SECTION ACC
ACCELERATOR CONTROL SYSTEM

CONTENTS

ACCELERATOR CONTROL SYSTEM 2
Removal and Installation 2
SERVICE DATA AND SPECIFICATIONS (SDS) 4
Accelerator Control 4
PEDAL TRAVEL 4

ACCELERATOR CONTROL SYSTEM

PFP:18005

Removal and Installation

EBS008QZ

1. Disconnect the accelerator position sensor electrical connector.
a. Pull the connector lock back to unlock the connector from the accelerator pedal position sensor as shown.
b. Pull up on the connector to disconnect it from the accelerator pedal position sensor as shown.

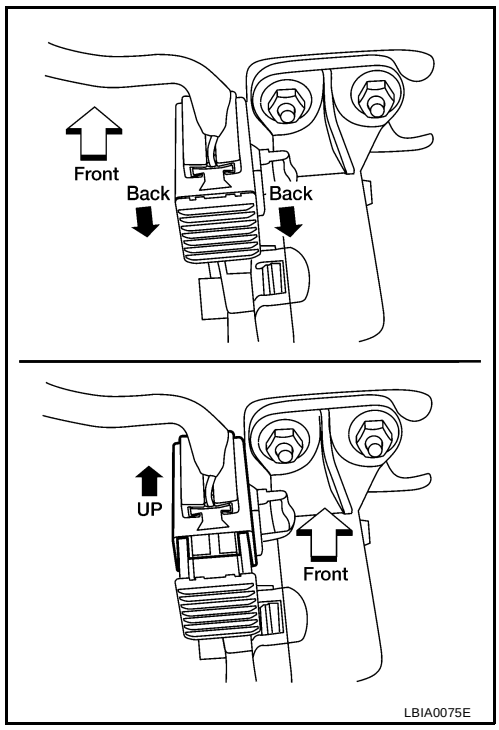

2. Remove the upper and lower accelerator pedal nuts.

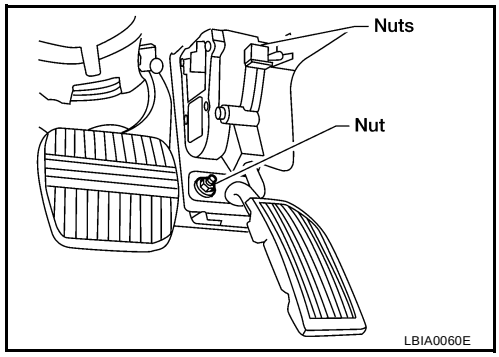

3. Remove the accelerator pedal and accelerator position sensor assembly.
a. Do not disassemble the pedal assembly. Do not remove the accelerator pedal position sensor from the pedal assembly.
b. Avoid impact from dropping during handling.
c. Keep the pedal assembly away from water.
d. For electrical inspection of the accelerator pedal position sensor. Refer to EC-49, "Accelerator Pedal Released Position Learning" .

4. Installation should be performed in the reverse procedure of removal.
   - When the harness connector of the accelerator pedal position sensor is disconnected, perform the "Accelerator pedal position released learning". Refer to EC-49, "Accelerator Pedal Released Position Learning" .
   - Check the accelerator pedal for smooth operation. There should be no binding or sticking when applying or releasing the accelerator pedal.

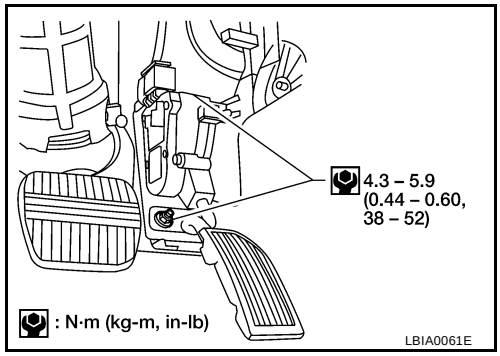

   - Check that the accelerator pedal moves through the full specified distance of pedal travel.

     Pedal travel A **: 52.6 - 58.2 mm (2.07 - 2.29 in)**

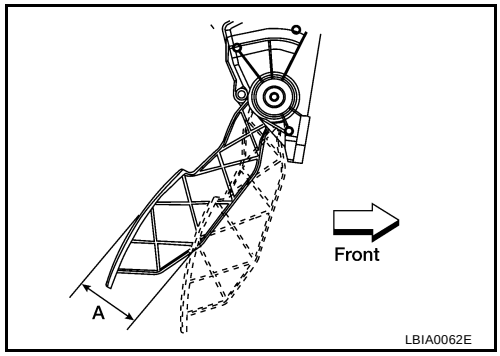

SERVICE DATA AND SPECIFICATIONS (SDS)

PFP:00030

Accelerator Control

EBS008R0

PEDAL TRAVEL

Accelerator control pedal - total travel	52.6 - 58.2 mm (2.07 - 2.29 in)

SECTION ACS

AUTO CRUISE CONTROL SYSTEM

CONTENTS

AUTOMATIC SPEED CONTROL DEVICE (ASCD).... 2
Description 2

AUTOMATIC SPEED CONTROL DEVICE (ASCD)

PFP:18930

Description

EKS002L4

Regarding the information for ASCD system, refer to EC-628, "AUTOMATIC SPEED CONTROL DEVICE (ASCD)" (QR engine models), EC-1286, "AUTOMATIC SPEED CONTROL DEVICE (ASCD)" (VQ engine models).

SECTION AT
AUTOMATIC TRANSAXLE

CONTENTS

TROUBLE DIAGNOSIS - INDEX 5
Alphabetical & P No. Index for DTC 5
PRECAUTIONS 7
Precautions for Supplemental Restraint System (SRS) “AIR BAG” and “SEAT BELT PRE-TENSIONER” 7
Precautions for On Board Diagnostic (OBD) System of A/T and Engine 7
Precautions 7
Service Notice or Precautions 9
Wiring Diagrams and Trouble Diagnosis 10
PREPARATION 11
Special Service Tools 11
Commercial Service Tools 14
OVERALL SYSTEM 15
A/T Electrical Parts Location 15
Circuit Diagram 16
Cross-sectional View 17
Hydraulic Control Circuit 18
Shift Mechanism 19
Control System 28
Control Mechanism 30
Control Valve 34
ON BOARD DIAGNOSTIC SYSTEM DESCRIPTION 36
Introduction 36
OBD-II Function for A/T System 36
One or Two Trip Detection Logic of OBD-II 36
OBD-II Diagnostic Trouble Code (DTC) 36
Malfunction Indicator Lamp (MIL) 40
CONSULT-II 40
Diagnostic Procedure Without CONSULT-II 50
TROUBLE DIAGNOSIS - INTRODUCTION 55
Introduction 55
Work Flow 59
TROUBLE DIAGNOSIS - BASIC INSPECTION 61
A/T Fluid Check 61
Stall Test 61
Line Pressure Test 65
Road Test 66
TROUBLE DIAGNOSIS - GENERAL DESCRIPTION 82
Symptom Chart 82
TCM Terminals and Reference Value 92
CAN Communication 95
TROUBLE DIAGNOSIS FOR POWER SUPPLY ... 100
Wiring Diagram — AT — MAIN 100
Diagnostic Procedure 101
DTC P0705 PARK/NEUTRAL POSITION SWITCH 103
Description 103
On Board Diagnosis Logic 103
Possible Cause 103
Diagnostic Trouble Code (DTC) Confirmation Procedure 103
Wiring Diagram — AT — PNP/SW 105
Diagnostic Procedure 106
DTC P0710 A/T FLUID TEMPERATURE SENSOR CIRCUIT 109
Description 109
On Board Diagnosis Logic 109
Possible Cause 109
Diagnostic Trouble Code (DTC) Confirmation Procedure 109
Wiring Diagram — AT — FTS 111
Diagnostic Procedure 113
DTC P0720 VEHICLE SPEED SENSOR·A/T (REVOLUTION SENSOR) 115
Description 115
On Board Diagnosis Logic 115
Possible Cause 115
Diagnostic Trouble Code (DTC) Confirmation Procedure 115
Wiring Diagram — AT — VSSA/T 117
Diagnostic Procedure 118
DTC P0725 ENGINE SPEED SIGNAL 120
Description 120
On Board Diagnosis Logic 120
Possible Cause 120
Diagnostic Trouble Code (DTC) Confirmation Procedure 120

Wiring Diagram — AT — ENGSS 121
Diagnostic Procedure 122
DTC P0731 A/T 1ST GEAR FUNCTION 124
Description 124
On Board Diagnosis Logic 124
Possible Cause 124
Diagnostic Trouble Code (DTC) Confirmation Procedure 124
Wiring Diagram — AT — 1ST 126
Diagnostic Procedure 127
DTC P0732 A/T 2ND GEAR FUNCTION 129
Description 129
On Board Diagnosis Logic 129
Possible Cause 129
Diagnostic Trouble Code (DTC) Confirmation Procedure 129
Wiring Diagram — AT — 2ND 131
Diagnostic Procedure 132
DTC P0733 A/T 3RD GEAR FUNCTION 134
Description 134
On Board Diagnosis Logic 134
Possible Cause 134
Diagnostic Trouble Code (DTC) Confirmation Procedure 134
Wiring Diagram — AT — 3RD 136
Diagnostic Procedure 137
DTC P0734 A/T 4TH GEAR FUNCTION 139
Description 139
On Board Diagnosis Logic 139
Possible Cause 139
Diagnostic Trouble Code (DTC) Confirmation Procedure 139
Wiring Diagram — AT — 4TH 141
Diagnostic Procedure 142
DTC P0740 TORQUE CONVERTER CLUTCH SOLENOID VALVE 146
Description 146
On Board Diagnosis Logic 146
Possible Cause 146
Diagnostic Trouble Code (DTC) Confirmation Procedure 146
Wiring Diagram — AT — TCV 148
Diagnostic Procedure 149
DTC P0744 A/T TCC S/V FUNCTION (LOCK-UP). 151
Description 151
On Board Diagnosis Logic 151
Possible Cause 151
Diagnostic Trouble Code (DTC) Confirmation Procedure 151
Wiring Diagram — AT — TCCSIG 153
Diagnostic Procedure 154
DTC P0745 LINE PRESSURE SOLENOID VALVE. 159
Description 159
On Board Diagnosis Logic 159
Possible Cause 159
Diagnostic Trouble Code (DTC) Confirmation Procedure 159
Wiring Diagram — AT — LPSV 161
Diagnostic Procedure 162
DTC P0750 SHIFT SOLENOID VALVE A 165
Description 165
On Board Diagnosis Logic 165
Possible Cause 165
Diagnostic Trouble Code (DTC) Confirmation Procedure 165
Wiring Diagram — AT — SSV/A 167
Diagnostic Procedure 168
DTC P0755 SHIFT SOLENOID VALVE B 170
Description 170
On Board Diagnosis Logic 170
Possible Cause 170
Diagnostic Trouble Code (DTC) Confirmation Procedure 170
Wiring Diagram — AT — SSV/B 172
Diagnostic Procedure 173
DTC P1705 THROTTLE POSITION SENSOR [ACCELERATOR PEDAL POSITION (APP) SENSOR] 175
Description 175
On Board Diagnosis Logic 175
Possible Cause 175
Diagnostic Trouble Code (DTC) Confirmation Procedure 175
Wiring Diagram — AT — TPS 177
Diagnostic Procedure 178
DTC P1760 OVERRUN CLUTCH SOLENOID VALVE 180
Description 180
On Board Diagnosis Logic 180
Possible Cause 180
Diagnostic Trouble Code (DTC) Confirmation Procedure 180
Wiring Diagram — AT — OVRCSV 182
Diagnostic Procedure 183
DTC U1000 CAN COMMUNICATION LINE 185
Description 185
On Board Diagnosis Logic 185
Possible Cause 185
DTC Confirmation Procedure 185
Wiring Diagram — AT — CAN 187
Diagnostic Procedure 188
DTC BATT/FLUID TEMP SEN (A/T FLUID TEMP SENSOR CIRCUIT AND TCM POWER SOURCE). 189
Description 189
On Board Diagnosis Logic 189
Possible Cause 189
Diagnostic Trouble Code (DTC) Confirmation Procedure 189
Wiring Diagram — AT — BA/FTS 191
Diagnostic Procedure 192
DTC VEHICLE SPEED SENSOR MTR 196
Description 196
On Board Diagnosis Logic 196
Possible Cause 196
Diagnostic Trouble Code (DTC) Confirmation Procedure 196
Wiring Diagram — AT — VSSMTR 198
Diagnostic Procedure 199

DTC TURBINE REVOLUTION SENSOR 200
Description 200
Wiring Diagram — AT — TRSA/T 202
Diagnostic Procedure 203
Component Inspection 204
DTC CONTROL UNIT (RAM), CONTROL UNIT (ROM) 205
Description 205
On Board Diagnosis Logic 205
Possible Cause 205
Diagnostic Trouble Code (DTC) Confirmation Procedure 205
Diagnostic Procedure 206
DTC CONTROL UNIT (EEP ROM) 207
Description 207
Diagnostic Procedure 208
TROUBLE DIAGNOSIS FOR SYMPTOMS 209
Wiring Diagram — AT — NONDTC 209
1. A/T Check (Position) Indicator Lamp Does Not Come On 213
2. Engine Cannot Be Started In P and N Position. 214
3. In P Position, Vehicle Moves Forward or Backward When Pushed 215
4. In N Position, Vehicle Moves 215
5. Large Shock. N → R Position 217
6. Vehicle Does Not Creep Backward In R Position 219
7. Vehicle Does Not Creep Forward in D, 3, 2 or 1 Position 222
8. Vehicle Cannot Be Started From D_1 224
9. A/T Does Not Shift: $D_1 \rightarrow D_2$ or Does Not Kick-down: $D_4 \rightarrow D_2$ 227
10. A/T Does Not Shift: $D_2 \rightarrow D_3$ 229
11. A/T Does Not Shift: $D_3 \rightarrow D_4$ 231
12. A/T Does Not Perform Lock-up 234
13. A/T Does Not Hold Lock-up Condition 235
14. Lock-up Is Not Released 236
15. Engine Speed Does Not Return To Idle (Light Braking $D_4 \rightarrow D_3$) 237
16. Vehicle Does Not Start From D_1 239
17. A/T Does Not Shift: $D_4 \rightarrow 3_3$, When A/T Selector Lever D → 3 239
18. A/T Does Not Shift: $3_3 \rightarrow 2_2$, When Selector Lever 3 → 2 Position 240
19. A/T Does Not Shift: $2_2 \rightarrow 1_1$, When Selector Lever 2 → 1 Position 240
20. Vehicle Does Not Decelerate By Engine Brake 241
21. TCM Self-diagnosis Does Not Activate (PNP & 3 Position Switches Circuit Checks), and Throttle Position Sensor [Accelerator Pedal Position (APP) Sensor] Circuit Check 242
A/T SHIFT LOCK SYSTEM 247
Description 247
Shift Lock System Electrical Parts Location 247
Wiring Diagram — SHIFT — 248
Shift Lock Control Unit Reference Values 250
Component Inspection 250
SHIFT CONTROL SYSTEM 253
Control Device 253
Control Cable 254
ON-VEHICLE SERVICE 255
Control Valve Assembly and Accumulators 255
Revolution Sensor Replacement 257
Turbine Revolution Sensor Replacement 257
Park/Neutral Position (PNP) Switch Adjustment . 257
Control Cable Adjustment 258
Differential Side Oil Seal Replacement 258
REMOVAL AND INSTALLATION 260
Removal 260
Installation 261
OVERHAUL 263
Components 263
Oil Channel 266
Locations of Adjusting Shims, Needle Bearings, Thrust Washers and Snap Rings 267
DISASSEMBLY 268
Disassembly 268
REPAIR FOR COMPONENT PARTS 283
Manual Shaft 283
Oil Pump 286
Control Valve Assembly 290
Control Valve Upper Body 299
Control Valve Lower Body 303
Reverse Clutch 305
High Clutch 308
Forward and Overrun Clutches 313
Low & Reverse Brake 319
Rear Internal Gear, Forward Clutch Hub and Overrun Clutch Hub 322
Output Shaft, Idler Gear, Reduction Pinion Gear and Bearing Retainer 326
Band Servo Piston Assembly 331
Final Drive 336
ASSEMBLY 341
Assembly (1) 341
Adjustment (1) 342
Assembly (2) 347
Adjustment (2) 354
Assembly (3) 357
SERVICE DATA AND SPECIFICATIONS (SDS) ... 364
General Specifications 364
Shift Schedule 364
Stall Revolution 365
Line Pressure 365
Control Valves 365
Accumulator 366
Clutch and Brakes 366
Final Drive 369
Planetary Carrier and Oil Pump 370
Input Shaft 370
Reduction Pinion Gear 371
Band Servo 371
Output Shaft 372
Bearing Retainer 372
Total End Play 372
Reverse Clutch End Play 373
Removal and Installation 373
Shift Solenoid Valves 373
Solenoid Valves 373

A/T Fluid Temperature Sensor 373
Revolution Sensor 373
Dropping Resistor 373
Turbine Revolution Sensor 374

TROUBLE DIAGNOSIS - INDEX

PFP:00000

Alphabetical & P No. Index for DTC

ECS004QN

ALPHABETICAL INDEX FOR DTC

Items (CONSULT-II screen terms)	DTC CONSULT-II GST*1	Reference page
A/T 1ST GR FNCTN	P0731	AT-124
A/T 2ND GR FNCTN	P0732	AT-129
A/T 3RD GR FNCTN	P0733	AT-134
A/T 4TH GR FNCTN	P0734	AT-139
A/T TCC S/V FNCTN	P0744	AT-151
ATF TEMP SEN/CIRC	P0710	AT-109
ENGINE SPEED SIG	P0725	AT-120
L/PRESS SOL/CIRC	P0745	AT-159
O/R CLTCH SOL/CIRC	P1760	AT-180
PNP SW/CIRC	P0705	AT-103
SFT SOL A/CIRC*2	P0750	AT-165
SFT SOL B/CIRC*2	P0755	AT-170
TCC SOLENOID/CIRC	P0740	AT-146
TP SEN/CIRC A/T*2	P1705	AT-175
VEH SPD SEN/CIR AT*3	P0720	AT-115
CAN COMM CIRCUIT	U1000	AT-185

*1: These numbers are prescribed by SAE J2012.
*2: When the fail-safe operation occurs, the MIL illuminates.
*3: The MIL illuminates when both the “Revolution sensor signal” and the “Vehicle speed sensor signal” meet the fail-safe condition at the same time.

P NO. INDEX FOR DTC

DTC CONSULT-II GST*1	Items (CONSULT-II screen terms)	Reference page
P0705	PNP SW/CIRC	AT-103
P0710	ATF TEMP SEN/CIRC	AT-109
P0720	VEH SPD SEN/CIR AT*3	AT-115
P0725	ENGINE SPEED SIG	AT-120
P0731	A/T 1ST GR FNCTN	AT-124
P0732	A/T 2ND GR FNCTN	AT-129
P0733	A/T 3RD GR FNCTN	AT-134
P0734	A/T 4TH GR FNCTN	AT-139
P0740	TCC SOLENOID/CIRC	AT-146
P0744	A/T TCC S/V FNCTN	AT-151
P0745	L/PRESS SOL/CIRC	AT-159
P0750	SFT SOL A/CIRC*2	AT-165
P0755	SFT SOL B/CIRC*2	AT-170
P1705	TP SEN/CIRC A/T*2	AT-175
P1760	O/R CLTCH SOL/CIRC	AT-180
U1000	CAN COMM CIRCUIT	AT-185

*1: These numbers are prescribed by SAE J2012.
*2: When the fail-safe operation occurs, the MIL illuminates.
*3: The MIL illuminates when both the “Revolution sensor signal” and the “Vehicle speed sensor signal” meet the fail-safe condition at the same time.

PRECAUTIONS

PFP:00001

Precautions for Supplemental Restraint System (SRS) “AIR BAG” and “SEAT BELT PRE-TENSIONER”

ECS004QO

The Supplemental Restraint System such as “AIR BAG” and “SEAT BELT PRE-TENSIONER”, used along with a front seat belt, helps to reduce the risk or severity of injury to the driver and front passenger for certain types of collision. Information necessary to service the system safely is included in the SRS and SB section of this Service Manual.

WARNING:

- **To avoid rendering the SRS inoperative, which could increase the risk of personal injury or death in the event of a collision which would result in air bag inflation, all maintenance must be performed by an authorized NISSAN/INFINITI dealer.**
- **Improper maintenance, including incorrect removal and installation of the SRS, can lead to personal injury caused by unintentional activation of the system. For removal of Spiral Cable and Air Bag Module, see the SRS section.**
- **Do not use electrical test equipment on any circuit related to the SRS unless instructed to in this Service Manual. SRS wiring harnesses can be identified by yellow and/or orange harness connectors.**

Precautions for On Board Diagnostic (OBD) System of A/T and Engine

ECS004QP

The ECM has an on board diagnostic system. It will light up the malfunction indicator lamp (MIL) to warn the driver of a malfunction causing emission deterioration.

CAUTION:

- **Be sure to turn the ignition switch OFF and disconnect the negative battery terminal before any repair or inspection work. The open/short circuit of related switches, sensors, solenoid valves, etc. will cause the MIL to light up.**
- **Be sure to connect and lock the connectors securely after work. A loose (unlocked) connector will cause the MIL to light up due to an open circuit. (Be sure the connector is free from water, grease, dirt, bent terminals, etc.)**
- **Be sure to route and secure the harnesses properly after work. Interference of the harness with a bracket, etc. may cause the MIL to light up due to a short circuit.**
- **Be sure to connect rubber tubes properly after work. A misconnected or disconnected rubber tube may cause the MIL to light up due to a malfunction of the EGR system or fuel injection system, etc.**
- **Be sure to erase the unnecessary malfunction information (repairs completed) from the TCM or ECM before returning the vehicle to the customer.**

Precautions

ECS004QQ

- **Before connecting or disconnecting the TCM harness connector, turn ignition switch OFF and disconnect negative battery terminal. Failure to do so may damage the TCM. Because battery voltage is applied to TCM even if ignition switch is turned off.**

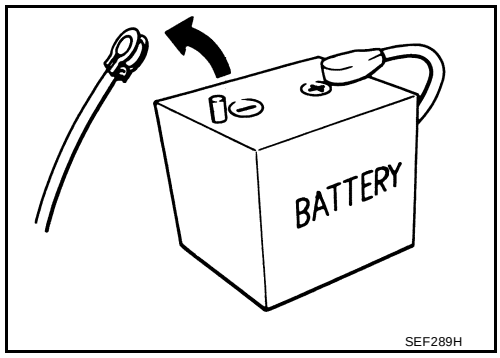

- **When connecting or disconnecting pin connectors into or from TCM, take care not to damage pin terminals (bend or break).**
  Make sure that there are not any bends or breaks on TCM pin terminal, when connecting pin connectors.

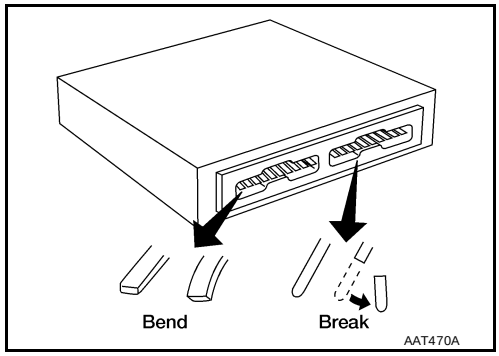

- **Before replacing TCM, perform TCM input/output signal inspection and make sure whether TCM functions properly or not. Refer to AT-29, "INPUT/OUTPUT SIGNAL OF TCM" .**

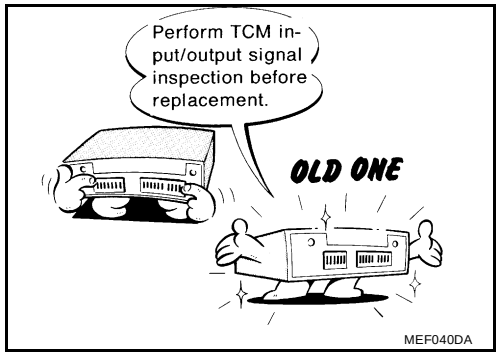

- **After performing each TROUBLE DIAGNOSIS, perform "DTC (Diagnostic Trouble Code) CONFIRMATION PROCEDURE".**
  The DTC should not be displayed in the "DTC CONFIRMATION PROCEDURE" if the repair is completed.

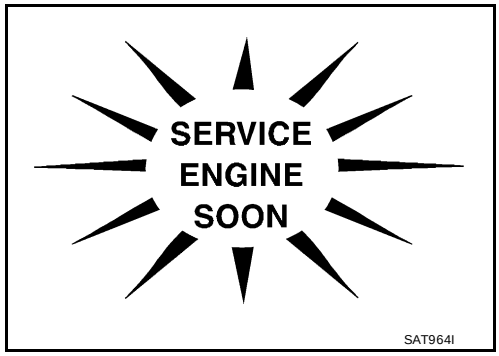

- Before proceeding with disassembly, thoroughly clean the outside of the transaxle. It is important to prevent the internal parts from becoming contaminated by dirt or other foreign matter.
- Disassembly should be done in a clean work area.
- Use lint-free cloth or towels for wiping parts clean. Common shop rags can leave fibers that could interfere with the operation of the transaxle.
- Place disassembled parts in order for easier and proper assembly.
- All parts should be carefully cleaned with a general purpose, non-flammable solvent before inspection or reassembly.
- Gaskets, seals and O-rings should be replaced any time the transaxle is disassembled.
- It is very important to perform functional tests whenever they are indicated.
- The valve body contains precision parts and requires extreme care when parts are removed and serviced. Place disassembled valve body parts in order for easier and proper assembly. Care will also prevent springs and small parts from becoming scattered or lost.
- Properly installed valves, sleeves, plugs, etc. will slide along bores in valve body under their own weight.
- Before assembly, apply a coat of recommended ATF to all parts. Apply petroleum jelly to protect O-rings and seals, or hold bearings and washers in place during assembly. Do not use grease.
- Extreme care should be taken to avoid damage to O-rings, seals and gaskets when assembling.
- Replace ATF cooler if excessive foreign material is found in oil pan or clogging strainer. Refer to AT-9, "ATF COOLER SERVICE" .
- After overhaul, refill the transaxle with new ATF.
- When the A/T drain plug is removed, only some of the fluid is drained. Old A/T fluid will remain in torque converter and ATF cooling system.
  Always follow the procedures when changing A/T fluid. Refer to MA-29, "Changing A/T Fluid" .

Service Notice or Precautions

ECS004QR

FAIL-SAFE

The TCM has an electronic Fail-Safe (limp home mode). This allows the vehicle to be driven even if a major electrical input/output device circuit is damaged.
Under Fail-Safe, the vehicle always runs in third gear, even with a shift lever position of 1, 2 or D. The customer may complain of sluggish or poor acceleration.
When the ignition key is turned ON following Fail-Safe operation, A/T check (position) indicator lamp blinks for about 8 seconds. [For “TCM Self-diagnostic Procedure (No Tools)”, refer to AT-51, "TCM SELF-DIAGNOSTIC PROCEDURE (NO TOOLS)" .]
The blinking of the A/T check (position) indicator lamp for about 8 seconds will appear only once and be cleared. The customer may resume normal driving conditions.
Always follow the “Work Flow” (Refer to AT-59, "Work Flow").
The SELF-DIAGNOSIS results will be as follows:

- The first SELF-DIAGNOSIS will indicate damage to the vehicle speed sensor or the revolution sensor.
- During the next SELF-DIAGNOSIS, performed after checking the sensor, no damages will be indicated.

TORQUE CONVERTER SERVICE

The torque converter should be replaced under any of the following conditions:

- External leaks in the hub weld area.
- Converter hub is scored or damaged.
- Converter pilot is broken, damaged or fits poorly into crankshaft.
- Steel particles are found after flushing the cooler and cooler lines.
- Pump is damaged or steel particles are found in the converter.
- Vehicle has TCC shudder and/or no TCC apply. Replace only after all hydraulic and electrical diagnoses have been made. (Converter clutch material may be glazed.)
- Converter is contaminated with engine coolant containing antifreeze.
- Internal failure of stator roller clutch.
- Heavy clutch debris due to overheating (blue converter).
- Steel particles or clutch lining material found in fluid filter or on magnet when no internal parts in unit are worn or damaged — indicates that lining material came from converter.
  The torque converter should not be replaced if:
- The fluid has an odor, is discolored, and there is no evidence of metal or clutch facing particles.
- The threads in one or more of the converter bolt holes are damaged.
- Transaxle failure did not display evidence of damaged or worn internal parts, steel particles or clutch plate lining material in unit and inside the fluid filter.
- Vehicle has been exposed to high mileage (only). The exception may be where the torque converter clutch dampener plate lining has seen excess wear by vehicles operated in heavy and/or constant traffic, such as taxi, delivery or police use.

ATF COOLER SERVICE

If A/T fluid contains frictional material (clutches, bands, etc.), replace radiator and flush cooler line using cleaning solvent and compressed air after repair of A/T. Refer to CO-12, "RADIATOR" (with QR25DE), or CO-34, "RADIATOR" (with VQ35DE).

OBD-II SELF-DIAGNOSIS

- A/T self-diagnosis is performed by the TCM in combination with the ECM. The results can be read through the blinking pattern of the A/T check (position) indicator or the malfunction indicator lamp (MIL). Refer to the table on AT-41 for the indicator used to display each self-diagnostic result.
- The self-diagnostic results indicated by the MIL are automatically stored in both the ECM and TCM memories.
  Always perform the procedure “HOW TO ERASE DTC” on AT-38 to complete the repair and avoid unnecessary blinking of the MIL.
- The following self-diagnostic items can be detected using ECM self-diagnostic results mode* only when the A/T check (position) indicator lamp does not indicate any malfunctions.
  - park/neutral position (PNP) switch
  - A/T 1st, 2nd, 3rd, or 4th gear function

- A/T TCC S/V function (lock-up).
  *: For details of OBD-II, refer to EC-54, "ON BOARD DIAGNOSTIC (OBD) SYSTEM" (with QR25DE), or EC-673, "ON BOARD DIAGNOSTIC (OBD) SYSTEM" (with VQ35DE).

- **Certain systems and components, especially those related to OBD, may use a new style slide-locking type harness connector.**
  For description and how to disconnect, refer to GI-22, "How to Check Terminal" .

Wiring Diagrams and Trouble Diagnosis

ECS004QS

When you read wiring diagrams, refer to the following:

- GI-12, "How to Read Wiring Diagrams"
- PG-3, "POWER SUPPLY ROUTING CIRCUIT"

When you perform trouble diagnosis, refer to the following:

- GI-10, "HOW TO FOLLOW TEST GROUPS IN TROUBLE DIAGNOSES"
- GI-25, "How to Perform Efficient Diagnosis for an Electrical Incident"

PREPARATION

PFP:00002

Special Service Tools

ECS004QT

The actual shapes of Kent-Moore tools may differ from those of special service tools illustrated here.

Tool number (Kent-Moore No.) Tool name	Description
KV381054S0 (J34286) Puller 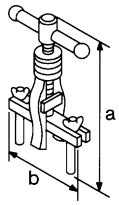 NT414	● Removing differential side oil seals ● Removing differential side bearing outer race ● Removing idler gear bearing outer race **a: 250 mm (9.84 in)** **b: 160 mm (6.30 in)**
ST33400001 (J26082) Drift 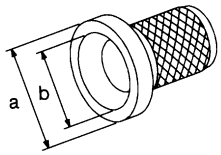 NT086	● Installing differential side oil seal (RH side) ● Installing oil seal on oil pump housing **a: 60 mm (2.36 in) dia.** **b: 47 mm (1.85 in) dia.**
(J34301-C) Oil pressure gauge set 1 (J34301-1) Oil pressure gauge 2 (J34301-2) Hoses 3 (J34298) Adapter 4 (J34282-2) Adapter 5 (790-301-1230-A) 60° Adapter 6 (J34301-15) Square socket 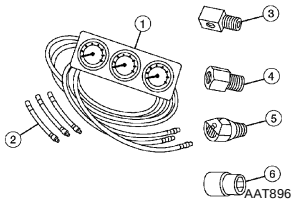 AAT896	● Measuring line pressure
ST27180001 (J25726-A) Puller 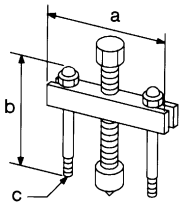 NT424	● Removing idler gear **a: 100 mm (3.94 in)** **b: 110 mm (4.33 in)** **c: M8 x 1.25P**
ST23540000 (J25689-A) Pin punch 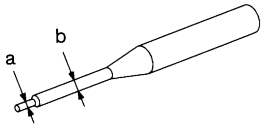 NT442	● Removing and installing parking rod plate and manual plate pins **a: 2.3 mm (0.091 in) dia.** **b: 4 mm (0.16 in) dia.**
ST25710000 (J25689-A) Pin punch 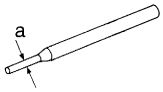 NT410	● Aligning groove of manual shaft and hole of transmission case **a: 2 mm (0.08 in) dia.**

Tool number (Kent-Moore No.) Tool name	Description
KV32101000 (J25689-A) Pin punch 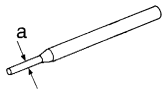 NT410	● Removing and installing manual shaft retaining pin ● Removing and installing pinion mate shaft lock pin **a: 4 mm (0.16 in) dia.**
KV31102400 (J34285 and J34285-87) Clutch spring compressor 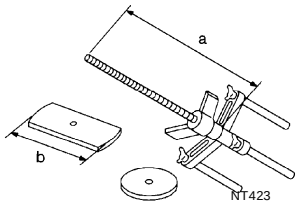 NT423	● Removing and installing clutch return springs ● Installing low and reverse brake piston **a: 320 mm (12.60 in)** **b: 174 mm (6.85 in)**
KV40100630 (J26092) Drift 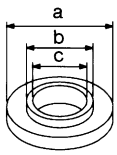 NT107	● Installing reduction gear bearing inner race ● Installing idler gear bearing inner race **a: 67.5 mm (2.657 in) dia.** **b: 44 mm (1.73 in) dia.** **c: 38.5 mm (1.516 in) dia.**
ST30720000 (J25405 and J34331) Bearing installer 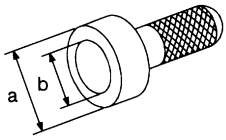 NT115	● Installing idler gear bearing outer race **a: 77 mm (3.03 in) dia.** **b: 55.5 mm (2.185 in) dia.**
ST35321000 (—) Drift 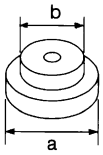 NT073	● Installing output shaft bearing **a: 49 mm (1.93 in) dia.** **b: 41 mm (1.61 in) dia.**
(J34291-A) Shim setting gauge set 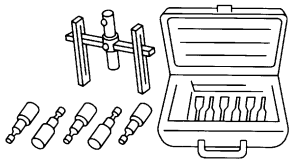 NT101	● Selecting oil pump cover bearing race and oil pump thrust washer ● Selecting side gear thrust washer
ST33230000 (J25805-01) Drift 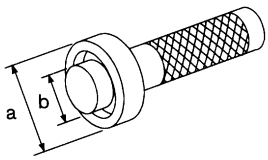 NT084	● Installing differential side bearing inner race (RH side) **a: 51 mm (2.01 in) dia.** **b: 28.5 mm (1.122 in) dia.**

Tool number (Kent-Moore No.) Tool name		Description
(J34290) Shim selecting tool set	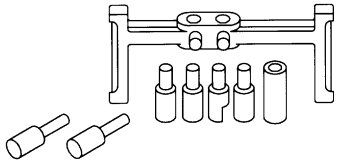	● Selecting differential side bearing adjusting shim
ST3306S001 (J22888-D) Differential side bearing puller set 1 ST33051001 (J22888-D) Puller 2 ST33061000 (J8107-2) Adapter	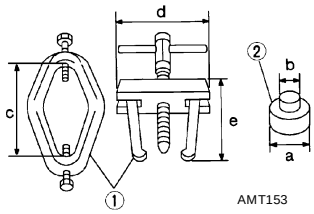	● Removing differential side bearing inner race **a: 38 mm (1.50 in) dia.** **b: 28.5 mm (1.122 in) dia.** **c: 130 mm (5.12 in)** **d: 135 mm (5.31 in)** **e: 100 mm (3.94 in)**
ST3127S000 (J25765-A) Preload gauge 1 GG91030000 (J25765-A) Torque wrench 2 HT62940000 (—) Socket adapter 3 HT62900000 (—) Socket adapter	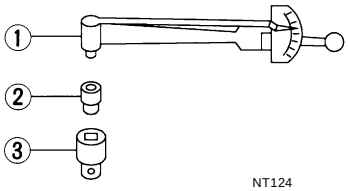	● Checking differential side bearing preload
ST35271000 (J26091) Drift	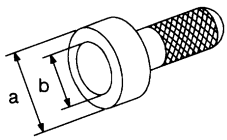	● Installing idler gear **a: 72 mm (2.83 in) dia.** **b: 63 mm (2.48 in) dia.**
(J39713) Preload adapter	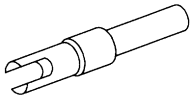	● Selecting differential side bearing adjusting shim ● Checking differential side bearing preload

Commercial Service Tools

ECS004QU

Tool name	Description
Puller 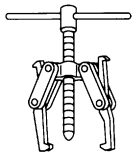 NT077	● Removing idler gear bearing inner race ● Removing and installing band servo piston snap ring
Puller 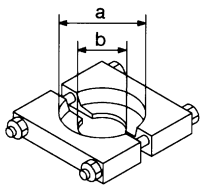 NT411	● Removing reduction gear bearing inner race **a: 60 mm (2.36 in) dia.** **b: 35 mm (1.38 in) dia.**
Drift 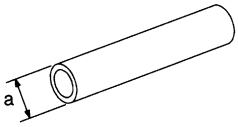 NT083	● Installing needle bearing on bearing retainer **a: 36 mm (1.42 in) dia.**
Drift 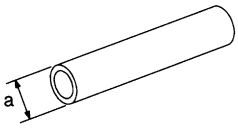 NT083	● Removing needle bearing from bearing retainer **a: 33.5 mm (1.319 in) dia.**
Drift 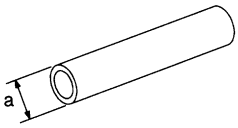 NT083	● Installing differential side bearing outer race (RH side) **a: 75 mm (2.95 in) dia.**
Power tool 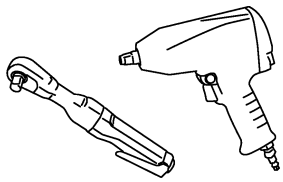 PBIC0190E	● Removing transaxle assembly ● Removing transaxle oil pan ● Removing transaxle case and cover

OVERALL SYSTEM

PFP:00000

A/T Electrical Parts Location

ECS004QV

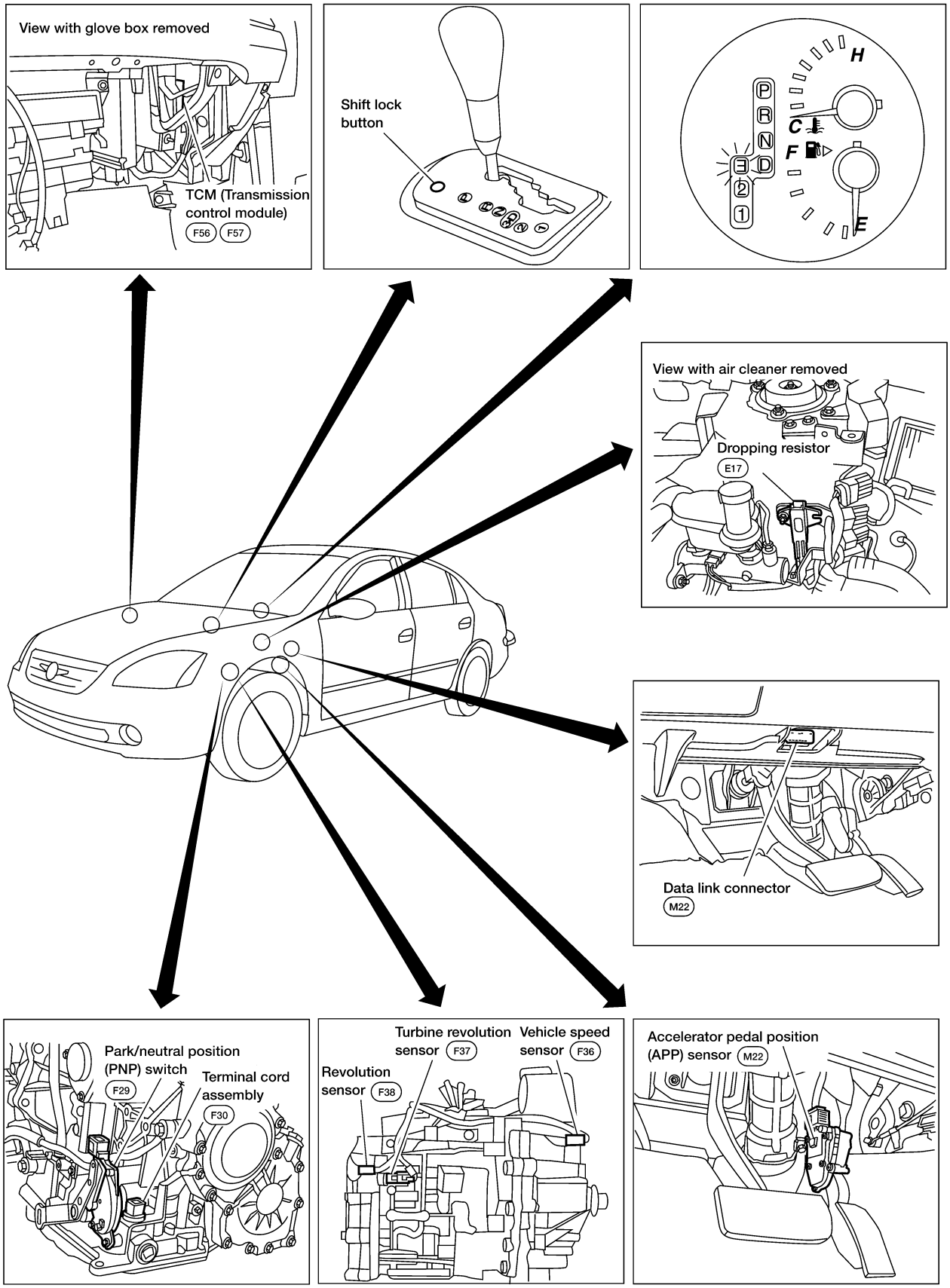

LCIA0038E

Circuit Diagram

ECS004QW

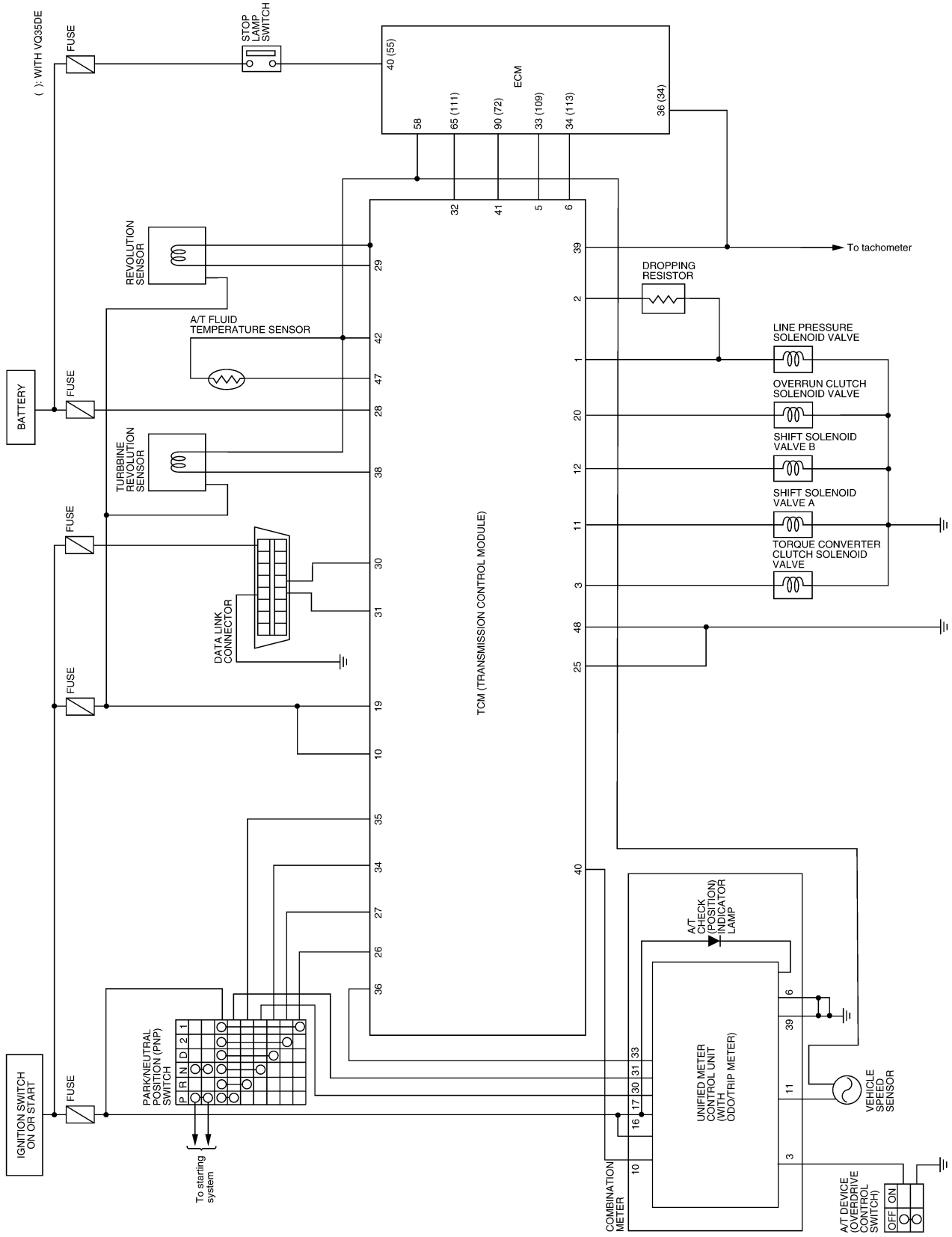

LCWA0029E

Cross-sectional View

ECS004QX

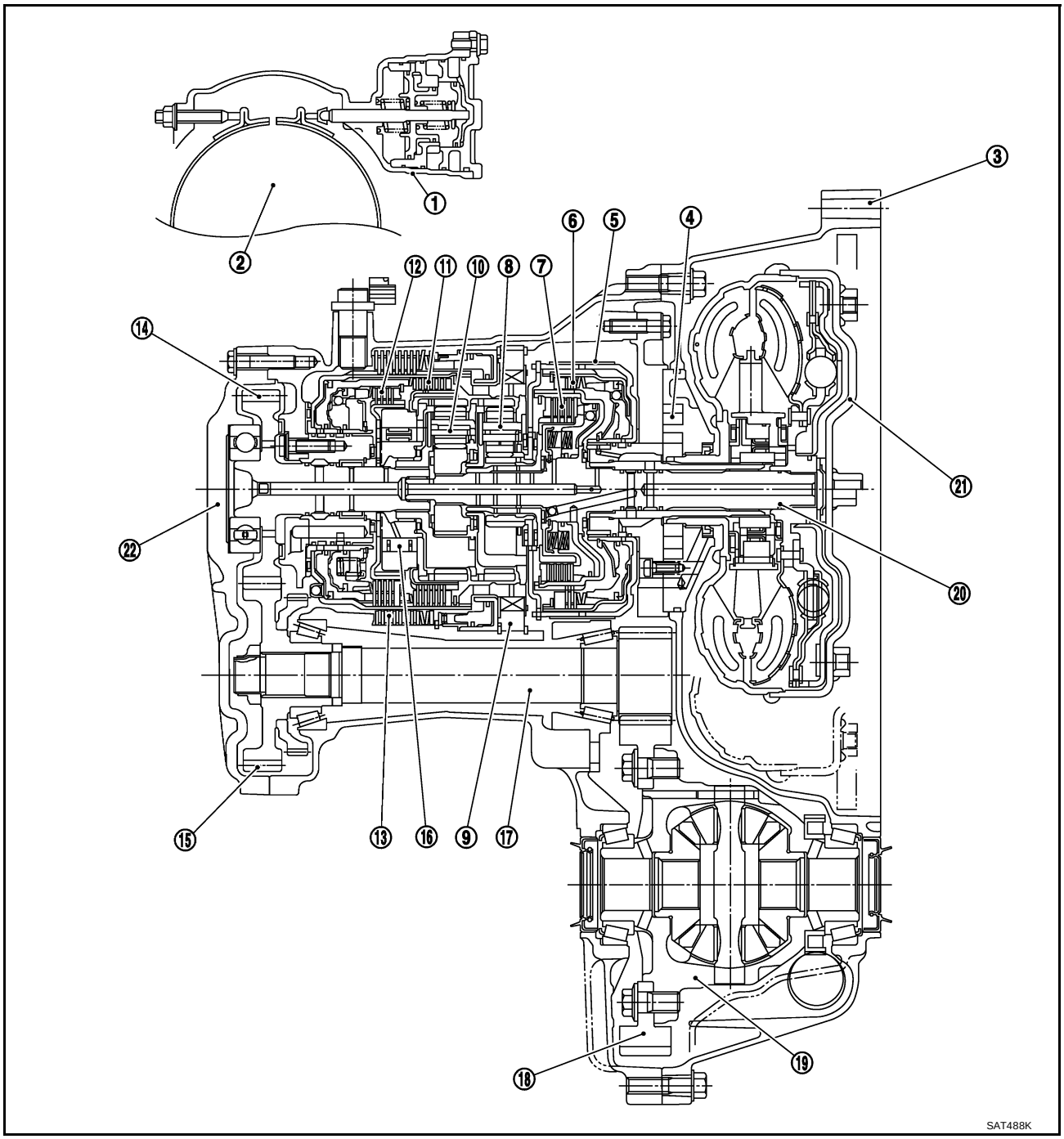

1.	Band servo piston	2.	Reverse clutch drum	3.	Converter housing
4.	Oil pump	5.	Brake band	6.	Reverse clutch
7.	High clutch	8.	Front planetary gear	9.	Low one-way clutch
10.	Rear planetary gear	11.	Forward clutch	12.	Overrun clutch
13.	Low & reverse brake	14.	Output gear	15.	Idler gear
16.	Forward one-way clutch	17.	Pinion reduction gear	18.	Final gear
19.	Differential case	20.	Input shaft	21.	Torque converter
22.	Side cover				

Hydraulic Control Circuit

ECS004QY

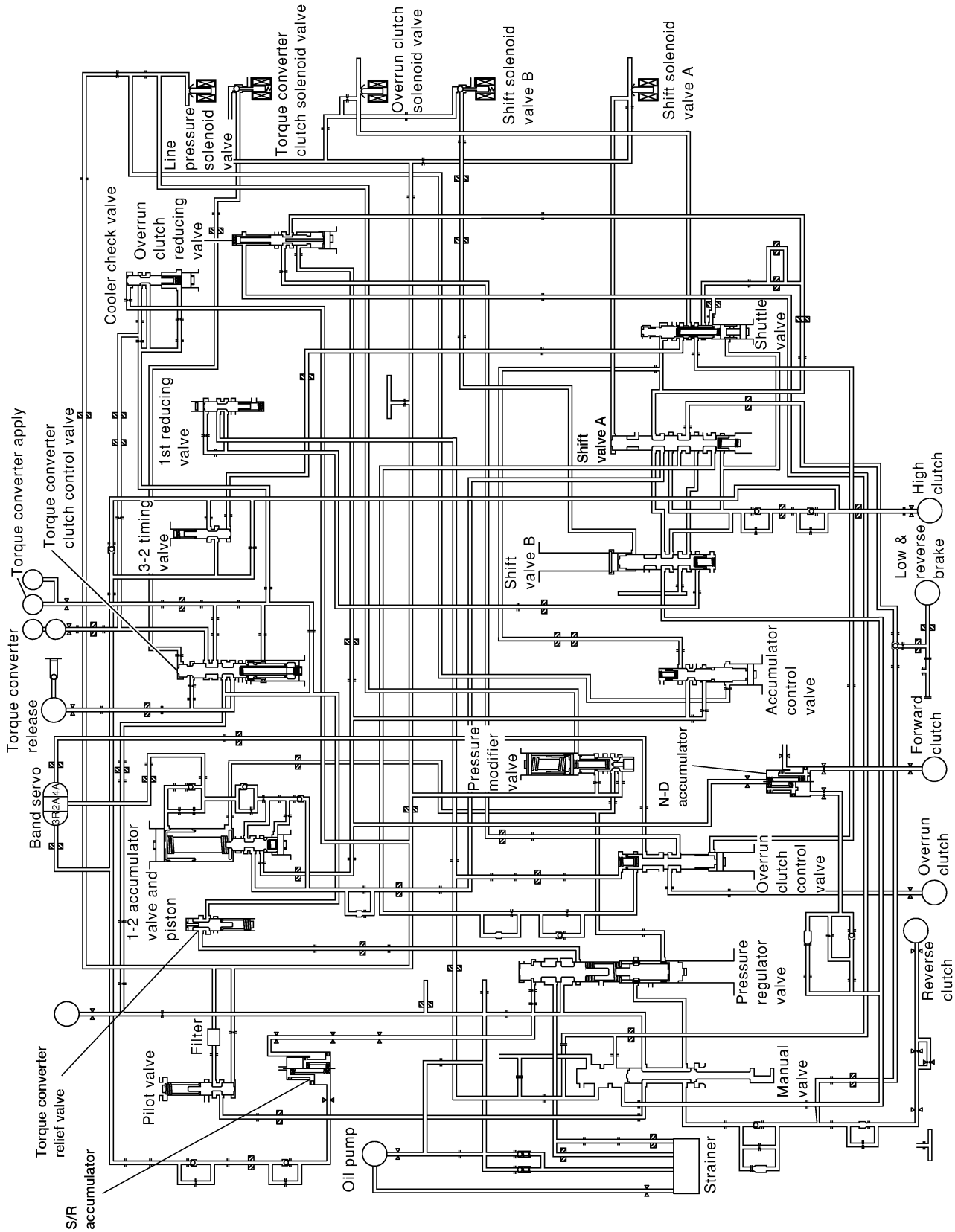

LCIA0040E

Shift Mechanism

ECS004QZ

CONSTRUCTION

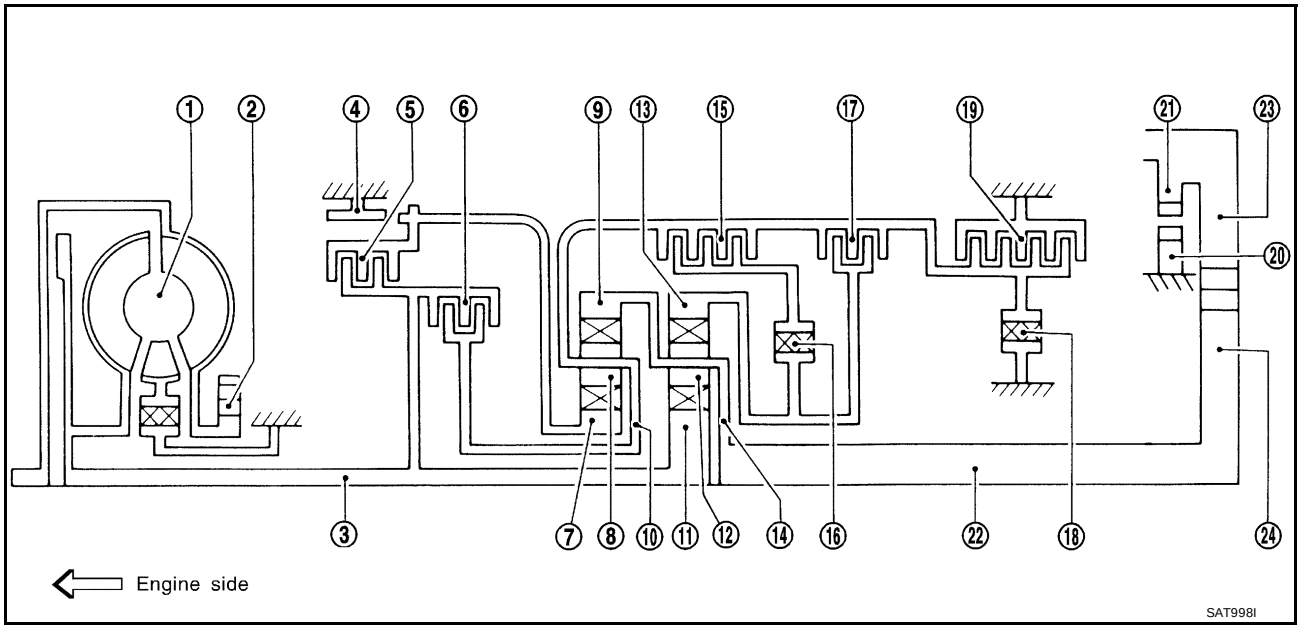

1.	Torque converter	2.	Oil pump	3.	Input shaft
4.	Brake band	5.	Reverse clutch	6.	High clutch
7.	Front sun gear	8.	Front pinion gear	9.	Front internal gear
10.	Front planetary carrier	11.	Rear sun gear	12.	Rear pinion gear
13.	Rear internal gear	14.	Rear planetary carrier	15.	Forward clutch
16.	Forward one-way clutch	17.	Overrun clutch	18.	Low one-way clutch
19.	Low & reverse brake	20.	Parking pawl	21.	Parking gear
22.	Output shaft	23.	Idle gear	24.	Output gear

FUNCTION OF CLUTCH AND BRAKE

Clutch and brake components	Abbr.	Function
Reverse clutch **5**	R/C	To transmit input power to front sun gear **7** .
High clutch **6**	H/C	To transmit input power to front planetary carrier **10** .
Forward clutch **15**	F/C	To connect front planetary carrier **10** with forward one-way clutch **16** .
Overrun clutch **17**	O/C	To connect front planetary carrier **10** with rear internal gear **13** .
Brake band **4**	B/B	To lock front sun gear **7** .
Forward one-way clutch **16**	F/O.C	When forward clutch **15** is engaged, to stop rear internal gear **13** from rotating in opposite direction against engine revolution.
Low one-way clutch **18**	L/O.C	To stop front planetary carrier **10** from rotating in opposite direction against engine revolution.
Low & reverse brake **19**	L & R/B	To lock front planetary carrier **10** .

CLUTCH AND BAND CHART

Shift position	Reverse clutch **5**	High clutch **6**	Forward clutch **15**	Overrun clutch **17**	Band servo			Forward one-way clutch **16**	Low one-way clutch **18**	Low & reverse brake **19**	Lock-up	Remarks
					2nd apply	3rd release	4th apply					
P												PARK POSITION
R	O									O		REVERSE POSITION

Shift position		Re-verse clutch **5**	High clutch **6**	For-ward clutch **15**	Over-run clutch **17**	Band servo			For-ward one-way clutch **16**	Low one-way clutch **18**	Low & re-verse brake **19**	Lock-up	Remarks
						2nd apply	3rd re-lease	4th apply					
N													NEUTRAL POSITION
D*4	1st			O	*1D				B	B			Automatic shift 1 ⇔ 2 ⇔ 3 ⇔ 4
	2nd			O	*1 A	O			B				
	3rd		O	O	*1 A	*2C	C		B			*5O	
	4th		O	C		*3C	C	O				O	
2	1st			O	D				B	B			Automatic shift 1 ⇔ 2 ⇐ 3
	2nd			O	A	O			B				
1	1st			O	O				B		O		Locks (held stationary) in 1st speed 1 ⇐ 2 ⇐ 3
	2nd			O	O	O			B				

*1: Operates when selector lever is set in 3 position.
*2: Oil pressure is applied to both 2nd “apply” side and 3rd “release” side of band servo piston. However, brake band does not contract because oil pressure area on the “release” side is greater than that on the “apply” side.
*3: Oil pressure is applied to 4th “apply” side in condition *2 above, and brake band contracts.
*4: A/T will not shift to 4th when selector lever is set in 3 position.
*5: Operates when selector lever is set in 3 position.
O: Operates
A: Operates when throttle opening is less than 3/16, activating engine brake.
B: Operates during “progressive” acceleration.
C: Operates but does not affect power transmission.
D: Operates when throttle opening is less than 3/16, but does not affect engine brake.

POWER TRANSMISSION

P and N Positions

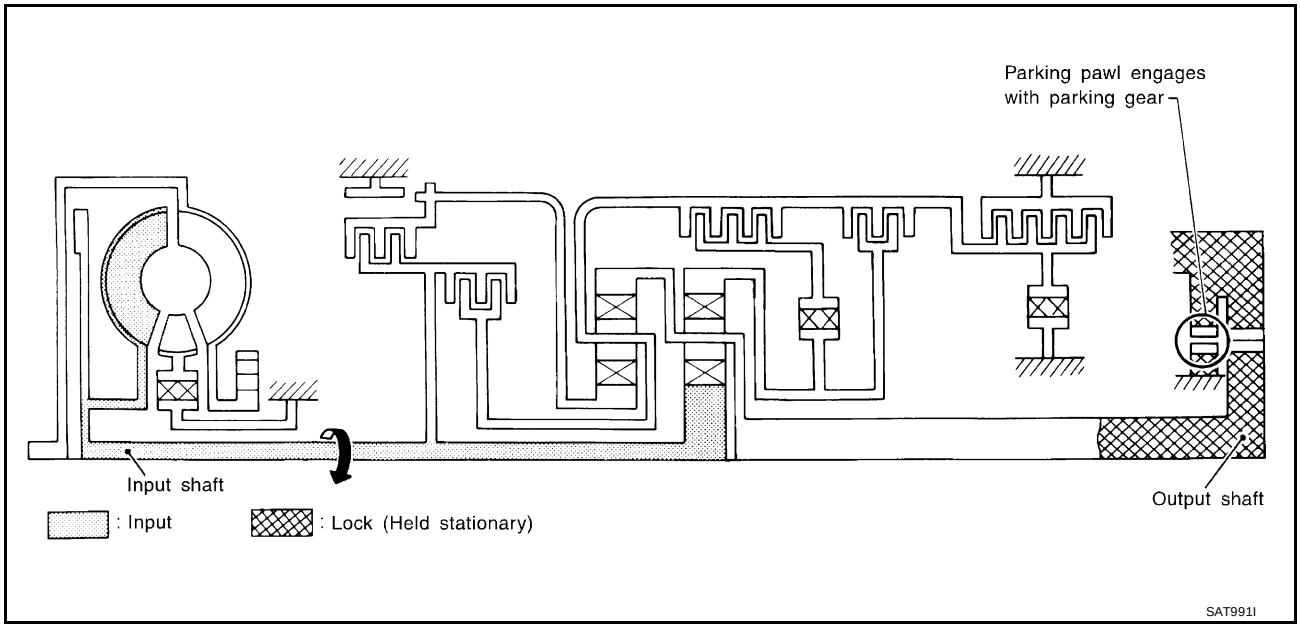

- P position
  Similar to the N position, the clutches do not operate. The parking pawl engages with the parking gear to mechanically hold the output shaft so that the power train is locked.
- N position
  Power from the input shaft is not transmitted to the output shaft because the clutches do not operate.

11 Position

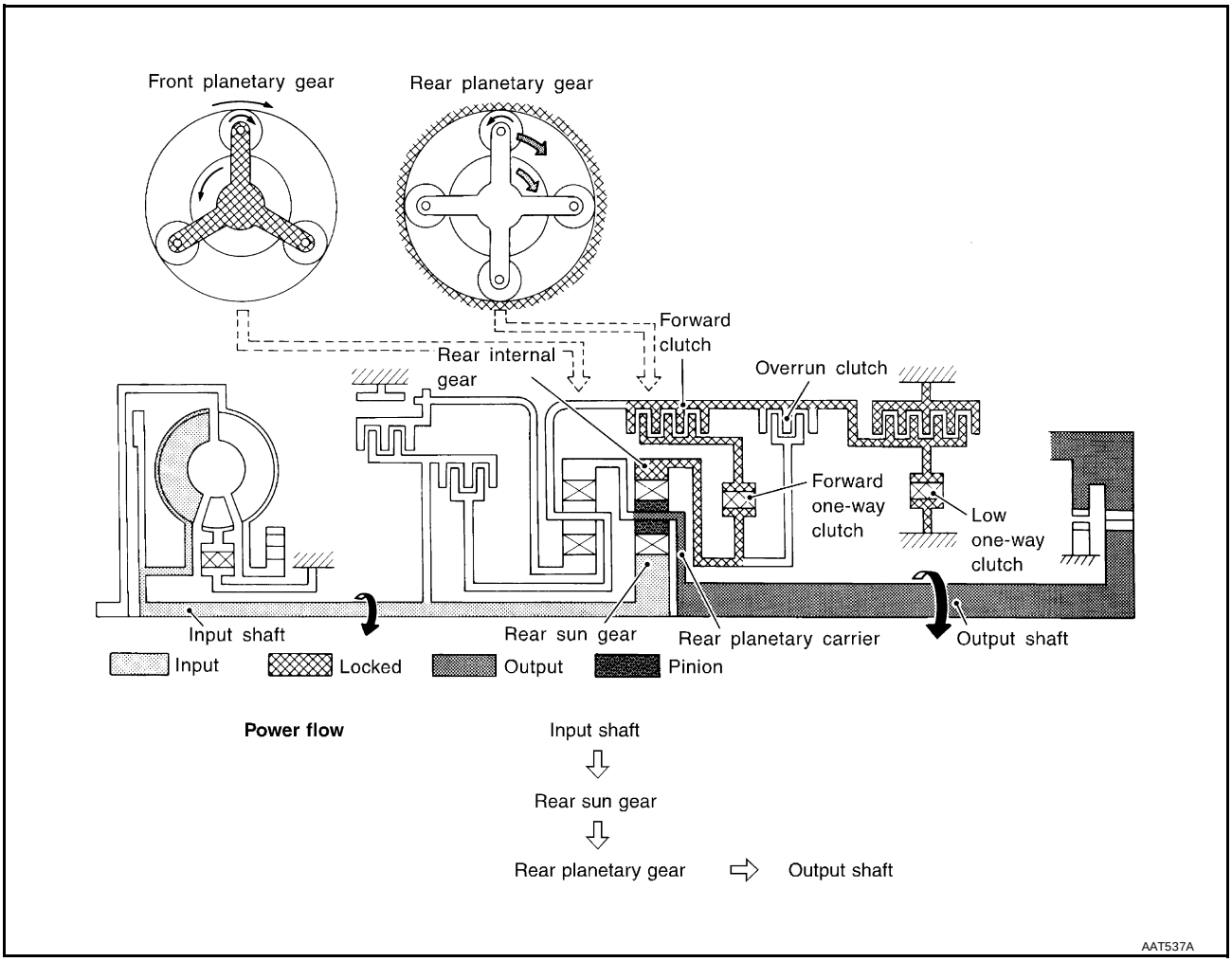

● **Forward clutch** ● **Forward one-way clutch** ● **Overrun clutch** ● **Low and reverse brake**	As overrun clutch engages, rear internal gear is locked by the operation of low and reverse brake. This is different from that of D_1 , 2_1 , and 3_1 .
Engine brake	Overrun clutch always engages, therefore engine brake can be obtained when decelerating.

D1 and 21 Positions

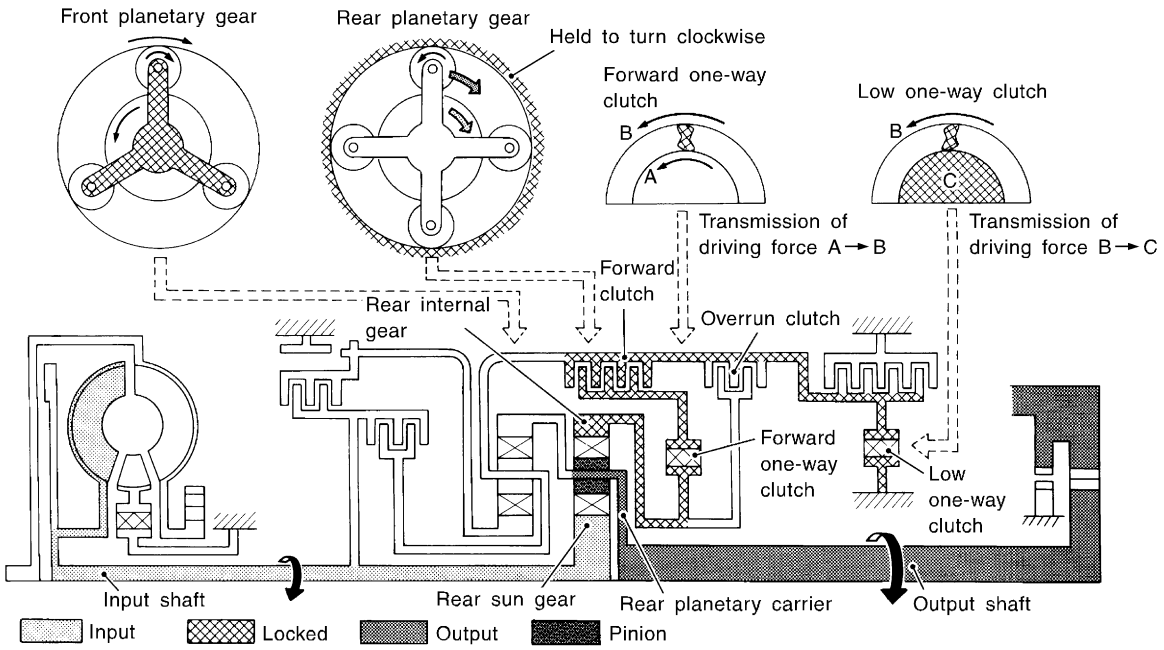

Power flow

Input shaft
⇩
Rear sun gear
⇩
Rear pinion gear
⇩
Rear planetary carrier → Output shaft

AAT532A

● **Forward one-way clutch** ● **Forward clutch** ● **Low one-way clutch**	Rear internal gear is locked to rotate counterclockwise because of the functioning of these three clutches.
Overrun clutch engagement conditions (Engine brake)	D1 : Gear selector lever is set in 3 position and throttle opening is less than 3/16 21 : Always engaged At D1 and 21 positions, engine brake is not activated due to free turning of low one-way clutch.

D_2 , 3_2 , 2_2 and 1_2 Positions

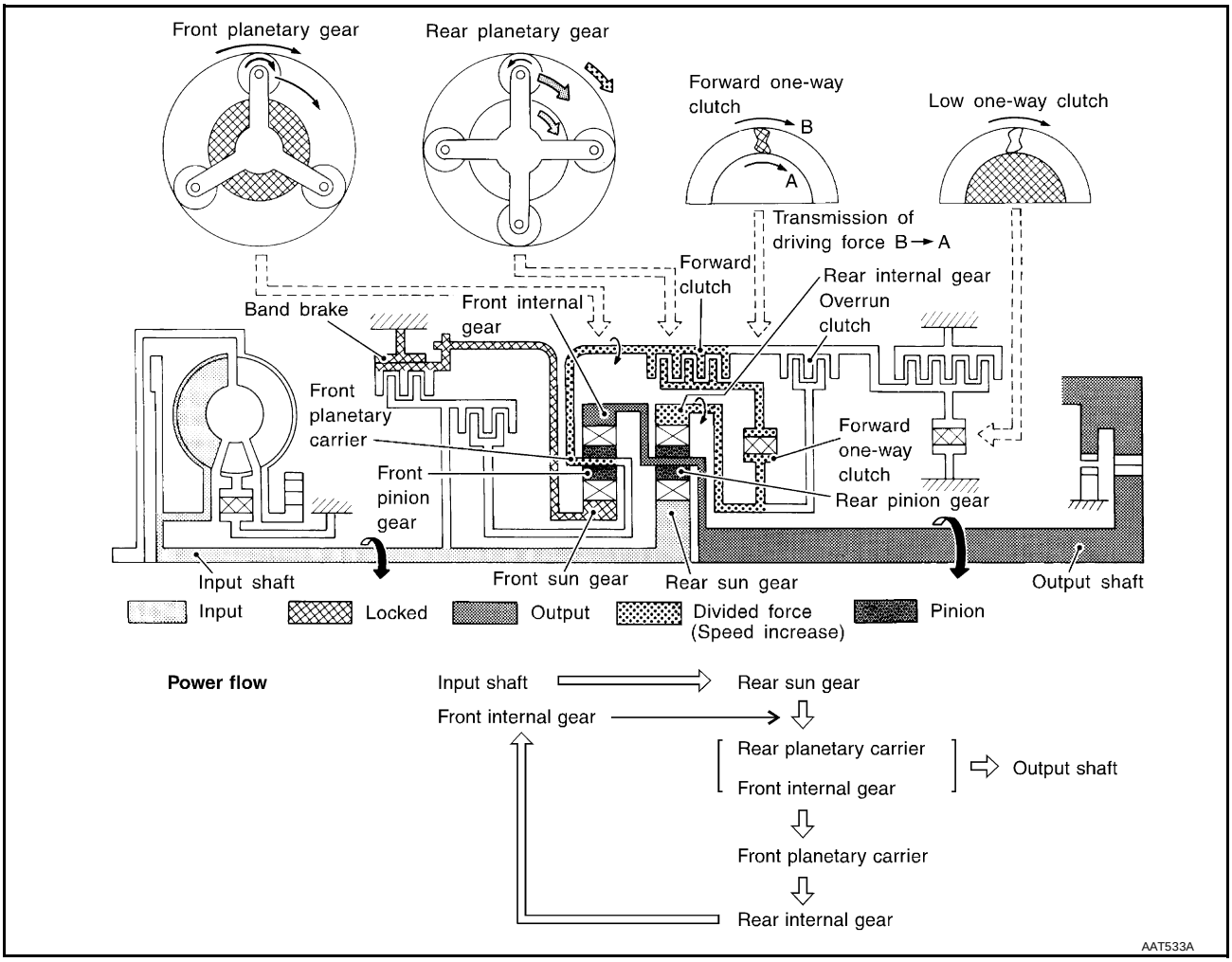

● **Forward clutch** ● **Forward one-way clutch** ● **Brake band**	Rear sun gear drives rear planetary carrier and combined front internal gear. Front internal gear now rotates around front sun gear accompanying front planetary carrier. As front planetary carrier transfers the power to rear internal gear through forward clutch and forward one-way clutch, this rotation of rear internal gear increases the speed of rear planetary carrier compared with that of the 1st speed.
Overrun clutch engagement conditions	3_2 : Gear selector lever is set in 3 position and throttle opening is less than 3/16 3_2 , 2_2 and 1_2 : Always engaged

D3 and 33 Positions

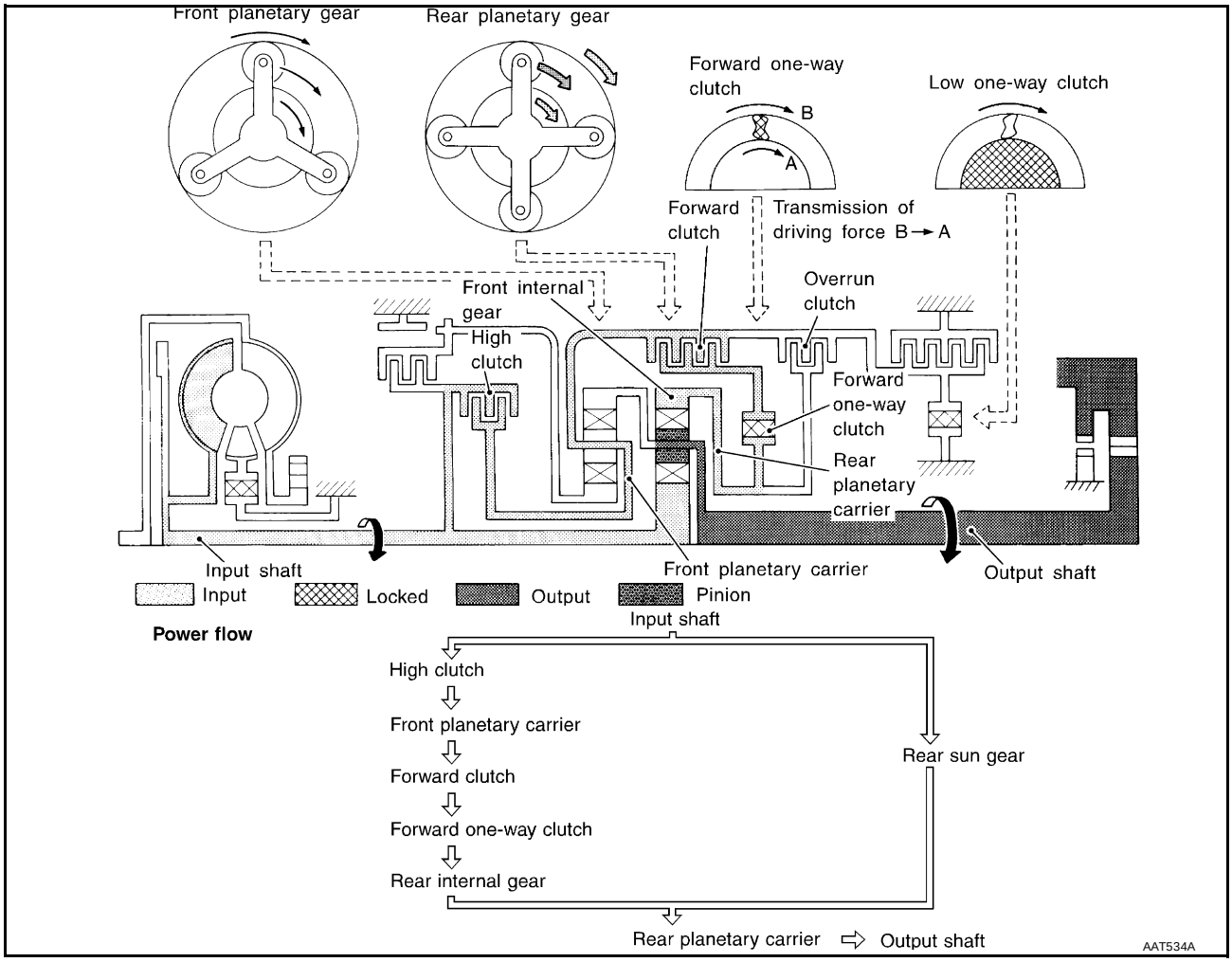

● **High clutch** ● **Forward clutch** ● **Forward one-way clutch**	Input power is transmitted to front planetary carrier through high clutch. And front planetary carrier is connected to rear internal gear by operation of forward clutch and forward one-way clutch. This rear internal gear rotation and another input (the rear sun gear) accompany rear planetary carrier to turn at the same speed.
Overrun clutch engagement conditions	D3 and 33 : Selector lever is set in 3 position and throttle opening is less than 3/16

D4 Position

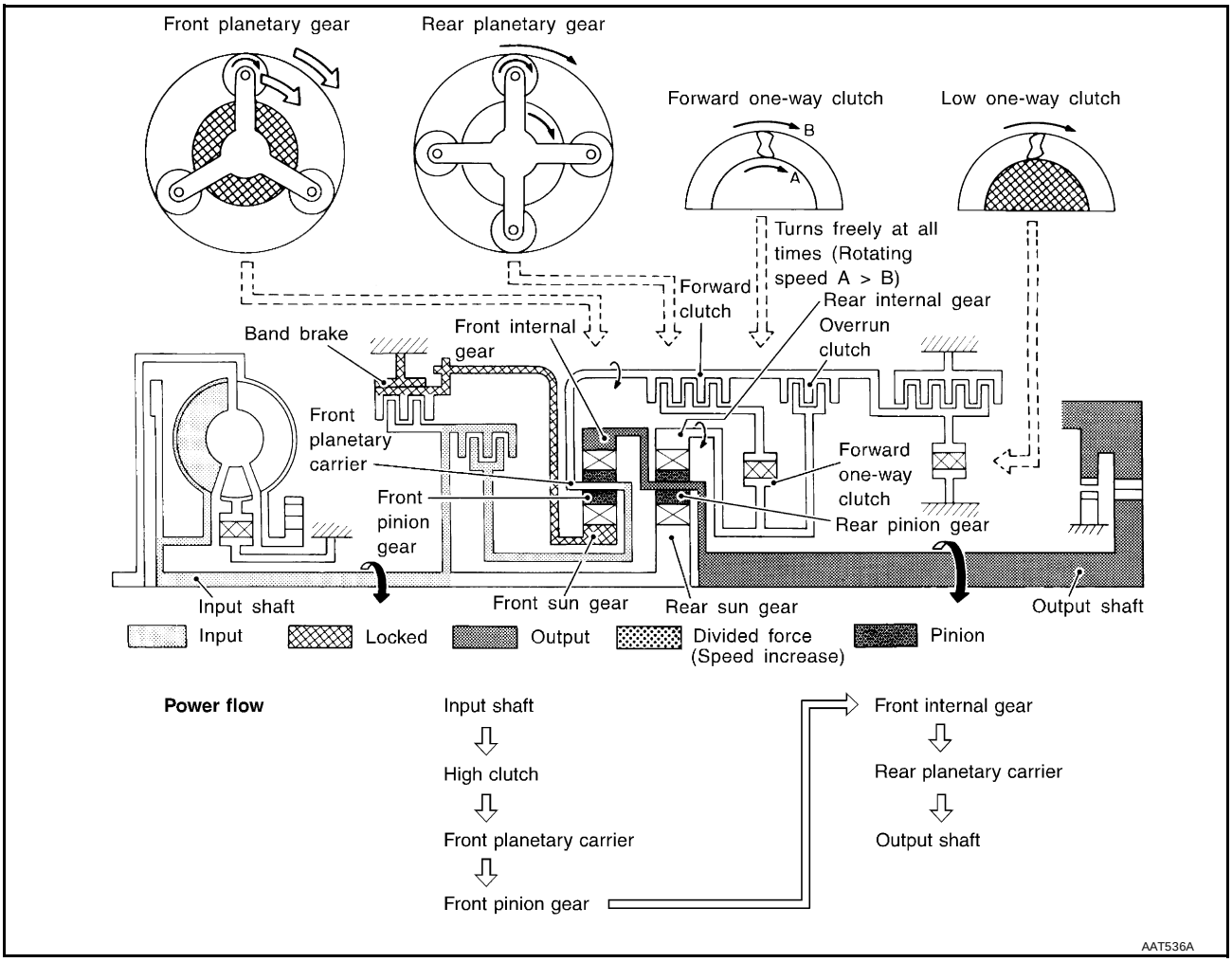

● **High clutch** ● **Brake band** ● **Forward clutch** (Does not affect power transmission)	Input power is transmitted to front carrier through high clutch. This front carrier turns around the sun gear which is fixed by brake band and makes front internal gear (output) turn faster.
Engine brake	At D4 position, there is no one-way clutch in the power transmission line and engine brake can be obtained when decelerating.

R Position

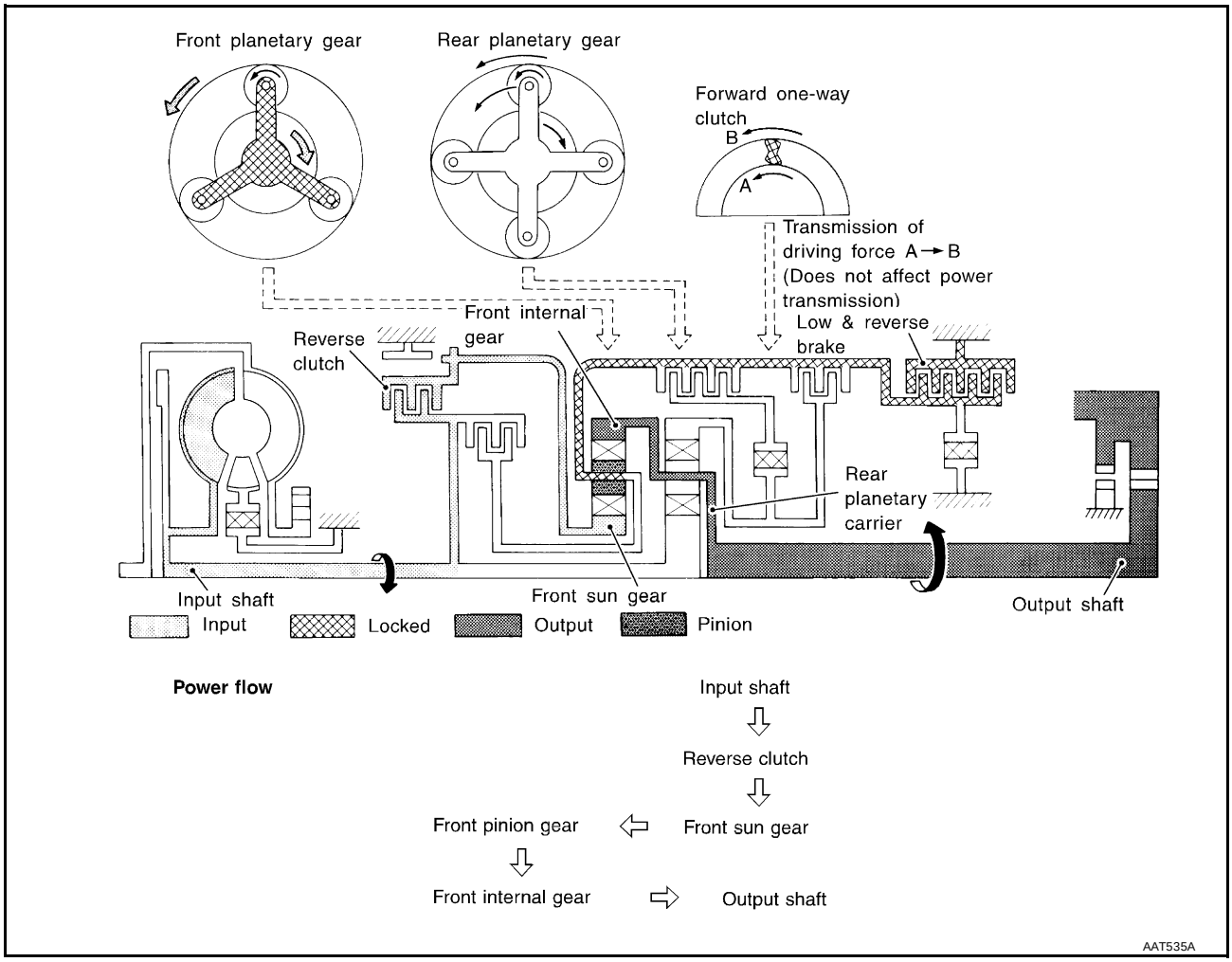

● **Reverse clutch** ● **Low and reverse brake**	Front planetary carrier is stationary because of the operation of low and reverse brake. Input power is transmitted to front sun gear through reverse clutch, which drives front internal gear in the opposite direction.
Engine brake	As there is no one-way clutch in the power transmission line, engine brake can be obtained when decelerating.

Control System

ECS004R0

OUTLINE

The automatic transaxle senses vehicle operating conditions through various sensors. It always controls the optimum shift position and reduces shifting and lock-up shocks.

SENSORS		TCM		ACTUATORS
Park/neutral position (PNP) switch Throttle position sensor [accelerator pedal position (APP) sensor] Engine speed signal A/T fluid temperature sensor Revolution sensor (VHCL/S SE-1) Vehicle speed sensor (VHCL/S SE-2) 3 position switch ASCD control unit Stop lamp switch Turbine revolution sensor	▶	Shift control Line pressure control Lock-up control Overrun clutch control Timing control Fail-safe control Self-diagnosis CAN communication line control	▶	Shift solenoid valve A Shift solenoid valve B Overrun clutch solenoid valve Torque converter clutch solenoid valve Line pressure solenoid valve A/T check (position) indicator lamp

CONTROL SYSTEM

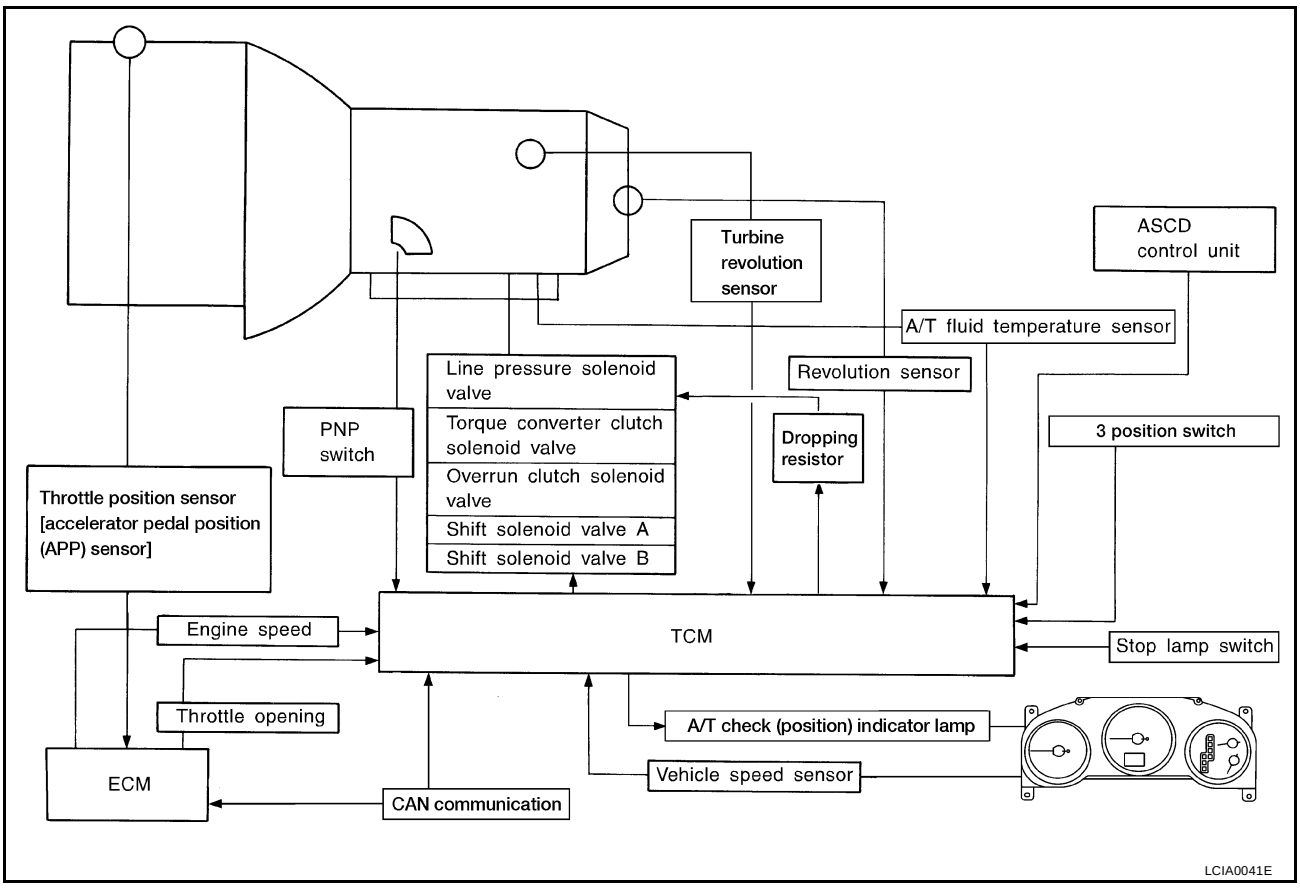

TCM FUNCTION

The function of the TCM is to:

- Receive input signals sent from various switches and sensors.
- Determine required line pressure, shifting point, lock-up operation, and engine brake operation.
- Send required output signals to the respective solenoids.

INPUT/OUTPUT SIGNAL OF TCM

	Sensors and solenoid valves	Function
Input	Park/neutral position (PNP) switch	Detects select lever position and sends a signal to TCM.
	Throttle position sensor [accelerator pedal position (APP) sensor]	Detects throttle valve position and sends a signal to TCM.
	Engine speed signal	Receives signal from ECM and controls lock-up control solenoid valve.
	A/T fluid temperature sensor	Detects transmission fluid temperature and sends a signal to TCM.
	Revolution sensor (VHCL/S SE-1)	Detects output shaft rpm and sends a signal to TCM.
	Vehicle speed sensor (VHCL/S SE-2)	Used as an auxiliary vehicle speed sensor. Sends a signal when revolution sensor (installed on transmission) malfunctions.
	3 position switch	Sends a signal, which prohibits a shift to D4 (overdrive) position, to the TCM.
	ASCD control unit	Sends the cruise signal and D4 (overdrive) cancellation signal from ASCD control unit to TCM.
	Stop lamp switch	Send the lock-up release signal to the TCM at time of D4 (lock-up).
	CAN communication	In CAN communication, control units are connected to 2 communication lines (CAN H line, CAN L line) allowing a high rate of information transmission with less wiring.
Output	Shift solenoid valve A/B	Selects shifting point suited to driving conditions in relation to a signal sent from TCM.
	Line pressure solenoid valve	Regulates (or decreases) line pressure suited to driving conditions in relation to a signal sent from TCM.
	Torque converter clutch solenoid valve	Regulates (or decreases) lock-up pressure suited to driving conditions in relation to a signal sent from TCM.
	Overrun clutch solenoid valve	Controls an “engine brake” effect suited to driving conditions in relation to a signal sent from TCM.
	A/T check (position) indicator lamp	Shows TCM faults, when A/T control components malfunction.
	CAN communication	In CAN communication, control units are connected to 2 communication lines (CAN H line, CAN L line) allowing a high rate of information transmission with less wiring.

Control Mechanism

ECS004R1

LINE PRESSURE CONTROL

TCM has various line pressure control characteristics to meet the driving conditions.
An ON-OFF duty signal is sent to the line pressure solenoid valve based on TCM characteristics.
Hydraulic pressure on the clutch and brake is electronically controlled through the line pressure solenoid valve to accommodate engine torque. This results in smooth shift operation.

Normal Control

The line pressure to throttle opening characteristics is set for suitable clutch operation.

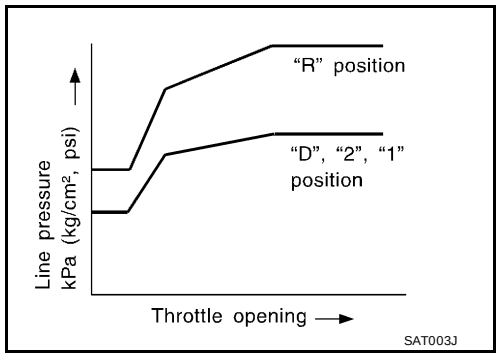

Back-up Control (Engine brake)

If the selector lever is shifted to 2 position while driving in D_4 (O/D) or D_3 , great driving force is applied to the clutch inside the transmission. Clutch operating pressure (line pressure) must be increased to deal with this driving force.

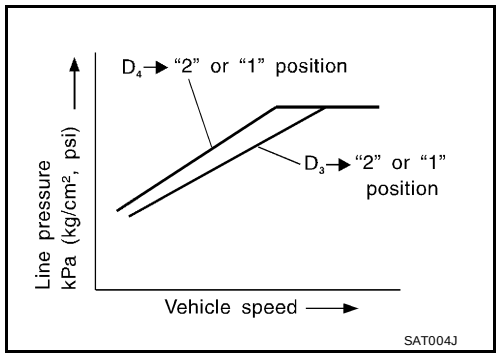

During Shift Change

The line pressure is temporarily reduced corresponding to a change in engine torque when shifting gears (that is, when the shift solenoid valve is switched for clutch operation) to reduce shifting shock.

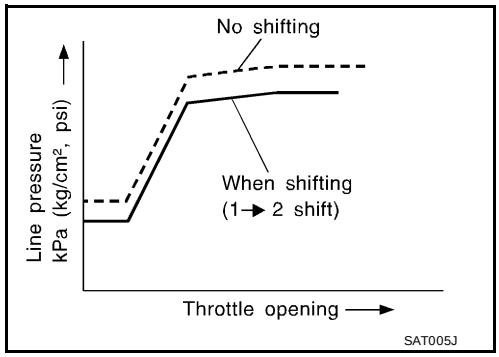

At Low Fluid Temperature

- Fluid viscosity and frictional characteristics of the clutch facing change with fluid temperature. Clutch engaging or band-contacting pressure is compensated for, according to fluid temperature, to stabilize shifting quality.

- The line pressure is reduced below 60°C (140°F) to prevent shifting shock due to low viscosity of automatic transmission fluid when temperature is low.

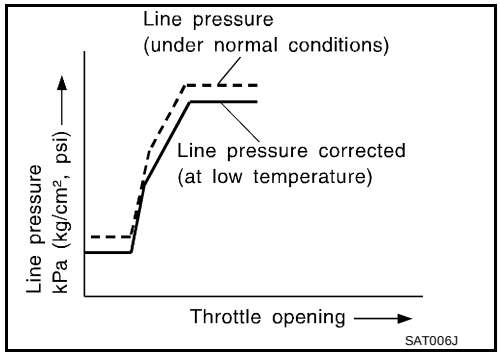

- Line pressure is increased to a maximum irrespective of the throttle opening when fluid temperature drops to –10°C (14°F). This pressure rise is adopted to prevent a delay in clutch and brake operation due to extreme drop of fluid viscosity at low temperature.

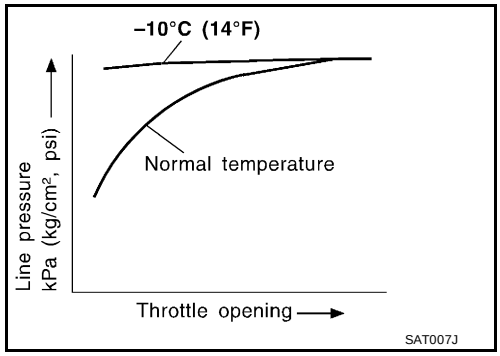

SHIFT CONTROL

The shift is regulated entirely by electronic control to accommodate vehicle speed and varying engine operations. This is accomplished by electrical signals transmitted by the revolution sensor and the ECM (throttle opening). This results in improved acceleration performance and fuel economy.

Control of Shift Solenoid Valves A and B

The shift solenoid valve performs simple ON-OFF operation. When set to ON, the drain circuit closes and pilot pressure is applied to the shift valve.
The TCM activates shift solenoid valves A and B according to signals from the ECM (throttle opening) and revolution sensor to select the optimum gear position on the basis of the shift schedule memorized in the TCM.

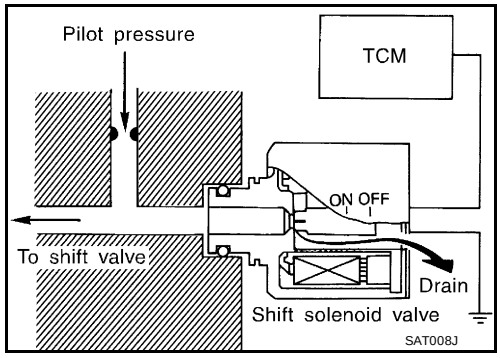

Relation between shift solenoid valves A and B and gear positions

Shift solenoid valve	Gear position				
	D_1 , 2_1 , 1_1	D_2 , 2_2 , 1_2	D_3 , 3_3	D_4 (O/D)	N-P
A	ON (Closed)	OFF (Open)	OFF (Open)	ON (Closed)	ON (Closed)
B	ON (Closed)	ON (Closed)	OFF (Open)	OFF (Open)	ON (Closed)

Control of Shift Valves A and B

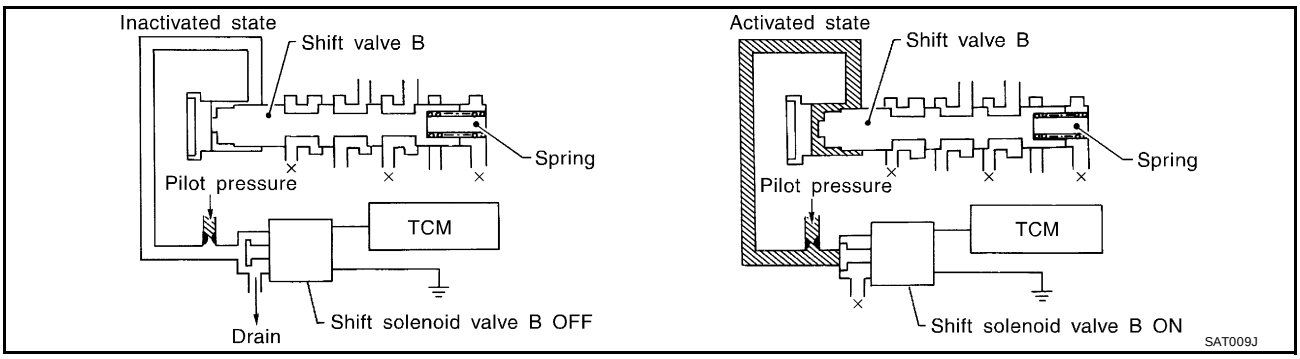

Pilot pressure generated by the operation of shift solenoid valves A and B is applied to the end face of shift valves A and B.
The drawing above shows the operation of shift valve B. When the shift solenoid valve is ON, pilot pressure applied to the end face of the shift valve overcomes spring force, moving the valve upward.

LOCK-UP CONTROL

The torque converter clutch piston in the torque converter is locked to eliminate torque converter slip to increase power transmission efficiency. The solenoid valve is controlled by an ON-OFF duty signal sent from the TCM. The signal is converted to an oil pressure signal which controls the lock-up piston.

Conditions for Lock-up Operation

When vehicle is driven in 4th gear position, vehicle speed and throttle opening are detected. If the detected values fall within the lock-up zone memorized in the TCM, lock-up is performed.

Selector lever	D position	3 position
Gear position	D_4	3
Vehicle speed sensor	More than set value	
ECM (throttle opening)	Less than set opening	
A/T fluid temperature sensor	More than 40°C (104°F)	

Torque Converter Clutch Solenoid Valve Control

The torque converter clutch solenoid valve is controlled by the TCM. The plunger closes the drain circuit during the OFF period, and opens the circuit during the ON period. If the percentage of OFF-time increases in one cycle, the pilot pressure drain time is reduced and pilot pressure remains high.

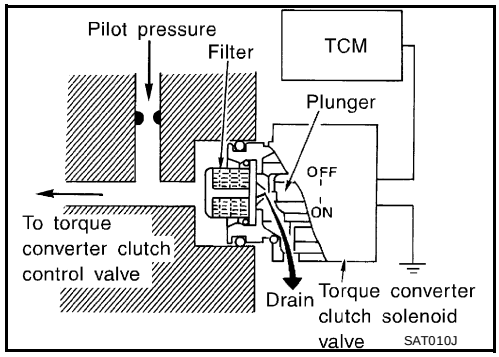

The torque converter clutch piston is designed to slip to adjust the ratio of ON-OFF, thereby reducing lock-up shock.
OFF-time INCREASING
↓
Amount of drain DECREASING
↓
Pilot pressure HIGH
↓
Lock-up RELEASING

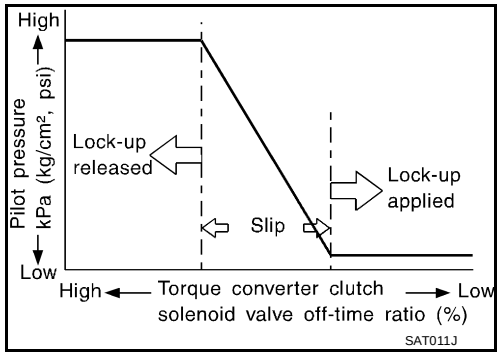

Torque Converter Clutch Control Valve Operation

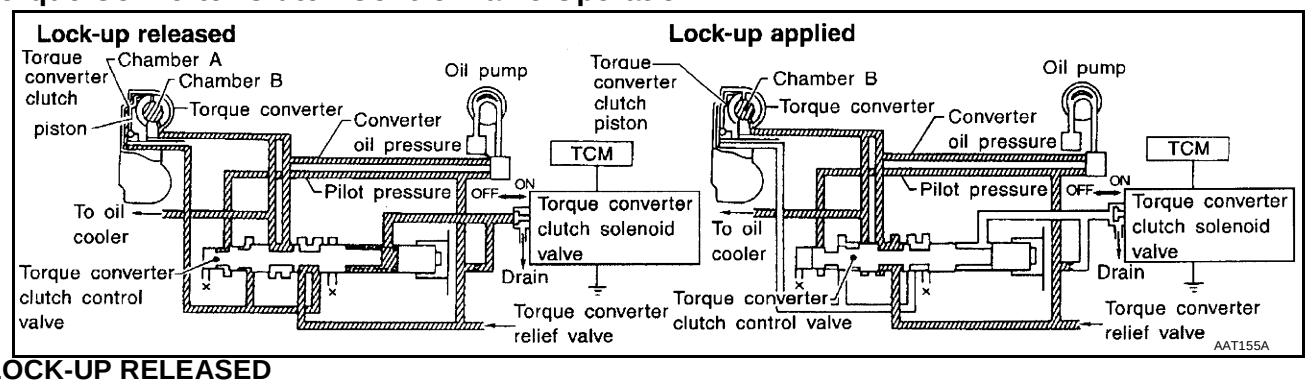

LOCK-UP RELEASED

The OFF-duration of the torque converter clutch solenoid valve is long, and pilot pressure is high. The pilot pressure pushes the end face of the torque converter clutch control valve in combination with spring force to move the valve to the left. As a result, converter pressure is applied to chamber A (torque converter clutch piston release side). Accordingly, the torque converter clutch piston remains unlocked.

LOCK-UP APPLIED

When the OFF-duration of the torque converter clutch solenoid valve is short, pilot pressure drains and becomes low. Accordingly, the control valve moves to the right by the pilot pressure of the other circuit and converter pressure. As a result, converter pressure is applied to chamber B, keeping the torque converter clutch piston applied.
Also smooth lock-up is provided by transient application and release of the lock-up.

OVERRUN CLUTCH CONTROL (ENGINE BRAKE CONTROL)

Forward one-way clutch is used to reduce shifting shocks in downshifting operations. This clutch transmits engine torque to the wheels. However, drive force from the wheels is not transmitted to the engine because the one-way clutch rotates idle. This means the engine brake is not effective.
The overrun clutch operates when the engine brake is needed.

Overrun Clutch Operating Conditions

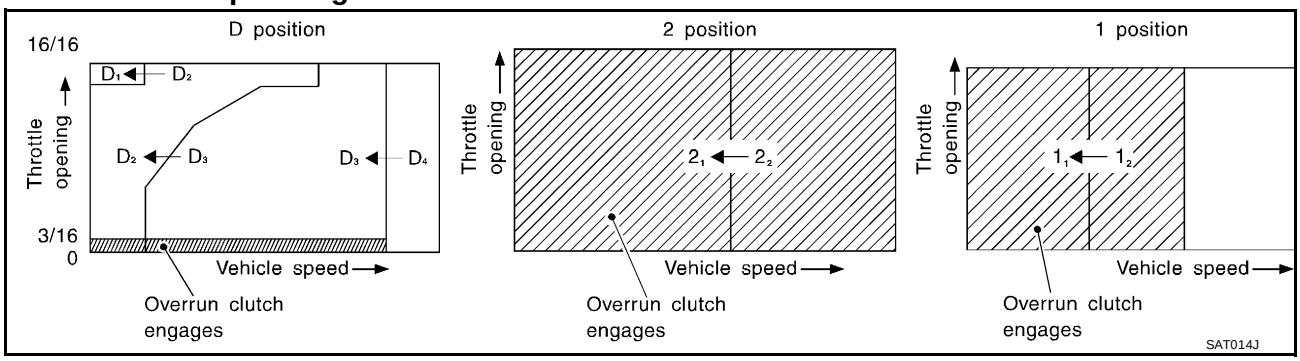

Selector lever position	Gear position	Throttle opening
D	D_1 , D_2 , D_3	Less than 3/16
2	2_1 , 2_2	
1	1_1 , 1_2	At any position

Overrun Clutch Solenoid Valve Control

The overrun clutch solenoid valve is operated by an ON-OFF signal transmitted by the TCM to provide overrun clutch control (engine brake control).
When this solenoid valve is ON, the pilot pressure drain port closes. When it is OFF, the drain port opens.
During the solenoid valve ON pilot pressure is applied to the end face of the overrun clutch control valve.

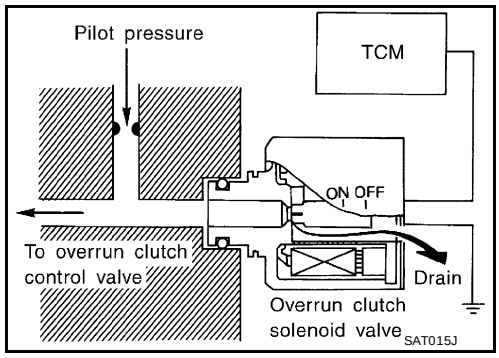

Overrun Clutch Control Valve Operation

When the solenoid valve is ON, pilot pressure is applied to the overrun clutch control valve. This pushes up the overrun clutch control valve. The line pressure is then shut off so that the clutch does not engage.
When the solenoid valve is OFF, pilot pressure is not generated. At this point, the overrun clutch control valve moves downward by spring force. As a result, overrun clutch operation pressure is provided by the overrun clutch reducing valve. This causes the overrun clutch to engage.
In the 1 position, the overrun clutch control valve remains pushed down so that the overrun clutch is engaged at all times.

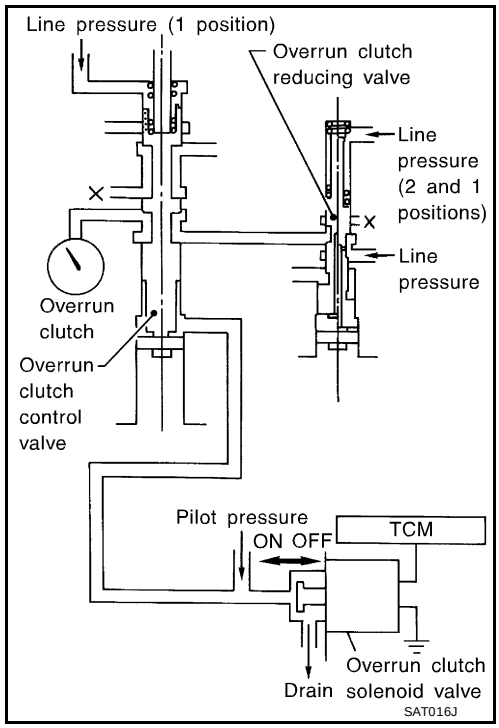

Control Valve

ECS004R2

FUNCTION OF CONTROL VALVES

Valve name	Function
Pressure regulator valve, plug and sleeve plug	Regulates oil discharged from the oil pump to provide optimum line pressure for all driving conditions.
Pressure modifier valve and sleeve	Used as a signal supplementary valve to the pressure regulator valve. Regulates pressure-modifier pressure (signal pressure) which controls optimum line pressure for all driving conditions.
Pilot valve	Regulates line pressure to maintain a constant pilot pressure level which controls lock-up mechanism, overrun clutch, shift timing.
Accumulator control valve	Regulates accumulator back-pressure to pressure suited to driving conditions.
Manual valve	Directs line pressure to oil circuits corresponding to select positions. Hydraulic pressure drains when the shift lever is in Neutral.
Shift valve A	Simultaneously switches three oil circuits using output pressure of shift solenoid valve A to meet driving conditions (vehicle speed, throttle opening, etc.). Provides automatic downshifting and up-shifting (1st → 2nd → 3rd → 4th gears/4th → 3rd → 2nd → 1st gears) in combination with shift valve B.

Valve name	Function
Shift valve B	Simultaneously switches two oil circuits using output pressure of shift solenoid valve B in relation to driving conditions (vehicle speed, throttle opening, etc.). Provides automatic downshifting and up-shifting (1st → 2nd → 3rd → 4th gears/4th → 3rd → 2nd → 1st gears) in combination with shift valve A.
Overrun clutch control valve	Switches hydraulic circuits to prevent engagement of the overrun clutch simultaneously with application of the brake band in D_4 . (Interlocking occurs if the overrun clutch engages during D_4 .)
“1” reducing valve	Reduces low & reverse brake pressure to dampen engine-brake shock when down-shifting from the 1 position 1_2 to 1_1 .
Overrun clutch reducing valve	Reduces oil pressure directed to the overrun clutch and prevents engine-brake shock. In 1 and 2 positions, line pressure acts on the overrun clutch reducing valve to increase the pressure-regulating point, with resultant engine brake capability.
Torque converter relief valve	Prevents an excessive rise in torque converter pressure.
Torque converter clutch control valve, plug and sleeve	Activates or inactivates the lock-up function. Also provides smooth lock-up through transient application and release of the lock-up system.
1-2 accumulator valve and piston	Dampens the shock encountered when 2nd gear band servo contracts, and provides smooth shifting.
3-2 timing valve	Switches the pace that oil pressure is released depending on vehicle speed; maximizes the high clutch release timing, and allows for soft down shifting.
Shuttle valve	Determines if the overrun clutch solenoid valve should control the 3-2 timing valve or the overrun clutch control valve and switches between the two.
Cooler check valve	At low speeds and with a small load when little heat is generated, saves the volume of cooler flow, and stores the oil pressure for lock up.

ON BOARD DIAGNOSTIC SYSTEM DESCRIPTION

PFP:00000

Introduction

ECS004R3

The A/T system has two self-diagnostic systems.
The first is the emission-related on board diagnostic system (OBD-II) performed by the TCM (transmission control module) in combination with the ECM. The malfunction is indicated by the MIL (malfunction indicator lamp) and is stored as a DTC in the ECM memory but not the TCM memory.
The second is the TCM original self-diagnosis indicated by the A/T check (position) indicator lamp. The malfunction is stored in the TCM memory. The detected items are overlapped with OBD-II self-diagnostic items. For details, refer to AT-36, "OBD-II Function for A/T System" .

OBD-II Function for A/T System

ECS004R4

The ECM provides emission-related on board diagnostic (OBD-II) functions for the A/T system. One function is to receive a signal from the TCM used with OBD-related parts of the A/T system. The signal is sent to the ECM when a malfunction occurs in the corresponding OBD-related part. The other function is to indicate a diagnostic result by means of the MIL (malfunction indicator lamp) on the instrument panel. Sensors, switches and solenoid valves are used as sensing elements.
The MIL automatically illuminates in One or Two Trip Detection Logic when a malfunction is sensed in relation to A/T system parts.

One or Two Trip Detection Logic of OBD-II

ECS004R5

ONE TRIP DETECTION LOGIC

If a malfunction is sensed during the first test drive, the MIL will illuminate and the malfunction will be stored in the ECM memory as a DTC. The TCM is not provided with such a memory function.

TWO TRIP DETECTION LOGIC

When a malfunction is sensed during the first test drive, it is stored in the ECM memory as a 1st trip DTC (diagnostic trouble code) or 1st trip freeze frame data. At this point, the MIL will not illuminate. — First Trip
If the same malfunction as that experienced during the first test drive is sensed during the second test drive, the MIL will illuminate. — Second Trip
A/T-related parts for which the MIL illuminates during the first or second test drive are listed below.

Items	MIL	
	One trip detection	Two trip detection
Shift solenoid valve A — DTC: P0750	X	
Shift solenoid valve B — DTC: P0755	X	
Accelerator pedal position (APP) sensor — DTC: P1705	X	
Except above		X

The “trip” in the “One or Two Trip Detection Logic” means a driving mode in which self-diagnosis is performed during vehicle operation.

OBD-II Diagnostic Trouble Code (DTC)

ECS004R6

HOW TO READ DTC AND 1ST TRIP DTC

DTC and 1st trip DTC can be read by the following methods.

(With CONSULT-II or GST) CONSULT-II or GST (Generic Scan Tool) Examples: P0705, P0710, P0720, P0725, etc.
These DTCs are prescribed by SAE J2012.
(CONSULT-II also displays the malfunctioning component or system.)

- **1st trip DTC No. is the same as DTC No.**
- **Output of the diagnostic trouble code indicates that the indicated circuit has a malfunction. However, in case of the Mode II and GST they do not indicate whether the malfunction is still occurring or occurred in the past and returned to normal.**
  CONSULT-II can identify them as shown below. Therefore, using CONSULT-II (if available) is recommended.

A sample of CONSULT-II display for DTC and 1st trip DTC is shown in the following page. DTC or 1st trip DTC of a malfunction is displayed in “SELF DIAGNOSIS” mode for “ENGINE” with CONSULT-II. Time data indicates how many times the vehicle was driven after the last detection of a DTC.

SELECT SYSTEM
A/T
ENGINE

SAT014K

If the DTC is being detected currently, the time data will be “0”.

SELF-DIAG RESULTS	
DTC RESULTS	TIME
PNP SW/CIRC [P0705]	0

SAT015K

If a 1st trip DTC is stored in the ECM, the time data will be “1t”.

SELF-DIAG RESULTS	
DTC RESULTS	TIME
PNP SW/CIRC [P0705]	1 t

SAT016K

Freeze Frame Data and 1st Trip Freeze Frame Data

The ECM has a memory function, which stores the driving condition such as fuel system status, calculated load value, engine coolant temperature, short term fuel trim, long term fuel trim, engine speed and vehicle speed at the moment the ECM detects a malfunction.

Data which are stored in the ECM memory, along with the 1st trip DTC, are called 1st trip freeze frame data, and the data, stored together with the DTC data, are called freeze frame data and displayed on CONSULT-II or GST. The 1st trip freeze frame data can only be displayed on the CONSULT-II screen, not on the GST. For details, refer to EC-59, "FREEZE FRAME DATA AND 1ST TRIP FREEZE FRAME DATA" (with QR25DE) or EC-678, "FREEZE FRAME DATA AND 1ST TRIP FREEZE FRAME DATA" (with VQ35DE).

Only one set of freeze frame data (either 1st trip freeze frame data of freeze frame data) can be stored in the ECM. 1st trip freeze frame data is stored in the ECM memory along with the 1st trip DTC. There is no priority for 1st trip freeze frame data and it is updated each time a different 1st trip DTC is detected. However, once freeze frame data (2nd trip detection/MIL on) is stored in the ECM memory, 1st trip freeze frame data is no longer stored. Remember, only one set of freeze frame data can be stored in the ECM. The ECM has the following priorities to update the data.

Priority	Items	
1	Freeze frame data	Misfire — DTC: P0300 - P0306 Fuel Injection System Function — DTC: P0171, P0172, P0174, P0175
2		Except the above items (Includes A/T related items)
3	1st trip freeze frame data	

Both 1st trip freeze frame data and freeze frame data (along with the DTCs) are cleared when the ECM memory is erased.

HOW TO ERASE DTC

The diagnostic trouble code can be erased by CONSULT-II, GST or ECM DIAGNOSTIC TEST MODE as described following.

- **If the battery terminal is disconnected, the diagnostic trouble code will be lost within 24 hours.**
- **When you erase the DTC, using CONSULT-II or GST is easier and quicker than switching the mode selector on the ECM.**

The following emission-related diagnostic information is cleared from the ECM memory when erasing DTC related to OBD-II. For details, refer to EC-55, "Emission-related Diagnostic Information" (with QR25DE), or EC-674, "Emission-related Diagnostic Information" (with VQ35DE).

- **Diagnostic trouble codes (DTC)**
- **1st trip diagnostic trouble codes (1st trip DTC)**
- **Freeze frame data**
- **1st trip freeze frame data**
- **System readiness test (SRT) codes**
- **Test values**

HOW TO ERASE DTC (WITH CONSULT-II)

- **If a DTC is displayed for both ECM and TCM, it needs to be erased for both ECM and TCM.**

1. If the ignition switch stays ON after repair work, be sure to turn ignition switch OFF once. Wait at least 10 seconds and then turn it ON (engine stopped) again.
2. Turn CONSULT-II “ON” and touch “A/T”.
3. Touch “SELF-DIAG RESULTS”.
4. Touch “ERASE”. (The DTC in the TCM will be erased.) Then touch “BACK” twice.
5. Touch “ENGINE”.
6. Touch “SELF DIAGNOSIS”.

7. Touch “ERASE”. (The DTC in the ECM will be erased.)

How to erase DTC (With CONSULT-II)

1. If the ignition switch stays “ON” after repair work, be sure to turn ignition switch “OFF” once. Wait at least 10 seconds and then turn it “ON” (engine stopped) again.

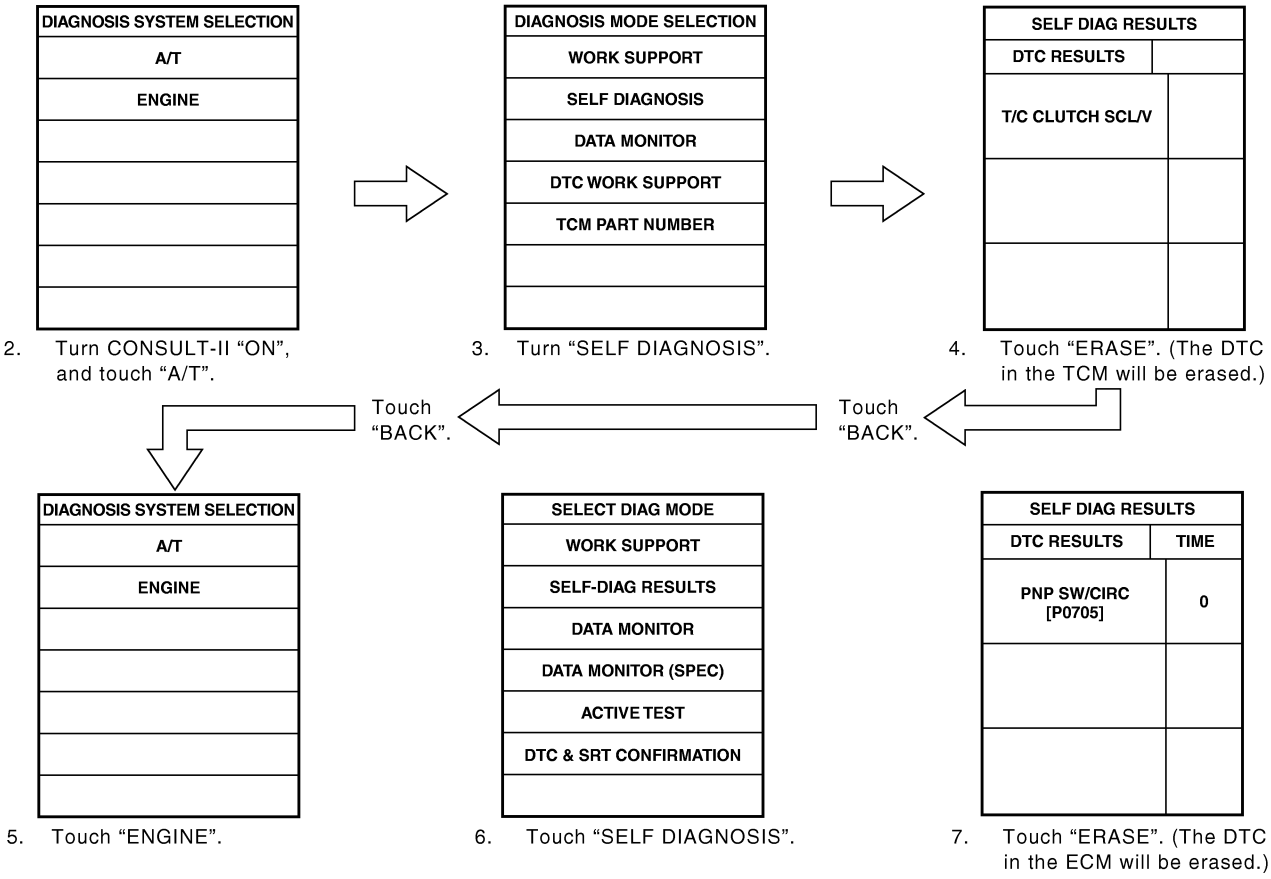

HOW TO ERASE DTC (WITH GST)

1. If the ignition switch stays ON after repair work, be sure to turn ignition switch OFF once. Wait at least 10 seconds and then turn it ON (engine stopped) again.
2. Perform “OBD-II SELF-DIAGNOSTIC PROCEDURE (No Tools)”. Refer to AT-50, "OBD-II SELF-DIAGNOSTIC PROCEDURE (NO TOOLS)" . (The engine warm-up step can be skipped when performing the diagnosis only to erase the DTC.)
3. Select Mode 4 with Generic Scan Tool (GST). For details, refer to EC-68, "How to Erase DTC (With GST)" (with QR25DE), or EC-688, "How to Erase DTC (With GST)" (with VQ35DE).

HOW TO ERASE DTC (NO TOOLS)

1. If the ignition switch stays ON after repair work, be sure to turn ignition switch OFF once. Wait at least 10 seconds and then turn it ON (engine stopped) again.
2. Perform “TCM SELF-DIAGNOSTIC PROCEDURE (NO TOOLS)”. Refer to AT-51, "TCM SELF-DIAGNOSTIC PROCEDURE (NO TOOLS)" . (The engine warm-up step can be skipped when performing the diagnosis only to erase the DTC.)

Malfunction Indicator Lamp (MIL)

ECS004R7

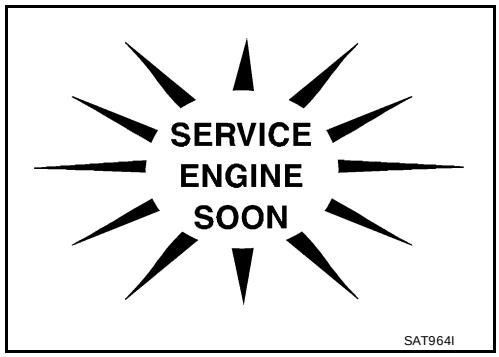

1. The malfunction indicator lamp will light up when the ignition switch is turned ON without the engine running. This is for checking the lamp.
   - If the malfunction indicator lamp does not light up, refer to DI-22, "WARNING LAMPS" .
     [Or see EC-69, "Malfunction Indicator Lamp (MIL)" (with QR25DE), or EC-689, "Malfunction Indicator Lamp (MIL)" (with VQ35DE).]
2. When the engine is started, the malfunction indicator lamp should go off.
   If the lamp remains on, the on board diagnostic system has detected an emission-related (OBD-II) malfunction. For details, refer to EC-55, "Emission-related Diagnostic Information" (with QR25DE), or EC-674, "Emission-related Diagnostic Information" (with VQ35DE).

CONSULT-II

ECS004R8

After performing “SELF-DIAGNOSTIC PROCEDURE (WITH CONSULT-II)” (AT-40, "SELF-DIAGNOSTIC PROCEDURE (WITH CONSULT-II)"), place check marks for results on the “Diagnostic Worksheet”, AT-56, "DIAGNOSTIC WORKSHEET" . Reference pages are provide following the items.

NOTICE:

1. The CONSULT-II electrically displays shift timing and lock-up timing (that is, operation timing of each solenoid).
   Check for time difference between actual shift timing and the CONSULT-II display. If the difference is noticeable, mechanical parts (except solenoids, sensors, etc.) may be malfunctioning. Check mechanical parts using applicable diagnostic procedures.
2. Shift schedule (which implies gear position) displayed on CONSULT-II and that indicated in Service Manual may differ slightly. This occurs because of the following reasons:
   - Actual shift schedule has more or less tolerance or allowance,
   - Shift schedule indicated in Service Manual refers to the point where shifts start, and
   - Gear position displayed on CONSULT-II indicates the point where shifts are completed.
3. Shift solenoid valve “A” or “B” is displayed on CONSULT-II at the start of shifting. Gear position is displayed upon completion of shifting (which is computed by TCM).
4. Additional CONSULT-II information can be found in the Operation Manual supplied with the CONSULT-II unit.

SELF-DIAGNOSTIC PROCEDURE (WITH CONSULT-II)

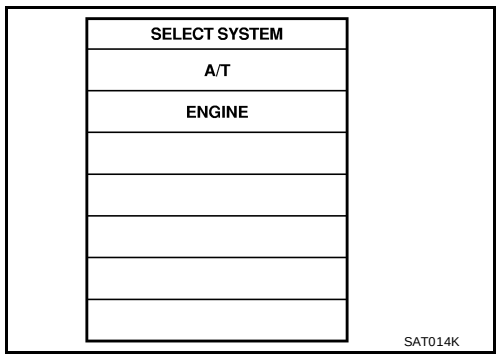

1. Turn on CONSULT-II and touch “ENGINE” for OBD-II detected items or touch “A/T” for TCM self-diagnosis.
   If A/T is not displayed, check TCM power supply and ground circuit. Refer to AT-100, "TROUBLE DIAGNOSIS FOR POWER SUPPLY" . If result is NG, refer to PG-3, "POWER SUPPLY ROUTING CIRCUIT" .

2. Touch “SELF DIAGNOSIS”.
   Display shows malfunction experienced since the last erasing operation.
   CONSULT-II performs “Real Time Diagnosis”.
   Also, any malfunction detected while in this mode will be displayed at real time.

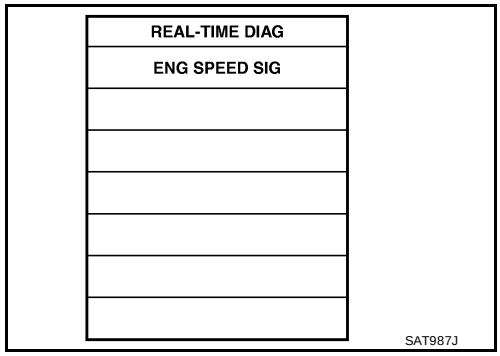

SELF-DIAGNOSTIC RESULT TEST MODE

Detected items (Screen terms for CONSULT-II, “SELF DIAGNOSIS” test mode)		Malfunction is detected when...	TCM self-diagnosis	OBD-II (DTC)
“A/T”	“ENGINE”		Available by A/T check (position) indicator lamp or “A/T” on CONSULT-II	Available by malfunction indicator lamp*2, SERVICE ENGINE SOON “ENGINE” on CONSULT-II or GST
Park/neutral position (PNP) switch circuit		● TCM does not receive the correct voltage signal (based on the gear position) from the switch.	—	P0705
—	PNP SW/CIRC			
Revolution sensor		● TCM does not receive the proper voltage signal from the sensor.	X	P0720
VHCL SPEED SEN·A/T	VEH SPD SEN/ CIR AT			
Vehicle speed sensor (Meter)		● TCM does not receive the proper voltage signal from the sensor.	X	—
VHCL SPEED SEN·MTR	—			
A/T 1st gear function		● A/T cannot be shifted to the 1st gear position even if electrical circuit is good.	—	P0731*1
—	A/T 1ST GR FNCTN			
A/T 2nd gear function		● A/T cannot be shifted to the 2nd gear position even if electrical circuit is good.	—	P0732*1
—	A/T 2ND GR FNCTN			
A/T 3rd gear function		● A/T cannot be shifted to the 3rd gear position even if electrical circuit is good.	—	P0733*1
—	A/T 3RD GR FNCTN			
A/T 4th gear function		● A/T cannot be shifted to the 4th gear position even if electrical circuit is good.	—	P0734*1
—	A/T 4TH GR FNCTN			
A/T TCC S/V function (lock-up)		● A/T cannot perform lock-up even if electrical circuit is good.	—	P0744*1
—	A/T TCC S/V FNCTN			
Shift solenoid valve A		● TCM detects an improper voltage drop when it tries to operate the solenoid valve.	X	P0750
SHIFT SOLENOID/V A	SFT SOL A/CIRC			
Shift solenoid valve B		● TCM detects an improper voltage drop when it tries to operate the solenoid valve.	X	P0755
SHIFT SOLENOID/V B	SFT SOL B/CIRC			
Overrun clutch solenoid valve		● TCM detects an improper voltage drop when it tries to operate the solenoid valve.	X	P1760
OVERRUN CLUTCH S/V	O/R CLUCH SOL/ CIRC			
T/C clutch solenoid valve		● TCM detects an improper voltage drop when it tries to operate the solenoid valve.	X	P0740
T/C CLUTCH SOL/V	TCC SOLENOID/ CIRC			

Detected items (Screen terms for CONSULT-II, “SELF DIAGNOSIS” test mode)		Malfunction is detected when...	TCM self-diagnosis	OBD-II (DTC)
“A/T”	“ENGINE”		Available by A/T check (position) indicator lamp or “A/T” on CONSULT-II	Available by malfunction indicator lamp*2, SERVICE ENGINE SOON “ENGINE” on CONSULT-II or GST
Line pressure solenoid valve		● TCM detects an improper voltage drop when it tries to operate the solenoid valve.	X	P0745
LINE PRESSURE S/V	L/PRESS SOL/ CIRC			
Throttle position sensor [accelerator pedal position (APP) sensor]		● TCM receives an excessively low or high voltage from this sensor	X	P1705
THROTTLE POSI SEN TP/SEN/CIRC A/T				
Engine speed signal		● TCM does not receive the proper voltage signal from the ECM.	X	P0725
ENGINE SPEED SIG				
A/T fluid temperature sensor		● TCM receives an excessively low or high voltage from the sensor.	X	P0710
BATT/FLUID TEMP SEN	ATF TEMP SEN/ CIRC			
Engine control		● The ECM-A/T communication line is open or shorted.	X	U1000
A/T COMM LINE	—			
Turbine revolution sensor		● TCM does not receive proper voltage signal from sensor	X	—
TURBINE REV				
TCM (RAM)		● TCM memory (RAM) is malfunctioning	—	—
CONTROL UNIT (RAM)	—			
TCM (ROM)		● TCM memory (ROM) is malfunctioning	—	—
CONTROL UNIT (ROM)	—			
TCM (EEP ROM)		● TCM memory (EEP ROM) is malfunctioning.	—	—
CONT UNIT(EEP ROM)	—			
Initial start		● This is not a malfunction message (Whenever shutting off a power supply to the TCM, this message appears on the screen.)	X	—
INITIAL START	—			
No failure (NO SELF DIAGNOSTIC FAILURE INDICATED FURTHER TESTING MAY BE REQUIRED**)		● No failure has been detected.	X	X

X: Applicable
–: Not applicable

*1: These malfunctions cannot be displayed by MIL SERVICE ENGINE SOON if another malfunction is assigned to MIL.
*2: Refer to EC-69, "Malfunction Indicator Lamp (MIL)" (with QR25DE), or EC-689, "Malfunction Indicator Lamp (MIL)" (with VQ35DE).

DATA MONITOR MODE (A/T)

Item	Display	Monitor item				Description	Remarks
		TCM Input signals	CAN Comm. signals	Main signals	Selection from menu		
Vehicle speed sensor 1 (A/T) (Revolution sensor)	VHCL/S SE·A/T [km/h] or [mph]	X	—	—	▼	● Vehicle speed computed from signal of revolution sensor is displayed.	● When racing engine in N or P with vehicle stationary, CONSULT-II data may not indicate 0 km/h (0 mph).
Vehicle speed sensor 2 (Meter)	VHCL/S SE·MTR [km/h] or [mph]	X	—	—	▼	● Vehicle speed computed from signal of vehicle speed sensor is displayed.	● Vehicle speed display may not be accurate under approx. 10 km/h (6 mph). It may not indicate 0 km/h (0 mph) when vehicle is stationary.
Throttle position sensor [accelerator pedal position (APP) sensor]	THRTL POS SEN [V]	X	—	—	▼	● Throttle position sensor signal voltage is displayed	
A/T fluid temperature sensor	FLUID TEMP SE [V]	X	—	—	▼	● A/T fluid temperature sensor signal voltage is displayed. ● Signal voltage lowers as fluid temperature rises.	
Battery voltage	BATTERY VOLT [V]	X	—	—	▼	● Source voltage of TCM is displayed.	
Engine speed	ENGINE SPEED [rpm]	X	—	X	▼	● Engine speed, computed from engine speed signal, is displayed.	● Engine speed display may not be accurate under approx. 800 rpm. It may not indicate 0 rpm even when engine is not running.
Turbine revolution sensor	TURBINE REV	X	—	—	▼	● Checks changing speed then performs oil pressure control and torque down control	
Overdrive control switch	OVERDRIVE SW [ON/OFF]	X	—	—	▼	● ON/OFF state computed from signal of 3 position switch is displayed.	
PN position (PNP) switch	PN POSI SW [ON/OFF]	X	—	—	▼	● ON/OFF state computed from signal of PN position SW is displayed.	
R position switch	R POSITION SW [ON/OFF]	X	—	—	▼	● ON/OFF state computed from signal of R position SW is displayed.	

Item	Display	Monitor item				Description	Remarks
		TCM Input signals	CAN Comm. signals	Main signals	Selection from menu		
D position switch	D POSITION SW [ON/OFF]	X	—	—	▼	● ON/OFF state computed from signal of D position SW is displayed.	
2 position switch	2 POSITION SW [ON/OFF]	X	—	—	▼	● ON/OFF status, computed from signal of 2 position SW, is displayed.	
1 position switch	1 POSITION SW [ON/OFF]	X	—	—	▼	● ON/OFF status, computed from signal of 1 position SW, is displayed.	
ASCD cruise signal	ASCD·CRUISE [ON/OFF]	X	—	—	▼	● Status of ASCD cruise signal is displayed. ON ... Cruising state OFF ... Normal running state	
ASCD OD cut signal	ASCD·OD CUT [ON/OFF]	X	—	—	▼	● Status of ASCD OD release signal is displayed. ON ... OD released OFF ... OD not released	
Kickdown switch	KICKDOWN SW [ON/OFF]	X	—	—	▼	● ON/OFF status, computed from signal of kickdown SW, is displayed.	● This is displayed even when no kickdown switch is equipped.
Stop lamp switch	BRAKE SW [ON/OFF]	X	—	—	—	● ON/OFF status is displayed. ON ... Brake pedal is depressed. OFF ... Brake pedal is released.	
Selector lever position	SLCT LVR POSI	—	—	X	▼	● Selector lever position data, used for computation by TCM, is displayed.	● A specific value used for control is displayed if fail-safe is activated due to error.
Vehicle speed	VEHICLE SPEED [km/h] or [mph]	—	—	X	▼	● Vehicle speed data, used for computation by TCM, is displayed.	
Throttle position [Accelerator pedal position (APP) sensor]	THROTTLE POSI [/8]	—	—	X	—	● Throttle position data, used for computation by TCM, is displayed.	● A specific value used for control is displayed if fail-safe is activated due to error.
Gear position	GEAR	—	—	X	▼	● Gear position data used for computation by TCM, is displayed.	

Item	Display	Monitor item				Description	Remarks
		TCM Input signals	CAN Comm. signals	Main signals	Selection from menu		
Line pressure duty	LINE PRES DTY [%]	—	—	X	—	● Control value of line pressure solenoid valve, computed by TCM from each input signal, is displayed.	
Torque converter clutch solenoid valve duty	TCC S/V DUTY [%]	—	—	X	—	● Control value of torque converter clutch solenoid valve, computed by TCM from each input signal, is displayed.	
Shift solenoid valve A	SHIFT S/V A [ON/OFF]	—	—	X	—	● Control value of shift solenoid valve A, computed by TCM from each input signal, is displayed.	● Control value of solenoid is displayed even if solenoid circuit is disconnected. The OFF signal is displayed if solenoid circuit is shorted.
Shift solenoid valve B	SHIFT S/V B [ON/OFF]	—	—	X	—	● Control value of shift solenoid valve B, computed by TCM from each input signal, is displayed.	
Overrun clutch solenoid valve	OVERRUN/C S/V [ON/OFF]	—	—	X	▼	● Control value of overrun clutch solenoid valve computed by TCM from each input signal is displayed.	
Self-diagnosis display lamp [A/T check (position) indicator lamp]	SELF-D DP LMP [ON/OFF]	—	—	X	▼	● Control status of A/T check (position) indicator lamp is displayed.	
Torque converter slip ratio	TC SLIP RATIO [0.000]	—	—	—	▼	● Ratio of engine revolution to input shaft revolution of torque converter.	
Torque converter slip speed	TC SLIP SPEED [rpm]	—	—	—	▼	● Difference in revolution between input shaft revolution and torque converter input shaft revolution.	● Display does not indicate engine is stopped even if 0 rpm — this is not a malfunction.
Voltage [V]		—	—	—	▼	● Value measured by voltage probe is displayed.	
Frequency [Hz]		—	—	—	▼	● Value measured by pulse probe is displayed. If measurement is impossible, "#" sign is displayed. "#" sign is also displayed at the final data value until the measurement result is obtained.	

Item	Display	Monitor item				Description	Remarks
		TCM Input signals	CAN Comm. signals	Main signals	Selec-tion from menu		
DUTY-HI		—	—	—	▼	● Duty cycle value for measurement probe is displayed.	
DUTY-LOW		—	—	—	▼		
PLS WIDTH-HI		—	—	—	▼	● Measured pulse width of measure-ment probe is dis-played.	
PLS WIDTH-LOW		—	—	—	▼		
CAN communication	CAN COMM [OK/UNKWN]	—	X	—	▼		
CAN circuit 1	CAN CIRC 1 [OK/UNKWN]	—	X	—	▼		
CAN circuit 2	CAN CIRC 2 [OK/UNKWN]	—	X	—	▼		
CAN circuit 3	CAN CIRC 3 [OK/UNKWN]	—	X	—	▼		
CAN circuit 4	CAN CIRC 4 [OK/UNKWN]	—	X	—	▼		
CAN circuit 5	CAN CIRC 5 [OK/UNKWN]	—	X	—	▼		

X: Applicable
—: Not applicable
▼: Option

DTC WORK SUPPORT MODE WITH CONSULT-II

CONSULT-II Setting Procedure

1. Turn ignition switch OFF.
2. Connect CONSULT-II to Data link connector, which is located in left side dash panel.

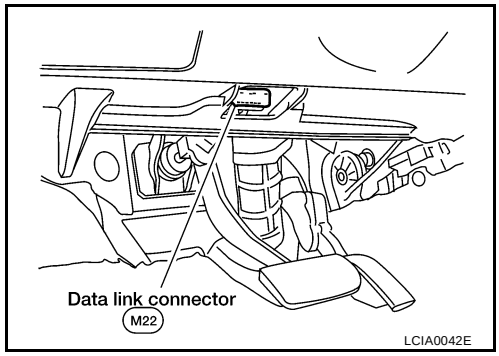

3. Turn ignition switch ON.
4. Touch “START”.

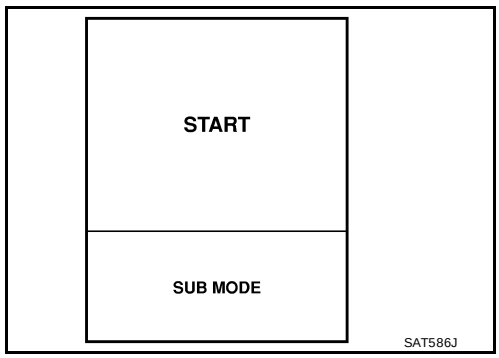

5. Touch “A/T”.

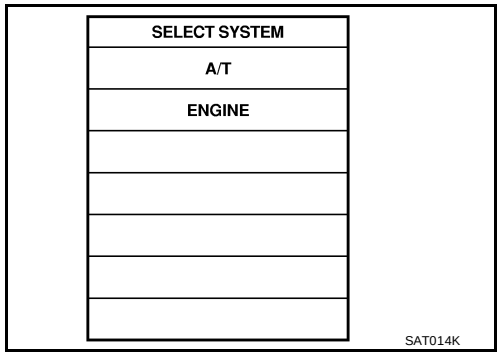

6. Touch “DTC WORK SUPPORT”.

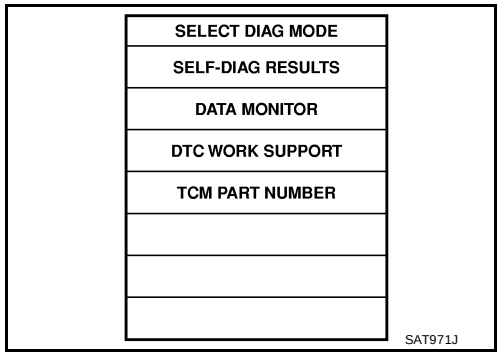

7. Touch select item menu (1ST, 2ND, etc.).

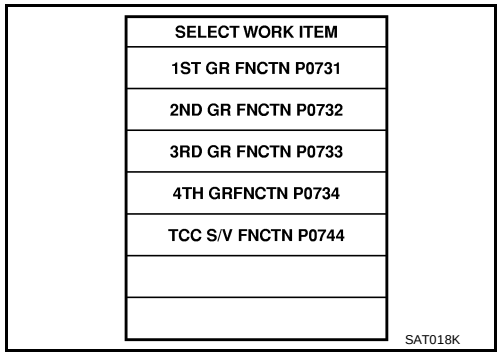

8. Touch “START”.

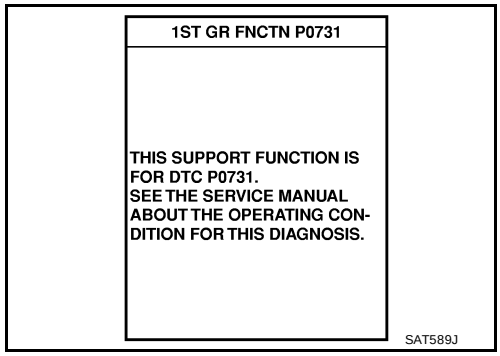

9. Perform driving test according to “DTC CONFIRMATION PROCEDURE” in “TROUBLE DIAGNOSIS FOR DTC”.

1ST GR FNCTN P0731	
OUT OF CONDTION	
MONITOR	
GEAR	XXX
VEHICLE SPEED	XXXkm/h
THROTTLE POSI	XXX
TCC S/V DUTY	XXX %

SAT019K

- **When testing conditions are satisfied, CONSULT-II screen changes from “OUT OF CONDITION” to “TESTING”.**

1ST GR FNCTN P0731	
TESTING	
MONITOR	
GEAR	XXX
VEHICLE SPEED	XXXkm/h
THROTTLE POSI	XXX
TCC S/V DUTY	XXX %

SAT591J

10. Stop vehicle. If “NG” appears on the screen, malfunction may exist. Go to “DIAGNOSTIC PROCEDURE”.

1ST GR FNCTN P0731
STOP VEHICLE

SAT592J

1ST GR FNCTN P0731
NG

SAT593J

11. Perform test drive to check gear shift feeling in accordance with instructions displayed.

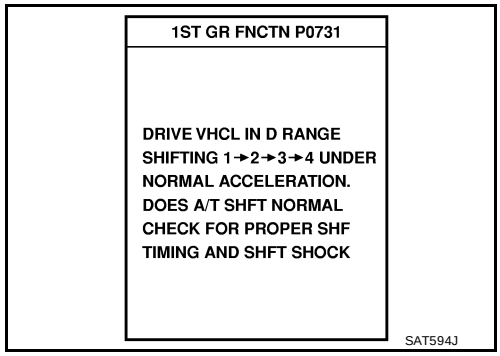

12. Touch “YES” or “NO”.

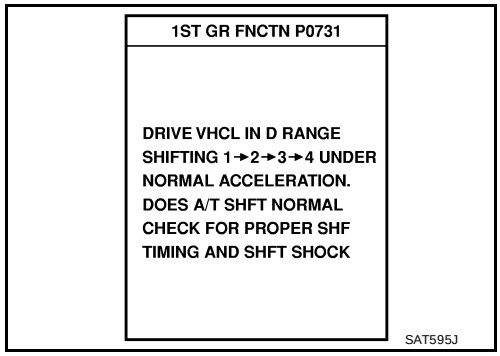

13. CONSULT-II procedure ended.

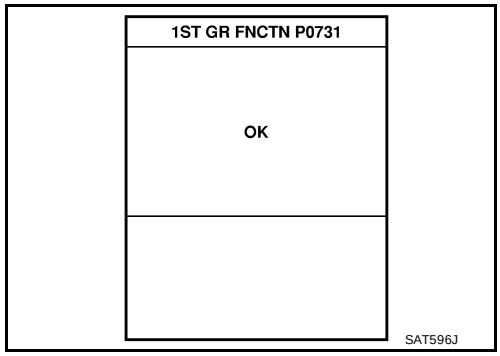

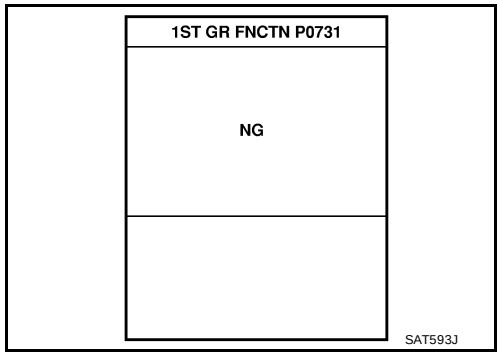

If “NG” appears on the screen, a malfunction may exist. Go to “DIAGNOSTIC PROCEDURE”.

DTC WORK SUPPORT MODE

DTC work support item	Description	Check item
1ST GR FNCTN P0731	Following items for “A/T 1st gear function (P0731)” can be confirmed. ● Self-diagnosis status (whether the diagnosis is being conducted or not) ● Self-diagnosis result (OK or NG)	● Shift solenoid valve A ● Shift solenoid valve B ● Each clutch ● Hydraulic control circuit
2ND GR FNCTN P0732	Following items for “A/T 2nd gear function (P0732)” can be confirmed. ● Self-diagnosis status (whether the diagnosis is being conducted or not) ● Self-diagnosis result (OK or NG)	● Shift solenoid valve B ● Each clutch ● Hydraulic control circuit
3RD GR FNCTN P0733	Following items for “A/T 3rd gear function (P0733)” can be confirmed. ● Self-diagnosis status (whether the diagnosis is being conducted or not) ● Self-diagnosis result (OK or NG)	● Shift solenoid valve A ● Each clutch ● Hydraulic control circuit
4TH GR FNCTN P0734	Following items for “A/T 4th gear function (P0734)” can be confirmed. ● Self-diagnosis status (whether the diagnosis is being conducted or not) ● Self-diagnosis result (OK or NG)	● Shift solenoid valve A ● Shift solenoid valve B ● Overrun clutch solenoid valve ● Line pressure solenoid valve ● Each clutch ● Hydraulic control circuit
TCC S/V FNCTN P0744	Following items for “A/T TCC S/V function (lock-up) (P0744)” can be confirmed. ● Self-diagnosis status (whether the diagnosis is being conducted or not) ● Self-diagnosis result (OK or NG)	● Torque converter clutch solenoid valve ● Each clutch ● Hydraulic control circuit

Diagnostic Procedure Without CONSULT-II

ECS004R9

OBD-II SELF-DIAGNOSTIC PROCEDURE (WITH GST)

Refer to EC-119, "Generic Scan Tool (GST) Function" (with QR25DE), or EC-743, "Generic Scan Tool (GST) Function" (with VQ35DE).

OBD-II SELF-DIAGNOSTIC PROCEDURE (NO TOOLS)

Refer to EC-69, "Malfunction Indicator Lamp (MIL)" (with QR25DE), or EC-689, "Malfunction Indicator Lamp (MIL)" (with VQ35DE).

TCM SELF-DIAGNOSTIC PROCEDURE (NO TOOLS)

1. CHECK A/T CHECK (POSITION) INDICATOR LAMP

1. Move selector lever to P position.
   Start engine and warm it up to normal engine operating temperature.
2. Turn ignition switch to OFF position.
3. Wait 5 seconds.
4. Turn ignition switch to ON position.
   (Do not start engine.)

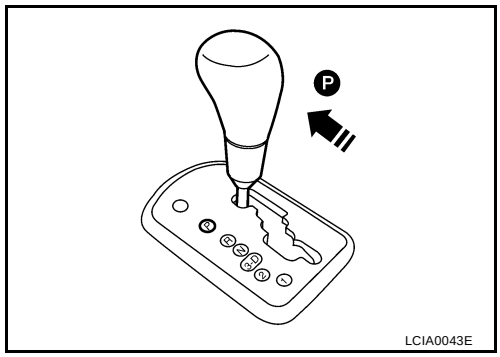

5. Does A/T check (position) indicator lamp come on for about 2 seconds?

Yes or No

Yes >> GO TO 2.
No >> Stop procedure. Perform AT-213, "1. A/T Check (Position) Indicator Lamp Does Not Come On" before proceeding.

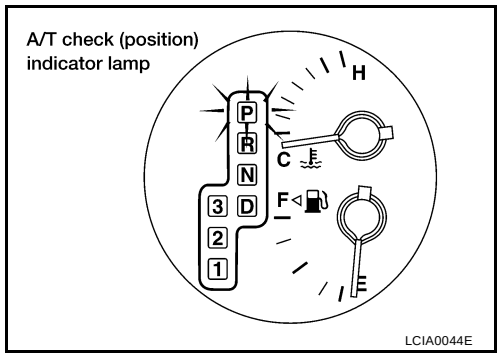

2. JUDGEMENT PROCEDURE STEP 1

1. Turn ignition switch to OFF position.
2. Turn ignition switch to ON position.
   (Do not start engine.)
3. Depress the brake pedal, then move gear selector lever from P to D position.
4. Wait 3 seconds.

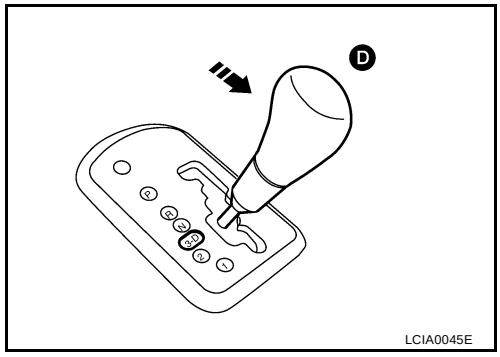

5. Move selector lever to 2 position.
6. Release brake pedal.

>> GO TO 3.

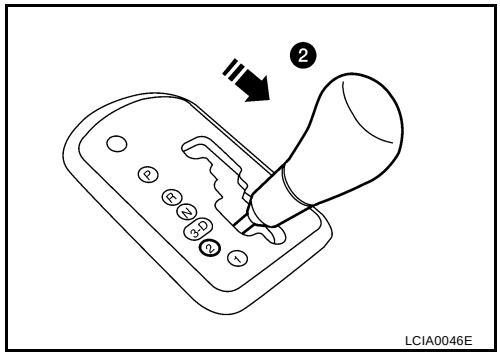

3. JUDGEMENT PROCEDURE STEP 2

1. Move selector lever to 1 position.
2. Depress brake pedal.
3. Depress accelerator pedal fully and release it.
4. The A/T check (position) indicator lamp will begin to flash.

>> GO TO 4.

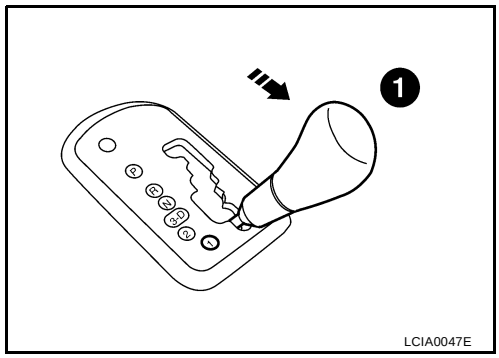

4. CHECK SELF-DIAGNOSTIC CODE

Check A/T check (position) indicator lamp.
Refer to AT-52, "JUDGEMENT OF SELF-DIAGNOSIS CODE" .

>> **DIAGNOSIS END**

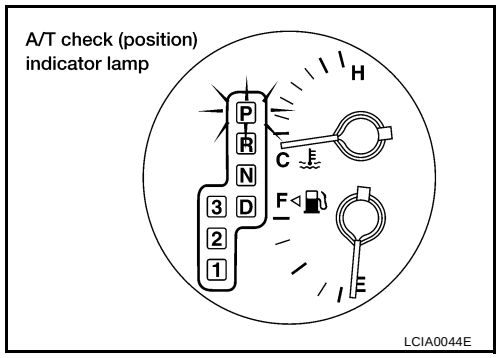

JUDGEMENT OF SELF-DIAGNOSIS CODE

A/T check (position) indicator lamp:	
All judgement flickers are the same. 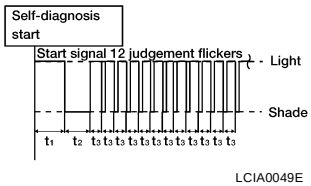 All circuits that can be confirmed by self-diagnosis are OK.	1st judgement flicker is longer than others. 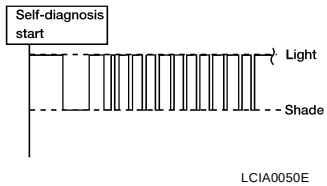 Revolution sensor circuit is short-circuited or disconnected. ⇒ **Go to** **AT-115, "DTC P0720 VEHICLE SPEED SENSOR·A/T (REVOLUTION SENSOR)"** .
2nd judgement flicker is longer than others. Vehicle speed sensor circuit is short-circuited or disconnected. ⇒ **Go to** **AT-196, "DTC VEHICLE SPEED SENSOR MTR"** .	3rd judgement flicker is longer than others. 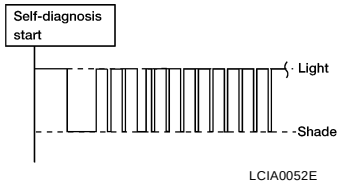 Throttle position sensor circuit is short-circuited or disconnected. ⇒ **Go to** **AT-175, "DTC P1705 THROTTLE POSITION SENSOR [ACCELERATOR PEDAL POSITION (APP) SENSOR]"**.

A/T check (position) indicator lamp:	
4th judgement flicker is longer than others. 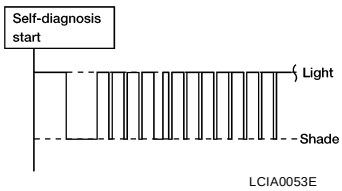 LCIA0053E Shift solenoid valve A circuit is short-circuited or disconnected. ⇒ **Go to** AT-165, "DTC P0750 SHIFT SOLENOID VALVE A" **.**	5th judgement flicker is longer than others. 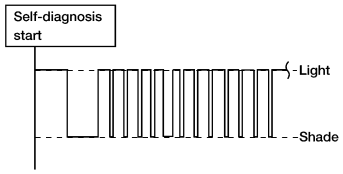 LCIA0054E Shift solenoid valve B circuit is short-circuited or disconnected. ⇒ **Go to** AT-170, "DTC P0755 SHIFT SOLENOID VALVE B" **.**
6th judgement flicker is longer than others. 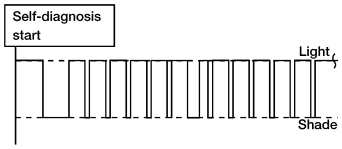 LCIA0055E Overrun clutch solenoid valve circuit is short-circuited or disconnected. ⇒ **Go to** AT-180, "DTC P1760 OVERRUN CLUTCH SOLENOID VALVE" **.**	7th judgement flicker is longer than others. 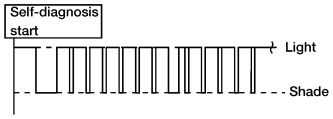 LCIA0056E Torque converter clutch solenoid valve circuit is short-circuited or disconnected. ⇒ **Go to** AT-146, "DTC P0740 TORQUE CONVERTER CLUTCH SOLENOID VALVE" **.**
8th judgement flicker is longer than others. 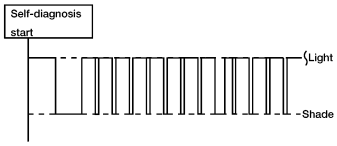 LCIA0057E A/T fluid temperature sensor is disconnected or TCM power source circuit is damaged. ⇒ **Go to** AT-109, "DTC P0710 A/T FLUID TEMPERATURE SENSOR CIRCUIT" **.**	9th judgement flicker is longer than others. 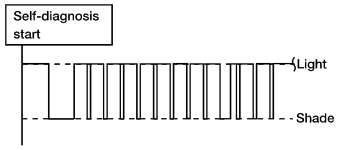 LCIA0058E Engine speed signal circuit is short-circuited or disconnected. ⇒ **Go to** AT-120, "DTC P0725 ENGINE SPEED SIGNAL" **.**
10th judgement flicker is longer than others. 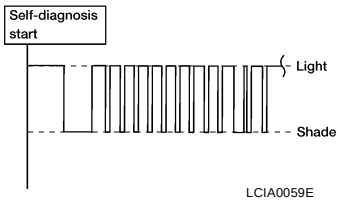 LCIA0059E Turbine revolution sensor circuit is short-circuited or disconnected. ⇒ **Go to** AT-200, "DTC TURBINE REVOLUTION SENSOR" **.**	11th judgement flicker is longer than others. LCIA0060E Line pressure solenoid valve circuit is short-circuited or disconnected. ⇒ **Go to** AT-159, "DTC P0745 LINE PRESSURE SOLENOID VALVE" **.**

A/T check (position) indicator lamp:	
12th judgement flicker is longer than others. 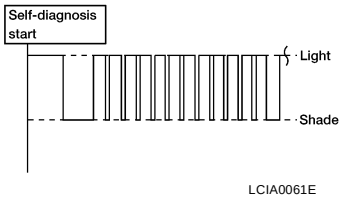 The ECM-A/T communication line is open or shorted. ⇒ **Go to** **AT-185, "DTC U1000 CAN COMMUNICATION LINE"** **.**	
Lamp turns off. 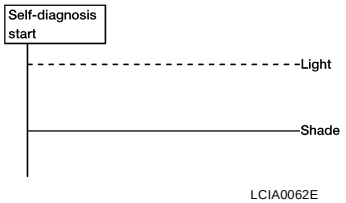 Park/neutral position (PNP) switch, and 3 position switch circuit is disconnected or TCM is damaged. ⇒ **Go to** **AT-242, "21. TCM Self-diagnosis Does Not Activate (PNP & 3 Position Switches Circuit Checks), and Throttle Position Sensor [Accelerator Pedal Position (APP) Sensor] Circuit Check"** **.**	Flickers as shown below. 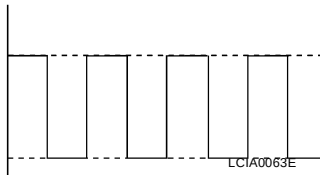 Battery power is low. Battery has been disconnected for a long time. Battery is connected conversely. (When reconnecting TCM connectors. — This is not a problem.)

t_1 = 2.5 seconds t_2 = 2.0 seconds t_3 = 1.0 second t_4 = 1.0 second

TROUBLE DIAGNOSIS - INTRODUCTION

PFP:00000

Introduction

ECS004RA

The TCM receives a signal from the vehicle speed sensor, ECM (throttle opening) or park/neutral position (PNP) switch and provides shift control or lock-up control via A/T solenoid valves.
The TCM also communicates with the ECM by means of a signal sent from sensing elements used with the OBD-related parts of the A/T system for malfunction-diagnostic purposes. The TCM is capable of diagnosing malfunctioning parts while the ECM can store malfunctions in its memory.
Input and output signals must always be correct and stable in the operation of the A/T system. The A/T system must be in good operating condition and be free of valve seizure, solenoid valve malfunction, etc.

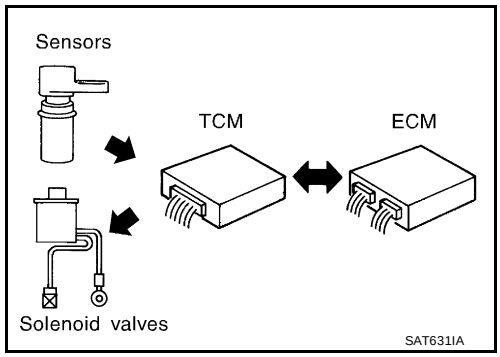

It is much more difficult to diagnose a problem that occurs intermittently rather than continuously. Most intermittent problems are caused by poor electric connections or improper wiring. In this case, careful checking of suspected circuits may help prevent the replacement of good parts.
A visual check only, may not find the cause of the problems. A road test with CONSULT-II (or GST) or a circuit tester connected should be performed. Follow the “Work Flow”. Refer to AT-59, "Work Flow" .

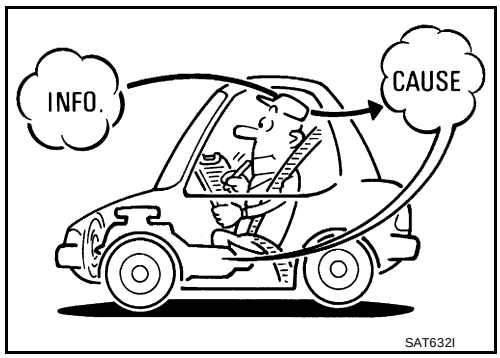

Before undertaking actual checks, take a few minutes to talk with a customer who approaches with a driveability complaint. The customer can supply good information about such problems, especially intermittent ones. Find out what symptoms are present and under what conditions they occur. A “DIAGNOSTIC WORKSHEET” like the example on page AT-57 should be used.
Start your diagnosis by looking for “conventional” problems first. This will help troubleshoot driveability problems on an electronically controlled engine vehicle.
Also check related Service bulletins for information.

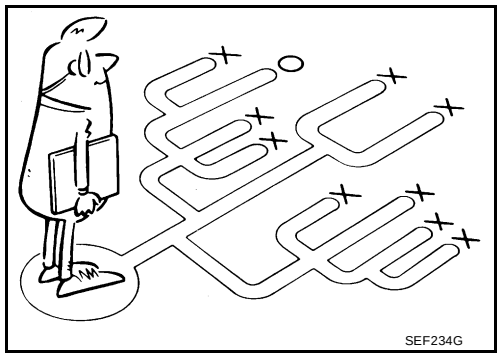

DIAGNOSTIC WORKSHEET

Information from Customer

KEY POINTS
WHAT ..... Vehicle & A/T model
WHEN ..... Date, Frequencies
WHERE ..... Road conditions
HOW ..... Operating conditions, Symptoms

Customer name MR/MS	Model & Year	VIN
Trans. model	Engine	Mileage
Incident Date	Manuf. Date	In Service Date
Frequency	❏ Continuous ❏ Intermittent (times a day)	
Symptoms	❏ Vehicle does not move. (❏ Any position ❏ Particular position)	
	❏ No up-shift (❏ 1st → 2nd ❏ 2nd → 3rd ❏ 3rd → 4th)	
	❏ No down-shift (❏ 4th → 3rd ❏ 3rd → 2nd ❏ 2nd → 1st)	
	❏ Lockup malfunction	
	❏ Shift point too high or too low.	
	❏ Shift shock or slip (❏ N → D ❏ Lockup ❏ Any drive position)	
	❏ Noise or vibration	
	❏ No kickdown	
	❏ No pattern select	
	❏ Others ( )	
A/T check (position) indicator lamp	Blinks for about 8 seconds.	
	❏ Continuously lit	❏ Not lit
Malfunction indicator lamp (MIL)	❏ Continuously lit	❏ Not lit

Diagnostic Worksheet

1.	❏ Read the Fail-safe and listen to customer complaints.			AT-9
2.	❏ CHECK A/T FLUID			AT-61
		❏ Leakage (Follow specified procedure) ❏ Fluid condition ❏ Fluid level		
3.	❏ Perform STALL TEST and PRESSURE TEST.			AT-61, AT-65
		❏ Stall test — Mark possible damaged components/others.		
			❏ Torque converter one-way clutch ❏ Reverse clutch ❏ Forward clutch ❏ Overrun clutch ❏ Forward one-way clutch	❏ Low & reverse brake ❏ Low one-way clutch ❏ Engine ❏ Line pressure is low ❏ Clutches and brakes except high clutch and brake band are OK
		❏ Pressure test — Suspected parts:		
4.	❏ Perform all ROAD TEST and mark required procedures.			AT-66
	4-1.	Check before engine is started.		AT-68
		❏ SELF-DIAGNOSTIC PROCEDURE - Mark detected items.		
			❏ Park/neutral position (PNP) switch, AT-103 . ❏ A/T fluid temperature sensor, AT-109 . ❏ Vehicle speed sensor·A/T (Revolution sensor), AT-115 . ❏ Engine speed signal, AT-120 . ❏ Turbine revolution sensor, AT-200 . ❏ Torque converter clutch solenoid valve, AT-146 . ❏ Line pressure solenoid valve, AT-159 . ❏ Shift solenoid valve A, AT-165 . ❏ Shift solenoid valve B, AT-170 . ❏ Throttle position sensor [accelerator pedal position (APP) sensor], AT-175 . ❏ Overrun clutch solenoid valve, AT-180 . ❏ Park/neutral position (PNP) & 3 position switches circuit checks, and throttle position sensor [accelerator pedal position (APP) sensor circuit check AT-242 . ❏ A/T fluid temperature sensor, AT-109 . ❏ Vehicle speed sensor·MTR, AT-196 . ❏ CAN communication line, AT-185 . ❏ Control unit (RAM), Control unit (ROM), AT-205 . ❏ Control unit (EEP ROM), AT-207 . ❏ Battery ❏ Others	

4.	4-2.	Check at idle	AT-68
		❏ 1. A/T Check (Position) Indicator Lamp Does Not Come On, AT-213 . ❏ 2. Engine Cannot Be Started In P and N Position, AT-214 . ❏ 3. In P Position, Vehicle Moves Forward or Backward When Pushed, AT-215 . ❏ 4. In N Position, Vehicle Moves, AT-215 . ❏ 5. Large Shock. N → R Position, AT-217 . ❏ 6. Vehicle Does Not Creep Backward In R Position, AT-219 . ❏ 7. Vehicle Does Not Creep Forward In D, 2 or 1 Position, AT-222 .	
	4-3.	Cruise test	AT-71 AT-75
		Part-1	
		❏ 8. Vehicle Cannot Be Started From D_1 , AT-224 . ❏ 9. A/T Does Not Shift: D_1 → D_2 or Does Not Kickdown: D_4 → D_2 , AT-227 . ❏ 10. A/T Does Not Shift: D_2 → D_3 , AT-229 . ❏ 11. A/T Does Not Shift: D_3 → D_4 , AT-231 . ❏ 12. A/T Does Not Perform Lock-up, AT-234 . ❏ 13. A/T Does Not Hold Lock-up Condition, AT-235 . ❏ 14. Lock-up Is Not Released, AT-236 . ❏ 15. Engine Speed Does Not Return To Idle (Light Braking D_4 → D_3), AT-237 .	
		Part-2	AT-78
		❏ 16. Vehicle Does Not Start From D_1 , AT-239 . ❏ 9. A/T Does Not Shift: D_1 → D_2 or Does Not Kickdown: D_4 → D_2 , AT-227 . ❏ 10. A/T Does Not Shift: D_2 → D_3 , AT-229 . ❏ 11. A/T Does Not Shift: D_3 → D_4 , AT-231 .	
		Part-3	AT-80
		❏ 17. A/T Does Not Shift: D_4 → D_3 When Gear Selector Lever D → 3, AT-239 . ❏ 15. Engine Speed Does Not Return To Idle (Engine Brake In D_3), AT-237 . ❏ 18. A/T Does Not Shift: D_3 → 2_2 , When Selector Lever D → 2 Position, AT-240 . ❏ 15. Engine Speed Does Not Return To Idle (Engine Brake In 2_2), AT-237 . ❏ 19. A/T Does Not Shift: 2_2 → 1_1 , When Selector Lever 2 → 1 Position, AT-240 . ❏ 20. Vehicle Does Not Decelerate By Engine Brake, AT-241 . ❏ SELF-DIAGNOSTIC PROCEDURE — Mark detected items.	
		❏ Park/neutral position (PNP) switch, AT-103 . ❏ A/T fluid temperature sensor, AT-109 . ❏ Vehicle speed sensor·A/T (Revolution sensor), AT-115 . ❏ Engine speed signal, AT-120 . ❏ Turbine revolution sensor, AT-200 . ❏ Torque converter clutch solenoid valve, AT-146 . ❏ Line pressure solenoid valve, AT-159 . ❏ Shift solenoid valve A, AT-165 . ❏ Shift solenoid valve B, AT-170 . ❏ Throttle position sensor [accelerator pedal position (APP) sensor], AT-175 . ❏ Overrun clutch solenoid valve, AT-180 . ❏ Park/neutral position (PNP) & 3 position switches circuit checks, and throttle position sensor [accelerator pedal position (APP) sensor] circuit check, AT-242 . ❏ A/T fluid temperature sensor, AT-109 . ❏ Vehicle speed sensor·MTR, AT-196 . ❏ CAN communication line, AT-185 . ❏ Control unit (RAM), Control unit (ROM), AT-205 . ❏ Control unit (EEP ROM), AT-207 . ❏ Battery ❏ Others	
5.	❏ For self-diagnosis NG items, inspect each component. Repair or replace the damaged parts.		AT-255
6.	❏ Perform all ROAD TEST and re-mark required procedures.		AT-66

7.	❏ Perform DTC CONFIRMATION PROCEDURE for following MIL indicating items and check out NG items. Refer to EC-55, "Emission-related Diagnostic Information" (with QR25DE), or EC-674, "Emission-related Diagnostic Information" (with VQ35DE).	EC-55, EC-674
	❏ DTC (P0731) A/T 1st gear function, AT-124 . ❏ DTC (P0732) A/T 2nd gear function, AT-129 . ❏ DTC (P0733) A/T 3rd gear function, AT-134 . ❏ DTC (P0734) A/T 4th gear function, AT-139 . ❏ DTC (P0744) A/T TCC S/V function (lock-up), AT-151 .	
8.	❏ Perform the Diagnostic Procedures for all remaining items marked NG. Repair or replace the damaged parts. Refer to the Symptom Chart when you perform the procedures. (The chart also shows some other possible symptoms and the component inspection orders.)	AT-40 AT-50
9.	❏ Erase DTC from TCM and ECM memories.	AT-38

Work Flow

ECS004RB

HOW TO PERFORM TROUBLE DIAGNOSES FOR QUICK AND ACCURATE REPAIR

A good understanding of the malfunction conditions can make troubleshooting faster and more accurate.
In general, each customer feels differently about a problem. It is important to fully understand the symptoms or conditions for a customer complaint.
Make good use of the two sheets provided, AT-56, "Information from Customer" and AT-57, "Diagnostic Worksheet" , to perform the best troubleshooting possible.

WORK FLOW CHART

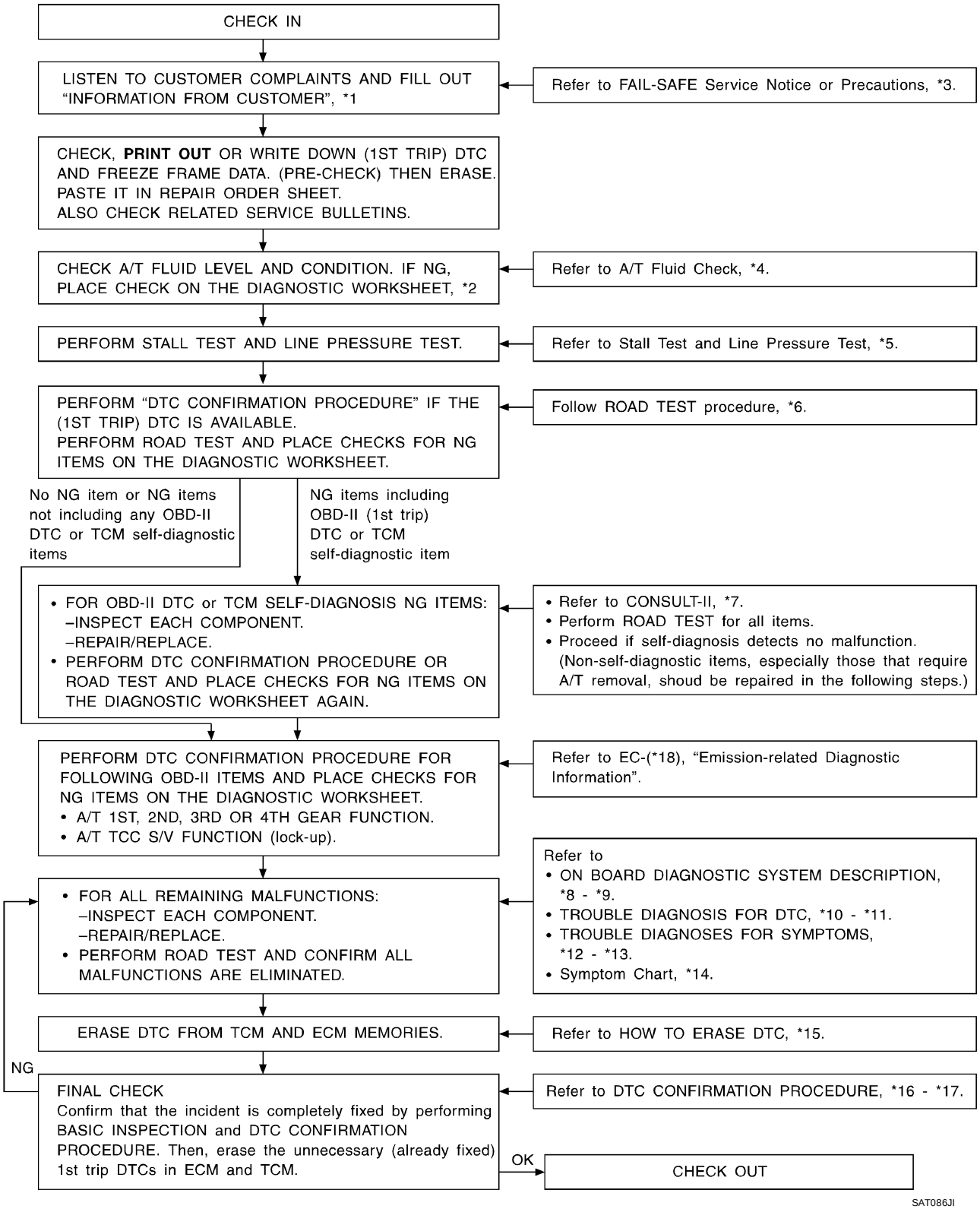

*1: AT-56	*2: AT-57	*3: AT-9
*4: AT-61	*5: AT-61, AT-65	*6: AT-66
*7: AT-40	*8: AT-36	*9: AT-36
*10: AT-36	*11: AT-36	*12: AT-209
*13: AT-209	*14: AT-82	*15: AT-38
*16: AT-103	*17: AT-189	*18: EC-55 , EC-674

TROUBLE DIAGNOSIS - BASIC INSPECTION

PFP:00000

A/T Fluid Check

ECS004RC

FLUID LEAKAGE CHECK

1. Clean area suspected of leaking. — for example, mating surface of converter housing and transmission case.
2. Start engine, apply foot brake, place selector lever in D position and wait a few minutes.
3. Stop engine.

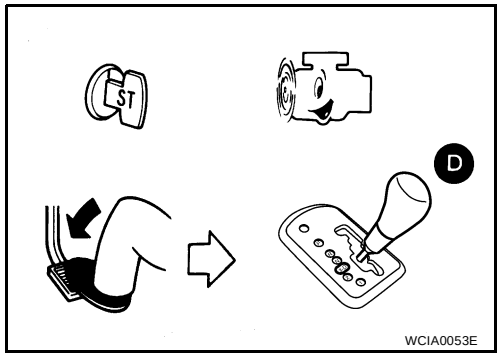

WCIA0053E

4. Check for fresh leakage.

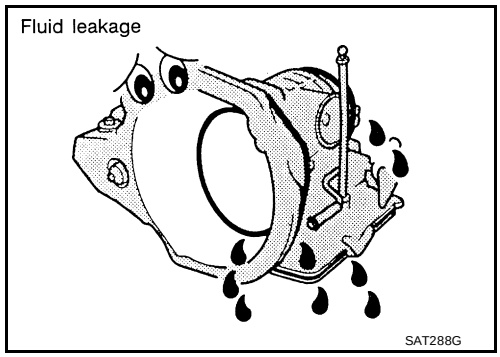

SAT288G

FLUID CONDITION CHECK

Fluid color	Suspected problem
Dark or black with burned odor	Wear of frictional material
Milky pink	Water contamination — Road water entering through filler tube or breather
Varnished fluid, light to dark brown and tacky	Oxidation — Over or under filling, — Overheating

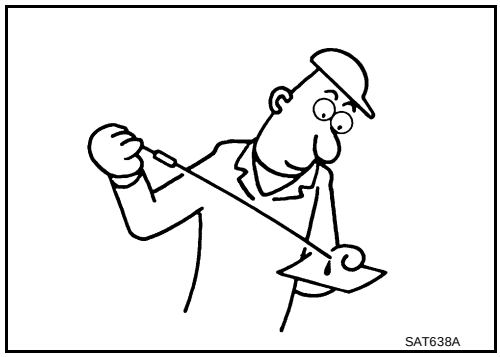
SAT638A

FLUID LEVEL CHECK

Refer to MA-29, "Checking A/T Fluid" .

Stall Test

ECS004RD

STALL TEST PROCEDURE

1. Check A/T fluid and engine oil levels. If necessary, add fluid and oil.
2. Drive vehicle for approximately 10 minutes or until fluid and oil reach operating temperature.

ATF operating temperature :50 - 80°C (122 - 176°F)

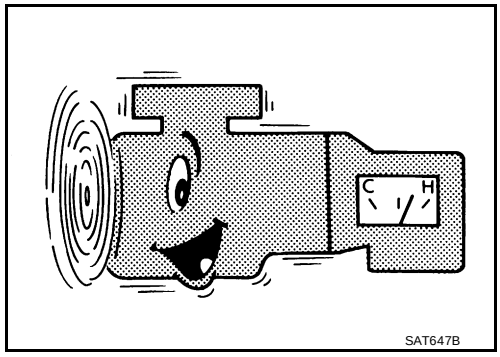

SAT647B

3. Set parking brake and block wheels.
4. Install a tachometer where it can be seen by driver during test.
   - **It is good practice to mark the point of specified engine rpm on indicator.**

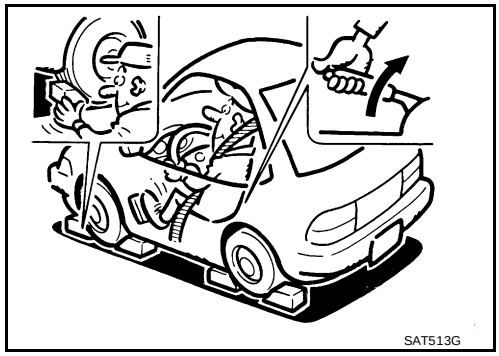

5. Start engine, apply foot brake, and place selector lever in D position.
6. Accelerate to wide open throttle gradually while applying foot brake.
7. Quickly note the engine stall revolution and immediately release throttle.
   - **During test, never hold throttle wide open for less than 5 seconds.**

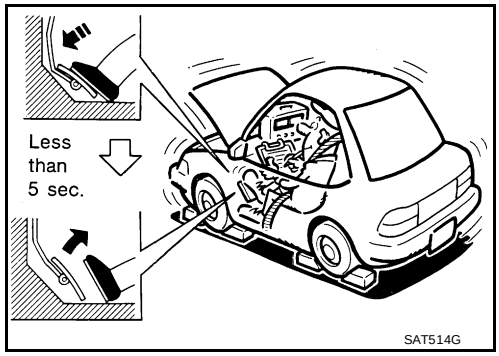

Stall revolution

QR25DE	**: 2,350 - 2,800 rpm**
VQ35DE	**: 2,550 - 3,050 rpm**

8. Move selector lever to N position.
9. Cool off ATF.
   - **Run engine at idle for at least one minute.**
10. Repeat steps 5 through 9 with selector lever in 2, 1 and R positions.

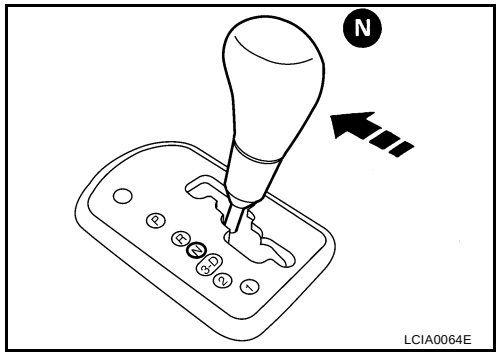

JUDGEMENT OF STALL TEST

The test result and possible damaged components relating to each result are shown in the illustrations on next page.
In order to pinpoint the possible damaged components, refer to AT-60, "WORK FLOW CHART" .

NOTE:
Stall revolution is too high in D, 2 or 1 position:

- Slippage occurs in 1st gear but not in 2nd and 3rd gears. ..... Low one-way clutch slippage
- Slippage occurs in the following gears:
  1st through 3rd gears in 3 position and engine brake functions.
  1st and 2nd gears in 2 position and engine brake functions with accelerator pedal released (fully closed throttle). ..... Forward clutch or forward one-way clutch slippage

Stall revolution is too high in R position:

- Engine brake does not function in 1 position. ..... Low & reverse brake slippage
- Engine brake functions in 1 position. ..... Reverse clutch slippage

Stall revolution within specifications:

- Vehicle does not achieve speed of more than 80 km/h (50 MPH). ..... One-way clutch seizure in torque converter housing

CAUTION:
Be careful since automatic fluid temperature increases abnormally.

- Slippage occurs in 3rd and 4th gears in D position. ..... High clutch slippage
- Slippage occurs in 2nd and 4th gear in D position. ..... Brake band slippage
- Engine brake does not function in 2nd and 3rd gears in D position, 2nd gear in 2 position, and 1st gear in 1 position.

Stall revolution less than specifications:

- Poor acceleration during starts. ..... One-way clutch seizure in torque converter

Selector lever position	Judgement		
D	H	O	L
2	H	O	L
1	H	O	L
R	O	H	L

O : Stall revolution is normal.
H : Stall revolution is higher than specified.
L : Stall revolution is lower than specified.

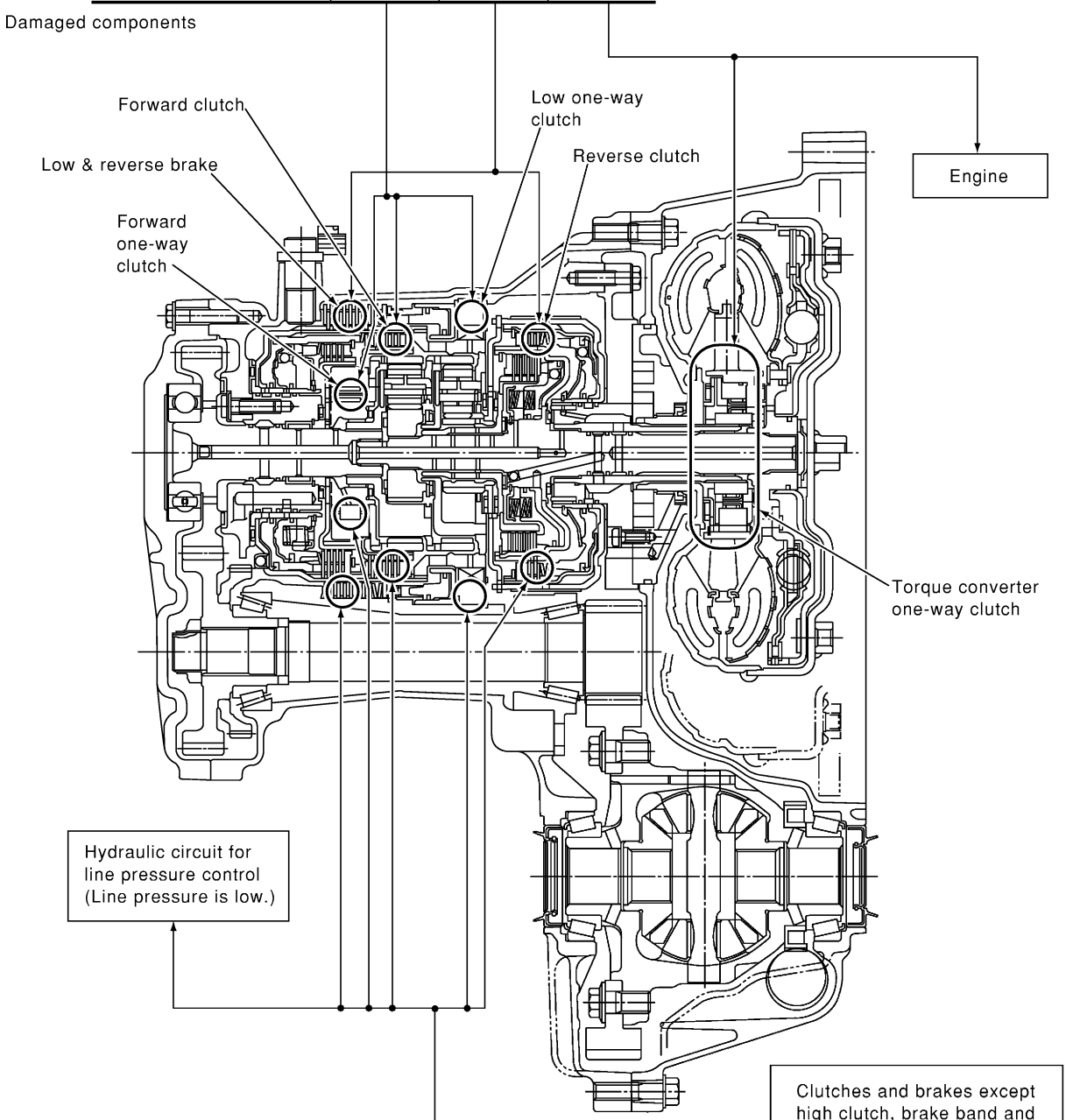

D	H	O
2	H	O
1	H	O
R	H	O
Selector lever position	Judgement	

SAT499K

Line Pressure Test

ECS004RE

LINE PRESSURE TEST PORTS

Location of line pressure test ports are shown in the illustration.

- **Always replace pressure plugs as they are self-sealing bolts.**

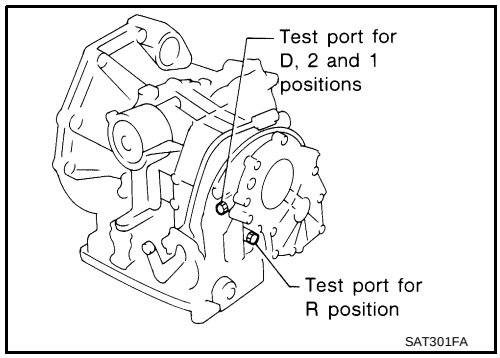

LINE PRESSURE TEST PROCEDURE

1. Check A/T fluid and engine oil levels. If necessary, add fluid and oil.
2. Drive vehicle for approximately 10 minutes or until fluid and oil reach operating temperature.

   ATF operating temperature :50 - 80°C (122 - 176°F)

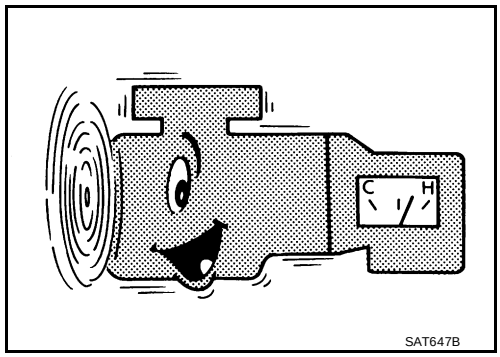

3. Install pressure gauge to corresponding line pressure port.

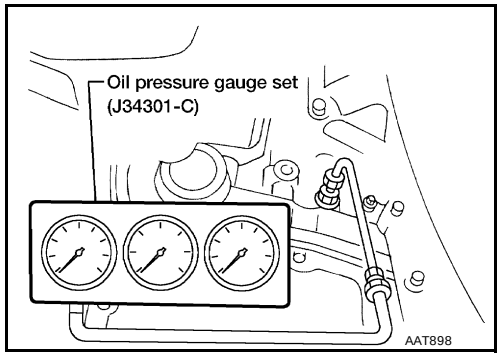

4. Set parking brake and block wheels.
   - **Continue to depress brake pedal fully while line pressure test is being performed at stall speed.**

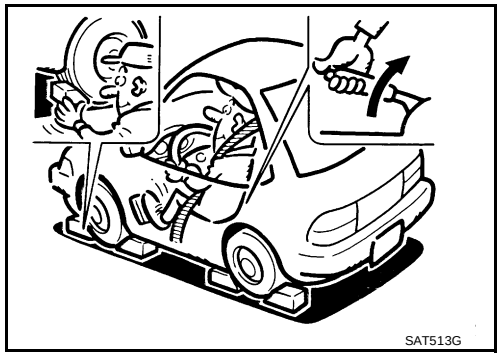

5. Start engine and measure line pressure at idle and stall speed.
   - **When measuring line pressure at stall speed, follow the stall test procedure.**

AT-65, "Line Pressure Test" : Refer to SDS, AT-365, "Line Pressure"

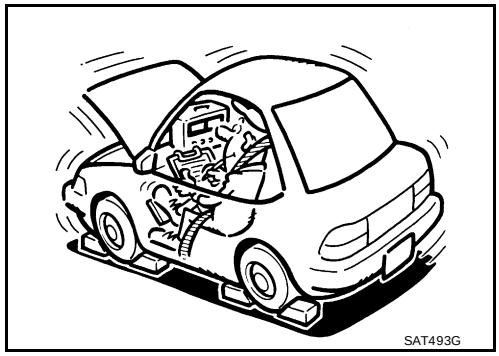

JUDGEMENT OF LINE PRESSURE TEST

Judgement		Suspected parts
At idle	Line pressure is low in all positions.	● Oil pump wear ● Control piston damage ● Pressure regulator valve or plug sticking ● Spring for pressure regulator valve damaged ● Fluid pressure leakage between oil strainer and pressure regulator valve ● Clogged strainer
	Line pressure is low in particular position.	● Fluid pressure leakage between manual valve and particular clutch ● For example, line pressure is: – Low in R and 1 positions, but – Normal in D and 2 positions. Therefore, fluid leakage exists at or around low and reverse brake circuit. Refer to AT-19, "CLUTCH AND BAND CHART" .
	Line pressure is high.	● A/T fluid temperature sensor damaged ● Line pressure solenoid valve sticking ● Short circuit of line pressure solenoid valve circuit ● Pressure modifier valve sticking ● Pressure regulator valve or plug sticking ● Open in dropping resistor circuit
At stall speed	Line pressure is low.	● Line pressure solenoid valve sticking ● Short circuit of line pressure solenoid valve circuit ● Pressure regulator valve or plug sticking ● Pressure modifier valve sticking ● Pilot valve sticking

Road Test

ECS004RF

DESCRIPTION

- The purpose of the test is to determine overall performance of A/T and analyze causes of problems.
- The road test consists of the following three parts:

1. Check before engine is started
2. Check at idle
3. Cruise test

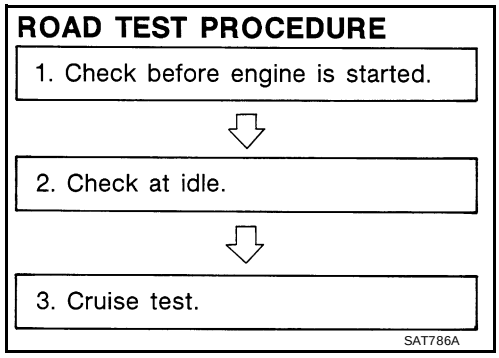

- Before road test, familiarize yourself with all test procedures and items to check.
- Conduct tests on all items until specified symptom is found. Troubleshoot items which check out No Good after road test. Refer to AT-36, "ON BOARD DIAGNOSTIC SYSTEM DESCRIPTION" , and AT-209, "TROUBLE DIAGNOSIS FOR SYMPTOMS" .

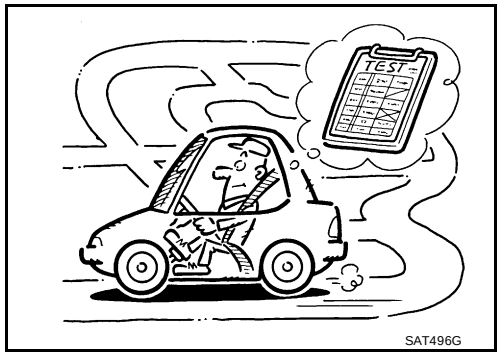

1. CHECK BEFORE ENGINE IS STARTED

1. CHECK A/T CHECK (POSITION) INDICATOR LAMP

1. Park vehicle on flat surface.
2. Move selector lever to P position.
3. Turn ignition switch to OFF position. Wait at least 5 seconds.
4. Turn ignition switch to ON position. (Do not start engine.)
5. Does A/T check (position) indicator lamp come on for about 2 seconds?

Yes or No

Yes >> GO TO 2.
No >> Stop ROAD TEST. Go to AT-213, "1. A/T Check (Position) Indicator Lamp Does Not Come On" .

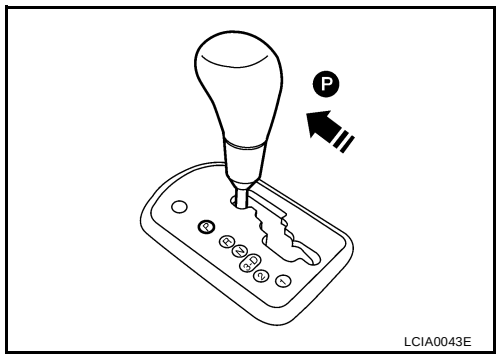

2. CHECK A/T CHECK (POSITION) INDICATOR LAMP

Does A/T check (position) OFF indicator lamp flicker for about 8 seconds?

Yes or No

Yes >> Perform self-diagnosis and check NG items on the DIAGNOSTIC WORKSHEET, AT-57 . Refer to AT-51, "TCM SELF-DIAGNOSTIC PROCEDURE (NO TOOLS)" .
No >> 1. Turn ignition switch to OFF position.
2. Perform self-diagnosis and note NG items. Refer to AT-51, "TCM SELF-DIAGNOSTIC PROCEDURE (NO TOOLS)" .
3. Go to AT-68, "2. CHECK AT IDLE" .

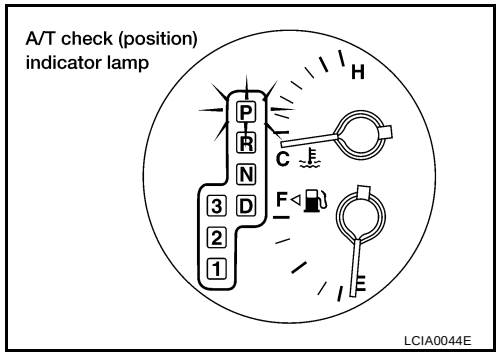

2. CHECK AT IDLE

1. CHECK ENGINE START

1. Park vehicle on flat surface.
2. Move selector lever to P position.
3. Turn ignition switch to OFF position.
4. Turn ignition switch to START position.
5. Is engine started?

Yes or No

Yes >> GO TO 2.
No >> Mark the box on the DIAGNOSTIC WORKSHEET. Go to AT-214, "2. Engine Cannot Be Started In P and N Position" . Continue ROAD TEST.

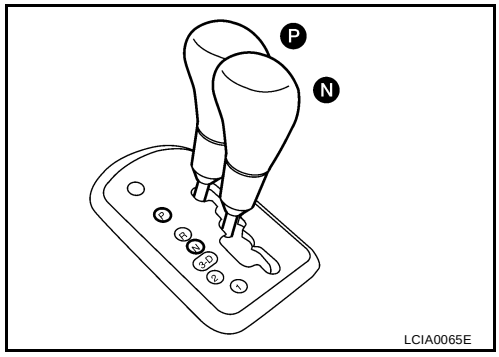

2. CHECK ENGINE START

1. Turn ignition switch to ACC position.
2. Move selector lever to D, 1, 2 or R position.
3. Turn ignition switch to START position.
4. Is engine started?

Yes or No

Yes >> Mark the box on the DIAGNOSTIC WORKSHEET. Go to AT-214, "2. Engine Cannot Be Started In P and N Position" . Continue ROAD TEST.

No >> GO TO 3.

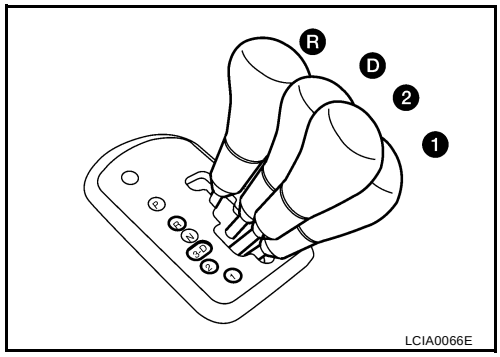

3. CHECK VEHICLE MOVE

1. Move selector lever to P position.
2. Turn ignition switch to OFF position.
3. Release parking brake.

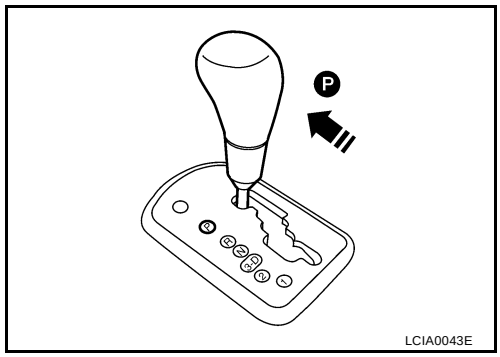

4. Push vehicle forward or backward.
5. Does vehicle move when it is pushed forward or backward?
6. Apply parking brake.

Yes or No

Yes >> Mark the box on the DIAGNOSTIC WORKSHEET. Go to AT-215, "3. In P Position, Vehicle Moves Forward or Backward When Pushed" . Continue ROAD TEST.

No >> GO TO 4.

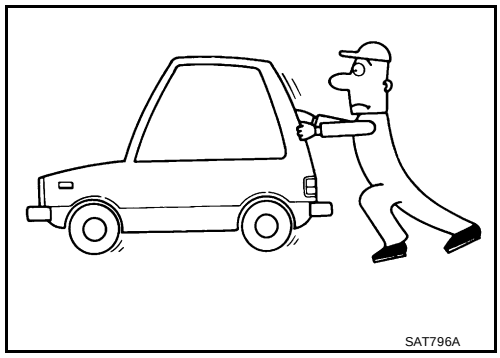

4. CHECK VEHICLE MOVE

1. Start engine.
2. Move selector lever to N position.
3. Release parking brake.
4. Does vehicle move forward or backward?

Yes or No

Yes >> Mark the box on the DIAGNOSTIC WORKSHEET. Go to AT-215, "4. In N Position, Vehicle Moves" . Continue ROAD TEST.

No >> GO TO 5.

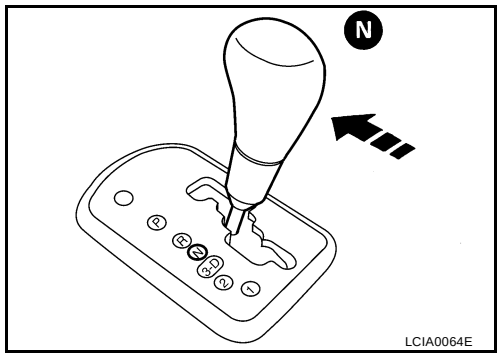

5. CHECK SHIFT LOCK

1. Apply foot brake.

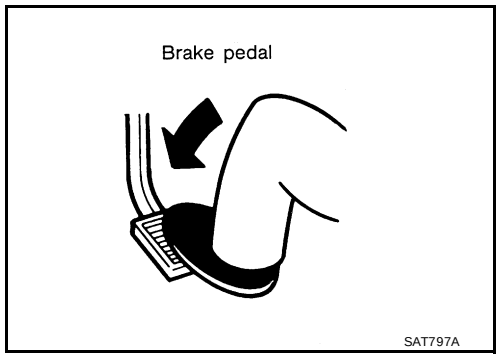

2. Move selector lever to R position.
3. Is there large shock when changing from N to R position?

Yes or No

Yes >> Mark the box on the DIAGNOSTIC WORKSHEET. Go to AT-217, "5. Large Shock. N → R Position" . Continue ROAD TEST.

No >> GO TO 6.

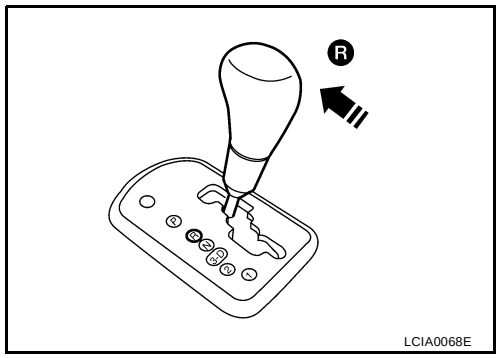

6. CHECK VEHICLE MOVE

1. Release foot brake for several seconds.
2. Does vehicle creep backward when foot brake is released?

Yes or No

Yes >> GO TO 7.

No >> Mark the box on the DIAGNOSTIC WORKSHEET. Go to AT-219, "6. Vehicle Does Not Creep Backward In R Position" . Continue ROAD TEST.

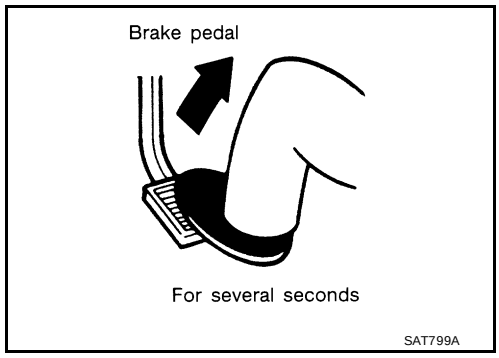

7. CHECK VEHICLE MOVE

1. Move selector lever to D, 2 and 1 positions and check if vehicle creeps forward.
2. Does vehicle creep forward in all three positions?

Yes or No

Yes >> Go to AT-71, "3. CRUISE TEST" .

No >> Mark the box on the DIAGNOSTIC WORKSHEET. Go to AT-222, "7. Vehicle Does Not Creep Forward in D, 3, 2 or 1 Position" . Continue ROAD TEST.

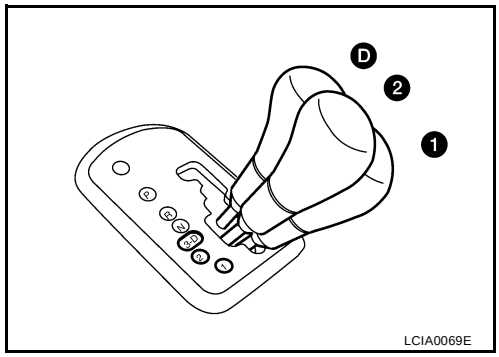

3. CRUISE TEST

- Check all items listed in Parts 1 through 3.

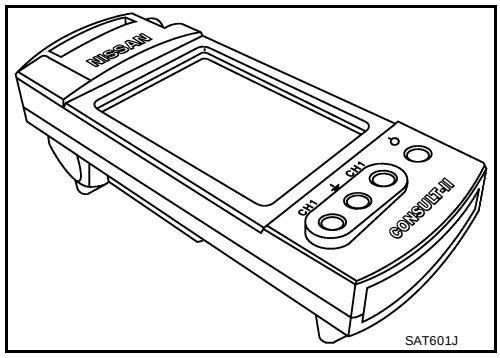

With CONSULT-II

- Using CONSULT-II, conduct a cruise test and record the result.
- Print the result and ensure that shifts and lock-ups take place as per Shift Schedule. Refer to AT-364, "Shift Schedule"

CONSULT-II Setting Procedure

1. Turn ignition switch OFF.
2. Connect CONSULT-II to data link connector, which is located in left side dash panel.

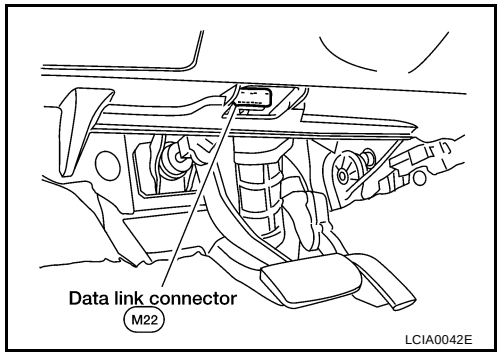

3. Turn ignition switch ON.
4. Touch “START”.

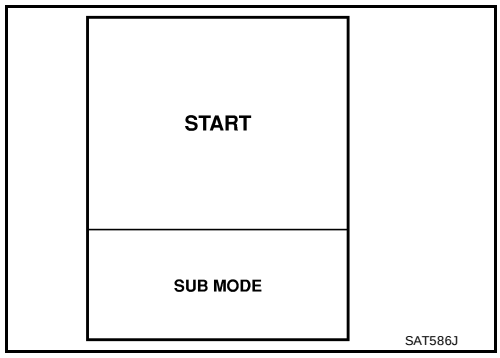

5. Touch “A/T”.

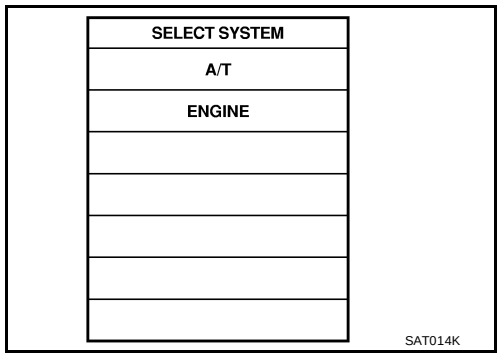

6. Touch “DATA MONITOR”.

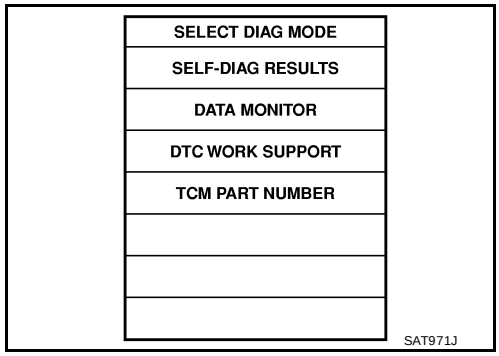

7. Touch “MAIN SIGNALS” or “TCM INPUT SIGNALS”.
8. See “Numerical Display”, “Barchart Display” or “Line Graph Display”.

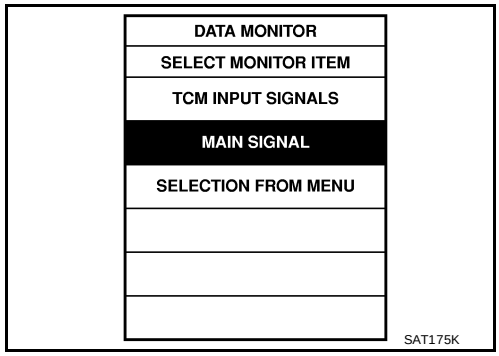

9. Touch “SETTING” to set recording condition (“AUTO TRIG” or “MANU TRIG”) and touch “BACK”.
10. Touch “Start”.

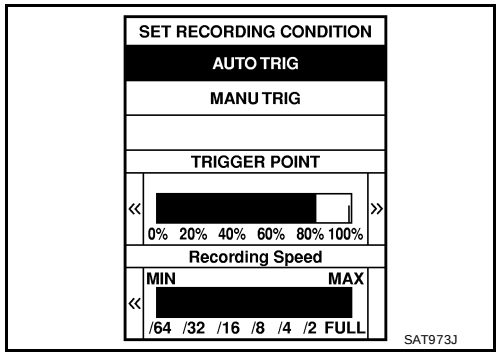

11. When performing cruise test, touch “RECORD”.

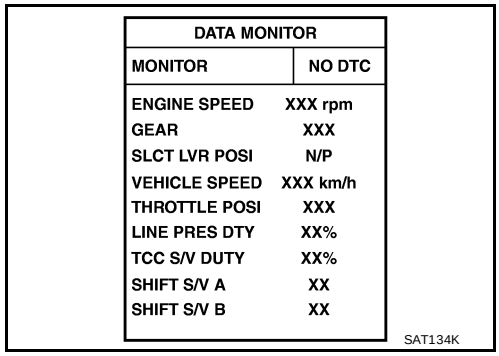

12. After finishing cruise test part 1, touch “STOP”.

DATA MONITOR		
Recording Data	X%	DTC DETECTED
ENGINE SPEED	XXX rpm	
GEAR	XXX	
SLCT LVR POSI	N/P	
VEHICLE SPEED	XXX km/h	
THROTTLE POSI	XXX	
LINE PRES DTY	XX%	
TCC S/V DUTY	XX%	
SHIFT S/V A	XX	
SHIFT S/V B	XX	

SAT135K

13. Touch “STORE” and touch “BACK”.

REAL-TIME DIAG
ENG SPEED SIG

SAT987J

STORE	
SYSTEM	SAVE REC DATA

SAT974J

14. Touch “DISPLAY”.
15. Touch “PRINT”.
16. Check the monitor data printed out.
17. Continue cruise test part 2 and 3.

Trigger	VHCL S/SEN A/T	VHCL S/SEN MTR	THRTL POSI SEN
	km/h	km/h	V

SAT975J

Without CONSULT-II

- Throttle position sensor can be checked by voltage across terminals 41 (W) and 42 (B) of TCM.

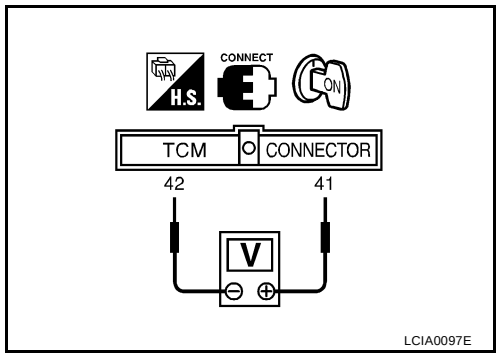

Cruise Test — Part 1

1. CHECK STARTING GEAR (D_1) POSITION

1. Drive vehicle for approximately 10 minutes to warm engine oil and ATF up to operating temperature.

ATF operating temperature	**:50 - 80°C (122 - 176°F)**

2. Park vehicle on flat surface.
3. Set gear selector lever to D position.
4. Move selector lever to P position.
5. Start engine.

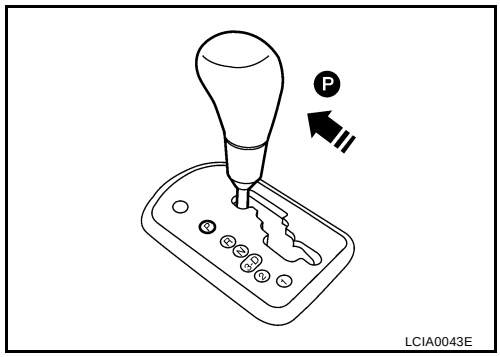

6. Move selector lever to D position.

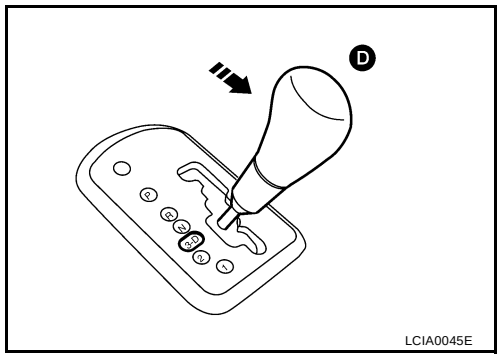

7. Accelerate vehicle by constantly depressing accelerator pedal half-way.
8. Does vehicle start from D_1 ?

Read gear position.

Yes or No

Yes >> GO TO 2.
No >> Go to AT-224, "8. Vehicle Cannot Be Started From D_1" . Continue ROAD TEST.

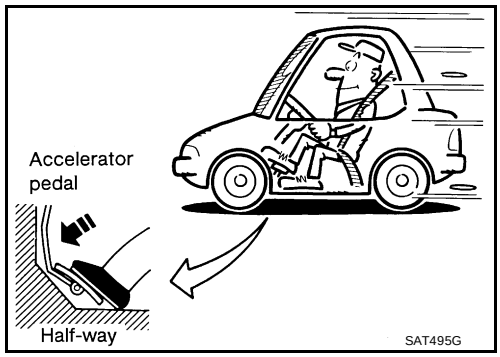

2. CHECK SHIFT UP (D_1 TO D_2)

Does A/T shift from D_1 to D_2 at the specified speed?

Read gear position, throttle opening and vehicle speed.

Specified speed when shifting from D_1 to D_2 **:Refer to AT-364, "Shift Schedule".**

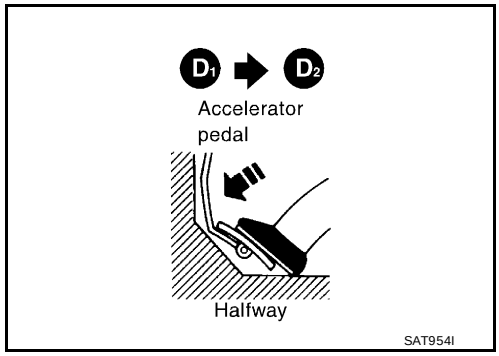

Yes or No

Yes >> GO TO 3.

No >> Go to AT-227, "9. A/T Does Not Shift: $D_1 \rightarrow D_2$ or Does Not Kickdown: $D_4 \rightarrow D_2$". Continue ROAD TEST.

3. CHECK SHIFT UP (D_2 TO D_3)

Does A/T shift from D_2 to D_3 at the specified speed?

Read gear position, throttle opening and vehicle speed.

Specified speed when shifting from D_2 to D_3 **:Refer to AT-364, "Shift Schedule"**

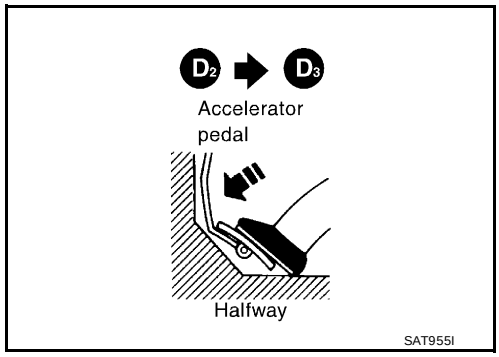

Yes or No

Yes >> GO TO 4.

No >> Go to AT-229, "10. A/T Does Not Shift: $D_2 \rightarrow D_3$". Continue ROAD TEST.

4. CHECK SHIFT UP (D_3 TO D_4)

Does A/T shift from D_3 to D_4 at the specified speed?

Read gear position, throttle opening and vehicle speed.

Specified speed when shifting from D_3 to D_4 **:Refer to AT-364, "Shift Schedule".**

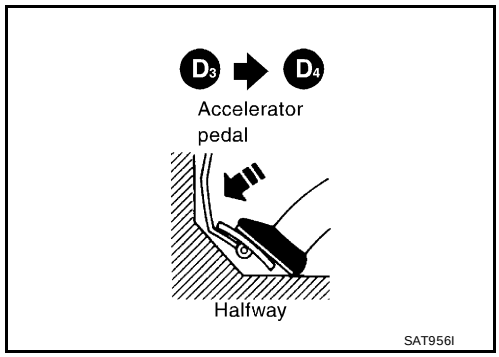

Yes or No

Yes >> GO TO 5.

No >> Go to AT-231, "11. A/T Does Not Shift: $D_3 \rightarrow D_4$". Continue ROAD TEST.

5. CHECK LOCK-UP (D_4 TO D_4 L/U)

Does A/T perform lock-up at the specified speed?

Read vehicle speed, throttle opening when lock-up duty becomes 94%.

Specified speed when lock-up occurs	**:Refer to AT-364, "Shift Schedule" .**

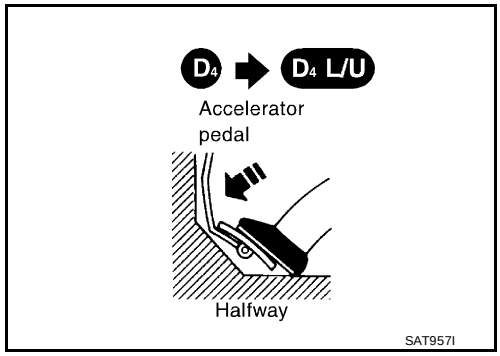

Yes or No

Yes >> GO TO 6.

No >> Go to AT-234, "12. A/T Does Not Perform Lock-up" . Continue ROAD TEST.

6. CHECK HOLD LOCK-UP

Does A/T hold lock-up condition for more than 30 seconds?

Yes or No

Yes >> GO TO 7.

No >> Go to AT-235, "13. A/T Does Not Hold Lock-up Condition" .

7. CHECK SHIFT DOWN (D_4 L/U TO D_4)

1. Release accelerator pedal.
2. Is lock-up released when accelerator pedal is released?

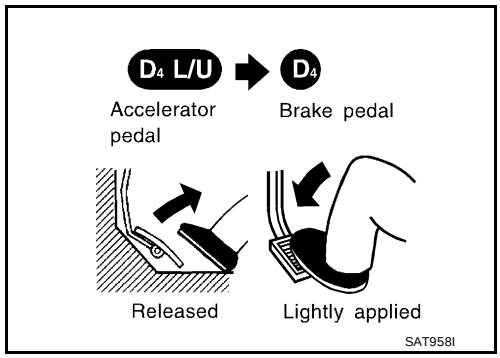

Yes or No

Yes >> GO TO 8.

No >> Go to AT-236, "14. Lock-up Is Not Released" . Continue ROAD TEST.

8. CHECK SHIFT DOWN (D_4 TO D_3)

1. Decelerate vehicle by applying foot brake lightly.
2. Does engine speed return to idle smoothly when A/T is shifted from D_4 to D_3 ?

   Read gear position and engine speed.

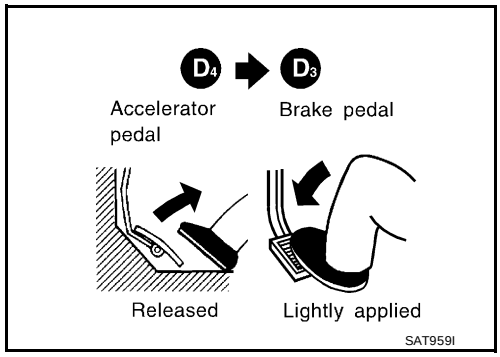

Yes or No

Yes >> 1. Stop vehicle.

2. Go to AT-78, "Cruise Test — Part 2" .

No >> Go to AT-237, "15. Engine Speed Does Not Return To Idle (Light Braking $D_4 \rightarrow D_3$)" . Continue ROAD TEST.

Cruise Test — Part 2

1. CHECK STARTING GEAR (D_1) POSITION

1. Confirm gear selector lever is in D position.
2. Accelerate vehicle by half throttle again.
3. Does vehicle start from D_1 ?

Read gear position.

Yes or No

Yes >> GO TO 2.
No >> Go to AT-239, "16. Vehicle Does Not Start From D_1" . Continue ROAD TEST.

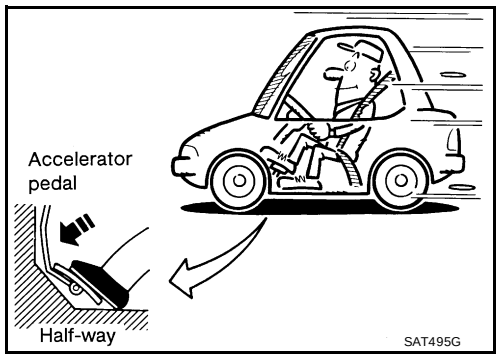

2. CHECK SHIFT UP AND SHIFT DOWN (D_3 TO D_4 TO D_2)

1. Accelerate vehicle to 80 km/h (50 MPH) as shown in illustration.
2. Release accelerator pedal and then quickly depress it fully.
3. Does A/T shift from D_4 to D_2 as soon as accelerator pedal is depressed fully?

Read gear position and throttle opening.

Yes or No

Yes >> GO TO 3.
No >> Go to AT-227, "9. A/T Does Not Shift: $D_1 \rightarrow D_2$ or Does Not Kickdown: $D_4 \rightarrow D_2$" . Continue ROAD TEST.

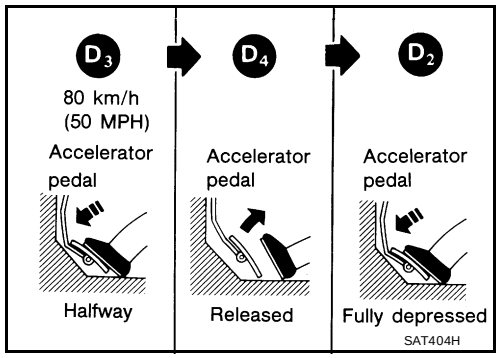

3. CHECK SHIFT UP (D_2 TO D_3)

Does A/T shift from D_2 to D_3 at the specified speed?

Read gear position, throttle opening and vehicle speed.

Specified speed when shifting from D_2 to D_3	**:Refer to AT-364, "Shift Schedule" .**

Yes or No

Yes >> GO TO 4.
No >> Go to AT-229, "10. A/T Does Not Shift: $D_2 \rightarrow D_3$" . Continue ROAD TEST.

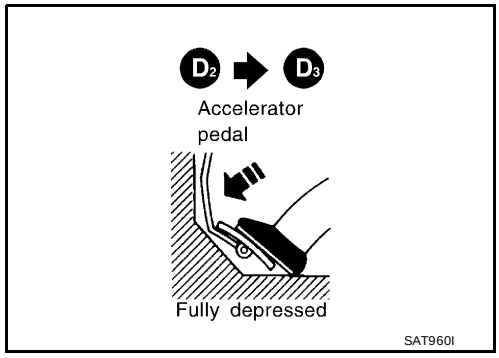

4. CHECK SHIFT UP (D_3 TO D_4) AND ENGINE BRAKE

Release accelerator pedal after shifting from D_2 to D_3.
Does A/T shift from D_3 to D_4 and does vehicle decelerate by engine brake?

Read gear position, throttle opening and vehicle speed.

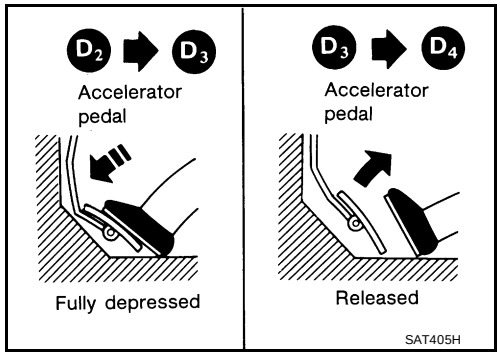

Yes or No

Yes >> 1. Stop vehicle.
2. Go to AT-80, "Cruise Test — Part 3".

No >> Go to AT-231, "11. A/T Does Not Shift: $D_3 \rightarrow D_4$". Continue ROAD TEST.

Cruise Test — Part 3

1. VEHICLE SPEED (D_4) POSITION

1. Confirm gear selector lever is in D position.
2. Accelerate vehicle using half-throttle to D_4.

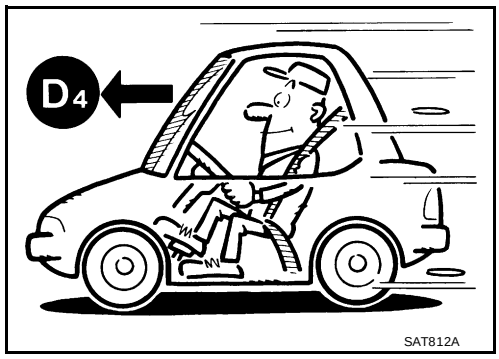

3. Release accelerator pedal.
4. Move gear selector lever from D position to 3 position while driving in D_4.
5. Does A/T shift from D_4 to 3?

   Read gear position and vehicle speed.

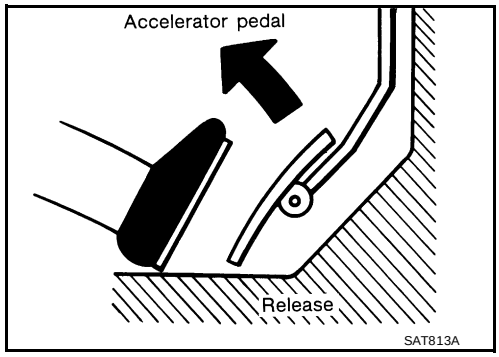

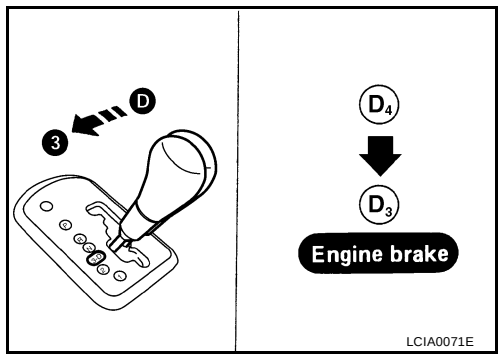

Yes or No

Yes >> GO TO 2.
No >> Go to AT-239, "17. A/T Does Not Shift: $D_4 \rightarrow 3_3$, When A/T Selector Lever D → 3". Continue ROAD TEST.

2. CHECK ENGINE BRAKE

Does vehicle decelerate by engine brake?

Yes or No

Yes >> GO TO 3.
No >> Go to AT-237, "15. Engine Speed Does Not Return To Idle (Light Braking $D_4 \rightarrow D_3$)". Continue ROAD TEST.

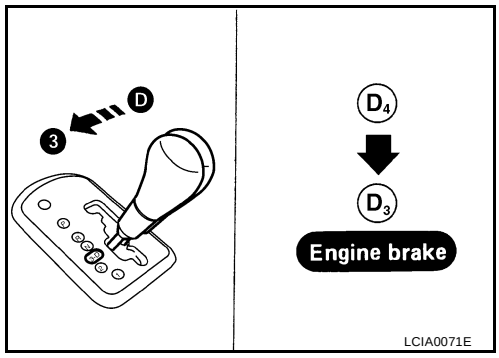

3. CHECK SHIFT DOWN (3_3 TO 2_2)

1. Move selector lever from 3 to 2 position while driving in 3_3.
2. Does A/T shift from 3_3 to 2_2?

Read gear position.

Yes or No

Yes >> GO TO 4.

No >> Go to AT-240, "18. A/T Does Not Shift: $3_3 \rightarrow 2_2$, When Selector Lever 3 → 2 Position". Continue ROAD TEST.

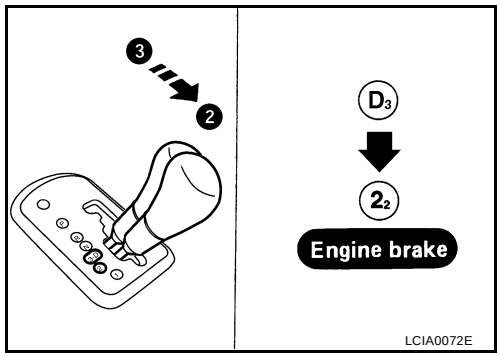

4. CHECK ENGINE BRAKE

Does vehicle decelerate by engine brake?

Yes or No

Yes >> GO TO 5.

No >> Go to AT-237, "15. Engine Speed Does Not Return To Idle (Light Braking $D_4 \rightarrow D_3$)". Continue ROAD TEST.

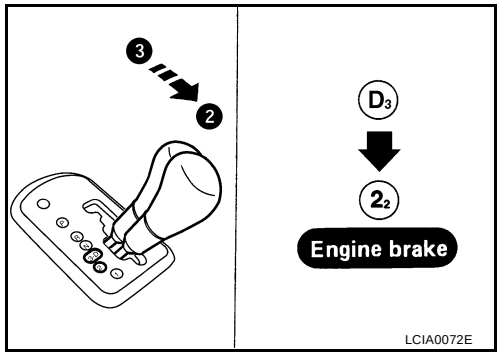

5. CHECK SHIFT DOWN (2_2 TO 1_1)

1. Move selector lever from 2 to 1 position while driving in 2_2.
2. Does A/T shift from 2_2 to 1_1 position?

Read gear position.

Yes or No

Yes >> GO TO 6.

No >> Go to AT-240, "19. A/T Does Not Shift: $2_2 \rightarrow 1_1$, When Selector Lever 2 → 1 Position". Continue ROAD TEST.

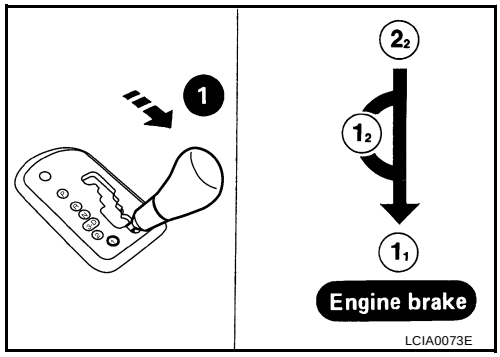

6. CHECK ENGINE BRAKE

Does vehicle decelerate by engine brake?

Yes or No

Yes >> 1. Stop vehicle.

2. Perform self-diagnosis. Refer to AT-51, "TCM SELF-DIAGNOSTIC PROCEDURE (NO TOOLS)".

No >> Go to AT-241, "20. Vehicle Does Not Decelerate By Engine Brake". Continue ROAD TEST.

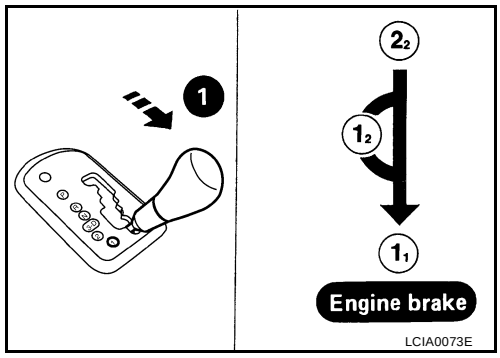

TROUBLE DIAGNOSIS - GENERAL DESCRIPTION

PFP:00000

Symptom Chart

ECS004RG

Numbers are arranged in order of inspection.
Perform inspections starting with number one and work up.

Items	Symptom	Condition	Diagnostic Item	Reference Page
No Lock-up Engagement/ TCC Inoperative	Torque converter is not locked up.	ON vehicle	1. Throttle position sensor [accelerator pedal position (APP) sensor] adjustment	EC-49 (with QR25DE) EC-657 (with VQ35DE)
			2. Vehicle speed sensor·A/T (Revolution sensor) and vehicle speed sensor·MTR	AT-115, AT-196
			3. Park/neutral position (PNP) switch adjustment	AT-257
			4. Engine speed signal	AT-120
			5. A/T fluid temperature sensor	AT-109
			6. Line pressure test	AT-65
			7. Torque converter clutch solenoid valve	AT-146
			8. Control valve assembly	AT-255
		OFF vehicle	9. Torque converter	AT-268
	Torque converter clutch piston slip.	ON vehicle	1. Fluid level	AT-61
			2. Throttle position sensor [accelerator pedal position (APP) sensor] adjustment	EC-49 (with QR25DE) EC-657 (with VQ35DE)
			3. Line pressure test	AT-65
			4. Torque converter clutch solenoid valve	AT-146
			5. Line pressure solenoid valve	AT-159
			6. Control valve assembly	AT-255
		OFF vehicle	7. Torque converter	AT-268
	Lock-up point is extremely high or low.	ON vehicle	1. Throttle position sensor [accelerator pedal position (APP) sensor] adjustment	EC-49 (with QR25DE) EC-657 (with VQ35DE)
			2. Vehicle speed sensor·A/T (Revolution sensor) and vehicle speed sensor·MTR	AT-115, AT-196
			3. Torque converter clutch solenoid valve	AT-146
			4. Control valve assembly	AT-255
Shift Shock	Sharp shock in shifting from N to D position.	ON vehicle	1. Engine idling rpm	EC-38 , EC-657
			2. Throttle position sensor [accelerator pedal position (APP) sensor] adjustment	EC-49 (with QR25DE) EC-657 (with VQ35DE)
			3. Line pressure test	AT-65
			4. A/T fluid temperature sensor	AT-109
			5. Engine speed signal	AT-120
			6. Line pressure solenoid valve	AT-159
			7. Control valve assembly	AT-255
			8. Accumulator N-D	AT-268
		OFF vehicle	9. Forward clutch	AT-313

Items	Symptom	Condition	Diagnostic Item	Reference Page
Shift Shock	Too sharp a shock in change from D_1 to D_2.	ON vehicle	1. Throttle position sensor [accelerator pedal position (APP) sensor] adjustment	EC-49 (with QR25DE) EC-657 (with VQ35DE)
			2. Line pressure test	AT-65
			3. Accumulator servo release	AT-268
			4. Control valve assembly	AT-255
			5. A/T fluid temperature sensor	AT-109
		OFF vehicle	6. Brake band	AT-268
	Too sharp a shock in change from D_2 to D_3.	ON vehicle	1. Throttle position sensor [accelerator pedal position (APP) sensor] adjustment	EC-49 (with QR25DE) EC-657 (with VQ35DE)
			2. Line pressure test	AT-65
			3. Control valve assembly	AT-255
		OFF vehicle	4. High clutch	AT-308
			5. Brake band	AT-268
	Too sharp a shock in change from D_3 to D_4.	ON vehicle	1. Throttle position sensor [accelerator pedal position (APP) sensor] adjustment	EC-49 (with QR25DE) EC-657 (with VQ35DE)
			2. Line pressure test	AT-65
			3. Control valve assembly	AT-255
		OFF vehicle	4. Brake band	AT-268
			5. Overrun clutch	AT-313
	Gear change shock felt during deceleration by releasing accelerator pedal.	ON vehicle	1. Throttle position sensor [accelerator pedal position (APP) sensor] adjustment	EC-49 (with QR25DE) EC-657 (with VQ35DE)
			2. Line pressure test	AT-65
			3. Overrun clutch solenoid valve	AT-180
			4. Control valve assembly	AT-255
	Large shock changing from 1_2 to 1_1 in 1 position.	ON vehicle	1. Control valve assembly	AT-255
		ON vehicle	2. Low & reverse brake	AT-319
Improper Shift Timing	Too high a gear change point from D_1 to D_2, from D_2 to D_3, from D_3 to D_4.	ON vehicle	1. Throttle position sensor [accelerator pedal position (APP) sensor] adjustment	EC-49 (with QR25DE) EC-657 (with VQ35DE)
			2. Vehicle speed sensor·A/T (Revolution sensor) and vehicle speed sensor·MTR	AT-115, AT-196
			3. Shift solenoid valve A	AT-165
			4. Shift solenoid valve B	AT-170
	Gear change directly from D_1 to D_3 occurs.	ON vehicle	1. Fluid level	AT-61
			2. Accumulator servo release	AT-263
		OFF vehicle	3. Brake band	AT-268
	Too high a change point from D_4 to D_3, from D_3 to D_2, from D_2 to D_1.	ON vehicle	1. Throttle position sensor [accelerator pedal position (APP) sensor] adjustment	EC-49 (with QR25DE) EC-657 (with VQ35DE)
			2. Vehicle speed sensor·A/T (Revolution sensor) and vehicle speed sensor·MTR	AT-115, AT-196
	Kickdown does not operate when depressing pedal in D_4 within kickdown vehicle speed.	ON vehicle	1. Throttle position sensor [accelerator pedal position (APP) sensor] adjustment	EC-49 (with QR25DE) EC-657 (with VQ35DE)
			2. Vehicle speed sensor·A/T (Revolution sensor) and vehicle speed sensor·MTR	AT-115, AT-196
			3. Shift solenoid valve A	AT-165
			4. Shift solenoid valve B	AT-170

Items	Symptom	Condition	Diagnostic Item	Reference Page
Improper Shift Timing	Kickdown operates or engine overruns when depressing pedal in D_4 beyond kickdown vehicle speed limit.	ON vehicle	1. Vehicle speed sensor·A/T (Revolution sensor) and vehicle speed sensor·MTR	AT-115, AT-196
			2. Throttle position sensor [accelerator pedal position (APP) sensor] adjustment	EC-49 (with QR25DE) EC-657 (with VQ35DE)
			3. Shift solenoid valve A	AT-165
			4. Shift solenoid valve B	AT-170
	Gear change from 2_2 to 2_3 in 2 position.	ON vehicle	1. Park/neutral position (PNP) switch adjustment	AT-257
	Gear change from 1_1 to 1_2 in 1 position.	ON vehicle	1. Park/neutral position (PNP) switch adjustment	AT-257
			2. Control cable adjustment	AT-258
No Down Shift	Failure to change gear from D_4 to D_3 .	ON vehicle	1. Fluid level	AT-61
			2. Throttle position sensor [accelerator pedal position (APP) sensor] adjustment	EC-49 (with QR25DE) EC-657 (with VQ35DE)
			3. Overrun clutch solenoid valve	AT-180
			4. Shift solenoid valve A	AT-165
			5. Line pressure solenoid valve	AT-159
			6. Control valve assembly	AT-255
		OFF vehicle	7. Low & reverse brake	AT-319
			8. Overrun clutch	AT-313
	Failure to change gear from D_3 to D_2 or from D_4 to D_2 .	ON vehicle	1. Fluid level	AT-61
			2. Throttle position sensor [accelerator pedal position (APP) sensor] adjustment	EC-49 (with QR25DE) EC-657 (with VQ35DE)
			3. Shift solenoid valve A	AT-165
			4. Shift solenoid valve B	AT-170
			5. Control valve assembly	AT-255
		OFF vehicle	6. High clutch	AT-308
			7. Brake band	AT-268
	Failure to change gear from D_2 to D_1 or from D_3 to D_1 .	ON vehicle	1. Fluid level	AT-61
			2. Throttle position sensor [accelerator pedal position (APP) sensor] adjustment	EC-49 (with QR25DE) EC-657 (with VQ35DE)
			3. Shift solenoid valve A	AT-165
			4. Shift solenoid valve B	AT-170
			5. Control valve assembly	AT-255
		OFF vehicle	6. Low one-way clutch	AT-268
			7. High clutch	AT-308
			8. Brake band	AT-268

Items	Symptom	Condition	Diagnostic Item	Reference Page
No Down Shift	Failure to change from D_3 to 2_2 when changing lever into 2 position. AT-240	ON vehicle	1. Park/neutral position (PNP) switch adjustment	AT-257
			2. Throttle position sensor [accelerator pedal position (APP) sensor] adjustment	EC-49 (with QR25DE) EC-657 (with VQ35DE)
			3. Overrun clutch solenoid valve	AT-180
			4. Shift solenoid valve B	AT-170
			5. Shift solenoid valve A	AT-165
			6. Control valve assembly	AT-255
			7. Control cable adjustment	AT-258
		OFF vehicle	8. Brake band	AT-268
			9. Overrun clutch	AT-313
	Does not change from 1_2 to 1_1 in 1 position.	ON vehicle	1. Park/neutral position (PNP) switch adjustment	AT-257
			2. Vehicle speed sensor·A/T (Revolution sensor) and vehicle speed sensor·MTR	AT-115, AT-196
			3. Shift solenoid valve A	AT-165
			4. Control valve assembly	AT-255
			5. Overrun clutch solenoid valve	AT-180
		OFF vehicle	6. Overrun clutch	AT-313
			7. Low & reverse brake	AT-319
No Up Shift	Failure to change gear from D_1 to D_2.	ON vehicle	1. Park/neutral position (PNP) switch adjustment	AT-257
			2. Control cable adjustment	AT-258
			3. Shift solenoid valve A	AT-165
			4. Control valve assembly	AT-255
			5. Vehicle speed sensor·A/T (Revolution sensor) and vehicle speed sensor·MTR	AT-115, AT-196
		OFF vehicle	6. Brake band	AT-268
	Failure to change gear from D_2 to D_3.	ON vehicle	1. Park/neutral position (PNP) switch adjustment	AT-257
			2. Control cable adjustment	AT-258
			3. Shift solenoid valve B	AT-170
			4. Control valve assembly	AT-255
			5. Vehicle speed sensor·A/T (Revolution sensor) and vehicle speed sensor·MTR	AT-115, AT-196
		OFF vehicle	6. High clutch	AT-308
			7. Brake band	AT-268

Items	Symptom	Condition	Diagnostic Item	Reference Page
No Up Shift	Failure to change gear from D3 to D4 .	ON vehicle	1. Park/neutral position (PNP) switch adjustment	AT-257
			2. Control cable adjustment	AT-258
			3. Shift solenoid valve A	AT-165
			4. Vehicle speed sensor·A/T (Revolution sensor) and vehicle speed sensor·MTR	AT-115, AT-196
			5. A/T fluid temperature sensor	AT-109
		OFF vehicle	6. Brake band	AT-268
	A/T does not shift to D4 when driving with overdrive control switch ON.	ON vehicle	1. Throttle position sensor [accelerator pedal position (APP) sensor] adjustment	EC-49 (with QR25DE) EC-657 (with VQ35DE)
			2. Park/neutral position (PNP) switch adjustment	AT-257
			3. Vehicle speed sensor·A/T (Revolution sensor) and vehicle speed sensor·MTR	AT-115, AT-196
			4. Shift solenoid valve A	AT-165
			5. Overrun clutch solenoid valve	AT-180
			6. Control valve assembly	AT-255
			7. A/T fluid temperature sensor	AT-109
			8. Line pressure solenoid valve	AT-159
		OFF vehicle	9. Brake band	AT-268
			10. Overrun clutch	AT-313
Slips/Will Not Engage	Vehicle will not run in R position (but runs in D, 2 and 1 positions). Clutch slips. Very poor acceleration.	ON vehicle	1. Control cable adjustment	AT-258
			2. Line pressure test	AT-65
			3. Line pressure solenoid valve	AT-159
			4. Control valve assembly	AT-255
		OFF vehicle	5. Reverse clutch	AT-305
			6. High clutch	AT-308
			7. Forward clutch	AT-313
			8. Overrun clutch	AT-313
			9. Low & reverse brake	AT-319
	Vehicle will not run in D and 2 positions (but runs in 1 and R positions).	ON vehicle	1. Control cable adjustment	AT-258
		OFF vehicle	2. Low one-way clutch	AT-268

Items	Symptom	Condition	Diagnostic Item	Reference Page
Slips/Will Not Engage	Vehicle will not run in D, 1, 2 positions (but runs in R position). Clutch slips. Very poor acceleration.	ON vehicle	1. Fluid level	AT-61
			2. Line pressure test	AT-65
			3. Line pressure solenoid valve	AT-159
			4. Control valve assembly	AT-255
			5. Accumulator N-D	AT-268
		OFF vehicle	6. Reverse clutch	AT-305
			7. High clutch	AT-308
			8. Forward clutch	AT-313
			9. Forward one-way clutch	AT-268
			10. Low one-way clutch	AT-268
	Clutches or brakes slip somewhat in starting.	ON vehicle	1. Fluid level	AT-61
			2. Control cable adjustment	AT-258
			3. Throttle position sensor [accelerator pedal position (APP) sensor] adjustment	EC-49 (with QR25DE) EC-657 (with VQ35DE)
			4. Line pressure test	AT-65
			5. Line pressure solenoid valve	AT-159
			6. Control valve assembly	AT-255
			7. Accumulator N-D	AT-268
		OFF vehicle	8. Forward clutch	AT-313
			9. Reverse clutch	AT-305
			10. Low & reverse brake	AT-319
			11. Oil pump	AT-286
			12. Torque converter	AT-268
	No creep at all. AT-219, AT-222	ON vehicle	1. Fluid level	AT-61
			2. Line pressure test	AT-65
			3. Control valve assembly	AT-255
		OFF vehicle	4. Forward clutch	AT-313
			5. Oil pump	AT-286
			6. Torque converter	AT-268
	Almost no shock or clutches slipping in change from D_1 to D_2 .	ON vehicle	1. Fluid level	AT-61
			2. Throttle position sensor [accelerator pedal position (APP) sensor] adjustment	EC-49 (with QR25DE) EC-657 (with VQ35DE)
			3. Line pressure test	AT-65
			4. Accumulator servo release	AT-263
			5. Control valve assembly	AT-255
		OFF vehicle	6. Brake band	AT-268

Items	Symptom	Condition	Diagnostic Item	Reference Page
Slips/Will Not Engage	Almost no shock or slipping in change from D2 to D3 .	ON vehicle	1. Fluid level	AT-61
			2. Throttle position sensor [accelerator pedal position (APP) sensor] adjustment	EC-49 (with QR25DE) EC-657 (with VQ35DE)
			3. Line pressure test	AT-65
			4. Control valve assembly	AT-255
		OFF vehicle	5. High clutch	AT-308
			6. Forward clutch	AT-313
	Almost no shock or slipping in change from D3 to D4 .	ON vehicle	1. Fluid level	AT-61
			2. Throttle position sensor [accelerator pedal position (APP) sensor] adjustment	EC-49 (with QR25DE) EC-657 (with VQ35DE)
			3. Line pressure test	AT-65
			4. Control valve assembly	AT-255
		OFF vehicle	5. High clutch	AT-308
			6. Brake band	AT-268
	Races extremely fast or slips in changing from D4 to D3 when depressing pedal.	ON vehicle	1. Fluid level	AT-61
			2. Throttle position sensor [accelerator pedal position (APP) sensor] adjustment	EC-49 (with QR25DE) EC-657 (with VQ35DE)
			3. Line pressure test	AT-65
			4. Line pressure solenoid valve	AT-159
			5. Control valve assembly	AT-255
		OFF vehicle	6. High clutch	AT-308
			7. Forward clutch	AT-313
	Races extremely fast or slips in changing from D4 to D2 when depressing pedal.	ON vehicle	1. Fluid level	AT-61
			2. Throttle position sensor [accelerator pedal position (APP) sensor] adjustment	EC-49 (with QR25DE) EC-657 (with VQ35DE)
			3. Line pressure test	AT-65
			4. Line pressure solenoid valve	AT-159
			5. Shift solenoid valve A	AT-165
			6. Control valve assembly	AT-255
		OFF vehicle	7. Brake band	AT-268
			8. Forward clutch	AT-313
	Races extremely fast or slips in changing from D3 to D2 when depressing pedal.	ON vehicle	1. Fluid level	AT-61
			2. Throttle position sensor [accelerator pedal position (APP) sensor] adjustment	EC-49 (with QR25DE) EC-657 (with VQ35DE)
			3. Line pressure test	AT-65
			4. Line pressure solenoid valve	AT-159
			5. Control valve assembly	AT-255
			6. A/T fluid temperature sensor	AT-109
		OFF vehicle	7. Brake band	AT-268
			8. Forward clutch	AT-313
			9. High clutch	AT-308

Items	Symptom	Condition	Diagnostic Item	Reference Page
Slips/Will Not Engage	Races extremely fast or slips in changing from D4 or D3 to D1 when depressing pedal.	ON vehicle	1. Fluid level	AT-61
			2. Throttle position sensor [accelerator pedal position (APP) sensor] adjustment	EC-49 (with QR25DE) EC-657 (with VQ35DE)
			3. Line pressure test	AT-65
			4. Line pressure solenoid valve	AT-159
			5. Control valve assembly	AT-255
		OFF vehicle	6. Forward clutch	AT-313
			7. Forward one-way clutch	AT-268
			8. Low one-way clutch	AT-268
	Vehicle will not run in any position.	ON vehicle	1. Fluid level	AT-61
			2. Control cable adjustment	AT-258
			3. Line pressure test	AT-65
			4. Line pressure solenoid valve	AT-159
		OFF vehicle	5. Oil pump	AT-286
			6. High clutch	AT-308
			7. Brake band	AT-268
			8. Low & reverse brake	AT-319
			9. Torque converter	AT-268
			10. Parking components	AT-283
NOT USED	Engine cannot be started in P and N positions. AT-214	ON vehicle	1. Ignition switch and starter	SC-6
			2. Control cable adjustment	AT-258
			3. Park/neutral position (PNP) switch adjustment	AT-257
	Engine starts in positions other than P and N.	ON vehicle	1. Control cable adjustment	AT-258
			2. Park/neutral position (PNP) switch adjustment	AT-257
	Transaxle noise in P and N positions.	ON vehicle	1. Fluid level	AT-61
			2. Line pressure test	AT-65
			3. Throttle position sensor [accelerator pedal position (APP) sensor] adjustment	EC-49 (with QR25DE) EC-657 (with VQ35DE)
			4. Vehicle speed sensor·A/T (Revolution sensor) and vehicle speed sensor·MTR	AT-115, AT-196
			5. Engine speed signal	AT-120
		OFF vehicle	6. Oil pump	AT-286
			7. Torque converter	AT-268
	Vehicle moves when changing into P position or parking gear does not disengage when shifted out of P position.	ON vehicle	1. Control cable adjustment	AT-258
		OFF vehicle	2. Parking components	AT-283

Items	Symptom	Condition	Diagnostic Item	Reference Page
NOT USED	Vehicle runs in N position. AT-215	ON vehicle	1. Control cable adjustment	AT-258
		OFF vehicle	2. Forward clutch	AT-313
			3. Reverse clutch	AT-305
			4. Overrun clutch	AT-313
	Vehicle braked when shifting into R position.	ON vehicle	1. Fluid level	AT-61
			2. Control cable adjustment	AT-258
			3. Line pressure test	AT-65
			4. Line pressure solenoid valve	AT-159
			5. Control valve assembly	AT-255
		OFF vehicle	6. High clutch	AT-308
			7. Brake band	AT-268
			8. Forward clutch	AT-313
			9. Overrun clutch	AT-313
	Excessive creep.	ON vehicle	1. Engine idling rpm	EC-38 , EC-657
	Engine stops when shifting lever into R, D, 2 and 1.	ON vehicle	1. Engine idling rpm	EC-38 , EC-657
			2. Torque converter clutch solenoid valve	AT-146
			3. Control valve assembly	AT-255
		OFF vehicle	4. Torque converter	AT-268
	Vehicle braked by gear change from D_1 to D_2 .	ON vehicle	1. Fluid level	AT-61
		OFF vehicle	2. Reverse clutch	AT-305
			3. Low & reverse brake	AT-319
			4. High clutch	AT-308
			5. Low one-way clutch	AT-268
	Vehicle braked by gear change from D_2 to D_3 .	ON vehicle	1. Fluid level	AT-61
		OFF vehicle	2. Brake band	AT-268
	Vehicle braked by gear change from D_3 to D_4 .	ON vehicle	1. Fluid level	AT-61
		OFF vehicle	2. Overrun clutch	AT-313
			3. Forward one-way clutch	AT-268
			4. Reverse clutch	AT-305

Items	Symptom	Condition	Diagnostic Item	Reference Page
NOT USED	Maximum speed not attained. Acceleration poor.	ON vehicle	1. Fluid level	AT-61
			2. Park/neutral position (PNP) switch adjustment	AT-257
			3. Shift solenoid valve A	AT-165
			4. Shift solenoid valve B	AT-170
			5. Control valve assembly	AT-255
		OFF vehicle	6. Reverse clutch	AT-305
			7. High clutch	AT-308
			8. Brake band	AT-268
			9. Low & reverse brake	AT-319
			10. Oil pump	AT-286
			11. Torque converter	AT-268
	Transaxle noise in D, 2, 1 and R positions.	ON vehicle	1. Fluid level	AT-61
		ON vehicle	2. Torque converter	AT-268
	Engine brake does not operate in “1” position.	ON vehicle	1. Park/neutral position (PNP) switch adjustment	AT-257
			2. Control cable adjustment	AT-258
			3. Throttle position sensor [accelerator pedal position (APP) sensor] adjustment	EC-49 (with QR25DE) EC-657 (with VQ35DE)
			4. Vehicle speed sensor·A/T (Revolution sensor) and vehicle speed sensor·MTR	AT-115, AT-196
			5. Shift solenoid valve A	AT-165
			6. Control valve assembly	AT-255
			7. Overrun clutch solenoid valve	AT-180
		OFF vehicle	8. Overrun clutch	AT-313
			9. Low & reverse brake	AT-319
	Transaxle overheats.	ON vehicle	1. Fluid level	AT-61
			2. Engine idling rpm	EC-38 , EC-657
			3. Throttle position sensor [accelerator pedal position (APP) sensor] adjustment	EC-49 (with QR25DE) EC-657 (with VQ35DE)
			4. Line pressure test	AT-65
			5. Line pressure solenoid valve	AT-159
			6. Control valve assembly	AT-255
		OFF vehicle	7. Oil pump	AT-286
			8. Reverse clutch	AT-305
			9. High clutch	AT-308
			10. Brake band	AT-268
			11. Forward clutch	AT-313
			12. Overrun clutch	AT-313
			13. Low & reverse brake	AT-319
			14. Torque converter	AT-268

Items	Symptom	Condition	Diagnostic Item	Reference Page
NOT USED	ATF shoots out during operation. White smoke emitted from exhaust pipe during operation.	ON vehicle	1. Fluid level	AT-61
		OFF vehicle	2. Reverse clutch	AT-305
			3. High clutch	AT-308
			4. Brake band	AT-268
			5. Forward clutch	AT-313
			6. Overrun clutch	AT-313
			7. Low & reverse brake	AT-319
	Offensive smell at fluid charging pipe.	ON vehicle	1. Fluid level	AT-61
		OFF vehicle	2. Torque converter	AT-268
			3. Oil pump	AT-286
			4. Reverse clutch	AT-305
			5. High clutch	AT-308
			6. Brake band	AT-268
			7. Forward clutch	AT-313
			8. Overrun clutch	AT-313
			9. Low & reverse brake	AT-319
	Engine is stopped at R, D, 2 and 1 positions.	ON vehicle	1. Fluid level	AT-61
			2. Torque converter clutch solenoid valve	AT-146
			3. Shift solenoid valve B	AT-170
			4. Shift solenoid valve A	AT-165
			5. Control valve assembly	AT-255

TCM Terminals and Reference Value

ECS004RH

PREPARATION

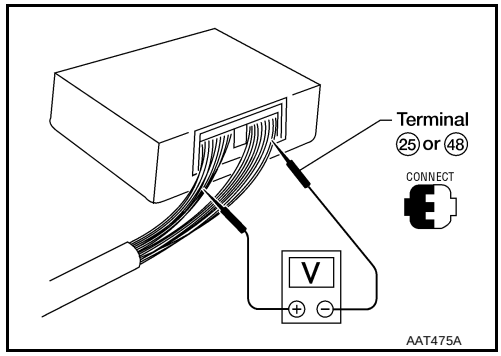

- Measure voltage between each terminal and terminal 25 or 48 by following “TCM INSPECTION TABLE”.

TCM HARNESS CONNECTOR TERMINAL LAYOUT

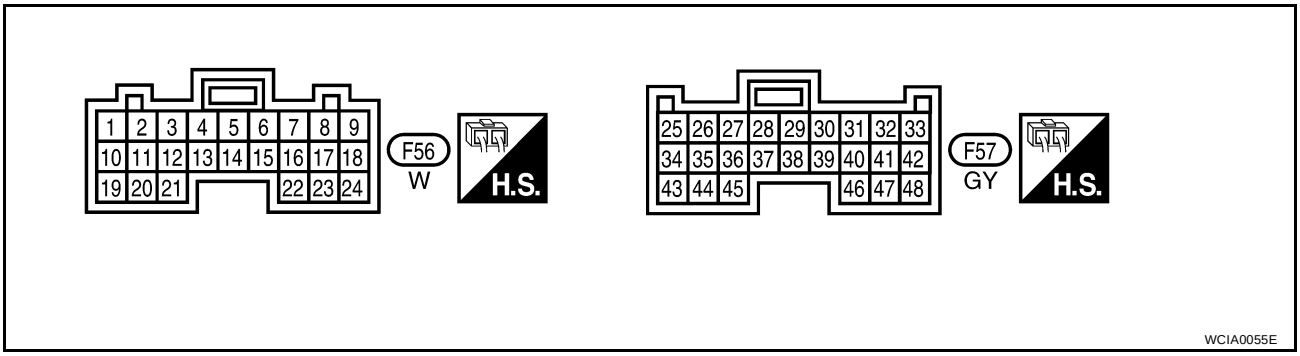

TCM INSPECTION TABLE

(Data are reference values.)

Terminal No.	Wire color	Item	Condition		Judgement standard (Approx.)
1	G/R	Line pressure solenoid valve		When releasing accelerator pedal after warming up engine.	1.5 - 3.0V
				When depressing accelerator pedal fully after warming up engine.	0V
2	W/B	Line pressure solenoid valve (with dropping resistor)		When releasing accelerator pedal after warming up engine.	4 - 14V
				When depressing accelerator pedal fully after warming up engine.	0V
3	G/B	Torque converter clutch solenoid valve		When A/T performs lock-up.	8 - 15V
				When A/T does not perform lock-up.	0V
5*	L	CAN-H	—	—	—
6*	Y	CAN-L	—	—	—
10	R/Y	Power source	ON or OFF	With ignition switch ON.	Battery voltage
				With ignition switch OFF.	0V
11	R/Y	Shift solenoid valve A		When shift solenoid valve A operates. (When driving in D_1 or D_4.)	Battery voltage
				When shift solenoid valve A does not operate. (When driving in D_2 or D_3.)	0V
12	LG/B	Shift solenoid valve B		When shift solenoid valve B operates. (When driving in D_1 or D_2.)	Battery voltage
				When shift solenoid valve B does not operate. (When driving in D_3 or D_4.)	0V
19	R/Y	Power source	Same as No. 10		
20	BR/Y	Overrun clutch solenoid valve		When overrun clutch solenoid valve operates.	Battery voltage
				When overrun clutch solenoid valve does not operate.	0V
25	B	Ground	—	—	—
26	PU/W	PNP switch 1 position	ON	When setting selector lever to 1 position.	Battery voltage
				When setting selector lever to other positions.	0V
27	P/B	PNP switch 2 position		When setting selector lever to 2 position.	Battery voltage
				When setting selector lever to other positions.	0V
28	Y/R	Power source (Memory back-up)	ON or OFF	With ignition switch OFF.	Battery voltage
				With ignition switch ON.	Battery voltage

Terminal No.	Wire color	Item	Condition		Judgement standard (Approx.)
29	W	Revolution sensor		When moving at 20 km/h (12 MPH), use the CONSULT-II pulse frequency measuring function.*1 **CAUTION:** **Connect the diagnosis data link cable to the vehicle diagnosis connector.** *1: A circuit tester cannot be used to test this item.	450 Hz
				When vehicle is parked.	Under 1.3V or over 4.5V
30**	BR/Y	Data link connector (RX)		—	—
31**	LG	Data link connector (TX)		—	—
32	R	Sensor power		Ignition switch ON.	4.5 - 5.5V
				Ignition switch OFF.	0V
34	G	PNP switch D position		When setting selector lever to D position.	Battery voltage
				When setting selector lever to other positions.	0V
35	G/W	PNP switch R position		When setting selector lever to R position.	Battery voltage
				When setting selector lever to other positions.	0V
36	R/B	PNP switch P or N position		When setting selector lever to P or N position.	Battery voltage
				When setting selector lever to other positions.	0V
38	G	Turbine revolution sensor		When moving at 20 km/h (12 MPH), use the CONSULT-II pulse frequency measuring function.*1 **CAUTION:** **Connect the diagnosis data link cable to the vehicle diagnosis connector.** *1: A circuit tester cannot be used to test this item.	240 Hz
				When vehicle is parked.	Under 1.3V or over 4.5V
39	W/G	Engine speed signal		Refer to EC-99, "ECM INSPECTION TABLE" (with QR25DE), or EC-722, "ECM INSPECTION TABLE" (with VQ35DE).	
40	PU/R	Vehicle speed sensor		When moving vehicle at 2 to 3 km/h (1 to 2 MPH) for 1 m (3 ft) or more.	Voltage varies between less than 1V and more than 4.5V
41	W	Throttle position sensor [accelerator pedal position (APP) sensor]		When depressing accelerator pedal slowly after warming up engine. (Voltage rises gradually in response to throttle position.)	Fully-closed throttle: 0.5V Fully-open throttle: 4V
42	B	Sensor ground	—	—	—

Terminal No.	Wire color	Item	Condition		Judgement standard (Approx.)
47	G	A/T fluid temperature sensor	ON	When ATF temperature is 20°C (68°F).	1.5V
				When ATF temperature is 80°C (176°F).	0.5V
48	B	Ground	—	—	—

*: These terminals are connected to the ECM.
**: These terminals are connected to the Data link connector.

CAN Communication

ECS004RI

CAN (Controller Area Network) is a serial communication line for real time application. It is an on-vehicle multiplex communication line with high data communication speed and excellent error detection ability. Many electronic control units are equipped onto a vehicle, and each control unit shares information and links with other control units during operation (not independent). In CAN communication, control units are connected with 2 communication lines (CAN H line, CAN L line) allowing a high rate of information transmission with less wiring. Each control unit transmits/receives data but selectively reads required data only.

FOR TCS MODELS

System diagram

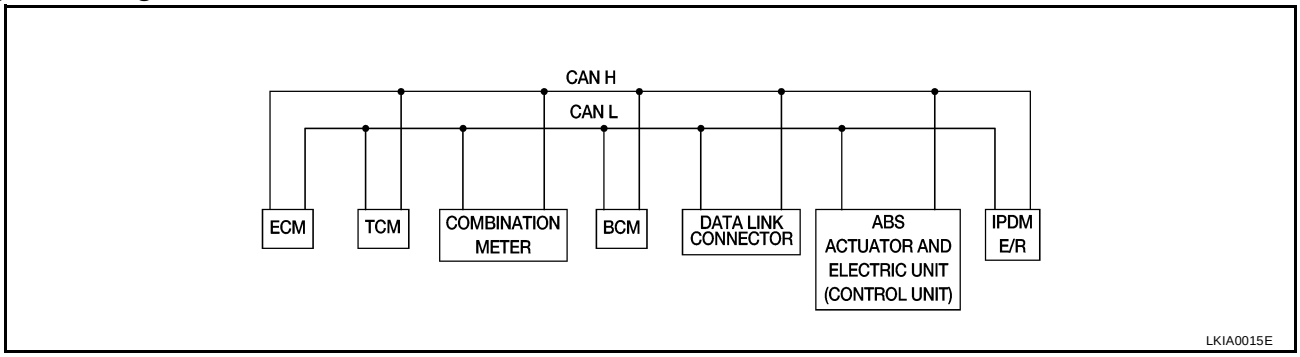

Input/output signal chart

T: Transmit R: Receive

Signals	ECM	TCM	COMBINATION METER	BCM	ABS/TCS control unit	IPDM E/R
Engine speed signal	T		R		R	
Engine coolant temperature signal	T		R			
Accelerator pedal position signal	T					
Fuel consumption monitor signal	T		R			
A/T warning lamp signal		T	R			
A/T position indicator signal	R	T	R	R(R range only)	R	
ABS operation signal	R				T	
TCS operation signal	R	R			T	
Air conditioner switch signal	R			T		
Air conditioner compressor signal	R					T
A/C compressor request signal	T					R
Cooling fan motor operation signal	R					T
Cooling fan speed request signal	T					R
Position lights request			R	T		R
Position lights status				R		T
Low beam request				T		R
Low beam status	R			R		T

Signals	ECM	TCM	COMBINA-TION METER	BCM	ABS/TCS control unit	IPDM E/R
High beam request			R	T		R
High beam status	R			R		T
Front fog lights request				T		R
Front fog light status				R		T
OD cancel switch signal		R	T			R
Brake switch signal		R	T			
Vehicle speed signal	R		T			
	R		T	R		
Oil pressure switch			R			T
Sleep request1			R	T		
Sleep request2				T		R
N range switch signal		R	T			
P range switch signal		R	T			
Seat belt buckle switch signal			T	R		
Door switch signal			R	T		R
Tail lamp request			R	T		R
Turn indicator signal			R	T		
Buzzer output signal			R	T		
Trunk switch signal			R	T		
ASCD main switch signal	T		R			
ASCD cruise signal	T		R			
Wiper operation				R		T
Wiper stop position signal				R		T
Rear window defogger switch signal				T		R
Rear window defogger control signal	R			R		T

FOR A/T MODELS

System diagram

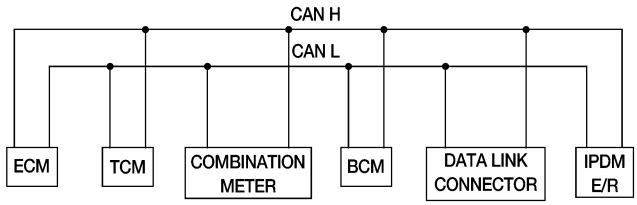

LKIA0017E

Input/output signal chart

T: Transmit R: Receive

Signals	ECM	TCM	COMBINATION METER	BCM	IPDM E/R
Engine speed signal	T		R		
Engine coolant temperature signal	T		R		
Accelerator pedal position signal	T				R

Signals	ECM	TCM	COMBINATION METER	BCM	IPDM E/R
Fuel consumption monitor signal	T		R		
A/T warning lamp signal		T	R		
A/T position indicator signal	R	T	R	R(R range only)	
Air conditioner switch signal	R			T	
Air conditioner compressor signal	R				T
A/C compressor request signal	T				R
Blower fan switch signal	R(QR25DE)			T	
Cooling fan motor operation signal	R			T	
Cooling fan speed request signal	T				R
Position lights request			R	T	R
Position lights status				R	T
Low beam request				T	R
Low beam status	R			R	T
High beam request			R	T	R
High beam status	R			R	T
Front fog lights request				T	R
Front fog light status				R	T
OD cancel switch signal		R	T		R
Brake switch signal		R	T		
Vehicle speed signal	R		T		
	R		T	R	
Oil pressure switch			R		T
Sleep request1			R	T	
Sleep request2				T	R
N range switch signal		R	T		
P range switch signal		R	T		
Seat belt buckle switch signal			T	R	
Door switch signal			R	T	R
Tail lamp request			R	T	R
Turn indicator signal			R	T	
Buzzer output signal			R	T	
Trunk switch signal			R	T	
ASCD main switch signal	T		R		
ASCD cruise signal	T		R		
Wiper operation				R	T
Wiper stop position signal				R	T
Rear window defogger switch signal				T	R
Rear window defogger control signal	R			R	T

FOR M/T MODELS

System diagram

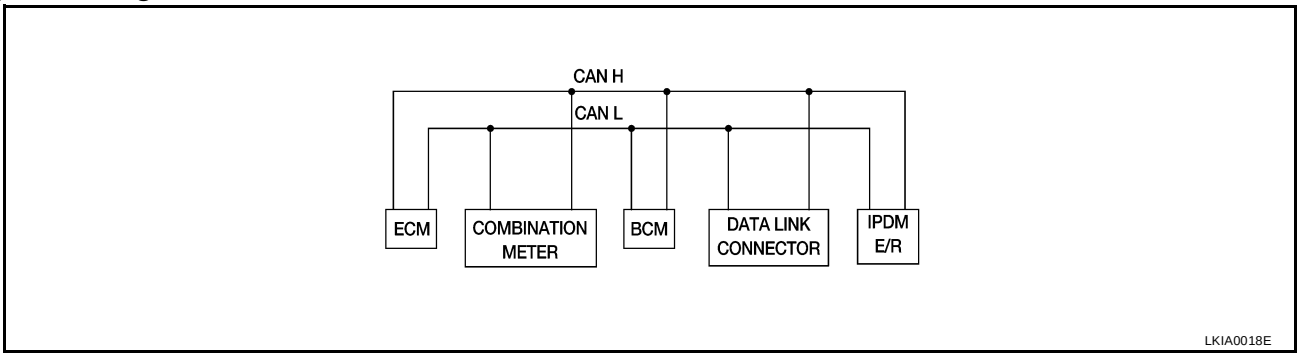

Input/output signal chart

T: Transmit R: Receive

Signals	ECM	COMBINATION METER	BCM	IPDM E/R
Engine speed signal	T			
Engine coolant temperature signal	T			
Fuel consumption monitor signal	T			
Air conditioner switch signal	R		T	
Air conditioner compressor signal	R			T
A/C compressor request signal	T			R
Blower fan switch signal	R(QR25DE)		T	
Cooling fan motor operation signal	R			T
Cooling fan speed request signal	T			R
Position lights request		R	T	R
Position lights status			R	T
Low beam request			T	R
Low beam status	R		R	T
High beam request		R	T	R
High beam status	R		R	T
Front fog lights request			T	R
Front fog light status			R	T
Vehicle speed signal	R	T		
Oil pressure switch		R		T
Sleep request1		R	T	
Sleep request2			T	R
Seat belt buckle switch signal		T	R	
Door switch signal		R	T	R
Tail lamp request		R	T	R
Turn indicator signal		R	T	
Buzzer output signal		R	T	
Trunk switch signal		R	T	
ASCD main switch signal	T	R		
ASCD cruise signal	T	R		
Wiper operation			R	T
Wiper stop position signal			R	T

Signals	ECM	COMBINATION METER	BCM	IPDM E/R
Rear window defogger switch signal			T	R
Rear window defogger control signal	R		R	T

TROUBLE DIAGNOSIS FOR POWER SUPPLY

PFP:00000

Wiring Diagram — AT — MAIN

ECS004RJ

AT-MAIN-01

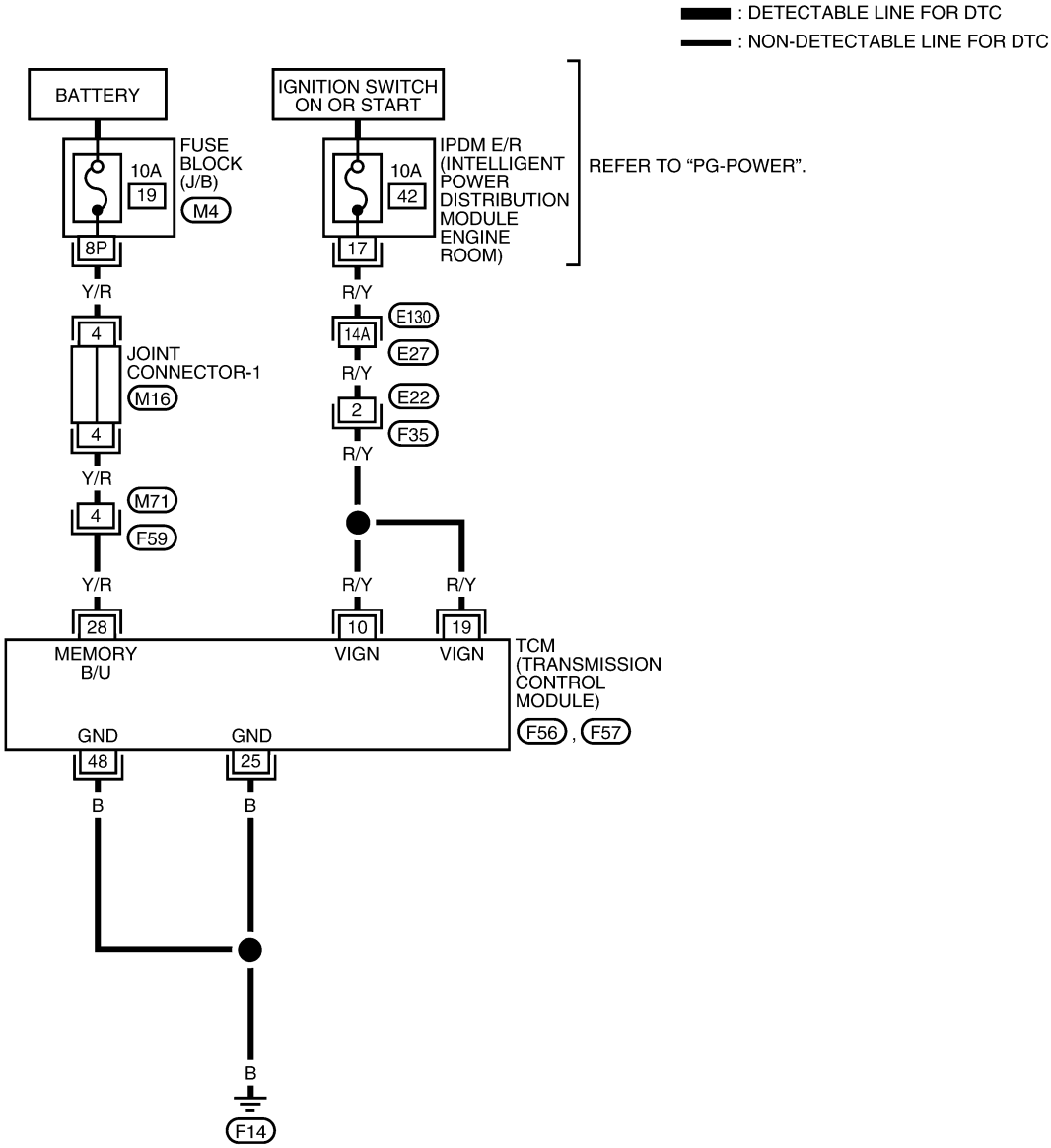

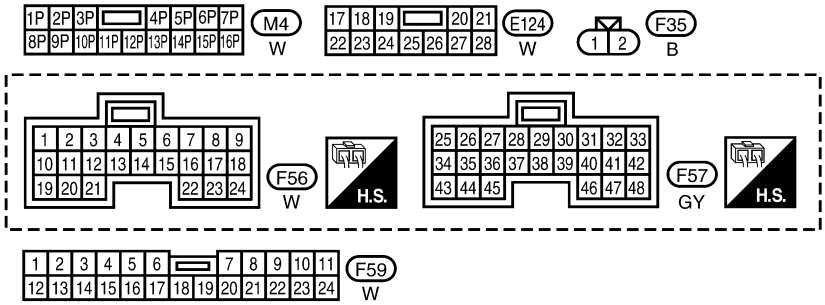

REFER TO THE FOLLOWING.

E130 - SUPER MULTIPLE JUNCTION (SMJ)

M16 - JOINT CONNECTOR (JC)

LCWA0005E

TCM TERMINALS AND REFERENCE VALUE MEASURED BETWEEN EACH TERMINAL AND 25 OR 48 (TCM GROUND)				
TERMINAL	WIRE COLOR	ITEM	CONDITION	DATA (APPROX.)
10	R/Y	POWER SOURCE	IGNITION ON	BATTERY VOLTAGE
			IGNITION OFF	0V
19	R/Y	POWER SOURCE	IGNITION ON	BATTERY VOLTAGE
			IGNITION OFF	0V
25	B	GROUND	—	—
28	Y/R	POWER SOURCE (MEMORY BACKUP)	IGNITION ON	BATTERY VOLTAGE
			IGNITION OFF	BATTERY VOLTAGE
48	B	GROUND	—	—

Diagnostic Procedure

ECS004RK

1. CHECK TCM POWER SOURCE STEP 1

1. Turn ignition switch to ON position.
   (Do not start engine.)
2. Check voltage between TCM terminals 10, 19, 28 and ground.

Voltage **: Battery voltage**

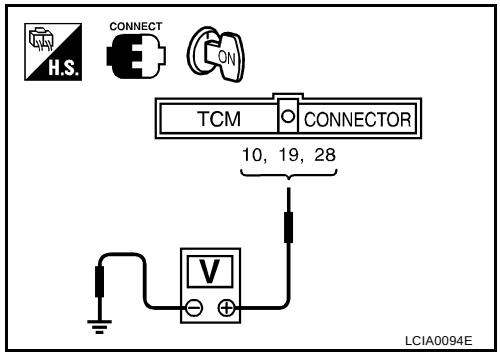

OK or NG

OK >> GO TO 2.
NG >> GO TO 3.

2. CHECK TCM POWER SOURCE STEP 2

1. Turn ignition switch to OFF position.
2. Check voltage between TCM terminal 28 (Y/R) and ground.

Voltage **: Battery voltage**

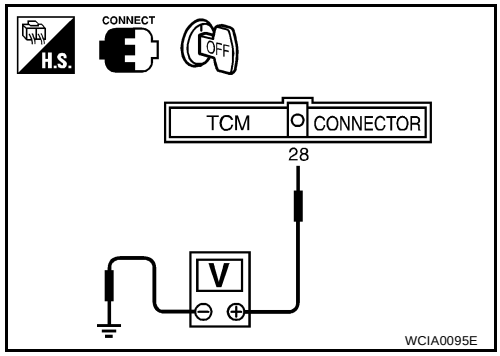

OK or NG

OK >> GO TO 4.
NG >> GO TO 3.

3. DETECT MALFUNCTIONING ITEM

Check the following items:

- Harness for short or open between ignition switch and TCM terminals 10, 19 and 28 (Main harness)
- Fuse
- Ignition switch
  Refer to PG-3, "POWER SUPPLY ROUTING CIRCUIT" .

OK or NG

OK >> GO TO 4.
NG >> Repair or replace damaged parts.

4. CHECK TCM GROUND CIRCUIT

1. Turn ignition switch to OFF position.
2. Disconnect TCM harness connector.
3. Check continuity between TCM terminals 25, 48 and ground. Refer to AT-100, "Wiring Diagram — AT — MAIN" .

Continuity should exist.

OK or NG

OK >> **INSPECTION END**
NG >> Repair open circuit or short to ground or short to power in harness or connectors.

DTC P0705 PARK/NEUTRAL POSITION SWITCH

PFP:32006

Description

ECS004RL

- The park/neutral position (PNP) switch includes a transmission range switch.
- The transmission range switch detects the selector lever position and sends a signal to the TCM.

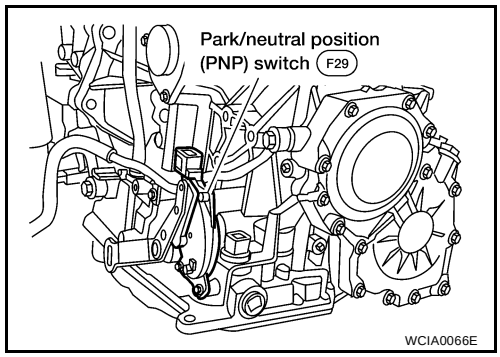

On Board Diagnosis Logic

ECS004RM

Diagnostic trouble code PNP SW/CIRC with CONSULT-II or P0705 without CONSULT-II is detected when TCM does not receive the correct voltage signal from the switch based on the gear position.

Possible Cause

ECS004RN

Check the following items.

- Harness or connectors
  (The park/neutral position (PNP) switch circuit is open or shorted.)
- Park/neutral position (PNP) switch

Diagnostic Trouble Code (DTC) Confirmation Procedure

ECS004RO

CAUTION:
Always drive vehicle at a safe speed.

NOTE:
If “DTC Confirmation Procedure” has been previously conducted, always turn ignition switch OFF and wait at least 10 seconds before conducting the next test.
After the repair, perform the following procedure to confirm the malfunction is eliminated.

WITH CONSULT-II

1. Turn ignition switch ON.

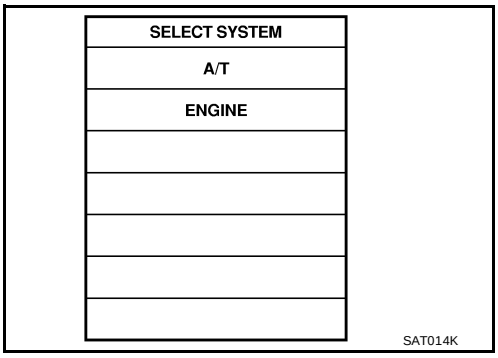

2. Select “DATA MONITOR” mode for “ENGINE” with CONSULT-II.
3. Start engine and maintain the following conditions for at least 5 consecutive seconds.
   VHCL SPEED SE: 10 km/h (6 MPH) or more
   THRTL POS SEN: More than 1.3V
   Selector lever: 3 or D position

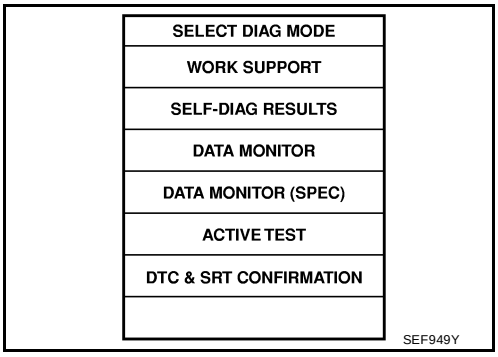

WITH GST

Follow the procedure “With CONSULT-II”.

Wiring Diagram — AT — PNP/SW

ECS004RP

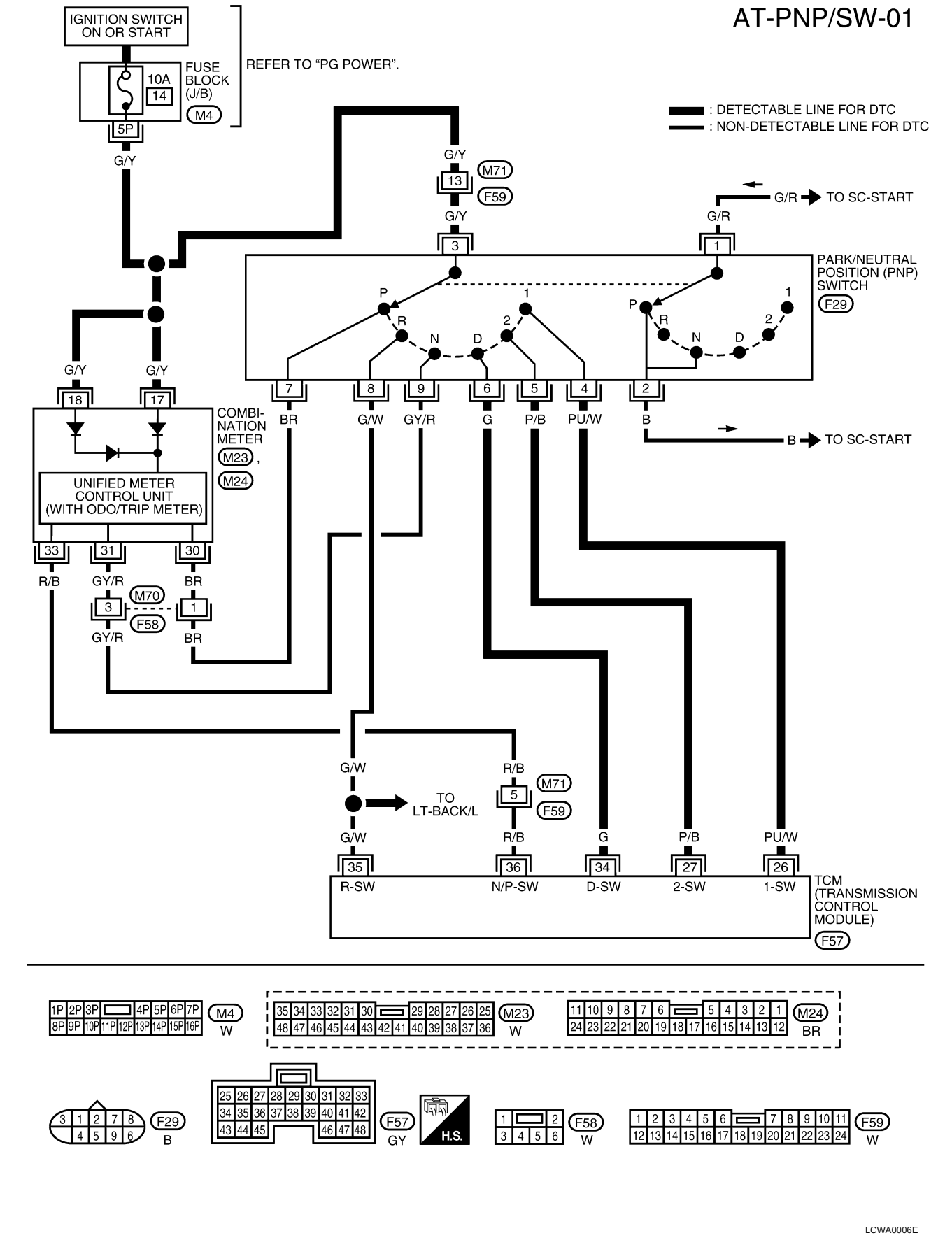

TCM TERMINALS AND REFERENCE VALUE MEASURED BETWEEN EACH TERMINAL AND 25 OR 48 (TCM GROUND)				
TERMINAL	WIRE COLOR	ITEM	CONDITION	DATA (APPROX.)
26	PU/W	PNP SWITCH 1 POSITION	WHEN SETTING SELECTOR LEVER IN 1 POSITION	BATTERY VOLTAGE
			WHEN SETTING SELECTOR LEVER IN OTHER POSITIONS	0V
27	P/B	PNP SWITCH 2 POSITION	WHEN SETTING SELECTOR LEVER IN 2 POSITION	BATTERY VOLTAGE
			WHEN SETTING SELECTOR LEVER IN OTHER POSITIONS	0V
34	G	PNP SWITCH D POSITION	WHEN SETTING SELECTOR LEVER IN D POSITION	BATTERY VOLTAGE
			WHEN SETTING SELECTOR LEVER IN OTHER POSITIONS	0V
35	G/W	PNP SWITCH R POSITION	WHEN SETTING SELECTOR LEVER IN R POSITION	BATTERY VOLTAGE
			WHEN SETTING SELECTOR LEVER IN OTHER POSITIONS	0V
36	R/B	PNP SWITCH P OR N POSITION	WHEN SETTING SELECTOR LEVER IN P OR N POSITION	BATTERY VOLTAGE
			WHEN SETTING SELECTOR LEVER IN OTHER POSITIONS	0V

Diagnostic Procedure

ECS004RQ

1. INSPECTION START

Do you have CONSULT-II?

Yes or No

Yes >> GO TO 2.
No >> GO TO 6.

2. CHECK PARK/NEUTRAL POSITION (PNP) SWITCH CIRCUIT (WITH CONSULT-II)

With CONSULT-II

1. Turn ignition switch to ON position.
   (Do not start engine.)
2. Select “TCM INPUT SIGNALS” in “DATA MONITOR” mode for “A/T” with CONSULT-II.
3. Read out P, R, N, D, 2 and 1 position switches moving selector lever to each position.
   Check that the signal of the selector lever position is indicated properly.

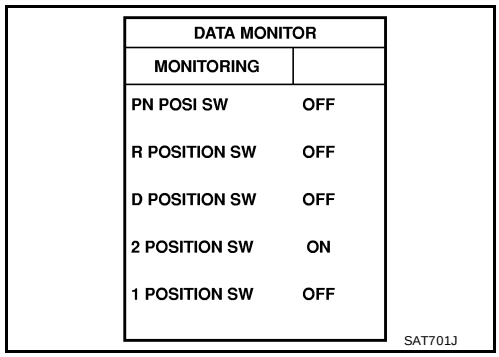

DATA MONITOR	
MONITORING	
PN POSI SW	OFF
R POSITION SW	OFF
D POSITION SW	OFF
2 POSITION SW	ON
1 POSITION SW	OFF

SAT701J

OK or NG

OK >> GO TO 7.
NG >> GO TO 3.

3. DETECT MALFUNCTIONING ITEM

Check the following item:

- Park/neutral position (PNP) switch
  Check continuity between park/neutral position (PNP) switch F29 terminals 1 (G/R) and 2 (B) and between terminals 3 (G/Y) and 4 (PU/W), 5 (P/B), 6 (G), 7 (BR), 8 (G/W) and 9 (GY/R) while moving manual shaft through each position.

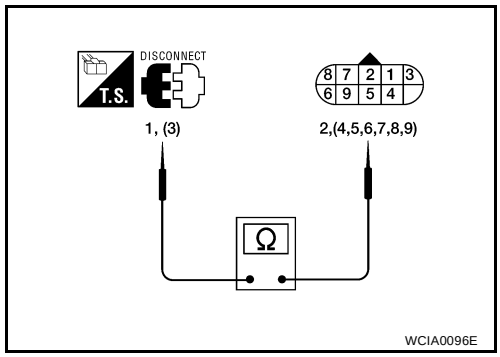

Lever position	Terminal No.	
P	3 - 7	1 - 2
R	3 - 8	
N	3 - 9	1 - 2
D	3 - 6	
2	3 - 5	
1	3 - 4	

OK or NG

OK >> GO TO 5.
NG >> GO TO 4.

4. CHECK MANUAL CONTROL CABLE ADJUSTMENT

Check PNP switch again with manual control cable disconnected from manual shaft of A/T assembly. Refer to test group 1.

OK or NG

OK >> Adjust manual control cable. Refer to AT-258, "Control Cable Adjustment" .
NG >> Repair or replace PNP switch.

5. DETECT MALFUNCTIONING ITEM

Check the following items:

- Harness for short or open between ignition switch and park/neutral position (PNP) switch (Main harness)
- Harness for short or open between park/neutral position (PNP) switch and TCM (Main harness)
- Fuse
- Joint connector-3 M29
- Ignition switch
  Refer to PG-3, "POWER SUPPLY ROUTING CIRCUIT" .

OK or NG

OK >> GO TO 7.
NG >> Repair or replace damaged parts.

6. CHECK PARK/NEUTRAL POSITION (PNP) SWITCH CIRCUIT (WITHOUT CONSULT-II)

Without CONSULT-II

1. Turn ignition switch to ON position. (Do not start engine.)
2. Check voltage between TCM terminals 26 (PU/W), 27 (P/B), 34 (G), 35 (G/W), 36 (R/B) and ground while moving selector lever through each position.

Lever Position	Terminal No.				
	36	35	34	27	26
P, N	B	0	0	0	0
R	0	B	0	0	0
D	0	0	B	0	0
2	0	0	0	B	0
1	0	0	0	0	B

B = Battery voltage

0 = 0V

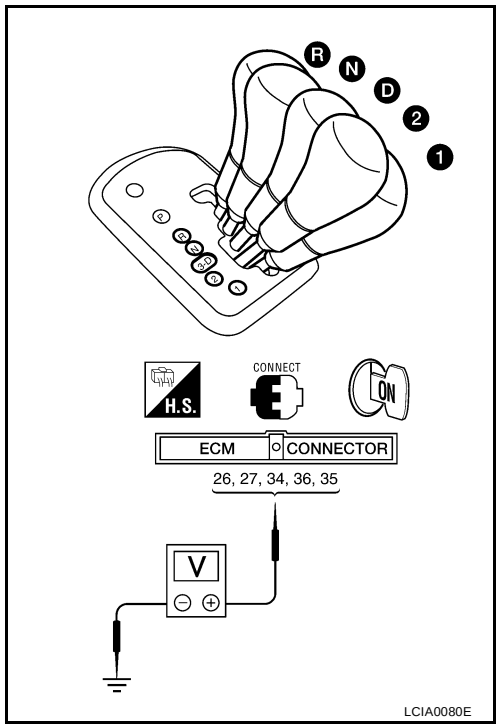

OK or NG

OK >> GO TO 7.
NG >> GO TO 5.

7. CHECK DTC

Perform AT-103, "Diagnostic Trouble Code (DTC) Confirmation Procedure" .

OK or NG

OK >> **INSPECTION END**
NG >> GO TO 8.

8. CHECK TCM INSPECTION

1. Perform TCM input/output signal inspection.
2. If NG, recheck TCM pin terminals for damage or loose connection with harness connector.

OK or NG

OK >> **INSPECTION END**
NG >> Repair or replace damaged parts.

DTC P0710 A/T FLUID TEMPERATURE SENSOR CIRCUIT

PFP:31940

Description

ECS004RR

The A/T fluid temperature sensor detects the A/T fluid temperature and sends a signal to the TCM.

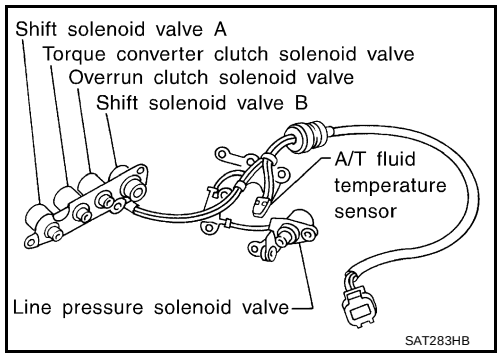

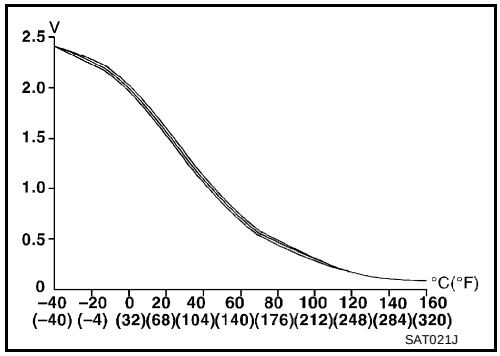

CONSULT-II REFERENCE VALUE IN DATA MONITOR MODE

Remarks: Specification data are reference values.

Monitor item	Condition	Specification (Approximately)	
A/T fluid temperature sensor	Cold [20°C (68°F)] ↓ Hot [80°C (176°F)]	1.5V ↓ 0.5V	2.5 kΩ ↓ 0.3 kΩ

On Board Diagnosis Logic

ECS004RS

Diagnostic trouble code ATF TEMP SEN/CIRC with CONSULT-II or P0710 without CONSULT-II is detected when TCM receives an excessively low or high voltage from the sensor.

Possible Cause

ECS004RT

Check the following items.

- Harness or connectors
  (The sensor circuit is open or shorted.)
- A/T fluid temperature sensor

Diagnostic Trouble Code (DTC) Confirmation Procedure

ECS004RU

CAUTION:

Always drive vehicle at a safe speed.

NOTE:

If “DTC Confirmation Procedure” has been previously conducted, always turn ignition switch OFF and wait at least 10 seconds before conducting the next test.

After the repair, perform the following procedure to confirm the malfunction is eliminated.

WITH CONSULT-II

1. Turn ignition switch ON and select “DATA MONITOR” mode for “ENGINE” with CONSULT-II.

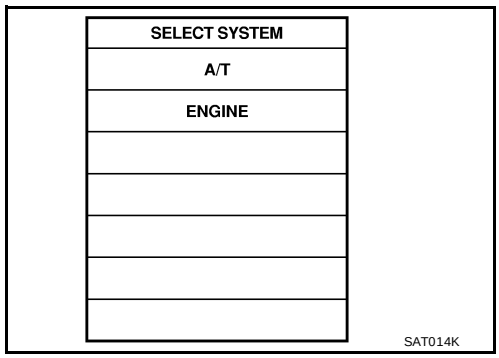

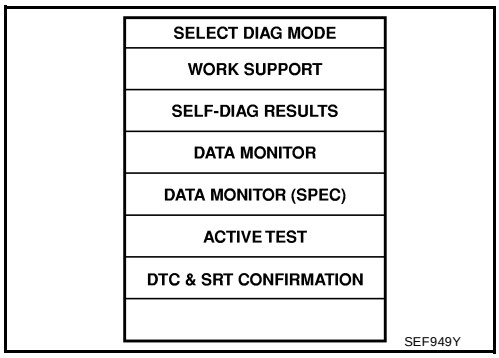

2. Start engine and maintain the following conditions for at least 10 minutes (Total). (It is not necessary to maintain continuously.)
   CMPS·RPM (REF): 450 rpm or more
   VHCL SPEED SE: 10 km/h (6 MPH) or more
   THRTL POS SEN: More than 1.2V
   Selector lever: D position

WITH GST

Follow the procedure “With CONSULT-II”.

Wiring Diagram — AT — FTS

ECS004RV

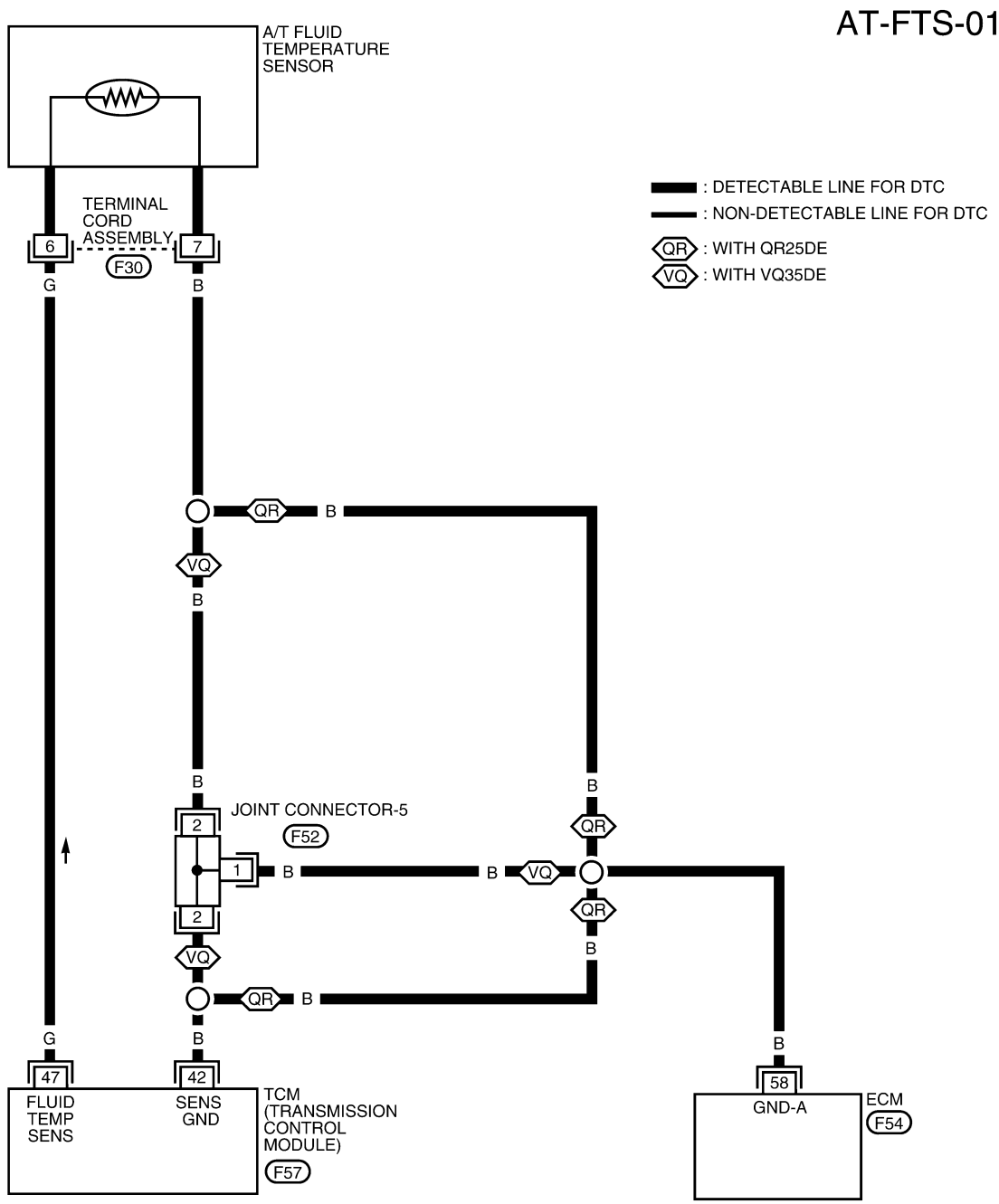

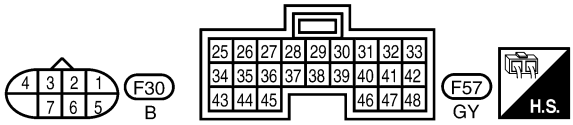

REFER TO THE FOLLOWING.
F54 - ELECTRICAL UNITS
F52 - JOINT CONNECTOR (J/C)

LCWA0007E

TCM TERMINALS AND REFERENCE VALUE MEASURED BETWEEN EACH TERMINAL AND 25 OR 48 (TCM GROUND)

TERMINAL	WIRE COLOR	ITEM	CONDITION	DATA (APPROX.)
42	B	SENSOR GROUND	—	—
47	G	A/T FLUID TEMPERATURE SENSOR	IGNITION ON AND ATF TEMPERATURE IS 20°C (68°F)	1.5V
			IGNITION ON AND ATF TEMPERATURE IS 80°C (176°F)	0.5V

Diagnostic Procedure

ECS004RW

1. INSPECTION START

Do you have CONSULT-II?

Yes or No

Yes >> GO TO 2.
No >> GO TO 6.

2. CHECK INPUT SIGNAL OF A/T FLUID TEMPERATURE SENSOR (WITH CONSULT-II)

With CONSULT-II

1. Start engine.
2. Select “TCM INPUT SIGNALS” in “DATA MONITOR” mode for “A/T” with CONSULT-II.
3. Read out the value of “FLUID TEMP SE”.

Voltage :Cold [20°C (68°F)] → Hot [80°C (176°F)]
:Approximately 1.5V → 0.5V

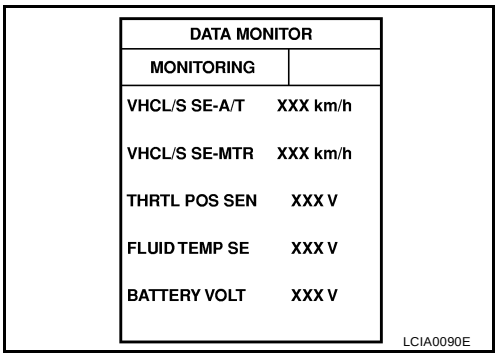

DATA MONITOR	
MONITORING	
VHCL/S SE-A/T	XXX km/h
VHCL/S SE-MTR	XXX km/h
THRTL POS SEN	XXX V
FLUID TEMP SE	XXX V
BATTERY VOLT	XXX V

LCIA0090E

OK or NG

OK >> GO TO 7.
NG >> GO TO 3.

3. CHECK A/T FLUID TEMPERATURE SENSOR WITH TERMINAL CORD ASSEMBLY

1. Turn ignition switch to OFF position.
2. Disconnect terminal cord assembly connector in engine compartment.
3. Check resistance between terminal cord F30 terminals 6 and 7 (component side) when A/T is cold.

Temperature	Resistance (Approx.)
Cold [20°C (68°F)]	25kΩ

4. Reinstall any part removed.

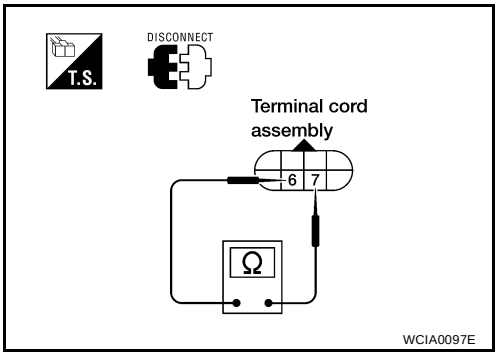

WCIA0097E

OK or NG

OK >> GO TO 4.
NG >> GO TO 5.

4. DETECT MALFUNCTIONING ITEM

Check the following items:

- Harness for short to ground or short to power or open between TCM, ECM and terminal cord assembly (Main harness)
- Ground circuit for ECM
  Refer to PG-3, "POWER SUPPLY ROUTING CIRCUIT" .

OK or NG

OK >> GO TO 7.
NG >> Repair or replace damaged parts.

5. DETECT MALFUNCTIONING ITEM

1. Remove oil pan.
2. Check the following items:

– A/T fluid temperature sensor
Check resistance between two terminals while changing temperature as shown in figure.

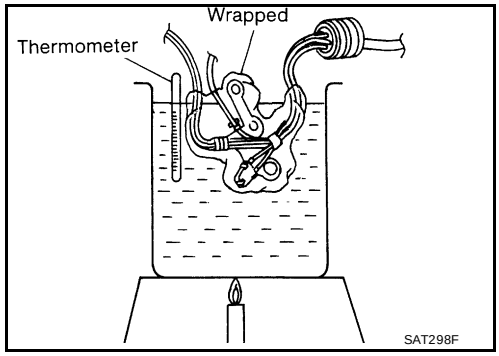

Temperature	Resistance (Approx.)
20 (68)	25kΩ
80 (176)	0.3kΩ

– Harness of terminal cord assembly for short or open

OK or NG

OK >> GO TO 7.
NG >> Repair or replace damaged parts.

6. CHECK INPUT SIGNAL OF A/T FLUID TEMPERATURE SENSOR (WITHOUT CONSULT-II)

Without CONSULT-II

1. Start engine.
2. Check voltage between TCM terminal 47 (BR) and ground while warming up A/T.

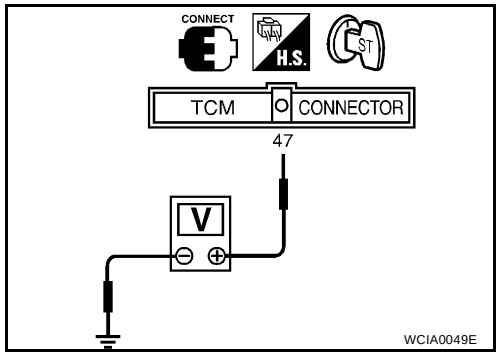

Temperature	Voltage (Approx.)
Cold [20°C (68°F)] → Hot [80°C (176°F)]	1.5V → 0.5V

OK or NG

OK >> GO TO 7.
NG >> GO TO 3.

7. CHECK DTC

Perform AT-109, "Diagnostic Trouble Code (DTC) Confirmation Procedure" .

OK or NG

OK >> **INSPECTION END**
NG >> GO TO 8.

8. CHECK TCM INSPECTION

1. Perform TCM input/output signal inspection.
2. If NG, recheck TCM pin terminals for damage or loose connection with harness connector.

OK or NG

OK >> **INSPECTION END**
NG >> Repair or replace damaged parts.

DTC P0720 VEHICLE SPEED SENSOR·A/T (REVOLUTION SENSOR)

PFP:32702

Description

ECS004RX

The revolution sensor detects the revolution of the idler gear parking pawl lock gear and emits a pulse signal. The pulse signal is sent to the TCM which converts it into vehicle speed.

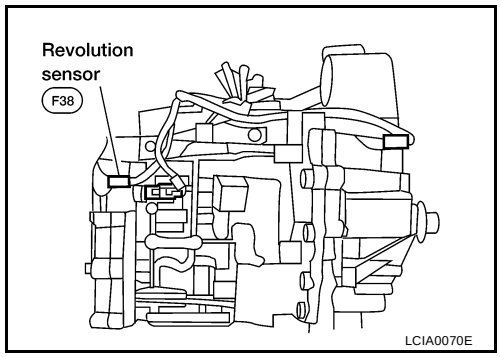

On Board Diagnosis Logic

ECS004RY

Diagnostic trouble code VEH SPD SEN/CIR AT with CONSULT-II or P0720 without CONSULT-II is detected when TCM does not receive the proper voltage signal from the sensor.

Possible Cause

ECS004RZ

Check the following items.

- Harness or connectors
  (The sensor circuit is open or shorted.)
- Revolution sensor

Diagnostic Trouble Code (DTC) Confirmation Procedure

ECS004S0

CAUTION:

- **Always drive vehicle at a safe speed.**
- **Be careful not to rev engine into the red zone on the tachometer.**

NOTE:

If “DTC Confirmation Procedure” has been previously conducted, always turn ignition switch OFF and wait at least 10 seconds before conducting the next test.
After the repair, perform the following procedure to confirm the malfunction is eliminated.

WITH CONSULT-II

1. Turn ignition switch ON and select “DATA MONITOR” mode for “A/T” with CONSULT-II.

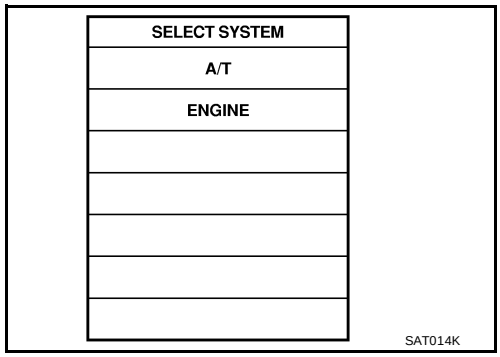

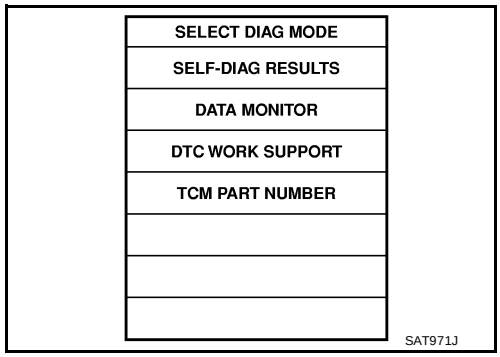

2. Drive vehicle and check for an increase of “VHCL/S SE·MTR” value.
   If the check result is NG, go to AT-118, "Diagnostic Procedure" .
   If the check result is OK, go to following step.
3. Select “DATA MONITOR” mode for “ENGINE” with CONSULT-II.

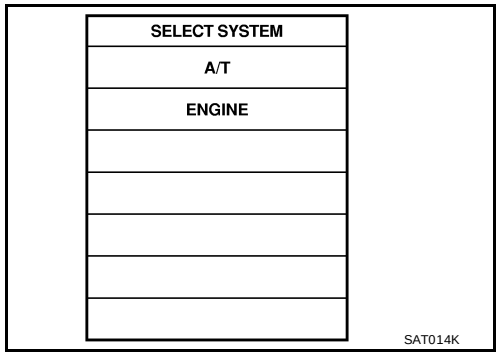

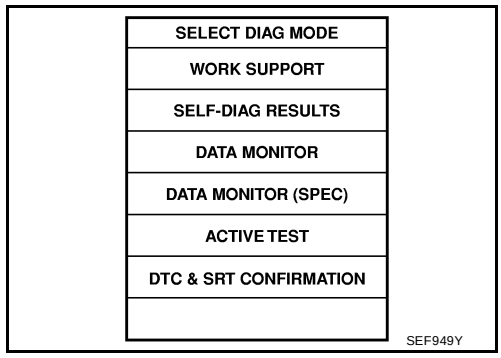

4. Start engine and maintain the following conditions for at least 5 consecutive seconds.
   VHCL SPEED SE: 30 km/h (19 MPH) or more
   THRTL POS SEN: More than 1.2V
   Selector lever: D position
   Driving location: Driving the vehicle uphill (increased engine load) will help maintain the driving conditions required for this test.
   If the check result is NG, go to AT-118, "Diagnostic Procedure" .
   If the check result is OK, go to following step.
5. Maintain the following conditions for at least 5 consecutive seconds.
   CMPS·RPM (REF): 3,500 rpm or more
   THRTL POS SEN: More than 1.2V
   Selector lever: D position
   Driving location: Driving the vehicle uphill (increased engine load) will help maintain the driving conditions required for this test.

WITH GST

Follow the procedure “With CONSULT-II”.

Wiring Diagram — AT — VSSA/T

ECS004S1

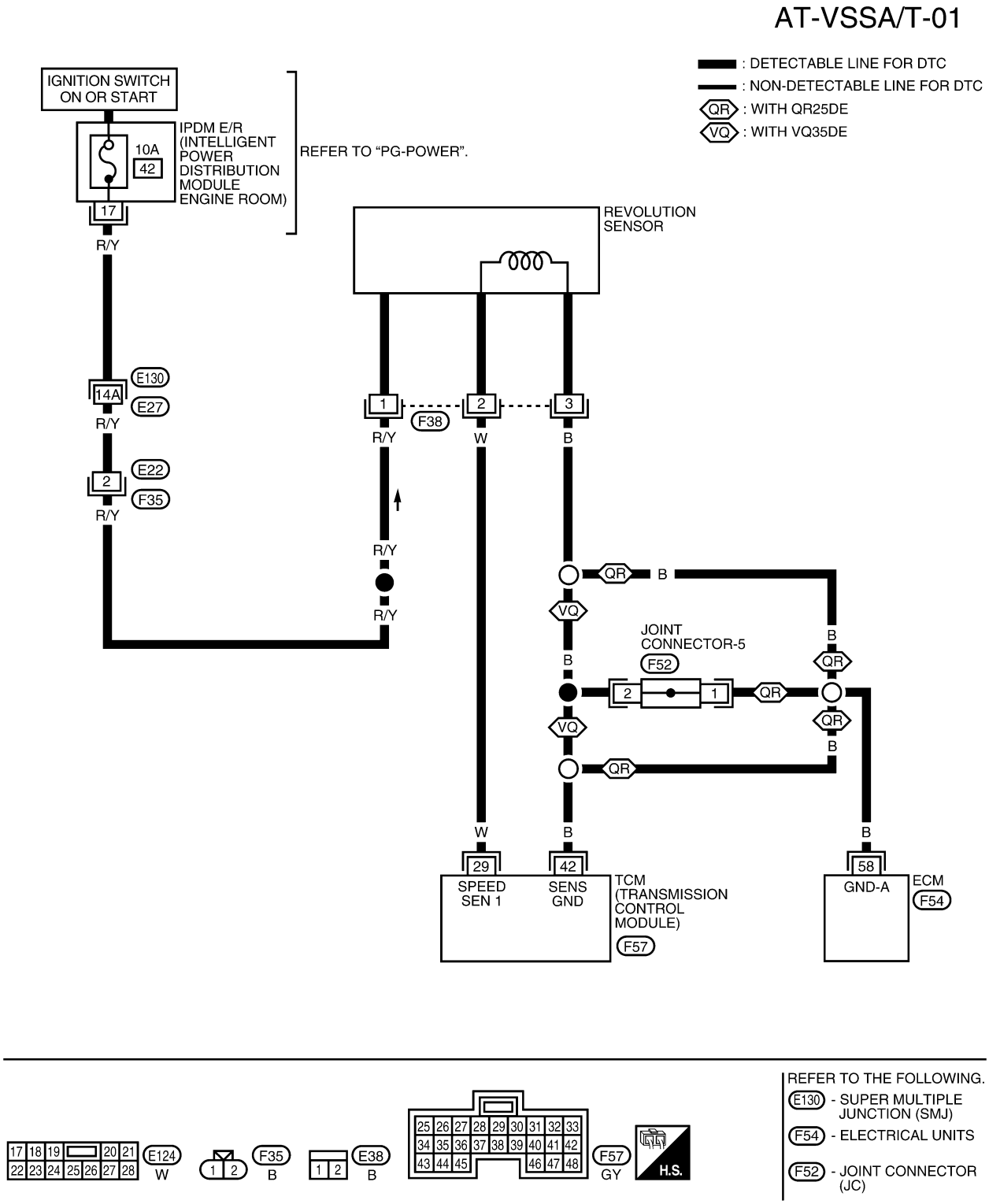

TERMINALS AND REFERENCE VALUE MEASURED BETWEEN EACH TERMINAL				
TERMINAL	WIRE COLOR	ITEM	CONDITION	DATA (DC)
29	W	REVOLUTION SENSOR	VEHICLE MOVING AT 20 KM/H (12 MPH). USE THE CONSULT-II PULSE FREQUENCY MEASURING FUNCTION. A CIRCUIT TESTER CANNOT BE USED TO TEST THIS ITEM. CAUTION: CONNECT THE DIAGNOSIS DATA LINK CABLE TO THE VEHICLE DIAGNOSIS CONNECTOR.	450 HZ
			VEHICLE NOT MOVING.	LESS THAN 1.3V OR GREATER THAN 4.5V
42	B	SENSOR GROUND	—	—

Diagnostic Procedure

ECS004S2

1. CHECK INPUT SIGNAL (WITH CONSULT-II)

With CONSULT-II

1. Start engine.
2. Select “TCM INPUT SIGNALS” in “DATA MONITOR” mode for “A/T” with CONSULT-II.
3. Read out the value of “VHCL/S SE·A/T” while driving.
   Check the value changes according to driving speed.

OK or NG

OK >> GO TO 3.
NG >> GO TO 2.

DATA MONITOR	
MONITORING	
VHCL/S SE-A/T	XXX km/h
VHCL/S SE-MTR	XXX km/h
THRTL POS SEN	XXX V
FLUID TEMP SE	XXX V
BATTERY VOLT	XXX V

LCIA0090E

2. CHECK REVOLUTION SENSOR (WITH CONSULT-II)

With CONSULT-II

1. Start engine.

- Harness for short or open between TCM, ECM and revolution sensor (Main harness)

OK or NG

OK >> GO TO 3.
NG >> Repair or replace damaged parts.

Condition	Judgement standard (Approx.)
When moving at 20 km/h (12 MPH), use the CONSULT-II pulse frequency measuring function. *1 **CAUTION:** **Connect the diagnosis data link cable to the vehicle diagnosis connector.** *1: A circuit tester cannot be used to test this item.	450 Hz
When vehicle parks.	0V

LCIA0091E

3. CHECK DTC

Perform AT-115, "Diagnostic Trouble Code (DTC) Confirmation Procedure" .

OK or NG

OK >> **INSPECTION END**
NG >> GO TO 4.

4. CHECK TCM INSPECTION

1. Perform TCM input/output signal inspection.
2. If NG, recheck TCM pin terminals for damage or loose connection with harness connector.

OK or NG

OK >> **INSPECTION END**
NG >> Repair or replace damaged parts.

DTC P0725 ENGINE SPEED SIGNAL

PFP:24825

Description

ECS004S3

The engine speed signal is sent from the ECM to the TCM.

On Board Diagnosis Logic

ECS004S4

Diagnostic trouble code ENGINE SPEED SIG with CONSULT-II or P0725 without CONSULT-II is detected when TCM does not receive the proper voltage signal from ECM.

Possible Cause

ECS004S5

Check harness or connectors. (The sensor circuit is open or shorted.)

Diagnostic Trouble Code (DTC) Confirmation Procedure

ECS004S6

CAUTION:
Always drive vehicle at a safe speed.

NOTE:
If “DTC Confirmation Procedure” has been previously conducted, always turn ignition switch OFF and wait at least 10 seconds before conducting the next test.
After the repair, perform the following procedure to confirm the malfunction is eliminated.

WITH CONSULT-II

1. Turn ignition switch ON and select “DATA MONITOR” mode for “ENGINE” with CONSULT-II.

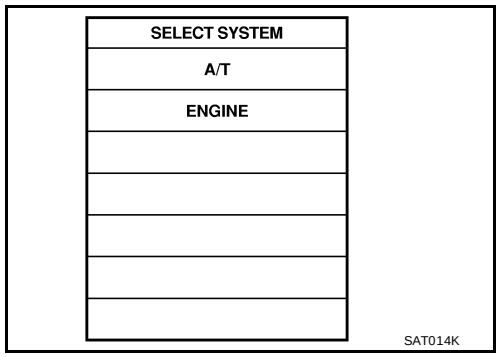

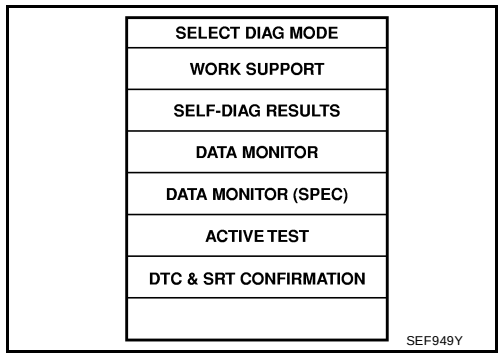

2. Start engine and maintain the following conditions for at least 10 consecutive seconds.
   VHCL SPEED SE: 10 km/h (6 MPH) or more
   THRTL POS SEN: More than 1.2V
   Selector lever: D position

WITH GST

Follow the procedure “With CONSULT-II”.

Wiring Diagram — AT — ENGSS

ECS004S7

AT-ENGSS-01

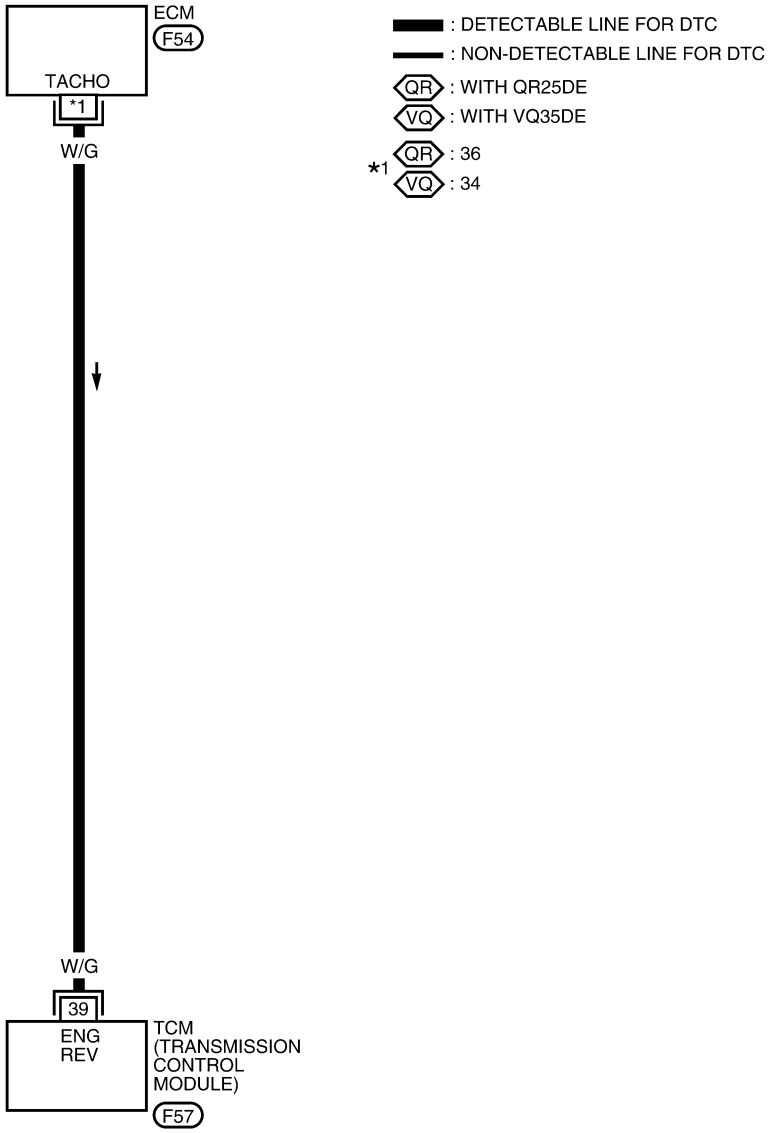

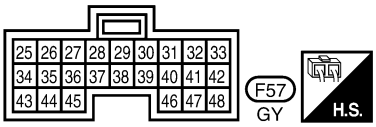

REFER TO THE FOLLOWING.
F54 - ELECTRICAL UNITS

LCWA0009E

TCM TERMINALS AND REFERENCE VALUE MEASURED BETWEEN EACH TERMINAL AND 25 OR 48 (TCM GROUND)				
TERMINAL	WIRE COLOR	ITEM	CONDITION	DATA
39	W/G	ENGINE SPEED SIGNAL	EC-99, "ECM INSPECTION TABLE" (with QR25DE), or EC-722, "ECM INSPECTION TABLE" (with VQ35DE)	

Diagnostic Procedure

ECS004S8

1. CHECK DTC WITH ECM

- Check P code.
  Turn ignition switch ON and select “SELF-DIAGNOSTIC RESULTS” mode for “ENGINE” with CONSULT-II.
  Refer to EC-69, "Malfunction Indicator Lamp (MIL)" (with QR25DE), or EC-689, "Malfunction Indicator Lamp (MIL)" (with VQ35DE).

OK or NG

OK (with CONSULT-II)>> GO TO 2.
OK (without CONSULT-II)>> GO TO 4.
NG >> Check ignition signal circuit for engine control. Refer to EC-554, "IGNITION SIGNAL" (with QR25DE), or EC-1210, "IGNITION SIGNAL" (with VQ35DE).

2. CHECK INPUT SIGNAL (WITH CONSULT-II)

With CONSULT-II

1. Start engine.
2. Select “TCM INPUT SIGNALS” in “DATA MONITOR” mode for “A/T” with CONSULT-II.
3. Read out the value of “ENGINE SPEED”.
   Check engine speed changes according to throttle position.

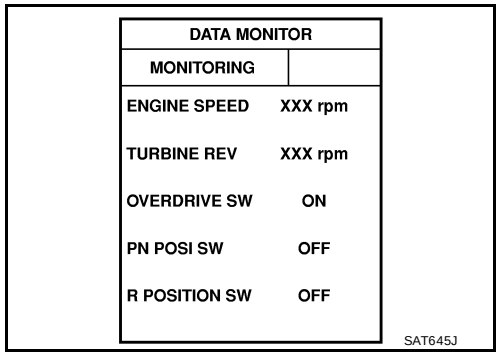

OK or NG

OK >> GO TO 6.
NG >> GO TO 3.

3. DETECT MALFUNCTIONING ITEM

Check the following items:

- Harness for short or open between TCM and ECM
- Resistor and ignition coil
  Refer to EC-554, "IGNITION SIGNAL" (with QR25DE), or EC-1210, "IGNITION SIGNAL" (with VQ35DE).

OK or NG

OK >> GO TO 6.
NG >> Repair or replace damaged parts.

4. CHECK INPUT SIGNAL (WITHOUT CONSULT-II)

Without CONSULT-II

1. Start engine.
2. Check voltage between TCM terminal 39 (W/B) and ground.

Voltage :0.6 (Idle speed) - 2.2V (3,000 rpm)

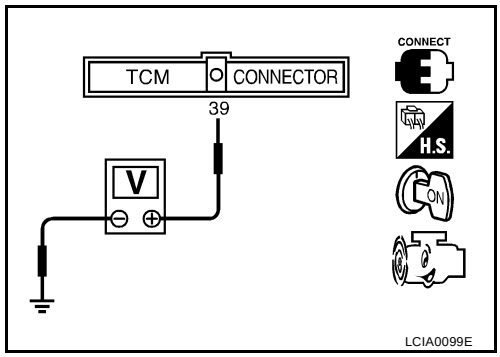

OK or NG

OK >> GO TO 6.
NG >> GO TO 5.

5. DETECT MALFUNCTIONING ITEM

Check the following items:

- Harness for short or open between TCM and ECM
- Resistor and ignition coil
  Refer to EC-554, "IGNITION SIGNAL" (with QR25DE), or EC-1210, "IGNITION SIGNAL" (with VQ35DE).

OK or NG

OK >> GO TO 6.
NG >> Repair or replace damaged parts.

6. CHECK DTC

Perform AT-120, "Diagnostic Trouble Code (DTC) Confirmation Procedure" .

OK or NG

OK >> **INSPECTION END**
NG >> GO TO 7.

7. CHECK TCM INSPECTION

1. Perform TCM input/output signal inspection.
2. If NG, recheck TCM pin terminals for damage or loose connection with harness connector.

OK or NG

OK >> **INSPECTION END**
NG >> Repair or replace damaged parts.

DTC P0731 A/T 1ST GEAR FUNCTION

PFP:31940

Description

ECS004S9

- This is an OBD-II self-diagnostic item and not available in TCM self-diagnosis.
- This malfunction will not be detected while the A/T check (position) indicator lamp is indicating another self-diagnosis malfunction.
- This malfunction is detected when the A/T does not shift into first gear position as instructed by the TCM. This is not caused by electrical malfunction (circuits open or shorted) but by mechanical malfunction such as control valve sticking, improper solenoid valve operation, etc.

Gear position	1	2	3	4
Shift solenoid valve A	ON (Closed)	OFF (Open)	OFF (Open)	ON (Closed)
Shift solenoid valve B	ON (Closed)	ON (Closed)	OFF (Open)	OFF (Open)

On Board Diagnosis Logic

ECS004SA

This diagnosis monitors actual gear position by checking the torque converter slip ratio calculated by TCM as follows:
Torque converter slip ratio = A x C/B
A: Output shaft revolution signal from revolution sensor
B: Engine speed signal from ECM
C: Gear ratio determined as gear position which TCM supposes
If the actual gear position is higher than the position (1st) supposed by TCM, the slip ratio will be more than normal. In case the ratio exceeds the specified value, TCM judges this diagnosis malfunction.
This malfunction will be caused when either shift solenoid valve A is stuck open or shift solenoid valve B is stuck open.
Gear positions supposed by TCM are as follows.
In case of gear position with no malfunctions: **1** , 2, 3 and 4 positions
In case of gear position with shift solenoid valve A stuck open: **2*** , 2, 3 and 3 positions
In case of gear position with shift solenoid valve B stuck open: **4*** , 3, 3 and 4 positions to each gear position above
*: P0731 is detected.
Diagnostic trouble code A/T 1ST GR FNCTN with CONSULT-II or P0731 without CONSULT-II is detected when A/T cannot be shifted to the 1st gear position even if electrical circuit is good.

Possible Cause

ECS004SB

Check the following items.

- Shift solenoid valve A
- Shift solenoid valve B
- Each clutch
- Hydraulic control circuit

Diagnostic Trouble Code (DTC) Confirmation Procedure

ECS004SC

CAUTION:

- **Always drive vehicle at a safe speed.**
- **Be careful not to rev engine into the red zone on the tachometer.**

NOTE:
If “DTC Confirmation Procedure” has been previously conducted, always turn ignition switch OFF and wait at least 10 seconds before conducting the next test.
TESTING CONDITION:
Always drive vehicle on a level road to improve the accuracy of test.
After the repair, perform the following procedure to confirm the malfunction is eliminated.

WITH CONSULT-II

1. Start engine and select “DATA MONITOR” mode for “A/T” with CONSULT-II.
2. Make sure that output voltage of A/T fluid temperature sensor is within the range below.
   FLUID TEMP SEN: 0.4 - 1.5V
   If out of range, drive the vehicle to decrease the voltage (warm up the fluid) or stop engine to increase the voltage (cool down the fluid).
3. Select “1ST GR FNCTN P0731” of “DTC WORK SUPPORT” mode for “A/T” with CONSULT-II and touch “START”.

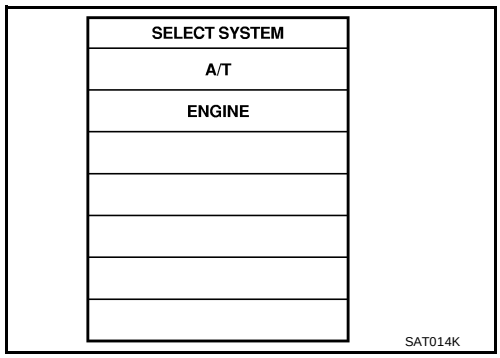

4. Accelerate vehicle to 20 to 25 km/h (12 to 16 MPH) under the following condition and release the accelerator pedal completely.
   THROTTLE POSI: Less than 1.0/8 (at all times during step 4)
   Selector lever: D position
   - **Check that “GEAR” shows “2” after releasing pedal.**
5. Depress accelerator pedal to WOT (more than 7.0/8 of “THROTTLE POSI”) quickly from a speed of 20 to 25 km/h (12 to 16 MPH) until “TESTING” changes to “STOP VEHICLE” or “COMPLETED”. (It will take approximately 3 seconds.)
   If the check result NG appears on CONSULT-II screen, go to AT-127, "Diagnostic Procedure" .
   If “STOP VEHICLE” appears on CONSULT-II screen, go to the following step.
   - **Check that “GEAR” shows “1” when depressing accelerator pedal to WOT.**
   - **If “TESTING” does not appear on CONSULT-II for a long time, select “SELF-DIAG RESULTS” for “ENGINE”. In case a 1st trip DTC other than P0731 is shown, refer to applicable “TROUBLE DIAGNOSIS FOR DTC”.**

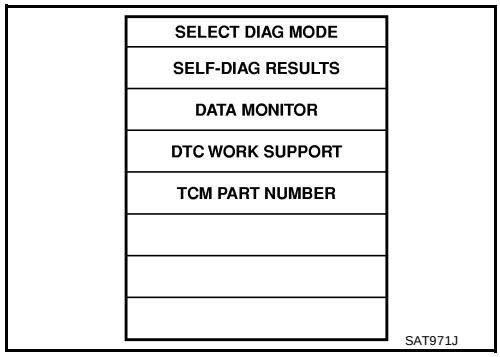

6. Stop vehicle.
7. Follow the instruction displayed. (Check for normal shifting referring to the table below.)

Vehicle condition	Gear on actual transmission shift pattern when screen is changed to 1 → 2 → 3 → 4
No malfunction exists.	1 → 2 → 3 → 4
Malfunction for P0731 exists.	2 → 2 → 3 → 3
	4 → 3 → 3 → 4

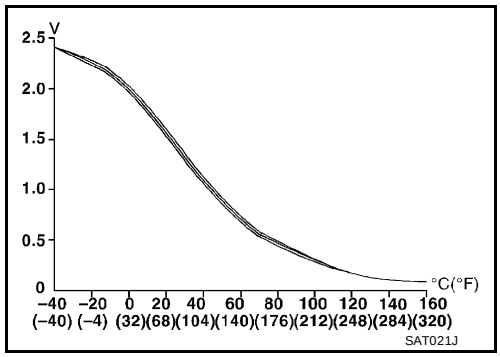

8. Make sure that “OK” is displayed. (If “NG” is displayed, refer to “DIAGNOSTIC PROCEDURE”.)
   Refer to AT-127, "Diagnostic Procedure" .
   Refer to AT-364, "Shift Schedule" .

WITH GST

Follow the procedure “With CONSULT-II”.

Wiring Diagram — AT — 1ST

ECS004SD

AT-1STSIG-01

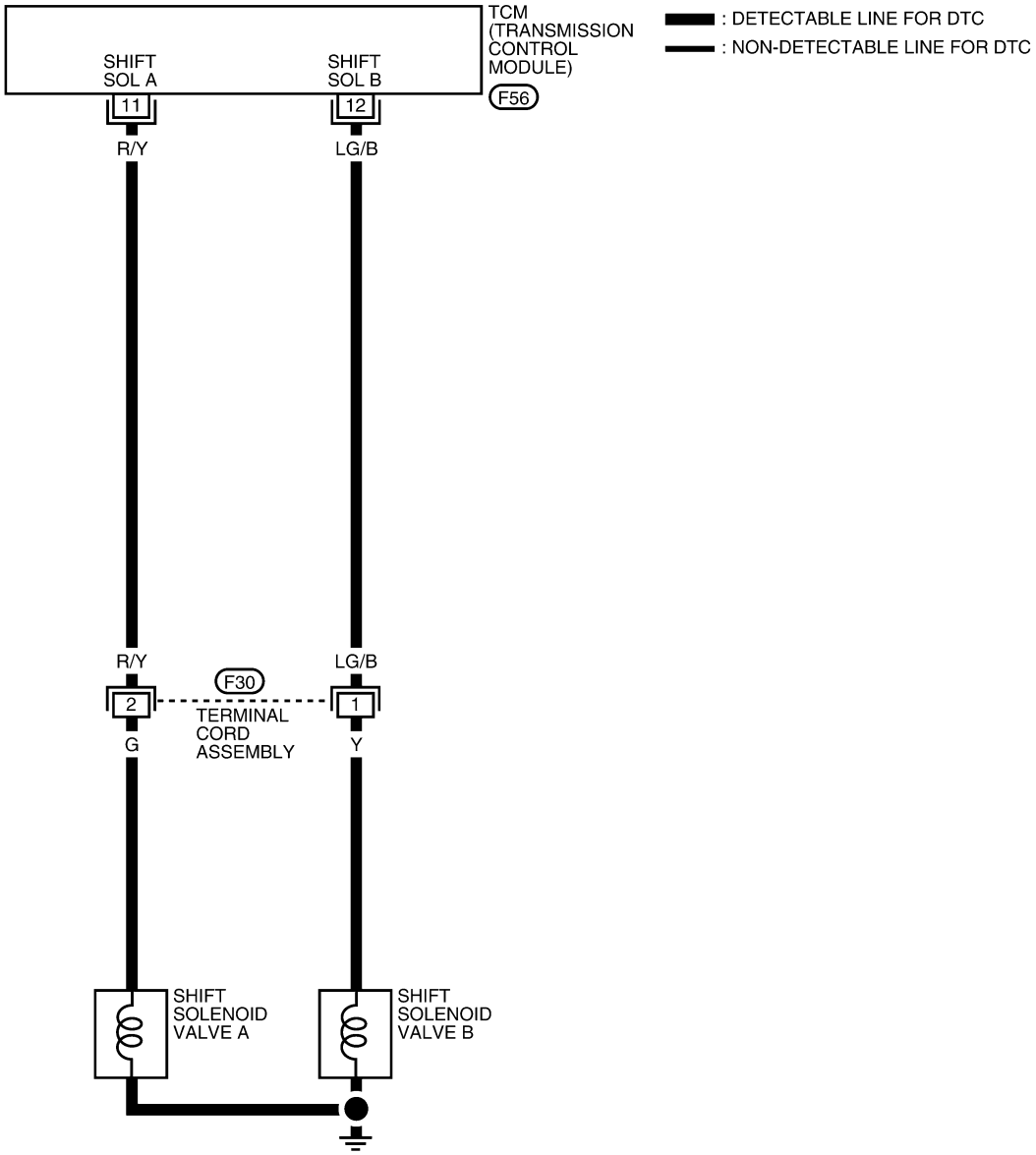

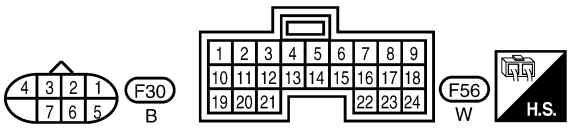

LCWA0010E

TCM TERMINALS AND REFERENCE VALUE MEASURED BETWEEN EACH TERMINAL AND 25 OR 48 (TCM GROUND)				
TERMINAL	WIRE COLOR	ITEM	CONDITION	DATA (APPROX.)
11	R/Y	SHIFT SOLENOID VALVE A	WHEN SHIFT SOLENOID VALVE A IS OPERATING (DRIVING IN D_1 OR D_4)	BATTERY VOLTAGE
			WHEN SHIFT SOLENOID VALVE A IS NOT OPERATING (DRIVING IN D_2 OR D_3)	0V
12	LG/B	SHIFT SOLENOID VALVE B	WHEN SHIFT SOLENOID VALVE B IS OPERATING (DRIVING IN D_1 OR D_2)	BATTERY VOLTAGE
			WHEN SHIFT SOLENOID VALVE B IS NOT OPERATING (DRIVING IN D_3 OR D_4)	0V

Diagnostic Procedure

ECS004SE

1. CHECK VALVE RESISTANCE

1. Remove control valve assembly. Refer to AT-255, "Control Valve Assembly and Accumulators" .
- Shift solenoid valve A
- Shift solenoid valve B
2. Check resistance between two terminals.

Solenoid valve	Terminal No.		Resistance (Approx.)
Shift solenoid valve A	2	Ground	20 - 30Ω
Shift solenoid valve B	1		5 - 20Ω

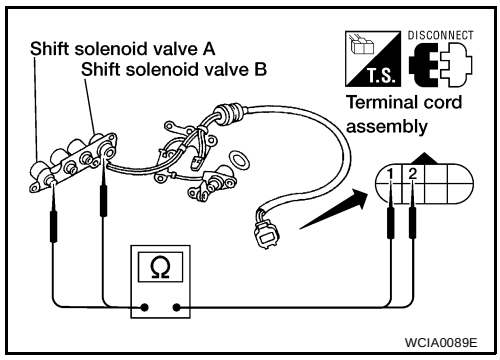

OK or NG

OK >> GO TO 2.
NG >> Repair or replace damaged parts.

2. CHECK VALVE OPERATION

1. Remove control valve assembly. Refer to AT-255, "Control Valve Assembly and Accumulators" .
- Shift solenoid valve A
- Shift solenoid valve B
2. Check solenoid valve by listening for its operating sound while applying battery voltage to the terminal and ground.

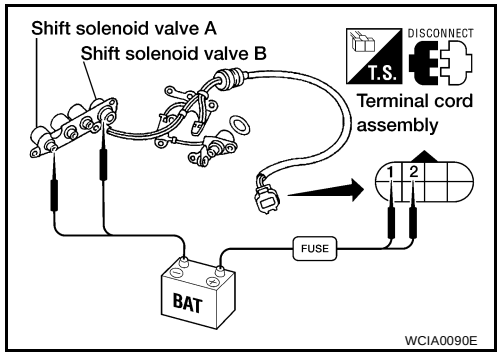

OK or NG

OK >> GO TO 3.
NG >> Repair or replace shift solenoid valve assembly.

3. CHECK CONTROL VALVE

1. Disassemble control valve assembly. Refer to AT-290, "Control Valve Assembly" .
2. Check to ensure that:

- Valve, sleeve and plug slide along valve bore under their own weight.
- Valve, sleeve and plug are free from burrs, dents and scratches.
- Control valve springs are free from damage, deformation and fatigue.
- Hydraulic line is free from obstacles.

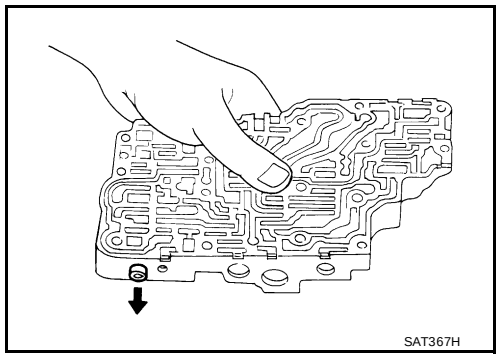

OK or NG

OK >> GO TO 4.
NG >> Repair control valve assembly.

4. CHECK DTC

Perform AT-124, "Diagnostic Trouble Code (DTC) Confirmation Procedure" .

OK or NG

OK >> **INSPECTION END**
NG >> Check control valve again. Repair or replace control valve assembly.

DTC P0732 A/T 2ND GEAR FUNCTION

PFP:31940

Description

ECS004SF

- This is an OBD-II self-diagnostic item and not available in TCM self-diagnosis.
- This malfunction will not be detected while the A/T check (position) indicator lamp is indicating another self-diagnosis malfunction.
- This malfunction is detected when the A/T does not shift into second gear position as instructed by the TCM. This is not caused by electrical malfunction (circuits open or shorted) but by mechanical malfunction such as control valve sticking, improper solenoid valve operation, etc.

Gear position	1	2	3	4
Shift solenoid valve A	ON (Closed)	OFF (Open)	OFF (Open)	ON (Closed)
Shift solenoid valve B	ON (Closed)	ON (Closed)	OFF (Open)	OFF (Open)

On Board Diagnosis Logic

ECS004SG

This diagnosis monitors actual gear position by checking the torque converter slip ratio calculated by TCM as follows:
Torque converter slip ratio = A x C/B
A: Output shaft revolution signal from revolution sensor
B: Engine speed signal from ECM
C: Gear ratio determined as gear position which TCM supposes
If the actual gear position is higher than the position (2nd) supposed by TCM, the slip ratio will be more than normal. In case the ratio exceeds the specified value, TCM judges this diagnosis malfunction.
This malfunction will be caused when shift solenoid valve B is stuck open.
Gear positions supposed by TCM are as follows.
In case of gear position with no malfunctions: 1, **2** , 3 and 4 positions
In case of gear position with shift solenoid valve B stuck open: 4, **3*** , 3 and 4 positions to each gear position above
*: P0732 is detected.
Diagnostic trouble code A/T 2ND GR FNCTN with CONSULT-II or P0732 without CONSULT-II is detected when A/T cannot be shifted to the 2nd gear position even if electrical circuit is good.

Possible Cause

ECS004SH

Check the following items.

- Shift solenoid valve B
- Each clutch
- Hydraulic control circuit

Diagnostic Trouble Code (DTC) Confirmation Procedure

ECS004SI

CAUTION:

- **Always drive vehicle at a safe speed.**
- **Be careful not to rev engine into the red zone on the tachometer.**

NOTE:
If “DTC Confirmation Procedure” has been previously conducted, always turn ignition switch OFF and wait at least 10 seconds before conducting the next test.
TESTING CONDITION:
Always drive vehicle on a level road to improve the accuracy of test.
After the repair, perform the following procedure to confirm the malfunction is eliminated.

WITH CONSULT-II

1. Start engine and select “DATA MONITOR” mode for “A/T” with CONSULT-II.
2. Make sure that output voltage of A/T fluid temperature sensor is within the range below.
   FLUID TEMP SEN: 0.4 - 1.5V
   If out of range, drive the vehicle to decrease the voltage (warm up the fluid) or stop engine to increase the voltage (cool down the fluid).
3. Select “2ND GR FNCTN P0732” of “DTC WORK SUPPORT” mode for “A/T” with CONSULT-II and touch “START”.

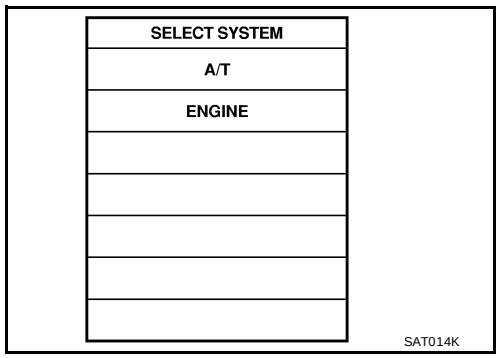

4. Accelerate vehicle to 45 to 50 km/h (28 to 31 MPH) under the following condition and release the accelerator pedal completely.
   THROTTLE POSI: Less than 1.0/8
   Selector lever: D position
   - **Check that “GEAR” shows “3” or “4” after releasing pedal.**
5. Depress accelerator pedal to WOT (more than 7.0/8 of “THROTTLE POSI”) quickly from a speed of 45 to 50 km/h (28 to 31 MPH) until “TESTING” changes to “STOP VEHICLE” or “COMPLETE”. (It will take approximately 3 seconds.)
   If the check result NG appears on CONSULT-II screen, go to AT-132, "Diagnostic Procedure" .
   If “STOP VEHICLE” appears on CONSULT-II screen, go to following step.
   - **Check that “GEAR” shows “2” when depressing accelerator pedal to WOT.**
   - **If “TESTING” does not appear on CONSULT-II for a long time, select “SELF-DIAG RESULTS” for “ENGINE”. In case a 1st trip DTC other than P0732 is shown, refer to applicable “TROUBLE DIAGNOSIS FOR DTC”.**
6. Stop vehicle.
7. Follow the instruction displayed. (Check for normal shifting referring to the table below.)

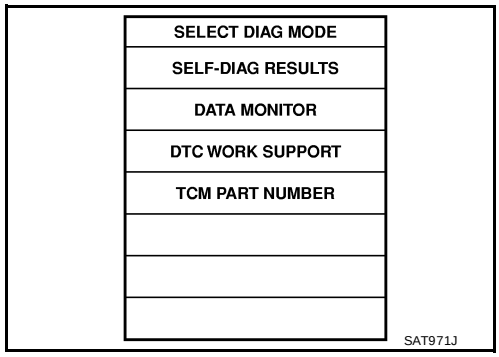

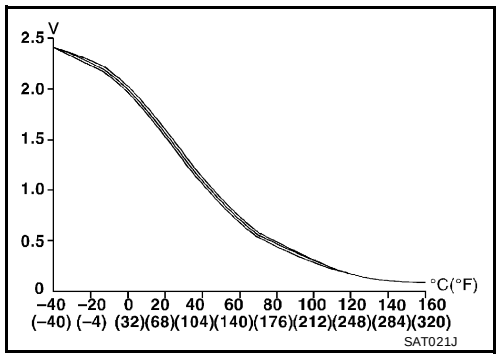

Vehicle condition	Gear on actual transmission shift pattern when screen is changed to 1 → 2 → 3 → 4
No malfunction exists	1 → 2 → 3 → 4
Malfunction for P0732 exists.	4 → 3 → 3 → 4

8. Make sure that “OK” is displayed. (If “NG” is displayed, refer to “DIAGNOSTIC PROCEDURE”.)
   Refer to AT-132, "Diagnostic Procedure" .
   Refer to AT-364, "Shift Schedule" .

WITH GST

Follow the procedure “With CONSULT-II”.

Wiring Diagram — AT — 2ND

ECS004SJ

AT-2NDSIG-01

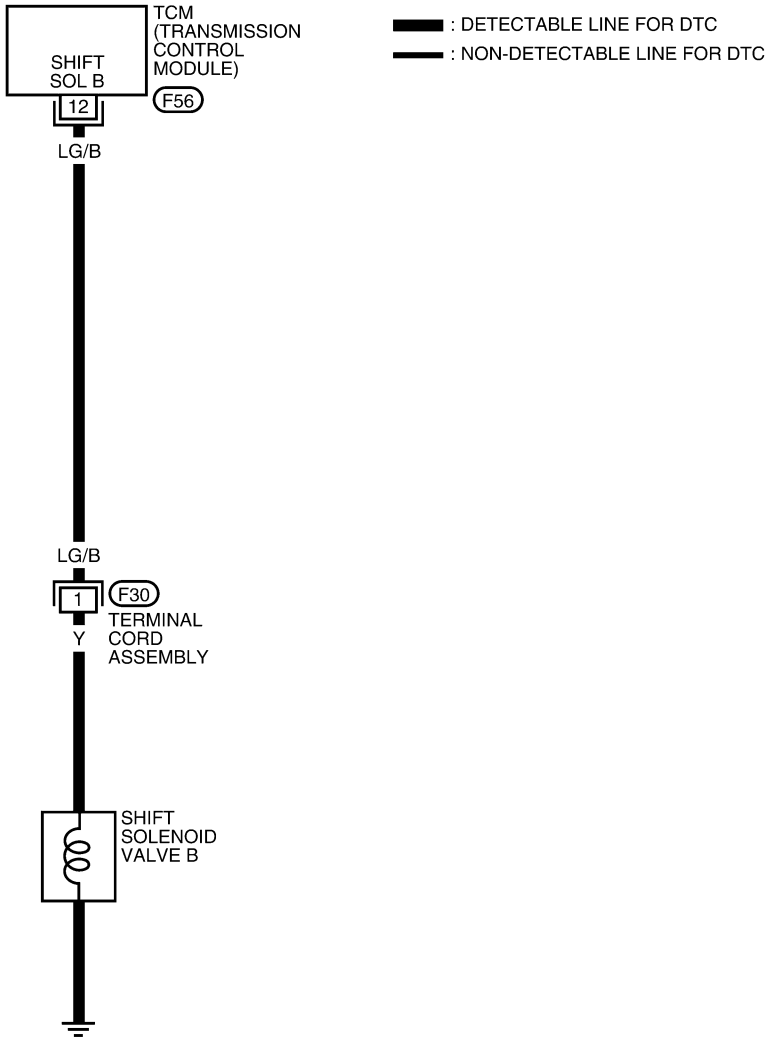

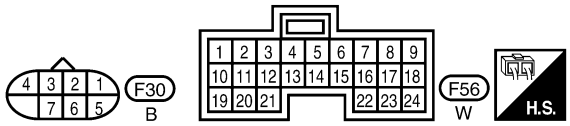

LCWA0011E

TCM TERMINALS AND REFERENCE VALUE MEASURED BETWEEN EACH TERMINAL AND 25 OR 48 (TCM GROUND)				
TERMINAL	WIRE COLOR	ITEM	CONDITION	DATA (APPROX.)
12	LG/B	SHIFT SOLENOID VALVE B	WHEN SHIFT SOLENOID VALVE B IS OPERATING (DRIVING IN D_1 OR D_2)	BATTERY VOLTAGE
			WHEN SHIFT SOLENOID VALVE B IS NOT OPERATING (DRIVING IN D_3 OR D_4)	0V

Diagnostic Procedure

ECS004SK

1. CHECK VALVE RESISTANCE

1. Remove control valve assembly. Refer to AT-255, "Control Valve Assembly and Accumulators" .
- Shift solenoid valve B
2. Check resistance to the terminal and ground.

Solenoid valve	Terminal No.		Resistance (Approx.)
Shift solenoid valve B	1	Ground	5 - 20Ω

OK or NG

OK >> GO TO 2.
NG >> Repair or replace shift solenoid valve assembly.

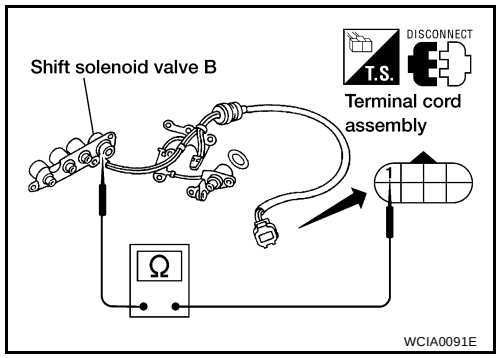

2. CHECK VALVE OPERATION

1. Remove control valve assembly. Refer to AT-255, "Control Valve Assembly and Accumulators" .
- Shift solenoid valve B
2. Check solenoid valve by listening for its operating sound while applying battery voltage to the terminal and ground.

OK or NG

OK >> GO TO 3.
NG >> Repair or replace shift solenoid valve assembly.

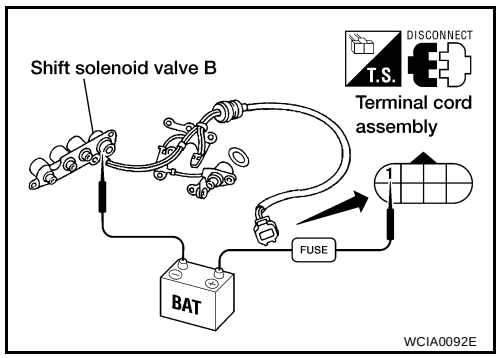

3. CHECK CONTROL VALVE

1. Disassemble control valve assembly. Refer to AT-290, "Control Valve Assembly" .
2. Check to ensure that:
- Valve, sleeve and plug slide along valve bore under their own weight.
- Valve, sleeve and plug are free from burrs, dents and scratches.
- Control valve springs are free from damage, deformation and fatigue.
- Hydraulic line is free from obstacles.

OK or NG

OK >> GO TO 4.
NG >> Repair control valve assembly.

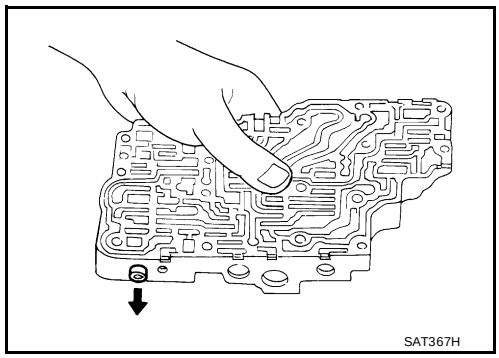

4. CHECK DTC

Perform AT-129, "Diagnostic Trouble Code (DTC) Confirmation Procedure" .

OK or NG

OK >> **INSPECTION END**
NG >> Check control valve again. Repair or replace control valve assembly.

DTC P0733 A/T 3RD GEAR FUNCTION

PFP:31940

Description

ECS004SL

- This is an OBD-II self-diagnostic item and not available in TCM self-diagnosis.
- This malfunction will not be detected while the A/T check (position) indicator lamp is indicating another self-diagnosis malfunction.
- This malfunction is detected when the A/T does not shift into third gear position as instructed by the TCM. This is not caused by electrical malfunction (circuits open or shorted) but by mechanical malfunction such as control valve sticking, improper solenoid valve operation, malfunctioning servo piston or brake band, etc.

Gear position	1	2	3	4
Shift solenoid valve A	ON (Closed)	OFF (Open)	OFF (Open)	ON (Closed)
Shift solenoid valve B	ON (Closed)	ON (Closed)	OFF (Open)	OFF (Open)

On Board Diagnosis Logic

ECS004SM

This diagnosis monitors actual gear position by checking the torque converter slip ratio calculated by TCM as follows:
Torque converter slip ratio = A x C/B
A: Output shaft revolution signal from revolution sensor
B: Engine speed signal from ECM
C: Gear ratio determined as gear position which TCM supposes
If the actual gear position is higher than the position (3rd) supposed by TCM, the slip ratio will be more than normal. In case the ratio exceeds the specified value, TCM judges this diagnosis malfunction.
This malfunction will be caused when shift solenoid valve A is stuck closed.
Gear positions supposed by TCM are as follows.
In case of gear position with no malfunctions: 1, 2, **3** and 4 positions
In case of gear position with shift solenoid valve A stuck closed: 1, 1, **4*** and 4 positions to each gear position above
*: P0733 is detected.
Diagnostic trouble code A/T 3RD GR FNCTN with CONSULT-II or P0733 without CONSULT-II is detected when A/T cannot be shifted to the 3rd gear position even if electrical circuit is good.

Possible Cause

ECS004SN

Check the following items.

- Shift solenoid valve A
- Each clutch
- Hydraulic control circuit

Diagnostic Trouble Code (DTC) Confirmation Procedure

ECS004SO

CAUTION:

- **Always drive vehicle at a safe speed.**
- **Be careful not to rev engine into the red zone on the tachometer.**

NOTE:
If “DTC Confirmation Procedure” has been previously conducted, always turn ignition switch “OFF” and wait at least 10 seconds before conducting the next test.
TESTING CONDITION:
Always drive vehicle on a level road to improve the accuracy of test.
After the repair, perform the following procedure to confirm the malfunction is eliminated.

WITH CONSULT-II

1. Start engine and select “DATA MONITOR” mode for “A/T” with CONSULT-II.
2. Make sure that output voltage of A/T fluid temperature sensor is within the range below.
   FLUID TEMP SEN: 0.4 - 1.5V
   If out of range, drive the vehicle to decrease the voltage (warm up the fluid) or stop engine to increase the voltage (cool down the fluid).
3. Select “3RD GR FNCTN P0733” of “DTC WORK SUPPORT” mode for “A/T” with CONSULT-II and touch “START”.

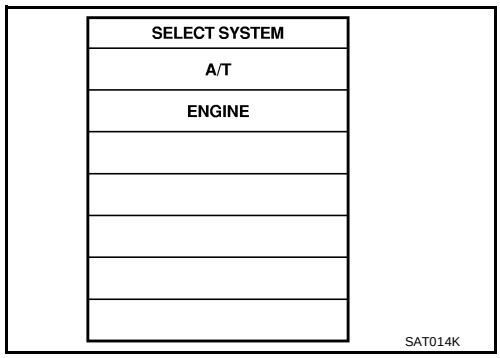

4. Accelerate vehicle to 60 to 75 km/h (37 to 47 MPH) under the following condition and release the accelerator pedal completely.
   THROTTLE POSI: Less than 1.0/8 (at all times during step 4)
   Selector lever: D position
   - **Check that “GEAR” shows “4” after releasing pedal.**
5. Depress accelerator pedal steadily with 3.5/8 - 4.5/8 of “THROTTLE POSI” from a speed of 60 to 75 km/h (37 to 47 MPH) until “TESTING” changes to “STOP VEHICLE” or “COMPLETED”. (It will take approximately 3 seconds.)
   If the check result NG appears on CONSULT-II screen, go to AT-137, "Diagnostic Procedure" .
   If “STOP VEHICLE” appears on CONSULT-II screen, go to following step.
   - **Check that “GEAR” shows “3” when depressing accelerator pedal with 3.5/8 - 4.5/8 of “THROTTLE POSI”.**
   - **If “TESTING” does not appear on CONSULT-II for a long time, select “SELF-DIAG RESULTS” for “ENGINE”. In case a 1st trip DTC other than P0733 is shown, refer to applicable “TROUBLE DIAGNOSIS FOR DTC”.**
6. Stop vehicle.
7. Follow the instruction displayed. (Check for normal shifting referring to the table below.)

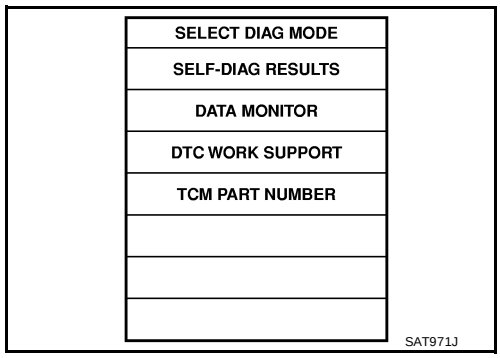

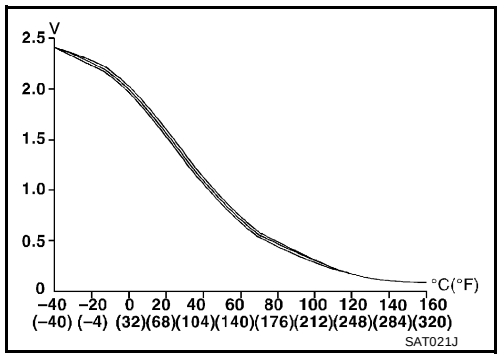

Vehicle condition	Gear on actual transmission shift pattern when screen is changed to 1 → 2 → 3 → 4
No malfunction exists.	1 → 2 → 3 → 4
Malfunction for P0733 exists.	1 → 1 → 4 → 4

8. Make sure that “OK” is displayed. (If “NG” is displayed, refer to “DIAGNOSTIC PROCEDURE”.)
   Refer to AT-137, "Diagnostic Procedure" .
   Refer to AT-364, "Shift Schedule" .

WITH GST

Follow the procedure “With CONSULT-II”.

Wiring Diagram — AT — 3RD

ECS004SP

AT-3RDSIG-01

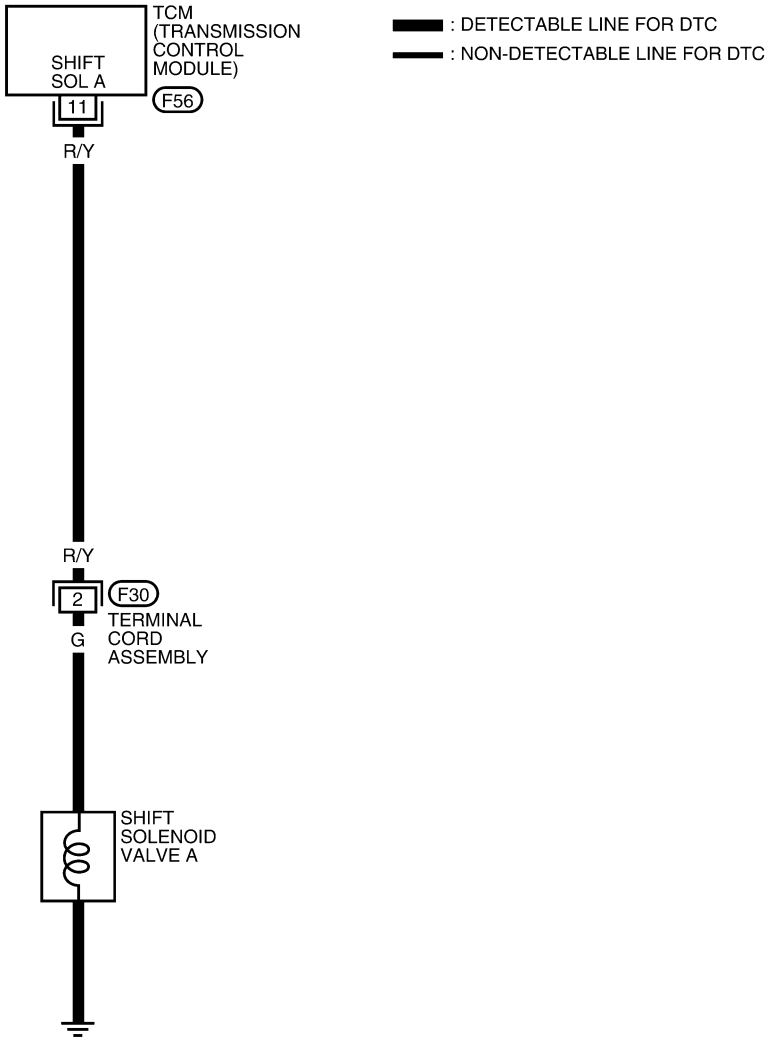

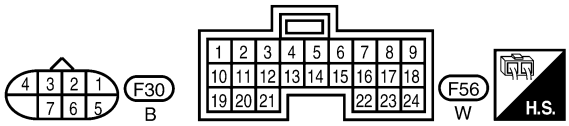

LCWA0012E

TCM TERMINALS AND REFERENCE VALUE MEASURED BETWEEN EACH TERMINAL AND 25 OR 48 (TCM GROUND)				
TERMINAL	WIRE COLOR	ITEM	CONDITION	DATA (APPROX.)
11	R/Y	SHIFT SOLENOID VALVE A	WHEN SHIFT SOLENOID VALVE A IS OPERATING (DRIVING IN D_1 OR D_4)	BATTERY VOLTAGE
			WHEN SHIFT SOLENOID VALVE A IS NOT OPERATING (DRIVING IN D_2 OR D_3)	0V

Diagnostic Procedure

ECS004SQ

1. CHECK VALVE RESISTANCE

1. Remove control valve assembly. Refer to AT-255, "Control Valve Assembly and Accumulators" .
- Shift solenoid valve A
2. Check resistance to the terminal and ground.

Solenoid valve	Terminal No.		Resistance (Approx.)
Shift solenoid valve A	2	Ground	20 - 30Ω

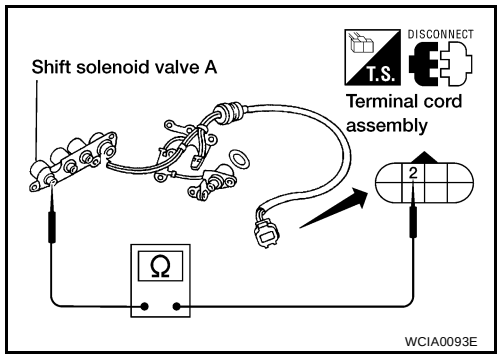

OK or NG

OK >> GO TO 2.
NG >> Repair or replace shift solenoid valve assembly.

2. CHECK VALVE OPERATION

1. Remove control valve assembly. Refer to AT-255, "Control Valve Assembly and Accumulators" .
- Shift solenoid valve A
2. Check solenoid valve by listening for its operating sound while applying battery voltage to the terminal and ground.

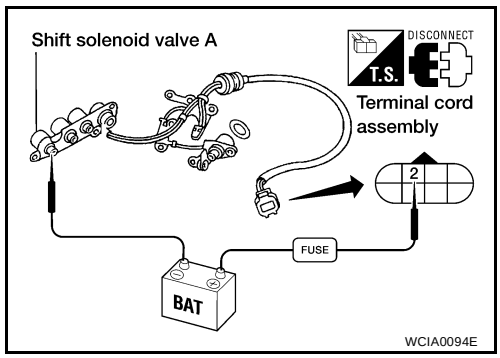

OK or NG

OK >> GO TO 3.
NG >> Repair or replace shift solenoid valve assembly.

3. CHECK CONTROL VALVE

1. Disassemble control valve assembly. Refer to AT-290, "Control Valve Assembly" .
2. Check to ensure that:
- Valve, sleeve and plug slide along valve bore under their own weight.
- Valve, sleeve and plug are free from burrs, dents and scratches.
- Control valve springs are free from damage, deformation and fatigue.
- Hydraulic line is free from obstacles.

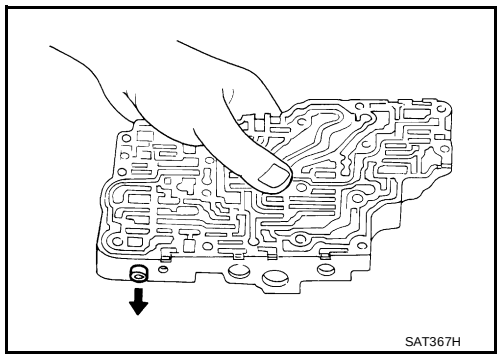

OK or NG

OK >> GO TO 4.
NG >> Repair control valve assembly.

4. CHECK DTC

Perform AT-134, "Diagnostic Trouble Code (DTC) Confirmation Procedure" .

OK or NG

OK >> **INSPECTION END**
NG >> Check control valve again. Repair or replace control valve assembly.

DTC P0734 A/T 4TH GEAR FUNCTION

PFP:31940

Description

ECS004SR

- This is an OBD-II self-diagnostic item and not available in TCM self-diagnosis.
- This malfunction will not be detected while the A/T check (position) indicator lamp is indicating another self-diagnosis malfunction.
- This malfunction is detected when the A/T does not shift into fourth gear position or the torque converter clutch does not lock up as instructed by the TCM. This is not caused by electrical malfunction (circuits open or shorted) but by mechanical malfunction such as control valve sticking, improper solenoid valve operation, malfunctioning oil pump or torque converter clutch, etc.

Gear position	1	2	3	4
Shift solenoid valve A	ON (Closed)	OFF (Open)	OFF (Open)	ON (Closed)
Shift solenoid valve B	ON (Closed)	ON (Closed)	OFF (Open)	OFF (Open)

CONSULT-II REFERENCE VALUE IN DATA MONITOR MODE

Remarks: Specification data are reference values.

Monitor item	Condition	Specification
Torque converter clutch solenoid valve duty	Lock-up OFF ↓ Lock-up ON	Approximately 4% ↓ Approximately 94%
Line pressure solenoid valve duty	Small throttle opening (Low line pressure) ↓ Large throttle opening (High line pressure)	Approximately 24% ↓ Approximately 95%

On Board Diagnosis Logic

ECS004SS

This diagnosis monitors actual gear position by checking the torque converter slip ratio calculated by TCM as follows:
Torque converter slip ratio = A x C/B
A: Output shaft revolution signal from revolution sensor
B: Engine speed signal from ECM
C: Gear ratio determined as gear position which TCM supposes
If the actual gear position is much lower than the position (4th) supposed by TCM, the slip ratio will be much less than normal. In case the ratio does not reach the specified value, TCM judges this diagnosis malfunction. This malfunction will be caused when shift solenoid valve B is stuck closed.
Gear positions supposed by TCM are as follows.
In case of gear position with no malfunctions: 1, 2, 3 and **4** positions
In case of gear position with shift solenoid valve B stuck closed: 1, 2, 2 and **1*** positions to each gear position above
*: P0734 is detected.
Diagnostic trouble code A/T 4TH GR FNCTN with CONSULT-II or P0734 without CONSULT-II is detected when A/T cannot be shifted to the 4th gear position even if electrical circuit is good.

Possible Cause

ECS004ST

Check the following items.

- Shift solenoid valve A
- Shift solenoid valve B
- Line pressure solenoid valve
- Each clutch
- Hydraulic control circuit

Diagnostic Trouble Code (DTC) Confirmation Procedure

ECS004SU

CAUTION:

- **Always drive vehicle at a safe speed.**
- **If conducting this "DTC CONFIRMATION PROCEDURE" again, always turn ignition switch OFF and wait at least 10 seconds before continuing.**
- **Be careful not to rev engine into the red zone on the tachometer.**

NOTE:
If “DTC Confirmation Procedure” has been previously conducted, always turn ignition switch OFF and wait at least 10 seconds before conducting the next test.
TESTING CONDITION:
Always drive vehicle on a level road to improve the accuracy of test.
After the repair, perform the following procedure to confirm the malfunction is eliminated.

WITH CONSULT-II

1. Start engine and select “DATA MONITOR” mode for “A/T” with CONSULT-II.
2. Make sure that output voltage of A/T fluid temperature sensor is within the range below.
   FLUID TEMP SEN: 0.4 - 1.5V
   If out of range, drive the vehicle to decrease the voltage (warm up the fluid) or stop engine to increase the voltage (cool down the fluid).
3. Select “4TH GR FNCTN P0734” of “DTC WORK SUPPORT” mode for “A/T” with CONSULT-II and touch “START”.

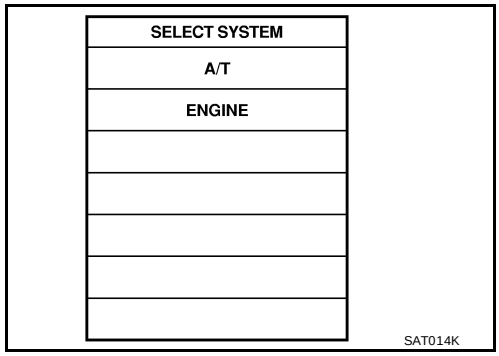

4. Accelerate vehicle to 55 to 65 km/h (34 to 40 MPH) under the following condition and release the accelerator pedal completely.
   THROTTLE POSI: Less than 5.5/8 (at all times during step 4)
   Selector lever: D position
- **Check that “GEAR” shows “3” after releasing pedal.**
5. Depress accelerator pedal steadily with 1.0/8 - 2.0/8 of “THROTTLE POSI” from a speed of 55 to 65 km/h (34 to 40 MPH) until “TESTING” has turned to “STOP VEHICLE” or “COMPLETED”. (It will take approximately 3 seconds.)
   If the check result NG appears on CONSULT-II screen, go to AT-142, "Diagnostic Procedure" .
   If “STOP VEHICLE” appears on CONSULT-II screen, go to following step.

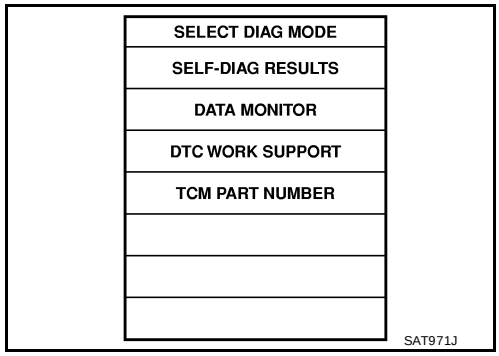

- **Check that “GEAR” shows “4” when depressing accelerator pedal with 1.0/8 - 2.0/8 of “THROTTLE POSI”.**
- **If “TESTING” does not appear on CONSULT-II for a long time, select “SELF-DIAG RESULTS” for “ENGINE”. In case a 1st trip DTC other than P0734 is shown, refer to applicable “TROUBLE DIAGNOSIS FOR DTC”.**
6. Stop vehicle.
7. Follow the instruction displayed. (Check for normal shifting referring to the table below.)

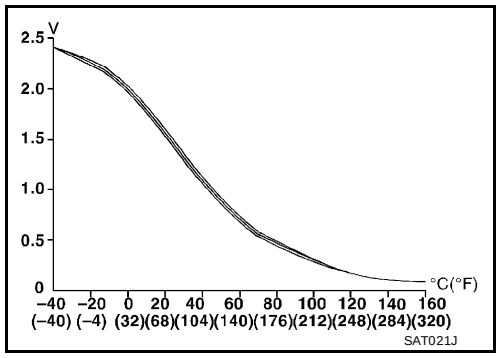

Vehicle condition	Gear on actual transmission shift pattern when screen is changed to 1 → 2 → 3 → 4
No malfunction exists	1 → 2 → 3 → 4
Malfunction for P0734 exists.	1 → 2 → 2 → 1

8. Make sure that “OK” is displayed. (If “NG” is displayed, refer to “DIAGNOSTIC PROCEDURE”.)
   Refer to AT-142, "Diagnostic Procedure" .
   Refer to AT-364, "Shift Schedule" .

WITH GST

Follow the procedure “With CONSULT-II”.

Wiring Diagram — AT — 4TH

ECS004SV

AT-4THSIG-01

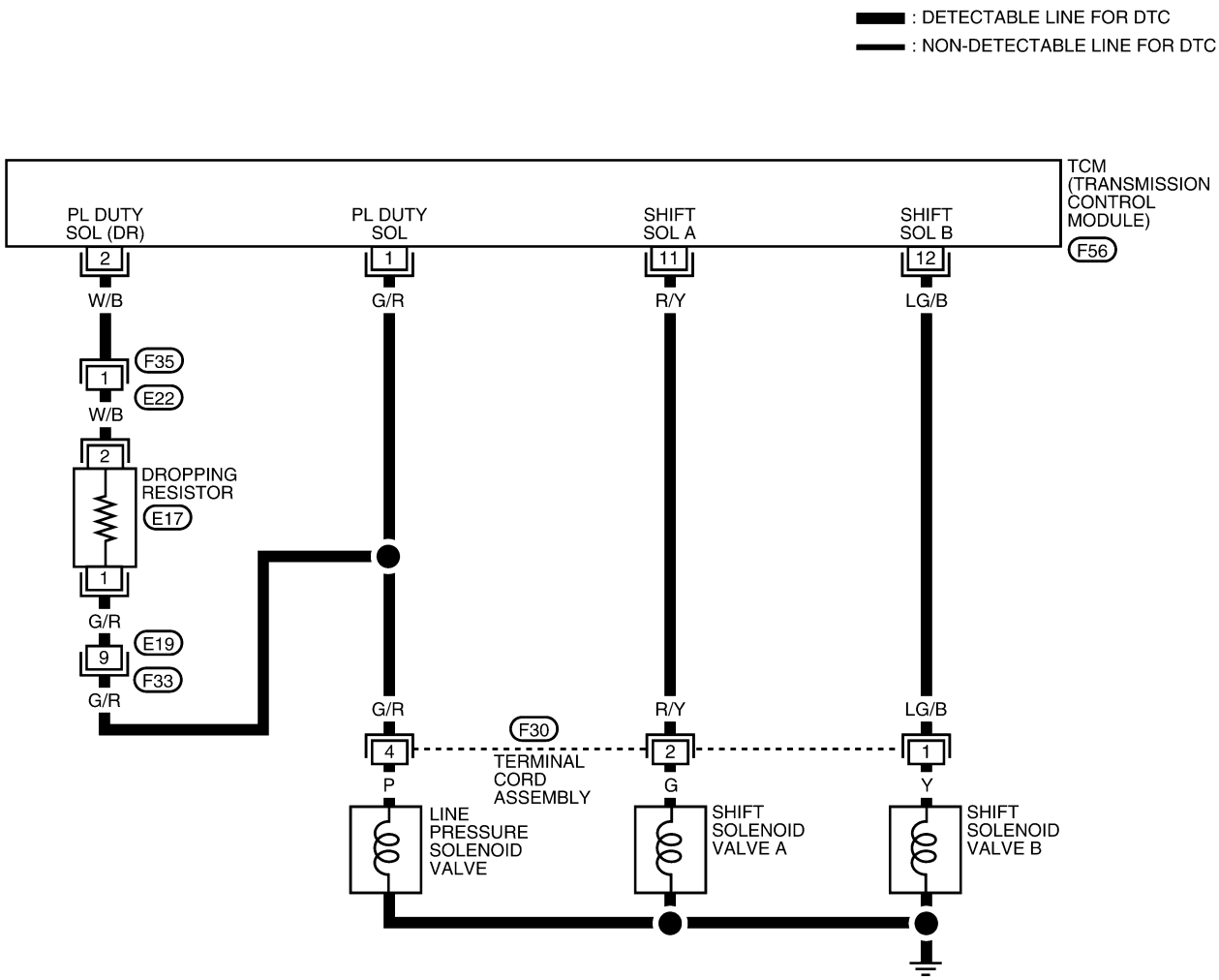

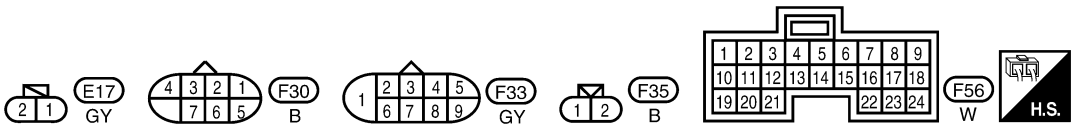

LCWA0013E

TCM TERMINALS AND REFERENCE VALUE MEASURED BETWEEN EACH TERMINAL AND 25 OR 48 (TCM GROUND)				
TERMINAL	WIRE COLOR	ITEM	CONDITION	DATA (APPROX.)
1	G/R	LINE PRESSURE SOLENOID VALVE	WHEN ACCELERATOR PEDAL IS RELEASED WHILE DRIVING	1.5 - 3.0V
			WHEN ACCELERATOR PEDAL IS DEPRESSED WHILE DRIVING	0V
2	W/B	LINE PRESSURE SOLENOID VALVE (DROPPING RESIS-TOR)	WHEN ACCELERATOR PEDAL IS RELEASED WHILE DRIVING	4 - 14V
			WHEN ACCELERATOR PEDAL IS DEPRESSED WHILE DRIVING	0V
11	R/Y	SHIFT SOLENOID VALVE A	WHEN SHIFT SOLENOID VALVE A IS OPERATING (DRIVING IN D_1 OR D_4)	BATTERY VOLTAGE
			WHEN SHIFT SOLENOID VALVE A IS NOT OPERATING (DRIVING IN D_2 OR D_3)	0V
12	LG/B	SHIFT SOLENOID VALVE B	WHEN SHIFT SOLENOID VALVE B IS OPERATING (DRIVING IN D_1 OR D_2)	BATTERY VOLTAGE
			WHEN SHIFT SOLENOID VALVE BE IS NOT OPERATING (DRIV-ING IN D_3 OR D_4)	OV

Diagnostic Procedure

ECS004SW

1. CHECK SHIFT UP (D_3 TO D_4)

During AT-75, "Cruise Test — Part 1" , does A/T shift from D_3 to D_4 at the specified speed?

Yes or No

Yes >> GO TO 11.
No >> GO TO 2.

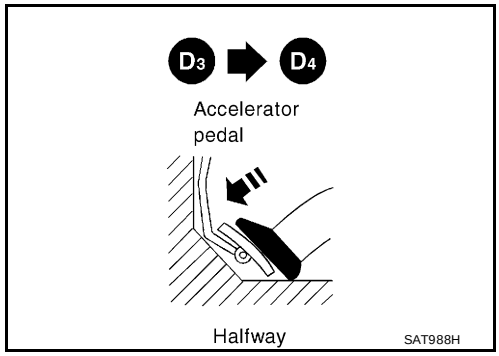

2. CHECK LINE PRESSURE

Perform line pressure test.

Engine Speed RPM	Line Pressure kPa (kg/cm^2 , psi)			
	QR25DE		VQ35DE	
	D, 2 and 1 Position	R Position	D, 2 and 1 Position	R Position
Idle	500 (5.1, 73)	778 (7.9, 113)	500 (5.1, 73)	778 (7.9, 113)
Stall	1.233 (12.6, 179)	1.918 (19.6, 278)	1.233 (12.6, 179)	1.918 (19.6, 278)

Refer to AT-65, "Line Pressure Test" .

OK or NG

OK >> GO TO 3.
NG >> GO TO 7.

3. CHECK VALVE RESISTANCE

1. Remove control valve assembly. Refer to AT-255, "Control Valve Assembly and Accumulators" .
- Shift solenoid valve A
- Shift solenoid valve B
2. Check resistance between two terminals.

Solenoid valve	Terminal No.		Resistance (Approx.)
Shift solenoid valve A	2	Ground	20 - 30Ω
Shift solenoid valve B	1		5 - 20Ω

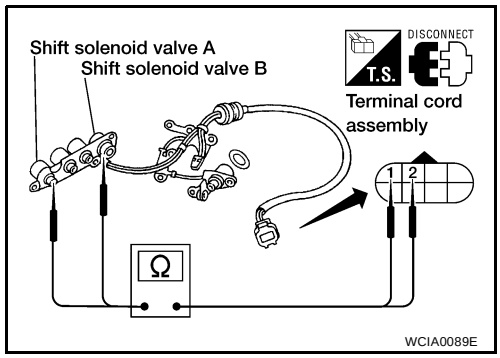

OK or NG

OK >> GO TO 5.
NG >> Replace solenoid valve assembly.

4. CHECK VALVE OPERATION

1. Remove control valve assembly. Refer to AT-255, "Control Valve Assembly and Accumulators" .
- Shift solenoid valve A
- Shift solenoid valve B
2. Check solenoid valve by listening for its operating sound while applying battery voltage to the terminal and ground.

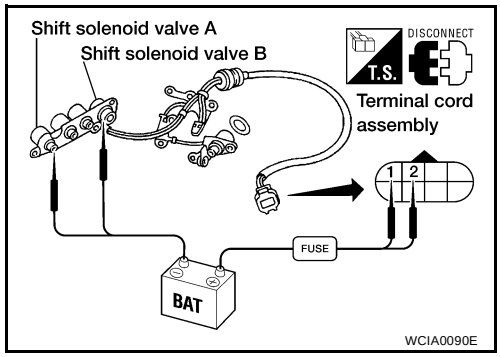

OK or NG

OK >> GO TO 5.
NG >> Replace solenoid valve assembly.

5. CHECK CONTROL VALVE

1. Disassemble control valve assembly. Refer to AT-290, "Control Valve Assembly" .
2. Check to ensure that:
- Valve, sleeve and plug slide along valve bore under their own weight.
- Valve, sleeve and plug are free from burrs, dents and scratches.
- Control valve springs are free from damage, deformation and fatigue.
- Hydraulic line is free from obstacles.

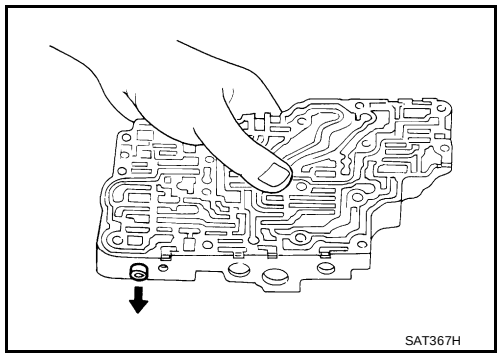

OK or NG

OK >> GO TO 6.
NG >> Repair control valve.

6. CHECK SHIFT UP (D_3 TO D_4)

Does A/T shift from D_3 to D_4 at the specified speed?

OK or NG

OK >> GO TO 11.
NG >> Check control valve again. Repair or replace control valve assembly.

7. CHECK VALVE RESISTANCE

1. Remove control valve assembly. Refer to AT-255, "Control Valve Assembly and Accumulators" .
- Line pressure solenoid valves
2. Check resistance to the terminal and ground.

Solenoid valve	Terminal No.		Resistance (Approx.)
Line pressure solenoid valve	4	Ground	2.5 - 5Ω

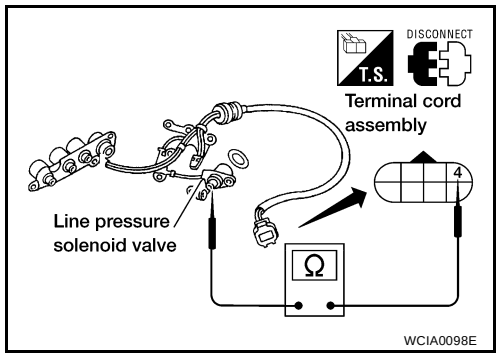

OK or NG

OK >> GO TO 9.
NG >> Replace solenoid valve assembly.

8. CHECK VALVE OPERATION

1. Remove control valve assembly. Refer to AT-255, "Control Valve Assembly and Accumulators" .
- Line pressure solenoid valves
2. Check solenoid valve by listening for its operating sound while applying battery voltage to the terminal and ground.

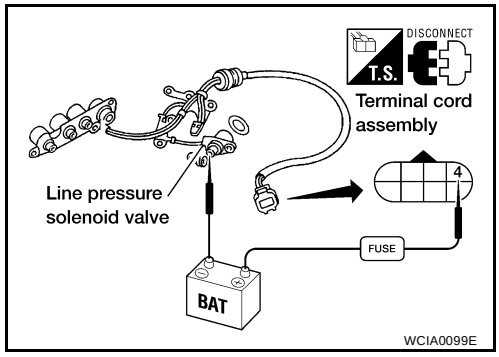

OK or NG

OK >> GO TO 9.
NG >> Replace solenoid valve assembly.

9. CHECK CONTROL VALVE

1. Disassemble control valve assembly. Refer to AT-290, "Control Valve Assembly" .
2. Check line pressure circuit valves for sticking.
- Pressure regulator valve
- Pilot valve
- Pressure modifier valve

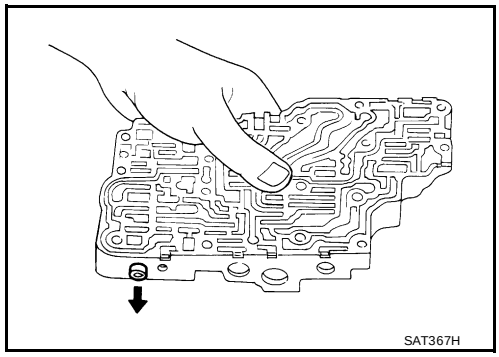

OK or NG

OK >> GO TO 10.
NG >> Repair control valve.

10. CHECK SHIFT UP (D_3 TO D_4)

Does A/T shift from D_3 to D_4 at the specified speed?

OK or NG

OK >> GO TO 11.
NG >> Check control valve again. Repair or replace control valve assembly.

11. CHECK DTC

Perform AT-139, "Diagnostic Trouble Code (DTC) Confirmation Procedure" .

OK or NG

OK >> **INSPECTION END**
NG >> Perform “Cruise test — Part 1” again and return to the start point of this test group.

DTC P0740 TORQUE CONVERTER CLUTCH SOLENOID VALVE

PFP:31940

Description

ECS004SX

The torque converter clutch solenoid valve is activated, with the gear in D4 , by the TCM in response to signals sent from the vehicle speed and the ECM (throttle opening). Lock-up piston operation will then be controlled.
Lock-up operation, however, is prohibited when A/T fluid temperature is too low.
When the accelerator pedal is depressed (less than 2/8) in lock-up condition, the engine speed should not change abruptly. If there is a big jump in engine speed, there is no lock-up.

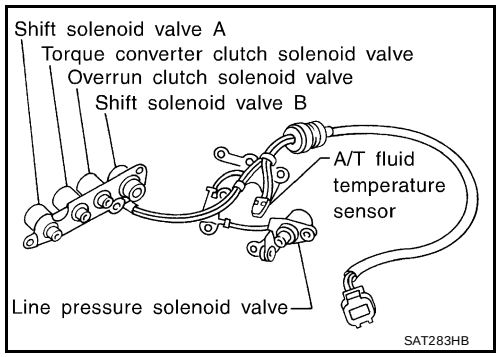

CONSULT-II REFERENCE VALUE IN DATA MONITOR MODE

Remarks: Specification data are reference values.

Monitor item	Condition	Specification
Torque converter clutch solenoid valve duty	Lock-up OFF ↓ Lock-up ON	Approximately 4% ↓ Approximately 94%

On Board Diagnosis Logic

ECS004SY

Diagnostic trouble code TCC SOLENOID/CIRC with CONSULT-II or P0740 without CONSULT-II is detected when TCM detects an improper voltage drop when it tries to operate the solenoid valve.

Possible Cause

ECS004SZ

Check the following items.

- Torque converter clutch solenoid valve
- Harness or connectors
  (The solenoid circuit is open or shorted.)

Diagnostic Trouble Code (DTC) Confirmation Procedure

ECS004T0

NOTE:
If “DTC Confirmation Procedure” has been previously conducted, always turn ignition switch OFF and wait at least 10 seconds before conducting the next test.
After the repair, perform the following procedure to confirm the malfunction is eliminated.

WITH CONSULT-II

1. Turn ignition switch ON.

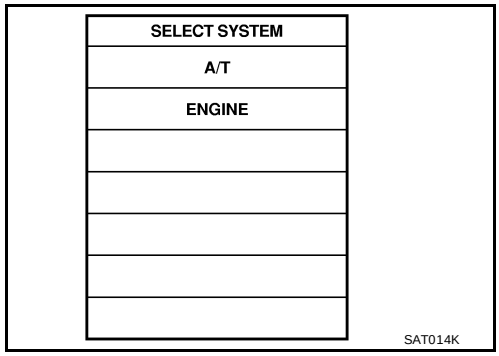

2. Select “DATA MONITOR” mode for “ENGINE” with CONSULT-II and wait at least 1 second.

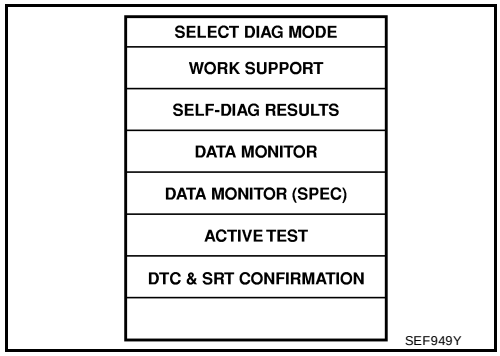

WITH GST

Follow the procedure “With CONSULT-II”.

Wiring Diagram — AT — TCV

ECS004T1

AT-TCV-01

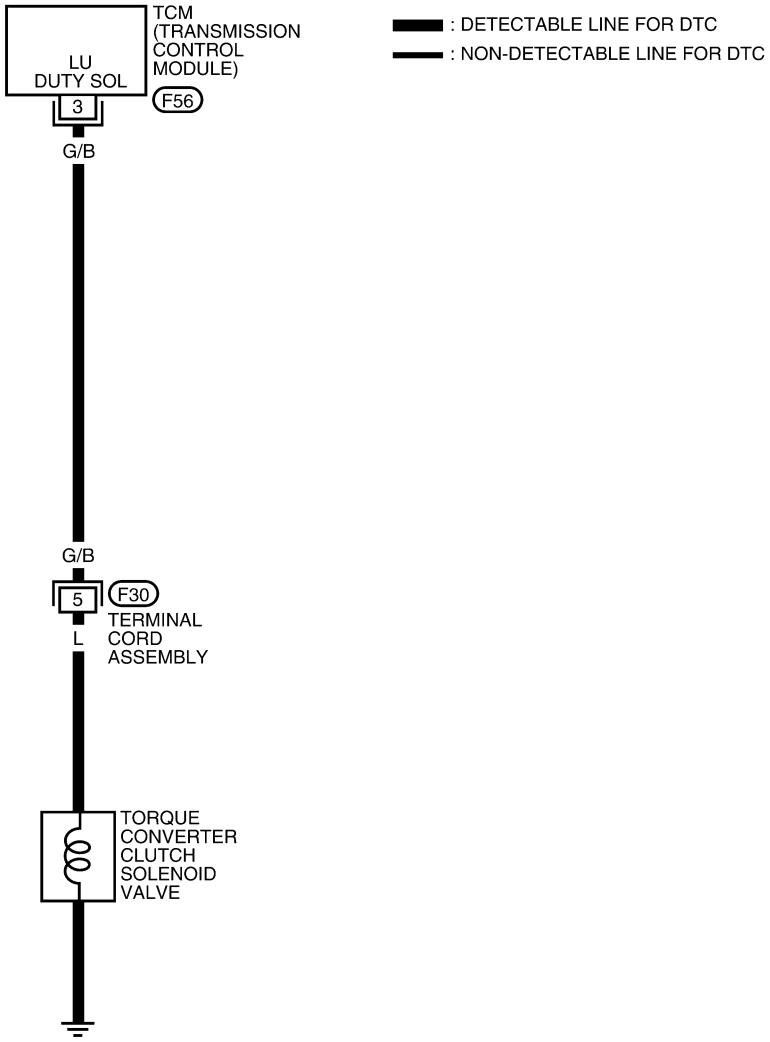

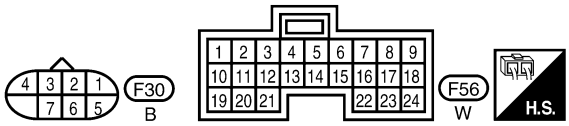

LCWA0014E

TCM TERMINALS AND REFERENCE VALUE MEASURED BETWEEN EACH TERMINAL AND 25 OR 48 (TCM GROUND)				
TERMINAL	WIRE COLOR	ITEM	CONDITION	DATA (APPROX.)
3	G/B	TORQUE CONVERTER CLUTCH SOLENOID VALVE	WITH TORQUE CONVERTER LOCK-UP	8 - 15V
			WITHOUT TORQUE CONVERTER LOCK-UP	0V

Diagnostic Procedure

ECS004T2

1. CHECK VALVE RESISTANCE

1. Turn ignition switch to OFF position.
2. Disconnect terminal cord assembly connector in engine compartment.
3. Check resistance between terminal 5 and ground.

Resistance : 5 - 20Ω

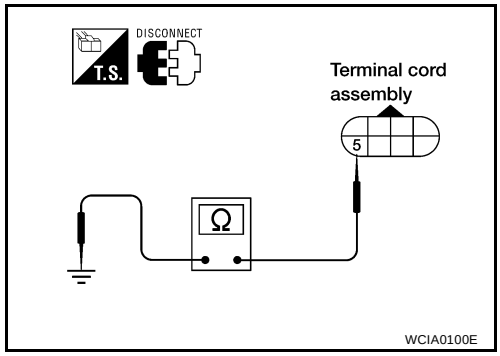

OK or NG

OK >> GO TO 3.
NG >> GO TO 2.

2. CHECK VALVE OPERATION

1. Remove oil pan.
2. Check the following items:

– Torque converter clutch solenoid valve
- Check solenoid valve by listening for its operating sound while applying battery voltage to the terminal and ground.

– Harness of terminal cord assembly for short or open

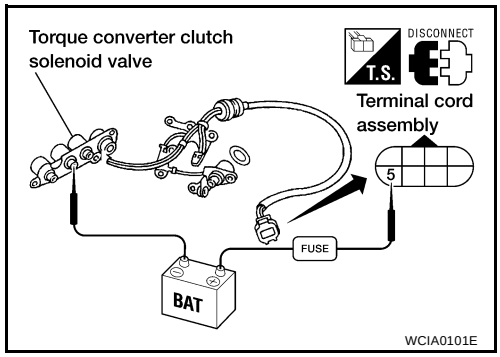

OK or NG

OK >> GO TO 3.
NG >> Repair or replace damaged parts.

3. CHECK POWER SOURCE CIRCUIT

1. Turn ignition switch to OFF position.
2. Disconnect TCM harness connector.
3. Check continuity between terminal cord assembly harness connector terminal 5 and TCM harness connector terminal 3. Refer to AT-148, "Wiring Diagram — AT — TCV" .

Continuity should exist.

4. Reinstall any part removed.

OK or NG

OK >> GO TO 4.
NG >> Repair open circuit or short to ground or short to power in harness or connectors.

4. CHECK DTC

Perform AT-146, "Diagnostic Trouble Code (DTC) Confirmation Procedure" .

OK or NG

OK >> **INSPECTION END**
NG >> GO TO 5.

5. CHECK TCM INSPECTION

1. Perform TCM input/output signal inspection.
2. If NG, recheck TCM pin terminals for damage or loose connection with harness connector.

OK or NG

OK >> **INSPECTION END**
NG >> Repair or replace damaged parts.

DTC P0744 A/T TCC S/V FUNCTION (LOCK-UP)

PFP:31940

Description

ECS004T3

- This is an OBD-II self-diagnostic item and not available in TCM self-diagnosis.
- This malfunction will not be detected while the A/T check position indicator lamp is indicating another self-diagnosis malfunction.
- This malfunction is detected when the A/T does not shift into fourth gear position or the torque converter clutch does not lock up as instructed by the TCM. This is not caused by electrical malfunction (circuits open or shorted) but by mechanical malfunction such as control valve sticking, improper solenoid valve operation, malfunctioning oil pump or torque converter clutch, etc.

CONSULT-II REFERENCE VALUE IN DATA MONITOR MODE

Remarks: Specification data are reference values.

Monitor item	Condition	Specification
Torque converter clutch solenoid valve duty	Lock-up OFF ↓ Lock-up ON	Approximately 4% ↓ Approximately 94%

On Board Diagnosis Logic

ECS004T4

This diagnosis monitors actual gear position by checking the torque converter slip ratio calculated by TCM as follows:
Torque converter slip ratio = A x C/B
A: Output shaft revolution signal from revolution sensor
B: Engine speed signal from ECM
C: Gear ratio determined as gear position which TCM supposes
If the actual gear position is much lower than the position (4th) supposed by TCM, the slip ratio will be much less than normal. In case the ratio does not reach the specified value, TCM judges this diagnosis malfunction. This malfunction will be caused when shift solenoid valve B is stuck closed.
Gear positions supposed by TCM are as follows.
In case of gear position with no malfunctions: 1, 2, 3 and 4 positions
In case of gear position with shift solenoid valve B stuck closed: 1, 2, 2 and 1* positions to each gear position above
*: P0744 is detected.
Diagnostic trouble code A/T TCC S/V FNCTN with CONSULT-II or P0744 without CONSULT-II is detected when A/T cannot perform lock-up even if electrical circuit is good.

Possible Cause

ECS004T5

Check the following items.

- Line pressure solenoid valve
- Torque converter clutch solenoid valve
- Each clutch
- Hydraulic control circuit

Diagnostic Trouble Code (DTC) Confirmation Procedure

ECS004T6

CAUTION:
Always drive vehicle at a safe speed.

NOTE:
If “DTC Confirmation Procedure” has been previously conducted, always turn ignition switch OFF and wait at least 10 seconds before conducting the next test.
After the repair, perform the following procedure to confirm the malfunction is eliminated.

WITH CONSULT-II

1. Start engine and select “DATA MONITOR” mode for “A/T” with CONSULT-II.
2. Make sure that output voltage of A/T fluid temperature sensor is within the range below.
   FLUID TEMP SEN: 0.4 - 1.5V
   If out of range, drive vehicle to decrease voltage (warm up the fluid) or stop engine to increase voltage (cool down the fluid).
3. Select “TCC S/V FNCTN P0744” of “DTC WORK SUPPORT” mode for “A/T” with CONSULT-II and touch “START”.

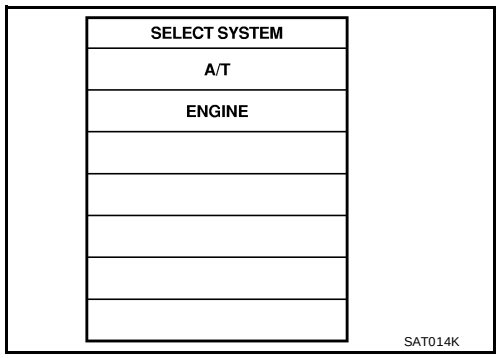

4. Accelerate vehicle to more than 80 km/h (50 MPH) and maintain the following condition continuously until “TESTING” has turned to “COMPLETE”. (It will take approximately 30 seconds after “TESTING” shows.)
   THROTTLE POSI: 1.0/8 - 2.0/8 (at all times during step 4)
   Selector lever: D position
   TCC S/V DUTY: More than 94%
   VHCL/S SE·A/T: Constant speed of more than 80 km/h (50 MPH)

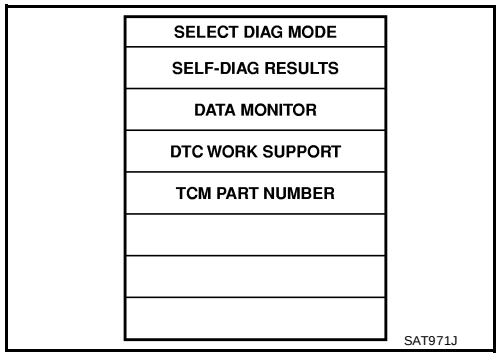

- **Check that “GEAR” shows “4”.**
- **For shift schedule, refer to AT-364, "Shift Schedule" .**
- **If “TESTING” does not appear on CONSULT-II for a long time, select “SELF-DIAG RESULTS”. In case a 1st trip DTC other than P0744 is shown, refer to applicable “TROUBLE DIAGNOSIS FOR DTC”.**

5. Make sure that “OK” is displayed. (If “NG” is displayed, refer to “DIAGNOSTIC PROCEDURE”.)
   Refer to AT-154, "Diagnostic Procedure" .
   Refer to AT-364, "Shift Schedule" .

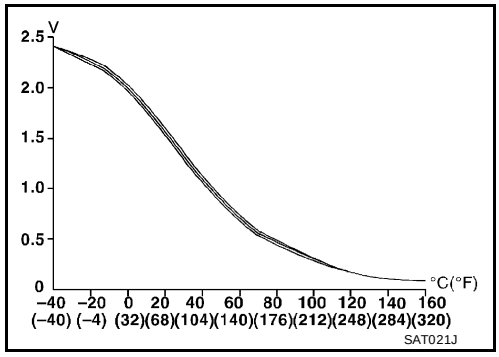

WITH GST

Follow the procedure “With CONSULT-II”.

Wiring Diagram — AT — TCCSIG

ECS004T7

AT-TCCSIG-01

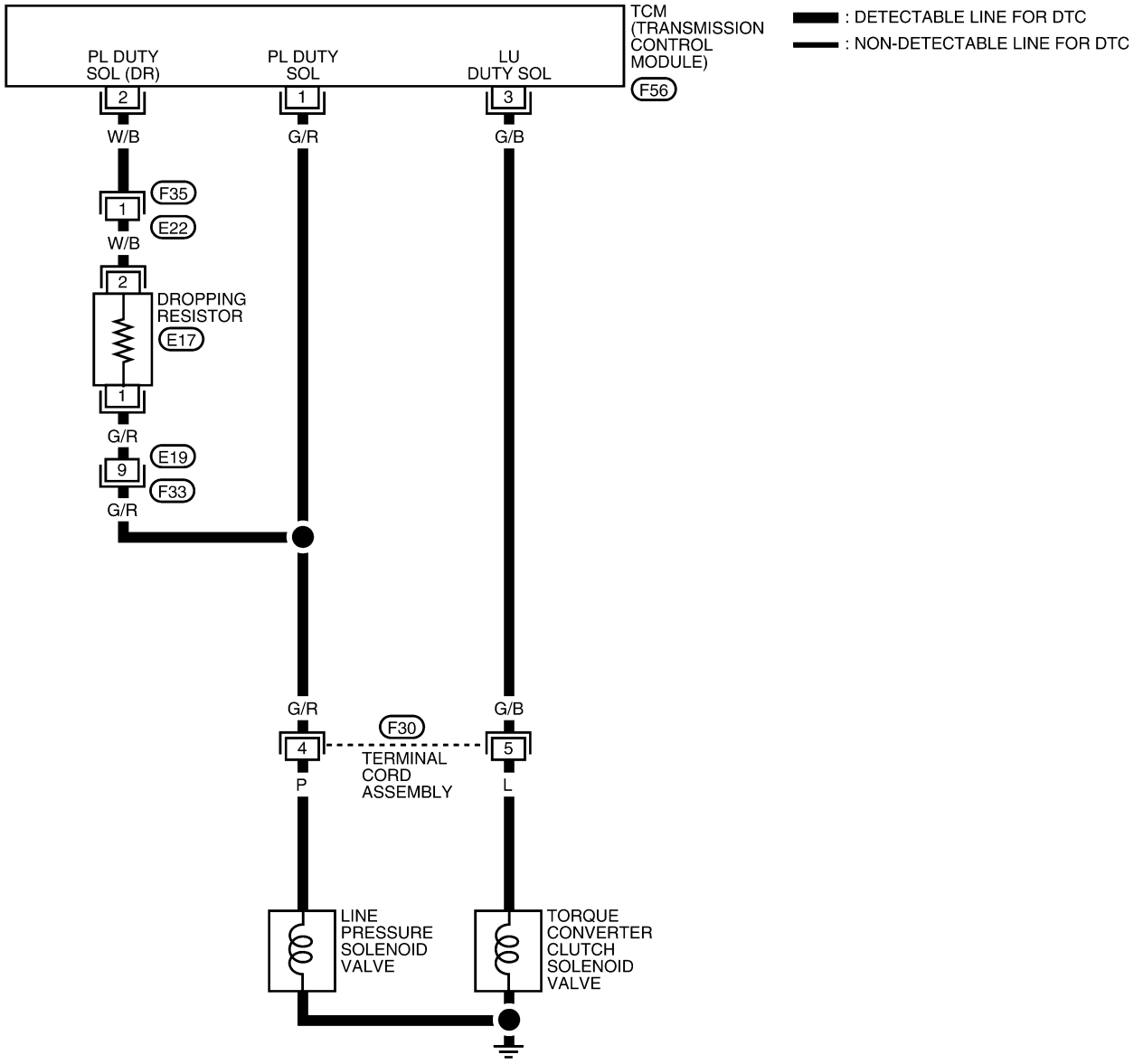

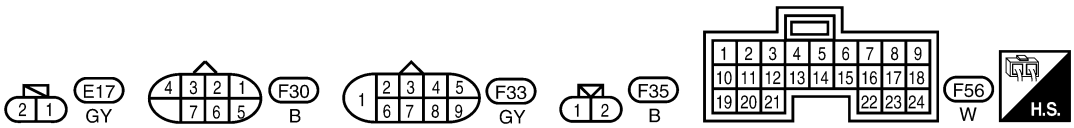

LCWA0015E

TCM TERMINALS AND REFERENCE VALUE MEASURED BETWEEN EACH TERMINAL AND 25 OR 48 (TCM GROUND)				
TERMINAL	WIRE COLOR	ITEM	CONDITION	DATA (APPROX.)
1	R/W	LINE PRESSURE SOLENOID VALVE	WHEN ACCELERATOR PEDAL IS RELEASED WHILE DRIVING	1.5 - 3.0V
			WHEN ACCELERATOR PEDAL IS DEPRESSED WHILE DRIVING	0V
2	P/B	LINE PRESSURE SOLENOID VALVE (DROPPING RESIS-TOR)	WHEN ACCELERATOR PEDAL IS RELEASED WHILE DRIVING	4 - 14V
			WHEN ACCELERATOR PEDAL IS DEPRESSED WHILE DRIVING	0V
3	GY/R	TORQUE CONVERTER CLUTCH SOLENOID VALVE	WITH TORQUE CONVERTER LOCK-UP	8 - 15V
			WITHOUT TORQUE CON-VERTER LOCK-UP	0V

Diagnostic Procedure

ECS004T8

1. CHECK SHIFT UP (D_3 TO D_4)

During AT-75, "Cruise Test — Part 1" , does A/T shift from D_3 to D_4 at the specified speed?

Yes or No

Yes >> GO TO 11.
No >> GO TO 2.

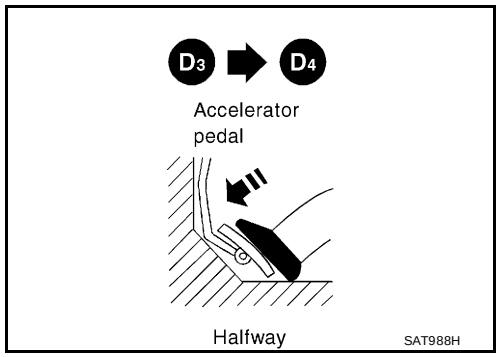

2. CHECK LINE PRESSURE

Perform line pressure test.

Engine Speed RPM	Line Pressure kPa (kg/cm^2 , psi)			
	QR25DE		VQ35DE	
	D, 2 and 1 Position	R Position	D, 2 and 1 Position	R Position
Idle	500 (5.1, 73)	778 (7.9, 113)	500 (5.1, 73)	778 (7.9, 113)
Stall	1.233 (12.6, 179)	1.918 (19.6, 278)	1.233 (12.6, 179)	1.918 (19.6, 278)

Refer to AT-65, "Line Pressure Test" .

OK or NG

OK >> GO TO 3.
NG >> GO TO 6.

3. CHECK CONTROL VALVE

1. Disassemble control valve assembly. Refer to AT-290, "Control Valve Assembly" .
2. Check to ensure that:
- Valve, sleeve and plug slide along valve bore under their own weight.
- Valve, sleeve and plug are free from burrs, dents and scratches.
- Control valve springs are free from damage, deformation and fatigue.
- Hydraulic line is free from obstacles.

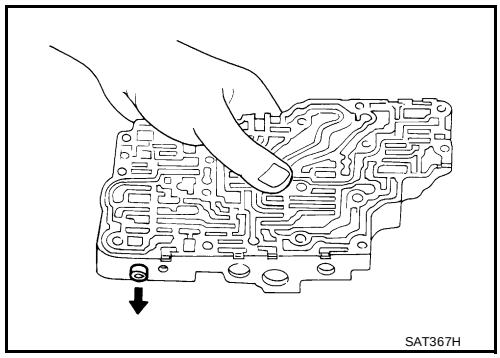

OK or NG

OK >> GO TO 4.
NG >> Repair control valve.

4. CHECK SHIFT UP (D_3 TO D_4)

Does A/T shift from D_3 to D_4 at the specified speed?

OK or NG

OK >> GO TO 5.
NG >> Check control valve again. Repair or replace control valve assembly.

5. CHECK DTC

Perform AT-151, "Diagnostic Trouble Code (DTC) Confirmation Procedure" .

OK or NG

OK >> **INSPECTION END**
NG >> GO TO 11. Check for proper lock-up.

6. CHECK VALVE RESISTANCE

1. Remove control valve assembly. Refer to AT-255, "Control Valve Assembly and Accumulators" .
- Line pressure solenoid valve
2. Check resistance to the terminal and ground.

Solenoid valve	Terminal No.		Resistance (Approx.)
Line pressure solenoid valve	4	Ground	2.5 - 5Ω

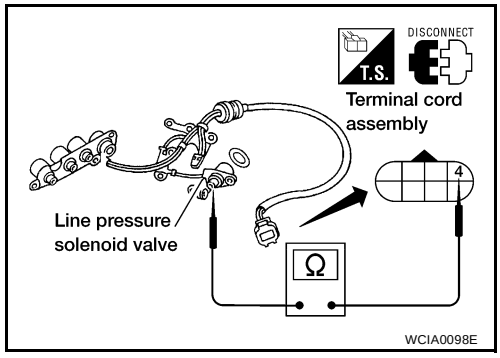

OK or NG

OK >> GO TO 8.
NG >> Replace solenoid valve assembly.

7. CHECK VALVE OPERATION

1. Remove control valve assembly. Refer to AT-255, "Control Valve Assembly and Accumulators" .
- Line pressure solenoid valve
2. Check solenoid valve by listening for its operating sound while applying battery voltage to the terminal and ground.

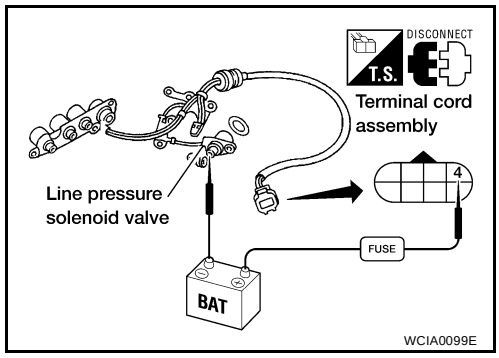

OK or NG

OK >> GO TO 8.
NG >> Replace solenoid valve assembly.

8. CHECK CONTROL VALVE

1. Disassemble control valve assembly. Refer to AT-290, "Control Valve Assembly" .
2. Check line pressure circuit valves for sticking.
- Pressure regulator valve
- Pilot valve
- Pressure modifier valve

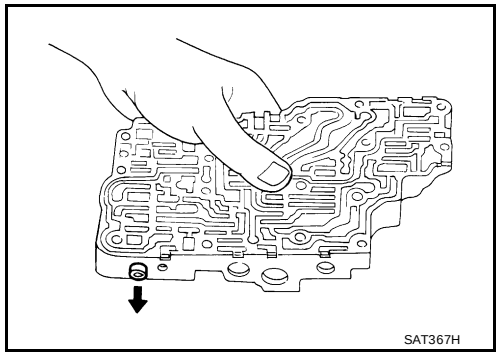

OK or NG

OK >> GO TO 9.
NG >> Repair control valve.

9. CHECK SHIFT UP (D_3 TO D_4)

Does A/T shift from D_3 to D_4 at the specified speed?

OK or NG

OK >> GO TO 10.
NG >> Check control valve again. Repair or replace control valve assembly.

10. CHECK DTC

Perform AT-151, "Diagnostic Trouble Code (DTC) Confirmation Procedure" .

OK or NG

OK >> **INSPECTION END**
NG >> GO TO 11. Check for proper lock-up.

11. CHECK LOCK-UP

During AT-75, "Cruise Test — Part 1" , does A/T perform lock-up at the specified speed?

Yes or No

Yes >> Perform “Cruise test — Part 1” again and return to the start point of this test group.
No >> GO TO 12.

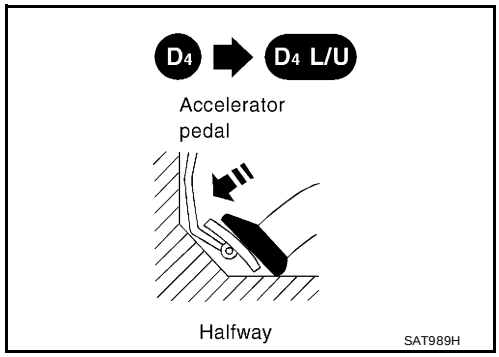

12. CHECK VALVE RESISTANCE

1. Remove control valve assembly. Refer to AT-255, "Control Valve Assembly and Accumulators" .
- Torque converter clutch solenoid valve
2. Check resistance to the terminal and ground.

Solenoid valve	Terminal No.		Resistance (Approx.)
Torque converter clutch solenoid valve	5	Ground	5 - 20Ω

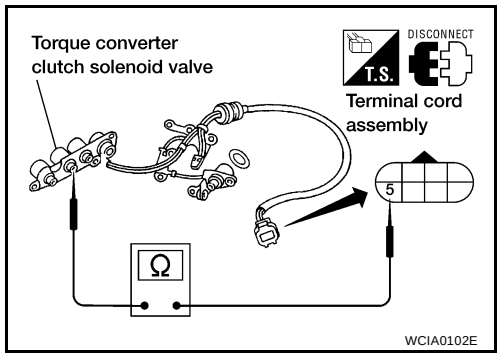

OK or NG

OK >> GO TO 14.
NG >> Replace solenoid valve assembly.

13. CHECK VALVE OPERATION

1. Remove control valve assembly. Refer to AT-255, "Control Valve Assembly and Accumulators" .
- Torque converter clutch solenoid valve
2. Check solenoid valve by listening for its operating sound while applying battery voltage to the terminal and ground.

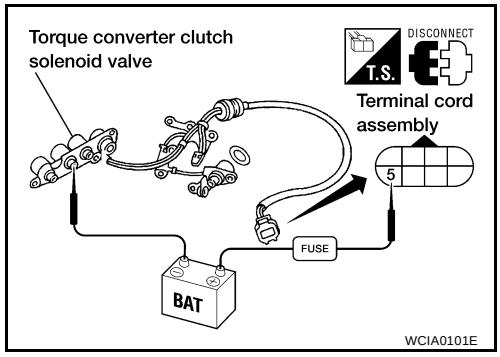

OK or NG

OK >> GO TO 14.
NG >> Replace solenoid valve assembly.

14. CHECK CONTROL VALVE

1. Disassemble control valve assembly. Refer to AT-290, "Control Valve Assembly" .
2. Check control valves for sticking.
- Torque converter clutch control valve
- Torque converter clutch relief valve

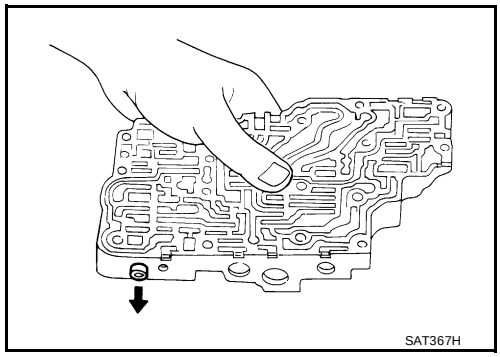

OK or NG

OK >> GO TO 15.
NG >> Repair control valve.

15. CHECK LOCK-UP

Does A/T perform lock-up at the specified speed?

Yes or No

Yes >> GO TO 16.
No >> Check control valve again. Repair or replace control valve assembly.

16. CHECK DTC

Perform AT-151, "Diagnostic Trouble Code (DTC) Confirmation Procedure" .

OK or NG

OK >> **INSPECTION END**
NG >> Perform “Cruise test — Part 1” again and return to the start point of this test group.

DTC P0745 LINE PRESSURE SOLENOID VALVE

PFP:31940

Description

ECS004T9

The line pressure solenoid valve regulates the oil pump discharge pressure to suit the driving condition in response to a signal sent from the TCM.

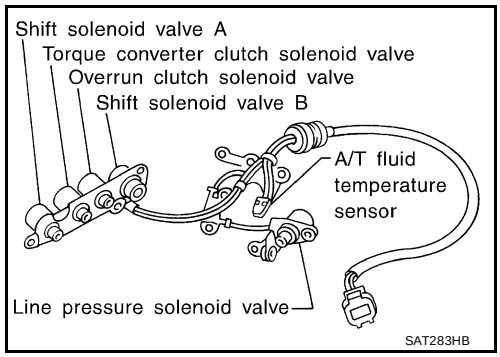

CONSULT-II REFERENCE VALUE IN DATA MONITOR MODE

Remarks: Specification data are reference values.

Monitor item	Condition	Specification
Line pressure solenoid valve duty	Small throttle opening (Low line pressure) ↓ Large throttle opening (High line pressure)	Approximately 24% ↓ Approximately 95%

On Board Diagnosis Logic

ECS004TA

Diagnostic trouble code L/PRESS SOL/CIRC with CONSULT-II or P0745 without CONSULT-II is detected when TCM detects an improper voltage drop when it tries to operate the solenoid valve.

Possible Cause

ECS004TB

Check the following items.

- Harness or connectors
  (The solenoid circuit is open or shorted.)
- Line pressure solenoid valve

Diagnostic Trouble Code (DTC) Confirmation Procedure

ECS004TC

NOTE:
If “DTC Confirmation Procedure” has been previously conducted, always turn ignition switch OFF and wait at least 10 seconds before conducting the next test.
After the repair, perform the following procedure to confirm the malfunction is eliminated.

WITH CONSULT-II

1. Turn ignition switch ON and select “DATA MONITOR” mode for “ENGINE” with CONSULT-II.

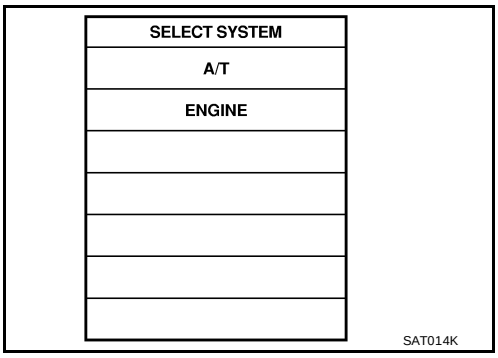

2. Depress accelerator pedal completely and wait at least 1 second.

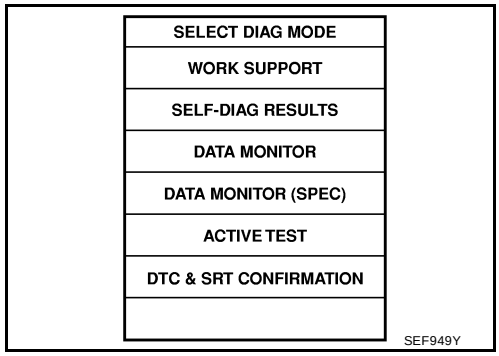

WITH GST

Follow the procedure “With CONSULT-II”.

Wiring Diagram — AT — LPSV

ECS004TD

AT-LPSV-01

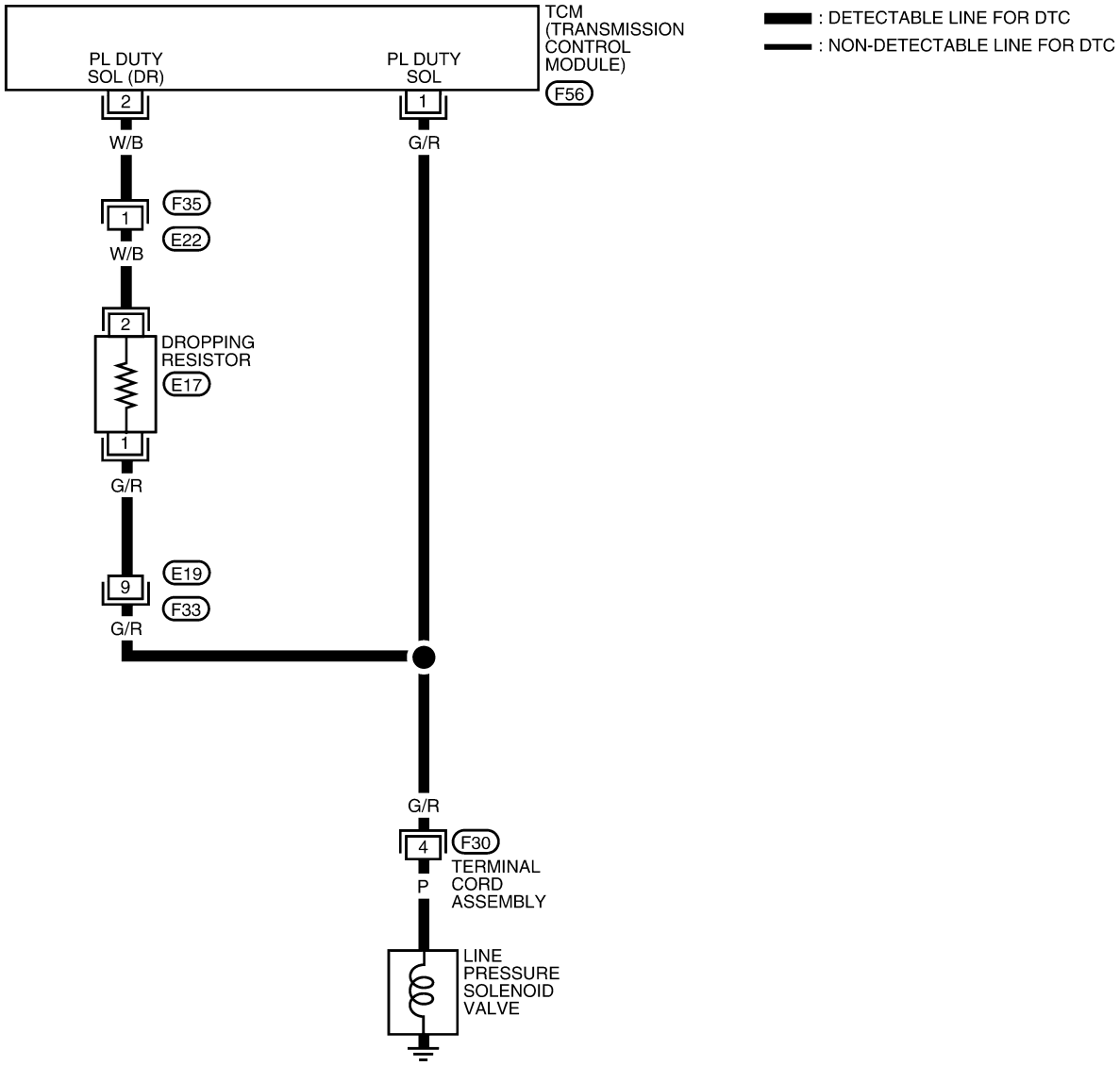

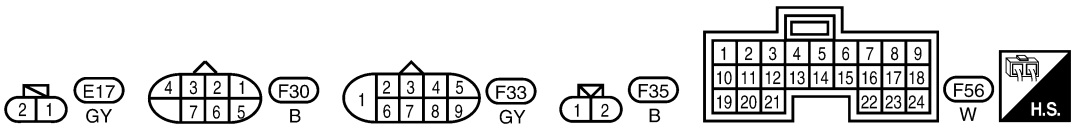

LCWA0016E

TCM TERMINALS AND REFERENCE VALUE MEASURED BETWEEN EACH TERMINAL AND 25 OR 48 (TCM GROUND)				
TERMINAL	WIRE COLOR	ITEM	CONDITION	DATA (APPROX.)
1	G/R	LINE PRESSURE SOLENOID VALVE	WHEN ACCELERATOR PEDAL IS RELEASED WHILE DRIVING	1.5 - 3.0V
			WHEN ACCELERATOR PEDAL IS DEPRESSED WHILE DRIVING	0V
2	W/B	LINE PRESSURE SOLENOID VALVE (DROPPING RESISTOR)	WHEN ACCELERATOR PEDAL IS RELEASED WHILE DRIVING	4 - 14V
			WHEN ACCELERATOR PEDAL IS DEPRESSED WHILE DRIVING	0V

Diagnostic Procedure

ECS004TE

1. CHECK VALVE RESISTANCE

1. Turn ignition switch to OFF position.
2. Disconnect terminal cord assembly connector in engine compartment.
3. Check resistance between terminal cord assembly harness connector terminal 4 and ground.

Resistance : 2.5 - 5Ω

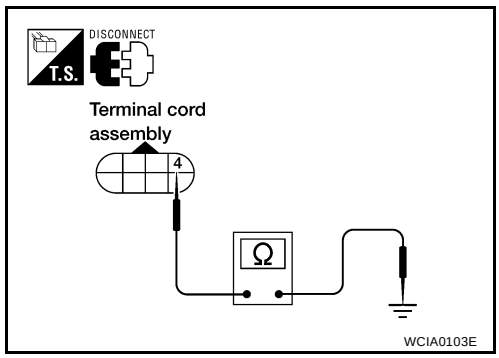

OK or NG

OK >> GO TO 3.
NG >> GO TO 2.

2. CHECK VALVE OPERATION

1. Remove control valve assembly. Refer to AT-255, "Control Valve Assembly and Accumulators" .
2. Check the following items:

– Line pressure solenoid valve

- Check solenoid valve by listening for its operating sound while applying battery voltage to the terminal and ground.

– Harness of terminal cord assembly for short or open

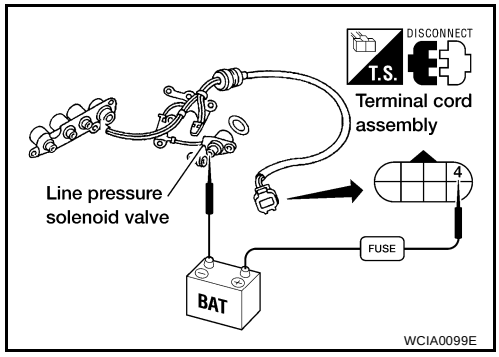

OK or NG

OK >> GO TO 3.
NG >> Repair or replace damaged parts.

3. CHECK POWER SOURCE AND DROPPING RESISTOR CIRCUIT

1. Turn ignition switch to OFF position.
2. Disconnect TCM harness connector.
3. Check resistance between terminal 4 (G/R) and TCM harness connector terminal 2 (W/B).

Resistance : 10 - 15Ω

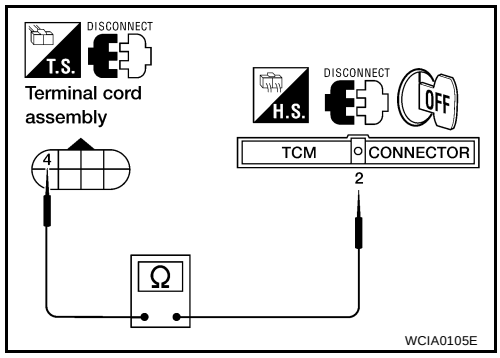

OK or NG

OK >> GO TO 5.
NG >> GO TO 4.

4. DETECT MALFUNCTIONING ITEM

Check the following items:

- Dropping resistor
- Check resistance between two terminals.

Resistance :10 - 15Ω

- Harness for short or open between TCM terminal 2 and terminal cord assembly (Main harness)

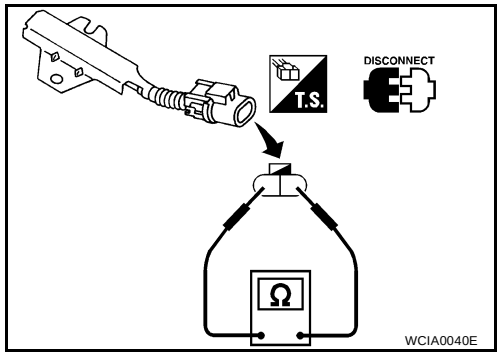

OK or NG

OK >> GO TO 5.
NG >> Repair or replace damaged parts.

5. CHECK POWER SOURCE CIRCUIT

1. Turn ignition switch to OFF position.
2. Check continuity between terminal cord assembly harness connector terminal 4 and TCM harness connector terminal 1. Refer to AT-161, "Wiring Diagram — AT — LPSV" .

Continuity should exist.

3. Reinstall any part removed.

OK or NG

OK >> GO TO 6.
NG >> Repair open circuit or short to ground or short to power in harness or connectors.

6. CHECK DTC

Perform AT-159, "Diagnostic Trouble Code (DTC) Confirmation Procedure" .

OK or NG

OK >> **INSPECTION END**
NG >> GO TO 7.

7. CHECK TCM INSPECTION

1. Perform TCM input/output signal inspection.
2. If NG, recheck TCM pin terminals for damage or loose connection with harness connector.

OK or NG

OK >> **INSPECTION END**
NG >> Repair or replace damaged parts.

DTC P0750 SHIFT SOLENOID VALVE A

PFP:31940

Description

ECS004TF

Shift solenoid valves A and B are turned ON or OFF by the TCM in response to signals sent from the park/neutral position (PNP) switch, vehicle speed and ECM (throttle opening). Gears will then be shifted to the optimum position.

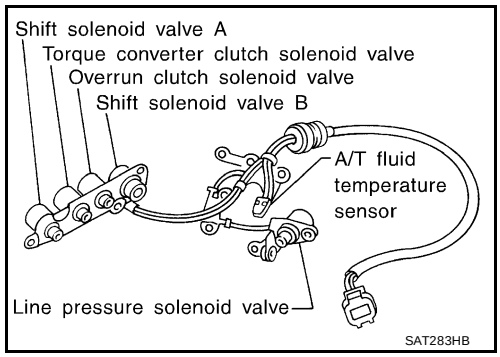

Gear position	1	2	3	4
Shift solenoid valve A	ON (Closed)	OFF (Open)	OFF (Open)	ON (Closed)
Shift solenoid valve B	ON (Closed)	ON (Closed)	OFF (Open)	OFF (Open)

On Board Diagnosis Logic

ECS004TG

Diagnostic trouble code SFT SOL A/CIRC with CONSULT-II or P0750 without CONSULT-II is detected when TCM detects an improper voltage drop when it tries to operate the solenoid valve.

Possible Cause

ECS004TH

Check the following items.

- Harness or connectors
  (The solenoid circuit is open or shorted.)
- Shift solenoid valve A

Diagnostic Trouble Code (DTC) Confirmation Procedure

ECS004TI

CAUTION:
Always drive vehicle at a safe speed.

NOTE:
If “DTC Confirmation Procedure” has been previously conducted, always turn ignition switch OFF and wait at least 10 seconds before conducting the next test.
After the repair, perform the following procedure to confirm the malfunction is eliminated.

WITH CONSULT-II

1. Turn ignition switch ON and select “DATA MONITOR” mode for “ENGINE” with CONSULT-II.

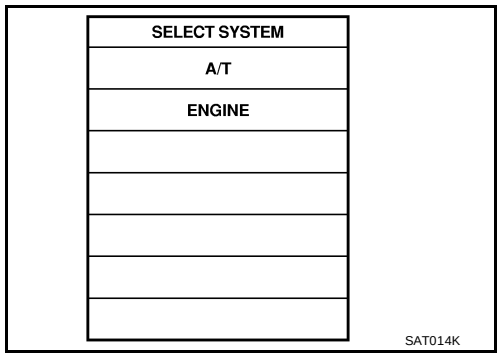

2. Start engine.
3. Drive vehicle in D position and allow the transmission to shift 1 → 2 (“GEAR”).

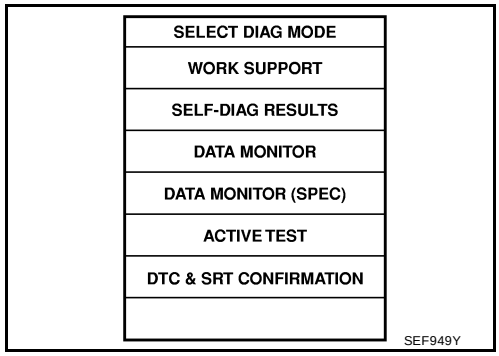

WITH GST

Follow the procedure “With CONSULT-II”.

Wiring Diagram — AT — SSV/A

ECS004TJ

AT-SSV/A-01

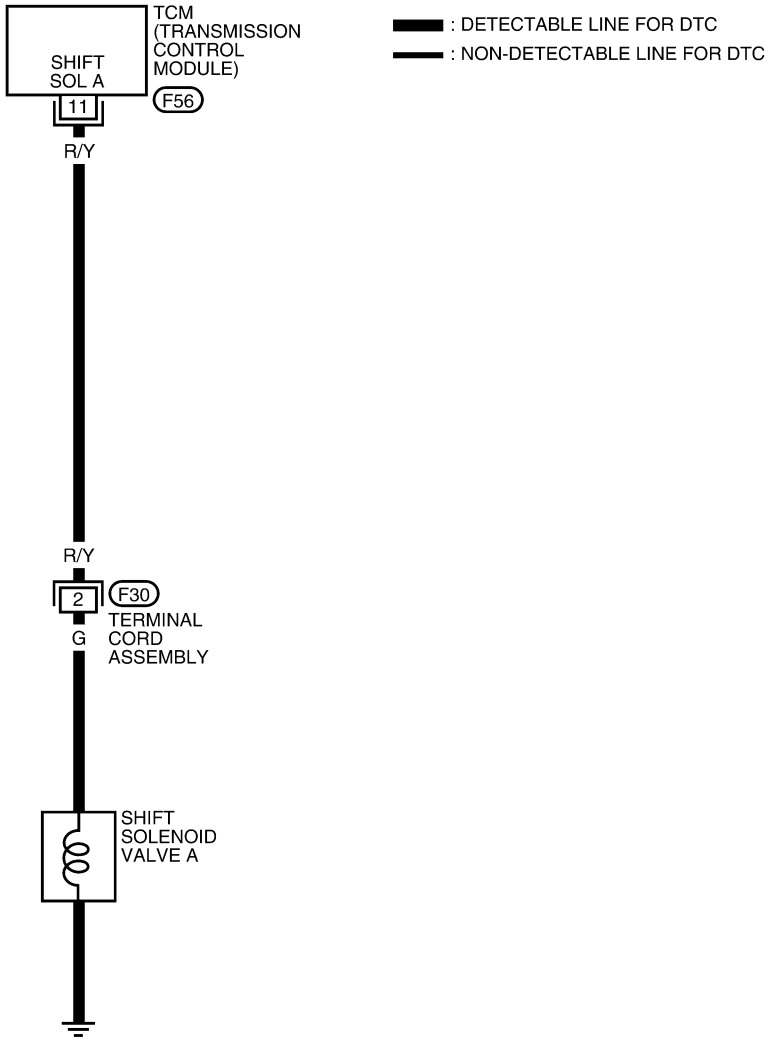

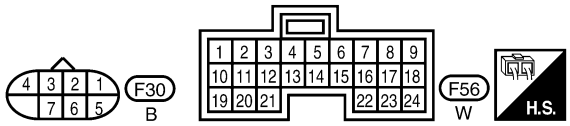

LCWA0017E

TCM TERMINALS AND REFERENCE VALUE MEASURED BETWEEN EACH TERMINAL AND 25 OR 48 (TCM GROUND)				
TERMINAL	WIRE COLOR	ITEM	CONDITION	DATA (APPROX.)
11	R/Y	SHIFT SOLENOID VALVE A	WHEN SHIFT SOLENOID VALVE A IS OPERATING (DRIVING IN D_1 OR D_4)	BATTERY VOLTAGE
			WHEN SHIFT SOLENOID VALVE A IS NOT OPERATING (DRIVING IN D_2 OR D_3)	0V

Diagnostic Procedure

ECS004TK

1. CHECK VALVE RESISTANCE

1. Turn ignition switch to OFF position.
2. Disconnect terminal cord assembly connector in engine compartment.
3. Check resistance between terminal cord assembly harness connector terminal 2 and ground.

Resistance : 20 - 30Ω

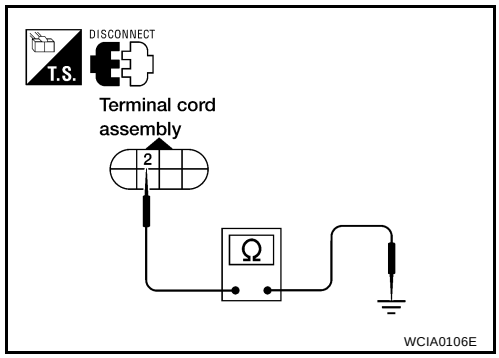

OK or NG

OK >> GO TO 3.
NG >> GO TO 2.

2. CHECK VALVE OPERATION

1. Remove control valve assembly. Refer to AT-255, "Control Valve Assembly and Accumulators" .
2. Check the following items:

– Shift solenoid valve A
– Operation check

• Check solenoid valve by listening for its operating sound while applying battery voltage to the terminal and ground.

– Harness of terminal cord assembly for short or open

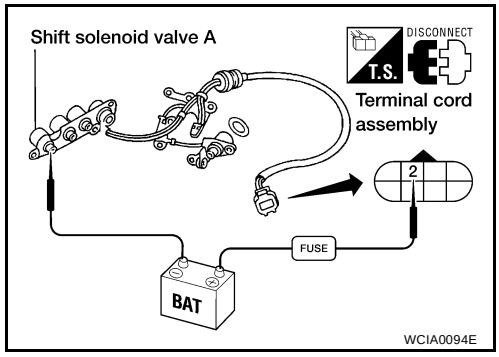

OK or NG

OK >> GO TO 3.
NG >> Repair or replace damaged parts.

3. CHECK POWER SOURCE CIRCUIT

1. Turn ignition switch to OFF position.
2. Disconnect TCM harness connector.
3. Check continuity between terminal cord assembly harness connector terminal 2 and TCM harness connector terminal 11. Refer to AT-167, "Wiring Diagram — AT — SSV/A" .

Continuity should exist.

4. Reinstall any part removed.

OK or NG

OK >> GO TO 4.
NG >> Repair open circuit or short to ground or short to power in harness or connectors.

4. CHECK DTC

Perform AT-165, "Diagnostic Trouble Code (DTC) Confirmation Procedure" .

OK or NG

OK >> **INSPECTION END**
NG >> GO TO 5.

5. CHECK TCM INSPECTION

1. Perform TCM input/output signal inspection.
2. If NG, recheck TCM pin terminals for damage or loose connection with harness connector.

OK or NG

OK >> **INSPECTION END**
NG >> Repair or replace damaged parts.

DTC P0755 SHIFT SOLENOID VALVE B

PFP:31940

Description

ECS004TL

Shift solenoid valves A and B are turned ON or OFF by the TCM in response to signals sent from the park/neutral position (PNP) switch, vehicle speed and ECM (throttle opening). Gears will then be shifted to the optimum position.

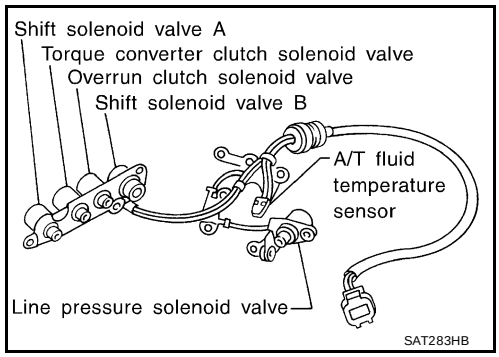

Gear position	1	2	3	4
Shift solenoid valve A	ON (Closed)	OFF (Open)	OFF (Open)	ON (Closed)
Shift solenoid valve B	ON (Closed)	ON (Closed)	OFF (Open)	OFF (Open)

On Board Diagnosis Logic

ECS004TM

Diagnostic trouble code SFT SOL B/CIRC with CONSULT-II or P0755 without CONSULT-II is detected when TCM detects an improper voltage drop when it tries to operate the solenoid valve.

Possible Cause

ECS004TN

Check the following items.

- Harness or connectors
  (The solenoid circuit is open or shorted.)
- Shift solenoid valve B

Diagnostic Trouble Code (DTC) Confirmation Procedure

ECS004TO

CAUTION:
Always drive vehicle at a safe speed.

NOTE:
If “DTC Confirmation Procedure” has been previously conducted, always turn ignition switch OFF and wait at least 10 seconds before conducting the next test.
After the repair, perform the following procedure to confirm the malfunction is eliminated.

WITH CONSULT-II

1. Turn ignition switch ON and select “DATA MONITOR” mode for “ENGINE” with CONSULT-II.

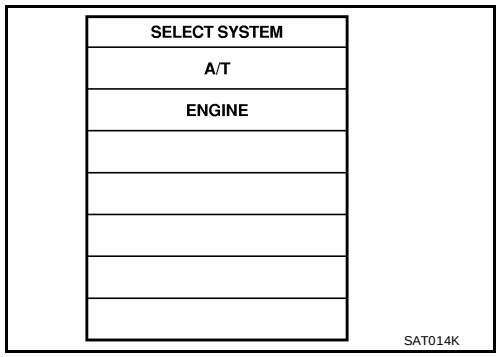

2. Start engine.
3. Drive vehicle in D position and allow the transmission to shift 1 → 2 → 3 (“GEAR”).

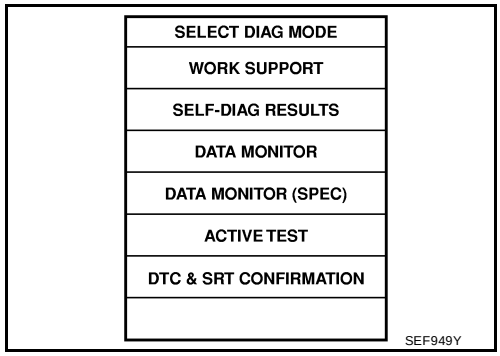

WITH GST

Follow the procedure “With CONSULT-II”.

Wiring Diagram — AT — SSV/B

ECS004TP

AT-SSV/B-01

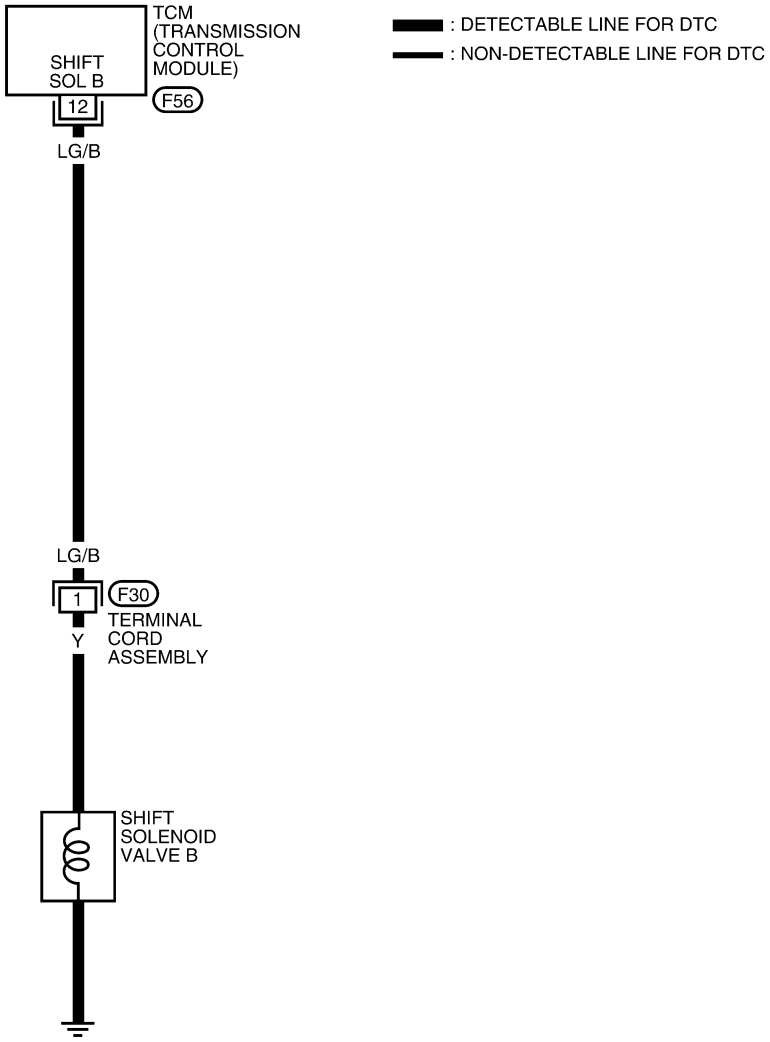

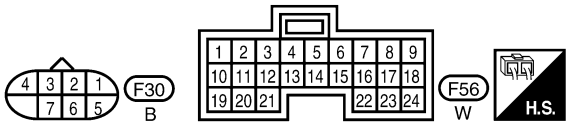

LCWA0018E

TCM TERMINALS AND REFERENCE VALUE MEASURED BETWEEN EACH TERMINAL AND 25 OR 48 (TCM GROUND)				
TERMINAL	WIRE COLOR	ITEM	CONDITION	DATA (APPROX.)
12	LG/B	SHIFT SOLENOID VALVE B	WHEN SHIFT SOLENOID VALVE B IS OPERATING (DRIVING IN D_1 OR D_2)	BATTERY VOLTAGE
			WHEN SHIFT SOLENOID VALVE BE IS NOT OPERATING (DRIVING IN D_3 OR D_4)	0V

Diagnostic Procedure

ECS004TQ

1. CHECK VALVE RESISTANCE

1. Turn ignition switch to OFF position.
2. Disconnect terminal cord assembly connector in engine compartment.
3. Check resistance between terminal cord assembly harness connector terminal 1 and ground.

Resistance : 5 - 20Ω

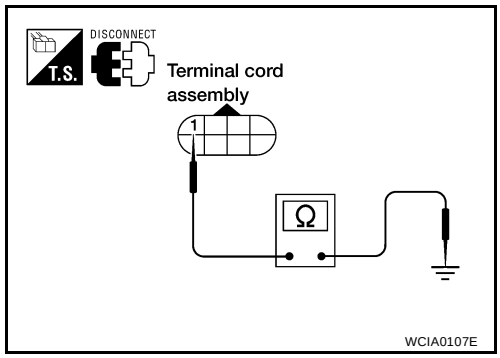

OK or NG

OK >> GO TO 3.
NG >> GO TO 2.

2. CHECK VALVE OPERATION

1. Remove control valve assembly. Refer to AT-255, "Control Valve Assembly and Accumulators" .
2. Check the following items:

– Shift solenoid valve B
– Operation check

• Check solenoid valve by listening for its operating sound while applying battery voltage to the terminal and ground.

– Harness of terminal cord assembly for short or open

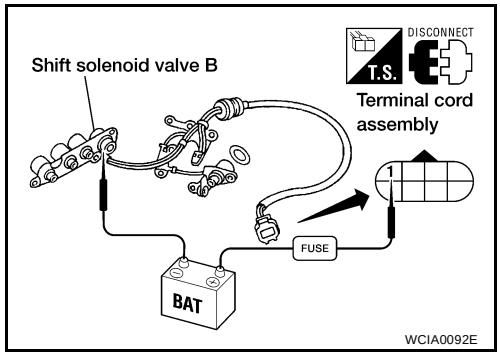

OK or NG

OK >> GO TO 3.
NG >> Repair or replace damaged parts.

3. CHECK POWER SOURCE CIRCUIT

1. Turn ignition switch to OFF position.
2. Disconnect TCM harness connector.
3. Check continuity between terminal cord harness connector terminal 1 and TCM harness connector terminal 12. Refer to AT-172, "Wiring Diagram — AT — SSV/B" .

Continuity should exist.

4. Reinstall any part removed.

OK or NG

OK >> GO TO 4.
NG >> Repair open circuit or short to ground or short to power in harness or connectors.

4. CHECK DTC

Perform AT-170, "Diagnostic Trouble Code (DTC) Confirmation Procedure" .

OK or NG

OK >> **INSPECTION END**
NG >> GO TO 5.

5. CHECK TCM INSPECTION

1. Perform TCM input/output signal inspection.
2. If NG, recheck TCM pin terminals for damage or loose connection with harness connector.

OK or NG

OK >> **INSPECTION END**
NG >> Repair or replace damaged parts.

DTC P1705 THROTTLE POSITION SENSOR [ACCELERATOR PEDAL POSITION (APP) SENSOR]

PFP:22560

Description

ECS004TR

The throttle position sensor [accelerator pedal position (APP) sensor] is part of the system that controls throttle position. This system also uses an electric throttle control actuator, which consists of a throttle control motor and throttle position sensors. Accelerator pedal position signal is sent to the ECM.

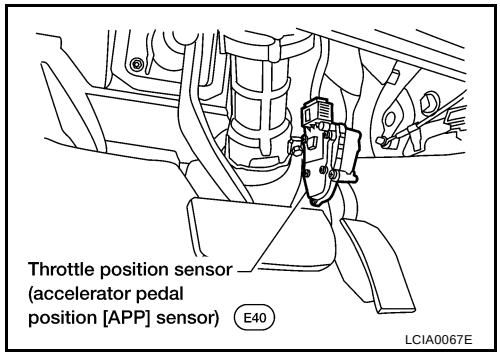

CONSULT-II REFERENCE VALUE IN DATA MONITOR MODE

Remarks: Specification data are reference values.

Monitor item	Condition	Specification
Throttle position sensor [accelerator pedal position (APP) sensor]	Fully-closed throttle	Approximately 0.5V
	Fully-open throttle	Approximately 4V

On Board Diagnosis Logic

ECS004TS

Diagnostic trouble code TP SEN/CIRC A/T or P1705 with CONSULT-II, or 3rd judgement flicker without CONSULT-II is detected when TCM receives an excessively low or high voltage from the ECM.

Possible Cause

ECS004TT

Harness or connectors
(The sensor circuit is open or shorted.)

Diagnostic Trouble Code (DTC) Confirmation Procedure

ECS004TU

CAUTION:
Always drive vehicle at a safe speed.

NOTE:
If “DTC Confirmation Procedure” has been previously conducted, always turn ignition switch OFF and wait at least 10 seconds before conducting the next test.
After the repair, perform the following procedure to confirm the malfunction is eliminated.

WITH CONSULT-II

1. Turn ignition switch ON and select “DATA MONITOR” mode for “A/T” with CONSULT-II.

Accelerator pedal condition	THRTL POS SEN
Fully released	Less than 4.7V
Partially depressed	0.1 - 4.6V
Fully depressed	1.9 - 4.6V

If the check result is NG, go to AT-178, "Diagnostic Procedure" .
If the check result is OK, go to following step.

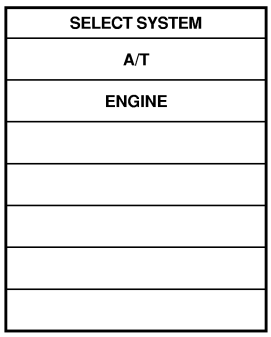

2. Turn ignition switch ON and select “DATA MONITOR” mode for “ENGINE” with CONSULT-II.
3. Start engine and maintain the following conditions for at least 3 consecutive seconds. Then release accelerator pedal completely.
   VHCL SPEED SE: 10 km/h (6 MPH) or more
   THRTL POS SEN: Approximately 3V or less
   Selector lever: D position
   If the check result is NG, go to AT-178, "Diagnostic Procedure" .
   If the check result is OK, go to following step.

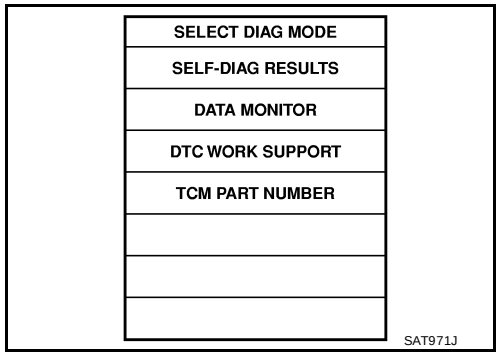

4. Maintain the following conditions for at least 3 consecutive seconds. Then release accelerator pedal completely.
   VHCL SPEED SE: 10 km/h (6 MPH) or more
   Accelerator pedal: Wide open throttle
   Selector lever: D position

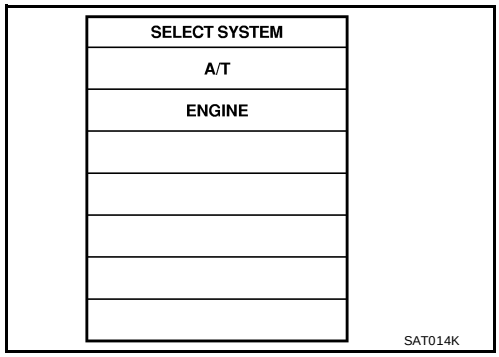

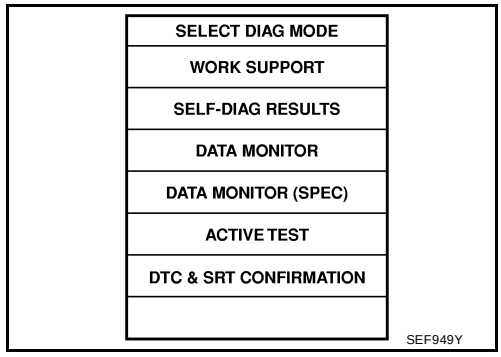

WITH GST

Follow the procedure “With CONSULT-II”.

Wiring Diagram — AT — TPS

ECS004TV

AT-TPS-01

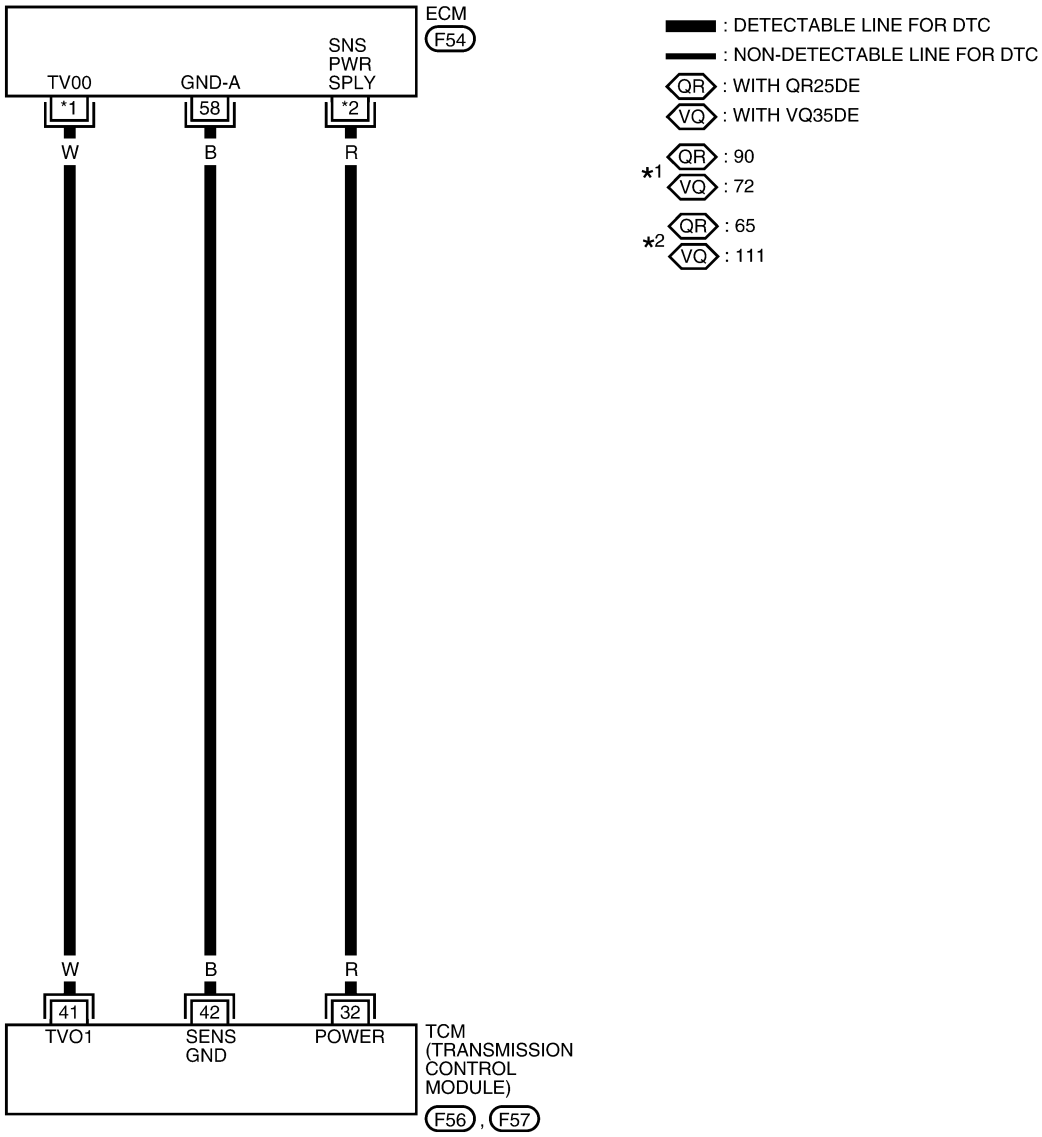

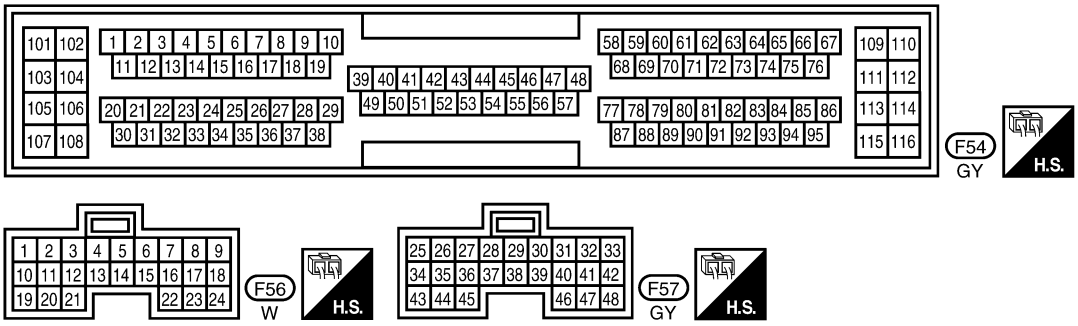

LCWA0019E

TCM TERMINALS AND REFERENCE VALUE MEASURED BETWEEN EACH TERMINAL AND 25 OR 48 (TCM GROUND)				
TERMINAL	WIRE COLOR	ITEM	CONDITION	DATA (APPROX.)
32	R	SENSOR POWER	IGNITION SWITCH ON	4.5 -5.5V
			IGNITION SWITCH OFF	0V
41	W	THROTTLE POSITION SENSOR [ACCELERATOR PEDAL POSITION (APP) SENSOR]	IGNITION ON AND ACCELERATOR PEDAL IS DEPRESSED SLOWLY AFTER WARMING UP ENGINE	FULLY CLOSED THROTTLE: 0.5V FULLY OPEN THROTTLE: 4V
42	B	SENSOR GROUND	—	—

Diagnostic Procedure

ECS004TW

1. CHECK DTC WITH ECM

- Check P code with CONSULT-II “ENGINE”.
  Turn ignition switch ON and select “SELF DIAGNOSTIC RESULTS” mode for “ENGINE” with CONSULT-II.

Refer to EC-69, "Malfunction Indicator Lamp (MIL)" (with QR25DE), or EC-689, "Malfunction Indicator Lamp (MIL)" (with VQ35DE).

OK or NG

OK (with CONSULT-II)>> GO TO 2.
NG >> Check accelerator pedal position (APP) sensor circuit for engine control. Refer to EC-250, "DTC P0221 TP SENSOR" and EC-263, "DTC P0226 APP SENSOR" (with QR25DE), or EC-901, "DTC P0221 TP SENSOR" and EC-915, "DTC P0226 APP SENSOR" (with VQ35DE). If CAN communication line is detected, GO TO AT-185, "DTC U1000 CAN COMMUNICATION LINE" .

2. CHECK INPUT SIGNAL (WITH CONSULT-II)

With CONSULT-II

1. Turn ignition switch to ON position.
   (Do not start engine.)
2. Select “TCM INPUT SIGNALS” in “DATA MONITOR” mode for “A/T” with CONSULT-II.
3. Read out the value of “THRTL POS SEN”.

Voltage:

Fully-closed throttle :Approximately 0.5V

Fully-open throttle :Approximately 4V

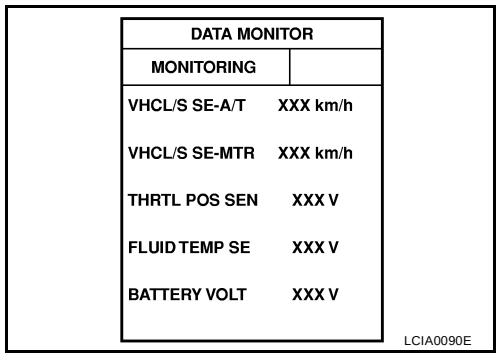

OK or NG

OK >> GO TO 4.
NG >> Check harness for short or open between ECM and TCM regarding throttle position sensor circuit. (Main harness)

3. CHECK INPUT SIGNAL (WITHOUT CONSULT-II)

Without CONSULT-II

1. Turn ignition switch to ON position. (Do not start engine.)
2. Check voltage between TCM terminals 41 (W) and 42 (B) while accelerator pedal is depressed slowly.

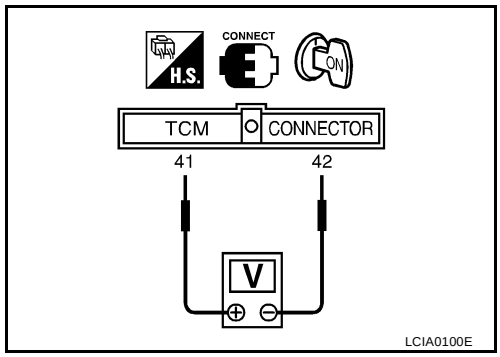

Voltage:

Fully-closed throttle valve :Approximately 0.5V

Fully-open throttle valve :Approximately 4V

(Voltage rises gradually in response to throttle position.)

OK or NG

OK >> GO TO 4.

NG >> Check harness for short or open between ECM and TCM regarding throttle position sensor circuit. (Main harness)

4. CHECK TCM INSPECTION

1. Perform TCM input/output signal inspection.
2. If NG, recheck TCM pin terminals for damage or loose connection with harness connector.

OK or NG

OK >> **INSPECTION END**

NG >> Repair or replace damaged parts.

DTC P1760 OVERRUN CLUTCH SOLENOID VALVE

PFP:31940

Description

ECS004TX

The overrun clutch solenoid valve is activated by the TCM in response to signals sent from the park/neutral position (PNP) switch, overdrive control switch, vehicle speed and ECM (throttle opening). The overrun clutch operation will then be controlled.

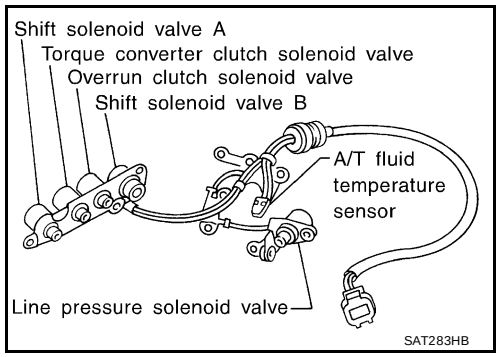

On Board Diagnosis Logic

ECS004TY

Diagnostic trouble code O/R CLTCH SOL/CIRC with CONSULT-II or P1760 without CONSULT-II is detected when TCM detects an improper voltage drop when it tries to operate the solenoid valve.

Possible Cause

ECS004TZ

Check the following items.

- Harness or connectors
  (The solenoid circuit is open or shorted.)
- Overrun clutch solenoid valve

Diagnostic Trouble Code (DTC) Confirmation Procedure

ECS004U0

CAUTION:
Always drive vehicle at a safe speed.

NOTE:
If “DIAGNOSTIC TROUBLE CODE CONFIRMATION PROCEDURE” has been previously conducted, always turn ignition switch OFF and wait at least 10 seconds before conducting the next test.

TESTING CONDITION:
Always drive vehicle on a level road to improve accuracy of test.
After the repair, perform the following procedure to confirm the malfunction is eliminated.

WITH CONSULT-II

1. Turn ignition switch ON and select “DATA MONITOR” mode for “ENGINE” with CONSULT-II.
2. Start engine.
3. Accelerate vehicle to a speed of more than 10 km/h (6 MPH) with selector lever in D position.

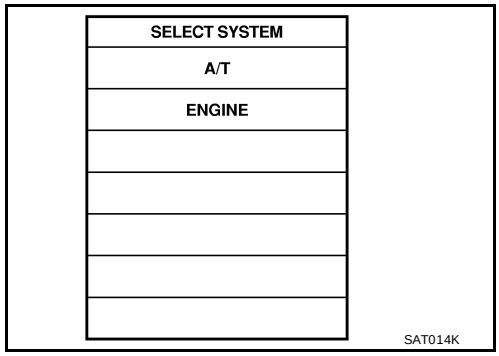

4. Release accelerator pedal completely with selector lever in 3 position.

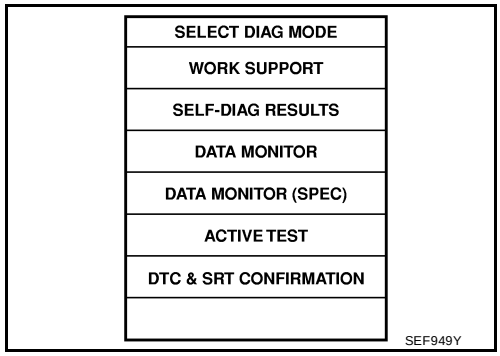

WITH GST

Follow the procedure “With CONSULT-II”.

Wiring Diagram — AT — OVRCSV

ECS004U1

AT-OVRCSV-01

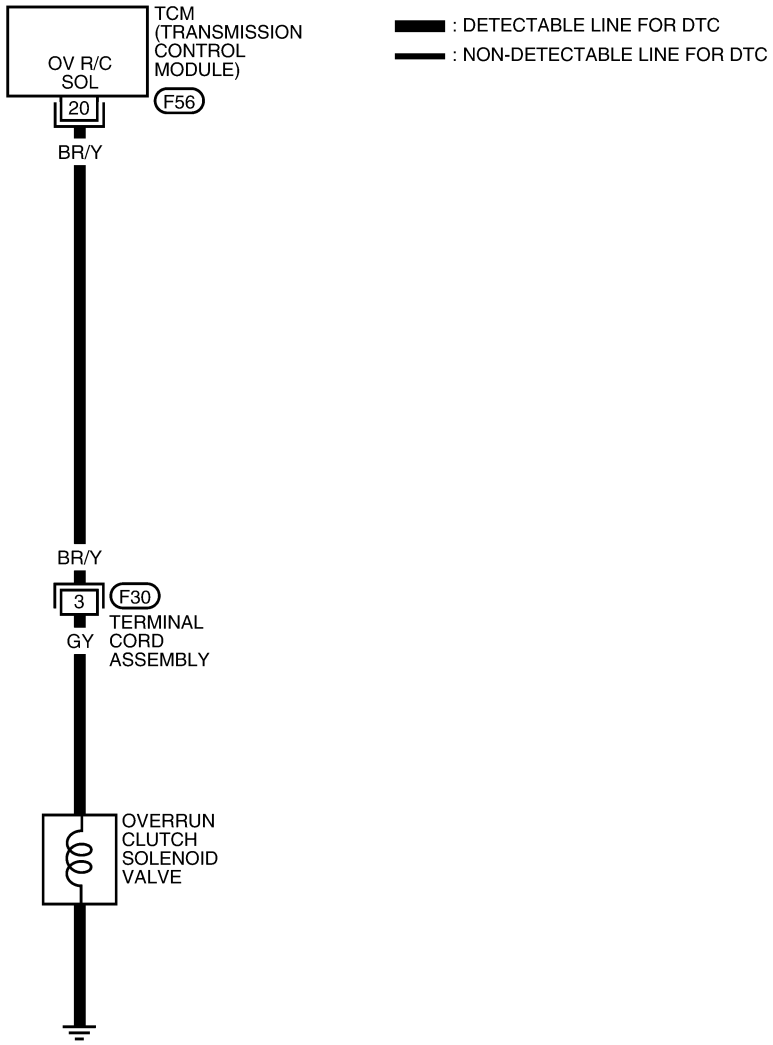

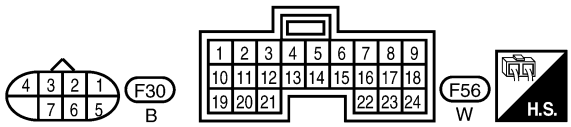

LCWA0020E

TCM TERMINALS AND REFERENCE VALUE MEASURED BETWEEN EACH TERMINAL AND 25 OR 48 (TCM GROUND)				
TERMINAL	WIRE COLOR	ITEM	CONDITION	DATA (APPROX.)
20	BR/Y	OVERRUN CLUTCH SOLENOID VALVE	WHEN OVERRUN CLUTCH SOLENOID VALVE OPERATES	BATTERY VOLTAGE
			WHEN OVERRUN CLUTCH SOLENOID VALVE DOES NOT OPERATE	0V

Diagnostic Procedure

ECS004U2

1. CHECK VALVE RESISTANCE

1. Turn ignition switch to OFF position.
2. Disconnect terminal cord assembly connector in engine compartment.
3. Check resistance between terminal cord assembly F30 terminal 3 (component side) and ground.

Resistance : 20 - 30Ω

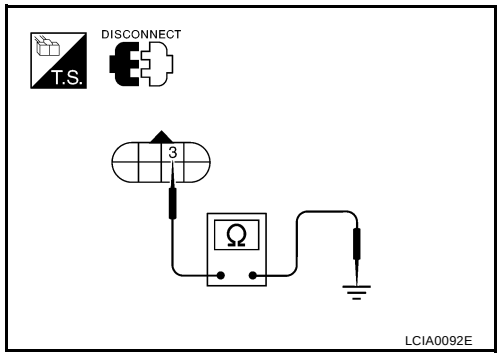

OK or NG

OK >> GO TO 3.
NG >> GO TO 2.

2. CHECK VALVE OPERATION

1. Remove control valve assembly. Refer to AT-255, "Control Valve Assembly and Accumulators" .
2. Check the following items:

– Overrun clutch solenoid valve
– Operation check

• Check solenoid valve by listening for its operating sound while applying battery voltage to the terminal and ground.

– Harness of terminal cord assembly for short or open

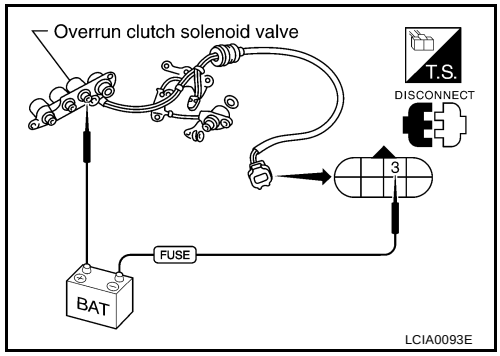

OK or NG

OK >> GO TO 3.
NG >> Repair or replace damaged parts.

3. CHECK POWER SOURCE CIRCUIT

1. Turn ignition switch to OFF position.
2. Disconnect TCM harness connector.
3. Check continuity between terminal cord assembly harness connector terminal 3 and TCM harness connector terminal 20. Refer to AT-182, "Wiring Diagram — AT — OVRCSV" .

Continuity should exist.

4. Reinstall any part removed.

OK or NG

OK >> GO TO 4.
NG >> Repair open circuit or short to ground or short to power in harness or connectors.

4. CHECK DTC

Perform AT-180, "Diagnostic Trouble Code (DTC) Confirmation Procedure" .

OK or NG

OK >> **INSPECTION END**
NG >> GO TO 5.

5. CHECK TCM INSPECTION

1. Perform TCM input/output signal inspection.
2. If NG, recheck TCM pin terminals for damage or loose connection with harness connector.

OK or NG

OK >> **INSPECTION END**
NG >> Repair or replace damaged parts.

DTC U1000 CAN COMMUNICATION LINE

PFP:23710

Description

ECS004U3

CAN (Controller Area Network) is a serial communication line for real time application. It is an on-vehicle multiplex communication line with high data communication speed and excellent error detection ability. Many electronic control units are equipped onto a vehicle, and each control unit shares information and links with other control units during operation (not independent). In CAN communication, control units are connected with 2 communication lines (CAN H line, CAN L line) allowing a high rate of information transmission with less wiring. Each control unit transmits/receives data but selectively reads required data only.

On Board Diagnosis Logic

ECS004U4

- This is an OBD-II self-diagnostic item.
- Diagnostic trouble code A/T COMM LINE or U1000 with CONSULT-II and 12th judgement flicker without CONSULT-II is detected when TCM cannot communicate to other control unit.

Possible Cause

ECS004U5

Harness or connectors
(CAN communication line is open or shorted.)

DTC Confirmation Procedure

ECS004U6

NOTE:
If “DTC Confirmation Procedure” has been previously conducted, always turn ignition switch “OFF” and wait at least 10 seconds before conducting the next test.
After the repair, perform the following procedure to confirm the malfunction is eliminated.

WITH CONSULT-II

1. Turn ignition switch to “ON” position. (Do not start engine.)
2. Select “DATA MONITOR” mode for “ENGINE” with CONSULT-II.
3. Start engine and wait for at least 6 seconds.
4. If DTC is detected, go to AT-188, "Diagnostic Procedure" .

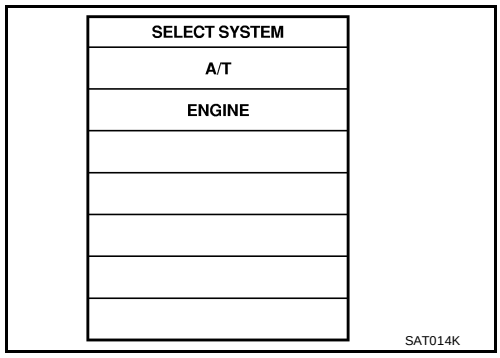

WITH GST

Follow the procedure “WITH CONSULT-II”.

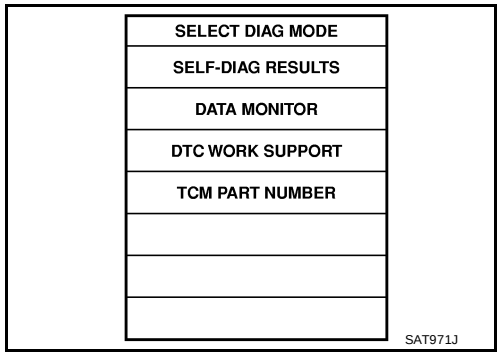

WITHOUT CONSULT-II

1. Turn ignition switch "ON".

2. Wait at least 6 seconds or start engine and wait at least 6 seconds.
3. Perform self-diagnosis. Refer to AT-51, "TCM SELF-DIAGNOSTIC PROCEDURE (NO TOOLS)" .

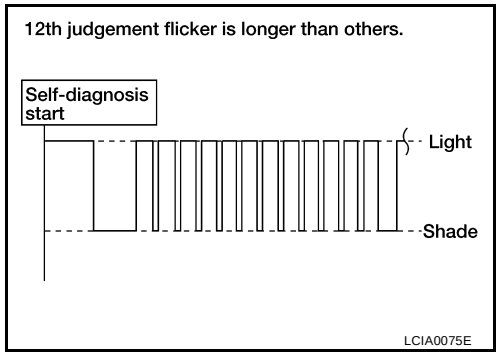

Wiring Diagram — AT — CAN

ECS004U7

AT-CAN-01

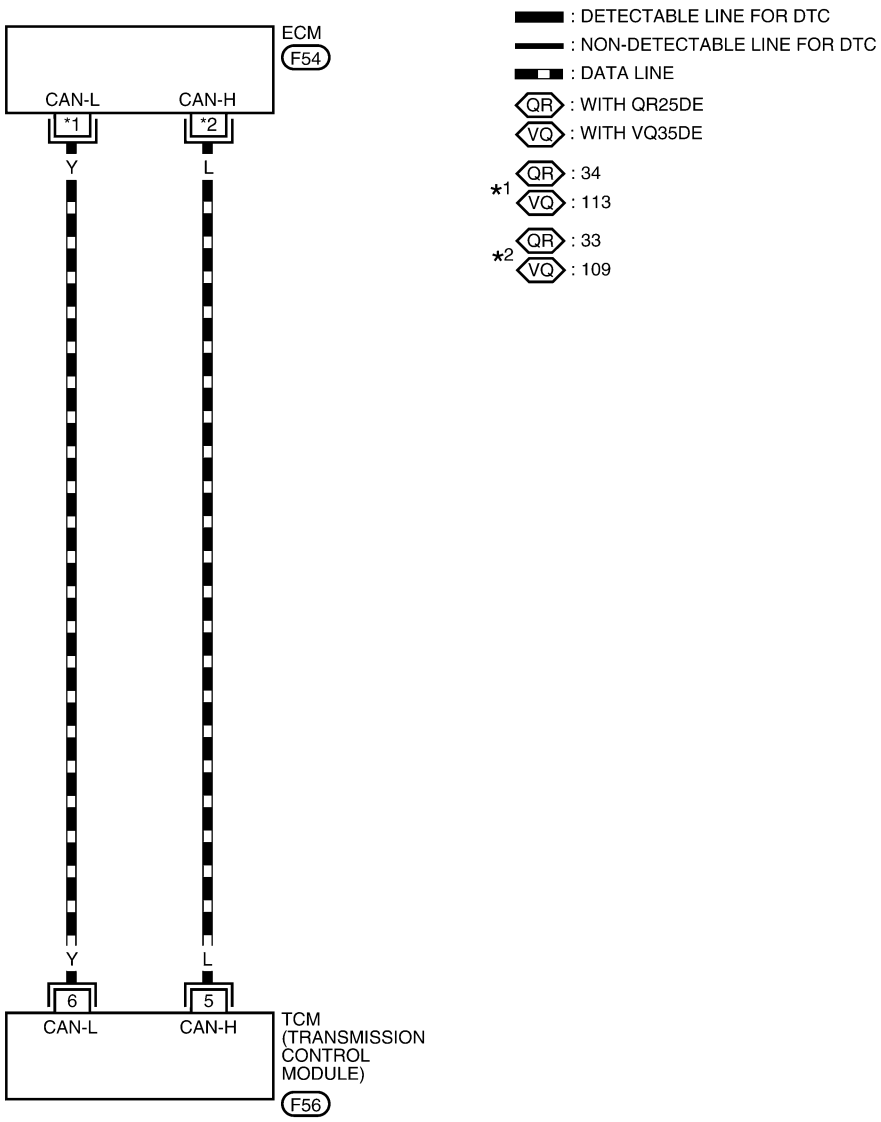

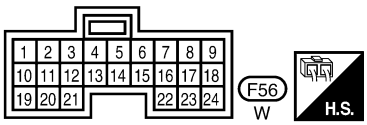

REFER TO THE FOLLOWING.
F54 - ELECTRICAL UNITS

LCWA0024E

Diagnostic Procedure

ECS004U8

1. CHECK CAN COMMUNICATION CIRCUIT

With CONSULT-II

1. Turn ignition switch to “ON” position. (Do not start engine.)
2. Select “DATA MONITOR” mode for “A/T” with CONSULT-II.
3. The “CAN COMM CIRCUIT” is detected.

Yes or No

Yes >> Print out CONSULT-II screen, GO TO 2.
No >> INSPECTION END

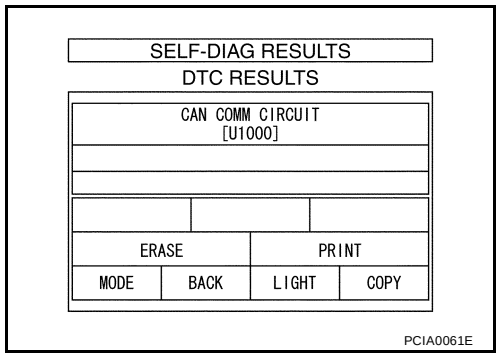

2. CHECK CAN COMMUNICATION SIGNALS

With CONSULT-II

1. Turn ignition switch to “ON” position. (Do not start engine.)
2. Select “CAN COMM SIGNALS” in “DATA MONITOR” mode for “A/T” with CONSULT-II.

>> Print out CONSULT-II screen, go to LAN-27, "CAN SYSTEM (FOR A/T MODELS)" .

CAN Communication Signals

Normal conditions	Abnormal conditions (examples)
CAN COMM : OK	CAN COMM : OK
CAN CIRC 1 : OK	CAN CIRC 1 : UNKWN
CAN CIRC 2 : OK	CAN CIRC 2 : UNKWN
CAN CIRC 3 : OK	CAN CIRC 3 : UNKWN
CAN CIRC 4 : OK	CAN CIRC 4 : UNKWN
CAN CIRC 5 : UNKWN	CAN CIRC 5 : UNKWN

DTC BATT/FLUID TEMP SEN (A/T FLUID TEMP SENSOR CIRCUIT AND TCM POWER SOURCE)

PFP:31940

Description

ECS004U9

The A/T fluid temperature sensor detects the A/T fluid temperature and sends a signal to the TCM.

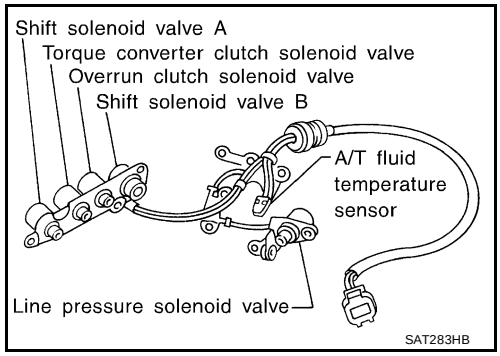

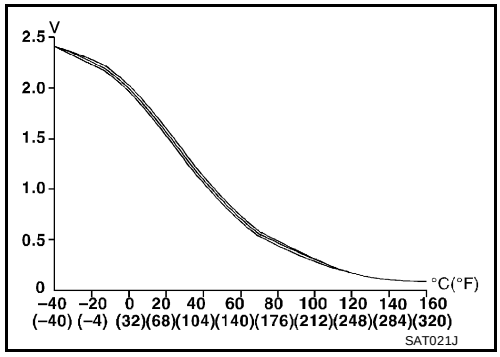

CONSULT-II REFERENCE VALUE IN DATA MONITOR MODE

Remarks: Specification data are reference values.

Monitor item	Condition	Specification (Approximately)	
A/T fluid temperature sensor	Cold [20°C (68°F)] ↓ Hot [80°C (176°F)]	1.5V ↓ 0.5V	2.5 kΩ ↓ 0.3 kΩ

On Board Diagnosis Logic

ECS004UA

Diagnostic trouble code BATT/FLUID TEMP SEN with CONSULT-II or 8th judgement flicker without CONSULT-II is detected when TCM receives an excessively low or high voltage from the sensor.

Possible Cause

ECS004UB

Check the following items.

- Harness or connectors
  (The sensor circuit is open or shorted.)
- A/T fluid temperature sensor

Diagnostic Trouble Code (DTC) Confirmation Procedure

ECS004UC

After the repair, perform the following procedure to confirm the malfunction is eliminated.

WITH CONSULT-II

1. Start engine.

2. Select “DATA MONITOR” mode for “A/T” with CONSULT-II.

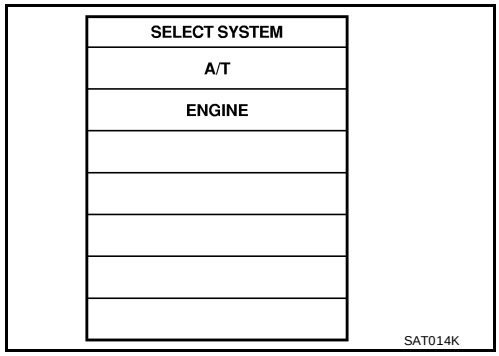

3. Drive vehicle under the following conditions:
   Selector lever in D, vehicle speed higher than 20 km/h (12 MPH).

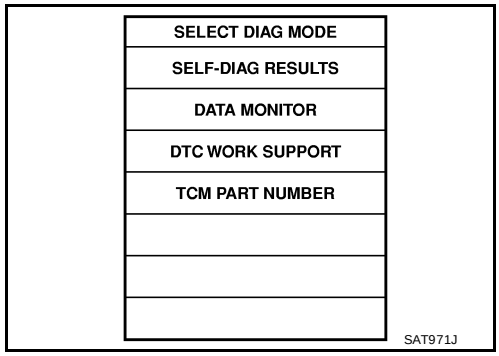

WITHOUT CONSULT-II

1. Start engine.
2. Drive vehicle under the following conditions:
   Selector lever in D, vehicle speed higher than 20 km/h (12 MPH).
3. Perform self-diagnosis.
   Refer to AT-51, "TCM SELF-DIAGNOSTIC PROCEDURE (NO TOOLS)" .

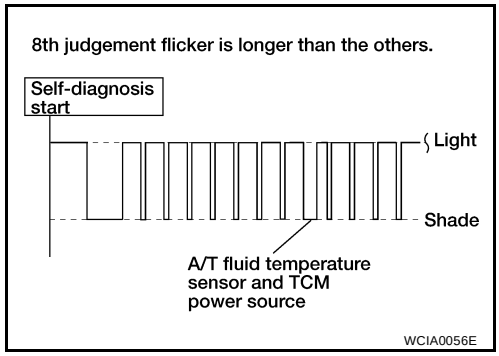

Wiring Diagram — AT — BA/FTS

ECS004UD

AT-BA/FTS-01

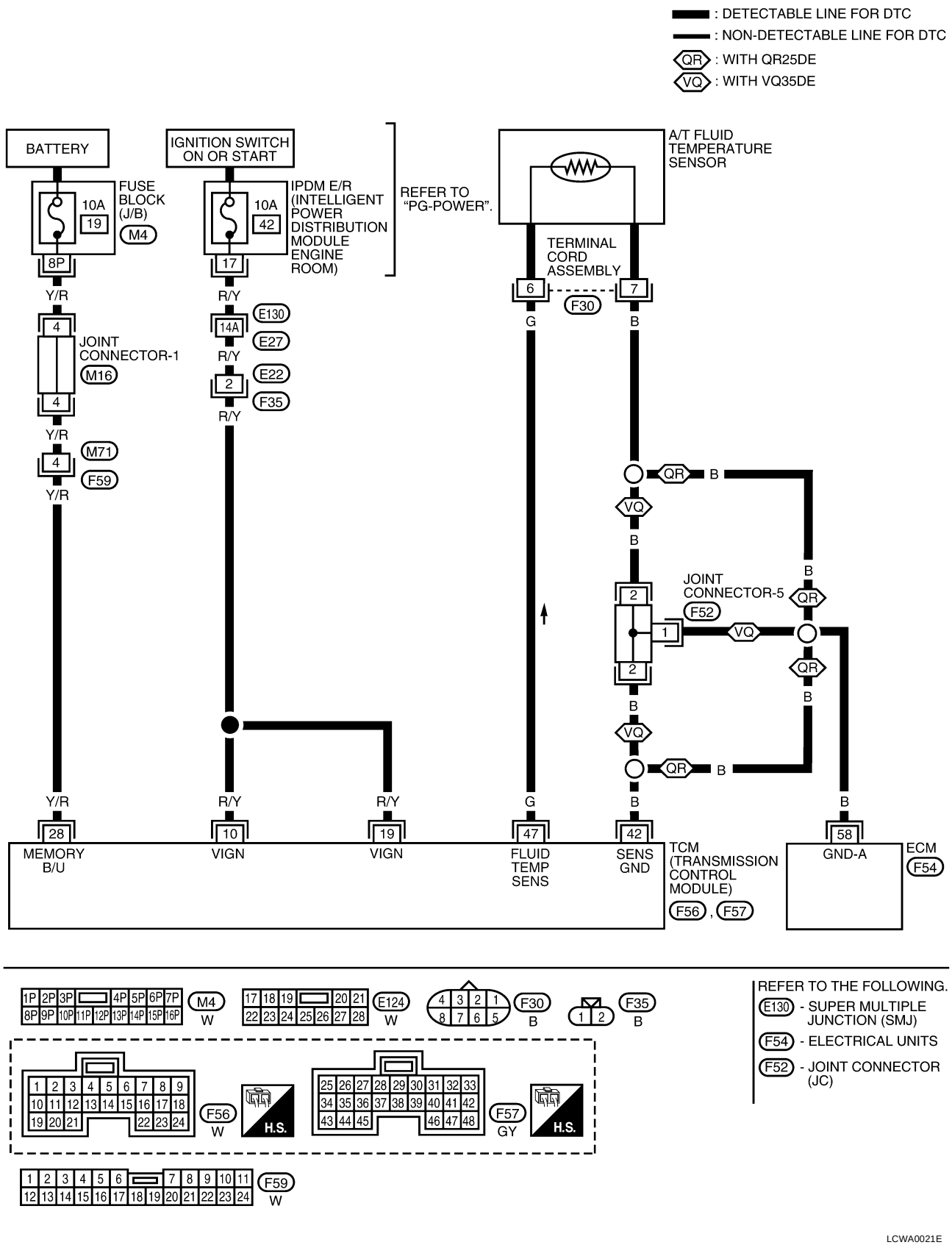

TERMINALS AND REFERENCE VALUE MEASURED BETWEEN EACH TERMINAL				
TERMINAL	WIRE COLOR	ITEM	CONDITION	DATA (APPROX.)
10	R/Y	POWER SOURCE	IGNITION ON	BATTERY VOLTAGE
			IGNITION OFF	0V
19	R/Y	POWER SOURCE	IGNITION ON	BATTERY VOLTAGE
			IGNITION OFF	0V
28	Y/R	POWER SOURCE (MEMORY BACKUP)	IGNITION ON	BATTERY VOLTAGE
			IGNITION OFF	BATTERY VOLTAGE
42	B	SENSOR GROUND	—	—
47	G	A/T FLUID TEMPERATURE SENSOR	IGNITION ON WITH ATF TEMPERATURE AT 20°C (68°F)	1.5V
			IGNITION ON WITH ATF TEMPERATURE AT 80°C (176°F)	0.5V

Diagnostic Procedure

ECS004UE

1. CHECK INPUT SIGNAL OF A/T FLUID TEMPERATURE SENSOR (WITH CONSULT-II)

With CONSULT-II

1. Start engine.
2. Select “TCM INPUT SIGNALS” in “DATA MONITOR” mode for “A/T” with CONSULT-II.
3. Read out the value of “FLUID TEMP SE”.

Voltage :Cold [20°C (68°F)] → Hot [80°C (176°F)]
:Approximately 1.5V → 0.5V

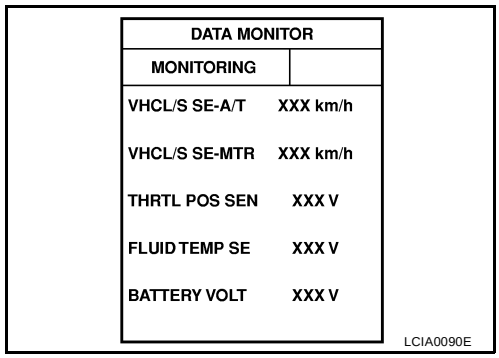

OK or NG

OK >> GO TO 9.
NG >> GO TO 2.

2. DETECT MALFUNCTIONING ITEM

Check the following items:

- Harness for short or open between TCM, ECM and terminal cord assembly (Main harness)
- Ground circuit for ECM
  Refer to EC-131, "POWER SUPPLY CIRCUIT FOR ECM" (with QR25DE), or EC-757, "POWER SUPPLY CIRCUIT FOR ECM" (with VQ35DE).

OK or NG

OK >> GO TO 9.
NG >> Repair or replace damaged parts.

3. CHECK TCM POWER SOURCE STEP 1

1. Turn ignition switch to ON position.
   (Do not start engine.)
2. Check voltage between TCM harness connector terminals 10 (R/Y), 19 (R/Y), 28 (Y/R) and ground.

Voltage : Battery voltage

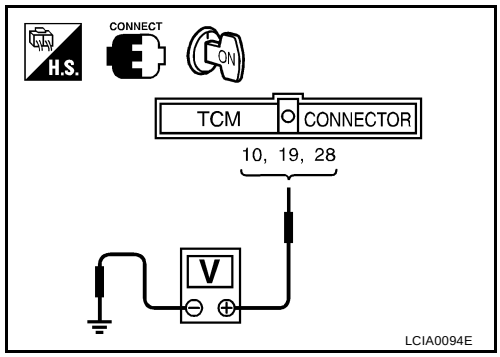

OK or NG

OK >> GO TO 4.
NG >> GO TO 5.

4. CHECK TCM POWER SOURCE STEP 2

1. Turn ignition switch to OFF position.
2. Check voltage between TCM harness connector terminal 28 (Y/R) and ground.

Voltage : Battery voltage

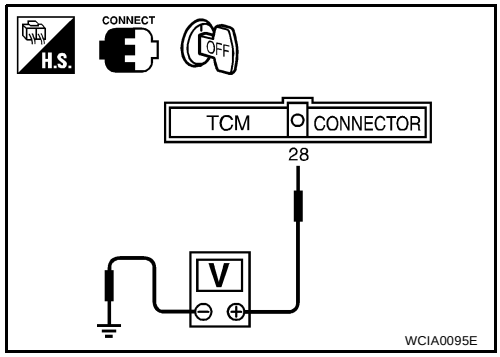

OK or NG

OK >> GO TO 6.
NG >> GO TO 5.

5. DETECT MALFUNCTIONING ITEM

Check the following items:

- Harness for short or open between ignition switch and TCM (Main harness)
- Ignition switch and fuse
  Refer to PG-3, "POWER SUPPLY ROUTING CIRCUIT" .

OK or NG

OK >> GO TO 6.
NG >> Repair or replace damaged parts.

6. CHECK A/T FLUID TEMPERATURE SENSOR WITH TERMINAL CORD ASSEMBLY

1. Turn ignition switch to OFF position.
2. Disconnect terminal cord assembly connector in engine compartment.
3. Check resistance between terminal cord assembly F30 terminals 6 and 7 (component side) when A/T is cold.

Temperature	Resistance (Approx.)
Cold 20°C (68°F)	2.5kΩ

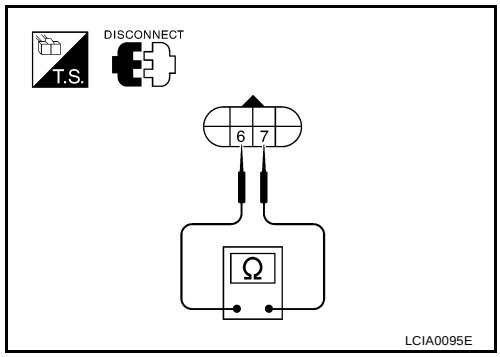

4. Reinstall any part removed.

OK or NG

OK (without CONSULT-II) >> GO TO 8.
NG >> GO TO 7.

7. DETECT MALFUNCTIONING ITEM

1. Remove oil pan.
2. Check the following items:

– A/T fluid temperature sensor

- Check resistance between two terminals while changing temperature as shown.

Temperature °C (°F)	Resistance (Approx.)
20 (68)	2.5kΩ
80 (176)	0.3kΩ

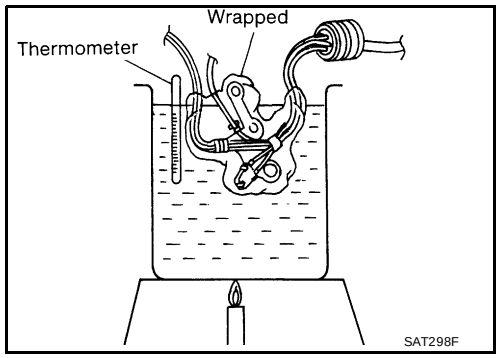

– Harness of terminal cord assembly for short or open

OK or NG

OK (without CONSULT-II) >> GO TO 8.
NG >> Repair or replace damaged parts.

8. CHECK INPUT SIGNAL OF A/T FLUID TEMPERATURE SENSOR (WITHOUT CONSULT-II)

Without CONSULT-II

1. Start engine.
2. Check voltage between TCM harness connector terminal 47 and ground while warming up A/T.

Temperature	Voltage (Approx.)
Cold [20°C (68°F)] → Hot [80°C (176°F)]	1.5V → 0.5V

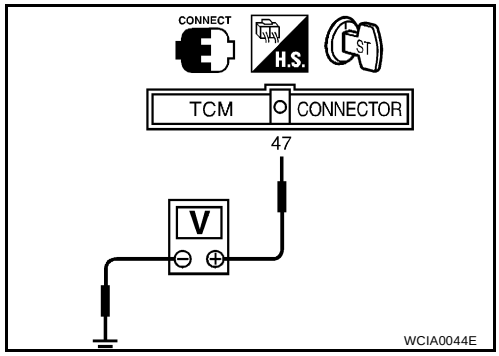

3. Turn ignition switch to OFF position.
4. Disconnect TCM harness connector.
5. Check resistance between terminal 42 and ground. Refer to AT-191, "Wiring Diagram — AT — BA/FTS" .

Continuity should exist.

OK or NG

OK >> GO TO 10.
NG >> GO TO 9.

9. DETECT MALFUNCTIONING ITEM

Check the following items:

- Harness for short or open between TCM, ECM and terminal cord assembly (Main harness)
- Ground circuit for ECM
  Refer to EC-131, "POWER SUPPLY CIRCUIT FOR ECM" (with QR25DE), or EC-757, "POWER SUPPLY CIRCUIT FOR ECM" (with VQ35DE).

OK or NG

OK >> GO TO 10.
NG >> Repair or replace damaged parts.

10. CHECK DTC

Perform AT-189, "Diagnostic Trouble Code (DTC) Confirmation Procedure" .

OK or NG

OK >> **INSPECTION END**
NG >> GO TO 11.

11. CHECK TCM INSPECTION

1. Perform TCM input/output signal inspection.
2. If NG, recheck TCM pin terminals for damage or loose connection with harness connector.

OK or NG

OK >> **INSPECTION END**
NG >> Repair or replace damaged parts.

DTC VEHICLE SPEED SENSOR MTR

PFP:24814

Description

ECS004UF

The vehicle speed sensor·MTR is built into the speedometer assembly. The sensor functions as an auxiliary device to the revolution sensor when it is malfunctioning. The TCM will then use a signal sent from the vehicle speed sensor·MTR.

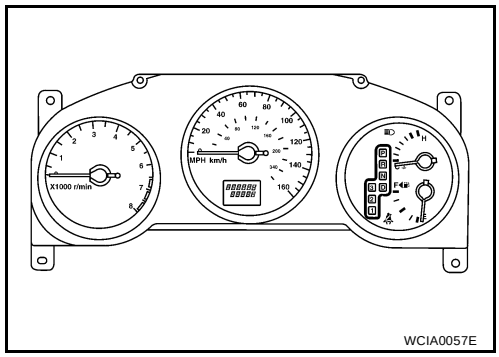

WCIA0057E

On Board Diagnosis Logic

ECS004UG

Diagnostic trouble code VHCL SPEED SEN·MTR with CONSULT-II or 2nd judgement flicker without CONSULT-II is detected when TCM does not receive the proper voltage signal from the sensor.

Possible Cause

ECS004UH

Check the following items.

- Harness or connectors
  (The sensor circuit is open or shorted.)
- Vehicle speed sensor

Diagnostic Trouble Code (DTC) Confirmation Procedure

ECS004UI

CAUTION:

- **Always drive vehicle at a safe speed.**
- **If conducting this "DTC Confirmation Procedure" again, always turn ignition switch OFF and wait at least 10 seconds before continuing.**

After the repair, perform the following procedure to confirm the malfunction is eliminated.

WITH CONSULT-II

1. Turn ignition switch ON and select "DATA MONITOR" mode for "A/T" with CONSULT-II.

SELECT SYSTEM
A/T
ENGINE

SAT014K

2. Start engine and accelerate vehicle from 0 to 25 km/h (0 to 16 MPH).

SELECT DIAG MODE
SELF-DIAG RESULTS
DATA MONITOR
DTC WORK SUPPORT
TCM PART NUMBER

SAT971J

WITHOUT CONSULT-II

1. Start engine.
2. Drive vehicle under the following conditions:
   Selector lever in D and vehicle speed higher than 25 km/h (16 MPH).
3. Perform self-diagnosis.
   Refer to AT-51, "TCM SELF-DIAGNOSTIC PROCEDURE (NO TOOLS)" .

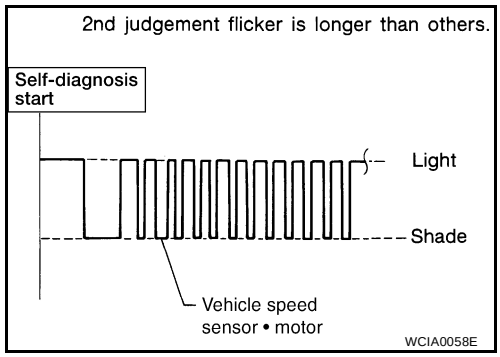

Wiring Diagram — AT — VSSMTR

ECS004UJ

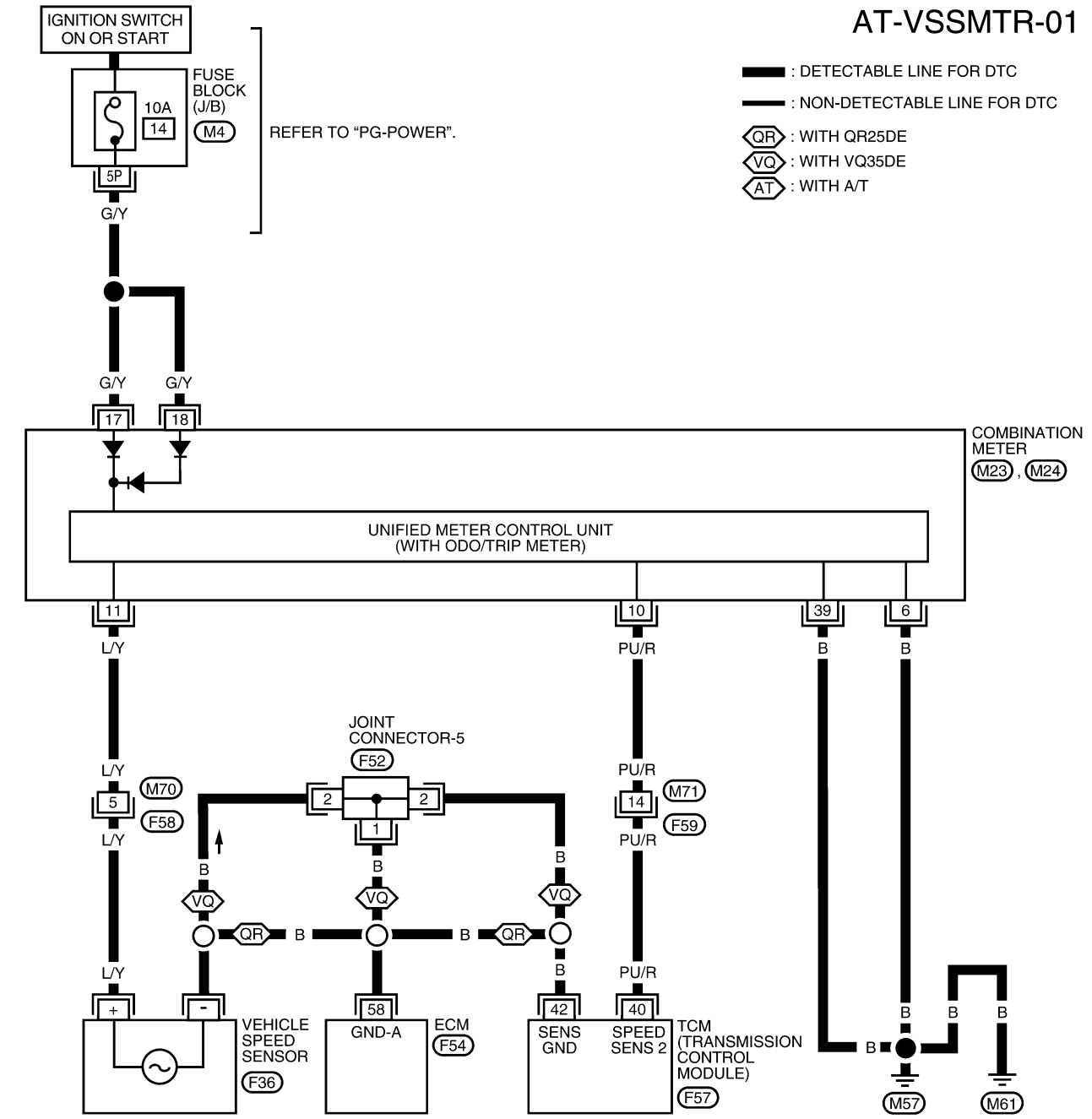

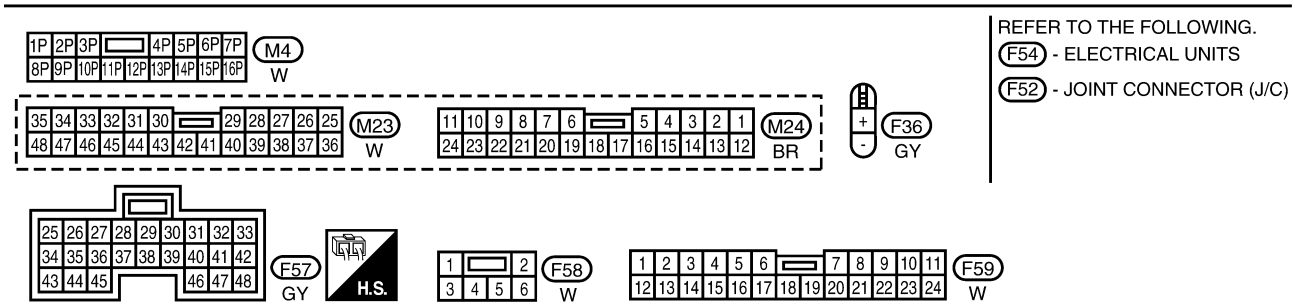

LCWA0022E

Diagnostic Procedure

ECS004UK

1. CHECK INPUT SIGNAL

With CONSULT-II

1. Start engine.
2. Select “TCM INPUT SIGNALS” in “DATA MONITOR” mode for “A/T” with CONSULT-II.
3. Read out the value of “VHCL/S SE·MTR” while driving. Check the value changes according to driving speed.

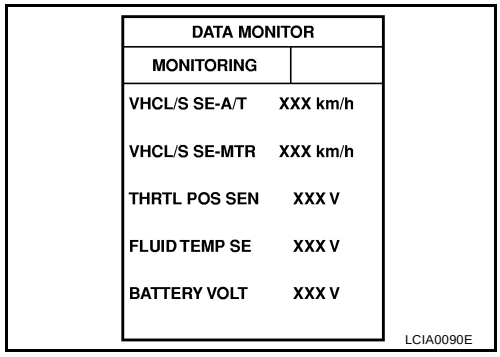

DATA MONITOR	
MONITORING	
VHCL/S SE-A/T	XXX km/h
VHCL/S SE-MTR	XXX km/h
THRTL POS SEN	XXX V
FLUID TEMP SE	XXX V
BATTERY VOLT	XXX V

LCIA0090E

Without CONSULT-II

1. Start engine.
2. Check voltage between TCM terminal 40 and ground while driving at 2 to 3 km/h (1 to 2 MPH) for 1 m (3 ft) or more.

Voltage :Voltage varies between less than 1V and more than 4.5V.

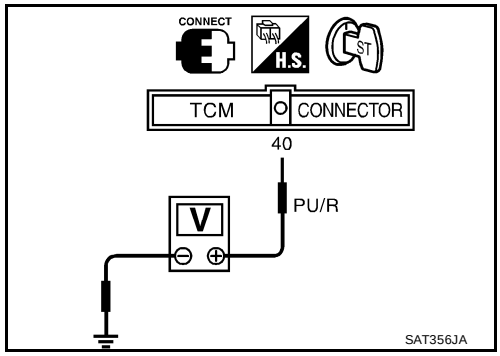

OK or NG

OK >> GO TO 3.
NG >> GO TO 2.

2. DETECT MALFUNCTIONING ITEM

Check the following items:

- Vehicle speed sensor and ground circuit for vehicle speed sensor
  Refer to DI-19, "Vehicle Speed System" .
- Harness for short or open between TCM and vehicle speed sensor (Main harness)

OK or NG

OK >> GO TO 3.
NG >> Repair or replace damaged parts.

3. CHECK DTC

Perform AT-196, "Diagnostic Trouble Code (DTC) Confirmation Procedure" .

OK or NG

OK >> **INSPECTION END**
NG >> GO TO 4.

4. CHECK TCM INSPECTION

1. Perform TCM input/output signal inspection.
2. If NG, recheck TCM pin terminals for damage or loose connection with harness connector.

OK or NG

OK >> **INSPECTION END**
NG >> Repair or replace damaged parts.

DTC TURBINE REVOLUTION SENSOR

PFP:31935

Description

ECS004UL

The turbine revolution sensor detects forward clutch drum rpm (revolutions per minute). It is located on the input side of the automatic transaxle. The vehicle speed sensor A/T (Revolution sensor) is located on the output side of the automatic transaxle. With the two sensors, input and output rpms are accurately detected. The result is optimal shift timing during deceleration and improved shifting.

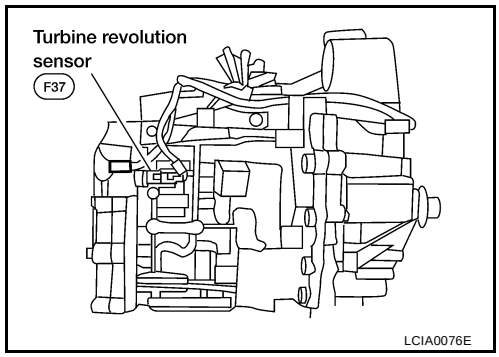

ON BOARD DIAGNOSIS LOGIC

Diagnostic trouble code	Malfunction is detected when ...	Check items (Possible cause)
: TURBINE REV	TCM does not receive the proper voltage signal from the sensor.	● Harness or connectors (The sensor circuit is open or shorted.) ● Turbine revolution sensor
: 10th judgement flicker		

DIAGNOSTIC TROUBLE CODE (DTC) CONFIRMATION PROCEDURE

CAUTION:

- **Always drive vehicle at a safe speed.**
- **If conducting this "DTC CONFIRMATION PROCEDURE" again, always turn ignition switch "OFF" and wait at least 5 seconds before continuing.**

After the repair, perform the following procedure to confirm the malfunction is eliminated.

With CONSULT-II

1. Start engine.

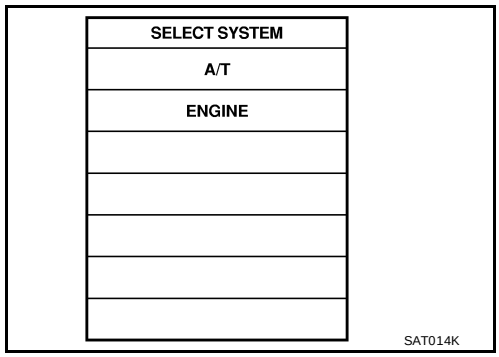

2. Select "DATA MONITOR" mode for "A/T" with CONSULT-II.
3. Drive vehicle under the following conditions:
   Selector lever in D, vehicle speed higher than 40 km/h (25 MPH), engine speed higher than 1,500 rpm, throttle opening greater than 1.0/8 of the full throttle position and driving for more than 5 seconds.

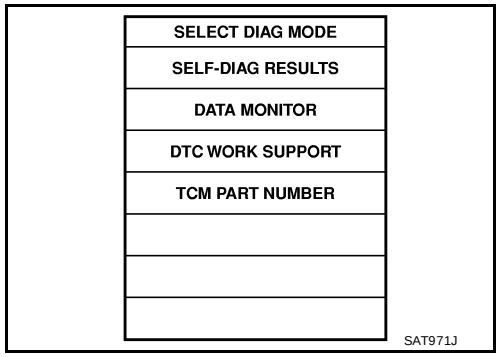

Without CONSULT-II

1. Start engine.
2. Drive vehicle under the following conditions:
   Selector lever in "D" and vehicle speed higher than 40 km/h (25 MPH), engine speed higher than 1,500 rpm, throttle opening greater than 1/8 of the full throttle position and driving for more than 5 seconds.

3. Perform self-diagnosis.
   Refer to AT-51, "TCM SELF-DIAGNOSTIC PROCEDURE (NO TOOLS)" .

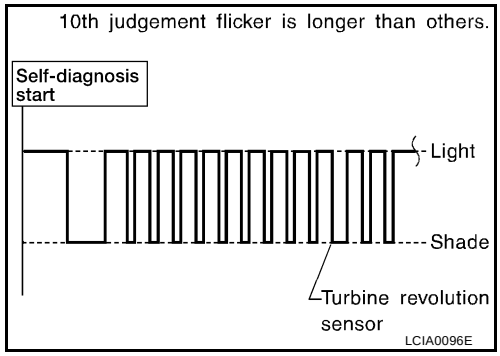

Wiring Diagram — AT — TRSA/T

ECS004UM

AT-TRSA/T-01

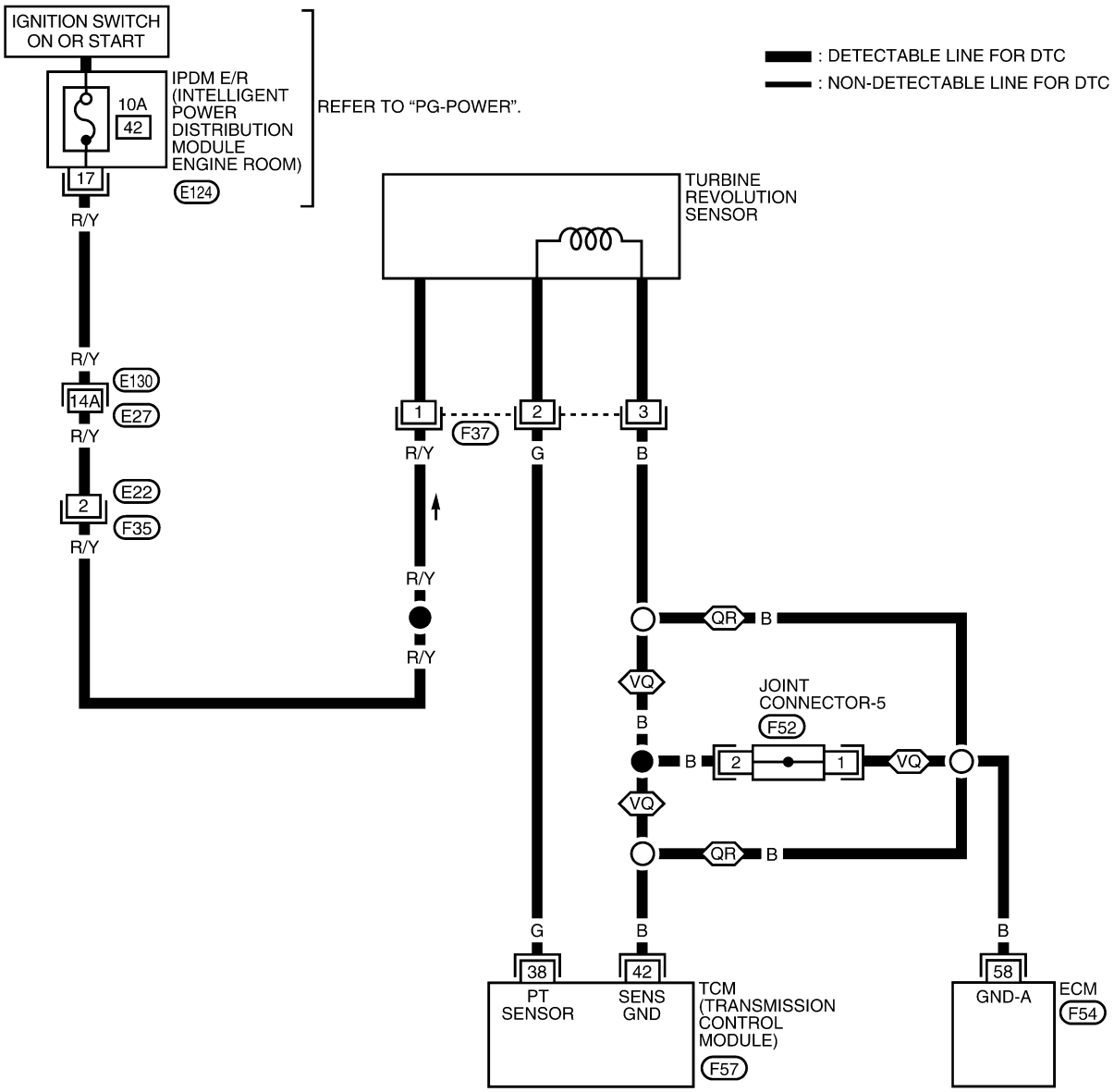

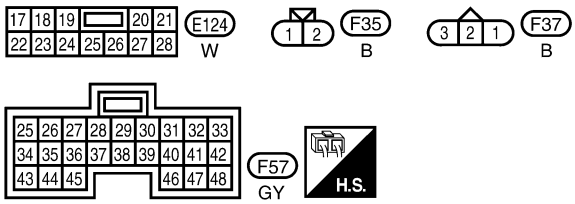

REFER TO THE FOLLOWING.
E130 - SUPER MULTIPLE JUNCTION (SMJ)
F54 - ELECTRICAL UNITS
F52 - JOINT CONNECTOR (J/C)

LCWA0023E

TCM TERMINALS AND REFERENCE VALUE MEASURED BETWEEN EACH TERMINAL AND 25 OR 48 (TCM GROUND)				
TERMINAL	WIRE COLOR	ITEM	CONDITION	DATA (DC)
38	G	TURBINE REVOLUTION SENSOR (SIGNAL)	WHEN MOVING AT 20 KM/H (12 MPH), USE THE CONSULT-II PULSE FREQUENCY MEASURING FUNCTION.*1 **CAUTION:** **CONNECT THE DIAGNOSIS DATA LINK CABLE TO THE VEHICLE DIAGNOSIS CONNECTOR.** *1: A CIRCUIT TESTER CANNOT BE USED TO TEST THIS ITEM.	240 Hz
			WHEN VEHICLE IS PARKED.	UNDER 1.3V OR OVER 4.5V
42	B	SENSOR GROUND	—	—

Diagnostic Procedure

ECS004UN

1. CHECK INPUT SIGNAL

With CONSULT-II

1. Start engine.
2. Select “TCM INPUT SIGNALS” in “DATA MONITOR” mode for “A/T” with CONSULT-II.
3. Read out the value of “TURBINE REV” while driving.
   Check the value changes according to driving speed.

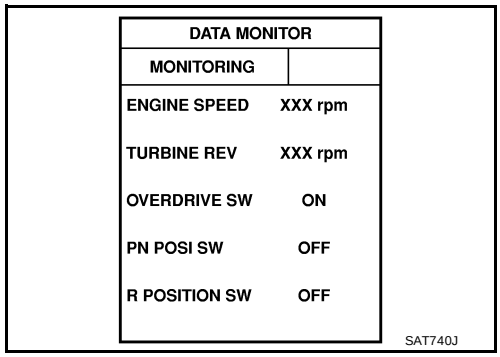

Without CONSULT-II

1. Start engine.
2. Check frequency between TCM terminal 38 and ground.

Frequency : Approximately 240 Hz when driving 20 km/h (12 MPH)

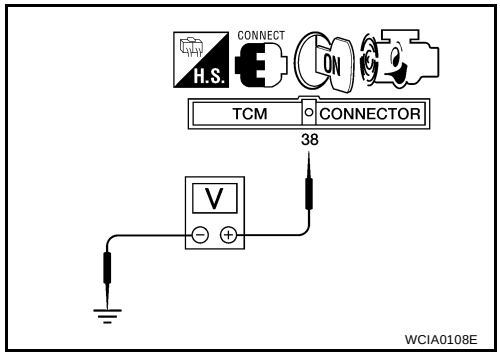

OK or NG

OK >> GO TO 3.
NG >> GO TO 2.

2. DETECT MALFUNCTIONING ITEM

Check harness for short or open between TCM and turbine revolution sensor.

OK or NG

OK >> GO TO 3.
NG >> Repair or replace damaged parts.

3. CHECK DTC

Perform AT-200, "DIAGNOSTIC TROUBLE CODE (DTC) CONFIRMATION PROCEDURE" .

OK or NG

OK >> **INSPECTION END.**
NG >> GO TO 4.

4. CHECK TCM INSPECTION

1. Perform TCM input/output signal inspection.
2. If NG, recheck TCM pin terminal for damage or loose connection with harness connector.

OK or NG

OK >> **INSPECTION END.**
NG >> Repair or replace damaged parts.

Component Inspection

ECS004UO

TURBINE REVOLUTION SENSOR

- Check resistance betwen terminals 1, 2 and 3.

Terminal No.		Resistance (Approx.)
1	2	No continuity
1	3	No continuity
2	3	2.4 - 2.8 kΩ

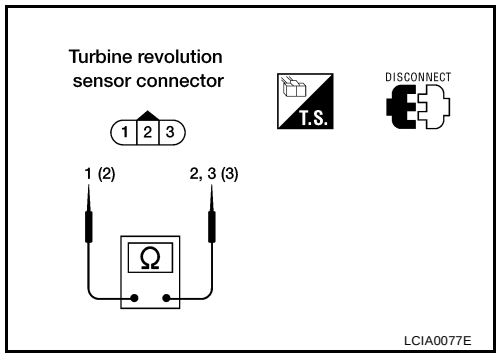

DTC CONTROL UNIT (RAM), CONTROL UNIT (ROM)

PFP:31036

Description

ECS004UP

The TCM consists of a microcomputer and connectors for signal input and output and for power supply. The unit controls the A/T.

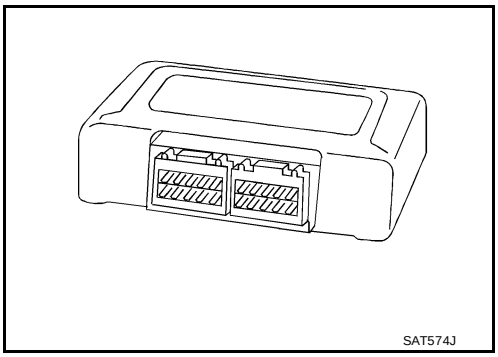

On Board Diagnosis Logic

ECS004UQ

Diagnostic trouble code CONTROL UNIT (RAM), CONTROL UNIT (ROM) with CONSULT-II is detected when TCM memory (RAM) or (ROM).

Possible Cause

ECS004UR

Check TCM.

Diagnostic Trouble Code (DTC) Confirmation Procedure

ECS004US

NOTE:
If "DTC Confirmation Procedure" has been previously conducted, always turn ignition switch OFF and wait at least 10 seconds before conducting the next test.

WITH CONSULT-II

1. Turn ignition switch ON and select "DATA MONITOR" mode for A/T with CONSULT-II.
2. Start engine.

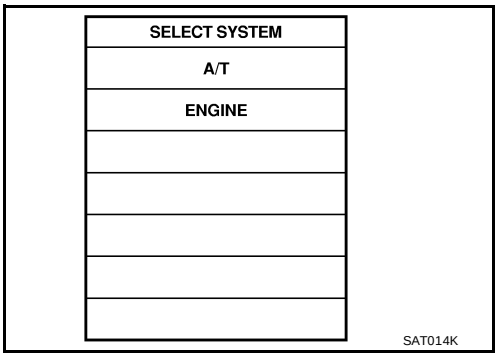

3. Run engine for at least 2 seconds at idle speed.

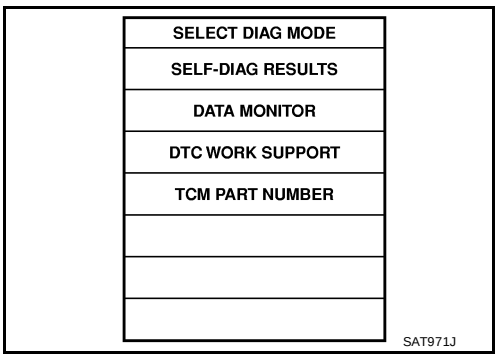

Diagnostic Procedure

ECS004UT

1. INSPECTION START

With CONSULT-II

1. Turn ignition switch ON and select “SELF DIAGNOSIS” mode for A/T with CONSULT-II.
2. Touch “ERASE”.
3. Perform AT-205, "Diagnostic Trouble Code (DTC) Confirmation Procedure" .
4. Is the “CONTROL UNIT (RAM)” or “CONTROL UNIT (ROM)” displayed again?

Yes or No

Yes >> Replace TCM.
No >> **INSPECTION END**

DTC CONTROL UNIT (EEP ROM)

PFP:31036

Description

ECS004UU

The TCM consists of a microcomputer and connectors for signal input and output and for power supply. The unit controls the A/T.

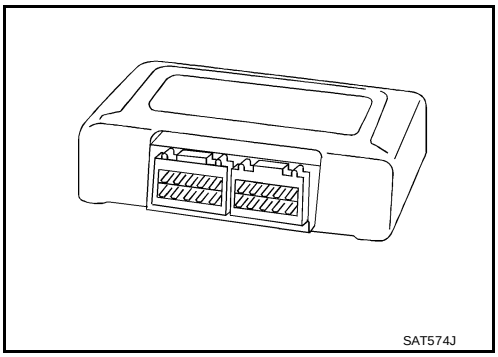

ON BOARD DIAGNOSIS LOGIC

Diagnostic trouble code	Malfunction is detected when ...	Check item (Possible cause)
: CONT UNIT (EEP ROM)	TCM memory (EEP ROM) is malfunctioning.	● TCM

DIAGNOSTIC TROUBLE CODE (DTC) CONFIRMATION PROCEDURE

NOTE:
If "DIAGNOSTIC TROUBLE CODE CONFIRMATION PROCEDURE" has been previously conducted, always turn ignition switch "OFF" and wait at least 5 seconds before conducting the next test.

With CONSULT-II

1. Turn ignition switch "ON" and select "DATA MONITOR" mode for A/T with CONSULT-II.
2. Start engine.

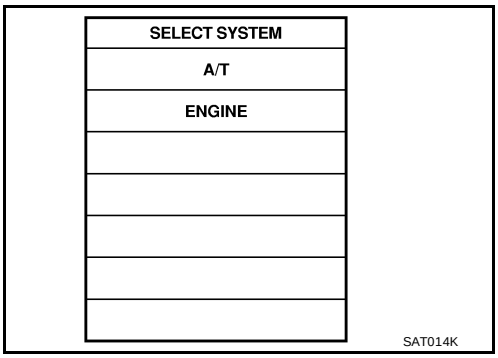

3. Run engine for at least 2 seconds at idle speed.

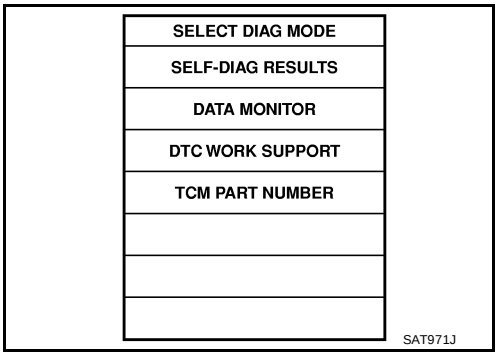

Diagnostic Procedure

ECS004UV

1. CHECK DTC

With CONSULT-II

1. Turn ignition switch “ON” and select “SELF DIAGNOSIS” mode for A/T with CONSULT-II.
2. Move selector lever to “R” position.
3. Depress accelerator pedal (Full throttle position).
4. Touch “ERASE”.
5. Turn ignition switch “OFF” position for 10 seconds.

Perform AT-207, "DIAGNOSTIC TROUBLE CODE (DTC) CONFIRMATION PROCEDURE" .

Is the “CONT UNIT (EEP ROM)” displayed again?

Yes >> Replace TCM.
No >> **INSPECTION END**

TROUBLE DIAGNOSIS FOR SYMPTOMS

PFP:00007

Wiring Diagram — AT — NONDTC

ECS004UW

AT-NONDTC-01

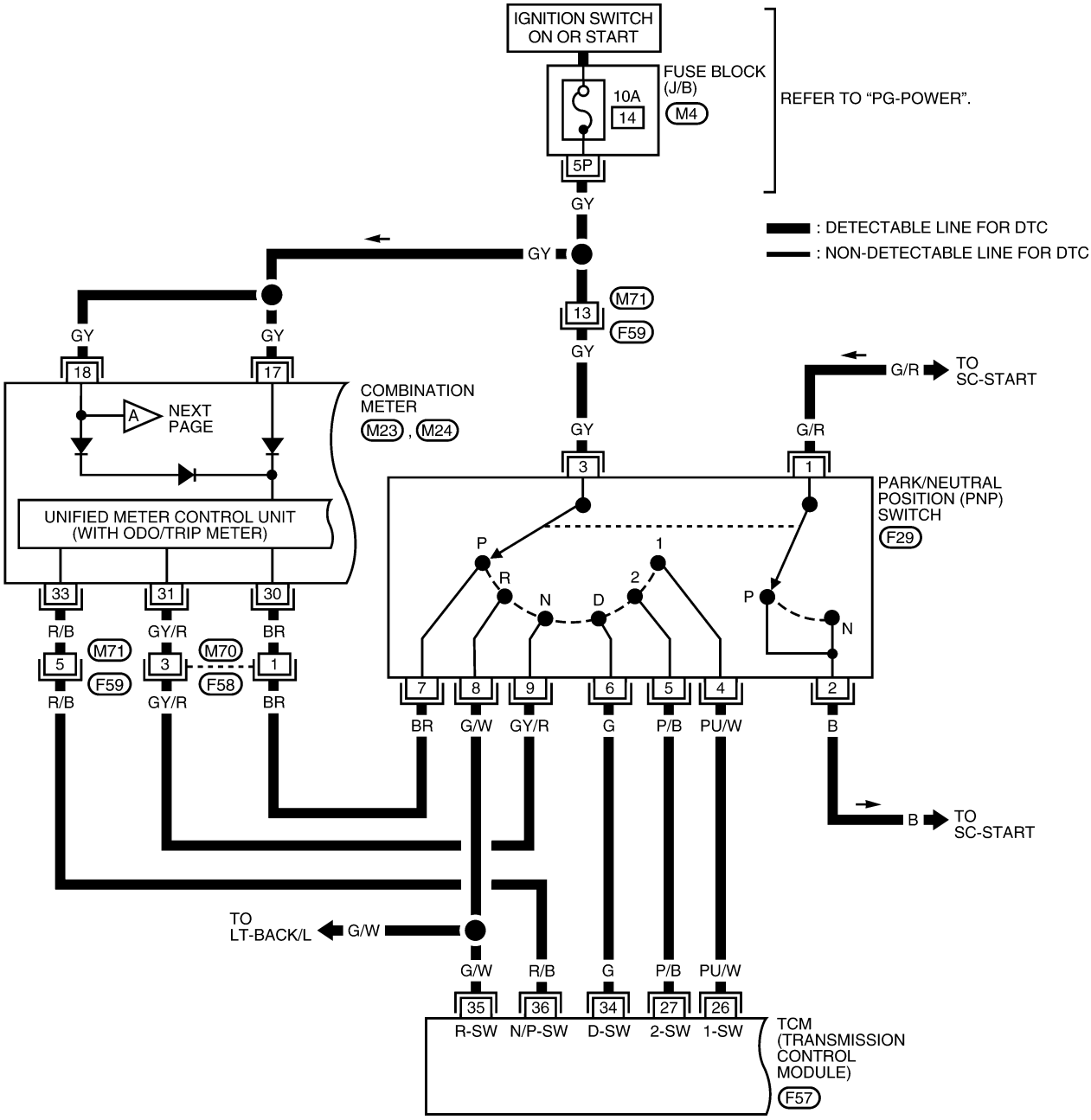

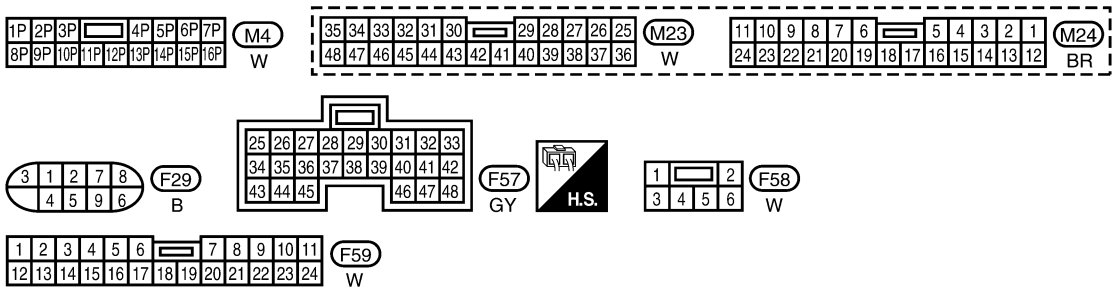

LCWA0025E

TCM TERMINALS AND REFERENCE VALUE MEASURED BETWEEN EACH TERMINAL AND 25 OR 48 (TCM GROUND)				
TERMINAL	WIRE COLOR	ITEM	CONDITION	DATA (APPROX.)
26	PU/W	PNP SWITCH 1 POSITION	IGNITION ON AND SELECTOR LEVER IN 1 POSITION	BATTERY VOLTAGE
			IGNITION ON AND SELECTOR LEVER IN OTHER POSITIONS	0V
27	P/B	PNP SWITCH 2 POSITION	IGNITION ON AND SELECTOR LEVER IN 2 POSITION	BATTERY VOLTAGE
			IGNITION ON AND SELECTOR LEVER IN OTHER POSITIONS	0V
34	G	PNP SWITCH D POSITION	IGNITION ON AND SELECTOR LEVER IN D POSITION	BATTERY VOLTAGE
			IGNITION ON AND SELECTOR LEVER IN OTHER POSITIONS	0V
35	G/W	PNP SWITCH R POSITION	IGNITION ON AND SELECTOR LEVER IN R POSITION	BATTERY VOLTAGE
			IGNITION ON AND SELECTOR LEVER IN OTHER POSITIONS	0V
36	R/B	PNP SWITCH P OR N POSITION	IGNITION ON AND SELECTOR LEVER IN P OR N POSITION	BATTERY VOLTAGE
			IGNITION ON AND SELECTOR LEVER IN OTHER POSITIONS	0V

AT-NONDTC-02

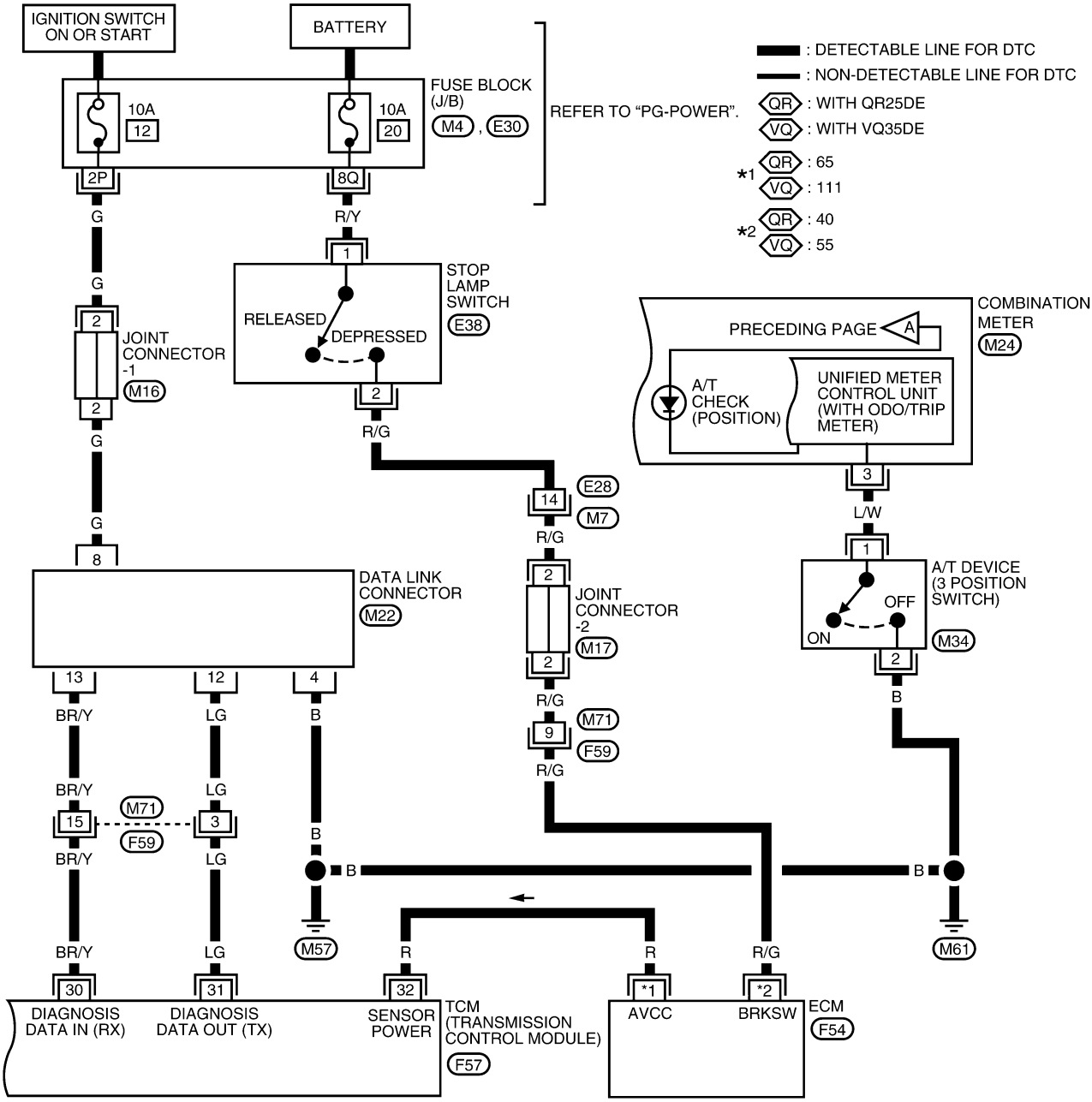

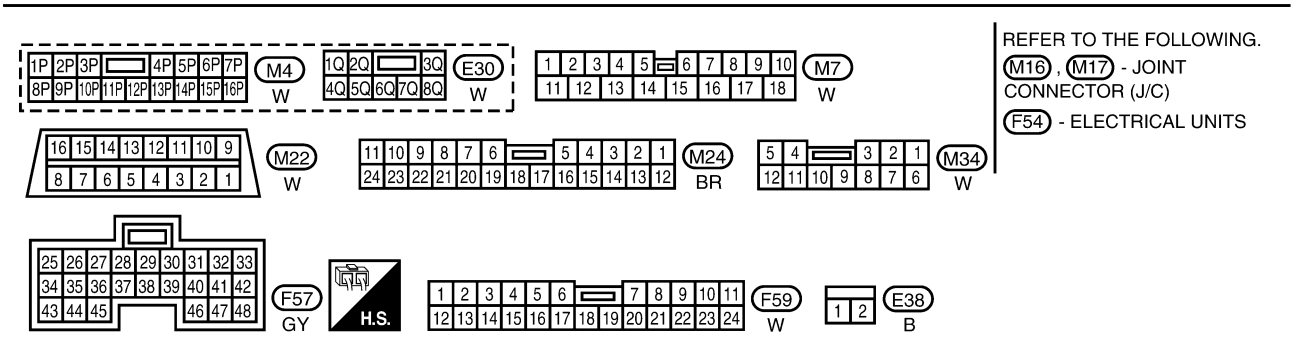

LCWA0026E

TCM TERMINALS AND REFERENCE VALUE MEASURED BETWEEN EACH TERMINAL AND 25 OR 48 (TCM GROUND)

TERMINAL	WIRE COLOR	ITEM	CONDITION	DATA (APPROX.)
30	BR/Y	DATA LINK CONNECTOR	—	—
31	LG	DATA LINK CONNECTOR	—	—
32	R	SENSOR POWER	IGNITION SWITCH ON	4.5 - 5.5V
			IGNITION SWITCH OFF	0V

1. A/T Check (Position) Indicator Lamp Does Not Come On

ECS004UX

SYMPTOM:
A/T check (position) indicator lamp does not come on for about 2 seconds when turning ignition switch to ON.

1. CHECK TCM POWER SOURCE

1. Turn ignition switch to ON position.
   (Do not start engine.)
2. Check voltage between TCM terminals 10 (R/Y), 19 (R/Y), and 28 (Y/R) and ground.

Voltage : Battery voltage

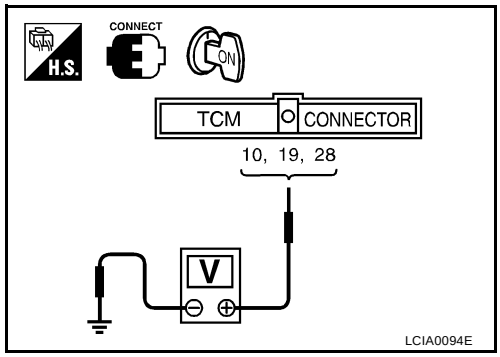

OK or NG

OK >> GO TO 2.
NG >> GO TO 3.

2. CHECK POWER SOURCE STEP 2

1. Turn ignition switch to OFF position.
2. Check voltage between TCM terminal 28 (Y/R) and ground.

Voltage : Battery voltage

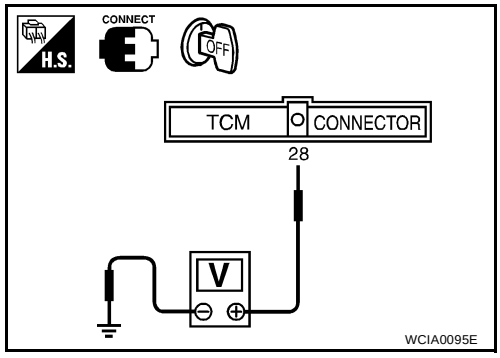

OK or NG

OK >> GO TO 4.
NG >> GO TO 3.

3. DETECT MALFUNCTIONING ITEM

Check the following items:

- Harness for short or open between ignition switch and TCM (Main harness)
  Refer to AT-100, "Wiring Diagram — AT — MAIN" .
- Ignition switch and fuse
  Refer to PG-3, "POWER SUPPLY ROUTING CIRCUIT" .

OK or NG

OK >> GO TO 4.
NG >> Repair or replace damaged parts.

4. CHECK TCM GROUND CIRCUIT

1. Turn ignition switch to OFF position.
2. Disconnect TCM harness connector.
3. Check continuity between TCM harness connector terminals 25, 48 and ground.

Continuity should exist.

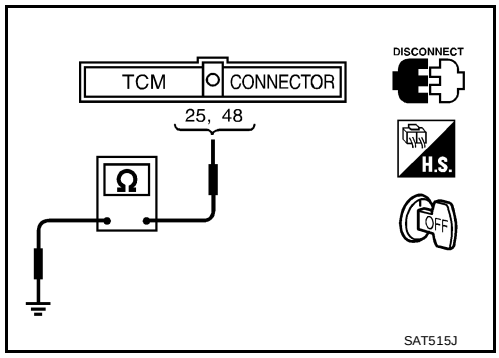

OK or NG

OK >> GO TO 5.
NG >> Repair open circuit or short to ground or short to power in harness or connectors. Refer to AT-100, "Wiring Diagram — AT — MAIN" .

5. DETECT MALFUNCTIONING ITEM

Check the following items:

- Harness and fuse for short or open between ignition switch and A/T check (position) indicator lamp (Main harness)
  Refer to PG-3, "POWER SUPPLY ROUTING CIRCUIT" .
- Harness for short or open between A/T check (position) indicator lamp and TCM

OK or NG

OK >> GO TO 6.
NG >> Repair or replace damaged parts.

6. CHECK SYMPTOM

Check again.

OK or NG

OK >> **INSPECTION END**
NG >> GO TO 8.

7. CHECK TCM INSPECTION

1. Perform TCM input/output signal inspection.
2. If NG, recheck TCM pin terminals for damage or loose connection with harness connector.

OK or NG

OK >> **INSPECTION END**
NG >> Repair or replace damaged parts.

2. Engine Cannot Be Started In P and N Position

ECS004UY

SYMPTOM:

- **Engine cannot be started with selector lever in P or N position.**
- **Engine can be started with selector lever in D, 2, 1 or R position.**

1. CHECK PARK/NEUTRAL POSITION (PNP) SWITCH CIRCUIT

With CONSULT-II

Does “TCM INPUT SIGNALS” in “DATA MONITOR” show damage to park/neutral position (PNP) switch circuit?

Without CONSULT-II

Does self-diagnosis show damage to park/neutral position (PNP) switch circuit?

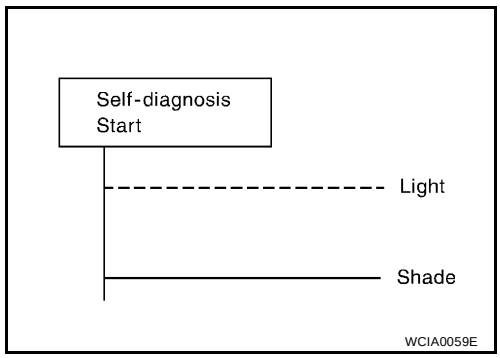

Yes or No

Yes >> Check park/neutral position (PNP) switch circuit. Refer to AT-103, "DTC P0705 PARK/NEUTRAL POSITION SWITCH" .

No >> GO TO 2.

2. CHECK PARK/NEUTRAL POSITION (PNP) SWITCH

Check for short or open of park/neutral position (PNP) switch harness connector terminals 1 and 2. Refer to SC-19, "DIAGNOSTIC PROCEDURE 2" .

OK or NG

OK >> GO TO 3.

NG >> Repair or replace park/neutral position (PNP) switch.

3. CHECK STARTING SYSTEM

Check starting system. Refer to SC-17, "WORK FLOW" .

OK or NG

OK >> **INSPECTION END**

NG >> Repair or replace damaged parts.

3. In P Position, Vehicle Moves Forward or Backward When Pushed

ECS004UZ

SYMPTOM:

Vehicle moves when it is pushed forward or backward with selector lever in P position.

1. CHECK PARKING COMPONENTS

Check parking components. Refer to AT-263, "OVERHAUL" and AT-268, "DISASSEMBLY" .

OK or NG

OK >> **INSPECTION END**

NG >> Repair or replace damaged parts.

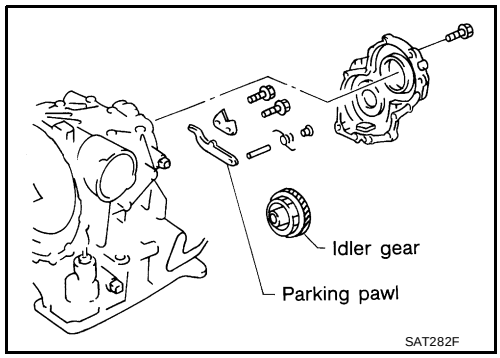

4. In N Position, Vehicle Moves

ECS004V0

SYMPTOM:

Vehicle moves forward or backward when selecting N position.

1. CHECK PARK/NEUTRAL POSITION (PNP) SWITCH CIRCUIT

With CONSULT-II

Does “TCM INPUT SIGNALS” in “DATA MONITOR” show damage to park/neutral position (PNP) switch circuit?

Without CONSULT-II

Does self-diagnosis show damage to park/neutral position (PNP) switch circuit?

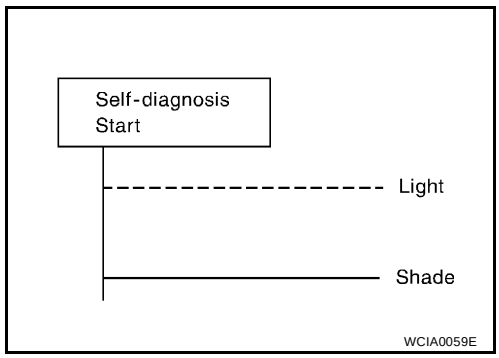

Yes or No

Yes >> Check park/neutral position (PNP) switch circuit. Refer to AT-103, "DTC P0705 PARK/NEUTRAL POSITION SWITCH" .

No >> GO TO 2.

2. CHECK CONTROL LINKAGE

Check control cable. Refer to AT-254, "Control Cable" .

OK or NG

OK >> GO TO 4.

NG >> GO TO 3.

3. ADJUST CONTROL CABLE

Adjust control cable.

>> Refer to AT-258, "Control Cable Adjustment" .

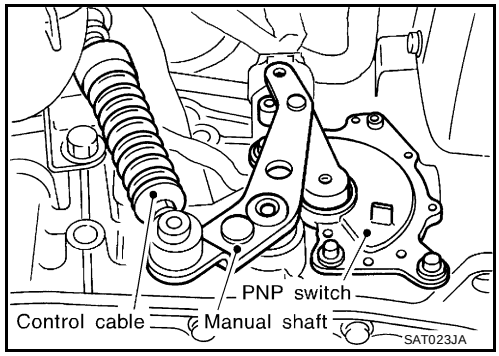

4. CHECK A/T FLUID LEVEL

Check A/T fluid level again.

OK or NG

OK >> GO TO 5.

NG >> Refill ATF.

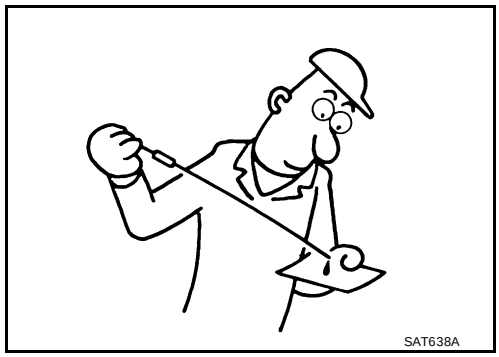

5. CHECK A/T FLUID CONDITION

1. Remove oil pan.
2. Check A/T fluid condition.

OK or NG

OK >> GO TO 7.
NG >> GO TO 6.

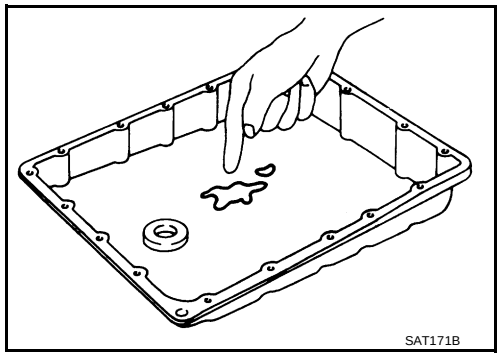

6. DETECT MALFUNCTIONING ITEM

1. Disassemble A/T.
2. Check the following items:

- Forward clutch assembly
- Overrun clutch assembly
- Reverse clutch assembly

OK or NG

OK >> GO TO 7.
NG >> Repair or replace damaged parts.

7. CHECK SYMPTOM

Check again.

OK or NG

OK >> **INSPECTION END**
NG >> GO TO 8.

8. CHECK TCM INSPECTION

1. Perform TCM input/output signal inspection.
2. If NG, recheck TCM pin terminals for damage or loose connection with harness connector.

OK or NG

OK >> **INSPECTION END**
NG >> Repair or replace damaged parts.

5. Large Shock. N → R Position

ECS004V1

SYMPTOM:
There is large shock when changing from N to R position.

1. CHECK SELF-DIAGNOSTIC RESULTS

Does self-diagnosis show damage to A/T fluid temperature sensor, line pressure solenoid valve or throttle position sensor [accelerator pedal position (APP) sensor] circuit?

Yes or No

Yes >> GO TO 2.
No >> GO TO 3.

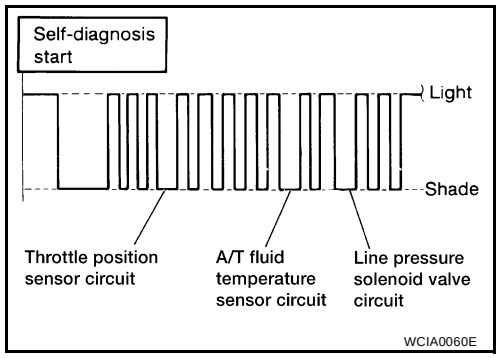

2. CHECK DAMAGED CIRCUIT

Check damaged circuit.

>> Refer to AT-109, "DTC P0710 A/T FLUID TEMPERATURE SENSOR CIRCUIT" , AT-159, "DTC P0745 LINE PRESSURE SOLENOID VALVE" or AT-175, "DTC P1705 THROTTLE POSITION SENSOR [ACCELERATOR PEDAL POSITION (APP) SENSOR]" .

3. CHECK THROTTLE POSITION SENSOR [ACCELERATOR PEDAL POSITION (APP) SENSOR]

Check throttle position sensor [accelerator pedal position (APP) sensor]. Refer to EC-250, "DTC P0221 TP SENSOR" and EC-263, "DTC P0226 APP SENSOR" (with QR25DE) or EC-901, "DTC P0221 TP SENSOR" and EC-915, "DTC P0226 APP SENSOR" (with VQ35DE).

OK or NG

OK >> GO TO 4.
NG >> Repair or replace throttle position sensor [accelerator pedal position (APP) sensor].

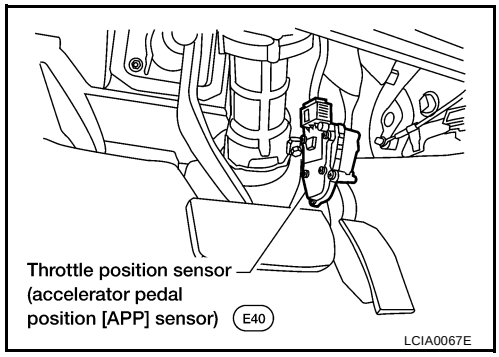

4. CHECK LINE PRESSURE

Check line pressure at idle with selector lever in D position. Refer to AT-65, "Line Pressure Test" .

OK or NG

OK >> GO TO 6.
NG >> GO TO 5.

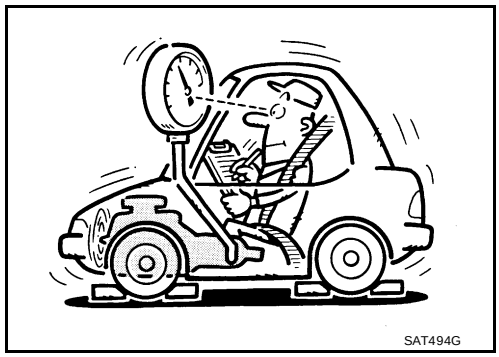

5. DETECT MALFUNCTIONING ITEM

1. Remove control valve assembly. Refer to AT-255, "Control Valve Assembly and Accumulators" .
2. Check the following items:

- Valves to control line pressure (Pressure regulator valve, pressure modifier valve, pilot valve and pilot filter)
- Line pressure solenoid valve

OK or NG

OK >> GO TO 6.
NG >> Repair or replace damaged parts.

6. CHECK SYMPTOM

Check again.

OK or NG

OK >> **INSPECTION END**
NG >> GO TO 7.

7. CHECK TCM INSPECTION

1. Perform TCM input/output signal inspection.
2. If NG, recheck TCM pin terminals for damage or loose connection with harness connector.

OK or NG

OK >> **INSPECTION END**
NG >> Repair or replace damaged parts.

6. Vehicle Does Not Creep Backward In R Position

ECS004V2

SYMPTOM:
Vehicle does not creep backward when selecting R position.

1. CHECK A/T FLUID LEVEL

Check A/T fluid level again.

OK or NG

OK >> GO TO 2.
NG >> Refill ATF.

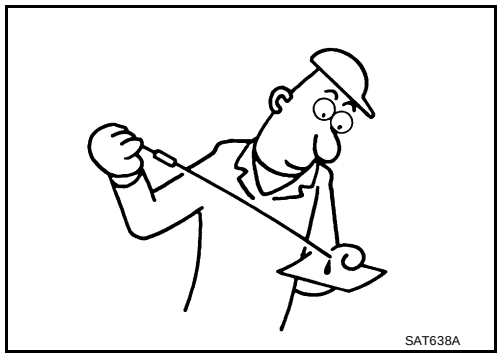

2. CHECK STALL REVOLUTION

Check stall revolution with selector lever in 1 and R positions.

OK or NG

OK >> GO TO 5.
OK in 1 position, NG in R position>> GO TO 3.
NG in both 1 and R positions>> GO TO 4.

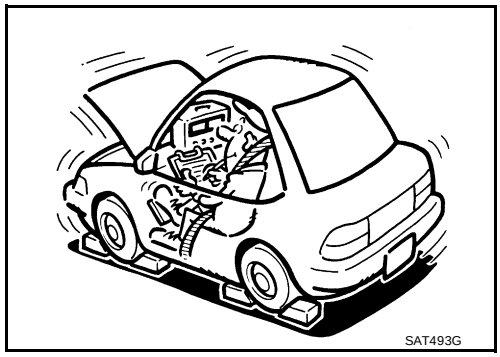

3. DETECT MALFUNCTIONING ITEM

1. Remove control valve assembly. Refer to AT-255, "Control Valve Assembly and Accumulators" .
2. Check the following items:
- Valves to control line pressure (Pressure regulator valve, pressure modifier valve, pilot valve and pilot filter)
- Line pressure solenoid valve
3. Disassemble A/T.
4. Check the following items:
- Oil pump assembly
- Torque converter
- Reverse clutch assembly
- High clutch assembly

OK or NG

OK >> GO TO 5.
NG >> Repair or replace damaged parts.

4. DETECT MALFUNCTIONING ITEM

1. Remove control valve assembly. Refer to AT-255, "Control Valve Assembly and Accumulators" .
2. Check the following items:
- Valves to control line pressure (Pressure regulator valve, pressure modifier valve, pilot valve and pilot filter)
- Line pressure solenoid valve
3. Disassemble A/T.
4. Check the following items:
- Oil pump assembly
- Torque converter
- Reverse clutch assembly
- High clutch assembly
- Low & reverse brake assembly
- Low one-way clutch

OK or NG

OK >> GO TO 5.
NG >> Repair or replace damaged parts.

5. CHECK LINE PRESSURE

Check line pressure at idle with selector lever in R position. Refer to AT-65, "Line Pressure Test" .

OK or NG

OK >> GO TO 7.
NG >> GO TO 6.

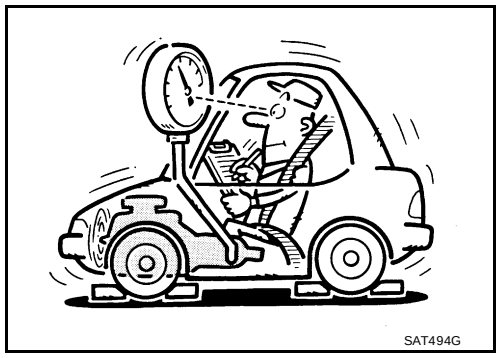

6. DETECT MALFUNCTIONING ITEM

1. Remove control valve assembly. Refer to AT-255, "Control Valve Assembly and Accumulators" .
2. Check the following items:
- Valves to control line pressure (Pressure regulator valve, pressure modifier valve, pilot valve and pilot filter)
- Line pressure solenoid valve
3. Disassemble A/T.
4. Check the following item:
- Oil pump assembly

OK or NG

OK >> GO TO 7.
NG >> Repair or replace damaged parts.

7. CHECK A/T FLUID CONDITION

1. Remove oil pan.
2. Check A/T fluid condition.

OK or NG

OK >> GO TO 9.
NG >> GO TO 8.

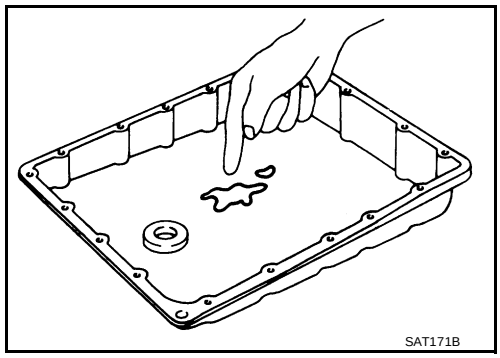

8. DETECT MALFUNCTIONING ITEM

1. Remove control valve assembly. Refer to AT-255, "Control Valve Assembly and Accumulators" .
2. Check the following items:
- Valves to control line pressure (Pressure regulator valve, pressure modifier valve, pilot valve and pilot filter)
- Line pressure solenoid valve
3. Disassemble A/T.
4. Check the following items:
- Oil pump assembly
- Torque converter
- Reverse clutch assembly
- High clutch assembly
- Low & reverse brake assembly
- Low one-way clutch

OK or NG

OK >> GO TO 9.
NG >> Repair or replace damaged parts.

9. CHECK SYMPTOM

Check again.

OK or NG

OK >> **INSPECTION END**
NG >> GO TO 10.

10. CHECK TCM INSPECTION

1. Perform TCM input/output signal inspection.
2. If NG, recheck TCM pin terminals for damage or loose connection with harness connector.

OK or NG

OK >> **INSPECTION END**
NG >> Repair or replace damaged parts.

7. Vehicle Does Not Creep Forward in D, 3, 2 or 1 Position

ECS004V3

SYMPTOM:
Vehicle does not creep forward when selecting D, 3, 2 or 1 position.

1. CHECK A/T FLUID LEVEL

Check A/T fluid level again.

OK or NG

OK >> GO TO 2.
NG >> Refill ATF.

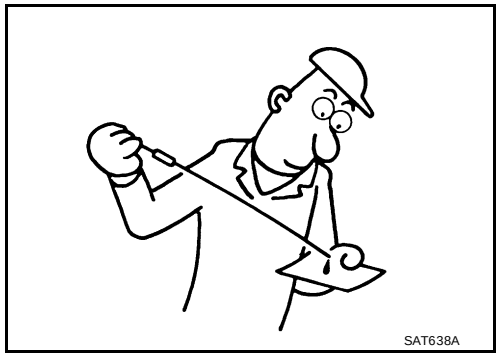

2. CHECK STALL REVOLUTION

Check stall revolution with selector lever in D position. Refer to AT-61, "Stall Test" .

OK or NG

OK >> GO TO 4.
NG >> GO TO 3.

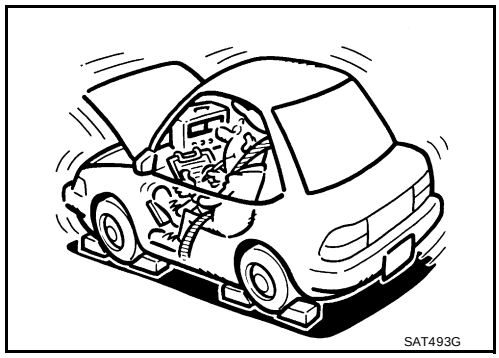

3. DETECT MALFUNCTIONING ITEM

1. Remove control valve assembly. Refer to AT-255, "Control Valve Assembly and Accumulators" .
2. Check the following items:
- Valves to control line pressure (Pressure regulator valve, pressure modifier valve, pilot valve and pilot filter)
- Line pressure solenoid valve
3. Disassemble A/T.
4. Check the following items:
- Oil pump assembly
- Forward clutch assembly
- Forward one-way clutch
- Low one-way clutch
- Low & reverse brake assembly
- Torque converter

OK or NG

OK >> GO TO 4.
NG >> Repair or replace damaged parts.

4. CHECK LINE PRESSURE

Check line pressure at idle with selector lever in D position. Refer to AT-65, "Line Pressure Test" .

OK or NG

OK >> GO TO 6.
NG >> GO TO 5.

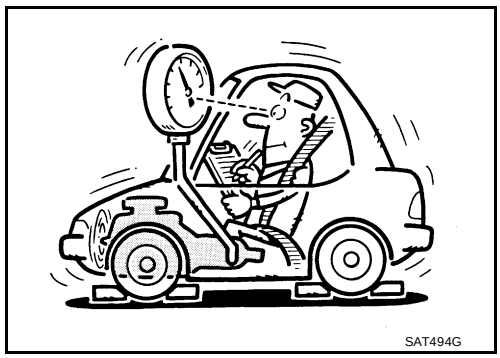

5. DETECT MALFUNCTIONING ITEM

1. Remove control valve assembly. Refer to AT-255, "Control Valve Assembly and Accumulators" .
2. Check the following items:
- Valves to control line pressure (Pressure regulator valve, pressure modifier valve, pilot valve and pilot filter)
- Line pressure solenoid valve
3. Disassemble A/T.
4. Check the following item:
- Oil pump assembly

OK or NG

OK >> GO TO 6.
NG >> Repair or replace damaged parts.

6. CHECK A/T FLUID CONDITION

1. Remove oil pan.
2. Check A/T fluid condition.

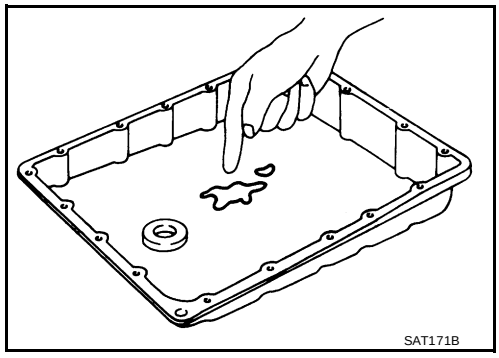

OK or NG

OK >> GO TO 8.
NG >> GO TO 7.

7. DETECT MALFUNCTIONING ITEM

1. Remove control valve assembly. Refer to AT-255, "Control Valve Assembly and Accumulators" .
2. Check the following items:

- Valves to control line pressure (Pressure regulator valve, pressure modifier valve, pilot valve and pilot filter)
- Line pressure solenoid valve

3. Disassemble A/T.
4. Check the following items:

- Oil pump assembly
- Forward clutch assembly
- Forward one-way clutch
- Low one-way clutch
- Low & reverse brake assembly
- Torque converter

OK or NG

OK >> GO TO 8.
NG >> Repair or replace damaged parts.

8. CHECK SYMPTOM

Check again.

OK or NG

OK >> **INSPECTION END**
NG >> GO TO 9.

9. CHECK TCM INSPECTION

1. Perform TCM input/output signal inspection.
2. If NG, recheck TCM pin terminals for damage or loose connection with harness connector.

OK or NG

OK >> **INSPECTION END**
NG >> Repair or replace damaged parts.

8. Vehicle Cannot Be Started From D_1

ECS004V4

SYMPTOM:
Vehicle cannot be started from D_1 on Cruise test — Part 1.

1. CHECK SYMPTOM

Is “6. Vehicle Does Not Creep Backward In R Position” OK?

Yes or No

Yes >> GO TO 2.
No >> Go to AT-219, "6. Vehicle Does Not Creep Backward In R Position" .

2. CHECK SELF-DIAGNOSTIC RESULTS

Does self-diagnosis show damage to vehicle speed sensor·A/T (revolution sensor), shift solenoid valve A, B or vehicle speed sensor·MTR after cruise test?

Yes or No

Yes >> Check damaged circuit. Refer to AT-115, "DTC P0720 VEHICLE SPEED SENSOR·A/T (REVOLUTION SENSOR)" , AT-165, "DTC P0750 SHIFT SOLENOID VALVE A" , AT-170, "DTC P0755 SHIFT SOLENOID VALVE B" or AT-196, "DTC VEHICLE SPEED SENSOR MTR" .
No >> GO TO 3.

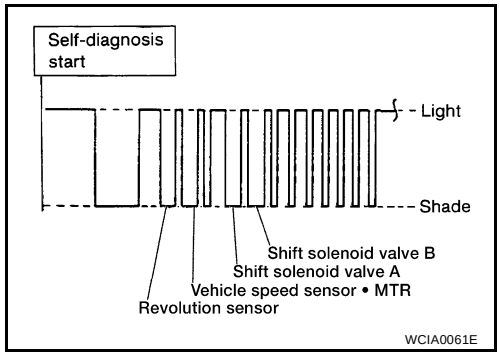

3. CHECK THROTTLE POSITION SENSOR [ACCELERATOR PEDAL POSITION (APP) SENSOR]

Check throttle position sensor [accelerator pedal position (APP) sensor]. Refer to EC-250, "DTC P0221 TP SENSOR" and EC-263, "DTC P0226 APP SENSOR" (with QR25DE), or EC-901, "DTC P0221 TP SENSOR" and EC-915, "DTC P0226 APP SENSOR" (with VQ35DE).

OK or NG

OK >> GO TO 4.
NG >> Repair or replace throttle position sensor [accelerator pedal position (APP) sensor].

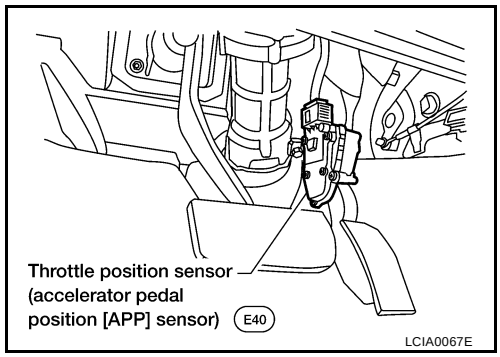

4. CHECK LINE PRESSURE

Check line pressure at stall point with selector lever in D position. Refer to AT-65, "Line Pressure Test" .

OK or NG

OK >> GO TO 6.
NG >> GO TO 5.

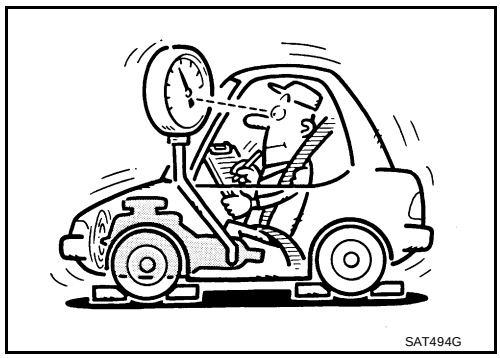

5. DETECT MALFUNCTIONING ITEM

1. Remove control valve assembly. Refer to AT-255, "Control Valve Assembly and Accumulators" .
2. Check the following items:
- Shift valve A
- Shift valve B
- Shift solenoid valve A
- Shift solenoid valve B
- Pilot valve
- Pilot filter
3. Disassemble A/T.
4. Check the following items:
- Forward clutch assembly
- Forward one-way clutch
- Low one-way clutch
- High clutch assembly
- Torque converter
- Oil pump assembly

OK or NG

OK >> GO TO 8.
NG >> Repair or replace damaged parts.

6. CHECK A/T FLUID CONDITION

1. Remove oil pan.
2. Check A/T fluid condition.

OK or NG

OK >> GO TO 7.
NG >> GO TO 5.

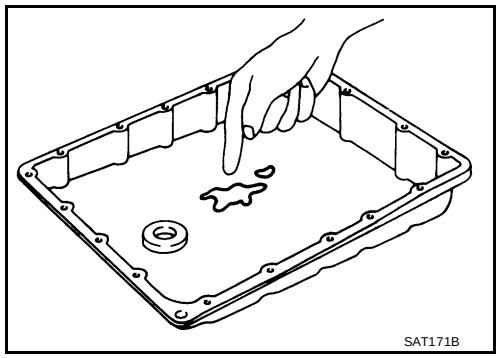

7. DETECT MALFUNCTIONING ITEM

1. Remove control valve assembly. Refer to AT-255, "Control Valve Assembly and Accumulators" .
2. Check the following items:
- Shift valve A
- Shift valve B
- Shift solenoid valve A
- Shift solenoid valve B
- Pilot valve
- Pilot filter

OK or NG

OK >> GO TO 8.
NG >> Repair or replace damage parts.

8. CHECK SYMPTOM

Check again.

OK or NG

OK >> **INSPECTION END**
NG >> GO TO 9.

9. CHECK TCM INSPECTION

1. Perform TCM input/output signal inspection.
2. If NG, recheck TCM pin terminals for damage or loose connection with harness connector.

OK or NG

OK >> **INSPECTION END**
NG >> Repair or replace damaged parts.

9. A/T Does Not Shift: D1 → D2 or Does Not Kickdown: D4 → D2

ECS004V5

SYMPTOM:
A/T does not shift from D1 to D2 at the specified speed.
A/T does not shift from D4 to D2 when depressing accelerator pedal fully at the specified speed.

1. CHECK SYMPTOM

Are “7. Vehicle Does Not Creep Forward In D, 3, 2 Or 1 Position” and “8. Vehicle Cannot Be Started From D1 ” OK?

Yes or No

Yes >> GO TO 2.
No >> Go to AT-222, "7. Vehicle Does Not Creep Forward in D, 3, 2 or 1 Position" and AT-224, "8. Vehicle Cannot Be Started From D1" .

2. CHECK SELF-DIAGNOSTIC RESULTS

With CONSULT-II

Does “TCM INPUT SIGNALS” in “DATA MONITOR” show damage to park/neutral position (PNP) switch circuit?

Without CONSULT-II

Does self-diagnosis show damage to park/neutral position (PNP) switch circuit?

Yes or No

Yes >> Check park/neutral position (PNP) switch circuit. Refer to AT-103, "DTC P0705 PARK/NEUTRAL POSITION SWITCH" .
No >> GO TO 3.

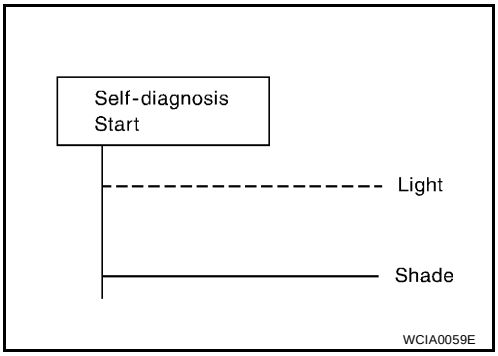

3. CHECK VEHICLE SPEED SENSOR·A/T AND VEHICLE SPEED SENSOR·MTR CIRCUIT

Check vehicle speed sensor·A/T (revolution sensor) and vehicle speed sensor·MTR circuit. Refer to AT-115, "DTC P0720 VEHICLE SPEED SENSOR·A/T (REVOLUTION SENSOR)" and AT-196, "DTC VEHICLE SPEED SENSOR MTR" .

OK or NG

OK >> GO TO 4.
NG >> Repair or replace vehicle speed sensor·A/T (revolution sensor) and vehicle speed sensor·MTR circuits.

4. CHECK THROTTLE POSITION SENSOR [ACCELERATOR PEDAL POSITION (APP) SENSOR]

Check throttle position sensor [accelerator pedal position (APP) sensor]. Refer to EC-250, "DTC P0221 TP SENSOR" and EC-263, "DTC P0226 APP SENSOR" (with QR25DE), or EC-901, "DTC P0221 TP SENSOR" and EC-915, "DTC P0226 APP SENSOR" (with VQ35DE).

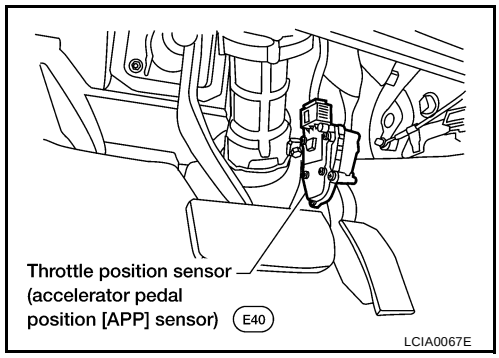

OK or NG

OK >> GO TO 5.
NG >> Repair or replace throttle position sensor [accelerator pedal position (APP) sensor].

5. CHECK A/T FLUID CONDITION

1. Remove oil pan.
2. Check A/T fluid condition.

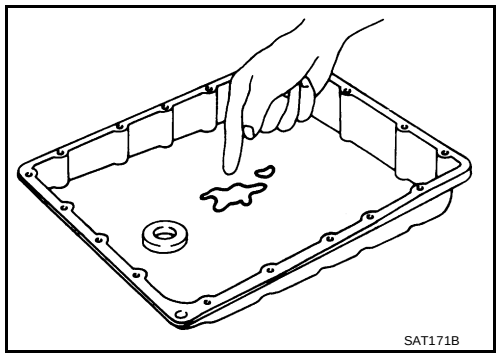

OK or NG

OK >> GO TO 7.
NG >> GO TO 6.

6. DETECT MALFUNCTIONING ITEM

1. Remove control valve. Refer to AT-255, "Control Valve Assembly and Accumulators" .
2. Check the following items:
- Shift valve A
- Shift solenoid valve A
- Pilot valve
- Pilot filter
3. Disassemble A/T.
4. Check the following items:
- Servo piston assembly
- Brake band
- Oil pump assembly

OK or NG

OK >> GO TO 8.
NG >> Repair or replace damaged parts.

7. DETECT MALFUNCTIONING ITEM

1. Remove control valve. Refer to AT-255, "Control Valve Assembly and Accumulators" .
2. Check the following items:

- Shift valve A
- Shift solenoid valve A
- Pilot valve
- Pilot filter

OK or NG

OK >> GO TO 8.
NG >> Repair or replace damaged parts.

8. CHECK SYMPTOM

Check again.

OK or NG

OK >> **INSPECTION END**
NG >> GO TO 9.

9. CHECK TCM INSPECTION

1. Perform TCM input/output signal inspection.
2. If NG, recheck TCM pin terminals for damage or loose connection with harness connector.

OK or NG

OK >> **INSPECTION END**
NG >> Repair or replace damaged parts.

10. A/T Does Not Shift: $D_2 \rightarrow D_3$

ECS004V6

SYMPTOM:
A/T does not shift from D_2 to D_3 at the specified speed.

1. CHECK SYMPTOM

Are 7. Vehicle Does Not Creep Forward In D, 3, 2 Or 1 Position and 8. Vehicle Cannot Be Started From D_1 OK?

Yes or No

Yes >> GO TO 2.
No >> Go to AT-222, "7. Vehicle Does Not Creep Forward in D, 3, 2 or 1 Position" and AT-224, "8. Vehicle Cannot Be Started From D_1" .

2. CHECK PARK/NEUTRAL POSITION (PNP) SWITCH CIRCUIT

With CONSULT-II

Does “TCM INPUT SIGNALS” in “DATA MONITOR” show damage to park/neutral position (PNP) switch circuit?

Without CONSULT-II

Does self-diagnosis show damage to park/neutral position (PNP) switch circuit?

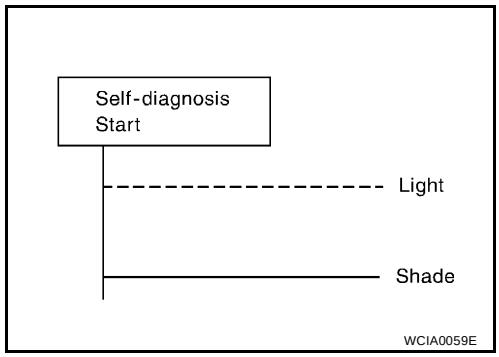

Yes or No

Yes >> Check park/neutral position (PNP) switch circuit. Refer to AT-103, "DTC P0705 PARK/NEUTRAL POSITION SWITCH" .

No >> GO TO 3.

3. CHECK THROTTLE POSITION SENSOR [ACCELERATOR PEDAL POSITION (APP) SENSOR]

Check throttle position sensor [accelerator pedal position (APP) sensor]. Refer to EC-250, "DTC P0221 TP SENSOR" and EC-263, "DTC P0226 APP SENSOR" (with QR25DE), or EC-901, "DTC P0221 TP SENSOR" and EC-915, "DTC P0226 APP SENSOR" (with VQ35DE).

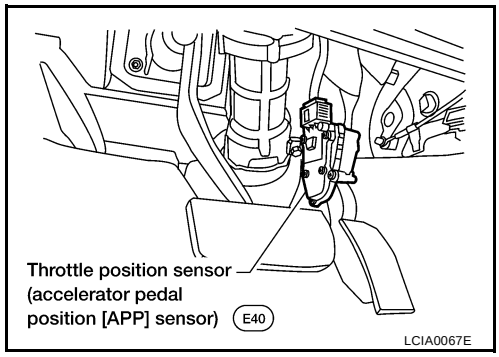

OK or NG

OK >> GO TO 4.

NG >> Repair or replace throttle position sensor [accelerator pedal position (APP) sensor].

4. CHECK A/T FLUID CONDITION

1. Remove oil pan.
2. Check A/T fluid condition.

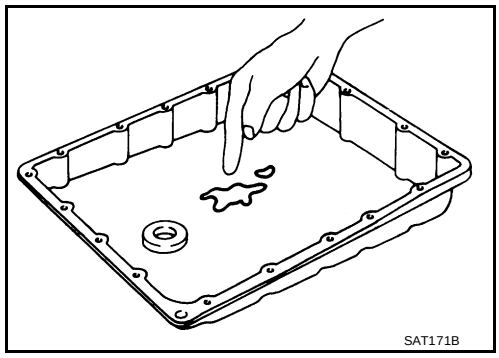

OK or NG

OK >> GO TO 6.

NG >> GO TO 5.

5. DETECT MALFUNCTIONING ITEM

1. Remove control valve assembly. Refer to AT-255, "Control Valve Assembly and Accumulators" .
2. Check the following items:
- Shift valve B
- Shift solenoid valve B
- Pilot valve
- Pilot filter
3. Disassemble A/T.
4. Check the following items:
- Servo piston assembly
- High clutch assembly
- Oil pump assembly

OK or NG

OK >> GO TO 7.
NG >> Repair or replace damaged parts.

6. DETECT MALFUNCTIONING ITEM

1. Remove control valve assembly. Refer to AT-255, "Control Valve Assembly and Accumulators" .
2. Check the following items:
- Shift valve B
- Shift solenoid valve B
- Pilot valve
- Pilot filter

OK or NG

OK >> GO TO 7.
NG >> Repair or replace damaged parts.

7. CHECK SYMPTOM

Check again.

OK or NG

OK >> **INSPECTION END**
NG >> GO TO 8.

8. CHECK TCM INSPECTION

1. Perform TCM input/output signal inspection.
2. If NG, recheck TCM pin terminals for damage or loose connection with harness connector.

OK or NG

OK >> **INSPECTION END**
NG >> Repair or replace damaged parts.

11. A/T Does Not Shift: $D_3 \rightarrow D_4$

ECS004V7

SYMPTOM:

- **A/T does not shift from D_3 to D_4 at the specified speed.**
- **A/T must be warm before D_3 to D_4 shift will occur.**

1. CHECK SYMPTOM

Are “7. Vehicle Does Not Creep Forward In D, 3, 2 Or 1 Position” and “8. Vehicle Cannot Be Started From D_1 ” OK?

Yes or No

Yes >> GO TO 2.

No >> Go to AT-222, "7. Vehicle Does Not Creep Forward in D, 3, 2 or 1 Position" and AT-224, "8. Vehicle Cannot Be Started From D_1" .

2. CHECK SELF-DIAGNOSTIC RESULTS

With CONSULT-II

Does self-diagnosis, after cruise test, show damage to any of the following circuits?

- Park/neutral position (PNP) switch
- Overdrive control switch
- A/T fluid temperature sensor
- Vehicle speed sensor·A/T (revolution sensor)
- Shift solenoid valve A or B

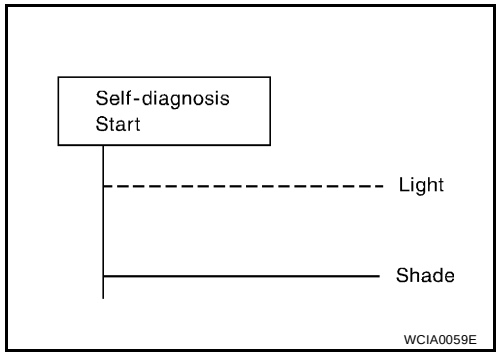

- Vehicle speed sensor·MTR

Yes or No

Yes >> Check damaged circuit. Refer to AT-103, "DTC P0705 PARK/NEUTRAL POSITION SWITCH" , AT-109, "DTC P0710 A/T FLUID TEMPERATURE SENSOR CIRCUIT" , AT-115, "DTC P0720 VEHICLE SPEED SENSOR·A/T (REVOLUTION SENSOR)" , AT-165, "DTC P0750 SHIFT SOLENOID VALVE A" , AT-170, "DTC P0755 SHIFT SOLENOID VALVE B" or AT-196, "DTC VEHICLE SPEED SENSOR MTR" .

No >> GO TO 3.

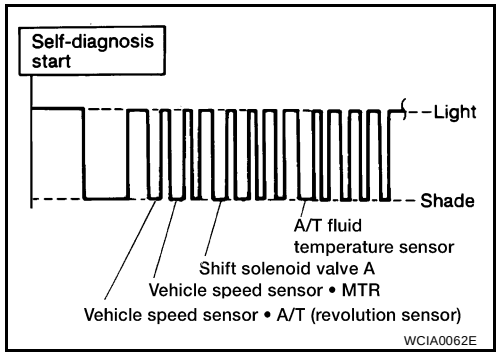

3. CHECK THROTTLE POSITION SENSOR [ACCELERATOR PEDAL POSITION (APP) SENSOR]

Check throttle position sensor [accelerator pedal position (APP) sensor]. Refer to EC-250, "DTC P0221 TP SENSOR" and EC-263, "DTC P0226 APP SENSOR" (with QR25DE), or EC-901, "DTC P0221 TP SENSOR" and EC-915, "DTC P0226 APP SENSOR" (with VQ35DE).

OK or NG

OK >> GO TO 4.

NG >> Repair or replace throttle position sensor [accelerator pedal position (APP) sensor].

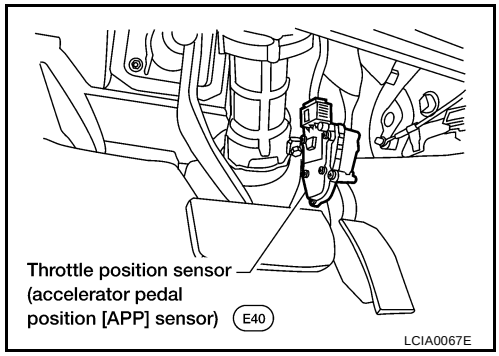

4. CHECK A/T FLUID CONDITION

1. Remove oil pan.
2. Check A/T fluid condition.

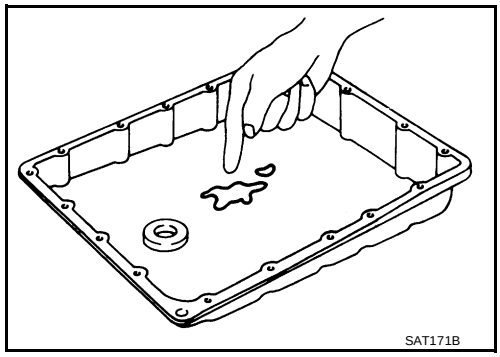

OK or NG

OK >> GO TO 6.
NG >> GO TO 5.

5. DETECT MALFUNCTIONING ITEM

1. Remove control valve assembly. Refer to AT-255, "Control Valve Assembly and Accumulators" .
2. Check the following items:
- Shift valve B
- Overrun clutch control valve
- Shift solenoid valve B
- Pilot valve
- Pilot filter
3. Disassemble A/T.
4. Check the following items:
- Servo piston assembly
- Brake band
- Torque converter
- Oil pump assembly

OK or NG

OK >> GO TO 7.
NG >> Repair or replace damaged parts.

6. DETECT MALFUNCTIONING ITEM

1. Remove control valve assembly. Refer to AT-255, "Control Valve Assembly and Accumulators" .
2. Check the following items:
- Shift valve B
- Overrun clutch control valve
- Shift solenoid valve B
- Pilot valve
- Pilot filter

OK or NG

OK >> GO TO 7.
NG >> Repair or replace damaged parts.

7. CHECK SYMPTOM

Check again.

OK or NG

OK >> **INSPECTION END**
NG >> GO TO 8.

8. CHECK TCM INSPECTION

1. Perform TCM input/output signal inspection.
2. If NG, recheck TCM pin terminals for damage or loose connection with harness connector.

OK or NG

OK >> **INSPECTION END**
NG >> Repair or replace damaged parts.

12. A/T Does Not Perform Lock-up

ECS004V8

SYMPTOM:
A/T does not perform lock-up at the specified speed.

1. CHECK SELF-DIAGNOSTIC RESULTS

Does self-diagnosis show damage to torque converter clutch solenoid valve circuit after cruise test?

Yes or No

Yes >> Check torque converter clutch solenoid valve circuit. Refer to AT-146, "DTC P0740 TORQUE CONVERTER CLUTCH SOLENOID VALVE" .
No >> GO TO 2.

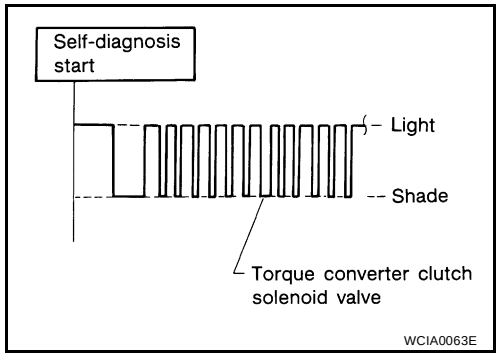

2. CHECK THROTTLE POSITION SENSOR [ACCELERATOR PEDAL POSITION (APP) SENSOR]

Check throttle position sensor [accelerator pedal position (APP) sensor]. Refer to EC-250, "DTC P0221 TP SENSOR" and EC-263, "DTC P0226 APP SENSOR" (with QR25DE), or EC-901, "DTC P0221 TP SENSOR" and EC-915, "DTC P0226 APP SENSOR" (with VQ35DE).

OK or NG

OK >> GO TO 3.
NG >> Repair or replace throttle position sensor [accelerator pedal position (APP) sensor].

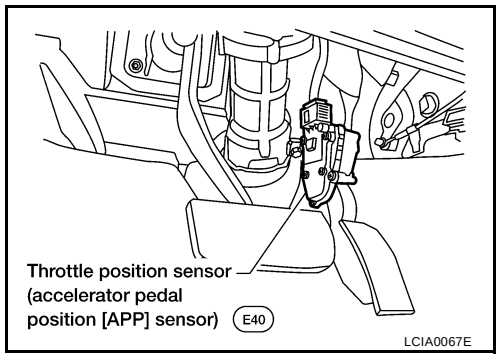

3. DETECT MALFUNCTIONING ITEM

1. Remove control valve. Refer to AT-255, "Control Valve Assembly and Accumulators" .
2. Check following items:

- Torque converter clutch control valve
- Torque converter relief valve
- Torque converter clutch solenoid valve
- Pilot valve
- Pilot filter

OK or NG

OK >> GO TO 4.
NG >> Repair or replace damaged parts.

4. CHECK SYMPTOM

Check again.

OK or NG

OK >> **INSPECTION END**
NG >> GO TO 5.

5. CHECK TCM INSPECTION

1. Perform TCM input/output signal inspection.
2. If NG, recheck TCM pin terminals for damage or loose connection with harness connector.

OK or NG

OK >> **INSPECTION END**
NG >> Repair or replace damaged parts.

13. A/T Does Not Hold Lock-up Condition

ECS004V9

SYMPTOM:
A/T does not hold lock-up condition for more than 30 seconds.

1. CHECK SELF-DIAGNOSTIC RESULTS

Does self-diagnosis show damage to engine speed signal circuit after cruise test?

Yes or No

Yes >> Check engine speed signal circuit. Refer to AT-120, "DTC P0725 ENGINE SPEED SIGNAL" .
No >> GO TO 2.

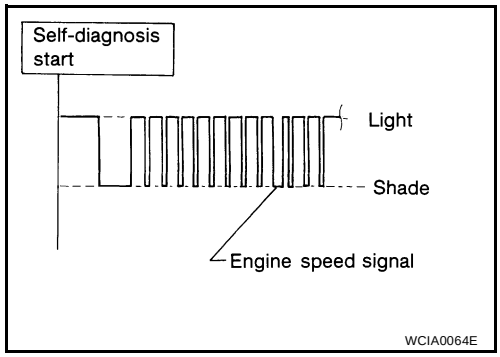

2. CHECK A/T FLUID CONDITION

1. Remove oil pan.
2. Check A/T fluid condition.

OK or NG

OK >> GO TO 4.
NG >> GO TO 3.

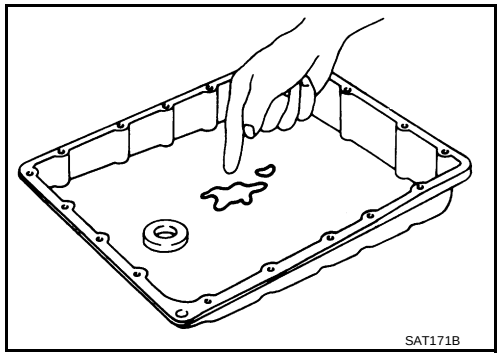

3. DETECT MALFUNCTIONING ITEM

1. Remove control valve assembly. Refer to AT-255, "Control Valve Assembly and Accumulators" .
2. Check the following items:
- Torque converter clutch control valve
- Pilot valve
- Pilot filter
3. Disassemble A/T.
4. Check torque converter and oil pump assembly.

OK or NG

OK >> GO TO 5.
NG >> Repair or replace damaged parts.

4. DETECT MALFUNCTIONING ITEM

1. Remove control valve assembly. Refer to AT-255, "Control Valve Assembly and Accumulators" .
2. Check the following items:
- Torque converter clutch control valve
- Pilot valve
- Pilot filter

OK or NG

OK >> GO TO 5.
NG >> Repair or replace damaged parts.

5. CHECK SYMPTOM

Check again.

OK or NG

OK >> **INSPECTION END**
NG >> GO TO 6.

6. CHECK TCM INSPECTION

1. Perform TCM input/output signal inspection.
2. If NG, recheck TCM pin terminals for damage or loose connection with harness connector.

OK or NG

OK >> **INSPECTION END**
NG >> Repair or replace damaged parts.

14. Lock-up Is Not Released

ECS004VA

SYMPTOM:
Lock-up is not released when accelerator pedal is released.

1. CHECK THROTTLE POSITION SENSOR [ACCELERATOR PEDAL POSITION (APP) SENSOR] CIRCUIT

With CONSULT-II

Does “TCM INPUT SIGNALS” in “DATA MONITOR” show damage to throttle position sensor [accelerator pedal position (APP) sensor] circuit?

Without CONSULT-II

Does self-diagnosis show damage to throttle position sensor [accelerator pedal position (APP) sensor] circuit?

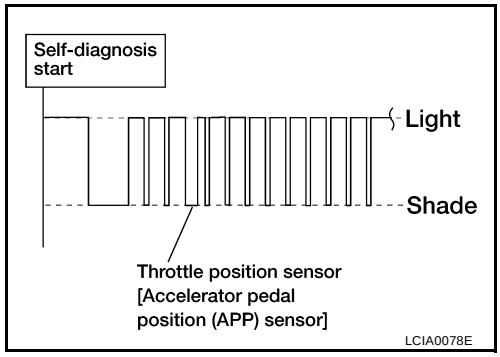

Yes or No

Yes >> Check throttle position sensor [accelerator pedal position (APP) sensor]. Refer to EC-250, "DTC P0221 TP SENSOR" and EC-263, "DTC P0226 APP SENSOR" (with QR25DE), or EC-901, "DTC P0221 TP SENSOR" and EC-915, "DTC P0226 APP SENSOR" (with VQ35DE).

No >> GO TO 2.

2. CHECK SYMPTOM

Check again.

OK or NG

OK >> **INSPECTION END**

NG >> GO TO 3.

3. CHECK TCM INSPECTION

1. Perform TCM input/output signal inspection.
2. If NG, recheck TCM pin terminals for damage or loose connection with harness connector.

OK or NG

OK >> **INSPECTION END**

NG >> Repair or replace damaged parts.

15. Engine Speed Does Not Return To Idle (Light Braking $D_4 \rightarrow D_3$)

ECS004VB

SYMPTOM:

- **Engine speed does not smoothly return to idle when A/T shifts from D_4 to D_3.**
- **Vehicle does not decelerate by engine brake when A/T selector lever is in 3 position.**
- **Vehicle does not decelerate by engine brake when shifting A/T from D to 2 position.**

1. CHECK SELF-DIAGNOSTIC RESULTS

Does self-diagnosis show damage to overrun clutch solenoid valve circuit after cruise test?

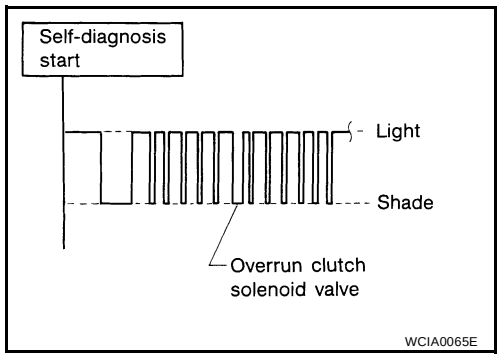

Yes or No

Yes >> Check overrun clutch solenoid valve circuit. Refer to AT-180, "DTC P1760 OVERRUN CLUTCH SOLENOID VALVE".

No >> GO TO 2.

2. CHECK THROTTLE POSITION SENSOR [ACCELERATOR PEDAL POSITION (APP) SENSOR]

Check throttle position sensor [accelerator pedal position (APP) sensor]. Refer to EC-250, "DTC P0221 TP SENSOR" and EC-263, "DTC P0226 APP SENSOR" (with QR25DE), or EC-901, "DTC P0221 TP SENSOR" and EC-915, "DTC P0226 APP SENSOR" (with VQ35DE).

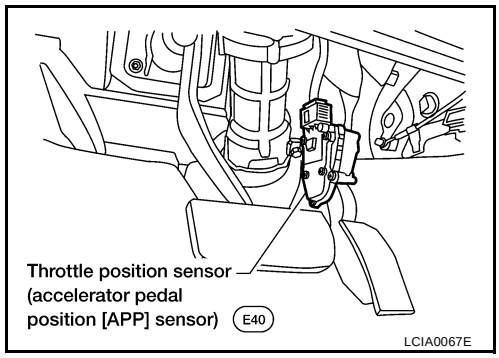

OK or NG

OK >> GO TO 3.
NG >> Repair or replace throttle position sensor [accelerator pedal position (APP) sensor].

3. CHECK A/T FLUID CONDITION

1. Remove oil pan.
2. Check A/T fluid condition.

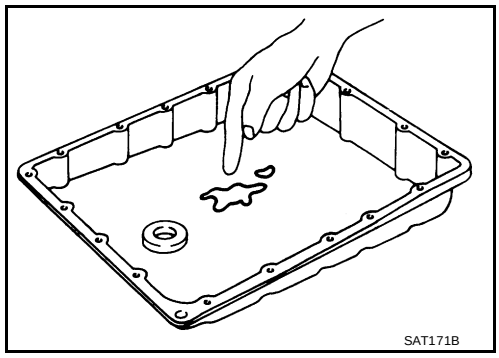

OK or NG

OK >> GO TO 5.
NG >> GO TO 4.

4. DETECT MALFUNCTIONING ITEM

1. Remove control valve assembly. Refer to AT-255, "Control Valve Assembly and Accumulators" .
2. Check the following items:
- Overrun clutch control valve
- Overrun clutch reducing valve
- Overrun clutch solenoid valve
3. Disassemble A/T.
4. Check the following items:
- Overrun clutch assembly
- Oil pump assembly

OK or NG

OK >> GO TO 6.
NG >> Repair or replace damaged parts.

5. DETECT MALFUNCTIONING ITEM

1. Remove control valve assembly. Refer to AT-255, "Control Valve Assembly and Accumulators" .
2. Check the following items:
- Overrun clutch control valve
- Overrun clutch reducing valve
- Overrun clutch solenoid valve

OK or NG

OK >> GO TO 6.
NG >> Repair or replace damaged parts.

6. CHECK SYMPTOM

Check again.

OK or NG

OK >> **INSPECTION END**
NG >> GO TO 7.

7. CHECK TCM INSPECTION

1. Perform TCM input/output signal inspection.
2. If NG, recheck TCM pin terminals for damage or loose connection with harness connector.

OK or NG

OK >> **INSPECTION END**
NG >> Repair or replace damaged parts.

16. Vehicle Does Not Start From D1

ECS004VC

SYMPTOM:
Vehicle does not start from D1 on Cruise test — Part 2.

1. CHECK SELF-DIAGNOSTIC RESULTS

Does self-diagnosis show damage to vehicle speed sensor·A/T (revolution sensor), shift solenoid valve A, B or vehicle speed sensor·MTR after cruise test?

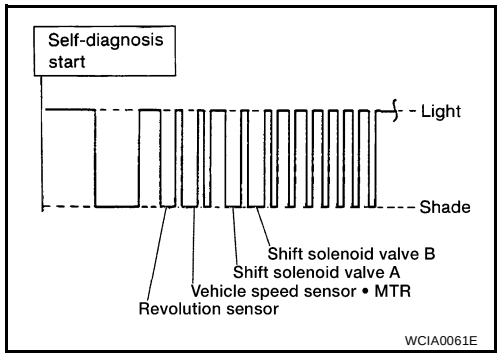

Yes or No

Yes >> Check damaged circuit. Refer to AT-115, "DTC P0720 VEHICLE SPEED SENSOR·A/T (REVOLUTION SENSOR)" , AT-165, "DTC P0750 SHIFT SOLENOID VALVE A" , AT-170, "DTC P0755 SHIFT SOLENOID VALVE B" or AT-196, "DTC VEHICLE SPEED SENSOR MTR" .
No >> GO TO 2.

2. CHECK SYMPTOM

Check again.

OK or NG

OK >> Go to AT-224, "8. Vehicle Cannot Be Started From D1" .
NG >> GO TO 3.

3. CHECK TCM INSPECTION

1. Perform TCM input/output signal inspection.
2. If NG, recheck TCM pin terminals for damage or loose connection with harness connector.

OK or NG

OK >> **INSPECTION END**
NG >> Repair or replace damaged parts.

17. A/T Does Not Shift: D4 → 33 , When A/T Selector Lever D → 3

ECS004VD

SYMPTOM:
A/T does not shift from D4 to 33 when changing A/T selector lever from D → 3 position.

1. CHECK 3 POSITION SWITCH CIRCUIT

With CONSULT-II

Does “TCM INPUT SIGNALS” in “DATA MONITOR” show damage to 3 position switch circuit?

Without CONSULT-II

Does self-diagnosis show damage to 3 position switch circuit?

Yes or No

Yes >> Check 3 position switch circuit. Refer to AT-103, "DTC P0705 PARK/NEUTRAL POSITION SWITCH" .

No >> Go to AT-229, "10. A/T Does Not Shift: $D_2 \rightarrow D_3$" .

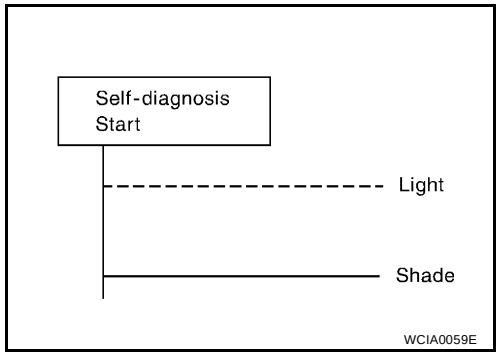

18. A/T Does Not Shift: $3_3 \rightarrow 2_2$, When Selector Lever 3 → 2 Position

ECS004VE

SYMPTOM:

A/T does not shift from 3_3 to 2_2 when changing selector lever from 3 to 2 position.

1. CHECK PARK/NEUTRAL POSITION (PNP) SWITCH CIRCUIT

With CONSULT-II

Does “TCM INPUT SIGNALS” in “DATA MONITOR” show damage to park/neutral position (PNP) switch circuit?

Without CONSULT-II

Does self-diagnosis show damage to park/neutral position (PNP) switch circuit?

Yes or No

Yes >> Check park/neutral position (PNP) switch circuit. Refer to AT-103, "DTC P0705 PARK/NEUTRAL POSITION SWITCH" .

No >> Go to AT-227, "9. A/T Does Not Shift: $D_1 \rightarrow D_2$ or Does Not Kickdown: $D_4 \rightarrow D_2$" .

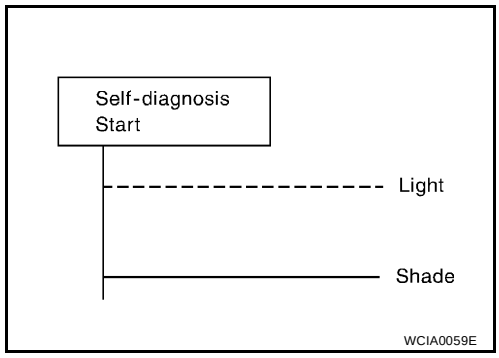

19. A/T Does Not Shift: $2_2 \rightarrow 1_1$, When Selector Lever 2 → 1 Position

ECS004VF

SYMPTOM:

A/T does not shift from 2_2 to 1_1 when changing selector lever from 2 to 1 position.

1. CHECK PARK/NEUTRAL POSITION (PNP) SWITCH CIRCUIT

With CONSULT-II

Does “TCM INPUT SIGNALS” in “DATA MONITOR” show damage to park/neutral position (PNP) switch circuit?

Without CONSULT-II

Does self-diagnosis show damage to park/neutral position (PNP) switch circuit?

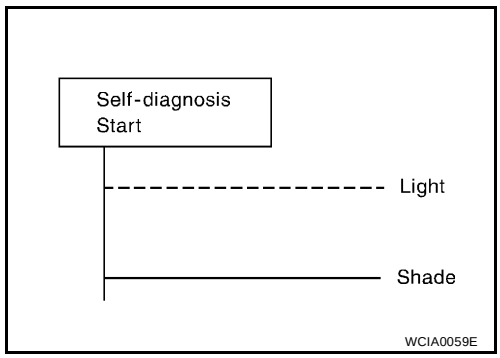

Yes or No

Yes >> Check park/neutral position (PNP) switch circuit. Refer to AT-103, "DTC P0705 PARK/NEUTRAL POSITION SWITCH" .

No >> GO TO 2.

2. CHECK SYMPTOM

Check again.

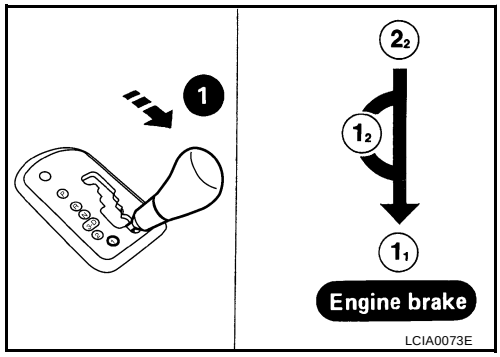

OK or NG

OK >> **INSPECTION END**

NG >> GO TO 3.

3. CHECK TCM INSPECTION

1. Perform TCM input/output signal inspection.
2. If NG, recheck TCM pin terminals for damage or loose connection with harness connector.

OK or NG

OK >> **INSPECTION END**

NG >> Repair or replace damaged parts.

20. Vehicle Does Not Decelerate By Engine Brake

ECS004VG

SYMPTOM:

Vehicle does not decelerate by engine brake when shifting from 2_2 (1_2) to 1_1 .

1. CHECK SYMPTOM

Is “6. Vehicle Does Not Creep Backward In R Position” OK?

Yes or No

Yes >> Go to AT-237, "15. Engine Speed Does Not Return To Idle (Light Braking $D_4 \rightarrow D_3$)" .

No >> Go to AT-219, "6. Vehicle Does Not Creep Backward In R Position" .

21. TCM Self-diagnosis Does Not Activate (PNP & 3 Position Switches Circuit Checks), and Throttle Position Sensor [Accelerator Pedal Position (APP) Sensor] Circuit Check

ECS004VH

SYMPTOM:

A/T check (position) indicator lamp does not come on in TCM self-diagnostic procedure even if the lamp circuit is good.

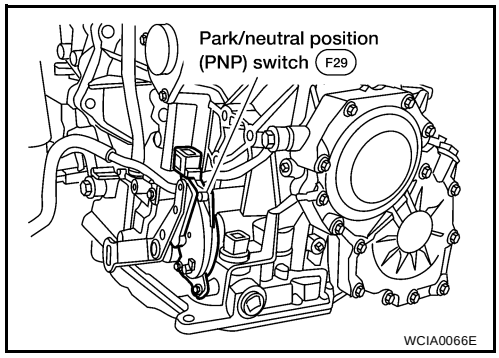

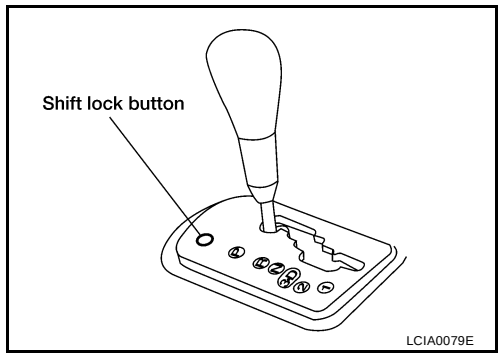

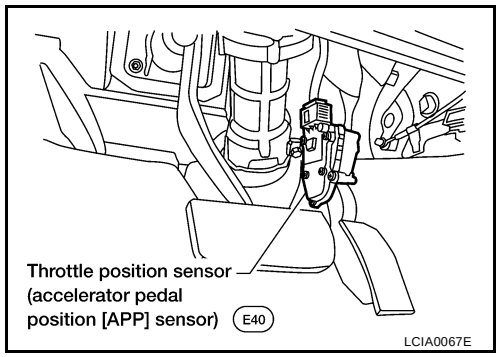

DESCRIPTION

- Park/neutral position (PNP) switch
  The park/neutral (PNP) switch assembly includes a transmission range switch. The transmission range switch detects the selector lever position and sends a signal to the TCM.
- 3 position switch
  Detects the A/T selector lever in 3 position and sends a signal to the TCM.
- Throttle position sensor [accelerator pedal position (APP) sensor]
  The throttle position sensor [accelerator pedal position (APP) sensor] is part of the system that controls the throttle position. This system also uses an electric throttle control actuator, which consists of a throttle control motor and throttle position sensors. Accelerator pedal position signal is sent to the ECM.

DIAGNOSTIC PROCEDURE

NOTE:
The diagnostic procedure includes inspection for the 3 position switch circuit.

1. CHECK PARK/NEUTRAL POSITION (PNP) SWITCH CIRCUIT (WITH CONSULT-II)

With CONSULT-II

1. Turn ignition switch to “ON” position.
   (Do not start engine.)
2. Select “TCM INPUT SIGNALS” in “DATA MONITOR” mode for “A/T” with CONSULT-II.
3. Read out P/N, R, D, 2 and 1 position switches moving selector lever to each position.
   Check that the signal of the selector lever position is indicated properly.

DATA MONITOR	
MONITORING	
PN POSI SW	OFF
R POSITION SW	OFF
D POSITION SW	OFF
2 POSITION SW	ON
1 POSITION SW	OFF

SAT701J

OK or NG

OK >> GO TO 5.
NG >> GO TO 2.

2. DETECT MALFUNCTIONING ITEM

Check the following items:

- Park/neutral position (PNP) switch
  - Check continuity between park/neutral position (PNP) switch F29 terminals 1 (G/R) and 2 (B) and between terminals 3 (G/Y) and 4 (PU/W), 5 (P/B), 6 (G), 7 (BR), 8 (G/W) and 9 (GY/R) while moving manual shaft through each position.

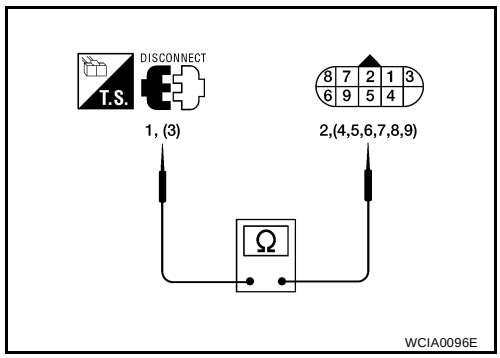

Lever position	Terminal No.	
P	3 - 7	1 - 2
R	3 - 8	
N	3 - 9	1 - 2
D	3 - 6	
2	3 - 5	
1	3 - 4	

  - If NG, check again with manual control cable disconnected from manual shaft of A/T assembly. Refer to step a.
  - If OK on step b, adjust manual control cable. Refer to AT-258, "Control Cable Adjustment" .
  - If NG on step b, remove park/neutral position (PNP) switch from A/T and check continuity of park/neutral position (PNP) switch terminals. Refer to step a.
  - If OK on step d, adjust park/neutral position (PNP) switch. Refer to AT-257, "Park/Neutral Position (PNP) Switch Adjustment" .
  - If NG on step d, replace park/neutral position (PNP) switch.
- Harness for short or open between ignition switch and park/neutral position (PNP) switch (Main harness)
- Harness for short or open between park/neutral position (PNP) switch and TCM (Main harness)

OK or NG

OK >> GO TO 5.
NG >> Repair or replace damaged parts.

3. CHECK PARK/NEUTRAL POSITION (PNP) SWITCH CIRCUIT (WITHOUT CONSULT-II)

Without CONSULT-II

1. Turn ignition switch to ON position. (Do not start engine.)
2. Check voltage between TCM terminals 26 (PU/W), 27 (P/B), 34 (G), 35 (G/W), 36 (R/B) and ground while moving selector lever through each position.

Lever Position	Terminal No.				
	36	35	34	27	26
P, N	B	0	0	0	0
R	0	B	0	0	0
D	0	0	B	0	0
2	0	0	0	B	0
1	0	0	0	0	B

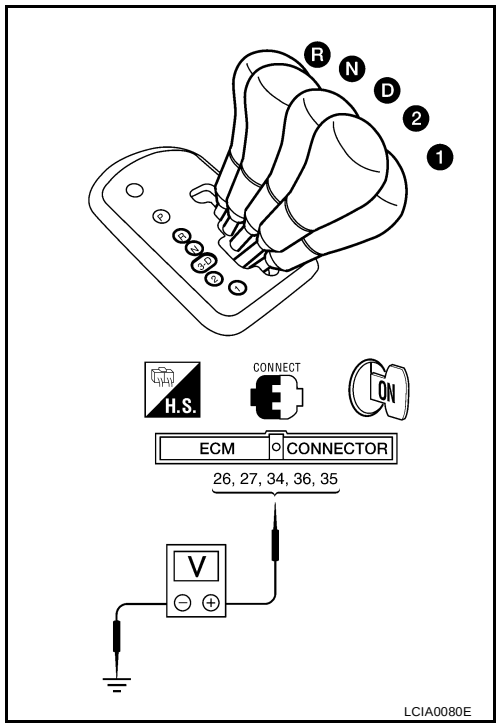

Voltage:

B : Battery voltage

0 : 0V

OK or NG

OK >> GO TO 6.
NG >> GO TO 4.

4. DETECT MALFUNCTIONING ITEM

Check the following items:

- Park/neutral position (PNP) switch
  - Check continuity between park/neutral position (PNP) switch terminals 1 (G/R) and 2 (B), and between terminals 3 (G/Y) and 4 (PU/W), 5 (P/B), 6 (G), 7 (BR), 8 (G/W) and 9 (GY/R) while moving manual shaft through each position.

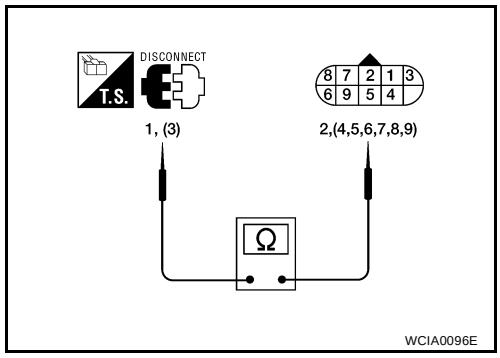

Lever position	Terminal No.	
P	3 - 7	1 - 2
R	3 - 8	
N	3 - 9	1 - 2
D	3 - 6	
2	3 - 5	
1	3 - 4	

  - If NG, check again with manual control cable disconnected from manual shaft of A/T assembly. Refer to step a.
  - If OK on step b, adjust manual control cable. Refer to AT-258, "Control Cable Adjustment" .
  - If NG on step b, remove park/neutral position (PNP) switch from A/T and check continuity of park/neutral position (PNP) switch terminals. Refer to step a.
  - If OK on step d, adjust park/neutral position (PNP) switch. Refer to AT-257, "Park/Neutral Position (PNP) Switch Adjustment" .
  - If NG on step d, replace park/neutral position (PNP) switch.
- Harness for short or open between ignition switch and park/neutral position (PNP) switch (Main harness)
- Harness for short or open between park/neutral position (PNP) switch and TCM (Main harness)

OK or NG

OK >> GO TO 7.
NG >> Repair or replace damaged parts.

5. CHECK 3 POSITION SWITCH CIRCUIT (WITH CONSULT-II)

With CONSULT-II

1. Turn ignition switch to “ON” position.
   (Do not start engine.)
2. Select “TCM INPUT SIGNALS” in “DATA MONITOR” mode for “A/T” with CONSULT-II.
3. Read out “OVERDRIVE SW”.
   Check the signal of the 3 position switch is indicated properly.
   (Overdrive switch “ON” displayed on CONSULT-II means overdrive “OFF”.)

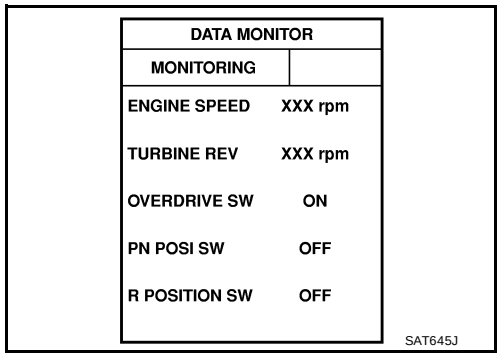

OK or NG

OK >> GO TO 7.
NG >> GO TO 6.

6. DETECT MALFUNCTIONING ITEM

Check the following items:

- 3 position switch M34.
  - Check for continuity between terminals 1 (L/W) and 2 (B) with selector lever in 3 position.
- Harness for short or open between meter and 3 position switch (Main harness)
- Harness of ground circuit for 3 position switch (Main harness) for short or open

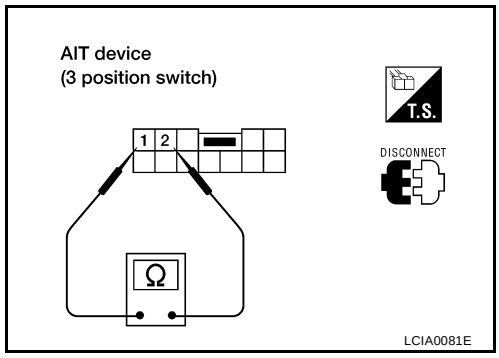

OK or NG

OK >> GO TO 7.
NG >> Repair or replace damaged parts.

7. CHECK THROTTLE POSITION SENSOR [ACCELERATOR PEDAL POSITION (APP) SENSOR]

- Perform throttle position sensor [accelerator pedal position (APP) sensor] inspection. Refer to AT-175, "DTC P1705 THROTTLE POSITION SENSOR [ACCELERATOR PEDAL POSITION (APP) SENSOR]" .

OK or NG

OK >> GO TO 8.
NG >> Repair or replace damaged parts.

8. CHECK TCM INSPECTION

1. Perform TCM input/output inspection. Refer to AT-93, "TCM INSPECTION TABLE"

OK or NG

OK >> **INSPECTION END**
NG >> Inspect TCM terminals and related wiring harnesses for damage or loose connections. Repair or replace damaged parts.

A/T SHIFT LOCK SYSTEM

PFP:34950

Description

ECS004VI

- The mechanical key interlock mechanism also operates as a shift lock:
  With the key switch turned to ON, the selector lever cannot be shifted from “P” (parking) to any other position unless the brake pedal is depressed.
  With the key removed, the selector lever cannot be shifted from “P” to any other position.
  The key cannot be removed unless the selector lever is placed in “P”.
- The shift lock and key interlock mechanisms are controlled by the ON-OFF operation of the shift lock solenoid and by the operation of the rotator and slider located inside the key cylinder.

Shift Lock System Electrical Parts Location

ECS004VJ

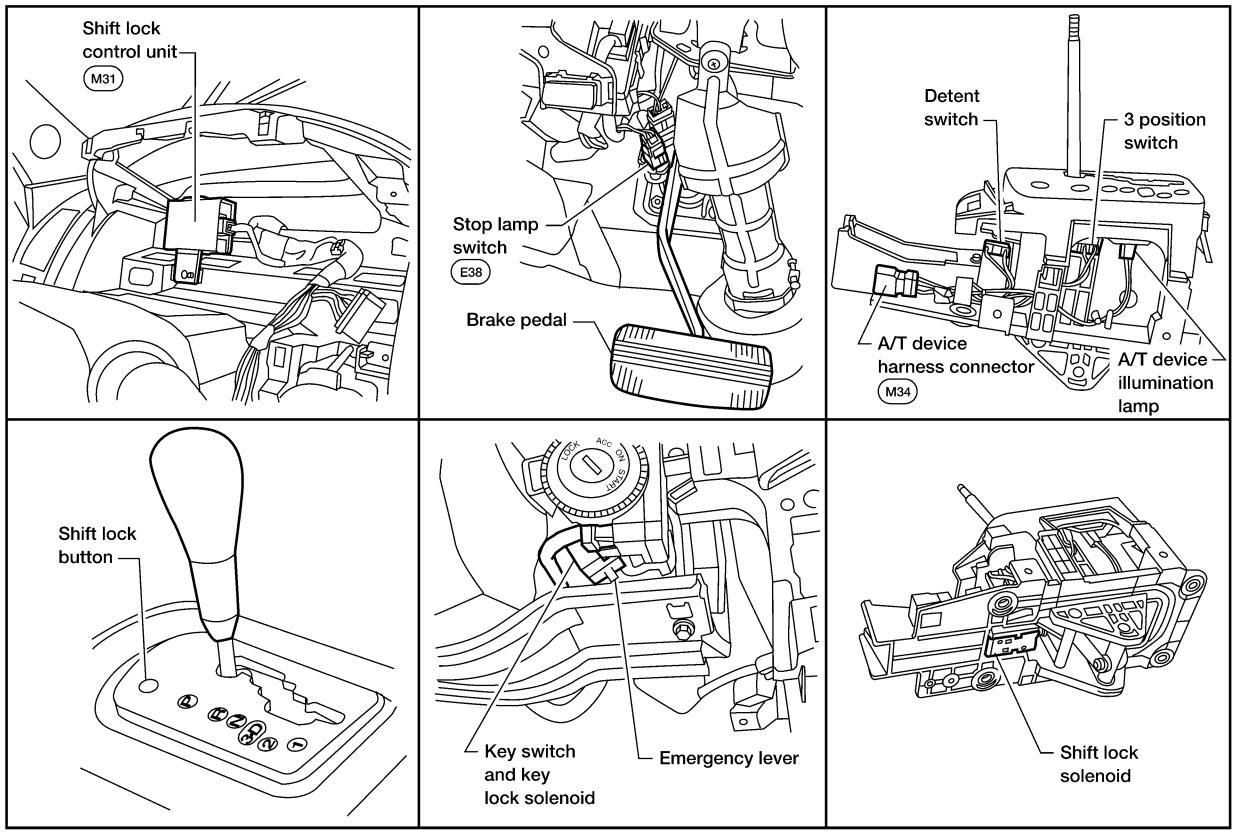

LCIA0082E

Wiring Diagram — SHIFT —

ECS004VK

AT-SHIFT-01

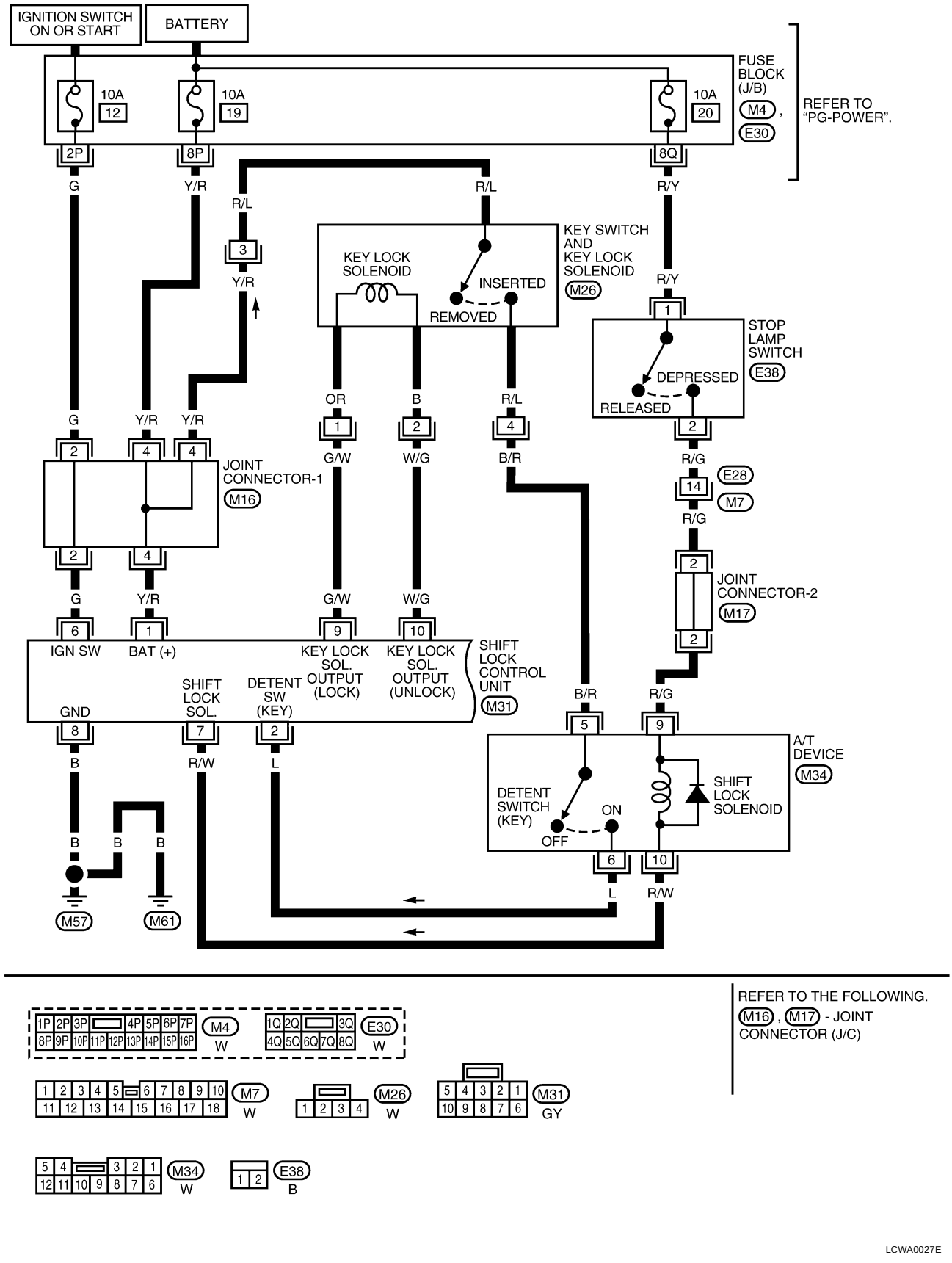

LCWA0027E

AT-SHIFT-02

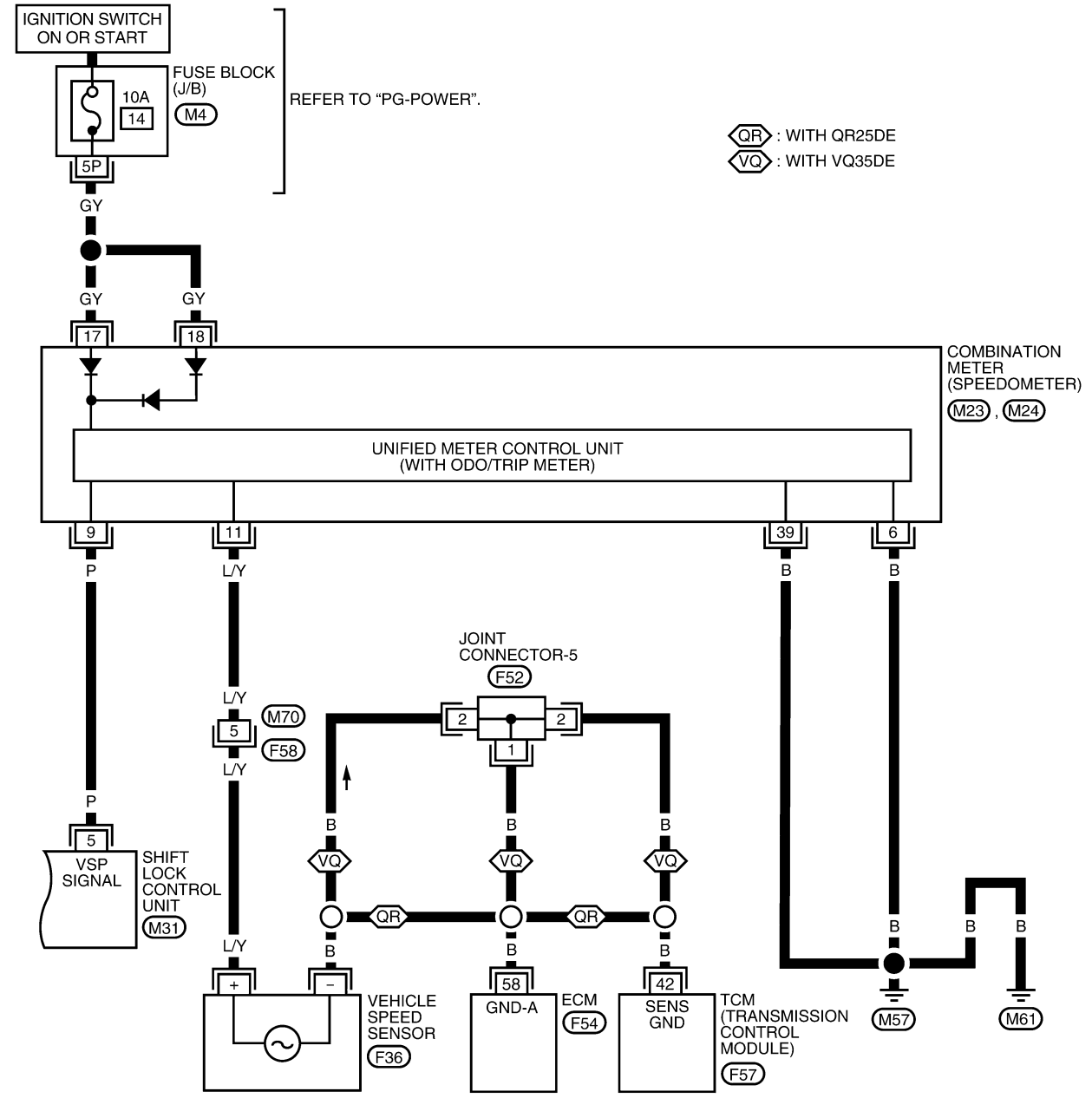

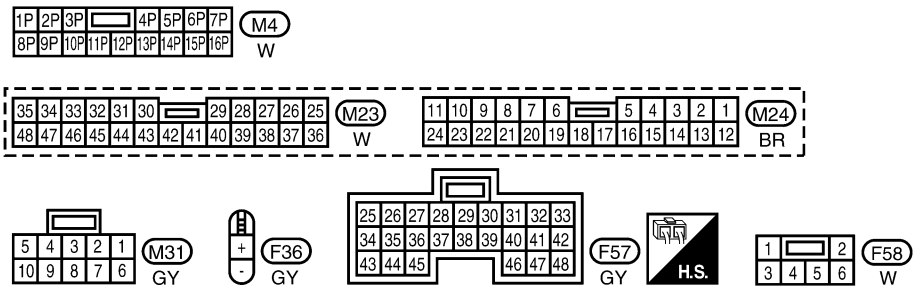

REFER TO THE FOLLOWING.
F51 - ELECTRICAL UNITS
F52 - JOINT CONNECTOR (J/C)

LCWA0028E

Shift Lock Control Unit Reference Values

ECS004VL

SHIFT LOCK HARNESS CONNECTOR TERMINAL LAYOUT

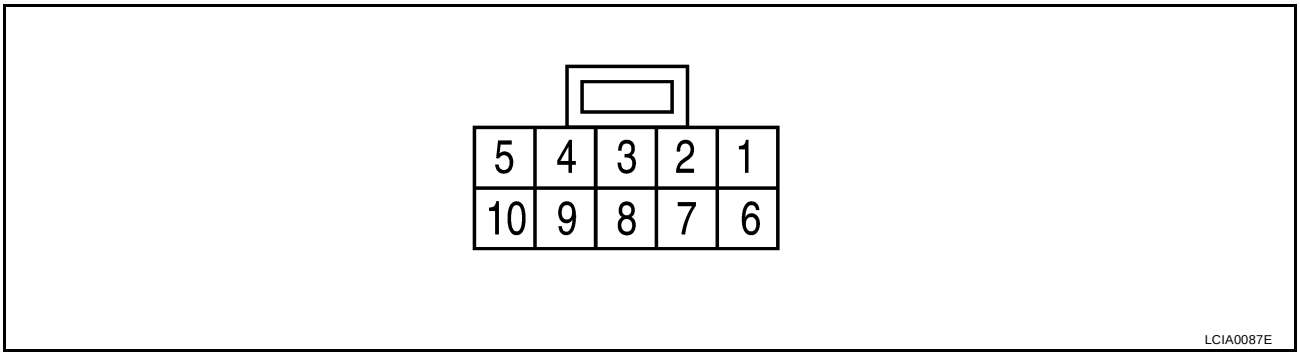

SHIFT LOCK CONTROL UNIT INSPECTION TABLE

Data are reference values.

Terminal No. (+)	Terminal No. (-)	Item	Condition	Judgement standard
1	8	Power source	IGN SW: “ON”	Battery voltage
			IGN SW: “OFF”	
2	8	Detent SW (key)	The position when the key is inserted and the selector lever is set to a position other than the “P” position	Battery voltage
			Except the above	Approx. 0V
6	8	IGN Signal	IGN SW: “ON”	Battery voltage
			IGN SW: “OFF”	Approx. 0V
7	8	Shift Lock Solenoid	When the brake pedal is depressed	Battery voltage
			IGN SW: "ON" and vehicle speed is less than 8 km/h (5 mph)	Approx. 0V
8	-	Ground	IGN SW: “ON”	Approx. 0V
9	8	Key Lock Signal	When the selector lever is set to a position other than the “P” position	-12V for approx. 30 ms
			Except the above	Approx. 0V
10	8	Key Unlock Signal	When the selector lever is set to the“ P” position	Battery voltage for approx. 150 ms
			Except the above	Approx. 0V

CAUTION:

Confirm that the pointer swings only momentarily because the output time is so short. If the inspection is done with an oscilloscope, it should be observed that the power source voltage lasts for 3.5 to 10 ms.

Component Inspection

ECS004VM

SHIFT LOCK SOLENOID

- Check operation by applying battery voltage to A/T device connector.

CAUTION:

Be sure to apply the voltage of the correct polarity to the respective terminals. Otherwise, the part may be damaged.

Connector No.	Terminal No.
M34	9 (Battery voltage) - 10 (Ground)

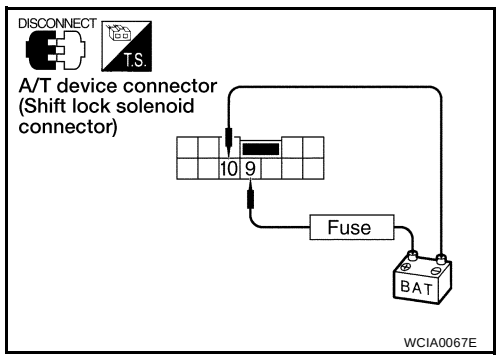

DETENT SWITCH

For Key:

- Check continuity between terminals of the A/T device connector.

Condition	Connector No.	Terminal No.	Continuity
The position when the selector lever is set to a position other than the “P” position, or when it is shifted from the “R” to the “P” position	M34	5 - 6	Yes
Except the above			No

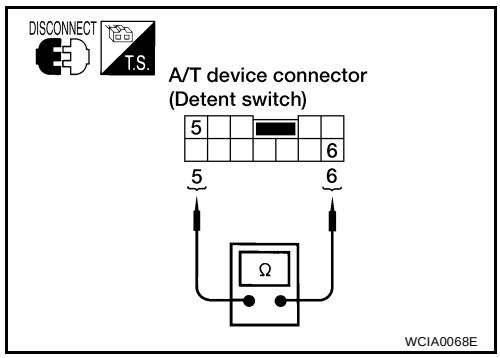

KEY LOCK SOLENOID

Key Lock

- Check operation by applying battery voltage to key switch and key lock solenoid connector.

CAUTION:
Be careful not to cause burnout of the harness.

Connector No.	Terminal No.
M26	1 (Battery voltage) - 2 (Ground)

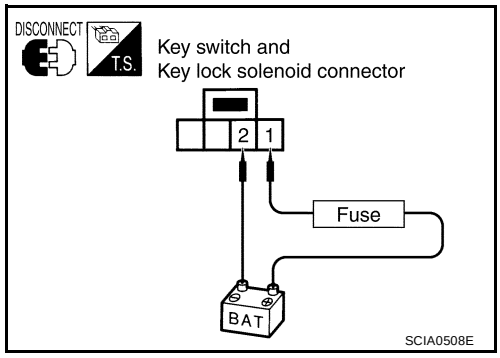

Key Unlock

- Check operation by applying battery voltage to key switch and key lock solenoid connector.

CAUTION:
Be careful not to cause burnout of the harness.

Connector No.	Terminal No.
M26	2 (Battery voltage) - 1 (Ground)

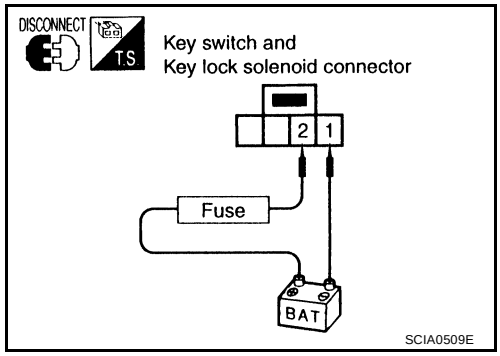

KEY SWITCH

- Check continuity between terminals of the key switch and key lock solenoid connector.

Condition	Connector No.	Terminal No.	Continuity
Key inserted	M26	3 - 4	Yes
Key removed			No

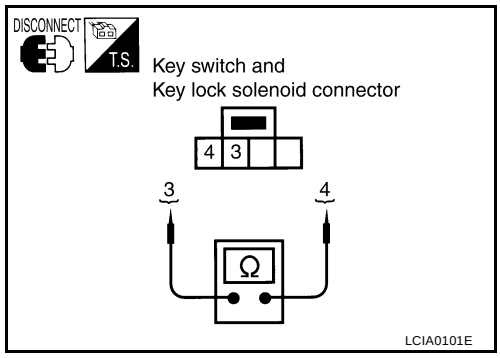

STOP LAMP SWITCH

- Check continuity between terminals of the stop lamp switch connector.

Condition	Connector No.	Terminal No.	Continuity
When brake pedal is depressed	E38	1 - 2	Yes
When brake pedal is released			No

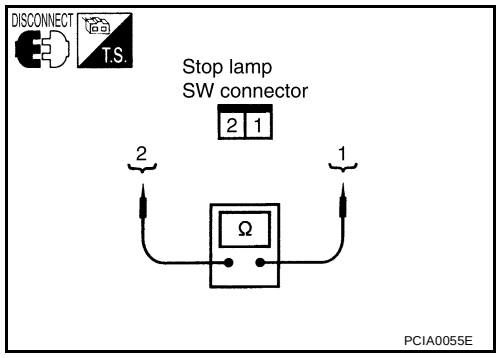

Check stop lamp switch after adjusting brake pedal. Refer to BR-6, "Inspection and Adjustment" .

SHIFT CONTROL SYSTEM

PFP:34901

Control Device

ECS004VN

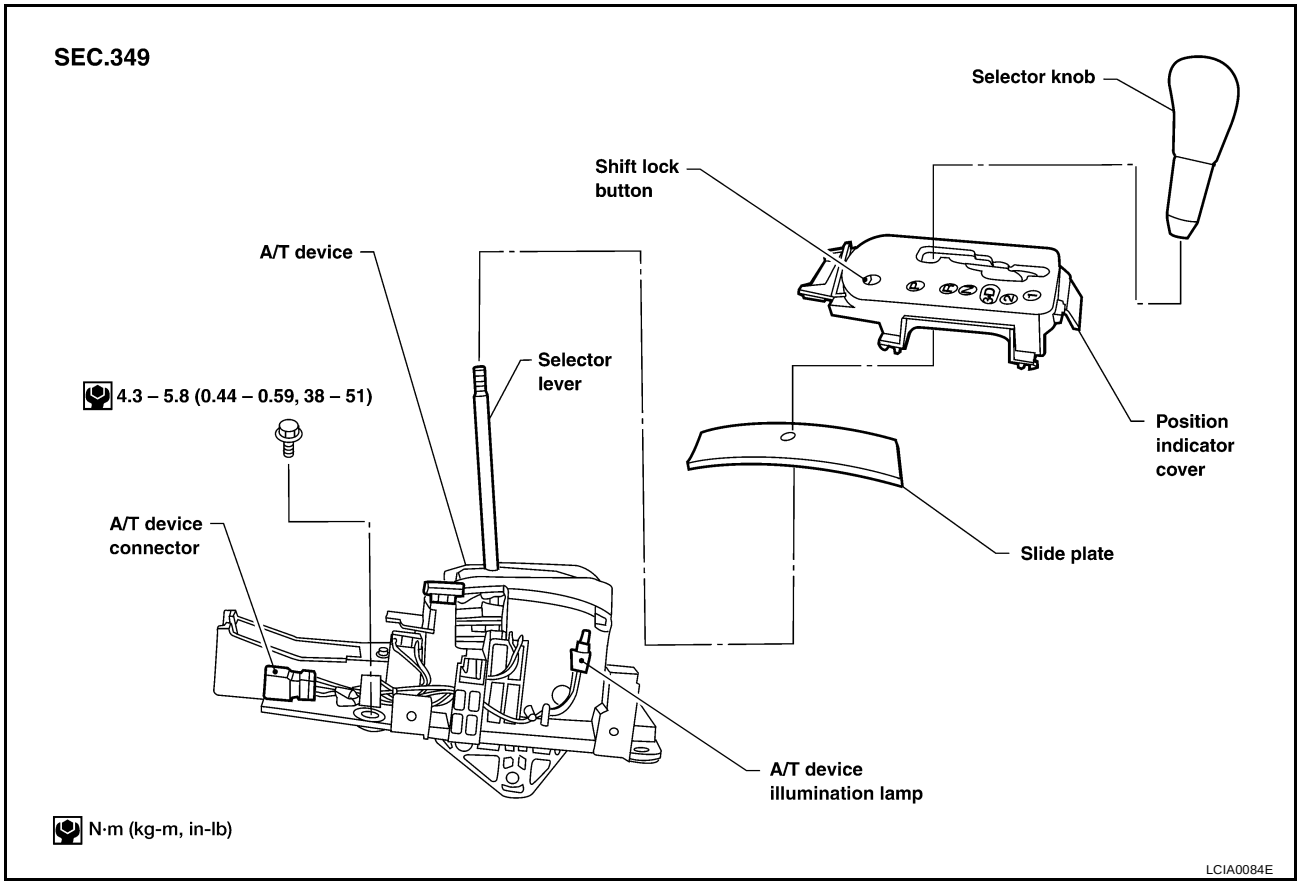

Control Cable

ECS004VO

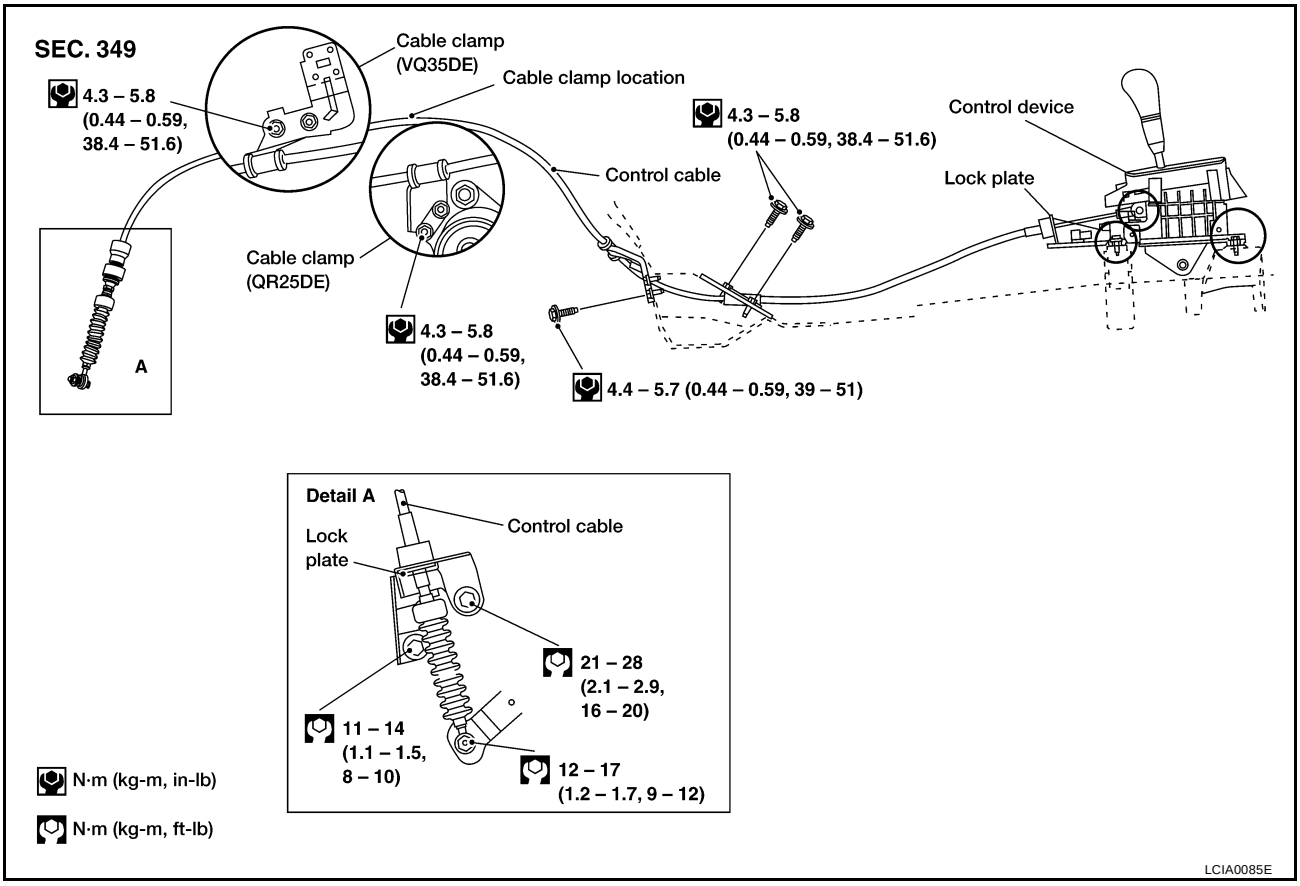

ON-VEHICLE SERVICE

PFP:00000

Control Valve Assembly and Accumulators

ECS004VP

REMOVAL

1. Drain ATF from transaxle.
2. Remove oil pan using power tools, and gasket.
   - Do not reuse oil pan bolts.

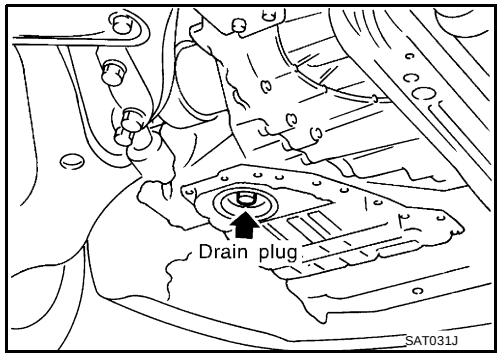

3. Disconnect terminal cord assembly harness connector.

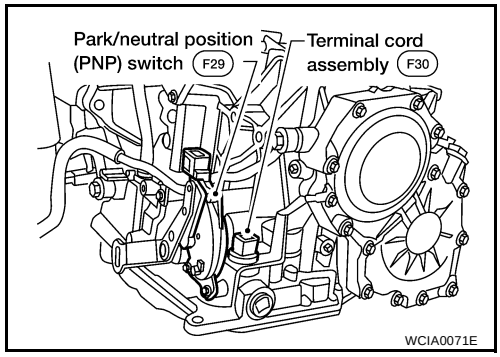

4. Remove stopper ring from terminal cord assembly harness terminal body.
5. Remove terminal cord assembly harness from transmission case by pushing on terminal body.

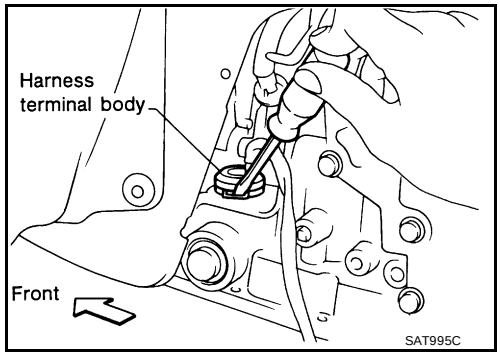

6. Remove control valve assembly by removing fixing bolts **I** , **X** and ●.

Bolt length, number and location are shown in the illustration.

- **Be careful not to drop manual valve and servo release accumulator return spring.**

7. Disassemble and inspect control valve assembly if necessary. Refer to AT-290, "Control Valve Assembly" .

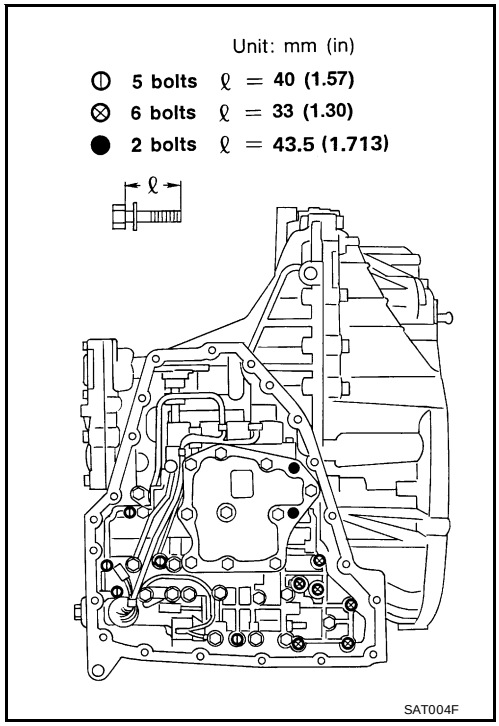

8. Remove servo release and N-D accumulators by applying compressed air if necessary.
   - **Hold each piston with a rag.**

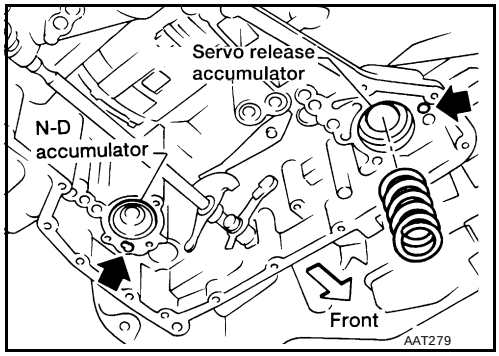

INSTALLATION

- **Set manual shaft in Neutral, then align manual plate with groove in manual valve.**
- **After installing control valve assembly, make sure that selector lever can be moved to all positions.**

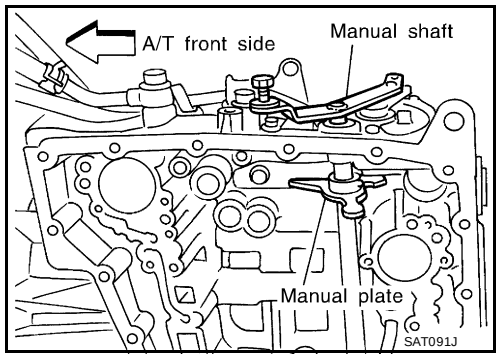

Revolution Sensor Replacement

ECS004VQ

1. Disconnect electrical connector.
2. Remove revolution sensor from A/T.
3. Reinstall any part removed.
   - **Always use new sealing parts.**

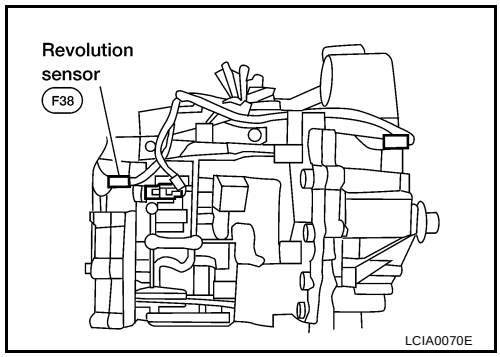

Turbine Revolution Sensor Replacement

ECS004VR

1. Disconnect electrical connector.
2. Remove bolt, and turbine revolution sensor from A/T.
3. Reinstall any part removed.
   - **Always use new sealing parts.**

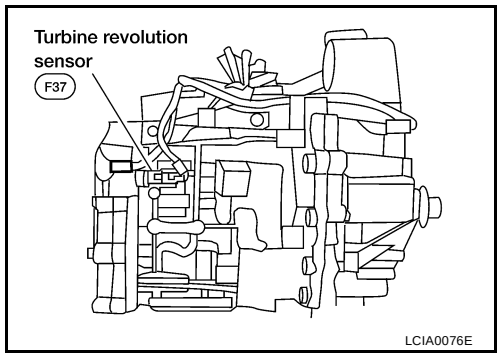

Park/Neutral Position (PNP) Switch Adjustment

ECS004VS

1. Remove control cable from manual shaft.
2. Set manual shaft in N position.
3. Loosen park/neutral position (PNP) switch fixing bolts.

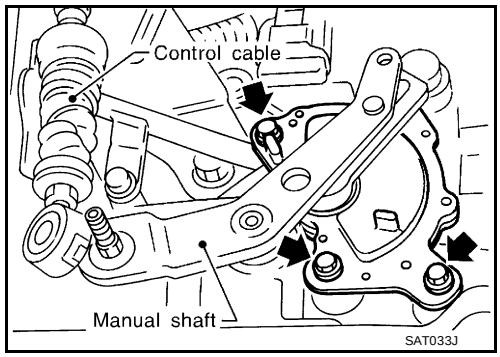

4. Insert pin into adjustment holes in both park/neutral position (PNP) switch and manual shaft as near vertical as possible.
5. Reinstall any part removed.
6. Check continuity of park/neutral position (PNP) switch. Refer to AT-106, "Diagnostic Procedure" .

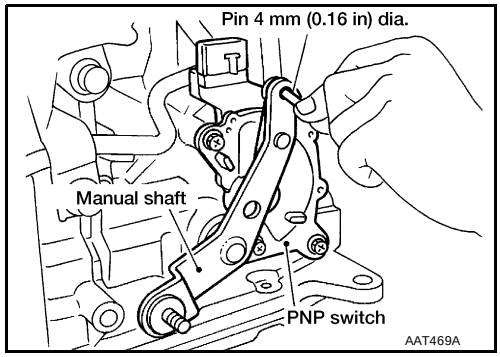

Control Cable Adjustment

ECS004VT

Move selector lever from the P position to the 1 position. You should be able to feel the detent in each position. If the detent cannot be felt or the pointer indicating the position is improperly aligned, the control cable needs adjustment.

1. Place selector lever in the P position.

   CAUTION:
   Turn wheels more than 1/4 rotations and apply the park lock.
2. Loosen control cable lock nut.
3. Secure the manual lever.
4. Using the specified force, push the control cable in the direction of the arrow shown in the illustration.

   Specified force : 9.8 N (1.0 kg, 2.2 lb)
5. Tighten control cable lock nut.
6. Move selector lever from P to 1 position. Make sure that selector lever moves smoothly.
   - **Make sure that the starter operates when the selector lever is placed in the N or P position.**
   - **Make sure that the transmission is locked properly when the selector lever is placed in the P position.**

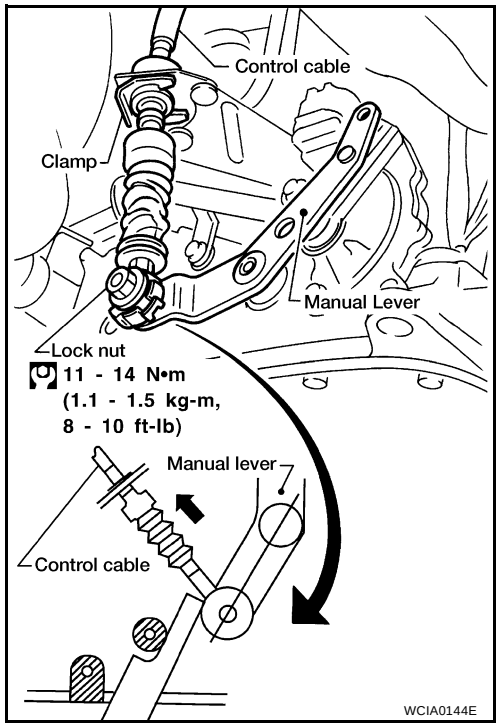

Differential Side Oil Seal Replacement

ECS004VU

1. Remove drive shaft assembly. Refer to FAX-11, "FRONT DRIVE SHAFT" .
2. Remove oil seal.

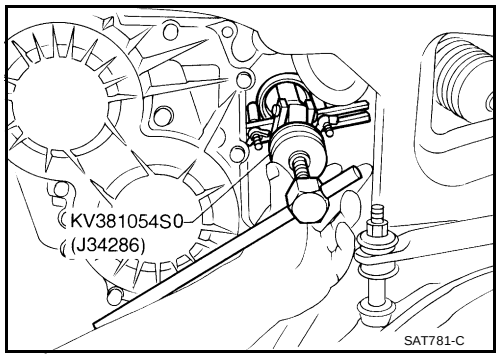

3. Install oil seal.
   - **Apply ATF before installing.**

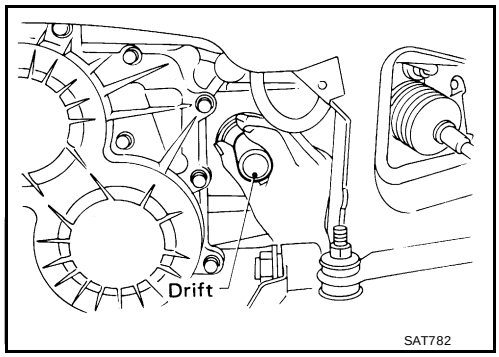

- **Install oil seals so dimension A is within specification**

  A : –0.5 mm (–0.02 in) to 0.5 mm (0.02 in)

4. Reinstall any part removed.

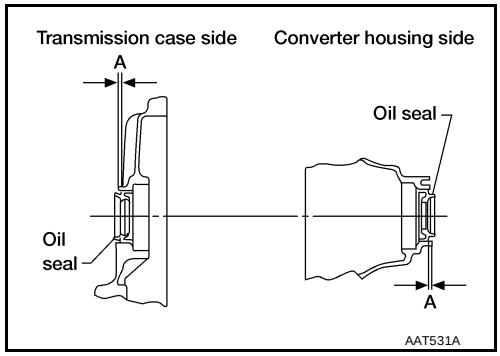

REMOVAL AND INSTALLATION

PFP:00000

Removal

ECS004VV

CAUTION:
When removing the transaxle assembly from engine, first remove the crankshaft position sensor from the assembly (with VQ35DE).
Be careful not to damage sensor edge.

1. Remove battery and bracket and tray.
2. Remove air cleaner assembly, refer to EM-14, "Removal and Installation" (with QR25DE), or EC-991, "CONSULT-II Reference Value in Data Monitor Mode" (with VQ35DE).
3. Disconnect terminal cord assembly harness connector and park/neutral position (PNP) switch harness connectors.
4. Disconnect harness connectors of revolution sensor, ground, vehicle speed sensor, mass air flow sensor, and turbine revolution sensor.
5. Remove crankshaft position sensor from transaxle (with VQ35DE).
6. Remove LH mounting bracket from transaxle and body.
7. Remove rear engine mount through bolt.
8. Disconnect control cable at transaxle side.
9. Remove drive shafts. Refer to FAX-11, "FRONT DRIVE SHAFT" .
10. Drain ATF.
11. Remove push clips and engine undercover.
12. Disconnect fluid cooler piping at radiator.
13. Remove starter motor from transaxle refer to SC-23, "Removal and Installation" .

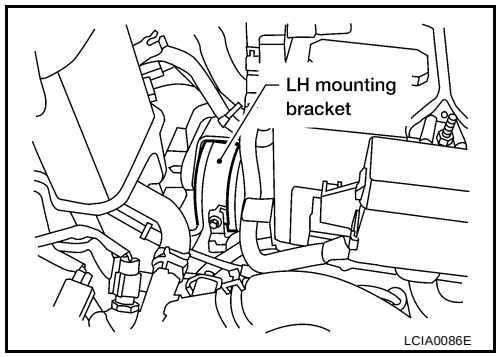

14. Support engine.
15. Remove upper transaxle to engine bolts.
16. Remove front suspension member, refer to FSU-14, "Removal and Installation" .
17. Remove rear cover plate and bolts securing torque converter to drive plate.
    - **Rotate crankshaft for access to securing bolts.**

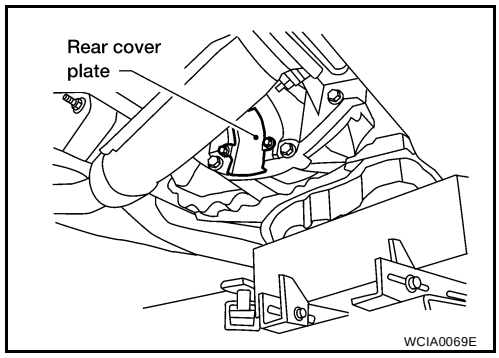

18. Support transaxle with a jack.
19. Remove lower transaxle to engine bolts.
20. Lower transaxle while supporting it with a jack.

Installation

ECS004VW

- Drive plate runout

  CAUTION:
  Do not allow any magnetic materials to contact the ring gear teeth.

  Maximum allowable runout:

  Refer to EM-91, "SERVICE DATA AND SPECIFICATIONS (SDS)" (with QR25DE).

  Refer to EM-206, "SERVICE DATA AND SPECIFICATIONS (SDS)" (with VQ35DE).

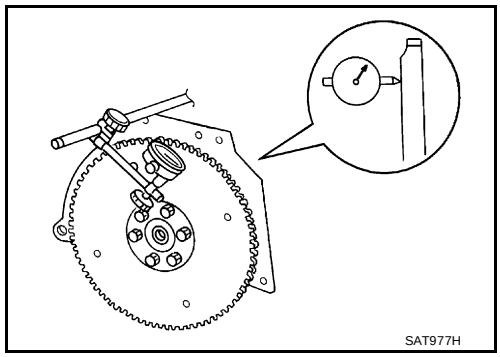

- If this runout is out of allowance, replace drive plate and ring gear.
- When connecting torque converter to transaxle, measure distance “A” to be certain that they are correctly assembled.

  Distance “A” : 14 mm (0.55 in) or more

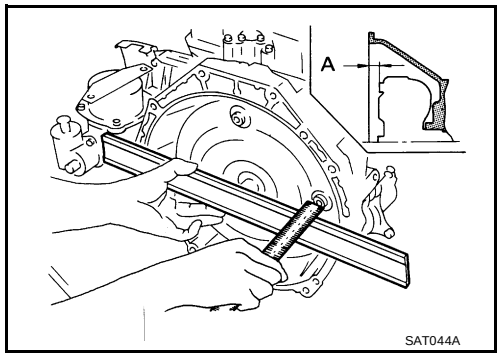

- Install bolts fixing converter to drive plate.
- **With converter installed, rotate crankshaft several turns to check that transaxle rotates freely without binding.**

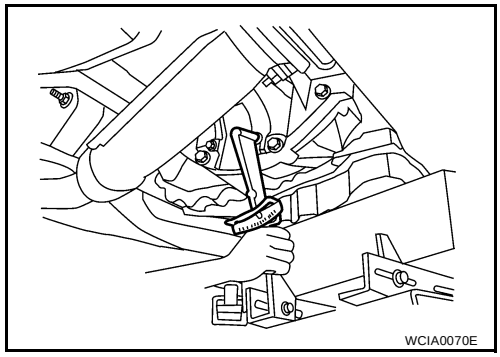

- Tighten bolts securing transaxle.
- Tighten LH mounting bracket bolts to the specified torque. Refer to EM-63, "Removal and Installation" (with QR25DE), or EC-1009, "Diagnostic Procedure" (with VQ35DE).
- Tighten front suspension member bolts to the specified torque. Refer to FSU-14, "FRONT SUSPENSION MEMBER" .
- Tighten rear plate cover bolts to the specified torque. Refer to AT-263, "OVERHAUL" .

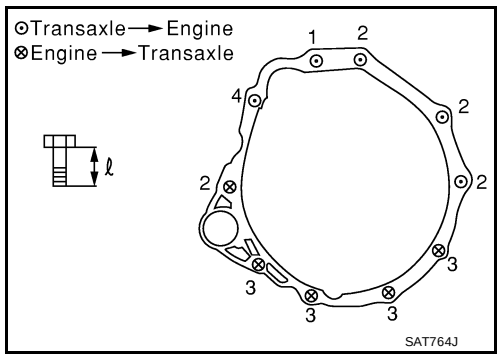

Bolt No.	Tightening torque N-m (kg-m, ft-lb)	l mm (in)
1	70 - 79 (7.1 - 8.1, 52 - 58)	65 (2.56)
2	70 - 79 (7.1 - 8.1, 52 - 58)	52 (2.05)
3	70 - 79 (7.1 - 8.1, 52 - 58)	40 (1.57)
4	78 - 98 (7.9 - 10.0, 58 - 72)	124 (4.88)

- Reinstall any part removed.
- Reconnect electrical connectors.

- Check fluid level in transaxle.
- Move selector lever through all positions to be sure that transaxle operates correctly.
  With parking brake applied, rotate engine at idling. Move selector lever through N to D, to 2, to 1 and to R position. A slight shock should be felt by hand gripping selector each time transaxle is shifted.
- Perform road test. Refer to AT-66, "Road Test" .

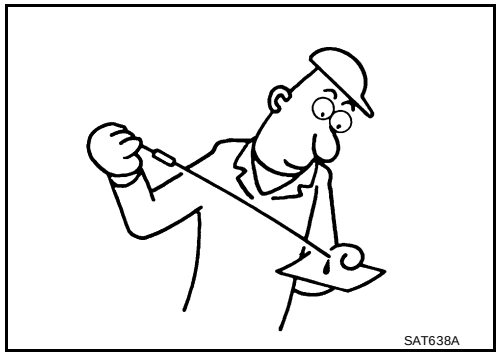

OVERHAUL

PFP:00000

Components

ECS004VX

SEC. 311•313•327•381

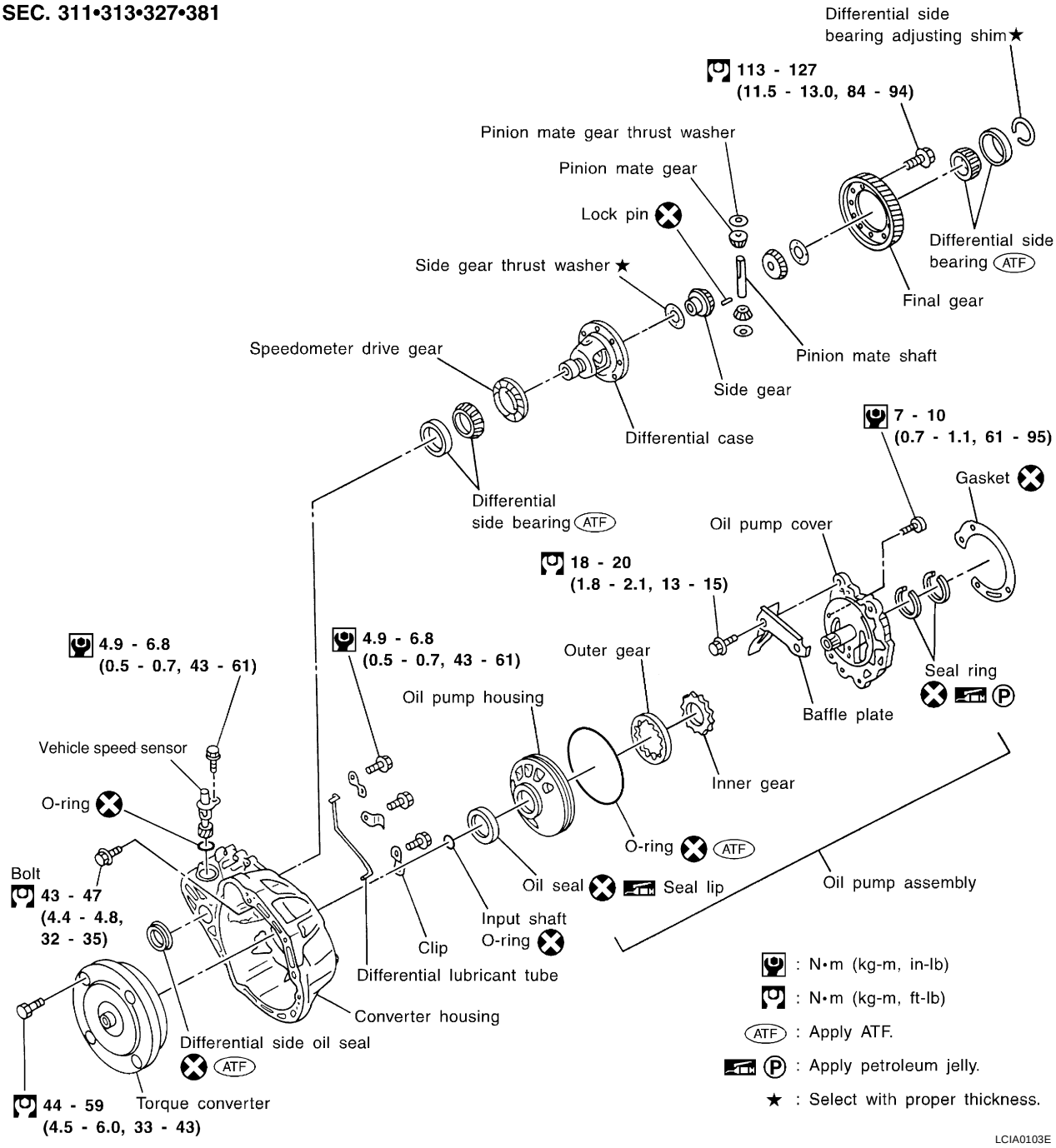

SEC. 315

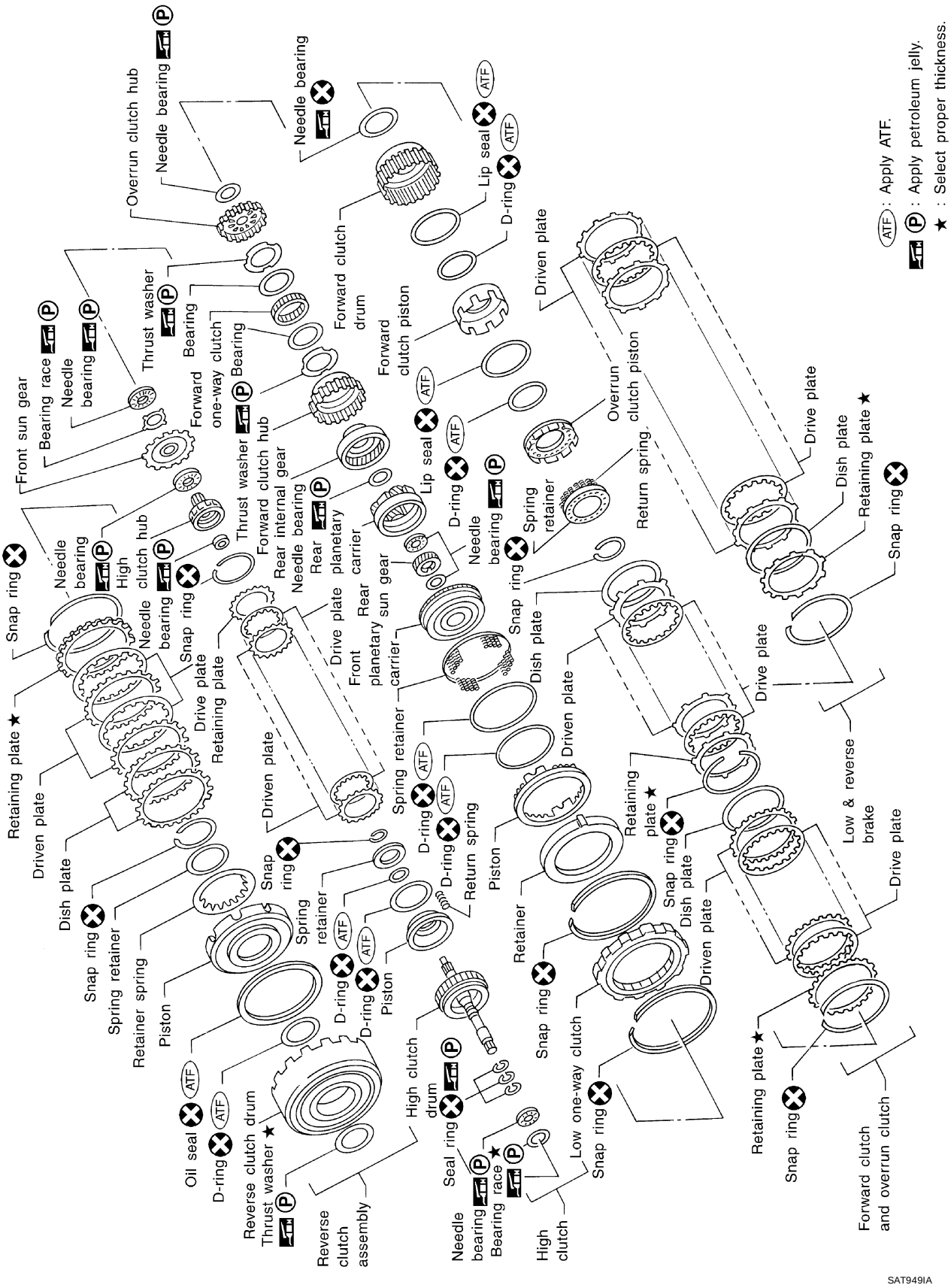
Overrun clutch hub
Needle bearing
Needle bearing
Lip seal
D-ring
Forward clutch drum
Forward clutch piston
Driven plate
Thrust washer
Bearing
Forward one-way clutch
Bearing
Front sun gear
Bearing race
Needle bearing
Thrust washer
Forward clutch hub
Rear internal gear
Needle bearing
Rear planetary carrier
Lip seal
D-ring
Needle bearing
Spring retainer
Overrun clutch piston
Return spring
Drive plate
Dish plate
Retaining plate
Snap ring
Needle bearing
High clutch hub
Needle bearing
Snap ring
Snap ring
Drive plate
Retaining plate
Rear sun gear
Front planetary carrier
Snap ring
Dish plate
Driven plate
Drive plate
Retaining plate
Driven plate
Spring retainer
D-ring
D-ring
Return spring
Piston
Retaining plate
Snap ring
Dish plate
Driven plate
Low & reverse brake
Drive plate
Driven plate
Dish plate
Snap ring
Spring retainer
Retainer spring
Piston
Snap ring
Spring retainer
D-ring
D-ring
Piston
Retainer
Snap ring
Driven plate
Oil seal
D-ring
Reverse clutch drum
Thrust washer
Reverse clutch assembly
High clutch drum
Seal ring
Needle bearing
Bearing race
High clutch
Low one-way clutch
Snap ring
Retaining plate
Snap ring
Forward clutch and overrun clutch
: Apply ATF.
: Apply petroleum jelly.
: Select proper thickness.
SAT949IA

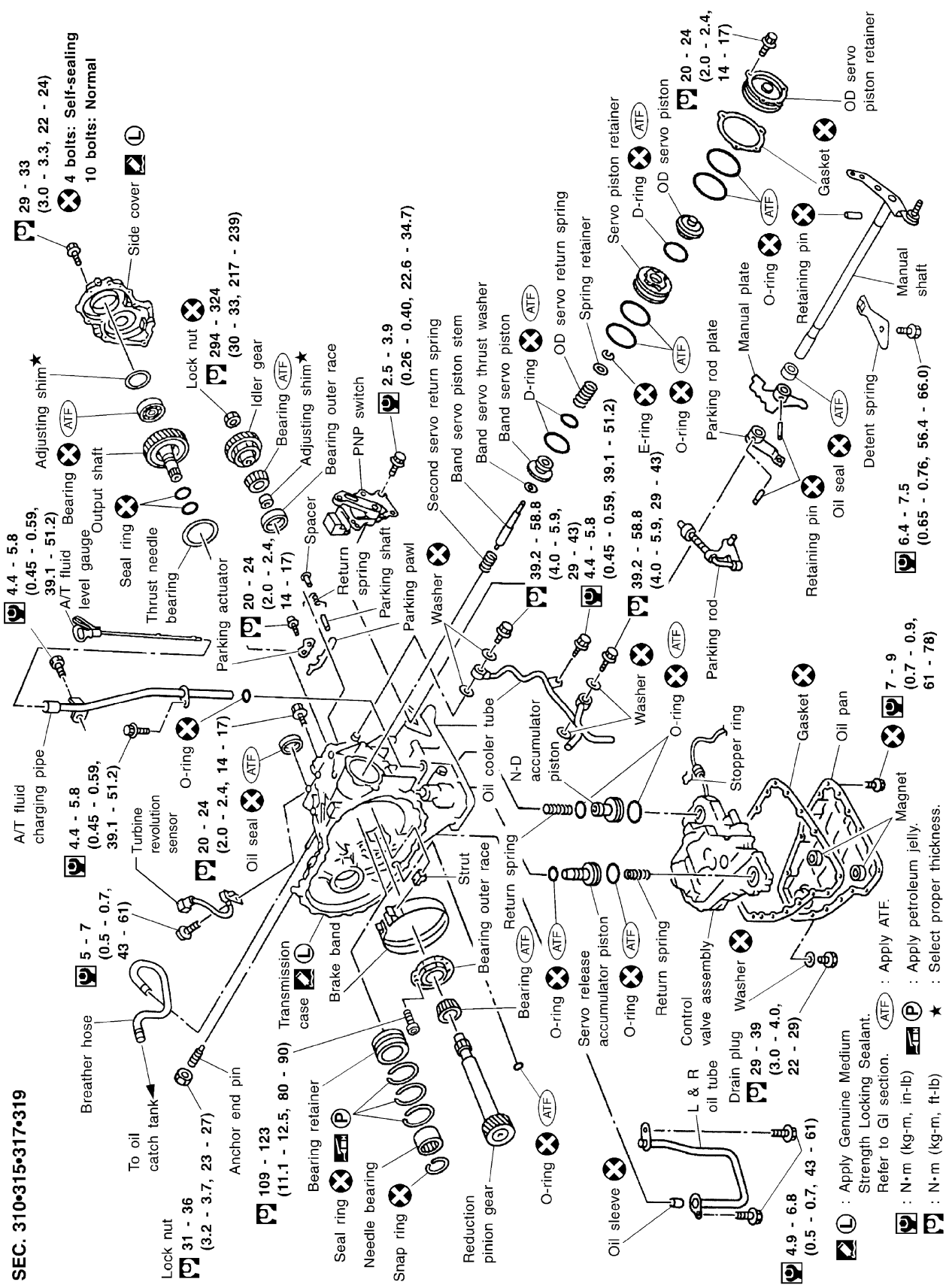
SEC. 310•315•317•319
29 - 33 (3.0 - 3.3, 22 - 24)
4 bolts: Self-sealing
10 bolts: Normal
Side cover
Adjusting shim
Bearing
Output shaft
Seal ring
Thrust needle bearing
Lock nut
294 - 324 (30 - 33, 217 - 239)
Idler gear
Bearing
Adjusting shim
Bearing outer race
PNP switch
2.5 - 3.9 (0.26 - 0.40, 22.6 - 34.7)
Second servo return spring
Band servo piston stem
Band servo thrust washer
Band servo piston
D-ring
OD servo return spring
Spring retainer
Servo piston retainer
D-ring
OD servo piston
20 - 24 (2.0 - 2.4, 14 - 17)
OD servo piston retainer
Gasket
Retaining pin
O-ring
Manual plate
Manual shaft
Detent spring
Oil seal
Retaining pin
6.4 - 7.5 (0.65 - 0.76, 56.4 - 66.0)
E-ring
O-ring
Parking rod plate
Parking rod
39.2 - 58.8 (4.0 - 5.9, 29 - 43)
4.4 - 5.8 (0.45 - 0.59, 39.1 - 51.2)
Washer
O-ring
Stopper ring
Gasket
Oil pan
7 - 9 (0.7 - 0.9, 61 - 78)
Magnet
4.4 - 5.8 (0.45 - 0.59, 39.1 - 51.2)
A/T fluid level gauge
A/T fluid charging pipe
Parking actuator
20 - 24 (2.0 - 2.4, 14 - 17)
Spacer
Return spring
Parking shaft
Parking pawl
Washer
Oil cooler tube
N-D accumulator piston
Return spring
Servo release accumulator piston
O-ring
Return spring
Control valve assembly
Washer
Drain plug
29 - 39 (3.0 - 4.0, 22 - 29)
L & R oil tube
4.9 - 6.8 (0.5 - 0.7, 43 - 61)
Oil sleeve
O-ring
Bearing
Bearing outer race
Strut
Brake band
Transmission case
Reduction pinion gear
Needle bearing
Snap ring
Seal ring
Bearing retainer
109 - 123 (11.1 - 12.5, 80 - 90)
Anchor end pin
Breather hose
To oil catch tank
Lock nut
31 - 36 (3.2 - 3.7, 23 - 27)
5 - 7 (0.5 - 0.7, 43 - 61)
Turbine revolution sensor
4.4 - 5.8 (0.45 - 0.59, 39.1 - 51.2)
O-ring
20 - 24 (2.0 - 2.4, 14 - 17)
Oil seal
: Apply Genuine Medium Strength Locking Sealant. Refer to GI section.
: Apply ATF.
: Apply petroleum jelly.
: Select proper thickness.
: N•m (kg-m, in-lb)
: N•m (kg-m, ft-lb)
LCIA0104E

Oil Channel

ECS004VY

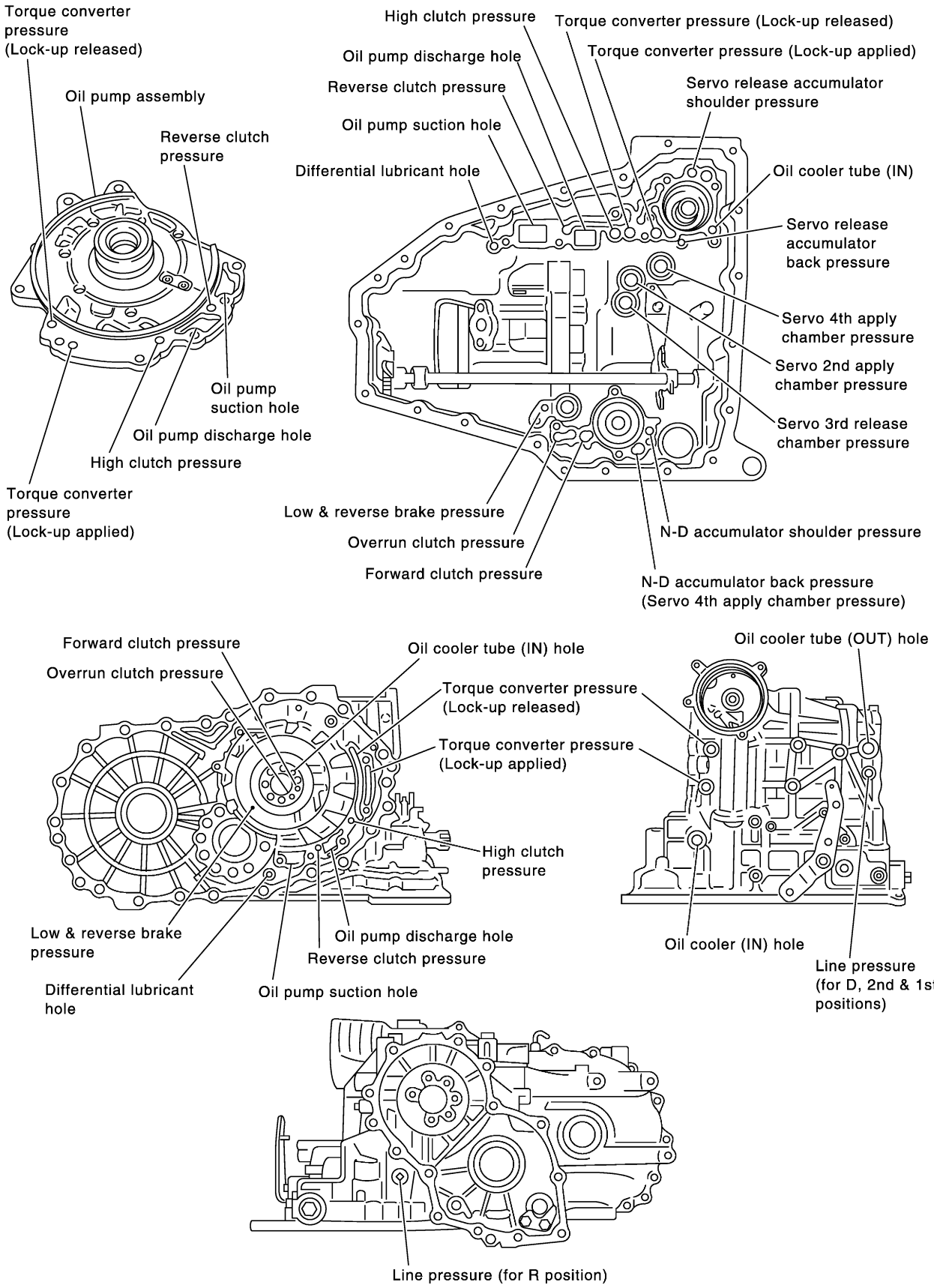

Locations of Adjusting Shims, Needle Bearings, Thrust Washers and Snap Rings

ECS004VZ

Outer diameter of thrust washers

Item number	Outer diameter mm (in)	Parts number*
Ⓙ★	76.0 (2.992)	31508 80X13 - 31508 80X20
Ⓚ★	80.0 (3.150)	31438 80X60 - 31438 80X70

Outer and inner diameter of needle bearings

Item number	Outer diameter mm (in)	Inner diameter mm (in)	Parts number*
Ⓐ	50.0 (1.969)	35.1 (1.382)	31407 80X10
Ⓑ	42.0 (1.654)	23.7 (0.933)	31407 80X01
Ⓒ	70.0 (2.756)	50.0 (1.969)	31407 80X09
Ⓓ	51.0 (2.008)	33.1 (1.303)	31407 80X02
Ⓔ	48.0 (1.890)	30.0 (1.181)	31407 80X03
Ⓕ	50.0 (1.969)	35.1 (1.382)	31407 80X10
Ⓖ	56.5 (2.224)	38.5 (1.516)	31407 80X08
Ⓗ	87.0 (3.425)	69.0 (2.717)	31407 80X07
Ⓘ	108.0 (4.252)	85.15 (3.3524)	31407 80X06

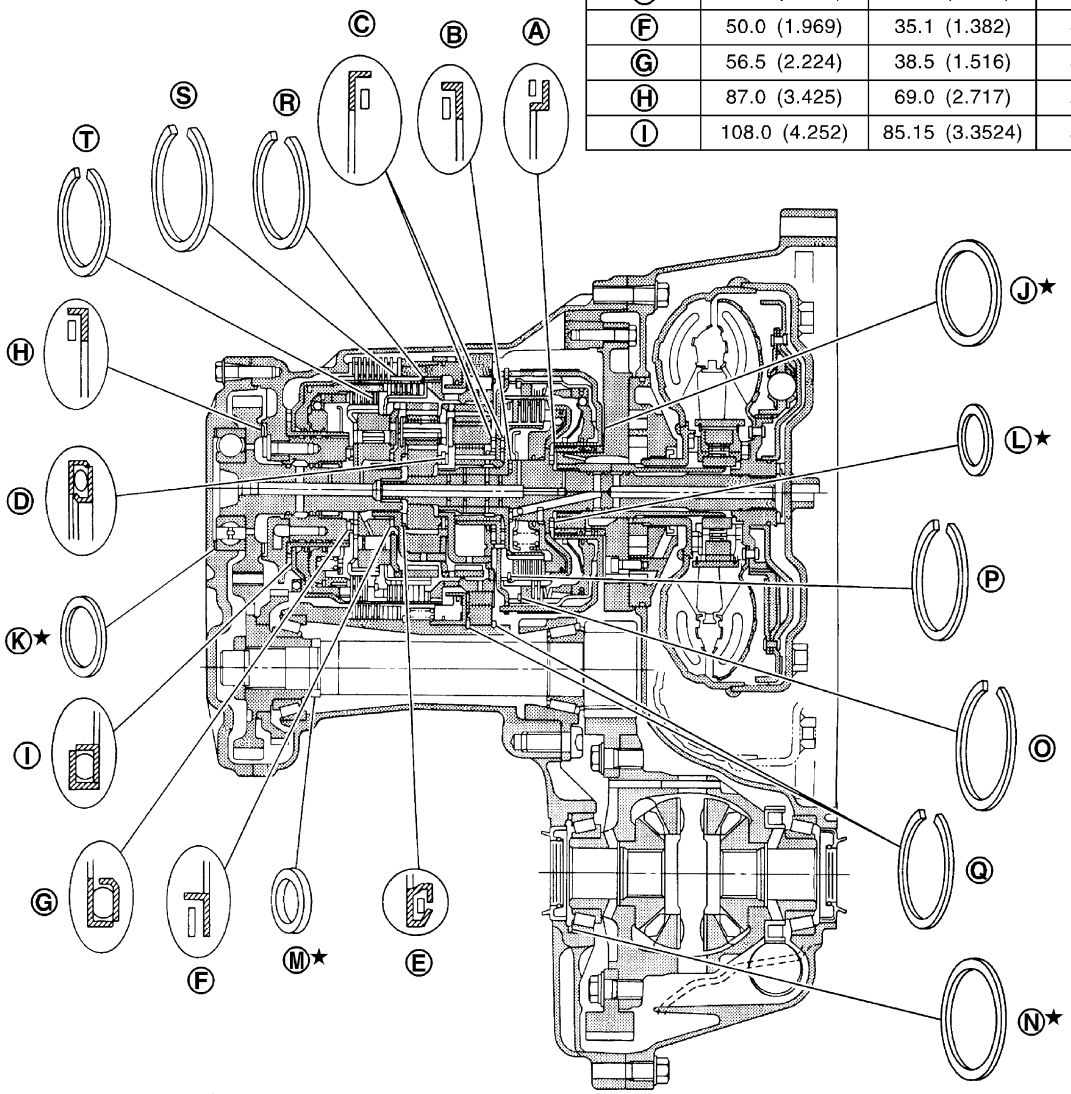

Outer & inner diameter of bearing races, adjusting shims and adjusting spacer

Item number	Outer diameter mm (in)	Inner diameter mm (in)	Parts number*
Ⓛ★	51.0 (2.008)	36.0 (1.417)	31435 80X00 - 31439 80X14
Ⓜ★	38.0 (1.496)	28.1 (1.106)	31439 85X01 - 31439 85X06 31439 83X11 - 31439 83X24 31439 81X00 - 31439 81X24 31439 81X46 - 31439 81X49 31439 81X60 - 31439 81X74
Ⓝ★	75.0 (2.953)	67.0 (2.638)	31438 80X00 - 31439 80X11

★ : Select proper thickness.

* : Always check with the Parts Department for the latest parts information.

Outer diameter of snap rings

Item number	Outer diameter mm (in)	Parts number*
Ⓞ	150 (5.91)	31506 80X13
Ⓟ	119.1 (4.689)	31506 80X06
Ⓠ	182.8 (7.197)	31506 80X08
Ⓡ	144.8 (5.701)	31506 80X03
Ⓢ	173.8 (6.843)	31506 80X09
Ⓣ	133.9 (5.272)	31506 80X01

SAT565K

DISASSEMBLY

PFP:31020

Disassembly

ECS004W0

1. Drain ATF through drain plug.
2. Remove torque converter.

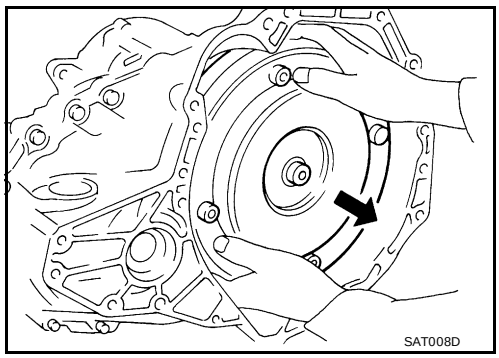

3. Check torque converter one-way clutch using check tool as shown at left.

a. Insert check tool into the groove of bearing support built into one-way clutch outer race.

b. When fixing bearing support with check tool, rotate one- way clutch spline using screwdriver.

c. Check that inner race rotates clockwise only. If not, replace torque converter assembly.

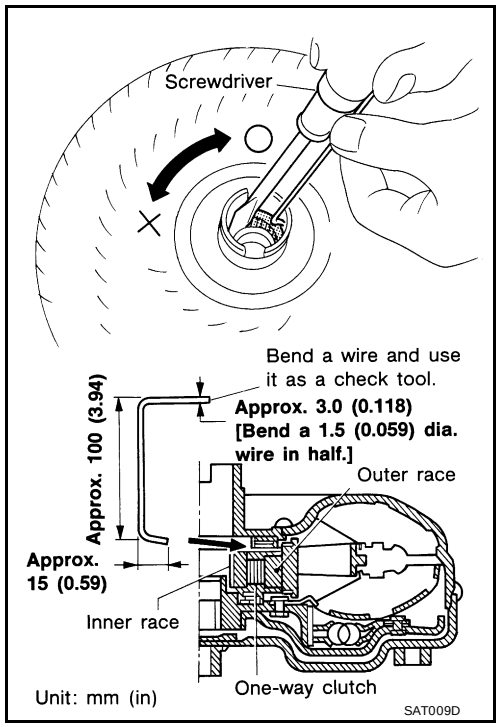

4. Remove A/T fluid charging pipe and fluid cooler tube.

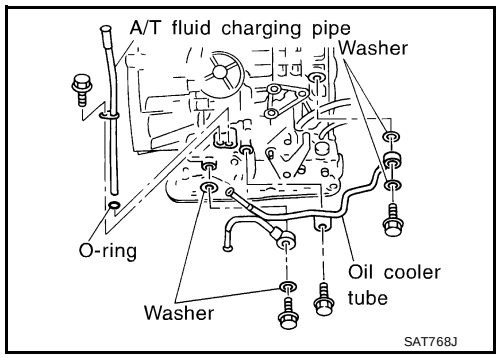

5. Set manual shaft to position P.
6. Remove park/neutral position (PNP) switch.

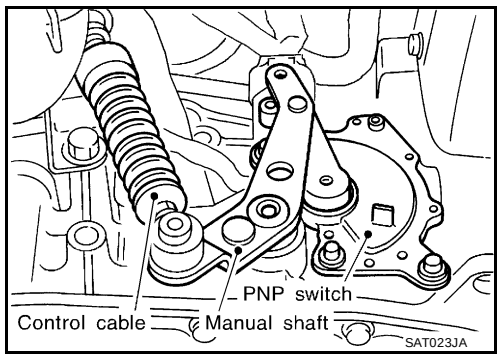

7. Remove oil pan using power tools, and oil pan gasket.
   - **Do not reuse oil pan bolts.**
8. Check foreign materials in oil pan to help determine causes of malfunction. If the fluid is very dark, smells burned, or contains foreign particles, the frictional material (clutches, band) may need replacement. A tacky film that will not wipe clean indicates varnish build up. Varnish can cause valves, servo, and clutches to stick and can inhibit pump pressure.
   - **If frictional material is detected, replace radiator after repair of A/T. Refer to CO-12, "RADIATOR" (with QR25DE), or CO-34, "RADIATOR" (with VQ35DE).**

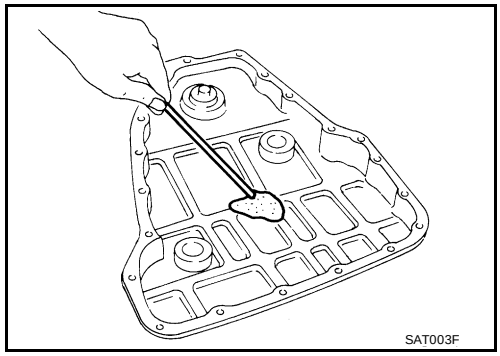

9. Remove control valve assembly according to the following procedures.

a. Remove control valve assembly mounting bolts **I** , **X** and ●.

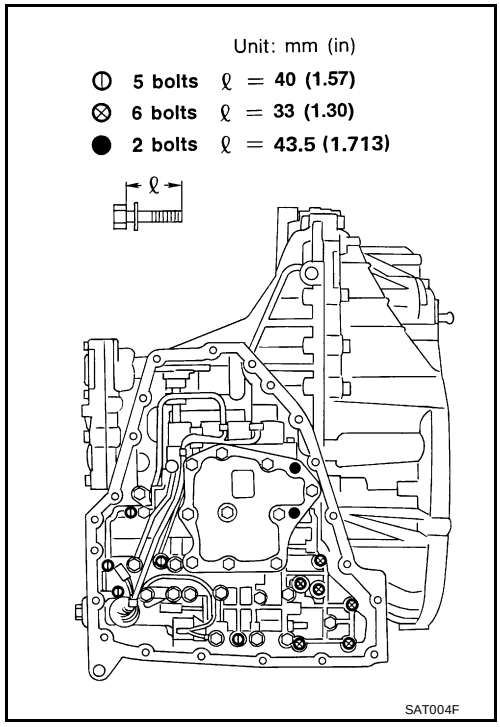

b. Remove snap ring from terminal body.

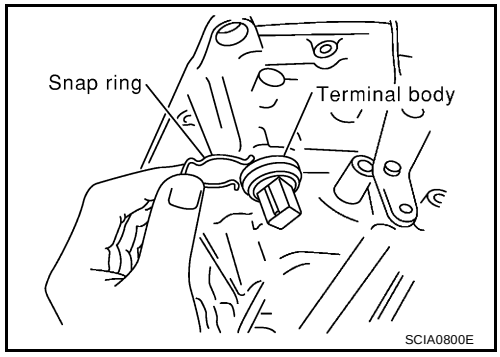

c. Push terminal body into transmission case and draw out terminal cord assembly.

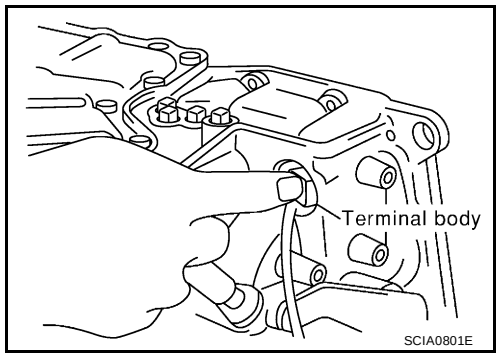

10. Remove manual valve from control valve assembly.

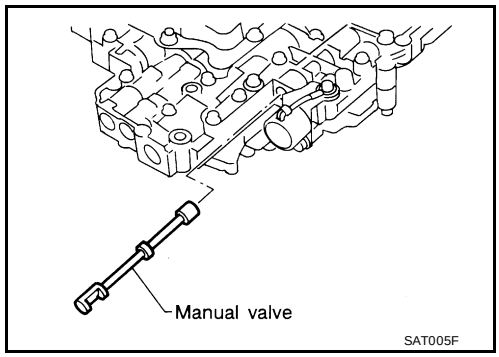

11. Remove return spring from servo release accumulator piston.

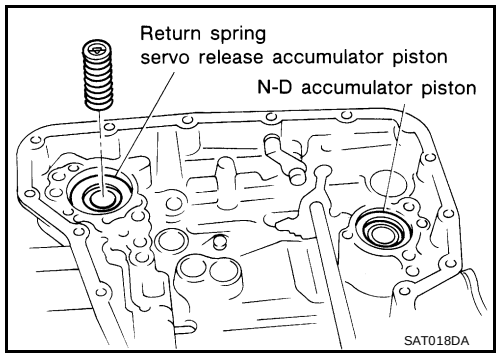

12. Remove servo release accumulator piston with compressed air.

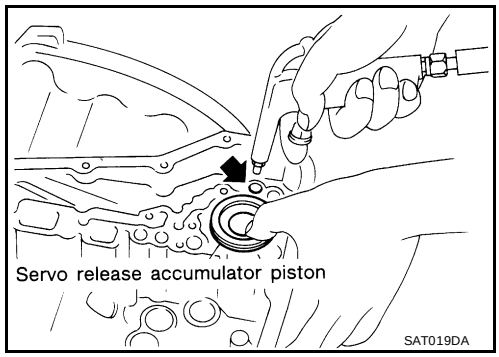

13. Remove O-rings from servo release accumulator piston.

14. Remove N-D accumulator piston and return spring with compressed air.

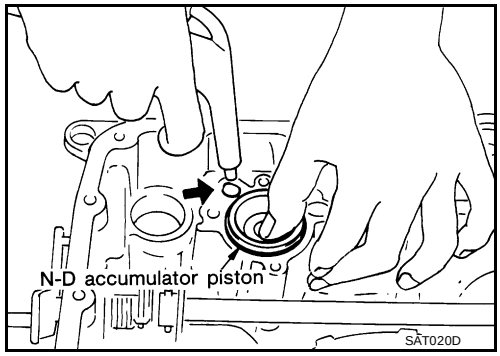

15. Remove O-rings from N-D accumulator piston.
16. Check accumulator pistons and contact surface of transmission case for damage.

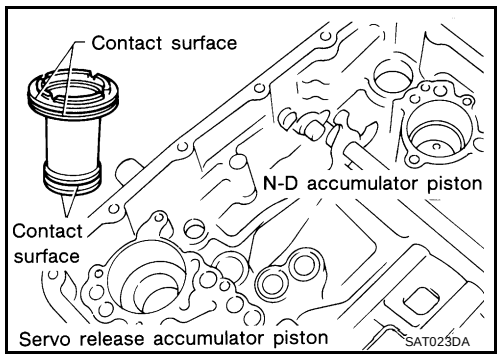

17. Check accumulator return springs for damage and free length.
18. Remove lip seals.

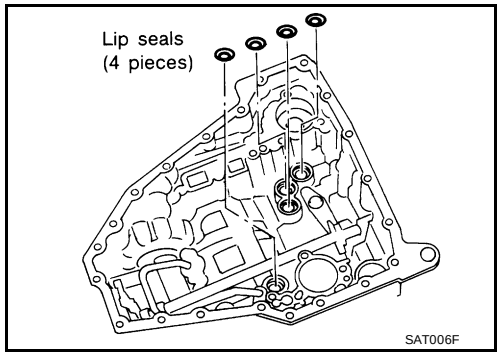

19. Remove L & R oil tube and oil sleeve.

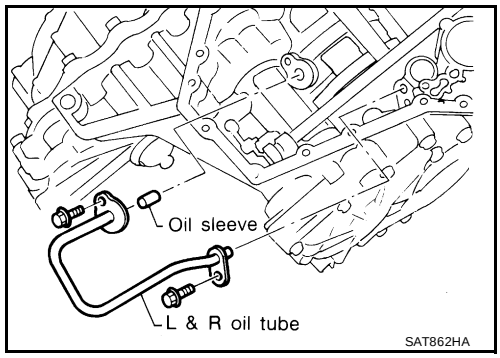

20. Remove converter housing according to the following procedures.

a. Remove converter housing mounting bolts using power tools.

b. Remove converter housing by tapping it lightly.

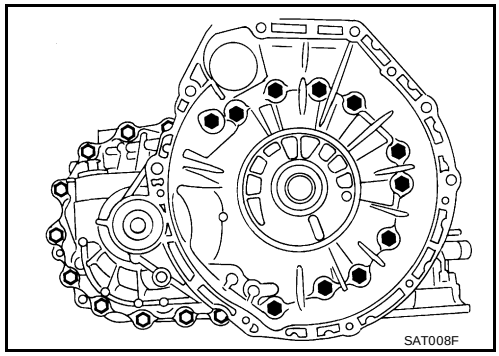

c. Remove O-ring from differential oil port.

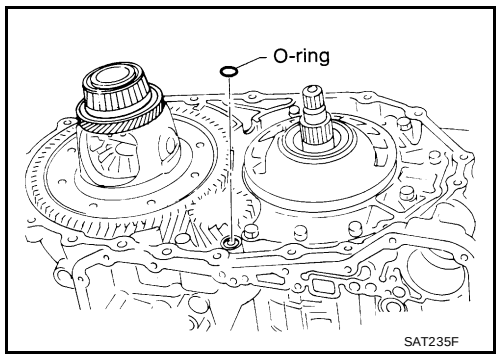

21. Remove final drive assembly from transmission case.

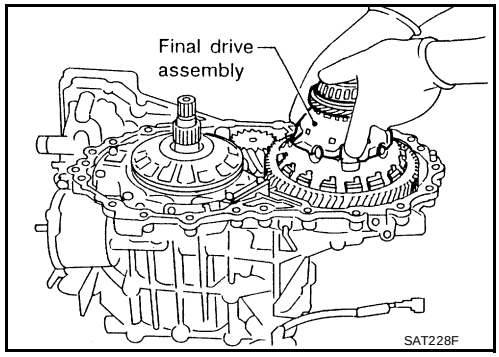

22. Remove differential side bearing outer race and side bearing adjusting shim from transmission case.

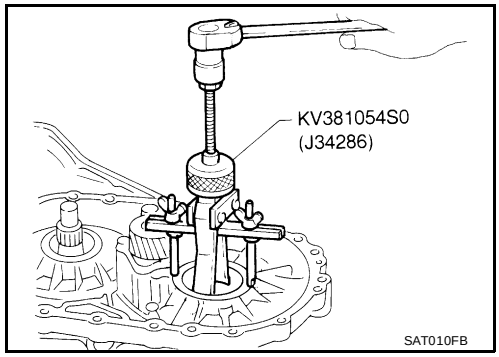

23. Remove differential side bearing adjusting shim from transmission case.

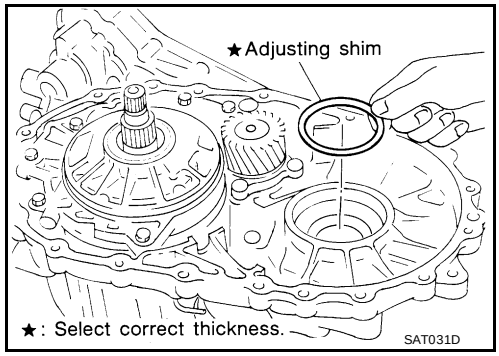

24. Remove differential side bearing outer race from converter housing.

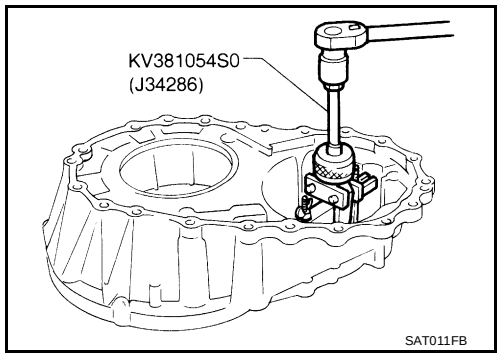

25. Remove oil seal with screwdriver from converter housing.
    - **Be careful not to damage case.**

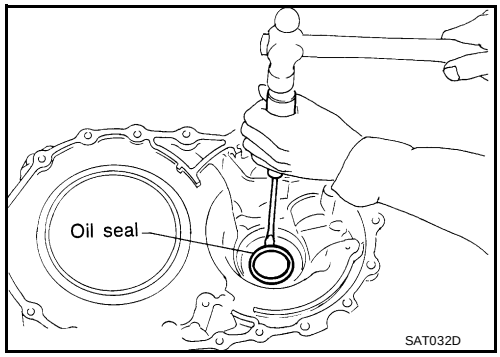

26. Remove differential lubricant tube from converter housing.

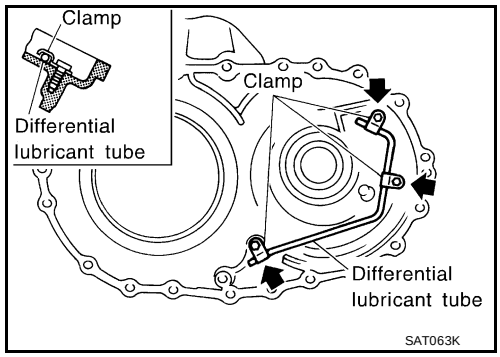

27. Remove oil pump according to the following procedures.

a. Remove O-ring from input shaft.

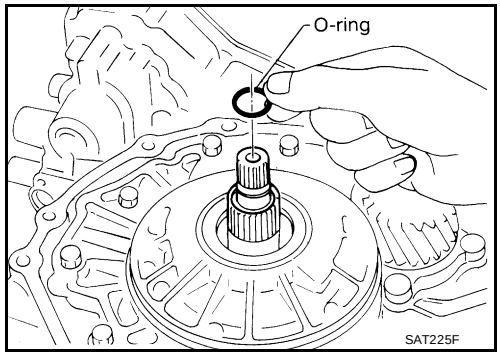

b. Remove oil pump assembly, baffle plate and gasket from transmission case.

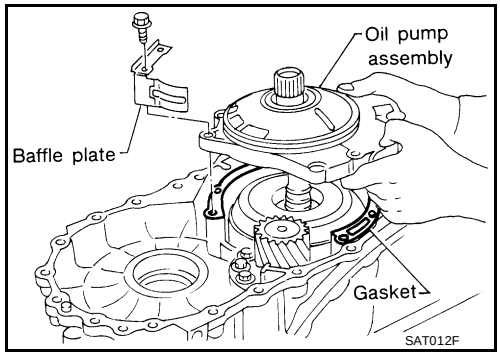

c. Remove thrust washer and bearing race from oil pump assembly.

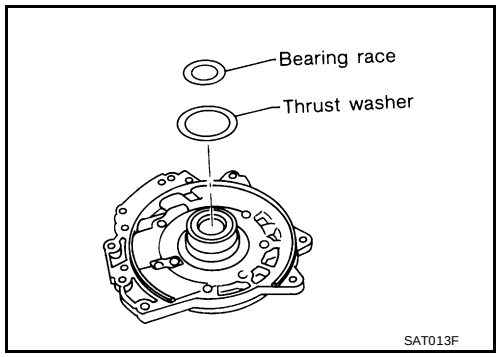

28. Remove brake band according to the following procedures.

a. Loosen lock nut, then back off anchor end pin.

- **Do not reuse anchor end pin.**

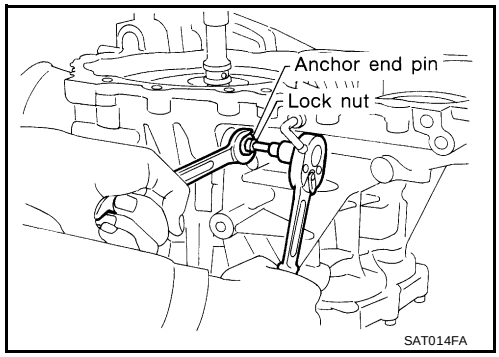

b. Remove brake band and strut from transmission case.

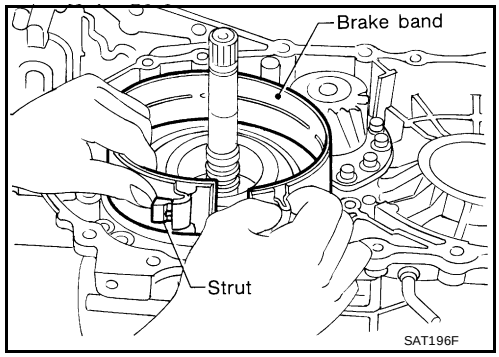

- **To prevent brake linings from cracking or peeling, do not stretch the flexible band unnecessarily. When removing the brake band, always secure it with a clip as shown in the figure at left.**
  Leave the clip in position after removing the brake band.

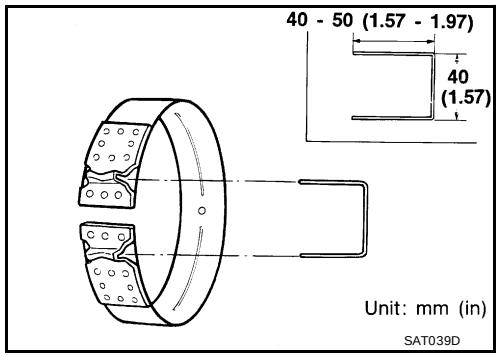

c. Check brake band facing for damage, cracks, wear or burns.

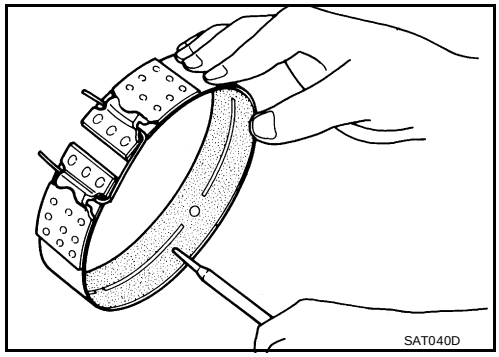

29. Remove input shaft assembly (high clutch) and reverse clutch according to the following procedures.

a. Remove input shaft assembly (high clutch) with reverse clutch.

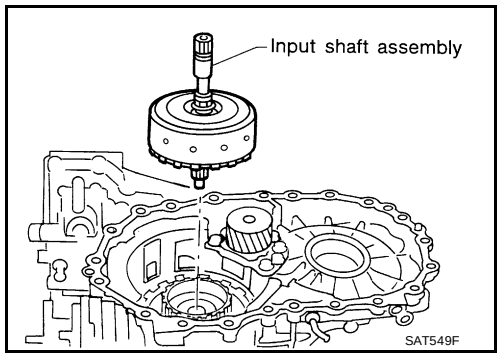

b. Remove input shaft assembly (high clutch) from reverse clutch.

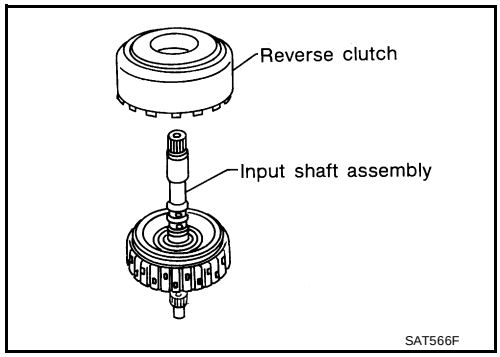

c. Remove needle bearings from high clutch drum and check for damage or wear.

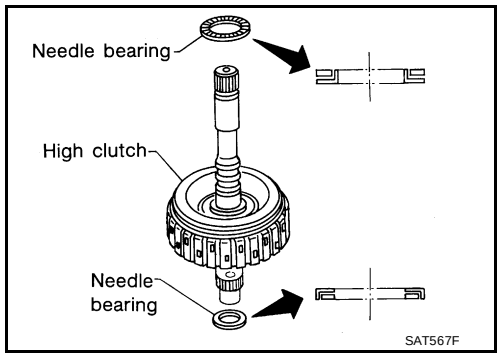

d. Remove high clutch hub and front sun gear from transmission case.

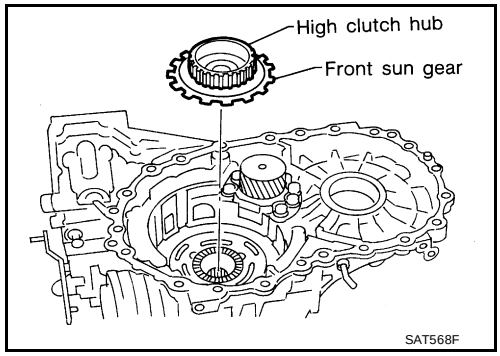

e. Remove front sun gear and needle bearing from high clutch hub and check for damage or wear.

f. Remove bearing race from front sun gear and check for damage or wear.

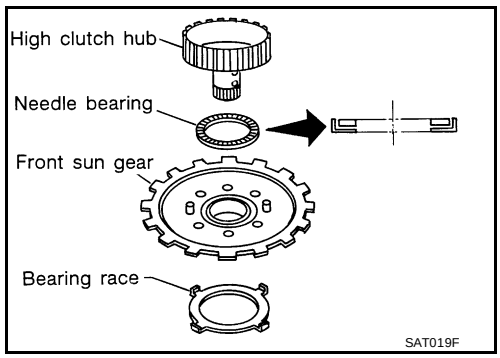

30. Remove needle bearing from transmission case and check for damage or wear.

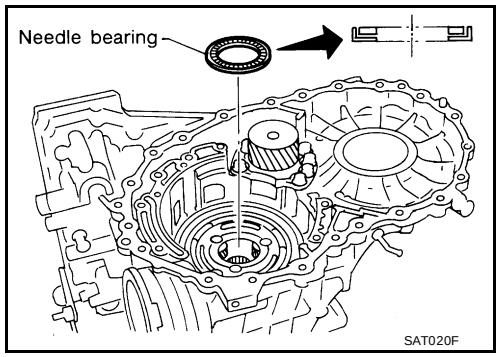

31. Apply compressed air and check to see that low and reverse brake operates.

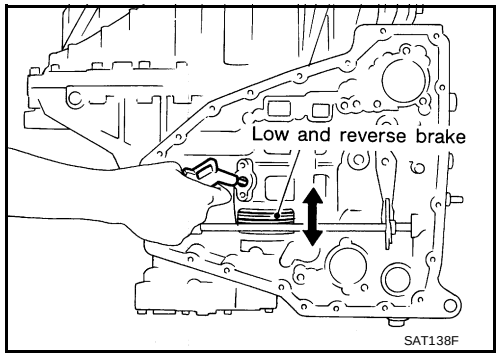

32. Remove low one-way clutch and front planetary carrier assembly according to the following procedures.

a. Remove snap ring with flat-bladed screwdriver.

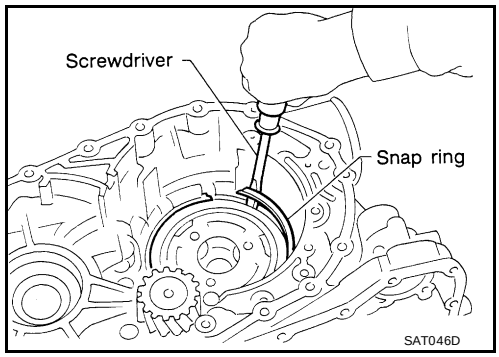

b. Remove low one-way clutch with a hook made of wire.

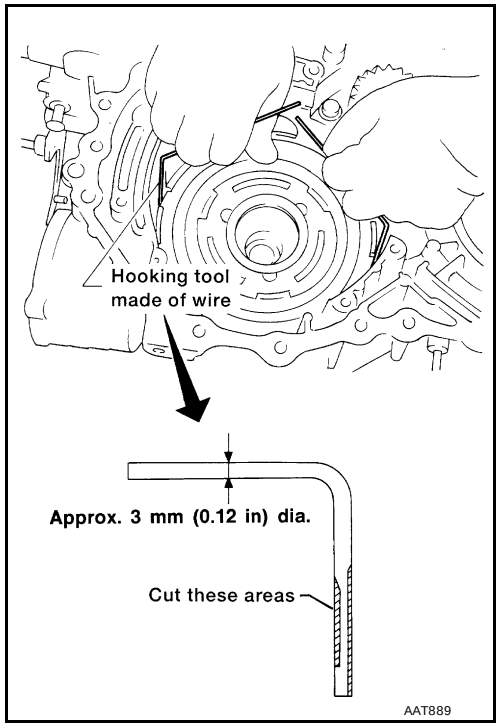

c. Remove snap ring with flat-bladed screwdriver.

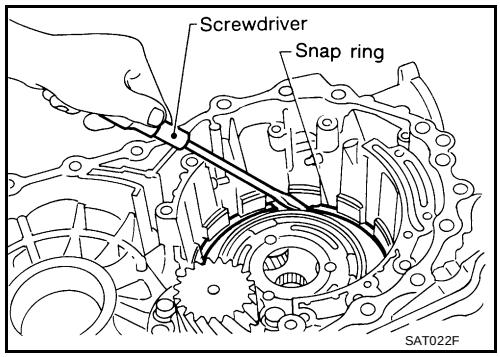

d. Remove front planetary carrier with low and reverse brake piston and retainer.

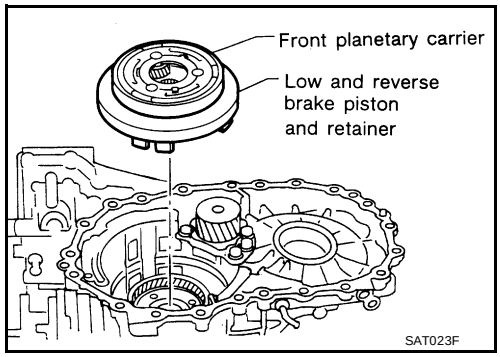

e. Remove low and reverse brake spring retainer.
   - **Do not remove return springs from spring retainer.**

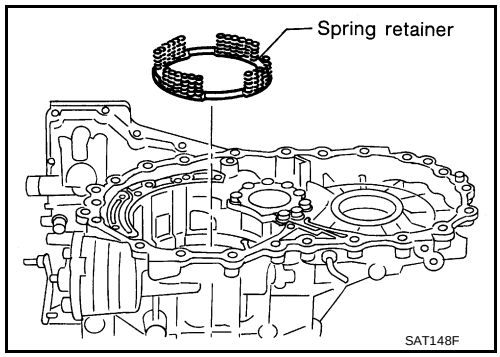

f. Check that low one-way clutch rotates in the direction of the clockwise arrow and locks in the opposite direction.

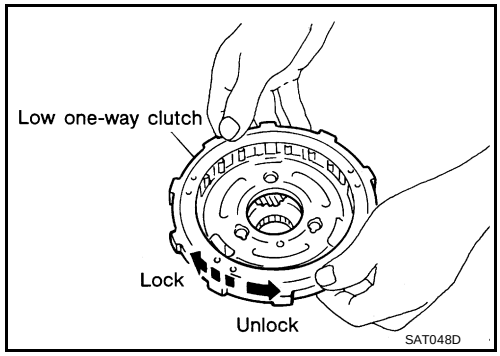

g. Remove needle bearing, low and reverse brake piston and retainer from front planetary carrier.

h. Check front planetary carrier, low one-way clutch and needle bearing for damage or wear.

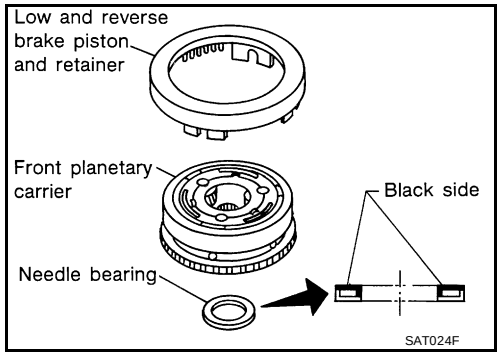

i. Check clearance between planetary gears and planetary carrier with feeler gauge.

Standard clearance : 0.20 - 0.70 mm (0.0079 - 0.0276 in)

Allowable limit : 0.80 mm (0.0315 in)

Replace front planetary carrier if the clearance exceeds allowable limit.

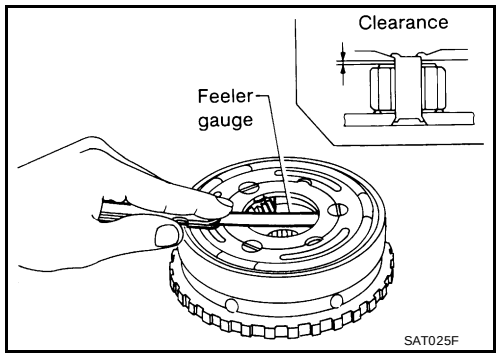

33. Remove rear planetary carrier assembly and rear sun gear according to the following procedures.

a. Remove rear planetary carrier assembly from transmission case.

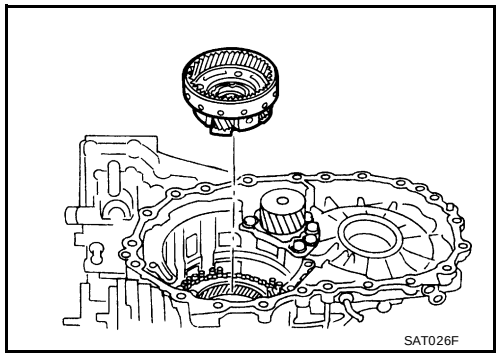

b. Remove rear sun gear from rear planetary carrier.

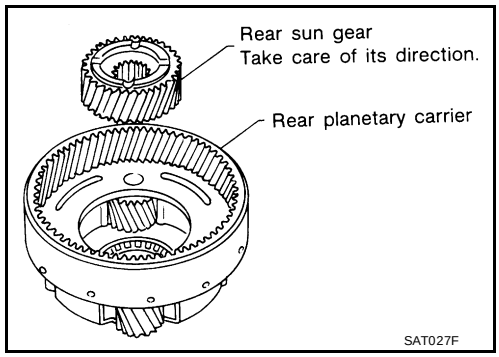

c. Remove needle bearings from rear planetary carrier assembly.

d. Check rear planetary carrier, rear sun gear and needle bearings for damage or wear.

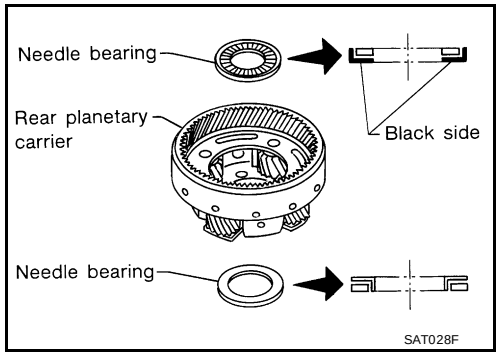

e. Check clearance between pinion washer and rear planetary carrier with feeler gauge.

Standard clearance : 0.20 - 0.70 mm (0.0079 - 0.0276 in)

Allowable limit : 0.80 mm (0.0315 in)

Replace rear planetary carrier if the clearance exceeds allowable limit.

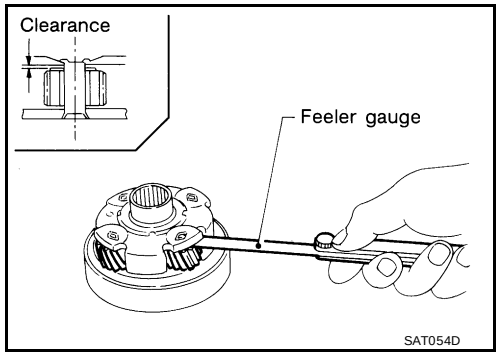

34. Remove rear internal gear and forward clutch hub from transmission case.

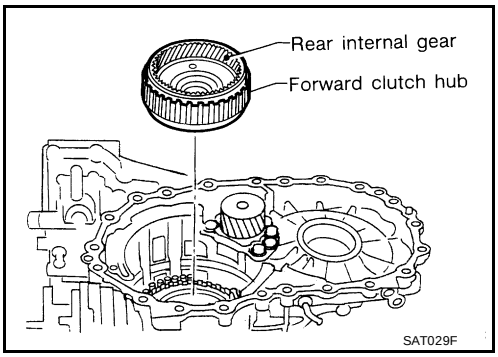

35. Remove overrun clutch hub from transmission case.

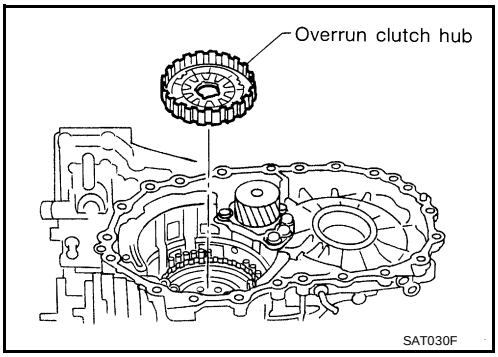

36. Remove needle bearing from overrun clutch hub and check for damage or wear.

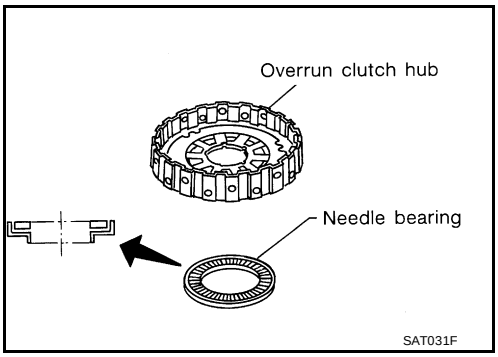

37. Remove forward clutch assembly from transmission case.

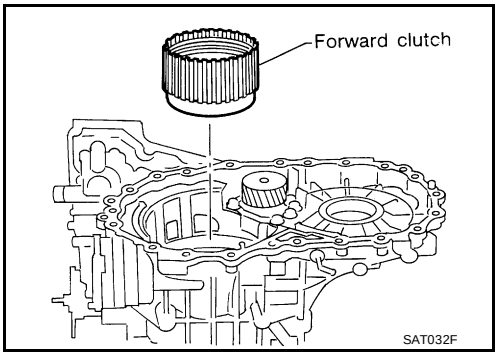

38. Remove needle bearing from transmission case.

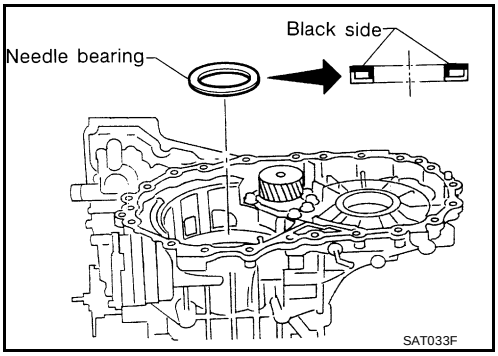

39. Remove output shaft assembly according to the following procedures.

a. Remove side cover bolts.
   - **Do not mix bolts A and B.**
   - **Always replace bolts A as they are self-sealing bolts.**

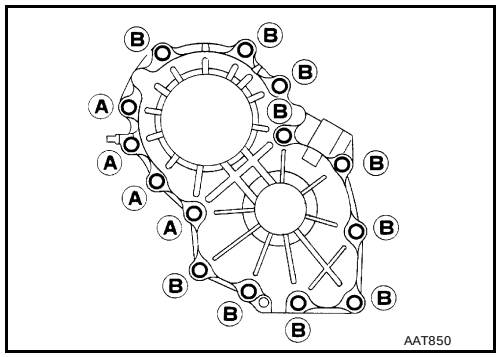

b. Remove side cover by lightly tapping it with a soft hammer.
   - **Be careful not to drop output shaft assembly. It might come out when removing side cover.**

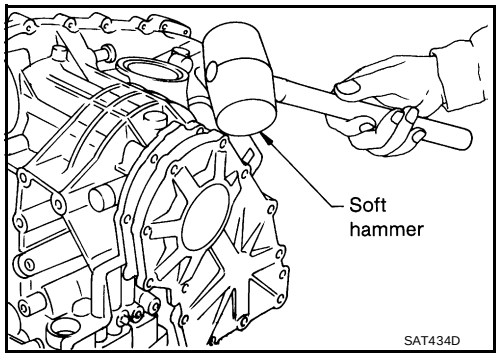

c. Remove adjusting shim.

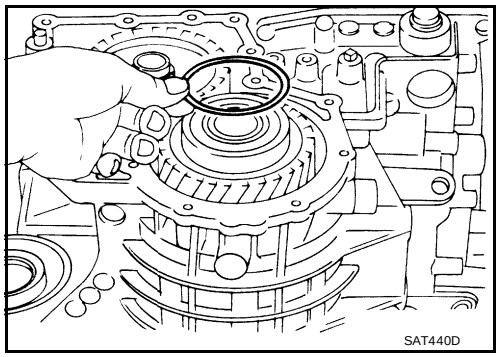

d. Remove output shaft assembly.

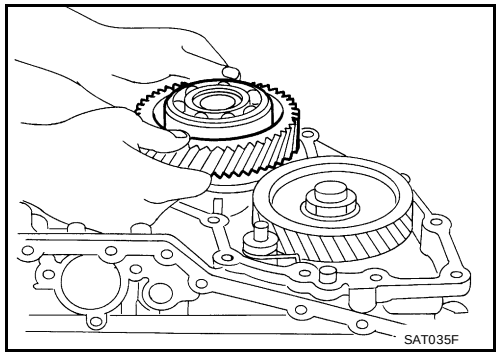

   - If output shaft assembly came off with side cover, tap cover with a soft hammer to separate.

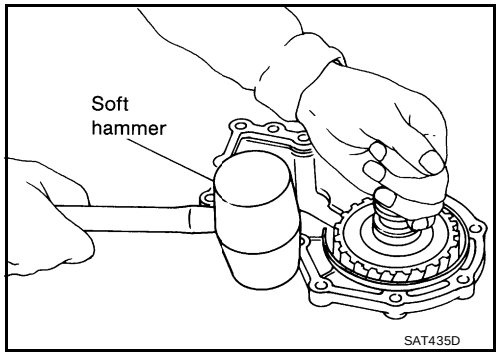

e. Remove needle bearing.

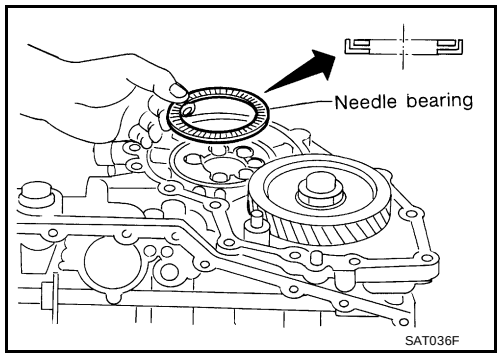

40. Disassemble reduction pinion gear according to the following procedures.
a. Set manual shaft to position P to fix idler gear.
b. Unlock idler gear lock nut using a pin punch.

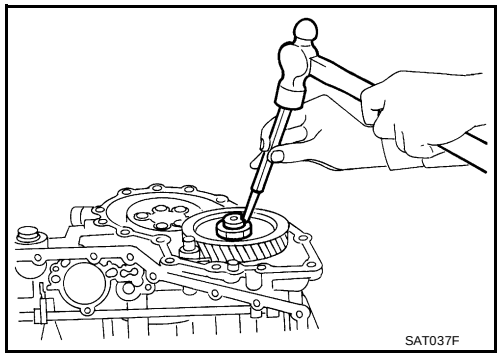

c. Remove idler gear lock nut.
- **Do not reuse idler gear lock nut.**

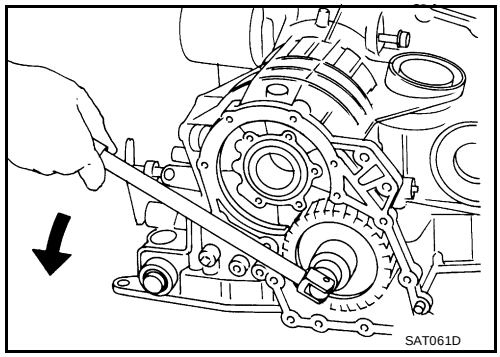

d. Remove idler gear with puller.

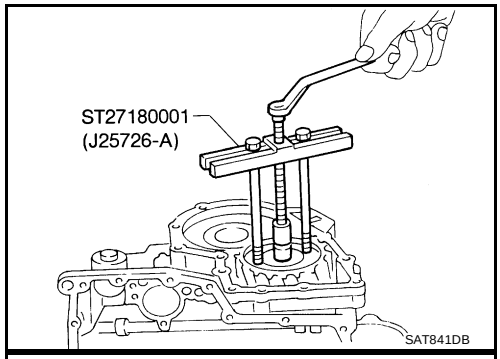

e. Remove reduction pinion gear.
f. Remove adjusting shim from reduction pinion gear.

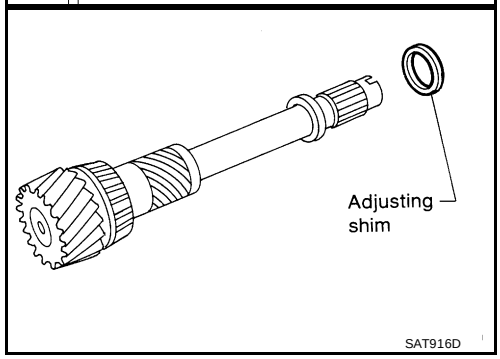

41. Remove return spring from parking shaft with screwdriver.
42. Draw out parking shaft and remove parking pawl from transmission case.
43. Check parking pawl and shaft for damage or wear.

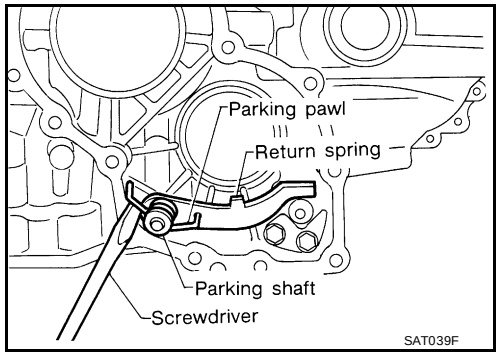

44. Remove parking actuator support from transmission case.
45. Check parking actuator support for damage or wear.

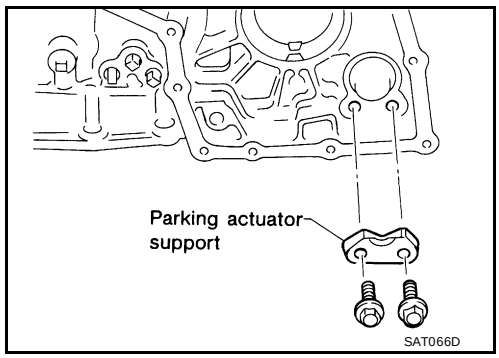

46. Remove side oil seal with screwdriver from transmission case.

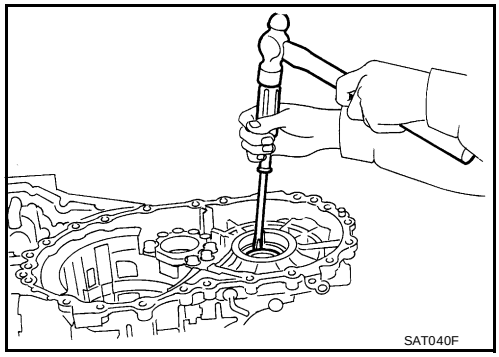

REPAIR FOR COMPONENT PARTS

PFP:00000

Manual Shaft

ECS004W1

COMPONENTS

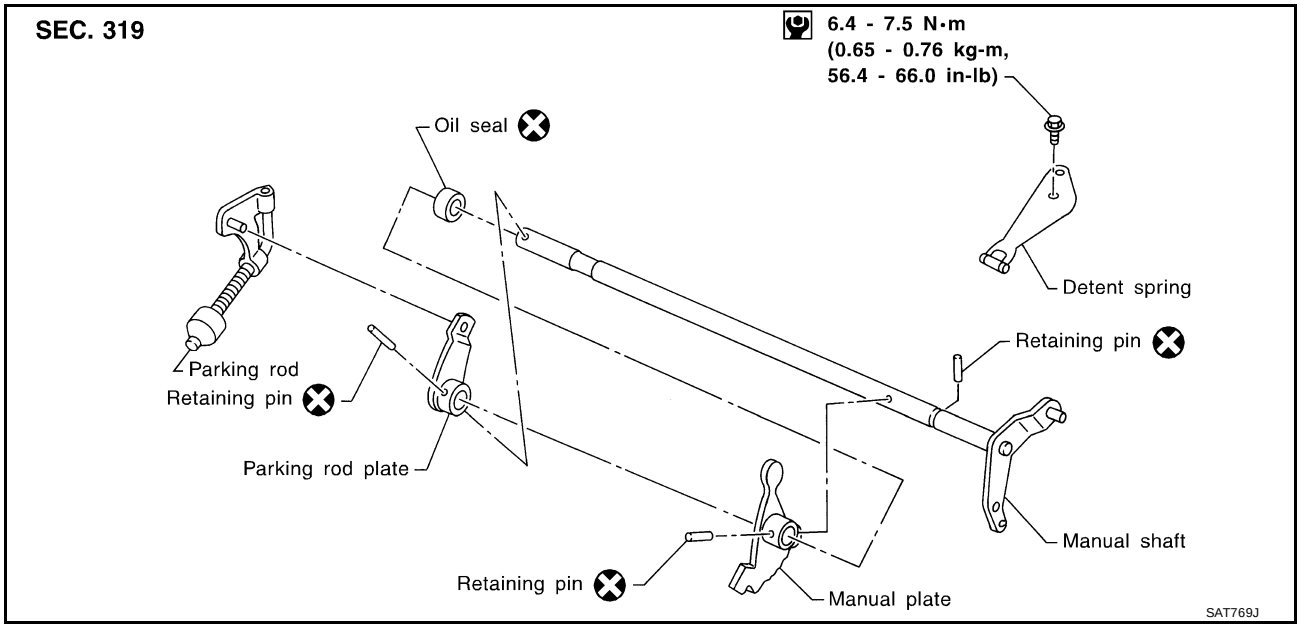

REMOVAL

1. Remove detent spring from transmission case.

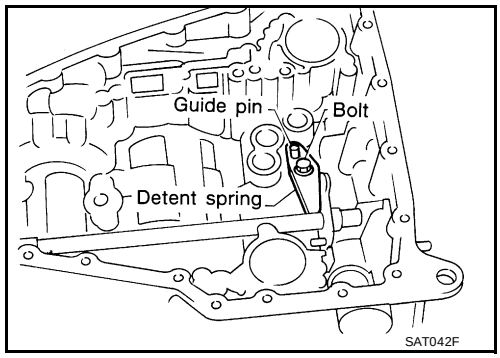

2. Drive out manual plate retaining pin.

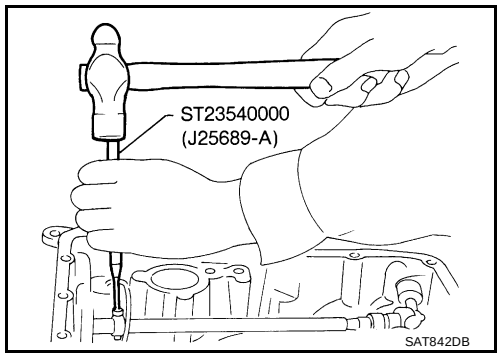

3. Drive and pull out parking rod plate retaining pin.
4. Remove parking rod plate from manual shaft.
5. Draw out parking rod from transmission case.

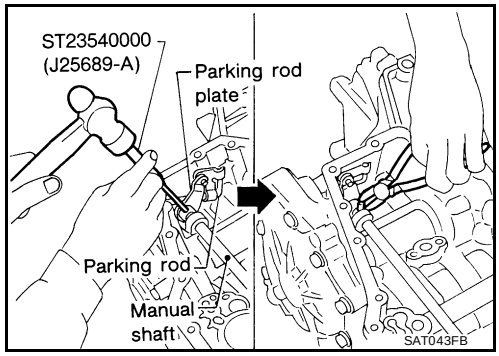

6. Pull out manual shaft retaining pin.
7. Remove manual shaft and manual plate from transmission case.

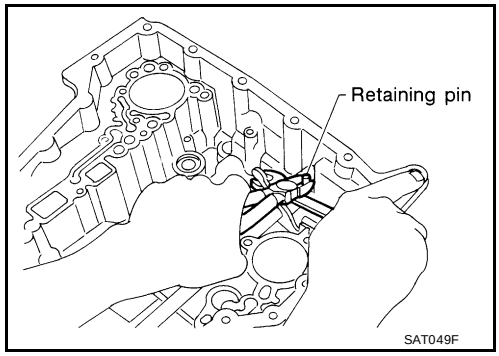

8. Remove manual shaft oil seal.

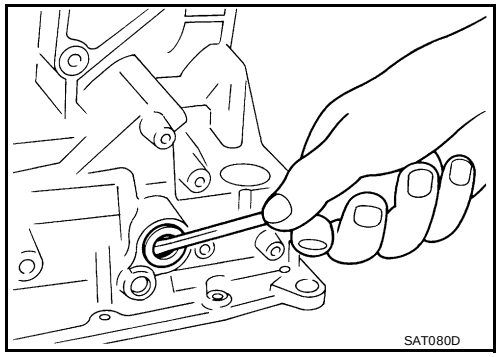

INSPECTION

- Check component parts for wear or damage. Replace if necessary.

INSTALLATION

1. Install manual shaft oil seal.
   - **Apply ATF to outer surface of oil seal.**

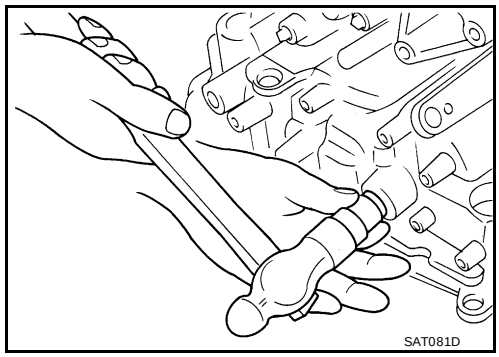

2. Install manual shaft and manual plate.

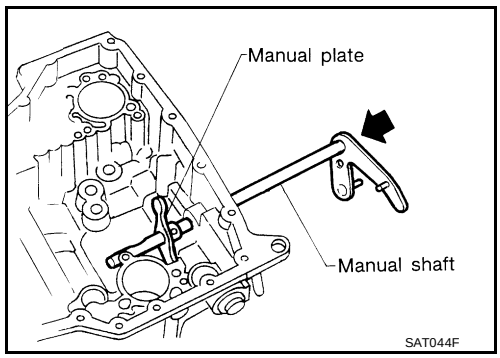

3. Align groove of manual shaft and hole of transmission case.
4. Install manual shaft retaining pin up to bottom of hole.

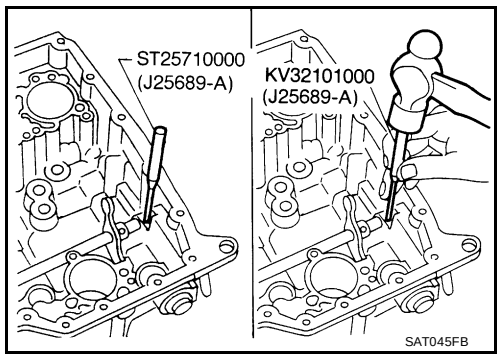

5. Install parking rod to parking rod plate.
6. Set parking rod assembly onto manual shaft and drive retaining pin.
   - **Both ends of pin should protrude.**

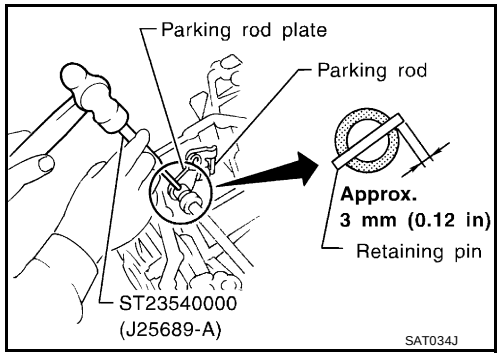

7. Drive manual plate retaining pin.
   - **Both ends of pin should protrude.**

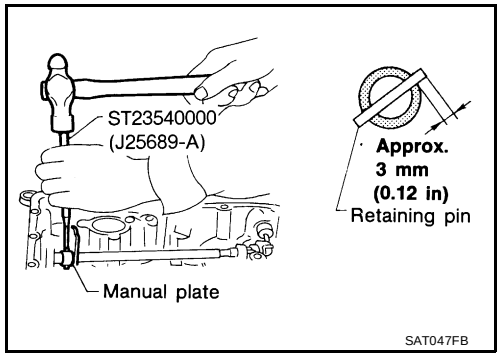

8. Install detent spring. Tighten detent spring bolts to the specified torque. Refer to AT-283, "COMPONENTS" .

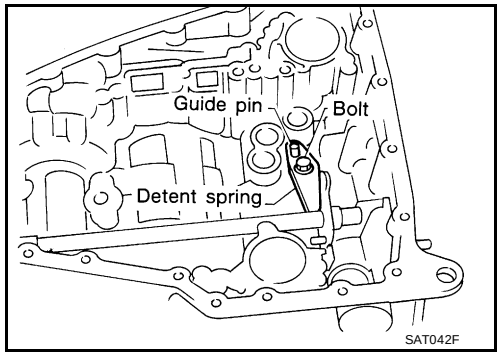

Oil Pump

ECS004W2

COMPONENTS

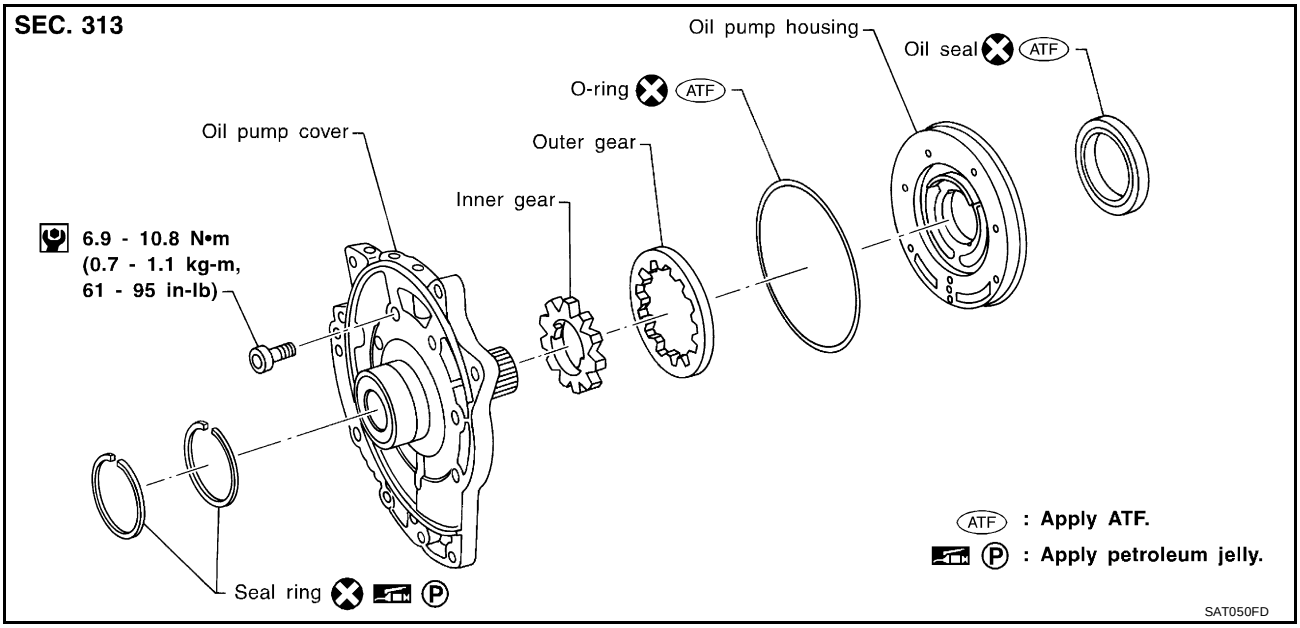

DISASSEMBLY

1. Remove seal rings.

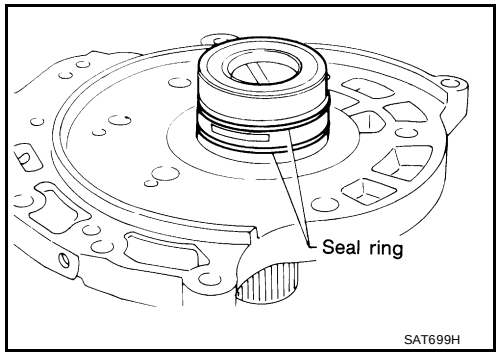

2. Loosen bolts in a crisscross pattern and remove oil pump cover.

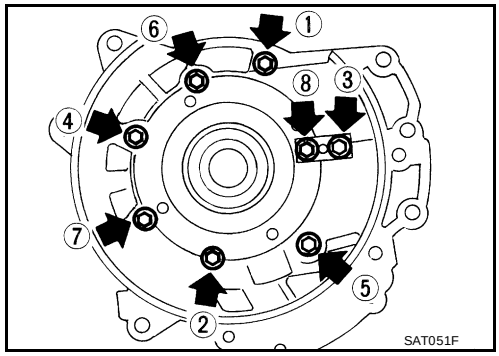

3. Remove inner and outer gear from oil pump housing.

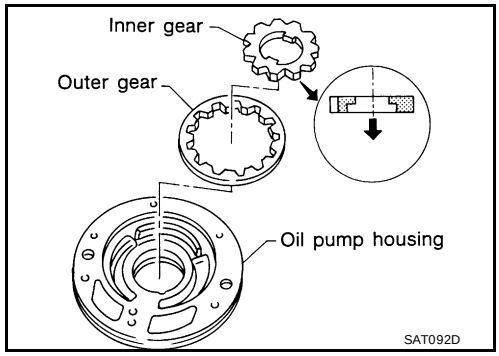

4. Remove O-ring from oil pump housing.

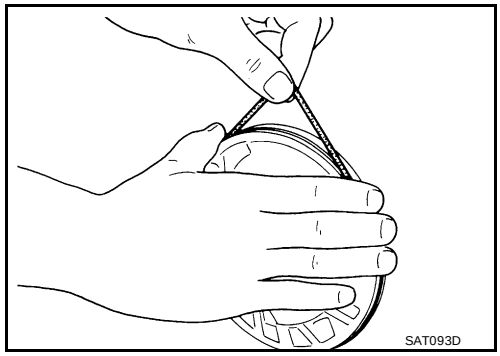

5. Remove oil pump housing oil seal.

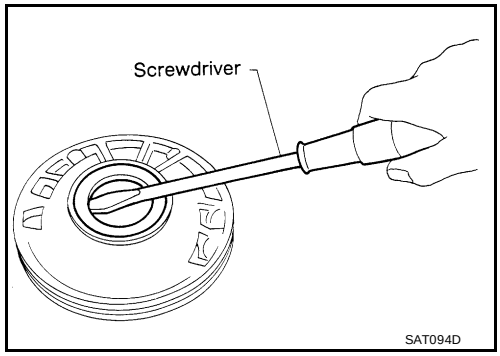

INSPECTION

Oil Pump Housing, Oil Pump Cover, Inner Gear and Outer Gear

- Check for wear or damage.

Side Clearances

- Measure side clearance of inner and outer gears in at least four places around each outside edge. Maximum measured values should be within specified positions.

  Standard clearance : 0.030 - 0.050 mm (0.0012 - 0.0020 in)

- If clearance is less than standard, select inner and outer gear as a set so that clearance is within specifications.

  Inner and outer gear:

  Refer to AT-364, "SERVICE DATA AND SPECIFICATIONS (SDS)" .

- If clearance is more than standard, replace whole oil pump assembly except oil pump cover.

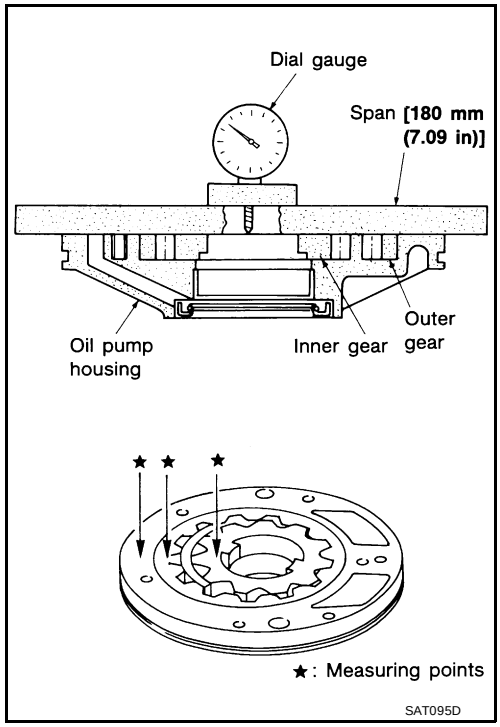

- Measure clearance between outer gear and oil pump housing.

  Standard clearance : 0.111 - 0.181 mm (0.0044 - 0.0071 in)

  Allowable limit : 0.181 mm (0.0071 in)

- If not within allowable limit, replace whole oil pump assembly except oil pump cover.

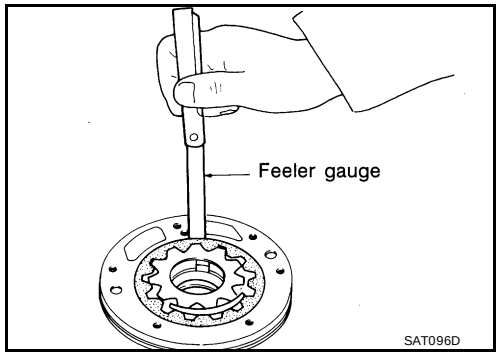

Seal Ring Clearance

- Measure clearance between seal ring and ring groove.

  Standard clearance : 0.1 - 0.25 mm (0.0039 - 0.0098 in)

  Allowable limit : 0.25 mm (0.0098 in)

- If not within allowable limit, replace oil pump cover assembly.

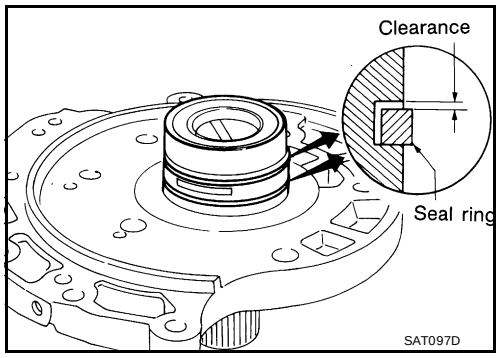

ASSEMBLY

1. Install oil seal on oil pump housing.

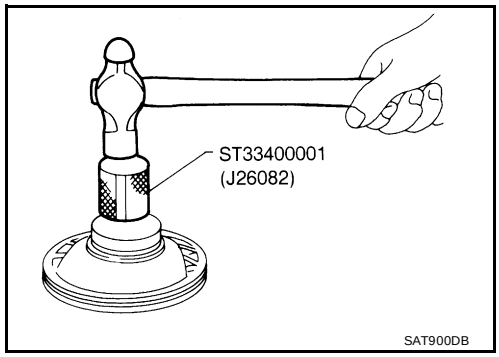

2. Install O-ring on oil pump housing.
   - **Apply ATF to O-ring.**

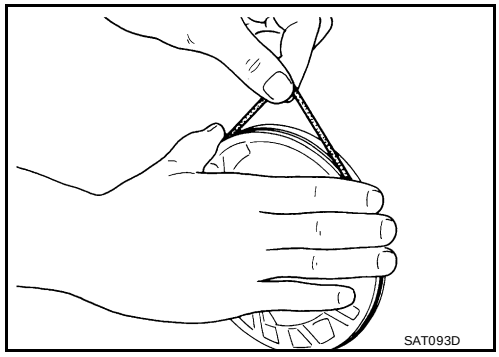

3. Install inner and outer gears on oil pump housing.
   - **Be careful of direction of inner gear.**

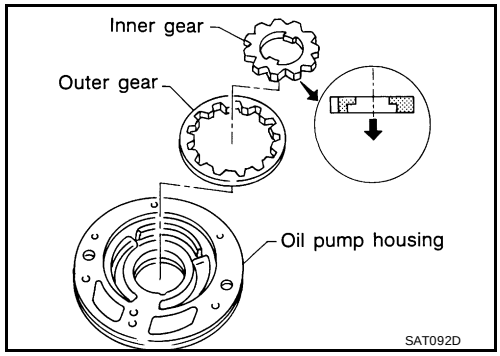

4. Install oil pump cover on oil pump housing.

a. Wrap masking tape around splines of oil pump cover assembly to protect seal. Position oil pump cover assembly on oil pump housing assembly, then remove masking tape.

b. Tighten bolts in a crisscross pattern. Tighten oil pump cover bolts to the specified torque. Refer to AT-286, "COMPONENTS".

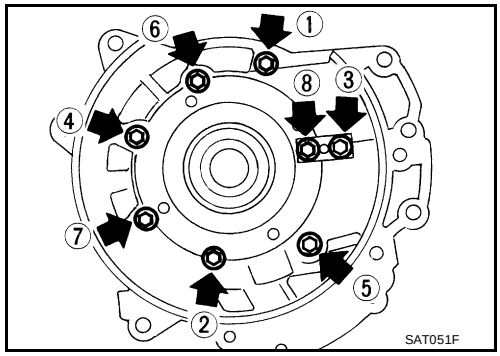

5. Install new seal rings carefully after packing ring groove with petroleum jelly.
   - **Do not spread gap of seal ring excessively while installing. The ring may be deformed.**

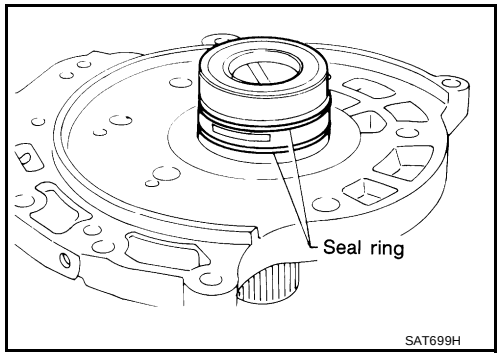

Control Valve Assembly

ECS004W3

COMPONENTS

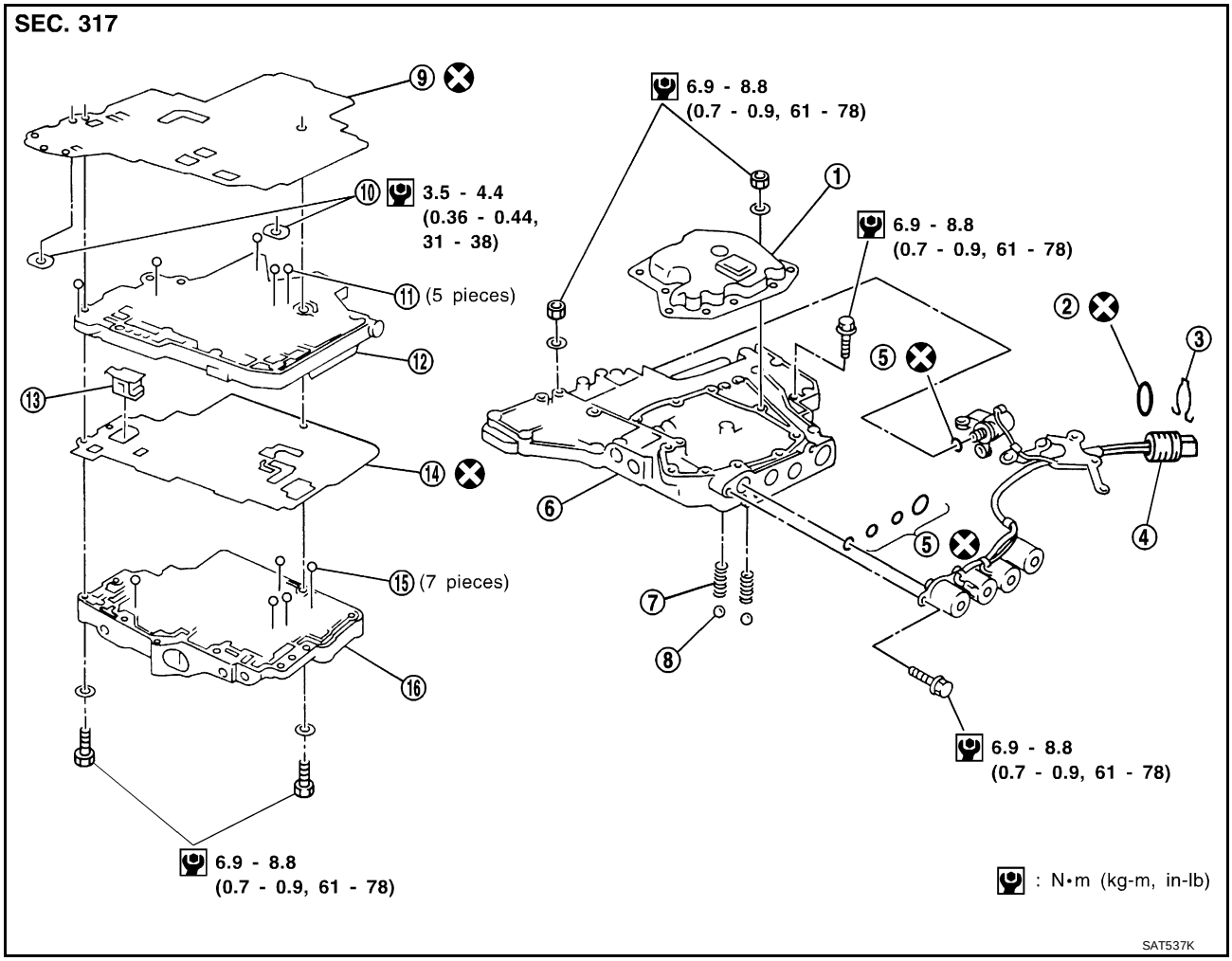

1.	Oil strainer	2.	O-ring	3.	Snap ring
4.	Terminal body	5.	O-rings	6.	Control valve lower body
7.	Oil cooler relief valve spring	8.	Check ball	9.	Separating plate
10.	Support plate	11.	Steel ball	12.	Control valve inter body
13.	Pilot filter	14.	Separating plate	15.	Steel ball
16.	Control valve upper body				

DISASSEMBLY

Disassemble upper, inter and lower bodies.

Bolt length, number and location:

Bolt symbol	a	b	c	d	e	f	g
Bolt length "ℓ" mm (in) ℓ	13.5 (0.531)	58.0 (2.283)	40.0 (1.575)	66.0 (2.598)	33.0 (1.299)	78.0 (3.071)	18.0 (0.709)
Number of bolts	6	3	6	11	2	2	1

f: Reamer bolt and nut.

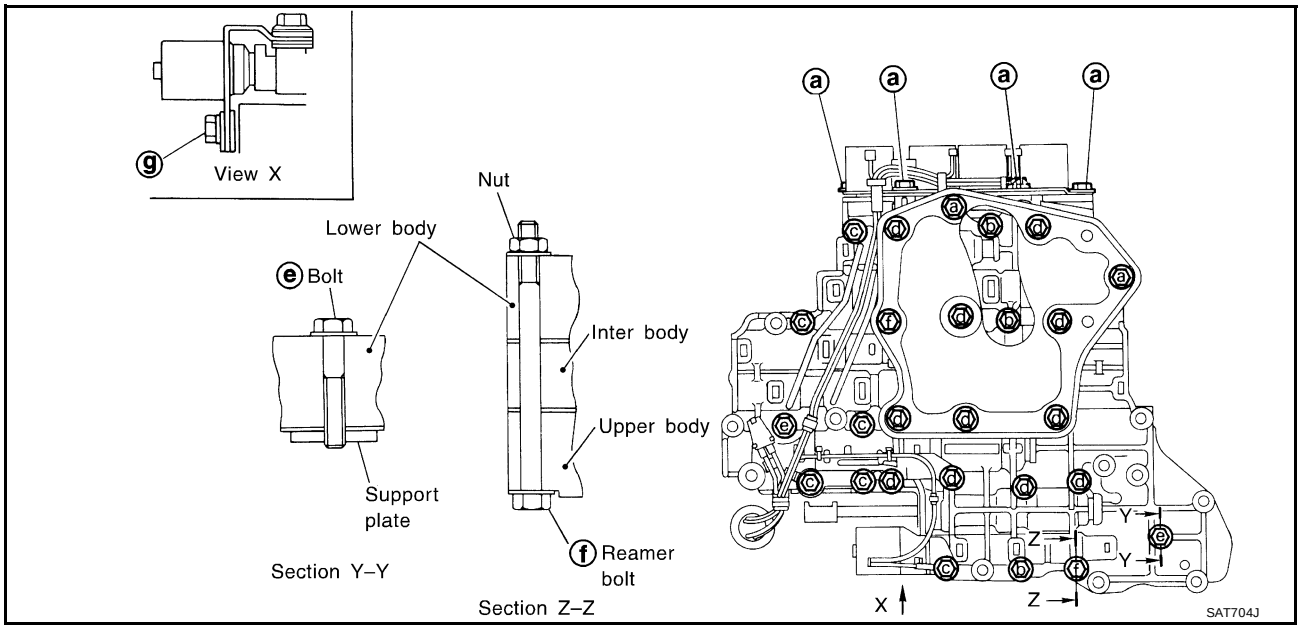

1. Remove bolts **a** , **d** and nut **f** and remove oil strainer from control valve assembly.

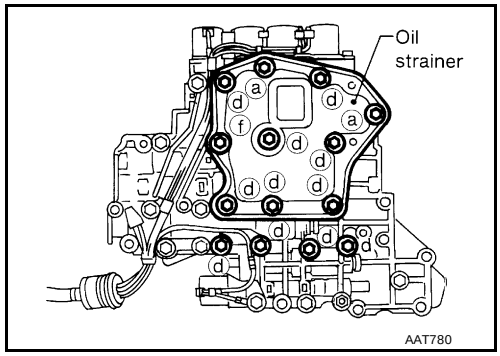

2. Remove solenoid valve assembly and line pressure solenoid valve from control valve assembly.

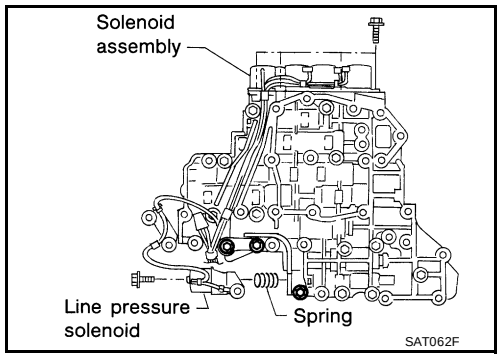

3. Remove O-rings from solenoid valves and terminal body.

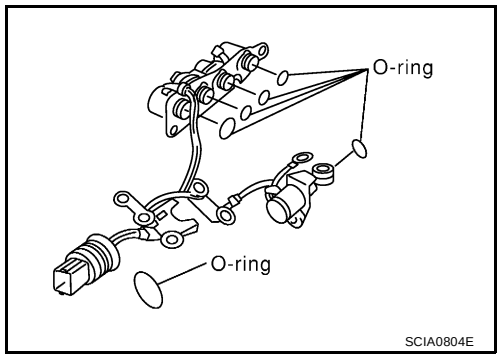

4. Place upper body facedown, and remove bolts **b** , **c** and nut **f** .

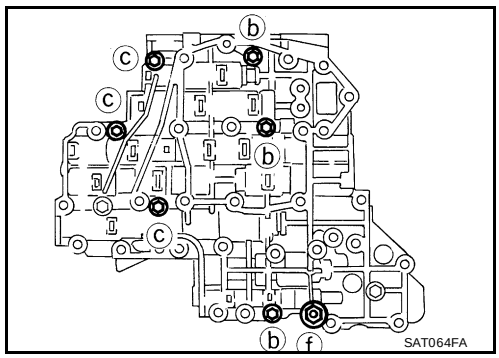

5. Remove inter body from lower body.

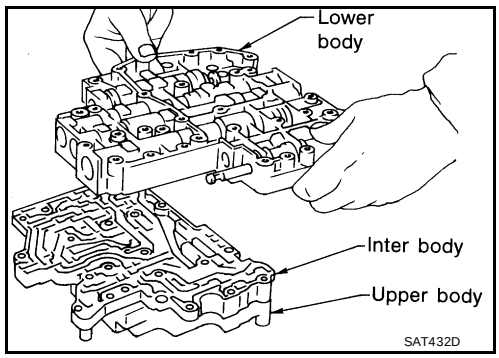

6. Turn over lower body, and remove accumulator support plate.

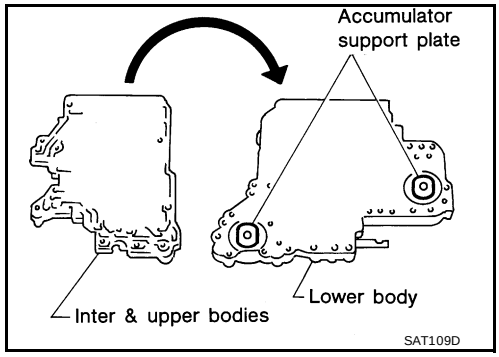

7. Remove bolts **e** , separating plate and separating gasket from lower body.
8. Remove check balls and oil cooler relief valve springs from lower body.
   - **Be careful not to lose check balls and oil cooler relief valve springs.**

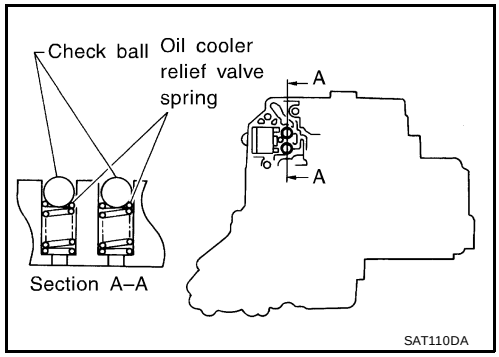

9. Remove inter body from upper body.

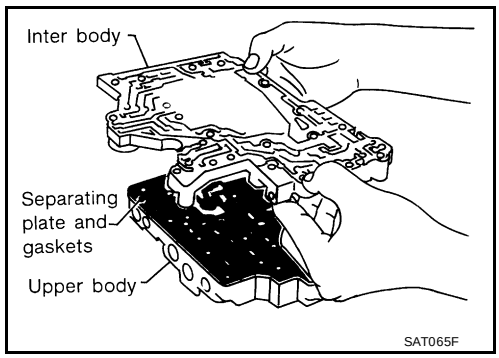

10. Check to see that steel balls are properly positioned in inter body and then remove them.
    - **Be careful not to lose steel balls.**

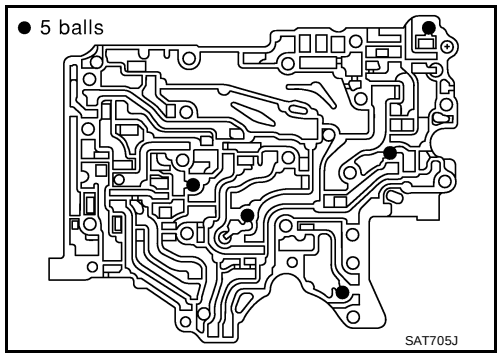

11. Check to see that steel balls are properly positioned in upper body and then remove them.
    - **Be careful not to lose steel balls.**

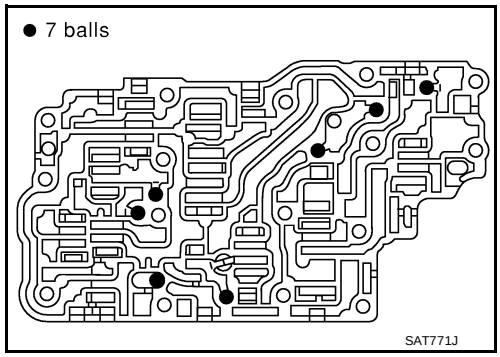

INSPECTION

Lower and Upper Bodies

- Check to see that retainer plates are properly positioned in lower body.

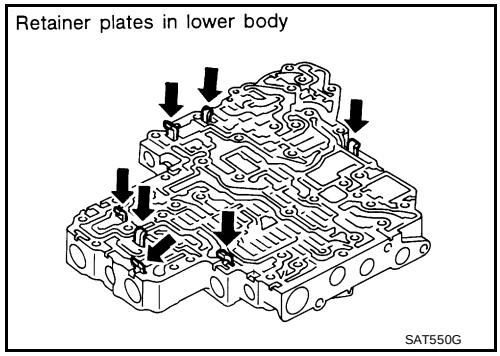

- Check to see that retainer plates are properly positioned in upper body.
- **Be careful not to lose these parts.**

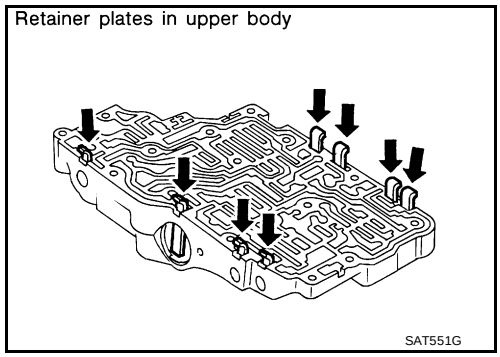

Oil Strainer

- Check wire netting of oil strainer for damage.

Shift Solenoid Valves “A” and “B”, Line Pressure Solenoid Valve, Torque Converter Clutch Solenoid Valve and Overrun Clutch Solenoid Valve

- Measure resistance.
- For shift solenoid valve A, refer to AT-168, "Diagnostic Procedure" .
- For shift solenoid valve B, refer to AT-173, "Diagnostic Procedure" .
- For line pressure solenoid valve, refer to AT-162, "Diagnostic Procedure" .
- For torque converter clutch solenoid valve, refer to AT-149, "Diagnostic Procedure" .
- For overrun clutch solenoid valve, refer to AT-183, "Diagnostic Procedure" .

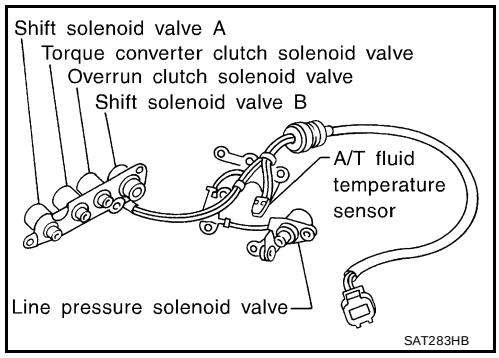

Oil Cooler Relief Valve Spring

- Check springs for damage or deformation.
- Measure free length and outer diameter.

Inspection standard : Refer to **AT-365, "Control Valves"** .

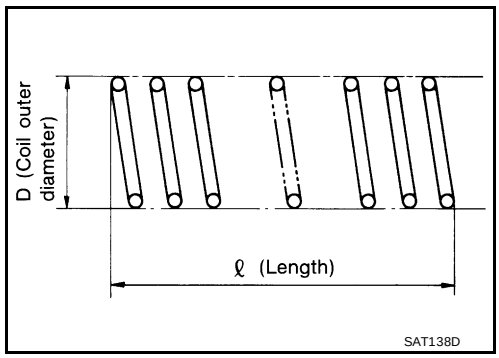

ASSEMBLY

1. Install upper, inter and lower body.

a. Place oil circuit of upper body face up. Install steel balls in their proper positions.

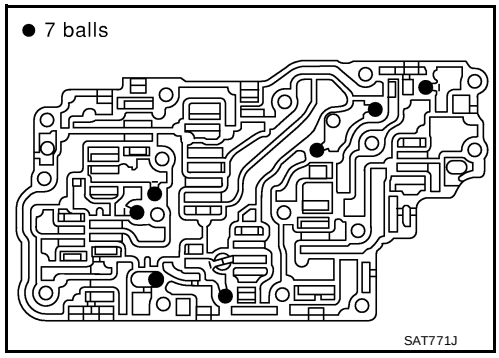

b. Install upper separating gasket, upper inter separating gasket and upper separating plate in order shown in illustration.

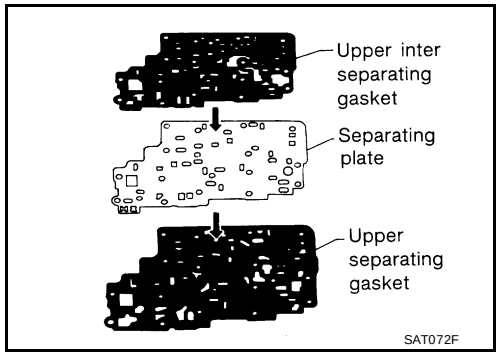

c. Install reamer bolts **f** from bottom of upper body. Using reamer bolts as guides, install separating plate and gaskets as a set.

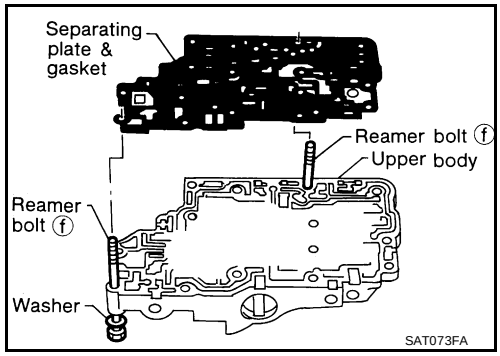

d. Install pilot filter.

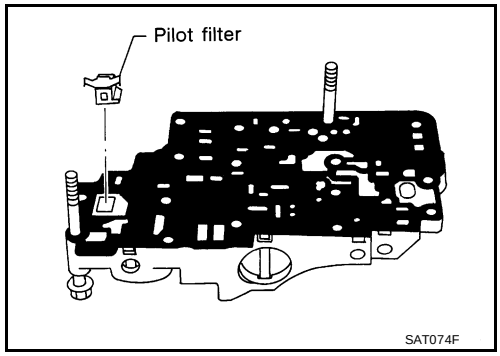

e. Place lower body as shown in illustration (side of inter body face up). Install steel balls in their proper positions.

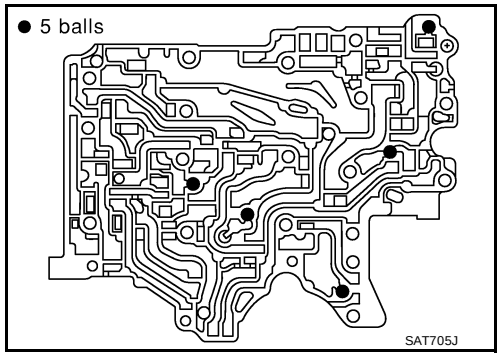

f. Install inter body on upper body using reamer bolts **f** as guides.

- **Be careful not to dislocate or drop steel balls.**

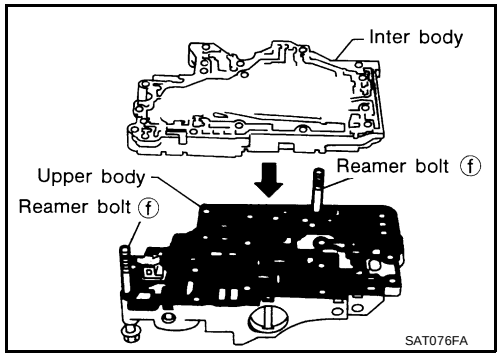

g. Install check balls and oil cooler relief valve springs in their proper positions in lower body.

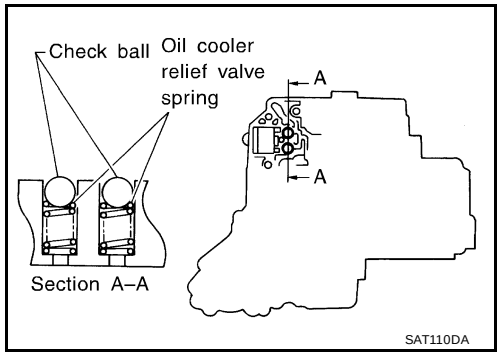

h. Install lower separating gasket, lower inter separating gasket and lower separating plate in order shown in illustration.

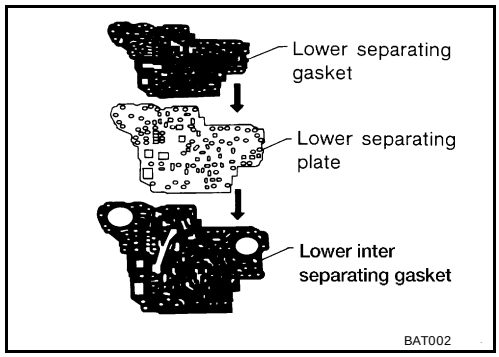

i. Install bolts **e** from bottom of lower body. Using bolts **e** as guides, install separating plate and gaskets as a set.

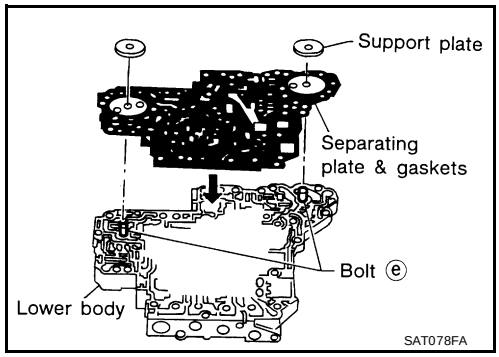

j. Temporarily install support plates on lower body.

k. Install lower body on inter body using reamer bolts **f** as guides and tighten reamer bolts **f** slightly.

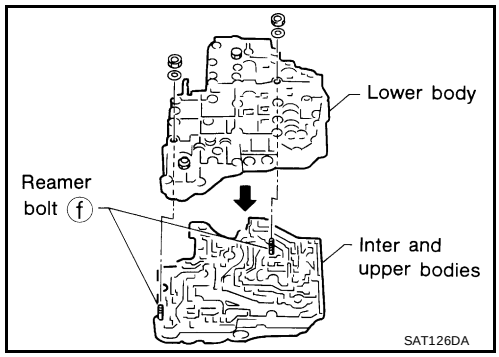

2. Install O-rings to solenoid valves and terminal body.
   - **Apply ATF to O-rings.**

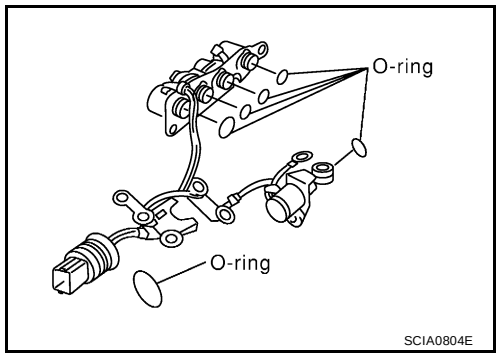

3. Install and tighten bolts.

Bolt length, number and location:

Bolt symbol	a	b	c	d	e	f	g
Bolt length "ℓ" mm (in) ℓ	13.5 (0.531)	58.0 (2.283)	40.0 (1.575)	66.0 (2.598)	33.0 (1.299)	78.0 (3.071)	18.0 (0.709)
Number of bolts	6	3	6	11	2	2	1

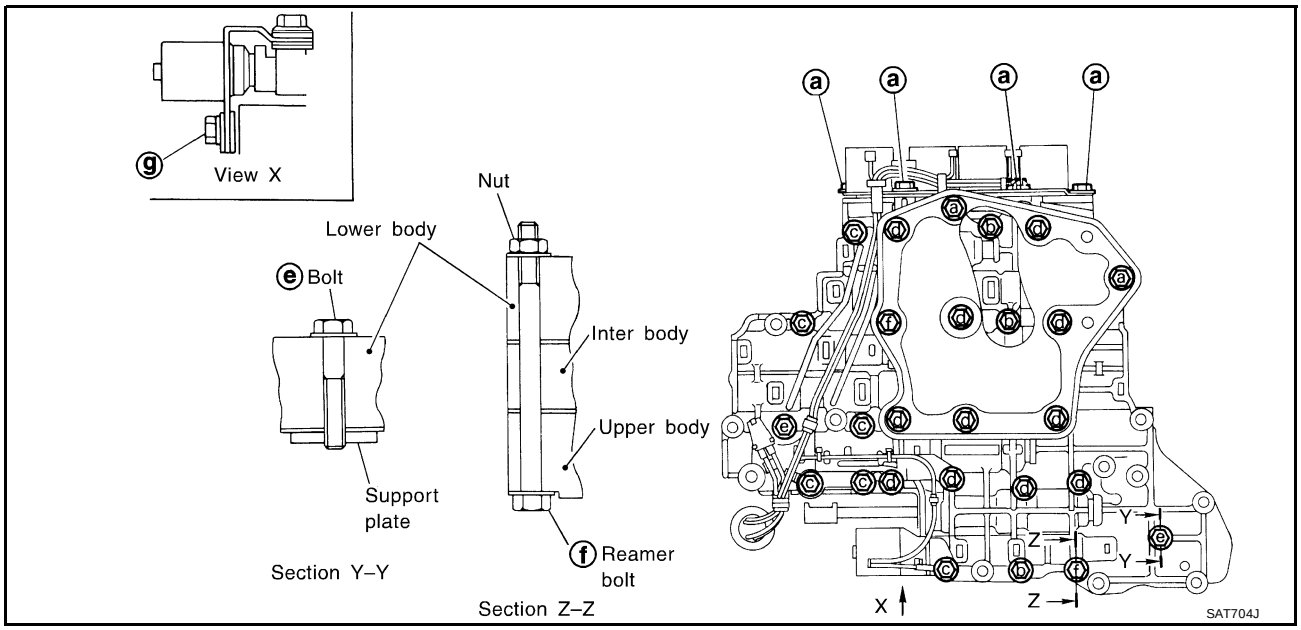

a. Install and tighten bolts **b** to specified torque.

: 7 - 9 N-m (0.7 - 0.9 kg-m, 61 - 78 in-lb)

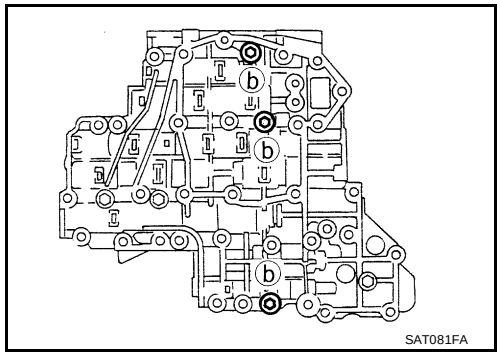

b. Install solenoid valve assembly and line pressure solenoid valve to lower body.

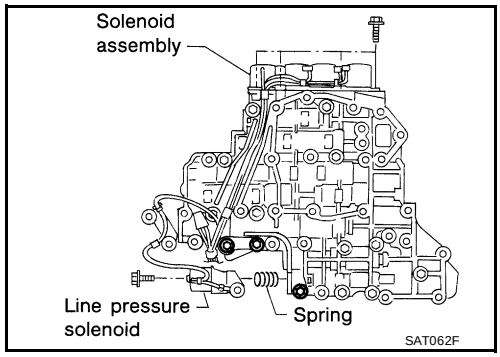

c. Set oil strainer, then tighten bolts **a** , **c** , **d** and nuts **f** to specified torque.

: 7 - 9 N-m (0.7 - 0.9 kg-m, 61 - 78 in-lb)

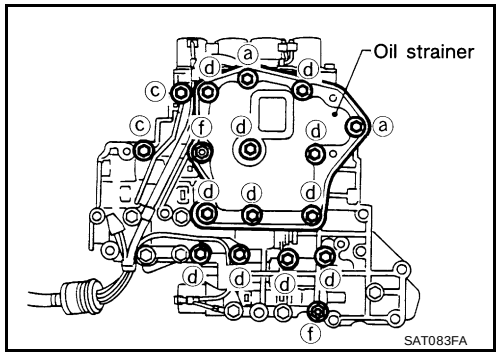

d. Tighten bolts **e** to specified torque.

: 3.4 - 4.4 N-m (0.35 - 0.45 kg-m, 30.4 - 39.1 in-lb)

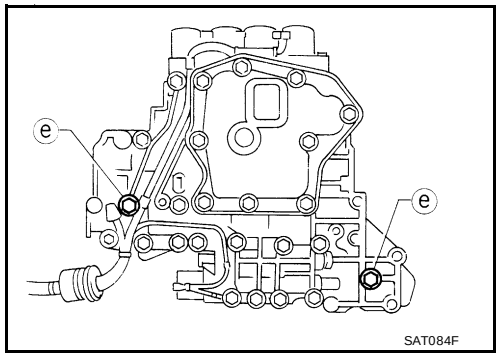

Control Valve Upper Body

ECS004W4

COMPONENTS

Apply ATF to all components before installation.

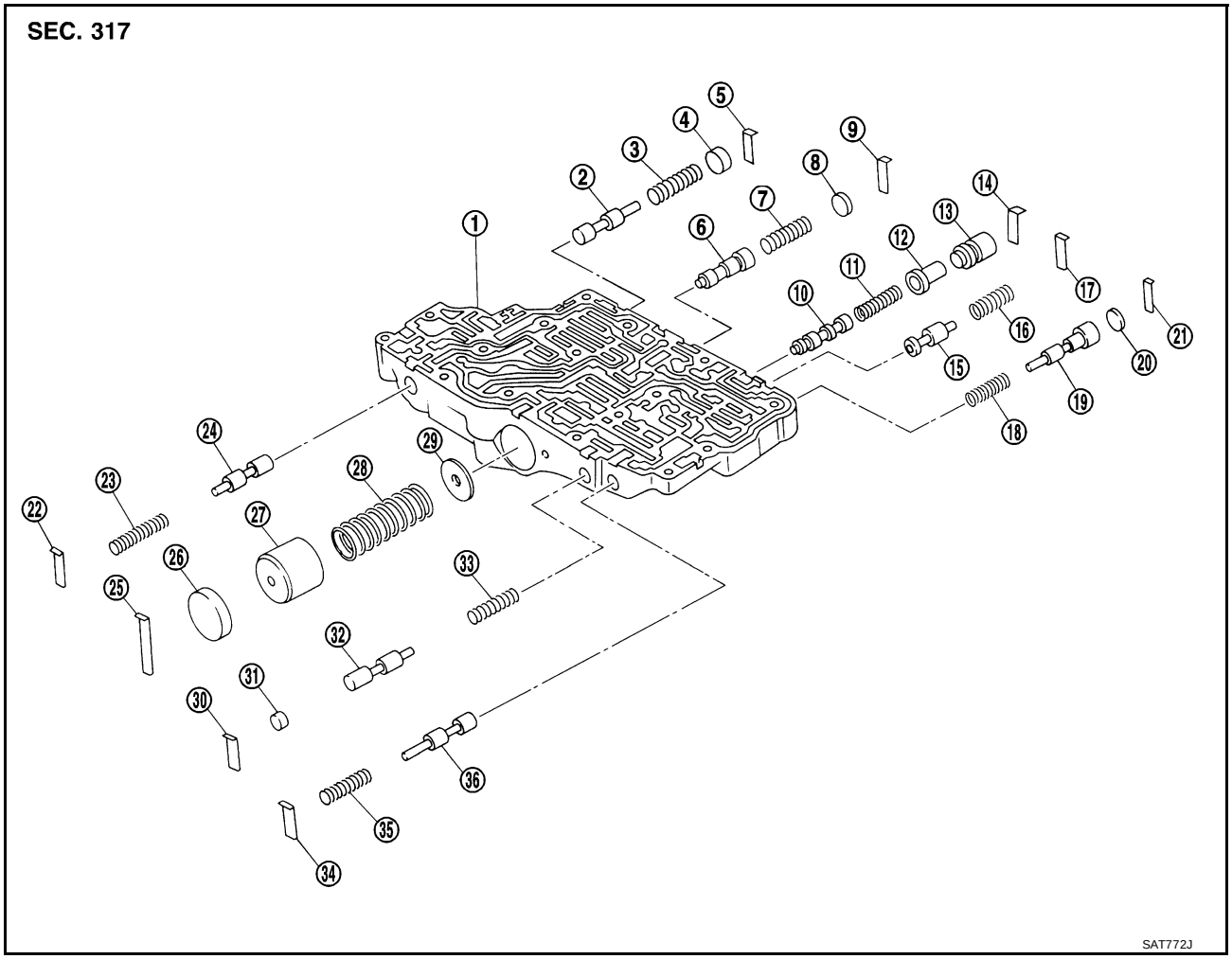

1.	Upper body	2.	Cooler check valve	3.	Return spring
4.	Plug	5.	Retainer plate	6.	1-2 accumulator valve
7.	Return spring	8.	Plug	9.	Retainer plate
10.	Torque converter clutch control valve	11.	Return spring	12.	Torque converter clutch control plug
13.	Torque converter clutch control sleeve	14.	Retainer plate	15.	Torque converter relief valve
16.	Return spring	17.	Retainer plate	18.	Return spring
19.	Overrun clutch reducing valve	20.	Plug	21.	Retainer plate
22.	Retainer plate	23.	Return spring	24.	Pilot valve
25.	Retainer plate	26.	Plug	27.	1-2 accumulator piston
28.	Return spring	29.	1-2 accumulator retainer plate	30.	Retainer plate
31.	Plug	32.	1st reducing valve	33.	Return spring
34.	Retainer plate	35.	Return spring	36.	3-2 timing valve

DISASSEMBLY

1. Remove valves at retainer plates.
   - **Do not use a magnetic pick-up tool.**

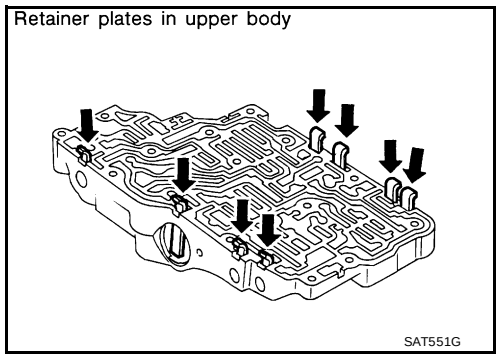

a. Use a screwdriver to remove retainer plates.

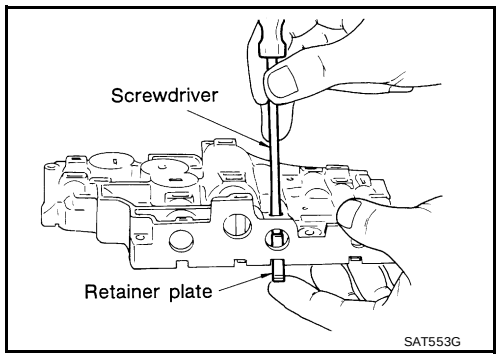

b. Remove retainer plates while holding spring, plugs or sleeves.
   - **Remove plugs slowly to prevent internal parts from jumping out.**

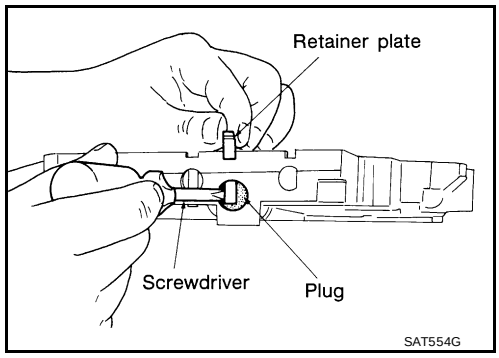

c. Place mating surface of valve body face down, and remove internal parts.
   - **If a valve is hard to remove, place valve body face down and lightly tap it with a soft hammer.**
   - **Be careful not to drop or damage valves and sleeves.**

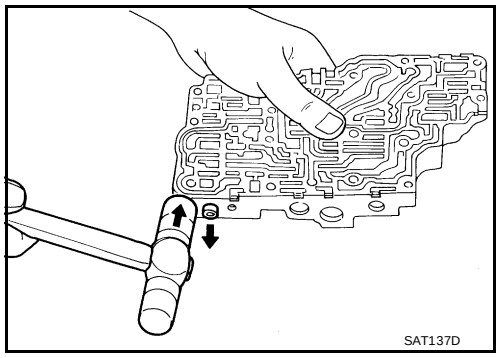

INSPECTION

Valve Spring

- Measure free length and outer diameter of each valve spring. Also check for damage or deformation.

  Inspection standard : Refer to AT-365, "Control Valves" .

- Replace valve springs if deformed or fatigued.

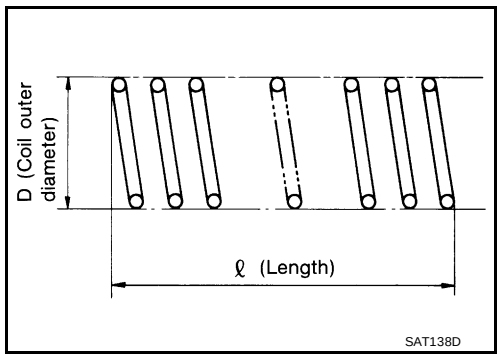

Control Valves

- Check sliding surfaces of valves, sleeves and plugs.

ASSEMBLY

- **Lay control valve body down when installing valves. Do not stand the control valve body upright.**

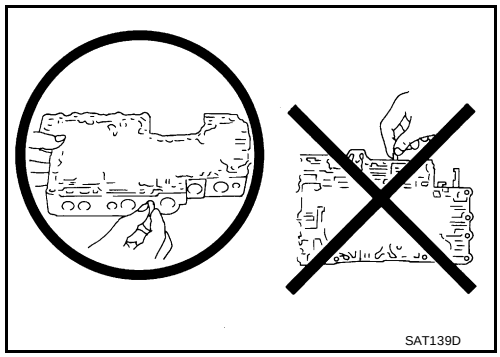

1. Lubricate the control valve body and all valves with ATF. Install control valves by sliding them carefully into their bores.
   - **Be careful not to scratch or damage valve body.**

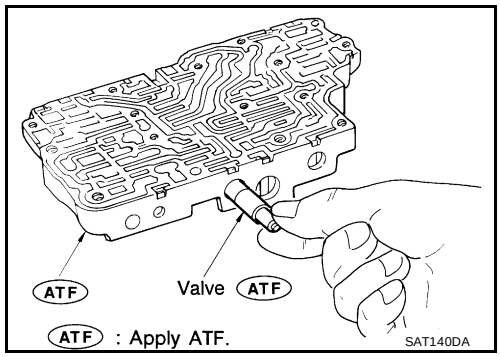

   - Wrap a small screwdriver with vinyl tape and use it to insert the valves into their proper positions.

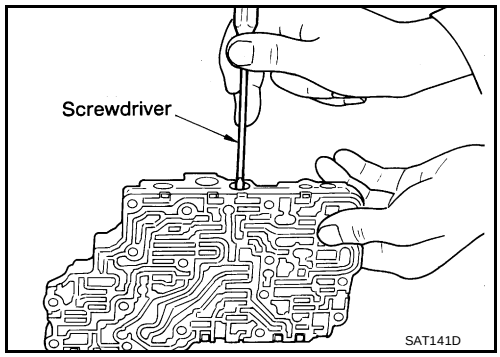

1-2 Accumulator Valve

- Install 1-2 accumulator valve. Align 1-2 accumulator retainer plate from opposite side of control valve body.
- Install return spring, 1-2 accumulator piston and plug.

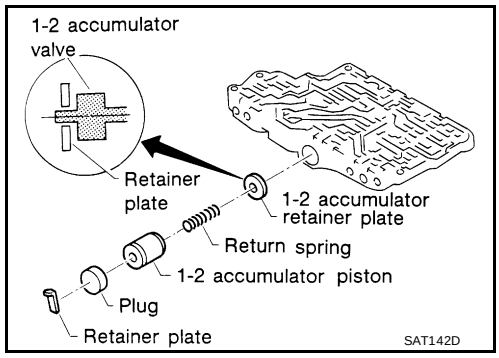

1. Install retainer plates.
   - While pushing plug or return spring, install retainer plate.

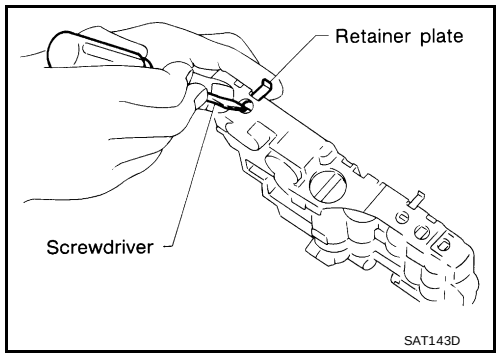

Retainer Plate (Upper Body)

Unit: mm (in)

No.	Name of control valve	Width A	Length B
22	Pilot valve	6.0 (0.236)	21.5 (0.846)
30	1st reducing valve		
34	3-2 timing valve		
17	Torque converter relief valve		
9	1-2 accumulator valve		38.5 (1.516)
25	1-2 accumulator piston valve		
21	Overrun clutch reducing valve		24.0 (0.945)
5	Cooler check valve		
14	Torque converter clutch control valve		28.0 (1.102)

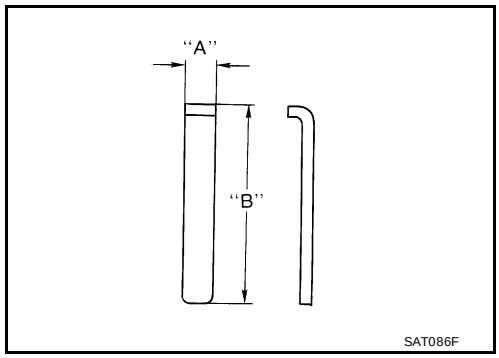

- Install proper retainer plates.
  Refer to AT-299, "COMPONENTS" .

Control Valve Lower Body

ECS004W5

COMPONENTS

Apply ATF to all components before installation.

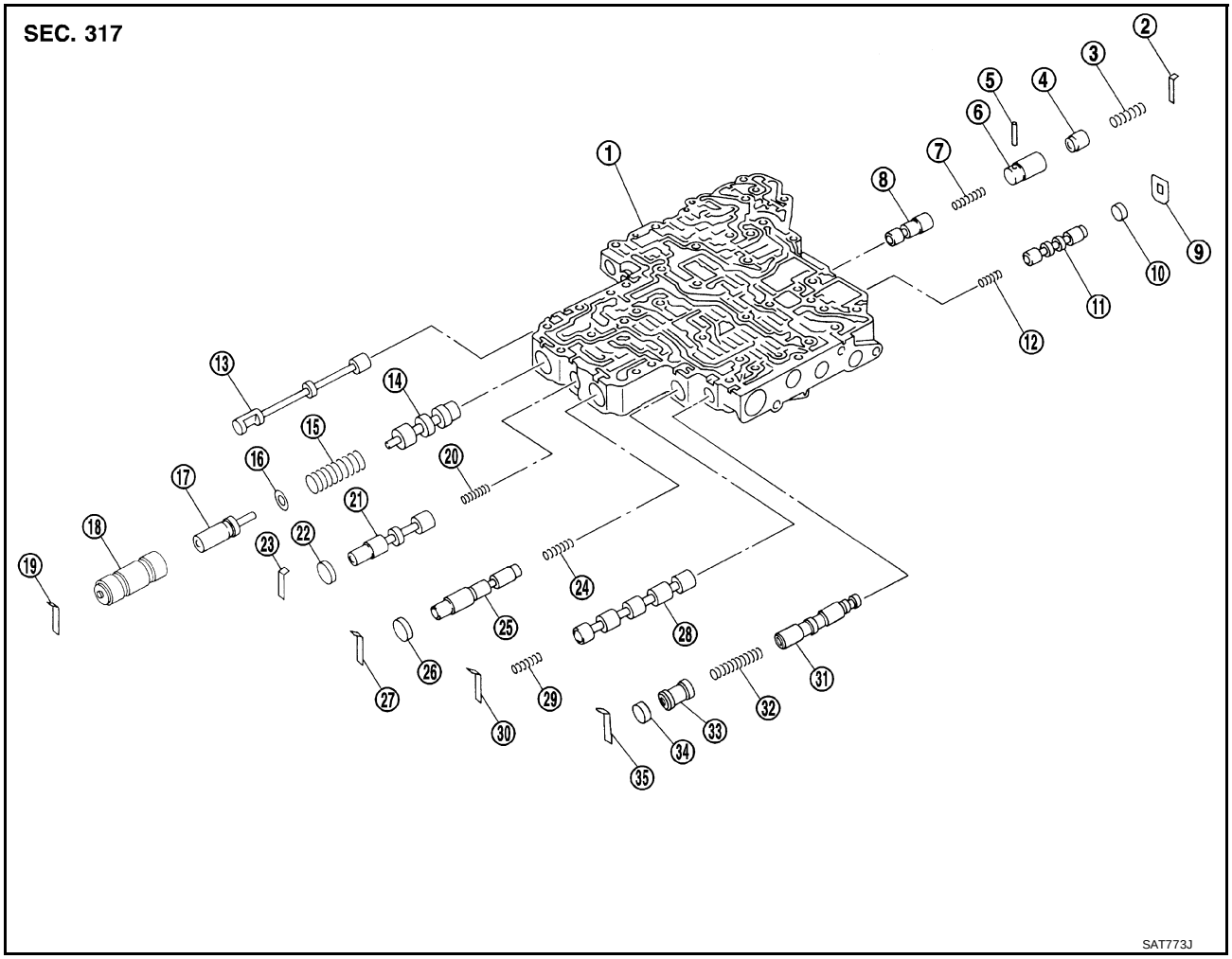

1.	Lower body	2.	Retainer plate	3.	Return spring
4.	Piston	5.	Parallel pin	6.	Sleeve
7.	Return spring	8.	Pressure modifier valve	9.	Retainer plate
10.	Plug	11.	Shift valve B	12.	Return spring
13.	Manual valve	14.	Pressure regulator valve	15.	Return spring
16.	Spring seat	17.	Plug	18.	Sleeve
19.	Retainer plate	20.	Return spring	21.	Overrun clutch control valve
22.	Plug	23.	Retainer plate	24.	Return spring
25.	Accumulator control valve	26.	Plug	27.	Retainer plate
28.	Shift valve A	29.	Return spring	30.	Retainer plate
31.	Shuttle valve	32.	Return spring	33.	Plug
34.	Plug	35.	Retainer plate		

DISASSEMBLY

- Remove valves at retainer plate.
  For removal procedures, refer to AT-303, "COMPONENTS" .

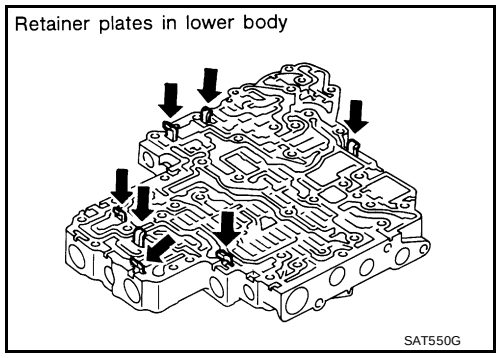

INSPECTION

Valve Springs

- Check each valve spring for damage or deformation. Also measure free length and outer diameter.

  Inspection standard : **Refer to AT-365, "Control Valves" .**

- Replace valve springs if deformed or fatigued.

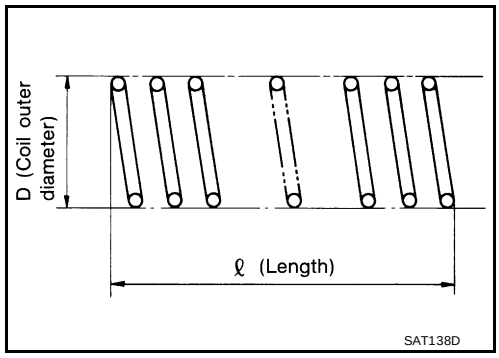

Control Valves

- Check sliding surfaces of control valves, sleeves and plugs for damage.

ASSEMBLY

- Install control valves.
  For installation procedures, refer to AT-303, "COMPONENTS" .

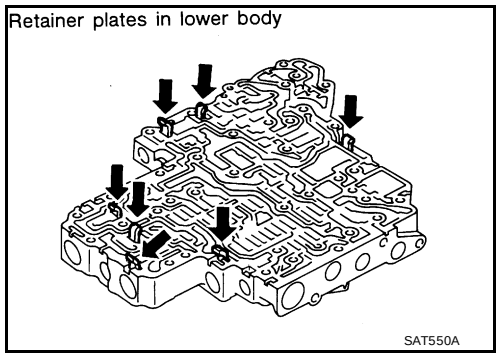

Retainer Plate (Lower Body)

Unit: mm (in)

No.	Name of control valve and plug	Width A	Length B	Type
19	Pressure regulator valve	6.0 (0.236)	28.0 (1.102)	I
27	Accumulator control valve			
30	Shift valve A			
23	Overrun clutch control valve			
2	Pressure modifier valve			
35	Shuttle valve			
9	Shift valve B	—	—	II

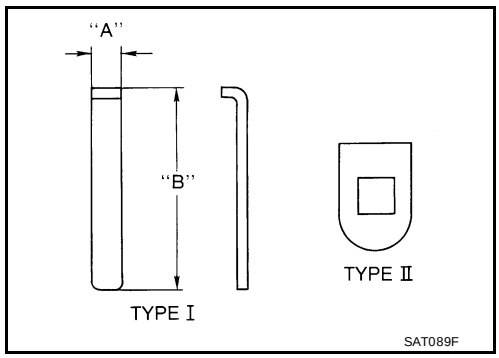

- Install proper retainer plates.
  Refer to AT-303, "COMPONENTS" .

Reverse Clutch

ECS004W6

COMPONENTS

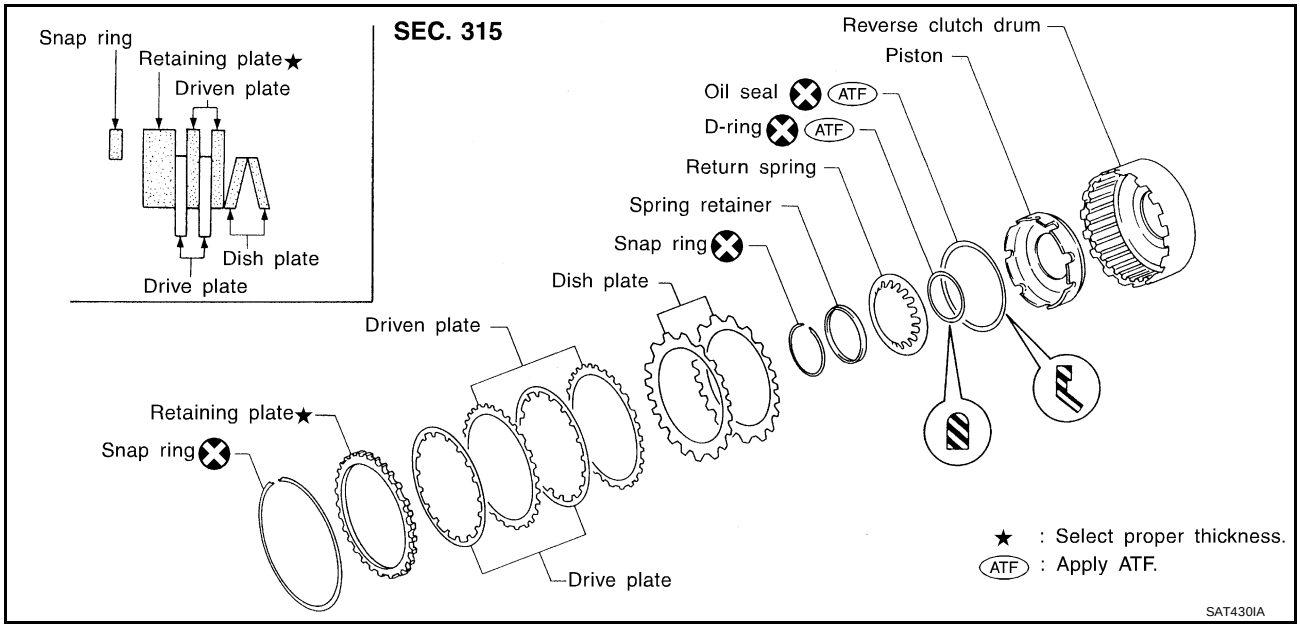

DISASSEMBLY

1. Check operation of reverse clutch

a. Install seal ring onto drum support of oil pump cover and install reverse clutch assembly. Apply compressed air to oil hole.

b. Check to see that retaining plate moves to snap ring.

c. If retaining plate does not contact snap ring:
   - D-ring might be damaged.
   - Oil seal might be damaged.
   - Fluid might be leaking past piston check ball.

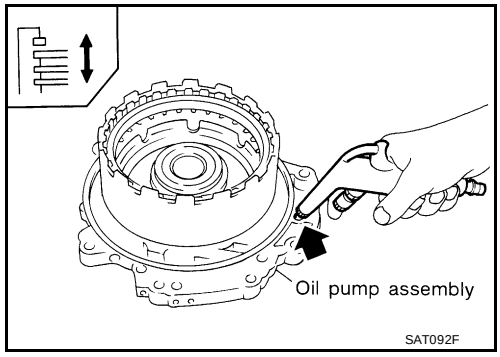

2. Remove snap ring.
3. Remove drive plates, driven plates, retaining plate, and dish plates.

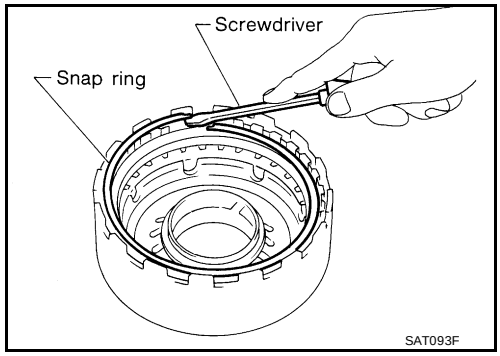

4. Set Tool on spring retainer and remove snap ring from reverse clutch drum while compressing return springs.
   - **Set Tool directly over springs.**
   - **Do not expand snap ring excessively.**
5. Remove spring retainer and return springs.

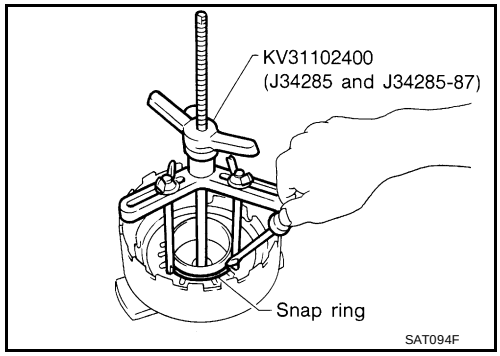

6. Remove piston from reverse clutch drum by turning it.
7. Remove D-ring and oil seal from piston.

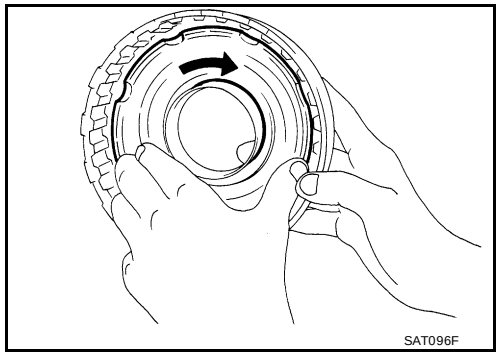

INSPECTION

Reverse Clutch Snap Ring, Spring Retainer and Return Springs

- Check for deformation, fatigue or damage.
  If necessary, replace.

Reverse Clutch Drive Plates

- Check facing for burns, cracks or damage.
- Measure thickness of facing.

Thickness of drive plate:

Standard value : 1.6 mm (0.063 in)

Wear limit : 1.4 mm (0.055 in)

- If not within wear limit, replace.

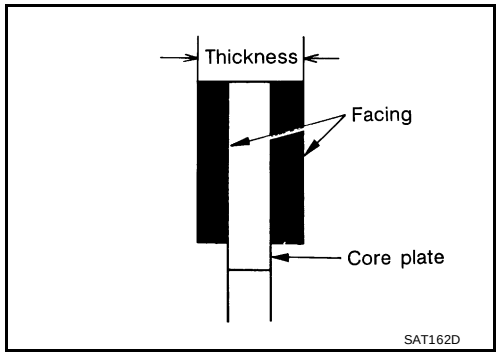

Reverse Clutch Dish Plates

- Check for deformation or damage.
- Measure thickness of dish plate.

Thickness of dish plate : 3.08 mm (0.1213 in)

- If deformed or fatigued, replace.

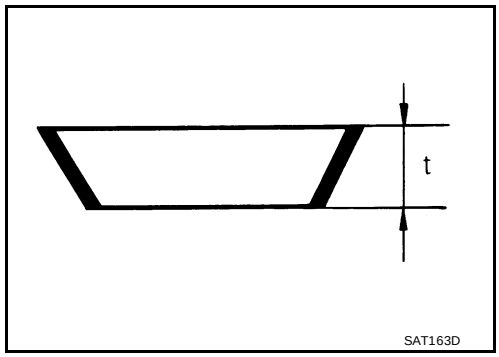

Reverse Clutch Piston

- Make sure that check balls are not fixed.
- Apply compressed air to check ball oil hole opposite the return spring. Make sure there is no air leakage.
- Apply compressed air to oil hole on return spring side to make sure that air leaks past ball.

ASSEMBLY

1. Install D-ring and oil seal on piston.
   - **Take care with the direction of oil seal.**
   - **Apply ATF to both parts.**

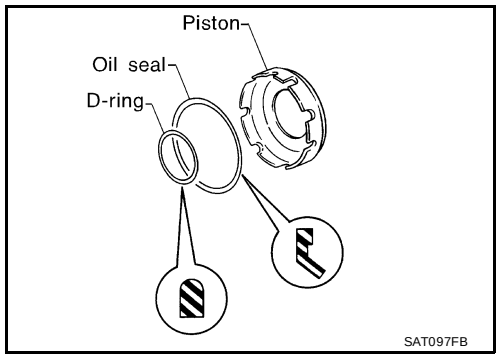

2. Install piston assembly by turning it slowly.
   - **Apply ATF to inner surface of drum.**

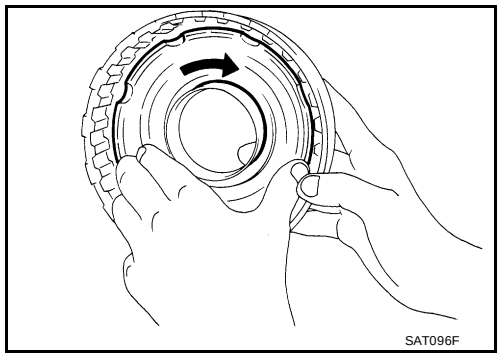

3. Install return springs and spring retainer on piston.

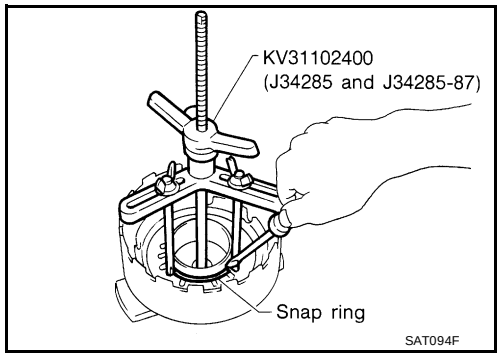

4. Set Tool on spring retainer and install snap ring while compressing return springs.
   - **Set Tool directly over return springs.**
5. Install drive plates, driven plates, retaining plate and dish plates.
   - **Take care with order of plates.**
6. Install snap ring.

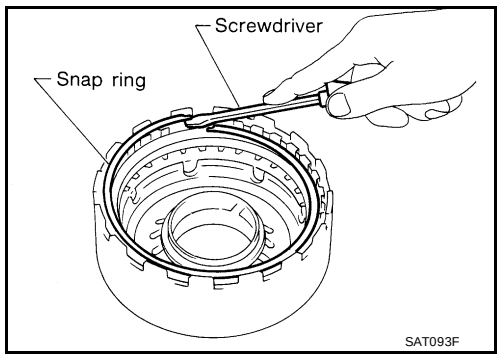

7. Measure clearance between retaining plate and snap ring. If not within allowable limit, select proper retaining plate.

Specified clearance	
Standard	**: 0.5 - 0.8 mm (0.020 - 0.031 in)**
Allowable limit	**: 1.2 mm (0.047 in)**
Retaining plate	**: Refer to AT-366, "REVERSE CLUTCH" .**

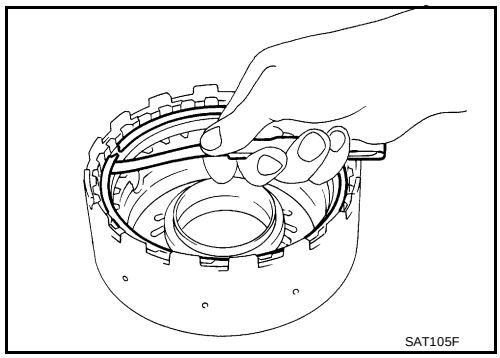

8. Check operation of reverse clutch.

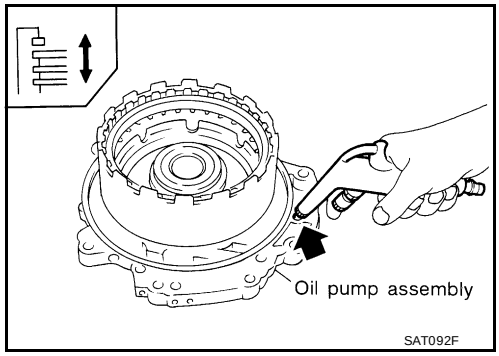

High Clutch

ECS004W7

COMPONENTS

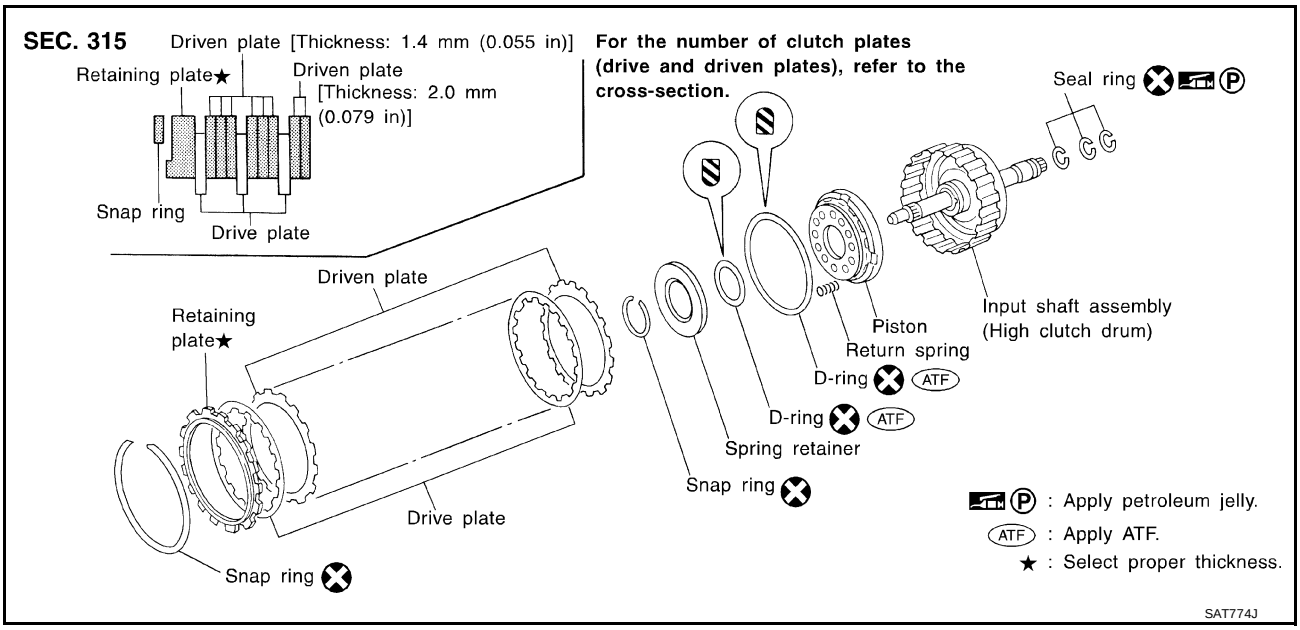

DISASSEMBLY

1. Check operation of high clutch.

a. Apply compressed air to oil hole of input shaft with nylon cloth.
   - **Stop up hole on opposite side of input shaft with nylon cloth.**

b. Check to see that retaining plate moves to snap ring.

c. If retaining plate does not contact snap ring:
   - D-ring might be damaged.
   - Oil seal might be damaged.
   - Fluid might be leaking past piston check ball.

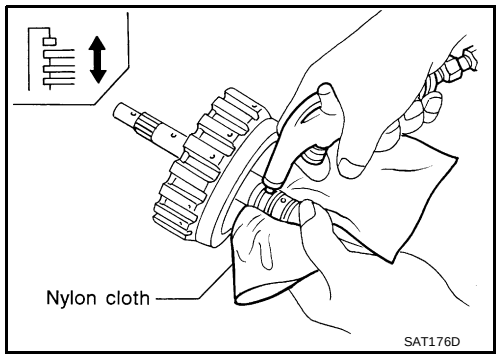

2. Remove seal rings from input shaft.
   - **Always replace when removed.**

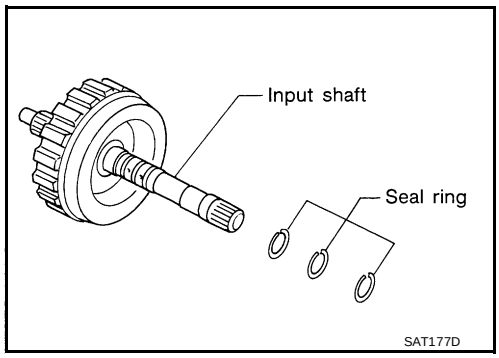

3. Remove snap ring.
4. Remove drive plates, driven plates and retaining plate.

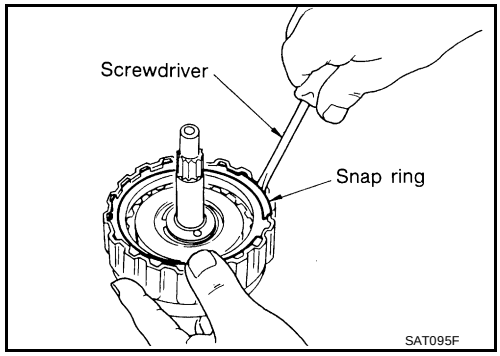

5. Set Tool on spring retainer and remove snap ring from high clutch drum while compressing return springs.
   - **Set Tool directly over springs.**
   - **Do not expand snap ring excessively.**
6. Remove spring retainer and return springs.

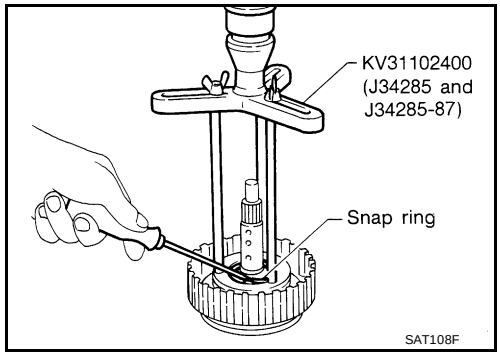

7. Remove piston from high clutch drum by turning it.

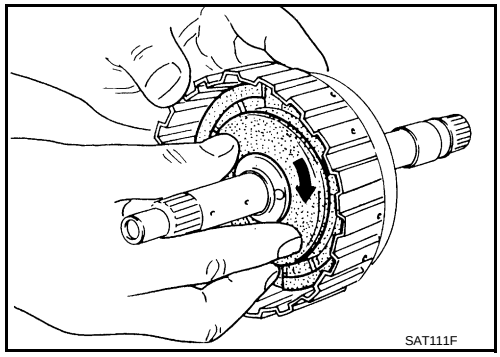

8. Remove D-rings from piston.

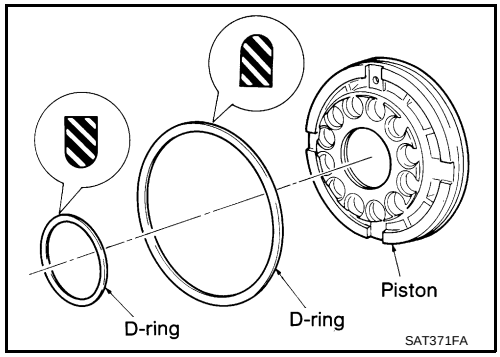

INSPECTION

High Clutch Snap Ring, Spring Retainer and Return Springs

- Check for deformation, fatigue or damage.
  If necessary, replace.
- **When replacing spring retainer and return springs, replace them as a set.**

High Clutch Drive Plates

- Check facing for burns, cracks or damage.
- Measure thickness of facing.

Thickness of drive plate:

Standard value	**: 1.6 mm (0.063 in)**
Wear limit	**: 1.4 mm (0.055 in)**

- If not within wear limit, replace.

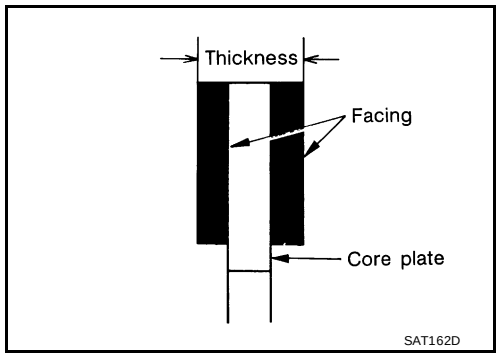

High Clutch Piston

- Make sure that check balls are not fixed.
- Apply compressed air to check ball oil hole opposite the return spring. Make sure there is no air leakage.
- Apply compressed air to oil hole on return spring side to make sure that air leaks past ball.

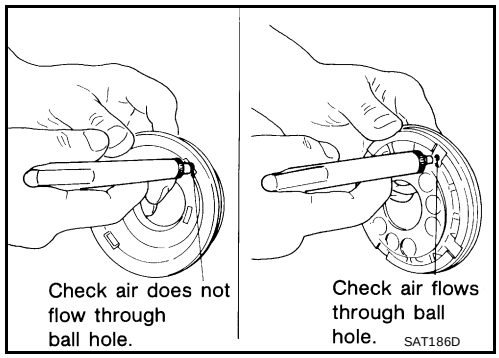

Seal Ring Clearance

- Install new seal rings onto input shaft.
- Measure clearance between seal ring and ring groove.

Standard clearance	**: 0.08 - 0.23 mm (0.0031 - 0.0091 in)**
Allowable limit	**: 0.23 mm (0.0091 in)**

- If not within allowable limit, replace input shaft assembly.

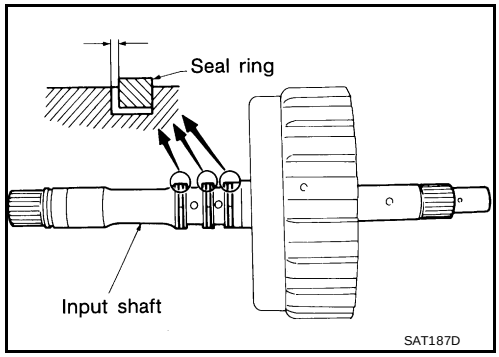

ASSEMBLY

1. Install D-rings on piston.
   - **Apply ATF to both parts.**

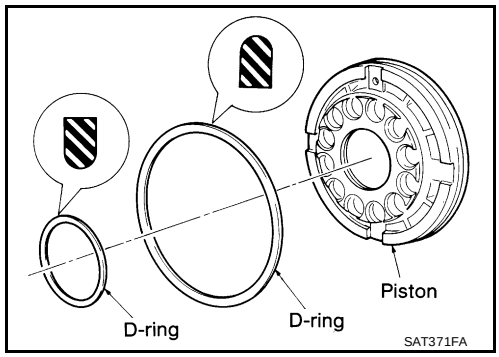

2. Install piston assembly by turning it slowly.
   - **Apply ATF to inner surface of drum.**

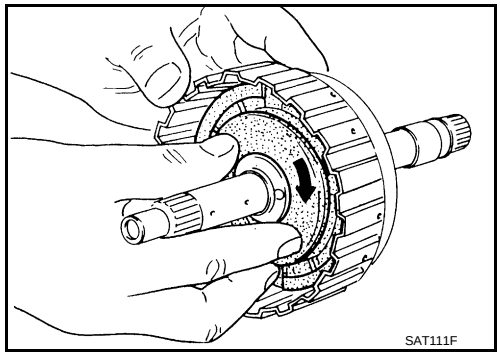

3. Install return springs and spring retainer on piston.

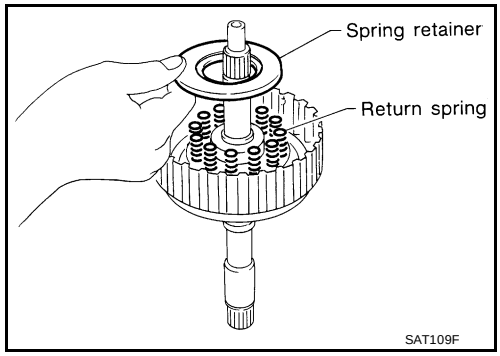

4. Set Tool on spring retainer and install snap ring while compressing return springs.
   - **Set Tool directly over return springs.**

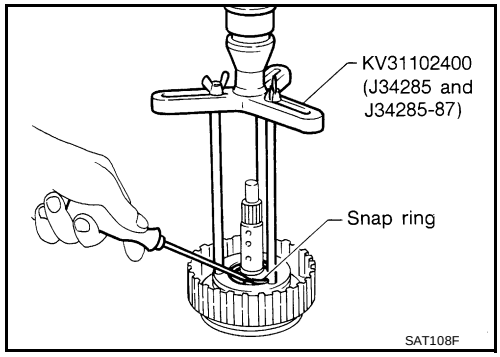

   - **Do not align snap ring gap with spring retainer stopper.**

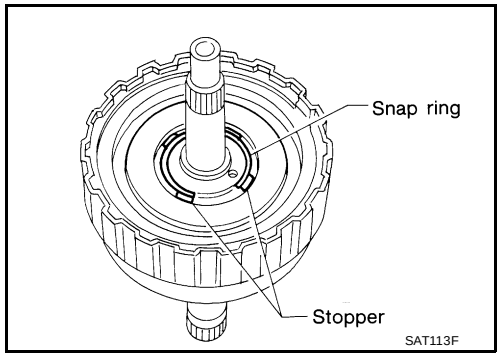

5. Install drive plates, driven plates and retaining plate.
   - **Take care with the order and direction of plates.**

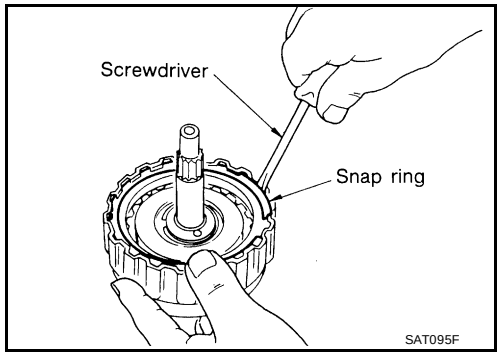

6. Install snap ring.
7. Measure clearance between retaining plate and snap ring. If not within allowable limit, select proper retaining plate.

   Specified clearance

   Standard : 1.8 - 2.2 mm (0.071 - 0.087 in)

   Allowable limit : 2.8 mm (0.110 in)

   Retaining plate

   : Refer to AT-367, "HIGH CLUTCH — QR25DE MODEL"

   .

   : Refer to AT-367, "HIGH CLUTCH — VQ35DE MODEL"

   .

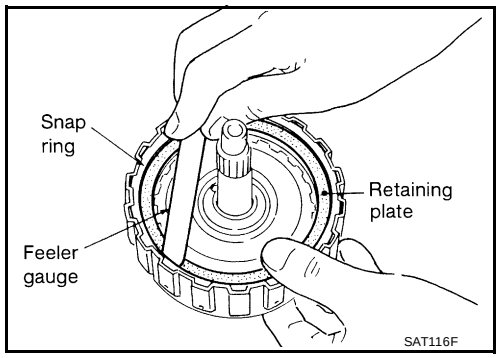

8. Check operation of high clutch.

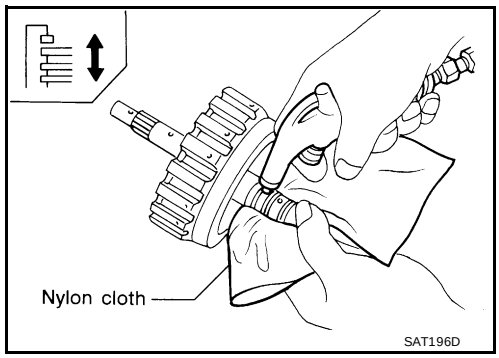

9. Install seal rings to input shaft.
   - **Apply petroleum jelly to seal rings.**
   - **Always replace when removed.**

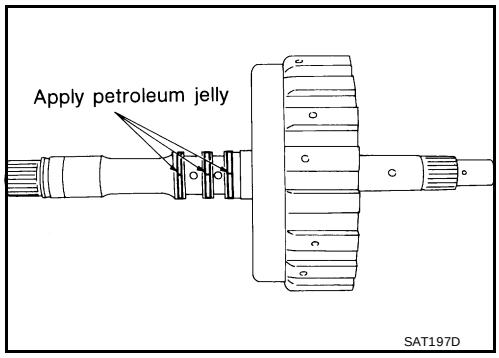

   - **Roll paper around seal rings to prevent seal rings from spreading.**

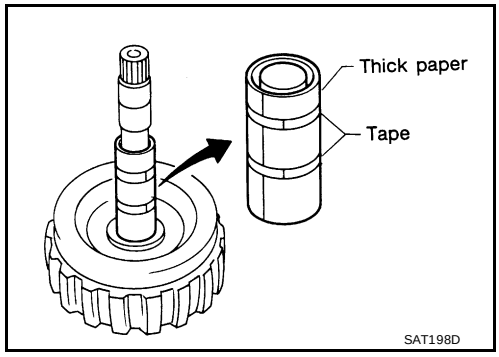

Forward and Overrun Clutches

ECS004W8

COMPONENTS

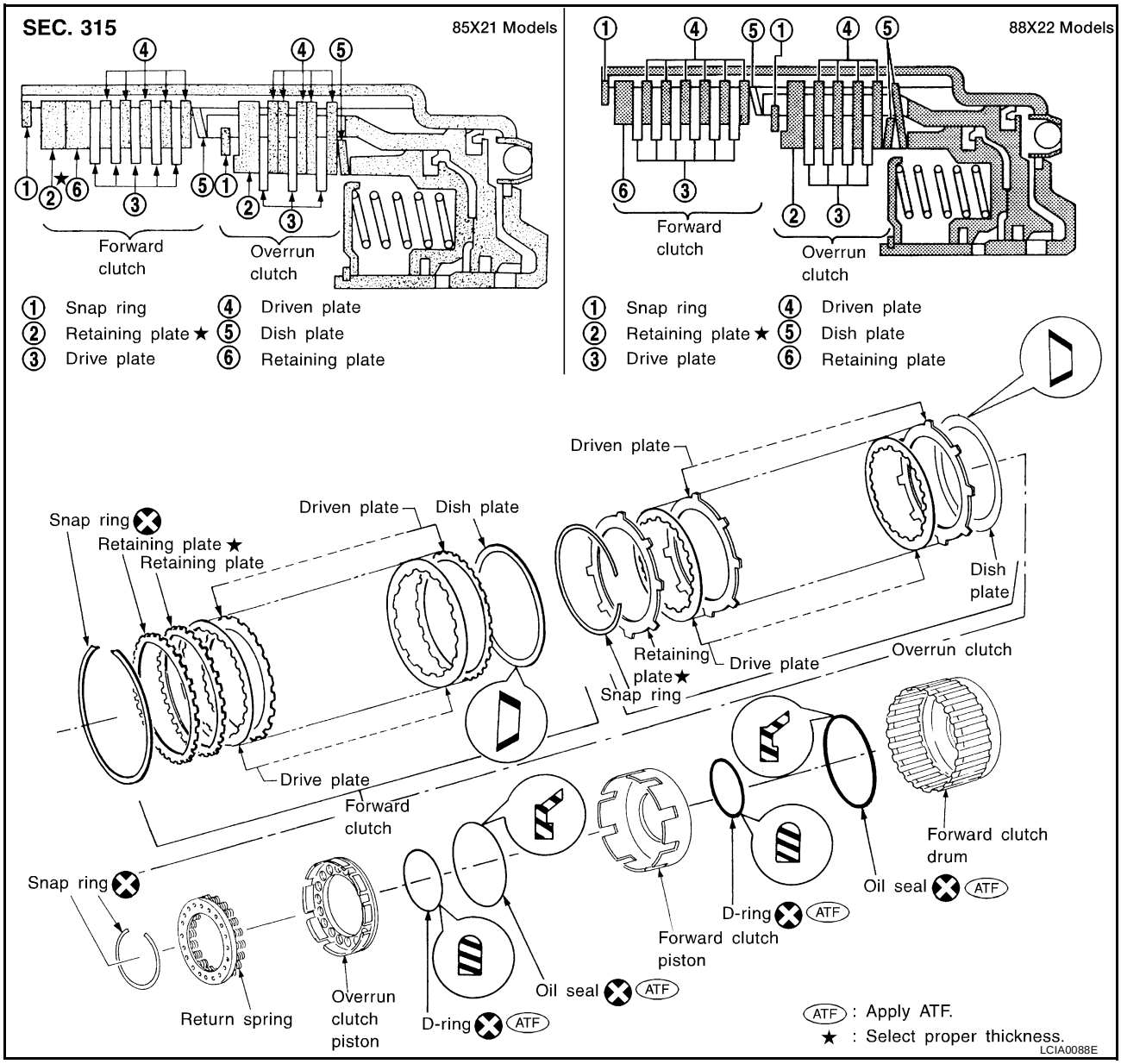

DISASSEMBLY

1. Check operation of forward clutch and overrun clutch.

a. Install bearing retainer on forward clutch drum.

b. Apply compressed air to oil hole of forward clutch drum.

c. Check to see that retaining plate moves to snap ring.

d. If retaining plate does not contact snap ring:
   - D-ring might be damaged.
   - Oil seal might be damaged.
   - Fluid might be leaking past piston check ball.

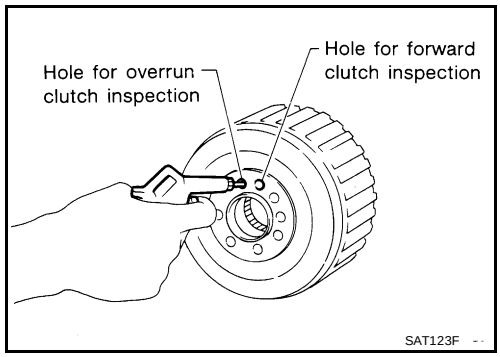

2. Remove snap ring for forward clutch.
3. Remove drive plates, driven plates, retaining plate and dish plate for forward clutch.

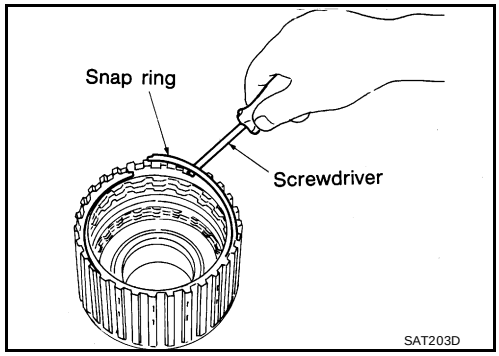

4. Remove snap ring for overrun clutch.
5. Remove drive plates, driven plates, retaining plate and dish plate for overrun clutch.

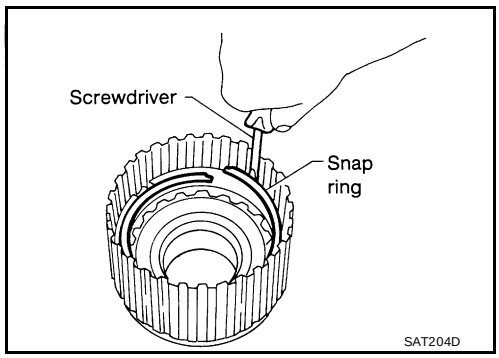

6. Set Tool on spring retainer and remove snap ring from forward clutch drum while compressing return springs.
   - **Set Tool directly over return springs.**
   - **Do not expand snap ring excessively.**
7. Remove spring retainer and return springs.
   - **Do not remove return springs from spring retainer.**

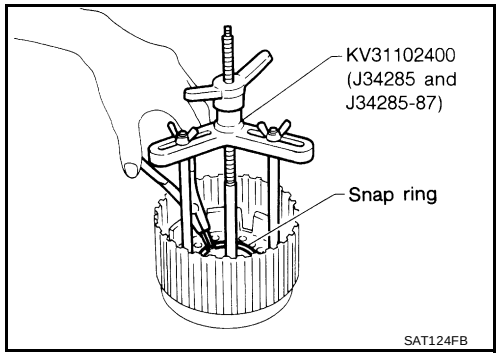

8. Remove forward clutch piston with overrun clutch piston from forward clutch drum by turning it.

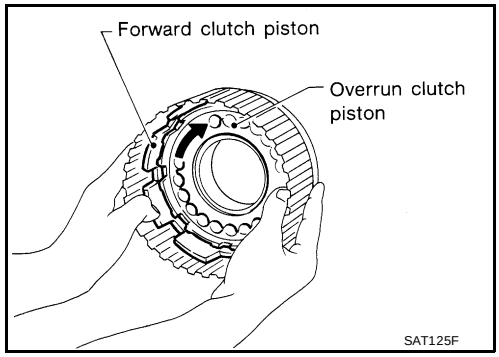

9. Remove overrun clutch piston from forward clutch piston by turning it.

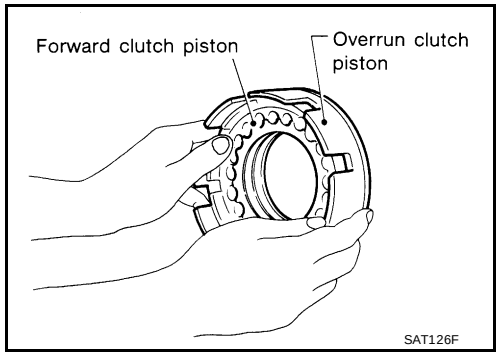

10. Remove D-rings and oil seals from forward clutch piston and overrun clutch piston.

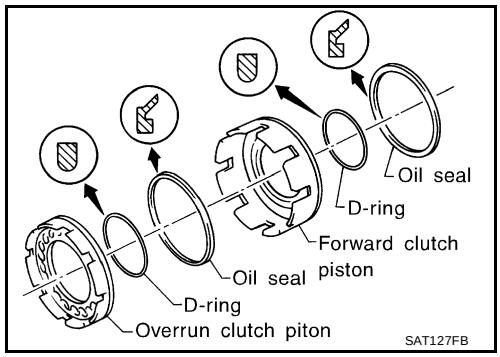

INSPECTION

Snap Rings, Spring Retainer and Return Springs

- Check for deformation, fatigue or damage.
- Replace if necessary.
- **When replacing spring retainer and return springs, replace them as a set.**

Forward Clutch and Overrun Clutch Drive Plates

- Check facing for burns, cracks or damage.
- Measure thickness of facing.

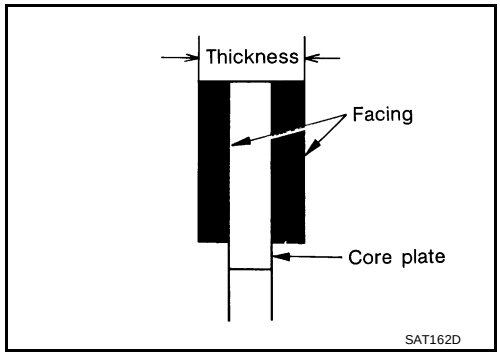

Thickness of drive plate:

Forward clutch

Standard value	**: 1.6 mm (0.063 in)**
Wear limit	**: 1.4 mm (0.055 in)**

Overrun clutch

Standard value	**: 1.6 mm (0.063 in)**
Wear limit	**: 1.4 mm (0.055 in)**

- If not within wear limit, replace.

Forward Clutch and Overrun Clutch Dish Plates

- Check for deformation or damage.
- Measure thickness of dish plate.

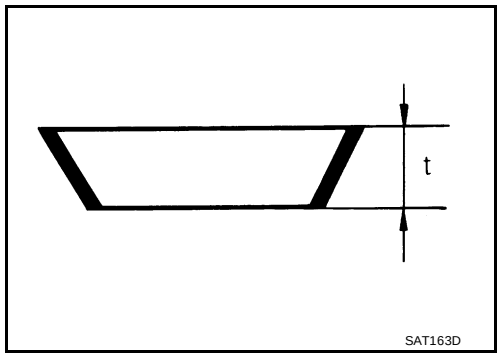

Thickness of dish plate

Forward clutch	**: 2.7 mm (0.106 in)**
Overrun clutch	**: 2.7 mm (0.106 in)**

- If deformed or fatigued, replace.

Forward Clutch Drum

- Make sure that check balls are not fixed.
- Apply compressed air to check ball oil hole from outside of forward clutch drum. Make sure air leaks past ball.
- Apply compressed air to oil hole from inside of forward clutch drum. Make sure there is no air leakage.

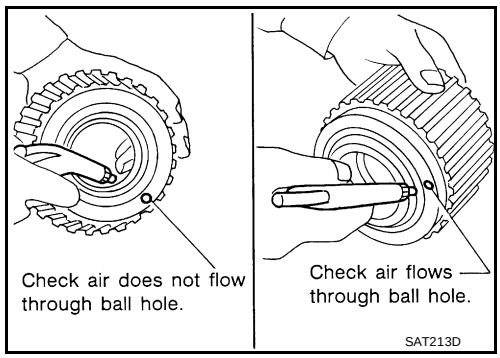

Overrun Clutch Piston

- Make sure that check balls are not fixed.
- Apply compressed air to check ball oil hole opposite the return spring. Make sure there is no air leakage.
- Apply compressed air to oil hole on return spring side. Make sure that air leaks past ball.

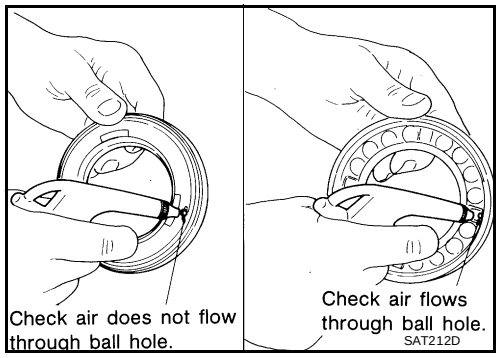

ASSEMBLY

1. Install D-rings and oil seals on forward clutch piston and overrun clutch piston.
   - **Take care with direction of oil seal.**
   - **Apply ATF to both parts.**

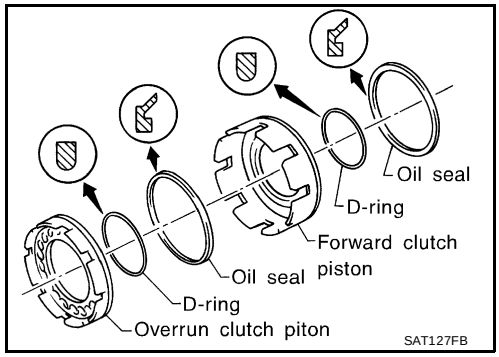

2. Install overrun clutch piston assembly on forward clutch piston by turning it slowly.
   - **Apply ATF to inner surface of forward clutch piston.**

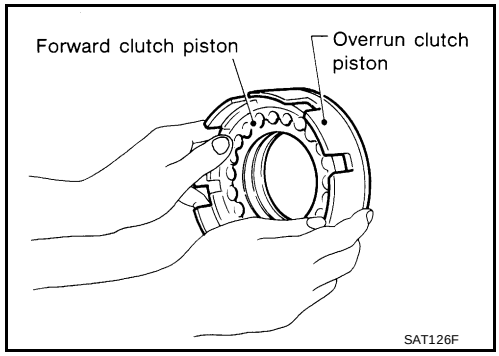

3. Install forward clutch piston assembly on forward clutch drum by turning it slowly.
   - **Apply ATF to inner surface of drum.**

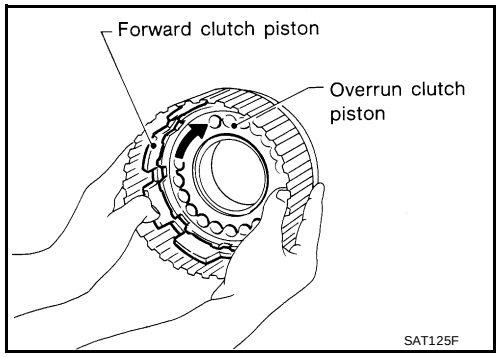

4. Install return spring on overrun clutch piston.

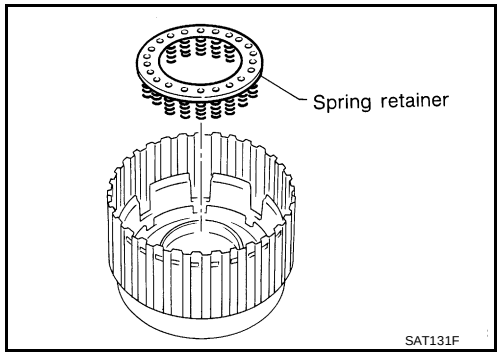

- Align the mark on spring retainer with check ball in overrun clutch piston.

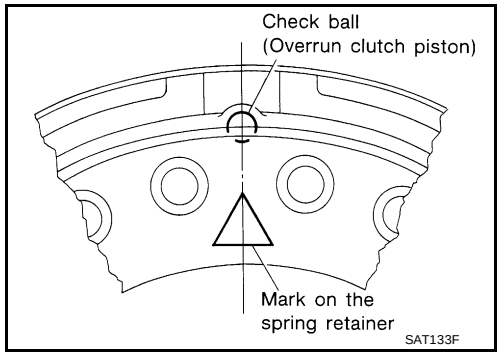

5. Set Tool on spring retainer and install snap ring while compressing return springs.
   - **Set Tool directly over return springs.**

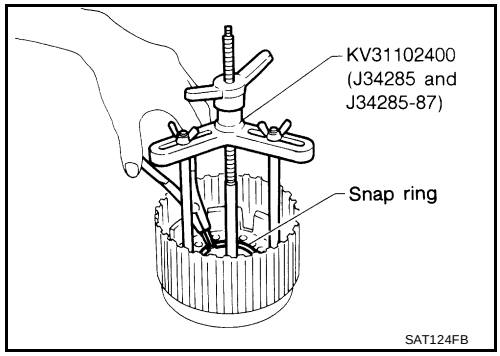

   - **Do not align snap ring gap with spring retainer stopper.**

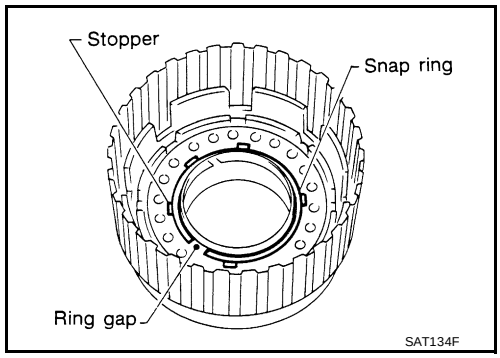

6. Install drive plates, driven plates, retaining plate and dish plate for overrun clutch.
   - **Take care with order of plates.**

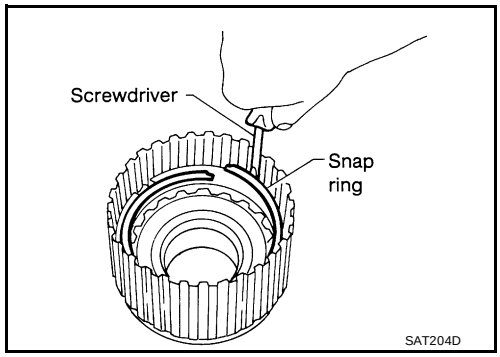

7. Install snap ring for overrun clutch.
8. Measure clearance between overrun clutch retaining plate and snap ring.
   If not within allowable limit, select proper retaining plate.

   Specified clearance

Standard	**: 0.7 - 1.1 mm (0.028 - 0.043 in)**
Allowable limit	**: 1.7 mm (0.067 in)**
Overrun clutch retaining plate	**Refer to AT-368, "OVERRUN CLUTCH" .**

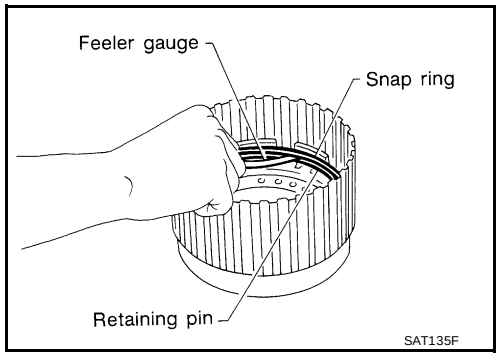

9. Install drive plates, driven plates, retaining plate and dish plate for forward clutch.
   - **Take care with order of plates.**
10. Install snap ring for forward clutch.

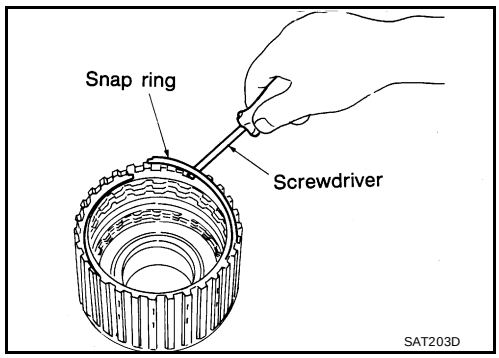

11. Measure clearance between forward clutch retaining plate and snap ring.
    If not within allowable limit, select proper retaining plate.

    Specified clearance

Standard	**: 0.45 - 0.85 mm (0.0177 - 0.0335 in)**
Allowable limit	**: 1.85 mm (0.0728 in)**
Forward clutch retaining plate	**: Refer to AT-368, "FORWARD CLUTCH" .**

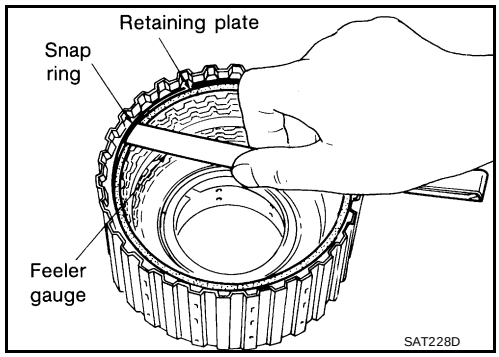

12. Check operation of forward clutch.
13. Check operation of overrun clutch.

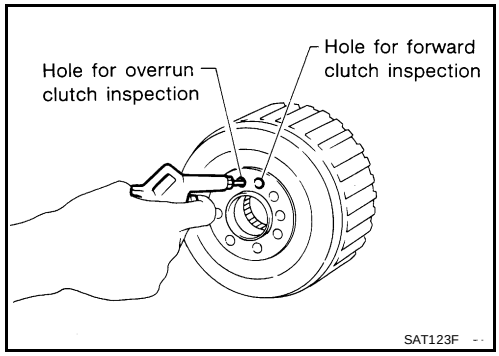

Low & Reverse Brake

ECS004W9

COMPONENTS

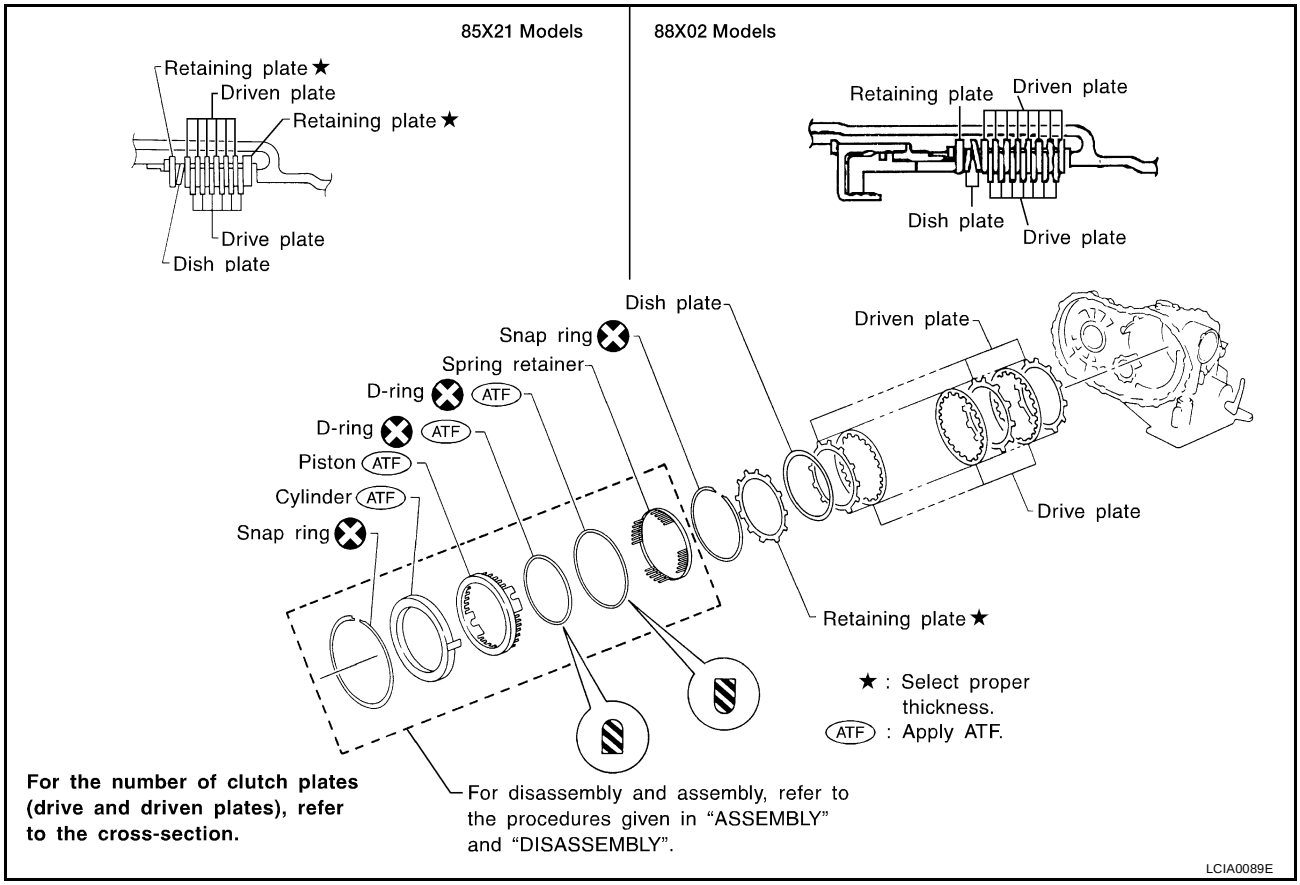

DISASSEMBLY

1. Check operation of low & reverse brake.
a. Apply compressed air to oil hole of transmission case.
b. Check to see that retaining plate moves to snap ring.
c. If retaining plate does not contact snap ring:
   - D-ring might be damaged.
   - Fluid might be leaking past piston check ball.

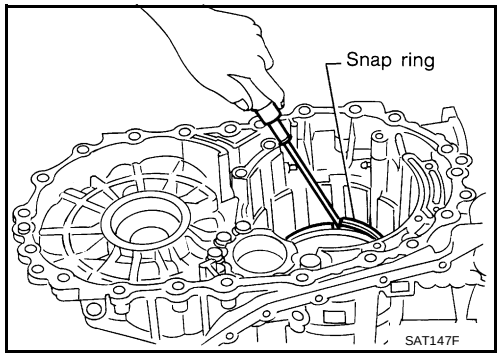

2. In order to remove piston, apply compressed air to oil hole of retainer while holding piston.
   - **Apply air gradually and allow piston to come out evenly.**

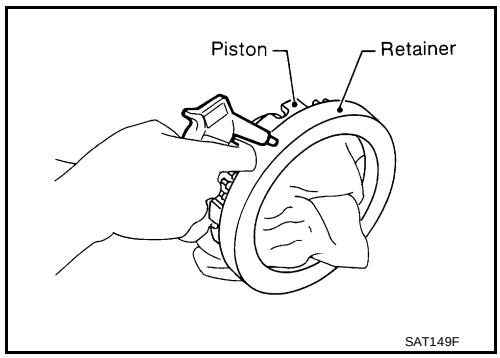

3. Remove D-rings from piston.

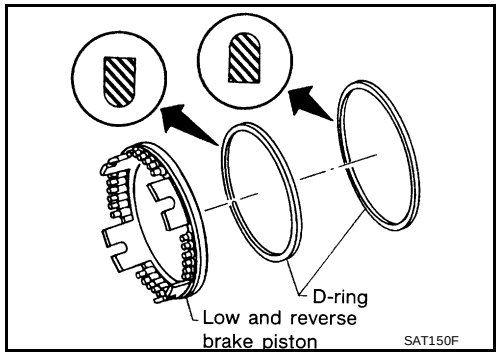

INSPECTION

Low and Reverse Brake Snap Ring, Spring Retainer and Return Springs

- Check for deformation, fatigue or damage.
  If necessary, replace.
- **When replacing spring retainer and return springs, replace them as a set.**

Low and Reverse Brake Drive Plate

- Check facing for burns, cracks or damage.
- Measure thickness of facing.

Thickness of drive plate

Standard value	**: 1.8 mm (0.071 in)**
Wear limit	**: 1.6 mm (0.063 in)**

- If not within wear limit, replace.

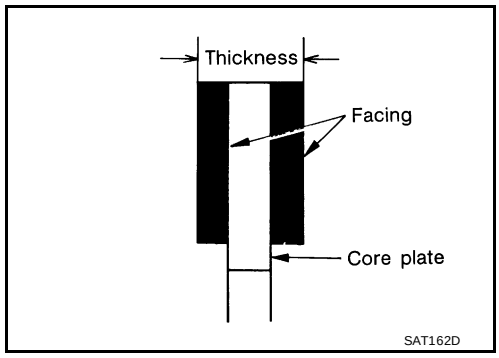

ASSEMBLY

1. Install D-rings on piston.
   - **Apply ATF to both parts.**

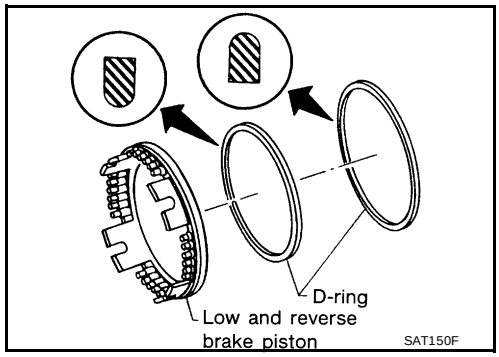

2. Set and align piston with retainer.
   - **This operation is required in order to engage the protrusions of piston to return springs correctly.**
     Further procedures are given in "ASSEMBLY".

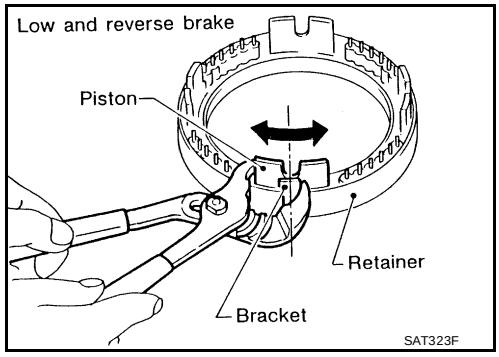

3. Install driven plates, drive plates, retaining plate and dish plate on transmission case.
   - **Take care with order of plates and direction of dish plate.**

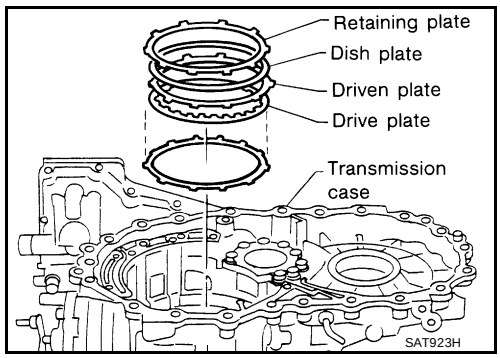

4. Install snap ring.

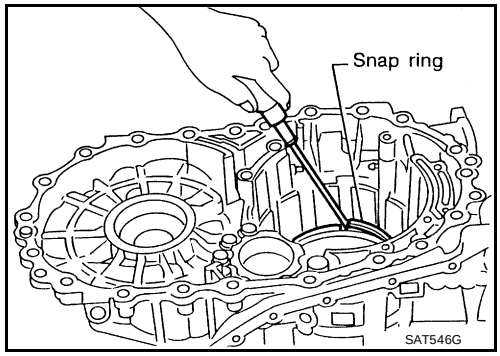

5. Measure clearance between driven plate and transmission case. If not within allowable limit, select proper retaining plate. (front side)

Specified clearance	
Standard	**: 1.7 - 2.1 mm (0.067 - 0.083 in)**
Allowable limit	**: 3.3 mm (0.130 in)**
Retaining plate	**Refer to AT-369, "LOW & REVERSE BRAKE" .**

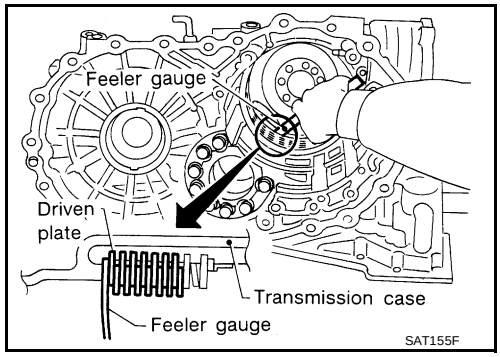

Rear Internal Gear, Forward Clutch Hub and Overrun Clutch Hub

ECS004WA

COMPONENTS

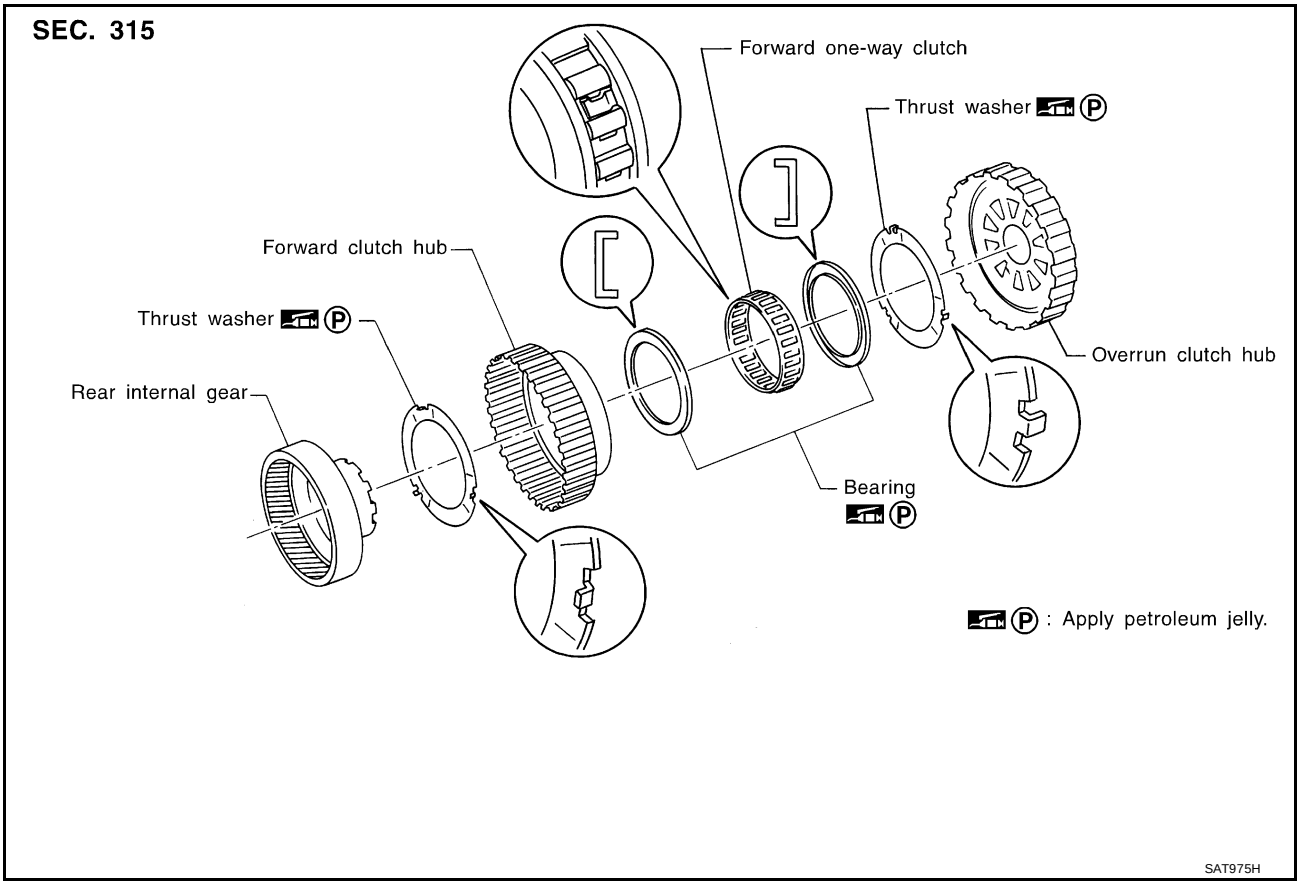

DISASSEMBLY

1. Remove overrun clutch hub and thrust washer from forward clutch hub.

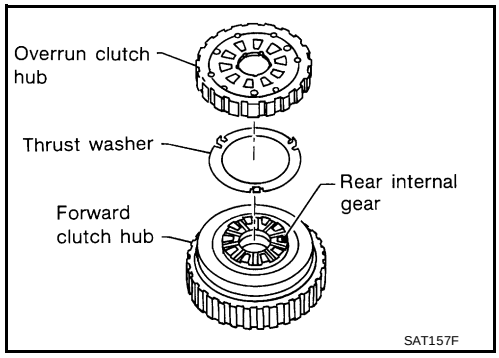

2. Remove forward clutch hub from rear internal gear.

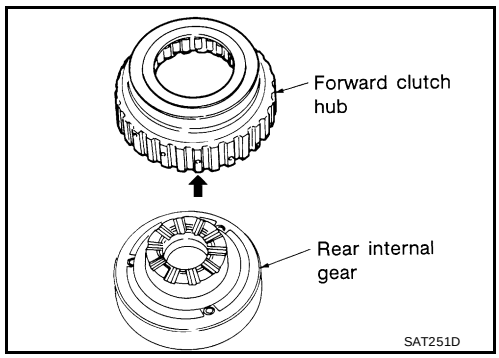

3. Remove bearing from rear internal gear.

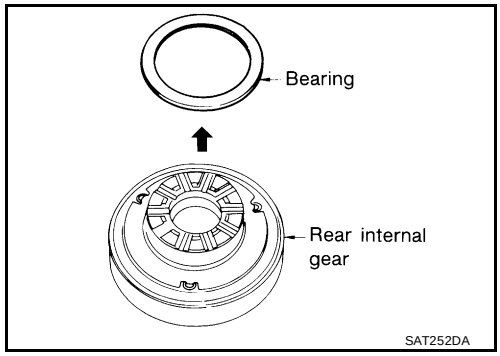

4. Remove thrust washer from rear internal gear.

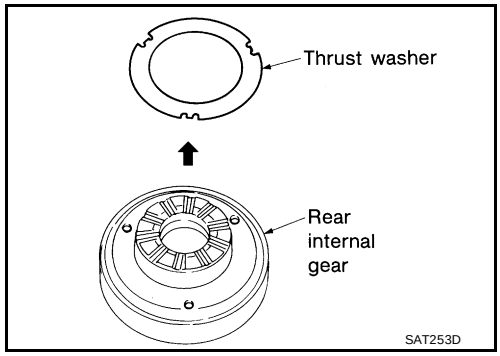

5. Remove bearing from forward one-way clutch.

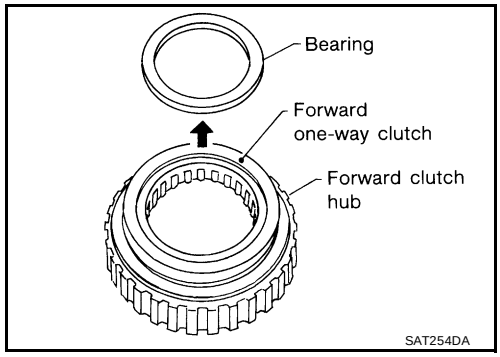

6. Remove forward one-way clutch from forward clutch hub.

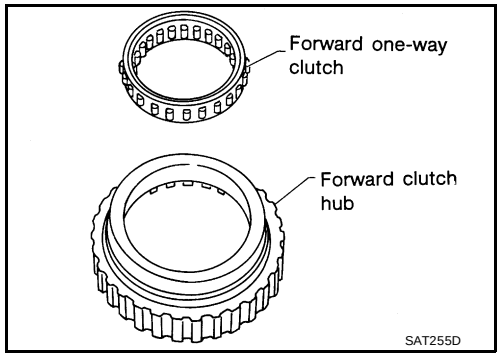

INSPECTION

Rear Internal Gear, Forward Clutch Hub and Overrun Clutch Hub

- Check rubbing surfaces for wear or damage.

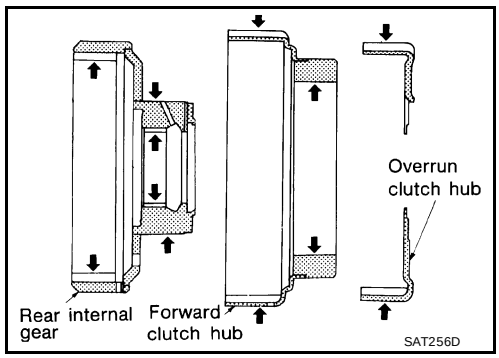

Bearings and Forward One-Way Clutch

- Check bearings for deformation and damage.
- Check forward one-way clutch for wear and damage.

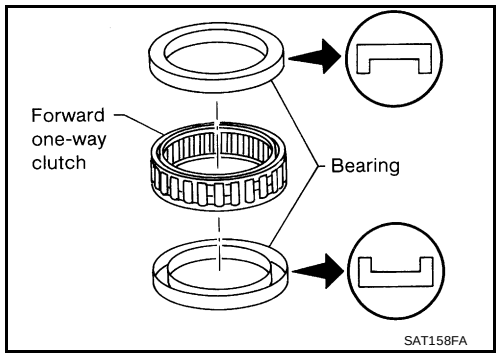

ASSEMBLY

1. Install forward one-way clutch on forward clutch.
   - **Take care with the direction of forward one-way clutch.**

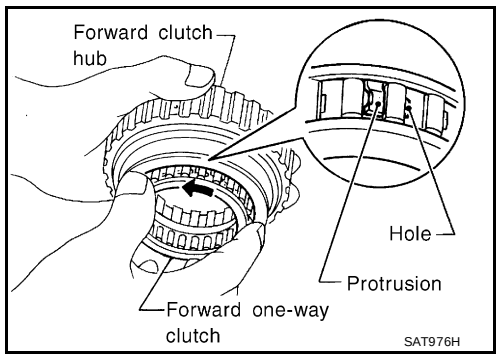

2. Install bearing on forward one-way clutch.
   - **Apply petroleum jelly to bearing.**

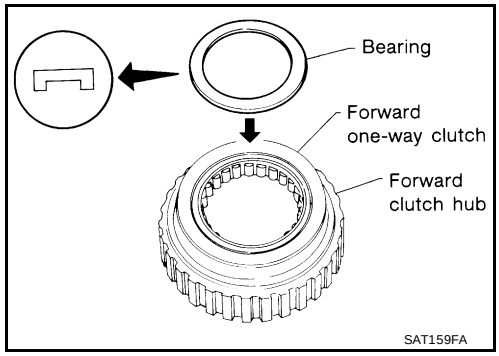

3. Install thrust washer on rear internal gear.
   - **Apply petroleum jelly to thrust washer.**
   - **Align hooks of thrust washer with holes of rear internal gear.**

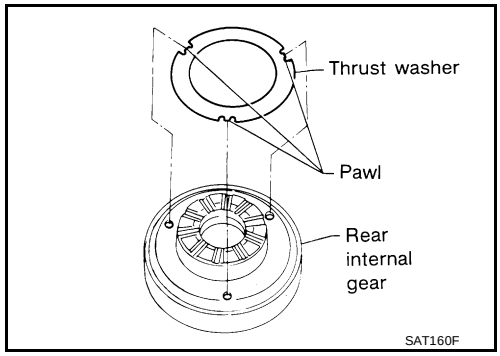

4. Install bearing on rear internal gear.
   - **Apply petroleum jelly to bearing.**

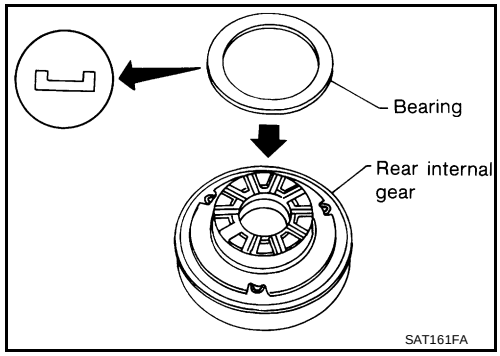

5. Install thrust washer and overrun clutch hub.
   - **Apply petroleum jelly to thrust washer.**
   - **Align hooks of thrust washer with holes of overrun clutch hub.**
   - **Align projections of rear internal gear with holes of overrun clutch hub.**

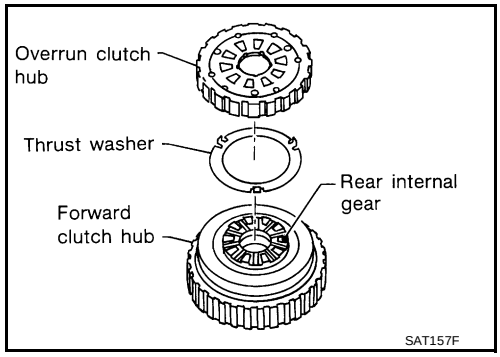

6. Install forward clutch hub on rear internal gear.
   - **Check operation of forward one-way clutch.**
     Hold rear internal gear and turn forward clutch hub.
     Check forward clutch hub for correct locking and unlocking directions.
   - **If not as shown in illustration, check installation direction of forward one-way clutch.**

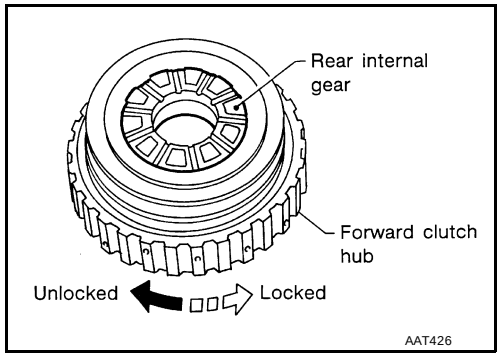

Output Shaft, Idler Gear, Reduction Pinion Gear and Bearing Retainer

ECS004WB

COMPONENTS

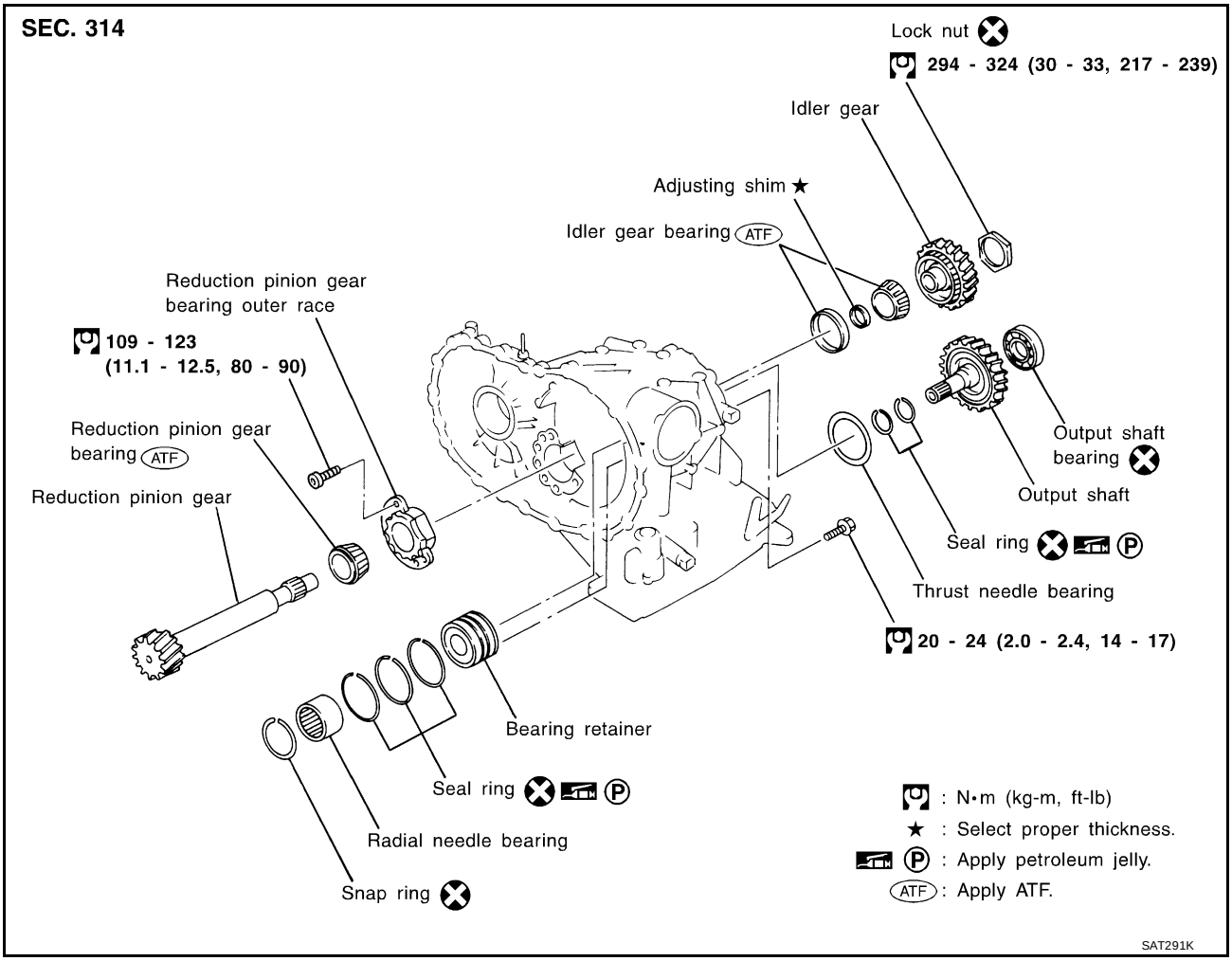

DISASSEMBLY

1. Remove seal rings from output shaft and bearing retainer.

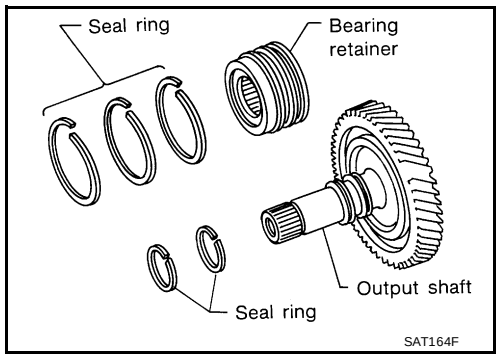

2. Remove output shaft bearing with screwdrivers.
   - **Always replace bearing with a new one when removed.**
   - **Do not damage output shaft.**

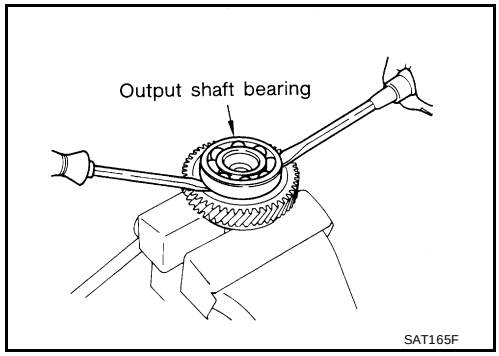

3. Remove snap ring from bearing retainer.

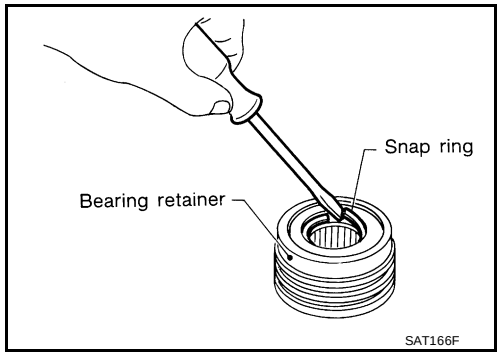

4. Remove needle bearing from bearing retainer.

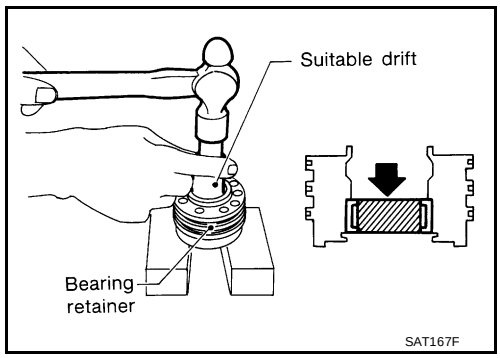

5. Remove idler gear bearing inner race from idler gear.

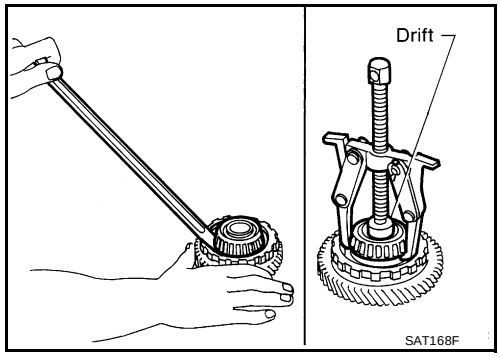

6. Remove idler gear bearing outer race from transmission case.

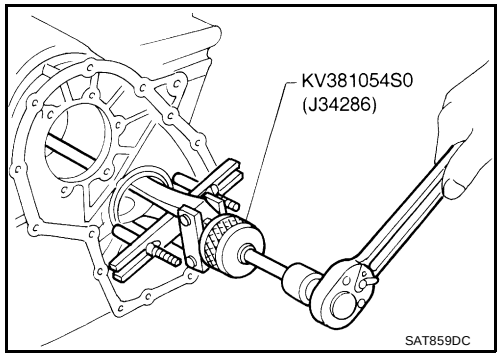

7. Press out reduction pinion gear bearing inner race from reduction pinion gear.

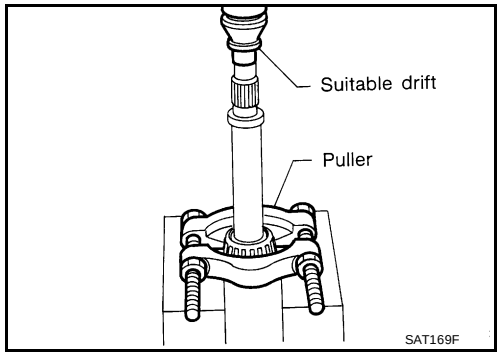

8. Remove reduction pinion gear bearing outer race from transmission case.

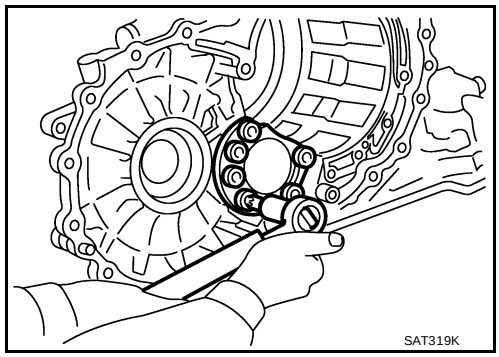

INSPECTION

Output Shaft, Idler Gear and Reduction Pinion Gear

- Check shafts for cracks, wear or bending.
- Check gears for wear, chips and cracks.

Bearing

- Make sure bearings roll freely and are free from noise, cracks, pitting or wear.
- **When replacing taper roller bearing, replace outer and inner race as a set.**

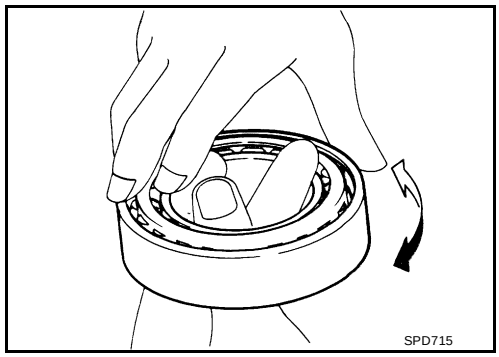

Seal Ring Clearance

- Install new seal rings to output shaft.
- Measure clearance between seal ring and ring groove of output shaft.

Standard clearance	**: 0.10 - 0.25 mm (0.0039 - 0.0098 in)**
Allowable limit	**: 0.25 mm (0.0098 in)**

- If not within allowable limit, replace output shaft.
- Install new seal rings to bearing retainer.
- Measure clearance between seal ring and ring groove of bearing retainer.

Standard clearance	**: 0.10 - 0.30 mm (0.0039 - 0.0118 in)**
Allowable limit	**: 0.30 mm (0.0118 in)**

- If not within allowable limit, replace bearing retainer.

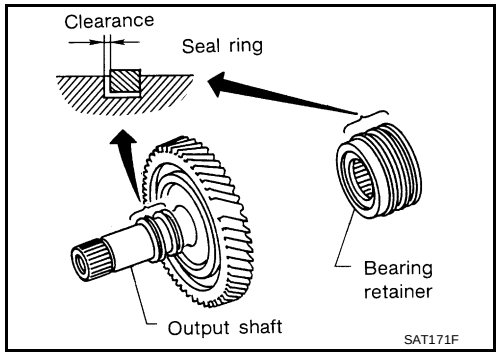

ASSEMBLY

1. Press reduction pinion gear bearing inner race on reduction pinion gear.

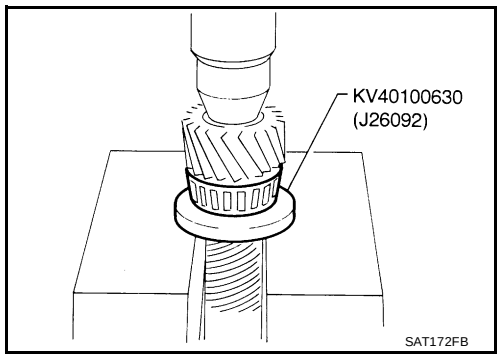

2. Install reduction pinion gear bearing outer race on transmission case.

   : 109 - 123 N-m (11.1 - 12.5 kg-m, 80 - 90 ft-lb)

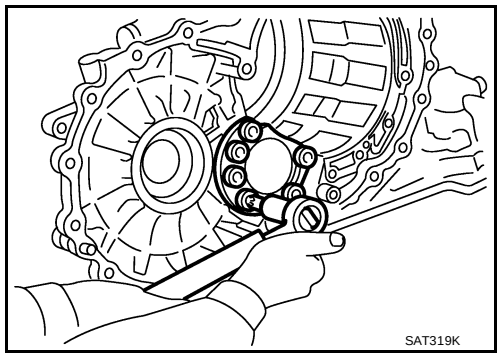

3. Press idler gear bearing inner race on idler gear.

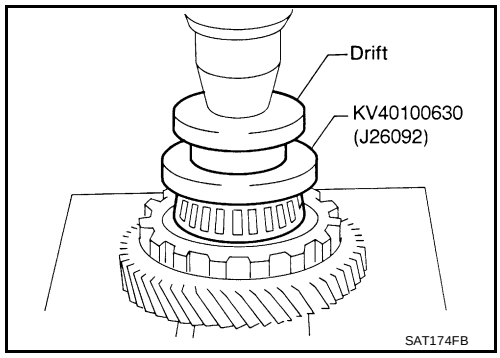

4. Install idler gear bearing outer race on transmission case.

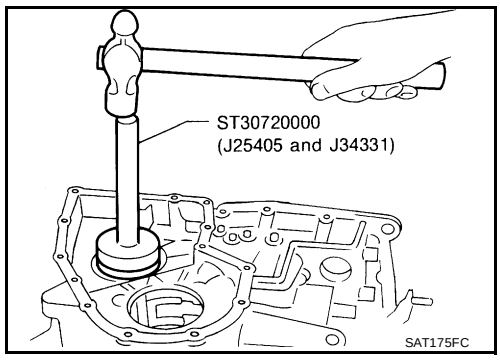

5. Press output shaft bearing on output shaft.

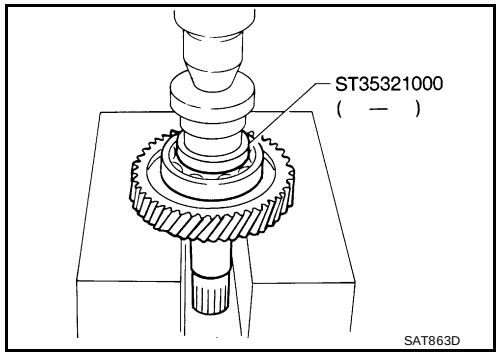

6. Press needle bearing on bearing retainer.

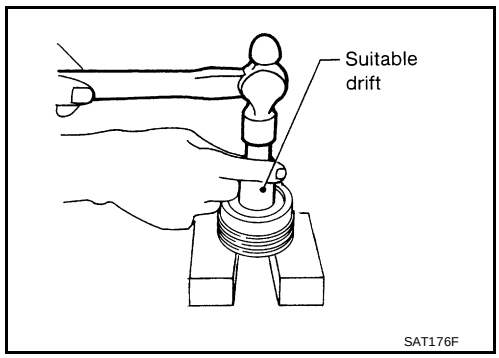

7. Install snap ring to bearing retainer.

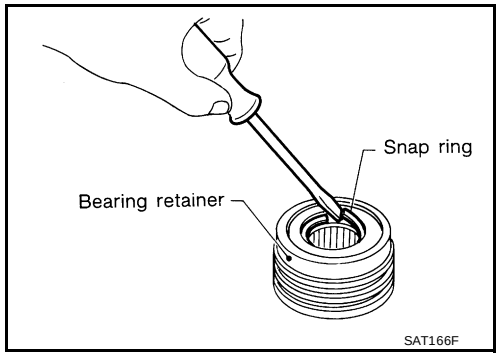

8. After packing ring grooves with petroleum jelly, carefully install new seal rings on output shaft and bearing retainer.

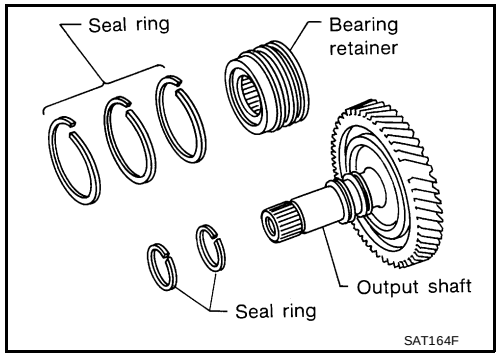

- **Roll paper around seal rings to prevent seal rings from spreading.**

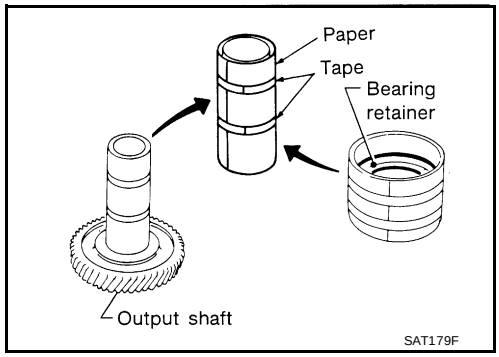

Band Servo Piston Assembly

ECS004WC

COMPONENTS

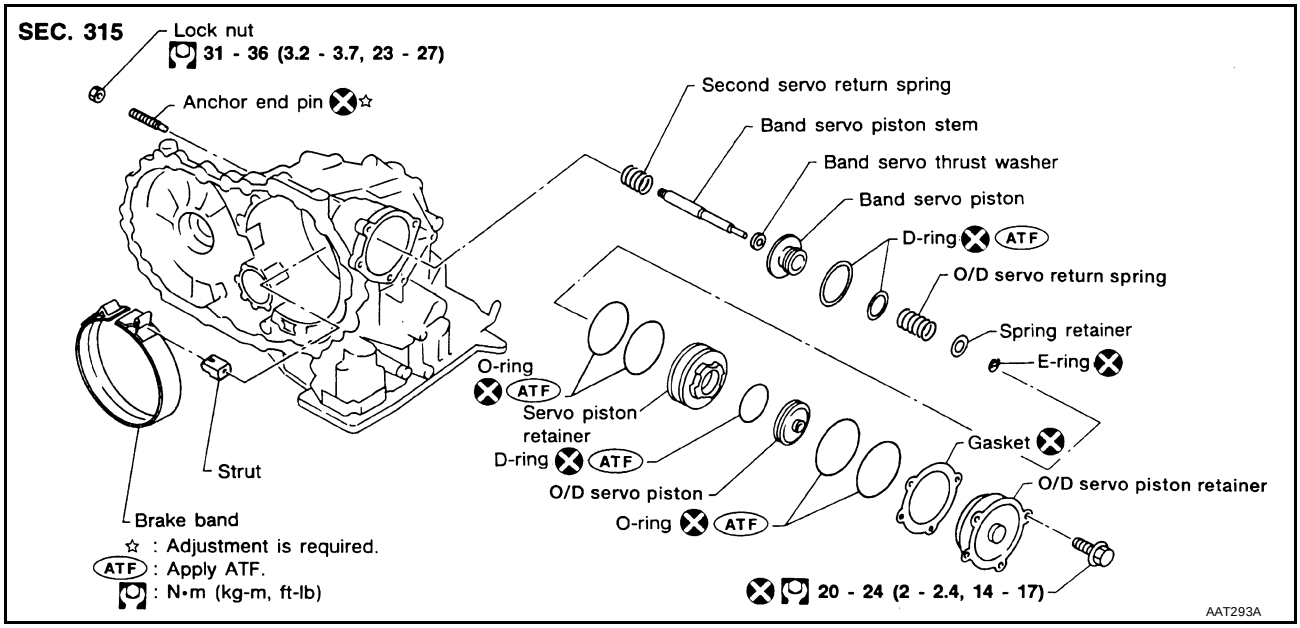

DISASSEMBLY

1. Remove band servo piston fixing bolts.

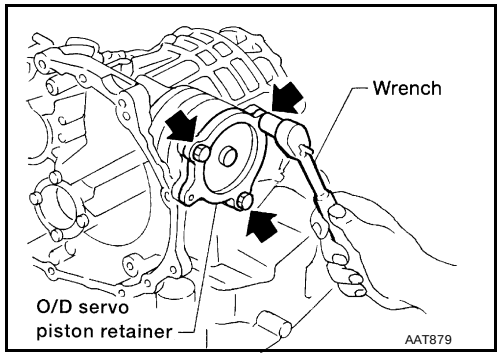

2. Apply compressed air to oil hole in transmission case to remove O/D servo piston retainer and band servo piston assembly.
   - **Hold band servo piston assembly with a rag or nylon waste.**

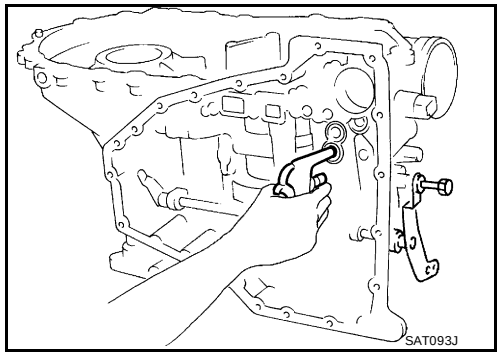

3. Apply compressed air to oil hole in O/D servo piston retainer to remove O/D servo piston from retainer.
   - **Hold O/D band servo piston while applying compressed air.**

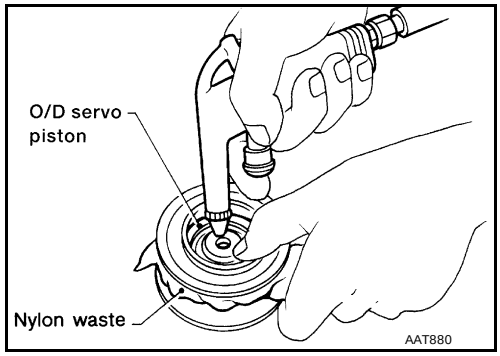

4. Remove D-ring from O/D servo piston.

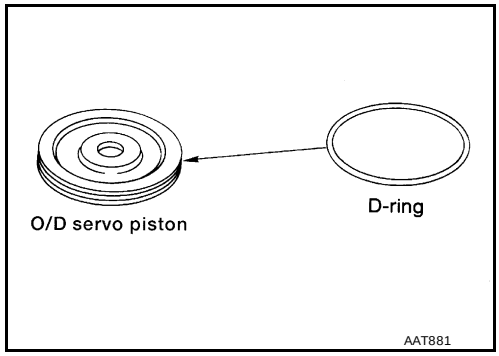

5. Remove O-rings from O/D servo piston retainer.

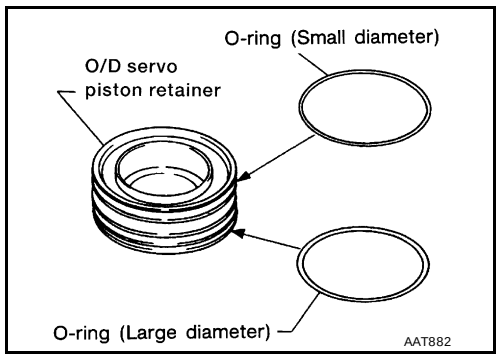

6. Remove band servo piston assembly from servo piston retainer by pushing it forward.

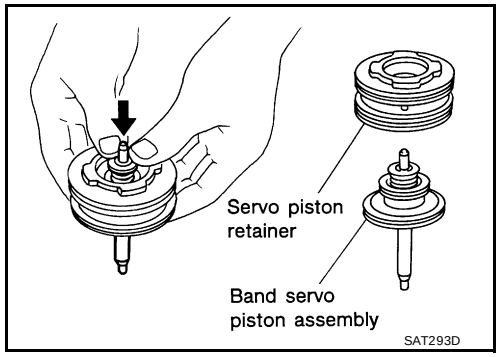

7. Place piston stem end on a wooden block. While pushing servo piston spring retainer down, remove E-ring.

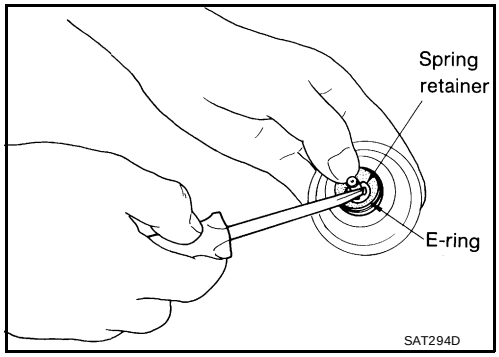

8. Remove O/D servo return spring, band servo thrust washer and band servo piston stem from band servo piston.

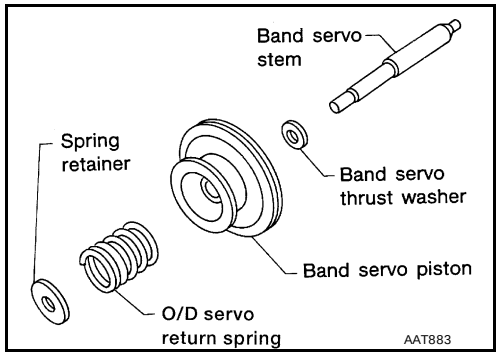

9. Remove O-rings from servo piston retainer.

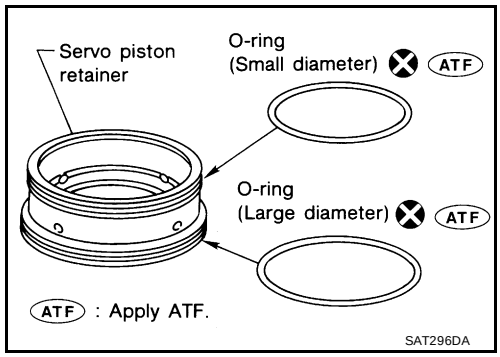

10. Remove D-rings from band servo piston.

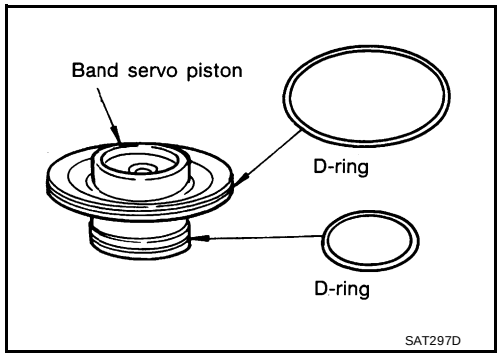

INSPECTION

Pistons, Retainers and Piston Stem

- Check frictional surfaces for abnormal wear or damage.

Return Springs

- Check for deformation or damage.
- Measure free length and outer diameter.

Inspection standard : Refer to AT-371, "Band Servo".

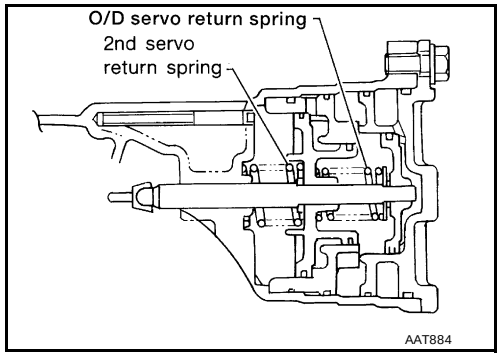

ASSEMBLY

1. Install D-rings to servo piston retainer.
   - **Apply ATF to D-rings.**
   - **Pay attention to position of each O-ring.**

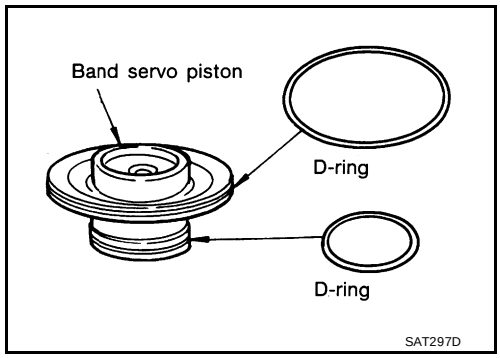

2. Install band servo piston stem, band servo thrust washer, O/D servo return spring and spring retainer to band servo piston.

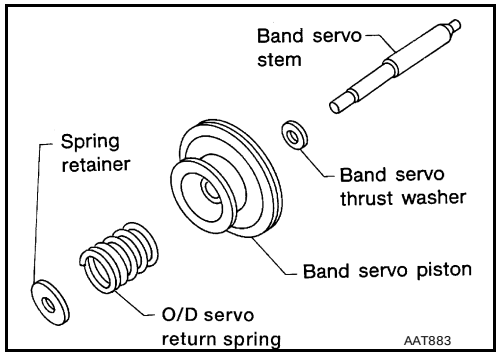

3. Place piston stem end on a wooden block. While pushing servo piston spring retainer down, install E-ring.

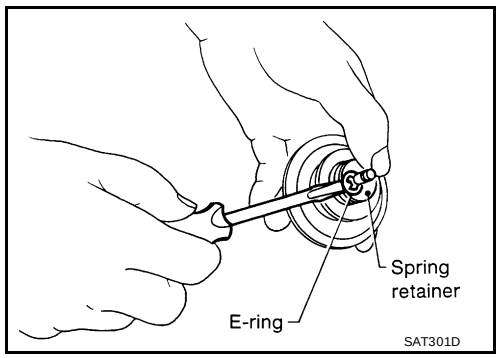

4. Install O-rings to servo piston retainer.
   - **Apply ATF to O-rings.**
   - **Pay attention to position of each O-ring.**

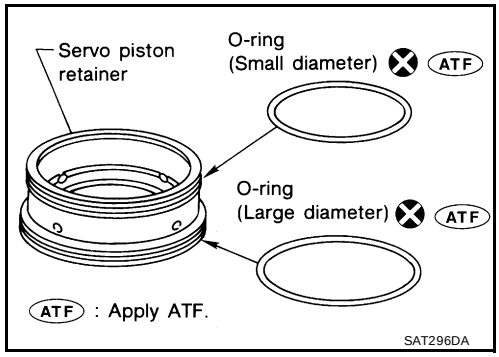

5. Install band servo piston assembly to servo piston retainer by pushing it inward.

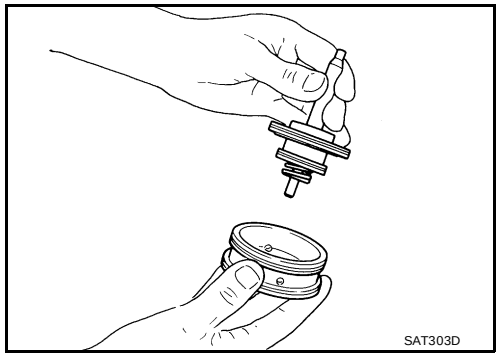

6. Install D-ring to O/D servo piston.
   - **Apply ATF to D-ring.**

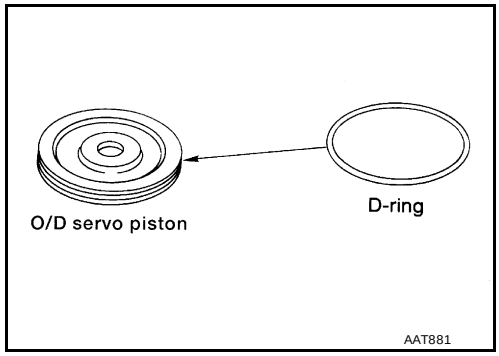

7. Install O-rings to O/D servo piston retainer.
   - **Apply ATF to O-rings.**
   - **Pay attention to position of each O-ring.**

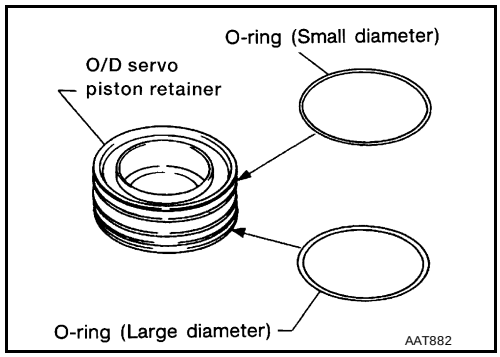

8. Install O/D servo piston to O/D servo piston retainer.

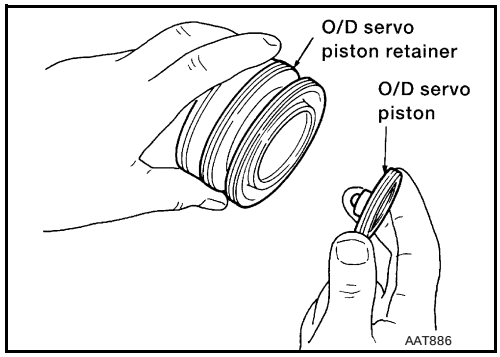

9. Install band servo piston assembly and 2nd servo return spring to transmission case.
   - **Apply ATF to O-ring of band servo piston and transmission case.**

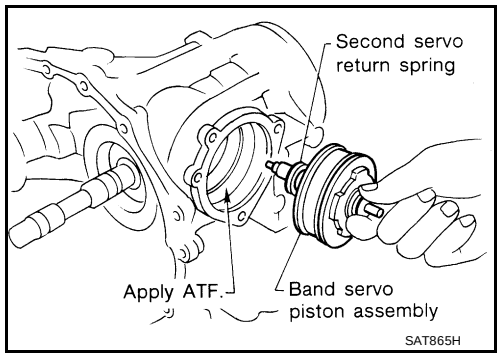

10. Install O/D servo piston assembly to transmission case.
    - **Apply ATF to O-ring of band servo piston and transmission case.**

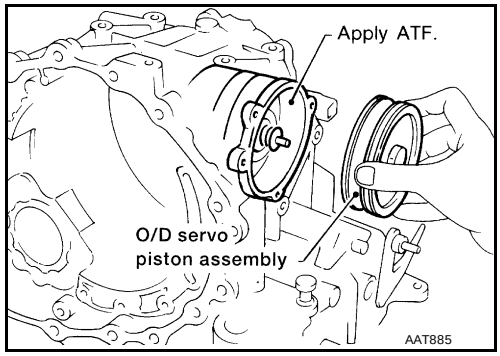

11. Install O/D servo piston retainer to transmission case.
    Refer to AT-331, "COMPONENTS" .

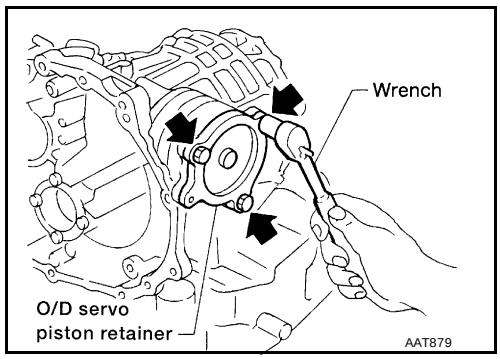

Final Drive

ECS004WD

COMPONENTS

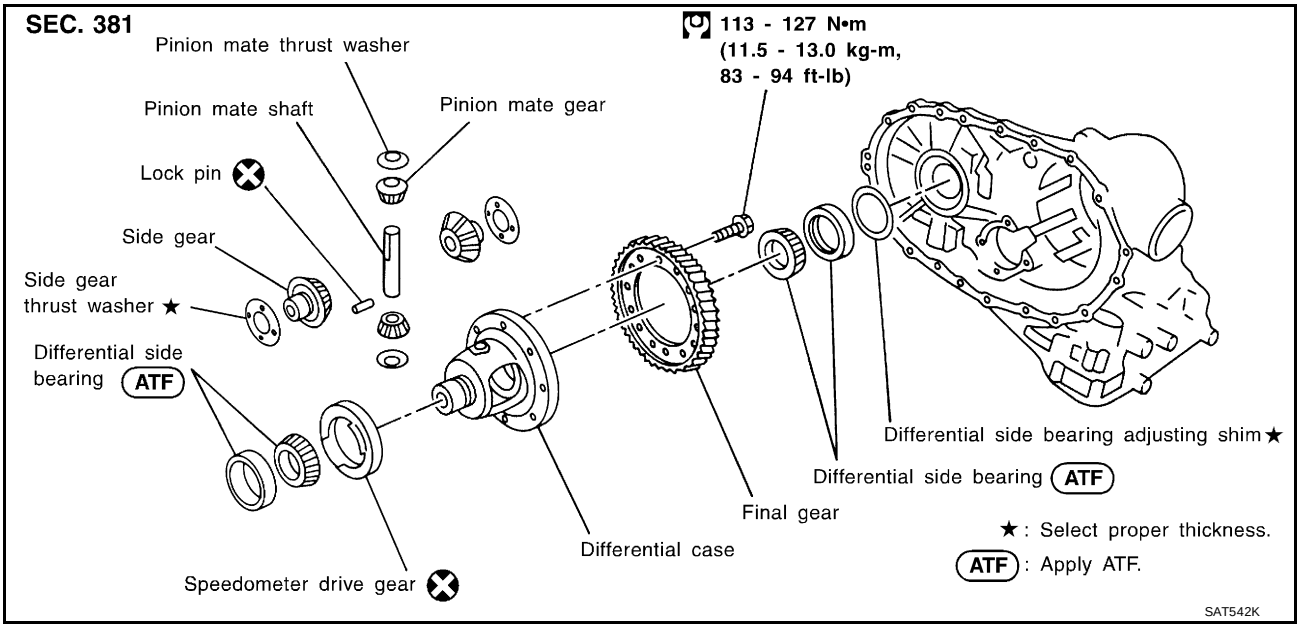

DISASSEMBLY

1. Remove final gear.

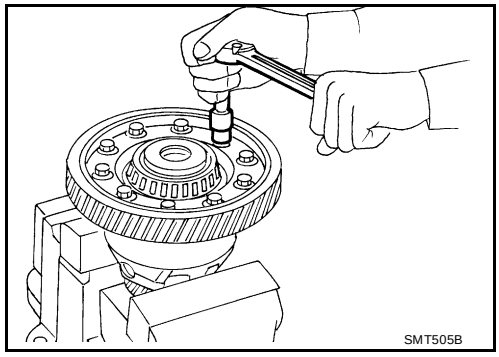

2. Press out differential side bearings.
   - **Be careful not to mix up the right and left bearings.**

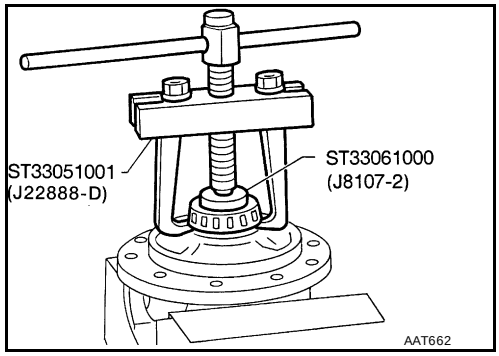

3. Remove differential side bearing outer race and side bearing adjusting shim from transmission case.

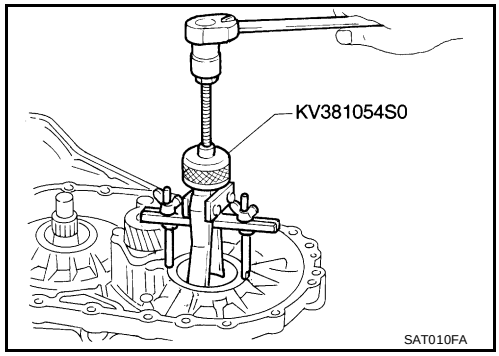

4. Remove speedometer drive gear.

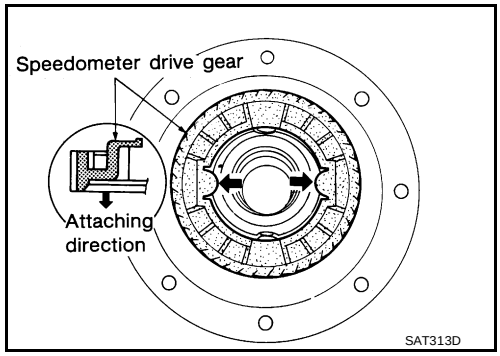

5. Drive out pinion mate shaft lock pin.

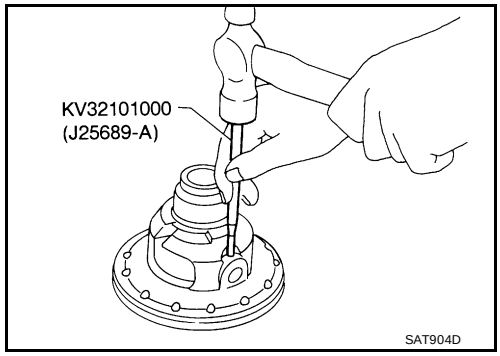

6. Draw out pinion mate shaft lock pin.
7. Remove pinion mate gears and side gears.

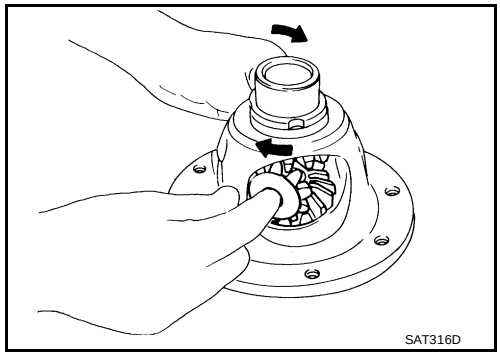

INSPECTION

Gear, Washer, Shaft and Case

- Check mating surfaces of differential case, side gears and pinion mate gears.
- Check washers for wear.

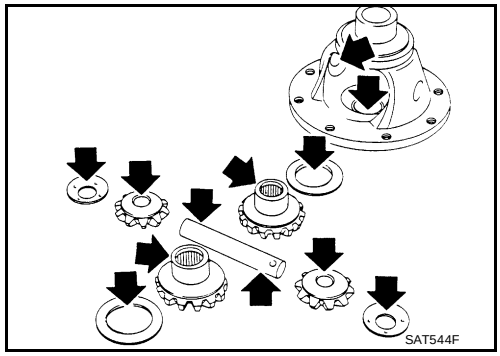

Bearings

- Make sure bearings roll freely and are free from noise, cracks, pitting or wear.
- **When replacing taper roller bearing, replace outer and inner race as a set.**

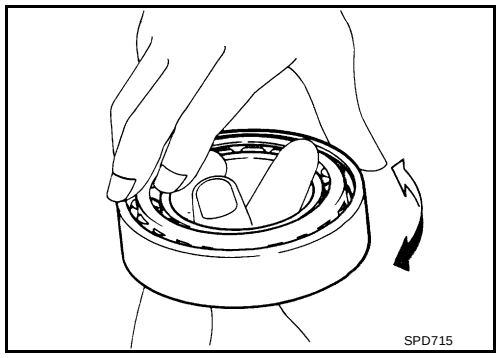

ASSEMBLY

1. Attach side gear thrust washers to side gears, then install pinion mate thrust washers and pinion mate gears in place.
   - **Apply ATF to any parts.**

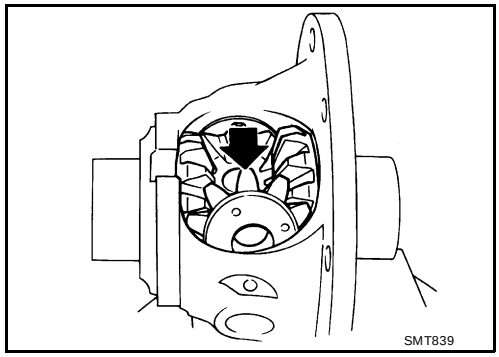

2. Insert pinion mate shaft.
   - **When inserting, be careful not to damage pinion mate thrust washers.**

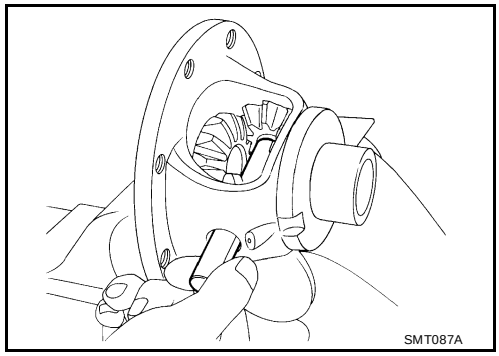

3. Measure clearance between side gear and differential case with washers following the procedure below:

a. Set Tool and dial indicator on side gear.

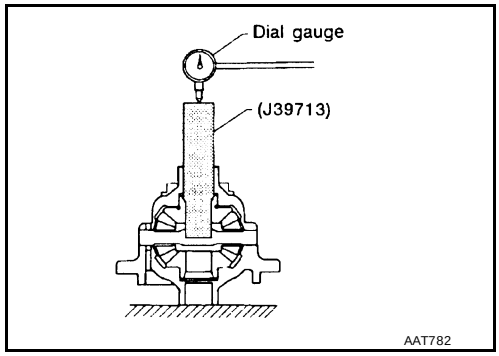

b. Move side gear up and down to measure dial indicator deflection. Always measure indicator deflection on both side gears.

Clearance between side gear and differential case with washer	**: 0.1 - 0.2 mm (0.004 - 0.008 in)**

c. If not within specification, adjust clearance by changing thickness of differential side gear thrust washers.

Differential side gear thrust washers	**: Refer to AT-369, "DIFFERENTIAL SIDE GEAR THRUST WASHERS" .**

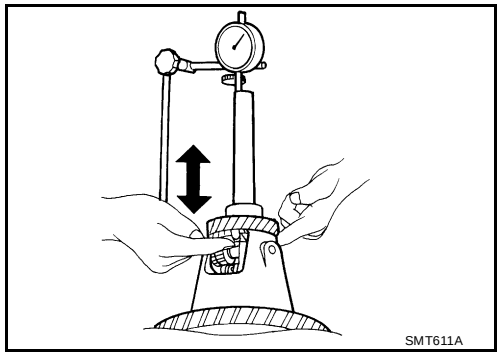

4. Install lock pin.
   - **Make sure that lock pin is flush with case.**

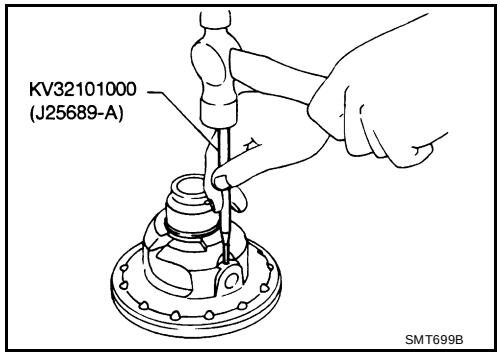

5. Install speedometer drive gear on differential case.
   - **Align the projection of speedometer drive gear with the groove of differential case.**

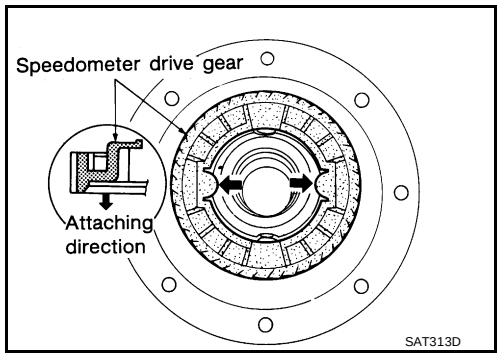

6. Press on differential side bearings.

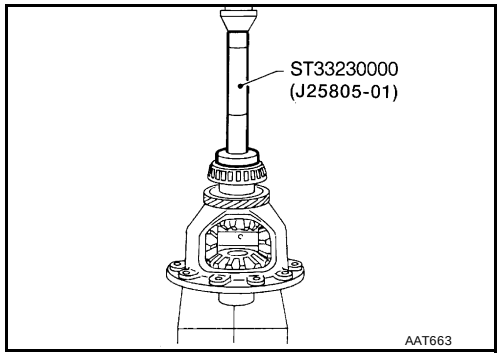

7. Install final gear and tighten fixing bolts in a crisscross pattern. Tighten final gear bolts to the specified torque. Refer to AT-336, "COMPONENTS" .

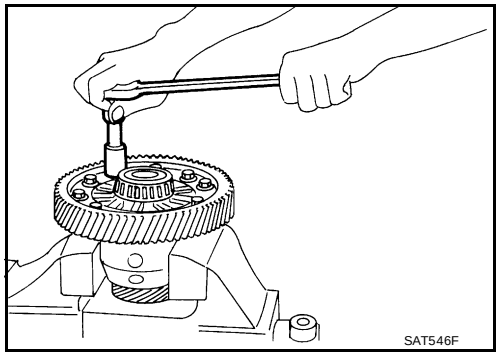

ASSEMBLY

PFP:00000

Assembly (1)

ECS004WE

1. Install differential side oil seals on transmission case and converter housing.

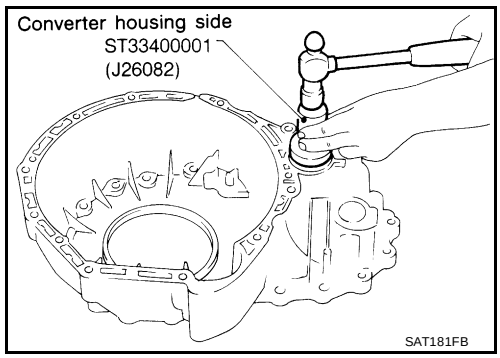

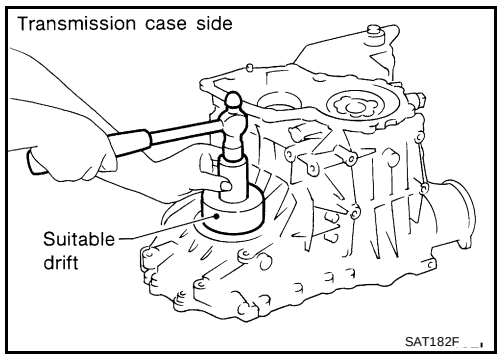

2. Install parking actuator support to transmission case. Tighten parking actuator support bolts to the specified torque. Refer to AT-263, "OVERHAUL" .
   - **Pay attention to direction of parking actuator support.**

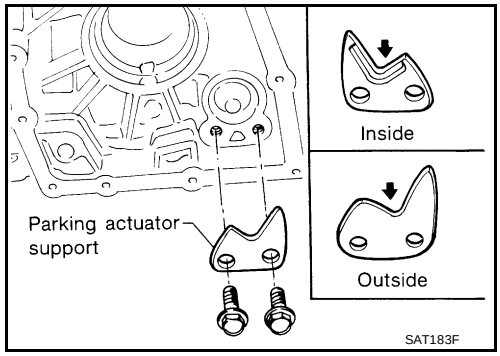

3. Install parking pawl on transmission case and fix it with parking shaft.
4. Install return spring.

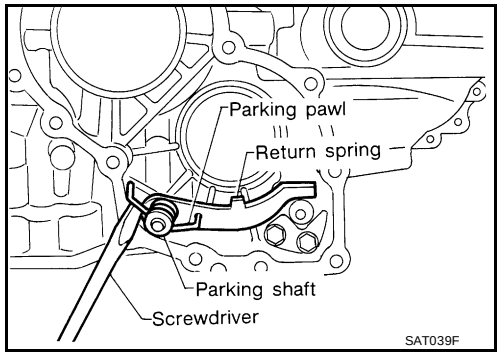

Adjustment (1)

ECS004WF

DIFFERENTIAL SIDE BEARING PRELOAD

1. Install differential side bearing outer race without adjusting shim on transmission case.
2. Install differential side bearing outer race on converter housing.

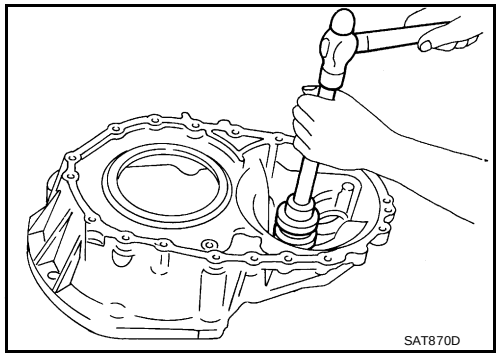

3. Place final drive assembly on transmission case.
4. Install transmission case on converter housing. Tighten transmission case fixing bolts to the specified torque. Refer to AT-263, "OVERHAUL" .

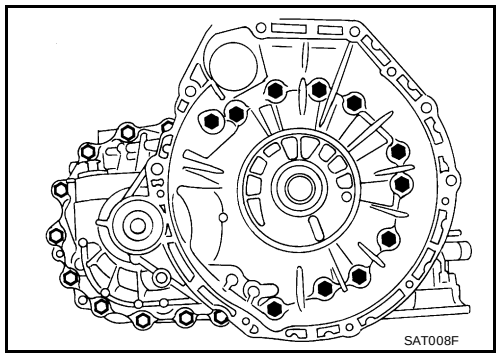

5. Attach dial indicator on differential case at converter housing side.
6. Insert Tool into differential side gear from transmission case side.
7. Move Tool up and down and measure dial indicator deflection.
8. Select proper thickness of differential side bearing adjusting shim(s).
   Suitable shim thickness = Dial indicator deflection + Specified bearing preload

Differential side bearing preload adjusting shim	**: Refer to AT-370, "DIFFERENTIAL SIDE BEARING PRELOAD ADJUSTING SHIMS" .**
Bearing preload	**: 0.05 - 0.09 mm (0.0020 - 0.0035 in)**

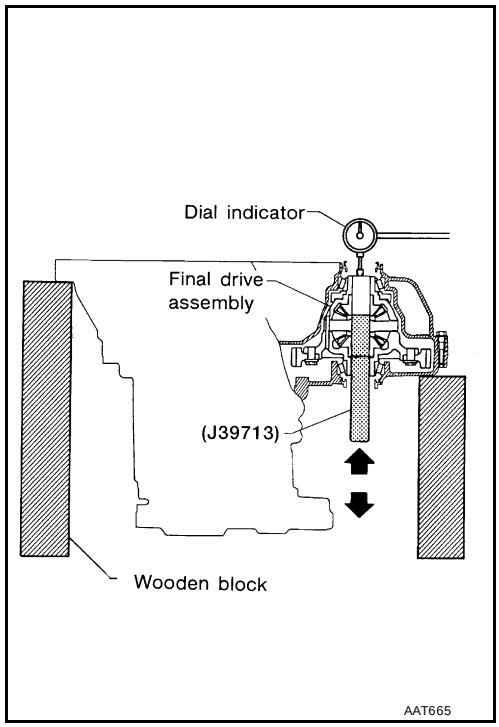

9. Remove converter housing from transmission case.
10. Remove final drive assembly from transmission case.
11. Remove differential side bearing outer race from transmission case.
12. Reinstall differential side bearing outer race and shim(s) selected from SDS table on transmission case.
13. Reinstall converter housing on transmission case and tighten transmission case fixing bolts to the specified torque. Refer to AT-263, "OVERHAUL" .

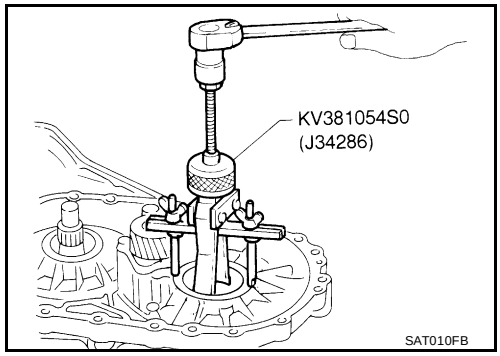

14. Insert Tool and measure turning torque of final drive assembly.
    - **Turn final drive assembly in both directions several times to seat bearing rollers correctly.**

      Turning torque of final drive assembly (New bearing) : 0.78 - 1.37 N-m (8.0 - 14.0 kg-cm, 6.9 - 12.2 in-lb)
    - **When old bearing is used again, turning torque will be slightly less than the above.**
    - **Make sure torque is close to the specified range.**

      Preload adapter : RE4F04B-(J39713)

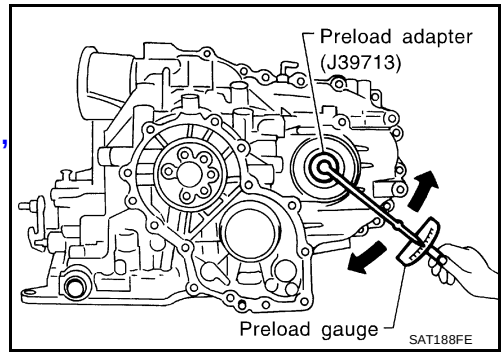

REDUCTION PINION GEAR BEARING PRELOAD

1. Remove transmission case and final drive assembly from converter housing.
2. Select proper thickness of reduction pinion gear bearing adjusting shim using the following procedures.

a. Place reduction pinion gear on transmission case as shown.

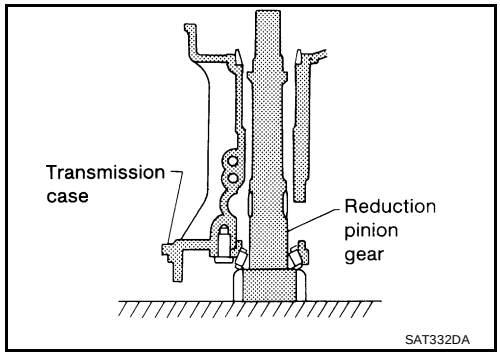

b. Place idler gear bearing on transmission case.
c. Measure dimensions “B” “C” and “D” and calculate dimension “A”.

   A = D – (B + C)

   “A” : Distance between the surface of idler gear bearing inner race and the adjusting shim mating surface of reduction pinion gear.

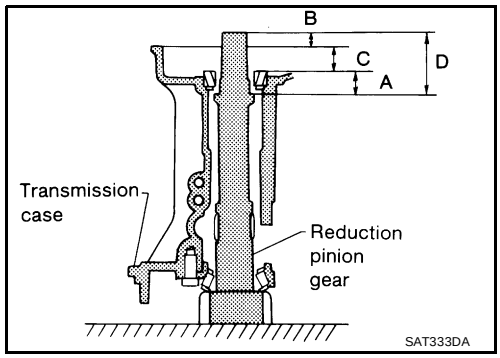

- Measure dimension “B” between the end of reduction pinion gear and the surface of transmission case.
- **Measure dimension “B” in at least two places.**

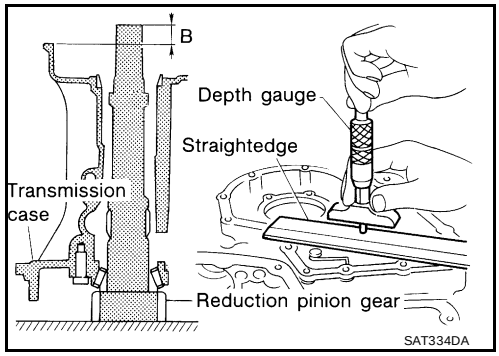

- Measure dimension “C” between the surface of idler gear bearing inner race and the surface of transmission case.
- **Measure dimension “C” in at least two places.**

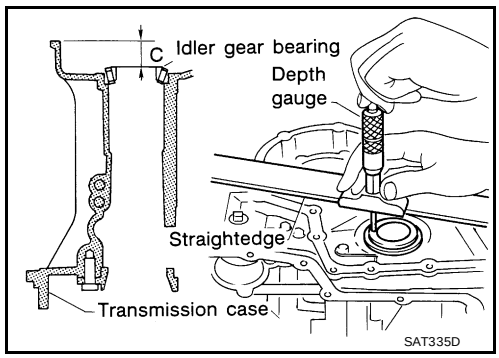

- Measure dimension “D” between the end of reduction pinion gear and the adjusting shim mating surface of reduction pinion gear.
- **Measure dimension “D” in at least two places.**
- Calculate dimension “A”.

  A = D – (B + C)

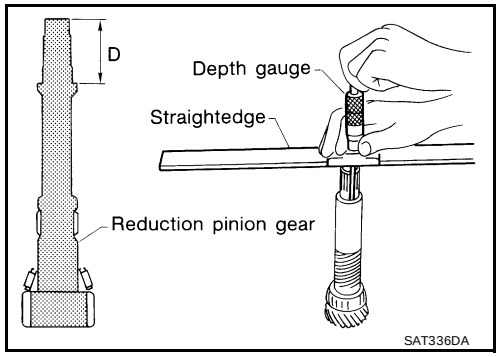

d. Measure dimension “E” between the end of idler gear and the idler gear bearing inner race mating surface of idler gear.
   - **Measure dimension “E” in at least two places.**

e. Select proper thickness of reduction pinion gear bearing adjusting shim.

   Proper shim thickness = A – E – 0.05 mm (0.0020 in)*

   (*: Bearing preload)

   Reduction pinion gear bearing adjusting shim : **Refer to AT-371, "REDUCTION PINION GEAR BEARING ADJUSTING SHIMS" .**

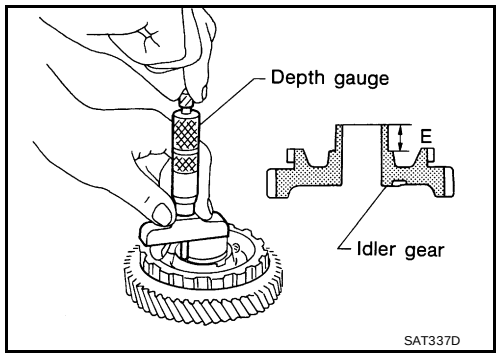

3. Install reduction gear and reduction gear bearing adjusting shim selected in step 2-e on transmission case.
4. Press idler gear bearing inner race on idler gear.
5. Press idler gear on reduction gear.
   - **Press idler gear until idler gear fully contacts adjusting shim.**

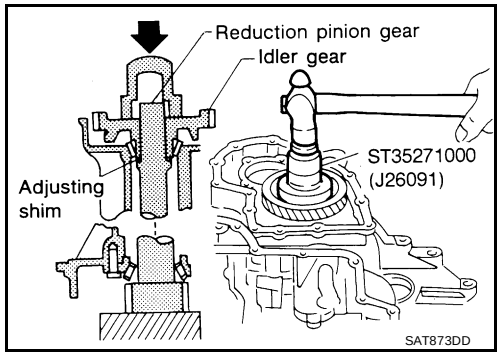

6. Tighten idler gear lock nut to the specified torque. Refer to AT-263, "OVERHAUL" .
   - **Lock idler gear with parking pawl when tightening lock nut.**

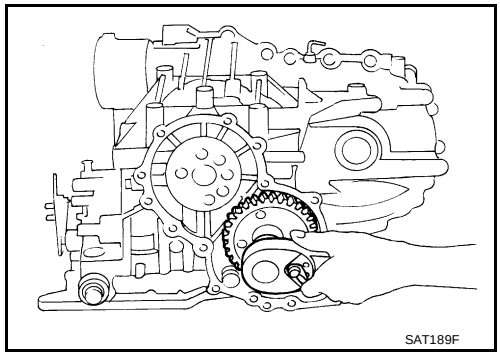

7. Measure turning torque of reduction pinion gear.
   - **When measuring turning torque, turn reduction pinion gear in both directions several times to seat bearing rollers correctly.**

Turning torque of reduction pinion gear	**: 0.05 - 0.39 N-m (0.5 - 4.0 kg-cm, 0.43 - 3.47 in-lb)**

   - **If turning torque is out of specification, decrease or increase thickness of reduction pinion gear bearing adjusting shim.**

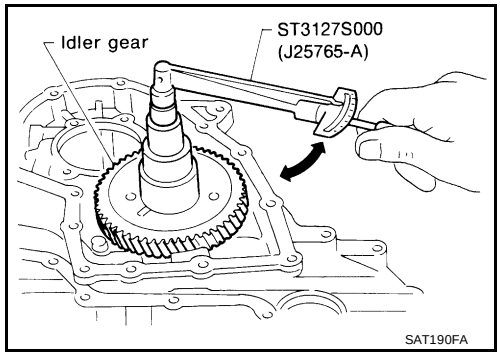

8. After properly adjusting turning torque, clinch idler gear lock nut as shown.

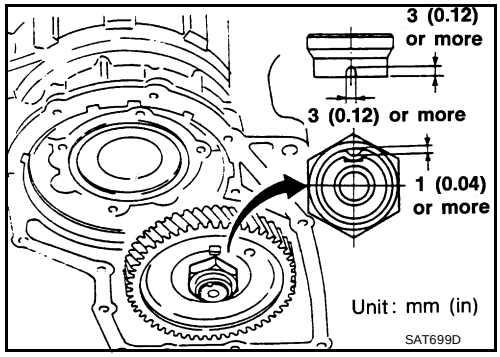

OUTPUT SHAFT END PLAY

- Measure clearance between side cover and the end of the output shaft bearing.
- Select proper thickness of adjusting shim so that clearance is within specifications.

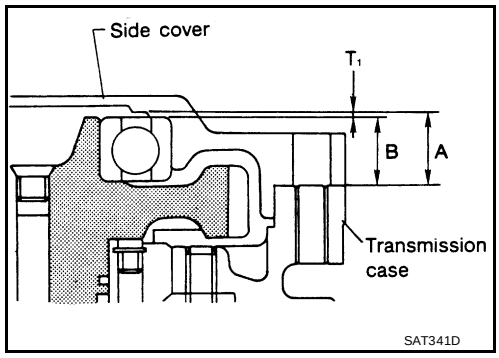

1. Install bearing retainer for output shaft.

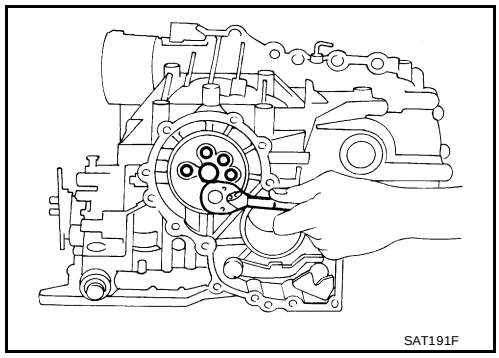

2. Install output shaft thrust needle bearing on bearing retainer.

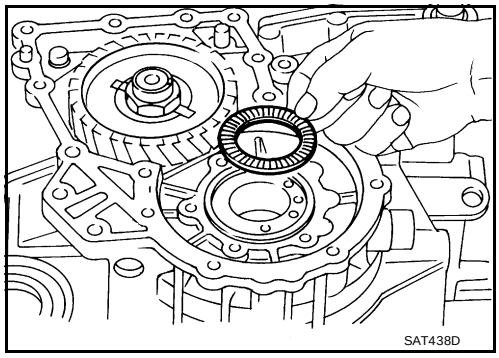

3. Install output shaft on transmission case.

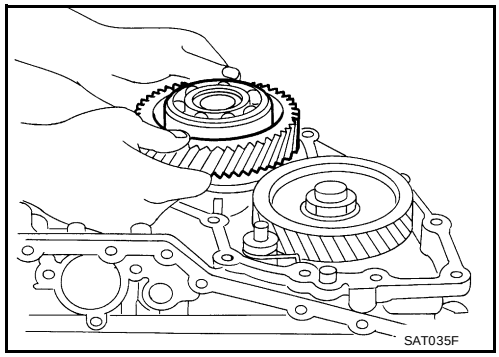

4. Measure dimensions "ℓ_1" and "ℓ_2" at side cover and then calculate dimension "A".
   - Measure dimension "ℓ_1" **and "ℓ_2" in at least two places.**

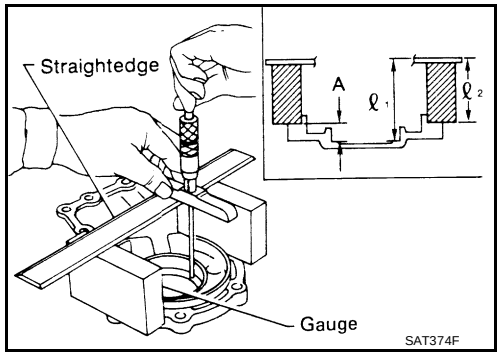

"A"	**: Distance between transmission case fitting surface and adjusting shim mating surface.**
A = ℓ_1 − ℓ_2	
ℓ_2	**: Height of gauge**

5. Measure dimensions "ℓ_2" and "ℓ_3" and then calculate dimension "B".
   - Measure "ℓ_2" **and "ℓ_3" in at least two places.**

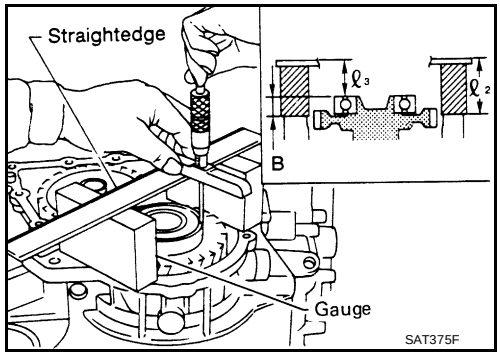

"B"	**: Distance between the end of output shaft bearing outer race and the side cover fitting surface of transmission case.**
B = ℓ_2 − ℓ_3	
ℓ_2	**: Height of gauge**

6. Select proper thickness of adjusting shim so that output shaft end play (clearance between side cover and output shaft bearing) is within specifications.

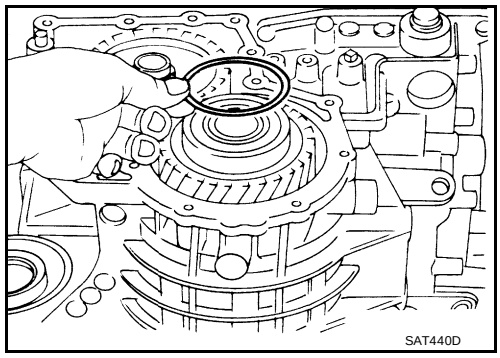

Output shaft end play (A − B)	**: 0 - 0.15 mm (0 - 0.0059 in)**
Output shaft end play adjusting shims	**: Refer to AT-372, "OUTPUT SHAFT ADJUSTING SHIMS" .**

7. Install adjusting shim on output shaft bearing.

Assembly (2)

ECS004WG

1. Apply anaerobic liquid gasket to transmission case as shown in illustration. Refer to GI-42, "Recommended Chemical Products and Sealants" .

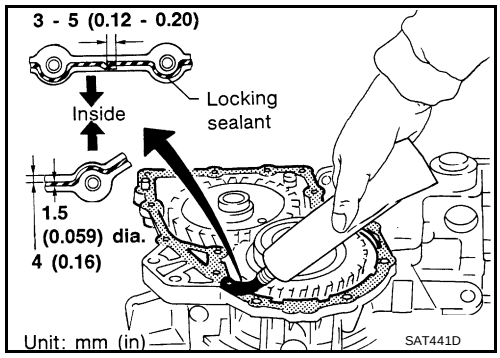

2. Set side cover on transmission case.
   - **Apply locking sealant to the mating surface of transmission case.**

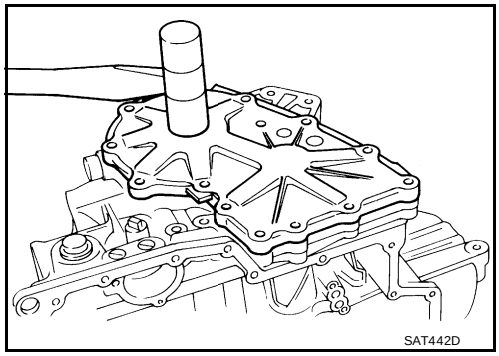

3. Tighten side cover fixing bolts to specified torque. Refer to AT-263, "OVERHAUL" .
   - **Do not mix bolts A and B.**
   - **Always replace bolts A as they are self-sealing bolts.**

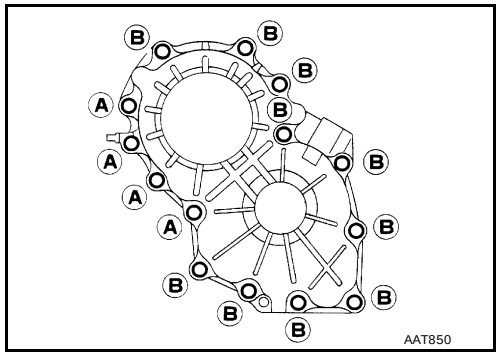

4. Remove paper rolled around bearing retainer.
5. Install thrust washer on bearing retainer.
   - **Apply petroleum jelly to thrust washer.**

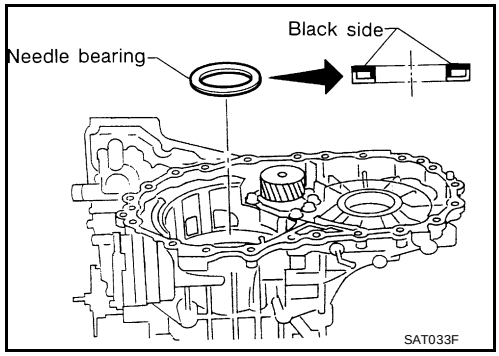

6. Install forward clutch assembly.
   - **Align teeth of low & reverse brake drive plates before installing.**
   - **Make sure that bearing retainer seal rings are not spread.**
   - **If forward clutch assembly is correctly seated, points 1 and 2 are at almost same level.**

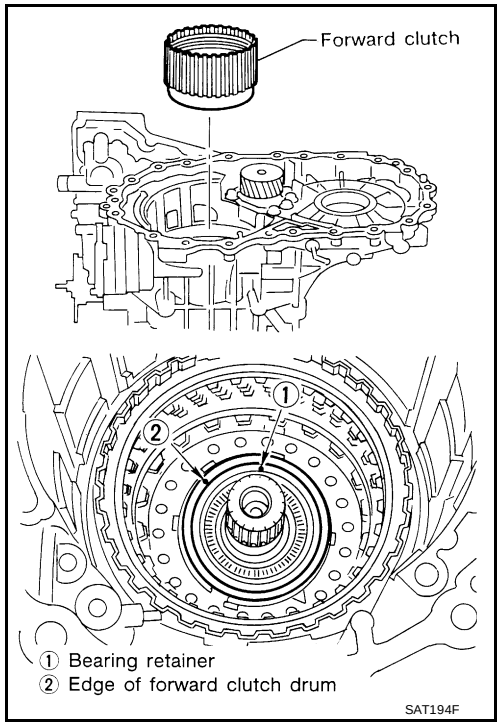

7. Install thrust needle bearing on bearing retainer.
   - **Apply petroleum jelly to thrust needle bearing.**
   - **Pay attention to direction of thrust needle bearing.**

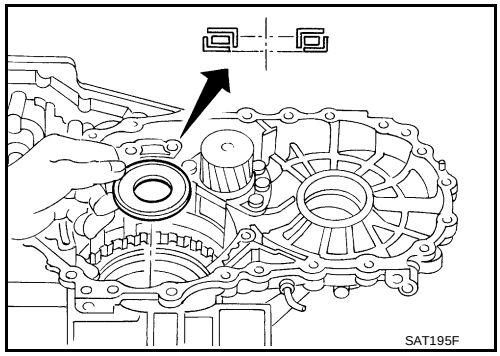

8. Install overrun clutch hub.
   - **Apply petroleum jelly to thrust washers.**
   - **Align teeth of overrun clutch drive plates before installing.**

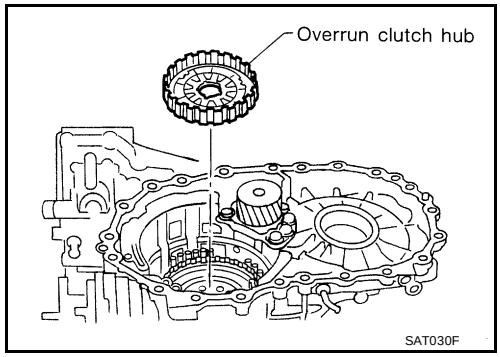

9. Hold forward clutch hub and turn rear internal gear.
   Check overrun clutch hub for correct directions of lock and unlock.
   - **If not shown as illustrated, check installed direction of forward one-way clutch.**

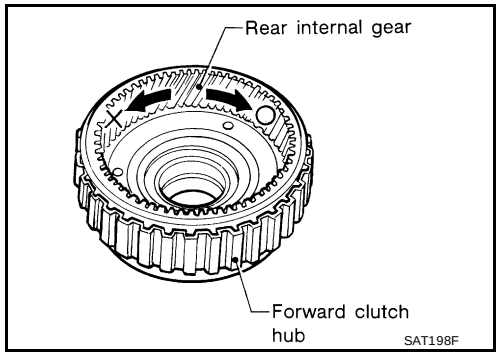

10. Install forward clutch hub and rear internal gear assembly.
    - **Align teeth of forward clutch drive plates before installing.**
    - **Check that three hooks of thrust washer are correctly aligned after installing.**

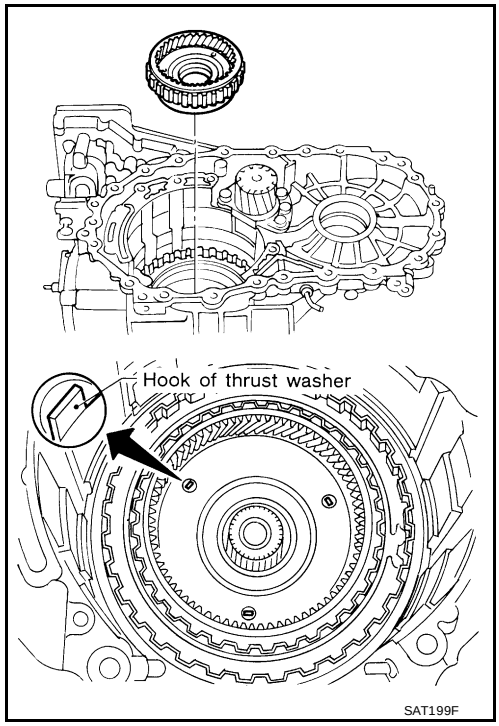

11. Install rear planetary carrier assembly and rear sun gear according to the following procedures.

a. Install needle bearings on rear planetary carrier.
   - **Apply petroleum jelly to needle bearings.**
   - **Pay attention to direction of needle bearings.**

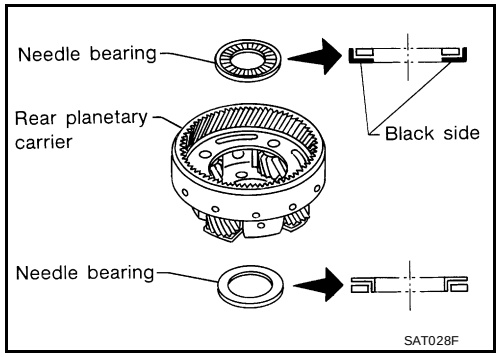

b. Install rear sun gear on rear planetary carrier.
   - **Pay attention to direction of rear sun gear.**

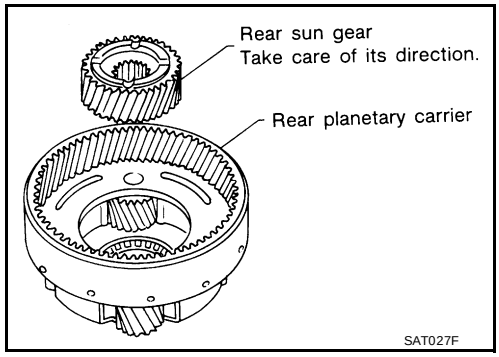

c. Install rear planetary carrier on transmission case.

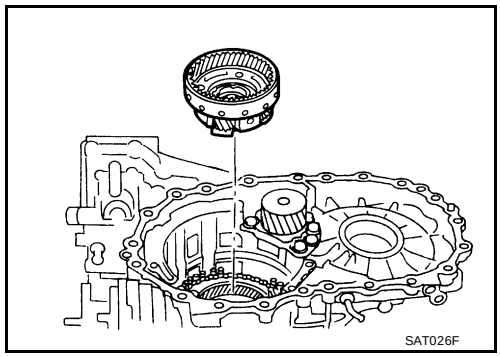

12. Install thrust needle bearing on front planetary carrier, then install them together on transmission case.
    - **Apply petroleum jelly to thrust needle bearing.**
    - **Pay attention to direction of thrust needle bearing.**

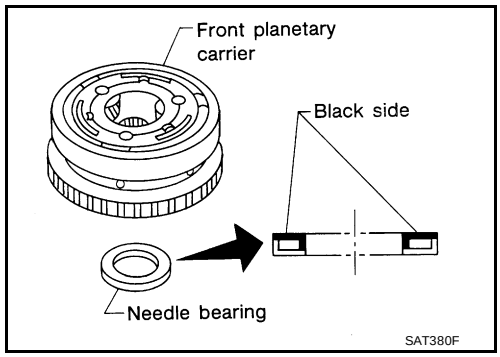

13. Install low and reverse brake piston according to the following procedures.

a. Set and align return springs to transmission case gutters as shown in illustration.

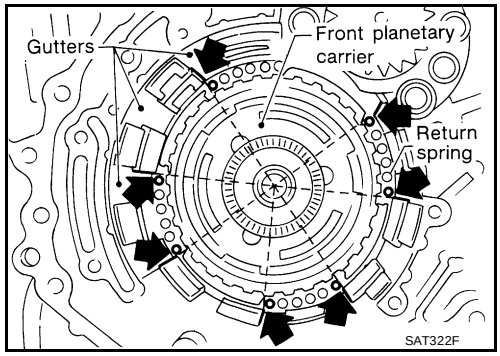

b. Set and align piston with retainer.

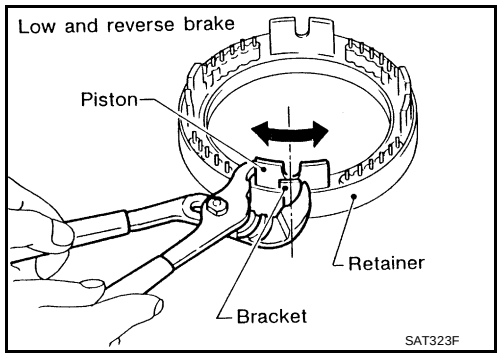

c. Install piston and retainer assembly on the transmission case.
   - **Align bracket to specified gutter as indicated in illustration.**

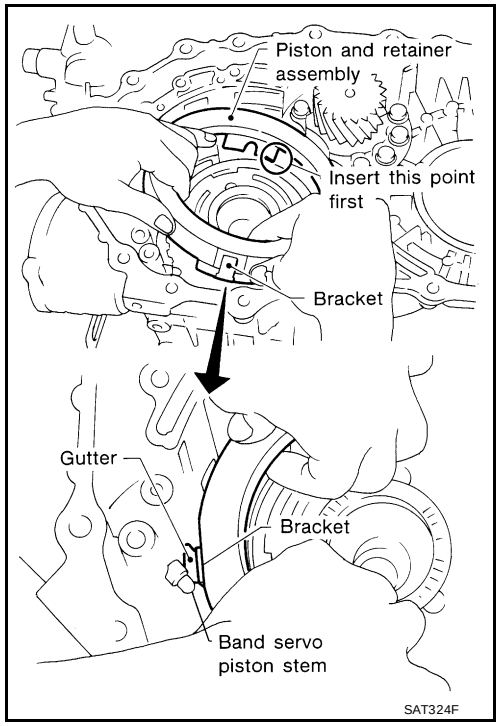

d. Check that each protrusion of piston is correctly set to corresponding return spring as follows.
   - **Push piston and retainer assembly evenly and confirm they move smoothly.**
   - **If they can not move smoothly, remove piston and retainer assembly and align return spring correctly as instructed in step "a".**

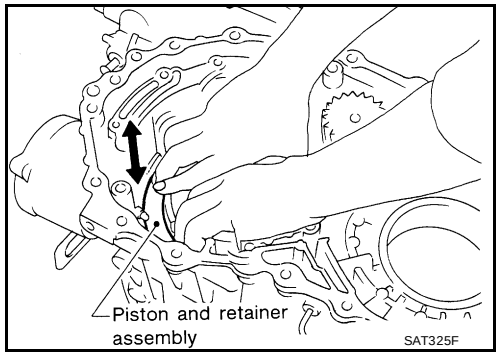

e. Push down piston and retainer assembly and install snap ring.

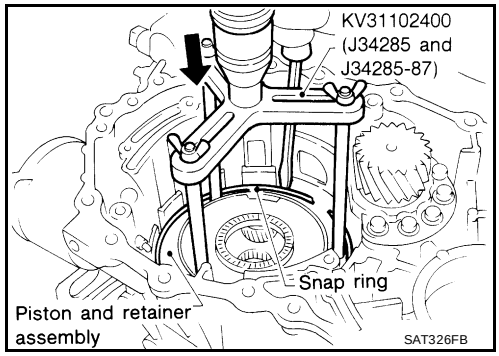

14. Install low one-way clutch to front planetary carrier by turning carrier in the direction of the arrow shown.

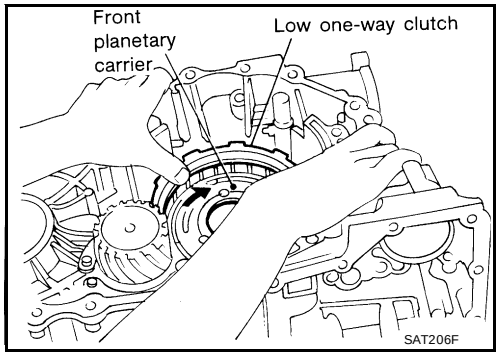

15. Install snap ring with screwdriver.
    - **Forward clutch and bearing must be correctly installed for snap ring to fit into groove of transmission case.**

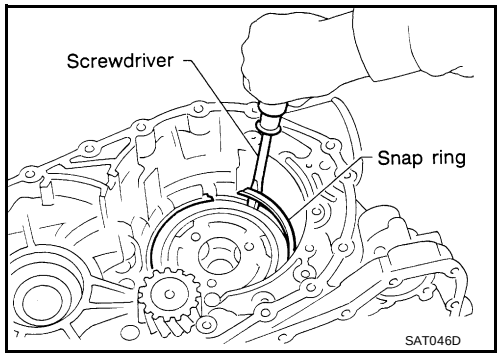

16. Install needle bearing on transmission case.
    - **Apply petroleum jelly to needle bearing.**
    - **Pay attention to direction of needle bearing.**

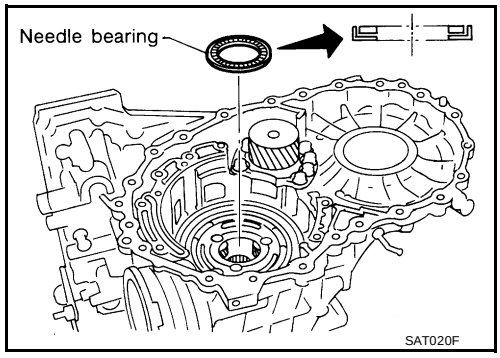

17. Install bearing race, needle bearing and high clutch hub on front sun gear.
    - **Apply petroleum jelly to needle bearing.**
    - **Pay attention to direction of needle bearing.**

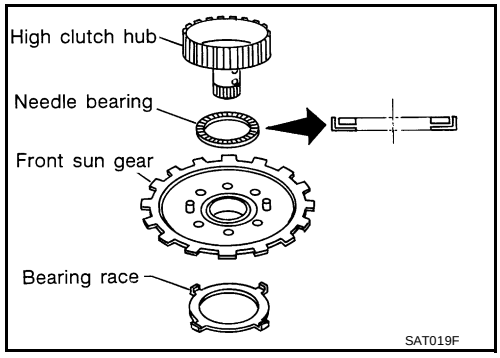

18. Install needle bearing and high clutch drum on high clutch hub.

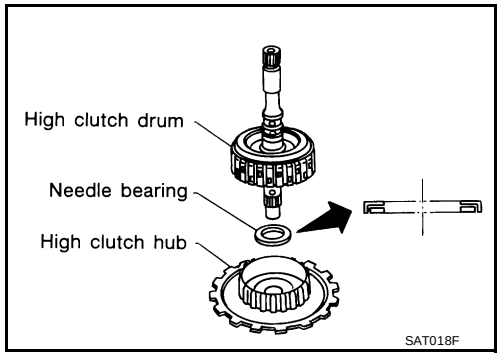

19. Install needle bearing on high clutch drum.
    - **Apply petroleum jelly to needle bearing.**
    - **Pay attention to direction of needle bearing.**

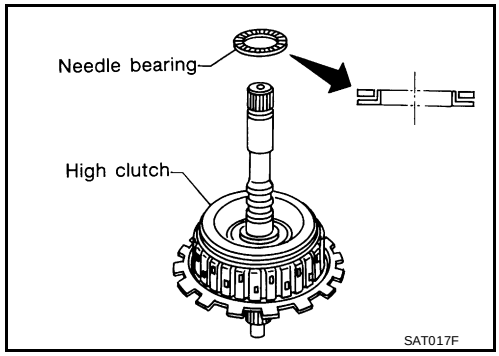

20. Remove paper rolled around input shaft.
21. Install input shaft assembly in reverse clutch.
    - **Align teeth of reverse clutch drive plates before installing.**

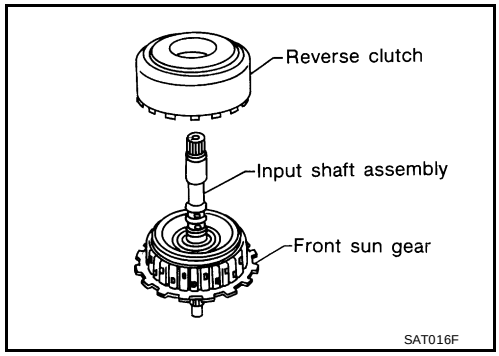

22. Install reverse clutch assembly on transmission case.
    - **Align teeth of high clutch drive plates before installing.**

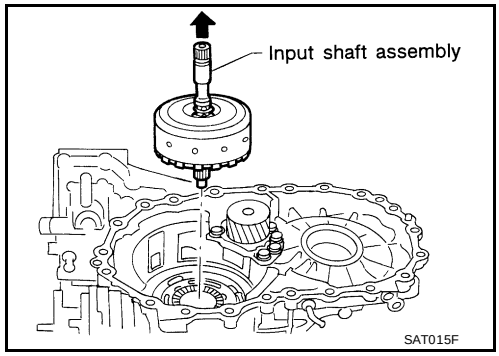

Adjustment (2)

ECS004WH

When any parts listed below are replaced, adjust total end play and reverse clutch end play.

Part name	Total end play	Reverse clutch end play
Transmission case	●	●
Overrun clutch hub	●	●
Rear internal gear	●	●
Rear planetary carrier	●	●
Rear sun gear	●	●
Front planetary carrier	●	●
Front sun gear	●	●
High clutch hub	●	●
High clutch drum	●	●
Oil pump cover	●	●
Reverse clutch drum	—	●

TOTAL END PLAY

1. Adjust total end play “T_1 ”.

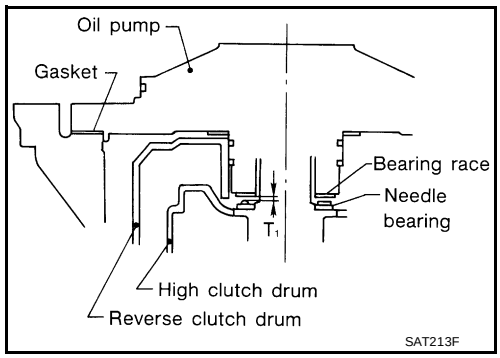

a. With original bearing race installed, place Tool onto oil pump. The long ends of legs should be placed firmly on machined surface of oil pump assembly. The gauging cylinder should rest on top of bearing race. Lock gauging cylinder in place with set screw.

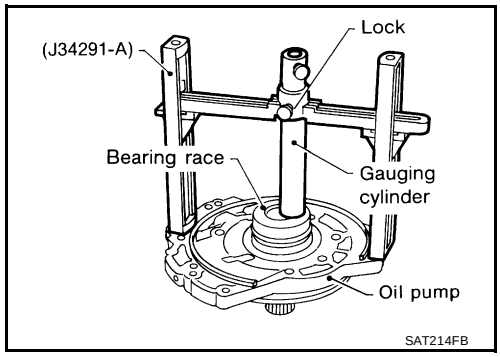

b. Install gauging plunger into cylinder.

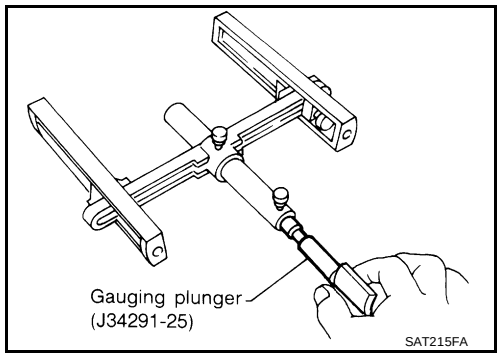

c. With needle bearing installed on high clutch drum, place Tool legs on machined surface of transmission case (with gasket). Then allow plunger to rest on needle bearing.

d. Measure gap between cylinder and plunger. This measurement should give exact total end play.

Total end play “T_1 ”	**: 0.25 - 0.55 mm (0.0098 - 0.0217 in)**

- If end play is out of specification, decrease or increase thickness of bearing race as necessary.

Available bearing race for adjusting total end play	**: Refer to AT-372, "BEARING RACE FOR ADJUSTING TOTAL END PLAY" .**

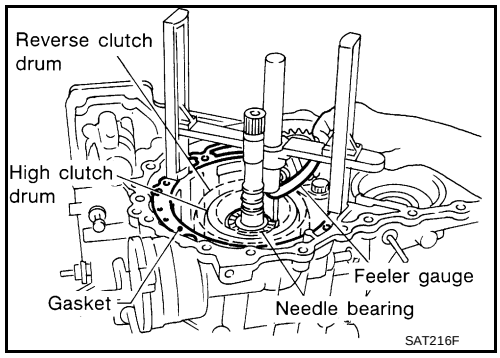

2. Adjust reverse clutch drum end play “T_2 ”.

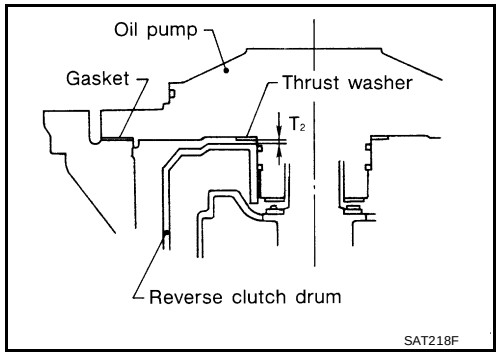

a. Place Tool on machined surface of transmission case (with gasket). Then allow gauging cylinder to rest on reverse clutch drum. Lock cylinder in place with set screw.

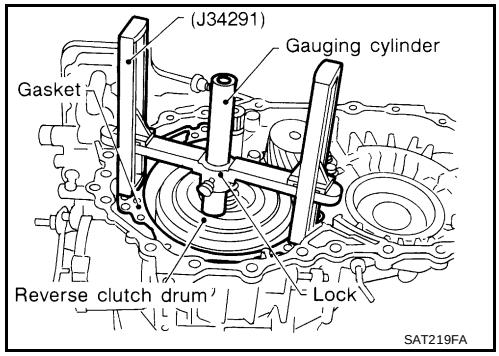

b. Install gauging plunger into cylinder.

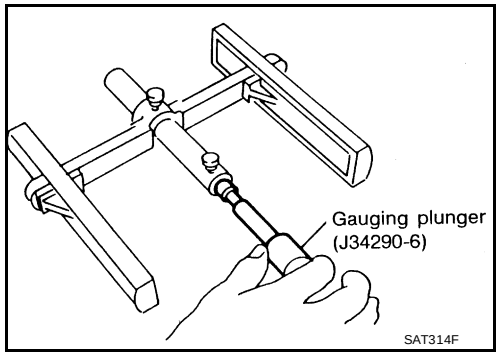

c. With original thrust washer installed on oil pump, place Tool legs onto machined surface of oil pump assembly. Then allow plunger to rest on thrust washer.

d. Measure gap between cylinder and plunger with feeler gauge. This measurement should give exact reverse clutch drum end play.

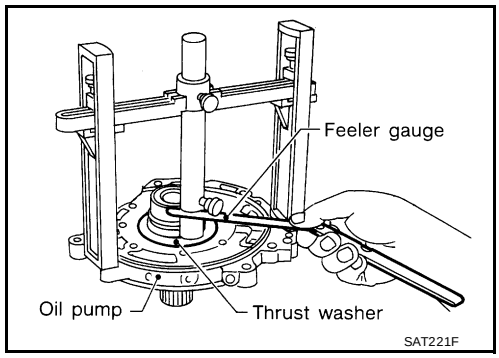

Reverse clutch drum end play “T_2 ”	**: 0.55 - 0.90 mm (0.0217 - 0.0354 in)**

- If end play is out of specification, decrease or increase thickness of thrust washer as necessary.

Available thrust washer for adjusting reverse clutch drum end play	**: Refer to AT-373, "THRUST WASHERS FOR ADJUSTING REVERSE CLUTCH DRUM END PLAY" .**

Assembly (3)

ECS004WI

1. Install anchor end pin and lock nut on transmission case.
2. Place brake band on outside of reverse clutch drum. Tighten anchor end pin just enough so that brake band is evenly fitted on reverse clutch drum.

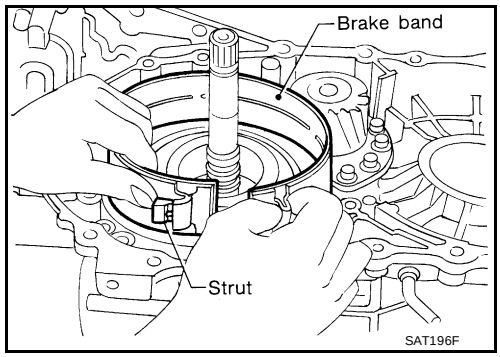

3. Place bearing race selected in total end play adjustment step on oil pump cover.
   - **Apply petroleum jelly to bearing race.**
4. Place thrust washer selected in reverse clutch end play step on reverse clutch drum.
   - **Apply petroleum jelly to thrust washer.**

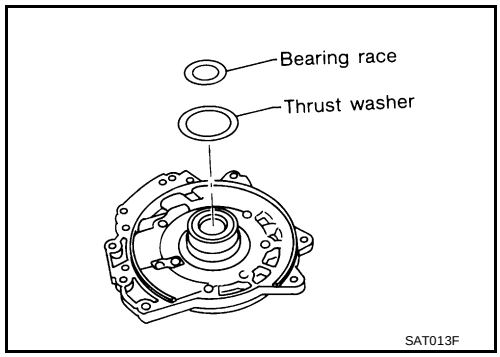

5. Install oil pump assembly, baffle plate and gasket on transmission case.
6. Tighten oil pump fixing bolts to the specified torque.

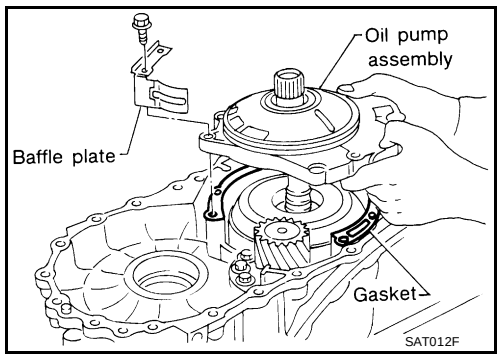

7. Install O-ring to input shaft.
   - **Apply ATF to O-ring.**

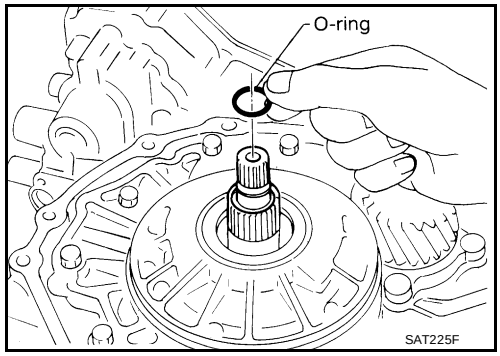

8. Adjust brake band.

a. Tighten anchor end pin to the specified torque.

Anchor end pin : Refer to AT-369, "BRAKE BAND" .

b. Back off anchor end pin two and a half turns.

c. While holding anchor end pin, tighten lock nut.

Lock nut : Refer to AT-369, "BRAKE BAND" .

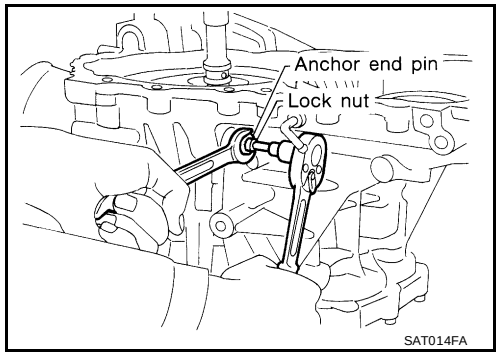

9. Apply compressed air to oil holes of transmission case and check operation of brake band.

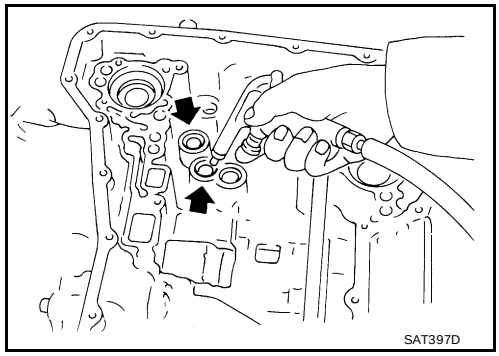

10. Install final drive assembly on transmission case.

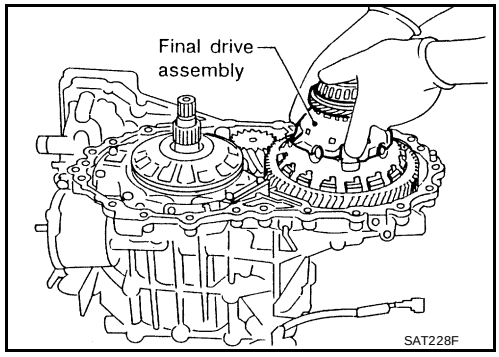

11. Install differential lubricant tube on converter housing. Tighten differential lubricant tube bolts to the specified torque. Refer to AT-263, "OVERHAUL" .

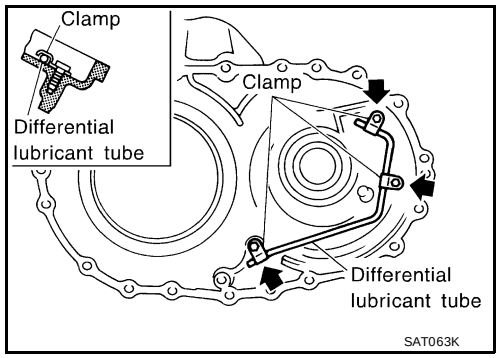

12. Install O-ring on differential oil port of transmission case.

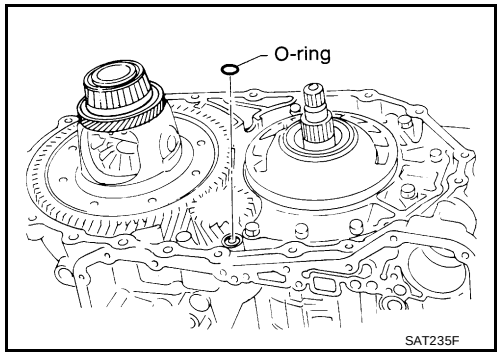

13. Install converter housing on transmission case.
    - **Apply locking sealant to mating surface of converter housing.**

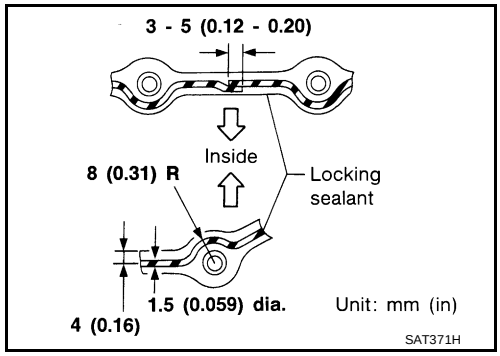

    - **Tighten converter housing bolts to the specified torque. Refer to AT-263, "OVERHAUL" .**

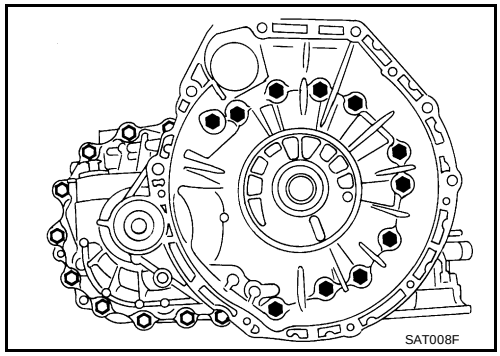

14. Install accumulator piston.

a. Check contact surface of accumulator piston for damage.

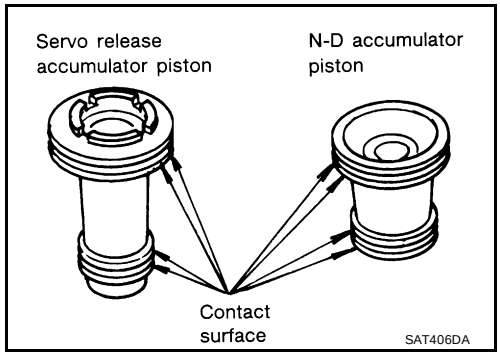

b. Install O-rings on accumulator piston.
- **Apply ATF to O-rings.**

Accumulator piston O-rings : Refer to AT-366, "O-RING"

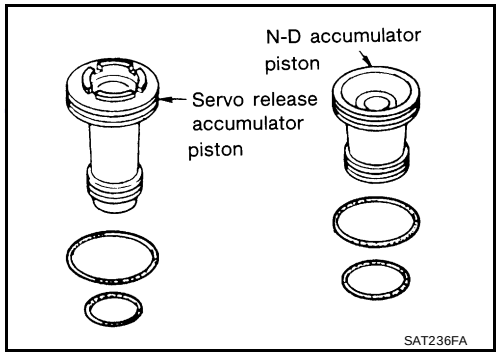

c. Install accumulator pistons and return springs on transmission case.
- **Apply ATF to inner surface of transmission case.**

Return springs : Refer to AT-366, "RETURN SPRING" .

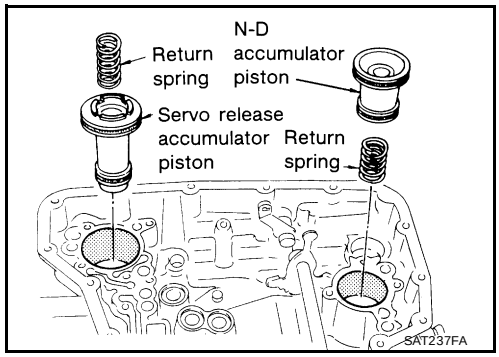

15. Install lip seals for band servo oil holes on transmission case.
- **Apply petroleum jelly to lip seals.**

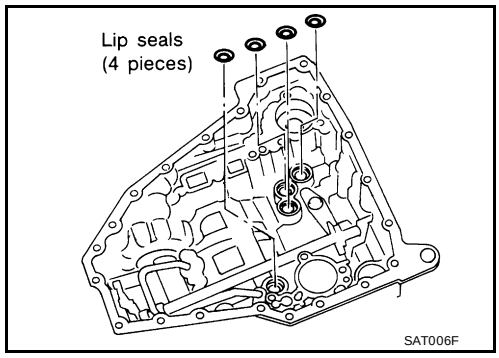

16. Install L & R oil tube and oil sleeve. Tighten L & R oil tube bolts to the specified torque. Refer to AT-263, "OVERHAUL" .

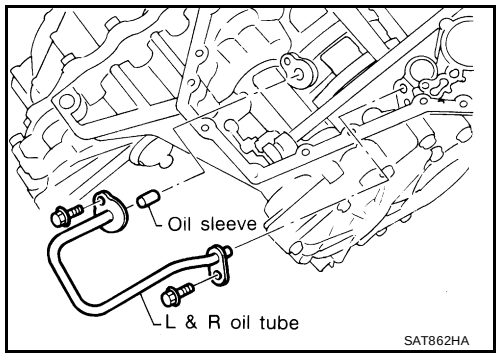

17. Install control valve assembly.

a. Insert manual valve into control valve assembly.
   - **Apply ATF to manual valve.**

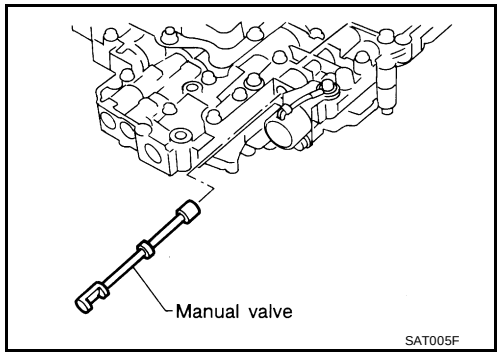

b. Set manual shaft in Neutral position.

c. Install control valve assembly on transmission case while aligning manual valve with manual plate.

d. Pass solenoid harness through transmission case and install terminal body on transmission case by pushing it.

e. Install stopper ring to terminal body.

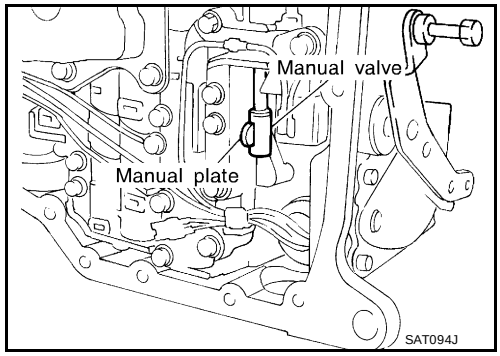

f. Tighten bolts **I** , **X** and ●.

Bolt length, number and location:

Bolt symbol	I	X	●
Bolt length " ℓ " mm (in)	40 (1.57)	33 (1.30)	43.5 (1.713)
Number of bolts	5	6	2

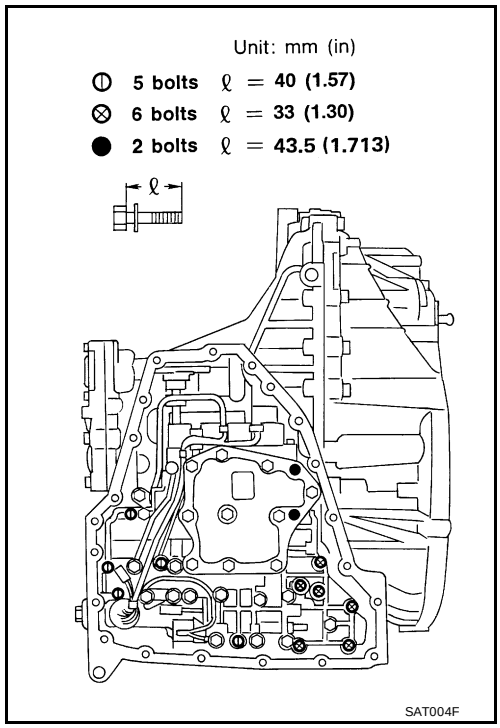

18. Install oil pan.

a. Attach a magnet to oil pan.

b. Install new oil pan gasket on transmission case.

c. Install oil pan on transmission case.
   - **Always replace oil pan bolts as they are self-sealing bolts.**
   - **Tighten four bolts in a criss-cross pattern to prevent dislocation of gasket.**

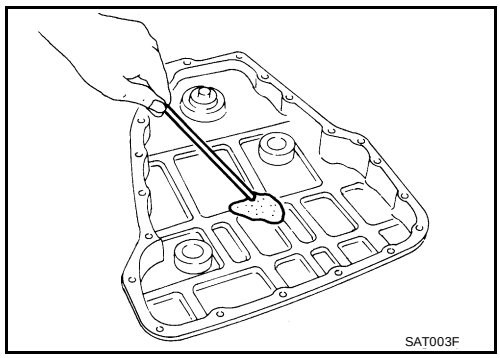

d. Tighten oil pan bolts and drain plug to the specified torque. Refer to AT-263, "OVERHAUL" .

19. Install park/neutral position (PNP) switch.

a. Set manual shaft in P position.

b. Temporarily install park/neutral position (PNP) switch on manual shaft.

c. Move selector lever to N position.

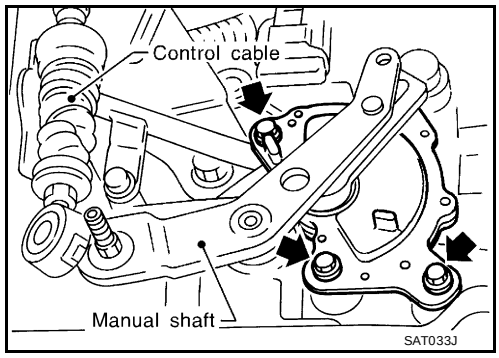

d. Use a 4 mm (0.16 in) pin for this adjustment.

i. Insert the pin straight into the manual shaft adjustment hole.

ii. Rotate park/neutral position (PNP) switch until the pin can also be inserted straight into hole in park/neutral position (PNP) switch.

e. Tighten park/neutral position (PNP) switch fixing bolts. Refer to AT-263, "OVERHAUL" .

f. Remove pin from adjustment hole after adjusting park/neutral position (PNP) switch.

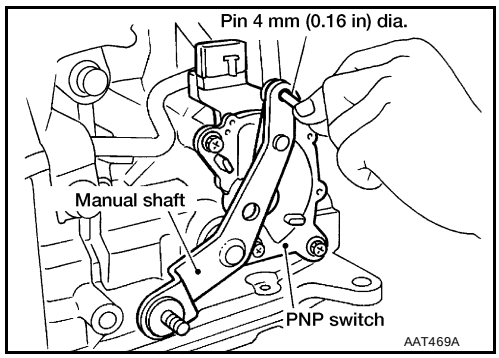

20. Install A/T fluid charging pipe and fluid cooler tube to transmission case. Tighten A/T fluid charging pipe and fluid cooler tube bolts to the specified torque. Refer to AT-263, "OVERHAUL" .

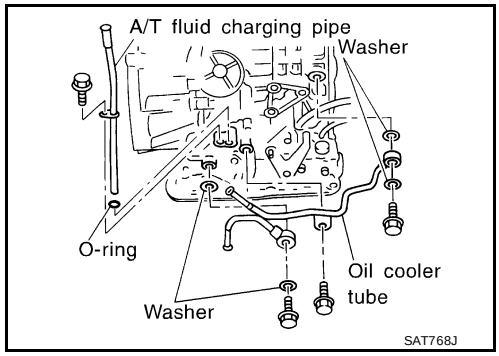

21. Install torque converter.

a. Pour ATF into torque converter.

- **Approximately 1 liter (1-1/8 US qt, 7/8 Imp qt) of fluid is required for a new torque converter.**
- **When reusing old torque converter, add the same amount of fluid as was drained.**

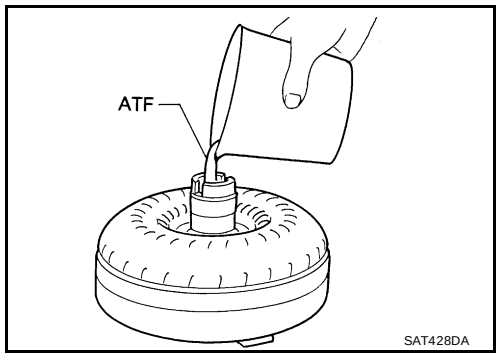

b. Install torque converter while aligning notches of torque converter with notches of oil pump.

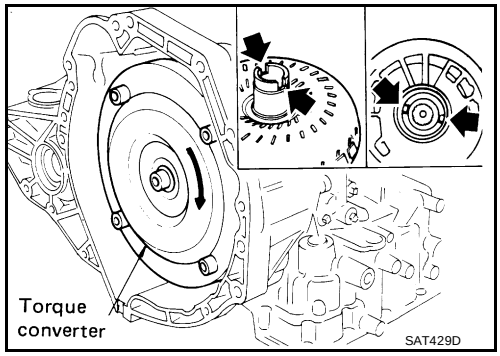

c. Measure distance “A” to check that torque converter is in proper position.

Distance A : 14 mm (0.55 in) or more

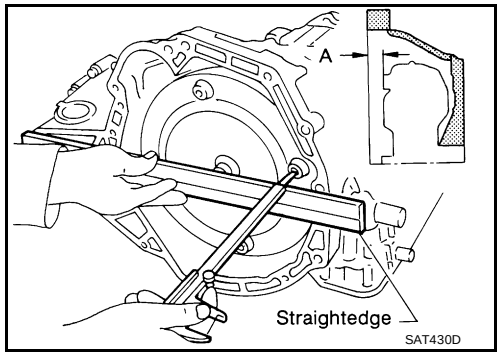

SERVICE DATA AND SPECIFICATIONS (SDS)

PFP:00030

General Specifications

ECS004WJ

Engine		QR25DE	VQ35DE
Automatic transaxle model		RE4F04B	
Automatic transaxle assembly	Model code number	85X21	88X02
Transaxle gear ratio	1st	2.785	
	2nd	1.545	
	3rd	1.000	
	4th	0.694	
	Reverse	2.272	
	Final drive	4.087	3.789
Recommended fluid		Nissan Matic “D” (Continental U.S. and Alaska) or Canada Nissan Automatic Transmission Fluid*	
Fluid capacity ℓ (US qt, Imp qt)		9.2 (9.75, 8.125)	

*: Refer to MA-12, "RECOMMENDED FLUIDS AND LUBRICANTS" .

Shift Schedule

ECS004WK

VEHICLE SPEED WHEN SHIFTING GEARS THROTTLE POSITION — QR25DE MODEL

Throttle position	Shift pattern	Vehicle speed km/h (MPH)					
		$D_1 \rightarrow D_2$	$D_2 \rightarrow D_3$	$D_3 \rightarrow D_4$	$D_4 \rightarrow D_3$	$D_3 \rightarrow D_2$	$D_2 \rightarrow D_1$
Full throttle	Comfort	57 - 65 (35 - 40)	106 - 114 (66 - 71)	166 - 174 (103 - 108)	162 - 170 (101 - 106)	96 - 104 (60 - 65)	41 - 49 (25 - 30)
	Auto power	57 - 65 (35 - 40)	106 - 114 (66 - 71)	166 - 174 (103 - 108)	162 - 17 (101 - 106)	96 - 104 (60 - 65)	41 - 49 (25 - 30)
Half throttle	Comfort	40 - 48 (25 - 30)	73 - 81 (45 - 50)	129 - 137 (80 - 85)	76 - 84 (47 - 52)	43 - 51 (27 - 32)	24 - 32 (15 - 20)
	Auto power	43 - 51 (27 - 32)	80 - 88 (50 - 55)	129 - 137 (80 - 85)	76 - 84 (47 - 52)	49 - 57 (30 - 35)	24 - 32 (15 - 20)

VEHICLE SPEED WHEN PERFORMING AND RELEASING LOCK-UP — QR25DE MODEL

Unit: km/h (MPH)

Selector lever position	D position		3 position	
Shift pattern	Comfort	Auto power	Comfort	Auto power
Lock-up "ON"	102 - 110 (63 - 68)	102 - 110 (63 - 68)	86 - 94 (53 - 58)	86 - 94 (53 - 58)
Lock-up "OFF"	86 - 94 (53 - 58)	86 - 94 (53 - 58)	83 - 91 (52 - 57)	83 - 91 (52 - 57)

NOTE:

- Lock-up vehicle speed indicates the speed in D_4 position.
- Perform lock-up inspection after warming up engine.
- Lock-up vehicle speed may vary depending on the driving conditions and circumstances.

VEHICLE SPEED WHEN SHIFTING GEARS THROTTLE POSITION — VQ35DE MODEL

Throttle position	Shift pattern	Vehicle speed km/h (MPH)					
		$D_1 \rightarrow D_2$	$D_2 \rightarrow D_3$	$D_3 \rightarrow D_4$	$D_4 \rightarrow D_3$	$D_3 \rightarrow D_2$	$D_2 \rightarrow D_1$
Full throttle	Comfort	61 - 69 (38 - 43)	114 - 122 (71 - 76)	179 - 187 (111 - 116)	175 - 183 (109 - 114)	104 - 112 (65 - 70)	41 - 49 (25 - 30)
	Auto power	61 - 69 (38 - 43)	114 - 122 (71 - 76)	179 - 187 (111 - 116)	175 - 183 (109 - 114)	104 - 112 (65 - 70)	41 - 49 (25 - 30)

Throttle position	Shift pattern	Vehicle speed km/h (MPH)					
		$D_1 \rightarrow D_2$	$D_2 \rightarrow D_3$	$D_3 \rightarrow D_4$	$D_4 \rightarrow D_3$	$D_3 \rightarrow D_2$	$D_2 \rightarrow D_1$
Half throttle	Comfort	39 - 47 (24 - 28)	73 - 81 (45 - 50)	137 - 145 (85 - 90)	87 - 95 (54 - 59)	33 - 41 (21 - 25)	9 - 17 (6 - 11)
	Auto power	45 - 53 (28 - 33)	86 - 94 (53 - 58	137 - 145 (85 - 90)	87 - 95 (54 - 59)	51 - 59 (32 - 37)	9 - 17 (6 - 11)

VEHICLE SPEED WHEN PERFORMING AND RELEASING LOCK-UP — VQ35DE MODEL

Unit: km/h (MPH)

Selector lever position	D position		3 position	
Shift pattern	Comfort	Auto power	Comfort	Auto power
Lock-up "ON"	109 - 117 (68 - 73)	109 - 117 (68 - 73)	86 - 94 (53 - 58)	86 - 94 (53 - 58)
Lock-up "OFF"	74 - 82 (46 - 51)	74 - 82 (46 - 51)	83 - 91 (52 - 57)	83 - 91 (52 - 57)

NOTE:

- Lock-up vehicle speed indicates the speed in D_4 position.
- Perform lock-up inspection after warming up engine.
- Lock-up vehicle speed may vary depending on the driving conditions and circumstances.

Stall Revolution

ECS004WL

Engine	Stall revolution rpm
QR25DE	2,350 - 2,800
VQ35DE	2,550 - 3,050

Line Pressure

ECS004WM

Engine speed rpm	Line pressure kPa (kg/cm^2 , psi)			
	D, 2 and 1 positions		R position	
	QR25DE	VQ35DE	QR25DE	VQ35DE
Idle	500 (5.1, 73)		778 (7.9, 113)	
Stall	1,223 (12.6, 179)		1,918 (19.6, 278)	

Control Valves

ECS004WN

CONTROL VALVE AND PLUG RETURN SPRINGS

Unit: mm (in)

Parts			Item		
			Part No.*	Free length	Outer diameter
Upper body	23	Pilot valve spring	31742-80L13	38.98 (1.535)	8.9 (0.350)
	7	1-2 accumulator valve spring	31742-80L15	20.5 (0.807)	6.95 (0.274)
	28	1-2 accumulator piston spring	31742-80L14	55.26 (2.176)	19.6 (0.772)
			31742-80L17**	55.7 (2.193)	19.5 (0.768)
	33	1st reducing valve spring	31742-80L08	27.0 (1.063)	7.0 (0.276)
	35	3-2 timing valve spring	31736-01X00	23.0 (0.906)	6.65 (0.262)
	18	Overrun clutch reducing valve spring	31742-80L09	37.5 (1.476)	6.9 (0.272)
	16	Torque converter relief valve spring	31742-80L10	31.0 (1.220)	9.0 (0.354)
	11	Torque converter clutch control valve	31742-80L16	56.98 (2.243)	6.5 (0.256)
	3	Cooler check valve spring	31742-85X01	29.4 (1.157)	6.0 (0.236)

Parts			Item		
			Part No.*	Free length	Outer diameter
Lower body	15	Pressure regulator valve spring	31742-80L01	45.0 (1.772)	15.0 (0.591)
	20	Overrun clutch control valve spring	31762-80L00	21.7 (0.854)	7.0 (0.276)
	24	Accumulator control valve spring	31742-80L02	22.0 (0.866)	6.5 (0.256)
	29	Shift valve A spring	31762-80L00	21.7 (0.854)	7.0 (0.276)
	32	Shuttle valve spring	31762-41X04	51.0 (2.008)	5.65 (0.222)
	12	Shift valve B spring	31762-80L00	21.7 (0.854)	7.0 (0.276)
	7	Pressure modifier valve spring	31742-80L13	30.5 (1.201)	9.8 (0.386)
	3		31742-80L04	32.0 (1.260)	6.9 (0.272)
	—	Oil cooler relief valve spring	31742-80L12	17.02 (0.670)	8.0 (0.315)

*: Always check with the Parts Department for the latest parts information.
**: This part is for model code number "88X02".

Accumulator

ECS004WO

O-RING

Unit: mm (in)

Accumulator	Part No.*	Inner diameter (Small)	Part No.*	Inner diameter (Large)
Servo release accumulator	31526-41X03	26.9 (1.059)	31526-41X02	44.2 (1.740)
N-D accumulator	31526-31X08	34.6 (1.362)	31672-21X00	39.4 (1.551)

*: Always check with the Parts Department for the latest parts information.

RETURN SPRING

Unit: mm (in)

Accumulator	Part number*	Free length	Outer diameter
Servo release accumulator	31605-85X00	62.8 (2.473)	21 (0.827)
N-D accumulator	31605-80L03	43.5 (1.713)	28.0 (1.102)

*: Always check with the Parts Department for the latest parts information.

Clutch and Brakes

ECS004WP

REVERSE CLUTCH

Model code number		85X21 and 88X02	
Number of drive plates		2	
Number of driven plates		2	
Drive plate thickness mm (in)	Standard	1.6 (0.063)	
	Allowable limit	1.4 (0.055)	
Driven plate thickness mm (in)	Standard	1.8 (0.070)	
Clearance mm (in)	Standard	0.5 - 0.8 (0.020 - 0.031)	
	Allowable limit	1.2 (0.047)	
Thickness of retaining plates		Thickness mm (in)	Part number*
		6.6 (0.260)	31537-80L00
		6.8 (0.268)	31537-80L01
		7.0 (0.276)	31537-80L02
		7.2 (0.283)	31537-80L03
		7.4 (0.291)	31537-80L04
		7.6 (0.299)	31537-80L05
		7.8 (0.307)	31537-80L06

*: Always check with the Parts Department for the latest parts information.

HIGH CLUTCH — QR25DE MODEL

Model code number		85X21	
Number of drive plates		3	
Number of driven plates		7*2 + 1*3	
Drive plate thickness mm (in)	Standard	1.6 (0.063)	
	Allowable limit	1.4 (0.055)	
Driven plate thickness mm (in)	Standard	*2	*3
		1.4 (0.055)	2.0 (0.079)
Clearance mm (in)	Standard	1.8 - 2.2 (0.071 - 0.087)	
	Allowable limit	2.8 (0.110)	
Thickness of retaining plates		Thickness mm (in)	Part number*
		3.2 (0.126) 3.4 (0.134) 3.6 (0.142) 3.8 (0.150) 4.0 (0.157)	31537-80L20 31537-80L21 31537-80L22 31537-80L23 31537-80L24

*: Always check with the Parts Department for the latest parts information.

HIGH CLUTCH — VQ35DE MODEL

Model code number		88X02	
Number of drive plates		4	
Number of driven plates		6*4 + 1*5	
Drive plate thickness mm (in)	Standard	1.6 (0.063)	
	Allowable limit	1.4 (0.055)	
Driven plate thickness mm (in)	Standard	*4	*5
		1.4 (0.055)	2.0 (0.079)
Clearance mm (in)	Standard	1.8 - 2.2 (0.071 - 0.087)	
	Allowable limit	2.8 (0.110)	
Thickness of retaining plates		Thickness mm (in)	Part number*
		3.0 (0.118) 3.2 (0.126) 3.4 (0.134) 3.6 (0.142) 3.8 (0.150)	31537-80L19 31537-80L20 31537-80L21 31537-80L22 31537-80L23

*: Always check with the Parts Department for the latest parts information.

FORWARD CLUTCH

Model code number		85X21	88X02
Number of drive plates		5	6
Number of driven plates		5	6
Drive plate thickness mm (in)	Standard	1.6 (0.063)	
	Allowable limit	1.4 (0.055)	
Driven plate thickness mm (in)	Standard	1.8 (0.071)	
Clearance mm (in)	Standard	0.45 - 0.85 (0.0177 - 0.0335)	
	Allowable limit	1.85 (0.0728)	
Thickness of retaining plates		Thickness mm (in)	Part number*
		3.2 (0.126)	31537-80L18
		3.4 (0.134)	31537-80L17
		3.6 (0.142)	31537-80L12
		3.8 (0.150)	31537-80L13
		4.0 (0.157)	31537-80L14
		4.2 (0.165)	31537-80L15
		4.4 (0.173)	31537-80L16

*: Always check with the Parts Department for the latest parts information.

OVERRUN CLUTCH

Model code number		85X21 and 88X02	
Number of drive plates		3	
Number of driven plates		5	
Drive plate thickness mm (in)	Standard	1.6 (0.063)	
	Allowable limit	1.4 (0.055)	
Driven plate thickness mm (in)	Standard	1.8 (0.071)	
Clearance mm (in)	Standard	0.7 - 1.1 (0.028 - 0.043)	
	Allowable limit	1.7 (0.067)	
Thickness of retaining plates		Thickness mm (in)	Part number*
		3.0 (0.118)	31537-80L07
		3.2 (0.126)	31537-80L08
		3.4 (0.134)	31537-80L09
		3.6 (0.142)	31537-80L10
		3.8 (0.150)	31537-80L11

*: Always check with the Parts Department for the latest parts information.

LOW & REVERSE BRAKE

Model code number		85X21	88X02
Number of drive plates		6	7
Number of driven plates		6	7 + 1
Drive plate thickness mm (in)	Standard	1.8 (0.071)	
	Allowable limit	1.6 (0.063)	
Driven plate thickness mm (in)	Standard	1.8 (0.071)	
Clearance mm (in)	Standard	1.7 - 2.1 (0.067 - 0.083)	
	Allowable limit	3.3 (0.130)	
Thickness of retaining plates		Thickness mm (in)	Part number*
		2.0 (0.079)	31667-80L00
		2.2 (0.087)	31667-80L01
		2.4 (0.094)	31667-80L02
		2.6 (0.102)	31667-80L03
		2.8 (0.110)	31667-80L04
		3.0 (0.118)	31667-80L05
		3.2 (0.126)	31667-80L06
		3.4 (0.134)	31667-80L07

*: Always check with the Parts Department for the latest parts information.

CLUTCH AND BRAKE RETURN SPRINGS

Unit: mm (in)

Parts	Part number*	Free length	Outer diameter
Forward clutch (Overrun clutch) (22 pcs)	31505-80L00	21.4 (0.843)	10.3 (0.406)
High clutch (10 pcs)	31505-80L02	22.5 (0.886)	10.8 (0.425)
Low & reverse brake (24 pcs)	31505-80L01	24.1 (0.949)	6.6 (0.260)

*: Always check with the Parts Department for the latest parts information.

BRAKE BAND

Anchor end pin tightening torque N-m (kg-m, in-lb)	4.0 - 5.8 (0.4 - 0.6, 36 - 52)
Number of returning revolutions for anchor end pin	2.5
Lock nut tightening torque N-m (kg-m, ft-lb)	31 - 36 (3.2 - 3.7, 23 - 27)

Final Drive

ECS004WQ

DIFFERENTIAL SIDE GEAR CLEARANCE

Clearance between side gear and differential case with washer mm (in)	0.1 - 0.2 (0.004 - 0.008)

DIFFERENTIAL SIDE GEAR THRUST WASHERS

Thickness mm (in)	Part number*
0.75 (0.0295)	38424-81X00
0.80 (0.0315)	38424-81X01
0.85 (0.0335)	38424-81X02
0.90 (0.0354)	38424-81X03
0.95 (0.0374)	38424-81X04

*: Always check with the Parts Department for the latest parts information.

DIFFERENTIAL SIDE BEARING PRELOAD ADJUSTING SHIMS

Thickness mm (in)	Part number*
0.48 (0.0189)	31438-80X00
0.52 (0.0205)	31438-80X01
0.56 (0.0220)	31438-80X02
0.60 (0.0236)	31438-80X03
0.64 (0.0252)	31438-80X04
0.68 (0.0268)	31438-80X05
0.72 (0.0283)	31438-80X06
0.76 (0.0299)	31438-80X07
0.80 (0.0315)	31438-80X08
0.84 (0.0331)	31438-80X09
0.88 (0.0346)	31438-80X10
0.92 (0.0362)	31438-80X11

*: Always check with the Parts Department for the latest parts information.

BEARING PRELOAD

Differential side bearing preload mm (in)	0.05 - 0.09 (0.0020 - 0.0035)

TURNING TORQUE

Turning torque of final drive assembly N-m (kg-cm, in-lb)	0.78 - 1.37 (8.0 - 14.0, 6.9 - 12.2)

Planetary Carrier and Oil Pump

ECS004WR

PLANETARY CARRIER

Clearance between planetary carrier and pinion washer mm (in)	Standard	0.20 - 0.70 (0.0079 - 0.0276)
	Allowable limit	0.80 (0.0315)

OIL PUMP

Oil pump side clearance mm (in)		0.030 - 0.050 (0.0012 - 0.0020)	
Thickness of inner gears and outer gears		Inner gear	
		Thickness mm (in)	Part number*
		11.99 - 12.0 (0.4720 - 0.4724) 11.98 - 11.99 (0.4717 - 0.4720) 11.97 - 11.98 (0.4713 - 0.4717)	31346-80L00 31346-80L01 31346-80L02
		Outer gear	
		Thickness mm (in)	Part number*
		11.99 - 12.0 (0.4720 - 0.4724) 11.98 - 11.99 (0.4717 - 0.4720) 11.97 - 11.98 (0.4713 - 0.4717)	31347-80L00 31347-80L01 31347-80L02
Clearance between oil pump housing and outer gear mm (in)	Standard	0.111 - 0.181 (0.0044 - 0.0071)	
	Allowable limit	0.181 (0.0071)	
Oil pump cover seal ring clearance mm (in)	Standard	0.1 - 0.25 (0.0039 - 0.0098)	
	Allowable limit	0.25 (0.0098)	

*: Always check with the Parts Department for the latest parts information.

Input Shaft

ECS004WS

SEAL RING CLEARANCE

Input shaft seal ring clearance mm (in)	Standard	0.08 - 0.23 (0.0031 - 0.0091)
	Allowable limit	0.23 (0.0091)

SEAL RING

Outer diameter mm (in)	Inner diameter mm (in)	Width mm (in)	Part number*
26 (1.024)	22.4 (0.882)	1.971 (0.078)	31525-80X02

*: Always check with the Parts Department for the latest parts information.

Reduction Pinion Gear

ECS004WT

TURNING TORQUE

Turning torque of reduction pinion gear N-m (kg-cm, in-lb)	0.05 - 0.39 (0.5 - 4.0, 0.43 - 3.47)

REDUCTION PINION GEAR BEARING ADJUSTING SHIMS

NO.	Thickness mm (in)	Part number	NO.	Thickness mm (in)	Part number*
1	5.00 (0.1969)	31439-81X00	18	5.34 (0.2102)	31439-81X17
2	5.02 (0.1976)	31439-81X01	19	5.36 (0.2110)	31439-81X18
3	5.04 (0.1984)	31439-81X02	20	5.38 (0.2118)	31439-81X19
4	5.06 (0.1992)	31439-81X03	21	5.40 (0.2126)	31439-81X20
5	5.08 (0.2000)	31439-81X04	22	5.42 (0.2134)	31439-81X21
6	5.10 (0.2008)	31439-81X05	23	5.44 (0.2142)	31439-81X22
7	5.12 (0.2016)	31439-81X06	24	5.46 (0.2150)	31439-81X23
8	5.14 (0.2024)	31439-81X07	25	5.48 (0.2157)	31439-81X24
9	5.16 (0.2031)	31439-81X08	26	5.50 (0.2165)	31439-81X46
10	5.18 (0.2039)	31439-81X09	27	5.52 (0.2173)	31439-81X47
11	5.20 (0.2047)	31439-81X10	28	5.54 (0.2181)	31439-81X48
12	5.22 (0.2055)	31439-81X11	29	5.56 (0.2189)	31439-81X49
13	5.24 (0.2063)	31439-81X12	30	5.58 (0.2197)	31439-81X60
14	5.26 (0.2071)	31439-81X13	31	5.60 (0.2205)	31439-81X61
15	5.28 (0.2079)	31439-81X14	32	5.62 (0.2213)	31439-81X62
16	5.30 (0.2087)	31439-81X15	33	5.64 (0.2220)	31439-81X63
17	5.32 (0.2094)	31439-81X16	34	5.66 (0.2228)	31439-81X64
35	5.68 (0.2236)	31439-81X65	50	4.70 (0.1850)	31439-83X06
36	5.70 (0.2244)	31439-81X66	51	4.72 (0.1858)	31439-83X11
37	5.72 (0.2252)	31439-81X67	52	4.74 (0.1866)	31439-83X12
38	5.74 (0.2260)	31439-81X68	53	4.76 (0.1874)	31439-83X13
39	5.76 (0.2268)	31439-81X69	54	4.78 (0.1882)	31439-83X14
40	5.78 (0.2276)	31439-81X70	55	4.80 (0.1890)	31439-83X15
41	5.80 (0.2283)	31439-81X71	56	4.82 (0.1898)	31439-83X16
42	5.82 (0.2291)	31439-81X72	57	4.84 (0.1906)	31439-83X17
43	5.84 (0.2299)	31439-81X73	58	4.86 (0.1913)	31439-83X18
44	5.86 (0.2307)	31439-81X74	59	4.88 (0.1921)	31439-83X19
45	4.60 (0.1811)	31439-85X01	60	4.90 (0.1929)	31439-83X20
46	4.62 (0.1819)	31439-85X02	61	4.92 (0.1937)	31439-83X21
47	4.64 (0.1827)	31439-85X03	62	4.94 (0.1945)	31439-83X22
48	4.66 (0.1835)	31439-85X04	63	4.96 (0.1953)	31439-83X23
49	4.68 (0.1843)	31439-85X05	64	4.98 (0.1961)	31439-83X24

*: Always check with the Parts Department for the latest parts information.

Band Servo

ECS004WU

RETURN SPRING

Unit: mm (in)

Return spring	Part number*	Free length	Outer diameter
2nd servo return spring	31605-80L05	32.5 (1.280)	25.9 (1.020)
OD servo return spring	31605-80L06	62.6 (2.465)	21.7 (0.854)

*: Always check with the Parts Department for the latest parts information.

Output Shaft

ECS004WV

SEAL RING CLEARANCE

Output shaft seal ring clearance mm (in)	Standard	0.10 - 0.25 (0.0039 - 0.0098)
	Allowable limit	0.25 (0.0098)

SEAL RING

Outer diameter mm (in)	Inner diameter mm (in)	Width mm (in)	Part number*
33.71 (1.327)	30.25 (1.191)	1.95 (0.077)	31525-80809

*: Always check with the Parts Department for the latest parts information.

END PLAY

Output shaft end play mm (in)	0 - 0.15 (0 - 0.0059)

OUTPUT SHAFT ADJUSTING SHIMS

Thickness mm (in)	Part number*
0.80 (0.0315)	31438-80X60
0.84 (0.0331)	31438-80X61
0.88 (0.0346)	31438-80X62
0.92 (0.0362)	31438-80X63
0.96 (0.0378)	31438-80X64
1.00 (0.0394)	31438-80X65
1.04 (0.0409)	31438-80X66
1.08 (0.0425)	31438-80X67
1.12 (0.0441)	31438-80X68
1.16 (0.0457)	31438-80X69
1.20 (0.0472)	31438-80X70

*: Always check with the Parts Department for the latest parts information.

Bearing Retainer

ECS004WW

SEAL RING CLEARANCE

Bearing retainer seal ring clearance mm (in)	Standard	0.10 - 0.30 (0.0039 - 0.0118)
	Allowable limit	0.30 (0.0118)

Total End Play

ECS004WX

Total end play mm (in)	0.25 - 0.55 (0.0098 - 0.0217)

BEARING RACE FOR ADJUSTING TOTAL END PLAY

Thickness mm (in)	Part number*
0.8 (0.031)	31435-80X00
1.0 (0.039)	31435-80X01
1.2 (0.047)	31435-80X02
1.4 (0.055)	31435-80X03
1.6 (0.063)	31435-80X04
1.8 (0.071)	31435-80X05
2.0 (0.079)	31435-80X06
0.9 (0.035)	31435-80X09
1.1 (0.043)	31435-80X10
1.3 (0.051)	31435-80X11
1.5 (0.059)	31435-80X12
1.7 (0.067)	31435-80X13
1.9 (0.075)	31435-80X14

*: Always check with the Parts Department for the latest parts information.

Reverse Clutch End Play

ECS004WY

Reverse clutch end play mm (in)	0.55 - 0.90 (0.0217 - 0.0354)

THRUST WASHERS FOR ADJUSTING REVERSE CLUTCH DRUM END PLAY

Thickness mm (in)	Part number*
0.80 (0.0315)	31508-80X13
0.95 (0.0374)	31508-80X14
1.10 (0.0433)	31508-80X15
1.25 (0.0492)	31508-80X16
1.40 (0.0551)	31508-80X17
1.55 (0.0610)	31508-80X18
1.70 (0.0669)	31508-80X19
1.85 (0.0728)	31508-80X20

*: Always check with the Parts Department for the latest parts information.

Removal and Installation

ECS004WZ

Unit: mm (in)

Distance between end of converter housing and torque converter	14 (0.55)

Shift Solenoid Valves

ECS004X0

Gear position	1	2	3	4
Shift solenoid valve A	ON (Closed)	OFF (Open)	OFF (Open)	ON (Closed)
Shift solenoid valve B	ON (Closed)	ON (Closed)	OFF (Open)	OFF (Open)

Solenoid Valves

ECS004X1

Solenoid valves	Resistance (Approx.) Ω	Terminal No.
Shift solenoid valve A	20 - 30	2
Shift solenoid valve B	5 - 20	1
Overrun clutch solenoid valve	20 - 30	3
Line pressure solenoid valve	2.5 - 5	4
Torque converter clutch solenoid valve	5 - 20	5

A/T Fluid Temperature Sensor

ECS004X2

Remarks: Specification data are reference values.

Monitor item	Condition	Specification (Approximately)	
A/T fluid temperature sensor	Cold [20°C (68°F)] ↓ Hot [80°C (176°F)]	1.5V ↓ 0.5V	2.5 kΩ ↓ 0.3 kΩ

Revolution Sensor

ECS004X3

Condition	Judgement standard
When moving at 20 km/h (12 MPH), use the CONSULT-II pulse frequency measuring function.*1 **CAUTION:** **Connect the diagnosis data link cable to the vehicle diagnosis connector.** *1: A circuit tester cannot be used to test this item.	450 Hz (Approx.)
When vehicle parks.	0V

Dropping Resistor

ECS004X4

Resistance	10 - 15Ω

Turbine Revolution Sensor

ECS004X5

Condition	Judgement standard
When moving at 20 km/h (12 MPH), use the CONSULT-II pulse frequency measuring function.*1 **CAUTION:** **Connect the diagnosis data link cable to the vehicle diagnosis connector.** *1: A circuit tester cannot be used to test this item.	240 Hz (Approx.)
When vehicle parks.	Under 1.3V or over 4.5V

SECTION ATC

AUTOMATIC AIR CONDITIONER

CONTENTS

PRECAUTIONS 4
Precautions for Supplemental Restraint System (SRS) “AIR BAG” and “SEAT BELT PRE-TENSIONER” 4
Precautions for Working with HFC-134a (R-134a).... 4
Contaminated Refrigerant 4
General Refrigerant Precautions 5
Precautions for Leak Detection Dye 5
A/C Identification Label 5
Precautions for Refrigerant Connection 6
FEATURES OF NEW TYPE REFRIGERANT CONNECTION 6
O-RING AND REFRIGERANT CONNECTION..... 7
Precautions for Servicing Compressor 9
Precautions for Service Equipment 9
RECOVERY/RECYCLING EQUIPMENT 9
ELECTRONIC LEAK DETECTOR 9
VACUUM PUMP 10
MANIFOLD GAUGE SET 10
SERVICE HOSES 10
SERVICE COUPLERS 11
REFRIGERANT WEIGHT SCALE 11
CALIBRATING ACR4 WEIGHT SCALE 11
CHARGING CYLINDER 11
Wiring Diagrams and Trouble Diagnosis 11
PREPARATION 12
Special Service Tools 12
HFC-134a (R-134a) Service Tools and Equipment.. 12
Commercial Service Tools 15
REFRIGERATION SYSTEM 16
Refrigerant Cycle 16
REFRIGERANT FLOW 16
Refrigerant System Protection 16
REFRIGERANT PRESSURE SENSOR 16
PRESSURE RELIEF VALVE 16
Component Layout 17
LUBRICANT 18
Maintenance of Lubricant Quantity in Compressor.. 18
LUBRICANT 18
CHECKING AND ADJUSTING 18
AIR CONDITIONER CONTROL 21
Overview Air Conditioner LAN Control System 21
System Construction 21
OPERATION 21
TRANSMISSION DATA AND TRANSMISSION ORDER 22
AIR MIX DOOR CONTROL (AUTOMATIC TEMPERATURE CONTROL) 22
FAN SPEED CONTROL 23
INTAKE DOOR CONTROL 23
OUTLET DOOR CONTROL 23
MAGNET CLUTCH CONTROL 23
SELF-DIAGNOSTIC SYSTEM 23
Overview of Control system 23
Control Operation 24
DISPLAY SCREEN 24
AUTO SWITCH 24
ECON (ECONOMY) SWITCH 24
TEMPERATURE DIAL (POTENTIO TEMPERATURE CONTROL) 24
OFF SWITCH 24
FAN SWITCH 24
RECIRCULATION (REC) SWITCH 24
DEFROSTER (DEF) SWITCH 24
MODE SWITCH 24
REAR WINDOW DEFOGGER SWITCH 24
Discharge Air Flow 25
System Description 26
SWITCHES AND THEIR CONTROL FUNCTION.. 26
CAN Communication System Description 26
FOR TCS MODELS 27
FOR A/T MODELS 28
FOR M/T MODELS 29
TROUBLE DIAGNOSIS 31
How to Perform Trouble Diagnoses for Quick and Accurate Repair 31
WORK FLOW 31
SYMPTOM TABLE 31
Component Parts and Harness Connector Location.. 32
ENGINE COMPARTMENT 32

PASSENGER COMPARTMENT 33
Circuit Diagram 34
Wiring Diagram — A/C,A — 35
Auto Amp. Terminals and Reference Value 39
INSPECTION OF AUTO AMP. 39
A/C AUTO AMP. HARNESS CONNECTOR TERMINAL LAYOUT 39
AUTO AMP. INSPECTION TABLE 39
Self-diagnosis 41
DESCRIPTION 41
FUNCTION CONFIRMATION PROCEDURE 42
AUXILIARY MECHANISM: TEMPERATURE SETTING TRIMMER 48
Operational Check 49
CONDITIONS: 49
PROCEDURE: 49
Power Supply and Ground Circuit for Auto Amp. ... 52
COMPONENT DESCRIPTION 52
DIAGNOSTIC PROCEDURE 53
LAN System Circuit 55
DIAGNOSTIC PROCEDURE 55
Mode Door Motor Circuit 58
INSPECTION FLOW 58
SYSTEM DESCRIPTION 59
COMPONENT DESCRIPTION 60
DIAGNOSTIC PROCEDURE 60
MODE DOOR 60
Air Mix Door Motor Circuit 61
INSPECTION FLOW 61
SYSTEM DESCRIPTION 62
COMPONENT DESCRIPTION 63
DIAGNOSTIC PROCEDURE 63
AIR MIX DOOR 63
Intake Door Motor Circuit 64
INSPECTION FLOW 64
SYSTEM DESCRIPTION 65
COMPONENT DESCRIPTION 66
DIAGNOSTIC PROCEDURE 66
INTAKE DOOR 66
Blower Motor Circuit 67
INSPECTION FLOW 67
SYSTEM DESCRIPTION 68
COMPONENT DESCRIPTION 69
DIAGNOSTIC PROCEDURE 69
COMPONENT INSPECTION 73
Magnet Clutch Circuit 74
INSPECTION FLOW 74
SYSTEM DESCRIPTION 75
DIAGNOSTIC PROCEDURE 75
COMPONENT INSPECTION 79
Insufficient Cooling 80
INSPECTION FLOW 80
PERFORMANCE TEST DIAGNOSES 81
PERFORMANCE CHART 82
TROUBLE DIAGNOSES FOR ABNORMAL PRESSURE 83
Insufficient Heating 87
INSPECTION FLOW 87
Noise 88
INSPECTION FLOW 88
Self-diagnosis 89
INSPECTION FLOW 89
Memory Function 90
INSPECTION FLOW 90
ECON (ECONOMY) Mode 91
INSPECTION FLOW 91
Ambient Sensor Circuit 91
COMPONENT DESCRIPTION 91
AMBIENT TEMPERATURE INPUT PROCESS ... 91
DIAGNOSTIC PROCEDURE 92
COMPONENT INSPECTION 93
In-vehicle Sensor Circuit 93
COMPONENT DESCRIPTION 93
DIAGNOSTIC PROCEDURE 94
COMPONENT INSPECTION 96
Sunload Sensor Circuit 96
COMPONENT DESCRIPTION 96
SUNLOAD INPUT PROCESS 96
DIAGNOSTIC PROCEDURE 97
COMPONENT INSPECTION 98
Intake Sensor Circuit 99
COMPONENT DESCRIPTION 99
DIAGNOSTIC PROCEDURE 100
AUTO AMP 102
Removal and Installation 102
AMBIENT SENSOR 103
Removal and Installation 103
IN-VEHICLE SENSOR 104
Removal and Installation 104
SUNLOAD SENSOR 105
Removal and Installation 105
INTAKE SENSOR 106
Removal and Installation 106
THERMO CONTROL AMPLIFIER 107
Removal and Installation 107
BLOWER UNIT 108
Removal and Installation 108
REMOVAL 108
BLOWER MOTOR 109
Removal and Installation 109
INTAKE DOOR MOTOR 110
Removal and Installation 110
IN-CABIN MICROFILTER 111
Removal and Installation 111
FUNCTION 111
REPLACEMENT TIMING 111
REPLACEMENT PROCEDURES 111
HEATER & COOLING UNIT ASSEMBLY 112
Removal and Installation 112
REMOVAL 112
INSTALLATION 112
HEATER CORE 113
Removal and Installation 113
MODE DOOR MOTOR 114
Removal and Installation 114
AIR MIX DOOR MOTOR 115
Removal and Installation 115

FAN CONTROL AMPLIFIER 116
Removal and Installation 116
DUCTS AND GRILLES 117
Removal and Installation 117
Ventilator Duct, Defroster Nozzle and Defroster Ducts 117
Center Ventilator Grille 117
Side Ventilator Grille LH 117
Side Ventilator Grille RH 118
Floor duct 118
REFRIGERANT LINES 119
HFC-134a (R-134a) Service Procedure 119
SETTING OF SERVICE TOOLS AND EQUIPMENT 119
Components 121
Removal and Installation for Compressor 122
REMOVAL 122
INSTALLATION 122
Removal and Installation for Compressor Clutch . 123
REMOVAL 123
INSPECTION 124
INSTALLATION 124
BREAK-IN OPERATION 125
Removal and Installation for Low-pressure Flexible Hose 125
REMOVAL 125
INSTALLATION 125
Removal and Installation for High-pressure Flexible Hose 126
REMOVAL 126
INSTALLATION 126
Removal and Installation for High-pressure Pipe . 126
REMOVAL 126
INSTALLATION 126
Removal and Installation for Refrigerant Pressure Sensor 126
Removal and Installation for Condenser 126
REMOVAL 126
INSTALLATION 127
Removal and Installation for Liquid Tank 127
Removal and Installation for Evaporator 128
REMOVAL 128
INSTALLATION 129
Removal and Installation for Expansion Valve 129
Checking for Refrigerant Leaks 129
Checking System for Leaks Using the Fluorescent Leak Detector 129
Dye Injection 130
Electronic Refrigerant Leak Detector 130
PRECAUTIONS FOR HANDLING LEAK DETECTOR 130
CHECKING PROCEDURE 131
SERVICE DATA AND SPECIFICATIONS (SDS) ... 133
Service Data and Specifications (SDS) 133
COMPRESSOR 133
LUBRICANT 133
REFRIGERANT 133
ENGINE IDLING SPEED 133
BELT TENSION 133

PRECAUTIONS

PFP:00001

Precautions for Supplemental Restraint System (SRS) “AIR BAG” and “SEAT BELT PRE-TENSIONER”

EJS000WP

The Supplemental Restraint System such as “AIR BAG” and “SEAT BELT PRE-TENSIONER”, used along with a front seat belt, helps to reduce the risk or severity of injury to the driver and front passenger for certain types of collision. Information necessary to service the system safely is included in the SRS and SB section of this Service Manual.

WARNING:

- **To avoid rendering the SRS inoperative, which could increase the risk of personal injury or death in the event of a collision which would result in air bag inflation, all maintenance must be performed by an authorized NISSAN/INFINITI dealer.**
- **Improper maintenance, including incorrect removal and installation of the SRS, can lead to personal injury caused by unintentional activation of the system. For removal of Spiral Cable and Air Bag Module, see the SRS section.**
- **Do not use electrical test equipment on any circuit related to the SRS unless instructed to in this Service Manual. SRS wiring harnesses can be identified by yellow and/or orange harness connectors.**

Precautions for Working with HFC-134a (R-134a)

EJS000WQ

WARNING:

- **CFC-12 (R-12) refrigerant and HFC-134a (R-134a) refrigerant are not compatible. If the refrigerants are mixed and compressor failure is likely to occur. Refer ATC-4, "Contaminated Refrigerant" . To determine the purity of HFC-134a (R-134a) in the vehicle and recovery tank, use Refrigerant Recovery/Recycling Recharging equipment (ACR4) (J-39500-NI) and Refrigerant Identifier.**
- **Use only specified lubricant for the HFC-134a (R-134a) A/C system and HFC-134a (R-134a) components. If lubricant other than that specified is used, compressor failure is likely to occur.**
- **The specified HFC-134a (R-134a) lubricant rapidly absorbs moisture from the atmosphere. The following handling precautions must be observed:**
  - **When removing refrigerant components from a vehicle, immediately cap (seal) the component to minimize the entry of moisture from the atmosphere.**
  - **When installing refrigerant components to a vehicle, do not remove the caps (unseal) until just before connecting the components. Connect all refrigerant loop components as quickly as possible to minimize the entry of moisture into system.**
  - **Only use the specified lubricant from a sealed container. Immediately reseal containers of lubricant. Without proper sealing, lubricant will become moisture saturated and should not be used.**
  - **Avoid breathing A/C refrigerant and lubricant vapor or mist. Exposure may irritate eyes, nose and throat. Remove R-134a from the A/C system using certified service equipment meeting requirements of SAE J2210 (R-134a recycling equipment), or J2209 (R-134a recovery equipment). If accidental system discharge occurs, ventilate work area before resuming service. Additional health and safety information may be obtained from refrigerant and lubricant manufacturers.**
  - **Do not allow lubricant (Nissan A/C System Oil Type DH-PS) to come in contact with styrofoam parts. Damage may result.**

Contaminated Refrigerant

EJS000WR

If a refrigerant other than pure R-134a is identified in a vehicle, your options are:

- Explain to the customer that environmental regulations prohibit the release of contaminated refrigerant into the atmosphere.
- Explain that recovery of the contaminated refrigerant could damage your service equipment and refrigerant supply.
- Suggest the customer return the vehicle to the location of previous service where the contamination may have occurred.
- If you choose to perform the repair, recover the refrigerant using only **dedicated equipment and containers. Do not recover contaminated refrigerant into your existing service equipment.** If your facility does not have dedicated recovery equipment, you may contact a local refrigerant product retailer for available service. This refrigerant must be disposed of in accordance with all federal and local regulations. In addition, replacement of all refrigerant system components on the vehicle is recommended.

- If the vehicle is within the warranty period, the air conditioner warranty is void. Please contact Nissan Customer Affairs for further assistance.

General Refrigerant Precautions

EJS000WS

WARNING:

- **Do not release refrigerant into the air. Use approved recovery/recycling equipment to capture the refrigerant every time an air conditioning system is discharged.**
- **Always wear eye and hand protection (goggles and gloves) when working with any refrigerant or air conditioning system.**
- **Do not store or heat refrigerant containers above 52°C (125°F).**
- **Do not heat a refrigerant container with an open flame; if container warming is required, place the bottom of the container in a warm pail of water.**
- **Do not intentionally drop, puncture, or incinerate refrigerant containers.**
- **Keep refrigerant away from open flames: poisonous gas will be produced if refrigerant burns.**
- **Refrigerant will displace oxygen, therefore be certain to work in well ventilated areas to prevent suffocation.**
- **Do not pressure test or leak test HFC-134a (R-134a) service equipment and/or vehicle air conditioning systems with compressed air during repair. Some mixtures of air and R-134a have been shown to be combustible at elevated pressures. These mixtures, if ignited, may cause injury or property damage. Additional health and safety information may be obtained from refrigerant manufacturers.**

Precautions for Leak Detection Dye

EJS000WT

- The A/C system contains a fluorescent leak detection dye used for locating refrigerant leaks. An ultraviolet (UV) lamp is required to illuminate the dye when inspecting for leaks.
- Always wear fluorescence enhancing UV safety glasses to protect your eyes and enhance the visibility of the fluorescent dye.
- A compressor shaft seal should not be repaired because of dye seepage. The compressor shaft seal should only be repaired after confirming the leak with an electronic refrigerant leak detector (J-41995).
- Always remove any dye from the leak area after repairs are complete to avoid a misdiagnosis during a future service.
- Do not allow dye to come into contact with painted body panels or interior components. If dye is spilled, clean immediately with the approved dye cleaner. Fluorescent dye left on a surface for an extended period of time **cannot be removed** .
- Do not spray the fluorescent dye cleaning agent on hot surfaces (engine exhaust manifold, etc.).
- Do not use more than one refrigerant dye bottle (1/4 ounce / 7.4 cc) per A/C system.
- Leak detection dyes for R-134a and R-12 A/C systems are different. Do not use R-134a leak detection dye in R-12 A/C systems or R-12 leak detection dye in R-134a A/C systems or A/C system damage may result.
- The fluorescent properties of the dye will remain for over three (3) years unless a compressor failure occurs.

A/C Identification Label

EJS000WU

Vehicles with factory installed fluorescent dye have this identification label on the underside of hood.

NOTE:
Vehicles with factory installed fluorescent dye have a green label.

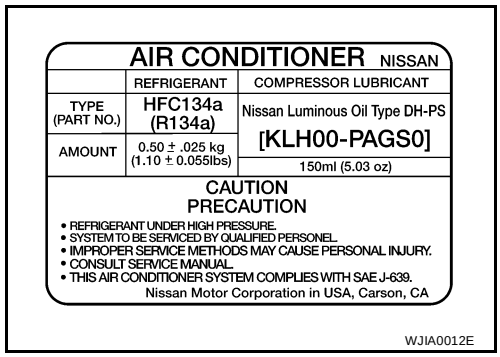

Precautions for Refrigerant Connection

EJS000WV

A new type refrigerant connection has been introduced to all refrigerant lines except the following locations.

- Expansion valve to cooling unit
- Evaporator pipes to evaporator (inside cooling unit)
- Refrigerant pressure sensor

FEATURES OF NEW TYPE REFRIGERANT CONNECTION

- The O-ring has been relocated. It has also been provided with a groove for proper installation. This eliminates the chance of the O-ring being caught in, or damaged by, the mating part. The sealing direction of the O-ring is now set vertically in relation to the contacting surface of the mating part to improve sealing characteristics.
- The reaction force of the O-ring will not occur in the direction that causes the joint to pull out, thereby facilitating piping connections.

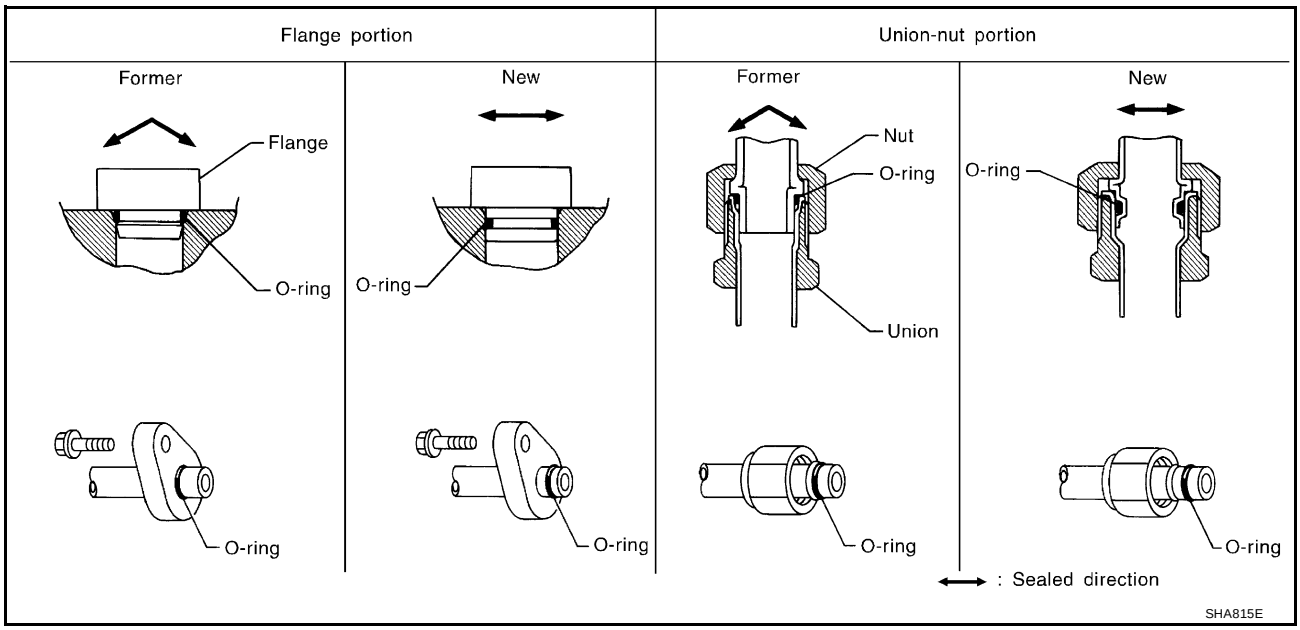

O-RING AND REFRIGERANT CONNECTION

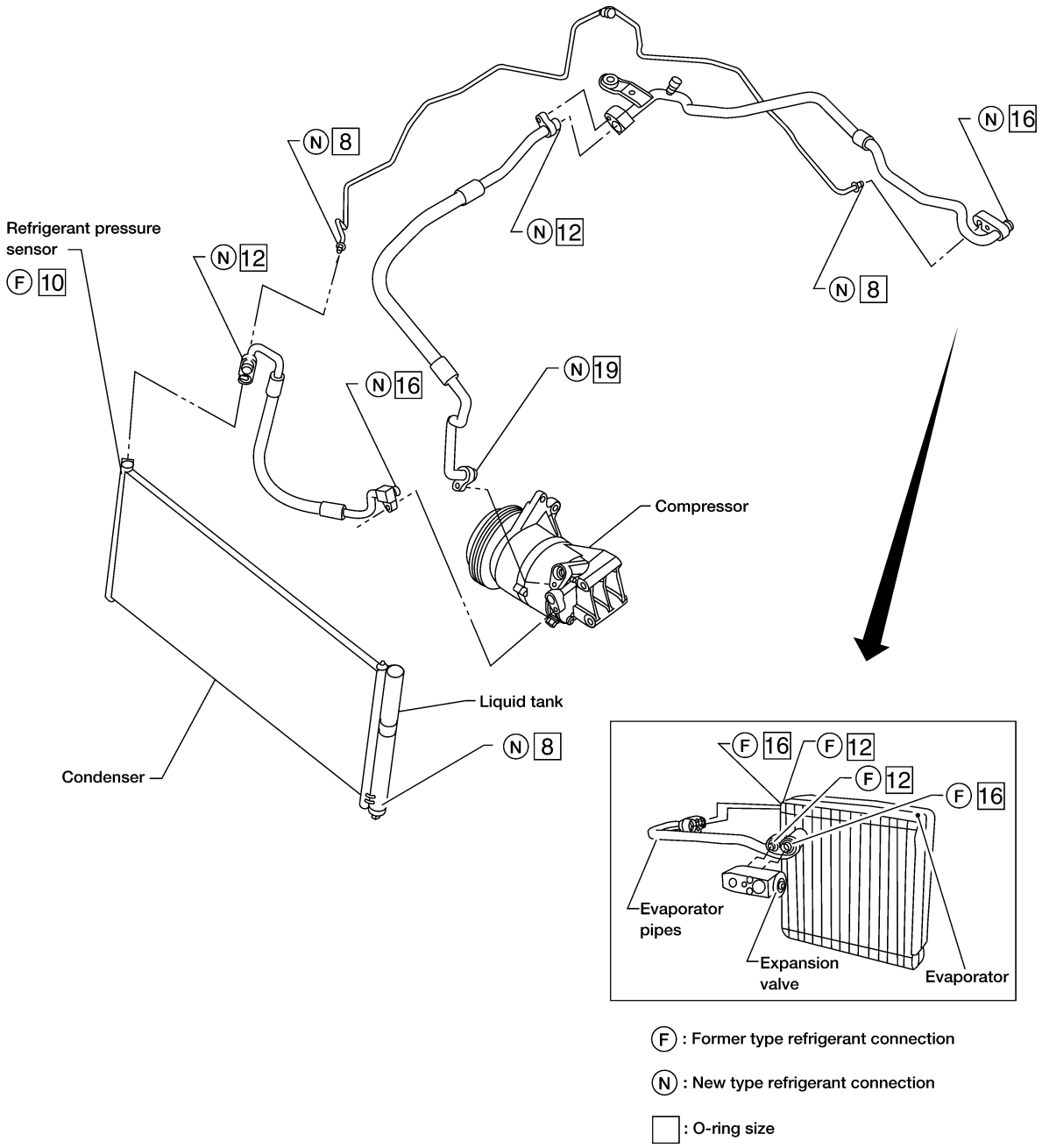

WJIA0135E

CAUTION:

The new and former refrigerant connections use different O-ring configurations. Do not confuse O-rings since they are not interchangeable. If a wrong O-ring is installed, refrigerant will leak at, or around, the connection.

O-Ring Part Numbers and Specifications

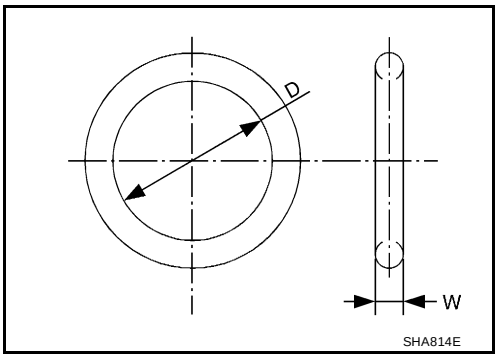

Connection type	O-ring size	Part number*	D mm (in)	W mm (in)
New	8	92471 N8210	6.8 (0.268)	1.85 (0.0728)
Former	10	J2476 89956	9.25 (0.3642)	1.78 (0.0701)
New	12	92472 N8210	10.9 (0.429)	2.43 (0.0957)
Former		92475 71L00	11.0 (0.433)	2.4 (0.094)
New	16	92473 N8210	13.6 (0.535)	2.43 (0.0957)
Former		92475 72L00	14.3 (0.563)	2.3 (0.091)
New	19	92474 N8210	16.5 (0.650)	2.43 (0.0957)
Former		92477 N8200	17.12 (0.6740)	1.78 (0.0701)
New	24	92195 AH300	21.8 (0.858)	2.4 (0.094)

*: Always check with the Parts Department for the latest parts information.

WARNING:

Make sure all refrigerant is discharged into the recycling equipment and the pressure in the system is less than atmospheric pressure. Then gradually loosen the discharge side hose fitting and remove it.

CAUTION:

When replacing or cleaning refrigerant cycle components, observe the following.

- **When the compressor is removed, store it in the same position as it is when mounted on the car. Failure to do so will cause lubricant to enter the low pressure chamber.**
- **When connecting tubes, always use a torque wrench and a back-up wrench.**
- **After disconnecting tubes, immediately plug all openings to prevent entry of dirt and moisture.**
- **When installing an air conditioner in the vehicle, connect the pipes as the final stage of the operation. Do not remove the seal caps of pipes and other components until just before required for connection.**
- **Allow components stored in cool areas to warm to working area temperature before removing seal caps. This prevents condensation from forming inside A/C components.**
- **Thoroughly remove moisture from the refrigeration system before charging the refrigerant.**
- **Always replace used O-rings.**
- **When connecting tube, apply lubricant to circle of the O-rings shown in illustration. Be careful not to apply lubricant to threaded portion.**
  Lubricant name: Nissan A/C System Oil Type DH-PS
  Part number: KLH00-PAGS0
- **O-ring must be closely attached to dented portion of tube.**
- **When replacing the O-ring, be careful not to damage O-ring and tube.**
- **Connect tube until you hear it click, then tighten the nut or bolt by hand until snug. Make sure that the O-ring is installed to tube correctly.**

- **After connecting line, conduct leak test and make sure that there is no leakage from connections. When the gas leaking point is found, disconnect that line and replace the O-ring. Then tighten connections of seal seat to the specified torque.**

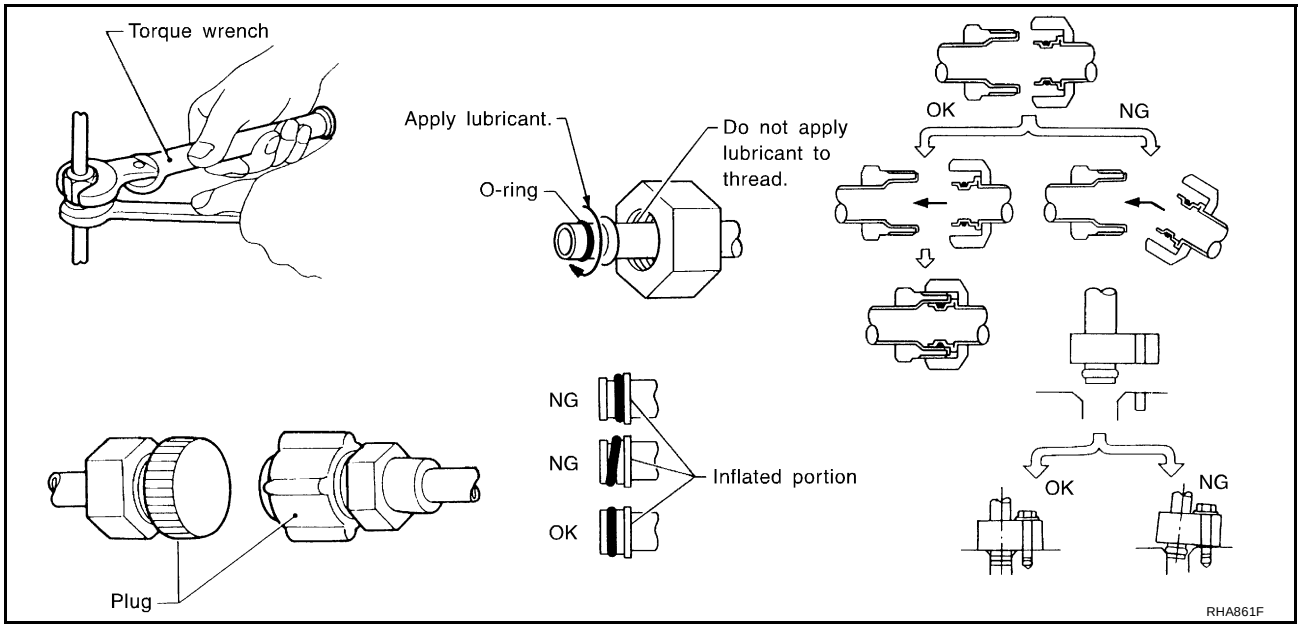

Precautions for Servicing Compressor

EJS000WW

- **Plug all openings to prevent moisture and foreign matter from entering.**
- **When the compressor is removed, store it in the same position as it is when mounted on the car.**
- **When replacing or repairing compressor, follow “Maintenance of Lubricant Quantity in Compressor” exactly. Refer to ATC-18, "Maintenance of Lubricant Quantity in Compressor" .**
- **Keep friction surfaces between clutch and pulley clean. If the surface is contaminated, with lubricant, wipe it off by using a clean waste cloth moistened with thinner.**
- **After compressor service operation, turn the compressor shaft by hand more than 5 turns in both directions. This will equally distribute lubricant inside the compressor. After the compressor is installed, let the engine idle and operate the compressor for 1 hour.**
- **After replacing the compressor magnet clutch, apply voltage to the new one and check for normal operation. [Gap between clutch disc and pulley is 0.3 - 0.6 mm (0.012 - 0.024 in)]**

Precautions for Service Equipment

EJS000WX

RECOVERY/RECYCLING EQUIPMENT

Follow the manufacturer's instructions for machine operation and machine maintenance. Never introduce any refrigerant other than that specified into the machine.

ELECTRONIC LEAK DETECTOR

Follow the manufacturer's instructions for tester operation and tester maintenance.

VACUUM PUMP

The lubricant contained inside the vacuum pump is not compatible with the specified lubricant for HFC-134a (R-134a) A/C systems. The vent side of the vacuum pump is exposed to atmospheric pressure so the vacuum pump lubricant may migrate out of the pump into the service hose. This is possible when the pump is switched off after evacuation (vacuuming) and hose is connected to it.
To prevent this migration, use a manual valve situated near the hose-to-pump connection, as follows.

- Usually vacuum pumps have a manual isolator valve as part of the pump. Close this valve to isolate the service hose from the pump.
- For pumps without an isolator, use a hose equipped with a manual shut-off valve near the pump end. Close the valve to isolate the hose from the pump.
- If the hose has an automatic shut off valve, disconnect the hose from the pump: as long as the hose is connected, the valve is open and lubricating oil may migrate.

Some one-way valves open when vacuum is applied and close under a no vacuum condition. Such valves may restrict the pump's ability to pull a deep vacuum and are not recommended.

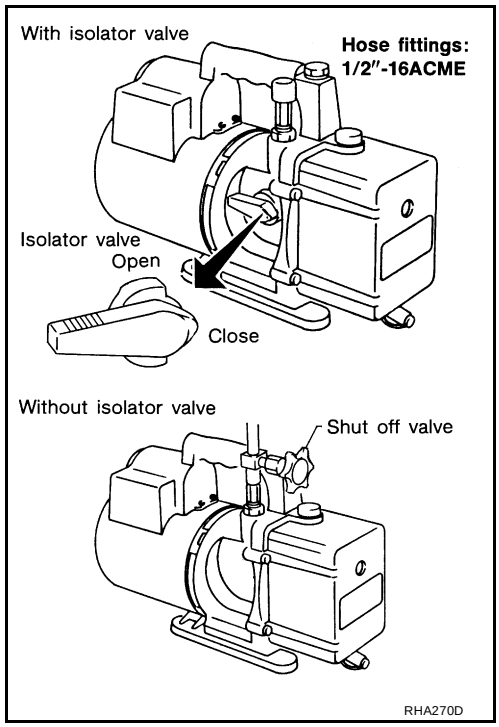

MANIFOLD GAUGE SET

Be certain that the gauge face indicates R-134a or 134a. Make sure the gauge set has 1/2″-16 ACME threaded connections for service hoses. Confirm the set has been used only with refrigerant HFC-134a (R-134a) along with specified lubricant.

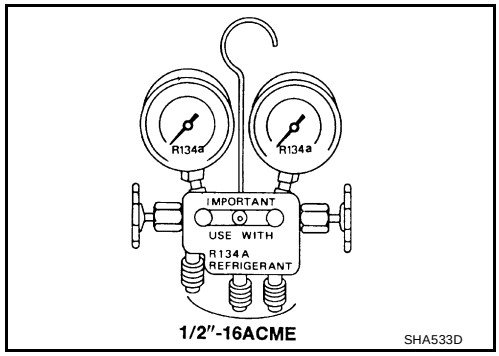

SERVICE HOSES

Be certain that the service hoses display the markings described (colored hose with black stripe). All hoses must include positive shut-off devices (either manual or automatic) near the end of the hoses opposite the manifold gauge.

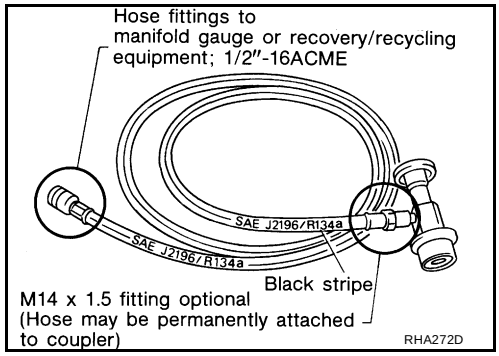

SERVICE COUPLERS

Never attempt to connect HFC-134a (R-134a) service couplers to a CFC-12 (R-12) A/C system. The HFC-134a (R-134a) couplers will not properly connect to the CFC-12 (R-12) system. However, if an improper connection is attempted, discharging and contamination may occur.

Shut-off valve rotation	A/C service valve
Clockwise	Open
Counterclockwise	Close

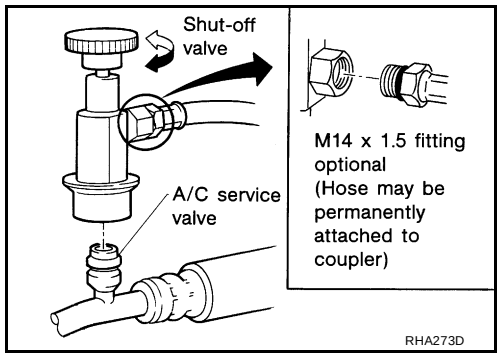

REFRIGERANT WEIGHT SCALE

Verify that no refrigerant other than HFC-134a (R-134a) and specified lubricants have been used with the scale. If the scale controls refrigerant flow electronically, the hose fitting must be 1/2″-16 ACME.

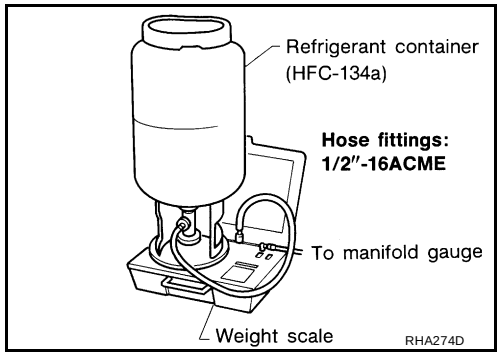

CALIBRATING ACR4 WEIGHT SCALE

Calibrate the scale every three months.
To calibrate the weight scale on the ACR4 (J-39500-NI):

1. Press **Shift/Reset** and **Enter** at the same time.
2. Press **8787** . “**A1** ” will be displayed.
3. Remove all weight from the scale.
4. Press **0** , then press **Enter** . “**0.00** ” will be displayed and change to “**A2** ”.
5. Place a known weight (dumbbell or similar weight), between 4.5 and 36.3 kg (10 and 80 lb) on the center of the weight scale.
6. Enter the known weight using four digits. (Example 10 lbs = 10.00, 10.5 lbs = 10.50)
7. Press **Enter** — the display returns to the vacuum mode.
8. Press **Shift/Reset** and **Enter** at the same time.
9. Press **6** — the known weight on the scale is displayed.
10. Remove the known weight from the scale. “**0.00** ” will be displayed.
11. Press **Shift/Reset** to return the ACR4 to the program mode.

CHARGING CYLINDER

Using a charging cylinder is not recommended. Refrigerant may be vented into air from cylinder's top valve when filling the cylinder with refrigerant. Also, the accuracy of the cylinder is generally less than that of an electronic scale or of quality recycle/recharge equipment.

Wiring Diagrams and Trouble Diagnosis

EJS000WY

When you read wiring diagrams, refer to the following:

- GI-12, "How to Read Wiring Diagrams"
- PG-5, "Wiring Diagram — POWER —"

When you perform trouble diagnosis, refer to the following:

- GI-9, "How to Follow Trouble Diagnoses"
- GI-25, "How to Perform Efficient Diagnosis for an Electrical Incident"

PREPARATION

PFP:00002

Special Service Tools

EJS000WZ

The actual shapes of Kent-Moore tools may differ from those of special service tools illustrated here.

Tool number (Kent-Moore No.) Tool name	Description
KV99234330 (J-38873) Pulley installer 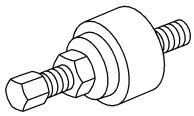 LHA171	Installing pulley
KV99233130 (J-29884) Pulley puller 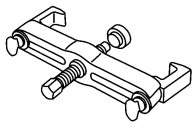 LHA172	Removing pulley

HFC-134a (R-134a) Service Tools and Equipment

EJS000X0

Never mix HFC-134a refrigerant and/or its specified lubricant with CFC-12 (R-12) refrigerant and/or its lubricant.
Separate and non-interchangeable service equipment must be used for handling each type of refrigerant/lubricant.
Refrigerant container fittings, service hose fittings and service equipment fittings (equipment which handles refrigerant and/or lubricant) are different between CFC-12 (R-12) and HFC-134a (R-134a). This is to avoid mixed use of the refrigerants/lubricant.
Adapters that convert one size fitting to another must never be used: refrigerant/lubricant contamination will occur and compressor failure will result.

Tool number (Kent-Moore No.) Tool name	Description
HFC-134a (R-134a) refrigerant 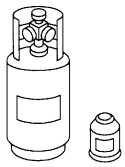 S-NT196	Container color:Light blue Container marking:HFC-134a (R-134a) Fitting size: Thread size ● large container 1/2^2 -16 ACME
KLH00-PAGS0 (-) Nissan A/C System Oil Type DH-PS S-NT197	Type:Poly alkylene glycol oil (PAG), type DH-PS Application:HFC-134a (R-134a) vane rotary compressors (Nissan only) Lubricity: 40 m ℓ (1.4 US fl oz, 1.4 Imp fl oz)

Tool number (Kent-Moore No.) Tool name		Description
(J-39500-NI) Recovery/Recycling Recharging equipment (ACR4)	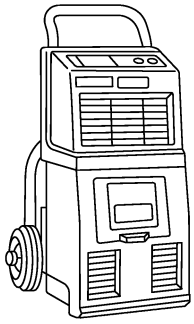 RJIA0195E	Function:Refrigerant Recovery and Recycling and Recharging
(J-41995) Electronic refrigerant leak detector	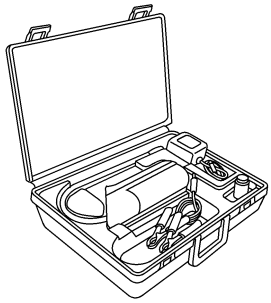 AHA281A	Power supply: ● DC 12V (Cigarette lighter)
(J-43926) Refrigerant dye leak detection kit Kit includes: (J-42220) UV lamp and UV safety glasses (J-41459) Refrigerant dye injector (J-41447) qty. 24 HFC-134a (R-134a) refrigerant dye (J-43872) Refrigerant dye cleaner	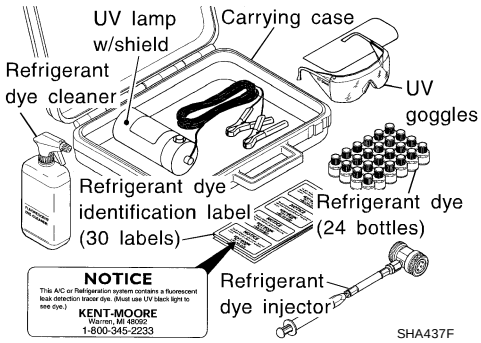 SHA437F	Power supply: DC 12V (Battery terminal)
(J-42220) Fluorescent dye leak detector	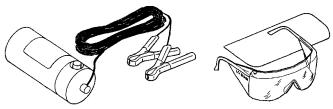 SHA438F	Power supply: DC 12V (Battery terminal) For checking refrigerant leak when fluorescent dye is installed in A/C system. Includes: UV lamp and UV safety glasses
(J-41447) HFC-134a (R-134a) Fluorescent leak detection dye (Box of 24, 1/4 ounce bottles)	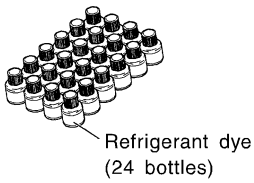 SHA439F	Application: For HFC-134a (R-134a) PAG oil Container: 1/4 ounce (7.4cc) bottle (Includes self-adhesive dye identification labels for affixing to vehicle after charging system with dye.)

Tool number (Kent-Moore No.) Tool name		Description
(J-41459) HFC-134a (R-134a) Dye injector Use with J-41447, 1/4 ounce bottle	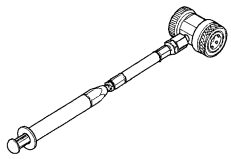 SHA440F	For injecting 1/4 ounce of fluorescent leak detection dye into A/C system.
(J-43872) Dye cleaner	 SHA441F	For cleanig dye spills.
(J-39183-C) Manifold gauge set (with hoses and couplers)	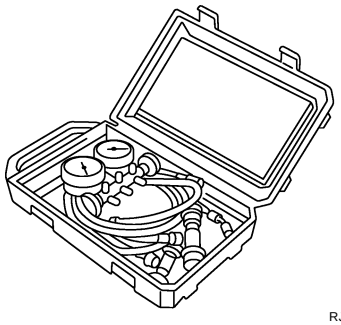 RJIA0196E	Identification: ● The gauge face indicates R-134a. Fitting size: Thread size ● 1/2^2 -16 ACME
Service hoses ● High side hose (J-39500-72B) ● Low side hose (J-39500-72R) ● Utility hose (J-39500-72Y)	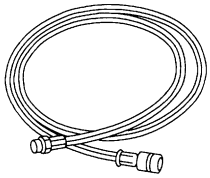 S-NT201	Hose color: ● Low side hose:Blue with black stripe ● High side hose:Red with black stripe ● Utility hose:Yellow with black stripe or green with black stripe Hose fitting to gauge: ● 1/2^2 -16 ACME
Service couplers ● High side coupler (J-39500-20A) ● Low side coupler (J-39500-24A)	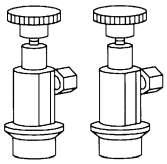 S-NT202	Hose fitting to service hose: ● M14 x 1.5 fitting is optional or permanently attached.
(J-39699) Refrigerant weight scale	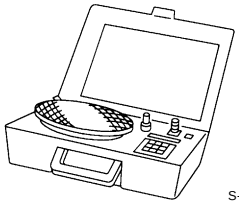 S-NT200	For measuring of refrigerant Fitting size: Thread size ● 1/2^2 -16 ACME
(J-39649) Vacuum pump (Including the isolator valve)	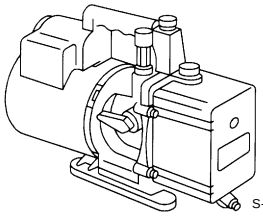 S-NT203	Capacity: ● Air displacement: 4 CFM ● Micron rating: 20 microns ● Oil capacity: 482 g (17 oz) Fitting size: Thread size ● 1/2^2 -16 ACME

Commercial Service Tools

EJS000X1

Tool name		Description
(J-41810-NI) Refrigerant identifier equipment-(R-134a)	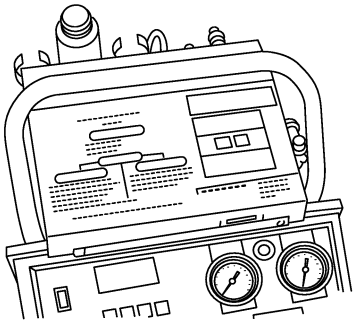 RJIA0197E	For checks refrigerant purity and for system contamination
Power tool	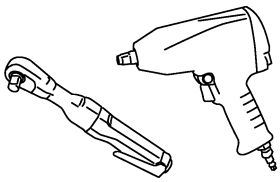 PBIC0190E	Loosening bolts and nuts
(J-44614) Clutch disc holding tool	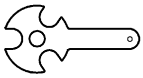 WHA230	Clutch disc holding tool

REFRIGERATION SYSTEM

PFP:KA990

Refrigerant Cycle

EJS000X2

REFRIGERANT FLOW

The refrigerant flows in the standard pattern, that is, through the compressor, the condenser with liquid tank, through the evaporator, and back to the compressor. The refrigerant evaporation through the evaporator coil is controlled by an externally equalized expansion valve, located inside the evaporator case.

Refrigerant System Protection

EJS000X3

REFRIGERANT PRESSURE SENSOR

The refrigerant system is protected against excessively high or low pressures by the refrigerant pressure sensor, located on the condenser. If the system pressure rises above or falls below the specifications, the refrigerant pressure sensor detects the pressure inside the refrigerant line and sends the voltage signal to the ECM. ECM makes the A/C relay go OFF and stops the compressor when pressure on the high pressure side detected by refrigerant pressure sensor is over about 2,746 kPa (28 kg/cm^2 , 398 psi), or below about 120 kPa (1.22 kg/cm^2 , 17.4 psi).

PRESSURE RELIEF VALVE

The refrigerant system is also protected by a pressure relief valve, located in the rear head of the compressor. When the pressure of refrigerant in the system increases to an abnormal level [more than 3,727 kPa (38 kg/cm^2 , 540 psi)], the release port on the pressure relief valve automatically opens and releases refrigerant into the atmosphere.

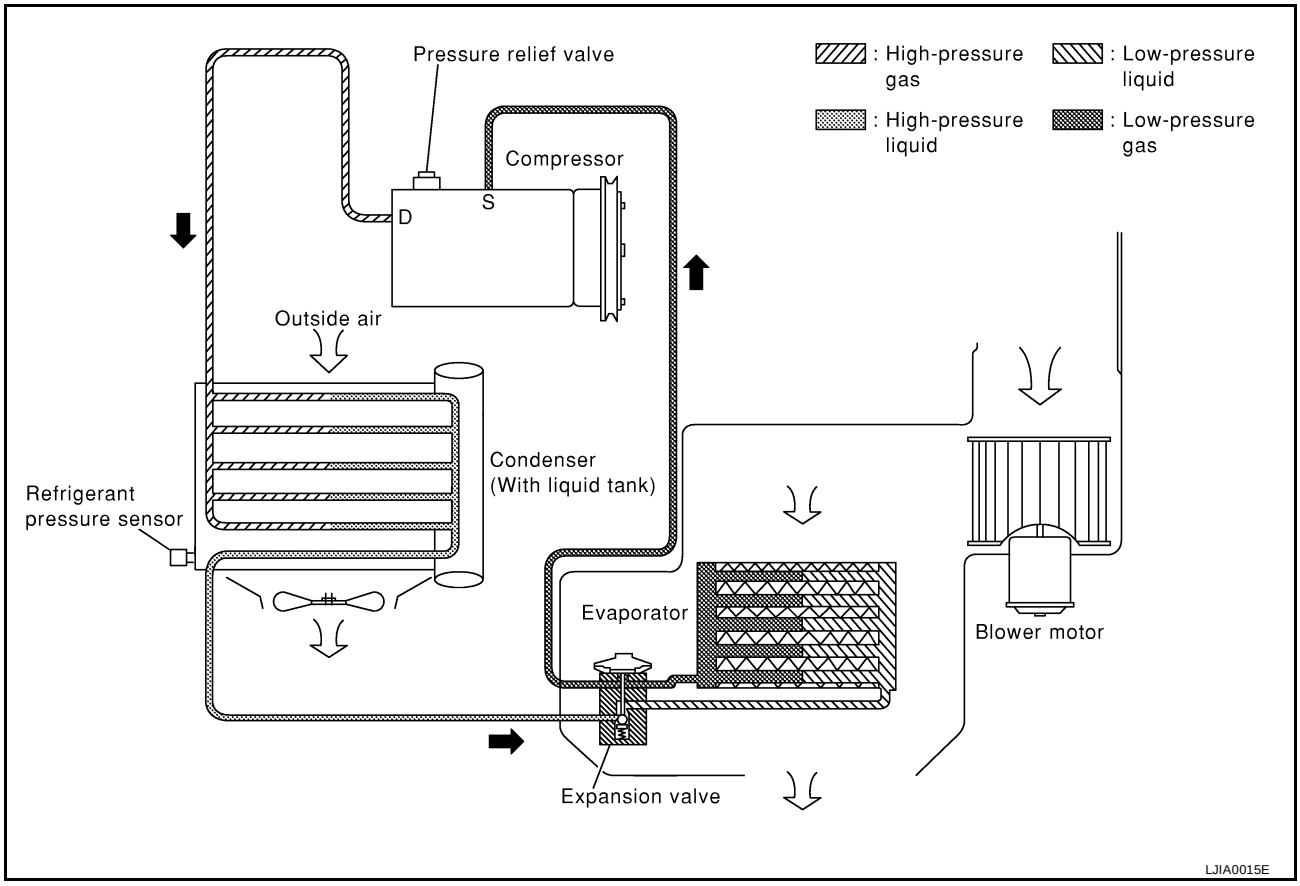

Component Layout

EJS000X4

SEC. 270 • 271 • 272 • 273

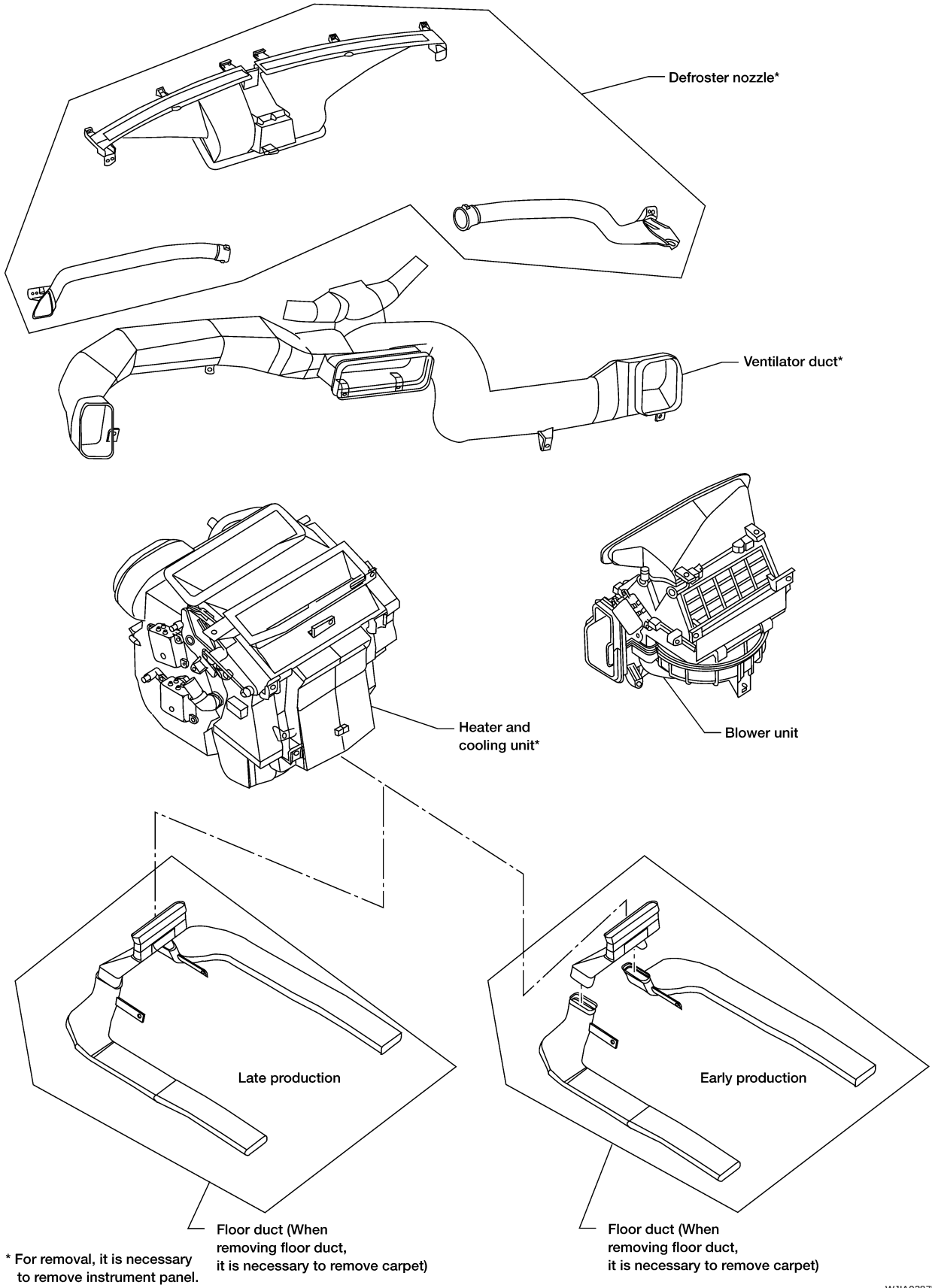

LUBRICANT

PFP:KLG00

Maintenance of Lubricant Quantity in Compressor

EJS000X5

The lubricant in the compressor circulates through the system with the refrigerant. Add lubricant to compressor when replacing any component or after a large refrigerant leakage has occurred. It is important to maintain the specified amount.
If lubricant quantity is not maintained properly, the following malfunctions may result:

- Lack of lubricant: May lead to a seized compressor
- Excessive lubricant: Inadequate cooling (thermal exchange interference)

LUBRICANT

Name: Nissan A/C System Oil Type DH-PS
Part number: KLH00-PAGS0

CHECKING AND ADJUSTING

Adjust the lubricant quantity according to the test group shown below.

1. LUBRICANT RETURN OPERATION

Can lubricant return operation be performed?

- A/C system works properly.
- There is no evidence of a large amount of lubricant leakage.

Yes or No

Yes >> GO TO 2.
No >> GO TO 3.

2. PERFORM LUBRICANT RETURN OPERATION, PROCEEDING AS FOLLOWS

1. Start engine, and set the following conditions:

– **Test condition**
Engine speed: Idling to 1,200 rpm
A/C switch: ON
Blower speed: Max. position
Temp. control: Optional [Set so that intake air temperature is 25 to 30°C (77 to 86°F).]
Intake position: Recirculation (REC)

2. Perform lubricant return operation for about 10 minutes.
3. Stop engine.

CAUTION:
If excessive lubricant leakage is noted, do not perform the lubricant return operation.

>> GO TO 3.

3. CHECK COMPRESSOR

Should the compressor be replaced?

Yes or No

Yes >> GO TO ATC-19, "Lubricant Adjustment Procedure for Compressor Replacement" .
No >> GO TO 4.

4. CHECK ANY PART

Is there any part to be replaced? (Evaporator, condenser, liquid tank or in case there is evidence of a large amount of lubricant leakage.)

Yes or No

Yes >> GO TO ATC-19, "Lubricant Adjusting Procedure for Components Replacement Except Compressor" .
No >> Carry out the A/C performance test.

Lubricant Adjusting Procedure for Components Replacement Except Compressor

After replacing any of the following major components, add the correct amount of lubricant to the system.

Amount of lubricant to be added

Part replaced	Lubricant to be added to system Amount of lubricant m ℓ (US fl oz, Imp fl oz)	Remarks
Evaporator	75 (2.5, 2.6)	—
Condenser	75 (2.5, 2.6)	—
Liquid tank	5 (0.2, 0.2)	Add if compressor is not replaced.
In case of refrigerant leak	30 (1.0, 1.1)	Large leak
	—	Small leak *1

- *1: If refrigerant leak is small, no addition of lubricant is needed.

Lubricant Adjustment Procedure for Compressor Replacement

1. Before connecting ACR4 to vehicle, check ACR4 gauges. No refrigerant pressure should be displayed. If OK, recover refrigerant from equipment lines.
2. Confirm refrigerant purity in supply tank using ACR4 and refrigerant identifier. If NG, refer to ATC-4, "Contaminated Refrigerant" .
3. Connect ACR4 to vehicle. Confirm refrigerant purity in vehicle A/C system using ACR4 and refrigerant identifier. If NG, refer to ATC-4, "Contaminated Refrigerant" .
4. Discharge refrigerant into the refrigerant recovery/recycling equipment. Measure lubricant discharged into the recovery/recycling equipment.
5. Drain the lubricant from the “old” (removed) compressor into a graduated container and recover the amount of lubricant drained.
6. Drain the lubricant from the “new” compressor into a separate, clean container.
7. Measure an amount of new lubricant installed equal to amount drained from “old” compressor. Add this lubricant to “new” compressor through the suction port opening.
8. Measure an amount of new lubricant equal to the amount recovered during discharging. Add this lubricant to “new” compressor through the suction port opening.
9. If the liquid tank also needs to be replaced, add an additional 5 m ℓ (0.2 US fl oz, 0.2 Imp fl oz) of lubricant at this time.
   Do not add this 5 m ℓ (0.2 US fl oz, 0.2 Imp fl oz) of lubricant if only replacing the compressor.

Lubricant adjusting procedure for compressor replacement

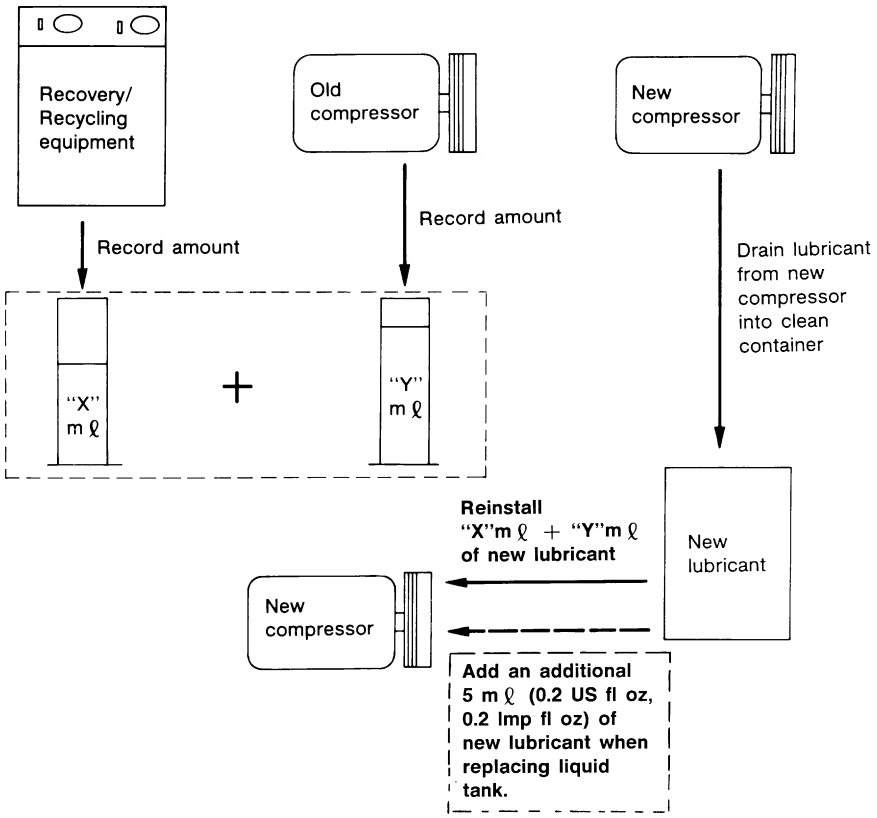

RHA065DD

AIR CONDITIONER CONTROL

PFP:27500

Overview Air Conditioner LAN Control System

EJS000X6

The LAN system consists of auto amp., air mix door motor and mode door motor.
A configuration of these components is shown in the diagram below.

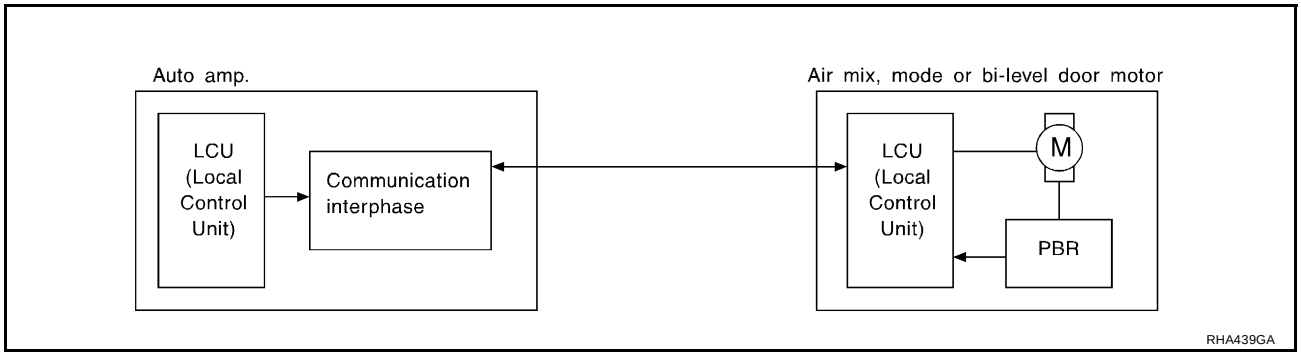

System Construction

EJS000X7

A small network is constructed between the auto amplifier, air mix door motor and mode door motor. The auto amplifier and motors are connected by data transmission lines and motor power supply lines. The LAN network is built through the ground circuits of the two motors.
Addresses, motor opening angle signals, motor stop signals and error checking messages are all transmitted through the data transmission lines connecting the auto amplifier and two motors.
The following functions are contained in LCUs built into the air mix door motor and the mode door motor.

- Address
- Motor opening angle signals
- Data transmission
- Motor stop and drive decision
- Opening angle sensor (PBR function)
- Comparison
- Decision (Auto amplifier indicated value and motor opening angle comparison)

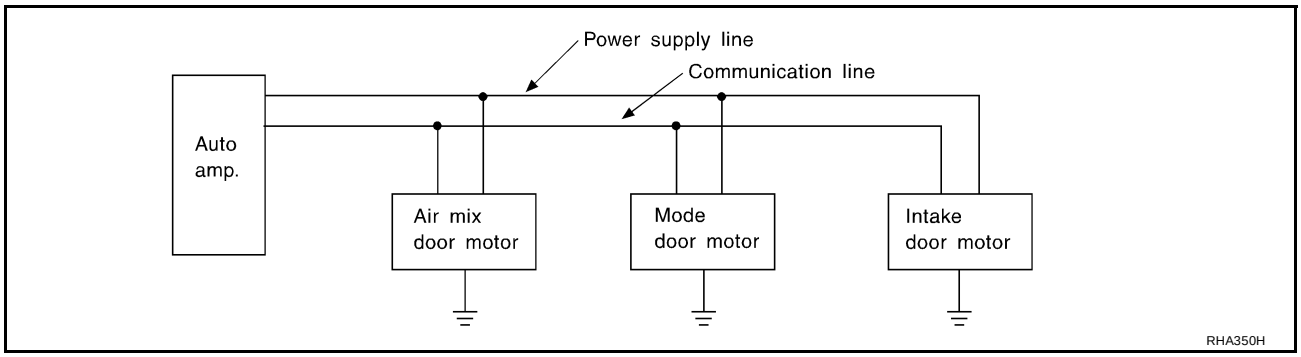

OPERATION

The auto amplifier receives data from each of the sensors. The amplifier sends air mix door, mode door and intake door opening angle data to the air mix door motor LCU, mode door motor LCU and intake door motor LCU.
The air mix door motor, mode door motor and intake door motor read their respective signals according to the address signal. Opening angle indication signals received from the auto amplifier and each of the motor position sensors are compared by the LCUs in each motor with the existing decision and opening angles. Subse-

quently, HOT/COLD, DEFROST/VENT or FRESH/RECIRCULATION operation is selected. The new selection data is returned to the auto amplifier.

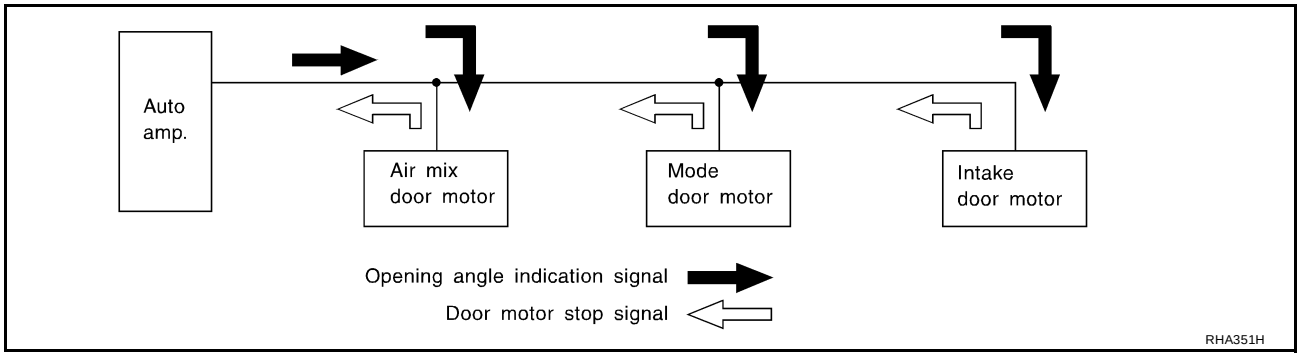

TRANSMISSION DATA AND TRANSMISSION ORDER

Amplifier data is transmitted consecutively to each of the door motors following the form shown in figure below.
Start: Initial compulsory signal sent to each of the door motors.
Address: Data sent from the auto amplifier is selected according to data-based decisions made by the air mix door motor, mode door motor and intake door motor.
If the addresses are identical, the opening angle data and error check signals are received by the door motor LCUs. The LCUs then make the appropriate error decision. If the opening angle data is normal, door control begins.
If an error exists, the received data is rejected and corrected data received. Finally, door control is based upon the corrected opening angle data.
Opening angle: Data that shows the indicated door opening angle of each door motor.
Error check: Procedure by which sent and received data is checked for errors. Error data is then compiled. The error check prevents corrupted data from being used by the air mix door motor, mode door motor and intake door motor. Error data can be related to the following problems.

- Abnormal electrical frequency
- Poor electrical connections
- Signal leakage from transmission lines
- Signal level fluctuation

Stop signal: At the end of each transmission, a stop operation, in-operation, or internal problem message is delivered to the auto amplifier. This completes one data transmission and control cycle.

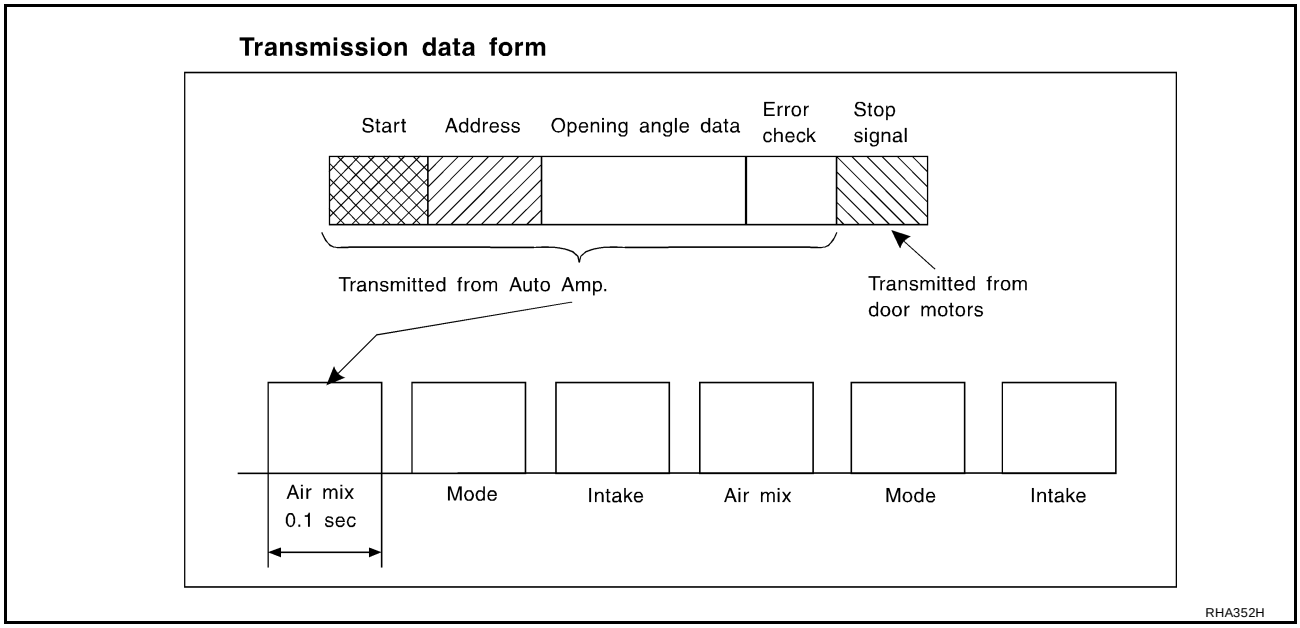

AIR MIX DOOR CONTROL (AUTOMATIC TEMPERATURE CONTROL)

The air mix door is automatically controlled so that in-vehicle temperature is maintained at a predetermined value by: The temperature setting, ambient temperature, in-vehicle temperature and amount of sunload.

FAN SPEED CONTROL

Blower speed is automatically controlled based on temperature setting, ambient temperature, in-vehicle temperature, intake temperature, amount of sunload and air mix door position.
With FAN switch set to AUTO, the blower motor starts to gradually increase air flow volume.
When engine coolant temperature is low, the blower motor operation is delayed to prevent cool air from flowing.

INTAKE DOOR CONTROL

The intake doors are automatically controlled by the: temperature setting, ambient temperature, in-vehicle temperature, intake temperature, amount of sunload and ON-OFF operation of the compressor.

OUTLET DOOR CONTROL

The outlet door is automatically controlled by the: temperature setting, ambient temperature, in-vehicle temperature, intake temperature and amount of sunload.

MAGNET CLUTCH CONTROL

The ECM controls compressor operation using input signals from the throttle position sensor and auto amplifier.

SELF-DIAGNOSTIC SYSTEM

The self-diagnostic system is built into the auto amplifier (LCU) to quickly locate the cause of problems.

Overview of Control system

EJS000X8

The control system consists of input sensors, switches, the automatic amplifier (microcomputer) and outputs. The relationship of these components is shown in the diagram below:

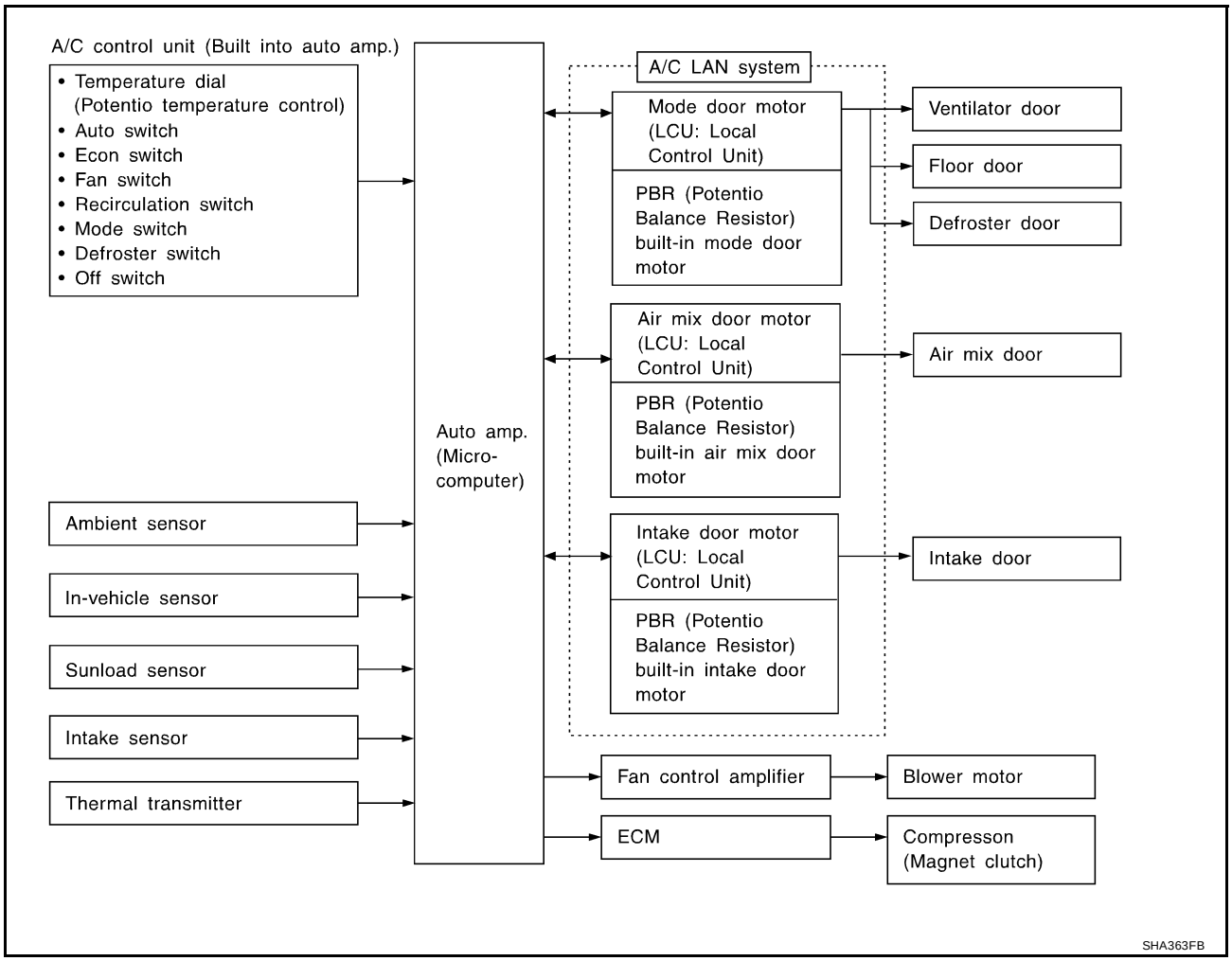

Control Operation

EJS000X9

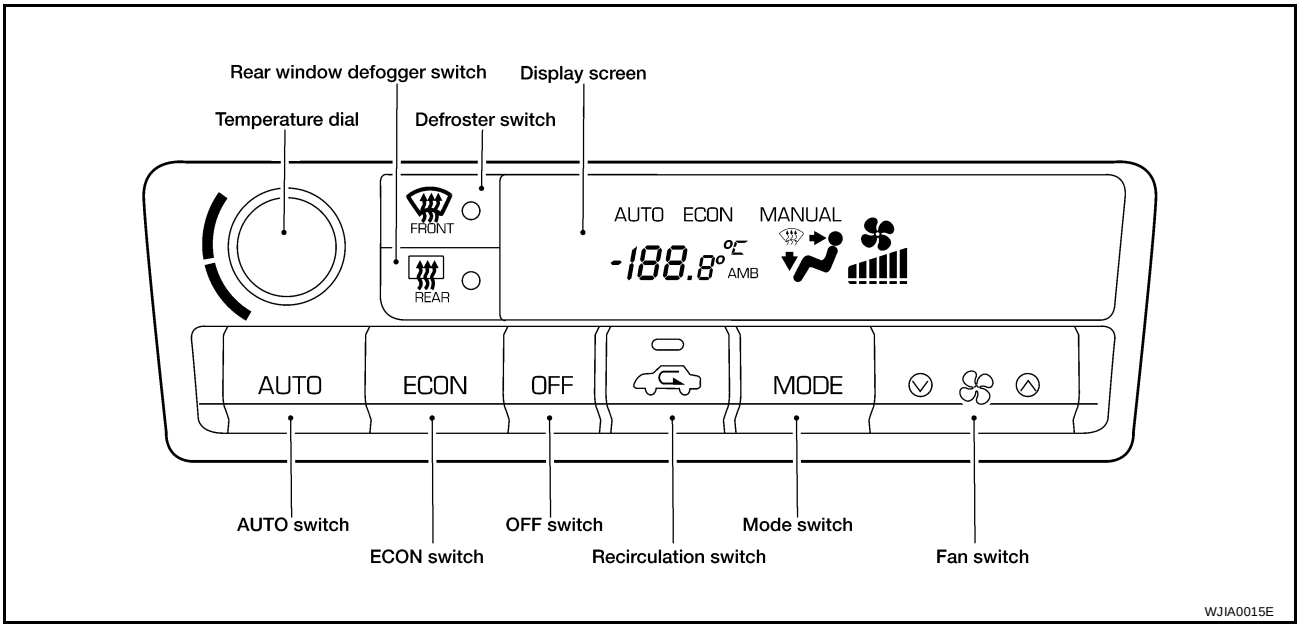

DISPLAY SCREEN

Displays the operational status of the system.

AUTO SWITCH

The compressor, intake doors, air mix door, outlet doors and blower speed are automatically controlled so that the in-vehicle temperature will reach, and be maintained at the set temperature selected by the operator.

ECON (ECONOMY) SWITCH

By pressing the ECON switch, the display screen should indicate ECON and the compressor always turns OFF. With the compressor OFF, the system will not remove heat (cool) or de-humidify. The system will maintain the in-vehicle temperature at the set temperature when the set the temperature is above the ambient (outside) temperature. The system will set the intake doors to the outside air position.

TEMPERATURE DIAL (POTENTIO TEMPERATURE CONTROL)

Increases or decreases the set temperature.

OFF SWITCH

The compressor and blower are OFF, the intake doors are set to the outside air position, and the air outlet doors are set to the foot (80% foot and 20% defrost) position.

FAN SWITCH

Manually controls the blower speed. Five speeds are available for manual control (as shown on the display screen).

RECIRCULATION (REC) SWITCH

OFF position: Outside air is drawn into the passenger compartment.
ON position: Interior air is recirculated inside the vehicle.

DEFROSTER (DEF) SWITCH

Positions the air outlet doors to the defrost position. Also positions the intake doors to the outside air position.

MODE SWITCH

Controls the air discharge outlets.

REAR WINDOW DEFOGGER SWITCH

This switch turns the rear window defogger ON and OFF.

Discharge Air Flow

EJS000XA

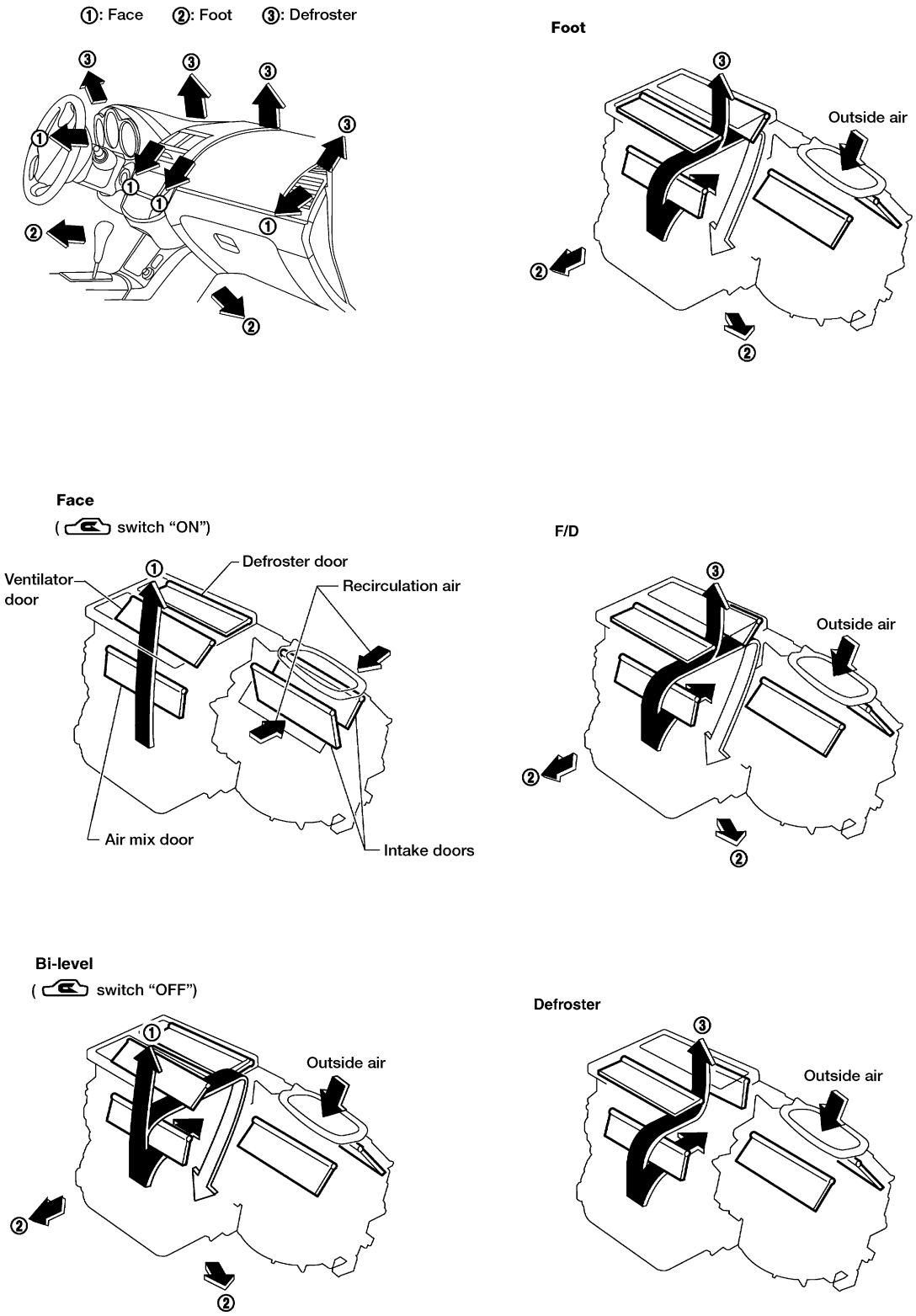

① : To face
② : To foot
③ : To defroster

For air flow %, refer to "Operational Check", "TROUBLE DIAGNOSES".

WJIA0016E

System Description

EJS000XB

SWITCHES AND THEIR CONTROL FUNCTION

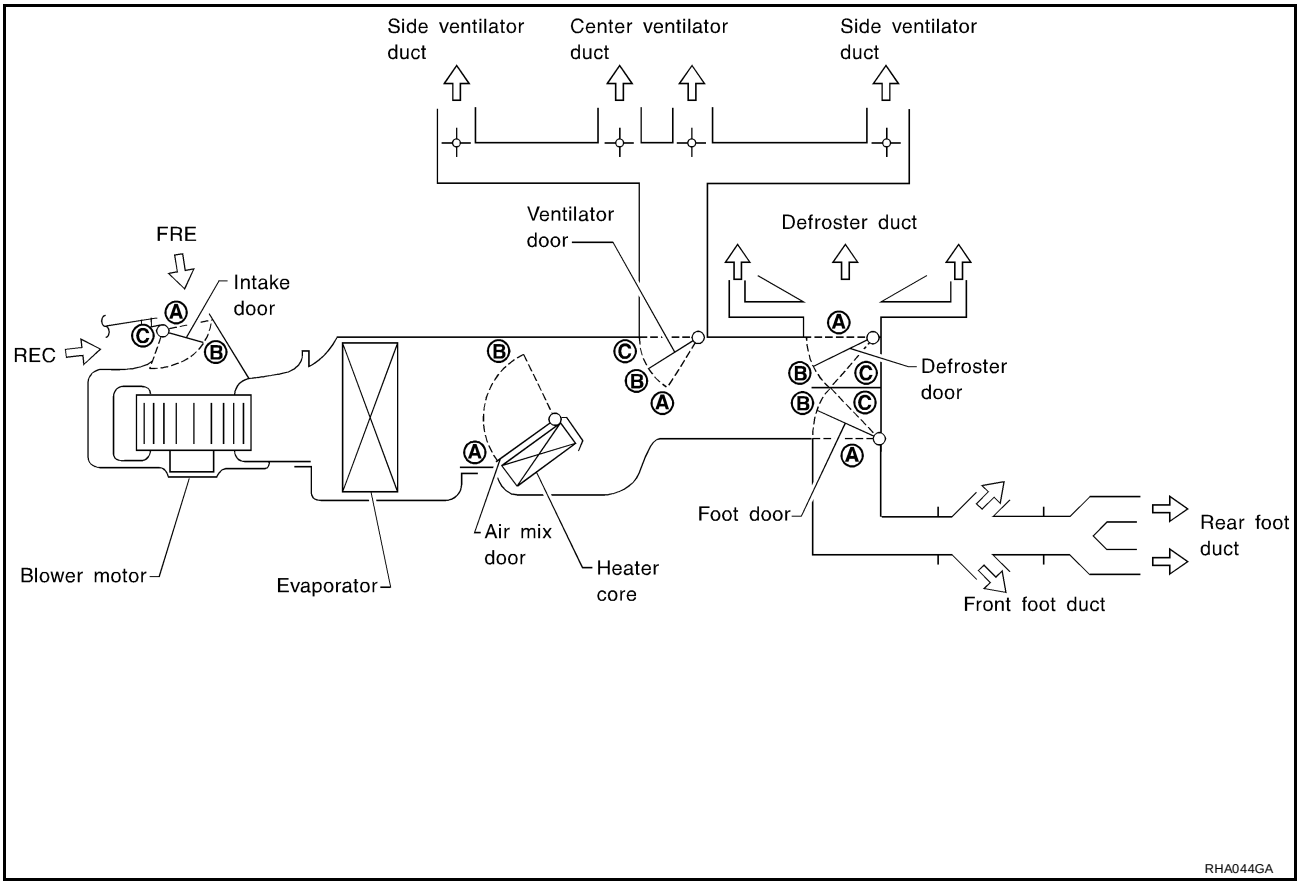

Position or switch	MODE SW				Front DEF SW		AUTO SW	ECON SW	REC SW		Temperature DIAL		
	VENT	B/L	FOOT	D/F	ON	OFF			ON	OFF			
Door							AUTO	ECON			18.0°C (60°F)	—	32.0°C (90°F)
Ventilator door	A	B	C	C	C	—	AUTO	AUTO	—		—		
Foot door	A	B	C	C	A				—		—		
Defroster door	A	A	B	C	C				—		—		
Air mix door	—				—				—		A	AUTO	B
Intake door	—				C				A	AUTO*1	—		

*1: Automatically controlled when REC switch is OFF.

WJIA0096E

CAN Communication System Description

EJS000XC

CAN (Controller Area Network) is a serial communication line for real time application. It is an on-vehicle multiplex communication line with high data communication speed and excellent error detection ability. Many electronic control units are equipped onto a vehicle, and each control unit shares information and links with other control units during operation (not independent). In CAN communication, control units are connected with 2 communication lines (CAN H line, CAN L line) allowing a high rate of information transmission with less wiring. Each control unit transmits/receives data but selectively reads required data only.

FOR TCS MODELS

System diagram

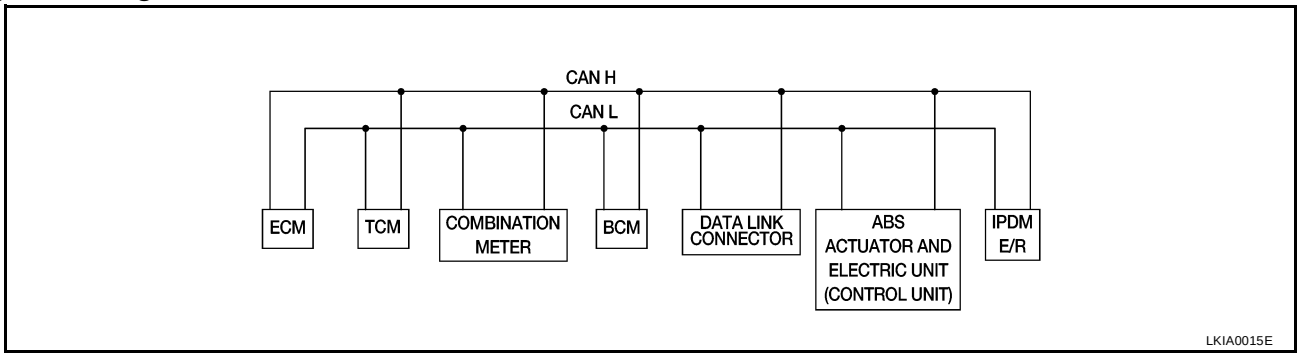

Input/output signal chart

T: Transmit R: Receive

Signals	ECM	TCM	COMBINA-TION METER	BCM	ABS/TCS control unit	IPDM E/R
Engine speed signal	T		R		R	
Engine coolant temperature signal	T		R			
Accelerator pedal position signal	T					
Fuel consumption monitor signal	T		R			
A/T warning lamp signal		T	R			
A/T position indicator signal	R	T	R	R(R range only)	R	
ABS operation signal	R				T	
TCS operation signal	R	R			T	
Air conditioner switch signal	R			T		
Air conditioner compressor signal	R					T
A/C compressor request signal	T					R
Cooling fan motor operation signal	R					T
Cooling fan speed request signal	T					R
Position lights request			R	T		R
Position lights status				R		T
Low beam request				T		R
Low beam status	R			R		T
High beam request			R	T		R
High beam status	R			R		T
Front fog lights request				T		R
Front fog light status				R		T
OD cancel switch signal		R	T			R
Brake switch signal		R	T			
Vehicle speed signal	R		T			
	R		T	R		
Oil pressure switch			R			T
Sleep request1			R	T		
Sleep request2				T		R
N range switch signal		R	T			
P range switch signal		R	T			
Seat belt buckle switch signal			T	R		

Signals	ECM	TCM	COMBINA-TION METER	BCM	ABS/TCS control unit	IPDM E/R
Door switch signal			R	T		R
Tail lamp request			R	T		R
Turn indicator signal			R	T		
Buzzer output signal			R	T		
Trunk switch signal			R	T		
ASCD main switch signal	T		R			
ASCD cruise signal	T		R			
Wiper operation				R		T
Wiper stop position signal				R		T
Rear window defogger switch signal				T		R
Rear window defogger control signal	R			R		T

FOR A/T MODELS

System diagram

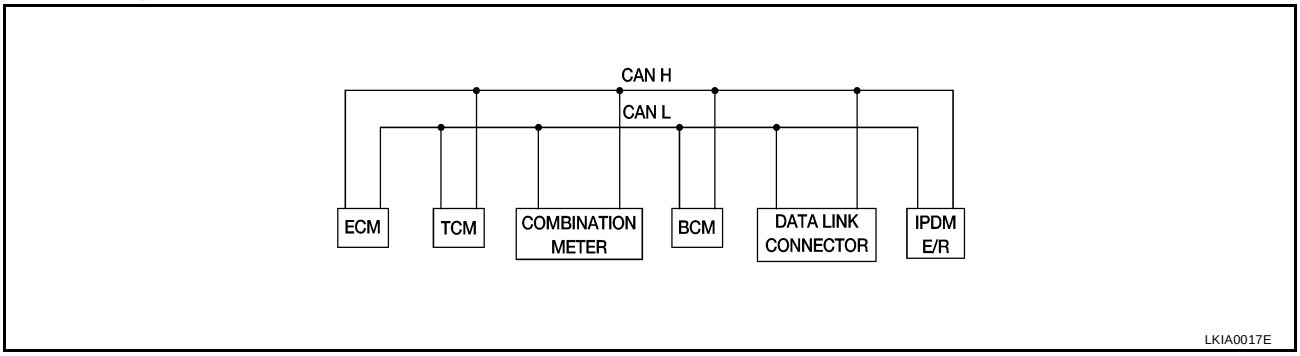

Input/output signal chart

T: Transmit R: Receive

Signals	ECM	TCM	COMBINATION METER	BCM	IPDM E/R
Engine speed signal	T		R		
Engine coolant temperature signal	T		R		
Accelerator pedal position signal	T				R
Fuel consumption monitor signal	T		R		
A/T warning lamp signal		T	R		
A/T position indicator signal	R	T	R	R(R range only)	
Air conditioner switch signal	R			T	
Air conditioner compressor signal	R				T
A/C compressor request signal	T				R
Blower fan switch signal	R(QR25DE)			T	
Cooling fan motor operation signal	R			T	
Cooling fan speed request signal	T				R
Position lights request			R	T	R
Position lights status				R	T
Low beam request				T	R
Low beam status	R			R	T
High beam request			R	T	R

Signals	ECM	TCM	COMBINATION METER	BCM	IPDM E/R
High beam status	R			R	T
Front fog lights request				T	R
Front fog light status				R	T
OD cancel switch signal		R	T		R
Brake switch signal		R	T		
Vehicle speed signal	R		T		
	R		T	R	
Oil pressure switch			R		T
Sleep request1			R	T	
Sleep request2				T	R
N range switch signal		R	T		
P range switch signal		R	T		
Seat belt buckle switch signal			T	R	
Door switch signal			R	T	R
Tail lamp request			R	T	R
Turn indicator signal			R	T	
Buzzer output signal			R	T	
Trunk switch signal			R	T	
ASCD main switch signal	T		R		
ASCD cruise signal	T		R		
Wiper operation				R	T
Wiper stop position signal				R	T
Rear window defogger switch signal				T	R
Rear window defogger control signal	R			R	T

FOR M/T MODELS

System diagram

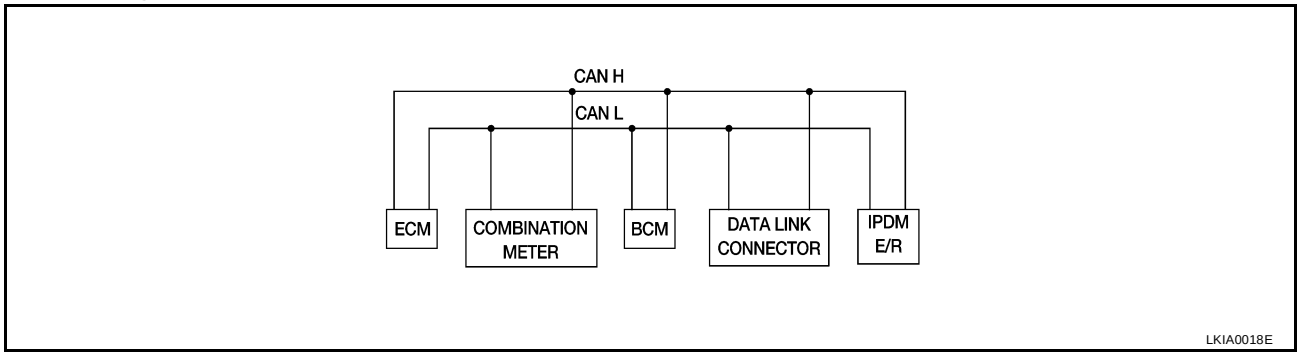

Input/output signal chart

T: Transmit R: Receive

Signals	ECM	COMBINATION METER	BCM	IPDM E/R
Engine speed signal	T			
Engine coolant temperature signal	T			
Fuel consumption monitor signal	T			
Air conditioner switch signal	R		T	
Air conditioner compressor signal	R			T
A/C compressor request signal	T			R

Signals	ECM	COMBINATION METER	BCM	IPDM E/R
Blower fan switch signal	R(QR25DE)		T	
Cooling fan motor operation signal	R			T
Cooling fan speed request signal	T			R
Position lights request		R	T	R
Position lights status			R	T
Low beam request			T	R
Low beam status	R		R	T
High beam request		R	T	R
High beam status	R		R	T
Front fog lights request			T	R
Front fog light status			R	T
Vehicle speed signal	R	T		
Oil pressure switch		R		T
Sleep request1		R	T	
Sleep request2			T	R
Seat belt buckle switch signal		T	R	
Door switch signal		R	T	R
Tail lamp request		R	T	R
Turn indicator signal		R	T	
Buzzer output signal		R	T	
Trunk switch signal		R	T	
ASCD main switch signal	T	R		
ASCD cruise signal	T	R		
Wiper operation			R	T
Wiper stop position signal			R	T
Rear window defogger switch signal			T	R
Rear window defogger control signal	R		R	T

TROUBLE DIAGNOSIS

PFP:00004

How to Perform Trouble Diagnoses for Quick and Accurate Repair

EJS000XD

WORK FLOW

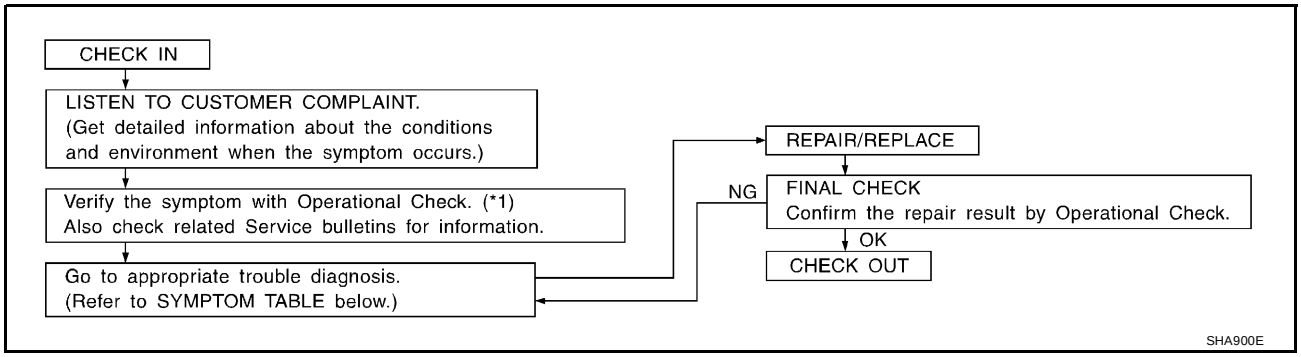

*1: ATC-49

SYMPTOM TABLE

Symptom	Reference Page	
● A/C system does not come on.	● Go to Trouble Diagnosis Procedure for A/C system.	ATC-52
● Air outlet does not change. ● Mode door motor does not operate normally.	● Go to Trouble Diagnosis Procedure for Mode Door Motor. (LAN)	ATC-58
● Discharge air temperature does not change. ● Air mix door motor does not operate normally.	● Go to Trouble Diagnosis Procedure for Air Mix Door Motor. (LAN)	ATC-61
● Intake door does not change. ● Intake door motor does not operate normally.	● Go to Trouble Diagnosis Procedure for Intake Door Motor. (LAN)	ATC-64
● Blower motor operation is malfunctioning.	● Go to Trouble Diagnosis Procedure for Blower Motor.	ATC-67
● Magnet clutch does not engage.	● Go to Trouble Diagnosis Procedure for Magnet Clutch.	ATC-74
● Insufficient cooling.	● Go to Trouble Diagnosis Procedure for Insufficient Cooling.	ATC-80
● Insufficient heating.	● Go to Trouble Diagnosis Procedure for Insufficient Heating.	ATC-87
● Noise.	● Go to Trouble Diagnosis Procedure for Noise.	ATC-88
● Self-diagnosis can not be performed.	● Go to Trouble Diagnosis Procedure for Self-diagnosis.	ATC-89
● Memory function does not operate.	● Go to Trouble Diagnosis Procedure for Memory Function.	ATC-90
● ECON mode does not operate.	● Go to Trouble Diagnosis Procedure for ECON (ECONOMY) — mode.	ATC-91

Component Parts and Harness Connector Location

EJS000XE

ENGINE COMPARTMENT

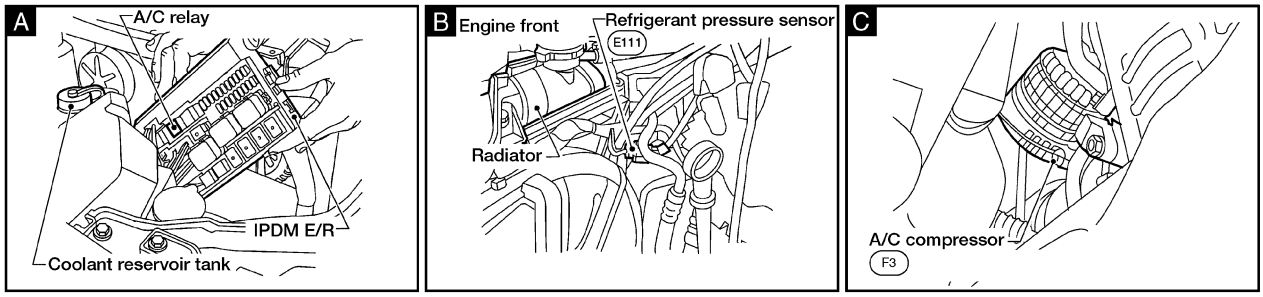

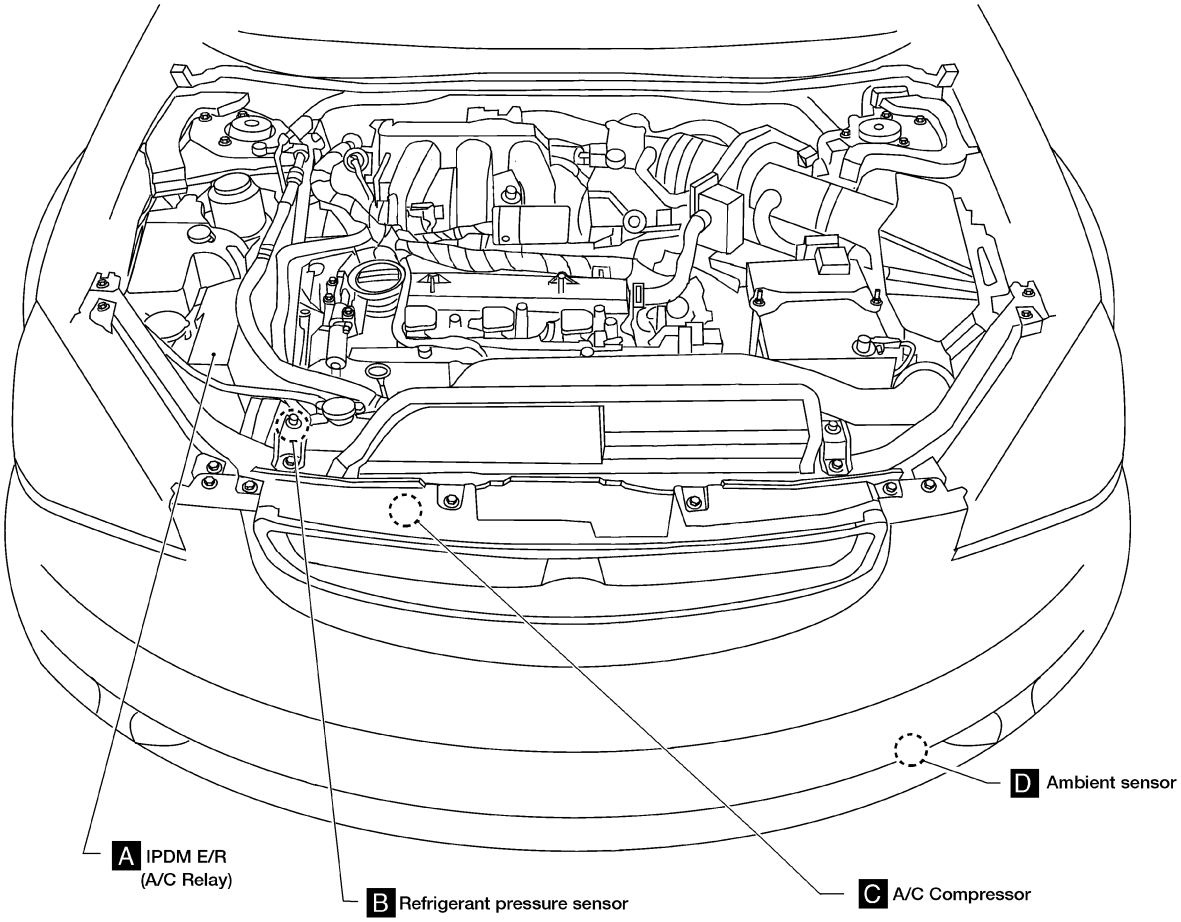

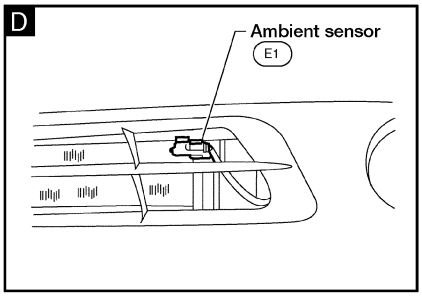

WJIA0017E

PASSENGER COMPARTMENT

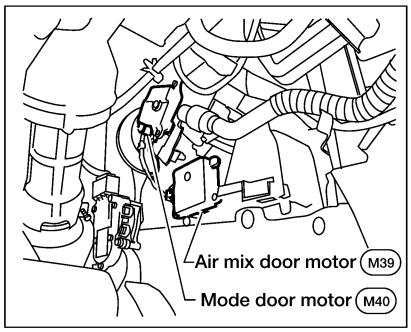

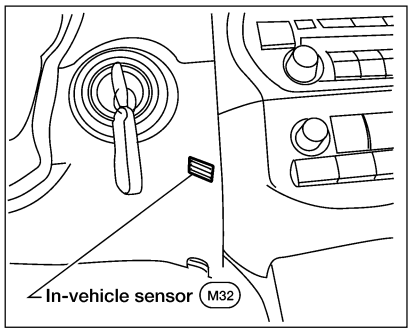

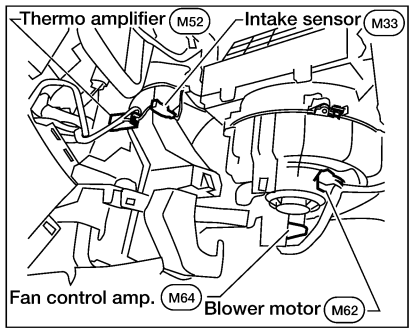

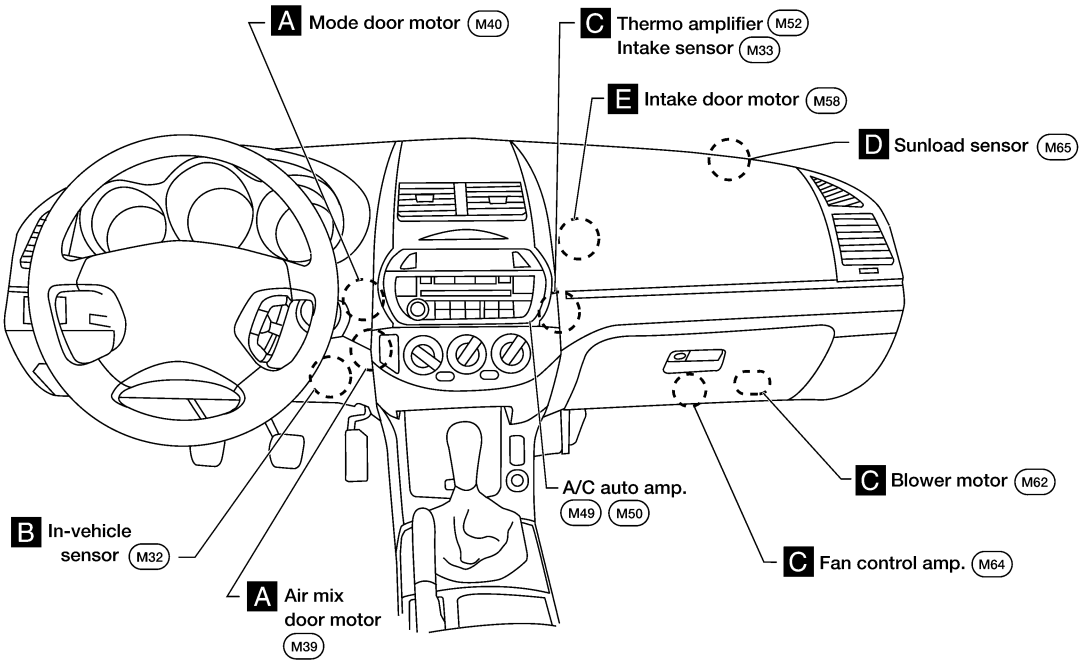

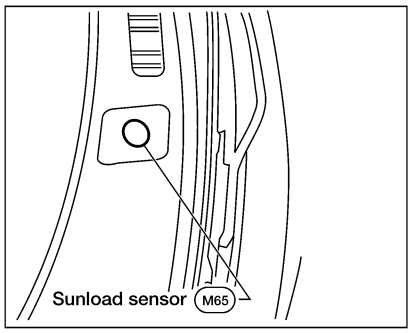

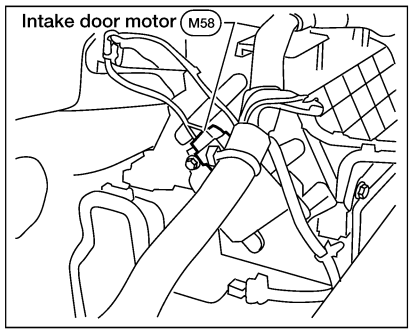

WJIA0018E

Circuit Diagram

EJS000XF

Ⓝ : FOR CANADA

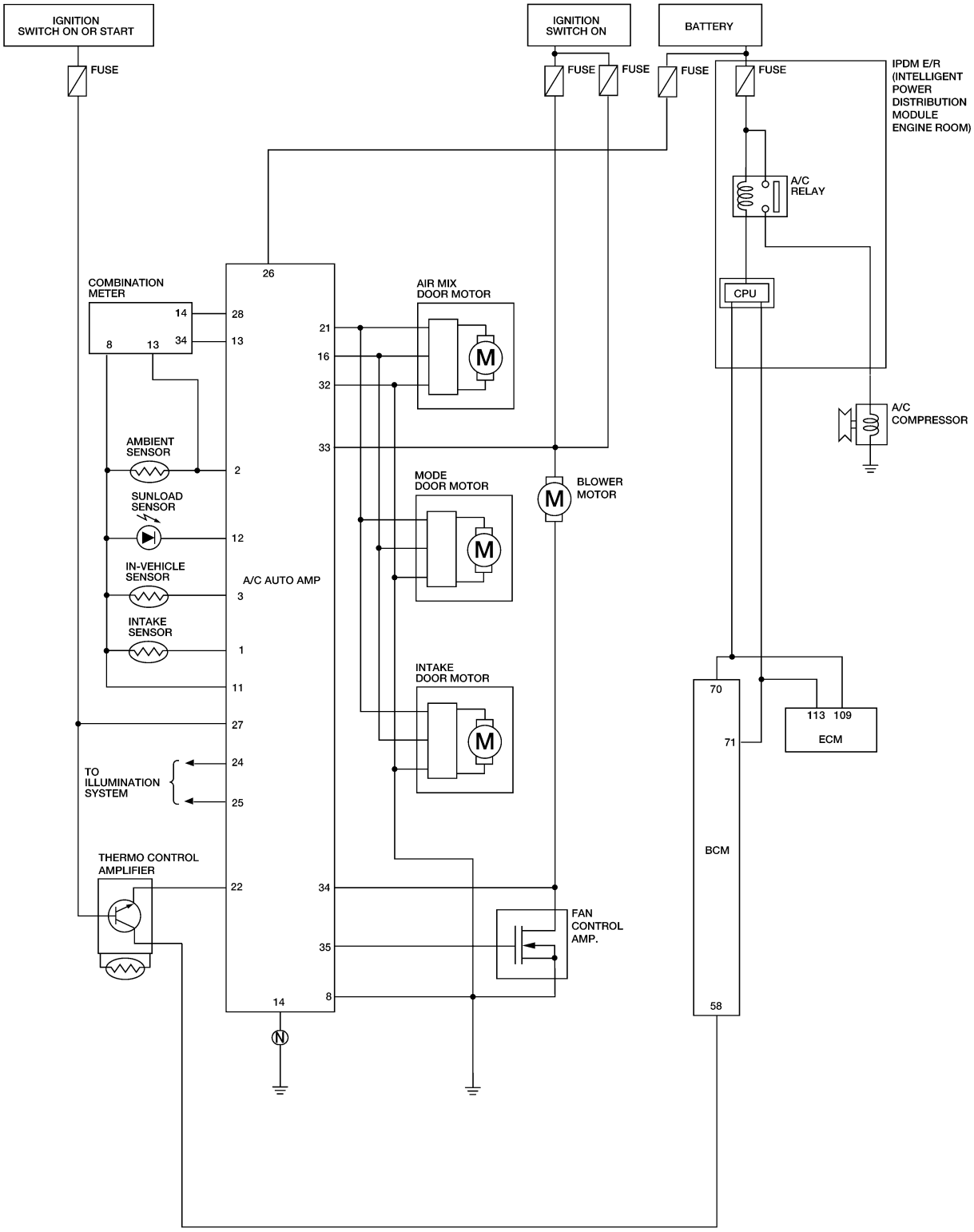

WJWA0006E

Wiring Diagram — A/C,A —

EJS000XG

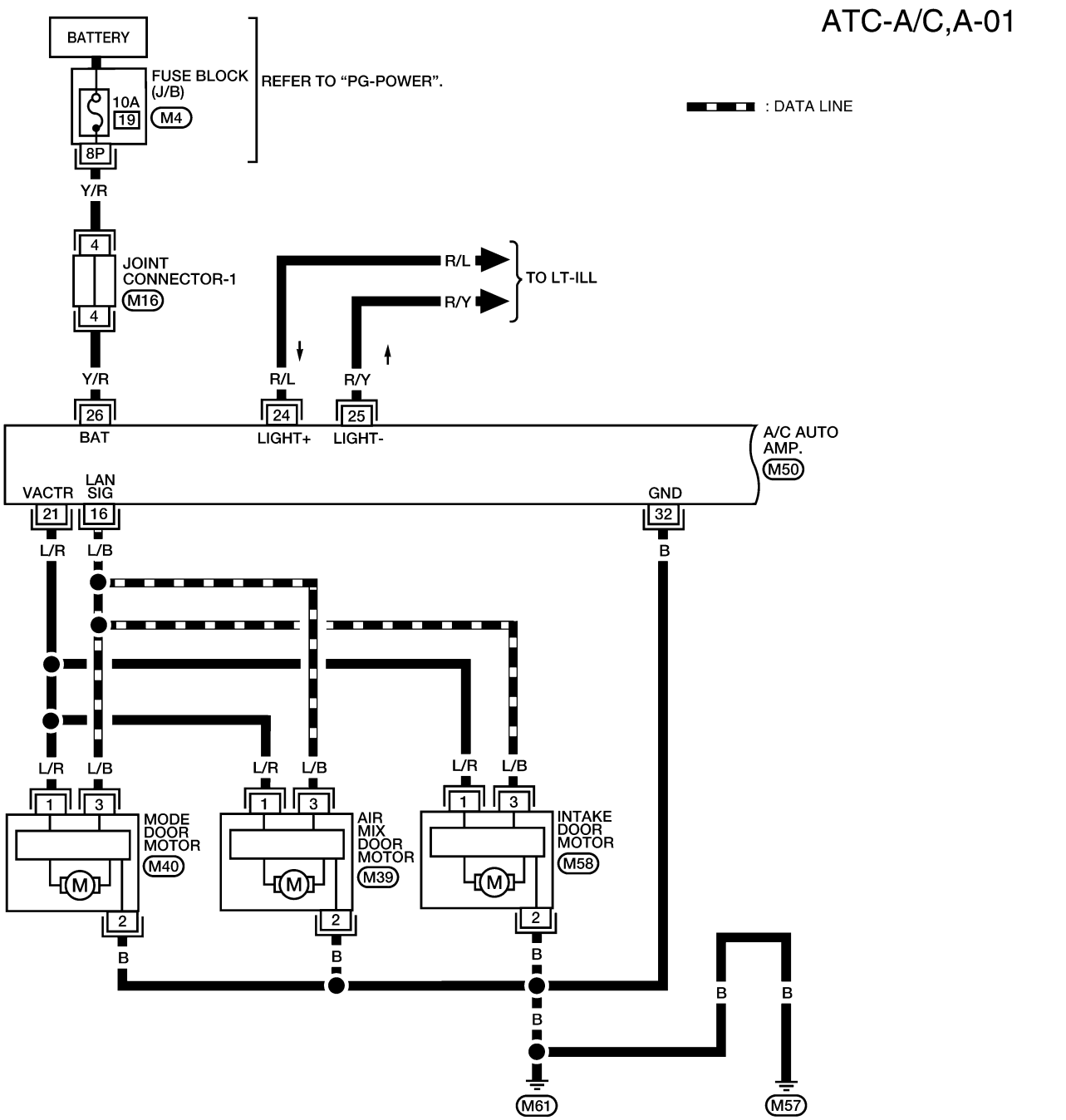

| | | |

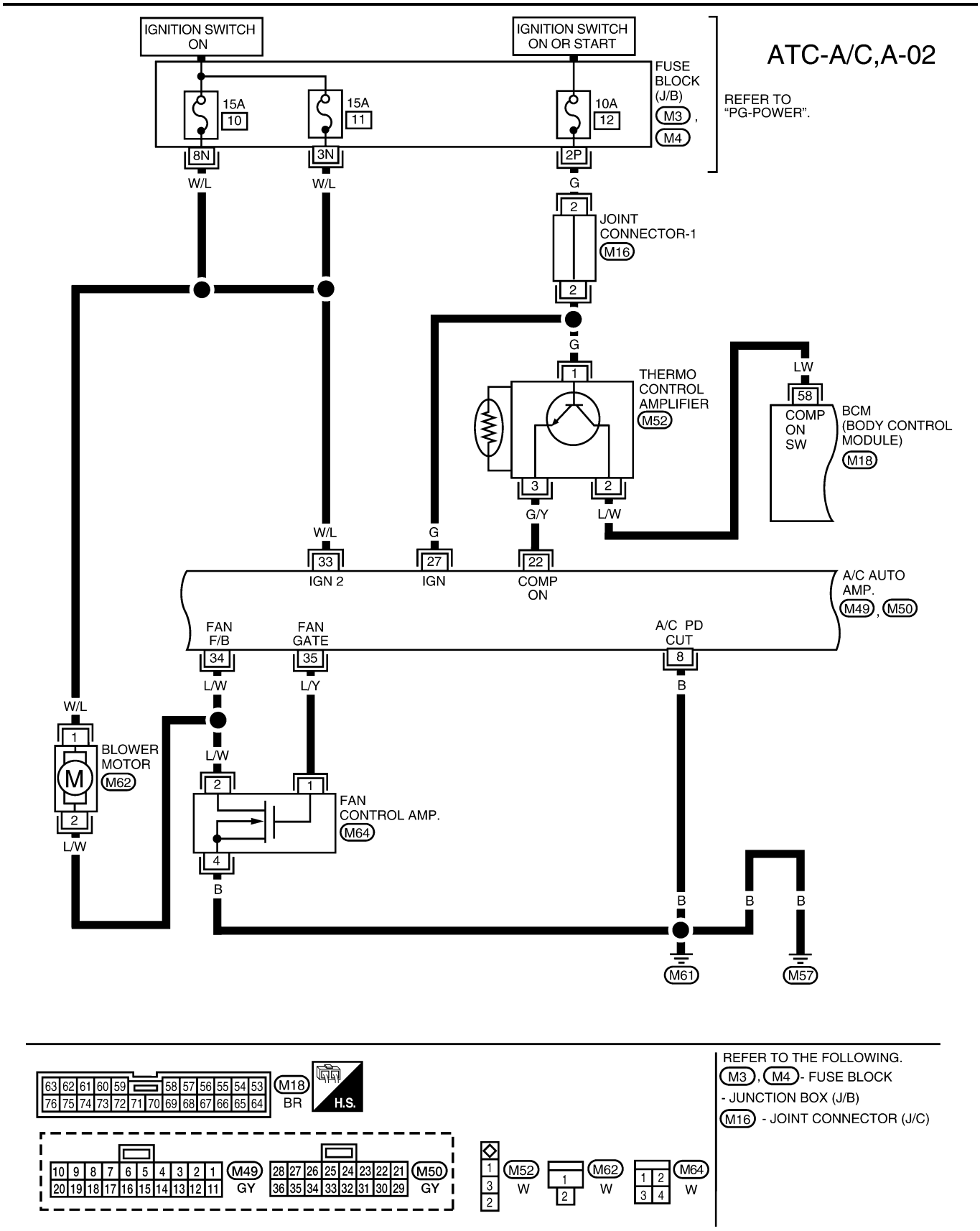
ATC-A/C,A-02
IGNITION SWITCH ON
IGNITION SWITCH ON OR START
FUSE BLOCK (J/B)
M3, M4
REFER TO "PG-POWER".
15A 10
15A 11
10A 12
8N
3N
2P
W/L
W/L
G
JOINT CONNECTOR-1
M16
G
THERMO CONTROL AMPLIFIER
M52
LW
58
COMP ON SW
BCM (BODY CONTROL MODULE)
M18
G/Y
L/W
W/L
G
33
27
22
IGN 2
IGN
COMP ON
A/C AUTO AMP.
M49, M50
FAN F/B
FAN GATE
A/C PD CUT
34
35
8
L/W
L/Y
B
W/L
BLOWER MOTOR
M62
L/W
L/W
FAN CONTROL AMP.
M64
B
B
B
B
M61
M57
M18
BR
H.S.
M49
GY
M50
GY
M52
W
M62
W
M64
W
REFER TO THE FOLLOWING.
M3, M4 - FUSE BLOCK
- JUNCTION BOX (J/B)
M16 - JOINT CONNECTOR (J/C)
WJWA0008E

ATC-A/C,A-03

N : FOR CANADA

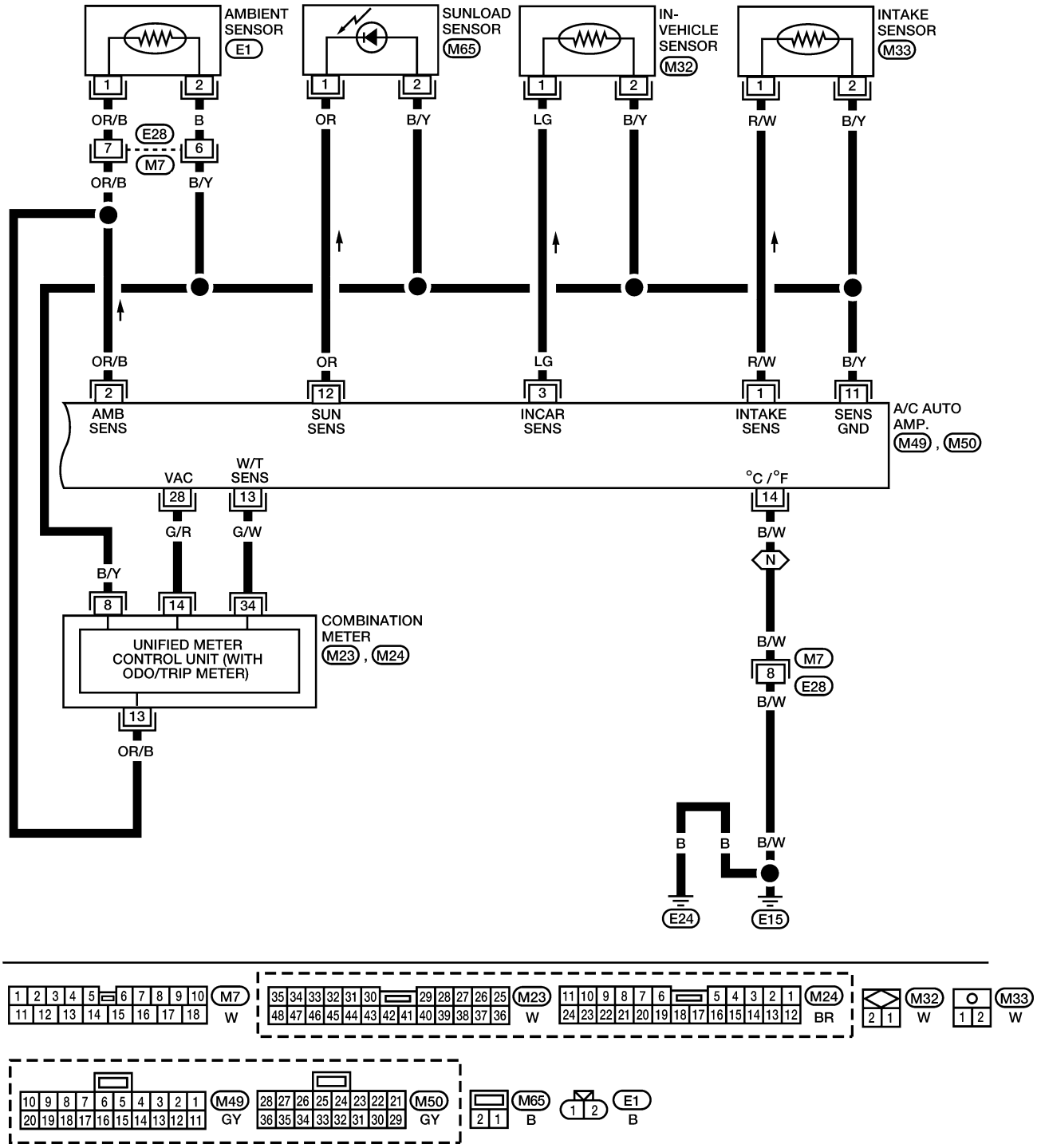

WJWA0009E

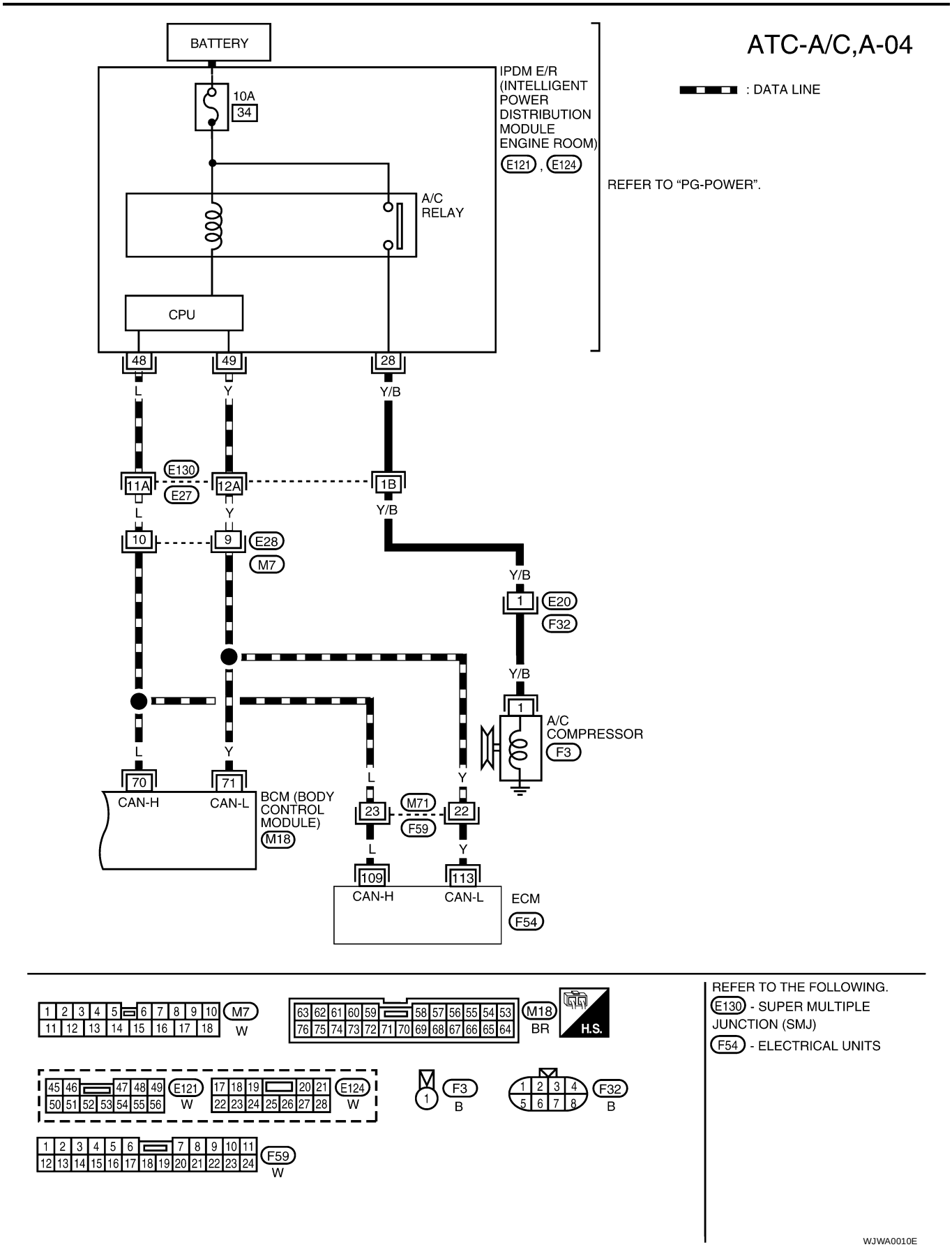
ATC-A/C,A-04
: DATA LINE
BATTERY
10A
34
IPDM E/R
(INTELLIGENT
POWER
DISTRIBUTION
MODULE
ENGINE ROOM)
E121 , E124
REFER TO “PG-POWER”.
A/C
RELAY
CPU
48
49
28
L
Y
Y/B
E130
11A
E27
12A
1B
L
Y
Y/B
10
9
E28
M7
Y/B
1
E20
F32
Y/B
1
A/C
COMPRESSOR
F3
L
Y
70
71
CAN-H
CAN-L
BCM (BODY
CONTROL
MODULE)
M18
L
Y
23
M71
F59
22
L
Y
109
113
CAN-H
CAN-L
ECM
F54
M7
W
M18
BR
H.S.
E121
W
E124
W
F3
B
F32
B
F59
W
REFER TO THE FOLLOWING.
E130 - SUPER MULTIPLE
JUNCTION (SMJ)
F54 - ELECTRICAL UNITS
WJWA0010E

Auto Amp. Terminals and Reference Value

EJS000XH

INSPECTION OF AUTO AMP.

- Measure voltage between each terminal and body ground by following “AUTO AMP. INSPECTION TABLE”.

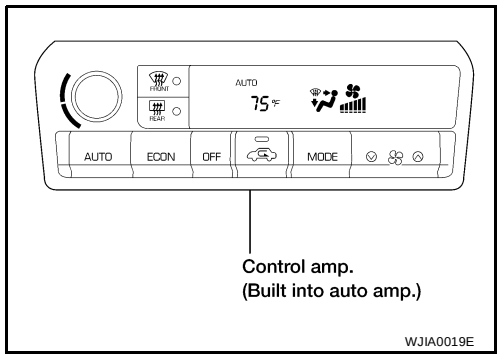

A/C AUTO AMP. HARNESS CONNECTOR TERMINAL LAYOUT

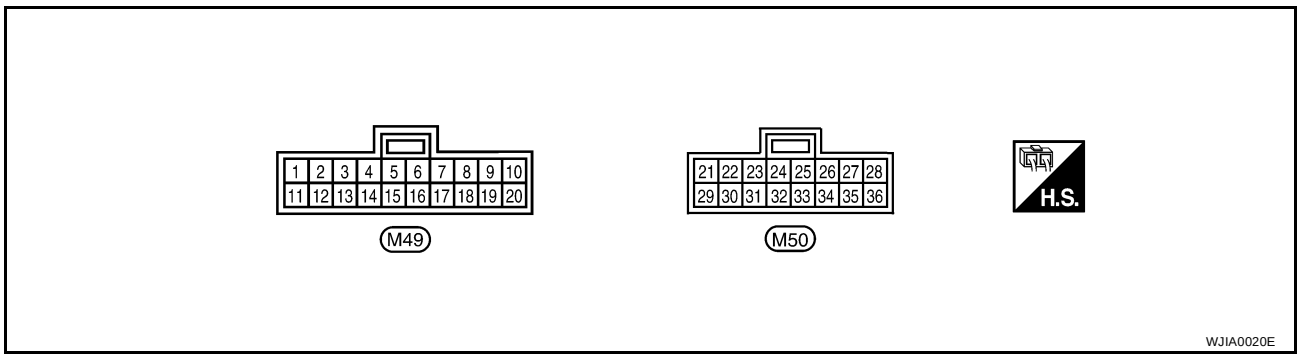

AUTO AMP. INSPECTION TABLE

TERMINAL NO.	ITEM	CONDITION			Voltage (V) (Approx.)
1	Intake sensor	—			—
2	Ambient sensor	—			—
3	In-vehicle sensor	—			—
8	A/C PD Cut	—			—
11	Sensor ground	ON	—		0
12	Sunload sensor	—			—
13	Water temperature sensor	—			—
14	Ground (for Canada)	ON	—		0
16	A/C LAN signal	ON	—		—
21	Power supply for mode door motor, intake door motor and air mix door motor	ON	—		12
22	Compressor ON signal	ON	Compressor	ON	0
				OFF	4.6
24	Illumination (+)	—			—
25	Illumination (-)	—			—
26	Power supply for BAT	OFF	—		Battery voltage

TERMI-NAL NO.	ITEM	CONDITION			Voltage (V) (Approx.)
27	Power supply for IGN		—		12
28	Power supply for A/C ON signal			ON	4.6
				OFF	0
32	Ground		—		0
33	Power source for A/C		Ignition voltage feed back		12
34	Blower motor feed back		Fan speed: Low		7 - 10
35	Fan control AMP. control signal		Fan speed	Low, Middle low or Middle high	2.5 - 3.0
				High	9 - 10

Self-diagnosis

EJS000XI

DESCRIPTION

The self-diagnostic system diagnoses sensors, door motors, blower motor, etc. by system line. Refer to applicable sections (items) for details. Shifting from normal control to the self-diagnostic system is accomplished by starting the engine (turning the ignition switch from “OFF” to “ON”) and pressing “ OFF ” switch for at least 5 seconds. The “ OFF ” switch must be pressed within 10 seconds after starting the engine (ignition switch is turned “ON”). This system will be canceled by either pressing " AUTO " (AUTO) switch or turning the ignition switch “OFF”. Shifting from one step to another is accomplished by means of turning TEMP dial right or left, as required.

Additionally shifting from STEP 5 to AUXILIARY MECHANISM is accomplished by means of pushing (fan) UP switch.

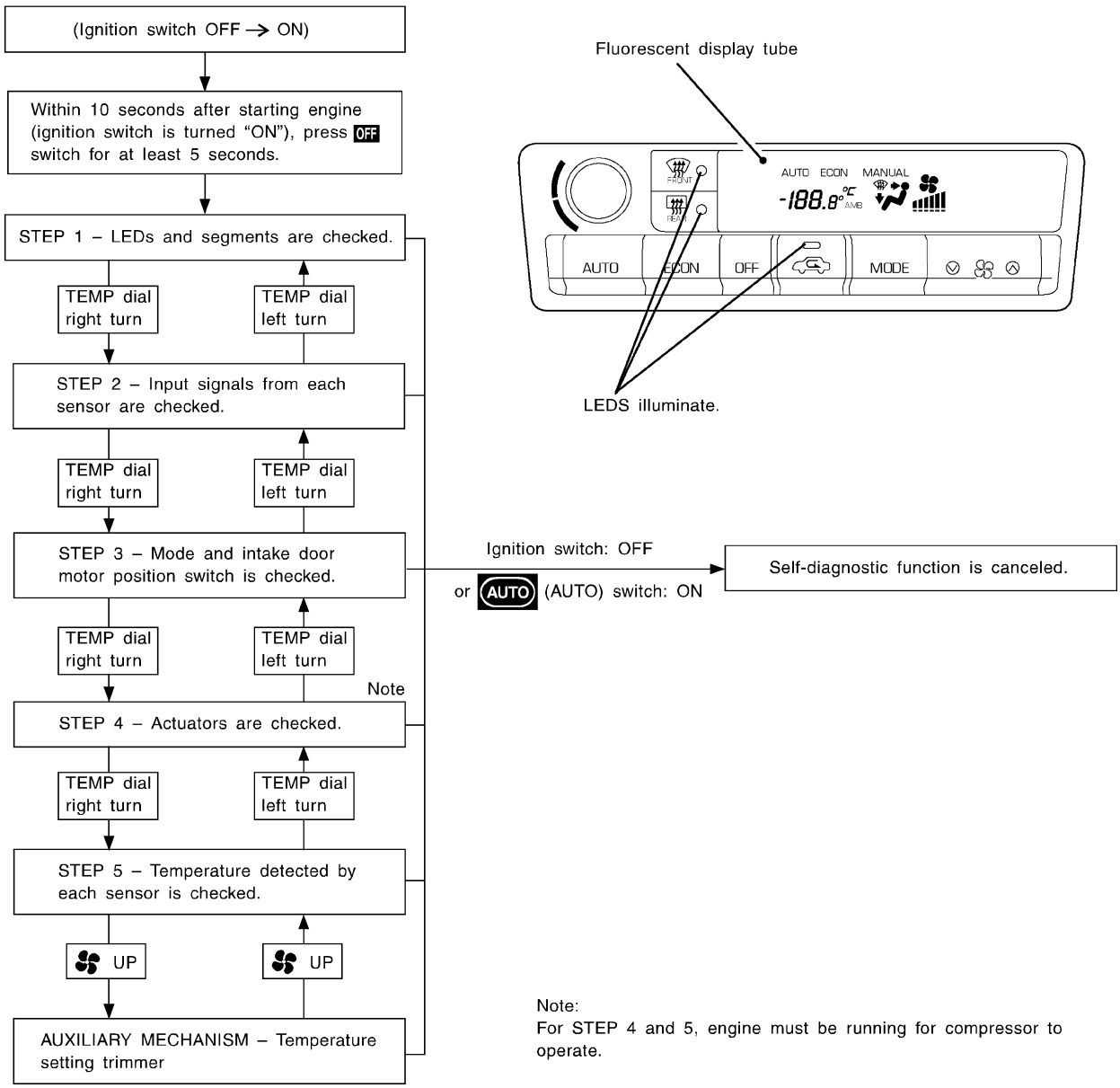

WJIA0021E

Perform all of the following tests to narrow the problem to a specific assembly, actuator, or function.
Link to the Diagnostic Procedure which corresponds to malfunctions noted in these tests.
If the A/C display screen has no display, check all power supply circuits to the A/C Auto Amp.

FUNCTION CONFIRMATION PROCEDURE

1. ENTER SELF-DIAGNOSTIC MODE

Perform steps 1 - 3.

1. Turn the ignition switch OFF.
2. Start the engine.
3. Immediately after starting the engine press and hold the OFF switch (for the auto A/C system) for at least 5 seconds.

The A/C Auto Amp. should now be in Self-Diagnosis mode. Self-Diagnosis steps 1 - 5 can now be performed. Self-Diagnosis step 1 will be displayed first. Shifting from one step to another is accomplished by turning the TEMP dial.

>> GO TO 2.

2. STEP 1 - DISPLAY CHECK

Verify all segments illuminate.
If all segments do not illuminate the fluorescent display tube is malfunctioning or the system has not entered self-diagnosis which would indicate a malfunctioning OFF switch.
Do all segments illuminate?

Display malfunction

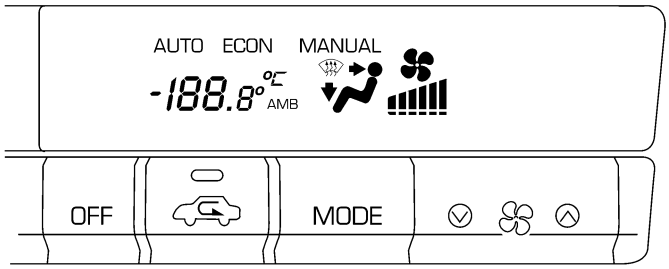

WJIA0022E

Yes or No

Yes >> GO TO 3.
No >> ● Malfunctioning OFF switch, LED or fluorescent display tube.
● Replace A/C auto amp.

3. CHECK TO ADVANCE SELF-DIAGNOSIS STEP 2

1. Turn the TEMP dial clockwise.
2. Advance to self-diagnosis STEP 2.

If the system does not shift between step 1 and 2, a malfunctioning TEMP dial is indicated.

Yes or No

Yes >> GO TO 4.
No >> ● Malfunctioning TEMP dial.
● Replace A/C auto amp.

4. CHECK TO RETURN SELF-DIAGNOSIS STEP 1

1. Turn the TEMP dial counterclockwise.
2. Return to self-diagnosis STEP 1.

If the system does not shift between step 1 and 2, a malfunctioning TEMP dial is indicated.

Yes or No

Yes >> GO TO 5.
No >> ● Malfunctioning TEMP dial.
● Replace A/C auto amp.

5. STEP 2 - SENSOR CIRCUITS ARE CHECKED FOR OPEN OR SHORT CIRCUIT

Turn the TEMP dial clockwise, advance to STEP 2: Wait (about 25 seconds) for two digit Code to appear. This is the Electronic Sensor Input Check which includes circuits.

Does code No. 20 appear on the display?

Yes or No

Yes >> GO TO 6.
No >> GO TO 13.

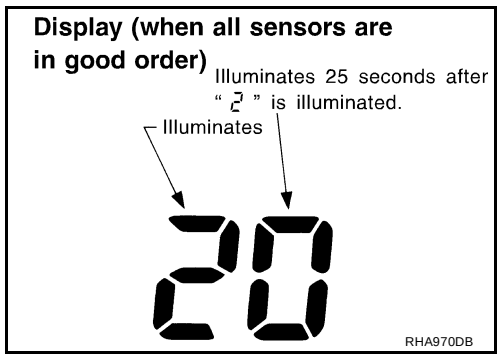

6. STEP 3 - MODE DOOR AND INTAKE DOOR POSITIONS ARE CHECKED

Turn the TEMP dial clockwise, advance to STEP 3. Wait (about 50 seconds) for two digit Code to appear. This is the Mode Door and Intake Door Position Switch input checks including circuits.

Does code No. 30 appear on the display?

Yes or No

Yes >> GO TO 7.
No >> GO TO 14.

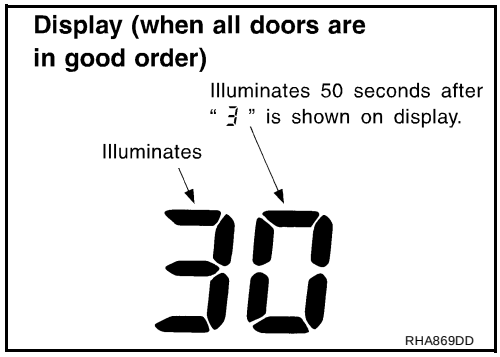

7. STEP 4 - OPERATION OF EACH ACTUATOR IS CHECKED

Turn the TEMP dial clockwise, advance to STEP 4.
Engine running.
This is Heater and A/C system check. Code 41 will be displayed. Use the DEF switch to advance the code number from 41 to 46. After 46, the display will return to code 41 and can be advanced to 46 again.

>> GO TO 8.

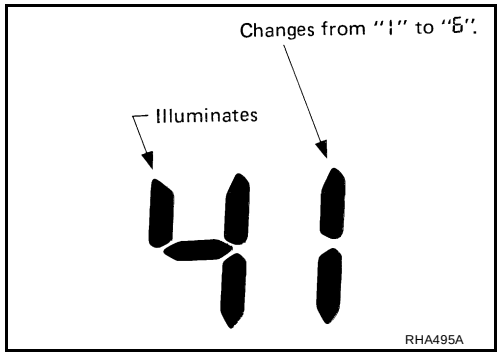

8. CHECK ACTUATORS

Confirm operation of system components according to the following charts.
Checks must be made visually, by listening to any noise, or by touching air outlets with your hand, etc. for improper operation.

Actuator \ Code No.	41	42	43	44	45	46
Mode door	VENT	B/L	B/L	FOOT	D/F	DEF
Intake door	REC	REC	20% FRE	FRE	FRE	FRE
Air mix door	Full cold	Full cold	Full hot	Full hot	Full hot	Full hot
Blower motor	4-5 V	9-11 V	7-9 V	7-9 V	7-9 V	10-12 V
Compressor	ON	ON	OFF	OFF	ON	ON

Operating condition of each actuator cannot be checked by indicators.
Discharge air flow

Mode control knob	Air outlet/distribution		
	Face	Foot	Defroster
	100 %	—	—
	60 %	40 %	—
	-—	80 %	20 %
	—	60 %	40 %
	—	—	100 %

OK or NG

OK >> GO TO 9.
NG >>
- Air outlet does not change.
  Go to ATC-58, "Mode Door Motor Circuit" .
- Intake door does not change.
  Go to ATC-64, "Intake Door Motor Circuit" .
- Blower motor operation is malfunctioning.
  Go to ATC-67, "Blower Motor Circuit" .
- Magnet clutch does not engage.
  Go to ATC-74, "Magnet Clutch Circuit" .
- Discharge air temperature does not change.
  Go to ATC-61, "Air Mix Door Motor Circuit" .

9. STEP 5 - TEMPERATURE OF EACH SENSOR IS CHECKED

Turn the TEMP dial clockwise, advance to STEP 5. This is Intake sensor, In Vehicle sensor and Ambient Sensor function check. Code 51 will be displayed.

NOTE:
Each sensor reading should be approximately the actual temperature.

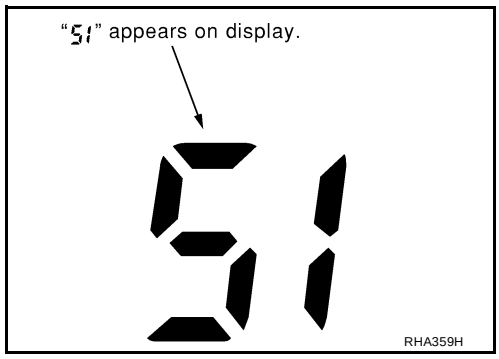

>> GO TO 10.

10. CHECK AMBIENT SENSOR

Press (DEF) once, temperature detected by the Ambient Sensor is displayed.

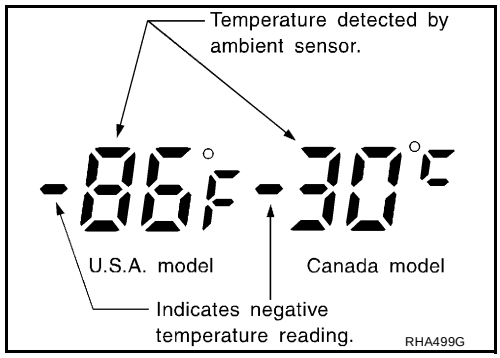

OK or NG

OK >> GO TO 11.

NG >> Go to ATC-91, "Ambient Sensor Circuit" .

11. CHECK IN-VEHICLE SENSOR

Press (DEF) second time, temperature detected by the In Vehicle Sensor is displayed.

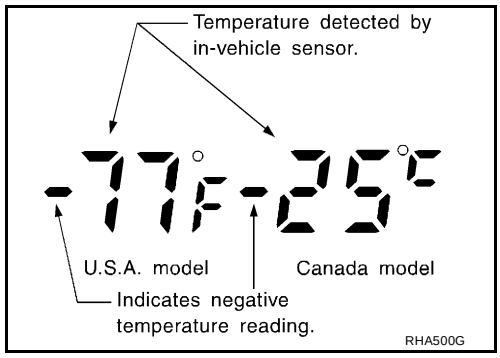

OK or NG

OK >> GO TO 12.

NG >> Go to ATC-93, "In-vehicle Sensor Circuit" .

12. CHECK INTAKE SENSOR

Press (DEF) third time, temperature detected by the Intake Sensor is displayed.

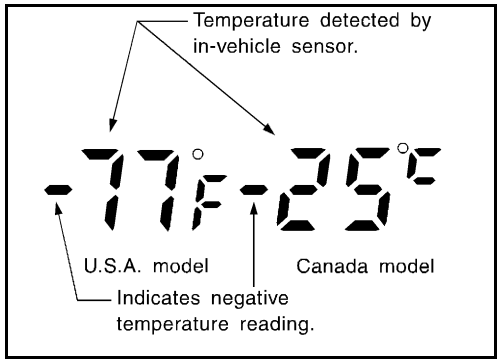

OK or NG

OK >> 1. Press (DEF) switch the fourth time. Display returns to original presentation 51.

2. Turn ignition switch OFF or " AUTO " (AUTO) switch ON.

3. END

NG >> Go to ATC-99, "Intake Sensor Circuit" .

13. CHECK MALFUNCTIONING SENSOR

NOTE:

- A blinking mark (-) preceding the Code No. indicates a short circuit.
- No blinking mark (-) preceding the Code No. indicates an open circuit.
- If 2 or more items are malfunctioning the corresponding codes will alternately blink twice.
- A circuit will be detected as open or shorted and its code No. will be displayed when input signals correspond with conditions in the following chart.

Code No.	Sensor	Open circuit	Short circuit	Reference page
21	Ambient sensor	Less than - 41.9°C (-43°F)	Greater than 100°C (212°F)	ATC-91
-21				
22	In-vehicle sensor	Less than - 41.9°C (-43°F)	Greater than 100°C (212°F)	ATC-93
-22				
24	Intake sensor	Less than - 41.9°C (-43°F)	Greater than 100°C (212°F)	ATC-99
-24				
25	Sunload sensor*2	Less than 0.228mA	Greater than 0.98 mA	ATC-96
-25				
26	PBR*1	Greater than 95%	Less than 5%	ATC-61
-26				

*1: “95%” and “5%” refer to percentage with respect to stroke of air mix door. (Full cold: 0%, Full hot: 100%)
*2: **Conduct self-diagnosis STEP 2 under sunshine.**
When conducting indoors, direct light (more than 60W) at sunload sensor.

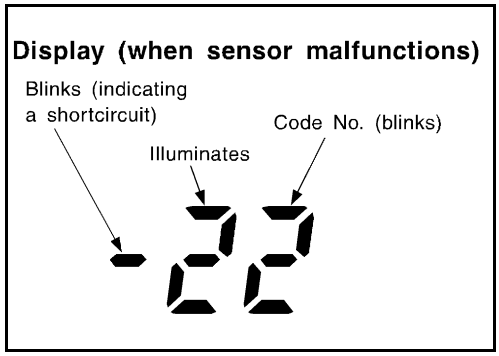

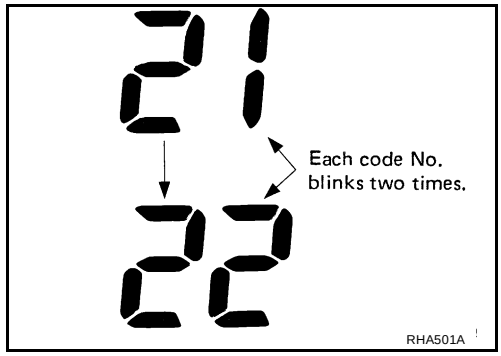

>> INSPECTION END

14. CHECK MALFUNCTIONING DOOR MOTOR POSITION SWITCH

30- Mode door and intake door position switches are in working order.
Continue to next step.
31- Mode door circuit / switch in vent position switch is malfunctioning.
32- Mode door circuit / switch in B/L position switch is malfunctioning.
34- Mode door circuit / switch in Foot position switch is malfunctioning.
35- Mode door circuit / switch in Foot Def. position switch is malfunctioning.
36- Mode door circuit / switch in Def. position switch is malfunctioning.
37- Intake door mode circuit / switch in Fresh Air position is malfunctioning.
38- Intake door mode circuit / switch in 20% Fresh Air position is malfunctioning.
39- Intake door mode circuit / switch in Recirculation Air position is malfunctioning.

NOTE:

- If 2 or more items are malfunctioning the corresponding codes will alternately blink twice.
- If the Mode Door Motor harness is disconnected repeated display pattern of 31 → 32 → 34 → 35 → 36 will occur.
- If Intake Door Motor harness is disconnected repeated display pattern of 37 → 38 → 39 will occur.
- If any Mode Door Motor Position Switch is malfunctioning the Mode Door Motor will also malfunction.

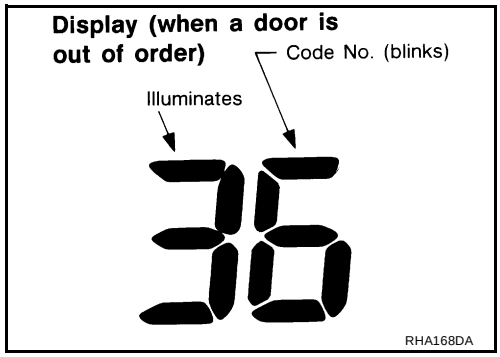

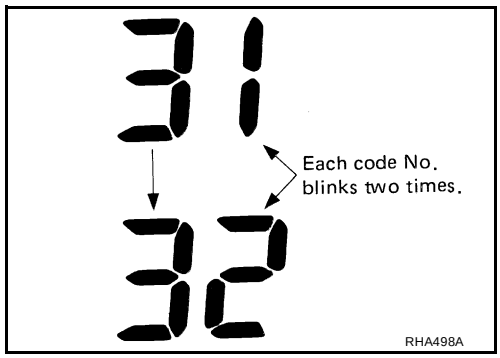

>> INSPECTION END

AUXILIARY MECHANISM: TEMPERATURE SETTING TRIMMER

Unconfirmed Incidents

The customer may feel that the cabin temperature is not being controlled or regulated to the temperature indicated by the auto A/C display screen. To satisfy individual driver preference the Temperature Setting Trimmer may be used to compensate in a range of ±3°C (±6°F).

1. Enter Self Diagnosis mode and select STEP 5.
2. Press the Fan Up switch: This will set the A/C system in auxiliary mode and the display will show 61.
3. Turn the temperature dial clockwise or counterclockwise: The temperature will change at a rate of 0.5°C (1°F).

If power is lost to the A/C Auto Amp., trimmer setting is canceled and setting becomes that of initial condition, 0°.

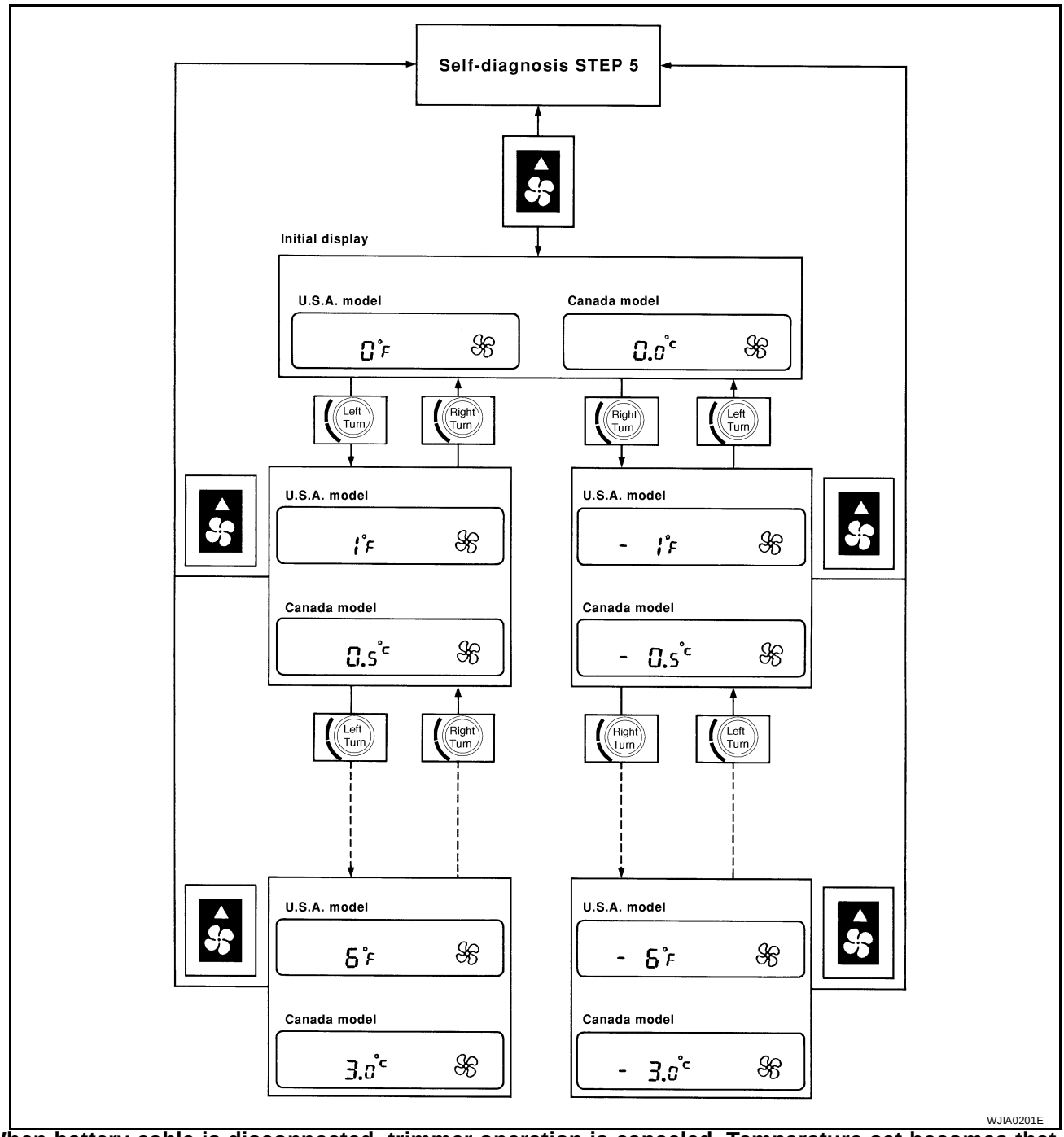

When battery cable is disconnected, trimmer operation is canceled. Temperature set becomes that of initial condition, i.e. 0°C (0°F).

Operational Check

EJS000XJ

The purpose of the operational check is to confirm that the system operates properly.

CONDITIONS:

- **Engine running and at normal operating temperature.**

PROCEDURE:

1. Check Memory Function

1. Set the temperature 90°F or 32°C.
2. Press OFF switch.
3. Turn the ignition off.
4. Turn the ignition on.
5. Press the AUTO switch.
6. Confirm that the set temperature remains at previous temperature.
7. Press OFF switch.

If NG, go to ATC-90, "Memory Function" .
If OK, continue with next check.

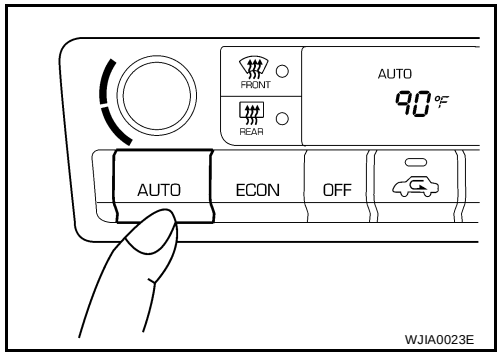

2. Check Blower

1. Press fan switch (up side) one time.
   Blower should operate on low speed.
   The fan symbol should have one bar lit.
2. Press fan switch (up side) one more time, and continue checking blower speed and fan symbol until all speeds are checked.
3. Leave blower on MAX speed.

If NG, go to ATC-67, "Blower Motor Circuit" .
If OK, continue with next check.

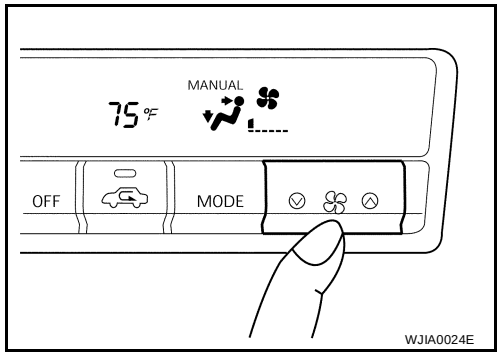

3. Check Discharge Air

1. Press mode switch four times and DEF button.
2. Each position indicator should change shape.

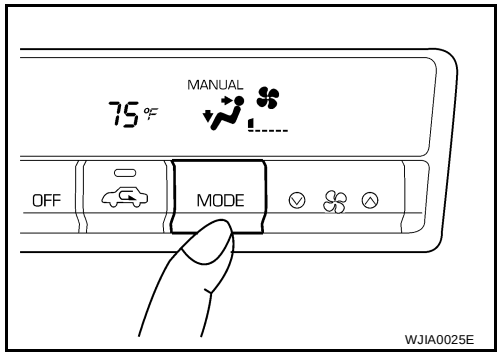

3. Confirm that discharge air comes out according to the air distribution table.
   Refer to ATC-25, "Discharge Air Flow" .

   NOTE:
   Confirm that the compressor clutch is engaged (visual inspection) and intake door position is at FRESH when the DEF is selected.

Intake door position is checked in the next step.
If NG, go to ATC-58, "Mode Door Motor Circuit" .
If OK, continue with next check.

Discharge air flow

Mode control knob	Air outlet/distribution		
	Face	Foot	Defroster
	100%	–	–
	60%	40%	–
	–	80%	20%
	–	60%	40%
	–	–	100%

RHA654F

4. Check Recirculation

1. Press REC switch.
   Recirculation indicator should illuminate.
2. Listen for intake door position change (you should hear blower sound change slightly).

If NG, go to ATC-64, "Intake Door Motor Circuit" .
If OK, continue with next check.

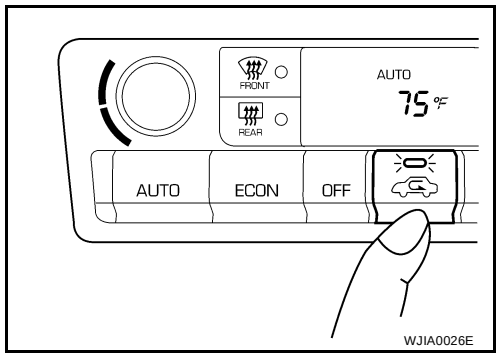

WJIA0026E

5. Check Temperature Decrease

1. Turn the temperature dial counterclockwise until 18°C (60°F) is displayed.
2. Check for cold air at discharge air outlets.

If NG, go to ATC-80, "Insufficient Cooling" .
If OK, continue with next check.

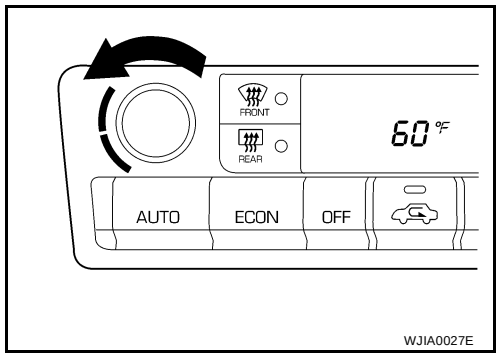

WJIA0027E

6. Check Temperature Increase

1. Turn the temperature dial clockwise until 32°C (90°F) is displayed.
2. Check for hot air at discharge air outlets.

If NG, go to ATC-87, "Insufficient Heating" .
If OK, continue with next check.

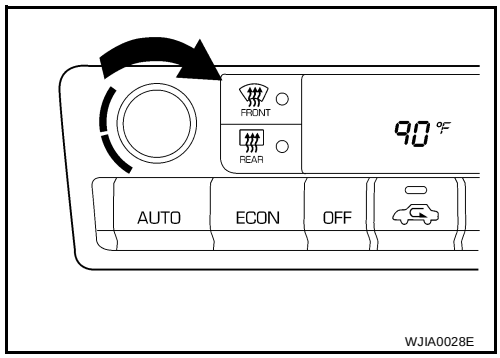

7. Check ECON (Economy) Mode

1. Set the temperature 25°C (75°F).
2. Press ECON switch.
3. Display should indicate ECON (no AUTO).
   Confirm that the compressor clutch is not engaged (visual inspection).
   (Discharge air and blower speed will depend on ambient, in-vehicle and set temperatures.)

If NG, go to ATC-91, "ECON (ECONOMY) Mode" .
If OK, continue with next check.

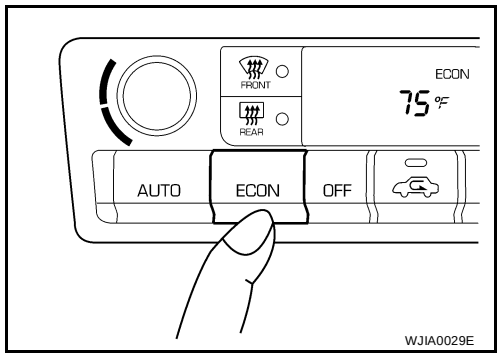

8. Check AUTO Mode

1. Press AUTO switch.
2. Display should indicate AUTO (no ECON).
   Confirm that the compressor clutch engages (audio or visual inspection).
   (Discharge air and blower speed will depend on ambient, in-vehicle and set temperatures.)

If NG, go to ATC-53, "DIAGNOSTIC PROCEDURE" , then if necessary, ATC-74, "Magnet Clutch Circuit" .
If all operational check are OK (symptom can not be duplicated), go to GI-25, "How to Perform Efficient Diagnosis for an Electrical Incident" and perform tests as outlined to simulate driving conditions environment. If symptom appears, refer to ATC-31, "SYMPTOM TABLE" and perform applicable trouble diagnosis procedures.

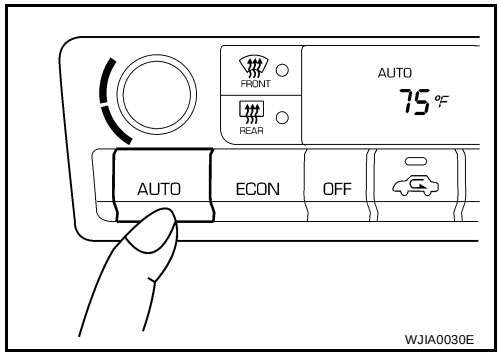

Power Supply and Ground Circuit for Auto Amp.

EJS000XK

SYMPTOM:

- **A/C system does not come on.**

INSPECTION FLOW

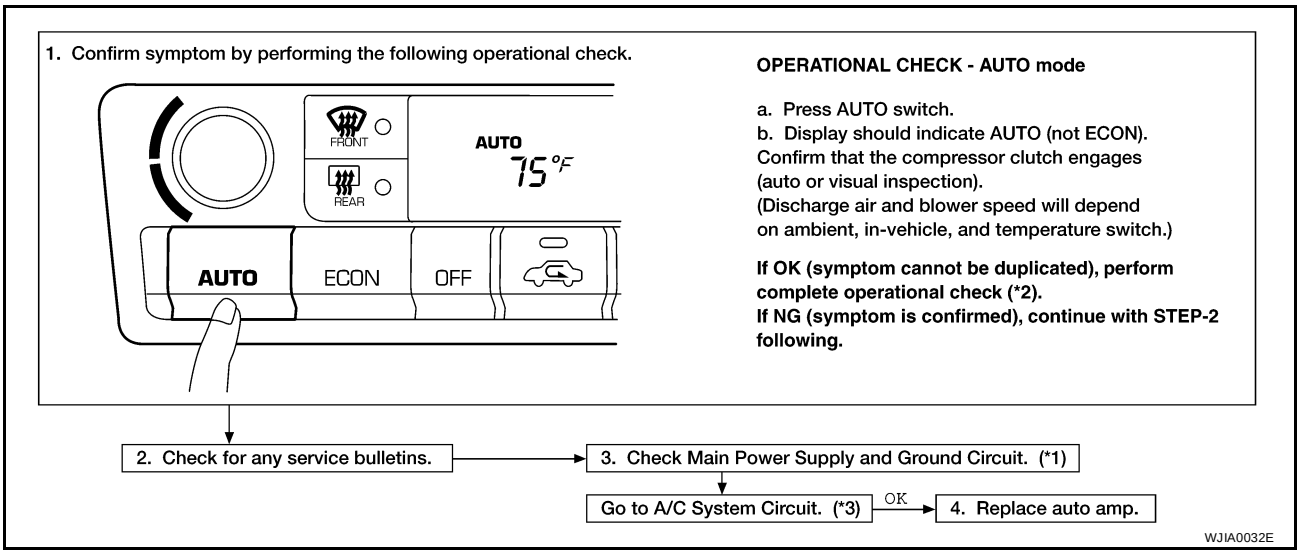

*1: ATC-52 *2: ATC-49 *3: ATC-52

COMPONENT DESCRIPTION

AUTOMATIC AMPLIFIER (AUTO AMP.)

The auto amplifier has a built-in microcomputer which processes information sent from various sensors needed for air conditioner operation. The air mix door motor, mode door motor, intake door motor, blower motor and compressor are then controlled.
The auto amplifier is unitized with control mechanisms. Signals from various switches and Potentio Temperature Control (PTC) are directly entered into auto amplifier.
Self-diagnostic functions are also built into auto amplifier to provide quick check of malfunctions in the auto air conditioner system.

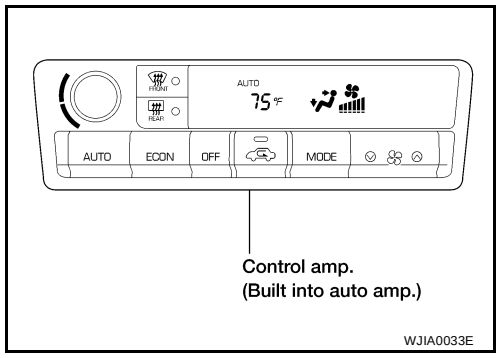

POTENTIO TEMPERATURE CONTROL (PTC)

The PTC is built into the A/C auto amp. It can be set at an interval of 0.5°C (1.0°F) in the 18°C (60°F) to 32°C (90°F) temperature range by pushing the temperature button. The set temperature is digitally displayed.

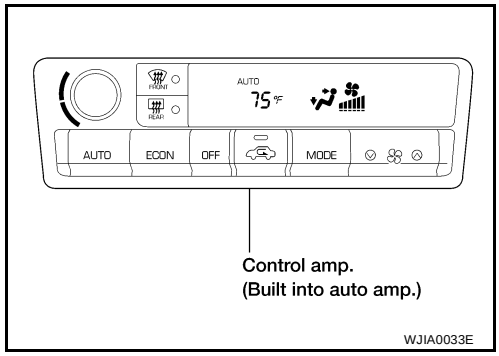

DIAGNOSTIC PROCEDURE

SYMPTOM:

- **A/C system does not come on.**

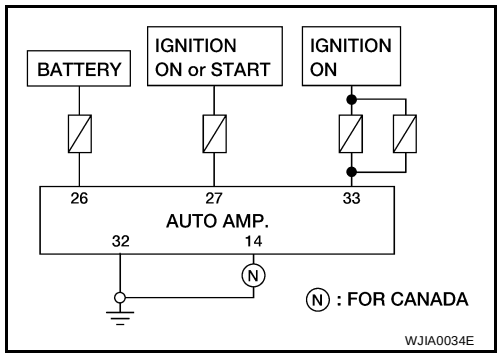

1. CHECK POWER SUPPLY CIRCUIT FOR AUTO AMP.

Terminals			Voltage (V) (Approx.)
(+)		(-)	
Connectors	Wire colors		
M60-26	Y/R	Body ground	12V
M60-27	G		
M60-33	W/L		

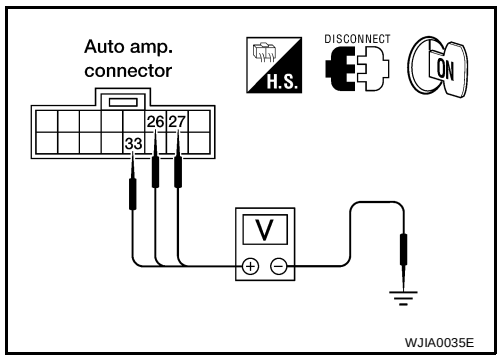

OK or NG

OK >> GO TO 2.

NG >> Check auto amp. ground circuit.

- Check 10A fuse [Nos. 12 and 19, located in the fuse block (J/B)] and 15A fuses [Nos. 10 and 11, located in the fuse block (J/B)].
- If fuses are OK, check for open circuit in wiring harness. Repair or replace as necessary.
- If fuses are NG, replace fuse and check wiring harness for short circuit. Repair or replace as necessary.

2. CHECK BODY GROUND CIRCUIT FOR AUTO AMP.

Terminals			Voltage (V) (Approx.)
(+)		(-)	
Connectors	Wire colors	Body ground	12V
M50-32	B		
M49-14 (Canada)	B/W		

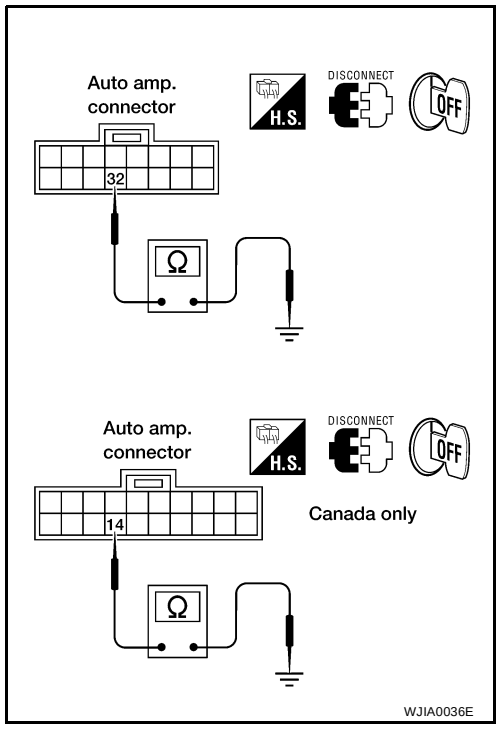

Yes or No

Yes >> ● Replace auto amp.
● INSPECTION END

No >> Repair or replace harness.

LAN System Circuit

EJS000XL

SYMPTOM: Mode door motor, intake door motor and/or air mix door motor does not operate normally.

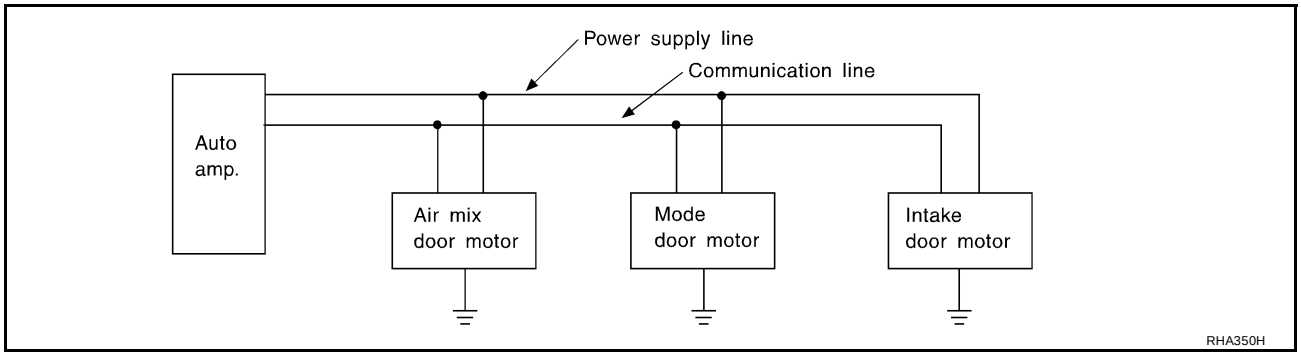

DIAGNOSTIC PROCEDURE

1. CHECK POWER SUPPLY FOR AUTO AMP. (LCU) SIDE

Terminals			Voltage (V) (Approx.)
(+)		(-)	
Connector	Terminal (wire color)		
M50-21	L/R	Body ground	12V

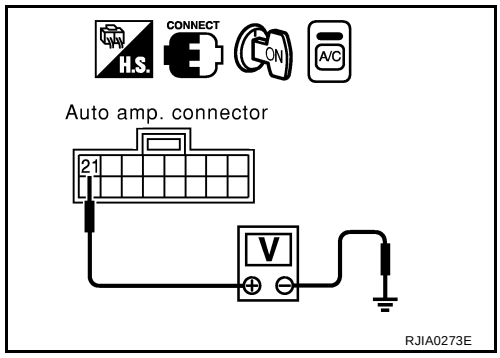

OK or NG

OK >> GO TO 2.
NG >> Replace auto amp.(LCU).

2. CHECK SIGNAL FOR AUTO AMP. (LCU) SIDE

Terminals			Voltage (V) (Approx.)
(+)		(-)	
Connector	Terminal (wire color)		
M49-16	L/B	Body ground	5.5V

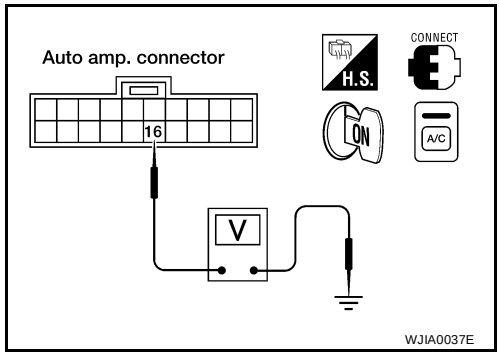

OK or NG

OK >> GO TO 3.
NG >> Replace auto amp.(LCU).

3. CHECK POWER SUPPLY FOR MOTOR SIDE

Door motors	Terminals			Voltage (V) (Approx.)
	(+)		(-)	
	Connector	wire colors		
Mode	M40-1	L/R	Body ground	12V
Air mix	M39-1	L/R		
Intake	M58-1	L/R		

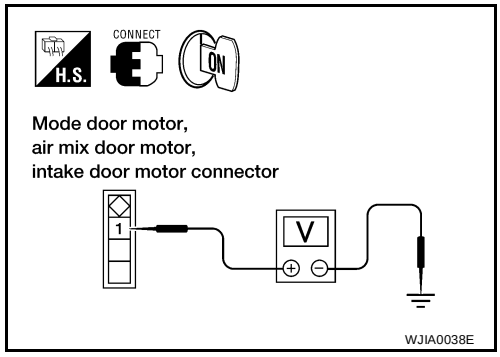

OK or NG

OK >> GO TO 4.
NG >> Replace harness or connector.

4. CHECK SIGNAL FOR MOTOR SIDE

Door motors	Terminals			Voltage (V) (Approx.)
	(+)		(-)	
	Connectors	wire colors		
Mode	M40-3	L/B	Body ground	5.5V
Air mix	M39-3	L/B		
Intake	M58-3	L/B		

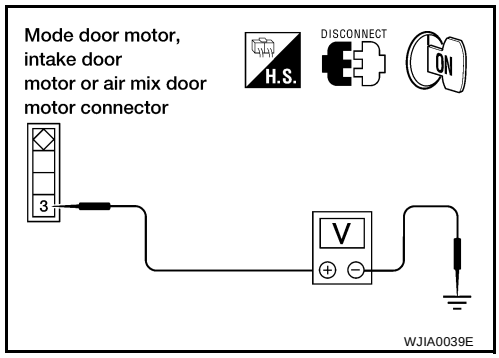

OK or NG

OK >> GO TO 5.
NG >> Replace harness or connector.

5. CHECK MOTOR GROUND CIRCUIT

Door motors	Terminals			Continuity
	(+)		(-)	
	Connector	wire colors		
Mode	M40-2	B	Body ground	Yes
Air mix	M39-2	B		
Intake	M58-2	B		

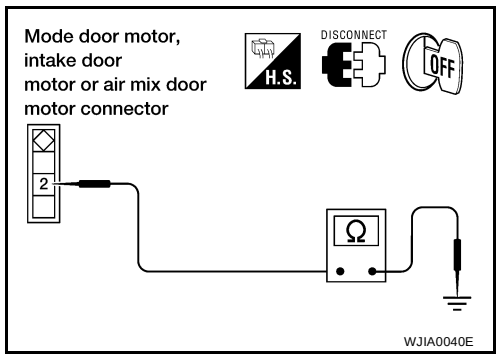

OK or NG

OK >> GO TO 6.
NG >> Replace harness or connector.

6. CHECK MOTOR OPERATION

Disconnect and reconnect the motor connectors and confirm the motor operation.

OK or NG

OK >> (Return to operate normally.)
- Poor contacting the motor connector

NG >> (Does not operate normally.)
- GO TO 7.

7. CHECK MODE DOOR MOTOR AND AIR MIX DOOR MOTOR OPERATION

1. Disconnect the intake door motor connector.
2. Reconnect the mode door motor connector and air mix door motor connector, confirm the mode door motor and air mix door motor operation.

OK or NG

OK >> (Mode door motor and air mix door motor operate normally.)
- Replace the intake door motor.

NG >> (Mode door motor and air mix door motor do not operate normally.)
- GO TO 8.

8. CHECK AIR MIX DOOR MOTOR AND INTAKE DOOR MOTOR OPERATION

1. Disconnect mode door motor connector.
2. Reconnect the intake door motor connector, confirm the air mix door motor and intake door motor operation.

OK or NG

OK >> (Air mix door motor and intake door motor operate normally.)
- Replace mode door motor.

NG >> (Air mix door motor and intake door motor do not operate normally.)
- GO TO 9.

9. CHECK INTAKE DOOR MOTOR AND MODE DOOR MOTOR OPERATION

1. Disconnect air mix door motor connector.
2. Reconnect mode door motor connector, confirm the intake door motor and mode door motor operation.

OK or NG

OK >> (Intake door motor and mode door motor operate normally.)
- Replace air mix door motor.

NG >> (Intake door motor and mode door motor do not operate normally.)
- Replace auto amp.

Mode Door Motor Circuit

EJS000XM

SYMPTOM:

- Air outlet does not change.
- Mode door motor does not operate normally.

INSPECTION FLOW

1. Confirm symptom by performing the following operational check.

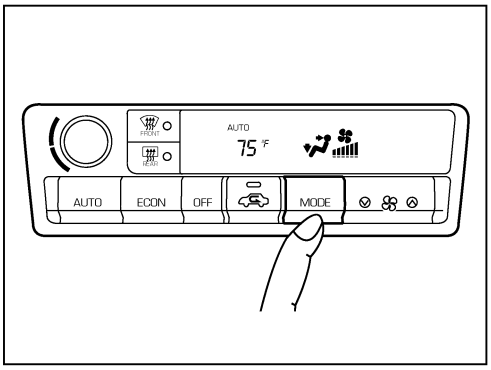

OPERATIONAL CHECK – Discharge air

a. Press mode switch four times and DEF button.
b. Each position indicator should change shape.
c. Confirm that discharge air comes out according to the air distribution table.

Refer to “Discharge Air Flow” (*1).

NOTE:

- **If OK (symptom cannot be duplicated), perform complete operational check (*2).**
  If NG (symptom is confirmed), continue with STEP-2 following.
- **Confirm that the compressor clutch is engaged (visual inspection) and intake door position is at FRESH when DEF is selected.**
  Intake door position is checked in the next step.

2. Check for any service bulletins. → 3. Perform self-diagnosis STEP-1. (*3)
4. Perform self-diagnosis STEP-2. (*4)
   - OK → 3. Perform self-diagnosis STEP-1. (*3)
   - NG → Go to appropriate malfunctioning sensor circuit. (*9)
   - OK ↓
5. Perform self-diagnosis STEP-3. (*4)
   - NG → Go to LAN system circuit. (*10)
   - OK ↓
6. Perform self-diagnosis STEP-4. (*4)
   - NG → Check mode door control linkage. (*11)
     - NG → Repair or adjust control linkage.
   - OK **[Cause cannot be confirmed by self-diagnosis.]** ↓
7. Check ambient sensor circuit. (*5) ↓ OK
8. Check in-vehicle sensor circuit. (*6) ↓ OK
9. Check sunload sensor circuit. (*7) ↓ OK
10. Check intake sensor circuit. (*14) ↓ OK
11. Check air mix door motor PBR circuit. (*8)
    - OK → If the symptom still exists, perform a complete operational check (*12) and check for other symptoms. [Refer to symptom table, (*13).] Does another symptom exist?
      - Yes → Go to Trouble Diagnosis for related symptoms. **[Another symptom exists.]**
      - No → Replace auto amp. → INSPECTION END

WJIA0041E

*1	Discharge air flow ATC-25	*7	Sunload sensor circuit ATC-96	*13	Symptom table ATC-31
*2	Operational check ATC-49	*8	Air mix door motor circuit ATC-61	*14	Intake sensor circuit ATC-99
*3	Self-diagnosis ATC-41 , see No.1	*9	Self-diagnosis ATC-89 , see No.14		
*4	Self-diagnosis ATC-41 , see No. 5	*10	LAN system circuit ATC-55		

*5	Ambient sensor circuit ATC-91	*1 1	Mode door Diagnostic Procedure ATC-60
*6	In-vehicle sensor circuit ATC-93	*1 2	Operational check ATC-49

SYSTEM DESCRIPTION

Component Parts

Mode door control system components are:

- Auto amp.
- Mode door motor (LCU)
- In-vehicle sensor
- Ambient sensor
- Sunload sensor
- Intake sensor

System Operation

The auto amplifier receives data from each of the sensors. The amplifier sends air mix door, mode door and intake door opening angle data to the air mix door motor LCU, mode door motor LCU and intake door motor LCU.

The air mix door motor, mode door motor and intake door motor read their respective signals according to the address signal. Opening angle indication signals received from the auto amplifier and each of the motor position sensors are compared by the LCUs in each motor with the existing decision and opening angles. Subsequently, HOT/COLD or DEFROST/VENT or FRESH/RECIRCULATION operation is selected. The new selection data is returned to the auto amplifier.

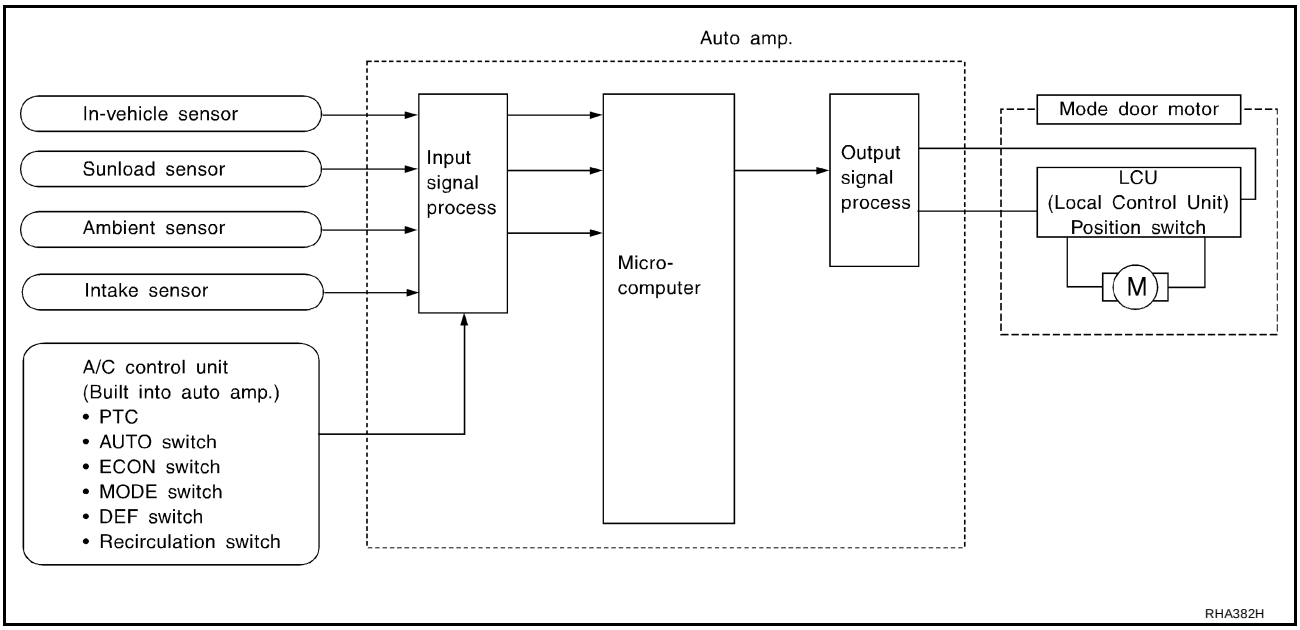

Mode Door Control Specification

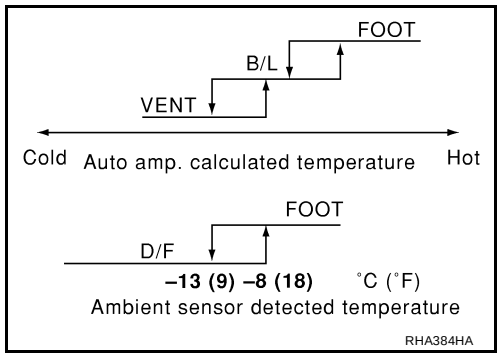

COMPONENT DESCRIPTION

Mode Door Motor

The mode door motor is attached to the heater and cooling unit. It rotates so that air is discharged from the outlet set by the auto amplifier. Motor rotation is conveyed to a link which activates the mode door.

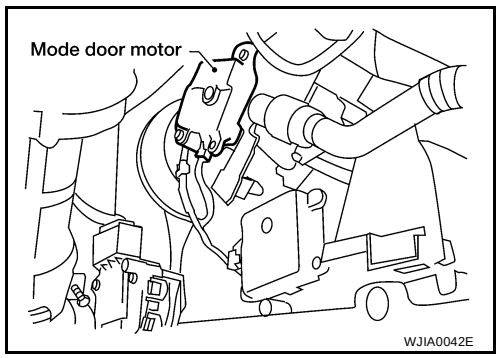

DIAGNOSTIC PROCEDURE

SYMPTOM: Mode door motor and/or air mix door motor does not operate normally.
Perform diagnostic procedure for LAN system circuit. Refer to ATC-55, "LAN System Circuit" .

MODE DOOR

1. Install mode door motor on heater unit and connect it to main harness.
2. Set up code No. in Self-diagnosis STEP 4. Refer to ATC-41, "Self-diagnosis" .
3. Move side link by hand and hold mode door in DEF mode.
4. Attach mode door motor rod to side link rod holder.
5. Make sure mode door operates properly when changing from code No. 41 to 46 by pushing DEF switch.

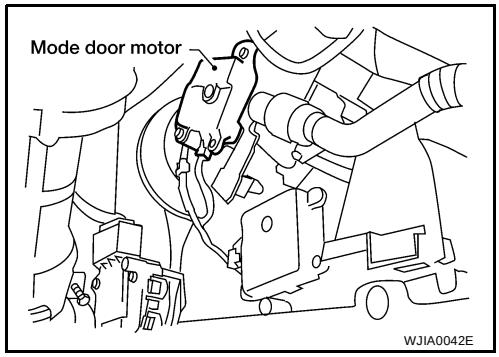

41	42	43	44	45	46
VENT	B/L	B/L	FOOT	D/F	DEF

Air Mix Door Motor Circuit

EJS000XN

SYMPTOM:

- Discharge air temperature does not change.
- Air mix door motor does not operate.

INSPECTION FLOW

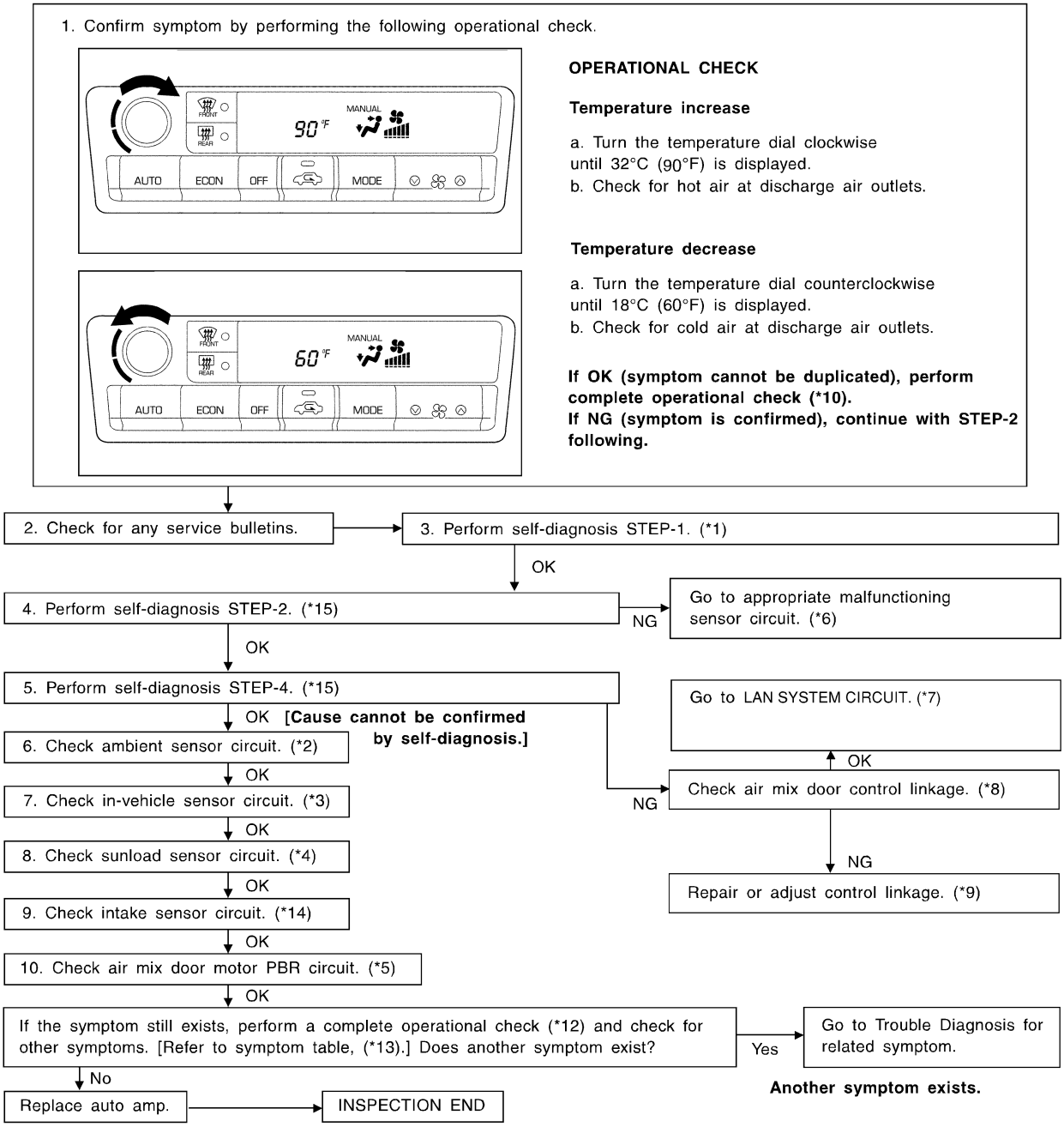

*1	Self-diagnosis ATC-41 , see No.1	*6	Self-diagnosis ATC-89 , see No. 14	*12	Operational check ATC-49
*2	Ambient sensor circuit ATC-91	*7	LAN system circuit ATC-55	*13	Symptom table ATC-31
*3	In-vehicle sensor circuit ATC-93	*8	Air mix door Diagnostic Procedure ATC-63	*14	Intake sensor circuit ATC-99

*4	Sunload sensor circuit ATC-96	*9	Air mix door Component description ATC-63	*15	Self-diagnosis ATC-89 , see No.7
*5	Air mix door motor circuit ATC-61	*10	Operational check ATC-49		

SYSTEM DESCRIPTION

Component Parts

Air mix door control system components are:

- Auto amp.
- Air mix door motor (LCU)
- In-vehicle sensor
- Ambient sensor
- Sunload sensor
- Intake sensor

System Operation

The auto amplifier receives data from each of the sensors. The amplifier sends air mix door, mode door and intake door motor opening angle data to the air mix door motor LCU, mode door motor LCU and intake door motor LCU.

The air mix door motor, mode door motor and intake door motor read their respective signals according to the address signal. Opening angle indication signals received from the auto amplifier and each of the motor position sensors are compared by the LCUs in each motor with the existing decision and opening angles. Subsequently, HOT/COLD or DEFROST/VENT or FRESH/RECIRCULATION operation is selected. The new selection data is returned to the auto amplifier.

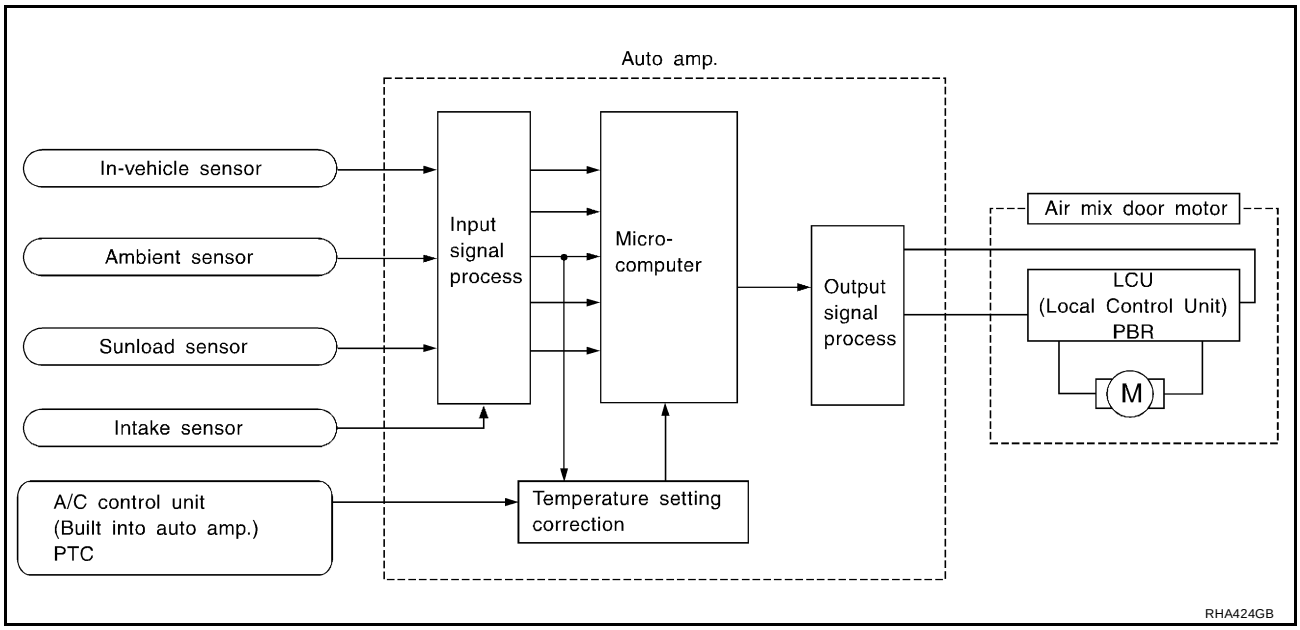

Air Mix Door Control Specification

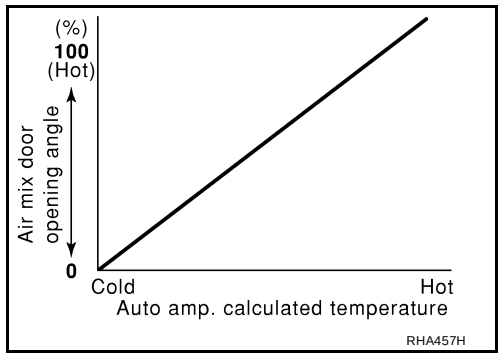

COMPONENT DESCRIPTION

Air Mix Door Motor

The air mix door motor is attached to the heater and cooling unit. It rotates so that the air mix door is opened or closed to a position set by the auto amplifier. Motor rotation is then conveyed through a shaft and the air mix door position is then fed back to the auto amplifier by PBR built-in air mix door motor.

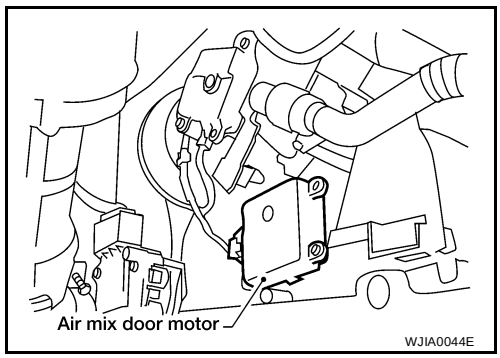

DIAGNOSTIC PROCEDURE

SYMPTOM: Discharge air temperature does not change.
Perform diagnostic procedure for LAN system circuit. Refer to ATC-55, "LAN System Circuit" .

AIR MIX DOOR

1. Install air mix door motor on heater unit and connect it to main harness.
2. Set up code No. 41 in Self-diagnosis STEP 4. Refer to ATC-89, "Self-diagnosis" .
3. Move air mix door lever by hand and hold it in full cold position.
4. Attach air mix door lever to side link.
5. Make sure air mix door operates properly when changing from code No. 41 to 46 by pushing DEF switch.

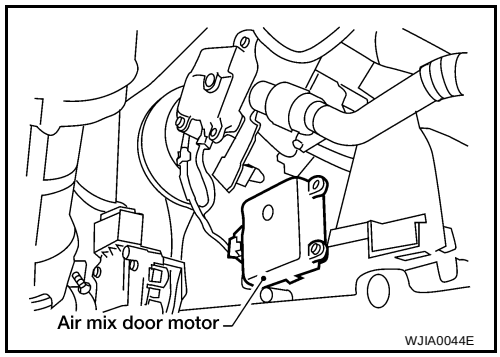

41	42	43	44	45	46
Full cold		Full hot			

Intake Door Motor Circuit

EJS000XO

SYMPTOM:

- Intake door does not change.
- Intake door motor does not operate normally.

INSPECTION FLOW

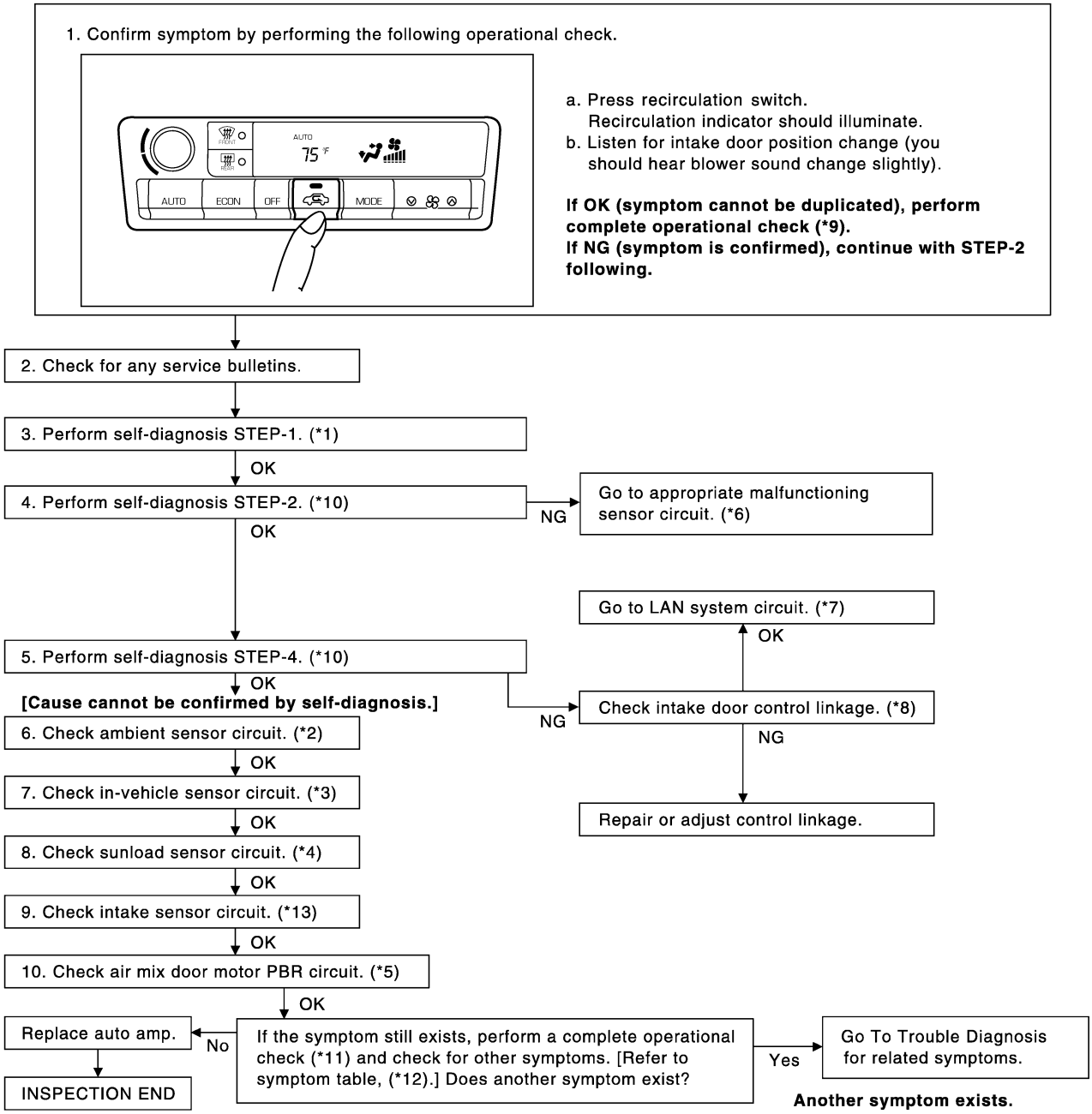

*1	Self-diagnosis ATC-89 , see No.1	*6	Self-diagnosis ATC-89 , see No. 14.	*11	Operational check ATC-49
*2	Ambient sensor ATC-91	*7	LAN system circuit -ATC-55	*12	Symptom table ATC-31
*3	In-vehicle sensor ATC-93	*8	Intake door motor Diagnostic Procedure ATC-66	*13	Intake sensor circuit ATC-99

*4	Sunload sensor ATC-96	*9	Operational check ATC-49
*5	Air mix door motor circuit ATC-61	*10	Self-diagnosis ATC-41 , see No.5 or 7

SYSTEM DESCRIPTION

Component Parts

Intake door control system components are:

- Auto amp.
- Intake door motor
- A/C LAN system (PBR built-in mode motor and air mix door motor)
- In-vehicle sensor
- Ambient sensor
- Sunload sensor
- Intake sensor

System Operation

The intake door control determines intake door position based on the ambient temperature, the intake air temperature and the in-vehicle temperature. When the ECON, DEFROST, or OFF switches are pushed, the auto amplifier sets the intake door at the Fresh position.

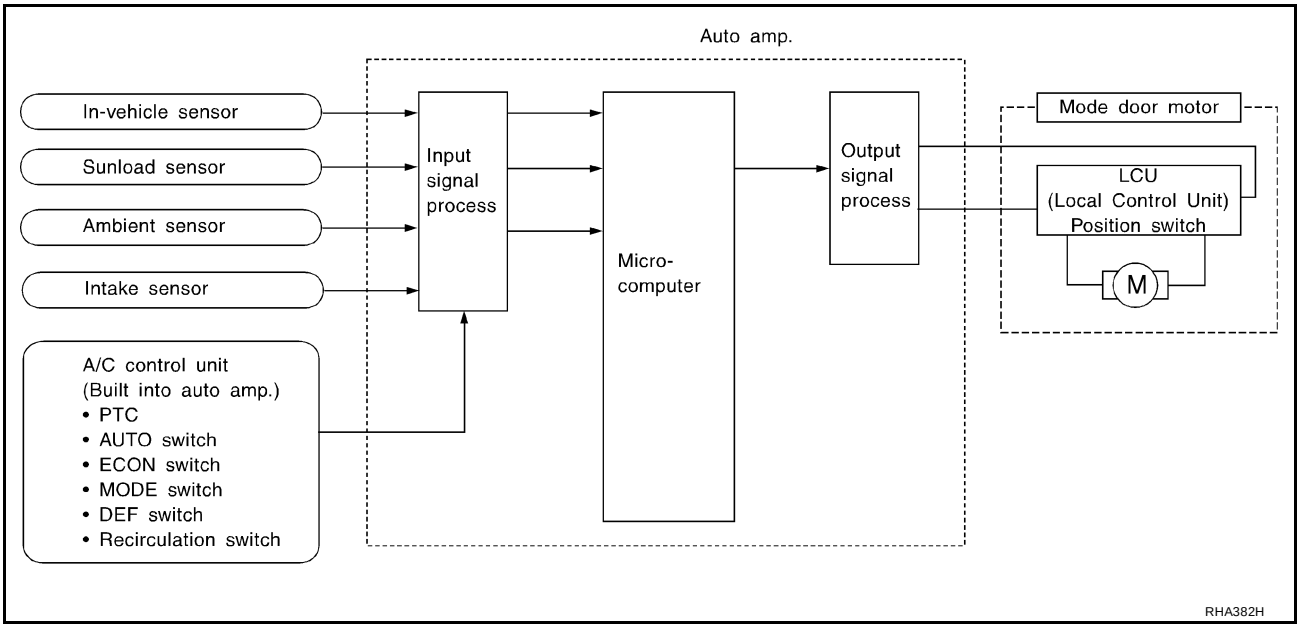

Intake Door Control Specification

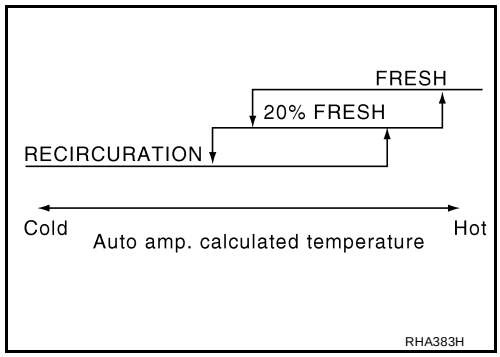

COMPONENT DESCRIPTION

Intake door motor

The intake door motor is attached to the intake unit. It rotates so that air is drawn from inlets set by the auto amplifier. Motor rotation is conveyed to a lever which activates the intake door.

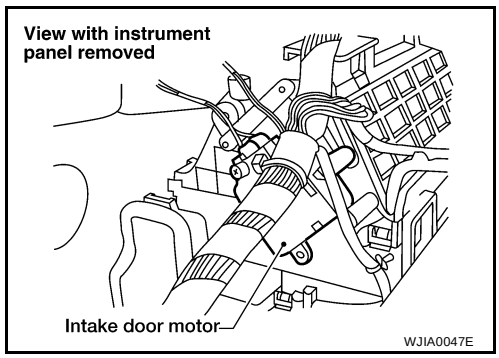

DIAGNOSTIC PROCEDURE

SYMPTOM: Intake door motor does not operate normally.
Perform diagnostic procedure for LAN system circuit. Refer to ATC-55, "LAN System Circuit" .

INTAKE DOOR

1. Install intake door motor on intake unit and connect it to main harness.
2. Set up code No. 41 in Self-diagnosis STEP 4. Refer to ATC-89, "Self-diagnosis" .
3. Make sure intake door operates properly when changing from code No. 41 to 46 by pushing DEF switch.

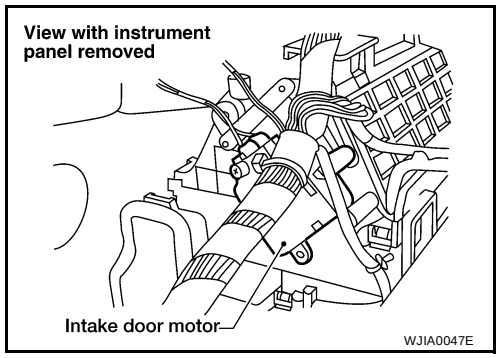

41	42	43	44	45	46
REC		20% FRE	FRE		

Blower Motor Circuit

EJS000XP

SYMPTOM:

- Blower motor operation is malfunctioning.

INSPECTION FLOW

1. Confirm symptom by performing the following operational check.

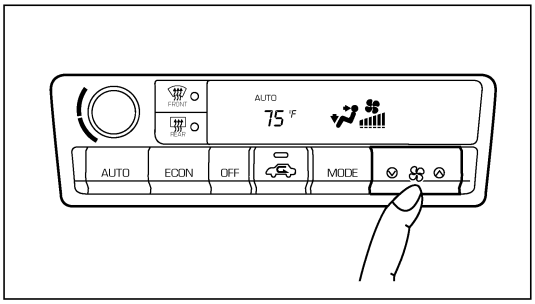

OPERATIONAL CHECK - Blower

a. Press fan switch (up side) one time.
Blower should operate on low speed.
The fan display should have one bar lit.

b. Press fan switch (up side) one more time, and continue checking blower speed and fan display until all speeds are checked.

c. Leave blower on MAX speed.

If OK (symptom cannot be duplicated), perform complete operational check (*1).
If NG (symptom is confirmed), continue with STEP-2 following.

2. Check for any service bulletins. → 3. Perform self-diagnosis STEP-1. (*2)

OK

4. Perform self-diagnosis STEP-2. (*3)
Code No. 20 should be displayed after approx. 25 seconds.

NG → Go to appropriate malfunctioning sensor circuit. (*5)

OK

5. Perform self-diagnosis STEP-4. (*4)
Does blower motor speed change according to each code No.?

Code No.	41	42	43	44	45	46	47	48
Blower motor duty ratio	37%		91%	65%				91%

No → Go to Blower Motor Circuit. (*6)

Yes

6. Is engine coolant temperature below 56˚C (133˚F)?

No → Blower motor operation is normal.

Yes

7. Is blower motor operating under starting blower speed control?

No → Go to Blower Motor Circuit. (*7)

Yes **[Cause cannot be confirmed by self-diagnosis.]**

8. Check ambient sensor circuit. (*8)

OK

9. Check in-vehicle sensor circuit. (*9)

OK

10. Check sunload sensor circuit. (*10)

OK

11. Check intake sensor circuit. (*11)

OK

If the symptom still exists, perform a complete operational check (*12) and check for other symptoms. [Refer to symptom table (*13).] Does another symptom exist?

Yes → Go to Trouble Diagnosis for related symptom.

Another symptom exists.

No

Replace auto amp. → INSPECTION END

WJIA0048E

*1	Operational Check ATC-49	*6	Blower motor circuit ATC-67	*11	Intake sensor circuit ATC-99
*2	Self-diagnosis ATC-89 , see No.1	*7	Blower motor circuit ATC-67	*12	Thermal transmitter (PG Power-***)
*3	Self-diagnosis -ATC-89 , see No.5	*8	Ambient sensor circuit ATC-91	*13	Operational Check ATC-49
*4	Self-diagnosis ATC-89 , see No.7	*9	In-vehicle sensor circuit ATC-93	*14	Symptom table ATC-31
*5	Self-diagnosis ATC-89 , see No.14	*10	Sunload sensor circuit ATC-96		

SYSTEM DESCRIPTION

Component Parts

Fan speed control system components are:

- Auto amp.
- A/C LAN system (PBR built-in mode door motor, air mix door motor and intake door motor)
- In-vehicle sensor
- Ambient sensor
- Sunload sensor
- Intake sensor

System Operation

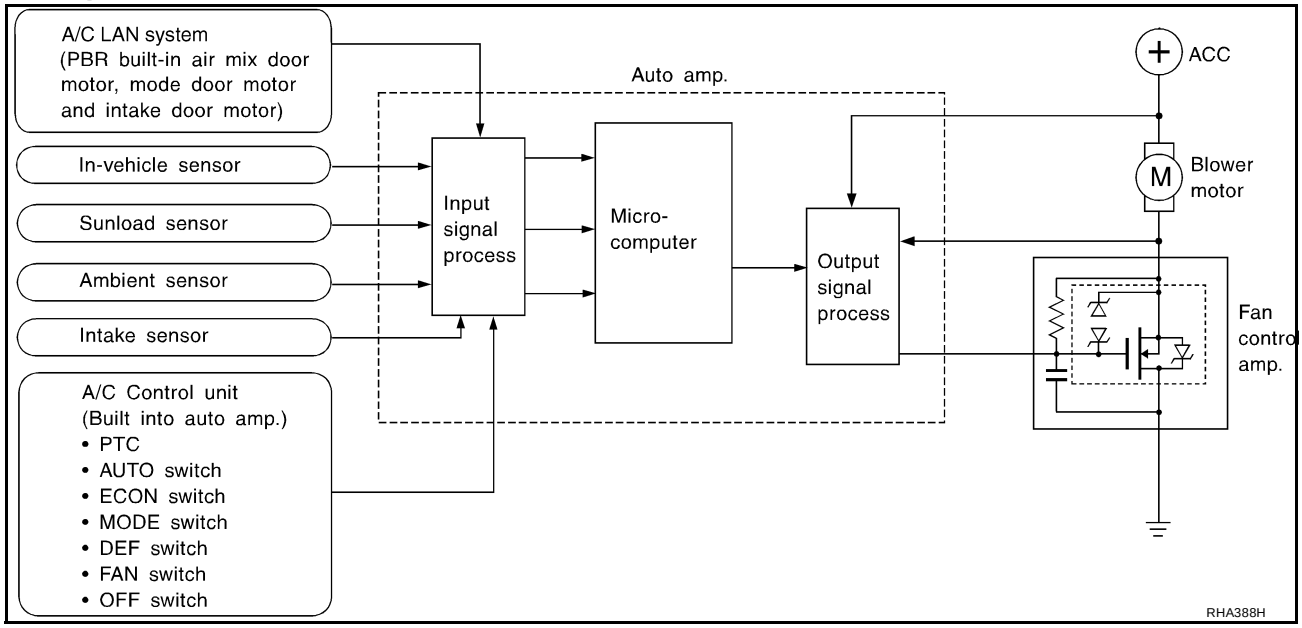

Automatic Mode

In the automatic mode, the blower motor speed is calculated by the automatic amplifier based on inputs from the PBR, in-vehicle sensor, sunload sensor, intake sensor and ambient sensor.
When the air flow is increased, the duty ratio of the blower fan motor's drive signal is changed at 8% sec. to prevent a sudden increase in air flow.
In addition to manual air flow control and the normal automatic air flow control, starting air flow control, low water temperature starting control and high passenger compartment temperature starting control are available.

Starting Fan Speed Control

Start Up From COLD SOAK Condition (Automatic mode)
In a cold start up condition where the engine coolant temperature is below 56°C (133°F), the blower will not operate for a short period of time (up to 150 seconds). The exact start delay time varies depending on the ambient and engine coolant temperature.
In the most extreme case (very low ambient) the blower starting delay will be 150 seconds as described above. After this delay, the blower will operate at low speed until the engine coolant temperature rises above 56°C (133°F), at which time the blower speed will increase to the objective speed.

Start Up From Normal or HOT SOAK Condition (Automatic mode)
The blower will begin operation momentarily after the A/C button is pushed. The blower speed will gradually rise to the objective speed over a time period of 3 seconds or less (actual time depends on the objective blower speed).

Blower Speed Compensation

Sunload
When the in-vehicle temperature and the set temperature are very close, the blower will be operating at low speed. The low speed will vary depending on the sunload. During conditions of high sunload, the blower low

speed is "normal" low speed (approx. 6V). During low or no sunload conditions, the low speed will drop to "low" low speed (approx. 5V).

Fan Speed Control Specification

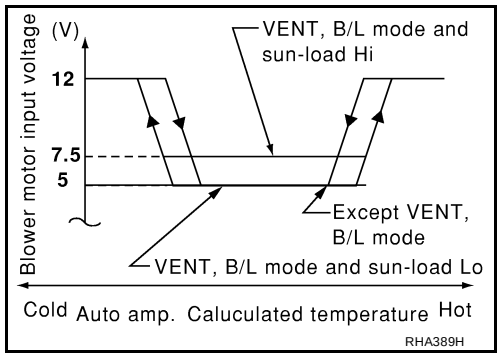

COMPONENT DESCRIPTION

Fan Control Amplifier

The fan control amplifier is located on the cooling unit. The fan control amp. receives a gate voltage from the auto amp. to smoothly maintain the blower fan motor voltage in the 5 to the 12V range (approx.).

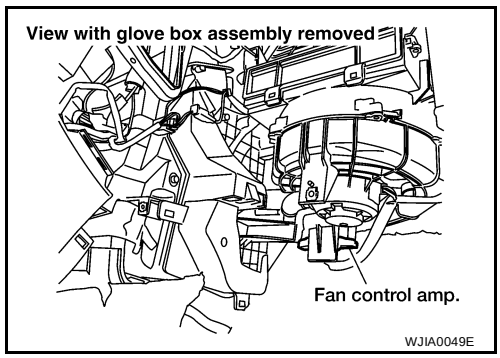

DIAGNOSTIC PROCEDURE

SYMPTOM: Blower motor operation is malfunctioning under Starting Fan Speed Control.

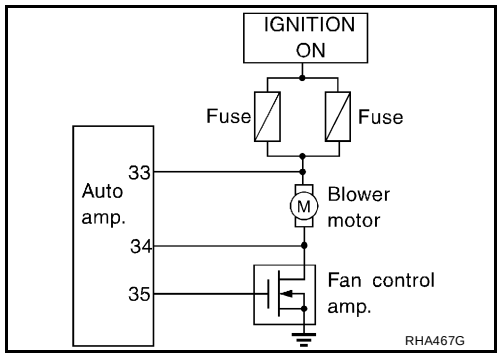

1. CHECK POWER SUPPLY FOR FAN CONTROL AMP.

Terminals			Voltage (V) (Approx.)
(+)		(-)	
Connector	Wire color		
M64-2	L/W	Body ground	12V

Yes or No

Yes >> GO TO 2.
No >> GO TO 8.

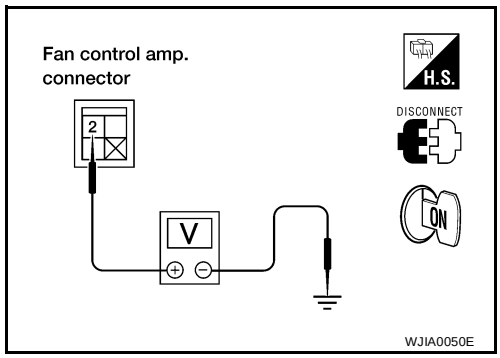

2. CHECK BODY GROUND CIRCUIT FOR FAN CONTROL AMP.

Terminals			Continuity
Connector	Wire color	Body ground	Yes
M64-1	B		

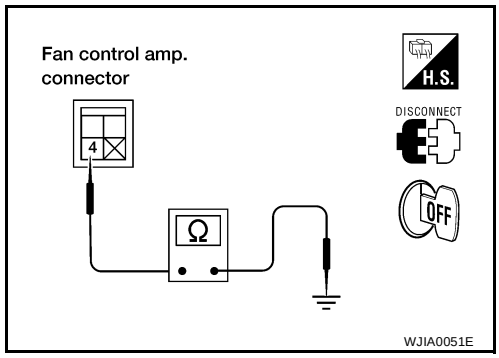

Yes or No

Yes >> Reconnect fan control amp. harness connector and GO TO 3.

No >> Repair harness or connector.

3. CHECK VOLTAGE FOR FAN CONTROL AMP.

Set up Self-diagnosis STEP 4.

Code No.	Terminal No.			Voltage (V) (Approx.)
	(+)		(-)	
	Connector	Wire color		
41-46	M64-2	L/Y	Body ground	12V

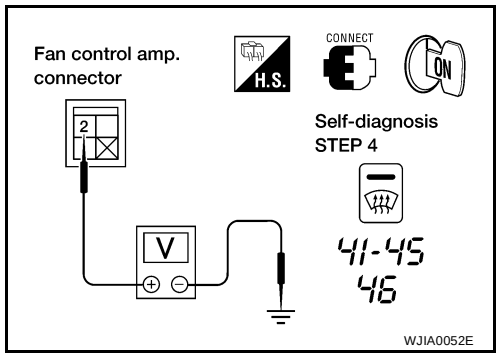

OK or NG

OK >> GO TO 4.

NG >> 1. If the voltage is less than 2.5V, replace fan control amp.

2. If the voltage is more than 3.0V, GO TO 4.

3. Go to “FUNCTION CONFIRMATION PROCEDURE”, ATC-41, "Self-diagnosis" and perform self-diagnosis STEP 4.
Confirm that blower motor operation is normal.

4. CHECK FAN CONTROL AMP.

Refer to ATC-69, "Fan Control Amplifier"

OK or NG

OK >> GO TO 5.

NG >> 1. Replace fan control amp.

2. Go to “FUNCTION CONFIRMATION PROCEDURE”, “ATC-41, "Self-diagnosis" and perform self-diagnosis STEP 4.
Confirm that blower motor operation is normal.

5. CHECK FAN CONTROL AMP. CIRCUIT BETWEEN FAN CONTROL AMP. AND AUTO AMP. (LCU)

1. Disconnect auto amp. (LCU) and fan control amp. harness connector.

Terminals				Continuity
Connector	Wire color	Connector	Wire color	Yes
M64-1	L/Y	M50-35	L/Y	

Continuity should exist.

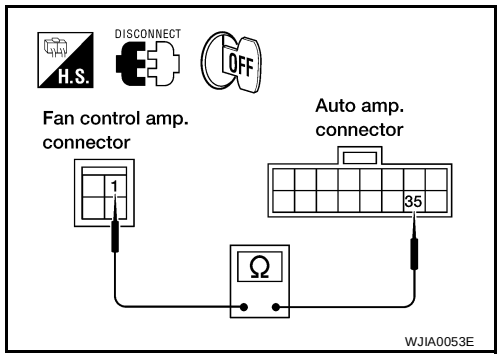

If OK, check harness for short.

OK or NG

OK >> GO TO 6.
NG >> Repair harness or connector.

6. CHECK FAN FEEDBACK CIRCUIT

Reconnect auto amp. (LCU) harness connector.

Terminal			Voltage (V) (Approx.)
(+)		(-)	
Connector	Wire color	Body ground	12V
M50-34	L/W		

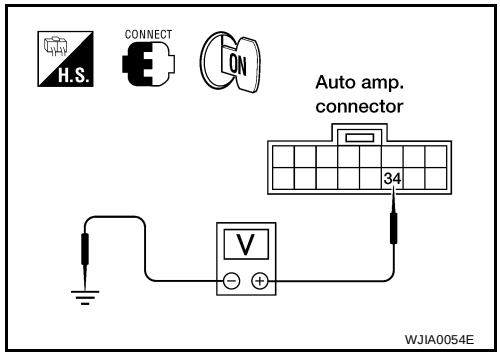

Yes or No

Yes >> GO TO 7.
No >> ● Check power supply circuit and 15A fuses [Nos. 10 and 11, located in the fuse block (J/B)].
● Refer to PG-5, "Wiring Diagram — POWER —" .
– If OK, check for open circuit in wiring harness. Repair or replace as necessary.
– If NG, replace fuse and check wiring harness for short circuit. Repair or replace as necessary.

7. CHECK POWER SUPPLY FOR AUTO AMP.

Terminal			Voltage (V) (Approx.)
(+)		(-)	
Connector	Wire color	Body ground	12V
M50-26	Y/R		

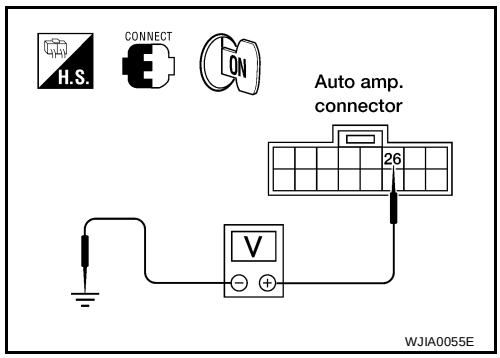

Yes or No

Yes >> 1. Replace auto amp.
2. Go to “FUNCTION CONFIRMATION PROCEDURE”, “Self-diagnosis”, ATC-41 and perform self-diagnosis STEP-4.
Confirm that blower motor operation is normal.

No >> GO TO 10.

8. CHECK POWER SUPPLY FOR BLOWER MOTOR

Disconnect blower motor harness connector.

Terminal			Voltage (V) (Approx.)
(+)		(-)	
Connector	Wire color	Body ground	12V
M62-1	W/L		

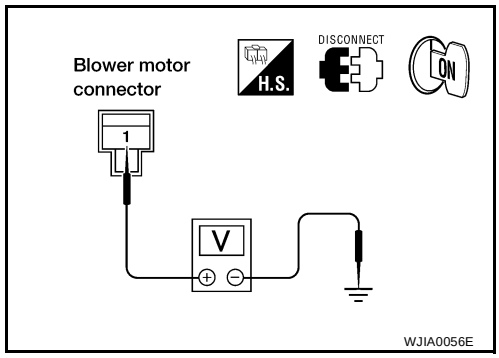

Yes or No

Yes >> GO TO 9.

No >> Check power supply circuit and 15A fuses [Nos. 10 and 11, located in the fuse block (J/B)].

- Check blower motor relay.
- If OK, check for open circuit in wiring harness. Repair or replace as necessary.
- If NG, replace fuse and check wiring harness for short circuit. Repair or replace as necessary.

9. CHECK CIRCUIT CONTINUITY BETWEEN BLOWER MOTOR AND FAN CONTROL AMP.

Disconnect blower motor connector and auto amp. (LCU) connector.

Terminals				Continuity
Connector	Wire color	Connector	Wire color	
M62-2	L/W	M64-2	L/W	Yes

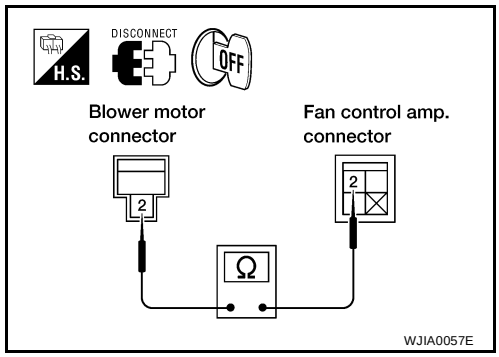

OK or NG

OK >> Check blower motor. Refer to ATC-73, "Blower Motor" .

1. If NG, replace blower motor.
2. Go to “FUNCTION CONFIRMATION PROCEDURE”, “Self-diagnosis”, ATC-41 and perform self-diagnosis STEP-4.
   Confirm that blower motor operation is normal.

NG >> Repair harness or connector.

10. CHECK BLOWER MOTOR CIRCUIT BETWEEN BLOWER MOTOR AND AUTO AMP. (LCU)

Terminals				Continuity
Connector	Wire color	Connector	Wire color	
M62-2	L/W	M50-34	L/W	Yes

Continuity should exist.

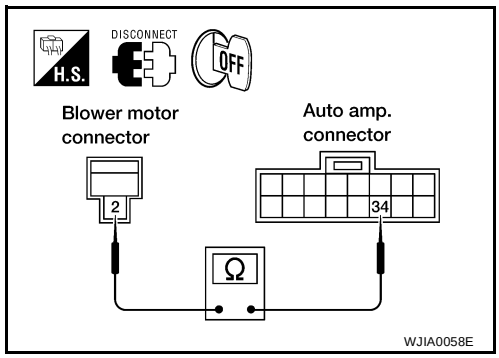

If OK, check harness for short.

OK or NG

OK >> INSPECTION END

NG >> Repair harness or connector.

COMPONENT INSPECTION

Blower Motor

Confirm smooth rotation of the blower motor.

- Ensure that there are no foreign particles inside the intake unit.

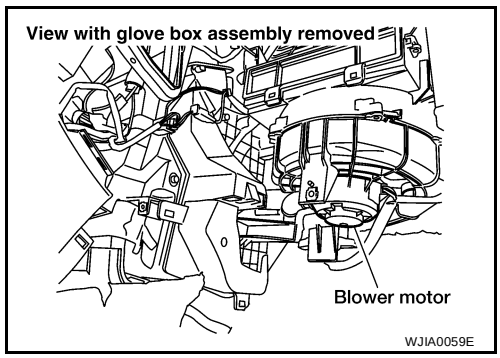

Fan Control Amp.

Check continuity between terminals.

Terminal Nos.	Continuity
2 - 4	Yes

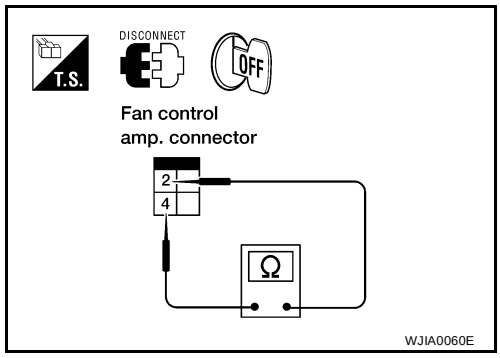

Magnet Clutch Circuit

EJS000XQ

SYMPTOM: Magnet clutch does not engage.

INSPECTION FLOW

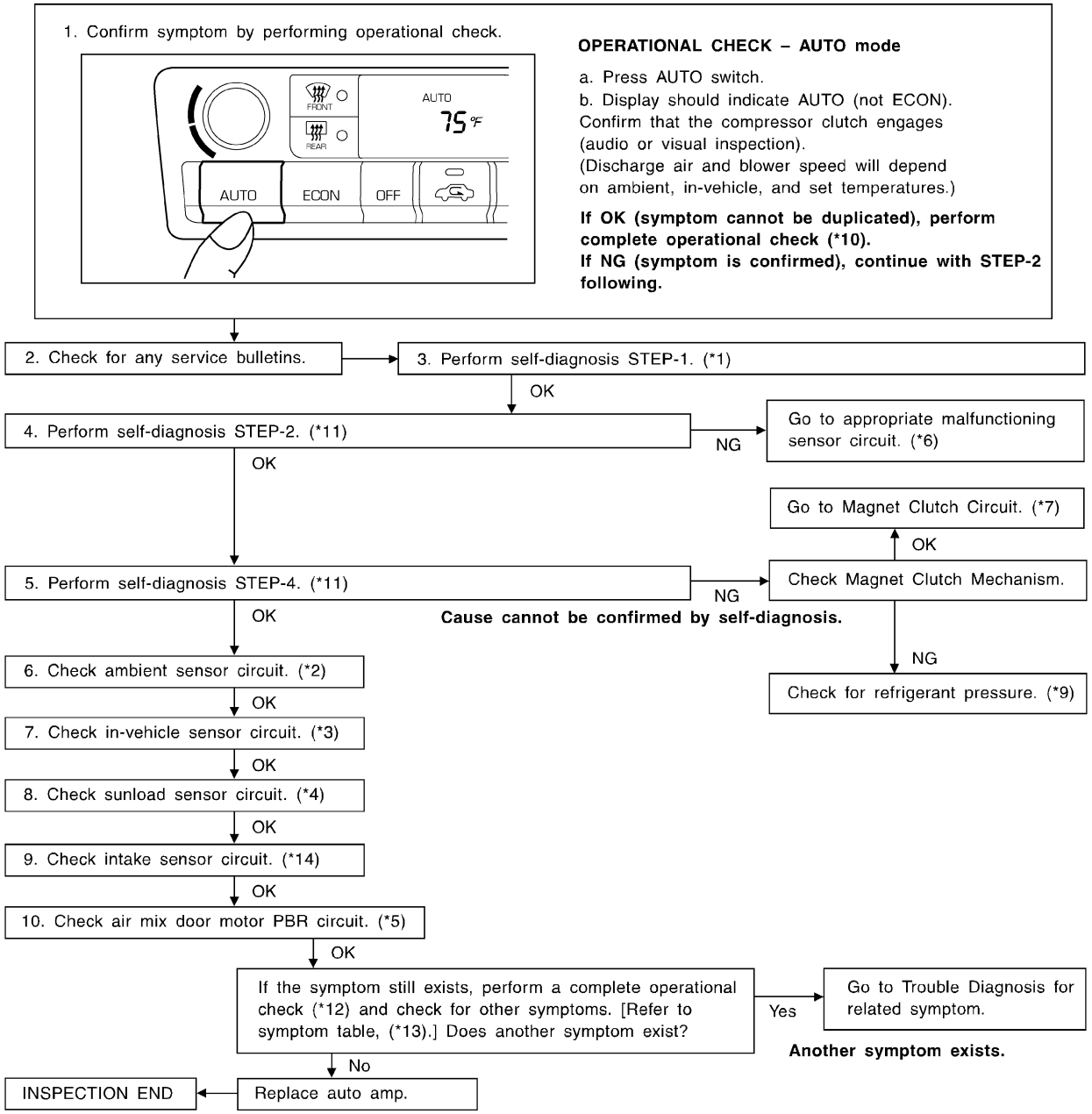

*1	Self-diagnosis ATC-41 , see No.1.	*6	Self-diagnosis ATC-89 , see No. 14.	*11	Operational check ATC-49
*2	Ambient sensor circuit ATC-91	*7	Magnet clutch circuit ATC-74	*12	Symptom table ATC-31
*3	In-vehicle sensor circuit ATC-93	*8	Trouble diagnoses for abnormal pressure ATC-83	*13	Intake sensor circuit ATC-99
*4	Sunload sensor circuit ATC-96	*9	Operational check ATC-49		
*5	Air mix door motor circuit ATC-61	*10	Self-diagnosis ATC-41 , see No.7.		

SYSTEM DESCRIPTION

Auto amplifier controls compressor operation by ambient temperature and signal from ECM.

Low Temperature Protection Control

Auto amp. will turn the compressor ON or OFF as determined by a signal detected by ambient sensor.
When ambient temperatures are greater than -2°C (28°F), the compressor turns ON. The compressor turns OFF when ambient temperatures are less than -5°C (23°F).

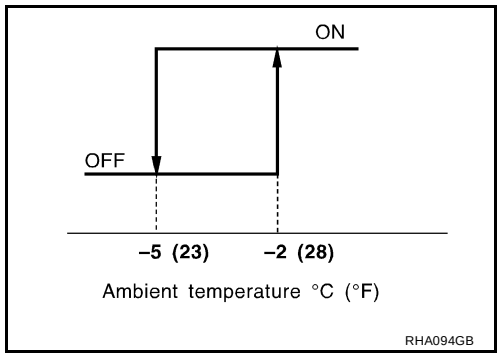

DIAGNOSTIC PROCEDURE

SYMPTOM: Magnet clutch does not engage when A/C switch is ON.

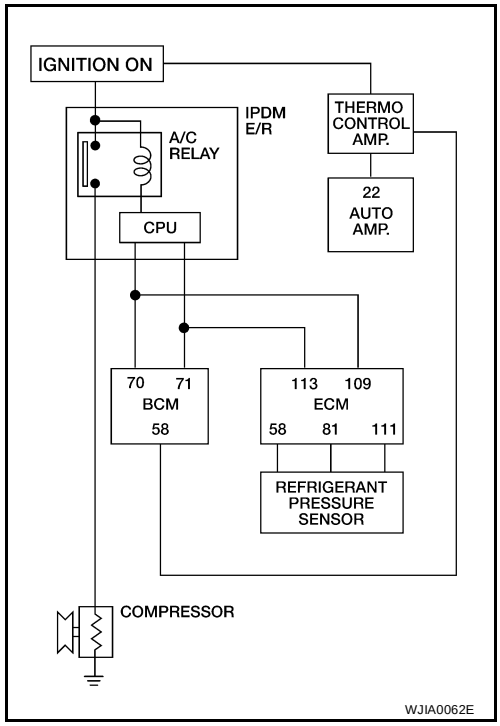

1. CHECK CIRCUIT CONTINUITY BETWEEN A/C RELAY IN IPDM E/R AND COMPRESSOR

Terminals				Continuity
Connector	Wire color	Connector	Wire color	Yes
F3-1	Y/B	E124-28	Y/B	

If OK, check harness for short.

OK or NG

OK >> GO TO 2.
NG >> Repair harness or connector.

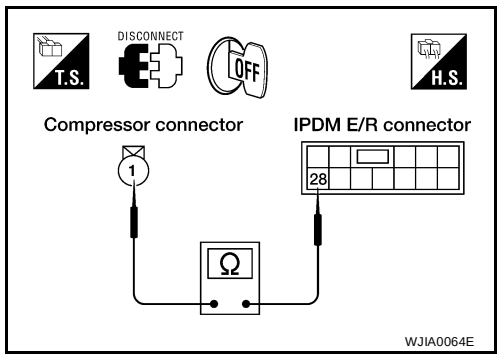

2. CHECK POWER SUPPLY FOR COMPRESSOR

Disconnect compressor harness connector.

Terminal			Voltage (V) (Approx.)
(+)		(-)	
Connector	Wire color	Body ground	12V
F3-1	Y/B		

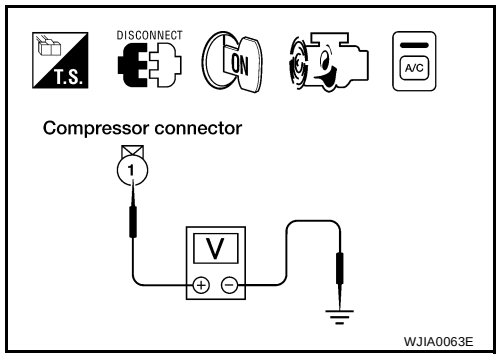

OK or NG

OK >> Check magnet clutch coil.

1. If NG, replace magnet clutch. Refer to ATC-123, "Removal and Installation for Compressor Clutch" .
2. If OK, check compressor mounting points for looseness or corrosion and repair as necessary.

NG >> GO TO 3.

3. CHECK A/C RELAY IN IPDM E/R

Terminal			Voltage (V) (Approx.)
(+)		(-)	
Connector	Wire color	Body ground	12V
E124-28	Y/B		

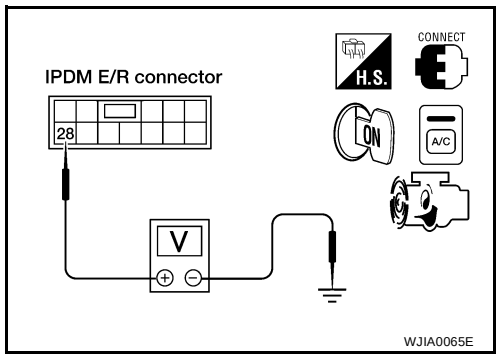

OK or NG

OK >> GO TO 4.

NG >> ● Disconnect BCM harness connector M18.
● GO TO 8.

4. CHECK VOLTAGE FOR BCM

Terminal			Voltage (V) (Approx.)
(+)		(-)	
Connector	Wire color	Body ground	12V
M18-58	L/W		

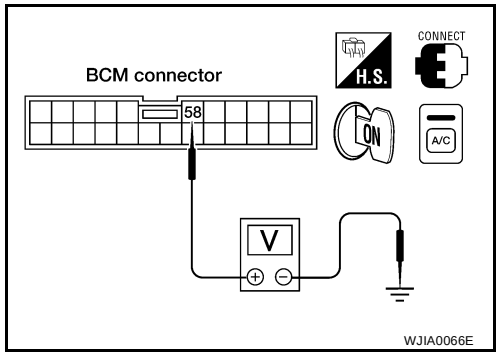

OK or NG

OK >> GO TO 5.

NG >> Check BCM.

5. CHECK REFRIGERANT PRESSURE SENSOR INPUT SIGNAL

Terminal			Voltage (V) (Approx.)
(+)		(-)	
Connector	Wire color	Body ground	12V
F54-81	W		

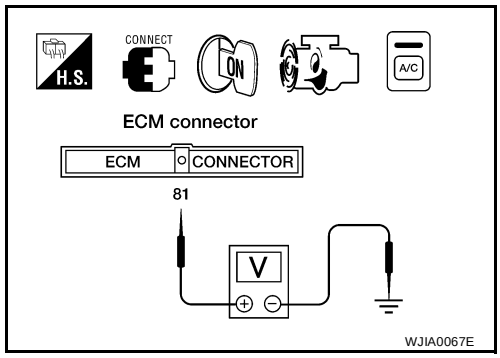

OK or NG

OK >> GO TO 6.

NG >> 1. Repair harness or connector.

2. Go to ATC-42, "FUNCTION CONFIRMATION PROCEDURE" and perform self-diagnosis STEP-4. Confirm that magnet clutch operation is normal.

6. CHECK REFRIGERANT PRESSURE SENSOR

Refer to ATC-79, "Refrigerant Pressure Sensor" .

OK or NG

OK >> GO TO 7.

NG >> Replace refrigerant pressure sensor.

7. CHECK VOLTAGE FOR THERMO CONTROL AMP.

Terminal			Voltage (V) (Approx.)
(+)		(-)	
Connector	Wire color	Body ground	12V
M52-1	G		

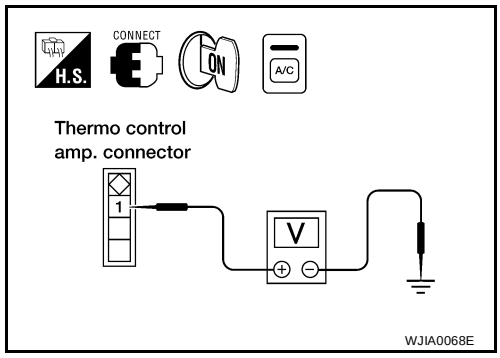

OK or NG

OK >> GO TO 8.

NG >>
- Check power supply circuit and 15A fuse [No.12 located at fuse block (J/B)]. Refer to PG-5, "Wiring Diagram — POWER —" .
- If OK, check for open circuit in wiring harness. Repair or replace as necessary.
- If NG, replace fuse and check wiring harness for short circuit. Repair or replace as necessary.

8. CHECK POWER SUPPLY FOR THERMO CONTROL AMP.

Terminal			Voltage (V) (Approx.)
(+)		(-)	
Connector	Wire color	Body ground	12V
M52-2	L/W		

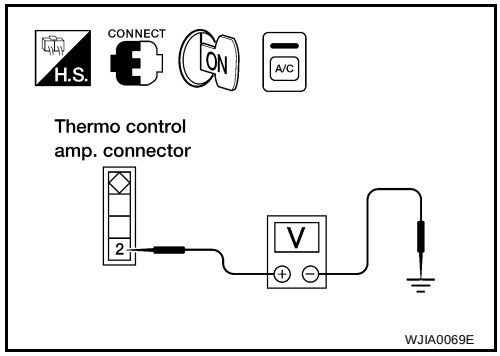

OK or NG

OK >> GO TO 9.

NG >> Repair or replace thermo control amp.

9. CHECK THERMO CONTROL AMP. OPERATION

Terminals			Continuity
(+)		(-)	Yes
Connector	Wire color	Body ground	
M52-3	G/Y		

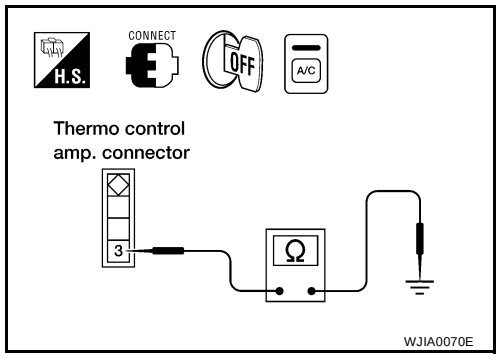

OK or NG

OK >> GO TO 10.
NG >> Replace thermo control amp.

10. CHECK THERMO CONTROL AMP.

Refer to ATC-79, "Thermo Control Amp." .

OK or NG

OK >> GO TO 11.
NG >> Repair harness or connector.

11. CHECK CIRCUIT CONTINUITY BETWEEN THERMO CONTROL AMP. AND AUTO AMP.

Disconnect auto amp. connector.

Terminals				Continuity
Connector	Wire color	Connector	Wire color	Yes
M52-3	G/Y	M50-22	G/Y	

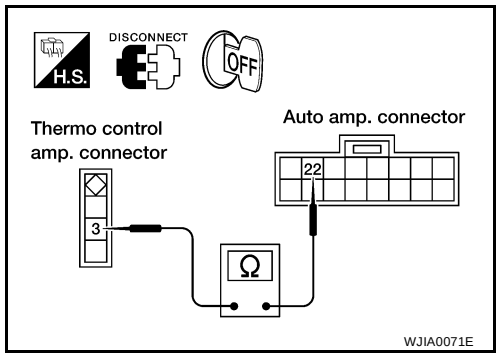

OK or NG

OK >> GO TO 12.
NG >> Repair harness or connector.

12. CHECK COMPRESSOR ON SIGNAL

When compressor is ON or OFF, check voltage between auto amp. and ground.

Terminal			Voltage (V) (Approx.)
(+)		(-)	
Connector	Wire color	Body ground	Compressor ON: 0V Compressor OFF: 5V
M50-22	G/Y		

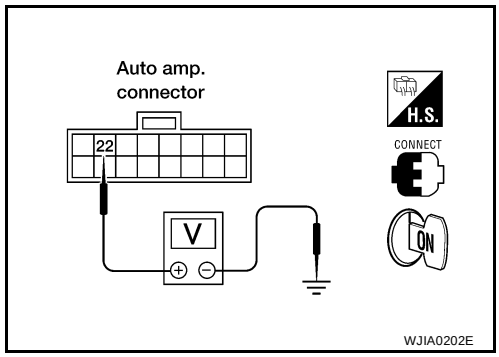

OK or NG

OK >> GO TO 13.
NG >>
- When compressor is ON and voltage is not approx. 0V, replace auto amp.
- When compressor is OFF and voltage is not approx. 5V, BCM is malfunctioning.

13. CHECK CAN COMMUNICATION CIRCUITS

Check CAN communication circuits between BCM to ECM and between ECM to IPDM E/R. Refer to LAN-4, "CAN COMMUNICATION" .

OK or NG

OK >> ECM malfunctioning.
NG >> Repair or replace component based on the result of diagnosis.

COMPONENT INSPECTION

Refrigerant Pressure Sensor

The refrigerant pressure sensor is attached to the condenser.

- Refer to EC-1252, "REFRIGERANT PRESSURE SENSOR" .

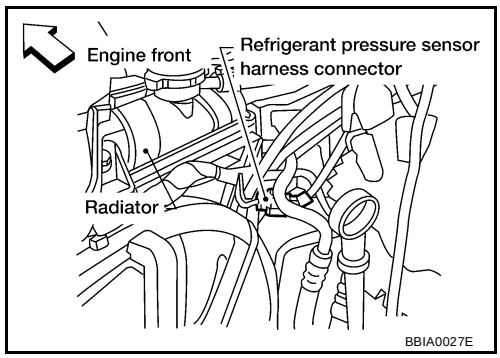

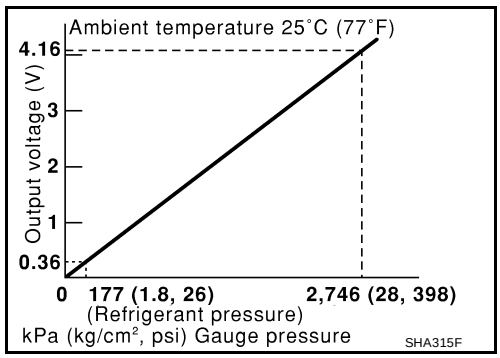

Thermo Control Amp.

1. Run engine and operate A/C system.
2. Connect the voltmeter from harness side.
3. Check the thermo control amp. operation as shown in the table.

Evaporator outlet air temperature °C (°F)	Thermo amp. operation	Voltage (V) (Approx.)
Decreasing to 2.5 - 3.5 (37 - 38)	Turn OFF	12V
Increasing to 4.0 - 5.0 (39 - 41)	Turn ON	0V

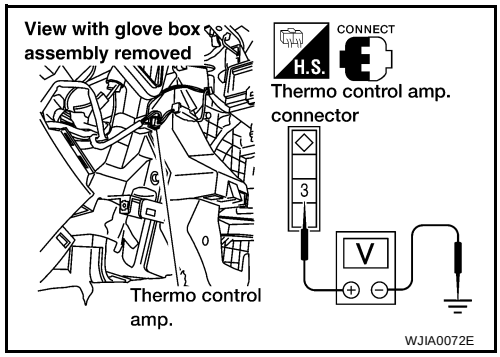

Insufficient Cooling

EJS000XR

SYMPTOM: Insufficient cooling

INSPECTION FLOW

1. Confirm symptom by performing the following operational check.

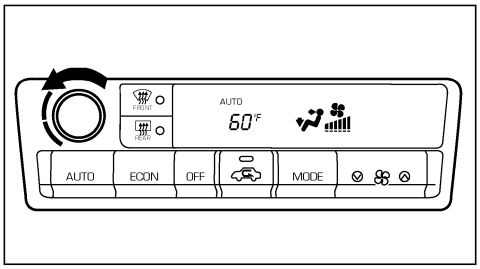

OPERATIONAL CHECK – Temperature decrease

a. Turn the temperature dial counterclockwise until 18˚C (60˚F) is displayed.

b. Check for cold air at discharge air outlets.

If OK (symptom cannot be duplicated), perform complete operational check (*10).
If NG (symptom is confirmed), continue with STEP-2 following.

2. Check for any service bulletins. → 3. Perform self-diagnosis STEP-1. (*1)

3. Perform self-diagnosis STEP-1. (*1) — OK ↓ / NG → Go to appropriate malfunctioning sensor circuit. (*5)

4. Perform self-diagnosis STEP-2. (*11) — OK ↓ / NG → Go to appropriate malfunctioning sensor circuit. (*5)

5. Perform self-diagnosis STEP-4. (*11) — OK ↓ / NG → **Go to appropriate malfunctioning items.**
- Check LAN system circuit. (*6)
- Check blower motor circuit. (*7)
- Check magnet clutch circuit. (*8)

6. Check compressor belt tension. Refer to MA-(*13), “Checking Drive Belts”. — OK ↓ / NG → Adjust or replace compressor belt.

7. Check air mix door operation. (*2) — OK ↓ / NG → Adjust or replace air mix door control linkage.

8. Check cooling fan motor operation. — OK ↓ / NG → Refer to EC-(*14), “System Description”.

9. Before connecting ACR4 to vehicle, check ACR4 gauges. No refrigerant pressure should be displayed. If NG, recover refrigerant from equipment lines. — OK ↓

10. Confirm refrigerant purity in supply tank using ACR4 and refrigerant identifier. — OK ↓ / NG → Refer to Contaminated refrigerant. (*12)

11. Connect ACR4 to vehicle.
Confirm refrigerant purity in vehicle A/C system using ACR4 and refrigerant identifier. — OK ↓ / NG → Refer to Contaminated refrigerant. (*12)

12. Check refrigeration cycle pressure with manifold gauge connected.
Refer to (*3). — OK ↓ / NG → Perform performance test diagnoses. Refer to (*9).

13. Check for evaporator coil freeze up. — (Does not freeze up.) OK ↓ / NG (Freeze up.) → Replace compressor.

14. Check ducts for air leaks. — OK ↓ / NG → Replair air leaks.

15. Perform temperature setting trimmer. (*4)
(1) Set up AUXILIARY MECHANISM mode in self-diagnosis.
(2) Turn temperature dial counterclockwise as desired. — OK ↓

INSPECTION END

WJIA0073E

*1	Self-diagnosis ATC-41 , see No.1.	*6	LAN system circuit ATC-55	*10	Operational check ATC-49
*2	Air mix door motor circuit ATC-61	*7	Blower motor circuit ATC-67	*11	Self-diagnosis ATC-41 , see No.5 or 7.
*3	Test reading ATC-83	*8	Magnet clutch circuit ATC-74	*12	Contaminated refrigerant ATC-4
*4	Self-diagnosis STEP6, Auxiliary mechanism ATC-41	*9	Performance test diagnoses ATC-82	*13	Checking drive belts
*5	Self-diagnosis ATC-41 , see No. 14.			*14	Cooling fan motor operation

PERFORMANCE TEST DIAGNOSES

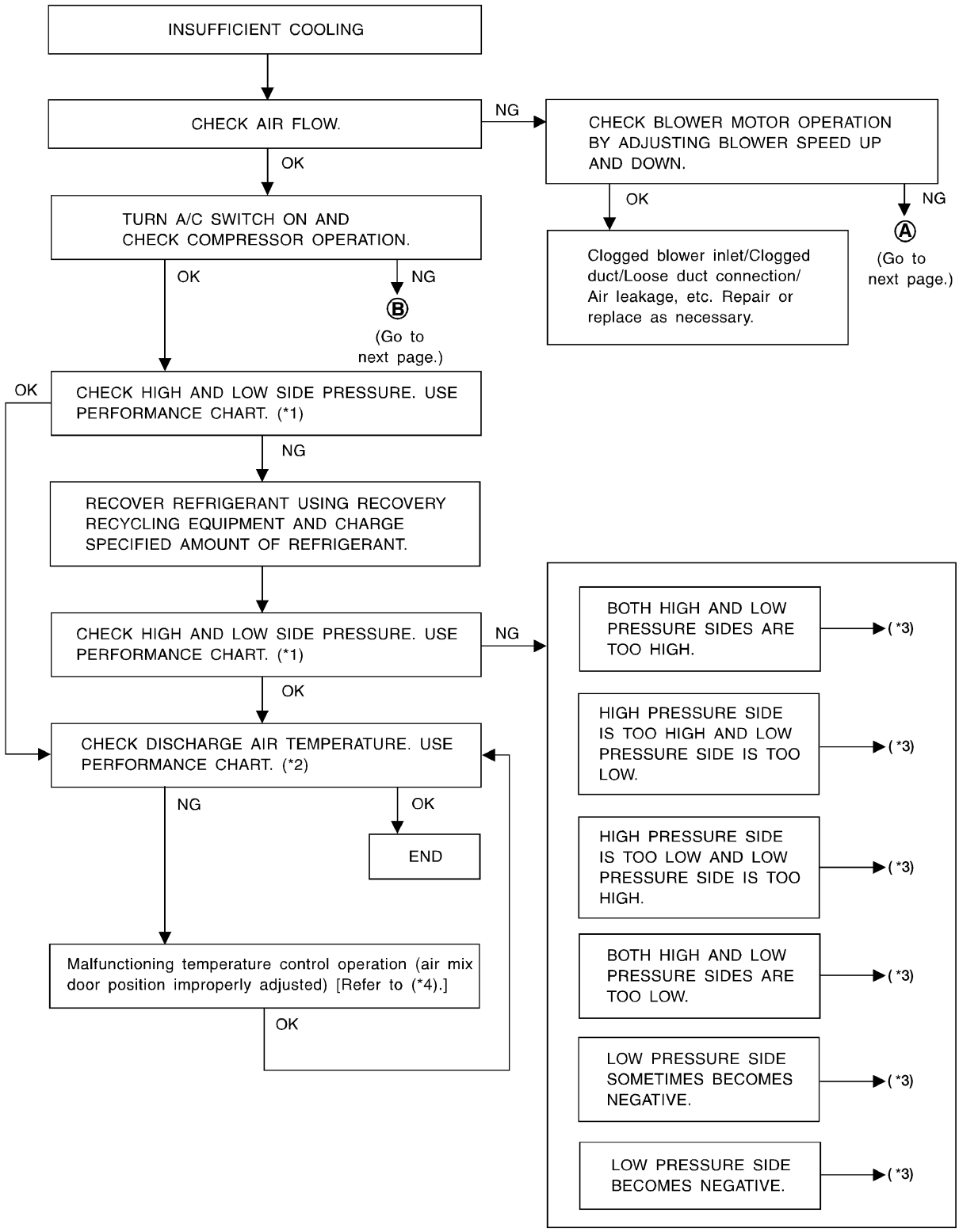

*1 Performance chart ATC-82

*2 Performance chart ATC-82

*3 Trouble diagnoses for abnormal pressure ATC-83

*4 Air mix door motor circuit ATC-61

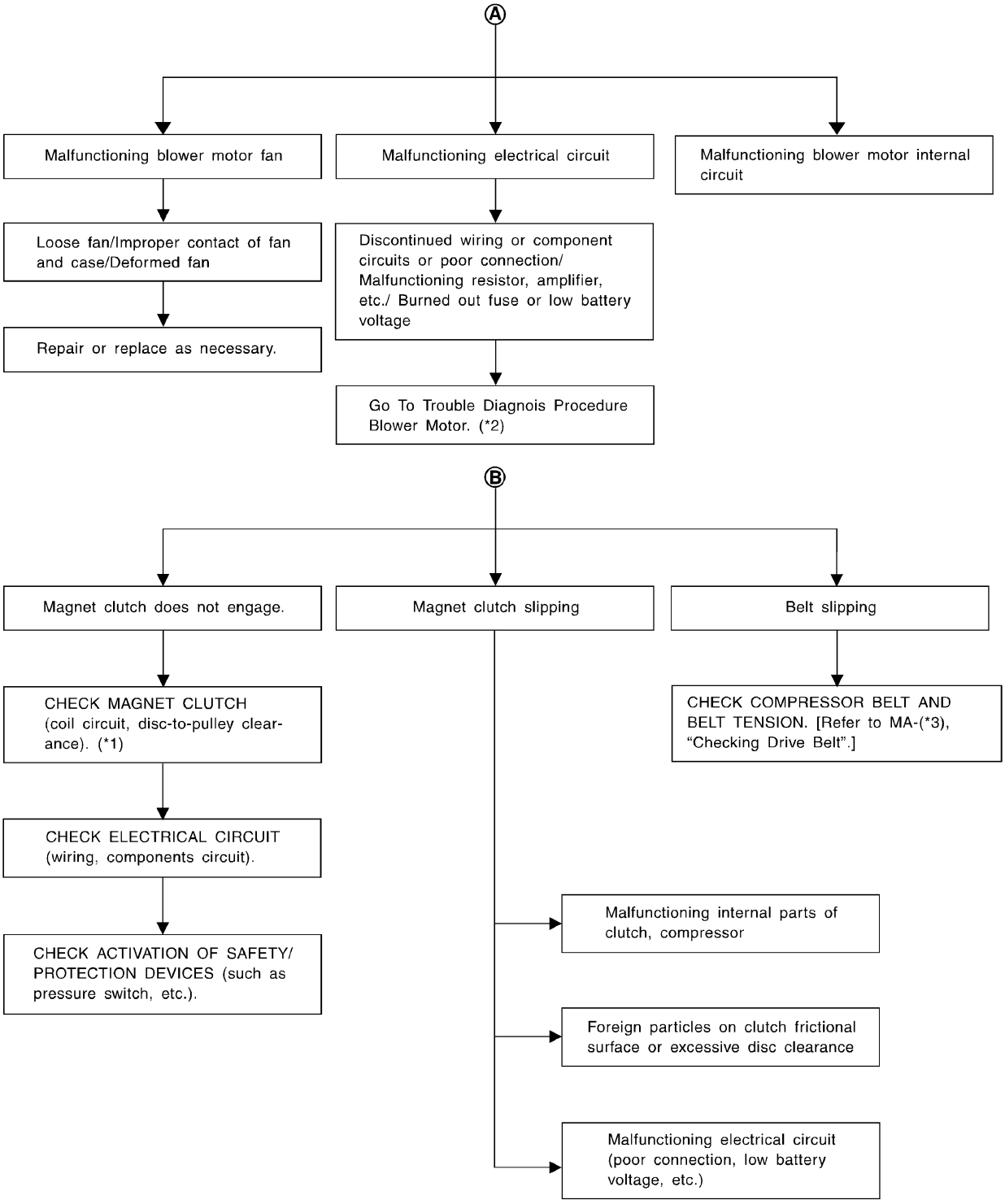

*1 Magnet clutch installation ATC-123 *2 Trouble diagnoses for blower motor circuit ATC-67 *3 Belt tension

PERFORMANCE CHART

Test Condition

Testing must be performed as follows:

Vehicle location	Indoors or in the shade (in a well-ventilated place)
Doors	Closed
Door windows	Open
Hood	Open
TEMP.	Max. COLD
Mode switch	(Ventilation) set
Intake switch	(Recirculation) set
(blower) speed	Max. speed set
Engine speed	Idle speed
Operate the air conditioning system for 10 minutes before taking measurements.	

Test Reading

Recirculating-to-discharge Air Temperature Table

Inside air (Recirculating air) at blower assembly inlet		Discharge air temperature at center ventilator °C (°F)
Relative humidity %	Air temperature °C (°F)	
50 - 60	25 (77)	10.0 - 12.3 (50 - 54)
	30 (86)	13.2 - 15.3 (56 - 60)
	35 (95)	17.2 - 21.0 (63 - 70)
60 - 70	25 (77)	12.3 - 14.9 (54 - 59)
	30 (86)	15.3 - 19.3 (60 - 67)
	35 (95)	21.0 - 24.4 (70 - 76)

Ambient Air Temperature-to-operating Pressure Table

Ambient air		High-pressure (Discharge side) kPa (kg/cm2, psi)	Low-pressure (Suction side) kPa (kg/cm2, psi)
Relative humidity %	Air temperature °C (°F)		
50 - 70	30 (86)	1,220 - 1,500 (12.44 - 15.30, 176.9 - 217.5)	240 - 295 (2.45 - 3.01, 34.8 - 42.8)
	35 (95)	1,360 - 1,690 (13.87 - 17.24, 197.2 - 245.1)	275 - 335 (2.81 - 3.42, 39.9 - 48.6)
	40 (104)	1,500 - 1,830 (12.44 - 18.67, 176.9 - 265.4)	310 - 375 (3.16 - 3.83, 45.0 - 54.4)

TROUBLE DIAGNOSES FOR ABNORMAL PRESSURE

Whenever system's high and/or low side pressure is abnormal, diagnose using a manifold gauge. The marker above the gauge scale in the following tables indicates the standard (normal) pressure range. Since the standard (normal) pressure, differs from vehicle to vehicle, refer to Ambient Air Temperature-to-operating Pressure Table above.

Both High and Low-pressure Sides are Too High

Gauge indication	Refrigerant cycle	Probable cause	Corrective action
Both high and low-pressure sides are too high. 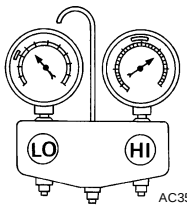 AC359A	Pressure is reduced soon after water is splashed on condenser.	Excessive refrigerant charge in refrigeration cycle	Reduce refrigerant until specified pressure is obtained.
	Air suction by cooling fan is insufficient.	Insufficient condenser cooling performance ↓ 1. Condenser fins are clogged. 2. Improper fan rotation of cooling fan	● Clean condenser. ● Check and repair cooling fan as necessary.
	● Low-pressure pipe is not cold. ● When compressor is stopped high-pressure value quickly drops by approximately 196 kPa (2 kg/cm^2 , 28 psi). It then decreases gradually thereafter.	Poor heat exchange in condenser (After compressor operation stops, high pressure decreases too slowly.) ↓ Air in refrigeration cycle	Evacuate repeatedly and recharge system.
	Engine tends to overheat.	Engine cooling systems malfunction.	Check and repair each engine cooling system.
	● An area of the low-pressure pipe is colder than areas near the evaporator outlet. ● Plates are sometimes covered with frost.	● Excessive liquid refrigerant on low-pressure side ● Excessive refrigerant discharge flow ● Expansion valve is open a little compared with the specification. ↓ 1. Improper thermal valve installation 2. Improper expansion valve adjustment	Replace expansion valve.

High-pressure Side is Too High and Low-pressure Side is Too Low

Gauge indication	Refrigerant cycle	Probable cause	Corrective action
High-pressure side is too high and low-pressure side is too low. 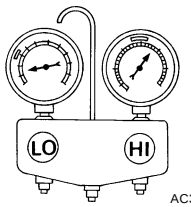 AC360A	Upper side of condenser and high-pressure side are hot, however, liquid tank is not so hot.	High-pressure tube or parts located between compressor and condenser are clogged or crushed.	● Check and repair or replace malfunctioning parts. ● Check lubricant for contamination.

High-pressure Side is Too Low and Low-pressure Side is Too High

Gauge indication	Refrigerant cycle	Probable cause	Corrective action
High-pressure side is too low and low-pressure side is too high. 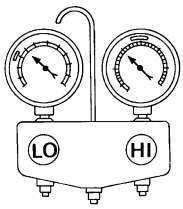 AC356A	High and low-pressure sides become equal soon after compressor operation stops.	Compressor pressure operation is improper. ↓ Damaged inside compressor packings	Replace compressor.
	No temperature difference between high and low-pressure sides	Compressor pressure operation is improper. ↓ Damaged inside compressor packings.	Replace compressor.

Both High- and Low-pressure Sides are Too Low

Gauge indication	Refrigerant cycle	Probable cause	Corrective action
Both high- and low-pressure sides are too low. 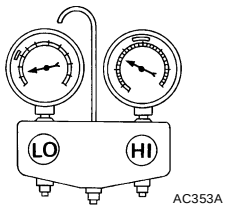	● There is a big temperature difference between receiver drier outlet and inlet. Outlet temperature is extremely low. ● Liquid tank inlet and expansion valve are frosted.	Liquid tank inside is slightly clogged.	● Replace desiccant assy. ● Check lubricant for contamination.
	● Temperature of expansion valve inlet is extremely low as compared with areas near liquid tank. ● Expansion valve inlet may be frosted. ● Temperature difference occurs somewhere in high-pressure side	High-pressure pipe located between receiver drier and expansion valve is clogged.	● Check and repair malfunctioning parts. ● Check lubricant for contamination.
	Expansion valve and liquid tank are warm or only cool when touched.	Low refrigerant charge ↓ Leaking fittings or components	Check refrigerant for leaks. Refer to Checking Refrigerant Leaks, ATC-129, "Checking for Refrigerant Leaks" and ATC-130, "Electronic Refrigerant Leak Detector" .
	There is a big temperature difference between expansion valve inlet and outlet while the valve itself is frosted.	Expansion valve closes a little compared with the specification. ↓ 1. Improper expansion valve adjustment 2. Malfunctioning thermal valve 3. Outlet and inlet may be clogged.	● Remove foreign particles by using compressed air. ● Check lubricant for contamination.
	An area of the low-pressure pipe is colder than areas near the evaporator outlet.	Low-pressure pipe is clogged or crushed.	● Check and repair malfunctioning parts. ● Check lubricant for contamination.
	Air flow volume is not enough or is too low.	Evaporator is frozen.	● Check thermo control amp. operation. ● Replace compressor.

Low-pressure Side Sometimes Becomes Negative

Gauge indication	Refrigerant cycle	Probable cause	Corrective action
Low-pressure side sometimes becomes negative. 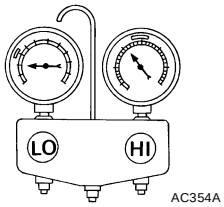	● Air conditioning system does not function and does not cyclically cool the compartment air. ● The system constantly functions for a certain period of time after compressor is stopped and restarted.	Refrigerant does not discharge cyclically. ↓ Moisture is frozen at expansion valve outlet and inlet. ↓ Water is mixed with refrigerant.	● Drain water from refrigerant or replace refrigerant. ● Replace desiccant assy.

Low-pressure Side Becomes Negative

Gauge indication	Refrigerant cycle	Probable cause	Corrective action
Low-pressure side becomes negative. 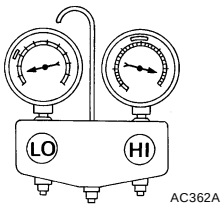 	Liquid tank or front/rear side of expansion valve's pipe is frosted or dewed.	High-pressure side is closed and refrigerant does not flow. ↓ Expansion valve or liquid tank is frosted.	Leave the system at rest until no frost is present. Start it again to check whether or not the problem is caused by water or foreign particles. ● If water is the cause, initially cooling is okay. Then the water freezes causing a blockage. Drain water from refrigerant or replace refrigerant. ● If due to foreign particles, remove expansion valve and remove the particles with dry and compressed air (not shop air). ● If either of the above methods cannot correct the problem, replace expansion valve. ● Replace desiccant assy. ● Check lubricant for contamination.

Insufficient Heating

EJS000XS

SYMPTOM: Insufficient heating

INSPECTION FLOW

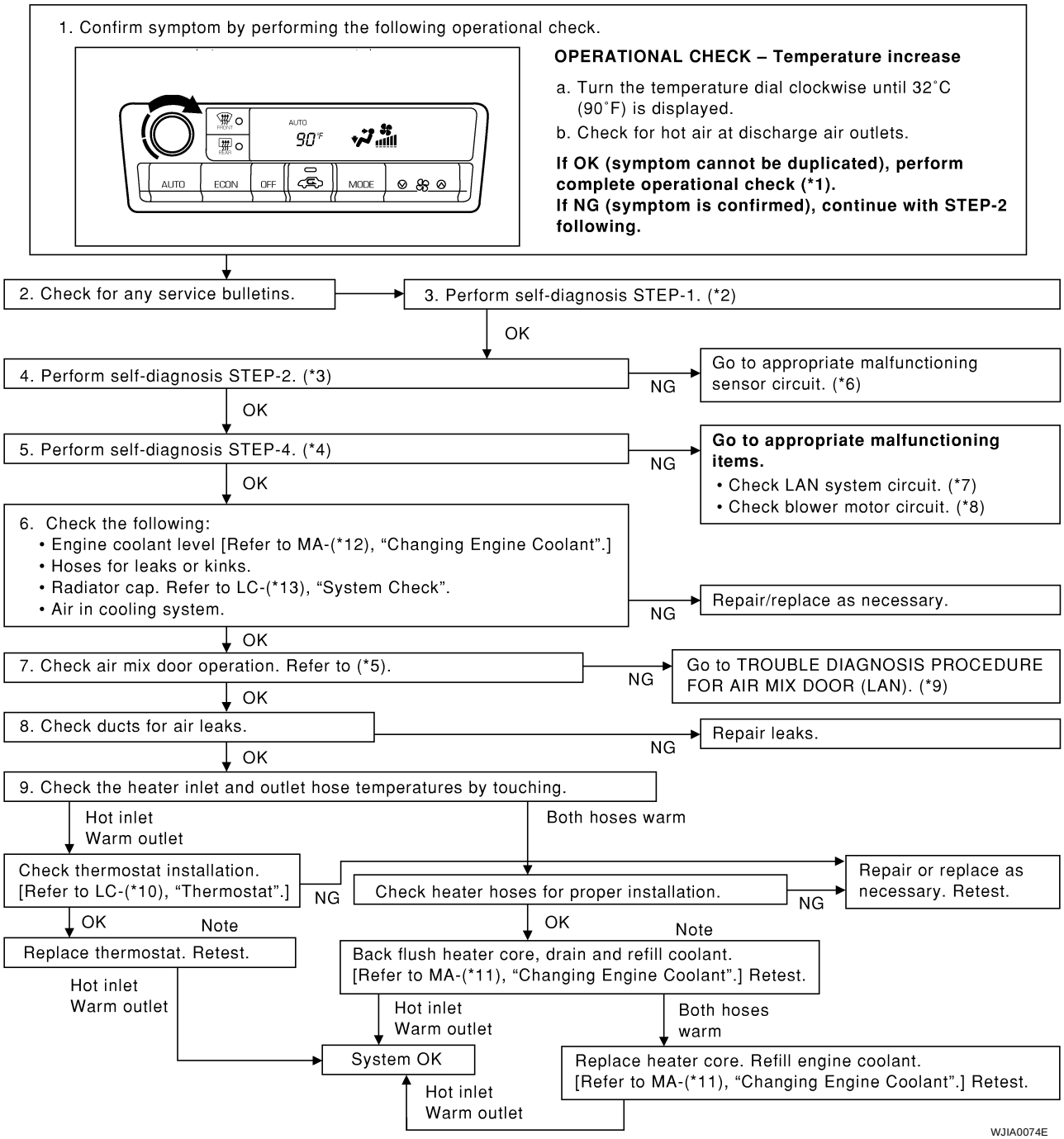

*1	Operational check ATC-49	*6	Self-diagnosis ATC-41 , see No.14.	*10	Thermostat (LC)
*2	Self-diagnosis ATC-41 , see No.1.	*7	LAN system circuit ATC-55	*11	Changing engine coolant (MA)
*3	Self-diagnosis ATC-41 , see No.5.	*8	Blower motor circuit ATC-67	*12	Changing engine coolant (MA)
*4	Self-diagnosis ATC-41 , see No.7.	*9	Air mix door motor circuit ATC-61	*13	Radiator cap-system check (LC)
*5	Air mix door motor circuit ATC-61				

Noise

EJS000XT

SYMPTOM: Noise

INSPECTION FLOW

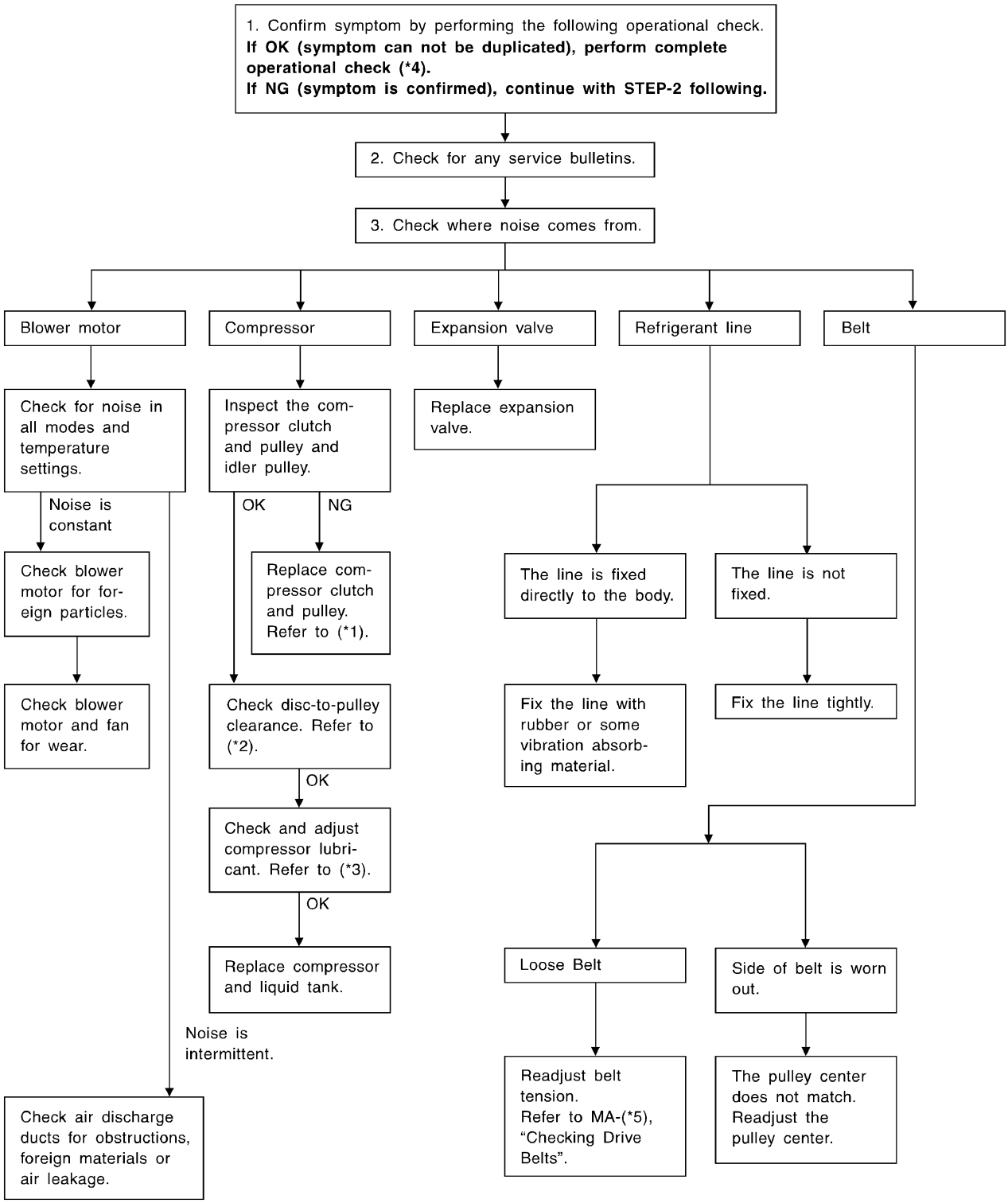

SHA331F

*1 Removal and installation for magnet clutch ATC-123

*2 Magnet clutch installation ATC-123

*3 Compressor lubricant (ATC-18)

*4 Operational check (ATC-49

*5 Checking drive belts (MA-21)

Self-diagnosis

EJS000XU

SYMPTOM: Self-diagnosis cannot be performed.

INSPECTION FLOW

1. Confirm sysptom by performing operational check.

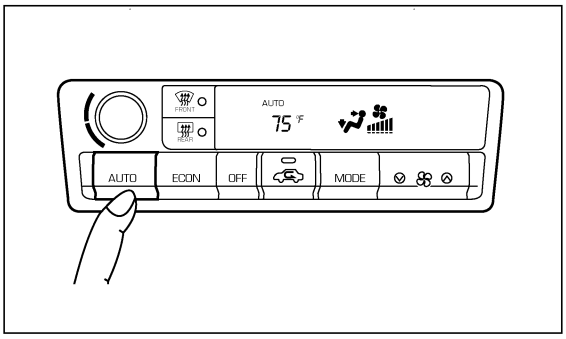

OPERATIONAL CHECK – AUTO mode

a. Press AUTO switch.
b. Display should indicate AUTO (not ECON).
Confirm that the compressor clutch engages (audio or visual inspection).
(Discharge air and blower speed will depend on ambient, in-vehicle and set temperatures.)

If OK (symptom cannot be duplicated), perform complete operational check (*9).
If NG (symptom is confirmed), continue with STEP-2 following.

2. Check for any service bulletins.

3. Check Main Power Supply and Ground Circuit. (*1)

OK **Cause cannot be confirmed by self-diagnosis.**

4. Check ambient sensor circuit. (*2)

OK

5. Check in-vehicle sensor circuit. (*3)

OK

6. Check sunload sensor circuit. (*4)

OK

7. Check intake sensor circuit. (*5)

OK

8. Check air mix door motor PBR circuit. (*6)

OK → If the symptom still exists, perform a complete operational check (*7) and check for other symptoms. [Refer to symptom table, (*8).] Does another symptom exist?

- No → Replace auto amp. → INSPECTION END
- Yes → Go to Trouble Diagnosis for related symptom. **Another symptom exists.**

WJIA0075E

*1	Main power supply and ground circuit ATC-52	*4	Sunload sensor circuit ATC-96	*7	Operational check ATC-49
*2	Ambient sensor circuit ATC-91	*5	Intake sensor circuit ATC-99	*8	Symptom table ATC-31
*3	In-vehicle sensor circuit ATC-93	*6	Air mix door motor circuit ATC-61	*9	Operational checkATC-49

Memory Function

EJS000XV

SYMPTOM: Memory function does not operate.

INSPECTION FLOW

1. Confirm symptom by performing the following operational check.

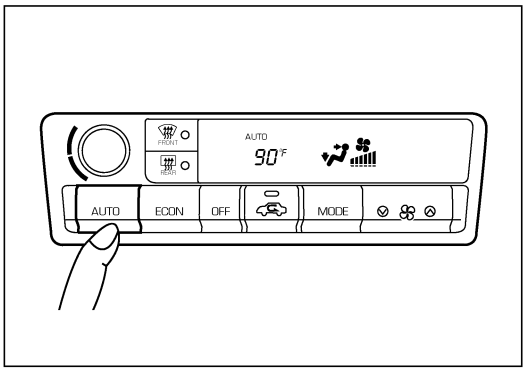

OPERATIONAL CHECK – Memory function

a. Set the temperature 90˚F or 32˚C.
b. Press OFF switch.
c. Turn the ignition off.
d. Turn the ignition on.
e. Press the AUTO switch.
f. Confirm that the set temperature remains at previous temperature.
g. Press OFF switch.

If OK (symptom cannot be duplicated), perform complete operational check (*2).
If NG (symptom is confirmed), continue with STEP-2 following.

↓

2. Check for any service bulletins.

↓

3. Check Main Power Supply and Ground Circuit. (*1)

↓ OK

Go to A/C system circuit. (*4)

↓ OK

4. Replace auto amp.

↓

5. FINAL CHECK
Go to self-diagnosis step-by-step procedure (*3) and perform self-diagnosis STEP-2.
Confirm that code No. 20 is displayed.

WJIA0076E

*1 Main power supply and ground circuit. Refer to PG-5, "Wiring Diagram — POWER —" .

*2 Operational check ATC-49

*3 Self-diagnosis ATC-41

*4 A/C system circuit ATC-53

ECON (ECONOMY) Mode

EJS000XW

SYMPTOM: ECON mode does not operate.

INSPECTION FLOW

1. Confirm symptom by performing the following operational check.

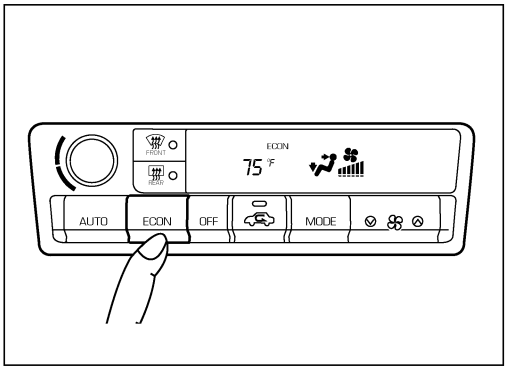

OPERATIONAL CHECK – ECON (ECONOMY) mode

a. Set the temperature 75˚F or 25˚C.
b. Press ECON switch.
c. Display should indicate ECON (not AUTO).
Confirm that the compressor clutch is not engaged (visual inspection).
(Discharge air and blower speed will depend on ambient, in-vehicle, and set temperatures.)

If OK (symptom cannot be duplicated), perform complete operational check (*2).
If NG (symptom is confirmed), continue with STEP-2 following.

↓

2. Check for any service bulletins.

↓

3. Check Main Power Supply and Ground Circuit. (*1)

↓ OK

Go to A/C system circuit. (*4)

↓ OK

4. Replace auto amp.

↓

5. FINAL CHECK
Go to self-diagnosis step-by-step procedure (*3) and perform self-diagnosis STEP-2.
Confirm that code No. 20 is displayed.

WJIA0077E

*1 Main power supply and ground circuit. Refer to P·G power
*2 Operational check ATC-49
*3 Self-diagnosis ATC-41
*4 A/C system circuit ATC-52

Ambient Sensor Circuit

EJS000XX

COMPONENT DESCRIPTION

Ambient Sensor

The ambient sensor is attached to the front bumper reinforcement. It detects ambient temperature and converts it into a resistance value which is then input into the auto amplifier.

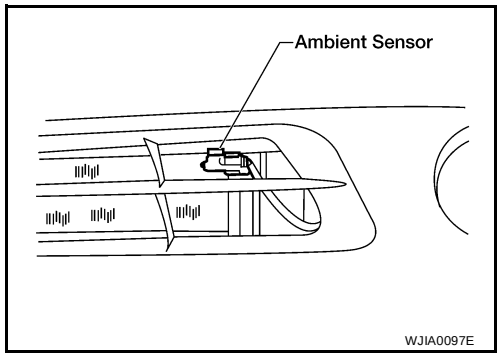

AMBIENT TEMPERATURE INPUT PROCESS

The automatic amplifier includes a processing circuit for the ambient sensor input. However, when the temperature detected by the ambient sensor increases quickly, the processing circuit retards the auto amp. function. It only allows the auto amp. to recognize an ambient temperature increase of 0.33°C (0.6°F) per 100 seconds.

As an example, consider stopping for a cup of coffee after high speed driving. Although the actual ambient temperature has not changed, the temperature detected by the ambient sensor will increase. This is because the heat from the engine compartment can radiate to the front grille area, location of the ambient sensor.

DIAGNOSTIC PROCEDURE

SYMPTOM: Ambient sensor circuit is open or shorted. (21 or -21 is indicated on auto amp. as a result of conducting Self-diagnosis STEP 2.)

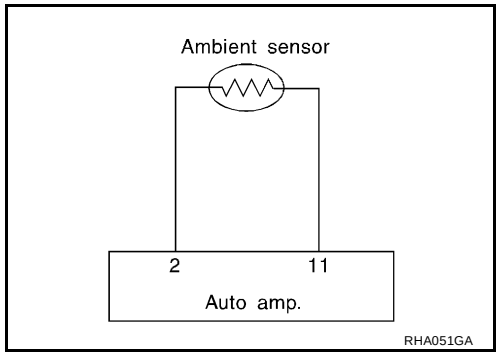

1. CHECK VOLTAGE BETWEEN AMBIENT SENSOR HARNESS CONNECTOR AND BODY GROUND

Disconnect ambient sensor harness connector.

Terminal			Voltage (V) (Approx.)
(+)		(-)	
Connector	Wire color	Body ground	12V
E1-1	OR/B		

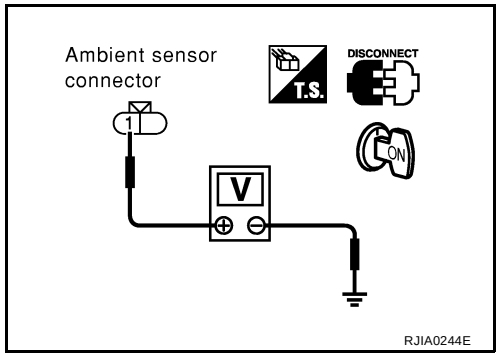

OK or NG

OK >> GO TO 2.
NG >> GO TO 4.

2. CHECK AMBIENT SENSOR GROUND CIRCUIT BETWEEN AMBIENT SENSOR AND AUTO AMP. (LCU)

Disconnect auto amp. (LCU) harness connector.

Terminals				Continuity
Connector	Wire color	Connector	Wire color	Yes
M49-11	B/Y	E1-2	B	

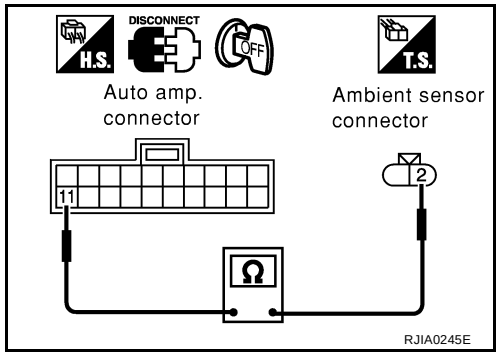

If OK, check harness for short.

OK or NG

OK >> GO TO 3.
NG >> Repair harness or connector.

3. CHECK AMBIENT SENSOR

Refer to ATC-93, "Ambient Sensor" .

OK or NG

OK >> 1. Replace auto amp. (LCU).
2. Go to ATC-41, "Self-diagnosis" and perform self-diagnosis STEP-2. Confirm that code No. 20 is displayed.

NG >> Replace ambient sensor.

4. CHECK AMBIENT SENSOR CIRCUIT BETWEEN AMBIENT SENSOR AND AUTO AMP. (LCU)

Disconnect auto amp. (LCU) harness connector.

Terminals				Continuity
Connector	Wire color	Connector	Wire color	Yes
M49-2	OR/B	E1-1	OR/B	

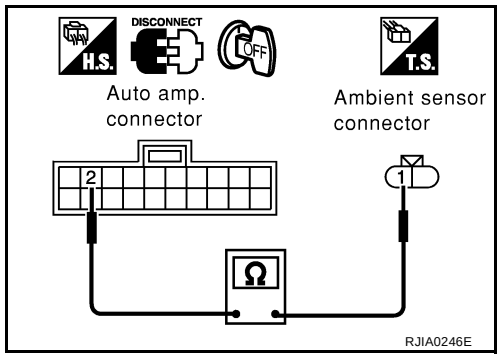

If OK, check harness for short.

OK or NG

OK >> 1. Replace auto amp. (LCU).

2. Go to self-diagnosis step-by-step procedure (Refer to ATC-41) and perform self-diagnosis STEP-2. Confirm that code No. 20 is displayed.

NG >> Repair harness or connector.

COMPONENT INSPECTION

Ambient Sensor

After disconnecting ambient sensor harness connector, measure resistance between terminals 2 and 1 at sensor harness side, using the table below.

Temperature °C (°F)	Resistance kΩ
-15 (5)	12.73
-10 (14)	9.92
-5 (23)	7.80
0 (32)	6.19
5 (41)	4.95
10 (50)	3.99
15 (59)	3.24
20 (68)	2.65
25 (77)	2.19
30 (86)	1.81
35 (95)	1.51
40 (104)	1.27
45 (113)	1.07

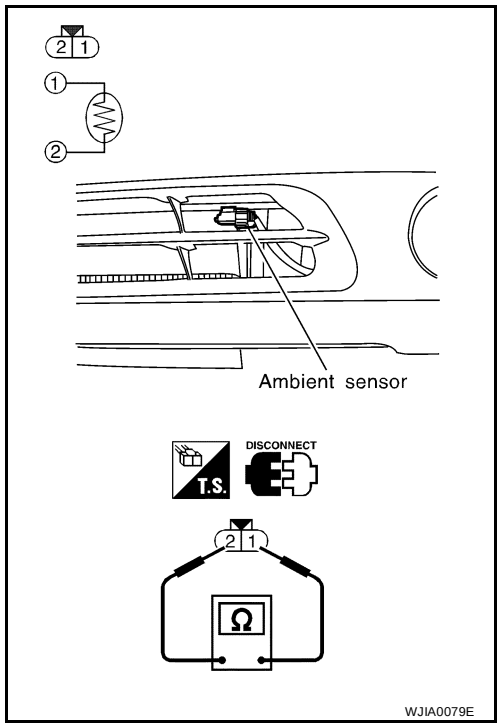

If NG, replace ambient sensor.

In-vehicle Sensor Circuit

EJS000XY

COMPONENT DESCRIPTION

In-vehicle sensor

The in-vehicle sensor is located on instrument lower panel. It converts variations in temperature of compartment air drawn from the aspirator into a resistance value. It is then input into the auto amplifier.

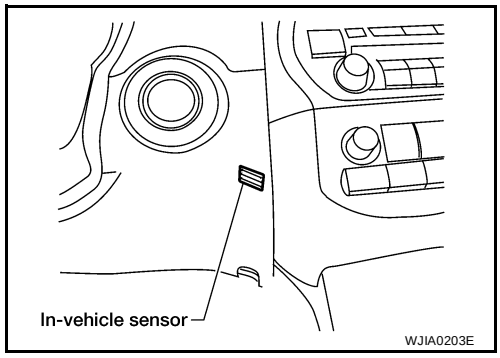

Aspirator

The aspirator is located on driver's side of heater and cooling unit. It produces vacuum pressure due to air discharged from the heater and cooling unit, continuously taking compartment air in the aspirator.

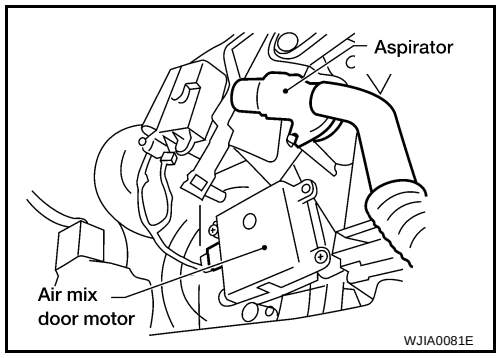

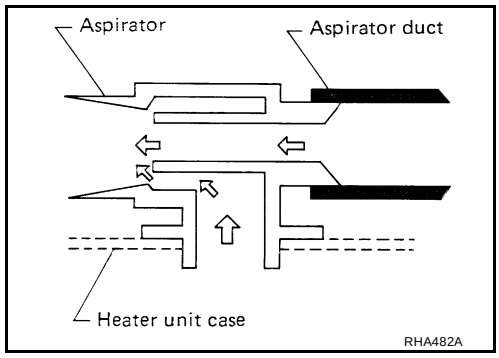

DIAGNOSTIC PROCEDURE

SYMPTOM: In-vehicle sensor circuit is open or shorted. (22 or -22 is indicated on auto amp. as a result of conducting Self-diagnosis STEP 2.)

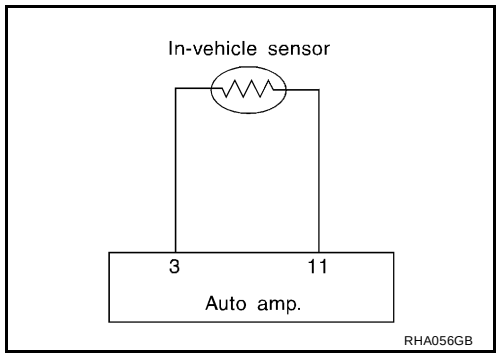

1. CHECK IN-VEHICLE SENSOR CIRCUIT BETWEEN IN-VEHICLE SENSOR AND BODY GROUND

Disconnect in-vehicle sensor harness connector.

Terminals			Voltage (V) (Approx.)
(+)		(-)	
Connector	Wire color	Body ground	5V
M32-1	B/Y		

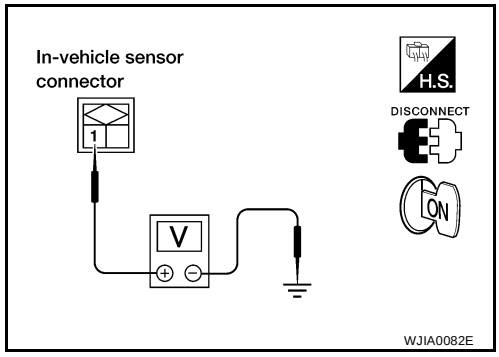

OK or NG

OK >> GO TO 2.
NG >> GO TO 4.

2. CHECK IN-VEHICLE SENSOR GROUND CIRCUIT BETWEEN IN-VEHICLE SENSOR AND AUTO AMP. (LCU)

Disconnect auto amp. (LCU) harness connector.

Terminals				Continuity
Connector	Wire color	Connector	Wire color	Yes
M49-11	B/Y	M32-2	B/Y	

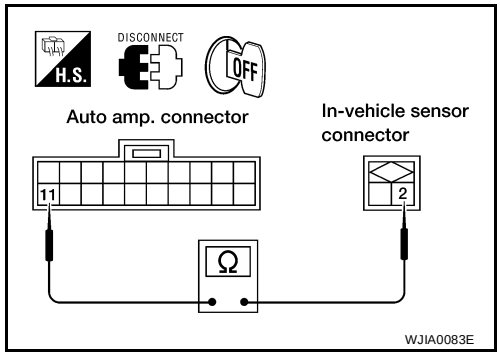

If OK, check harness for short.

OK or NG

OK >> GO TO 3.

NG >> Repair harness or connector.

3. CHECK IN-VEHICLE SENSOR

Refer to ATC-96, "In-vehicle Sensor" .

OK or NG

OK >> 1. Replace auto amp.

2. Go to self-diagnosis step-by-step procedure (Refer to ATC-41) and perform self-diagnosis STEP-2. Confirm that code No. 20 is displayed.

NG >> 1. Replace in-vehicle sensor.

2. Go to self-diagnosis step-by-step procedure (Refer to ATC-41) and perform self-diagnosis STEP-2. Confirm that code No. 20 is displayed.

4. CHECK IN-VEHICLE SENSOR CIRCUIT BETWEEN AMBIENT SENSOR AND AUTO AMP. (LCU)

Disconnect auto amp. (LCU) harness connector.

Terminals				Continuity
Connector	Wire color	Connector	Wire color	Yes
M49-3	LG	M39-1	LG	

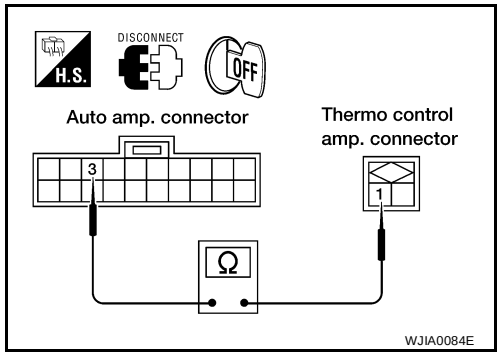

If OK, check harness for short.

OK or NG

OK >> 1. Replace auto amp. (LCU).

2. Go to self-diagnosis step-by-step procedure (ATC-41) and perform self-diagnosis STEP-2. Confirm that code No. 20 is displayed.

NG >> Repair harness or connector.

COMPONENT INSPECTION

In-vehicle Sensor

After disconnecting in-vehicle sensor harness connector, measure resistance between terminals 1 and 2 at sensor harness side, using the table below.

Temperature °C (°F)	Resistance kΩ
-15 (5)	12.73
-10 (14)	9.92
-5 (23)	7.80
0 (32)	6.19
5 (41)	4.95
10 (50)	3.99
15 (59)	3.24
20 (68)	2.65
25 (77)	2.19
30 (86)	1.81
35 (95)	1.51
40 (104)	1.27
45 (113)	1.07

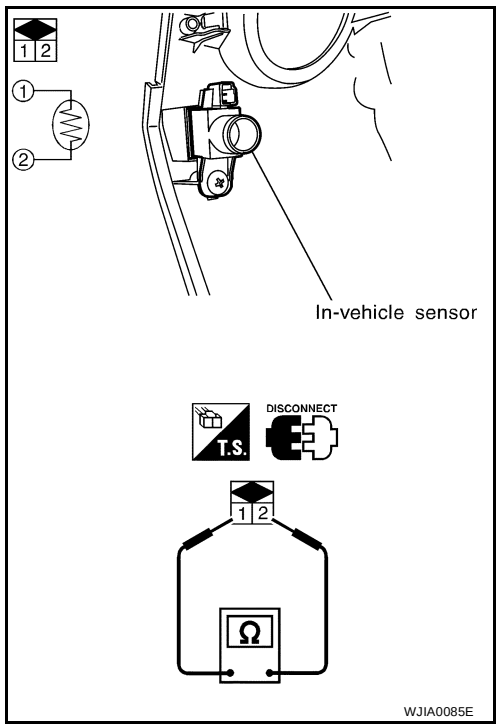

If NG, replace in-vehicle sensor.

Sunload Sensor Circuit

EJS000XZ

COMPONENT DESCRIPTION

The sunload sensor is located on the right defroster grille. It detects sunload entering through windshield by means of a photo diode. The sensor converts the sunload into a current value which is then input into the auto amplifier.

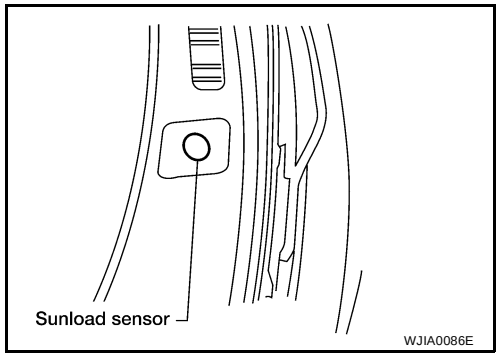

SUNLOAD INPUT PROCESS

The auto amp. also includes a processing circuit which average the variations in detected sunload over a period of time. This prevents drastic swings in the ATC system operation due to small or quick variations in detected sunload.

For example, consider driving along a road bordered by an occasional group of large trees. The sunload detected by the sunload sensor will vary whenever the trees obstruct the sunlight. The processing circuit averages the detected sunload over a period of time, so that the (insignificant) effect of the trees momentarily obstructing the sunlight does not cause any change in the ATC system operation. On the other hand, shortly after entering a long tunnel, the system will recognize the change in sunload, and the system will react accordingly.

DIAGNOSTIC PROCEDURE

SYMPTOM: Sunload sensor circuit is open or shorted. (25 or -25) is indicated on auto amp. as a result of conducting Self-diagnosis STEP 2.)

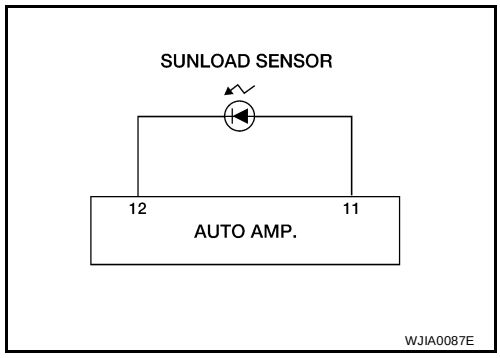

1. CHECK SUNLOAD SENSOR CIRCUIT BETWEEN SUNLOAD SENSOR AND BODY GROUND

Disconnect sunload sensor harness connector.

Terminals			Voltage (V) (Approx.)
(+)		(-)	
Connector	Wire color	Body ground	5V
M65-1	OR		

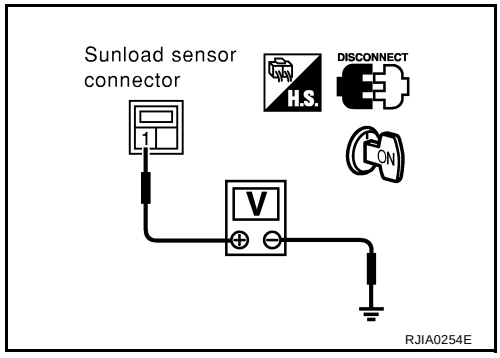

OK or NG

OK >> GO TO 2.
NG >> GO TO 4.

2. CHECK SUNLOAD SENSOR GROUND CIRCUIT BETWEEN SUNLOAD SENSOR AND AUTO AMP. (LCU)

Disconnect auto amp. (LCU) harness connector.

Terminals				Continuity
Connector	Wire color	Connector	Wire color	Yes
M49-12	OR	M65-1	OR	

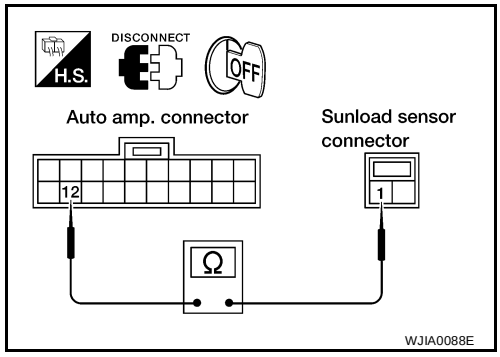

If OK, check harness for short.

OK or NG

OK >> GO TO 3.
NG >> Repair harness or connector.

3. CHECK SUNLOAD SENSOR

Refer to ATC-98, "Sunload Sensor" .

OK or NG

OK >> 1. Replace auto amp. (LCU).
2. Go to self-diagnosis step-by-step procedure (Refer to ATC-89) and perform self-diagnosis STEP-2. Confirm that code No. 20 is displayed.

NG >> 1. Replace sunload sensor.
2. Go to self-diagnosis step-by-step procedure (Refer to ATC-41) and perform self-diagnosis STEP-2. Confirm that code No. 20 is displayed.

4. CHECK SUNLOAD SENSOR CIRCUIT BETWEEN SUNLOAD SENSOR AND AUTO AMP. (LCU)

Disconnect auto amp. (LCU) harness connector.

Terminals				Continuity
Connector	Wire color	Connector	Wire color	Yes
M49-11	B/Y	M65-2	B/Y	

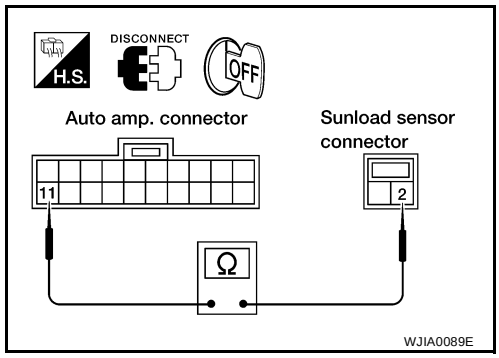

If OK, check harness for short.

OK or NG

OK >> 1. Replace auto amp.

2. Go to self-diagnosis step-by-step procedure (Refer to ATC-41) and perform self-diagnosis STEP-2. Confirm that code No. 20 is displayed.

NG >> Repair harness or connector.

COMPONENT INSPECTION

Sunload Sensor

Measure voltage between auto amp. terminal 12 and body ground.
If NG, replace auto amp.

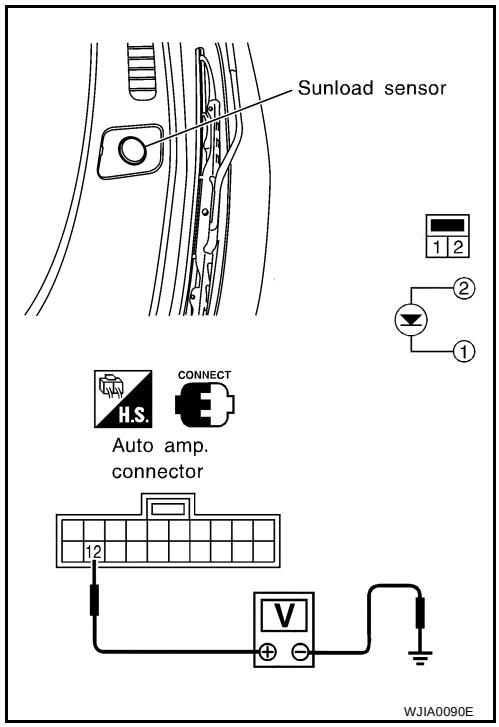

- When checking sunload sensor, select a place where sun shines directly on it.

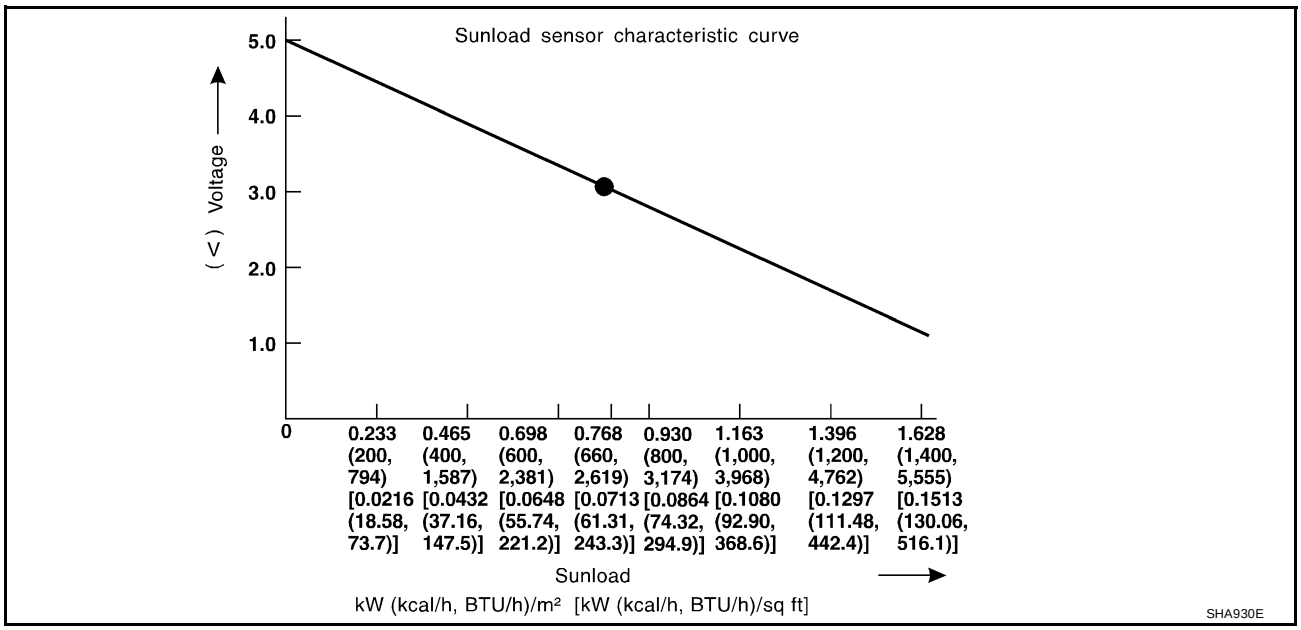

Intake Sensor Circuit

EJS000Y0

COMPONENT DESCRIPTION

Intake Sensor

The intake sensor is located on the heater and cooling unit. It converts temperature of air after it passes through the evaporator into a resistance value which is then input to the auto amp.
After disconnecting intake sensor harness connector, measure resistance between terminals 1 and 2 at sensor harness side, using the table below.

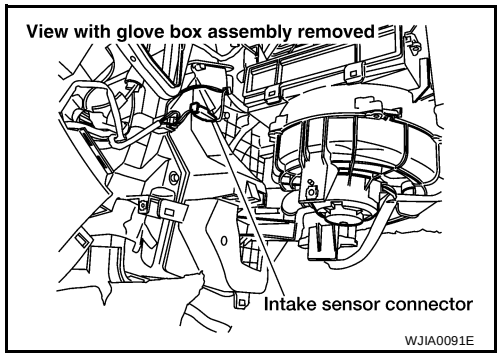

Temperature °C (°F)	Resistance kΩ
-15 (5)	12.34
-10 (14)	9.62
-5 (23)	7.56
0 (32)	6.00
5 (41)	4.80
10 (50)	3.87
15 (59)	3.15
20 (68)	2.57
25 (77)	2.12
30 (86)	1.76
35 (95)	1.47
40 (104)	1.23
45 (113)	1.04

If NG, replace intake sensor.

DIAGNOSTIC PROCEDURE

SYMPTOM: Intake sensor circuit is open or shorted. (24 or -24 is indicated on auto amp. as a result of conducting Self-diagnosis STEP 2.)

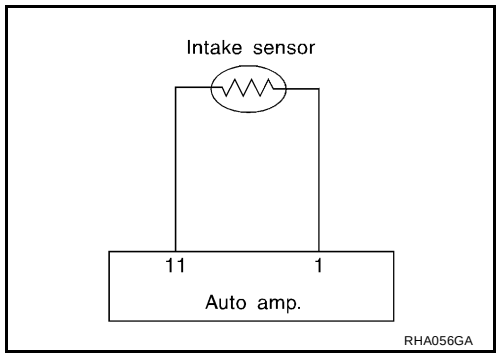

1. CHECK INTAKE SENSOR CIRCUIT BETWEEN INTAKE SENSOR AND BODY GROUND

Disconnect intake sensor harness connector.

Terminals			Voltage (V) (Approx.)
(+)		(-)	
Connector	Wire color	Body ground	5V
M33-2	B/Y		

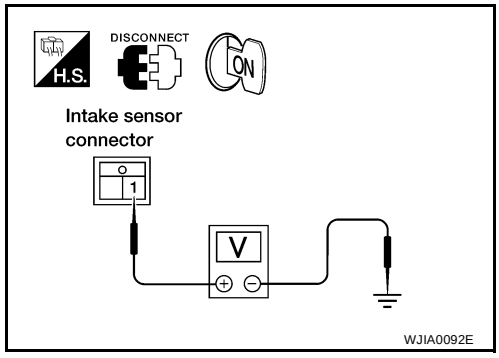

OK or NG

OK >> GO TO 2.
NG >> GO TO 4.

2. CHECK INTAKE SENSOR GROUND CIRCUIT BETWEEN INTAKE SENSOR AND AUTO AMP. (LCU)

Disconnect auto amp. (LCU) harness connector.

Terminals				Continuity
Connector	Wire color	Connector	Wire color	Yes
M49-11	B/Y	M33-2	B/Y	

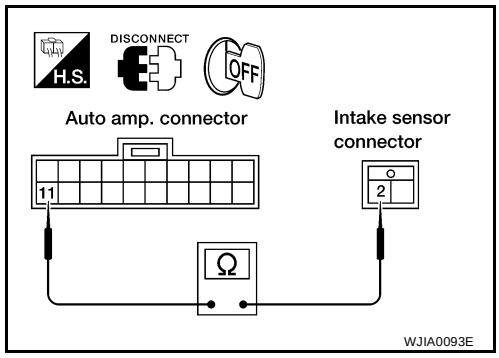

If OK, check harness for short.

OK or NG

OK >> GO TO 3.
NG >> Repair harness or connector.

3. CHECK INTAKE SENSOR

Refer to ATC-99, "Intake Sensor" .

OK or NG

OK >> 1. Replace auto amp.
2. Go to self-diagnosis step-by-step procedure (Refer to ATC-41) and perform self-diagnosis STEP-2. Confirm that code No. 20 is displayed.

NG >> 1. Replace intake sensor.
2. Go to self-diagnosis step-by-step procedure (Refer to ATC-41) and perform self-diagnosis STEP-2. Confirm that code No. 20 is displayed.

4. CHECK INTAKE SENSOR CIRCUIT BETWEEN AMBIENT SENSOR AND AUTO AMP. (LCU)

Disconnect auto amp. (LCU) harness connector.

Terminals				Continuity
Connector	Wire color	Connector	Wire color	Yes
M33-1	R/W	M49-1	R/W	

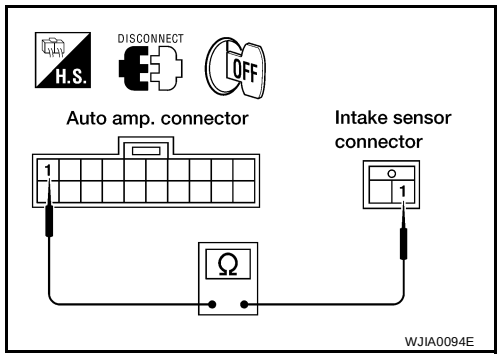

If OK, check harness for short.

OK or NG

OK >> 1. Replace auto amp.

2. Go to self-diagnosis step-by-step procedure (Refer to ATC-41) and perform self-diagnosis STEP-2. Confirm that code No. 20 is displayed.

NG >> Repair harness or connector.

AUTO AMP

PFP:27760

Removal and Installation

EJS000Y1

1. Remove cluster lid D. Refer to IP-13, "Cluster Lid D" .
2. Remove the audio unit. Refer to AV-22, "AUDIO UNIT" .
3. Remove the a/c auto amp. screws and then remove it from the instrument panel.
4. Disconnect the connectors and then remove it.

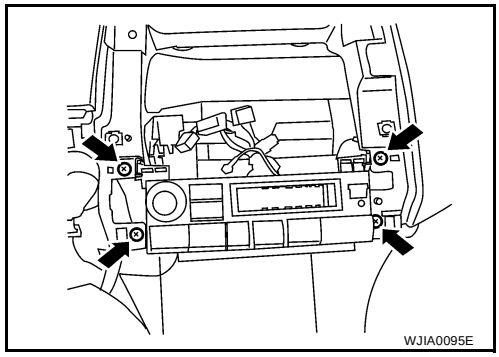

AMBIENT SENSOR

PFP:27722

Removal and Installation

EJS000Y2

1. Disconnect ambient sensor connector.
2. Release the ambient sensor clip and then remove it.

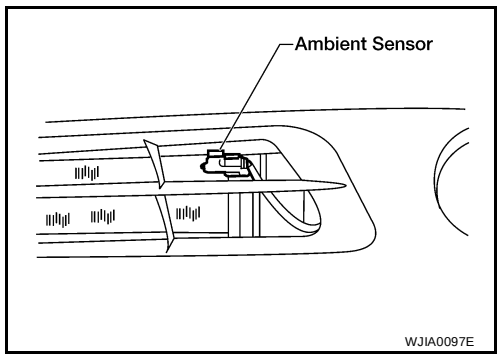

IN-VEHICLE SENSOR

PFP:27720

Removal and Installation

EJS000Y3

1. Remove lower driver instrument panel assembly. Refer to IP-13, "Driver Lower Instrument Panel" .
2. Remove the in-vehicle sensor screw and then remove it.

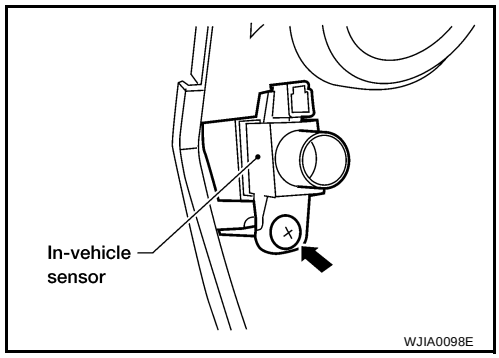

SUNLOAD SENSOR

PFP:27721

Removal and Installation

EJS000Y4

1. Remove the sunload sensor garnish.
2. Disconnect the connector.
3. Release the sunload sensor tabs and then remove it from the garnish.

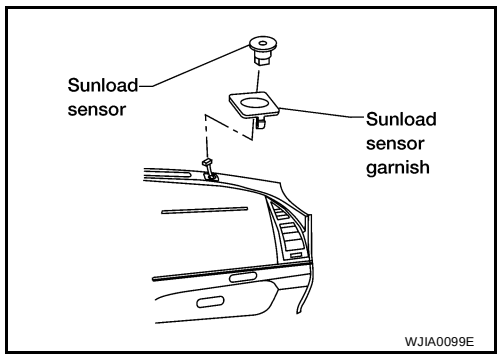

INTAKE SENSOR

PFP:27723

Removal and Installation

EJS000Y5

1. Remove the evaporator. Refer to ATC-128, "Removal and Installation for Evaporator" .
2. Remove the intake sensor clip and then the sensor.

   CAUTION:
   Be careful not to damage the core surface.

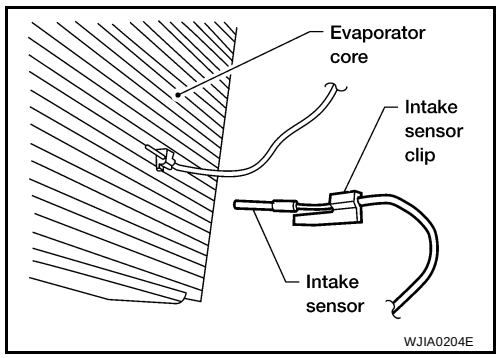

THERMO CONTROL AMPLIFIER

PFP:27675

Removal and Installation

EJS000Y6

1. Remove evaporator. Refer to ATC-128, "Removal and Installation for Evaporator" .
2. Remove thermo control amplifier.

   CAUTION:
   Be careful not to damage the core surface.

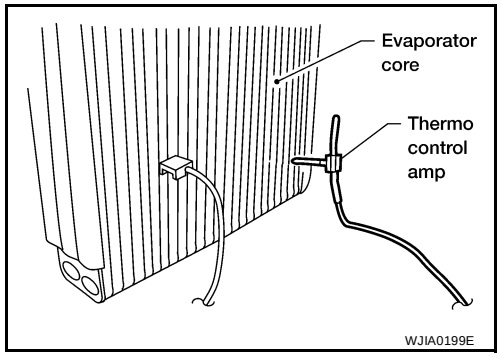

BLOWER UNIT

PFP:27200

Removal and Installation

EJS000Y7

REMOVAL

1. Remove the glove box assembly. Refer to IP-15, "Glove Box"
2. Remove the ECM.
3. Disconnect the blower motor, intake door motor and fan control amp. connector.
4. Remove the 2 bolts and 1 screw from the blower unit, then remove it.

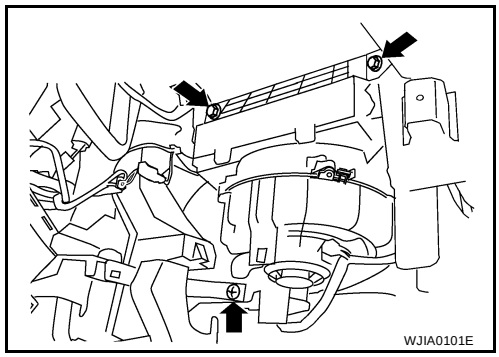

BLOWER MOTOR

PFP:27226

Removal and Installation

EJS000Y8

1. Remove the blower unit. Refer to ATC-108, "Removal and Installation" .
2. Release the 8 tabs attaching blower motor to blower unit case and then remove it.

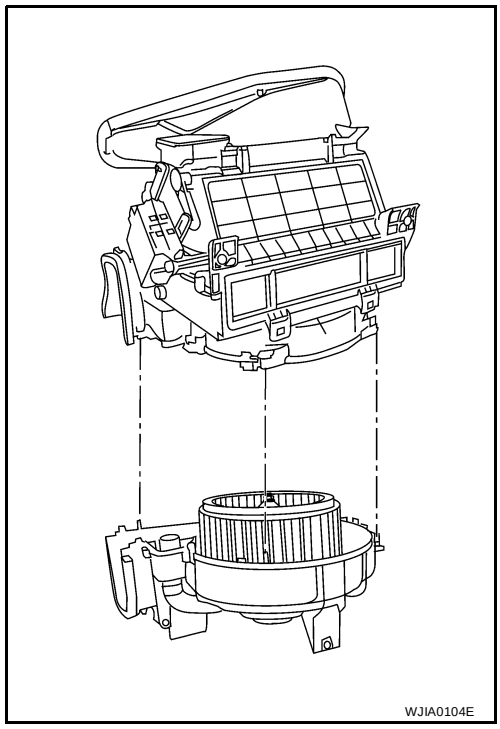

INTAKE DOOR MOTOR

PFP:27730

Removal and Installation

EJS000Y9

1. Remove the blower unit. Refer to ATC-108, "BLOWER UNIT" .
2. Remove the screws and then the intake door motor from the blower unit.

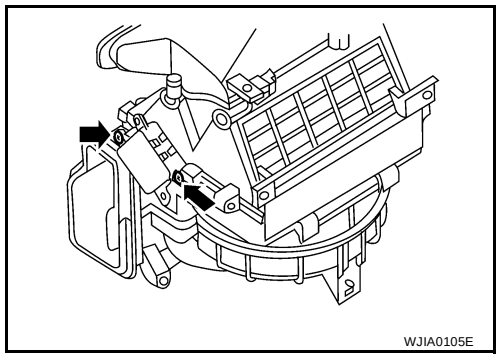

IN-CABIN MICROFILTER

PFP:27277

Removal and Installation

EJS001LJ

FUNCTION

Air inside passenger compartment is kept clean at either recirculation or fresh mode by installing in-cabin microfilter into blower unit.

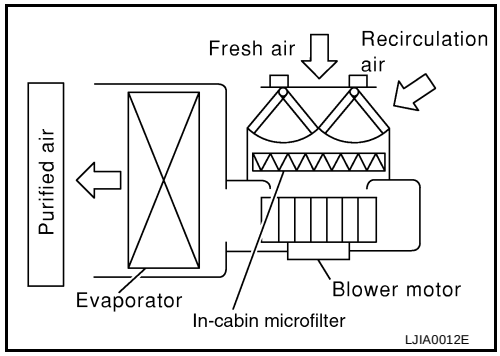

REPLACEMENT TIMING

Replace in-cabin microfilter.
Refer to MA-7, "SCHEDULE 1" and MA-10, "SCHEDULE 2" .
Caution label is affixed inside the glove box.

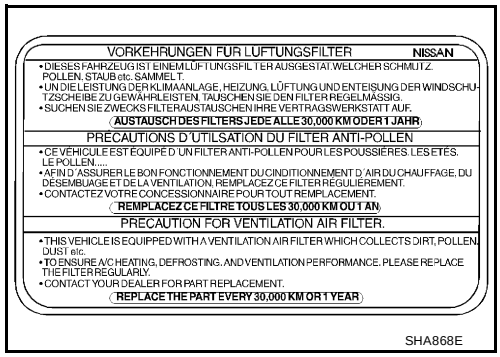

REPLACEMENT PROCEDURES

1. Remove glove box assembly. Refer to IP-15, "Glove Box" .
2. Remove in-cabin microfilter cover.
3. Remove the in-cabin microfilter from blower unit.
4. Replace with new in-cabin microfilter and reinstall cover on blower unit.
5. Reinstall glove box assembly.

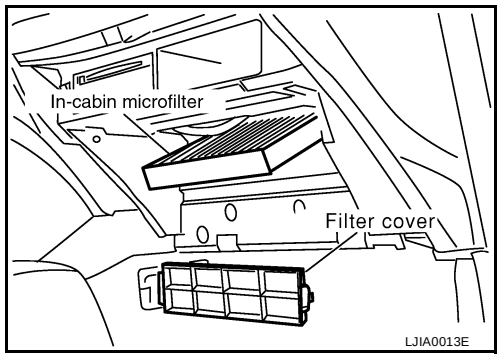

HEATER & COOLING UNIT ASSEMBLY

PFP:27110

Removal and Installation

EJS000YA

REMOVAL

1. Discharge refrigerant from A/C system. Refer to ATC-119, "HFC-134a (R-134a) Service Procedure"
2. Drain coolant from cooling system. Refer to MA-22, "Changing Engine Coolant" .
3. Disconnect heater hoses from heater core pipes.
4. Disconnect refrigerant lines from evaporator.
5. Remove the instrument panel. Refer to IP-10, "INSTRUMENT PANEL ASSEMBLY" .
6. Remove the blower unit. Refer to ATC-108, "BLOWER UNIT" .
7. Disconnect mode door motor and air mix door motor connectors.
8. Remove the heater and cooling unit.

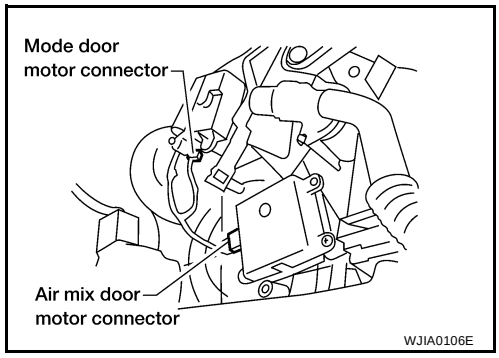

INSTALLATION

Install in the reverse order of removal.

NOTE:

When filling radiator with coolant, refer to CO-33, "Refilling Engine Coolant" . Recharge the A/C system. Refer to ATC-119, "HFC-134a (R-134a) Service Procedure" .

HEATER CORE

PFP:27140

Removal and Installation

EJS000YB

1. Remove heater and cooling unit. Refer to ATC-112, "HEATER & COOLING UNIT ASSEMBLY" .
2. Remove heater core pipe support screws and then remove it.

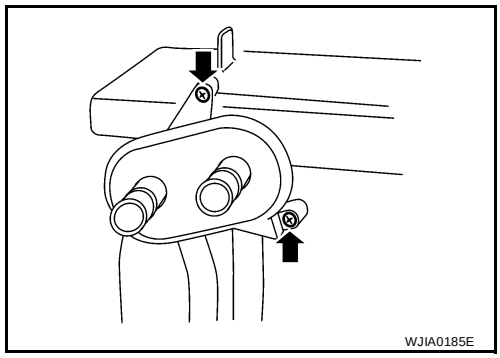

3. Remove heater core cover screws and then remove it.

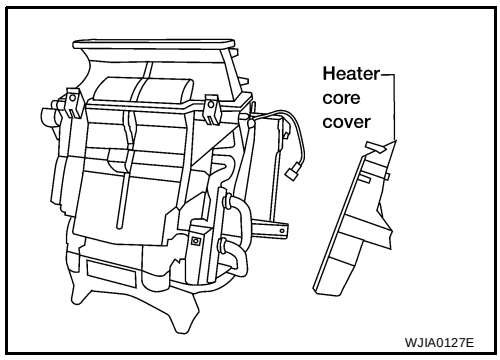

4. Remove heater core.

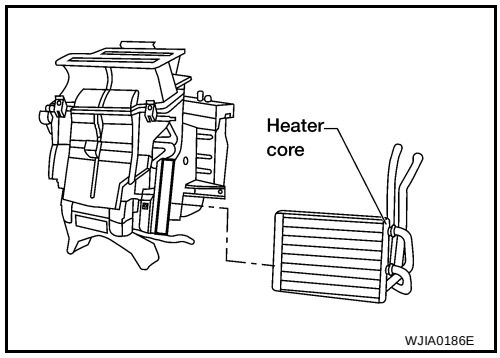

MODE DOOR MOTOR

PFP:27731

Removal and Installation

EJS000YC

1. Remove the driver lower instrument panel assembly. Refer to IP-13, "Driver Lower Instrument Panel" .
2. Disconnect the mode door motor connector.
3. Remove the mode door motor screws and then remove it.

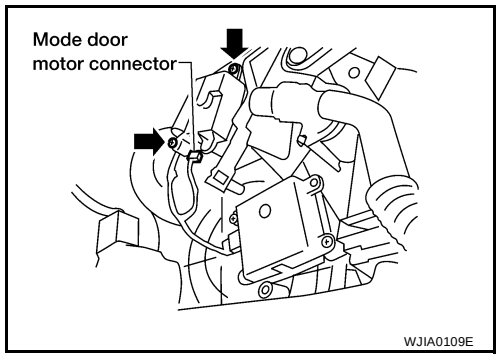

AIR MIX DOOR MOTOR

PFP:27732

Removal and Installation

EJS000YD

1. Remove the driver lower instrument panel assembly. Refer to IP-13, "Driver Lower Instrument Panel" .
2. Disconnect the air mix door motor connector.
3. Remove the air mix door motor screws and then remove it.

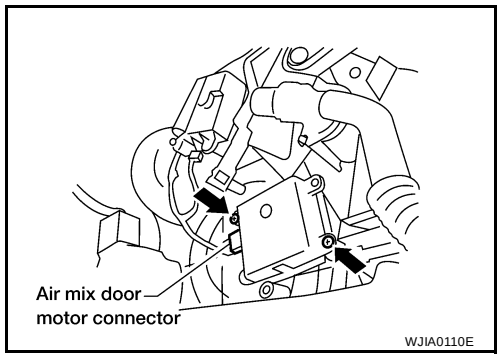

FAN CONTROL AMPLIFIER

PFP:27761

Removal and Installation

EJS000YE

1. Disconnect fan control amp. connector
2. Remove screws from the fan control amp. and then remove it.

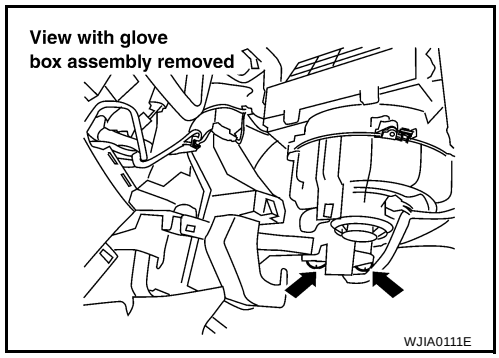

DUCTS AND GRILLES

PFP:27860

Removal and Installation

EJS000YF

Ventilator Duct, Defroster Nozzle and Defroster Ducts

EJS000YG

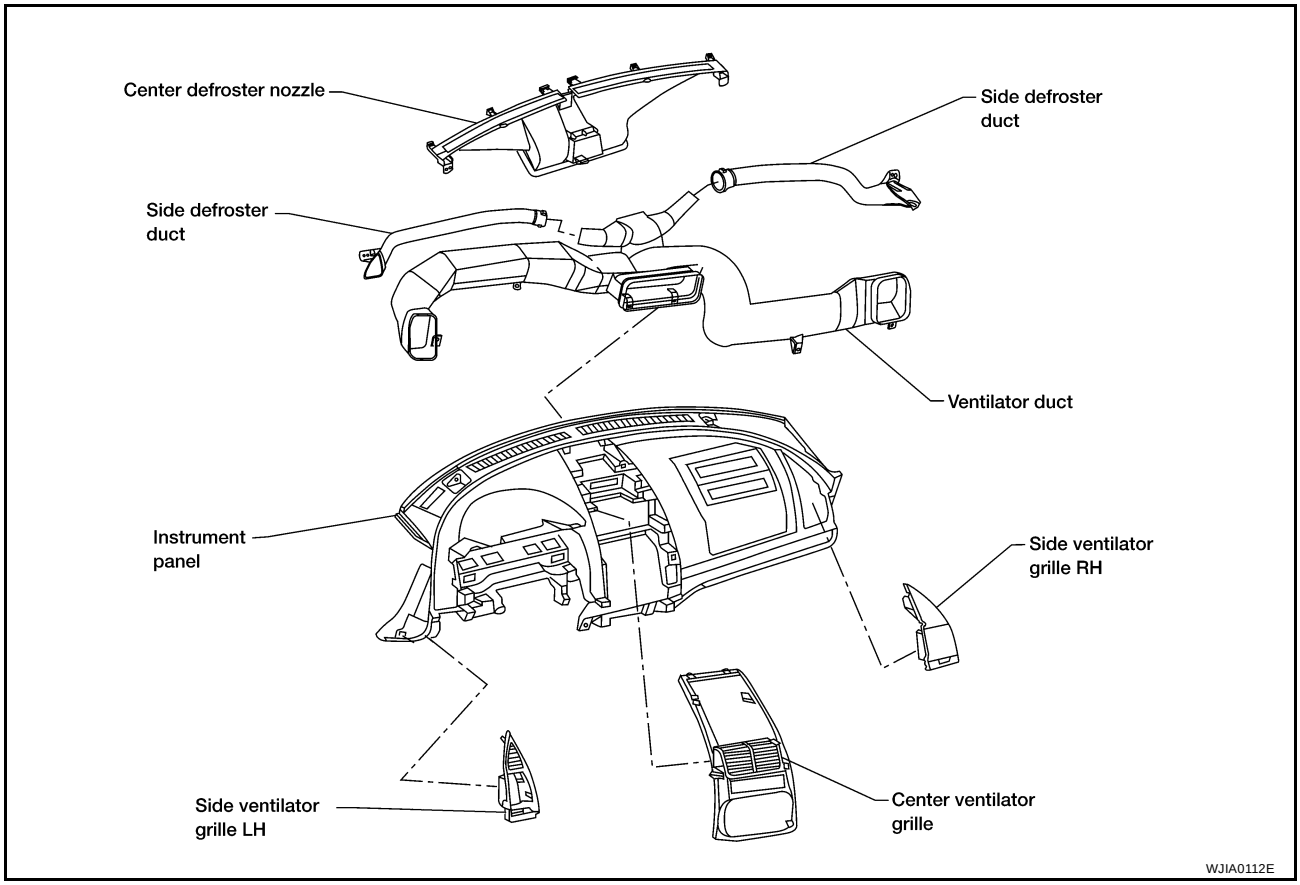

Center Ventilator Grille

EJS000YH

1. Remove cluster lid D. Refer to IP-13, "Cluster Lid D" .
2. Release the tabs to remove center ventilator grille.

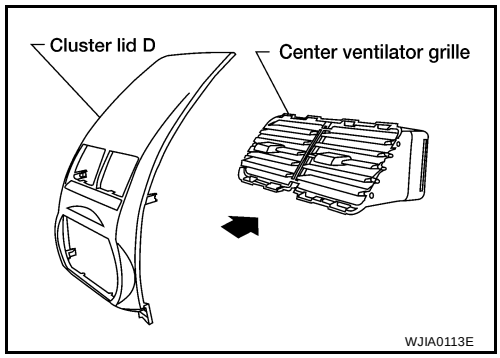

Side Ventilator Grille LH

EJS000YI

1. Remove cluster lid A. Refer to IP-13, "Cluster Lid A" .
2. Remove side ventilator grille LH.

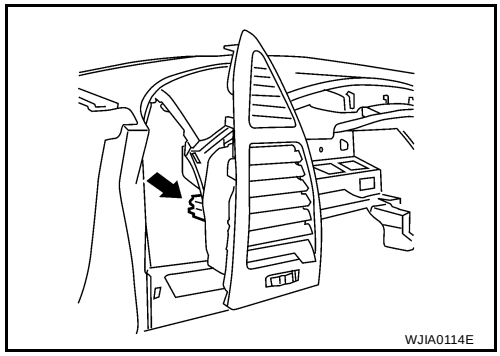

Side Ventilator Grille RH

EJS000YJ

1. Remove glove box assembly. Refer to IP-15, "Glove Box" .
2. Remove side ventilator grille RH screw and then remove it.

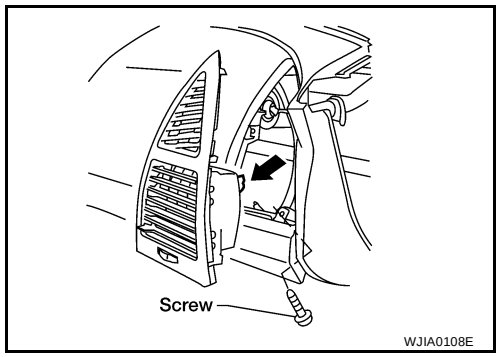

Floor duct

EJS000YK

1. Remove the carpet. Refer to EI-32, "FLOOR TRIM" .
2. Release foam tape and slide floor duct rearward to release from clips.

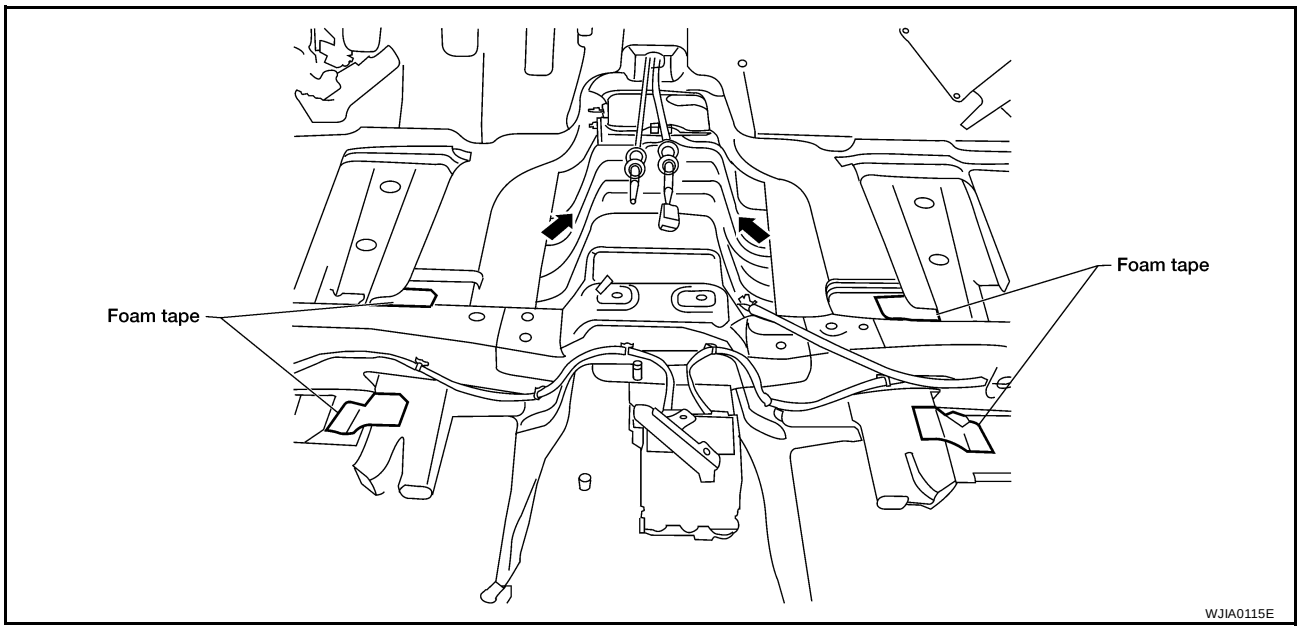

REFRIGERANT LINES

PFP:92600

HFC-134a (R-134a) Service Procedure

EJS000YL

SETTING OF SERVICE TOOLS AND EQUIPMENT

Discharging Refrigerant

WARNING:

Avoid breathing A/C refrigerant and lubricant vapor or mist. Exposure may irritate eyes, nose and throat. Remove HFC-134a (R-134a) from A/C system using certified service equipment meeting requirements of SAE J2210 (R-134a recycling equipment) or J2201 (R-134a recovery equipment). If accidental system discharge occurs, ventilate work area before resuming service. Additional health and safety information may be obtained from refrigerant and lubricant manufacturers.

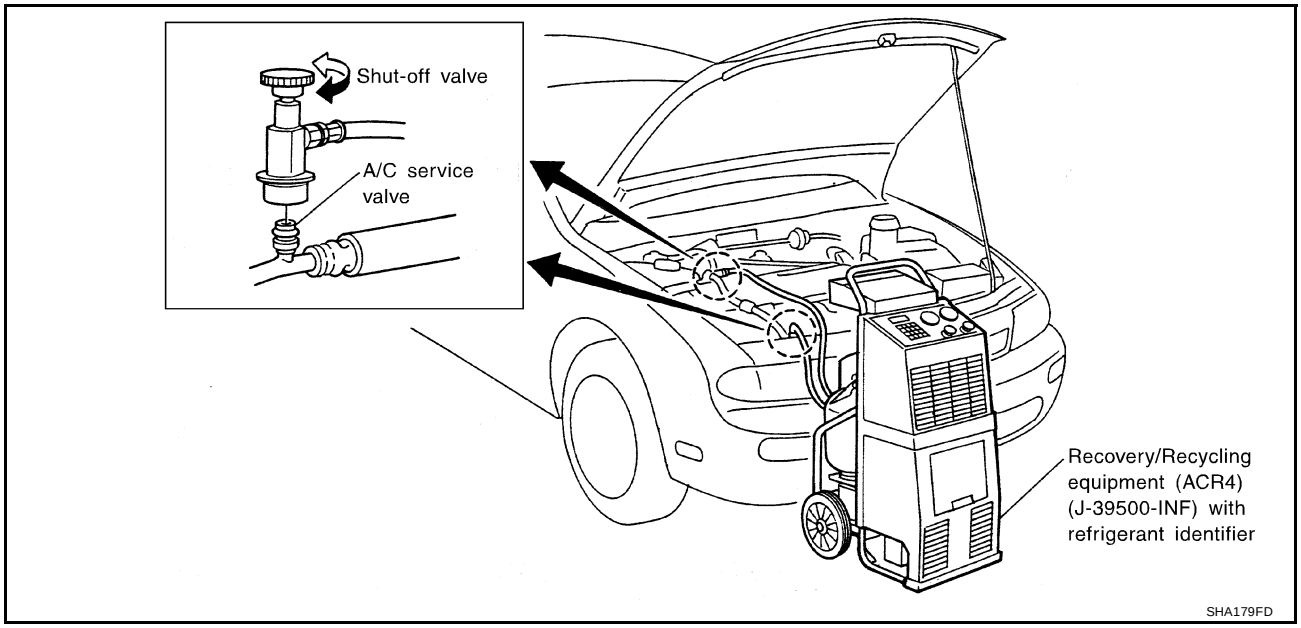

Evacuating System and Charging Refrigerant

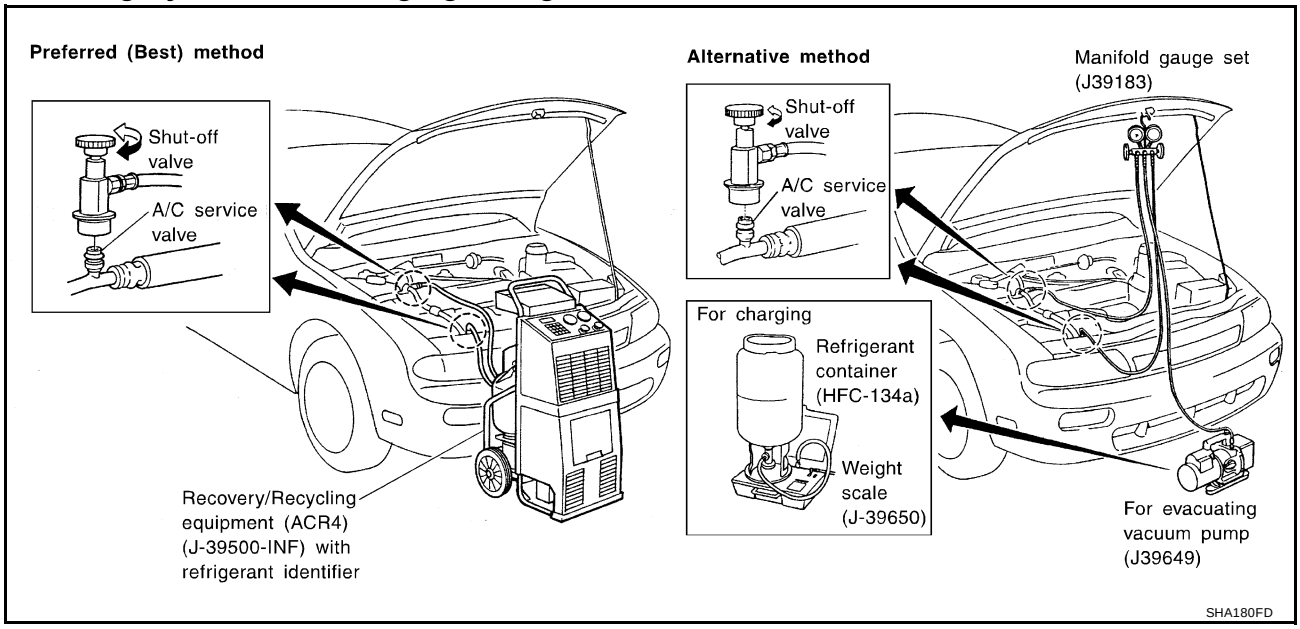

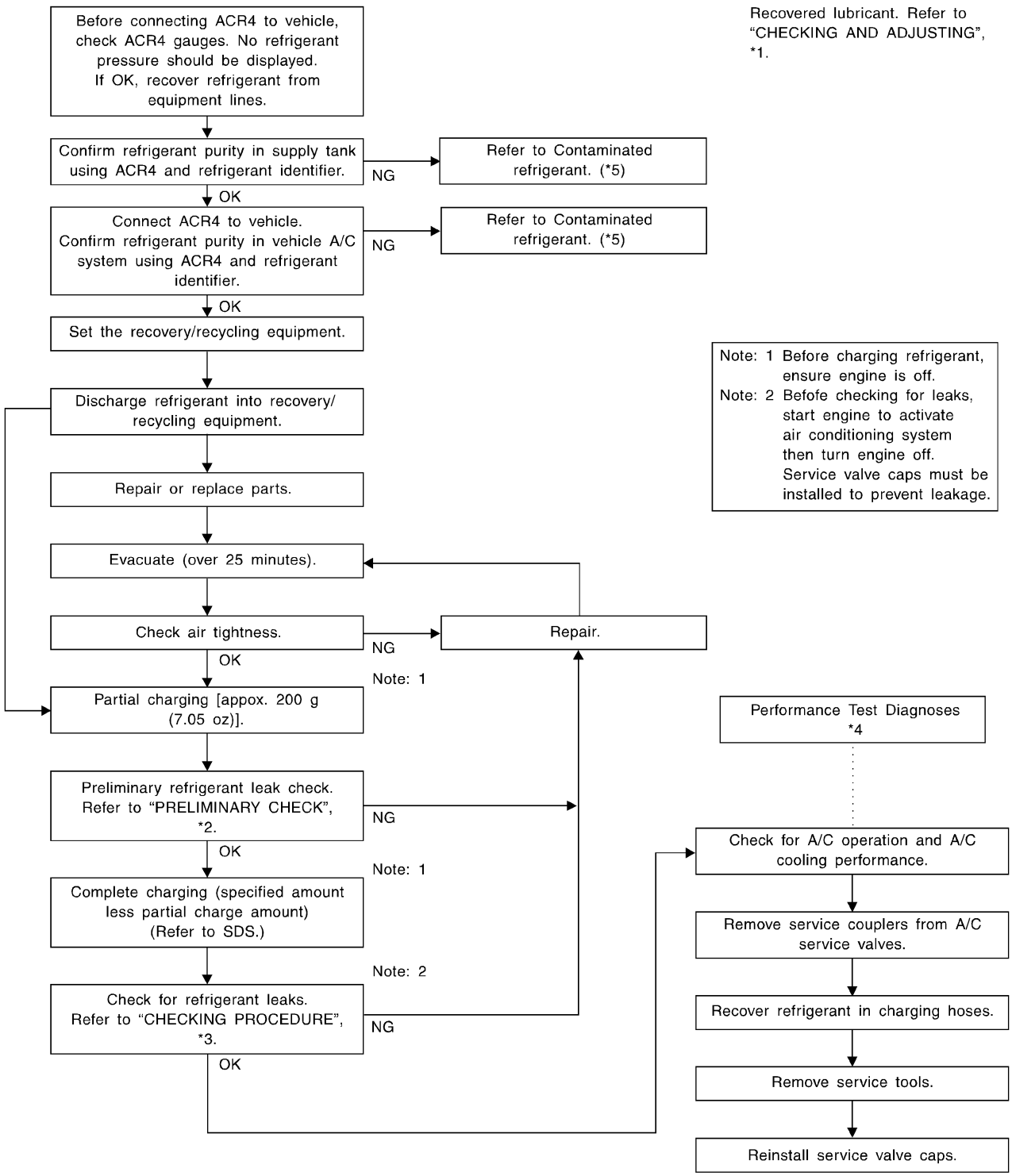

*1 ATC-18, "CHECKING AND ADJUSTING"

*2 ATC-129, "Checking for Refrigerant Leaks"

*3 ATC-129, "Checking for Refrigerant Leaks"

*4 ATC-81, "Performance Test Diagnoses"

*5 ATC-4, "Contaminated Refrigerant"

Components

EJS000YM

Refer to ATC-6, "Precautions for Refrigerant Connection" .

SEC. 214 • 271 • 274 • 276

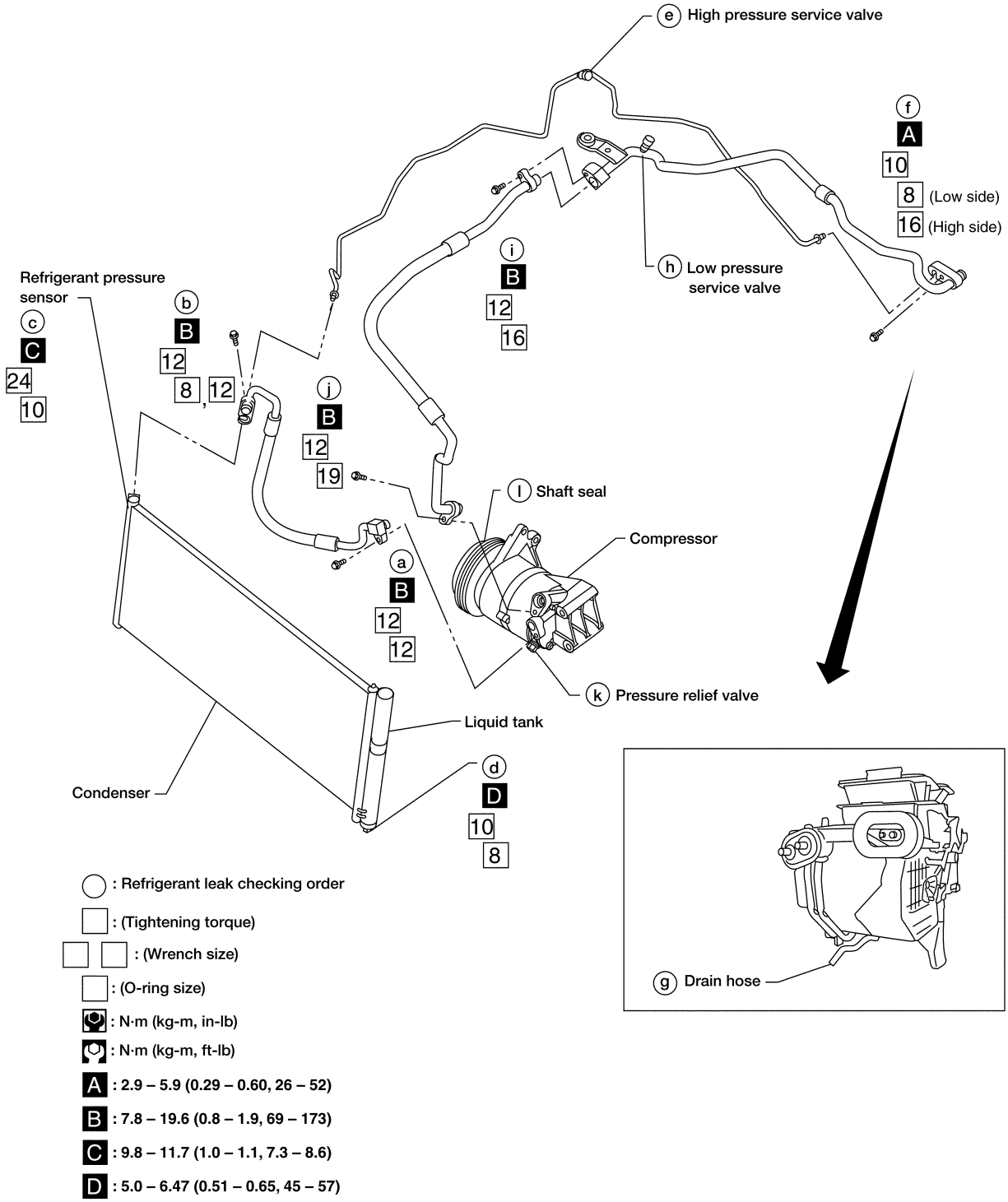

WJIA0116E

Removal and Installation for Compressor

EJS000YN

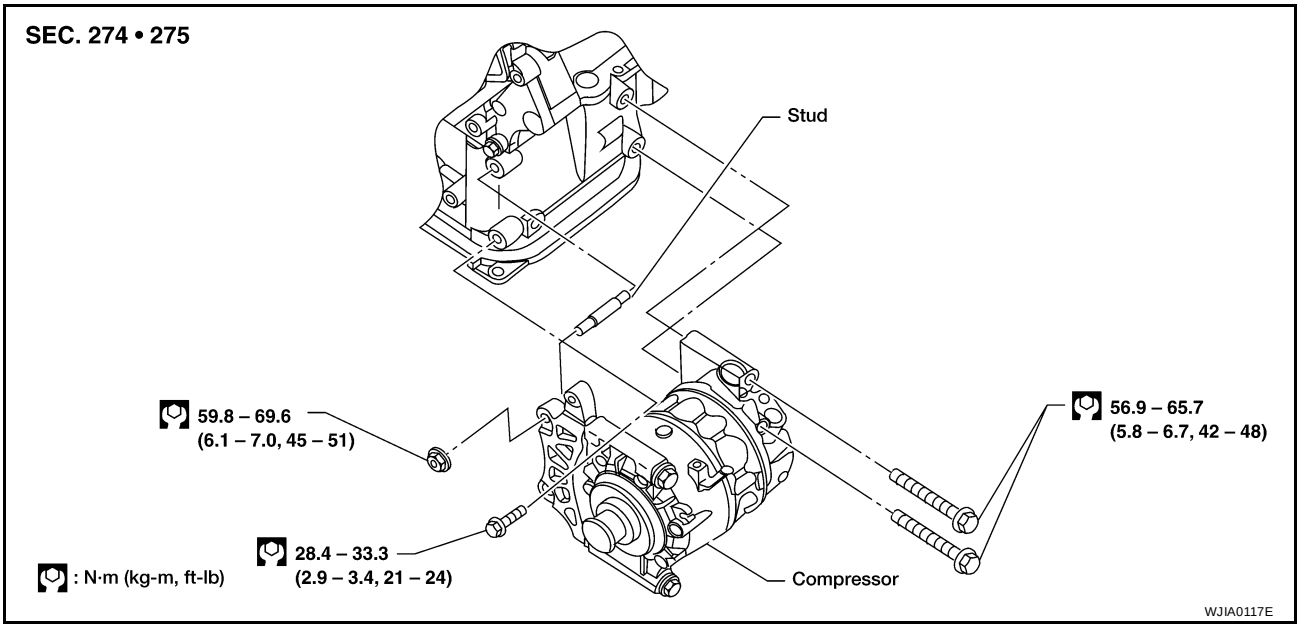

REMOVAL

1. Discharge the refrigerant. Refer to ATC-119, "HFC-134a (R-134a) Service Procedure" .
2. Remove the drive belt.
   Refer to MA-21, "ENGINE MAINTENANCE (VQ35DE ENGINE)" .
3. Remove the coolant pipe bracket bolt.
4. Remove compressor mounting stud.
5. Disconnect the compressor connector.
6. Remove the high-pressure flexible hose and low-pressure flexible hose.
   CAUTION:
   Cap or wrap the joint of the pipe with suitable material such as vinyl tape to avoid the entry of air.
7. Remove the mounting bolts and nut from compressor using power tools.

INSTALLATION

CAUTION:

- **Replace the O-ring of the low-pressure flexible hose and high-pressure flexible hose with a new one, then apply compressor oil to it when installing it.**
- **When charging refrigerant, check for leaks.**

Bolts mounting the compressor (rear side)

Tightening torque : 56.9 - 65.7 N·m (5.8 - 6.8 kg-m, 42 - 48 ft-lb)

Bolt mounting the compressor (front side)

Tightening torque : 28.4 - 33.3 N·m (2.9 - 3.4 kg-m, 21 - 24 ft-lb)

Nut mounting the compressor (front side)

Tightening torque : 59.8 - 69.6 N·m (6.1 - 7.0 kg-m, 45 - 51 ft-lb)

Bolt mounting the high- and low-pressure flexible hoses

Tightening torque : 7.8 - 19.6 N·m (0.8 - 1.9 kg-m, 69 - 173 in-lb)

Removal and Installation for Compressor Clutch

EJS000YO

REMOVAL

- When removing center bolt, hold clutch disc with clutch disc tool.
- Remove the clutch disc.
  Clutch disc holding tool:
  (J-44614) Commercial service tool

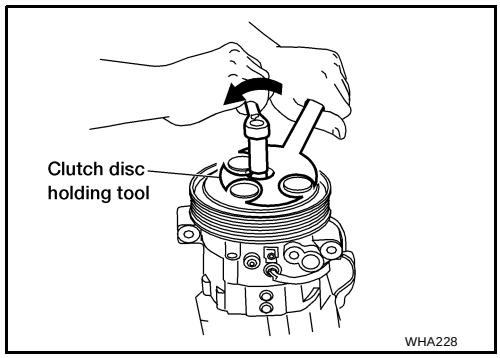

- Remove the snap ring using external snap ring pliers.

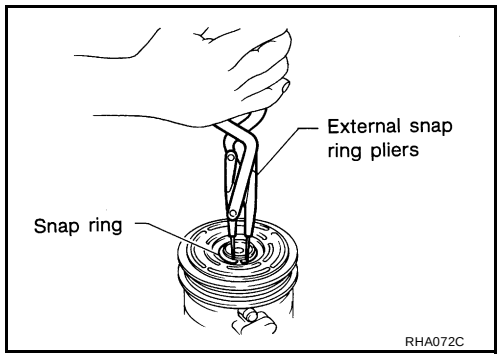

- Pulley removal:

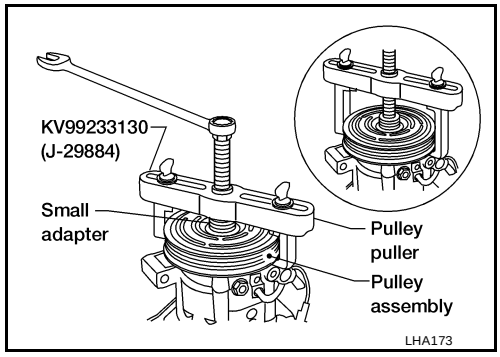

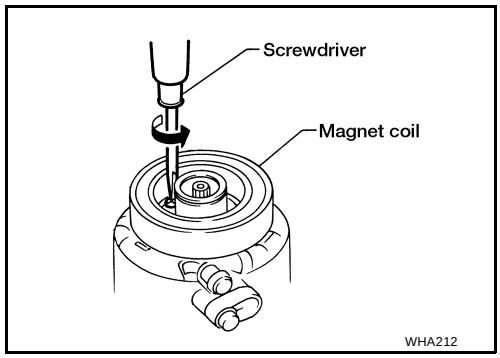

Use a pulley puller with small adapter. Position the small adapter on the end of the drive shaft and the center of the puller on the small adapter. Remove the pulley assembly with the puller.
To prevent deformation of the pulley groove, the puller claws should be hooked under (not into) the pulley groove.

- Remove the snap ring using external snap ring pliers.
- Remove the magnet coil harness clip using a screwdriver, remove the three magnet coil fixing screws and remove the magnet coil.

INSPECTION

Clutch Disc

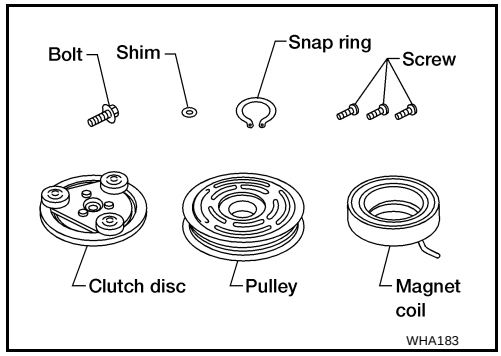

If the contact surface shows signs of damage due to excessive heat, replace clutch disc and pulley.

Pulley

Check the appearance of the pulley assembly. If contact surface of pulley shows signs of excessive grooving, replace clutch disc and pulley. The contact surfaces of the pulley assembly should be cleaned with a suitable solvent before reinstallation.

Coil

Check magnet coil for loose connection or cracked insulation.

INSTALLATION

- Install the magnet coil.
  Be sure to align the magnet coil pin with the hole in the compressor front head.
- Install the magnet coil harness clip using a screwdriver.

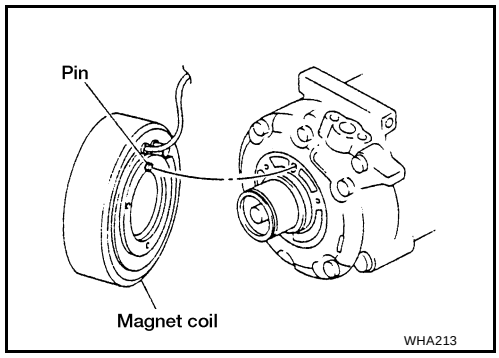

- Install the pulley assembly using the installer and a wrench, and then install the snap ring using snap ring pliers.

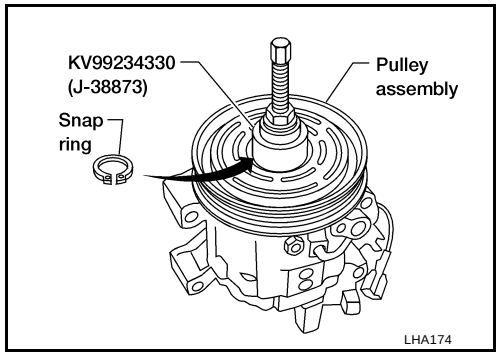

- Install the clutch disc on the drive shaft, together with the original shim(s). Press the clutch disc down by hand.

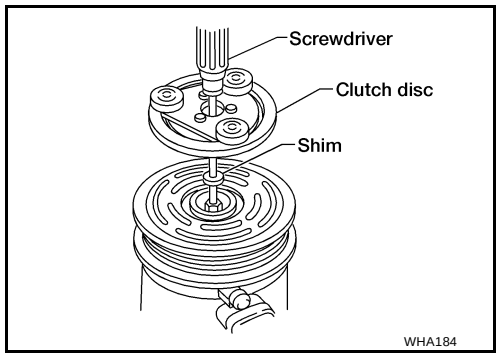

- Using the clutch disc tool to prevent clutch disc rotation, tighten the bolt to 12 N·m (1.2 kg-m, 9 ft-lb).
- **After tightening the bolt, check that the pulley rotates smoothly.**

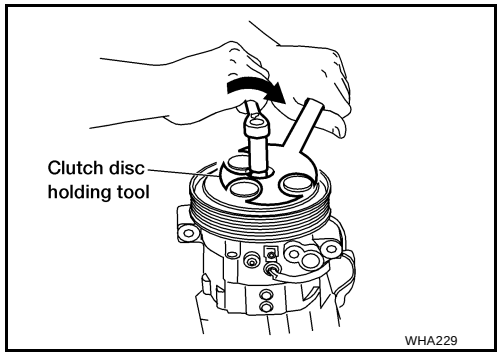

- Check clearance all the way around the clutch disc.

  Clutch disc-to-pulley clearance : 0.3 - 0.6 mm (0.012 - 0.024 in)

  If the specified clearance is not obtained, replace adjusting spacer and readjust.

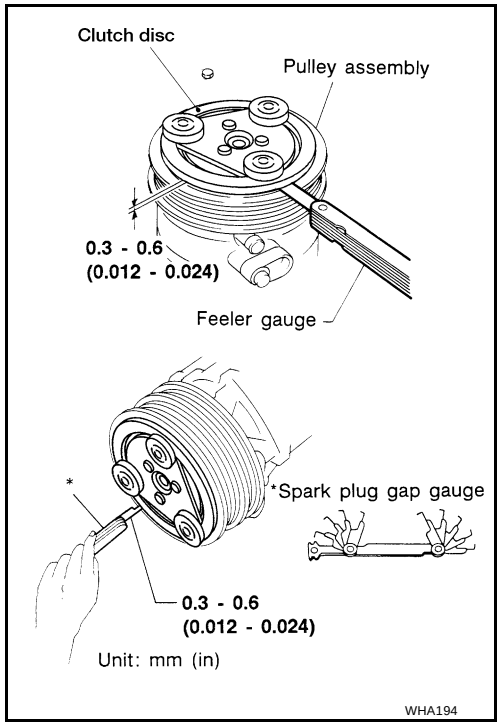

BREAK-IN OPERATION

When replacing compressor clutch assembly, always conduct the break-in operation. This is done by engaging and disengaging the clutch about 30 times. Break-in operation raises the level of transmitted torque.

Removal and Installation for Low-pressure Flexible Hose

EJS000YP

REMOVAL

1. Discharge the refrigerant. Refer to ATC-119, "HFC-134a (R-134a) Service Procedure" .

CAUTION:

Cap or wrap the joint of the pipe with suitable material such as vinyl tape to avoid the entry of air.

2. Remove the low-pressure flexible hose. Refer to ATC-121, "Components" .

INSTALLATION

CAUTION:

- **Replace the O-ring of the low-pressure flexible hose with a new one, then apply compressor oil to it when installing it.**
- **When charging refrigerant, check for leaks.**

Bolt mounting the low-pressure flexible hose (evaporator side)

Tightening torque : 2.9 - 5.9 N·m (0.29 - 0.60 kg-m, 26 - 52 in-lb)

Bolt mounting the low-pressure flexible hose (compressor side)

Tightening torque : 7.8 - 19.6 N·m (0.8 - 1.9 kg-m, 69 - 173 in-lb)

Bolt connecting the low-pressure flexible hose in-line connection

Tightening torque : 7.8 - 19.6 N·m (0.8 - 1.9 kg-m, 69 - 173 in-lb)

Removal and Installation for High-pressure Flexible Hose

EJS000YQ

REMOVAL

1. Discharge the refrigerant. Refer to ATC-119, "HFC-134a (R-134a) Service Procedure" .
2. Remove the high-pressure flexible hose. Refer to ATC-121, "Components" .

CAUTION:

Cap or wrap the joint of the pipe with suitable material such as vinyl tape to avoid the entry of air.

INSTALLATION

CAUTION:

- **Replace the O-ring of the high-pressure flexible hose with a new one, then apply compressor oil to it when installing it.**
- **When charging refrigerant, check for leaks.**

Bolts mounting the high-pressure flexible hose

Tightening torque : 7.8 - 19.6 N·m (0.8 - 1.9 kg-m, 69 - 173 in-lb)

Removal and Installation for High-pressure Pipe

EJS000YR

REMOVAL

1. Discharge the refrigerant. Refer to ATC-119, "HFC-134a (R-134a) Service Procedure" .
2. Remove the high-pressure pipe. Refer to ATC-121, "Components" .

CAUTION:

Cap or wrap the joint of the pipe with suitable material such as vinyl tape to avoid the entry of air.

INSTALLATION

CAUTION:

- **Replace the O-ring of the high-pressure pipe with a new one, then apply compressor oil to it when installing it.**
- **When charging refrigerant, check for leaks.**

Bolt mounting the high-pressure pipe (evaporator side)

Tightening torque : 2.9 - 5.9 N·m (0.29 - 0.60 kg-m, 26 - 52 in-lb)

Bolt mounting the high-pressure pipe (condenser side)

Tightening torque : 7.8 - 19.6 N·m (0.8 - 1.9 kg-m, 69 - 173 in-lb)

Removal and Installation for Refrigerant Pressure Sensor

EJS000YS

1. Discharge the refrigerant. Refer to ATC-119, "HFC-134a (R-134a) Service Procedure" .
2. Disconnect the refrigerant pressure sensor connector and remove the refrigerant pressure sensor from condenser.

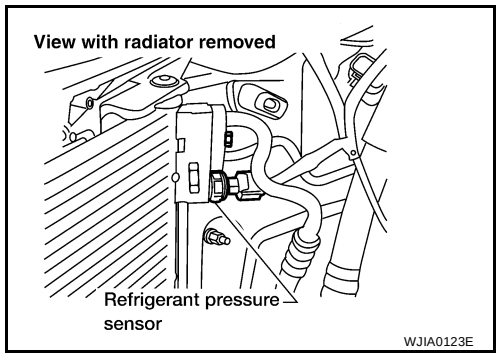

CAUTION:

- **Please be careful not to damage the condenser fins.**
- **Apply compressor oil to the O-ring of the refrigerant pressure sensor when installing it.**

Tightening torque : 9.8 - 11.7 N·m (1.0 - 1.2 kg-m, 7.3 - 8.6 ft-lb)

Removal and Installation for Condenser

EJS000YT

REMOVAL

1. Discharge the refrigerant. Refer to ATC-119, "HFC-134a (R-134a) Service Procedure" .
2. Remove the radiator. Refer to CO-34, "RADIATOR" .

CAUTION:

Be careful not to damage the core surface of the condenser and the radiator.

3. Disconnect the high-pressure flexible hose and the high-pressure pipe from the condenser.

   CAUTION:
   Cap or wrap the joint of the pipe with suitable material such as vinyl tape to avoid the entry of air.
4. Disconnect the refrigerant pressure sensor connector.
5. Remove the front fascia. Refer to EI-13, "FRONT BUMPER" .

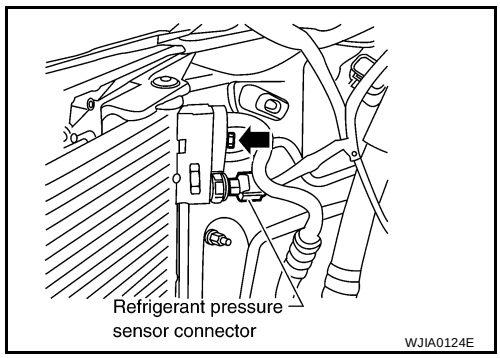

6. Remove the mounting nuts from condenser mounting brackets.

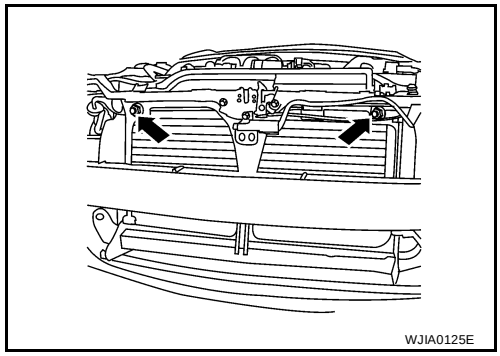

INSTALLATION

CAUTION:

- **Replace the O-rings of the high-pressure pipe and the high-pressure flexible hose with new ones, then apply compressor oil to them after installing them.**
- **When charging refrigerant, check for leaks.**

High-pressure flexible hose and pipe mounting bolt

Tightening torque : 7.8 - 19.6 N·m (0.8 - 1.9 kg-m, 69 - 173 in-lb)

Condenser mounting nuts

Tightening torque : 5.0 - 6.79 N·m (0.51 - 0.69 kg-m, 45 - 60 in-lb)

Removal and Installation for Liquid Tank

EJS000YU

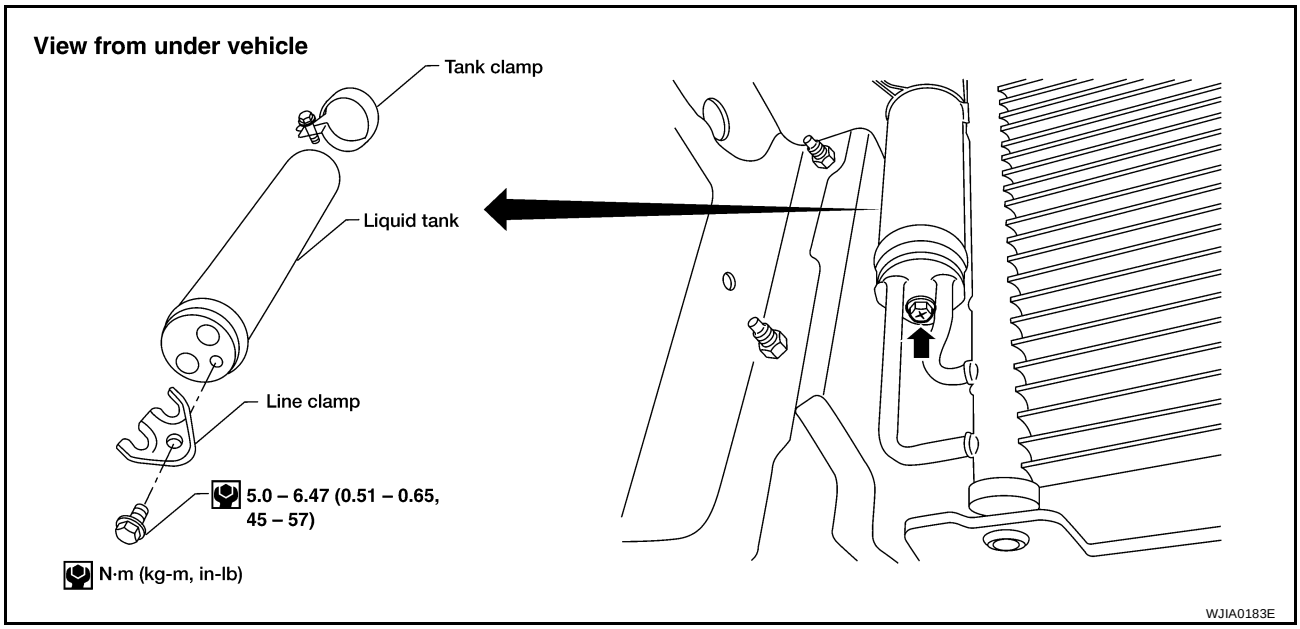

1. Discharge the refrigerant. Refer to ATC-119, "HFC-134a (R-134a) Service Procedure" .
2. Remove the battery.

3. Remove the hood switch (if equipped).
4. Remove the engine undercover using power tools.
5. Remove the bolt and line clamp.
6. Loosen the tank clamp and remove the liquid tank.

Removal and Installation for Evaporator

EJS000YV

REMOVAL

1. Remove the heater and cooling unit. Refer to ATC-119, "HFC-134a (R-134a) Service Procedure" .
2. Remove the heater core cover.

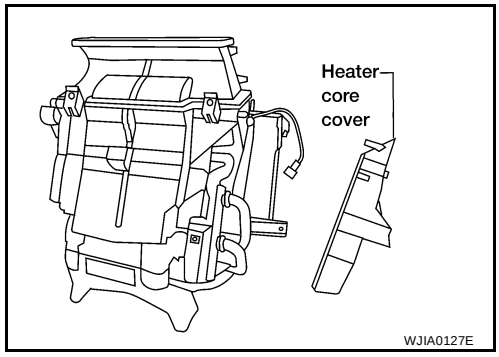

3. Remove the evaporator cover.

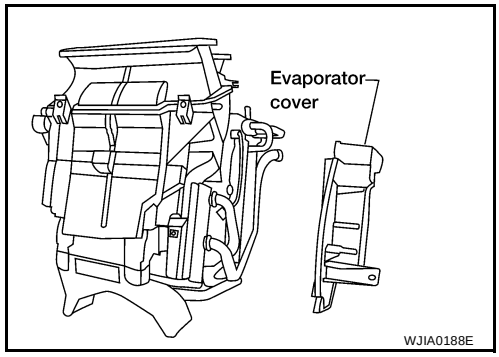

4. Remove the evaporator pipes.

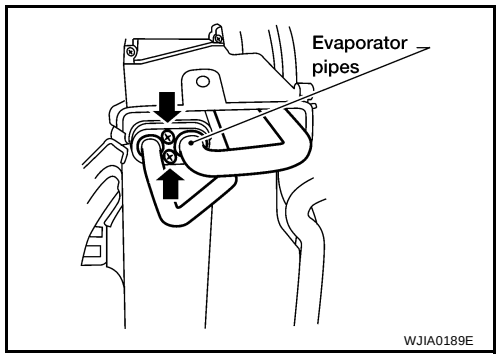

5. Remove the evaporator.

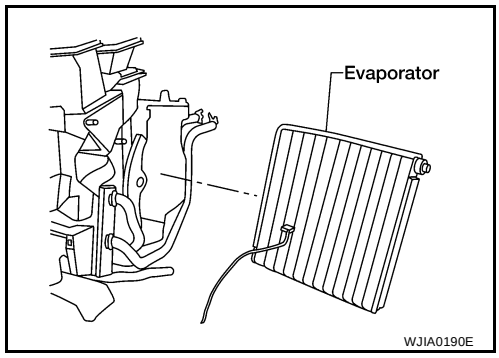

INSTALLATION

CAUTION:

- **Replace the O-rings of the low-pressure flexible hose and the high-pressure pipe with new ones, then apply compressor oil to them when installing them.**
- **Mark the mounting position of the intake sensor and thermo control amp.**

Removal and Installation for Expansion Valve

EJS000YW

1. Discharge the refrigerant. Refer to ATC-119, "HFC-134a (R-134a) Service Procedure" .
2. Disconnect the refrigerant lines from the cooler unit.

   CAUTION:
   Cap or wrap the joint of the pipe with suitable material such as vinyl tape to avoid the entry of air.
3. Remove the cooler grommet.
4. Remove the expansion valve.

Expansion valve mounting bolts

Tightening torque : 2.9 - 5.0 N·m (0.29 - 0.51 kg-m, 26 - 44 in-lb)

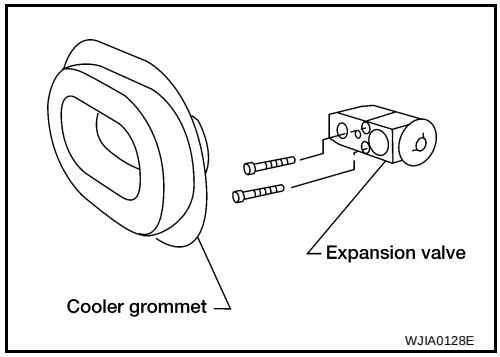

Checking for Refrigerant Leaks

EJS000YX

Perform a visual inspection of all refrigeration parts, fittings, hoses and components for signs of A/C lubricant leakage, damage and corrosion. A/C lubricant leakage may indicate an area of refrigerant leakage. Allow extra inspection time in these areas when using either an electronic refrigerant leak detector or fluorescent dye leak detector.
If dye is observed, confirm the leak with an electronic refrigerant leak detector. It is possible a prior leak was repaired and not properly cleaned.
When searching for leaks, do not stop when one leak is found but continue to check for additional leaks at all system components and connections.
When searching for refrigerant leaks using an electronic leak detector, move the probe along the suspected leak area at 25 - 50 mm (1 - 2 in) per second and no further than 6 mm (1/4 in) from the component.

CAUTION:
Moving the electronic leak detector probe slower and closer to the suspected leak area will improve the chances of finding a leak.

Checking System for Leaks Using the Fluorescent Leak Detector

EJS000YY

1. Check A/C system for leaks using the UV lamp and safety glasses (J-42220) in a low sunlight area (area without windows preferable). Illuminate all components, fittings and lines. The dye will appear as a bright green/yellow area at the point of leakage. Fluorescent dye observed at the evaporator drain opening indicates an evaporator core assembly (tubes, core or TXV) leak.
2. If the suspected area is difficult to see, use an adjustable mirror or wipe the area with a clean shop rag or cloth, with the UV lamp for dye residue.
3. After the leak is repaired, remove any residual dye using dye cleaner (J-43872) to prevent future misdiagnosis.
4. Perform a system performance check and verify the leak repair with an approved electronic refrigerant leak detector.

NOTE:
Other gases in the work area or substances on the A/C components, for example, anti-freeze, windshield washer fluid, solvents and lubricants, may falsely trigger the leak detector. Make sure the surfaces to be checked are clean.
Clean with a dry cloth or blow off with shop air.
Do not allow the sensor tip of the detector to contact with any substance. This can also cause false readings and may damage the detector.

Dye Injection

EJS000YZ

(This procedure is only necessary when recharging the system or when the compressor has seized and was replaced.)

1. Check A/C system static (at rest) pressure. Pressure must be at least 345 kPa (50 psi).
2. Pour one bottle (1/4 ounce / 7.4 cc) of the A/C refrigerant dye into the injector tool (J-41459).
3. Connect the injector tool to the A/C LOW PRESSURE side service fitting.
4. Start engine and switch A/C ON.
5. When the A/C operating (compressor running), inject one bottle (1/4 ounce / 7.4 cc) of fluorescent dye through the low-pressure service valve using dye injector tool J-41459 (refer to the manufacturer's operating instructions).
6. With the engine still running, disconnect the injector tool from the service fitting.

CAUTION:

Be careful the A/C system or replacing a component, pour the dye directly into the open system connection and proceed with the service procedures.

7. Operate the A/C system for a minimum of 20 minutes to mix the dye with the system oil. Depending on the leak size, operating conditions and location of the leak, it may take from minutes to days for the dye to penetrate a leak and become visible.

Electronic Refrigerant Leak Detector

EJS000Z0

PRECAUTIONS FOR HANDLING LEAK DETECTOR

When performing a refrigerant leak check, use a J-41995 A/C leak detector or equivalent. Ensure that the instrument is calibrated and set properly per the operating instructions.
The leak detector is a delicate device. In order to use the leak detector properly, read the operating instructions and perform any specified maintenance.

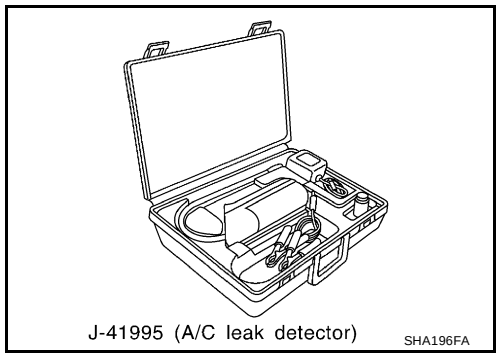

1. Position probe approximately 5 mm (3/16 in) away from point to be checked.

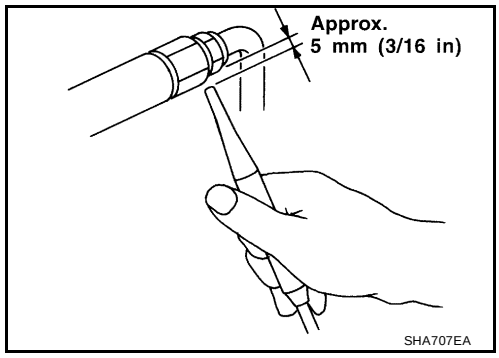

2. When testing, circle each fitting completely with probe.

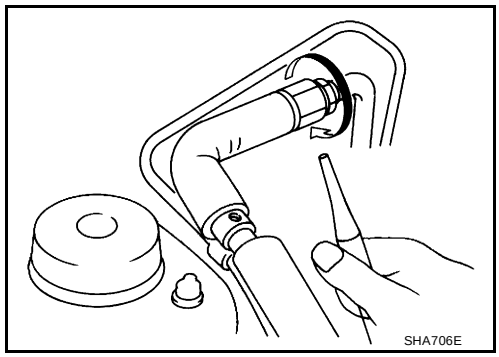

3. Move probe along component approximately 25 to 50 mm (1 to 2 in)/sec.

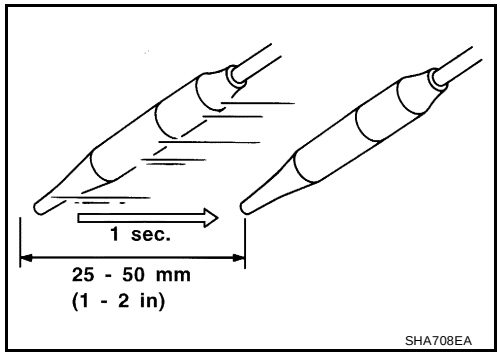

CHECKING PROCEDURE

To prevent inaccurate or false readings, make sure there is no refrigerant vapor, shop chemicals, or cigarette smoke in the vicinity of the vehicle. Perform the leak test in calm area (low air/wind movement) so that the leaking refrigerant is not dispersed.

1. Turn engine OFF.
2. Connect a suitable A/C manifold gauge set to the A/C service ports.
3. Check if the A/C refrigerant pressure is at least 345 kPa (3.52 kg/cm^2 , 50 psi) above 16°C (61°F). If less than specification, recover/evacuate and recharge the system with the specified amount of refrigerant.

NOTE:
At temperatures below 16°C (61°F), leaks may not be detected since the system may not reach 345 kPa (3.54 kg/cm^2 , 50 psi).

4. Conduct the leak test from the high side (compressor discharge a to evaporator inlet f) to the low side (evaporator drain hose g to shaft seal l). Refer to ATC-121 . Perform a leak check for the following areas carefully. Clean the component to be checked and move the leak detected probe completely around the connection/component.
   Compressor
   Check the fitting of high- and low-pressure hoses, relief valve and shaft seal.
   Liquid tank
   Check the refrigerant pressure sensor.
   Service valves
   Check all around the service valves. Ensure service valve caps are secured on the service valves (to prevent leaks).

   NOTE:
   After removing A/C manifold gauge set from service valves, wipe any residue from valves to prevent any false readings by leak detector.

   Cooling unit (Evaporator)
   With engine OFF, turn blower fan on "High" for at least 15 seconds to dissipate any refrigerant trace in the cooling unit. Wait a minimum of 10 minutes accumulation time (refer to the manufacturer's recommended procedure for actual wait time) before inserting the leak detector probe into the drain hose.
   Keep the probe inserted for at least 10 seconds. Use caution not to contaminate the probe tip with water or dirt that may be in the drain hose.
5. If a leak detector detects a leak, verify at least once by blowing compressed air into area of suspected leak, then repeat check as outlined above.
6. Do not stop when one leak is found. Continue to check for additional leaks at all system components.
   If no leaks are found, perform steps 7 - 10.
7. Start engine.
8. Set the heater A/C control as follows;

a. A/C switch: ON
b. Face mode
c. Intake position: Recirculation
d. Max cold temperature
e. Fan speed: High

9. Run engine at 1,500 rpm for at least 2 minutes.

10. Turn engine off and perform leak check again following steps 4 through 6 above.

Refrigerant leaks should be checked immediately after stopping the engine. Begin with the leak detector at the compressor. The pressure on the high pressure side will gradually drop after refrigerant circulation stops and pressure on the low pressure side will gradually rise, as shown in the graph. Some leaks are more easily detected when pressure is high.

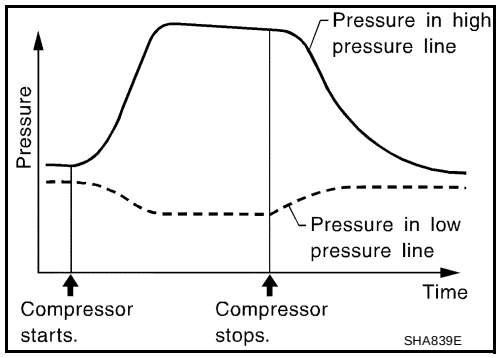

11. Before connecting ACR4 to vehicle, check ACR4 gauges. No refrigerant pressure should be displayed. If pressure is displayed, recover refrigerant from equipment lines and then check refrigerant purity.
12. Confirm refrigerant purity in supply tank using ACR4 and refrigerant identifier.
13. Confirm refrigerant purity in vehicle A/C system using ACR4 and refrigerant identifier.
14. Discharge A/C system using approved refrigerant recovery equipment. Repair the leaking fitting or component as necessary.
15. Evacuate and recharge A/C system and perform the leak test to confirm no refrigerant leaks.
16. Conduct A/C performance test to ensure system works properly.

SERVICE DATA AND SPECIFICATIONS (SDS)

PFP:00030

Service Data and Specifications (SDS)

EJS000Z1

COMPRESSOR

Model	CALSONIC KANSEI make
Type	DKS-17D
Displacement cm3 (cu in)/rev	175.5 (10.7)/rev
Cylinder bore × stroke mm (in)	30.5 (1.201) x 21.4 (0.84)
Direction of rotation	Clockwise (viewed from drive end)
Drive belt	Poly V

LUBRICANT

Model		CALSONIC KANSEI make DKS-17D
Name		Nissan A/C System Oil Type DH-PS
Part number		KLH00-PAGS0
Capacity m ℓ (US fl oz, Imp fl oz)	Total in system	150 (5.03, 5.3)
	Compressor (Service part) charging amount	150 (5.03, 5.3)

REFRIGERANT

Type	HFC-134a (R-134a)
Capacity kg (lb)	0.475 - 0.525 (1.045 - 1.155)

ENGINE IDLING SPEED

Refer to EC-657, "Idle Speed and Ignition Timing Check" .

BELT TENSION

Refer to MA-21, "ENGINE MAINTENANCE (VQ35DE ENGINE)" .

SECTION AV

AUDIO, VISUAL & TELEPHONE SYSTEM

CONTENTS

PRECAUTIONS 2
Precautions for Supplemental Restraint System (SRS) “AIR BAG” and “SEAT BELT PRE-TENSIONER” 2
Wiring Diagrams and Trouble Diagnosis 2
PREPARATION 3
Commercial Service Tools 3
AUDIO 4
System Description 4
BASE AND MIDLINE SYSTEM 4
BOSE® SYSTEM 4
SPEED DEPENDENT VOLUME CONTROL (MIDLINE SYSTEM AND BOSE SYSTEM) 4
Circuit Diagram 5
BASE SYSTEM 5
MIDLINE SYSTEM 6
BOSE SYSTEM 7
Wiring Diagram — AUDIO — 8
BASE SYSTEM 8
MIDLINE SYSTEM 11
BOSE SYSTEM 14
Wiring Diagram - REMOTE - 18
Terminals and Reference Value for Audio Unit (Except Bose) 19
Terminals and Reference Value for Audio Unit (Bose) 20
Terminals and Reference Value for Bose Speaker Amp. 21
Steering Wheel Audio Control Switch Resistance Check 22
Removal and Installation 22
AUDIO UNIT 22
DOOR SPEAKER 22
TWEETER SPEAKER 23
REAR SPEAKER 23
SUBWOOFER SPEAKER 23
BOSE SPEAKER AMP. 23
STEERING WHEEL AUDIO CONTROL SWITCHES 24
Trouble Diagnoses 24
AUDIO UNIT 24
BASE AND MIDLINE SYSTEM 24
BOSE SYSTEM 24
AUDIO ANTENNA 26
System Description 26
Wiring Diagram -W/ANT- 27
Location of Antenna 28
Window Antenna Repair 28
ELEMENT CHECK 28
ELEMENT REPAIR 29

PRECAUTIONS

PFP:00001

Precautions for Supplemental Restraint System (SRS) “AIR BAG” and “SEAT BELT PRE-TENSIONER”

EKS002KN

The Supplemental Restraint System such as “AIR BAG” and “SEAT BELT PRE-TENSIONER”, used along with a front seat belt, helps to reduce the risk or severity of injury to the driver and front passenger for certain types of collision. Information necessary to service the system safely is included in the SRS and SB section of this Service Manual.

WARNING:

- **To avoid rendering the SRS inoperative, which could increase the risk of personal injury or death in the event of a collision which would result in air bag inflation, all maintenance must be performed by an authorized NISSAN/INFINITI dealer.**
- **Improper maintenance, including incorrect removal and installation of the SRS, can lead to personal injury caused by unintentional activation of the system. For removal of Spiral Cable and Air Bag Module, see the SRS section.**
- **Do not use electrical test equipment on any circuit related to the SRS unless instructed to in this Service Manual. SRS wiring harnesses can be identified by yellow and/or orange harness connectors.**

Wiring Diagrams and Trouble Diagnosis

EKS002KO

When you read wiring diagrams, refer to the following:

- Refer to GI-12, "How to Read Wiring Diagrams" .
  Refer to PG-3, "POWER SUPPLY ROUTING CIRCUIT" .

When you perform trouble diagnosis, refer to the following:

- Refer to GI-10, "HOW TO FOLLOW TEST GROUPS IN TROUBLE DIAGNOSES" .
  Refer to GI-25, "How to Perform Efficient Diagnosis for an Electrical Incident" .

PREPARATION

PFP:00002

Commercial Service Tools

EKS002KP

Tool name	Description
Power tool 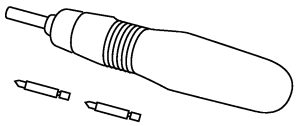 PBIC0191E	Loosening bolts and nuts

AUDIO

PFP:28111

System Description

EKS002KQ

BASE AND MIDLINE SYSTEM

Refer to Owner's Manual for audio system operating instructions.
Power is supplied at all times

- through 15A fuse [No. 31, located in the fuse and fusible link box]
- to audio unit terminal 6.

With the ignition switch in the ACC or ON position, power is supplied

- through 10A fuse [No. 6, located in the fuse block (J/B)]
- to audio unit terminal 10.

Ground is supplied through the case of the audio unit.
Audio signals are supplied

- through audio unit terminals 1, 2, 3, 4, 13, 14, 15, and 16
- to terminals + and - of front door speaker LH and RH
- to terminals + and - of rear door speaker LH and RH
- to terminals + and - of tweeter LH and RH.

BOSE® SYSTEM

Refer to Owner's Manual for audio system operating instructions.
Power is supplied at all times

- through 15A fuse [No. 31, located in the fuse and fusible link box]
- to audio unit terminal 6, and
- to Bose speaker amp. terminal 1.

With the ignition switch in the ACC or ON position, power is supplied

- through 10A fuse [No. 6, located in the fuse block (J/B)]
- to audio unit terminal 10.

Ground is supplied through the case of the audio unit.
Ground is also supplied

- to speaker amp. terminal 17
- through body ground B117.

Audio signals are supplied

- through audio unit terminals 1, 2, 3, 4, 13, 14, 15, and 16
- to speaker amp. terminals 23, 24, 25, 26, 27, 28, 29, and 30.

Audio signals are amplified by the speaker amp.
The amplified audio signals are supplied

- through speaker amp. terminals 2, 3, 9, 10, 11, 12, 13, 14, 15, 16, 18, and 19
- to terminals + and - of front door speaker LH and RH
- to terminals + and - of rear door speaker LH and RH
- to terminals + and - of tweeter LH and RH
- to terminals + and - of subwoofer LH and RH.

SPEED DEPENDENT VOLUME CONTROL (MIDLINE SYSTEM AND BOSE SYSTEM)

If activated, the radio output volume will be automatically adjusted to compensate for increased driving noises at higher driving speeds.
The radio receives a vehicle speed signal from the combination meter, and selects the output volume.

Circuit Diagram
BASE SYSTEM

EKS002KR

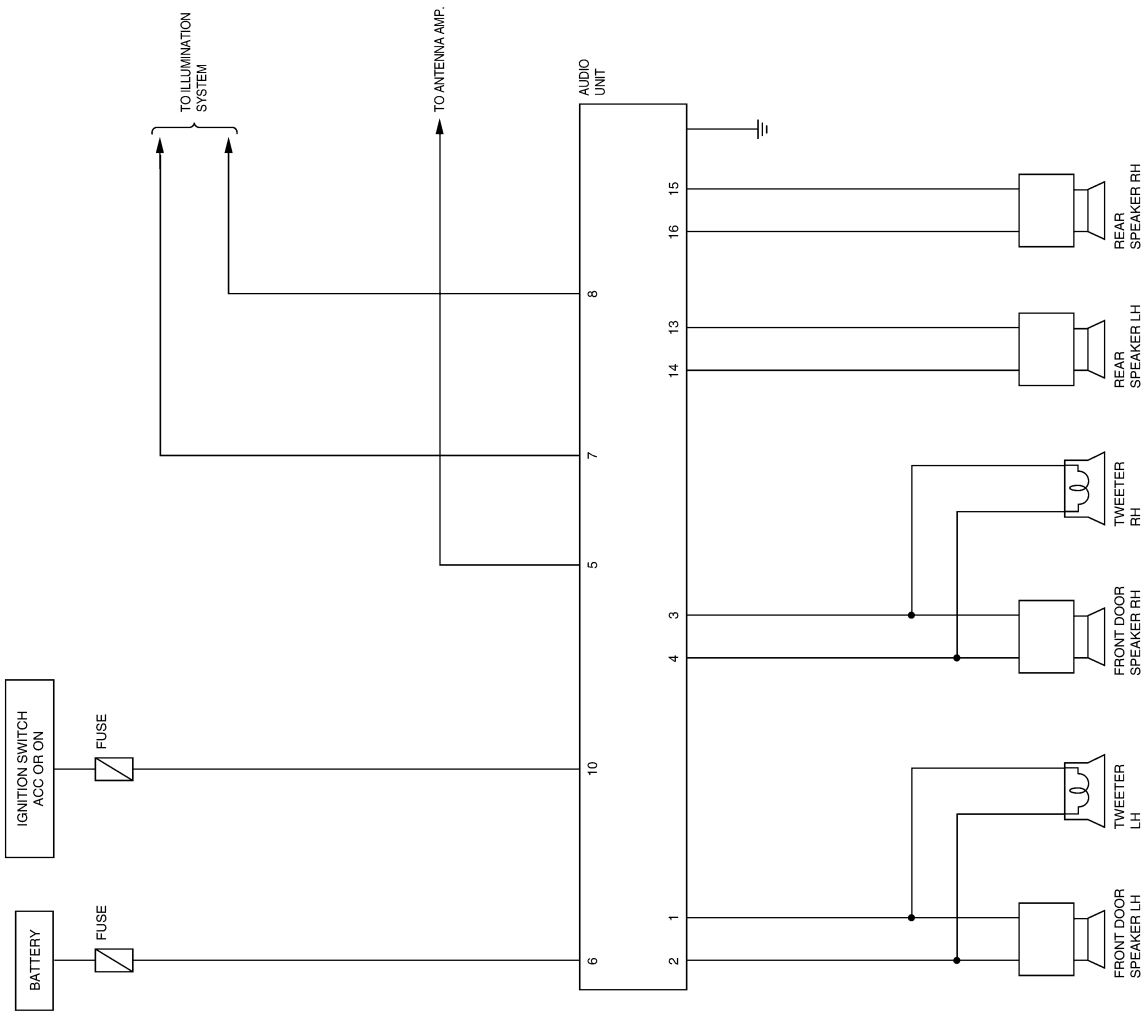

LKWA0001E

MIDLINE SYSTEM

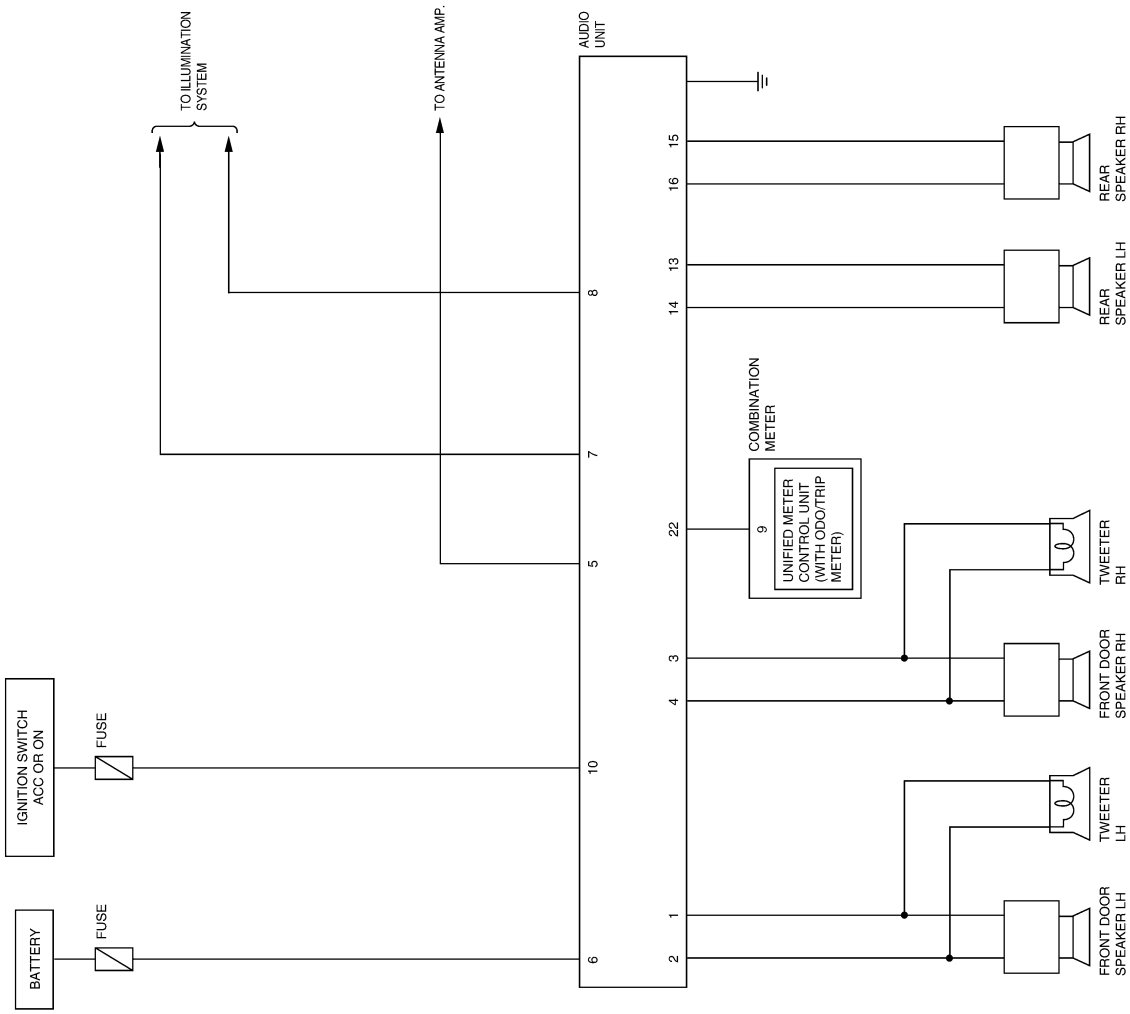

LKWA0002E

BOSE SYSTEM

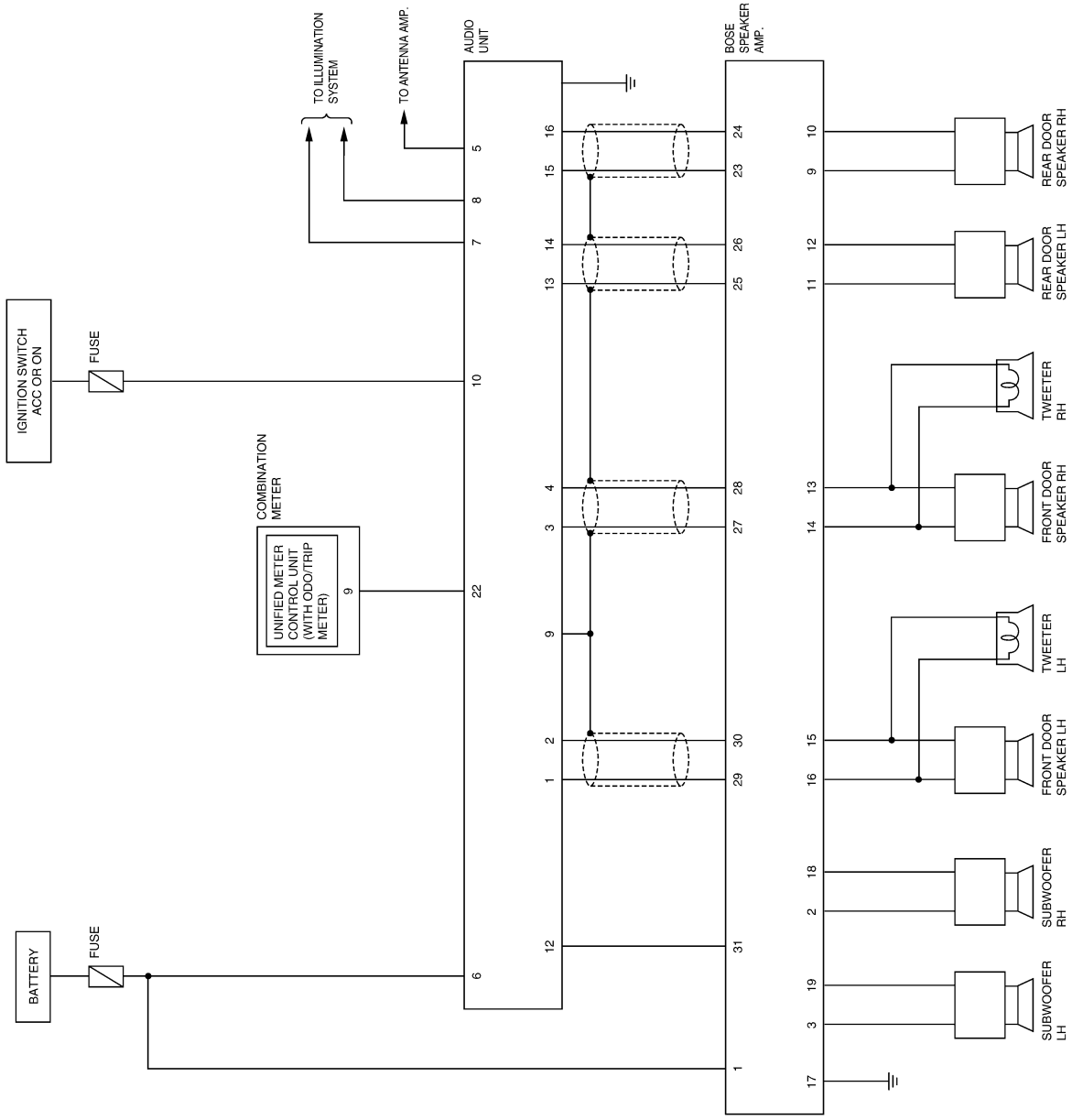

LKWA0003E

Wiring Diagram — AUDIO —
BASE SYSTEM

EKS002TT

AV-AUDIO-01

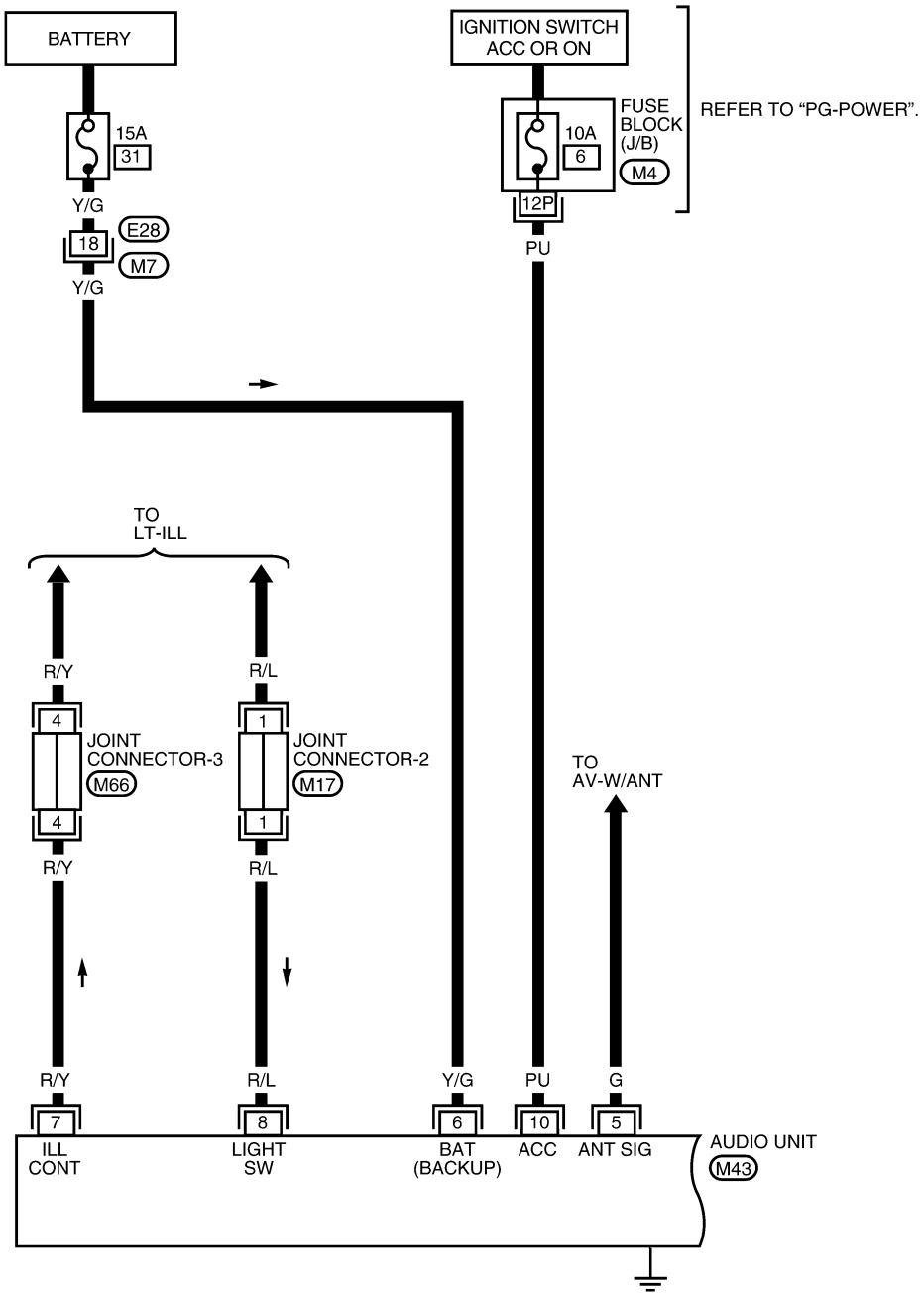

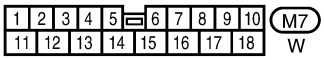

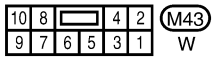

REFER TO THE FOLLOWING.
M17 , M66 - JOINT CONNECTOR (J/C)

LKWA0004E

AV-AUDIO-02

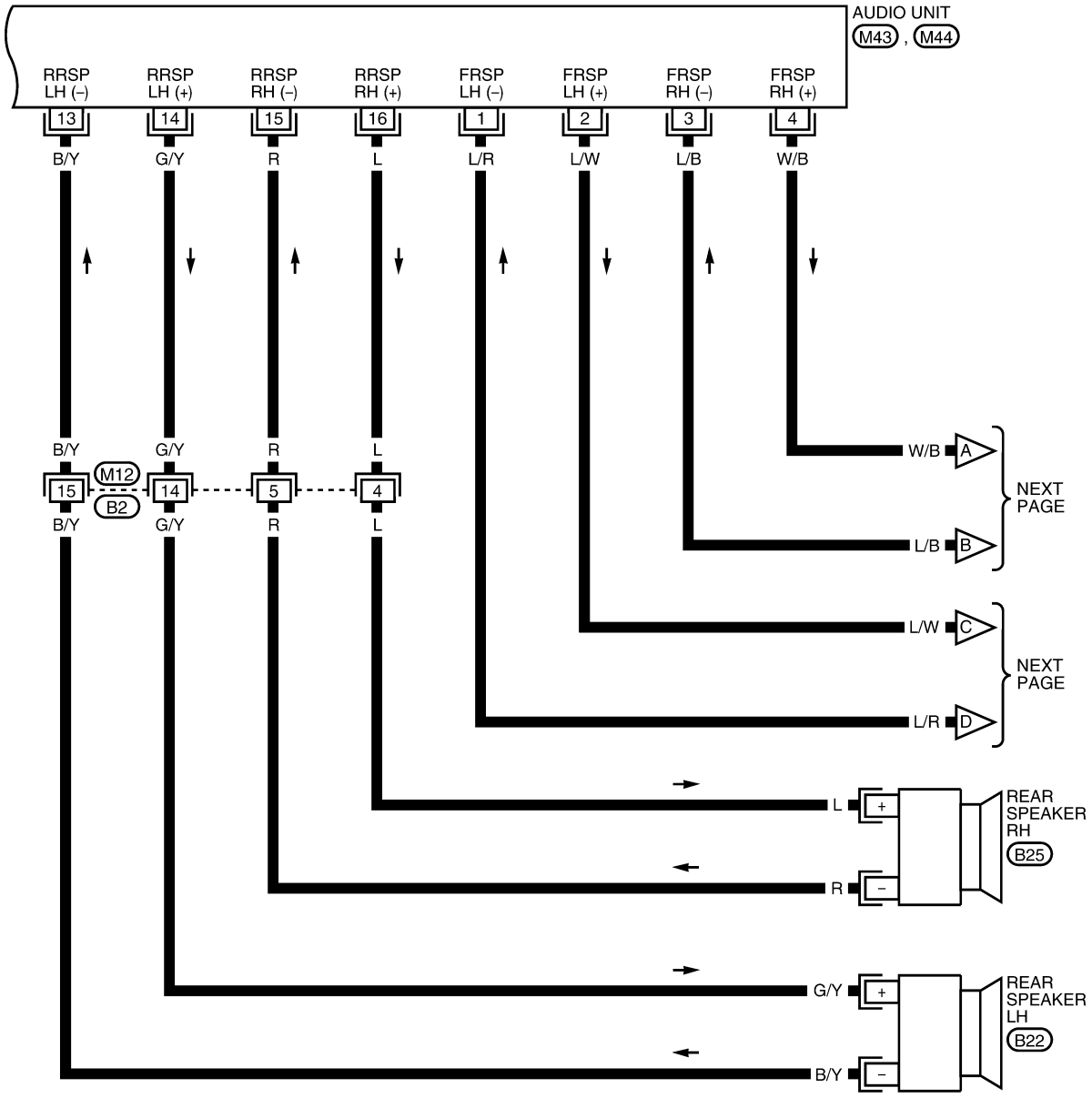

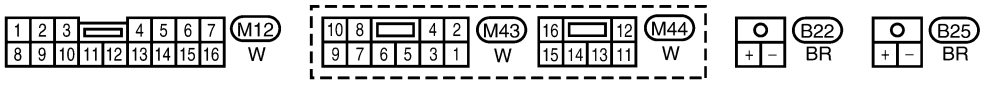

LKWA0005E

AV-AUDIO-03

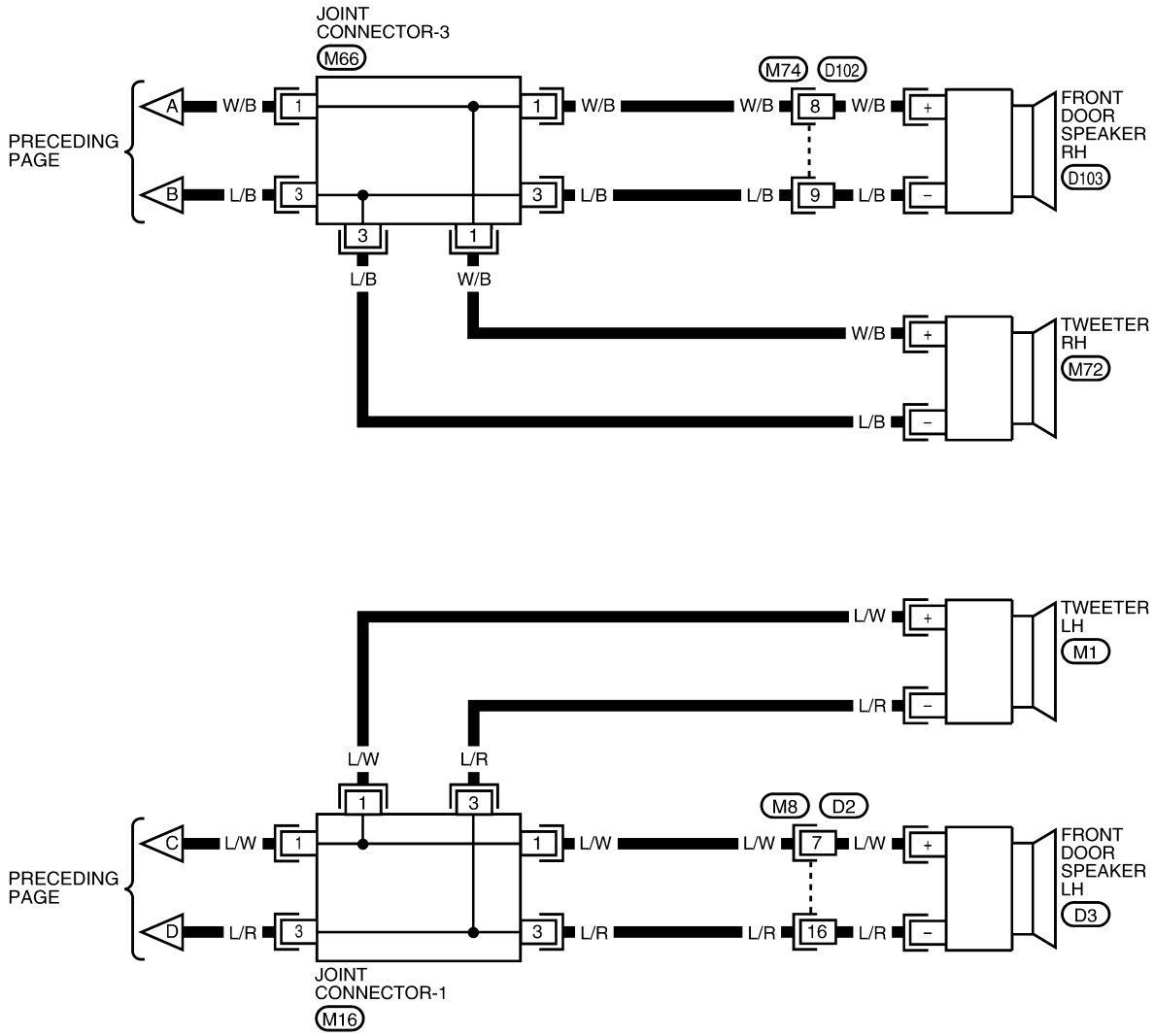

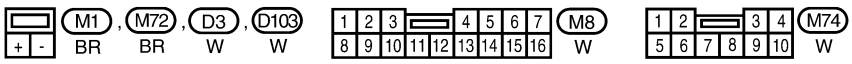

REFER TO THE FOLLOWING.
M16 , M66 - JOINT CONNECTOR (J/C)

LKWA0094E

MIDLINE SYSTEM

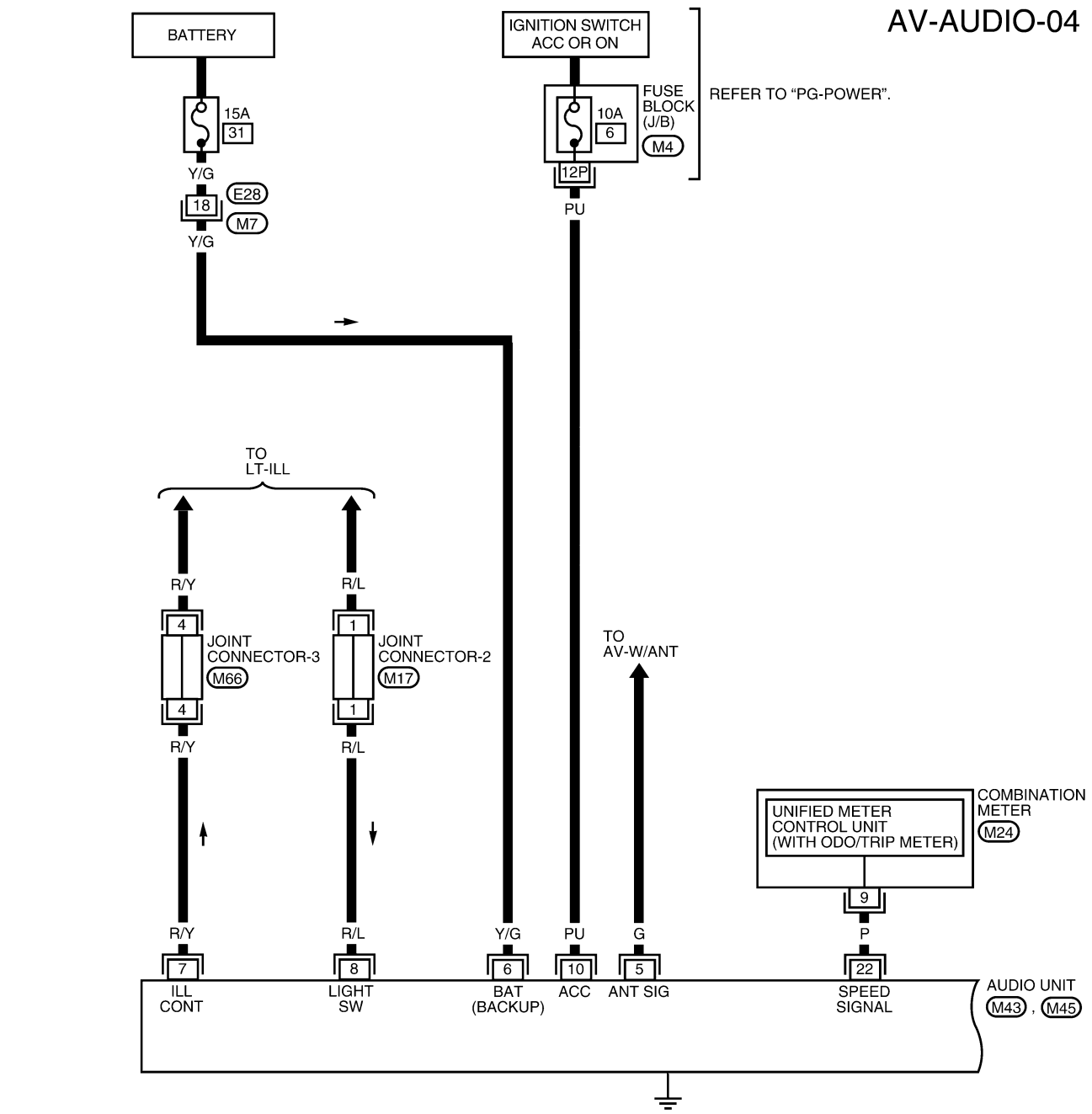

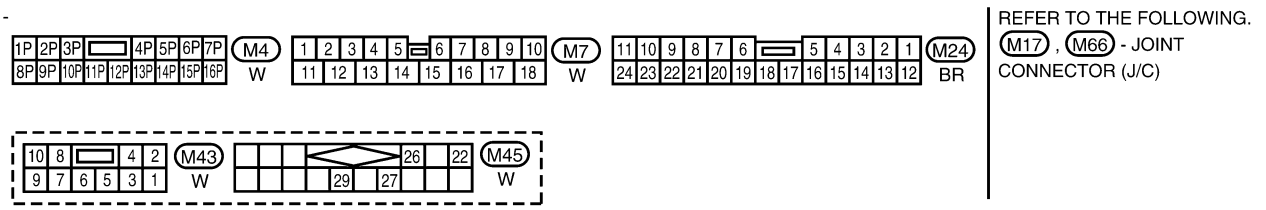

LKWA0007E

AV-AUDIO-05

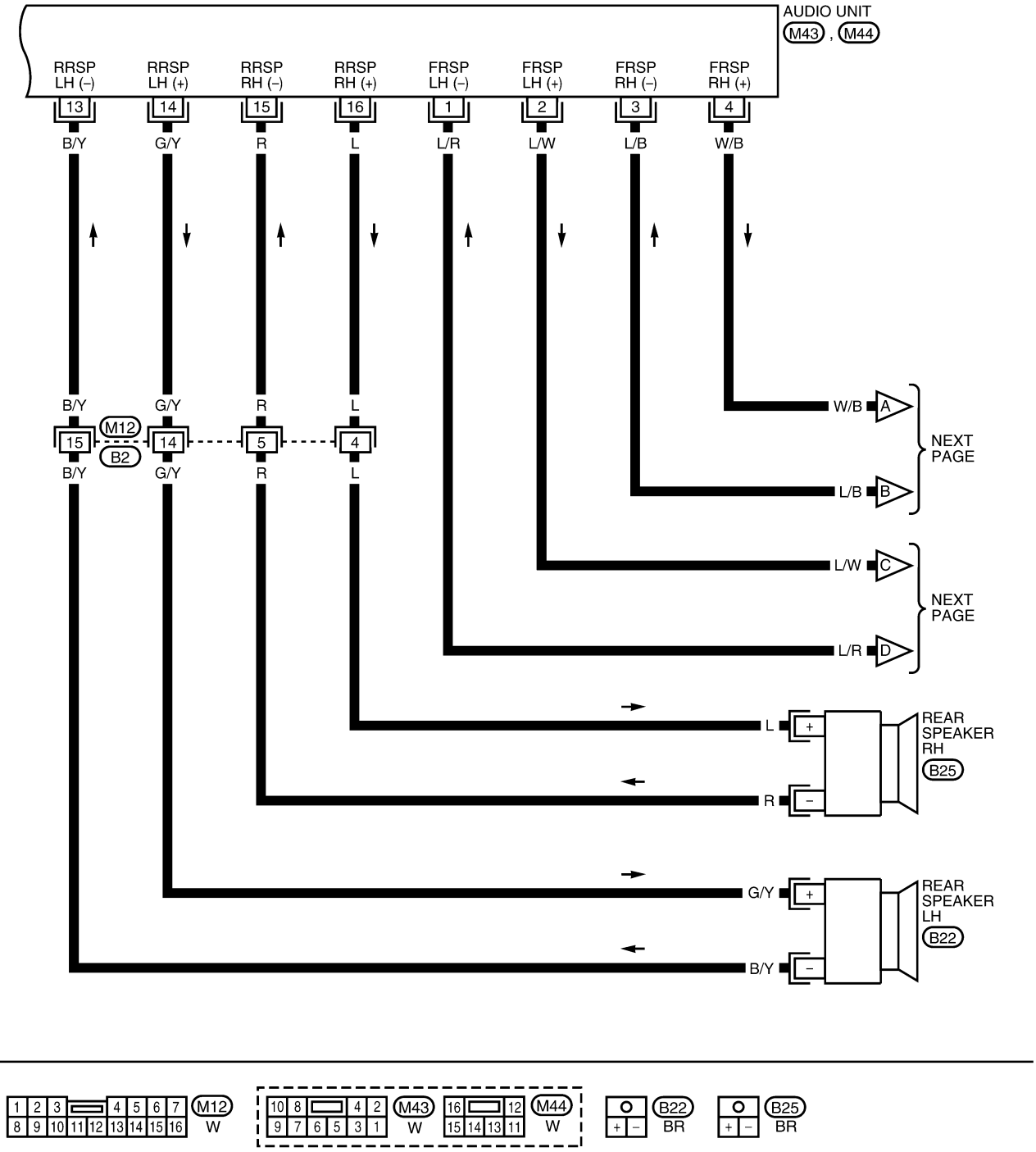

LKWA0009E

AV-AUDIO-06

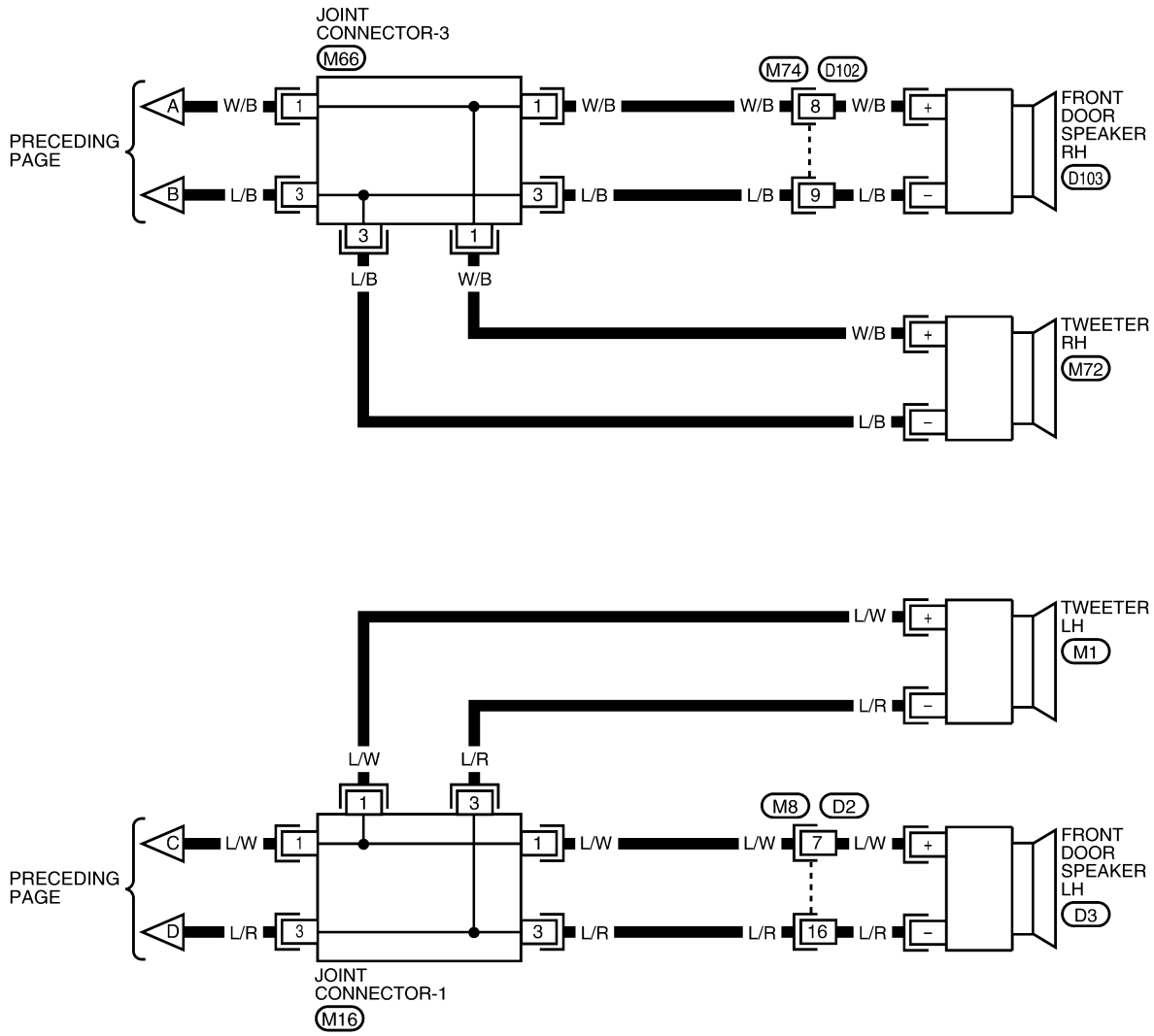

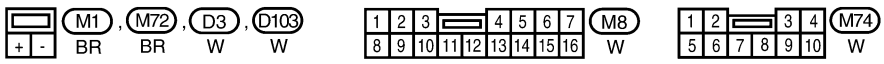

REFER TO THE FOLLOWING.
M16 , M66 - JOINT CONNECTOR (J/C)

LKWA0096E

BOSE SYSTEM

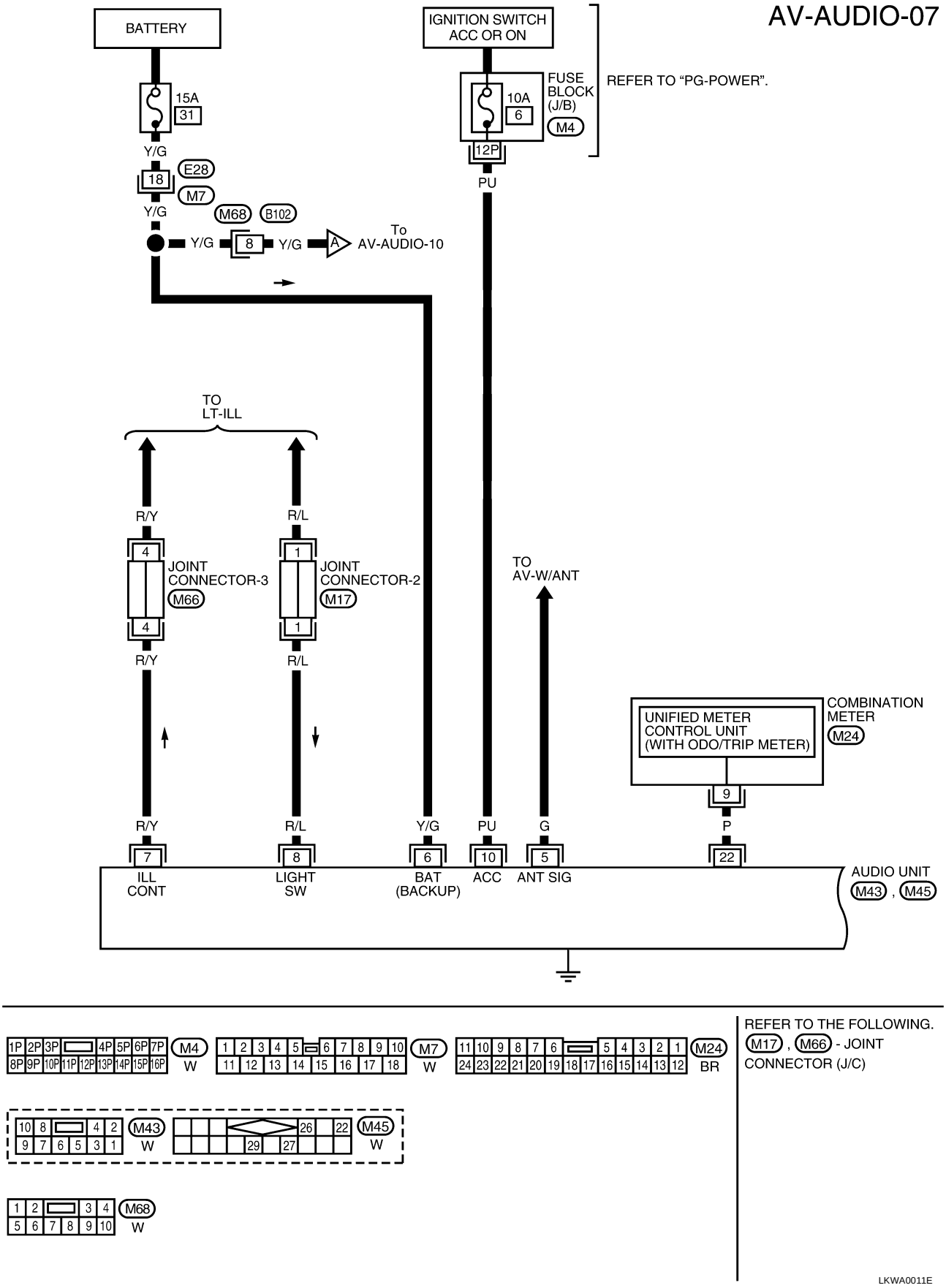
AV-AUDIO-07
BATTERY
15A
31
Y/G
18
E28
M7
Y/G
M68
B102
Y/G
8
Y/G
A
To
AV-AUDIO-10
IGNITION SWITCH
ACC OR ON
FUSE
BLOCK
(J/B)
M4
10A
6
12P
PU
REFER TO "PG-POWER".
TO
LT-ILL
R/Y
R/L
4
JOINT
CONNECTOR-3
M66
4
1
JOINT
CONNECTOR-2
M17
1
R/Y
R/L
TO
AV-W/ANT
UNIFIED METER
CONTROL UNIT
(WITH ODO/TRIP METER)
COMBINATION
METER
M24
9
R/Y
R/L
Y/G
PU
G
P
7
8
6
10
5
22
ILL
CONT
LIGHT
SW
BAT
(BACKUP)
ACC
ANT SIG
AUDIO UNIT
M43 , M45
M4
W
M7
W
M24
BR
M43
W
M45
W
M68
W
REFER TO THE FOLLOWING.
M17 , M66 - JOINT
CONNECTOR (J/C)
LKWA0011E

AV-AUDIO-08

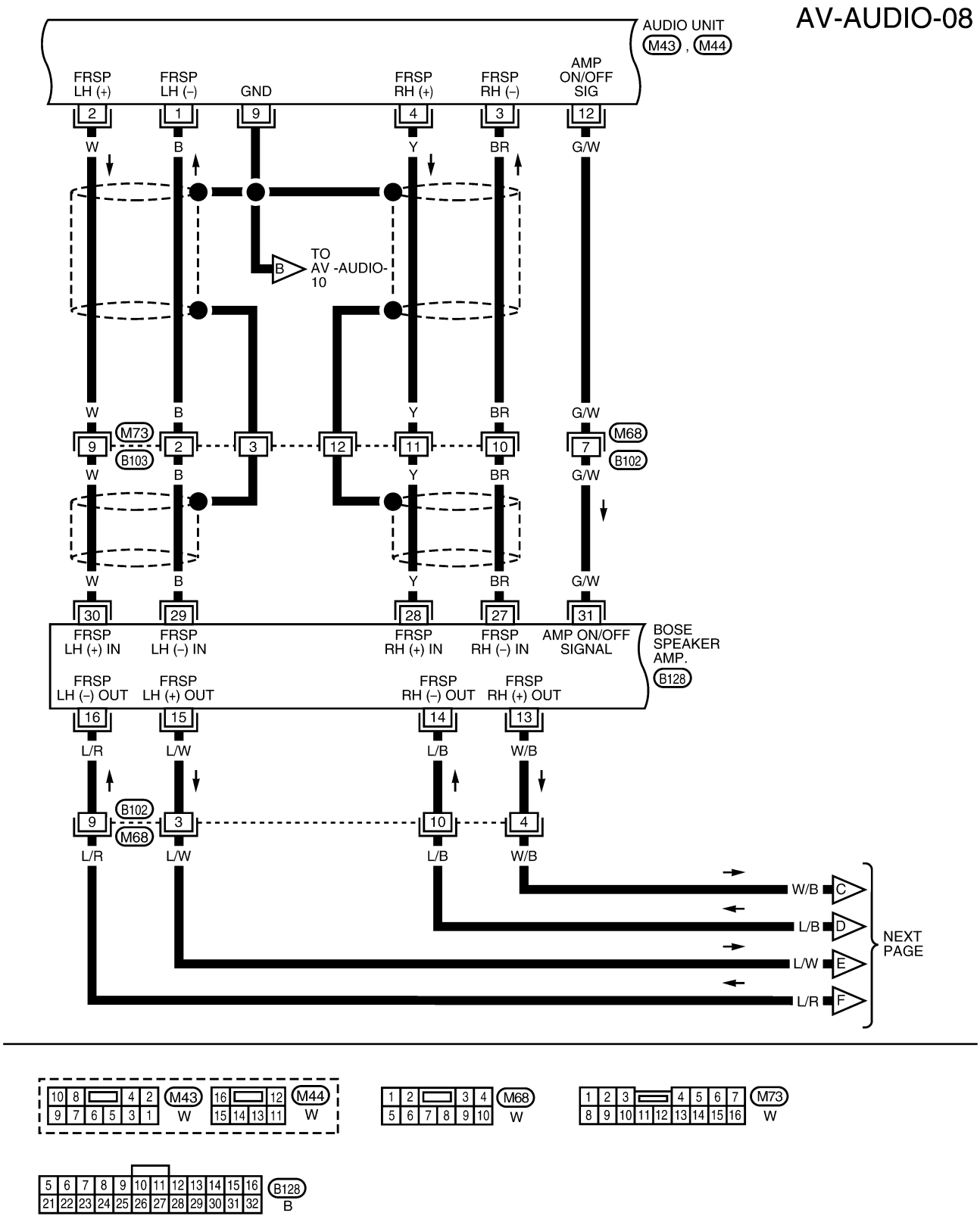

LKWA0013E

AV-AUDIO-09

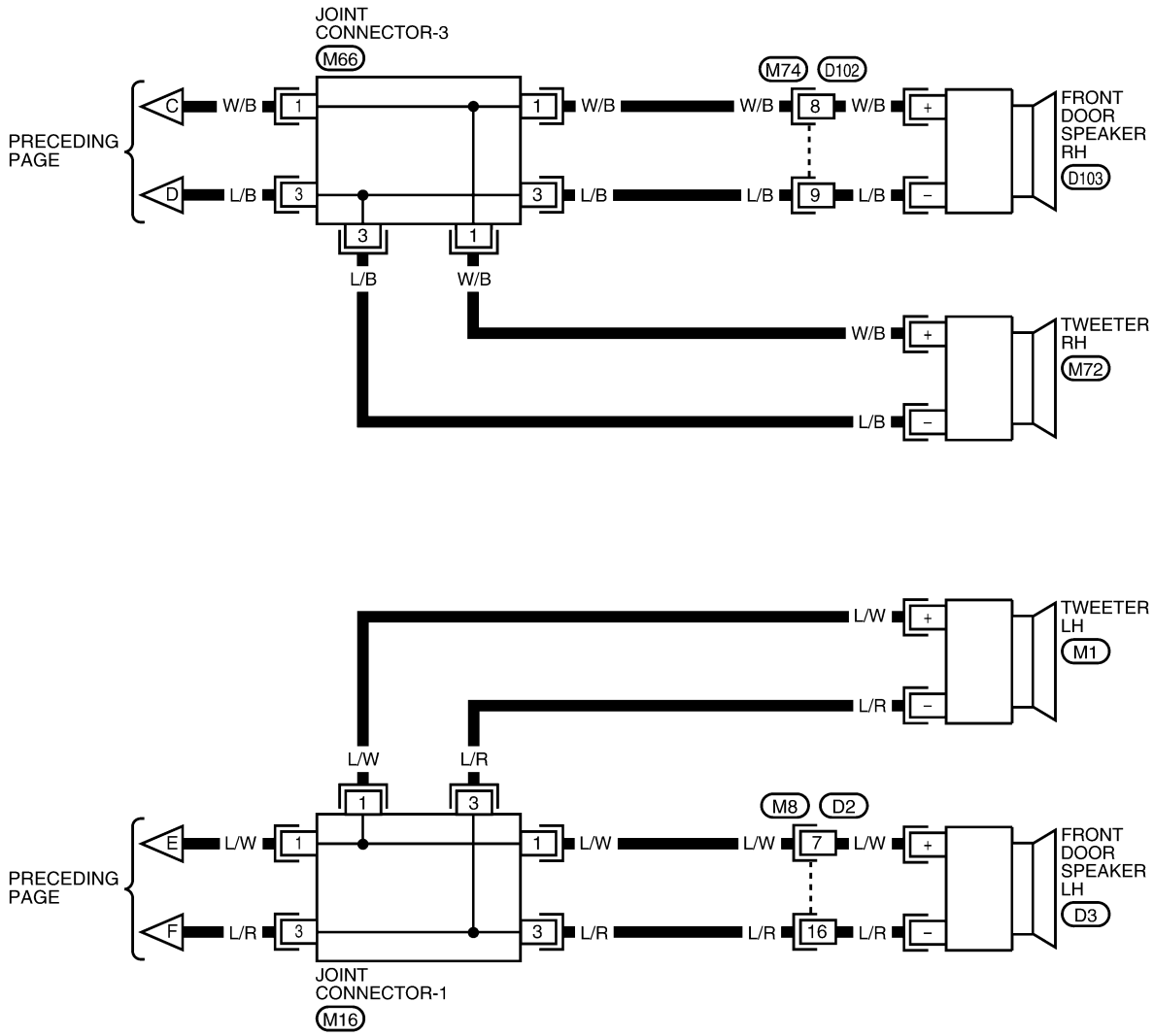

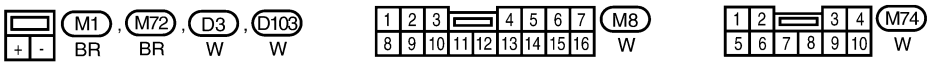

REFER TO THE FOLLOWING.
M16 , M66 - JOINT CONNECTOR (J/C)

LKWA0098E

AV-AUDIO-10

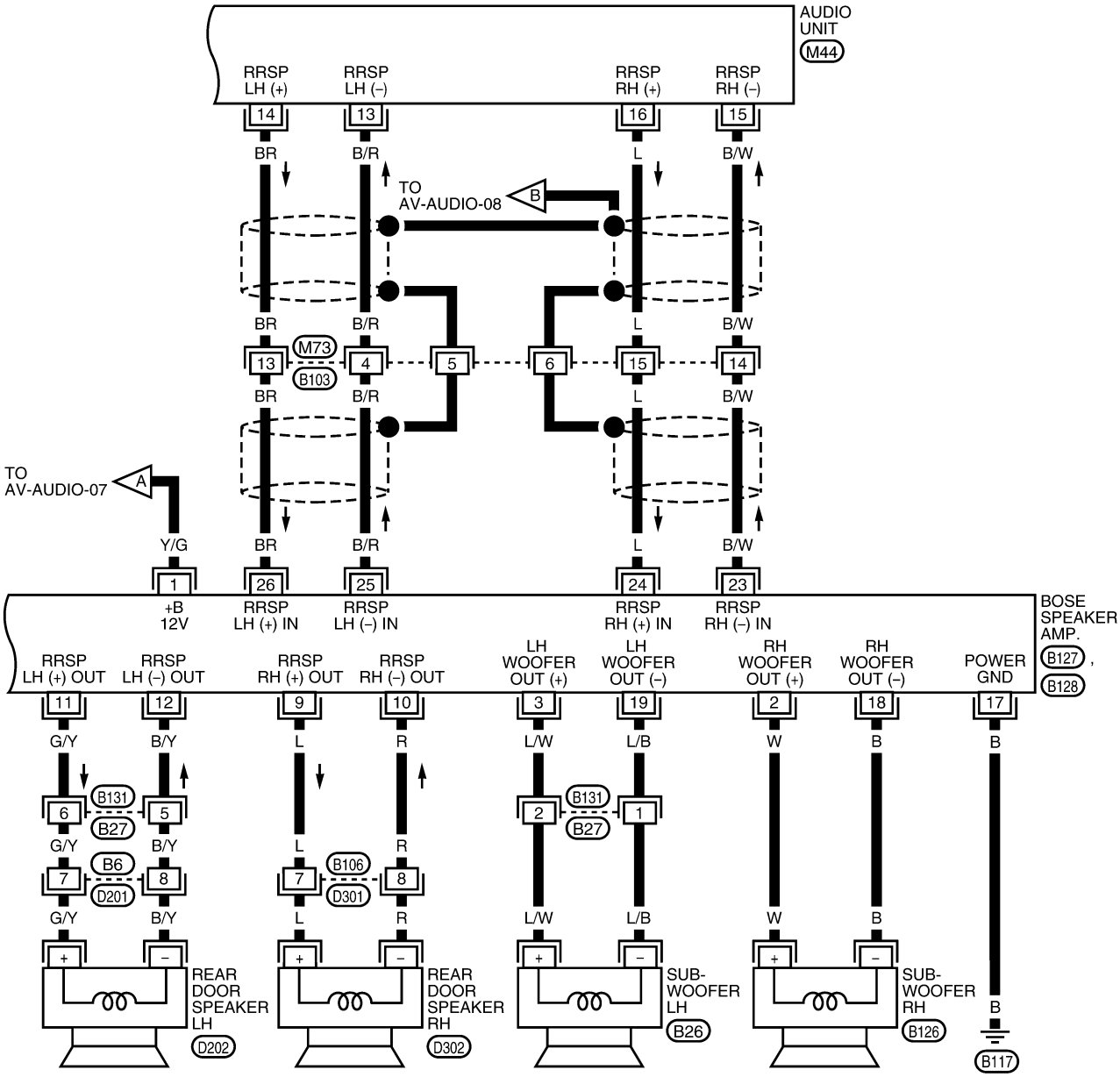

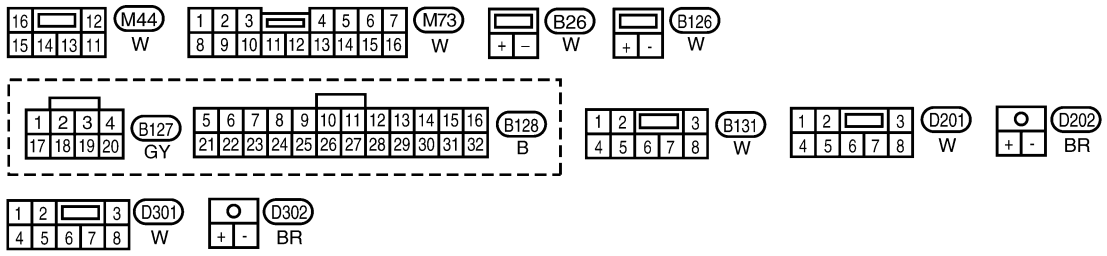

LKWA0015E

Wiring Diagram - REMOTE -

EKS003JT

AV-REMOTE-01

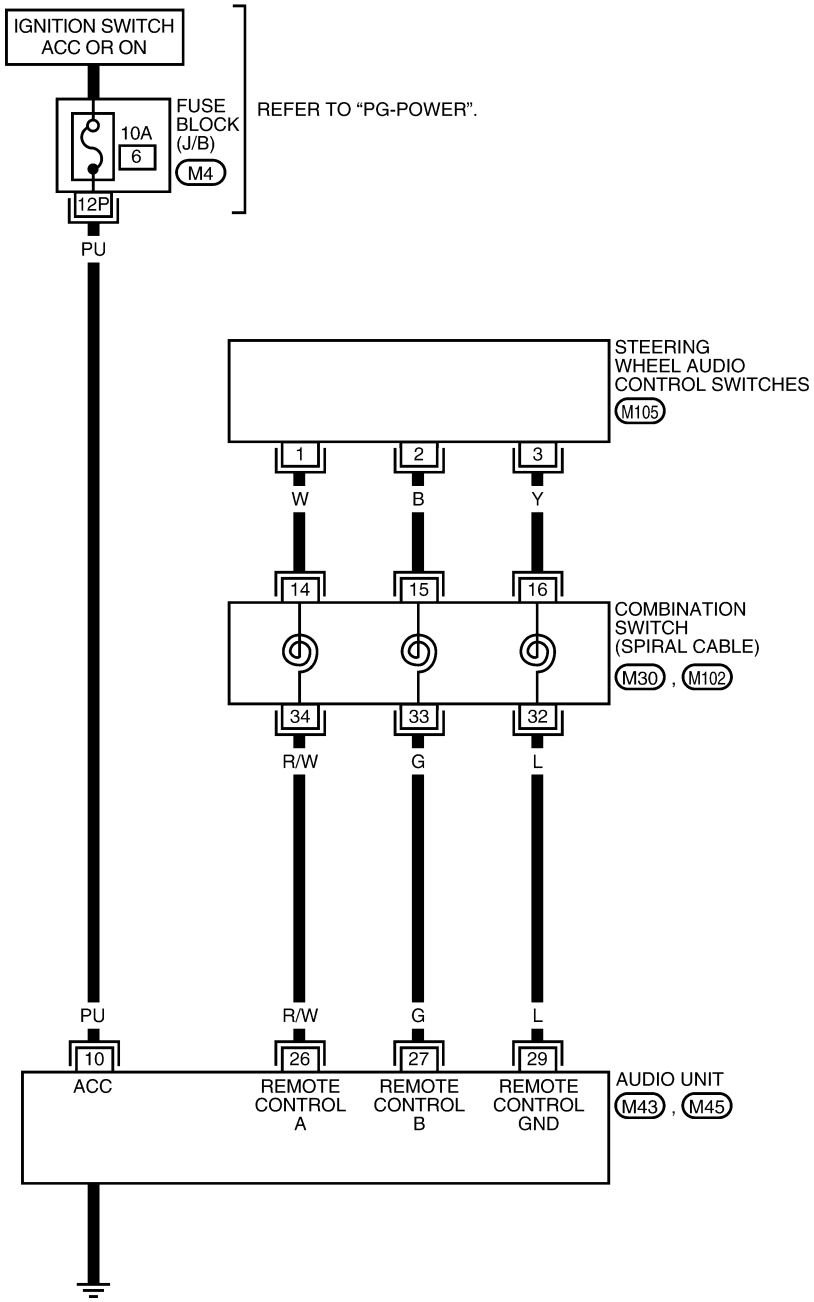

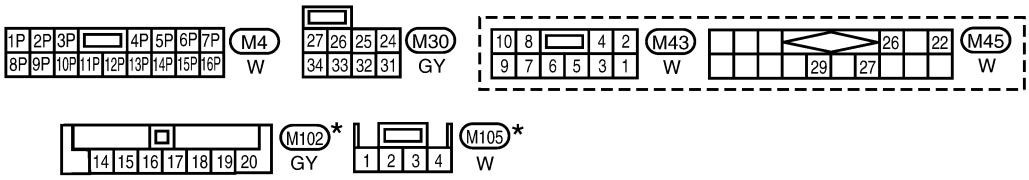

*: This connector is not shown in “HARNESS LAYOUT” of PG section.

LKWA0100E

Terminals and Reference Value for Audio Unit (Except Bose)

EKS003OJ

Terminal No.		Item	Signal input/ output	Condition		Voltage (V) (Approx.)	Example of symptom
+	-			Ignition switch	Operation		
1 (L/R)	Ground	Audio sound signal front LH (-)	Output	ON	Receive audio signal	5.5V	No sound from front door speaker LH or tweeter LH.
2 (L/W)	Ground	Audio sound signal front LH (+)	Output	ON	Receive audio signal	5.5V	No sound from front door speaker LH or tweeter LH.
3 (L/B)	Ground	Audio sound signal front RH (-)	Output	ON	Receive audio signal	5.5V	No sound from front door speaker RH or tweeter RH.
4 (W/B)	Ground	Audio sound signal front RH (+)	Output	ON	Receive audio signal	5.5V	No sound from front door speaker RH or tweeter RH.
5 (G)	Ground	Antenna signal	Input	ON	–	Battery voltage	System does not work properly.
6 (Y/G)	Ground	Battery	Input	–	–	Battery voltage	System does not work properly.
7 (R/Y)	Ground	Illumination control	Input	ON	Lighting switch ON (1st position)	1V → 5V	Audio unit illumination does not function when lighting switch is ON (position 1).
8 (R/L)	Ground	Light switch	Input	ON	Lighting switch ON (1st position)	5.5V	Audio unit illumination does not function when lighting switch is ON (position 1).
10 (PU)	Ground	ACC	Input	ON	Ignition switch ACC or ON	Battery voltage	System does not work properly.
13 (B/Y)	Ground	Audio sound signal rear LH (-)	Output	ON	Receive audio signal	5.5V	No sound from rear speaker LH.
14 (G/Y)	Ground	Audio sound signal rear LH (+)	Output	ON	Receive audio signal	5.5V	No sound from rear speaker LH.
15 (R)	Ground	Audio sound signal rear RH (-)	Output	ON	Receive audio signal	5.5V	No sound from rear speaker RH.
16 (L)	Ground	Audio sound signal rear RH (+)	Output	ON	Receive audio signal	5.5V	No sound from rear speaker RH.
*22 (P)	Ground	Speed signal	Input	ON	Vehicle speed sensor rotating	Voltage increases as vehicle speed sensor rotates faster	Speed dependent volume control does not function.
*26 (R/W)	–	Remote control A	–	–	–	Refer to AV-22, "Steering Wheel Audio Control Switch Resistance Check" .	Steering wheel audio controls do not function.
*27 (G)	–	Remote control B	–	–	–	Refer to AV-22, "Steering Wheel Audio Control Switch Resistance Check" .	Steering wheel audio controls do not function.
*29 (L)	–	Remote control ground	–	–	–	Refer to AV-22, "Steering Wheel Audio Control Switch Resistance Check" .	Steering wheel audio controls do not function.

*: With midline system

Terminals and Reference Value for Audio Unit (Bose)

EKS003OK

Terminal No.		Item	Signal input/ output	Condition		Voltage (V) (Approx.)	Example of symptom
+	-			Ignition switch	Operation		
1 (B)	Ground	Audio sound signal front LH (-)	Output	ON	Receive audio signal	5.5V	No sound from front door speaker LH or tweeter LH.
2 (W)	Ground	Audio sound signal front LH (+)	Output	ON	Receive audio signal	5.5V	No sound from front door speaker LH or tweeter LH.
3 (BR)	Ground	Audio sound signal front RH (-)	Output	ON	Receive audio signal	5.5V	No sound from front door speaker RH or tweeter RH.
4 (Y)	Ground	Audio sound signal front RH (+)	Output	ON	Receive audio signal	5.5V	No sound from front door speaker RH or tweeter RH.
5 (G)	Ground	Antenna signal	Input	ON	–	Battery voltage	System does not work properly.
6 (Y/G)	Ground	Battery	Input	–	–	Battery voltage	System does not work properly.
7 (R/Y)	Ground	Illumination control	Input	ON	Lighting switch ON (1st position)	1V → 5V	Audio unit illumination does not function when lighting switch is ON (position 1).
8 (R/L)	Ground	Light switch	Input	ON	Lighting switch ON (1st position)	5.5V	Audio unit illumination does not function when lighting switch is ON (position 1).
9	–	Ground (Shield drain)	–	–	–	0V	Interference and distortion heard from speakers.
10 (PU)	Ground	ACC	Input	ON	Ignition switch ACC or ON	Battery voltage	System does not work properly.
12 (G/W)	Ground	Amp. ON/OFF signal	Output	ON	Ignition switch ACC or ON	Battery voltage	Amp. does not work properly.
13 (B/R)	Ground	Audio sound signal rear LH (-)	Output	ON	Receive audio signal	5.5V	No sound from rear speaker LH.
14 (BR)	Ground	Audio sound signal rear LH (+)	Output	ON	Receive audio signal	5.5V	No sound from rear speaker LH.
15 (B/W)	Ground	Audio sound signal rear RH (-)	Output	ON	Receive audio signal	5.5V	No sound from rear speaker RH.
16 (L)	Ground	Audio sound signal rear RH (+)	Output	ON	Receive audio signal	5.5V	No sound from rear speaker RH.
22 (P)	Ground	Speed signal	Input	ON	Vehicle speed sensor rotating	Voltage increases as vehicle speed sensor rotates faster	Speed dependent volume control does not function.
26 (R/W)	–	Remote control A	–	–	–	Refer to AV-22, "Steering Wheel Audio Control Switch Resistance Check" .	Steering wheel audio controls do not function.

Terminal No.		Item	Signal input/ output	Condition		Voltage (V) (Approx.)	Example of symptom
+	-			Ignition switch	Operation		
27 (G)	–	Remote control B	–	–	–	Refer to AV-22, "Steering Wheel Audio Control Switch Resistance Check" .	Steering wheel audio controls do not function.
29 (L)	–	Remote control ground	–	–	–	Refer to AV-22, "Steering Wheel Audio Control Switch Resistance Check" .	Steering wheel audio controls do not function.

Terminals and Reference Value for Bose Speaker Amp.

EKS003OL

Terminal No.		Item	Signal input/ output	Condition		Voltage (V) (Approx.)	Example of symptom
+	-			Ignition switch	Operation		
1 (Y/G)	Ground	Battery	Input	–	–	Battery voltage	System does not work properly.
2 (W)	Ground	Subwoofer RH (+)	Output	ON	Receive audio signal	5 - 7.5V	No sound from subwoofer RH.
3 (L/W)	Ground	Subwoofer LH (+)	Output	ON	Receive audio signal	5 - 7.5V	No sound from subwoofer LH.
9 (L)	Ground	Rear door speaker RH (+)	Output	ON	Receive audio signal	5 - 7.5V	No sound from rear door speaker RH.
10 (R)	Ground	Rear door speaker RH (-)	Output	ON	Receive audio signal	5 - 7.5V	No sound from rear door speaker RH.
11 (G/Y)	Ground	Rear door speaker LH (+)	Output	ON	Receive audio signal	5 - 7.5V	No sound from rear door speaker LH.
12 (B/Y)	Ground	Rear door speaker LH (-)	Output	ON	Receive audio signal	5 - 7.5V	No sound from rear door speaker LH.
13 (W/B)	Ground	Front door speaker RH and tweeter RH (+)	Output	ON	Receive audio signal	5 - 7.5V	No sound from front door speaker RH or tweeter RH.
14 (L/B)	Ground	Front door speaker RH and tweeter RH (-)	Output	ON	Receive audio signal	5 - 7.5V	No sound from front door speaker RH or tweeter RH.
15 (L/W)	Ground	Front door speaker LH and tweeter LH (+)	Output	ON	Receive audio signal	5 - 7.5V	No sound from front door speaker LH or tweeter LH.
16 (L/R)	Ground	Front door speaker LH and tweeter LH (-)	Output	ON	Receive audio signal	5 - 7.5V	No sound from front door speaker LH or tweeter LH.
17 (B)	Ground	Ground	–	–	–	–	–
18 (B)	Ground	Subwoofer RH (-)	Output	ON	Receive audio signal	5 - 7.5V	No sound from subwoofer RH.
19 (L/B)	Ground	Subwoofer LH (-)	Output	ON	Receive audio signal	5 - 7.5V	No sound from subwoofer LH.
23 (B/W)	Ground	Rear speaker RH (-)	Input	ON	Receive audio signal	5 - 7.5V	No sound from RH rear speakers.
24 (L)	Ground	Rear speaker RH (+)	Input	ON	Receive audio signal	5 - 7.5V	No sound from RH rear speakers.
25 (B/R)	Ground	Rear speaker LH (-)	Input	ON	Receive audio signal	5 - 7.5V	No sound from LH rear speakers.

Terminal No.		Item	Signal input/ output	Condition		Voltage (V) (Approx.)	Example of symptom
+	-			Ignition switch	Operation		
26 (BR)	Ground	Rear speaker LH (+)	Input	ON	Receive audio signal	5 - 7.5V	No sound from LH rear speakers.
27 (BR)	Ground	Front speaker RH (-)	Input	ON	Receive audio signal	5 - 7.5V	No sound from RH front speakers.
28 (Y)	Ground	Front speaker RH (+)	Input	ON	Receive audio signal	5 - 7.5V	No sound from RH front speakers.
29 (B)	Ground	Front speaker LH (-)	Input	ON	Receive audio signal	5 - 7.5V	No sound from LH front speakers.
30 (W)	Ground	Front speaker LH (+)	Input	ON	Receive audio signal	5 - 7.5V	No sound from LH front speakers.
31 (G/W)	Ground	Amp. ON/OFF signal	Input	ON	–	10V	System does not work properly.

Steering Wheel Audio Control Switch Resistance Check

EKS003OM

*Terminal No. (wire color)		Signal name	Condition	Resistance (Ω) (Approx.)
+	-			
27 (G)	29 (L)	Volume (down)	Depress volume down switch	652Ω
26 (R/W)	29 (L)	Volume (up)	Depress volume up switch	652Ω
27 (G)	29 (L)	Mode	Depress (station) down switch	165Ω
26 (R/W)	29 (L)	Up (next)	Depress (station) up switch	165Ω
26 (R/W)	29 (L)	Down (previous)	Depress mode switch	1Ω

*: Audio unit terminals.

Removal and Installation

EKS003ON

AUDIO UNIT

1. Remove cluster lid C. Refer to IP-12, "Cluster Lid C" .
2. Remove cluster lid D. Refer to IP-13, "Cluster Lid D" .
3. Remove audio unit screws using power tool and slide audio unit forward.
4. Disconnect connectors and antenna cable and then remove audio unit.

Install in the reverse order of removal.

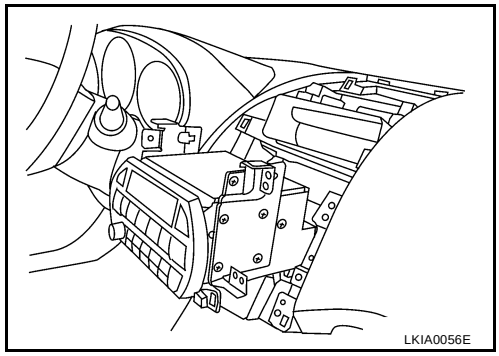

DOOR SPEAKER

1. Remove door finisher. Refer to EI-27, "Removal and Installation" .

2. Remove screws and speaker.
3. Disconnect speaker connector.

Install in the reverse order of removal.

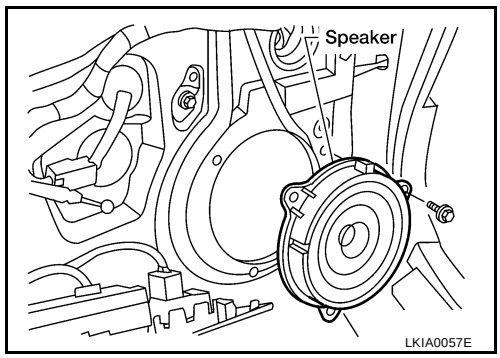

TWEETER SPEAKER

1. Remove windshield garnish molding. Refer to EI-29, "Removal and Installation" .
2. Remove tweeter speaker by gently prying away from A pillar.
3. Disconnect tweeter speaker connector.

Install in the reverse order of removal.

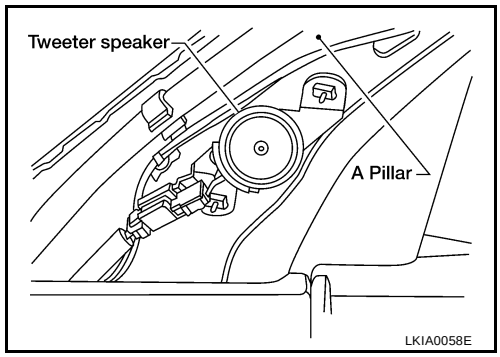

REAR SPEAKER

1. Remove rear parcel shelf finisher. Refer to EI-31, "Removal and Installation" .
2. Remove screws and rear speaker.
3. Disconnect speaker connector.

Install in the reverse order of removal, noting the following:

Rear speaker mounting screws:

: 2.7 - 3.7 N·m (0.28 - 0.38 kg-m, 24 - 33 in-lb)

SUBWOOFER SPEAKER

1. Remove rear parcel shelf finisher. Refer to EI-31, "Removal and Installation" .
2. Remove screws and subwoofer.
3. Disconnect subwoofer connector.

Install in the reverse order of removal, noting the following:

Subwoofer mounting screws:

: 2.7 - 3.7 N·m (0.28 - 0.38 kg-m, 24 - 33 in-lb)

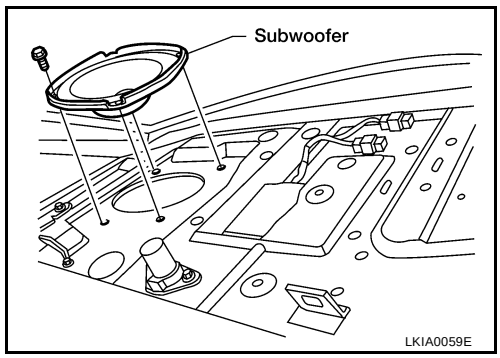

BOSE SPEAKER AMP.

1. Remove rear parcel shelf finisher. Refer to EI-31, "Removal and Installation" .
2. Remove trunk trim and trunk lid finisher. Refer to EI-35, "Removal and Installation" .

3. Remove screws and amp.
4. Disconnect amp. connectors.

Install in the reverse order of removal, noting the following:

Bose speaker amp. mounting screws:

: 2.7 - 3.7 N·m (0.28 - 0.38 kg-m, 24 - 33 in-lb)

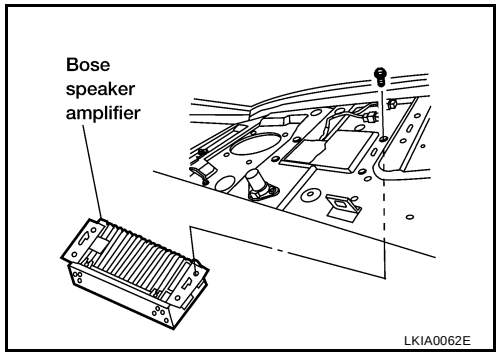

STEERING WHEEL AUDIO CONTROL SWITCHES

1. Remove driver air bag module. Refer to SRS-39, "REMOVAL" .
2. Remove screws and disconnect connector and then remove steering wheel audio control switches.

Install in the reverse order of removal.

Trouble Diagnoses

EKS003OO

AUDIO UNIT

Symptom	Possible causes	Repair order
Audio unit inoperative (no digital display and no sound from speakers).	1. 10A fuse 2. Poor audio unit case ground 3. Audio unit	1. Check 10A fuse [No. 6, located in fuse block (J/B)]. Turn ignition switch ON and verify that battery positive voltage is present at terminal 10 of audio unit. 2. Check audio unit case ground. 3. Remove audio unit for repair.
Audio unit presets are lost when ignition switch is turned OFF.	1. 15A fuse 2. Audio unit	1. Check 15A fuse (No. 31, located in fuse and fusible link box) and verify that battery positive voltage is present at terminal 6 of audio unit. 2. Remove audio unit for repair.
AM/FM stations are weak or noisy.	1. Window antenna or antenna amp. 2. Poor audio unit case ground 3. Audio unit	1. Check window antenna. 2. Check audio unit case ground. 3. Remove audio unit for repair.
Audio unit generates noise in AM and FM modes with engine running.	1. Poor audio unit case ground 2. Loose or missing ground bonding straps 3. Ignition condenser or rear window defogger noise suppressor condenser 4. Generator 5. Ignition coil(s) 6. Audio unit	1. Check audio unit case ground. 2. Check ground bonding straps. 3. Replace ignition condenser or rear window defogger noise suppressor condenser. 4. Check generator. 5. Check ignition coil(s). 6. Remove audio unit for repair.
Audio unit generates noise in AM and FM modes with accessories on (switch pops and motor noise).	1. Poor audio unit case ground 2. Antenna 3. Accessory ground 4. Faulty accessory	1. Check audio unit case ground. 2. Check antenna. 3. Check accessory ground. 4. Replace accessory.

BASE AND MIDLINE SYSTEM

Symptom	Possible causes	Repair order
Individual speaker is noisy or inoperative.	1. Speaker 2. Audio unit output 3. Speaker circuit 4. Audio unit	1. Check speaker. 2. Check audio unit output voltages. 3. Check wires for open or short between audio unit and speaker. 4. Remove audio unit for repair.

BOSE SYSTEM

Symptom	Possible causes	Repair order
Audio unit controls are operational, but no sound is heard from any speaker.	1. 15A fuse 2. Amp. ON/OFF signal circuit 3. Speaker amp. ground	1. Check 15A fuse [No. 31, located in the fuse block (J/B)]. Verify battery positive voltage is present at terminal 1 of the speaker amp. 2. Check harness continuity between audio unit terminal 12 and speaker amp. terminal 31. 3. Check harness continuity between speaker amp. terminal 17 and ground.
Individual speaker is noisy or inoperative.	1. Speaker 2. Output circuits to speaker 3. Speaker amp. power supply and ground	1. Check speaker. 2. Check the output circuits to speaker: – between audio unit and speaker amp. – between speaker amp. and speaker 3. Check speaker amp. power supply and ground condition.

AUDIO ANTENNA

PFP:28200

System Description

EKS002L0

With the ignition switch in ACC or ON, power is supplied

- through 10A fuse [No. 6, located in the fuse block (J/B)]
- to audio unit terminal 10.

Ground is supplied through the case of the antenna amp.
When the radio switch is turned ON, antenna signal is supplied

- through audio unit terminal 5
- to the antenna amp. terminal 1.

Then the antenna amp. is activated.
The amplified radio signals are supplied to the audio unit through the antenna amp.

Wiring Diagram -W/ANT-

EKS002L1

AV-W/ANT-01

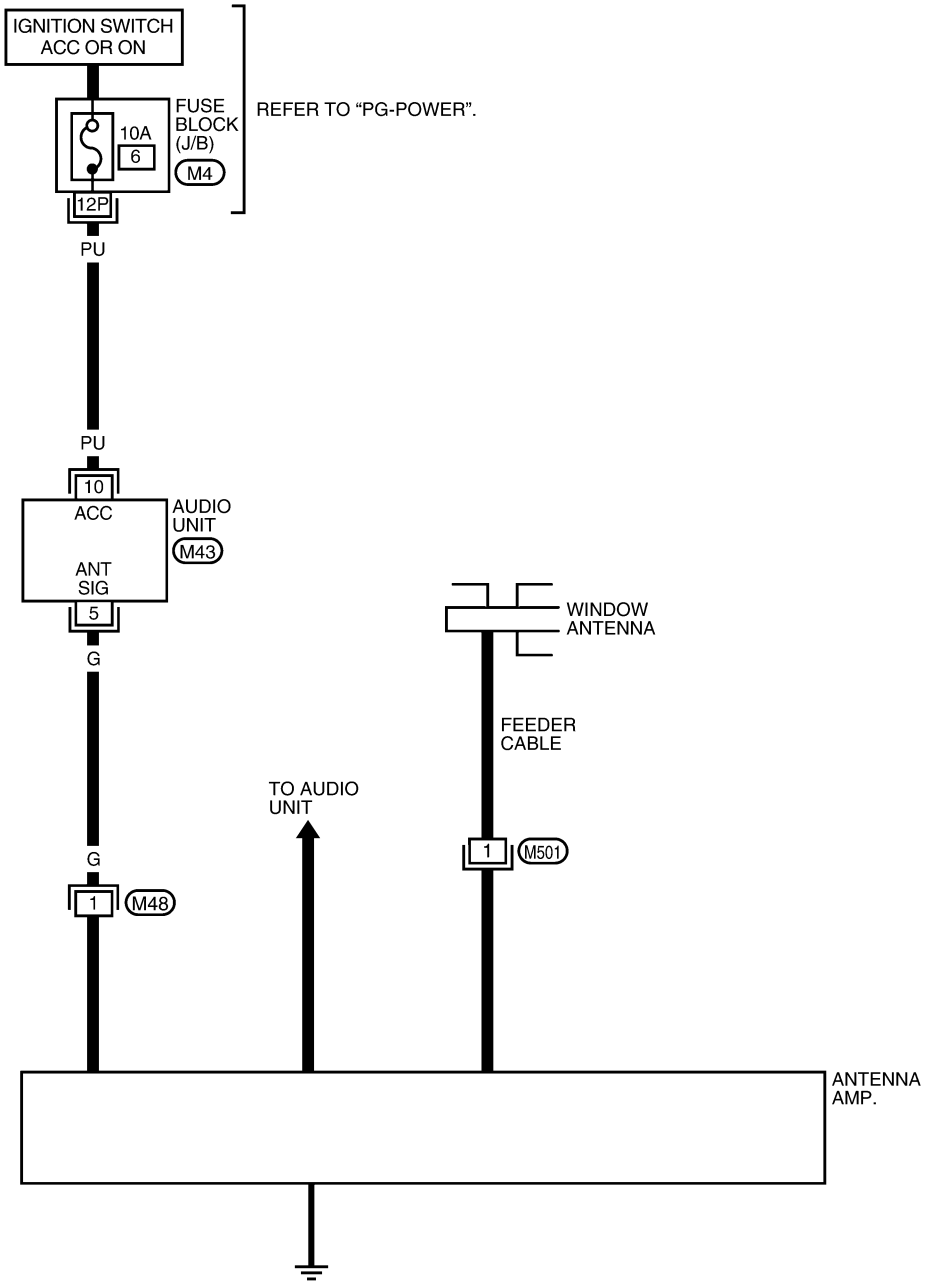

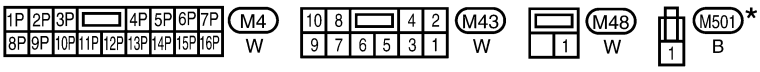

*: This connector is not shown in “HARNESS LAYOUT” of PG section.

LKWA0017E

Location of Antenna

EKS002L2

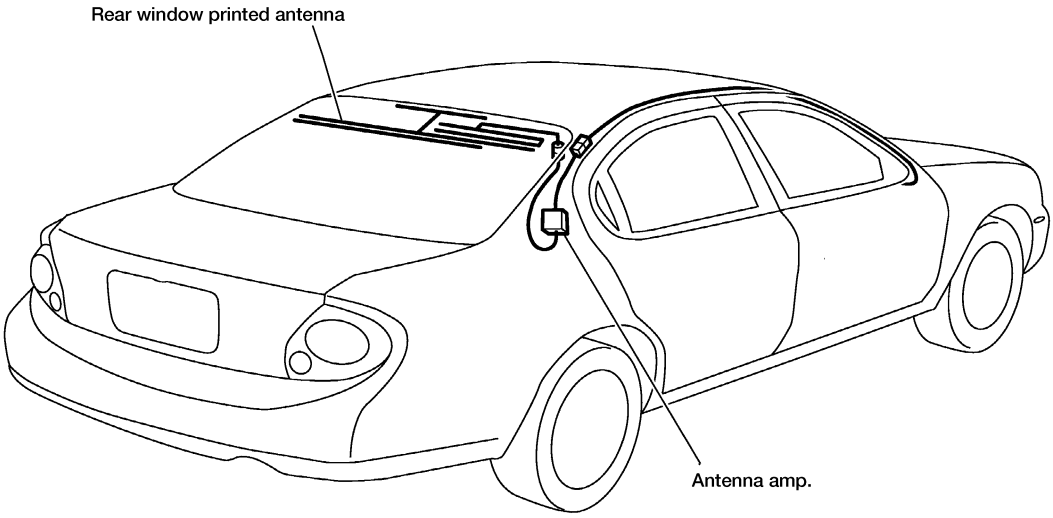

LKIA0012E

Window Antenna Repair

EKS002L3

ELEMENT CHECK

1. Attach probe circuit tester (ohm setting) to antenna terminal on each side.

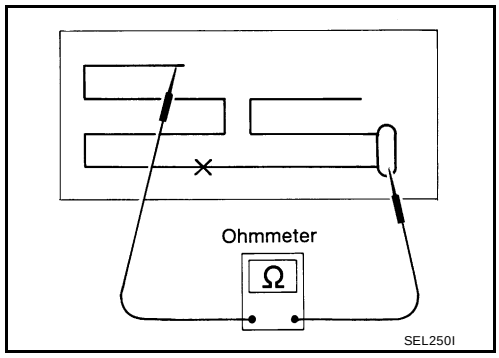

- **When measuring continuity, wrap tin foil around the top of probe. Then, press the foil against the wire with your finger.**

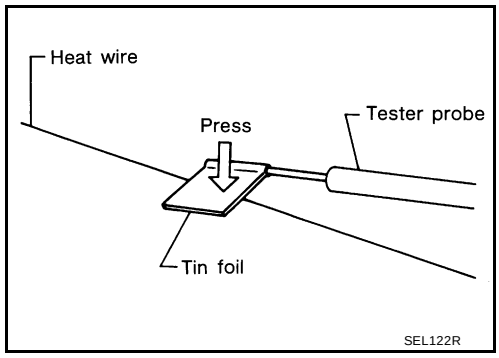

2. If an element is broken, no continuity will exist.

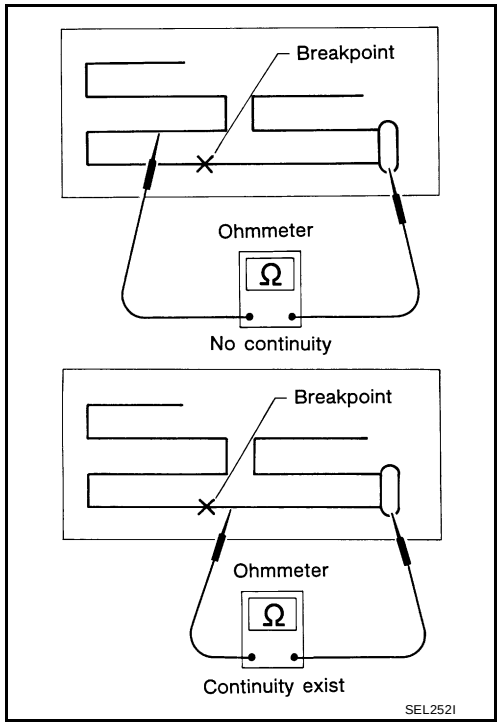

3. To locate a break, move probe along element. Tester indication will change abruptly when probe passes the broken point.

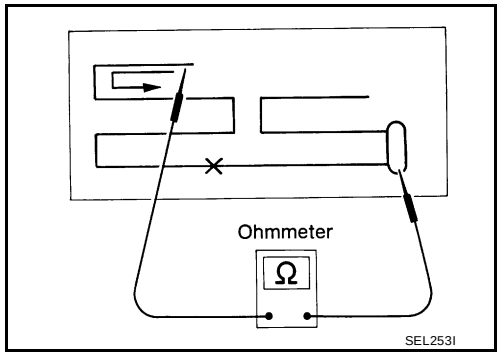

ELEMENT REPAIR

Refer to GW-58, "Filament Repair" .

SECTION BCS
BODY CONTROL SYSTEM

CONTENTS

PRECAUTIONS 2
Precautions for Supplemental Restraint System (SRS) “AIR BAG” and “SEAT BELT PRE-TENSIONER” 2
BCM (BODY CONTROL MODULE) 3
System Description 3
BCM FUNCTION 3
COMBINATION SWITCH READING FUNCTION 3
CAN COMMUNICATION CONTROL 5
BCM STATUS CONTROL 5
SYSTEMS CONTROLLED BY BCM DIRECTLY..... 6
SYSTEMS CONTROLLED BY BCM AND IPDM E/R 6
MAJOR COMPONENTS AND CONTROL SYSTEM 6
CAN Communication System Description 7
FOR TCS MODELS 7
FOR A/T MODELS 8
FOR M/T MODELS 10
Schematic 12
CONSULT-II 14
CONSULT–II INSPECTION PROCEDURE 14
ITEMS OF EACH PART 14
CAN Communication Inspection Using CONSULT-II (Self-Diagnosis) 15
Combination Switch Inspection According to Self-Diagnostic Results 16
Malfunctioning Operation of Lamps and Wipers 19
Inspection of BCM Power Supply and Ground Circuit 21

PRECAUTIONS

PFP:00001

Precautions for Supplemental Restraint System (SRS) “AIR BAG” and “SEAT BELT PRE-TENSIONER”

EKS002J7

The Supplemental Restraint System such as “AIR BAG” and “SEAT BELT PRE-TENSIONER”, used along with a front seat belt, helps to reduce the risk or severity of injury to the driver and front passenger for certain types of collision. Information necessary to service the system safely is included in the SRS and SB section of this Service Manual.

WARNING:

- **To avoid rendering the SRS inoperative, which could increase the risk of personal injury or death in the event of a collision which would result in air bag inflation, all maintenance must be performed by an authorized NISSAN/INFINITI dealer.**
- **Improper maintenance, including incorrect removal and installation of the SRS, can lead to personal injury caused by unintentional activation of the system. For removal of Spiral Cable and Air Bag Module, see the SRS section.**
- **Do not use electrical test equipment on any circuit related to the SRS unless instructed to in this Service Manual. SRS wiring harnesses can be identified by yellow and/or orange harness connectors.**

BCM (BODY CONTROL MODULE)

PFP:284B2

System Description

EKS002J8

- BCM (Body Control Module) controls the operation of various electrical units installed on the vehicle.

BCM FUNCTION

BCM has a combination switch reading function for reading the operation of combination switches (light, wiper washer, turn signal) in addition to the function for controlling the operation of various electrical components. Also, it functions as an interface that receives signals from the A/C control unit (with manual A/C), A/C auto amplifier (with auto A/C), and sends signals to ECM using CAN communication.

COMBINATION SWITCH READING FUNCTION

1. Description
   - BCM reads combination switch (light, wiper washer, turn signal) status, and controls various electrical components according to the results.
   - BCM reads information of 20 switches and 5 diagnostic results by combining five output terminals (OUTPUT 1 - 5) and five input terminals (INPUT 1 - 5).
2. Operation description
   - BCM outputs battery voltage from input terminals (INPUT 1 - 5) all the time. At the same time output terminals (OUTPUT 1 - 5) activate transistors in turn, and allow current to flow. At this time, if any (1 or more) of the switches are ON, the input terminals corresponding to these switches detect current flow, and BCM judges switches are ON.

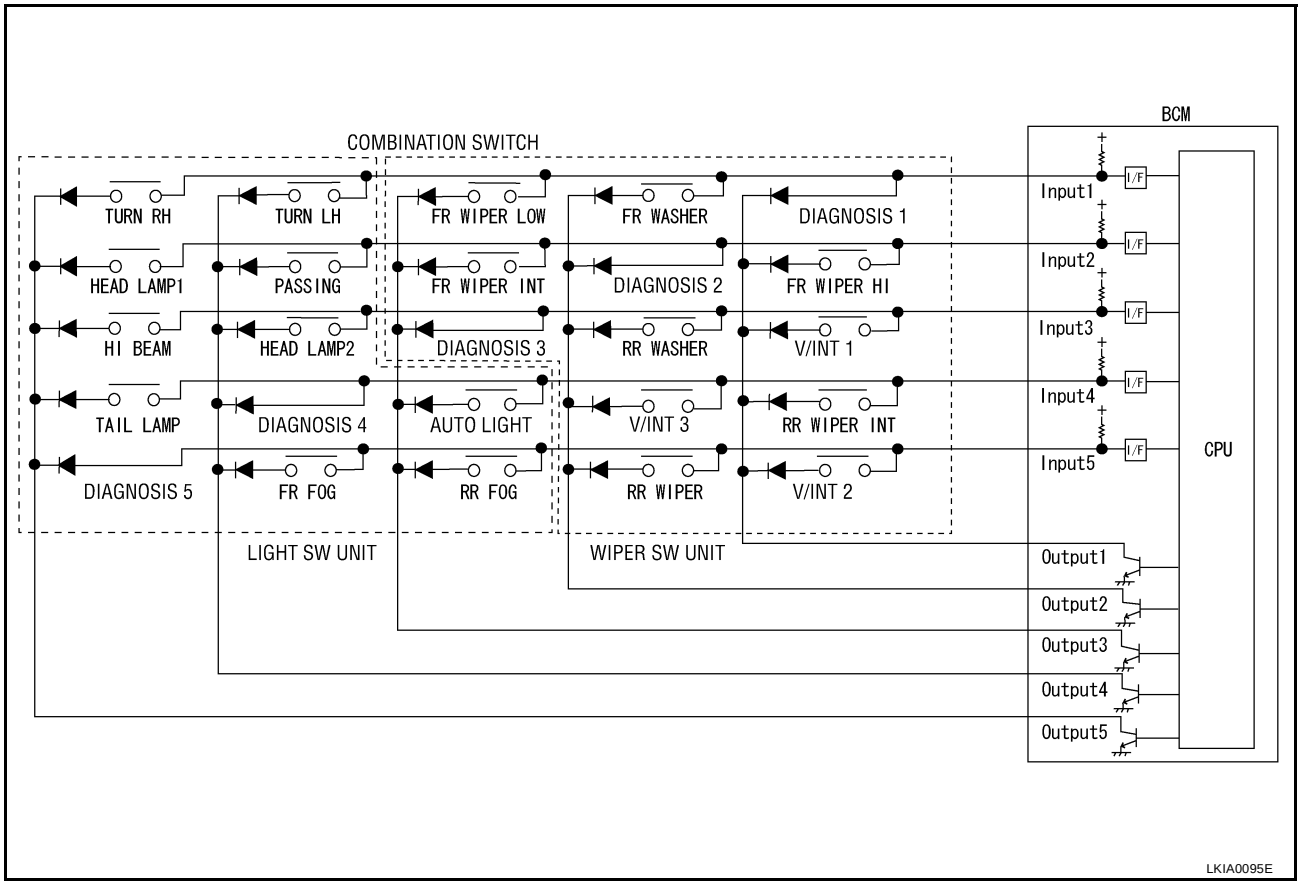

3. Example (When fog lamp switch is turned ON)
   - When fog lamp switch is turned ON, contact in combination switch turns ON. At this time if OUTPUT 4 transistor is activated, BCM detects current flow in INPUT 5.
   - When OUTPUT 4 transistor is ON, BCM detects current flow in INPUT5, and judges fog lamp switch is ON. Then BCM sends fog lamp ON signal to IPDM E/R using CAN communication.
   - When OUTPUT 4 transistor is activated again, BCM detects current flow in INPUT 5, and confirms fog lamp switch is continuously ON.

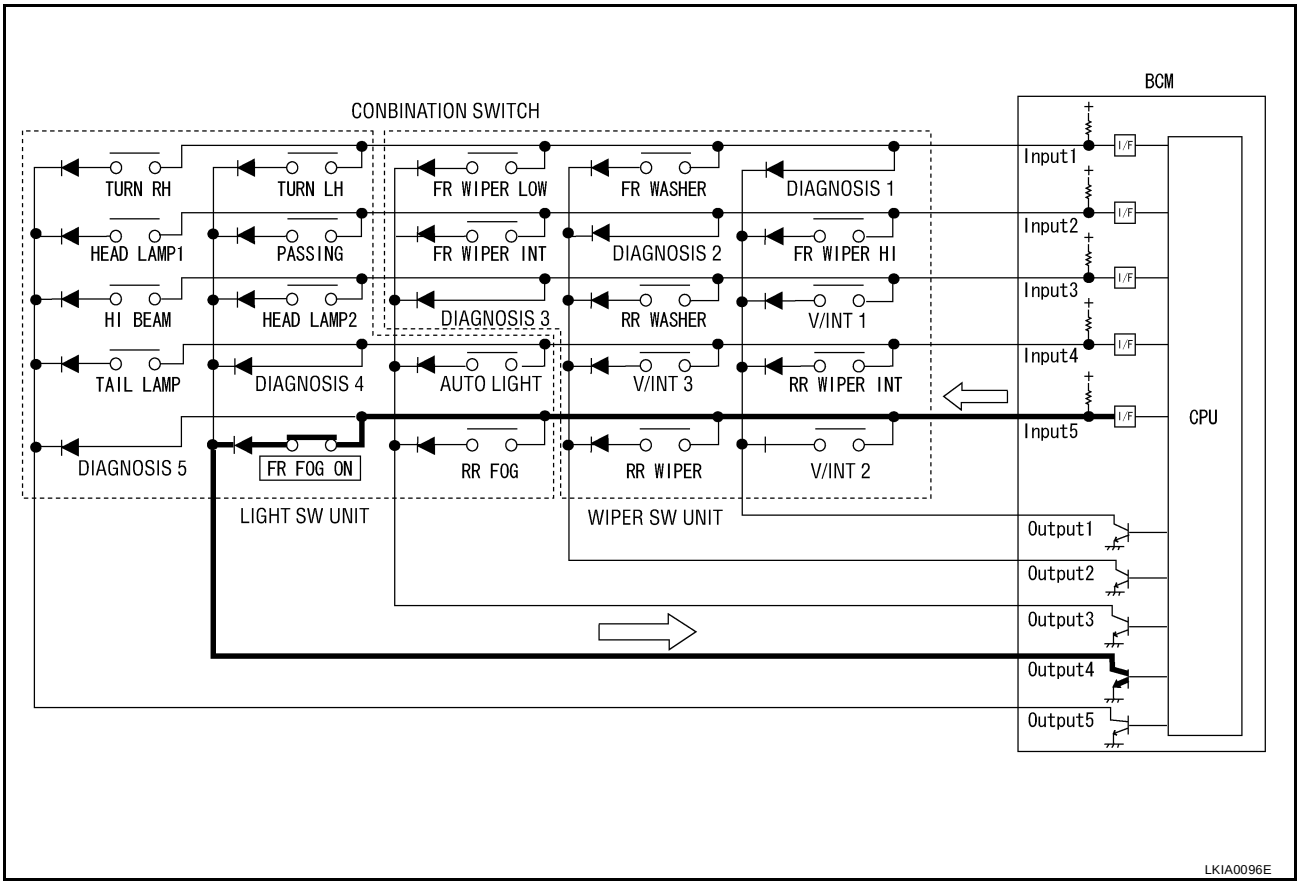

NOTE:
Each OUTPUT terminal transistor is activated at 10 ms interval. Therefore, after a switch is turned ON, the electrical loads are activated with a time delay. But this time delay is so short that it cannot be noticed.

4. BCM - Operation table of combination switches
   - BCM reads operation status of combination switches by the combination shown in the table.

	COMB SW INPUT 1		COMB SW INPUT 2		COMB SW INPUT 3		COMB SW INPUT 4		COMB SW INPUT 5	
	ON	OFF	ON	OFF	ON	OFF	ON	OFF	ON	OFF
COMB SW OUTPUT 1	DIAGNOSIS 1 OK	DIAGNOSIS 1 NG	FR WIPER HI ON	FR WIPER HI OFF	V/INT 1 ON	V/INT 1 OFF	RR WIPER INT ON	RR WIPER INT OFF	V/INT 2 ON	V/INT 2 OFF
COMB SW OUTPUT 2	FR WASHER ON	FR WASHER OFF	DIAGNOSIS 2 OK	DIAGNOSIS 2 NG	RR WASHER ON	RR WASHER OFF	V/INT 3 ON	V/INT 3 OFF	RR WIPER ON	RR WIPER OFF
COMB SW OUTPUT 3	FR WIPER LOW ON	FR WIPER LOW OFF	FR WIPER INT ON	FR WIPER INT OFF	DIAGNOSIS 3 OK	DIAGNOSIS 3 NG	AUTO LIGHT ON	AUTO LIGHT OFF	RR FOG ON	RR FOG OFF
COMB SW OUTPUT 4	TURN LH ON	TURN LH OFF	PASSING ON	PASSING OFF	HEAD LAMP 2 ON	HEAD LAMP 2 OFF	DIAGNOSIS 4 OK	DIAGNOSIS 4 NG	FR FOG ON	FR FOG OFF
COMB SW OUTPUT 5	TURN RH ON	TURN RH OFF	HEAD LAMP ON	HEAD LAMP OFF	HI BEAM ON	HI BEAM OFF	LIGHTING SWITCH 1ST POSITION ON	LIGHTING SWITCH 1ST POSITION OFF	DIAGNOSIS 5 OK	DIAGNOSIS 5 NG

LKIA0097E

NOTE:
Headlamp has a dual system switch for safe operation.

5. Operation mode

- Combination switch reading function has operation modes shown below.

a. Normal mode
   - When BCM is not in sleep mode, each OUTPUT (1 - 5) terminal turns ON-OFF at 10 ms intervals.

b. Sleep mode
   - When BCM is in sleep mode, transistors of OUTPUT 1 and 2 stop the output, and BCM enters low-current-consumption mode. OUTPUTS (3 - 5) turn ON-OFF at 60 ms intervals, and receives lighting switch input only.

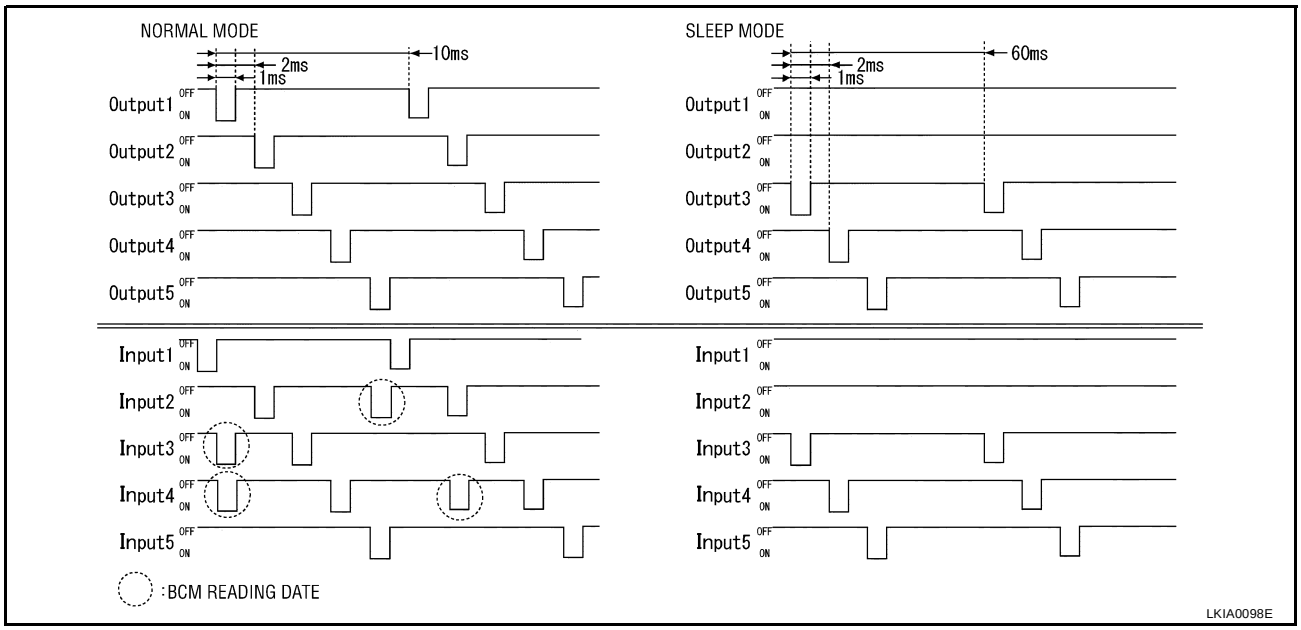

CAN COMMUNICATION CONTROL

CAN communication is capable of dealing with a lot of information through the two communication lines (CAN L-line, CAN H-line) connecting control units in the system. Also each control unit functions to transmit and receive data, and reads necessary information only.

BCM STATUS CONTROL

BCM changes its status depending on the operation status in order to save power consumption.

1. CAN communication status
   - With ignition switch ON, CAN communicates with other control units normally.
   - Control by BCM is being operated properly.
   - When ignition switch is OFF, switching to sleep mode is possible.
   - Even when ignition switch is OFF, if CAN communication with IPDM E/R and combination meter is active, CAN communication status is active.
2. Sleep status
   - This is the status to stop CAN communication when ignition switch is turned OFF.
   - It transmits sleep request signal to IPDM E/R and combination meter.
   - Two seconds after CAN communication with other control unit stops, it switches to CAN communication inactive status.
3. CAN communication inactive status
   - With ignition switch OFF, CAN communication is not active.
   - With ignition switch OFF, control performed only by BCM is active.
   - Two seconds after CAN communication with other control unit stops, it switches to CAN communication inactive status.
4. Sleep status
   - BCM is activated with low-current-consumption mode.
   - CAN communication is not active.

- When CAN communication operation is detected, it switches to CAN communication status.
- When control performed only by BCM is required by switch, it shifts to CAN communication inactive mode.
- It changes combination switch reading function.

SYSTEMS CONTROLLED BY BCM DIRECTLY

- Power door lock system. Refer to BL-16, "POWER DOOR LOCK SYSTEM" .
- Remote keyless entry system. Refer to.BL-43, "REMOTE KEYLESS ENTRY SYSTEM" .
- Power window system. Refer to GW-15, "POWER WINDOW SYSTEM" . NOTE
- Sunroof system. Refer to RF-10, "SUNROOF" . NOTE
- Room lamp timer. Refer to LT-123, "INTERIOR ROOM LAMP" .
- Key reminder
- Warning chime
- Turn signal and hazard warning lamps

NOTE:
Power supply only. No system control.

SYSTEMS CONTROLLED BY BCM AND IPDM E/R

- Headlamp, tail lamp, fog lamp, auto light system
- Wiper
- Front washer
- Rear window defogger

MAJOR COMPONENTS AND CONTROL SYSTEM

System	Input	Output
Remote keyless entry system	—	All-door locking actuator Trunk lid opener actuator
Power door lock system	● Power door lock switch ● Driver door lock switch	All-door locking actuator
Power supply (IGN) to power window, sunroof	Ignition power supply	Power supply to power window and sunroof system
Power supply (BAT) to power window, sunroof and power seat	Battery power supply	Power supply to power window, sunroof system and power seat
Auto light system	Auto light sensor Combination switch	IPDM E/R
Headlamp	Combination switch	IPDM E/R
Tail lamp	Combination switch	IPDM E/R
Fog lamp	Combination switch	IPDM E/R
Turn signal lamp	Combination switch	Turn signal lamp Combination meter
Hazard lamp	Hazard switch	Turn signal lamp Combination meter
Room lamp timer	Key detection switch Driver door lock switch Driver door switch All-door switch	Interior room lamp
Key warning chime	Key detection switch Driver door switch	Combination meter (warning buzzer)
Light warning chime	Combination switch Key detection switch Driver door switch	Combination meter (warning buzzer)
Vehicle-speed-sensing intermittent wiper	Combination switch Combination meter	IPDM E/R

System	Input	Output
Front washer	Combination switch	Front washer motor IPDM E/R
Rear window defogger	Rear defogger switch	IPDM E/R
Air conditioner switch signal	A/C auto amplifier (with auto A/C) A/C control unit (with manual A/C)	ECM
Blower fan switch signal	A/C auto amplifier (with auto A/C) A/C control unit (with manual A/C)	ECM

CAN Communication System Description

EKS002J9

CAN (Controller Area Network) is a serial communication line for real time application. It is an on-vehicle multiplex communication line with high data communication speed and excellent error detection ability. Many electronic control units are equipped onto a vehicle, and each control unit shares information and links with other control units during operation (not independent). In CAN communication, control units are connected with 2 communication lines (CAN H line, CAN L line) allowing a high rate of information transmission with less wiring. Each control unit transmits/receives data but selectively reads required data only.

FOR TCS MODELS

System diagram

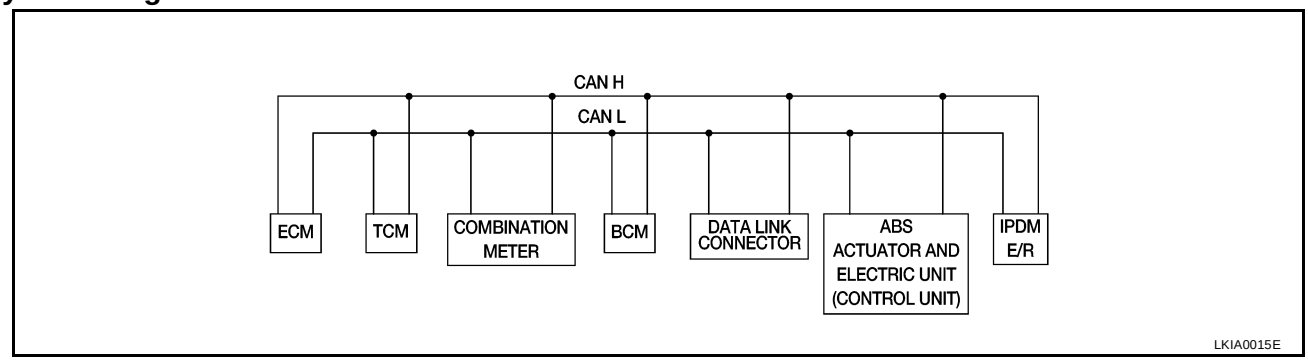

Input/output signal chart

T: Transmit R: Receive

Signals	ECM	TCM	COMBINATION METER	BCM	ABS/TCS control unit	IPDM E/R
Engine speed signal	T		R		R	
Engine coolant temperature signal	T		R			
Accelerator pedal position signal	T					
Fuel consumption monitor signal	T		R			
A/T warning lamp signal		T	R			
A/T position indicator signal	R		R	R(R range only)	R	
ABS operation signal	R				T	
TCS operation signal	R	R			T	
Air conditioner switch signal	R			T		
Air conditioner compressor signal	R					T
A/C compressor request signal	T					R
Cooling fan motor operation signal	R					T
Cooling fan speed request signal	T					R
Position lights request			R	T		R
Position lights status				R		T
Low beam request				T		R
Low beam status	R			R		T

Signals	ECM	TCM	COMBINA-TION METER	BCM	ABS/TCS control unit	IPDM E/R
High beam request			R	T		R
High beam status	R			R		T
Front fog lights request				T		R
Front fog light status				R		T
OD cancel switch signal		R	T			R
Brake switch signal		R	T			
Vehicle speed signal	R	T				
	R		T	R		
Oil pressure switch			R			T
Sleep request1			R	T		
Sleep request2				T		R
N range switch signal		R	T			
P range switch signal		R	T			
Seat belt buckle switch signal			T	R		
Door switch signal			R	T		R
Tail lamp request			R	T		R
Turn indicator signal			R	T		
Buzzer output signal			R	T		
Trunk switch signal			R	T		
ASCD main switch signal	T		R			
ASCD cruise signal	T		R			
Wiper operation				R		T
Wiper stop position signal				R		T
Rear window defogger switch signal				T		R
Rear window defogger control sig-nal	R			R		T

FOR A/T MODELS

System diagram

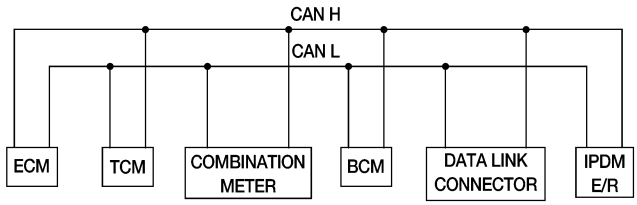

LKIA0017E

Input/output signal chart

T: Transmit R: Receive

Signals	ECM	TCM	COMBINATION METER	BCM	IPDM E/R
Engine speed signal	T		R		
Engine coolant temperature signal	T		R		
Accelerator pedal position signal	T				R

Signals	ECM	TCM	COMBINATION METER	BCM	IPDM E/R
Fuel consumption monitor signal	T		R		
A/T warning lamp signal		T	R		
A/T position indicator signal	R	T	R	R(R range only)	
Air conditioner switch signal	R			T	
Air conditioner compressor signal	R				T
A/C compressor request signal	T				R
Blower fan switch signal	R(QR25DE)			T	
Cooling fan motor operation signal	R			T	
Cooling fan speed request signal	T				R
Position lights request			R	T	R
Position lights status				R	T
Low beam request				T	R
Low beam status	R			R	T
High beam request			R	T	R
High beam status	R			R	T
Front fog lights request				T	R
Front fog light status				R	T
OD cancel switch signal		R	T		R
Brake switch signal		R	T		
Vehicle speed signal	R	T			
	R		T	R	
Oil pressure switch			R		T
Sleep request1			R	T	
Sleep request2				T	R
N range switch signal		R	T		
P range switch signal		R	T		
Seat belt buckle switch signal			T	R	
Door switch signal			R	T	R
Tail lamp request			R	T	R
Turn indicator signal			R	T	
Buzzer output signal			R	T	
Trunk switch signal			R	T	
ASCD main switch signal	T		R		
ASCD cruise signal	T		R		
Wiper operation				R	T
Wiper stop position signal				R	T
Rear window defogger switch signal				T	R
Rear window defogger control signal	R			R	T

FOR M/T MODELS

System diagram

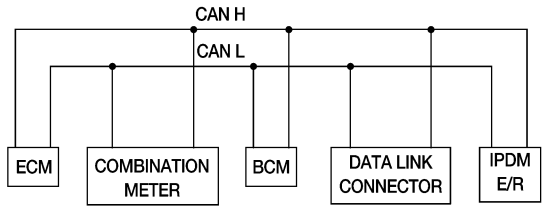

Input/output signal chart

T: Transmit R: Receive

Signals	ECM	COMBINATION METER	BCM	IPDM E/R
Engine speed signal	T			
Engine coolant temperature signal	T			
Fuel consumption monitor signal	T			
Air conditioner switch signal	R		T	
Air conditioner compressor signal	R			T
A/C compressor request signal	T			R
Blower fan switch signal	R(QR25DE)		T	
Cooling fan motor operation signal	R			T
Cooling fan speed request signal	T			R
Position lights request		R	T	R
Position lights status			R	T
Low beam request			T	R
Low beam status	R		R	T
High beam request		R	T	R
High beam status	R		R	T
Front fog lights request			T	R
Front fog light status			R	T
Vehicle speed signal	R	T		
Oil pressure switch		R		T
Sleep request1		R	T	
Sleep request2			T	R
Seat belt buckle switch signal		T	R	
Door switch signal		R	T	R
Tail lamp request		R	T	R
Turn indicator signal		R	T	
Buzzer output signal		R	T	
Trunk switch signal		R	T	
ASCD main switch signal	T	R		
ASCD cruise signal	T	R		
Wiper operation			R	T
Wiper stop position signal			R	T

Signals	ECM	COMBINATION METER	BCM	IPDM E/R
Rear window defogger switch signal			T	R
Rear window defogger control signal	R		R	T

Schematic

EKS002JA

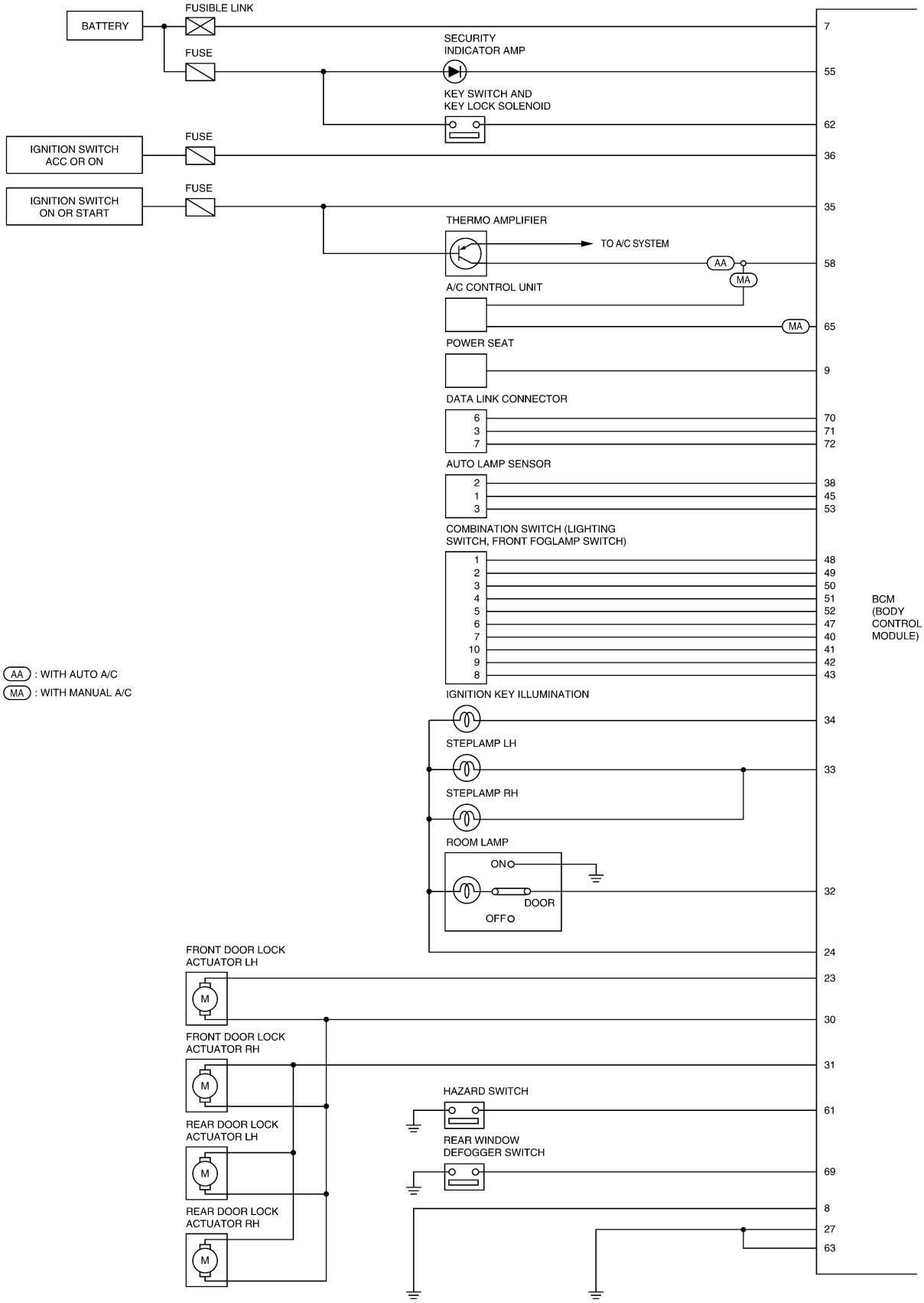

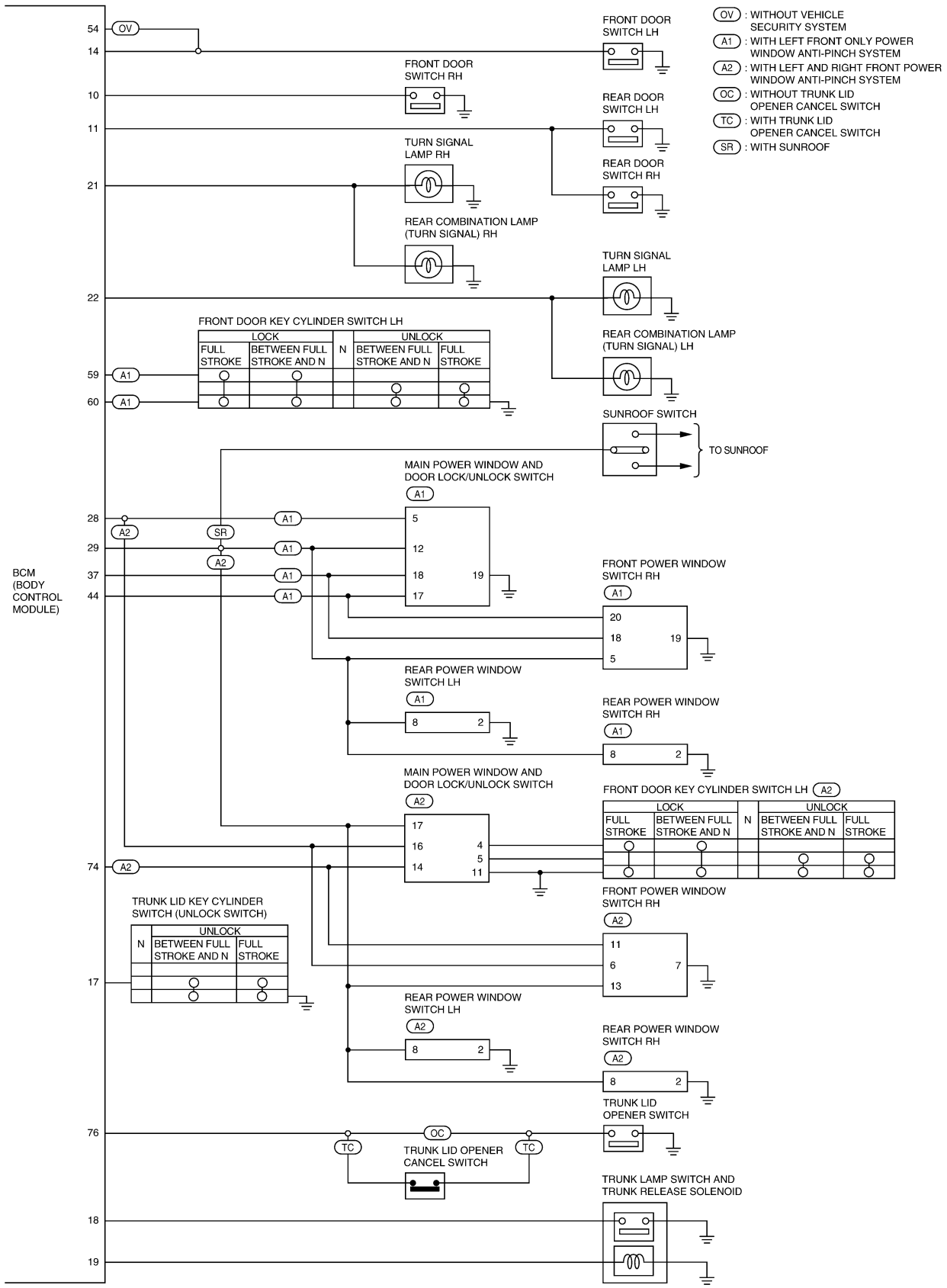
OV : WITHOUT VEHICLE SECURITY SYSTEM
A1 : WITH LEFT FRONT ONLY POWER WINDOW ANTI-PINCH SYSTEM
A2 : WITH LEFT AND RIGHT FRONT POWER WINDOW ANTI-PINCH SYSTEM
OC : WITHOUT TRUNK LID OPENER CANCEL SWITCH
TC : WITH TRUNK LID OPENER CANCEL SWITCH
SR : WITH SUNROOF
BCM (BODY CONTROL MODULE)
FRONT DOOR SWITCH LH
FRONT DOOR SWITCH RH
REAR DOOR SWITCH LH
REAR DOOR SWITCH RH
TURN SIGNAL LAMP RH
REAR COMBINATION LAMP (TURN SIGNAL) RH
TURN SIGNAL LAMP LH
REAR COMBINATION LAMP (TURN SIGNAL) LH
FRONT DOOR KEY CYLINDER SWITCH LH
LOCK
UNLOCK
FULL STROKE
BETWEEN FULL STROKE AND N
N
SUNROOF SWITCH
TO SUNROOF
MAIN POWER WINDOW AND DOOR LOCK/UNLOCK SWITCH
FRONT POWER WINDOW SWITCH RH
REAR POWER WINDOW SWITCH LH
REAR POWER WINDOW SWITCH RH
TRUNK LID KEY CYLINDER SWITCH (UNLOCK SWITCH)
TRUNK LID OPENER SWITCH
TRUNK LID OPENER CANCEL SWITCH
TRUNK LAMP SWITCH AND TRUNK RELEASE SOLENOID
LKWA0072E

CONSULT-II

EKS002JB

CONSULT-II can display each diagnostic item using the following diagnostic test modes: work support, self-diagnostic results, data monitor and active test through data reception and command transmission via the BCM communication line.

BCM diagnostic test item	Check item, diagnostic test mode	Content
Inspection by part	Work support	Changes setting of each function.
	Self-diag results	BCM performs self-diagnosis of CAN communication and combination switch.
	Data monitor	Displays the input data of BCM in real time.
	Active test	Gives a drive signal to a load to check the operation.

CONSULT–II INSPECTION PROCEDURE

1. With ignition switch OFF, connect CONSULT-II to data link connector and turn ON ignition switch.
2. Touch “START”.

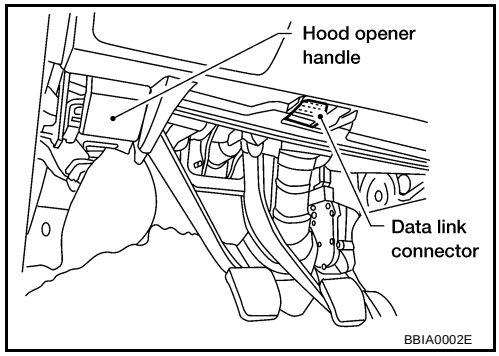

3. Touch “BCM” on “SELECT SYSTEM” screen.

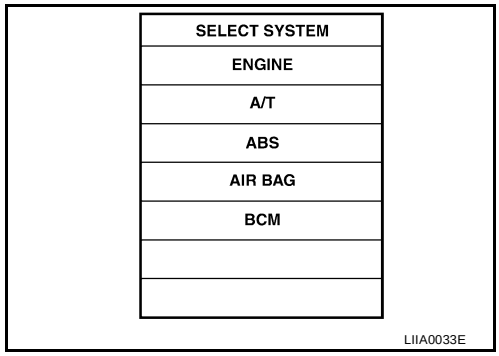

4. Select item to be diagnosed on “SELECT TEST ITEM” screen.

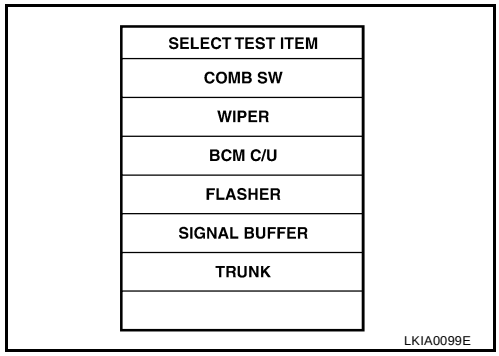

ITEMS OF EACH PART

System and item	CONSULT-II display	Diagnostic test mode (Inspection by part)			
		WORK SUPPORT	SELF–DIAG RESULTS	DATA MONITOR	ACTIVE TEST
Power door lock system	Door lock			×	×
Rear defogger	Rear defogger			×	×
Key reminder	Key reminder			×	×

System and item	CONSULT-II display	Diagnostic test mode (Inspection by part)			
		WORK SUPPORT	SELF–DIAG RESULTS	DATA MONITOR	ACTIVE TEST
Light reminder	Light reminder			×	×
Room lamp timer	Interior room lamp	×		×	×
Power supply (IGN) to power window and sunroof	RAP			×	×
Remote keyless entry system	Keyless entry	×		×	×
Headlamp	Headlamp	× NOTE 1		× NOTE 2	
Combination switch	Combination switch			× NOTE 2	
BCM	BCM control unit		×	×	
Turn signal lamp Hazard lamp	Flasher			×	×
Air conditioner switch signal Blower fan switch signal	Signal buffer			×	
Reverse warning buzzer	Reverse warning			×	×

CAUTION:

1. **For vehicles with auto light only**
2. **For vehicles without auto light, related items are displayed, but monitoring cannot be performed.**

CAN Communication Inspection Using CONSULT-II (Self-Diagnosis)

EKS002JC

1. SELF-DIAGNOSTIC RESULT CHECK

1. Connect to CONSULT–II, and select “BCM” on “SELECT SYSTEM” screen.
2. Select “BCM control unit ” on “SELECT WORK ITEM”screen, and select “SELF-DIAG RESULTS”.
3. Check display content in self-diagnostic results.

CONSULT-II display code	Diagnosis item
U1000	CAN COMM
	CAN CIRC 1
	CAN CIRC 2
	CAN CIRC 3
	CAN CIRC 4

Contents displayed

No malfunction>>Inspection End
Malfunction in CAN communication system>>GO TO 2.

2. SYMPTOM CHECK

1. Select “CAN diagnosis support monitor” in data monitor.
2. Select “START” and check display content.

Diagnosis item	Self-diagnostic result content	
	Normal	Not normal (Example)
CAN COMM	OK	NG
CAN CIRC 1	OK	UNKWN
CAN CIRC 2	OK	UNKWN
CAN CIRC 3	OK	UNKWN
CAN CIRC 4	OK	UNKWN

>> After printing the monitor items, go to “CAN System”. Refer to LAN-4, "CAN COMMUNICATION" .

Combination Switch Inspection According to Self-Diagnostic Results

EKS002JD

1. SELF-DIAGNOSTIC RESULT CHECK

1. Connect to CONSULT–II, and select “BCM” on “SELECT SYSTEM” screen.
2. Select “BCM control unit ” on “SELECT WORK ITEM”screen, and select “SELF-DIAG RESULTS”.
3. Check display content in self-diagnostic results.

CONSULT-II display code	Self-diagnostic result content	Malfunctioning switch system	Detection conditions	Possible causes
B2049	OPEN DETECT 1	The following switch operation shown below cannot be input. ● Front wiper Hi ● Intermittent control 1 ● Intermittent control 2	BCM terminal No. 48 (Input 1) does not change. (Open circuit in diagnosis 1 system line or open malfunction in output 1 transistor.)	● Vehicle harness between BCM and combination switch ● Wiper switch ● BCM
B2050	OPEN DETECT 2	The following switch operation shown below cannot be input. ● Front washer ● Intermittent control 3	BCM terminal No. 47 (Input 2) does not change. (Open circuit in diagnosis 2 system line or open malfunction in output 2 transistor.)	● Vehicle harness between BCM and combination switch ● Wiper switch ● BCM
B2051	OPEN DETECT 3	The following switch operation shown below cannot be input. ● Front wiper Lo ● Front wiper INT ● Auto light	BCM terminal No. 46 (Input 3) does not change. (Open circuit in diagnosis 3 system line or open malfunction in output 3 transistor.)	● Vehicle harness between BCM and combination switch ● Wiper switch (Front wiper Lo, INT) ● Lighting switch (Auto light) ● BCM
B2052	OPEN DETECT 4	The following switch operation shown below cannot be input. ● TURN LH ● PASSING ● Headlamp 2 ● Front fog lamp	BCM terminal No. 45 (Input 4) does not change. (Open circuit in diagnosis 4 system line or open malfunction in output 4 transistor.)	● Vehicle harness between BCM and combination switch ● Lighting switch ● BCM
B2053	OPEN DETECT 5	The following switch operation shown below cannot be input. ● TURN RH ● Headlamp 1 ● HI BEAM ● Lighting switch 1st position	BCM terminal No. 44 (Input 5) does not change. (Open circuit in diagnosis 5 system line or open malfunction in output 5 transistor.)	● Vehicle harness between BCM and combination switch ● Lighting switch ● BCM
B2054	HEADLAMP 1 SW NG	Headlamp 1 malfunction	Headlamp 1 switch OFF Headlamp 2 switch ON	Lighting switch
B2055	HEADLAMP 2 SW NG	Headlamp 2 malfunction	Headlamp 1 switch ON Headlamp 2 switch OFF	Lighting switch

Display content

No malfunction>>Inspection End
Malfunction in diagnosis system>>GO TO 2.
Malfunction in headlamp switch system>>Replace lamp switch.

2. HARNESS INSPECTION

1. Disconnect BCM connector and combination switch connector.
2. Check continuity between BCM harness connector of applicable malfunctioning system and combination switch connector terminals.

Self-diagnostic result content	Terminals					Continuity
	BCM(+)			Combination switch(–)		
	Connector	Terminal (wire color)		Connector	Terminal (wire color)	
OPEN DETECT 1	M19	Input 1	48(G/W)	M28	1(G/W)	Yes
		Output 1	47(R/W)		6(R/W)	
OPEN DETECT 2		Input 2	49(G/B)		2(G/B)	
		Output 2	40(R/B)		7(R/B)	
OPEN DETECT 3		Input 3	50(G/R)		3(G/R)	
		Output 3	41(R/G)		10(R/G)	
OPEN DETECT 4		Input 4	51(G/Y)		4(G/Y)	
		Output 4	42(R/Y)		9(R/Y)	
OPEN DETECT 5		Input 5	52(L/W)		5(L/W)	
		Output 5	43(L)		8(L)	

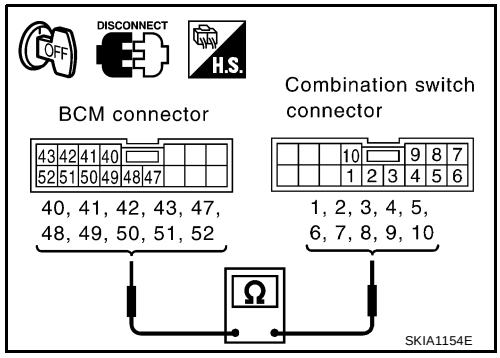

- Refer to LT-12, "Wiring Diagram — H/LAMP —" .

OK or NG

OK >> GO TO 3.
NG >> Check harness between BCM and combination switch for open or short circuit.

3. INSPECTION OF BCM INPUT TERMINAL VOLTAGE

Connect BCM connector, and check BCM input terminal voltage of applicable malfunctioning system.

Self-diagnostic result content	Terminals			Voltage
	BCM			
	Connector	Terminal (wire color)		
OPEN DETECT 1	M19	Input 1	48(G/W)	4.5V or more
OPEN DETECT 2		Input 2	49(G/B)	
OPEN DETECT 3		Input 3	50(G/R)	
OPEN DETECT 4		Input 4	51(G/Y)	
OPEN DETECT 5		Input 5	52(L/W)	

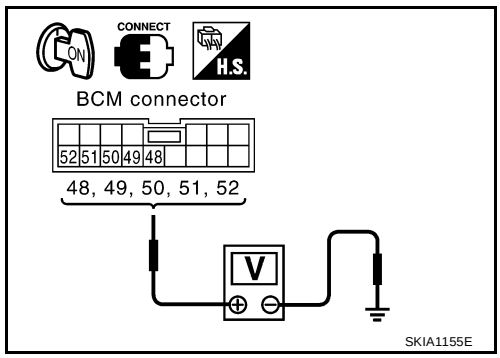

- Refer to LT-12, "Wiring Diagram — H/LAMP —" .

OK or NG

OK >> GO TO 4.
NG >> Replace BCM.

4. BCM OUTPUT TERMINAL INSPECTION

Connect combination switch connector, and check BCM output terminal voltage waveform of applicable malfunctioning system.

Self-diagnostic result content	Terminals		
	BCM		
	Connector	Terminal (wire color)	
OPEN DETECT 1	M19	Output 1	47(R/W)
OPEN DETECT 2		Output 2	40(R/B)
OPEN DETECT 3		Output 3	41(R/G)
OPEN DETECT 4		Output 4	42(R/Y)
OPEN DETECT 5		Output 5	43(L)

- Refer to LT-12, "Wiring Diagram — H/LAMP —" .

OK or NG

OK >> Combination switch malfunction, go to 5.
NG >> Replace BCM.

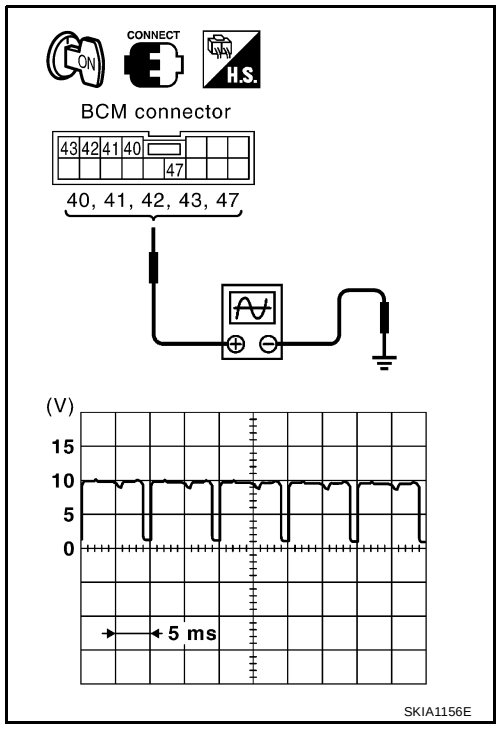

5. COMBINATION SWITCH INSPECTION

Following the table below, check switches by procedure of appropriate malfunctioning system.

Self-diagnostic result content	Procedure									
	1	2		3	4		5	6		7
OPEN DETECT 1	Wiper switch replacement	Confirm self-diagnostic results again.	OK	Inspection End	—					
			NG	Confirm symptom again.						
OPEN DETECT 2	Wiper switch replacement	Confirm self-diagnostic results again.	OK	Inspection End	—					
			NG	Confirm symptom again.						
OPEN DETECT 3	Lighting switch replacement	Confirm self-diagnostic results again.	OK	Inspection End	Confirm self-diagnostic results again.	OK	Inspection End	Confirm self-diagnostic results again.	OK	Inspection End
			NG	Wiper switch replacement		NG	Switch base replacement		NG	Confirm symptom again.
OPEN DETECT 4	Lighting switch replacement	Confirm self-diagnostic results again.	OK	Inspection End	Confirm self-diagnostic results again.	OK	Inspection End	Confirm self-diagnostic results again.	OK	Inspection End
			NG	Wiper switch replacement		NG	Switch base replacement		NG	Confirm symptom again.
OPEN DETECT 5	Lighting switch replacement	Confirm self-diagnostic results again.	OK	Inspection End	Confirm self-diagnostic results again.	OK	Inspection End	Confirm self-diagnostic results again.	OK	Inspection End
			NG	Wiper switch replacement		NG	Switch base replacement		NG	Confirm symptom again.

>> Inspection End

Malfunctioning Operation of Lamps and Wipers

EKS002JE

1. SYMPTOM CHECK

Confirm symptom, and confirm malfunctioning system No. from the table below.

Ignition switch	Symptom	Malfunctioning system	Possible causes
ON	● LH Turn signal lamp and RH Turn signal lamp on ● Front wiper on (LO speed)	1	● Vehicle harness shorted between BCM input terminal No. 1 and BCM output terminal No. 1 ● BCM ● Combination switch
OFF	—		
ON	● Headlamp on (HI and LO) ● Front wiper on (HI speed)	2	● Vehicle harness shorted between BCM input terminal No. 2 and BCM output terminal No. 2 ● BCM ● Combination switch
OFF	Headlamp on (HI and LO)		
ON	Headlamp on (HI and LO)	3	● Vehicle harness shorted between BCM input terminal No. 3 and BCM output terminal No. 3 ● BCM ● Combination switch
OFF	Headlamp on (HI and LO)		
ON	● Parking lamp and Tail lamp on ● Headlamp on at certain degrees of brightness	4	● Vehicle harness shorted between BCM input terminal No. 4 and BCM output terminal No. 4 ● BCM ● Combination switch
OFF	Parking lamp and Tail lamp on		
ON	Front fog lamp on	5	● Vehicle harness shorted between BCM input terminal No. 5 and BCM output terminal No. 5 ● BCM ● Combination switch
OFF	Front fog lamp on		

>> GO TO 2.

2. HARNESS INSPECTION

1. Disconnect BCM connector and combination switch connector.
2. Check continuity between BCM harness connector of applicable malfunctioning system and body ground.

Self-diagnostic result content	Terminals				Continuity
	BCM(+)			(–)	
	Connector	Terminal (wire color)			
OPEN DETECT 1	M19	Input 1	48(G/W)	Ground	No
		Output 1	47(R/W)		
OPEN DETECT 2		Input 2	49(G/B)		
		Output 2	40(R/B)		
OPEN DETECT 3		Input 3	50(G/R)		
		Output 3	41(R/G)		
OPEN DETECT 4		Input 4	51(G/Y)		
		Output 4	42(R/Y)		
OPEN DETECT 5		Input 5	52(L/W)		
		Output 5	43(L)		

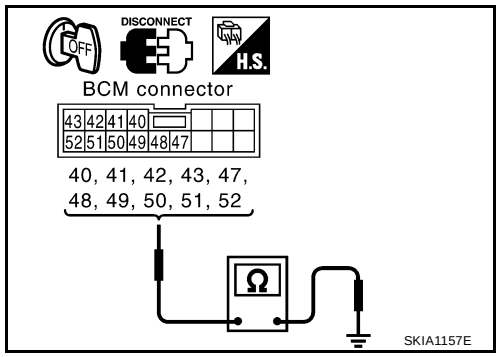

- Refer to LT-12, "Wiring Diagram — H/LAMP —" .

OK or NG

OK >> GO TO 3.
NG >> Check harness between BCM and combination switch for short circuit.

3. INSPECTION OF BCM INPUT TERMINAL VOLTAGE

Connect BCM connector. Check voltage between BCM input terminal of applicable malfunctioning system and body ground.

Self-diagnostic result content	Terminals			Voltage
	BCM(+)		(–)	
	Connector	Terminal (wire color)		
OPEN DETECT 1	M19	48(G/W)	Ground	4.5V or more
OPEN DETECT 2		49(G/B)		
OPEN DETECT 3		50(G/R)		
OPEN DETECT 4		51(G/Y)		
OPEN DETECT 5		52(L/W)		

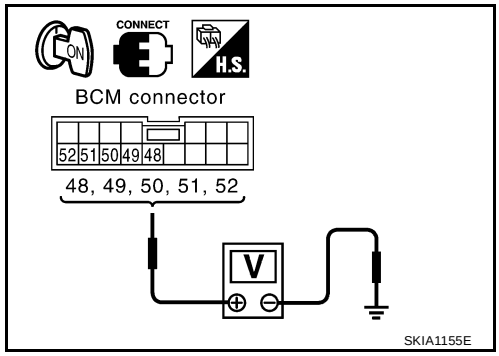

- Refer to LT-12, "Wiring Diagram — H/LAMP —" .

OK or NG

OK >> Combination switch malfunction, go to 4.
NG >> Replace BCM.

4. COMBINATION SWITCH INSPECTION

Following the table below, check combination switch.

Procedure									
1	2		3	4		5	6		7
Lighting switch replacement	Confirm self-diagnostic results again.	OK	Inspection End	Confirm self-diagnostic results again.	OK	Inspection End	Confirm self-diagnostic results again.	OK	Inspection End
		NG	Wiper switch replacement		NG	Replace-ment of switch base		NG	Confirm symptom again.

>> Inspection End

Inspection of BCM Power Supply and Ground Circuit

EKS002JF

1. FUSE AND FUSIBLE LINK INSPECTION

Check if any of the following BCM fuses and fusible links are blown.

Terminal No.	Signal name	Fuse No., fusible link No.
7	Battery	f
35	Ignition switch ON or START	12
36	Ignition switch ACC or ON	6

- Refer to LT-12, "Wiring Diagram — H/LAMP —" .

OK or NG

OK >> GO TO 2.
NG >> Replace fuse or fusible link.

2. POWER SUPPLY CIRCUIT INSPECTION

Disconnect BCM connector. To measure voltage, connect following connector terminals to positive probe and body ground to negative one.

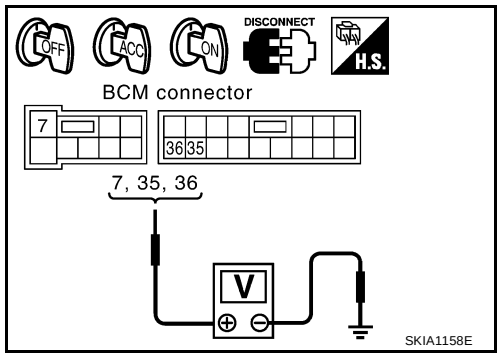

Terminals			Power source	Ignition switch	Reference voltage (V)
(+)		(–)			
Connector	Terminal (wire color)				
E39	7	Ground	Battery power	OFF	Approx. 12
M19	35		Ignition power supply	ON	Approx. 12
	36		ACC power supply	ACC	Approx. 12

- Refer to LT-12, "Wiring Diagram — H/LAMP —" .

OK or NG

OK >> GO TO 3.
NG >> Replace BCM power supply circuit harness.

3. GROUND CIRCUIT INSPECTION

Check continuity between the following connector of BCM and body ground.

Terminals			Power source	Ignition switch	Continuity
(+)		(–)			
Connector	Terminal (wire color)				
E39	8	Ground	Ground	OFF	YES

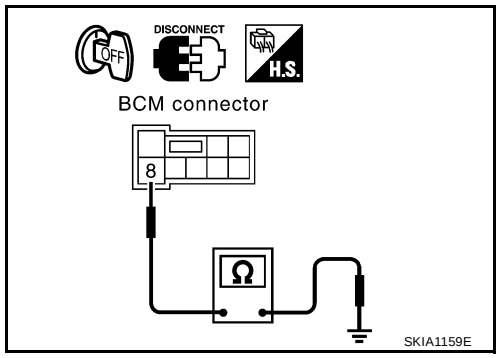

- Refer to LT-12, "Wiring Diagram — H/LAMP —" .

OK or NG

OK >> Normal
NG >> Replace BCM ground circuit harness.

SECTION BL

BODY, LOCK & SECURITY SYSTEM

CONTENTS

PRECAUTIONS 4
Precautions for Supplemental Restraint System (SRS) “AIR BAG” and “SEAT BELT PRE-TENSIONER” 4
Precautions for work 4
Wiring Diagnosis and Trouble Diagnosis 4
PREPARATION 5
Special service tool 5
Commercial Service Tool 5
SQUEAK AND RATTLE TROUBLE DIAGNOSIS 6
Work Flow 6
CUSTOMER INTERVIEW 6
DUPLICATE THE NOISE AND TEST DRIVE 7
CHECK RELATED SERVICE BULLETINS 7
LOCATE THE NOISE AND IDENTIFY THE ROOT CAUSE 7
REPAIR THE CAUSE 7
CONFIRM THE REPAIR 8
Generic Squeak and Rattle Troubleshooting 8
INSTRUMENT PANEL 8
CENTER CONSOLE 8
DOORS 8
TRUNK 9
SUNROOF/HEADLINER 9
SEATS 9
UNDERHOOD 9
Diagnostic Worksheet 10
HOOD 12
Fitting Adjustment 12
FRONT END HEIGHT ADJUSTMENT AND LATERAL/LONGITUDINAL CLEARANCE ADJUSTMENT. 12
SURFACE HEIGHT ADJUSTMENT 12
Removal and Installation of Hood Assembly 13
Removal and Installation of Hood Lock Control 14
REMOVAL 14
INSTALLATION 14
Hood Lock Control Inspection 15
POWER DOOR LOCK SYSTEM 16
Component Parts and Harness Connector Location 16
System Description 17
OUTLINE 17
OPERATIONS BY MAIN POWER WINDOW AND DOOR LOCK/UNLOCK SWITCH 18
KEY–TRAP PREVENTIVE FUNCTION 18
Schematic 19
Wiring Diagram -D/LOCK- 20
FIG. 1 20
FIG. 2 21
FIG. 3 22
FIG. 4 23
Terminals and Reference Value for BCM 24
Work Flow 24
Preliminary Check 25
FUSE CHECK 25
CONSULT–II Function 25
CONSULT–II BASIC OPERATION PROCEDURE 25
DATA MONITOR 26
ACTIVE TEST 26
Symptom Chart 27
Door Switch Check 28
Key Switch (Insert) Check 29
Door Lock/Unlock Switch Check (With left front only power window anti–pinch system) 30
Door Lock/Unlock Switch Check (With left and right front power window anti–pinch system) 33
Door Lock Actuator Check (Front LH) 36
Door Lock Actuator Check (Front RH and rear LH/RH) 37
Front Door Key Cylinder Switch LH Check (With left front only power window anti-pinch system) 38
Door Lock/Unlock Switch Check (With left and right front power window anti–pinch system) 39
Front Door Key Cylinder Switch LH Check (With left and right front power window anti–pinch system)... 41
REMOTE KEYLESS ENTRY SYSTEM 43
Component Parts and Harness Connector Location 43
System Description 44
INPUTS 44

OPERATED PROCEDURE 44
CAN Communication System Description 45
FOR TCS MODELS 46
FOR A/T MODELS 47
FOR M/T MODELS 48
Schematic 50
Wiring Diagram — KEYLES— 51
FIG. 1 51
FIG. 2 52
FIG. 3 53
FIG. 4 54
Terminals and Reference Value for BCM 55
CONSULT-II Function 55
CONSULT-II Inspection Procedure 56
“MULTI REMOTE ENT” 56
CONSULT-II Application Items 57
“MULTI REMOTE CONT SYS” 57
Trouble Diagnosis Procedure 58
Pre-Diagnosis Inspection 59
BCM POWER SUPPLY AND GROUND CIRCUIT INSPECTION 59
Trouble Diagnoses 59
SYMPTOM CHART 59
Key Fob Battery and Function Check 61
Door Switch Check 62
Key Switch (insert) Check 63
Trunk Release Solenoid Check 64
Hazard Reminder Check 65
Horn Reminder Check 67
Interior Lamp Operation Check 68
Ignition Illumination Operation Check 69
Step Lamp Operation Check 70
ID Code Entry Procedure 71
KEY FOB ID SET UP WITH CONSULT-II 71
KEY FOB ID SET UP WITHOUT CONSULT-II 73
Key Fob Battery Replacement 74
DOOR 75
Fitting Adjustment 75
FRONT DOOR 75
REAR DOOR 75
STRIKER ADJUSTMENT 75
Removal and Installation 76
Door Weatherstrip 77
FRONT DOOR LOCK 78
Component Structure 78
Inspection and Adjustment. 78
EXTERIOR HANDLE ROD ADJUSTMENT 78
Removal and Installation 78
REMOVAL 78
Disassembly and Assembly 79
DISASSEMBLY 79
ASSEMBLY 79
REAR DOOR LOCK 80
Components 80
Inspection and Adjustment 80
EXTERIOR HANDLE ROD ADJUSTMENT 80
Removal and Installation of Door Lock 80
REMOVAL 80
Disassembly and Assembly 81
DISASSEMBLY 81
ASSEMBLY 81
TRUNK LID 82
Fitting Adjustment 82
LONGITUDINAL AND LATERAL CLEARANCE ADJUSTMENT 82
SURFACE HEIGHT ADJUSTMENT 82
Removal and Installation of Trunk Lid Assembly 83
Removal and Installation of Trunk Lid Lock 83
LOCK REMOVAL 83
STRIKER REMOVAL 83
LOCK AND STRIKER INSTALLATION 83
Removal and Installation of Trunk Lid Weatherstrip 84
TRUNK LID OPENER 85
Wiring Diagram -TLID- 85
Terminals and Reference Value for BCM 86
VEHICLE SECURITY (THEFT WARNING) SYSTEM 87
Component Parts and Harness Connector Location 87
System Description 89
DESCRIPTION 89
POWER SUPPLY 89
INITIAL CONDITION TO ACTIVATE THE SYSTEM 89
VEHICLE SECURITY SYSTEM ALARM OPERATION 90
VEHICLE SECURITY SYSTEM DEACTIVATION 90
PANIC ALARM OPERATION 90
CAN Communication System Description 90
FOR TCS MODELS 91
FOR A/T MODELS 92
FOR M/T MODELS 93
Schematic 95
Wiring Diagram -VEHSEC- 96
FIG. 1 96
FIG. 2 97
FIG. 3 98
FIG. 4 99
FIG. 5 100
CONSULT-II Function 101
CONSULT-II INSPECTION PROCEDURE 101
CONSULT-II APPLICATION ITEM 101
Trouble Diagnosis 103
WORK FLOW 103
Preliminary Check 104
Symptom Chart 105
Diagnostic Procedure 1 106
Diagnostic Procedure 2 109
Diagnostic Procedure 3 110
Diagnostic Procedure 4 112
Diagnostic Procedure 5 113
Diagnostic Procedure 6 114
Diagnostic Procedure 7 115
NVIS(NISSAN VEHICLE IMMOBILIZER SYSTEM-NATS) 116
Component Parts and Harness Connector Location 116
System Description 117
System Composition 117

Wiring Diagram — NATS — 118
CONSULT-II 119
CONSULT-II INSPECTION PROCEDURE 119
CONSULT-II DIAGNOSTIC TEST MODE FUNCTION 120
HOW TO READ SELF-DIAGNOSTIC RESULTS 120
NVIS (NATS) SELF-DIAGNOSTIC RESULTS ITEM CHART 121
Trouble Diagnoses 122
WORK FLOW 122
SYMPTOM MATRIX CHART 1 (SELF-DIAGNOSIS RELATED ITEM) 123
SYMPTOM MATRIX CHART 2 (NON SELF-DIAGNOSIS RELATED ITEM) 123
DIAGNOSTIC SYSTEM DIAGRAM 124
DIAGNOSTIC PROCEDURE 1 124
DIAGNOSTIC PROCEDURE 2 125
DIAGNOSTIC PROCEDURE 3 128
DIAGNOSTIC PROCEDURE 4 129
DIAGNOSTIC PROCEDURE 5 130
DIAGNOSTIC PROCEDURE 6 131
DIAGNOSTIC PROCEDURE 7 133
How to Replace NVIS (NATS) IMMU 134
INTEGRATED HOMELINK TRANSMITTER 135
Wiring Diagram —TRNSCV— 135
Trouble Diagnoses 136
DIAGNOSTIC PROCEDURE 136
BODY REPAIR 138
Body Exterior Paint Color 138
Body Component Parts 139
UNDERBODY COMPONENT PARTS 139
BODY COMPONENT PARTS 141
Corrosion Protection 143
DESCRIPTION 143
ANTI-CORROSIVE WAX 144
UNDERCOATING 145
Body Sealing 146
DESCRIPTION 146
Body Construction 149
BODY CONSTRUCTION 149
Body Alignment 150
BODY CENTER MARKS 150
PANEL PARTS MATCHING MARKS 151
DESCRIPTION 152
ENGINE COMPARTMENT 153
UNDERBODY 155
PASSENGER COMPARTMENT 157
REAR BODY 159
Handling Precautions for Plastics 161
HANDLING PRECAUTIONS FOR PLASTICS . 161
LOCATION OF PLASTIC PARTS 162
Precautions in Repairing High Strength Steel 164
HIGH STRENGTH STEEL (HSS) USED IN NISSAN VEHICLES 164
Replacement Operations 167
DESCRIPTION 167
HOODLEDGE 170
HOODLEDGE (PARTIAL REPLACEMENT) 171
FRONT SIDE MEMBER 172
FRONT SIDE MEMBER (PARTIAL REPLACEMENT) 173
FRONT PILLAR 174
CENTER PILLAR 177
OUTER SILL 178
REAR FENDER 179
REAR PANEL 180
REAR FLOOR REAR 181
REAR SIDE MEMBER EXTENSION 182

PRECAUTIONS

PFP:00001

Precautions for Supplemental Restraint System (SRS) “AIR BAG” and “SEAT BELT PRE-TENSIONER”

EIS000PD

The Supplemental Restraint System such as “AIR BAG” and “SEAT BELT PRE-TENSIONER”, used along with a front seat belt, helps to reduce the risk or severity of injury to the driver and front passenger for certain types of collision. Information necessary to service the system safely is included in the SRS and SB section of this Service Manual.

WARNING:

- **To avoid rendering the SRS inoperative, which could increase the risk of personal injury or death in the event of a collision which would result in air bag inflation, all maintenance must be performed by an authorized NISSAN/INFINITI dealer.**
- **Improper maintenance, including incorrect removal and installation of the SRS, can lead to personal injury caused by unintentional activation of the system. For removal of Spiral Cable and Air Bag Module, see the SRS section.**
- **Do not use electrical test equipment on any circuit related to the SRS unless instructed to in this Service Manual. SRS wiring harnesses can be identified by yellow and/or orange harness connectors.**

Precautions for work

EIS000PE

- After removing and installing the opening/closing parts, be sure to carry out fitting adjustments to check their operation.
- Check the lubrication level, damage, and wear of each part. If necessary, grease or replace it.

Wiring Diagnosis and Trouble Diagnosis

EIS000PF

When you read wiring diagrams, refer to the following:

- GI-12, "How to Read Wiring Diagrams"
- PG-3, "POWER SUPPLY ROUTING CIRCUIT"

When you perform trouble diagnosis, refer to the following:

- GI-10, "HOW TO FOLLOW TEST GROUPS IN TROUBLE DIAGNOSES"
- GI-25, "How to Perform Efficient Diagnosis for an Electrical Incident"
  Check for any Service bulletins before servicing the vehicle.

PREPARATION

PFP:00002

Special service tool

EIS000PG

The actual shapes of Kent-Moore tools may differ from those of special service tools illustrated here.

Tool number (Kent-Moore No.) Tool name		Description
(J-39570) Chassis ear	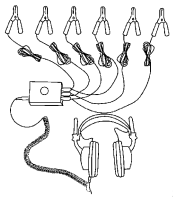 SIIA0993E	Locating the noise
(J-43980) NISSAN Squeak and Rattle Kit	 SIIA0994E	Repairing the cause of noise
(J-43241) Remote Keyless Entry Tester	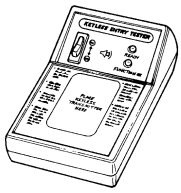 LEL946A	Used to test key fobs

Commercial Service Tool

EIS000PH

Tool name		Description
Engine ear	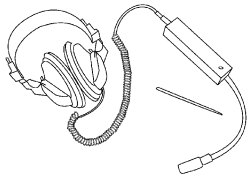 SIIA0995E	Locating the noise

SQUEAK AND RATTLE TROUBLE DIAGNOSIS

PFP:00000

Work Flow

EIS000PI

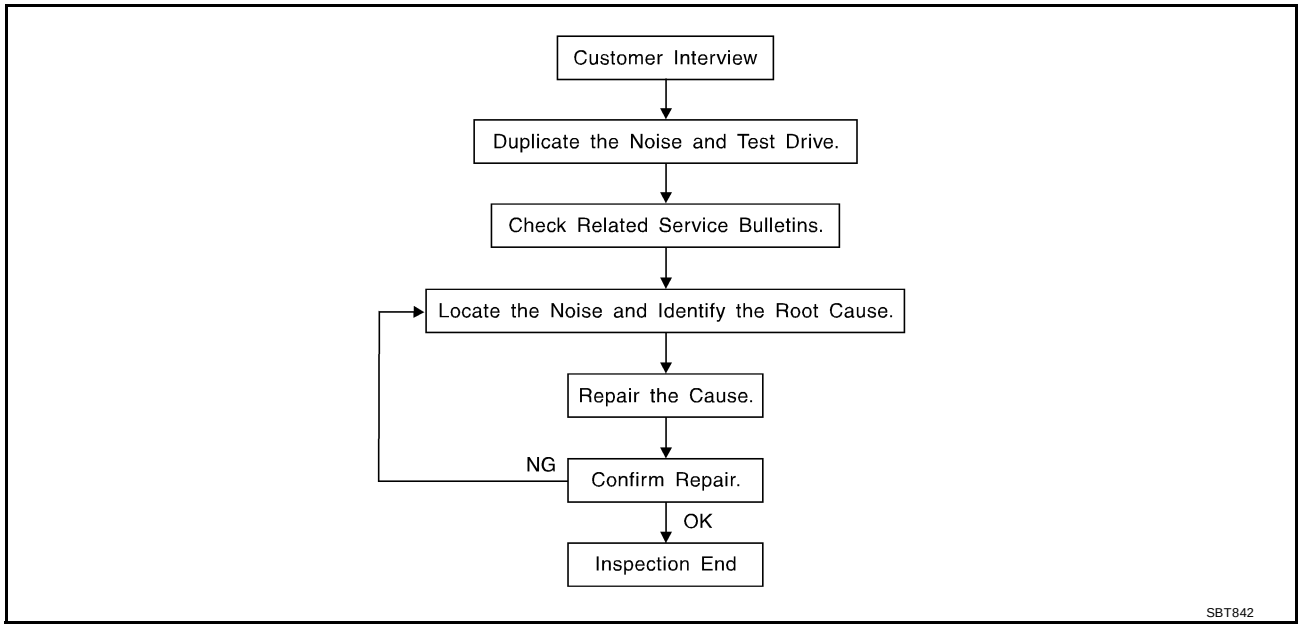

CUSTOMER INTERVIEW

Interview the customer if possible, to determine the conditions that exist when the noise occurs. Use the Diagnostic Worksheet during the interview to document the facts and conditions when the noise occurs and any customer's comments; refer BL-10, "Diagnostic Worksheet" . This information is necessary to duplicate the conditions that exist when the noise occurs.

- The customer may not be able to provide a detailed description or the location of the noise. Attempt to obtain all the facts and conditions that exist when the noise occurs (or does not occur).
- If there is more than one noise in the vehicle, be sure to diagnose and repair the noise that the customer is concerned about. This can be accomplished by test driving the vehicle with the customer.
- After identifying the type of noise, isolate the noise in terms of its characteristics.The noise characteristics are provided so the customer, service adviser and technician are all speaking the same language when defining the noise.
- Squeak —(Like tennis shoes on a clean floor)
  Squeak characteristics include the light contact/fast movement/brought on by road conditions/hard surfaces=higher pitch noise/softer surfaces=lower pitch noises/edge to surface=chirping
- Creak—(Like walking on an old wooden floor)
  Creak characteristics include firm contact/slow movement/twisting with a rotational movement/pitch dependent on materials/often brought on by activity.
- Rattle—(Like shaking a baby rattle)
  Rattle characteristics include the fast repeated contact/vibration or similar movement/loose parts/missing clip or fastener/incorrect clearance.
- Knock —(Like a knock on a door)
  Knock characteristics include hollow sounding/sometimes repeating/often brought on by driver action.
- Tick—(Like a clock second hand)
  Tick characteristics include gentle contacting of light materials/loose components/can be caused by driver action or road conditions.
- Thump—(Heavy, muffled knock noise)
  Thump characteristics include softer knock/dead sound often drought on by activity.
- Buzz—(Like a bumble bee)
  Buzz characteristics include high frequency rattle/firm contact.
- Often the degree of acceptable noise level will vary depending upon the person. A noise that you may judge as acceptable may be very irritating to the customer.
- Weather conditions, especially humidity and temperature, may have a great effect on noise level.

DUPLICATE THE NOISE AND TEST DRIVE

If possible, drive the vehicle with the customer until the noise is duplicated. Note any additional information on the Diagnostic Worksheet regarding the conditions or location of the noise. This information can be used to duplicate the same conditions when you confirm the repair.
If the noise can be duplicated easily during the test drive, to help identify the source of the noise, try to duplicate the noise with the vehicle stopped by doing one or all of the following:

1) Close a door.
2) Tap or push/pull around the area where the noise appears to be coming from.
3) Rev the engine.
4) Use a floor jack to recreate vehicle "twist".
5) At idle, apply engine load (electrical load, half-clutch on M/T model, drive position on A/T model).
6) Raise the vehicle on a hoist and hit a tire with a rubber hammer.

- Drive the vehicle and attempt to duplicate the conditions the customer states exist when the noise occurs.
- If it is difficult to duplicate the noise, drive the vehicle slowly on an undulating or rough road to stress the vehicle body.

CHECK RELATED SERVICE BULLETINS

After verifying the customer concern or symptom, check ASIST for Technical Service Bulletins (TSBs) related to that concern or symptom.
If a TSB relates to the symptom, follow the procedure to repair the noise.

LOCATE THE NOISE AND IDENTIFY THE ROOT CAUSE

1. Narrow down the noise to a general area. To help pinpoint the source of the noise, use a listening tool (Chassis Ear: J-39570, Engine Ear and mechanic's stethoscope).
2. Narrow down the noise to a more specific area and identify the cause of the noise by:

- removing the components in the area that you suspect the noise is coming from.
  Do not use too much force when removing clips and fasteners, otherwise clips and fastener can be broken or lost during the repair, resulting in the creation of new noise.
- tapping or pushing/pulling the component that you suspect is causing the noise.
  Do not tap or push/pull the component with excessive force, otherwise the noise will be eliminated only temporarily.
- feeling for a vibration with your hand by touching the component(s) that you suspect is (are) causing the noise.
- placing a piece of paper between components that you suspect are causing the noise.
- looking for loose components and contact marks.
  Refer to BL-8, "Generic Squeak and Rattle Troubleshooting" .

REPAIR THE CAUSE

- If the cause is a loose component, tighten the component securely.
- If the cause is insufficient clearance between components:
  - separate components by repositioning or loosening and retightening the component, if possible.
  - insulate components with a suitable insulator such as urethane pads, foam blocks, felt cloth tape or urethane tape. A Nissan Squeak and Rattle Kit (J-43980) is available through your authorized Nissan Parts Department.

CAUTION:
Do not use excessive force as many components are constructed of plastic and may be damaged.
Always check with the Parts Department for the latest parts information.
The following materials are contained in the Nissan Squeak and Rattle Kit (J-43980). Each item can be ordered separately as needed.
URETHANE PADS [1.5 mm (0.059 in) thick]
Insulates connectors, harness, etc.
76268-9E005: 100×135 mm (3.94×5.31 in)/76884-71L01: 60×85 mm (2.36×3.35 in)/76884-71L02: 15×25 mm (0.59×0.98 in)
INSULATOR (Foam blocks)
Insulates components from contact. Can be used to fill space behind a panel.
73982-9E000: 45 mm (1.77 in) thick, 50×50 mm (1.97×1.97 in)/73982-50Y00: 10 mm (0.39 in) thick, 50×50 mm (1.97×1.97 in)
INSULATOR (Light foam block)

80845-71L00: 30 mm (1.18 in) thick, 30×50 mm (1.18×1.97 in)
FELT CLOTH TAPE
Used to insulate where movement does not occur.Ideal for instrument panel applications.
68370-4B000: 15×25 mm (0.59×0.98 in) pad/68239-13E00: 5 mm (0.20 in) wide tape roll The following materials, not found in the kit, can also be used to repair squeaks and rattles.
UHMW (TEFLON) TAPE
Insulates where slight movement is present. Ideal for instrument panel applications.
SILICONE GREASE
Used in place of UHMW tape that will be visible or not fit.
Note: Will only last a few months.
SILICONE SPRAY
Use when grease cannot be applied.
DUCT TAPE
Use to eliminate movement.

CONFIRM THE REPAIR

Confirm that the cause of a noise is repaired by test driving the vehicle. Operate the vehicle under the same conditions as when the noise originally occurred. Refer to the notes on the Diagnostic Worksheet.

Generic Squeak and Rattle Troubleshooting

EIS000PJ

Refer to Table of Contents for specific component removal and installation information.

INSTRUMENT PANEL

Most incidents are caused by contact and movement between:

1. The cluster lid A and instrument panel
2. Acrylic lens and combination meter housing
3. Instrument panel to front pillar garnish
4. Instrument panel to windshield
5. Instrument panel mounting pins
6. Wiring harnesses behind the combination meter
7. A/C defroster duct and duct joint

These incidents can usually be located by tapping or moving the components to duplicate the noise or by pressing on the components while driving to stop the noise. Most of these incidents can be repaired by applying felt cloth tape or silicone spray (in hard to reach areas). Urethane pads can be used to insulate wiring harness.

CAUTION:
Do not use silicone spray to isolate a squeak or rattle. If you saturate the area with silicone, you will not be able to recheck the repair.

CENTER CONSOLE

Components to pay attention to include:

1. Shifter assembly cover to finisher
2. A/C control unit and cluster lid C
3. Wiring harnesses behind audio and A/C control unit

The instrument panel repair and isolation procedures also apply to the center console.

DOORS

Pay attention to the:

1. Finisher and inner panel making a slapping noise
2. Inside handle escutcheon to door finisher
3. Wiring harnesses tapping
4. Door striker out of alignment causing a popping noise on starts and stops

Tapping or moving the components or pressing on them while driving to duplicate the conditions can isolate many of these incidents. You can usually insulate the areas with felt cloth tape or insulator foam blocks from the Nissan Squeak and Rattle Kit (J-43980) to repair the noise.

TRUNK

Trunk noises are often caused by a loose jack or loose items put into the trunk by the owner.
In addition look for:

1. Trunk lid bumpers out of adjustment
2. Trunk lid striker out of adjustment
3. The trunk lid torsion bars knocking together
4. A loose license plate or bracket

Most of these incidents can be repaired by adjusting, securing or insulating the item(s) or component(s) causing the noise.

SUNROOF/HEADLINER

Noises in the sunroof/headliner area can often be traced to one of the following:

1. Sunroof lid, rail, linkage or seals making a rattle or light knocking noise
2. Sun visor shaft shaking in the holder
3. Front or rear windshield touching headliner and squeaking

Again, pressing on the components to stop the noise while duplicating the conditions can isolate most of these incidents. Repairs usually consist of insulating with felt cloth tape.

SEATS

When isolating seat noise it's important to note the position the seat is in and the load placed on the seat when the noise is present. These conditions should be duplicated when verifying and isolating the cause of the noise.
Cause of seat noise include:

1. Headrest rods and holder
2. A squeak between the seat pad cushion and frame
3. The rear seatback lock and bracket

These noises can be isolated by moving or pressing on the suspected components while duplicating the conditions under which the noise occurs. Most of these incidents can be repaired by repositioning the component or applying urethane tape to the contact area.

UNDERHOOD

Some interior noise may be caused by components under the hood or on the engine wall. The noise is then transmitted into the passenger compartment.
Causes of transmitted underhood noise include:

1. Any component mounted to the engine wall
2. Components that pass through the engine wall
3. Engine wall mounts and connectors
4. Loose radiator mounting pins
5. Hood bumpers out of adjustment
6. Hood striker out of adjustment

These noise can be difficult to isolate since they cannot be reached from the interior of the vehicle. The best method is to secure, move or insulate one component at a time and test drive the vehicle. Also, engine RPM or load can be changed to isolate the noise. Repairs can usually be made by moving, adjusting, securing, or insulating the component causing the noise.

Diagnostic Worksheet

EIS000PK

SQUEAK & RATTLE DIAGNOSTIC WORKSHEET

Dear Nissan Customer:
We are concerned about your satisfaction with your Nissan vehicle. Repairing a squeak or rattle sometimes can be very difficult. To help us fix your Nissan right the first time, please take a moment to note the area of the vehicle where the squeak or rattle occurs and under what conditions. You may be asked to take a test drive with a service advisor or technician to ensure we confirm the noise you are hearing.

I. WHERE DOESTHE NOISE COME FROM? (circle the area of the vehicle)
The illustrations are for reference only, and may not reflect the actual configuration of your vehicle.

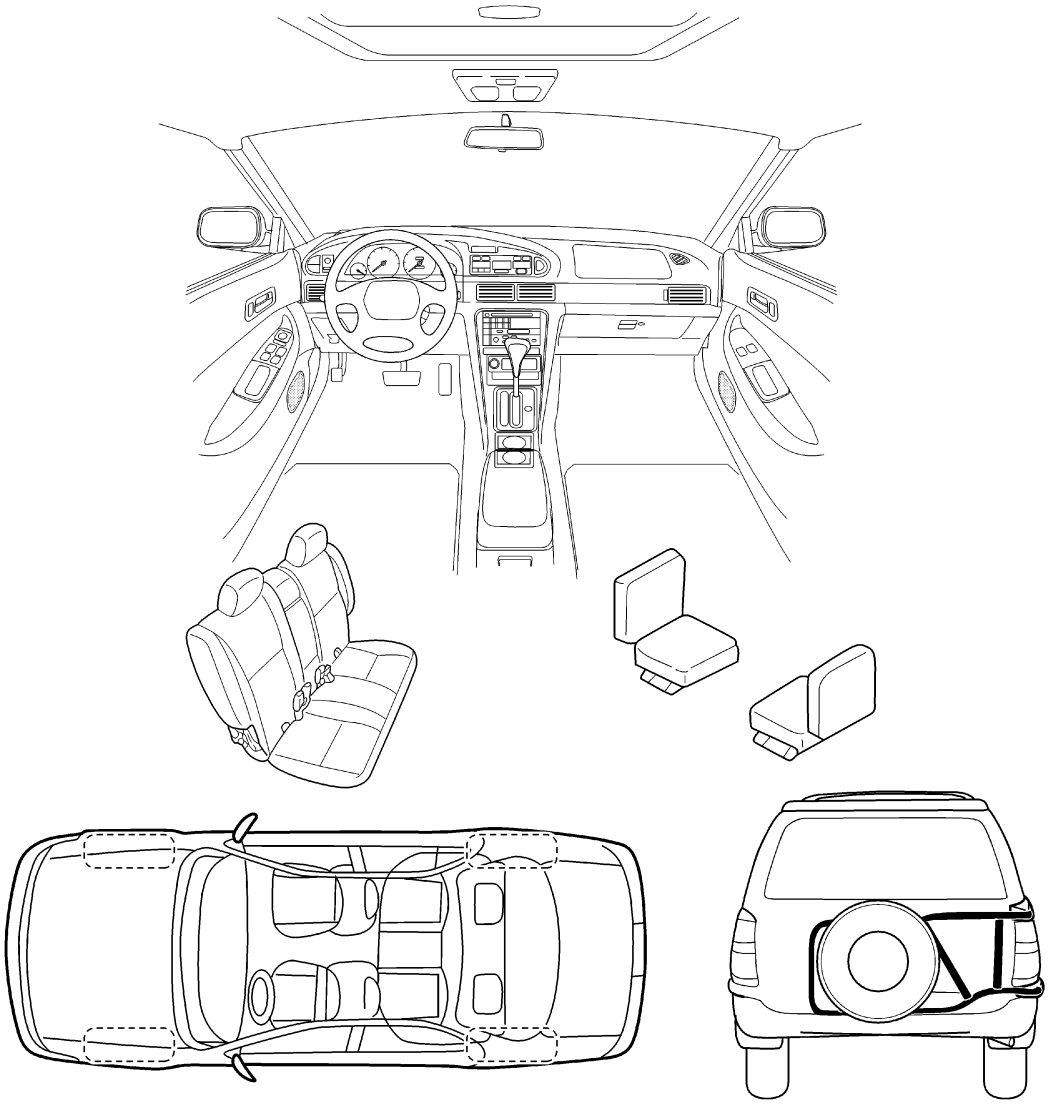

Continue to the back of the worksheet and briefly describe the location of the noise or rattle. In addition, please indicate the conditions which are present when the noise occurs.

ABT468

SQUEAK & RATTLE DIAGNOSTIC WORKSHEET- page 2

Briefly describe the location where the noise occurs:

_____

_____

II. WHEN DOES IT OCCUR? (check the boxes that apply)

- ❑ anytime
- ❑ 1st time in the morning
- ❑ only when it is cold outside
- ❑ only when it is hot outside
- ❑ after sitting out in the sun
- ❑ when it is raining or wet
- ❑ dry or dusty conditions
- ❑ other: _____

III. WHEN DRIVING:

- ❑ through driveways
- ❑ over rough roads
- ❑ over speed bumps
- ❑ only at about ____ mph
- ❑ on acceleration
- ❑ coming to a stop
- ❑ on turns : left, right or either (circle)
- ❑ with passengers or cargo
- ❑ other: _____
- ❑ after driving ____ miles or ____ minutes

IV. WHAT TYPE OF NOISE?

- ❑ squeak (like tennis shoes on a clean floor)
- ❑ creak (like walking on an old wooden floor)
- ❑ rattle (like shaking a baby rattle)
- ❑ knock (like a knock on a door)
- ❑ tick (like a clock second hand)
- ❑ thump (heavy, muffled knock noise)
- ❑ buzz (like a bumble bee)

TO BE COMPLETED BY DEALERSHIP PERSONNEL
Test Drive Notes:

_____

_____

	YES	NO	Initials of person performing
Vehicle test driven with customer	❑	❑	_____
- Noise verified on test drive	❑	❑	
- Noise source located and repaired	❑	❑	_____
- Follow up test drive performed to confirm repair	❑	❑	_____

VIN: _____ Customer Name: _____

W.O. #: _____ Date: _____

SBT844

This form must be attached to Work Order

HOOD

PFP:F5100

Fitting Adjustment

EIS000PL

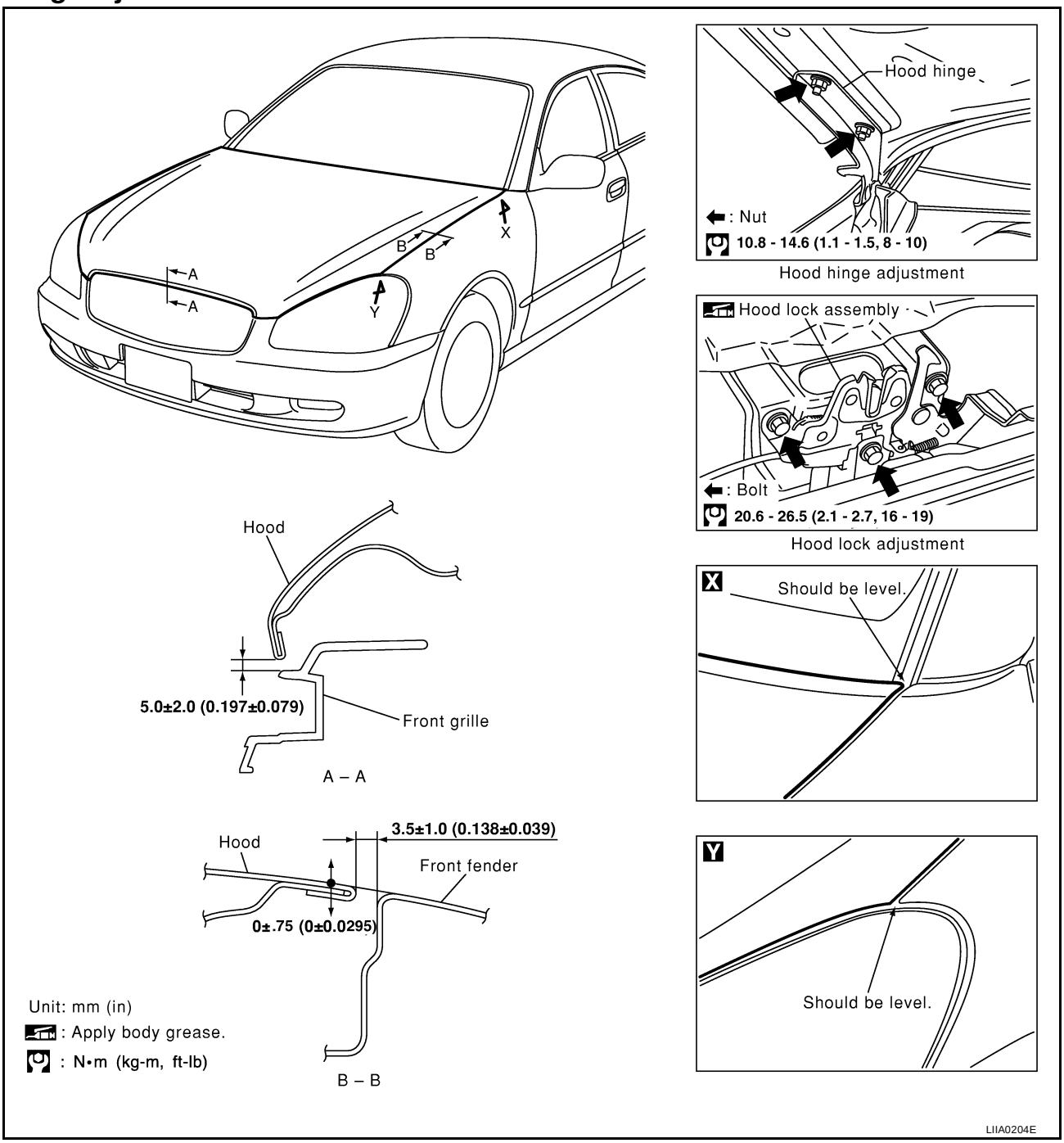

FRONT END HEIGHT ADJUSTMENT AND LATERAL/LONGITUDINAL CLEARANCE ADJUSTMENT.

1. Remove the hood lock and adjust the height by rotating the bumper rubber until the hood becomes 1 to 1.5 mm (0.04 to 0.059 in) higher than the fender.
2. Temporarily tighten the hood lock, and position it by engaging it with the hood striker. Check the lock and striker for looseness, and tighten the lock mounting bolt to the specified torque.

SURFACE HEIGHT ADJUSTMENT

1. Remove the hood lock, and adjust the surface height difference of the hood and fender according to the fitting standard dimension, by rotating RH and LH bumper rubbers.
2. Install the hood lock temprarily, and align the hood striker and lock so that the centers of striker and lock become vertical viewed from the front, by moving the hood lock laterally.

3. Check that the secondary latch is properly engaged with the secondary striker with hood's own weight by dropping it from approx. 200 mm (7.87 in) height or by pressing it lightly approx. 3 kg (29 N).

   CAUTION:
   Do not drop the hood from 300 mm (11.81 in) height or higher.

4. Move the hood lock up and down so that the striker and lock are engaged firmly with the hood closed.
5. Tighten the lock mounting bolts to the specified torque.

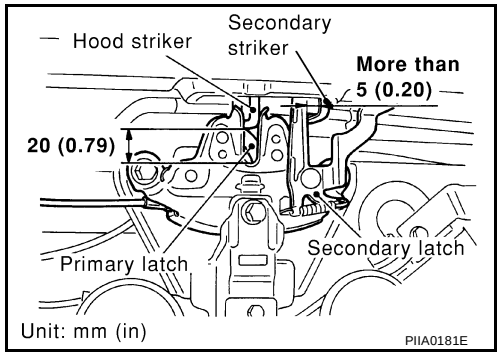

Removal and Installation of Hood Assembly

EIS000PM

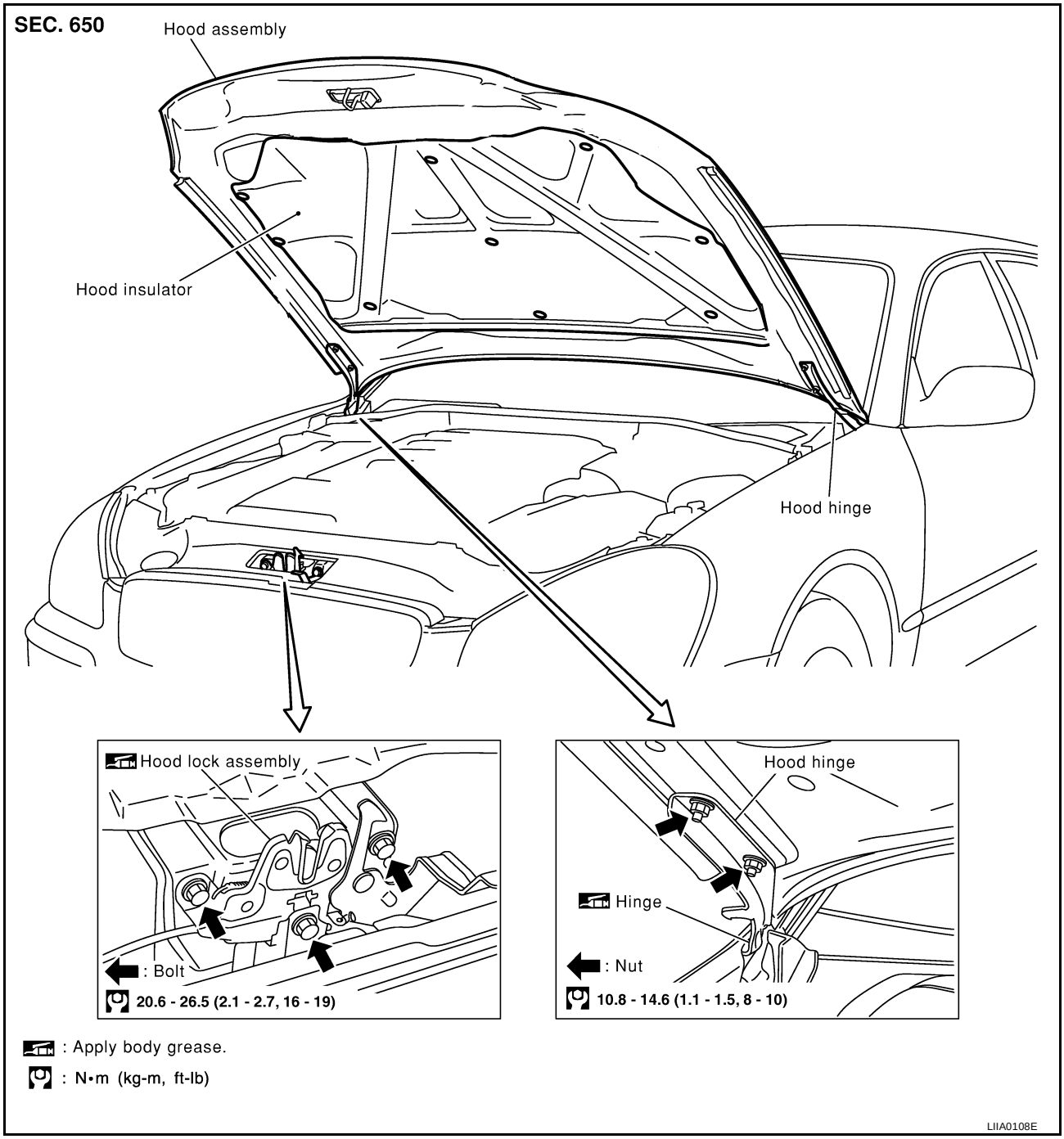

1. Remove the hinge mounting nuts on the hood to remove the hood assembly.

Install in the reverse order of removal.

Removal and Installation of Hood Lock Control

EIS000PN

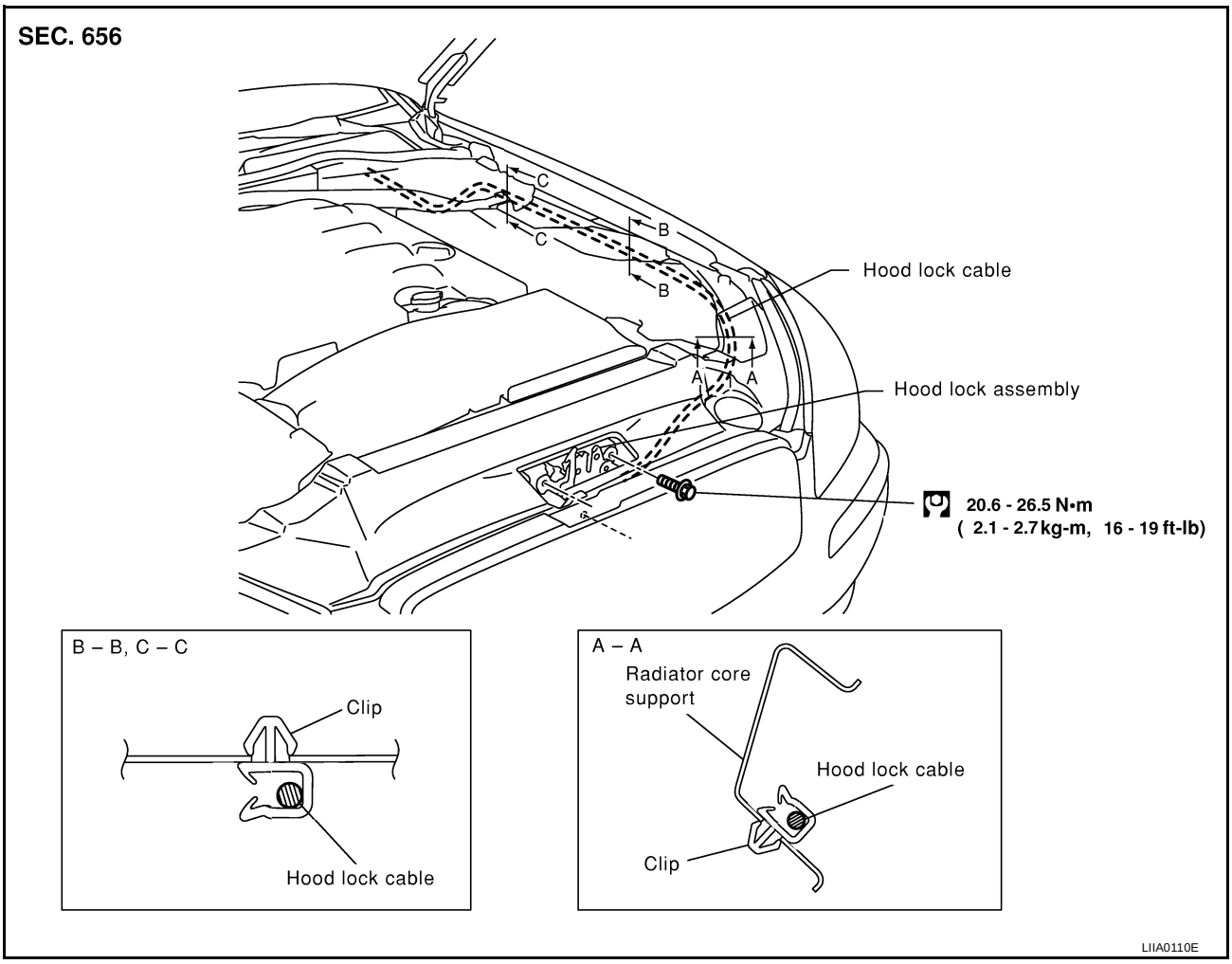

REMOVAL

1. Disconnect the hood lock cable from the hood lock, and clip it from the radiator core upper support and hood ledge.
2. Remove the mounting screws, and remove the hood opener.
3. Remove the grommet on the instrument panel, and pull the hood lock cable toward the passenger compartment.

   CAUTION:
   While pulling, be careful not to damage (peeling) the outside of the hood lock cable.

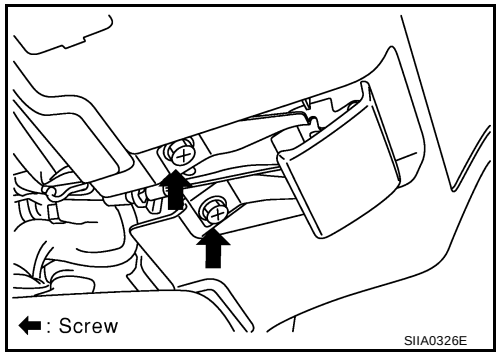

INSTALLATION

1. Pull the hood lock cable through the panel hole to the engine compartment.
   Be careful not to bend the cable too much, keeping the radius 100 mm (3.94 in) or more.
2. Check that the cable is not offset from the positioning grommet, and push the grommet into the panel hole securely.
3. Apply the sealant to the grommet (at * mark) properly.

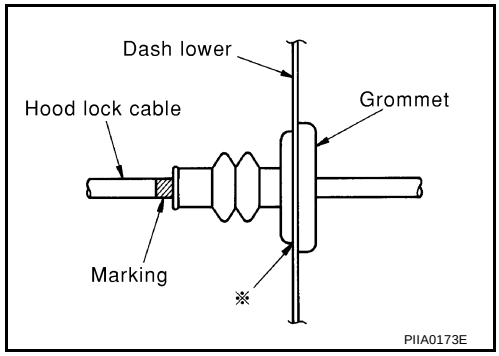

4. Install the cable securely to the lock.
5. After installing, check the hood lock adjustment and hood opener operation.

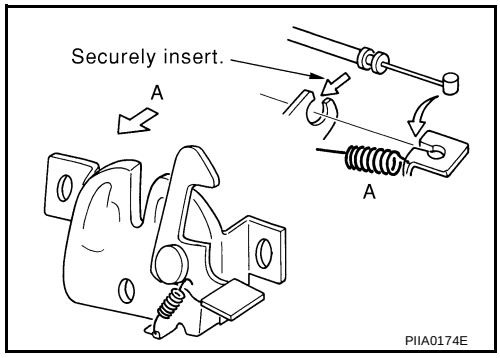

Hood Lock Control Inspection

EIS000PO

CAUTION:
If the hood lock cable is bent or deformed, replace it.

1. Check that the secondary latch is properly engaged with the secondary striker with hood's own weight by dropping it from approx. 200 mm (7.87 in) height.
2. While operating the hood opener, carefully check that the front end of the hood is raised by approx. 20 mm (0.79 in). Also check that the hood opener returns to the original position.

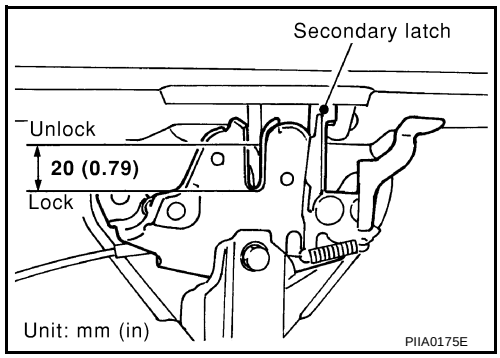

3. Check the hood lock lubrication condition. If necessary, apply "body grease" to the points shown in the figure.

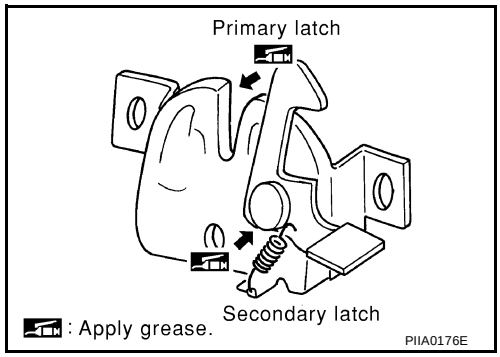

POWER DOOR LOCK SYSTEM

PFP:24814

Component Parts and Harness Connector Location

EIS000PP

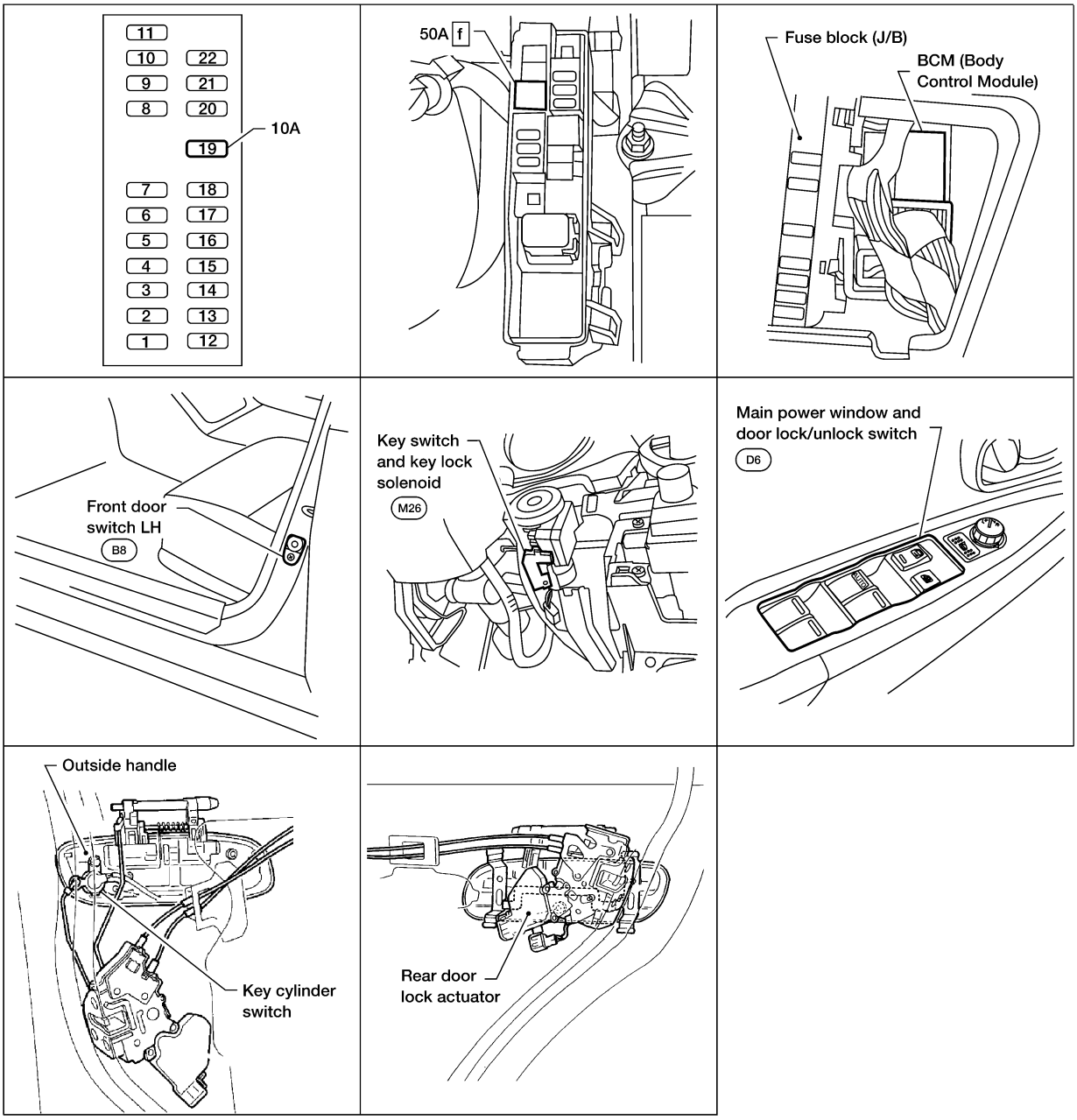

LIIA0064E

System Description

EIS000PQ

Power is supplied at all time

- to BCM terminal 7
- through 50A fusible link (letter **f,** located in the fuse and fusible link box)
- through 10A fuse [No.19, located in the fuse block (J/B)]
- to key switch and keylock solenoid terminal 3.

With ignition key inserted, power is supplied

- through key switch and keylock solenoid terminal 4
- to BCM terminal 62.

Ground is supplied to terminal 8 of BCM through body grounds E15 and E24 and to terminals 27 and 63 of BCM through body ground M57 and M61.
When the door is locked with main power window and door lock/unlock switch, ground is supplied

- through terminal 19 of main power window and door lock/unlock switch through body grounds M57 and M61
- to BCM terminal 37 and
- through main power window and door lock/unlock switch terminal 18. (with left front only power window anti–pinch system)

When the door is unlocked with main power window and door lock/unlock switch, ground is supplied

- through terminal 19 of main power window and door lock/unlock switch through body grounds M57 and M61
- to BCM terminal 44
- through main power window and door lock/unlock switch terminal 17 (with left front only power window anti–pinch system).

When the door is locked with front power window switch RH, ground is suppied

- through terminal 19 front power window switch RH through body grounds M57 and M61
- to BCM terminal 37
- through front power window switch RH terminal 18 (with left front only power window anti–pinch system).

When the door is unlocked with front power window switch RH, ground is supplied

- through terminal 19 of front power window switch RH through body grounds M57 and M61
- to BCM terminal 44
- through front power window switch RH terminal 20 (with left front only power window anti–pinch system).

When the door is locked with front door key cylinder switch LH, ground is suppied

- to body grounds M57 and M61
- through BCM terminal 59 (with left front only power window anti–pinch system).

When the door is unlocked with front door key cylinder switch LH, ground is supplied

- to body grounds M57 and M61
- through BCM terminal 60 (with left front only power window anti–pinch system).

BCM is connected to main power window and door lock/unlock switch and front power window switch RH as anti–pinch serial link (with left and right front power window anti–pinch system).
Main power window and door lock/unlock switch and front power window switch RH output to key cylinder lock/unlock switch, central lock/unlock switch and power window UP/DOWN control by key cylinder switch as DATALINE (anti–pinch serial link) to BCM.

OUTLINE

Functions available by operating the central switches on driver's door and passenger's door

- Interlocked with the locking operation of central switch, door lock actuators of all doors are locked.
- Interlocked with the unlocking operation of central switch, door lock actuators of all doors are unlocked.

Functions available by operating the key cylinder switch on driver's door

- Interlocked with the locking operation of door key cylinder, door lock actuators of all doors are locked.
- When door key cylinder is unlocked, fron door lock actuator LH is unlocked.

- When door key cylinder is unlocked for the second time within 5 seconds after the first operation, door lock actuators on all doors are unlocked.

Key–trap preventive function

When central switch is operated to lock doors with ignition key put in key cylinder and any door open, all door lock actuators are locked and then unlocked.

OPERATIONS BY MAIN POWER WINDOW AND DOOR LOCK/UNLOCK SWITCH

Time chart

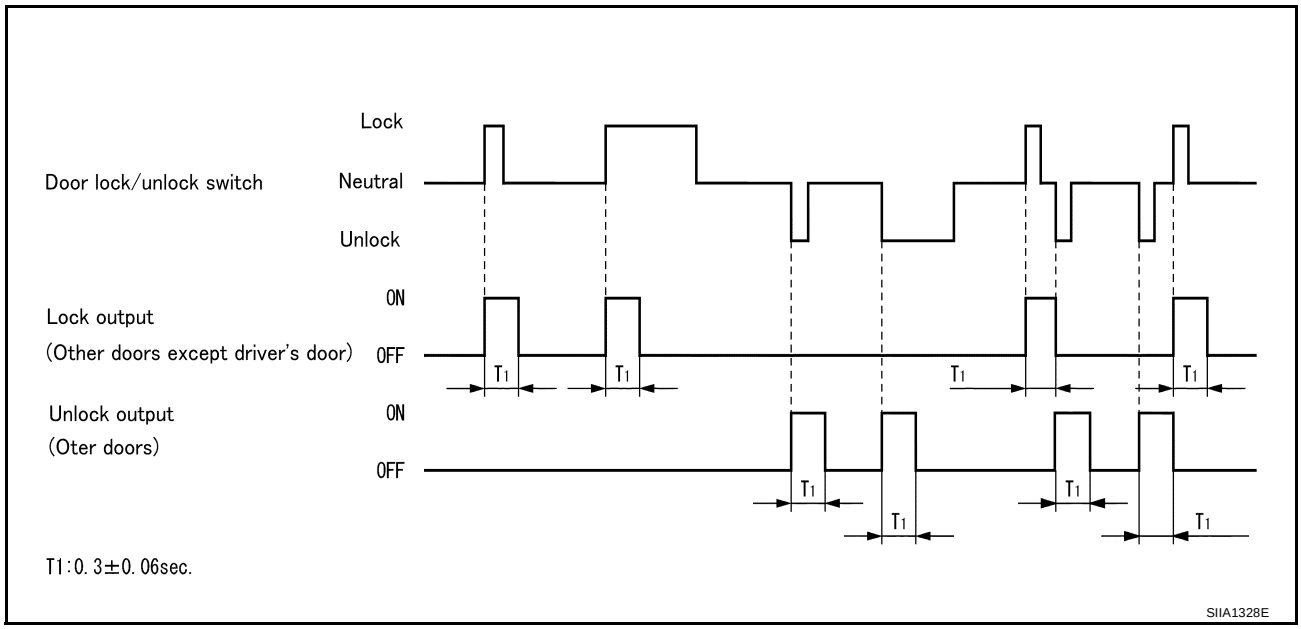

KEY–TRAP PREVENTIVE FUNCTION

Time chart

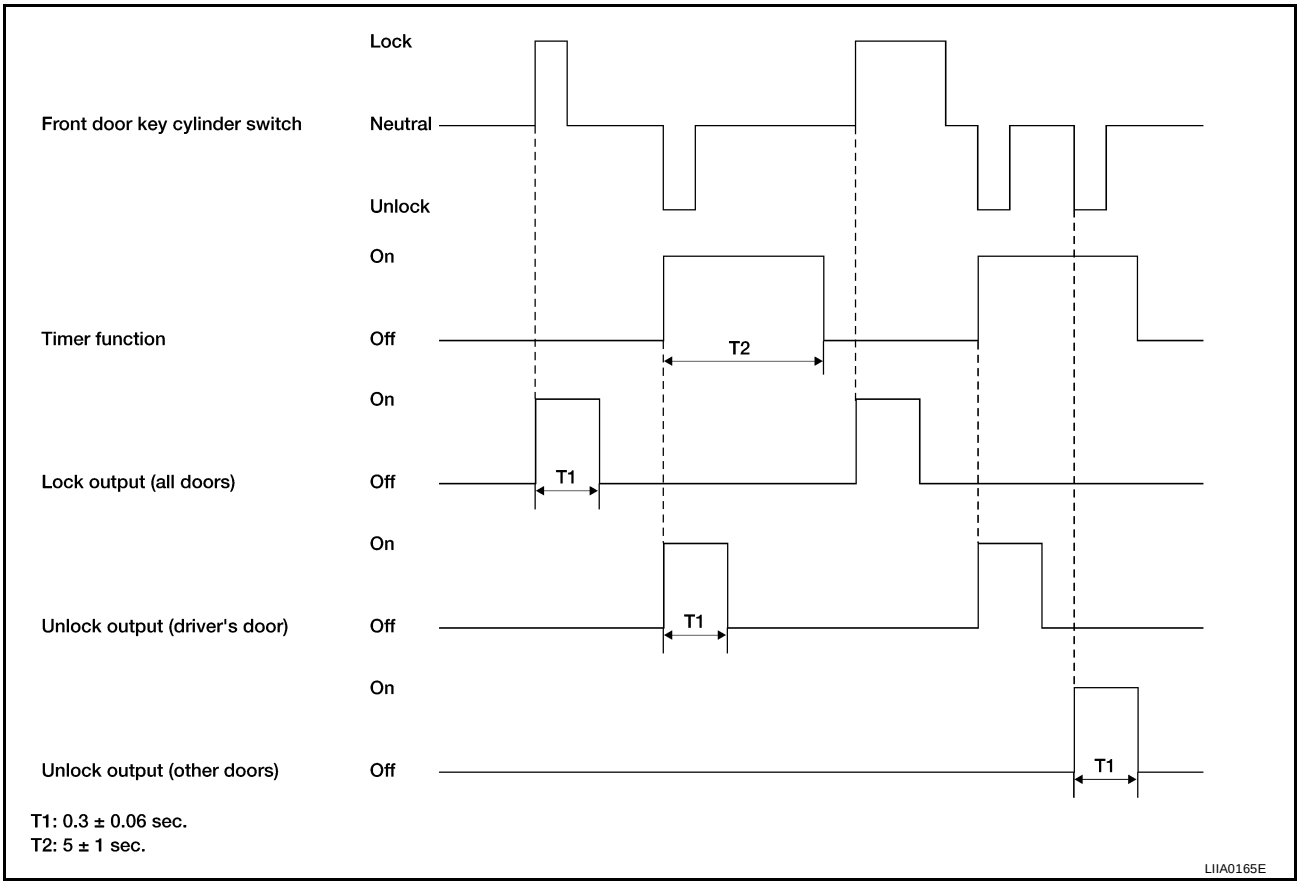

Schematic

EIS000PR

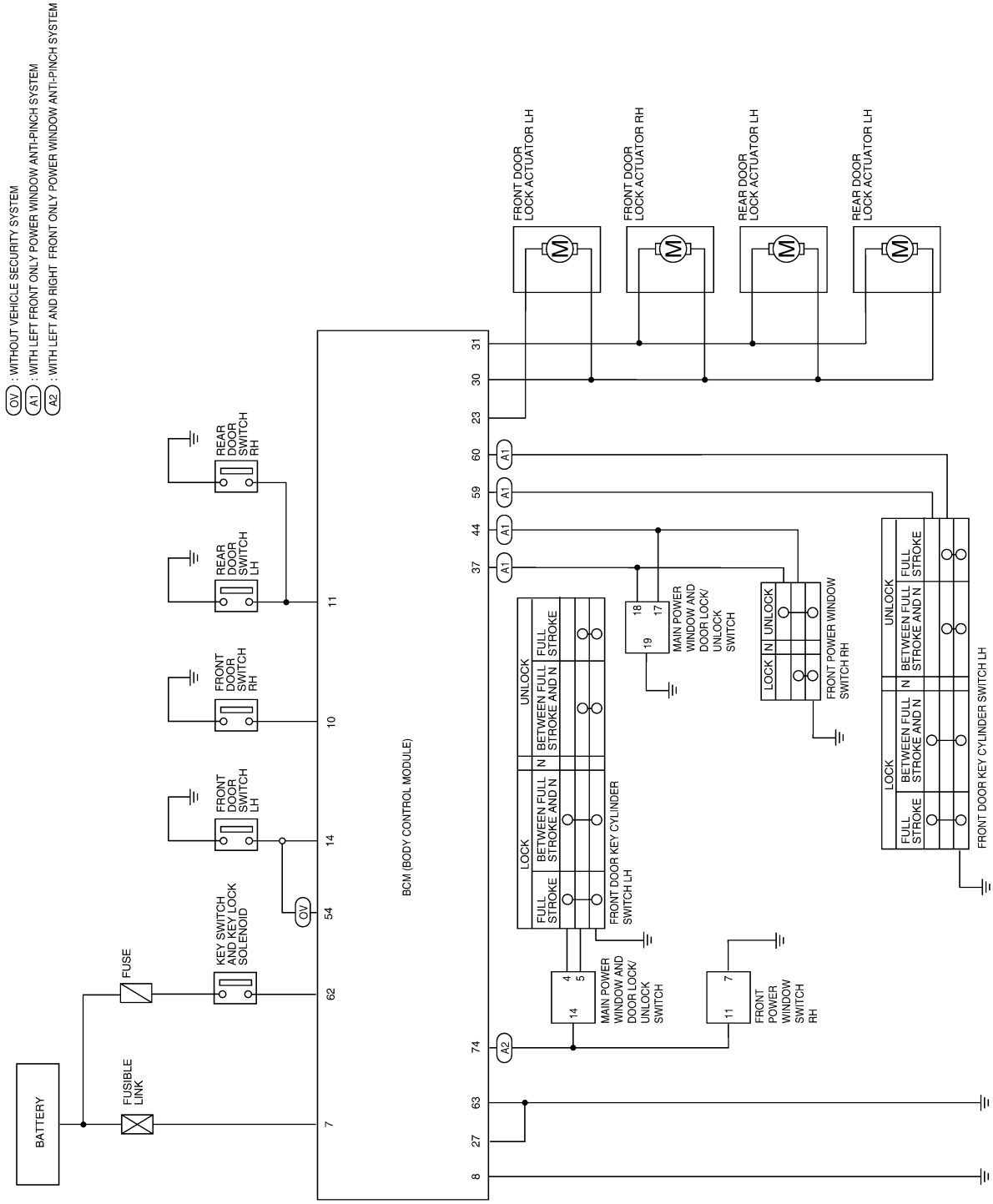

LIWA0030E

Wiring Diagram -D/LOCK-

EIS000PS

FIG. 1

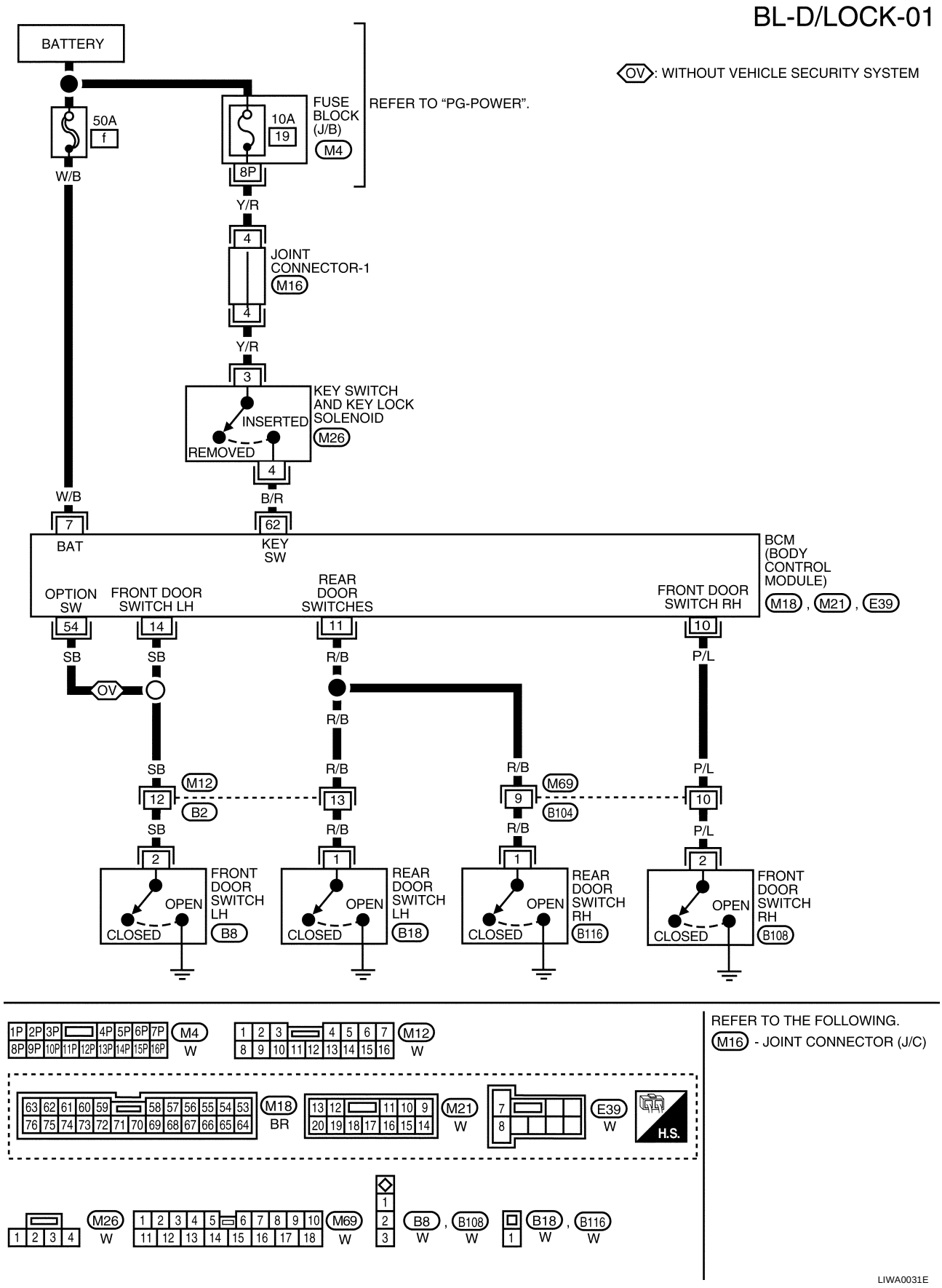

FIG. 2

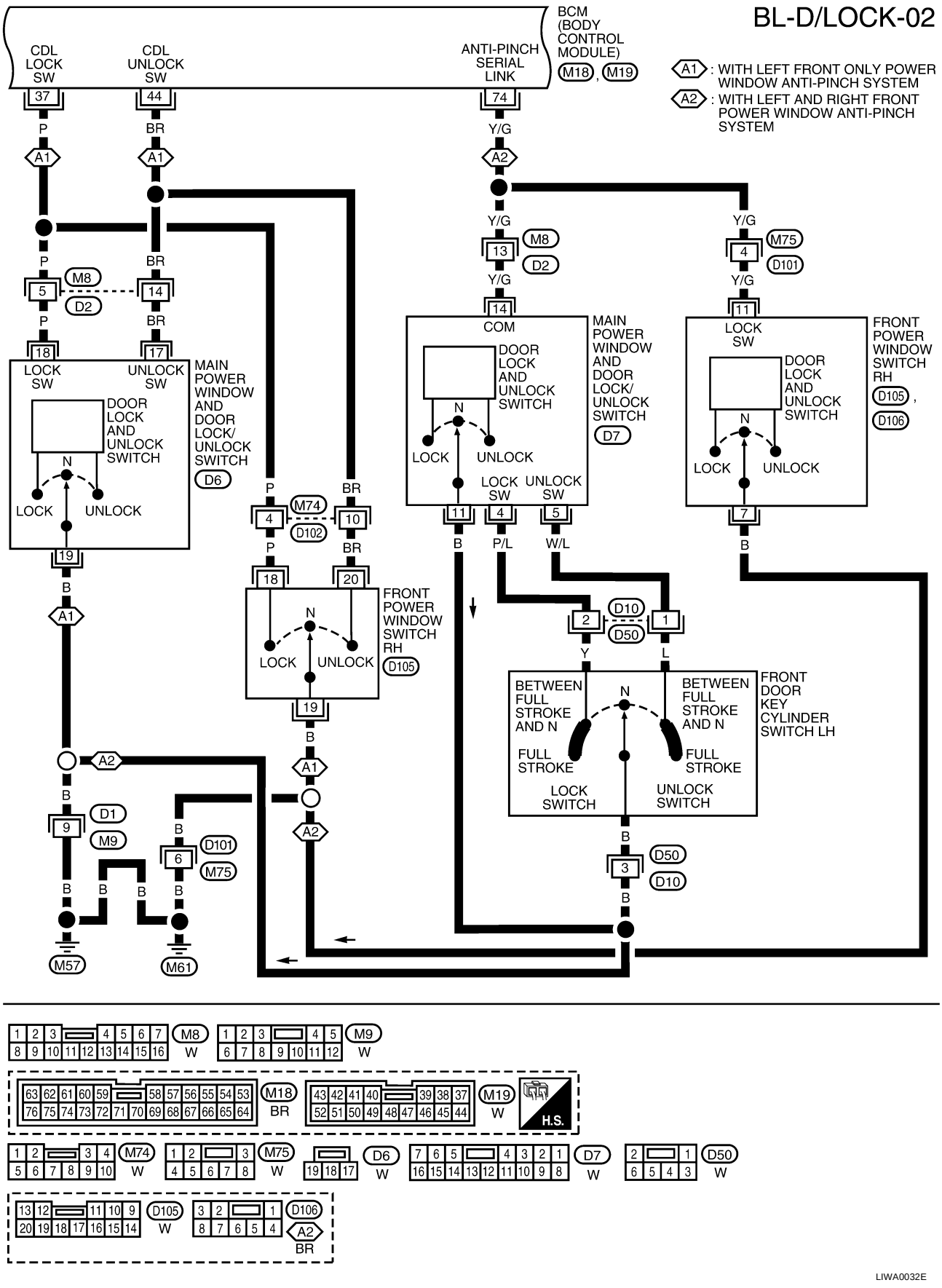
BL-D/LOCK-02
BCM (BODY CONTROL MODULE)
M18, M19
CDL LOCK SW
CDL UNLOCK SW
ANTI-PINCH SERIAL LINK
A1 : WITH LEFT FRONT ONLY POWER WINDOW ANTI-PINCH SYSTEM
A2 : WITH LEFT AND RIGHT FRONT POWER WINDOW ANTI-PINCH SYSTEM
MAIN POWER WINDOW AND DOOR LOCK/ UNLOCK SWITCH
D6
DOOR LOCK AND UNLOCK SWITCH
LOCK SW
UNLOCK SW
LOCK
UNLOCK
FRONT POWER WINDOW SWITCH RH
D105
D106
MAIN POWER WINDOW AND DOOR LOCK/ UNLOCK SWITCH
D7
COM
FRONT DOOR KEY CYLINDER SWITCH LH
BETWEEN FULL STROKE AND N
FULL STROKE
LOCK SWITCH
UNLOCK SWITCH
M57
M61
M8
M9
M74
M75
D1
D2
D10
D50
D101
D102
H.S.
LIWA0032E

FIG. 3

BL-D/LOCK-03

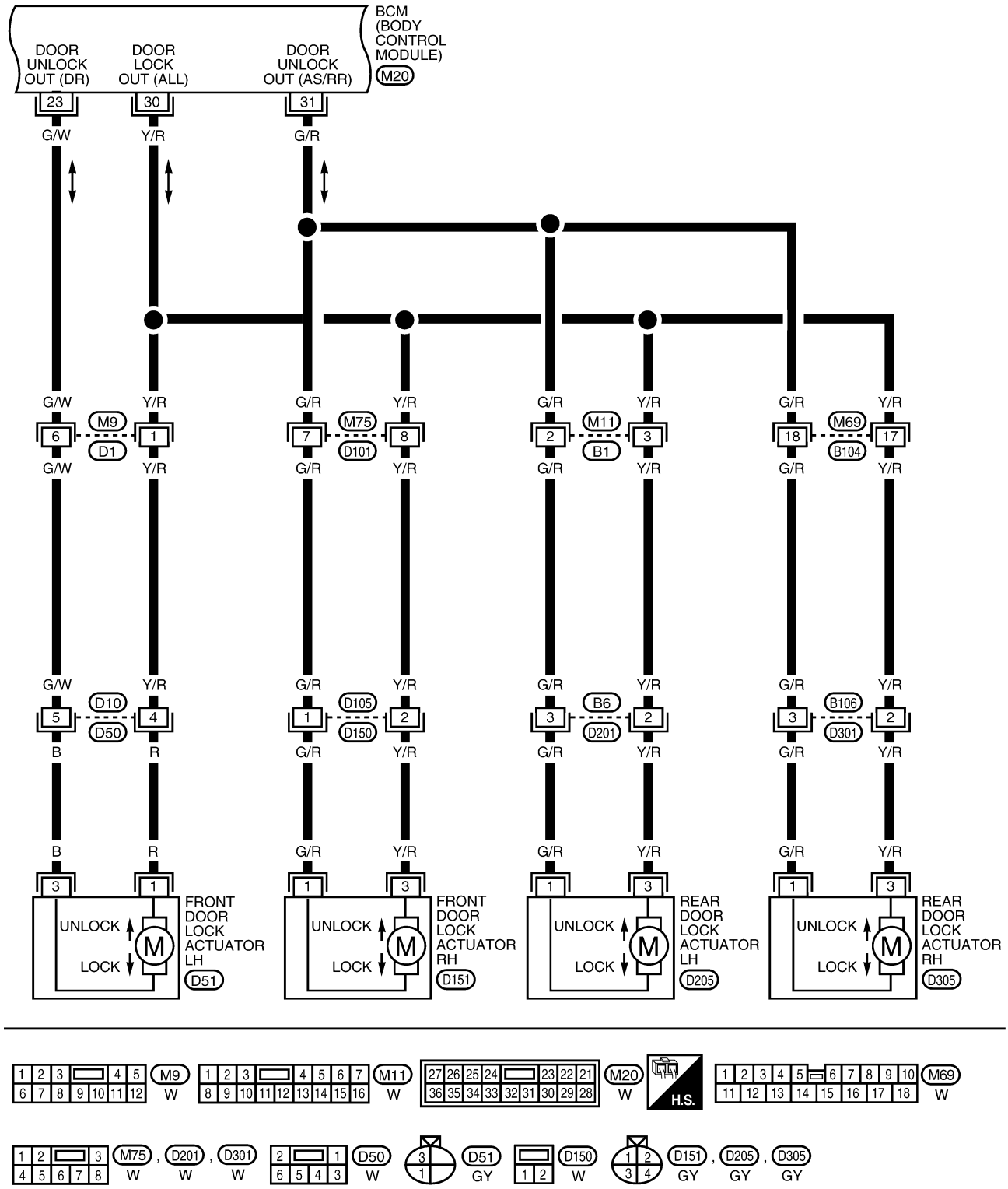

LIWA0033E

FIG. 4

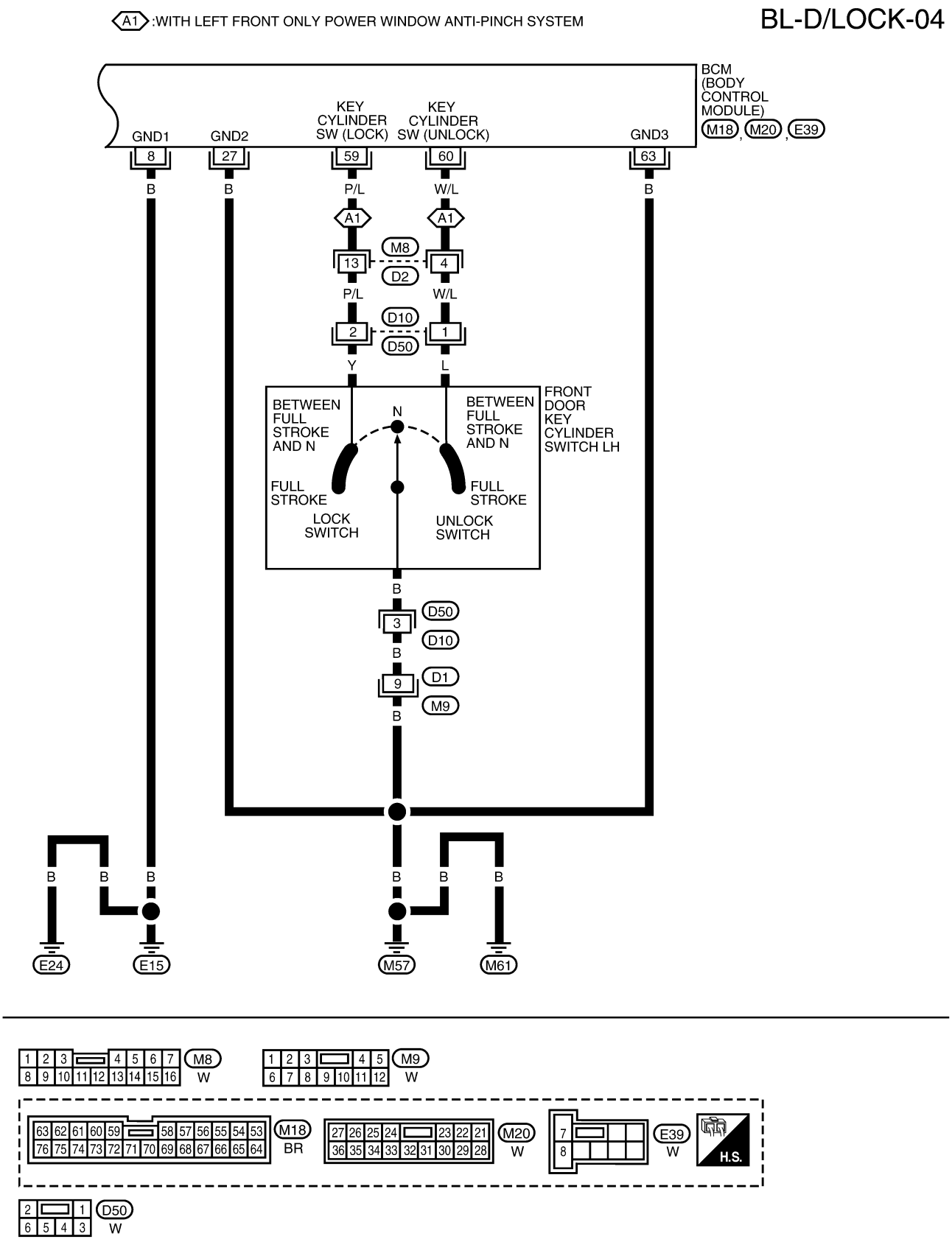
A1 :WITH LEFT FRONT ONLY POWER WINDOW ANTI-PINCH SYSTEM
BL-D/LOCK-04
BCM (BODY CONTROL MODULE)
M18, M20, E39
GND1
GND2
KEY CYLINDER SW (LOCK)
KEY CYLINDER SW (UNLOCK)
GND3
8
27
59
60
63
B
B
P/L
W/L
B
A1
A1
M8
13
4
D2
P/L
W/L
D10
2
1
D50
Y
L
BETWEEN FULL STROKE AND N
N
BETWEEN FULL STROKE AND N
FRONT DOOR KEY CYLINDER SWITCH LH
FULL STROKE
FULL STROKE
LOCK SWITCH
UNLOCK SWITCH
B
3
D50
D10
B
9
D1
M9
B
B B B
B B B
E24
E15
M57
M61
M8 W
M9 W
M18 BR
M20 W
E39 W
H.S.
D50 W
LIWA0034E

Terminals and Reference Value for BCM

EIS000PT

TERMI-NAL	WIRE COLOR	ITEM	CONDITION	VOLTAGE
7	W/B	BAT power supply	—	Battery voltage
8	B	Ground	—	—
10	P/L	Front door switch RH	Door open (ON) → Door close (OFF)	0V → Battery voltage
11	R/B	Rear door switch LH/RH	Door open (ON) → Door close (OFF)	0V → Battery voltage
14	SB	Front door switch LH	Door open (ON) → Door close (OFF)	OV → Battery voltage
23	G/W	Front door lock actuator LH (unlock)	Driver door lock knob (locked → un locked)	0V → Battery voltage
27	B	Ground	—	—
30	Y/R	All door lock actuator (lock)	Driver door lock knob (neutral → lock)	0V → Battery voltage
31	G/R	Front door lock actuator RH and Rear door lock actuators LH/RH (unlock)	Door lock and unlock switch (locked → unlocked)	0V → Battery voltage
37	P	Lock switch signal	Door lock and unlock switch (unlocked → locked)	Battery voltage → 0V
44	BR	Unlock switch signal	Door lock and unlock switch (locked → unlocked)	Battery voltage → 0V
54*	SB	Option switch	Door open (ON) → Door close (OFF)	0V → Battery voltage
59	P/L	Front door key cylinder switch LH (lock)	OFF (neutral) → ON (locked)	5V → 0V
60	W/L	Front door key cylinder switch LH (unlock)	OFF (neutral) → ON (unlocked)	5V → 0V
62	B/R	Key switch (insert)	Key inserted (ON) → Key removed from IGN key cylinder (OFF)	Battery voltage → 0V
63	B	Ground	—	—
74	Y/G	Anti–pinch serial link	—	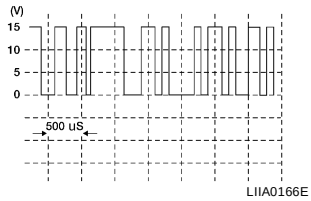

*:Without vehicle security system.

Work Flow

EIS000PU

1. Check the symptom and customer's requests.
2. Understand the outline of system. Refer to BL-17, "System Description" .
3. Perform the preliminary check. Refer to BL-25, "Preliminary Check" .
4. According to the trouble diagnosis chart, repair or replace the cause of the malfunction.Refer to BL-27, "Symptom Chart" .
5. Does rear window defogger operate normally? OK: GO TO 6, NG: GO TO 4.
6. INSPECTION END.

Preliminary Check

EIS000PV

FUSE CHECK

1. FUSE INSPECTION

- Check the following BCM fuse and fusible link.

COMPONENT PARTS	TERMINAL NO. (SIGNAL)	AMPERE	NO.	LOCATION
BCM	62 (BAT power supply)	10A	19	Fuse block (J/B)
BCM	7 (BAT power supply)	50A	f	Fuse and fusible link box

NOTE:
Refer to BL-16, "Component Parts and Harness Connector Location" .

OK or NG ?

OK >> **Inspection End** .
NG >> If fuse is blown, be sure to eliminate cause of problem before installing new fuse, refer to PG-3, "POWER SUPPLY ROUTING CIRCUIT" .

CONSULT–II Function

EIS000PW

Power door lock system check with data monitor and active test can be executed by combining data reception and command transmission via communication line from BCM.

BCM diagnosis part	Inspection item, self–diagnosis mode	Content
Door lock	Data monitor	Displays BCM input data on real–time basis.
	Active test	Sends drive signals to door lock actuator to perform operation check.

CONSULT–II BASIC OPERATION PROCEDURE

1. With ignition switch OFF, connect CONSULT–II to data link connector on vehicle, and turn ON ignition switch.
2. Touch “START”.

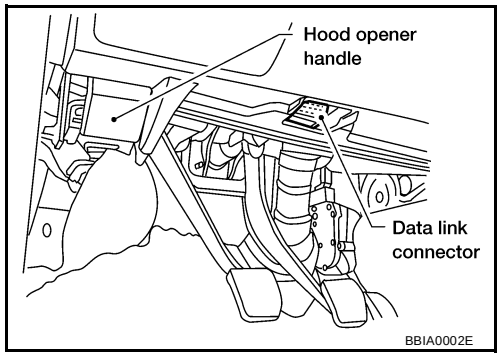

3. Touch “BCM” on “SELECT SYSTEM” screen.

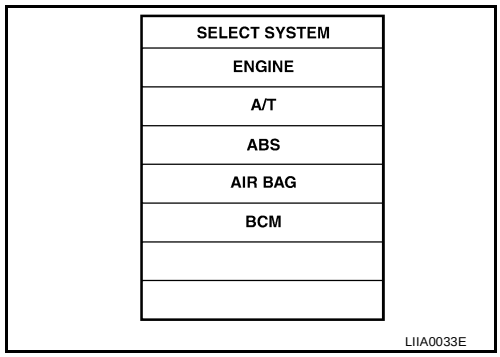

4. Select item to be diagnosed on “SELECT TEST ITEM” screen.

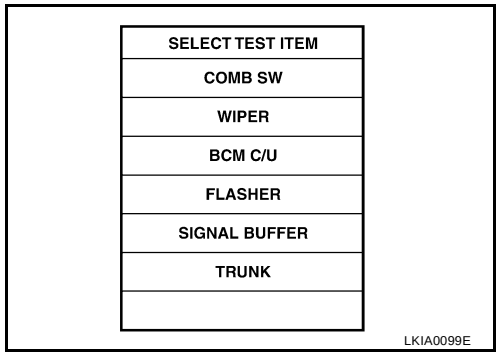

DATA MONITOR

Operation procedure

1. Touch "DOOR LOCK" on the "SELECT TEST ITEM" screen.
2. Touch "DATA MONITOR" on the "SELECT DIAG MODE" screen.
3. Touch either "ALL SIGNALS" or "SELECTION FROM MENU" on the "DATA MONITOR" screen.

ALL SIGNALS	Monitor all items.
SELECTION FROM MENU	Select and monitor the item.

4. Touch "START".
5. If "SELECTION FROM MENU" is selected, touch the desired monitor item. If "ALL SIGNALS" is selected, all the items are monitored.
6. During monitoring, touching "COPY" can start recording the monitor item status.

Display item list

Monitor item "OPERATION"		Content
KEY ON SW	"ON/OFF"	Indicates [ON/OFF] condition of key switch.
LOCK SW DR/AS	"ON/OFF"	Indicates [ON/OFF] condition of lock signal from lock/unlock switch LH and RH.
UNLK SW DR/AS	"ON/OFF"	Indicates [ON/OFF] condition of unlock signal from lock/unlock switch LH and RH.
KEY CYL LK-SW	"ON/OFF"	Indicates [ON/OFF] condition of lock signal from key cylinder.
KEY CYL UN-SW	"ON/OFF"	Indicates [ON/OFF] condition of unlock signal from key cylinder.
LK BUTTON/SIG	"ON/OFF"	Indicates [ON/OFF] condition of lock signal from key fob.
UN BUTTON/SIG	"ON/OFF"	Indicates [ON/OFF] condition of unlock signal from key fob.
IGN ON SW	"ON/OFF"	Indicates [ON/OFF] condition of ignition switch.
DOOR SW–DR	"ON/OFF"	Indicates [ON/OFF] condition of front door switch LH.
DOOR SW–AS	"ON/OFF"	Indicates [ON/OFF] condition of front door switch RH.
DOOR SW–RR	"ON/OFF"	Indicates [ON/OFF] condition of door switch (Rear).

ACTIVE TEST

Operation procedure

1. Touch "DOOR LOCK" on the "SELECT TEST ITEM" screen.
2. Touch "ACTIVE TEST" on the "SELECT DIAG MODE" screen.
3. Touch the item to be tested, and check the operation.
4. During the operation check, touching "OFF" deactivates the operation.

Display item list

Test item	Content
ALL D/LK MTR	This test is able to check all door lock actuators lock operation. These actuators lock when "ON" on CONSULT–II screen is touched.

Test item	Content
DR D/UN MTR	This test is able to check front door lock actuator LH unlock operation.These actuators lock when "ON" on CONSULT–II screen is touched.
NON DR D/UN	This test is able to check door lock actuators (except front door lock actuator LH) unlock operation.These actuators unlock when "ON" on CONSULT–II screen is touched.

Symptom Chart

EIS000PX

Symptom	Malfunctioning system	Power window system
Key reminder door system does not operate properly.	Door switch check. Refer to BL-28, "Door Switch Check" .	—
	Key switch (Insert) check. Refer to BL-29, "Key Switch (Insert) Check" .	
	If above systems are "OK", replace BCM.	
Power door lock does not operate with door lock and unlock switch on main power window and door lock/unlock switch or front power window switch RH	Door lock and unlock switch check. Refer to BL-30, "Door Lock/Unlock Switch Check (With left front only power window anti–pinch system)" .	With left front only anti–pinch system.
	Door lock and unlock switch check. Refer to BL-33, "Door Lock/Unlock Switch Check (With left and right front power window anti–pinch system)" .	With left and right front anti–pinch system.
Power door lock does not operate with driver door lock knob switch.	Door lock actuator check –Driver–. Refer to BL-36, "Door Lock Actuator Check (Front LH)" .	—
Specific door lock acutuator does not operate.	Door lock actuator check (passenger, Rear LH/RH).Refer to BL-37, "Door Lock Actuator Check (Front RH and rear LH/RH)" .	—
Power door lock does not operate with front door key cylinder LH operation.	Front door key cylinder switch LH check. Refer to BL-38, "Front Door Key Cylinder Switch LH Check (With left front only power window anti-pinch system)" .	With left front only anti–pinch system.
	Door lock and unlock switch check. Refer to BL-39, "Door Lock/Unlock Switch Check (With left and right front power window anti–pinch system)" .	With left and right front anti–pinch system.
	Front door key cylinder switch LH check. Refer to BL-41, "Front Door Key Cylinder Switch LH Check (With left and right front power window anti–pinch system)" .	
	If above system are "OK", replace BCM.	—

Door Switch Check

EIS000PY

1. CHECK DOOR SWITCHES INPUT SIGNAL

With CONSULT-II

Check door switches ("DOOR SW-DR", "DOOR SW-AS", "DOOR SW-RR") in DATA MONITOR mode with CONSULT–II.Refer to BL-26, "DATA MONITOR" .

- When any doors are open :

  DOOR SW-DR :ON
  DOOR SW-AS :ON
  DOOR SW-RR :ON

- When any doors are closed :

  DOOR SW-DR :OFF
  DOOR SW-AS :OFF
  DOOR SW-RR :OFF

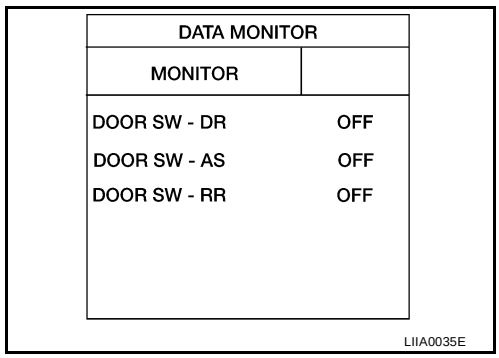

Without CONSULT-II

Check voltage between BCM connector M18 or M21 terminals 10(P/L), 11(R/B) and 14(SB) or 54*(SB) and body ground.

NOTE:

*:Without vehicle security system.

Connec-tor		Terminals		Condition	Voltage (V) (Approx.)
		(+)	(–)		
M18,M21	Front door switch LH	14,54	Ground	Open	0
				Closed	Battery voltage
M21	Front door switch RH	10	Ground	Open	0
				Closed	Battery voltage
	Rear door switch LH/ RH	11	Ground	Open	0
				Closed	Battery voltage

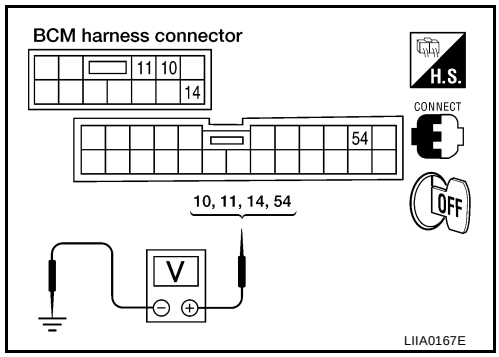

OK or NG

OK >> System is OK.
NG >> GO TO 2.

2. CHECK DOOR SWITCHES

- Disconnect door switch harness connector.
- Check continuity between door switch connector terminals.

	Terminals	Condition	Continuity
Front door switch LH/RH	2 – Ground	Open	Yes
		Closed	No
Rear door switch LH/RH	1 – Ground	Open	Yes
		Closed	No

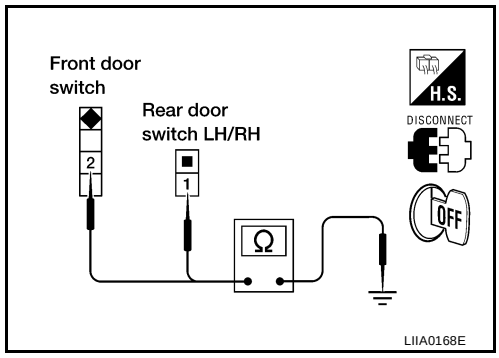

OK or NG ?

OK >> Repair or replace harness.
NG >> Replace door switch.

Key Switch (Insert) Check

EIS000PZ

1. CHECK KEY SWITCH INPUT SIGNAL

With CONSULT-II

Check key switch "KEY ON SW" in DATA MONITOR mode with CONSULT–II.Refer to BL-26, "DATA MONITOR" .

- When key is inserted to ignition key cylinder :

  KEY ON SW **:ON**

- When key is removed from ignition key cylinder :

  KEY ON SW **:OFF**

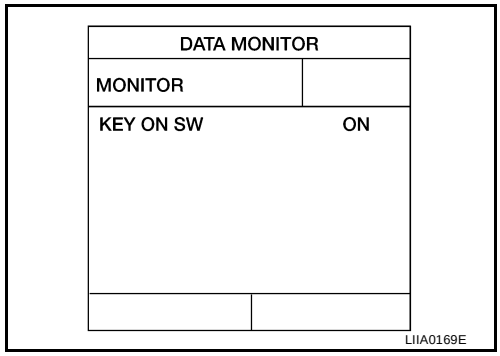

Without CONSULT-II

Check voltage between BCM connector M18 terminal 62(B/R) and ground.

Connector	Terminal (+)	Terminal (–)	Condition	Voltage (V)
M18	62	Ground	Key is inserted.	Battery voltage
			Key is removed.	0

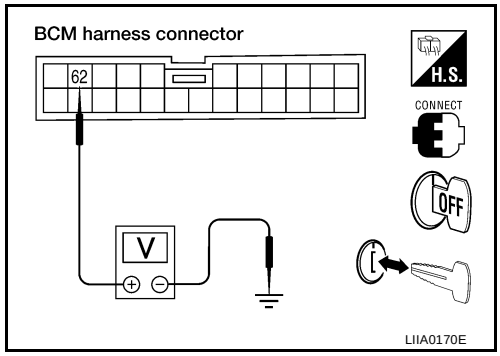

OK or NG ?

OK >> System is OK.
NG >> GO TO 2.

2. CHECK KEY SWITCH (INSERT)

Check continuity between key switch connector terminals.

Terminals	Condition	Continuity
3 – 4	Key is inserted.	Yes
	Key is removed.	No

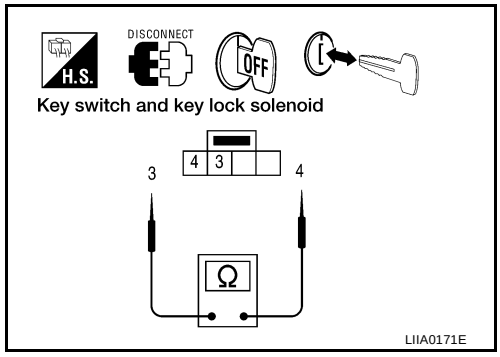

OK or NG ?

OK >> Repair or replace harness.
NG >> Replace key switch.

Door Lock/Unlock Switch Check (With left front only power window anti–pinch system)

EIS000Q0

1. CHECK DOOR LOCK/UNLOCK SWITCH INPUT SIGNAL

With CONSULT-II

Check door lock/unlock switch ("LOCK SW DR/AS", "UNLK SW DR/AS") in DATA MONITOR mode in CONSULT–II.Refer to BL-26, "DATA MONITOR"

- When door lock/unlock switch is turned to LOCK :

  LOCK SW DR/AS :ON

- When door lock/unlock switch is turned to UNLOCK :

  UNLK SW DR/AS :ON

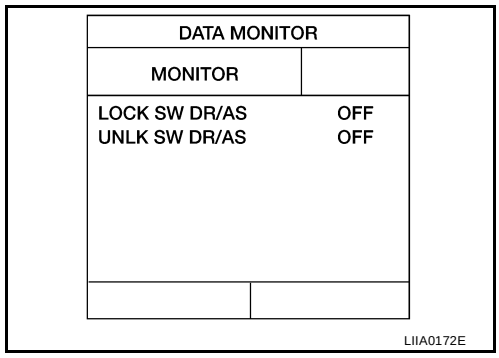

Without CONSULT-II

Check voltage between BCM connector M19 terminals 37(P) and 44(BR) and ground.

Connector	Terminal (+)	Terminal (–)	Condition	Voltage (V)
M19	37	Ground	Door lock/unlock switch is neutral.	Battery voltage
			Door lock/unlock switch is turned to LOCK.	0
	44	Ground	Door lock/unlock switch is neutral.	Battery voltage
			Door lock/unlock switch is turned to UNLOCK.	0

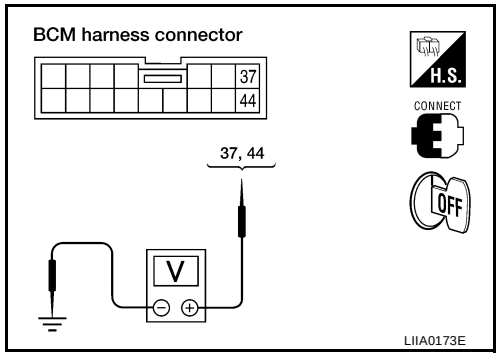

OK or NG ?

OK >> System is OK.
NG >> GO TO 2.

2. CHECK DOOR LOCK/UNLOCK SWITCH GROUND HARNESS

Check continuity between main power window and door lock/unlock switch connector D6 terminal 19(B) and front power window switch RH connector D105 terminal 19(B) and body ground.

- Main power window and door lock/unlock switch

Connector	Terminals	Continuity
D6	19 – Ground	Yes

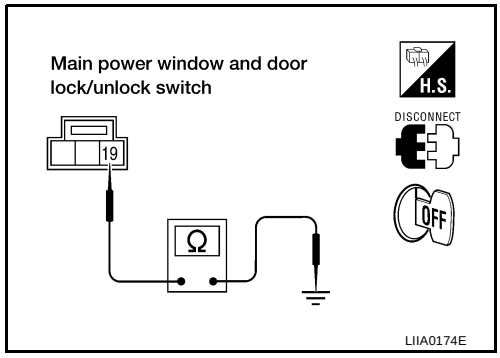

- Front power window switch RH

Connector	Terminals	Continuity
D105	19 – Ground	Yes

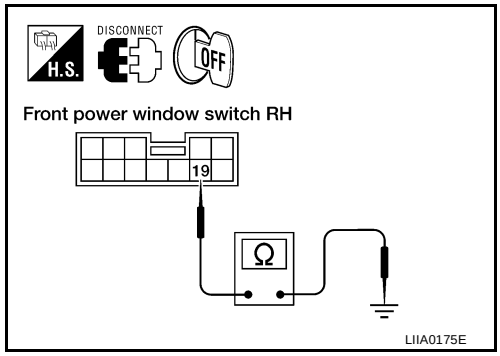

OK or NG ?

OK >> GO TO 3.
NG >> Repair or replace harness.

3. CHECK DOOR LOCK/UNLOCK SWITCH

1. Disconnect main power wondow and door lock/unlock switch or front power window switch RH
2. Check continuity between each door lock/unlock switch terminals.

- Main power window and door lock/unlock switch

Terminals	Condition	Continuity
18 – 19	Neutral	No
	Lock	Yes
17 – 19	Neutral	No
	Unlock	Yes

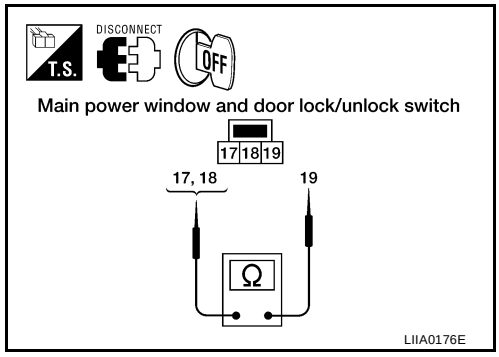

- Front power window switch RH

Terminals	Condition	Continuity
18 – 19	Neutral	No
	Lock	Yes
20 – 19	Neutral	No
	Unlock	Yes

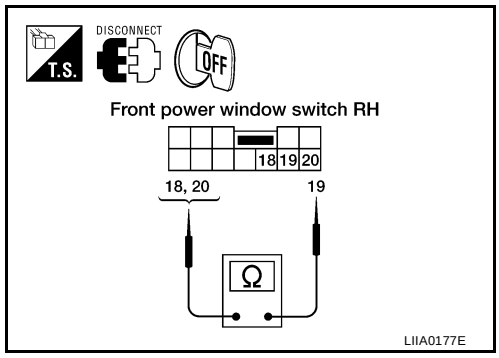

OK or NG ?

OK >> Repair or replace harness.
NG >> Replace main power window and door lock/unlock switch or front power window switch RH.

Door Lock/Unlock Switch Check (With left and right front power window anti–pinch system)

EIS000Q1

1. CHECK DOOR LOCK/UNLOCK SWITCH INPUT SIGNAL

With CONSULT-II

Check door lock/unlock switch ("LOCK SW DR/AS", "UNLK SW DR/AS") in DATA MONITOR mode in CONSULT–II.Refer to BL-26, "DATA MONITOR" .

- When door lock/unlock switch is turned to LOCK :

  LOCK SW DR/AS :ON

- When door lock/unlock switch is turned to UNLOCK :

  UNLK SW DR/AS :ON

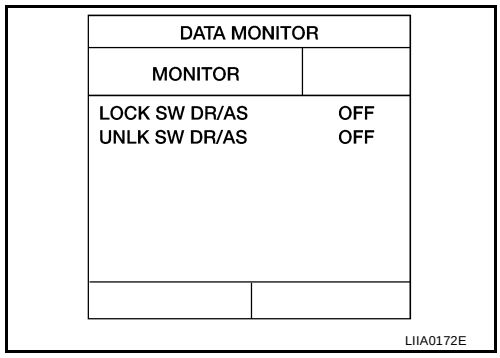

Without CONSULT-II

Check voltage between BCM connector M18 terminal 74(Y/G) and ground.

Connector	Terminal (+)	Terminal (–)	Condition	Voltage (V)
M18	74	Ground	—	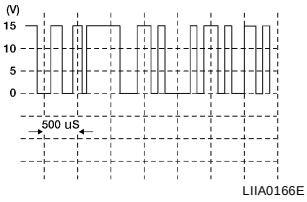

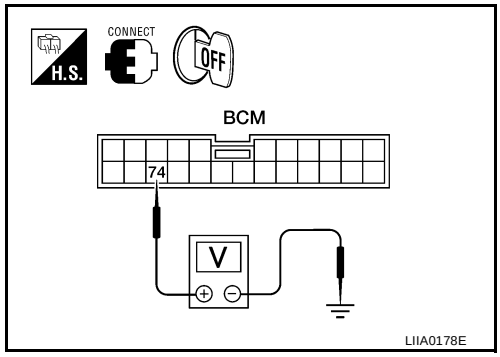

OK or NG ?

OK >> System is OK.

NG >> GO TO 2.

2. CHECK DOOR LOCK/UNLOCK SWITCH GROUND HARNESS

Check continuity between main power window and door lock/unlock switch connector D7 terminal 11(B) and front power window switch RH connector D106 terminal 7(B) and body ground.

- Main power window and door lock/unlock switch

Connector	Terminals	Continuity
D7	11 – Ground	Yes

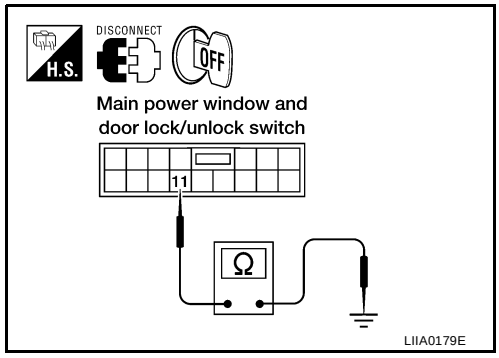

- Front power window switch RH

Connector	Terminals	Continuity
D106	7 – Ground	Yes

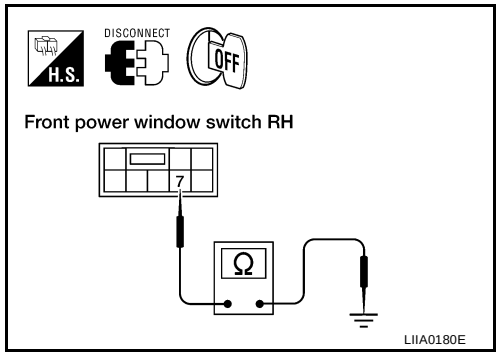

OK or NG ?

OK >> GO TO 3.
NG >> Repair or replace harness.

3. CHECK ANTI-PINCH SERIAL LINK CIRCUIT

Check continuity between BCM connector M18 terminal 74 (Y/G) and main power window and door lock/unlock switch connector D7 terminal 14 (Y/G).

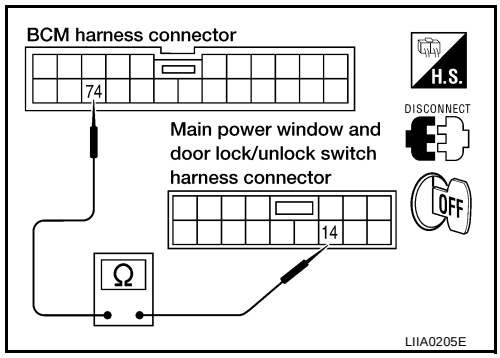

Check continuity between BCM connector M18 terminal 74 (Y/G) and front power window switch RH connector D105 terminal 11 (Y/G).

OK or NG

OK >> GO TO 4.
NG >> Repair or replace harness.

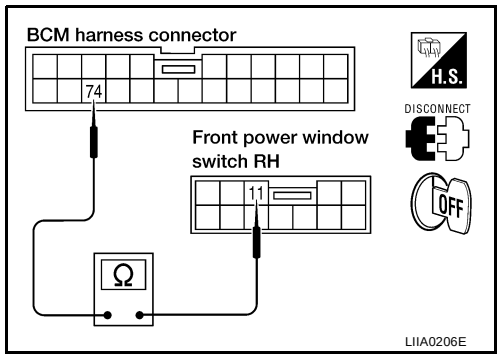

4. CHECK DOOR LOCK/UNLOCK SWITCH

- Check voltage between main power window and door lock/unlock switch connector D7 terminal 11 (B) and ground.

Terminals	Condition	Voltage (Approx.)
11 – Ground	Neutral	0V
	Lock/Unlock	5V

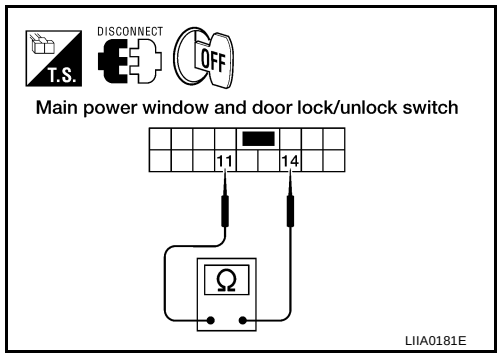

- Check voltage between main power window and door lock/unlock switch connector D106 terminal 7 (B) and ground.

Terminals	Condition	Voltage (Approx.)
7 – Ground	Neutral	0V
	Unlock/Unlock	5V

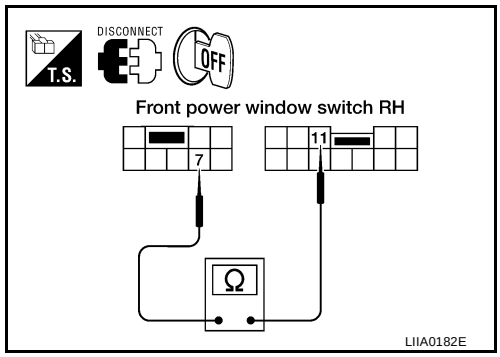

OK or NG ?

OK >> Repair or replace harness.
NG >> Replace main power window and door lock/unlock switch or front power window switch RH.

Door Lock Actuator Check (Front LH)

EIS000Q2

1. CHECK DOOR LOCK ACTUATOR SIGNAL

With CONSULT-II

Check front door lock actuator LH "ALL D/LK MTR", "DR D/UN MTR" in ACTIVE TEST mode with CONSULT–II. Refer to BL-26, "ACTIVE TEST" .

ALL D/LK MTR : ON/OFF

DR D/UN MTR : ON/OFF

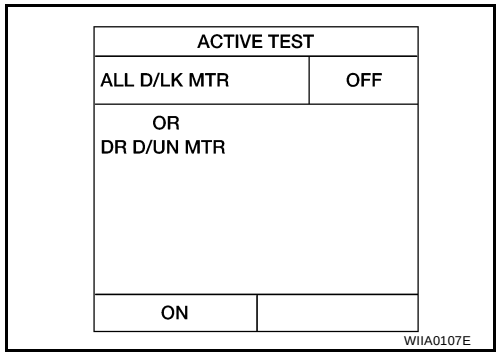

Without CONSULT-II

Check voltage between BCM connector M20 terminals 23(G/W), 30(Y/R) and ground.

Connec-tor	Terminal		Condition	Voltage (V)
	(+)	(–)		
M20	23	Ground	Driver door lock knob is turned to UNLOCK.	0 → Battery voltage
	30	Ground	Driver door lock knob is turned to LOCK.	0 → Battery voltage

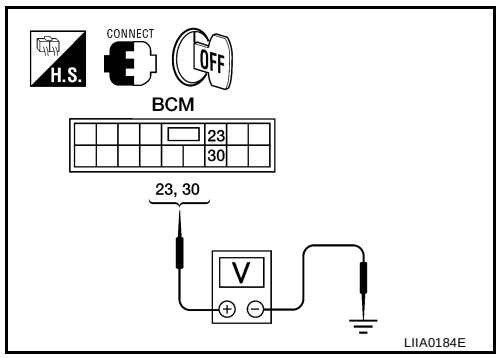

OK or NG ?

OK >> System is OK.

NG >> GO TO 2.

2. CHECK DOOR LOCK ACTUATOR HARNESS

Check continuity between BCM connector M20 terminals 23(G/W), 30(Y/R) and front door lock actuator LH connector D51 terminals 1 (R), 3(B) and body ground.

Con-nector	Terminal	Con-nector	Terminal	Continuity
M20	23	D51	3	Should exist
	30		1	Should exist
	23, 30	Ground		Should not exist

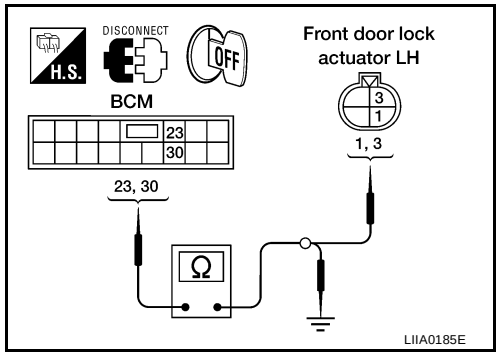

OK or NG ?

OK >> Replace front door lock actuator LH.

NG >> Repair or replace harness.

Door Lock Actuator Check (Front RH and rear LH/RH)

EIS000Q3

1. CHECK DOOR LOCK ACTUATOR SIGNAL

With CONSULT-II

Check door lock actuators "ALL D/LK MTR", "NON DR D/UN" in ACTIVE TEST mode with CONSULT–II. Refer to BL-26, "ACTIVE TEST" .

ALL D/LK MTR : ON/OFF

NON DR D/UN : ON/OFF

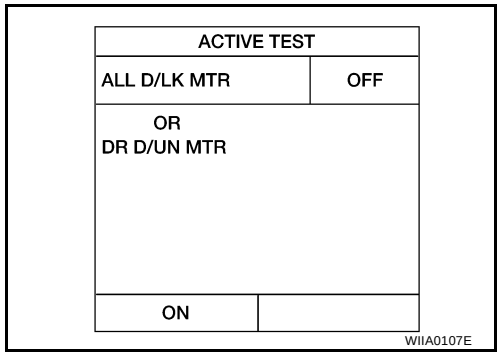

Without CONSULT-II

Check voltage between BCM connector M20 terminals 30(Y/R), 31(G/R) and ground.

Connec-tor	Terminal		Condition	Voltage (V)
	(+)	(–)		
M20	30	Ground	Driver door lock knob is turned to LOCK.	0 → Battery voltage
	31	Ground	Door lock/unlock switch is turned to UNLOCK.	0 → Battery voltage

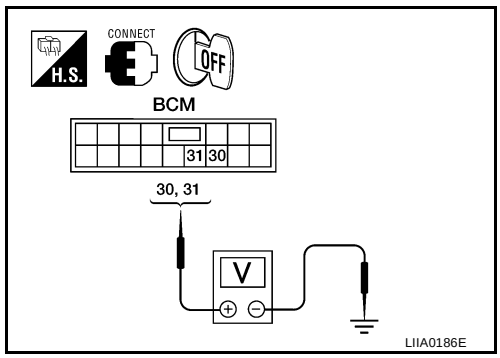

OK or NG ?

OK >> System is OK.

NG >> GO TO 2.

2. CHECK DOOR LOCK ACTUATOR HARNESS

Check continuity between BCM connector M20 terminals 30(Y/R), 31(G/R) and front door lock actuator RH, rear door lock actuator LH/RH connector D151, D205 and D305 terminals 1(G/R), 3(Y/R) and body ground.

Connector	Terminal	Connector	Terminal	Continuity
M20	30	D151, D205, D305	3	Should exist
	31		1	Should exist
	30, 31	Ground		Should not exist

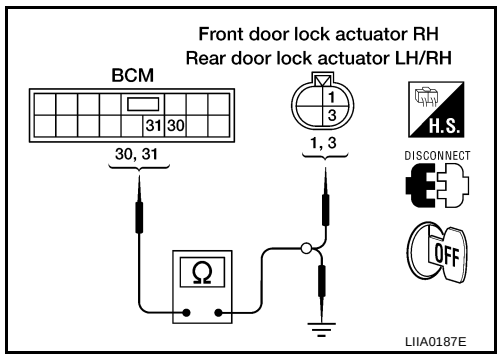

OK or NG ?

OK >> Replace front door lock actuator RH or rear door lock actuator LH/RH.

NG >> Repair or replace harness.

Front Door Key Cylinder Switch LH Check (With left front only power window anti-pinch system)

EIS000Q4

1. CHECK DOOR KEY CYLINDER SWITCH LH SIGNAL

With CONSULT-II

Check front door key cylinder switch ("KEY CYL LK-SW", "KEY CYL UN-SW") in DATA MONITOR mode in CONSULT–II.Refer to BL-26, "DATA MONITOR" .

- When key inserted in front key cylinder is turned to LOCK :

  KEY CYL LK-SW : ON

- When key inserted in front key cylinder is turned to UNLOCK :

  KEY CYL UN-SW : ON

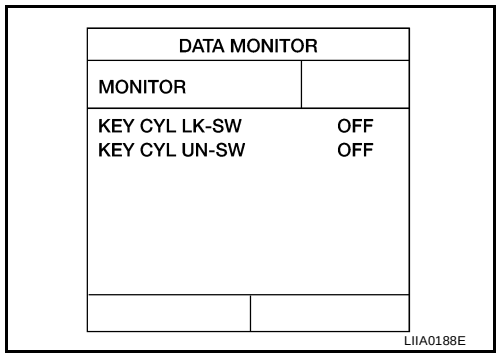

Without CONSULT-II

Check voltage between BCM connector M18 terminals 59 (P/L), 60 (W/L) and ground.

Connec-tor	Terminal		Condition	Voltage (V)
	(+)	(–)		
M18	59	Ground	Front door key cylinder switch LH is neutral.	Approx.5
			Front door key cylinder switch LH is turned to LOCK.	0
	60	Ground	Front door key cylinder switch LH is neutral.	Approx.5
			Front door key cylinder switch LH is turned to UNLOCK.	0

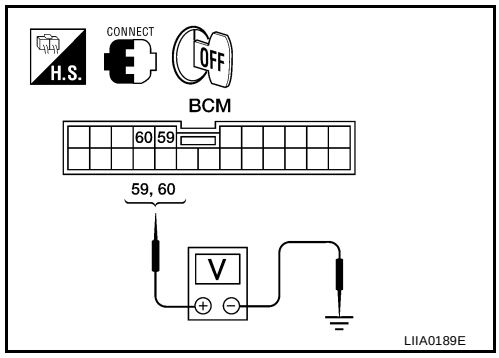

OK or NG ?

OK >> System is OK.
NG >> GO TO 2.

2. CHECK FRONT DOOR KEY CYLINDER SWITCH LH GROUND HARNESS

Check continuity between front door key cylinder switch LH connector D50 terminal 3 (B) and body ground.

Connector	Terminals	Continuity
D50	3 – Ground	Yes

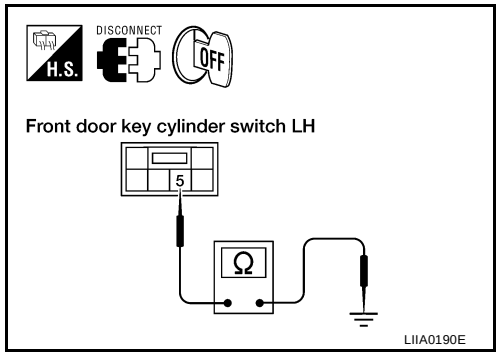

OK or NG ?

OK >> GO TO 3.
NG >> Repair or replace harness.

3. CHECK DOOR KEY CYLINDER SWITCH LH

Check continuity between door key cylinder switch LH connector terminals.

Terminals	Condition	Continuity
1 – 3	Key is turned to LOCK or neutral.	No
	Key is turned to UNLOCK	Yes
2 – 3	Key is turned to UNLOCK or neutral.	No
	Key is turned to LOCK.	Yes

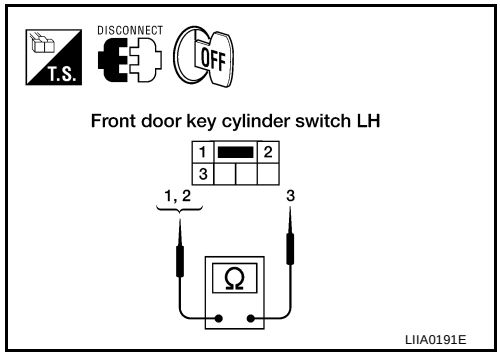

OK or NG ?

OK >> Repair or replace harness.
NG >> Replace front door key cylinder switch LH.

Door Lock/Unlock Switch Check (With left and right front power window anti–pinch system)

EIS000Q5

1. CHECK MAIN POWER WINDOW AND DOOR LOCK/UNLOCK SWITCH INPUT SIGNAL

With CONSULT-II

Check main power window and door lock/unlock switch ("LOCK SW DR/AS", "UNLK SW DR/AS") in DATA MONITOR mode in CONSULT–II.Refer to BL-26, "DATA MONITOR" .

- When main power window and door lock/unlock switch is turned to LOCK :

  LOCK SW DR/AS :ON

- When main power window and door lock/unlock switch is turned to UNLOCK :

  UNLK SW DR/AS :ON

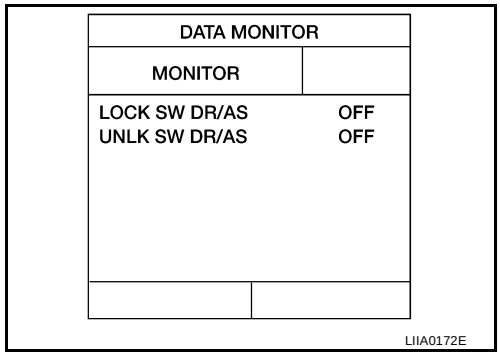

Without CONSULT-II

Check voltage between BCM connector M18 terminal 74(Y/G) and ground.

Connec-tor	Terminal		Condition	Voltage (V)
	(+)	(–)		
M18	74	Ground	—	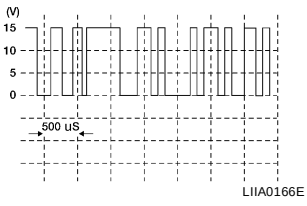

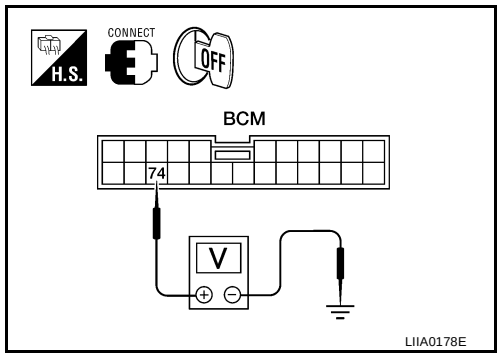

OK or NG ?

OK >> System is OK.
NG >> GO TO 2.

2. CHECK MAIN POWER WINDOW AND DOOR LOCK/UNLOCK SWITCH GROUND HARNESS

Check continuity between main power window and door lock/unlock switch connector D7 terminal 11(B) and body ground.

Connector	Terminals	Continuity
D7	11 – Ground	Yes

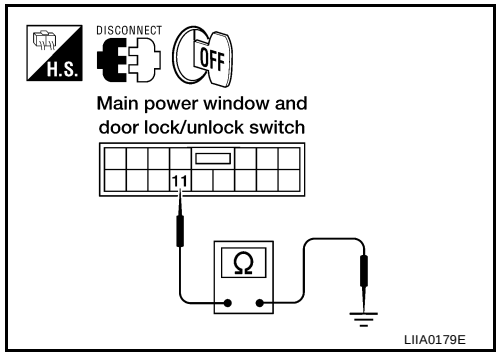

OK or NG ?

OK >> GO TO 3.
NG >> Repair or replace harness.

3. CHECK ANTI-PINCH SERIAL LINK CIRCUIT

Check continuity between BCM connector M18 terminal 74 (Y/G) and main power window and door lock/unlock switch connector D7 terminal 14 (Y/G).

OK or NG

OK >> GO TO 4.
NG >> Repair or replace harness.

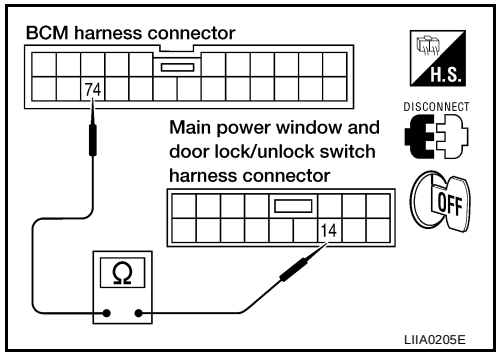

4. CHECK DOOR LOCK/UNLOCK SWITCH

- Check voltage between main power window and door lock/unlock switch connector D7 terminal 11 (B) and ground.

Terminals	Condition	Voltage (Approx.)
11 – Ground	Neutral	0V
	Lock/Unlock	5V

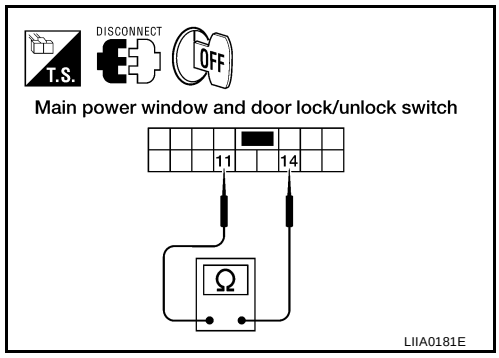

OK or NG ?

OK >> Repair or replace harness.
NG >> Replace main power window and door lock/unlock switch or front power window switch RH.

Front Door Key Cylinder Switch LH Check (With left and right front power window anti–pinch system)

EIS000Q6

1. CHECK DOOR KEY CYLINDER SWITCH LH SIGNAL

With CONSULT-II

Check front door key cylinder switch ("KEY CYL LK-SW", "KEY CYL UN-SW") in DATA MONITOR mode in CONSULT–II.Refer to BL-26, "DATA MONITOR" .

- When key inserted in front key cylinder is turned to LOCK :

  KEY CYL LK-SW : ON

- When key inserted in front key cylinder is turned to UNLOCK :

  KEY CYL UN-SW : ON

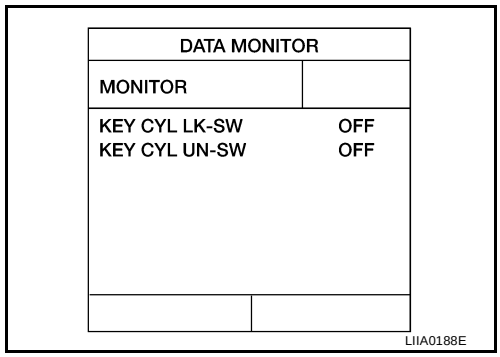

OK or NG ?

OK >> System is OK.
NG >> GO TO 2.

2. CHECK DOOR KEY CYLINDER SWITCH LH GROUND HARNESS

Check continuity between front door key cylinder switch LH connector D50 terminal 3 (B) and body ground.

Connector	Terminals	Continuity
D50	3 – Ground	Yes

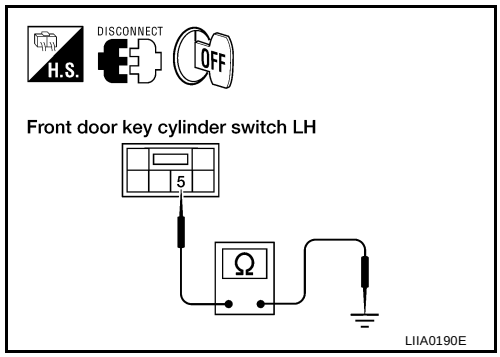

OK or NG ?

OK >> GO TO 3.
NG >> Repair or replace harness.

3. CHECK DOOR KEY CYLINDER SWITCH LH

Check continuity between door key cylinder switch LH connector terminals.

Terminals	Condition	Continuity
1 – 3	Key is turned to LOCK or neutral.	No
	Key is turned to UNLOCK	Yes
2 – 3	Key is turned to UNLOCK or neutral.	No
	Key is turned to LOCK.	Yes

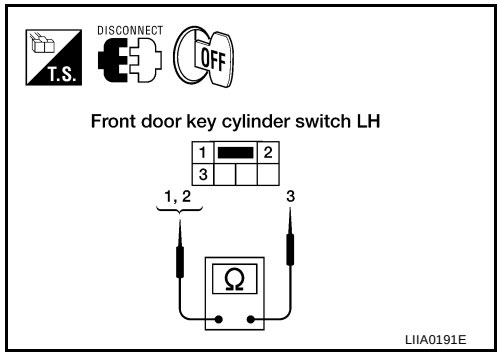

OK or NG ?

OK >> GO TO 4.
NG >> Replace front door key cylinder switch LH.

4. CHECK DOOR KEY CYLINDER HARNESS

Check continuity between main power window and door lock/unlock switch connector D7 terminals 4(P/L), 5(W/L) and front door key cylinder switch LH connector D50 terminals 1(L), 2(Y) and body ground.

Connector	Terminal	Connector	Terminal	Continuity
D7	4	D50	2	Should exist
	5		1	Should exist
	4,5	Ground		Should not exist

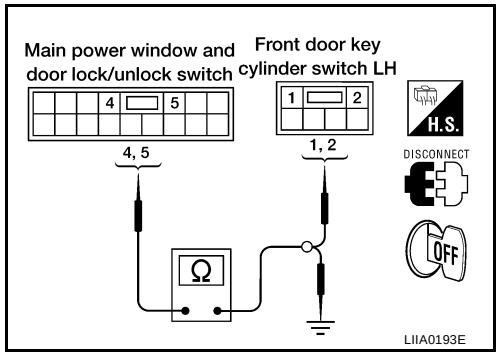

OK or NG ?

OK >> Replace main power window and door lock/unlock switch.
NG >> Repair or replace harness.

REMOTE KEYLESS ENTRY SYSTEM

PFP:28596

Component Parts and Harness Connector Location

EIS000Q7

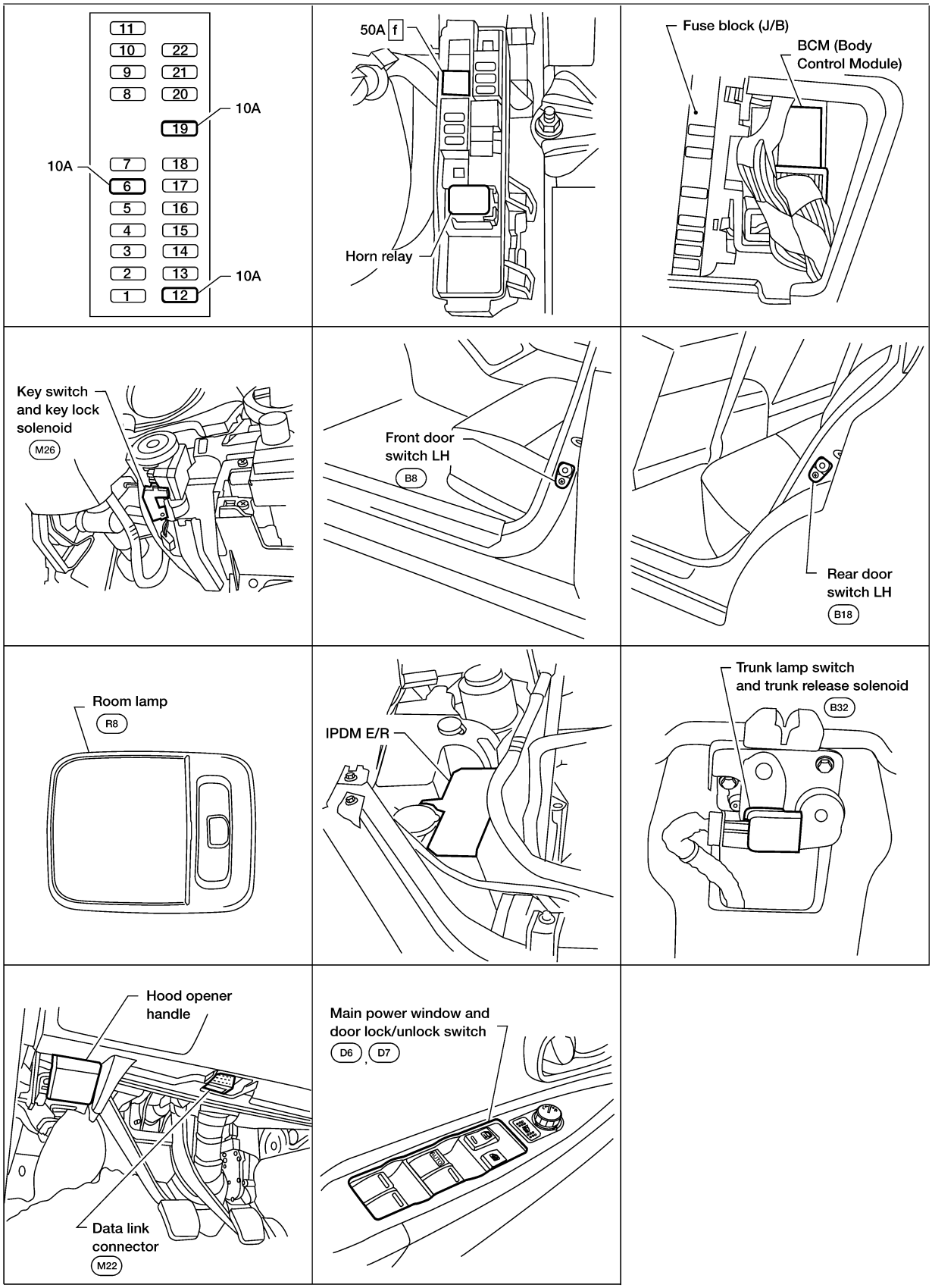

LIIA0147E

System Description

EIS000Q8

INPUTS

Power is supplied at all times

- to BCM terminal 7
- through 50A fusible link (letter **f** , located in the fuse and fusible link box).
- to key switch terminal 3
- through 10A fuse [No. 19, located in the fuse block (J/B)].

When the key switch is ON (ignition key is inserted in key cylinder), power is supplied

- through key switch terminal 4
- to BCM terminal 62.

When the front door switch LH is ON (door is OPEN), ground is supplied

- to BCM terminal 14 and 54 (without vehicle security system).
- through front door switch LH terminal 2
- to driver door switch case ground.

When the front door switch RH is ON (door is OPEN), ground is supplied

- to BCM terminal 10
- through front door switch RH terminal 2
- to front door switch RH case ground.

When the rear door switches are ON (door is OPEN), ground is supplied

- to BCM terminal 11
- through rear door switches terminal 1
- to rear door switches case grounds.

Key fob signal is inputted to smart entrance control unit (the antenna of the system is combined with BCM).
The remote keyless entry system controls operation of the

- power door lock
- trunk lid opener
- interior lamp and step lamps
- panic alarm
- hazard and horn reminder
- keyless power window down (open)

OPERATED PROCEDURE

Power Door Lock Operation

BCM receives a LOCK signal from key fob. BCM locks all doors with input of LOCK signal from key fob.
When an UNLOCK signal is sent from key fob once, driver's door will be unlocked.
Then, if an UNLOCK signal is sent from key fob again within 5 seconds, all other door will be unlocked.

Hazard and Horn Reminder

BCM output to IPDM E/R for hazard and horn reminder signal as DATA LINE (CAN H line and CAN L line).
The hazard and horn reminder has C mode (horn chirp mode) and S mode (non-horn chirp mode).

Operating function of hazard and horn reminder

	C mode		S mode	
Remote controller operation	Lock	Unlock	Lock	Unlock
Hazard warning lamp flash	Twice	Once	Twice	—
Horn sound	Once	—	—	—

How to change hazard and horn reminder mode

With CONSULT-II

Hazard and horn reminder can be changed using “WORK SUPPORT” mode in “MULTI ANSWER BACK SET".

Without CONSULT-II

When LOCK and UNLOCK signals are sent from the key fob for more than 2 seconds at the same time, the hazard and horn reminder mode is changed and hazard warning lamp flashes and horn sounds as follows:

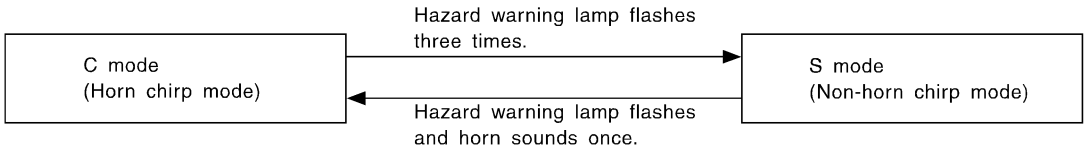

SEL153WA

Interior Lamp Operation

When the following input signals are both supplied:

- door switch CLOSED (when all the doors are closed);
- driver's door LOCKED;

Remote keyless entry system turns on interior lamp and ignition illumination (for 30 seconds) with input of UNLOCK signal from key fob.
For detailed description, refer to LT-123, "INTERIOR LAMP TIMER OPERATION" .

Panic Alarm Operation

When key switch is OFF (when ignition key is not inserted in key cylinder), remote keyless entry system turns on and off horn and headlamp intermittently with input of PANIC ALARM signal from key fob.
The alarm automatically turns off after 25 seconds or when BCM receives any signal from key fob.
For detailed description, refer to BL-87, "VEHICLE SECURITY (THEFT WARNING) SYSTEM" .

Trunk Lid Opener Operation

When a TRUNK OPEN signal is sent with key OFF (ignition key removed from key cylinder) from key fob, power is supplied

- through BCM terminal 19
- to trunk lid opener actuator terminal 3.

When power and ground are supplied, trunk lid opener actuator opens trunk lid.

Keyless Power Window Down (open) Operation

When key fob unlock switch is turned ON with ignition switch OFF, and the switch is detected to be on continuously for 3 seconds, the driver's door and passenger's door (with left and right front power window anti-pinch system) power windows are simultaneously opened.
Power window is operated to open and the operation continues as long as the key fob unlock switch is pressed.

CAN Communication System Description

EIS000Q9

CAN (Controller Area Network) is a serial communication line for real time application. It is an on-vehicle multiplex communication line with high data communication speed and excellent error detection ability. Many electronic control units are equipped onto a vehicle, and each control unit shares information and links with other control units during operation (not independent). In CAN communication, control units are connected with 2 communication lines (CAN H line, CAN L line) allowing a high rate of information transmission with less wiring. Each control unit transmits/receives data but selectively reads required data only.

FOR TCS MODELS

System diagram

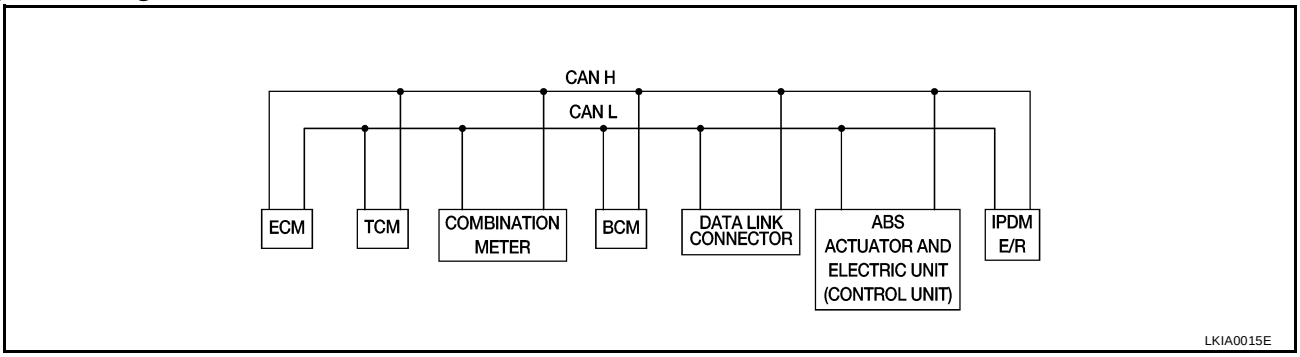

Input/output signal chart

T: Transmit R: Receive

Signals	ECM	TCM	COMBINA-TION METER	BCM	ABS/TCS control unit	IPDM E/R
Engine speed signal	T		R		R	
Engine coolant temperature signal	T		R			
Accelerator pedal position signal	T					
Fuel consumption monitor signal	T		R			
A/T warning lamp signal		T	R			
A/T position indicator signal	R	T	R	R(R range only)	R	
ABS operation signal	R				T	
TCS operation signal	R	R			T	
Air conditioner switch signal	R			T		
Air conditioner compressor signal	R					T
A/C compressor request signal	T					R
Cooling fan motor operation signal	R					T
Cooling fan speed request signal	T					R
Position lights request			R	T		R
Position lights status				R		T
Low beam request				T		R
Low beam status	R			R		T
High beam request			R	T		R
High beam status	R			R		T
Front fog lights request				T		R
Front fog light status				R		T
OD cancel switch signal		R	T			R
Brake switch signal		R	T			
Vehicle speed signal	R		T			
	R		T	R		
Oil pressure switch			R			T
Sleep request1			R	T		
Sleep request2				T		R
N range switch signal		R	T			
P range switch signal		R	T			
Seat belt buckle switch signal			T	R		

Signals	ECM	TCM	COMBINATION METER	BCM	ABS/TCS control unit	IPDM E/R
Door switch signal			R	T		R
Tail lamp request			R	T		R
Turn indicator signal			R	T		
Buzzer output signal			R	T		
Trunk switch signal			R	T		
ASCD main switch signal	T		R			
ASCD cruise signal	T		R			
Wiper operation				R		T
Wiper stop position signal				R		T
Rear window defogger switch signal				T		R
Rear window defogger control signal	R			R		T

FOR A/T MODELS

System diagram

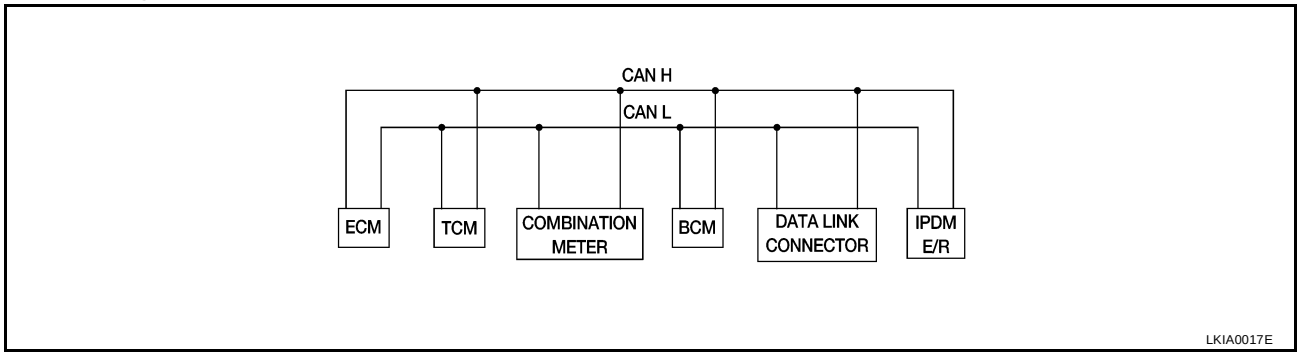

Input/output signal chart

T: Transmit R: Receive

Signals	ECM	TCM	COMBINATION METER	BCM	IPDM E/R
Engine speed signal	T		R		
Engine coolant temperature signal	T		R		
Accelerator pedal position signal	T				R
Fuel consumption monitor signal	T		R		
A/T warning lamp signal		T	R		
A/T position indicator signal	R	T	R	R(R range only)	
Air conditioner switch signal	R			T	
Air conditioner compressor signal	R				T
A/C compressor request signal	T				R
Blower fan switch signal	R(QR25DE)			T	
Cooling fan motor operation signal	R			T	
Cooling fan speed request signal	T				R
Position lights request			R	T	R
Position lights status				R	T
Low beam request				T	R
Low beam status	R			R	T
High beam request			R	T	R

Signals	ECM	TCM	COMBINATION METER	BCM	IPDM E/R
High beam status	R			R	T
Front fog lights request				T	R
Front fog light status				R	T
OD cancel switch signal		R	T		R
Brake switch signal		R	T		
Vehicle speed signal	R		T		
	R		T	R	
Oil pressure switch			R		T
Sleep request1			R	T	
Sleep request2				T	R
N range switch signal		R	T		
P range switch signal		R	T		
Seat belt buckle switch signal			T	R	
Door switch signal			R	T	R
Tail lamp request			R	T	R
Turn indicator signal			R	T	
Buzzer output signal			R	T	
Trunk switch signal			R	T	
ASCD main switch signal	T		R		
ASCD cruise signal	T		R		
Wiper operation				R	T
Wiper stop position signal				R	T
Rear window defogger switch signal				T	R
Rear window defogger control signal	R			R	T

FOR M/T MODELS

System diagram

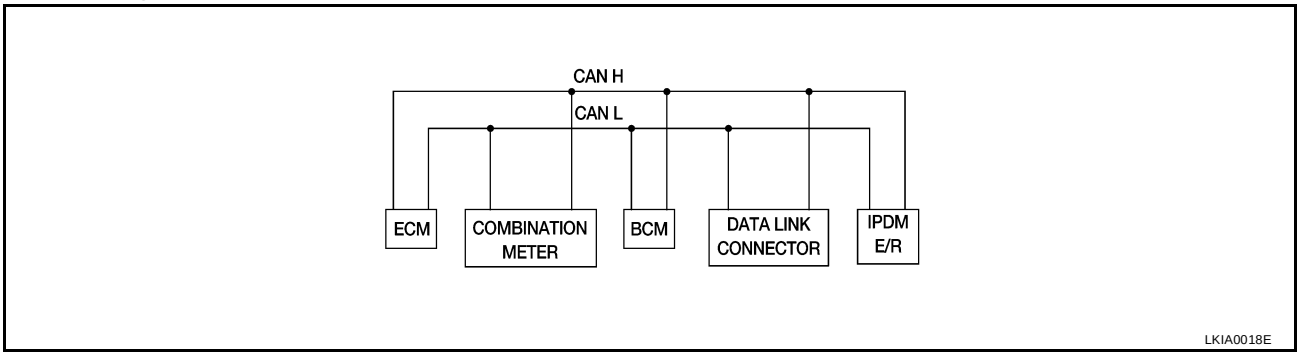

Input/output signal chart

T: Transmit R: Receive

Signals	ECM	COMBINATION METER	BCM	IPDM E/R
Engine speed signal	T			
Engine coolant temperature signal	T			
Fuel consumption monitor signal	T			
Air conditioner switch signal	R		T	
Air conditioner compressor signal	R			T
A/C compressor request signal	T			R

Signals	ECM	COMBINATION METER	BCM	IPDM E/R
Blower fan switch signal	R(QR25DE)		T	
Cooling fan motor operation signal	R			T
Cooling fan speed request signal	T			R
Position lights request		R	T	R
Position lights status			R	T
Low beam request			T	R
Low beam status	R		R	T
High beam request		R	T	R
High beam status	R		R	T
Front fog lights request			T	R
Front fog light status			R	T
Vehicle speed signal	R	T		
Oil pressure switch		R		T
Sleep request1		R	T	
Sleep request2			T	R
Seat belt buckle switch signal		T	R	
Door switch signal		R	T	R
Tail lamp request		R	T	R
Turn indicator signal		R	T	
Buzzer output signal		R	T	
Trunk switch signal		R	T	
ASCD main switch signal	T	R		
ASCD cruise signal	T	R		
Wiper operation			R	T
Wiper stop position signal			R	T
Rear window defogger switch signal			T	R
Rear window defogger control signal	R		R	T

Schematic

EIS000QA

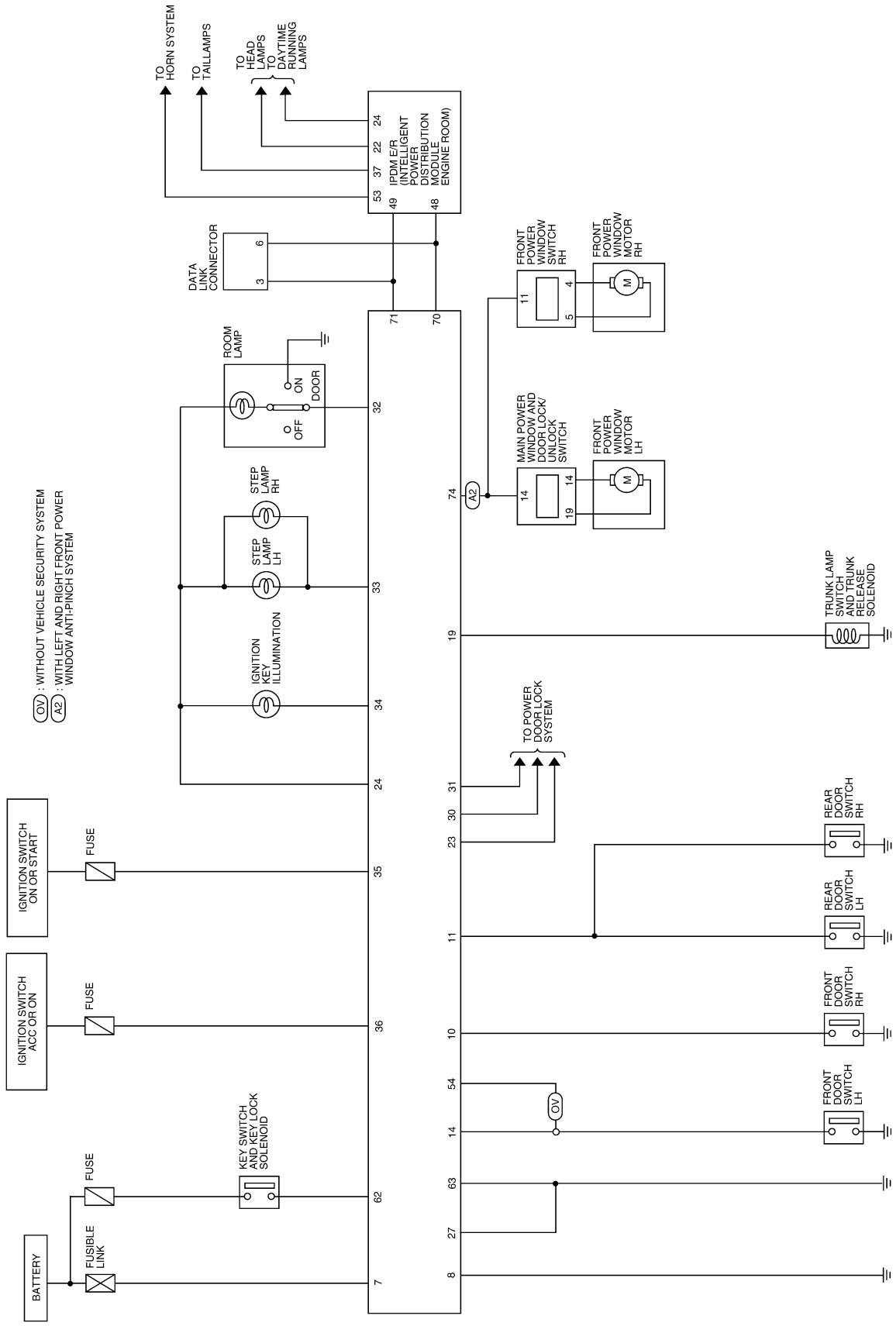

LIWA0035E

Wiring Diagram — KEYLES—

EIS000QB

FIG. 1

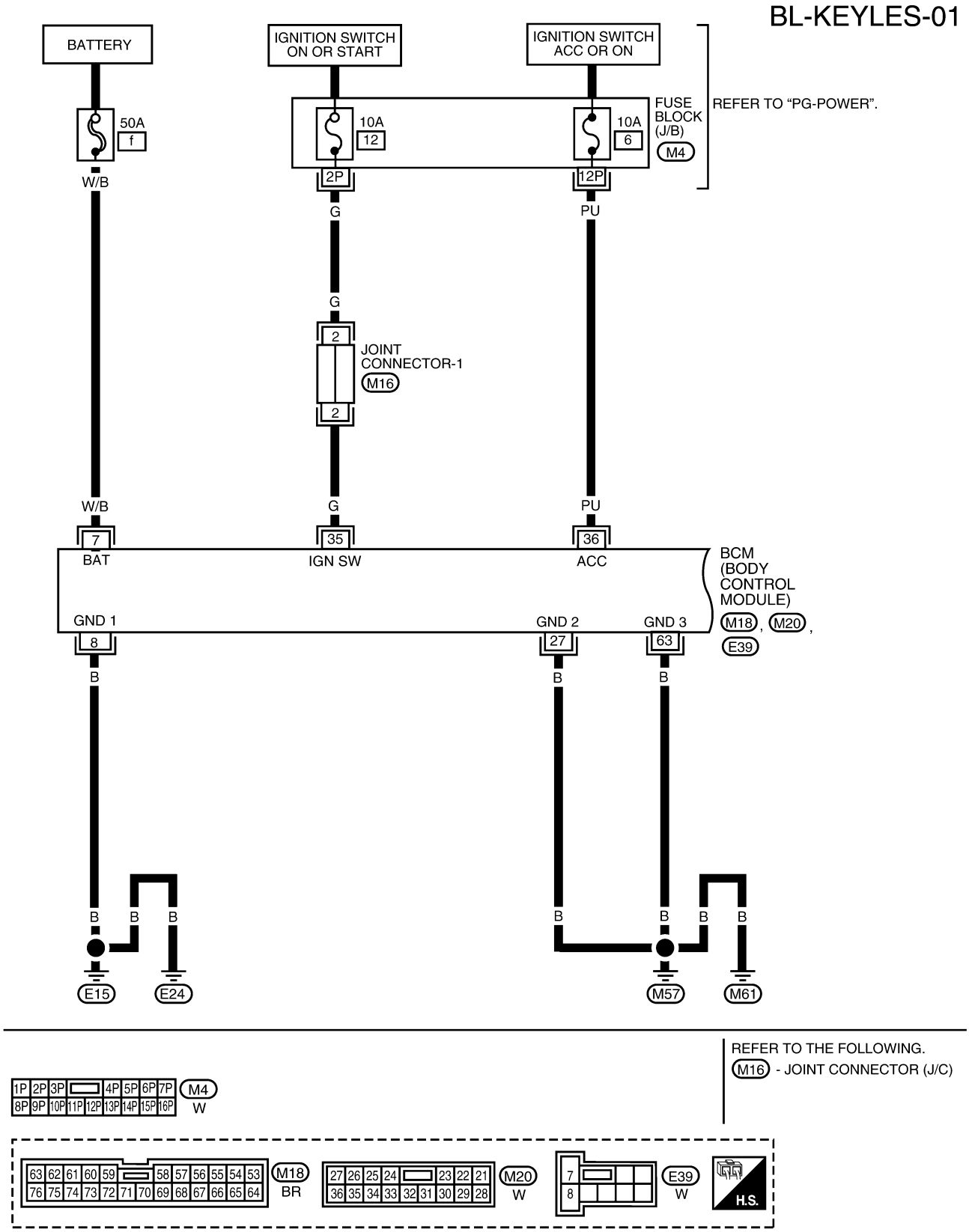

LIWA0036E

FIG. 2

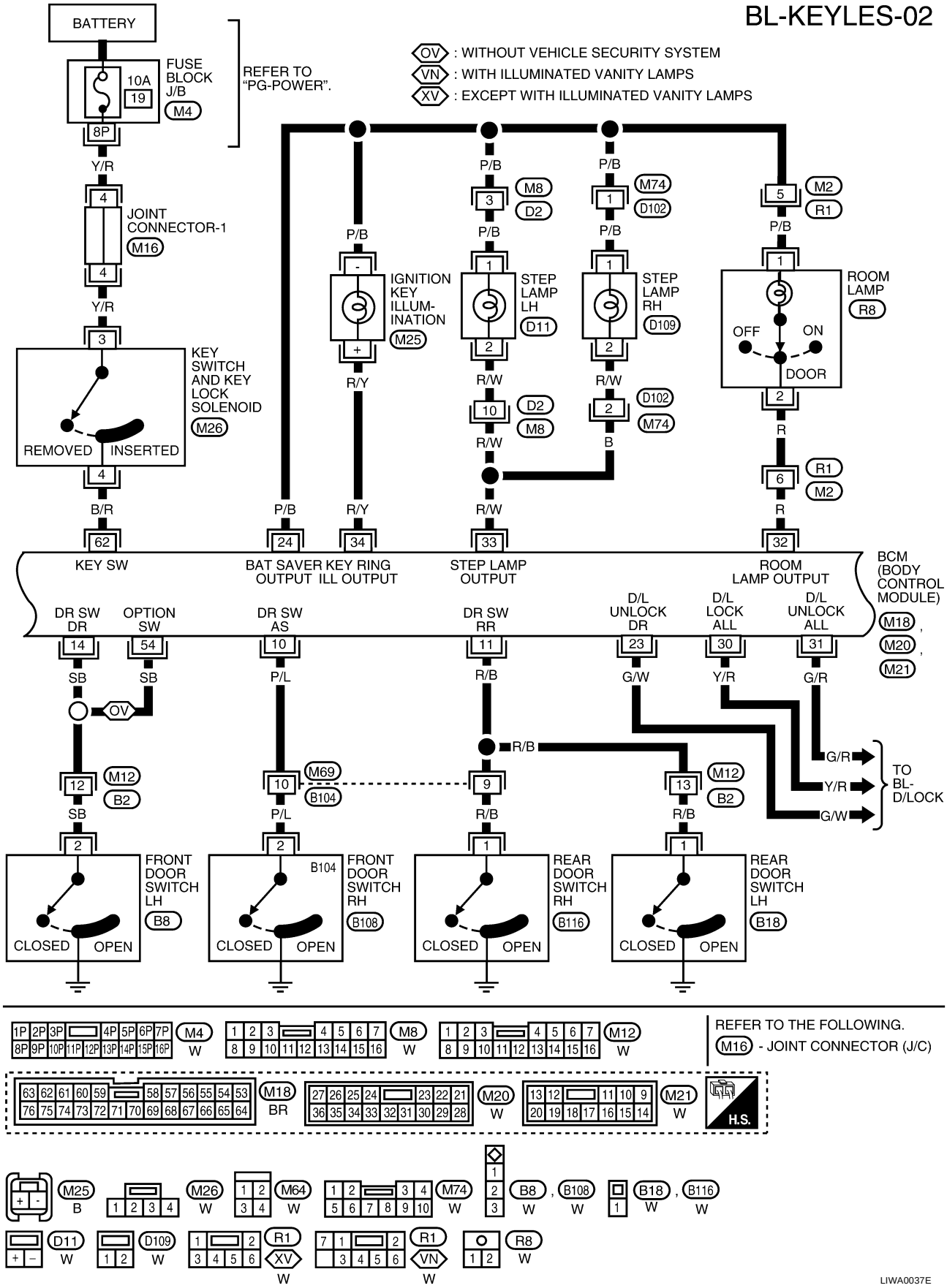
BL-KEYLES-02
BATTERY
FUSE BLOCK J/B
10A
19
M4
8P
REFER TO "PG-POWER".
OV : WITHOUT VEHICLE SECURITY SYSTEM
VN : WITH ILLUMINATED VANITY LAMPS
XV : EXCEPT WITH ILLUMINATED VANITY LAMPS
Y/R
JOINT CONNECTOR-1
M16
KEY SWITCH AND KEY LOCK SOLENOID
M26
REMOVED
INSERTED
B/R
P/B
R/Y
IGNITION KEY ILLUM-INATION
M25
STEP LAMP LH
D11
STEP LAMP RH
D109
R/W
B
M8
D2
M74
D102
M2
R1
ROOM LAMP
R8
OFF
ON
DOOR
R
KEY SW
BAT SAVER OUTPUT
KEY RING ILL OUTPUT
STEP LAMP OUTPUT
ROOM LAMP OUTPUT
BCM (BODY CONTROL MODULE)
M18, M20, M21
DR SW DR
OPTION SW
DR SW AS
DR SW RR
D/L UNLOCK DR
D/L LOCK ALL
D/L UNLOCK ALL
SB
P/L
R/B
G/W
Y/R
G/R
M12
B2
M69
B104
TO BL-D/LOCK
FRONT DOOR SWITCH LH
B8
FRONT DOOR SWITCH RH
B108
REAR DOOR SWITCH RH
B116
REAR DOOR SWITCH LH
B18
CLOSED
OPEN
REFER TO THE FOLLOWING.
M16 - JOINT CONNECTOR (J/C)
M4
M8
M12
M18
M20
M21
H.S.
M25
M26
M64
M74
B8
B108
B18
B116
D11
D109
R1
XV
VN
R8
LIWA0037E

FIG. 3

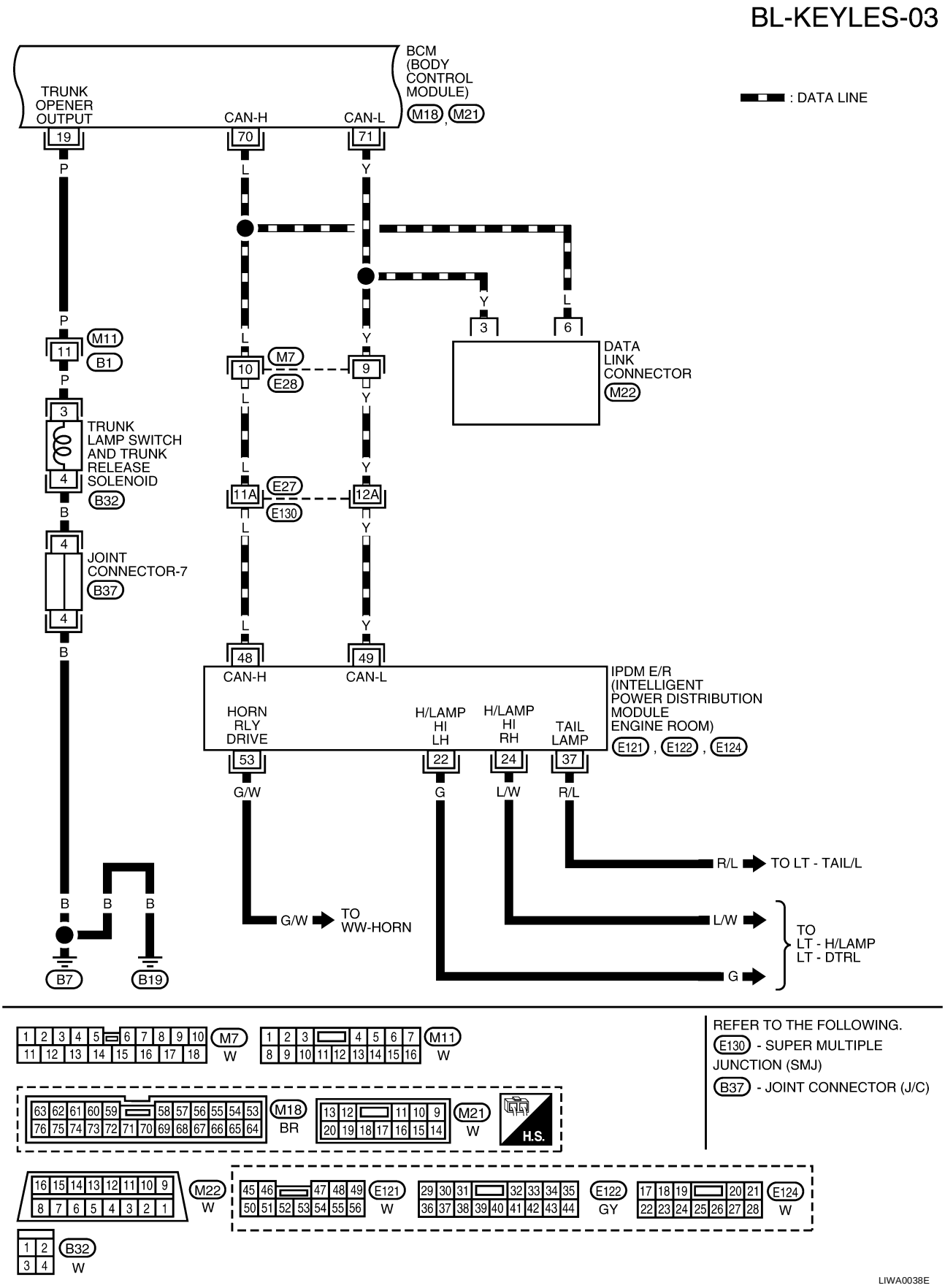
BL-KEYLES-03
BCM (BODY CONTROL MODULE)
M18, M21
: DATA LINE
TRUNK OPENER OUTPUT
CAN-H
CAN-L
19
70
71
P
L
Y
M11
11
B1
M7
10
E28
9
3
6
DATA LINK CONNECTOR
M22
TRUNK LAMP SWITCH AND TRUNK RELEASE SOLENOID
B32
E27
11A
E130
12A
JOINT CONNECTOR-7
B37
B
48
49
CAN-H
CAN-L
IPDM E/R (INTELLIGENT POWER DISTRIBUTION MODULE ENGINE ROOM)
E121, E122, E124
HORN RLY DRIVE
H/LAMP HI LH
H/LAMP HI RH
TAIL LAMP
53
22
24
37
G/W
G
L/W
R/L
R/L TO LT - TAIL/L
G/W TO WW-HORN
L/W
G
TO LT - H/LAMP LT - DTRL
B7
B19
M7 W
M11 W
M18 BR
M21 W
H.S.
M22 W
E121 W
E122 GY
E124 W
B32 W
REFER TO THE FOLLOWING.
E130 - SUPER MULTIPLE JUNCTION (SMJ)
B37 - JOINT CONNECTOR (J/C)
LIWA0038E

FIG. 4

BL-KEYLES-04

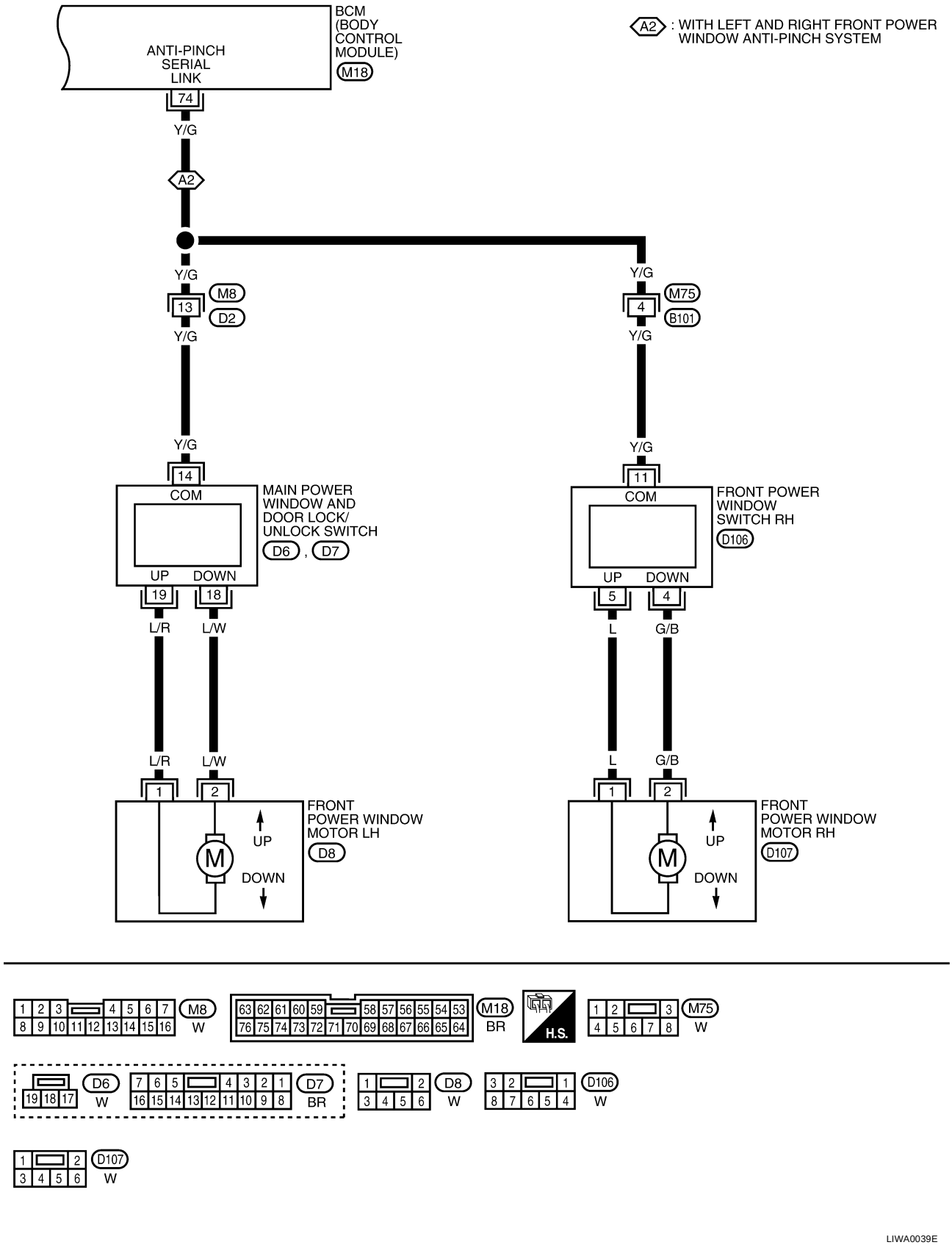

Terminals and Reference Value for BCM

EIS000QC

TERMINAL	WIRE COLOR	ITEM	CONDITION	VOLTAGE (Approximate value)
7	W/B	Power source (BAT)	—	Battery voltage
8	B	Ground	—	—
10	P/L	Front door switch RH	Door Close (OFF) → Open (ON)	Battery voltage → 0V
11	R/B	Rear door switch RH and LH	Door Close (OFF) → Open (ON)	Battery voltage → 0V
14	SB	Front door switch LH (with vehicle security system)	Door Close (OFF) → Open (ON)	Battery voltage → 0V
19	P	Trunk release solenoid	When trunk lid release solenoid is operated using key fob (ON → OFF)	0V → Battery voltage
23	G/W	Driver door lock actuator	Door lock & unlock switch (Neutral → Unlock)	0V → Battery voltage
24	P/B	Battery saver (Interior lamp)	Battery saver does operated → Does not operated (ON → OFF)	Battery voltage → 0V
27	B	Ground	—	—
30	Y/R	Door lock actuators	Door lock & unlock switch (Neutral → Lock)	0V → Battery voltage
31	G/R	Passenger and rear doors lock actuator	Door lock & unlock switch (Neutral → Unlock)	0V → Battery voltage
32	R	Room lamp	When doors are locked using key fob (Lamp switch in "DOOR" position)	Battery voltage
33	R/W	Step lamp LH and RH	When doors are unlocked using key fob (OFF → Unlock)	Battery voltage → 0V
34	R/Y	Ignition key illumination	When doors are unlocked using key fob (OFF → Unlock)	Battery voltage → 0V
35	G	Ignition switch (ON)	—	Battery voltage
36	PU	Ignition switch (ACC)	—	Battery voltage
54	SB	Front door switch LH (without vehicle security system)	Door Close (OFF) → Open (ON)	Battery voltage → 0V
62	B/R	Ignition key switch (insert)	Key inserted → Key removed from key cylinder	Battery voltage → 0V
63	B	Ground	—	—
70	L	CAN H	—	—
71	Y	CAN L	—	—
74	Y/G	Anti-pinch serial link	—	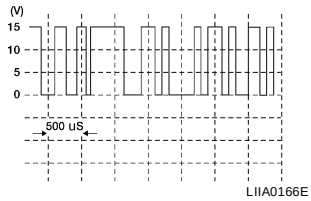

CONSULT-II Function

EIS000QD

- The following functions are executed by combining data received and command transmitted via the communication line from the BCM.

BCM diagnosis position	Inspection items and diagnosis mode		Description
BCM C/U*	Self–diagnosis results		Carries out the self–diagnosis.
	Data monitor	CAN diagnosis support monitor	Displays CAN communication system diagnosis, disabled transmission status, and communication status of each unit communicated with BCM.
		Selection from menu	Displays the input data to BCM on real–time basis.
MULTI REMOTE ENT	Data monitor		Displays the input remote keyless entry system data to BCM on real–time basis.
	Active test		Gives a drive to a load to check the operation.
	Work support		Changes the setting for each function.

*:Refer to BCS-15, "CAN Communication Inspection Using CONSULT-II (Self-Diagnosis)" .

CONSULT-II Inspection Procedure

EIS000QE

“MULTI REMOTE ENT”

1. Turn ignition switch “OFF”.
2. Connect “CONSULT-II” to the data link connector.

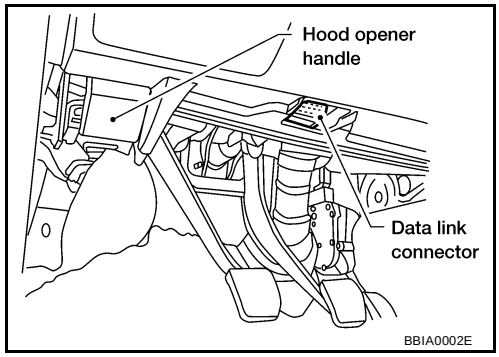

3. Turn ignition switch “ON”.
4. Touch “START”.

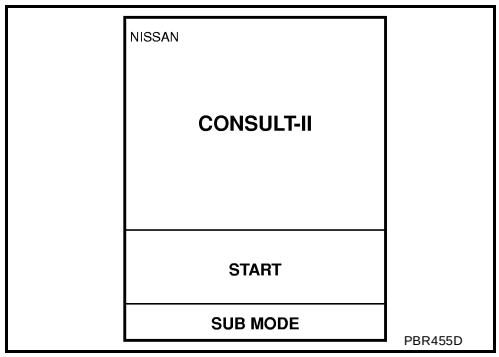

5. Touch “BCM”.

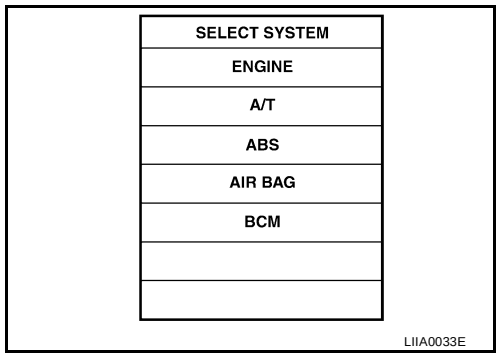

6. Touch “MULTI REMOTE ENT”.

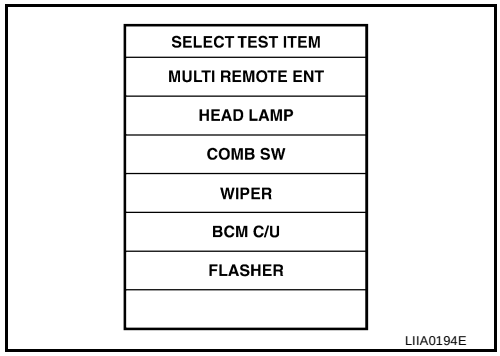

7. Select diagnosis mode.
“DATA MONITOR”, “ACTIVE TEST” and “WORK SUPPORT” are available.

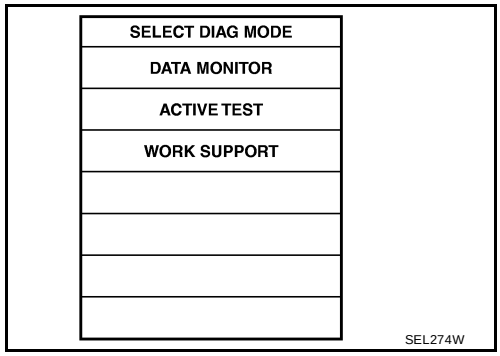

CONSULT-II Application Items

EIS000QF

“MULTI REMOTE CONT SYS”

Data Monitor

Monitored Item	Description
DOOR SW-AS	Indicates [ON/OFF] condition of door switch RH.
DOOR SW-DR	Indicates [ON/OFF] condition of front door switch LH.
KEY ON SW	Indicates [ON/OFF] condition of key switch.
ACC ON SW	Indicates [ON/OFF] condition of ignition switch in ACC position.
IGN ON SW	Indicates [ON/OFF] condition of ignition switch in ON position.
PANIC BTN	Indicates [ON/OFF] condition of panic signal from key fob.
UN BUTTON/SIG	Indicates [ON/OFF] condition of unlock signal from key fob.
LK BUTTON/SIG	Indicates [ON/OFF] condition of lock signal from key fob.
KEY CYL LK-SW	Indicates [ON/OFF] condition of lock signal from door key cylinder switch.
KEY CYL UN-SW	Indicates [ON/OFF] condition of unlock signal from door key cylinder switch.
UNLK SW DR/AS	Indicates [ON/OFF] condition of unlock signal from lock/unlock switch.
LOCK SW DR/AS	Indicates [ON/OFF] condition of lock signal from lock/unlock switch.
DOOR SW-RR	Indicates [ON/OFF] condition of rear door switch.
LK/UN BTN ON	Indicates [ON/OFF] condition of lock/unlock signal at the same time from key fob.
TRUNK BTN/SIG	Indicates [ON/OFF] condition of trunk open signal from key fob.
UN BUTTON ON	Indicates [ON/OFF] condition of unlock signal from key fob.

Active Test

Test Item	Description
INT ILLUM	This test is able to check interior lamp illumination operation. The interior lamp illumination is turned on when “ON” on CONSULT-II screen is touched.
IGN ILLUM	This test is able to check ignition illumination operation. The ignition illumination is turned on when “ON” on CONSULT-II screen is touched.
FLASHER RIGHT(CAN)	This test is able to check right hazard reminder operation. The right hazard lamp turns on when “ON” on CONSULT-II screen is touched.

Test Item	Description
FLASHER LEFT(CAN)	This test is able to check left hazard reminder operation. The left hazard lamp turns on when “ON” on CONSULT-II screen is touched.
HORN	This test is able to check panic alarm and horn reminder operations. The alarm activate for 0.5 seconds after “ON” on CONSULT-II screen is touched.
HEAD LAMP(HI)	This test is able to check headlamps panic alarm operation. The headlamp illuminates for 0.5 seconds after “ON” on CONSULT-II screen is touched.
TRUNK/BACK DOOR	This test is able to check trunk lid opener actuator operation. The trunk is unlocked when “ON” on CONSULT-II screen is touched.

Work Support

Test Item	Description
REMO CONT ID CONFIR	It can be checked whether key fob ID code is registered or not in this mode.
REMO CONT ID REGIST	Key fob ID code can be registered.
REMO CONT ID ERASUR	Key fob ID code can be erased.
MULTI ANSWER BACK SET	Hazard and horn reminder mode can be changed in this mode. The reminder mode will be changed when “MODE SET” on CONSULT-II screen is touched.
AUTO LOCK SET	Auto locking function mode can be changed in this mode. The function mode will be changed when "MODE SET" on CONSULT-II screen is touched.
PANIC ALRM SET	Panic alarm operation mode can be changed in this mode. The operaition mode will be changed when "MODE SET" on CONSULT-II screen is touched.
TRUNK OPEN SET	Trunk lid opener operation mode can be changed in this mode. The operation mode will be changed when "MODE SET" on CONSULT-II screen is touched.
PW DOWN SET	Keyless power window down (open) operation mode can be changed in this mode. The operation mode will be changed when "MODE SET" on CONSULT-II screen is touched.

Hazard and horn reminder mode

	MODE 1 (C mode)		MODE 2 (S mode)		MODE 3		MODE 4		MODE 5		MODE 6	
Key fob operation	Lock	Unlock	Lock	Unlock	Lock	Unlock	Lock	Unlock	Lock	Unlock	Lock	Unlock
Hazard warning lamp flash	Twice	Once	Twice	—	—	—	Twice	Once	Twice	—	—	Once
Horn sound	Once	—	—	—	—	—	—	—	Once	—	Once	—

Auto locking function mode

	MODE 1	MODE 2	MODE 3
Auto locking function	5 minutes	Nothing	1 minuites

Panic alarm operation mode

	MODE 1	MODE 2	MODE 3
Key fob operation	0.5 seconds	Nothing	1.5 seconds

Trunk open operation mode

	MODE 1	MODE 2	MODE 3
Key fob operation	0.5 seconds	Nothing	1.5 seconds

Power window down operation mode

	MODE 1	MODE 2	MODE 3
Key fob operation	3 seconds	Nothing	5 seconds

Trouble Diagnosis Procedure

EIS000QG

1. Check the trouble symptom and customer's requests.
2. Understand outline of system. Refer to BL-44, "System Description" .

3. Confirm that power door lock system operates normally. Refer to BL-16, "POWER DOOR LOCK SYSTEM" .
4. Perform pre-diagnosis inspection. Refer to BL-59, "Pre-Diagnosis Inspection" .
5. Refer to trouble diagnosis chart by symptom, repair or replace any malfunctioning parts. Refer to BL-59, "Trouble Diagnoses" .
6. **Inspection End.**

Pre-Diagnosis Inspection

EIS000QH

BCM POWER SUPPLY AND GROUND CIRCUIT INSPECTION

1. FUSE INSPECTION

- Check the following fuses and fusible link in the fuse block (J/B) and fuse and fusible link box.

Unit	Terminal No.	Signal name	No.	Location
BCM	7	Battery power supply	f	Fuse and fuslible link box
	36	ACC power supply	6	Fuse block (J/B)
	35	IGN power supply	12	Fuse block (J/B)

OK or NG

OK >> GO TO 2.
NG >> Replace the fuse or fusible link.

2. POWER SUPPLY CIRCUIT INSPECTION

Disconnect BCM connector, and connect vehicle-side connector terminals shown below to positive probe and body ground to negative probe. Measure voltage.

Unit	Terminal No.	Signal name	Ignition switch	Voltage
BCM	7	Battery power supply	OFF	Battery voltage
	36	ACC power supply	ACC	Battery voltage
	35	IGN power supply	ON	Battery voltage

OK or NG

OK >> GO TO 3.
NG >> Replace applicable power circuit harness.

3. GROUND CIRCUIT INSPECTION

Check continuity between BCM vehicle-side connector and body ground.

Unit	Terminal No.	Signal name	Ignition switch	Continuity
BCM	8, 27, 63	Ground	OFF	Yes

OK or NG

OK >> Power supply and ground circuits are normal.
NG >> Replace BCM ground circuit harness.

Trouble Diagnoses

EIS000QI

SYMPTOM CHART

NOTE:

- Always check key fob battery before replacing key fob.
- The panic alarm operation and trunk lid opener operation of remote keyless entry system do not activate with the ignition key inserted in the ignition key cylinder.
- Use Remote Keyless Entry Tester J-43241 (follow instructions on tester) to check operation of key fob before replacing key fob.

Symptom	Diagnoses/service procedure	Reference page
All function of remote keyless entry system do not operate.	1. Key fob battery and function check (use Remote Keyless Entry Tester J-43241)	BL-61
	2. Replace key fob (use Remote Keyless Entry Tester J-43241). Refer to ID Code Entry Procedure. **NOTE:** If the result of key fob function check with CONSULT-II is OK, Key fob is not malfunctioning.	BL-71
The new ID of key fob cannot be entered.	1. Key fob battery and function check (use Remote Keyless Entry Tester J-43241)	BL-61
	2. Key switch (insert) check	BL-63
	3. Door switch check	BL-62
	4. Replace key fob (use Remote Keyless Entry Tester J-43241). Refer to ID Code Entry Procedure. **NOTE:** If the result of key fob function check with CONSULT-II is OK, Key fob is not malfunctioning.	BL-71
Door lock or unlock does not function. (If the power door lock system does not operate manually, check power door lock system. Refer to BL-16, "POWER DOOR LOCK SYSTEM")	1. Key fob battery and function check (use Remote Keyless Entry Tester J-43241)	BL-61
	2. Replace key fob (use Remote Keyless Entry Tester J-43241). Refer to ID Code Entry Procedure . **NOTE:** If the result of key fob function check with CONSULT-II is OK, Key fob is not malfunctioning.	BL-71
Hazard and horn reminder does not activate properly when pressing lock or unlock button of key fob.	1. Hazard reminder check	BL-65
	2. Horn reminder check	BL-67
	3. Door switch check	BL-62
	4. Replace BCM.	—
Room lamp, ignition illumination and step lamp operation do not activate properly.	1. Room lamp operation check	BL-68
	2. Ignition illumination operation check	BL-69
	3.Step lamp operation check	BL-70
	4. Door switch check	BL-62
Panic alarm (horn and headlamp) does not activate when panic alarm button is continuously pressed.	1. Key fob battery and function check (use Remote Keyless Entry Tester J-43241)	BL-61
	2. Vehicle security operation check. Refer to Vehicle security system.	BL-87
	3. Key switch (insert) check	BL-63
	4. Replace key fob (use Remote Keyless Entry Tester J-43241). Refer to ID Code Entry Procedure. **NOTE:** If the result of key fob function check with CONSULT-II is OK, Key fob is not malfunctioning.	BL-71
Trunk lid does not open when trunk opener button is continuously pressed.	1. Key fob battery and function check (use Remote Keyless Entry Tester J-43241)	BL-61
	2. Trunk release solenoid check	BL-64
	3. Key switch (insert) check	BL-63
	4. Replace BCM.	—

Key Fob Battery and Function Check

EIS000QJ

1. CHECK KEY FOB BATTERY

Remove battery and measure voltage across battery positive and negative terminals, (+) and (–).

Voltage : 2.5V - 3.0V

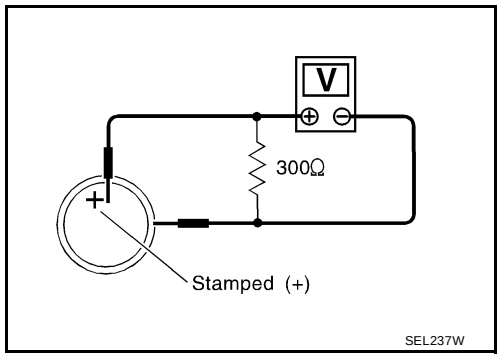

NOTE:
Key fob does not function if battery is not set correctly.

OK or NG?

OK >> GO TO 2
NG >> Replace battery.

2. CHECK KEY FOB FUNCTION

With CONSULT-II

Check key fob function in “DATA MONITOR” mode with CONSULT-II.

When pushing each button of key fob, the corresponding monitor item should be turned as follows.

Condition	Monitor item	
Pushing LOCK	LK BUTTON/SIG	: ON
Pushing UNLOCK	UN BUTTON/SIG	: ON
Pushing TRUNK	TRUNK BTN/SIG	: ON
Pushing PANIC	PANIC BTN	: ON
Pushing LOCK and UNLOCK at the same time	LK/UN BTN ON	: ON

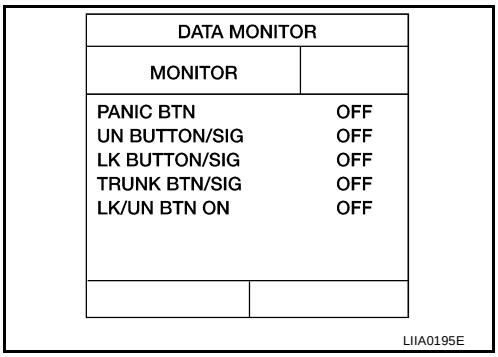

OK or NG?

OK >> Key fob is OK. Further inspection is necessary. Refer to BL-59, "SYMPTOM CHART" .
NG >> Replace key fob.

Door Switch Check

EIS000QK

1. CHECK DOOR SWITCH INPUT SIGNAL

With CONSULT-II

Check door switches (“DOOR SW-RR”, “DOOR SW-DR” and “DOOR SW-AS”) in “DATA MONITOR” mode with CONSULT-II.

Monitor item	Condition	
DOOR SW-RR	OPEN	: ON
	CLOSE	: OFF
DOOR SW-DR	OPEN	: ON
	CLOSE	: OFF
DOOR SW-AS	OPEN	: ON
	CLOSE	: OFF

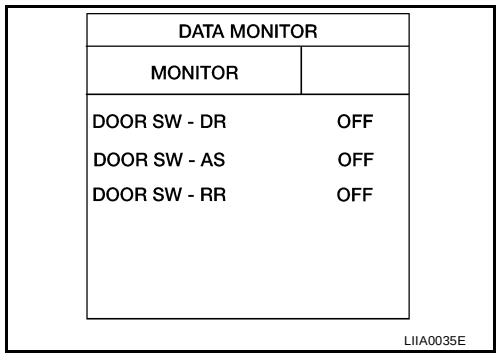

Without CONSULT-II

Check voltage between BCM harness connector terminals 10 (P/L), 11 (R/B), 14 (SB) and/or 54 (SB) (without vehicle security system) and ground.

	Terminals		Condition	Voltage [V]
	(+)	(-)		
Front door switch RH	10	Ground	OPEN	0
			CLOSE	Approx. 12
Rear door switch	11	Ground	OPEN	0V
			CLOSE	Approx. 12
Front door switch LH	14 and/ or 54	Ground	OPEN	0V
			CLOSE	Approx. 12

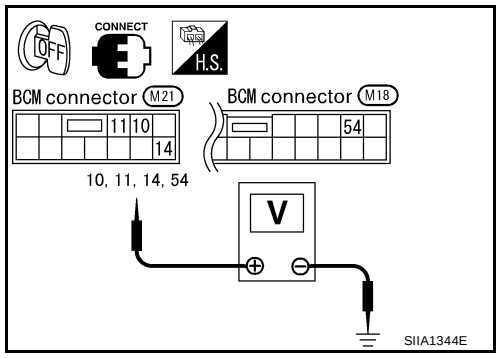

OK or NG?

OK >> Door switch is OK.
NG >> GO TO 2

2. CHECK DOOR SWITCH

1. Disconnect door switch and BCM harness connector.
2. Check continuity between door switch harness connector B8, B18, B108, B116 terminals 1 (R/B), 2 (SB or P/L) and BCM harness connector ? terminals 10 (P/L), 11 (R/B) , 14 (SB) and/or 54 (SB) (without vehicle security system).

Front door RH	**2 (P/L) - 10 (P/L)**	**: Continuity should exist.**
Rear door	**1 (R/B) - 11 (R/B)**	**: Continuity should exist.**
Front door LH	**2 (SB) - 14 (SB)** **2 (SB) - 54 (SB)**	**: Continuity should exist.**

3. Check continuity between door switch harness connector B8, B18, B108, B116 terminals 1(R/B), 2 (SB or P/L) and ground.

Front door RH	**2 (P/L) - Ground**	**: Continuity should not exist.**
Rear door	**1 (R/B) - Ground**	**: Continuity should not exist.**
Front door LH	**2 (SB) - Ground**	**: Continuity should not exist.**

OK or NG?

OK >> Replace door switch.
NG >> Replace door switch harness.

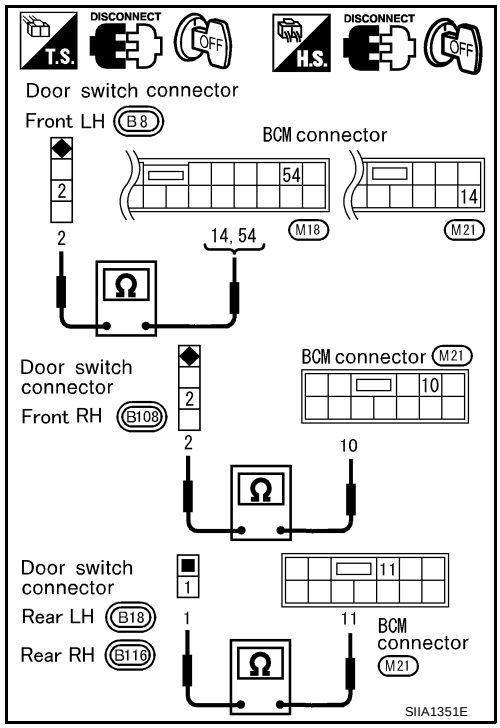

EIS000QL

Key Switch (insert) Check

1. CHECK KEY SWITCH INPUT SIGNAL

Check voltage between BCM harness connector M18 terminal 62 (B/R) and ground.

Condition of key switch	Voltage [V]
Key is inserted.	**: Approx. 12**
Key is removed.	**: 0**

OK or NG?

OK >> Key switch is OK.
NG >> GO TO 2

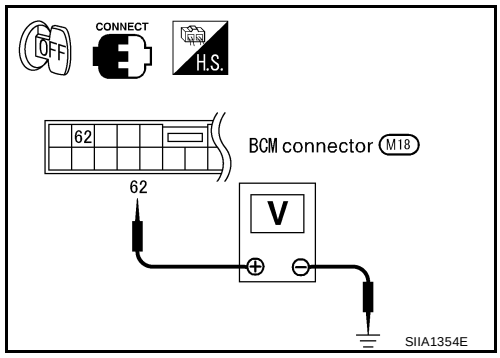

2. CHECK KEY SWITCH (INSERT)

Check continuity between key switch connector M26 terminals 3 and 4.

Condition of key switch	Continuity
Key is inserted.	Yes
Key is removed.	No

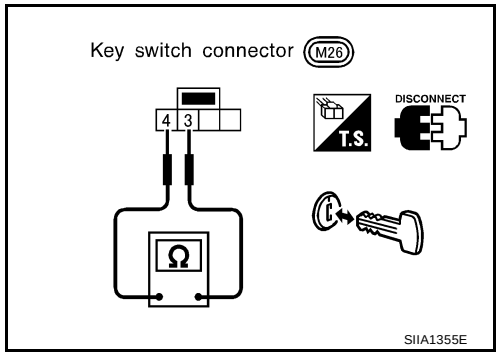

OK or NG?

OK >> Check the following.
- 10A fuse [No. 19, located in fuse block (J/B)]
- Harness for open or short between key switch and fuse
- Harness for open or short between BCM and key switch

NG >> Replace key switch.

Trunk Release Solenoid Check

EIS000QM

1. CHECK TRUNK LID OPENER

Check trunk release operation with trunk lid opener switch.

NOTE:
First check trunk lid opener cancel switch position. Refer to BL-85, "TRUNK LID OPENER"

Does trunk lid open?

Yes >> GO TO 2.
No >> Check trunk release solenoid and the circuit.

2. CHECK TRUNK LID OPENER ACTUATOR OPERATION

With CONSULT-II

1. Select “ACTIVE TEST” in “MULTI REMOTE ENT” with CONSULT-II.
2. Select “TRUNK/BACK DOOR” and touch “ON”.

Trunk release solenoid should operate.

NOTE:
If CONSULT-II is not available, skip this procedure and go to the next step.

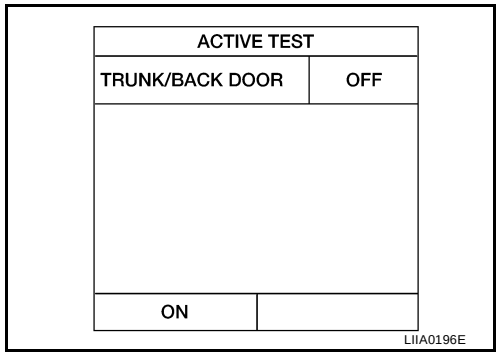

OK or NG?

OK >> Trunk lid opener actuator circuit is OK.
NG >> Check harness for open or short between BCM and trunk lid opener actuator.

3. CHECK TRUNK LID OPENER ACTUATOR CIRCUIT

Without CONSULT-II

1. Disconnect trunk lamp switch and trunk release solenoid connector.
2. Check voltage between trunk lamp switch and trunk release solenoid harness connector B32 terminal 3 (P) and ground.

   3 (P) - Ground : Battery voltage should exist.

3. Check continuity between trunk lamp switch and trunk release solenoid harness connector B32 terminal 4 (B) and ground.

   4 (B) - Ground : Continuity should exist.

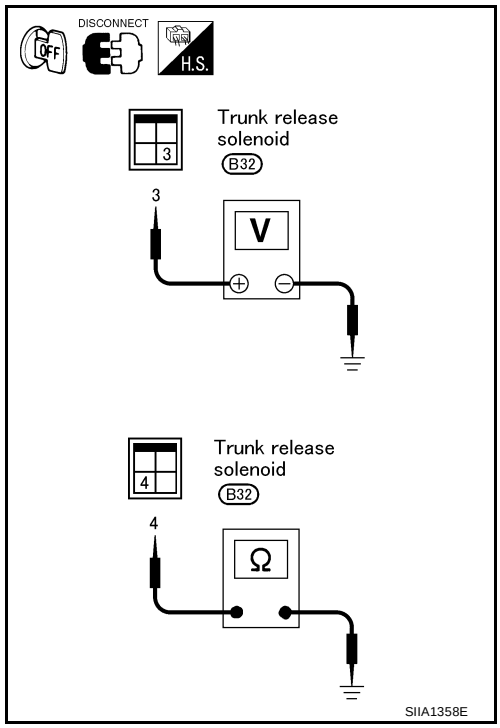

OK or NG?

OK >> Replace trunk release solenoid.
No >> Check the following.
1. Harness for open or short between BCM and trunk release solenoid
2. Harness for open or short between trunk lamp switch and trunk release solenoid and ground
3. Replace BCM

Hazard Reminder Check

EIS000QN

1. CHECK HAZARD INDICATOR

Check if hazard indicator flashes with hazard switch.

Does hazard indicator operate?

Yes >> GO TO 2
No >> Check “hazard indicator” Refer to LT-80, "TURN SIGNAL AND HAZARD WARNING LAMPS" .

2. SELF-DIAGNOSTIC RESULT CHECK

With CONSULT–II

- Select “BCM” on “SELECTSYSTEM” screen.
- Select “BCM C/U ” on “SELECT TEST ITEM”screen, and select “SELF-DIAG RESULTS”.
- Check display content in self-diagnostic results.

CONSULT-II display code	Diagnosis item
U1000	CAN COMM
	CAN CIRC 1
	CAN CIRC 2
	CAN CIRC 3
	CAN CIRC 4
	CAN CIRC 6

Contents displayed?

No malfunction >> GO TO 4.
Malfunction in CAN communication system>>GO TO 3.
Malfunction in diagnosis system or headlamp switch system>>BCS-16, "Combination Switch Inspection According to Self-Diagnostic Results".

3. SYMPTOM CHECK

With CONSULT–II

- Select “CAN DIAGNOSIS SUPPORT MONITOR” in "DATA MONITOR".
- Select “START” and check display content.

Diagnosis item	Self-diagnostic result content	
	Normal	Not normal (Example)
CAN COMM	OK	NG
CAN CIRC 1	OK	UNKWN
CAN CIRC 2	OK	UNKWN
CAN CIRC 3	OK	UNKWN
CAN CIRC 4	OK	UNKWN
CAN CIRC 6	OK	UNKWN

>> After printing the monitor items, go to “CAN System”. Refer to LAN-4, "CAN COMMUNICATION" .

4. CHECK HAZARD REMINDER OPERATION WITH CONSULT-II

With CONSULT-II

1. Select “ACTIVE TEST” in “MULT REMOTE ENT” with CONSULT-II.
2. Select “FLASHER RIGHT(CAN)” or "FLASHER LEFT(CAN)" and touch “ON”.

Hazard indicator should illuminate.

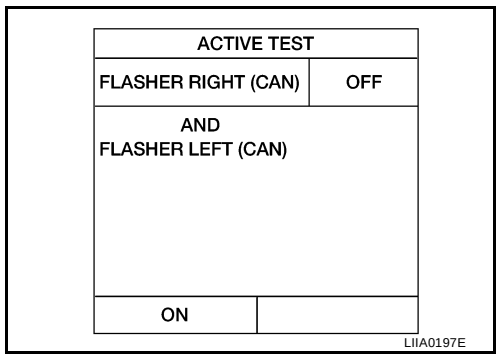

OK or NG?

OK >> Hazard reminder operation is OK.
NG >> Replace BCM.

Horn Reminder Check

EIS000QO

1. CHECK HORN

Check if horn sounds with horn switch.

Does horn operate?

Yes >> GO TO 2.
No >> Check horn circuit. Refer to WW-32, "HORN" .

2. SELF-DIAGNOSTIC RESULT CHECK

With CONSULT–II

- Select “BCM” on “SELECT SYSTEM” screen.
- Select “BCM C/U ” on “SELECT TEST ITEM”screen, and select “SELF-DIAG RESULTS”.
- Check display content in self-diagnostic results.

CONSULT-II display code	Diagnosis item
U1000	CAN COMM
	CAN CIRC 1
	CAN CIRC 2
	CAN CIRC 3
	CAN CIRC 4
	CAN CIRC 6

Contents displayed?

No malfunction >> GO TO 4.
Malfunction in CAN communication system >> GO TO 3.
Malfunction in diagnosis system or head lamp switch system >> BCS-16, "Combination Switch Inspection According to Self-Diagnostic Results" .

3. SYMPTOM CHECK

With CONSULT–II

- Select “CAN DIAGNOSIS SUPPORT MONITOR” in "DATA MONITOR".
- Select “START” and check display content.

Diagnosis item	Self-diagnostic result content	
	Normal	Not normal (Example)
CAN COMM	OK	NG
CAN CIRC 1	OK	UNKWN
CAN CIRC 2	OK	UNKWN
CAN CIRC 3	OK	UNKWN
CAN CIRC 4	OK	UNKWN
CAN CIRC 6	OK	UNKWN

>> After printing the monitor items, go to “CAN System”. Refer to LAN-4, "CAN COMMUNICATION" .

4. CHECK HORN REMINDER OPERATION WITH CONSULT-II

With CONSULT-II

1. Select “ACTIVE TEST” in “MULTI REMOTE ENT” with CONSULT-II.
2. Select “HORN” and touch ON.

Horn should sound.

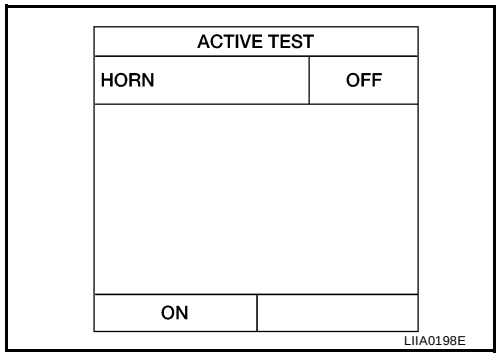

OK or NG?

OK >> Horn reminder operation is OK.
NG >> Replace BCM.

Interior Lamp Operation Check

EIS000QP

1. CHECK INTERIOR LAMP

Check if the interior lamp switch is in the ON position and the lamp illuminates.

Does interior lamp illuminate?

Yes >> GO TO 2
No >> Check interior room lamp circuit. Refer to LT-123, "INTERIOR ROOM LAMP" .

2. CHECK INTERIOR LAMP OPERATION

With CONSULT-II

1. Select “ACTIVE TEST” in “MULTI-REMOTE CONT SYS” with CONSULT-II.
2. Select “INT ILLUM” and touch ON.

Interior lamp should illminate.

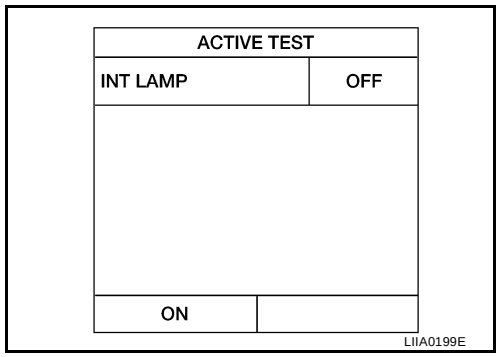

Without CONSULT-II

Push unlock button of key fob with all doors closed and driver's door locked, and check voltage between BCM harness connector M20 terminal 32 (R) and ground.

Key Fob	Voltage [V]
Unlock button is pushed.	: 0 (Approx. 30 seconds)
Unlock button is not pushed	: Battery voltage

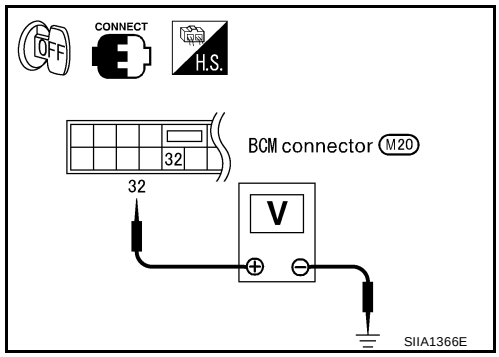

OK or NG

OK >> System is OK.
NG >> Check harness open or short between BCM and interior lamp.

Ignition Illumination Operation Check

EIS000QQ

1. CHECK IGNITION ILLUMINATION OPERATION

With CONSULT-II

1. Select “ACTIVE TEST” IN “MULTI REMOTE ENT” with CONSULT-II.
2. Select “IGN ILLUM” and touch “ON”.

Ignition illuminate should illuminate.

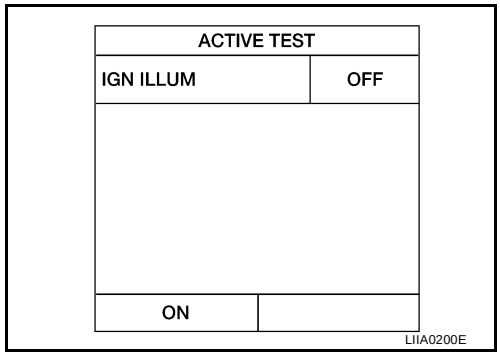

Without CONSULT-II

Push unlock button of key fob with all doors closed and driver's door locked, and check voltage between BCM harness connector M20 terminal 34 (R/Y) and ground.

Key Fob	Voltage [V]
Unlock button is pushed.	: 0 (Approx. 30 seconds)
Unlock button is not pushed	: Battery voltage

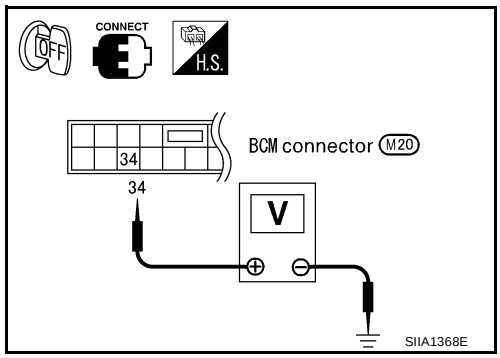

OK or NG

OK >> System is OK.

NG >> Check the following.

- Harness for open or short between BCM and key hole illumination.
- Ignition illumination

Step Lamp Operation Check

EIS000QR

1. CHECK STEP LAMP OPERATION

With CONSULT-II

1. Select “ACTIVE TEST” IN “MULTI REMOTE ENT” with CONSULT-II.
2. Select “INT ILLUM” and touch “ON”.

Step lamp should illuminate.

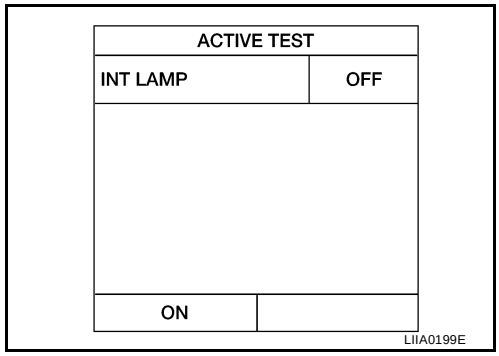

Without CONSULT-II

Push unlock button of key fob with all doors closed and driver's door locked, and check voltage between BCM harness connector M20 terminal 33 (R/W) and ground.

Key Fob	Voltage [V]
Unlock button is pushed.	: 0 (Approx. 30 seconds)
Unlock button is not pushed	: Battery voltage

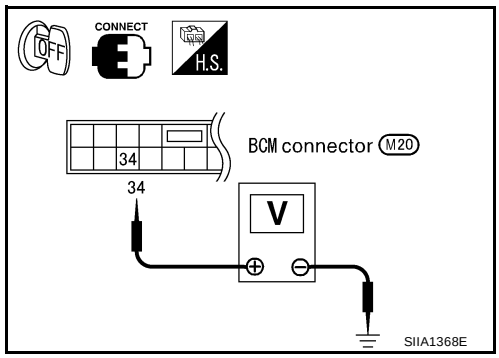

OK or NG

OK >> System is OK.

NG >> Check the following.

- Harness for open or short between BCM and step lamp.
- Step lamp

ID Code Entry Procedure

EIS000QS

KEY FOB ID SET UP WITH CONSULT-II

NOTE:

If a key fob is lost, the ID code of the lost key fob must be erased to prevent unauthorized use. When the ID code of a lost key fob is not known, all controller ID codes should be erased. After all ID codes are erased, the ID codes of all remaining and/or new key fobs must be re-registered.

1. Turn ignition switch “OFF”.
2. Connect “CONSULT-II” to the data link connector.

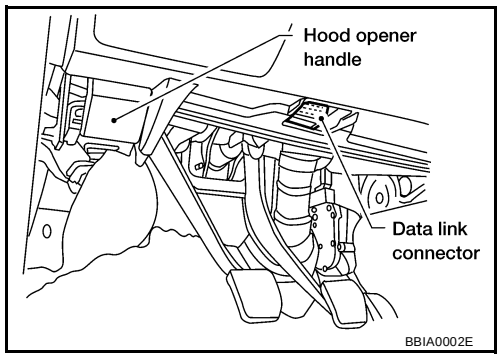

3. Turn ignition switch ON.
4. Touch “START”.

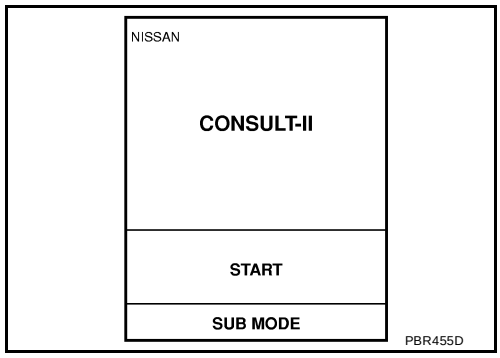

5. Touch “BCM”.

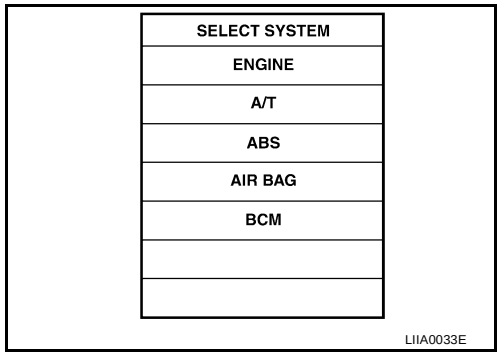

6. Touch “MULTI REMOTE ENT”.

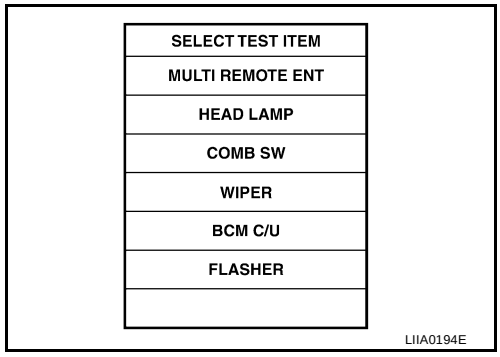

7. Touch “WORK SUPPORT”.

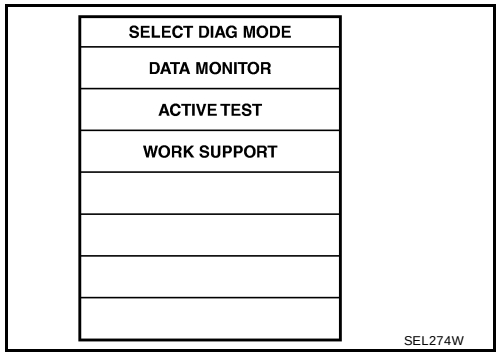

8. The items are shown on the figure at left can be set up.
   - “REMO CONT ID CONFIR”
     Use this mode to confirm if a key fob ID code is registered or not.
   - “REMO CONT ID REGIST”
     Use this mode to register a key fob ID code.

     NOTE:
     Register the ID code when key fob or BCM is replaced, or when additional key fob is required.
   - “REMO CONT ID ERASUR”
     Use this mode to erase a key fob ID code.

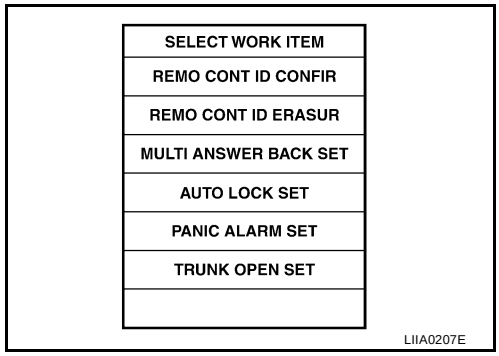

KEY FOB ID SET UP WITHOUT CONSULT-II

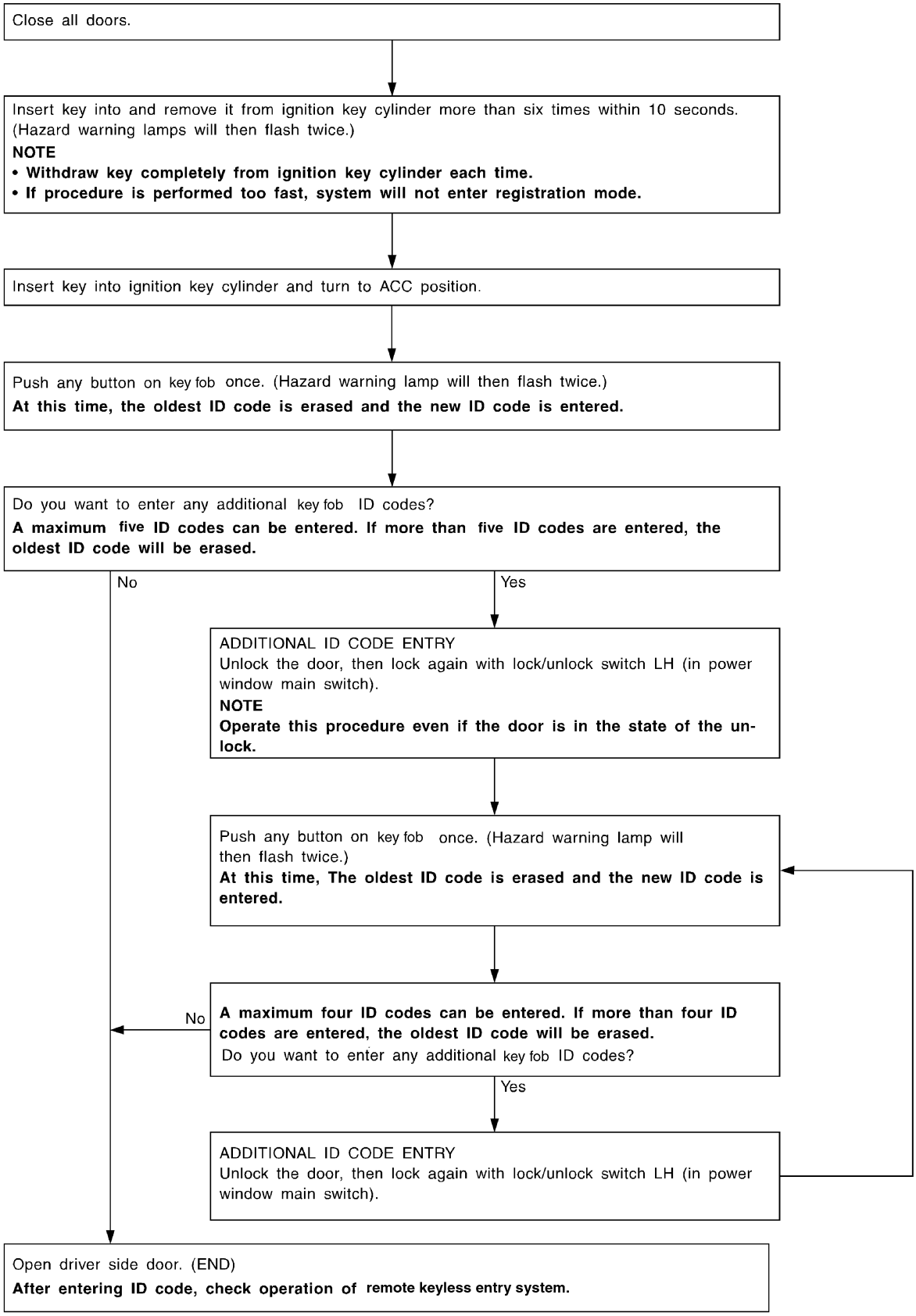

LIIA0208E

NOTE:

- If a key fob is lost, the ID code of the lost key fob must be erased to prevent unauthorized use. A specific ID code can be erased with CONSULT-II. However, when the ID code of a lost key fob is not known, all controller ID codes should be erased. After all ID codes are erased, the ID codes of all remaining and/or new key fobs must be re-registered.
  To erase all ID codes in memory, register one ID code (key fob) five times. After all ID codes are erased, the ID codes of all remaining and/or new key fobs must be re-registered.
- When registering an additional key fob, the existing ID codes in memory may or may not be erased. If five ID codes are stored in memory, when an additional code is registered, only the oldest code is erased. If less than five ID codes are stored in memory, when an additional ID code is registered, the new ID code is added and no ID codes are erased.
- If you need to activate more than two additional new key fobs, repeat the procedure “Additional ID code entry” for each new key fob.
- Entry of maximum five ID codes is allowed. When more than five ID codes are entered, the oldest ID code will be erased.
- Even if same ID code that is already in the memory is input, the same ID code can be entered. The code is counted as an additional code.

Key Fob Battery Replacement

EIS000QT

NOTE:

- Be careful not to touch the circuit board or battery terminal.
- The key fob is water-resistant. However, if it does get wet, immediately wipe it dry.

1. Open the lid using a coin.
2. Remove the battery.
3. Install the new battery, positive side down.
4. Close the lid securely. Push the key fob buttons two or three times to check operation.

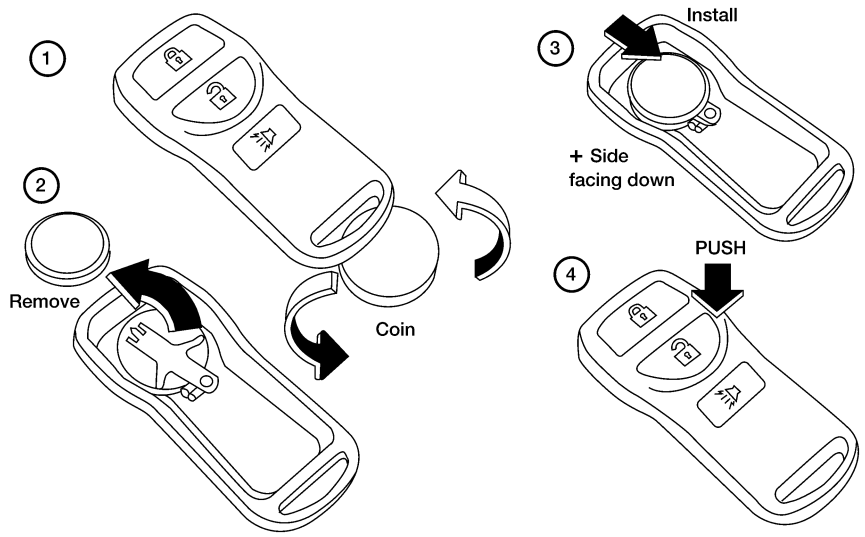

LIIA0203E

DOOR

PFP:80100

Fitting Adjustment

EIS000QU

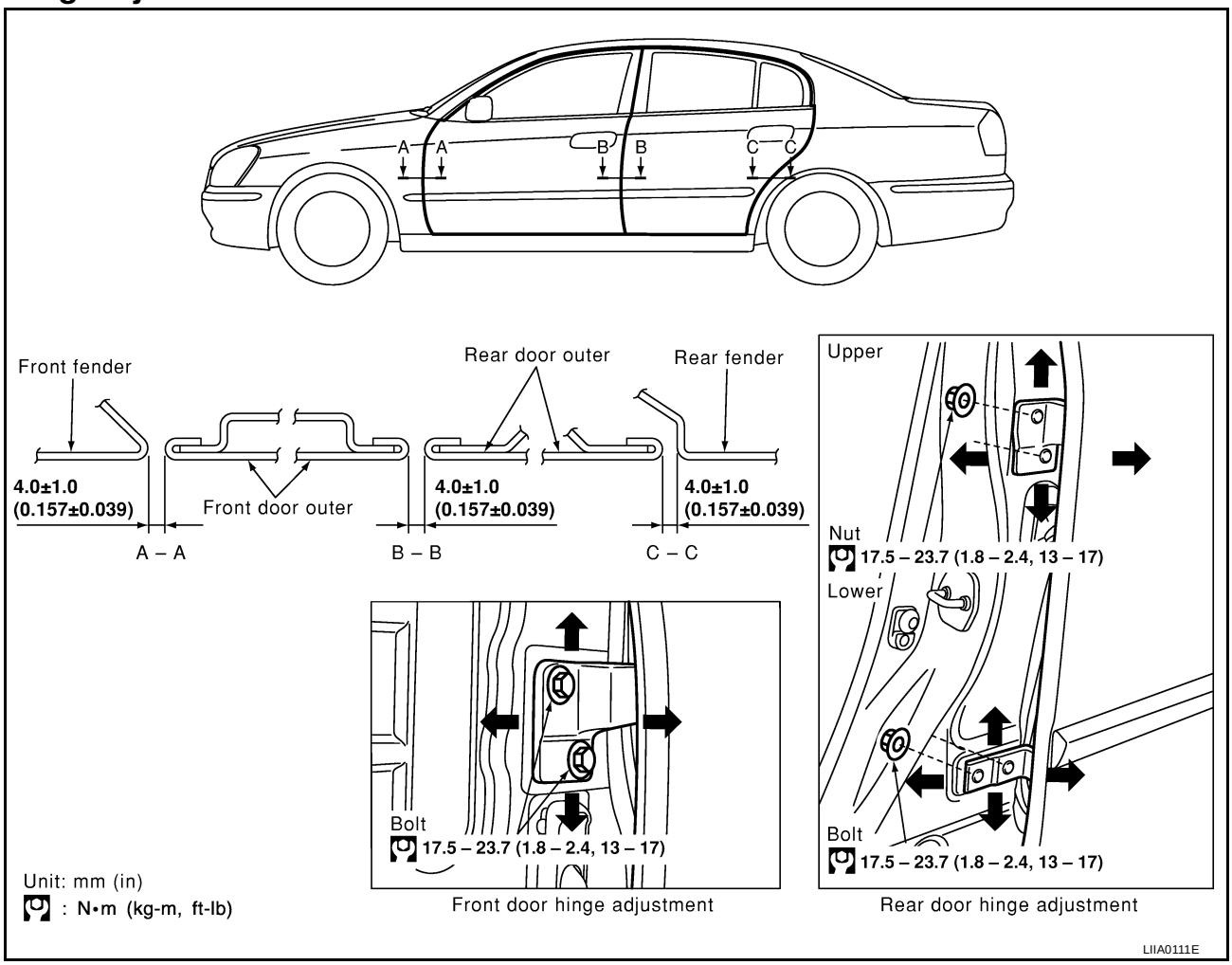

FRONT DOOR

Longitudinal clearance and surface height adjustment at front end

1. Remove the fender. Refer to .
2. Loosen the hinge mounting bolts. Raise the front door at rear end to adjust.

REAR DOOR

Longitudinal clearance and surface height adjustment at front end

1. Remove the center pillar upper garnish and center pillar lower garnish. Refer to EI-29, "Removal and Installation" .
2. Accessing from inside the vehicle, loosen the mounting nuts. Open the rear door, and raise the rear door at rear end to adjust.

STRIKER ADJUSTMENT

1. Adjust the striker so that it becomes parallel with the lock insertion direction.

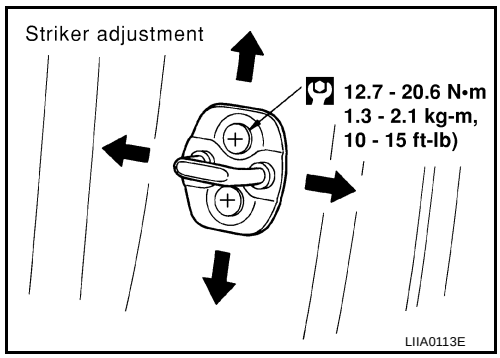

Removal and Installation

EIS000QV

CAUTION:

- **When removing and installing the door assembly, support the door with a jack and shop cloth to protect the door and body.**
- **When removing and installing door assembly, be sure to carry out the fitting adjustment.**
- **Check the hinge rotating part for poor lubrication. If necessary, apply "body grease".**

1. Remove the door finisher. Refer to EI-27, "DOOR FINISHER" .
2. Remove the inner seal.
3. Remove the door window and module assembly. Refer to GW-34, "Removal and Installation" .
4. Remove the door harness.
5. Remove the check link cover.
6. Remove the mounting bolts of the check link on the vehicle.

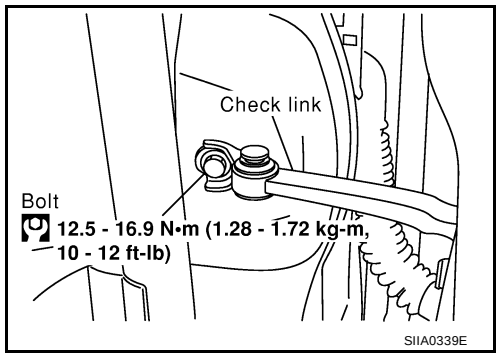

7. Remove the door-side hinge mounting nuts and bolts, and remove the door assembly.

Install in the reverse order of removal.

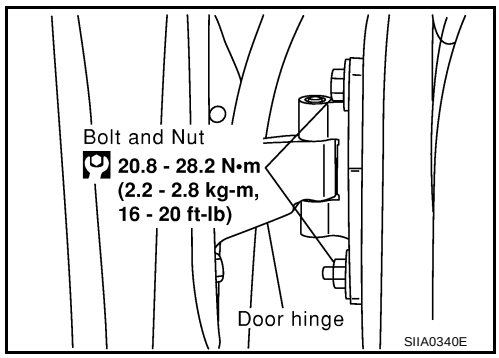

Door Weatherstrip

EIS000QW

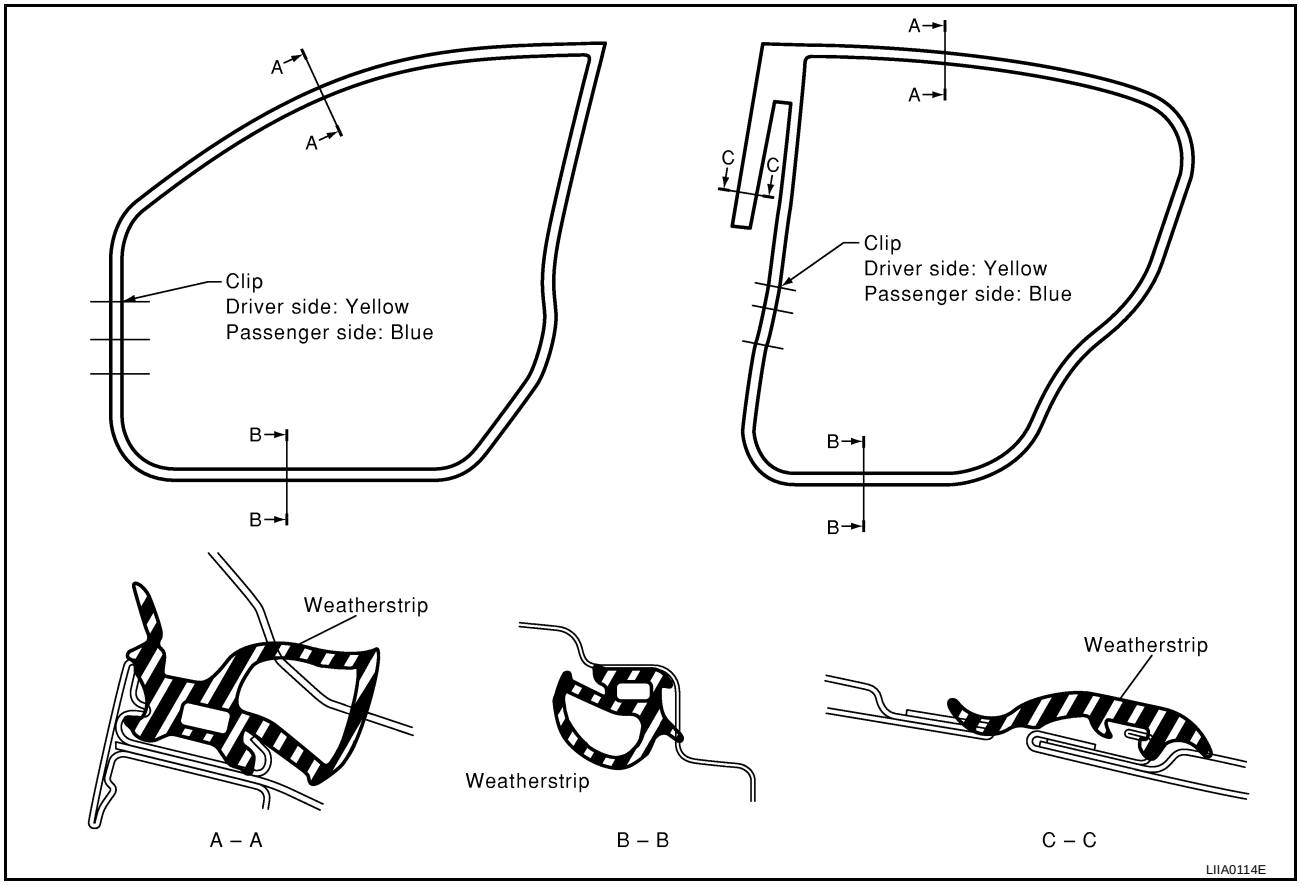

FRONT DOOR LOCK

PFP:80502

Component Structure

EIS000QX

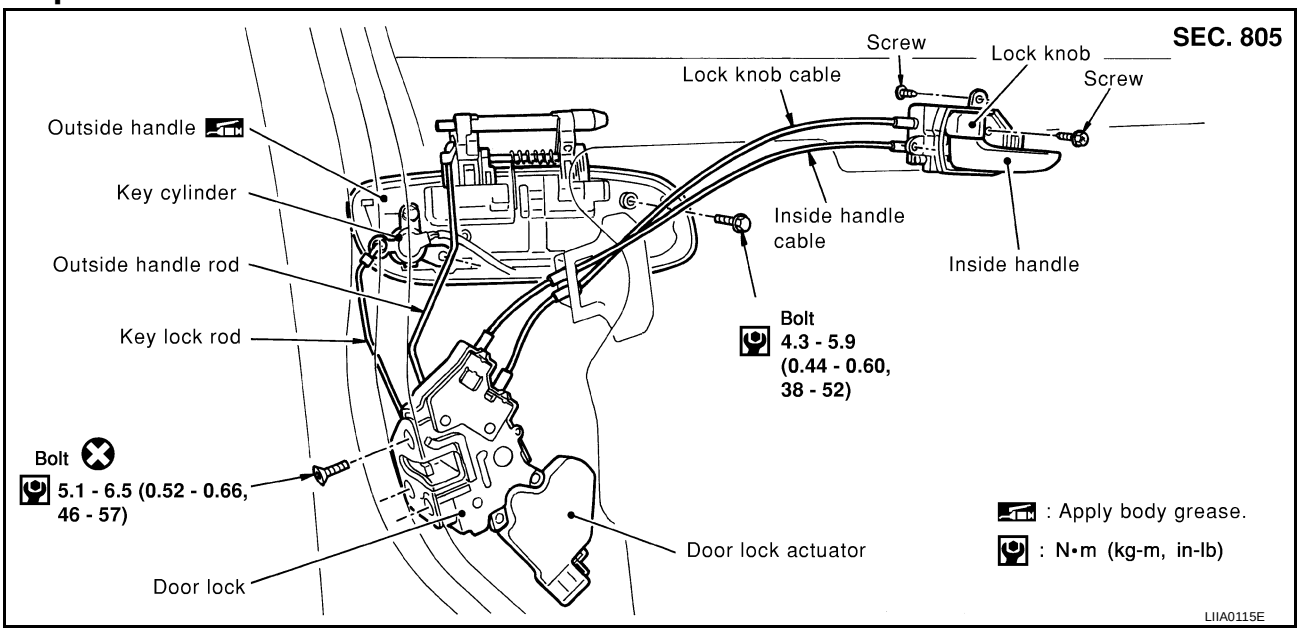

Inspection and Adjustment.

EIS000QY

1. Remove the front door finisher. Refer to EI-27, "DOOR FINISHER" .
2. Remove the front door window and front door module assembly. Refer to GW-34, "FRONT DOOR GLASS AND REGULATOR" .

EXTERIOR HANDLE ROD ADJUSTMENT

- Rotate the bushing to adjust so that the clearance between the bushing and rod becomes as shown in the figure.

CAUTION:
Be careful not to make the clearance 0 mm (0 in) or the rod will be pressed continuously.

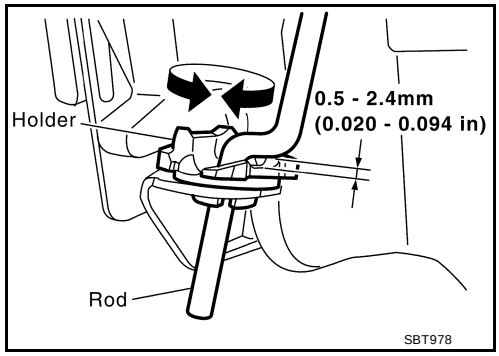

Removal and Installation

EIS000QZ

REMOVAL

1. Remove the front door finisher. Refer to EI-27, "DOOR FINISHER" .
2. Remove the front door window and front door module assembly. Refer to GW-34, "FRONT DOOR GLASS AND REGULATOR" .
3. Disconnect the interior handle cable and locking knob cable from the back side of the front door finisher.

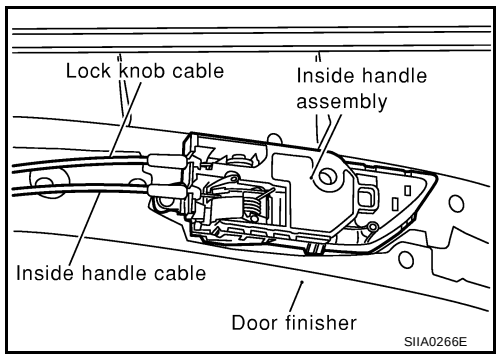

4. Reach to separate the key cylinder rod and exterior handle rod connection (on the handle).
5. Remove the mounting screws (TORX T30), remove the door lock assembly.
6. Disconnect the door lock actuator connector.

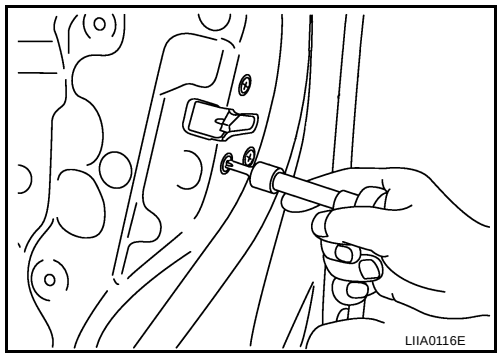

7. Remove the exterior handle mounting bolts, move the exterior handle assembly backward, and then remove it from the panel in front of the exterior handle escutcheon.

Install in the reverse order of removal.

CAUTION:
To install each rod, be sure to rotate the rod holder until a click is felt.

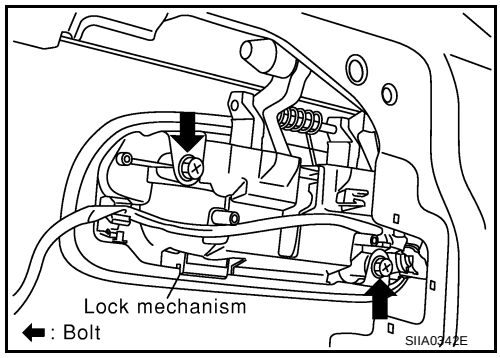

Disassembly and Assembly

EIS000R0

DISASSEMBLY

CAUTION:
Be sure to remove or install the actuator with the door lock assembly removed.

1. Remove the mounting screws, and remove the actuator from the door lock assembly.
2. Pull the actuator straight downward to separate it from the door lock assembly.

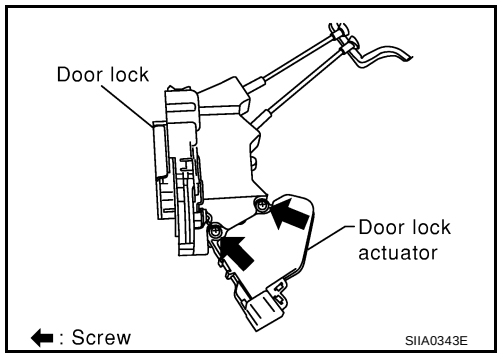

ASSEMBLY

1. Align the actuator pivot with the cutout on the knob lever of the door lock assembly, then assemble the actuator.
2. Move the knob lever and the actuator pivot toward the lock-on direction, and check that it engages securely.

REAR DOOR LOCK

PFP:82502

Components

EIS000R1

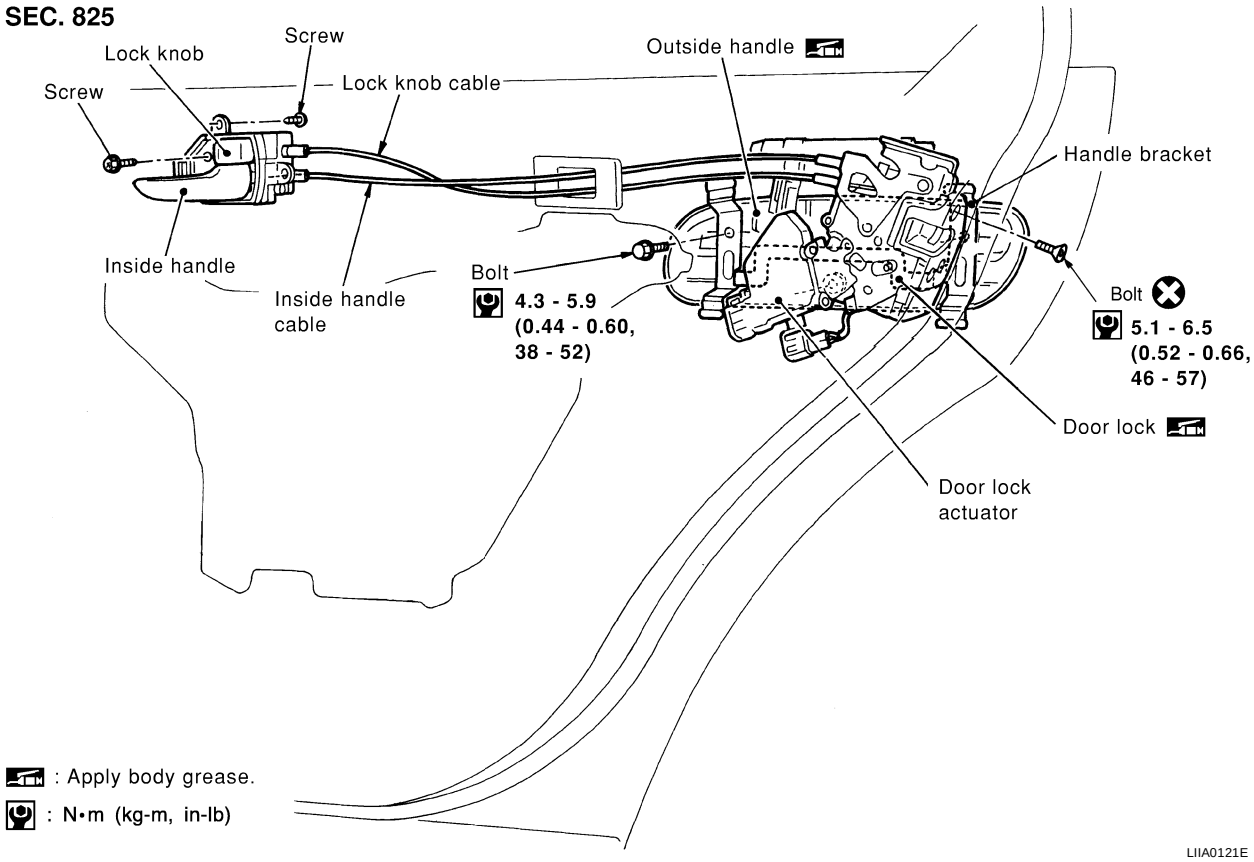

Inspection and Adjustment

EIS000R2

Remove the rear door finisher. Refer to EI-27, "DOOR FINISHER" .

EXTERIOR HANDLE ROD ADJUSTMENT

Rotate the bushing to adjust so that the clearance between the bushing and rod becomes as shown in the figure.

CAUTION:

Be careful not to make the clearance 0 mm (0 in) or the rod will be pressed continuously.

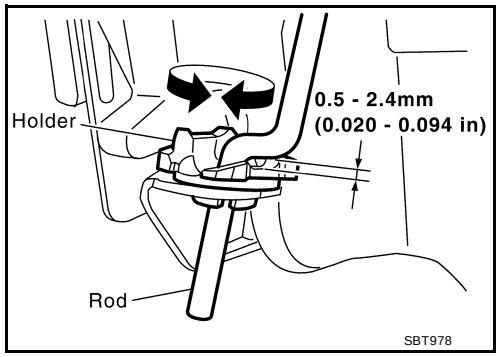

Removal and Installation of Door Lock

EIS000R3

REMOVAL

1. Remove the rear door finisher. Refer to EI-27, "DOOR FINISHER"

2. After gaining access to the interior handle on the back side of the rear door finisher, disconnect the interior handle cable and locking knob cable.

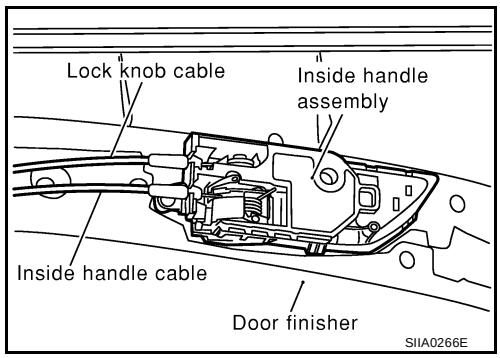

3. Remove the mounting screws (TORX T30), remove the door lock assembly.
4. Disconnect the door lock actuator connector.

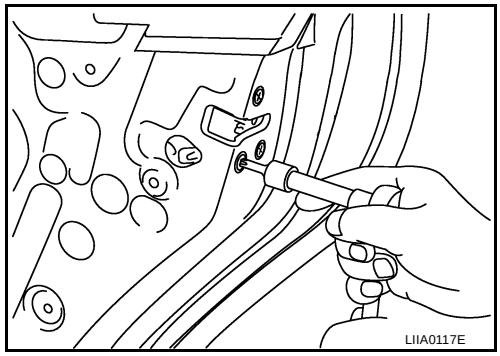

5. Remove the exterior handle mounting bolts, and move the handle backward to disengage it from the panel in front of the exterior handle escutcheon, then remove the handle.

Install in the reverse order of removal.

CAUTION:

To install each rod, be sure to rotate the rod holder until a click is felt.

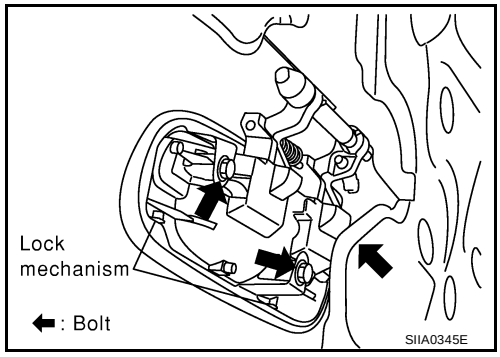

Disassembly and Assembly

EIS000R4

DISASSEMBLY

CAUTION:

Be sure to remove or install the actuator with the door lock assembly removed.

1. Remove the mounting screws, and remove the actuator from the door lock assembly.
2. Pull the actuator straight downward to separate it from the door lock assembly.

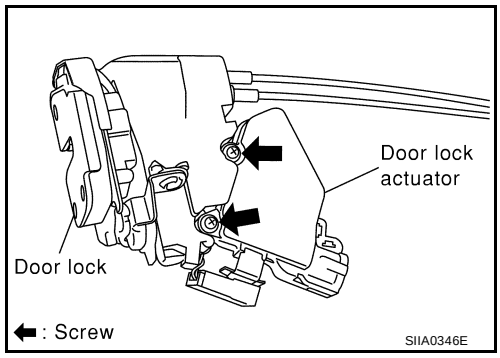

ASSEMBLY

1. Align the actuator pivot with the cutout on the knob lever of the door lock assembly, then assemble the actuator.
2. Move the knob lever and the actuator pivot toward the lock-on direction, and check that it engages securely.

TRUNK LID

PFP:H4300

Fitting Adjustment

EIS000R5

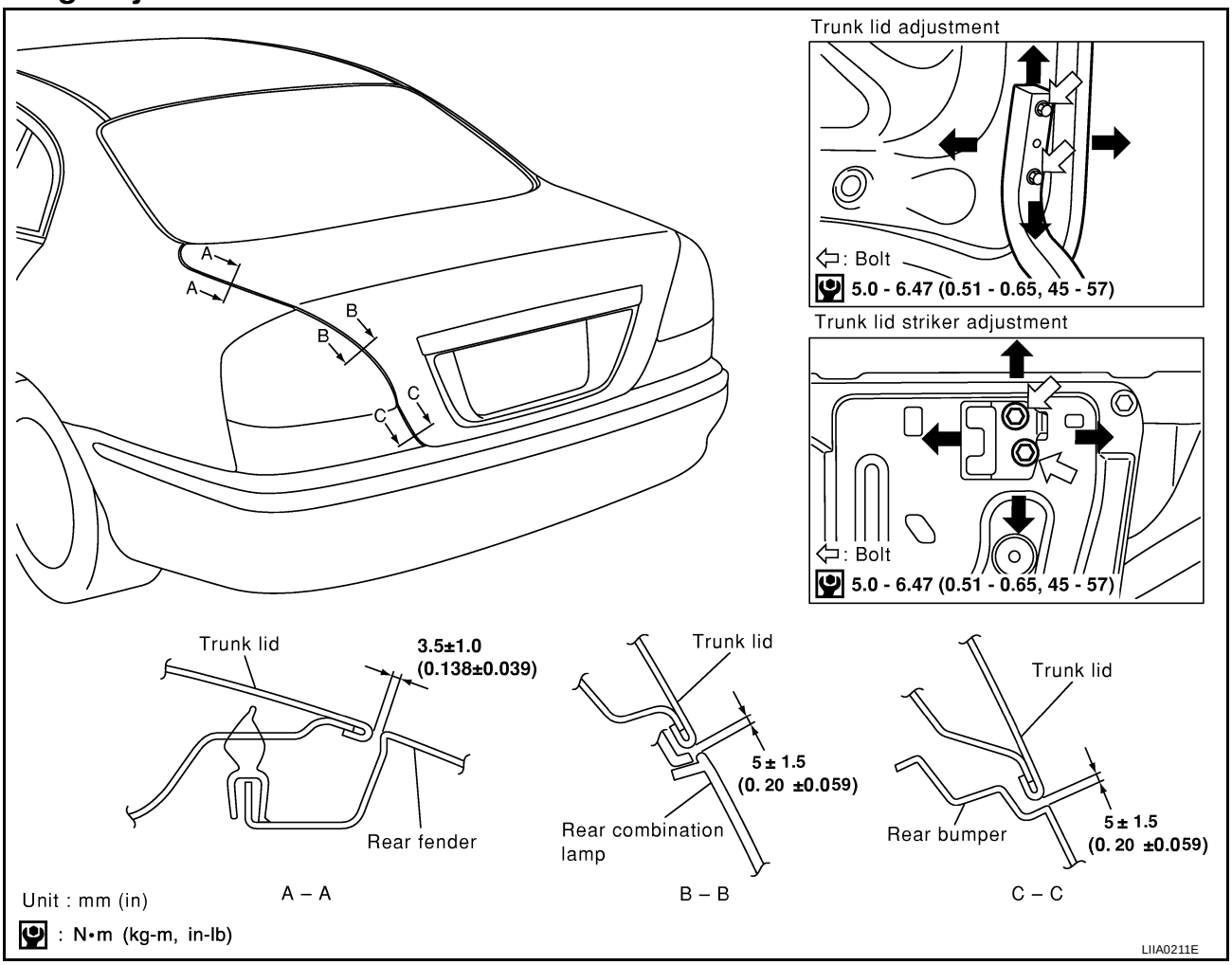

LONGITUDINAL AND LATERAL CLEARANCE ADJUSTMENT

1. With the striker released, loosen the trunk lid hinge mounting bolts to close the trunk lid.
2. Make the lateral clearance and the clearance to the rear window glass equal, and open the trunk lid to tighten the mounting bolts to the specified torque.

SURFACE HEIGHT ADJUSTMENT

1. Loosen the striker mounting bolts. Raise the striker to the top position, and temporarily tighten the upper mounting bolt at the position.
2. Close the trunk lid lightly and adjust the surface height, then open the trunk lid to finally tighten the striker mounting bolts to the specified torque.

Removal and Installation of Trunk Lid Assembly

EIS000R6

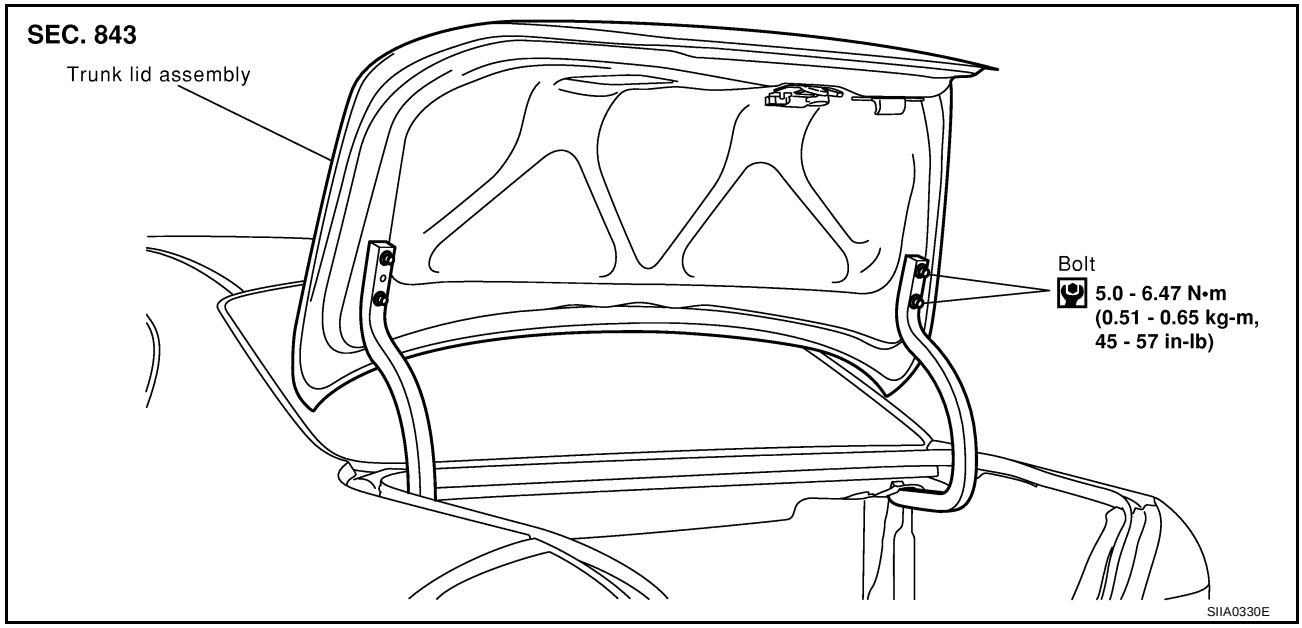

1. Remove the trunk lid finisher. Refer to EI-35, "TRUNK ROOM TRIM & TRUNK LID FINISHER" .
2. Disconnect the connectors in the trunk lid, and remove the harness clamps to pull the harness out of the trunk lid.
3. Remove the mounting bolts, and remove the trunk lid assembly.

CAUTION:
After installing, apply touch-up paint (the body color) onto the head of the hinge mounting bolts.

Install in the reverse order of removal.

Removal and Installation of Trunk Lid Lock

EIS000R7

LOCK REMOVAL

1. Remove the trunk lid finisher. Refer to EI-35, "TRUNK ROOM TRIM & TRUNK LID FINISHER" .
2. Separate the key cylinder rod.
3. After removing the harness connector, remove the mounting bolts, and remove the trunk lid lock.

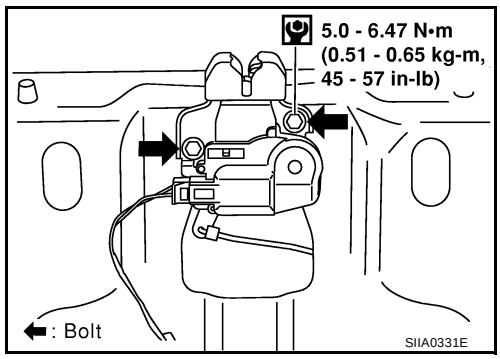

STRIKER REMOVAL

1. Remove the trunk rear plate and trunk rear finisher. Refer to EI-35, "TRUNK ROOM TRIM & TRUNK LID FINISHER" .
2. Remove the mounting bolts, and remove the trunk lock support from the vehicle.
3. After removing the harness connector, remove the mounting bolts, and remove the striker from the trunk lock support.

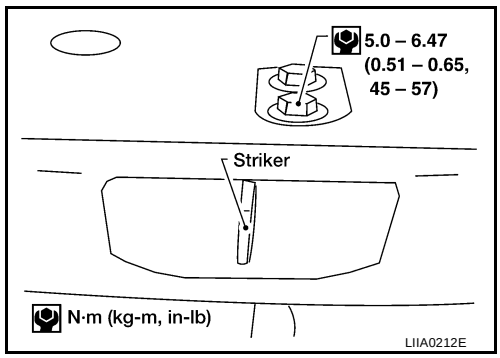

LOCK AND STRIKER INSTALLATION

1. Install in the reverse order of removal.

2. After installing, close the trunk lid lightly. Perform the lock and surface height adjustment. Refer to BL-82, "Fitting Adjustment" .
3. After installing, check the operation.

Removal and Installation of Trunk Lid Weatherstrip

EIS000R8

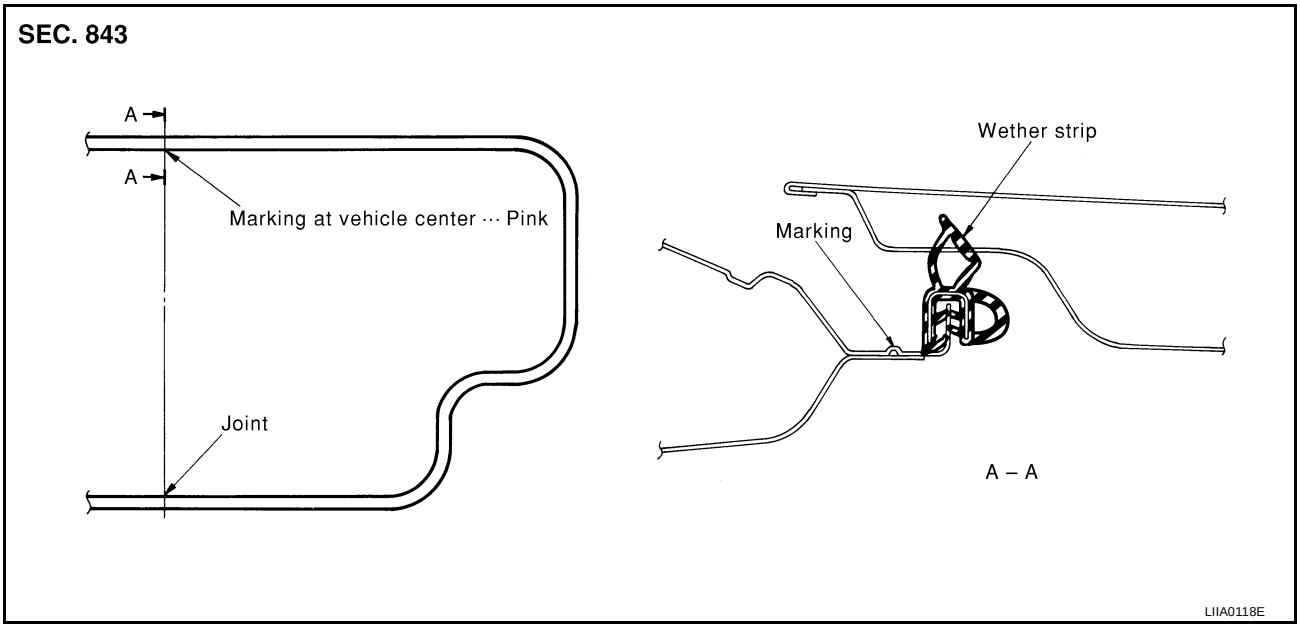

1. Install the weatherstrip from the front with the vehicle center mark aligned to the weatherstrip mark.
2. At rear side, align the weatherstrip seam to the center of the striker.
3. After installing, pull the weatherstrip lightly to check for looseness.

   CAUTION:
   The weatherstrip should fit tightly onto the corners and trunk lid rear plate.

TRUNK LID OPENER

PFP:84640

Wiring Diagram -TLID-

EIS000R9

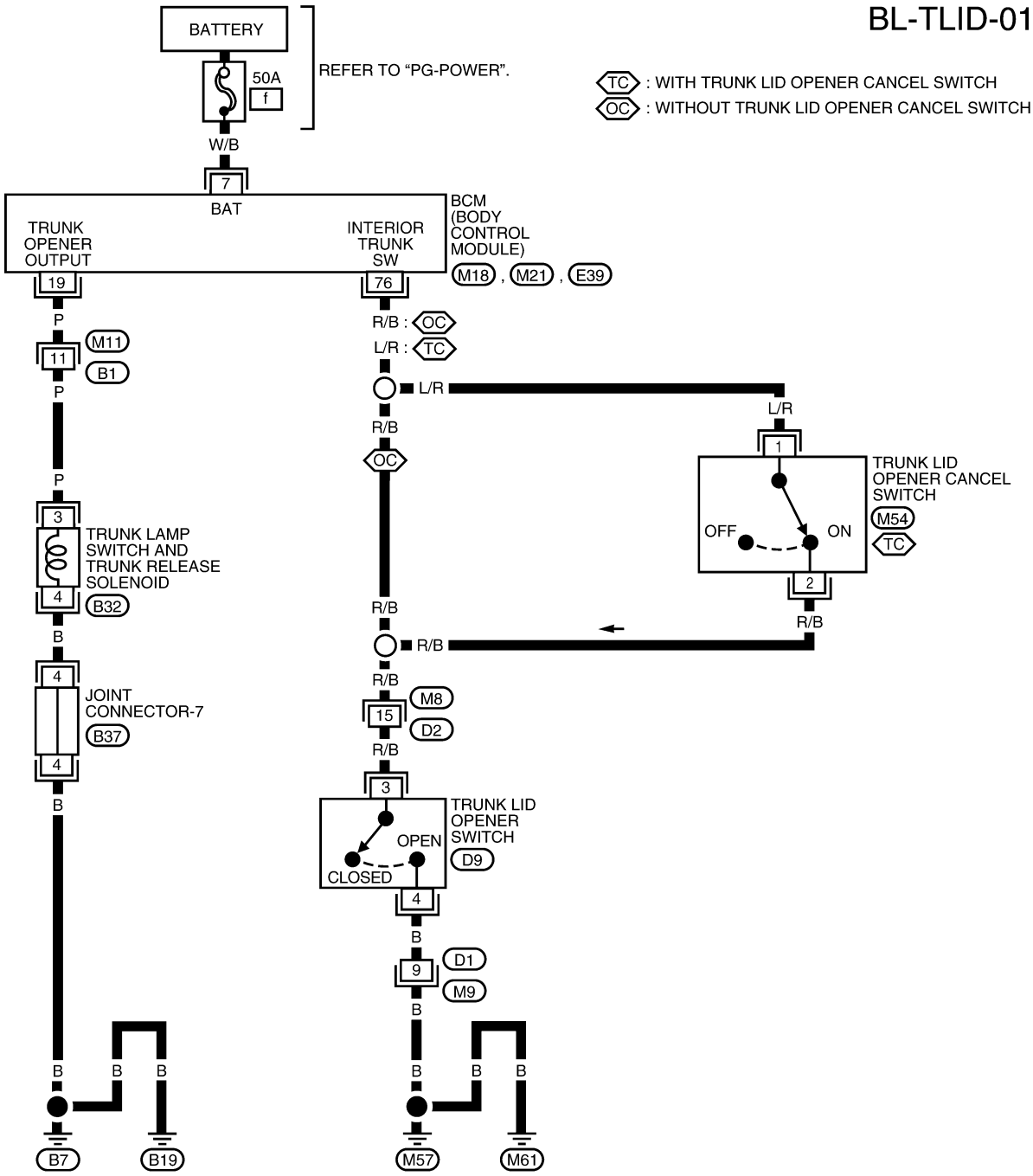

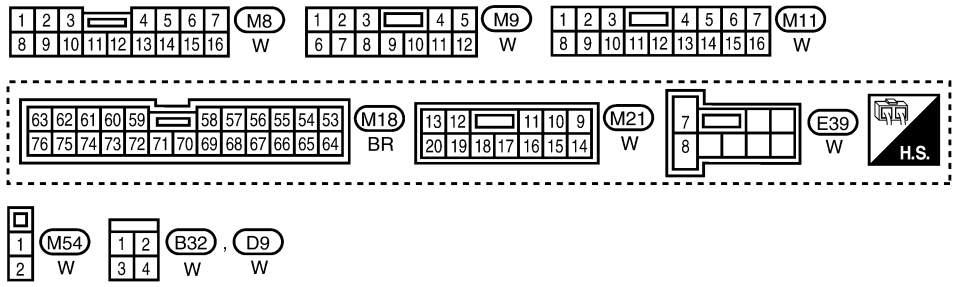

REFER TO THE FOLLOWING.
B37 - JOINT CONNECTOR (J/C)

LIWA0029E

Terminals and Reference Value for BCM

EIS000RA

TERMI-NAL	WIRE COLOR	ITEM	CONDITION	VOLTAGE
7	W/B	BAT power supply	—	Battery voltage
19	P	Trunk lid opener release solenoid	When trunk lid opener release solenoid is operated using key fob (ON → OFF)	0V → Battery voltage
76	R/B*1, L/R*2	Trunk lid opener switch	OFF → ON	Battery voltage → 0V

NOTE:

*1: Without trunk lid opener cancel switch.

*2: With trunk lid opener cancel switch.

VEHICLE SECURITY (THEFT WARNING) SYSTEM

PFP:28491

Component Parts and Harness Connector Location

EIS000RB

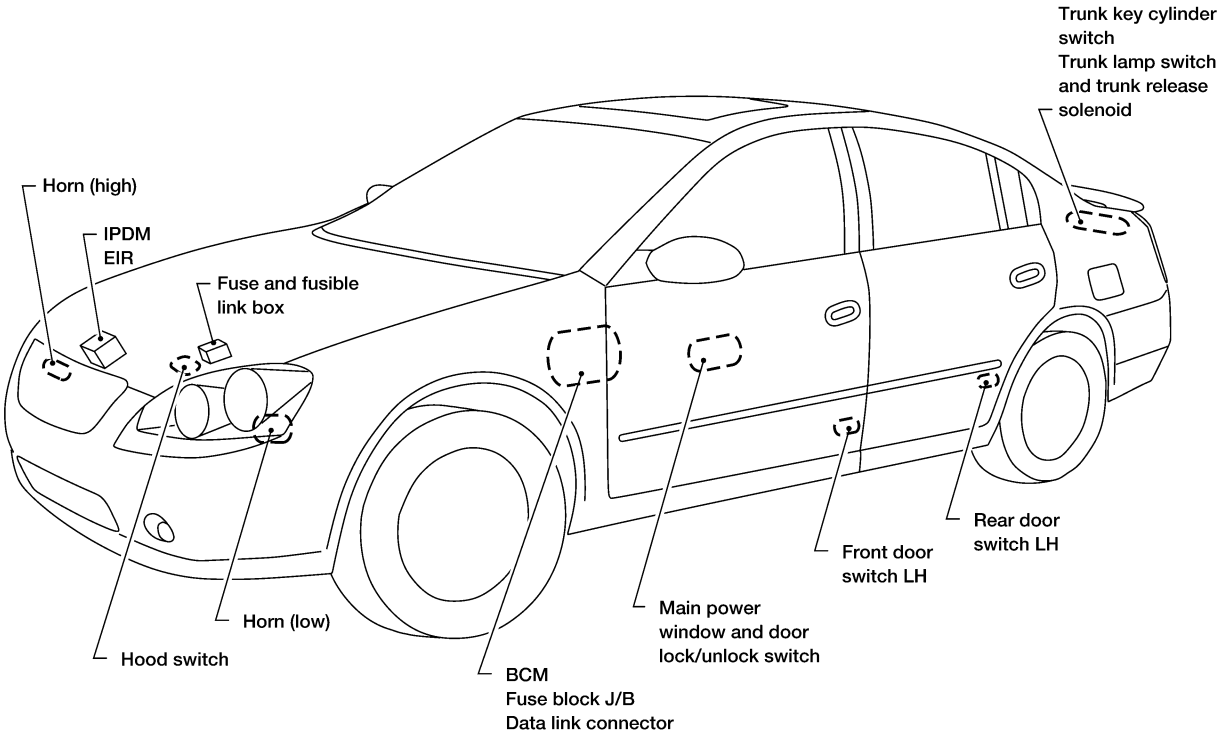

LIIA0062E

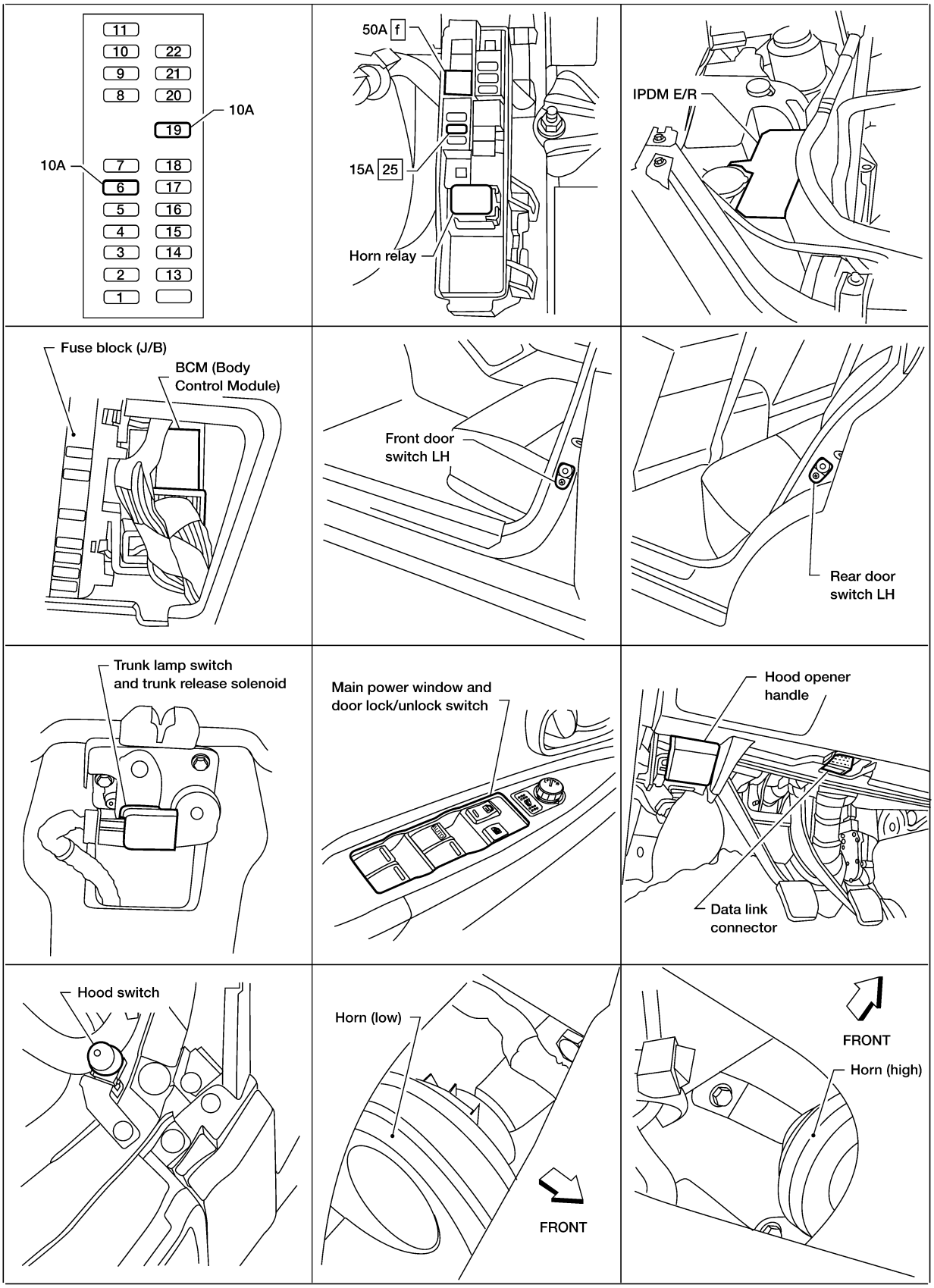
11
10
22
9
21
8
20
10A
19
10A
7
18
6
17
5
16
4
15
3
14
2
13
1
50A f
15A 25
Horn relay
IPDM E/R
Fuse block (J/B)
BCM (Body Control Module)
Front door switch LH
Rear door switch LH
Trunk lamp switch and trunk release solenoid
Main power window and door lock/unlock switch
Hood opener handle
Data link connector
Hood switch
Horn (low)
FRONT
FRONT
Horn (high)

LIIA0063E

System Description

EIS000RC

DESCRIPTION

Setting the vehicle security system

Disarmed phase

- When the vehicle is being driven or when doors or trunk lid is open, the vehicle security system is set in the disarmed phase on the assumption that the owner is inside or near the vehicle.

Pre-armed phase and armed phase

- The vehicle security system turns into the "pre-armed" phase when hood, trunk lid and all doors are closed and locked by electronic key. The security indicator lamp illuminates for 30 seconds. then, the system automatically shifts into the "armed" phase.

Canceling the set vehicle security system

When one of the following operations is performed, the armed phase is canceled.

1. Unlock the doors with the key or the key fob.
2. Open the trunk lid with the key or the key fob. When the trunk lid is closed after opening the trunk lid with the key fob, the system returns to the armed phase.

Activating the alarm operation of the vehicle security system

Make sure the system is in the armed phase.
When one of the following operations is performed, the system sounds the horns and flashes the head-lamps for about 50 seconds.

1. Engine hood or any door is opened before unlocking door with key or key fob.
2. Door is unlocked without using key or key fob.
3. Trunk lid is opened without using key or key fob.

POWER SUPPLY

Power is supplied at all times

- through 10A fuse [No.19, located in the fuse block (J/B)]
- to security indicator lamp terminal 1 and
- to key switch and key lock solenoid terminal 3.

Power is supplied at all times

- through 50A fusible link (letter f, located in the fuse and fusible link box)
- to BCM terminal 7.

With the ignition switch in the ACC or ON position, power is supplied

- through 10A fuse [No. 6, located in the fuse block (J/B)]
- to BCM terminal 36.

INITIAL CONDITION TO ACTIVATE THE SYSTEM

The operation of the vehicle security system is controlled by the doors, hood and trunk lid.
To activate the vehicle security system, BCM must receive signals indicating the doors, hood and trunk lid are closed and the doors are locked.
When a door is open, BCM terminal 10, 11 or 14 receives a ground signal from each door switch.
When front door LH is unlocked, BCM terminal 74 receives a signal from terminal 14 of main power window and door lock/unlock switch.
When front door RH is unlocked, BCM terminal 74 receives a signal from terminal 11 of front power window switch RH.
When the hood is open, IPDM E/R receives a ground signal

- from hood switch terminal 2
- to IPDM E/R terminal 51
- through body grounds E15 and E24.

The IPDM E/R then sends a signal to the BCM through the CAN SYSTEM.
When the trunk lid is open, BCM terminal 18 receives a ground signal

- from terminal 1 of the trunk lamp and trunk release solenoid switch
- through body grounds B7 and B19.

VEHICLE SECURITY SYSTEM ALARM OPERATION

The vehicle security system is triggered by

- opening a door
- opening the trunk lid
- opening the hood
- unlocking door without using the key or key fob.

The vehicle security system will be triggered once the system is in armed phase,

- when BCM receives a ground signal at terminals 10, 11, 14 (door switch), 18 (trunk lamp and trunk release solenoid switch) or receives a signal from the IPDM E/R (hood switch).

Power is supplied at all times

- to horn relay terminal 1
- through 15A fuse (No. 25, located in fuse and fusible link box).

When the vehicle security system is triggered, ground is supplied intermittently

- from IPDM E/R terminal 53
- to headlamp high relay and
- to horn relay terminal 2.

The headlamps flash and the horn sounds intermittently.
The alarm automatically turns off after 50 seconds, but will reactivate if the vehicle is tampered with again.

VEHICLE SECURITY SYSTEM DEACTIVATION

To deactivate the vehicle security system, a door or the trunk lid must be unlocked with the key or key fob.
When the key is used to unlock a door, BCM terminal 74 receives signal

- from terminal 14 of the main power window and door lock/unlock switch.

When the key is used to unlock the trunk lid, BCM terminal 17 receives a ground signal from terminal 1 of the trunk key cylinder switch (unlock switch).
When the BCM receives either one of these signals or unlock signal from key fob, the vehicle security system is deactivated. (Disarmed phase)

PANIC ALARM OPERATION

Remote keyless entry system may or may not operate vehicle security system (horn and headlamps) as required.
When the remote keyless entry system is triggered, ground is supplied intermittently

- from IPDM E/R terminal 53
- to headlamp high relay and
- to horn relay terminal 2.

The headlamp flashes and the horn sounds intermittently.
The alarm automatically turns off after 30 seconds or when BCM receives any signal from key fob.

CAN Communication System Description

EIS000RD

CAN (Controller Area Network) is a serial communication line for real time application. It is an on-vehicle multiplex communication line with high data communication speed and excellent error detection ability. Many electronic control units are equipped onto a vehicle, and each control unit shares information and links with other control units during operation (not independent). In CAN communication, control units are connected with 2 communication lines (CAN H line, CAN L line) allowing a high rate of information transmission with less wiring. Each control unit transmits/receives data but selectively reads required data only.

FOR TCS MODELS

System diagram

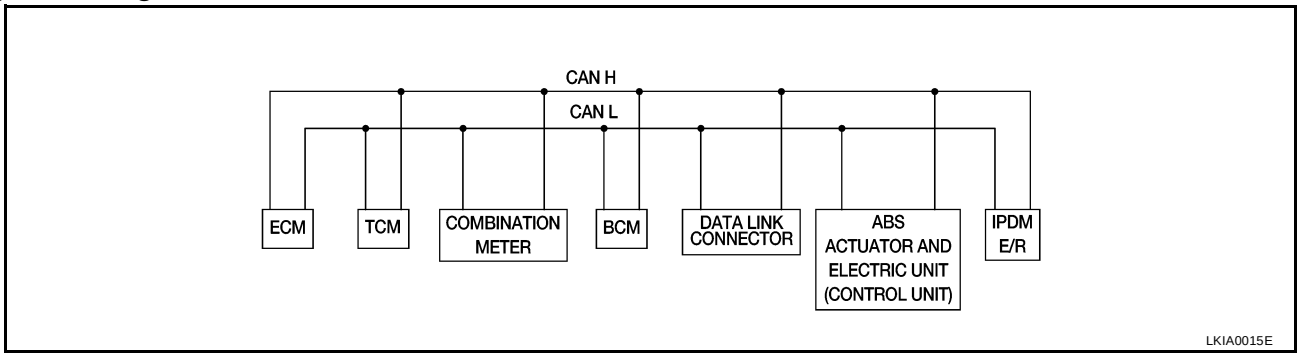

Input/output signal chart

T: Transmit R: Receive

Signals	ECM	TCM	COMBINA-TION METER	BCM	ABS/TCS control unit	IPDM E/R
Engine speed signal	T		R		R	
Engine coolant temperature signal	T		R			
Accelerator pedal position signal	T					
Fuel consumption monitor signal	T		R			
A/T warning lamp signal		T	R			
A/T position indicator signal	R	T	R	R(R range only)	R	
ABS operation signal	R				T	
TCS operation signal	R	R			T	
Air conditioner switch signal	R			T		
Air conditioner compressor signal	R					T
A/C compressor request signal	T					R
Cooling fan motor operation signal	R					T
Cooling fan speed request signal	T					R
Position lights request			R	T		R
Position lights status				R		T
Low beam request				T		R
Low beam status	R			R		T
High beam request			R	T		R
High beam status	R			R		T
Front fog lights request				T		R
Front fog light status				R		T
OD cancel switch signal		R	T			R
Brake switch signal		R	T			
Vehicle speed signal	R		T			
	R		T	R		
Oil pressure switch			R			T
Sleep request1			R	T		
Sleep request2				T		R
N range switch signal		R	T			
P range switch signal		R	T			
Seat belt buckle switch signal			T	R		

Signals	ECM	TCM	COMBINA-TION METER	BCM	ABS/TCS control unit	IPDM E/R
Door switch signal			R	T		R
Tail lamp request			R	T		R
Turn indicator signal			R	T		
Buzzer output signal			R	T		
Trunk switch signal			R	T		
ASCD main switch signal	T		R			
ASCD cruise signal	T		R			
Wiper operation				R		T
Wiper stop position signal				R		T
Rear window defogger switch signal				T		R
Rear window defogger control signal	R			R		T

FOR A/T MODELS

System diagram

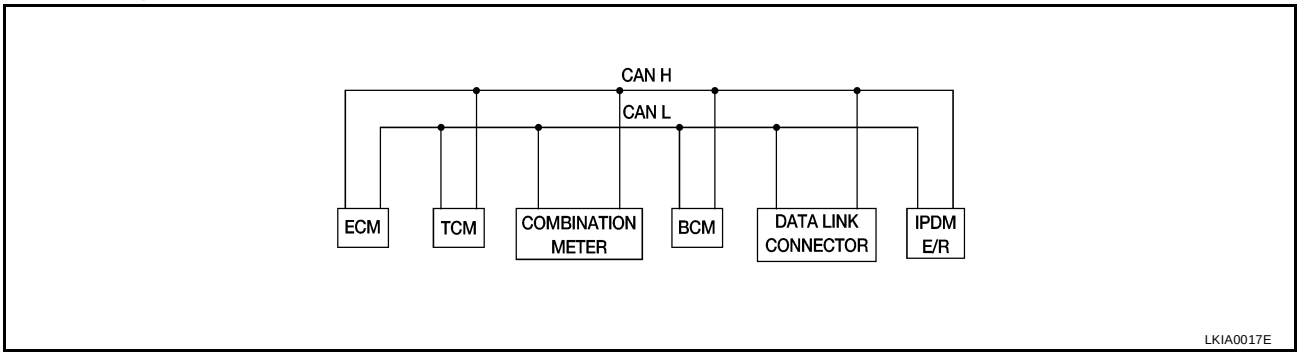

Input/output signal chart

T: Transmit R: Receive

Signals	ECM	TCM	COMBINATION METER	BCM	IPDM E/R
Engine speed signal	T		R		
Engine coolant temperature signal	T		R		
Accelerator pedal position signal	T				R
Fuel consumption monitor signal	T		R		
A/T warning lamp signal		T	R		
A/T position indicator signal	R	T	R	R(R range only)	
Air conditioner switch signal	R			T	
Air conditioner compressor signal	R				T
A/C compressor request signal	T				R
Blower fan switch signal	R(QR25DE)			T	
Cooling fan motor operation signal	R			T	
Cooling fan speed request signal	T				R
Position lights request			R	T	R
Position lights status				R	T
Low beam request				T	R
Low beam status	R			R	T
High beam request			R	T	R

Signals	ECM	TCM	COMBINATION METER	BCM	IPDM E/R
High beam status	R			R	T
Front fog lights request				T	R
Front fog light status				R	T
OD cancel switch signal		R	T		R
Brake switch signal		R	T		
Vehicle speed signal	R		T		
	R		T	R	
Oil pressure switch			R		T
Sleep request1			R	T	
Sleep request2				T	R
N range switch signal		R	T		
P range switch signal		R	T		
Seat belt buckle switch signal			T	R	
Door switch signal			R	T	R
Tail lamp request			R	T	R
Turn indicator signal			R	T	
Buzzer output signal			R	T	
Trunk switch signal			R	T	
ASCD main switch signal	T		R		
ASCD cruise signal	T		R		
Wiper operation				R	T
Wiper stop position signal				R	T
Rear window defogger switch signal				T	R
Rear window defogger control signal	R			R	T

FOR M/T MODELS

System diagram

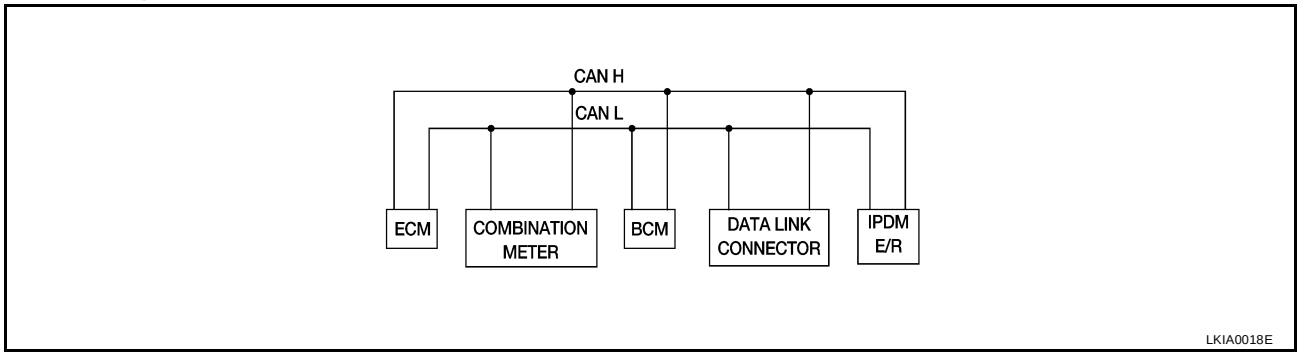

Input/output signal chart

T: Transmit R: Receive

Signals	ECM	COMBINATION METER	BCM	IPDM E/R
Engine speed signal	T			
Engine coolant temperature signal	T			
Fuel consumption monitor signal	T			
Air conditioner switch signal	R		T	
Air conditioner compressor signal	R			T
A/C compressor request signal	T			R

Signals	ECM	COMBINATION METER	BCM	IPDM E/R
Blower fan switch signal	R(QR25DE)		T	
Cooling fan motor operation signal	R			T
Cooling fan speed request signal	T			R
Position lights request		R	T	R
Position lights status			R	T
Low beam request			T	R
Low beam status	R		R	T
High beam request		R	T	R
High beam status	R		R	T
Front fog lights request			T	R
Front fog light status			R	T
Vehicle speed signal	R	T		
Oil pressure switch		R		T
Sleep request1		R	T	
Sleep request2			T	R
Seat belt buckle switch signal		T	R	
Door switch signal		R	T	R
Tail lamp request		R	T	R
Turn indicator signal		R	T	
Buzzer output signal		R	T	
Trunk switch signal		R	T	
ASCD main switch signal	T	R		
ASCD cruise signal	T	R		
Wiper operation			R	T
Wiper stop position signal			R	T
Rear window defogger switch signal			T	R
Rear window defogger control signal	R		R	T

Schematic

EIS000RE

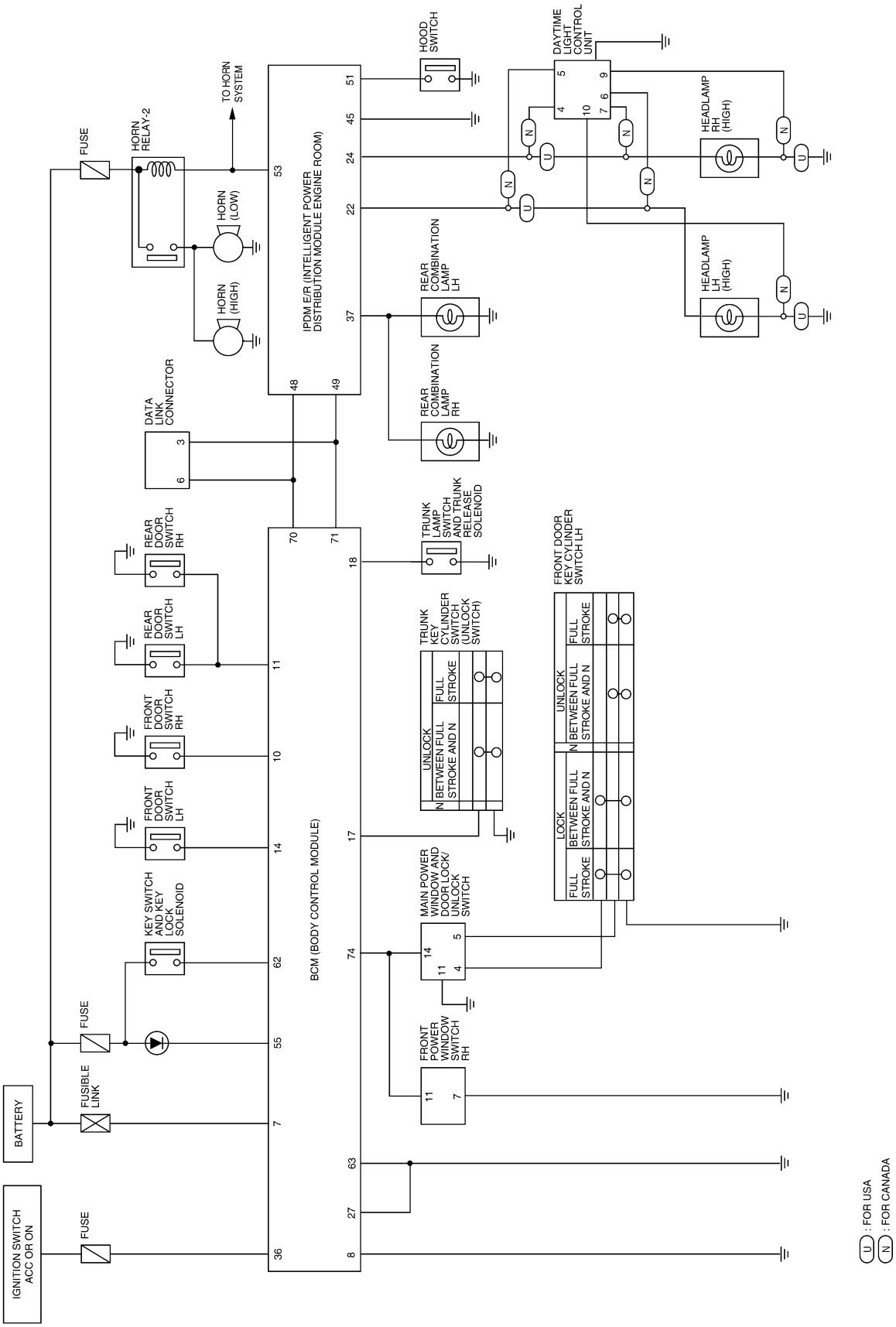

LIWA0023E

Wiring Diagram -VEHSEC-

EIS000RF

FIG. 1

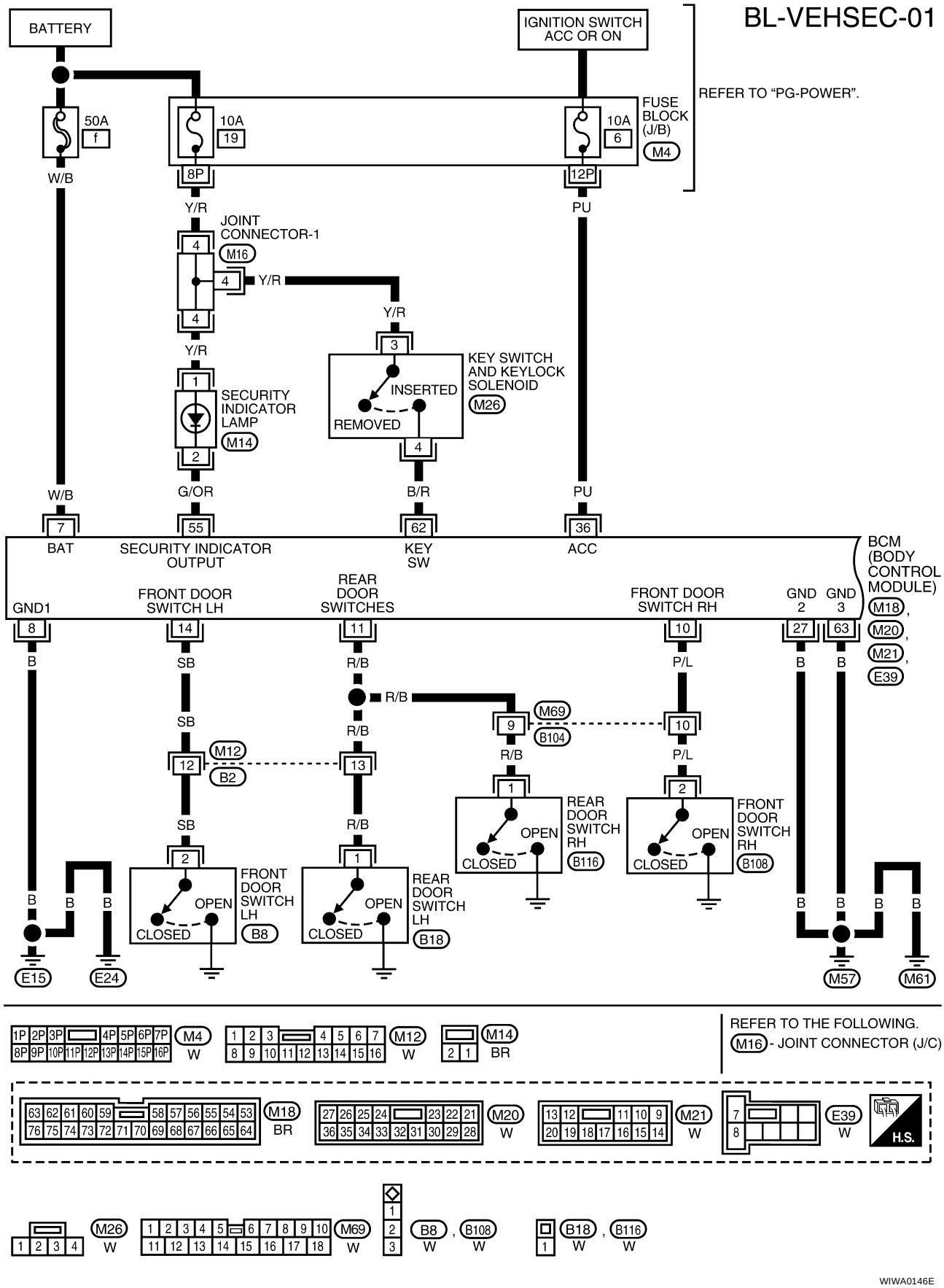

FIG. 2

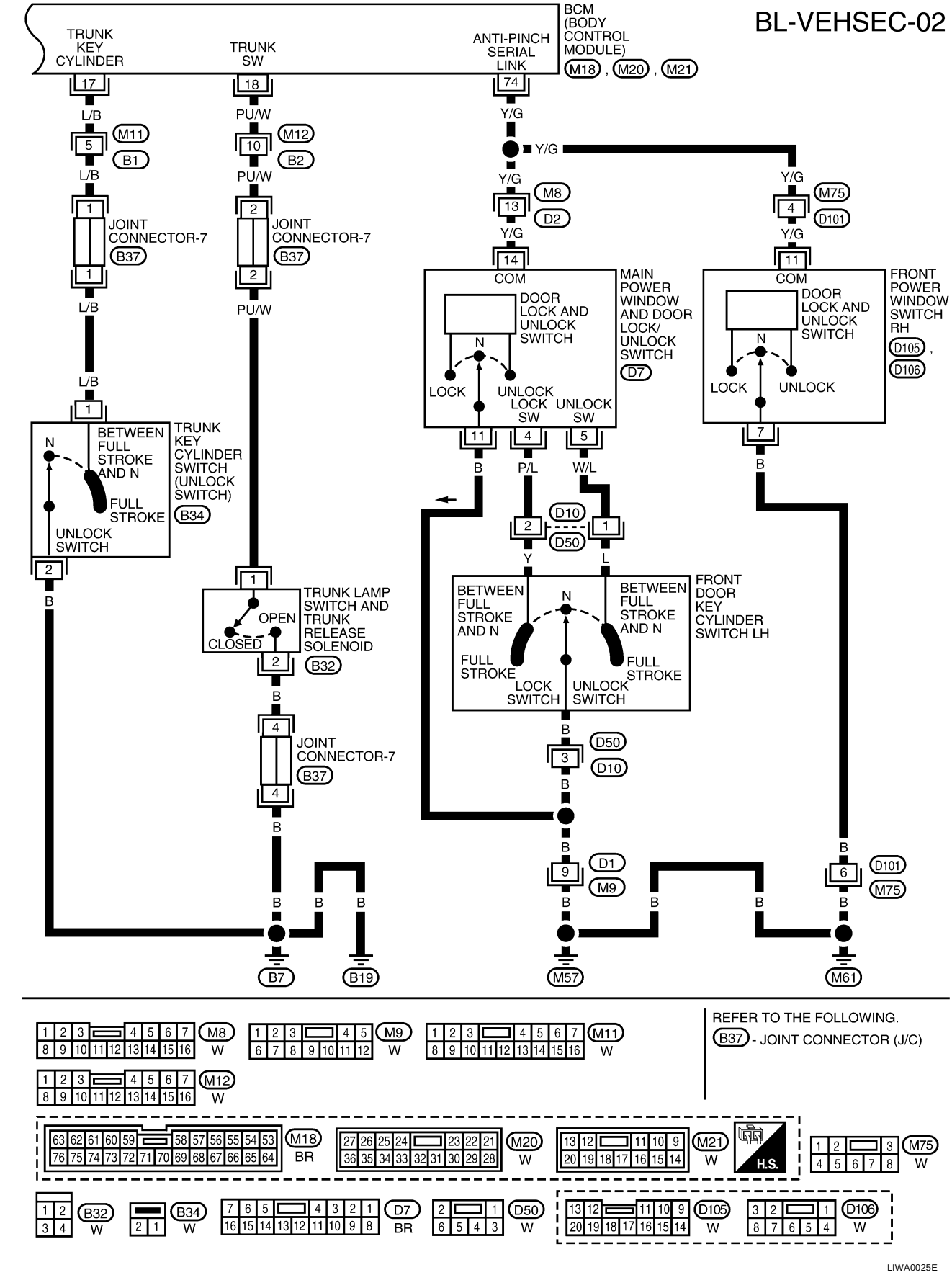
BL-VEHSEC-02
BCM (BODY CONTROL MODULE)
M18 , M20 , M21
TRUNK KEY CYLINDER
TRUNK SW
ANTI-PINCH SERIAL LINK
17
18
74
L/B
PU/W
Y/G
M11
M12
M8
M75
5
10
13
4
B1
B2
D2
D101
JOINT CONNECTOR-7
B37
1
2
14
11
COM
MAIN POWER WINDOW AND DOOR LOCK/ UNLOCK SWITCH
D7
DOOR LOCK AND UNLOCK SWITCH
N
LOCK
UNLOCK
LOCK SW
UNLOCK SW
FRONT POWER WINDOW SWITCH RH
D105 , D106
TRUNK KEY CYLINDER SWITCH (UNLOCK SWITCH)
BETWEEN FULL STROKE AND N
FULL STROKE
UNLOCK SWITCH
B34
B
P/L
W/L
D10
D50
Y
L
TRUNK LAMP SWITCH AND TRUNK RELEASE SOLENOID
OPEN
CLOSED
B32
FRONT DOOR KEY CYLINDER SWITCH LH
LOCK SWITCH
UNLOCK SWITCH
3
9
6
D1
M9
D101
M75
B7
B19
M57
M61
REFER TO THE FOLLOWING.
B37 - JOINT CONNECTOR (J/C)
M8 W
M9 W
M11 W
M12 W
M18 BR
M20 W
M21 W
H.S.
M75 W
B32 W
B34 W
D7 BR
D50 W
D105 W
D106 W
LIWA0025E

FIG. 3

BL-VEHSEC-03

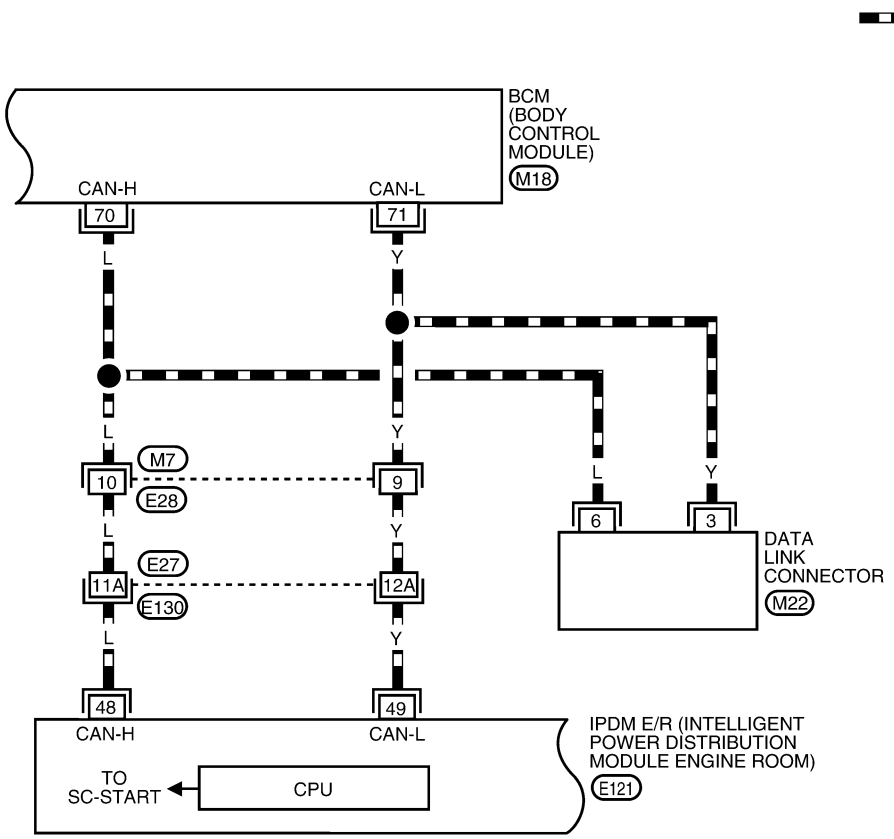

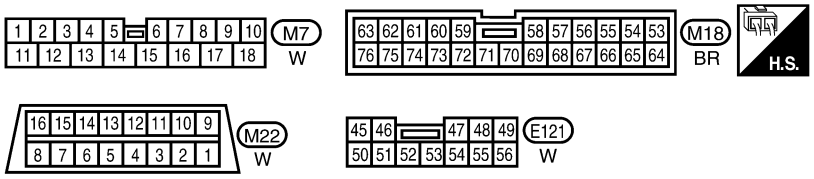

REFER TO THE FOLLOWING.
E130 - SUPER MULTIPLE JUNCTION (SMJ)

LIWA0026E

FIG. 4

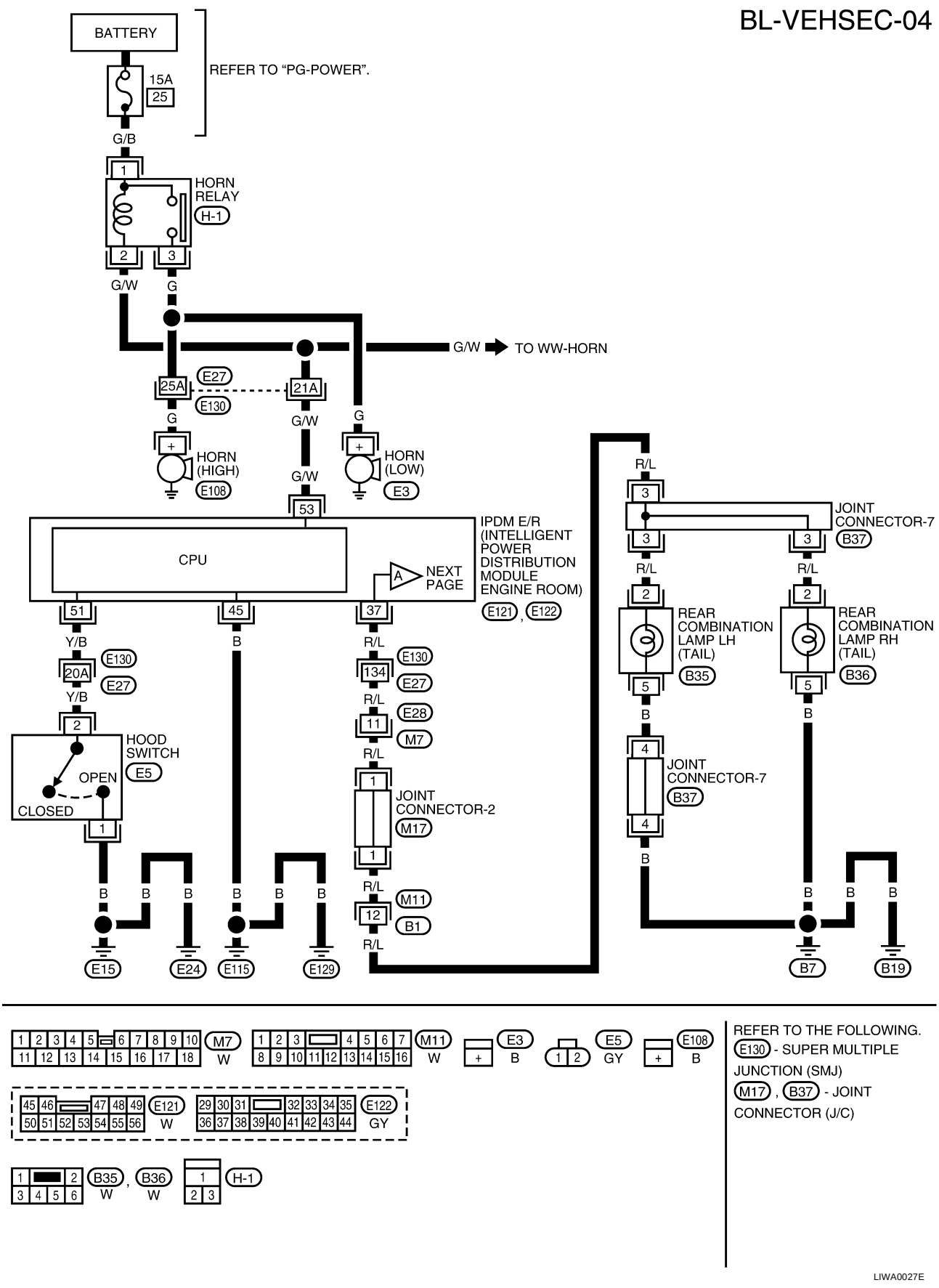
BL-VEHSEC-04
BATTERY
15A
25
REFER TO "PG-POWER".
G/B
HORN RELAY
H-1
G/W
G
G/W
TO WW-HORN
25A
E27
E130
21A
HORN (HIGH)
E108
HORN (LOW)
E3
53
CPU
IPDM E/R (INTELLIGENT POWER DISTRIBUTION MODULE ENGINE ROOM)
E121, E122
NEXT PAGE
51
45
37
Y/B
B
R/L
20A
134
11
HOOD SWITCH
E5
OPEN
CLOSED
JOINT CONNECTOR-2
M17
M11
12
B1
E15
E24
E115
E129
JOINT CONNECTOR-7
B37
REAR COMBINATION LAMP LH (TAIL)
B35
REAR COMBINATION LAMP RH (TAIL)
B36
B7
B19
M7
W
M11
W
E3
B
E5
GY
E108
B
E121
W
E122
GY
B35
W
B36
W
H-1
REFER TO THE FOLLOWING.
E130 - SUPER MULTIPLE JUNCTION (SMJ)
M17, B37 - JOINT CONNECTOR (J/C)
LIWA0027E

FIG. 5

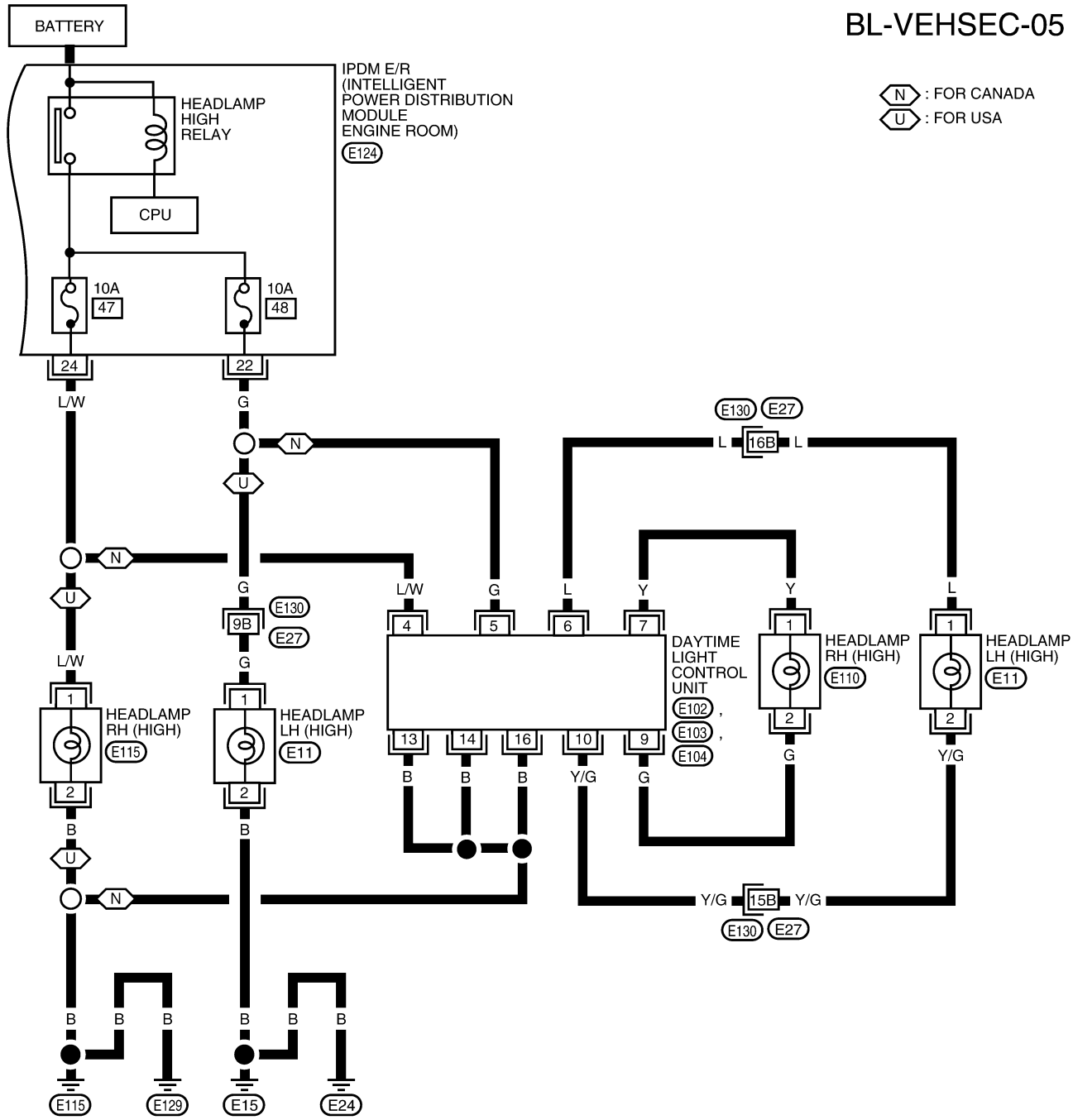

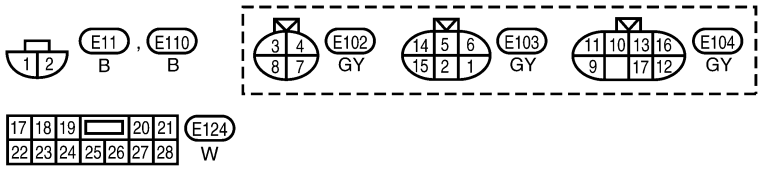

REFER TO THE FOLLOWING.
E130 - SUPER MULTIPLE JUNCTION (SMJ)

LIWA0028E

CONSULT-II Function

EIS000RG

CONSULT-II INSPECTION PROCEDURE

1. With the ignition switch OFF, connect CONSULT-II to the data link connector, and turn the ignition switch ON.

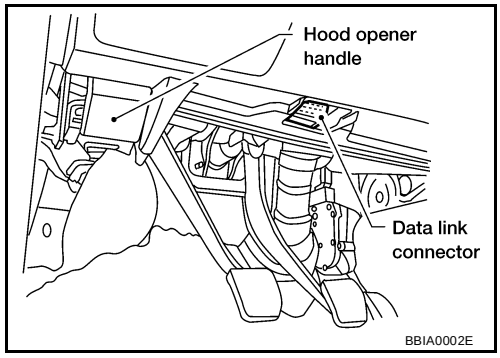

2. Touch "START".

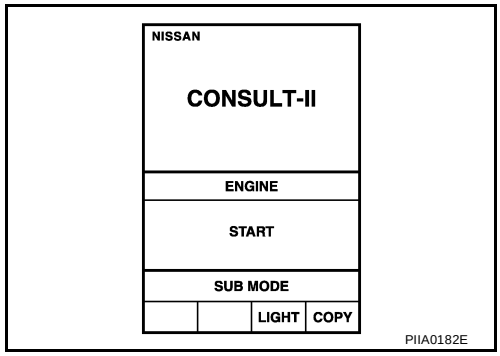

3. Touch "BCM" on the "SELECT SYSTEM" screen.

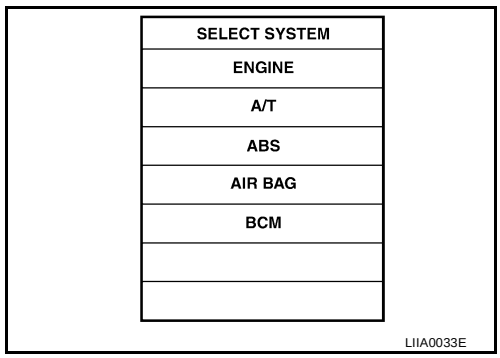

4. Touch "THEFT ALM" on the "SELECT TEST ITEM" screen.
   - WORK SUPPORT, DATA MONITOR and ACTIVE TEST are available for the vehicle security system.

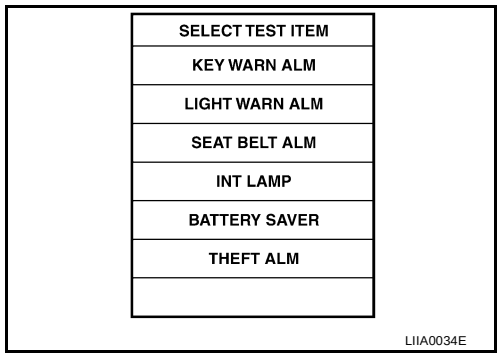

CONSULT-II APPLICATION ITEM

Data Monitor

Monitored Item	Description
IGN ON SW	Indicates [ON/OFF] condition of ignition switch.
ACC ON SW	Indicates [ON/OFF] condition of ignition switch in ACC position.
KEY CYL LK SW	Indicates [ON/OFF] condition of lock signal from key cylinder switch.
KEY CYL UN SW	Indicates [ON/OFF] condition of unlock signal from key cylinder switch.

Monitored Item	Description
DOOR SW-DR	Indicates [ON/OFF] condition of front door switch LH.
DOOR SW-AS	Indicates [ON/OFF] condition of front door switch RH.
DOOR SW-RR	Indicates [ON/OFF] condition of rear door switches.
TRNK OPN MTR	Indicates [ON/OFF] condition of trunk opener motor.
TRNK OPNR SW	Indicates [ON/OFF] condition of trunk opener switch.
TRUNK KEY SW	Indicates [ON/OFF] condition of trunk key cylinder switch.
HOOD SWITCH	Indicates [ON/OFF] condition of hood switch.
LOCK SW DR/AS	Indicates [ON/OFF] condition of lock signal from door lock/unlock switch LH and RH.
UNLK SW DR/AS	Indicates [ON/OFF] condition of unlock signal from door lock/unlock switch LH and RH.
LK BUTTON/SIG	Indicates [ON/OFF] condition of lock signal from key fob.
UN BUTTON/SIG	Indicates [ON/OFF] condition of unlock signal from key fob.
TRUNK BTN/SIG	Indicates [ON/OFF] condition of trunk open signal from key fob.

Active Test

Test Item	Description
THEFT IND	This test is able to check security indicator lamp operation. The lamp will be turned on when “ON” on CONSULT-II screen is touched.
HEADLAMP	This test is able to check vehicle security lamp operation. The headlamps will be activated for 0.5 seconds after “ON” on CONSULT-II screen is touched.
HORN	This test is able to check vehicle security horn operation. The horns will be activated for 0.5 seconds after “ON” on CONSULT-II screen is touched.

Work Support

Test Item	Description
SECURITY ALARM SET	.
THEFT ALM TRG	The switch which triggered vehicle security alarm is recorded. This mode is able to confirm and erase the record of vehicle security alarm. The trigger data can be erased by touching “CLEAR” on CONSULT-II screen.

Trouble Diagnosis

EIS000RH

WORK FLOW

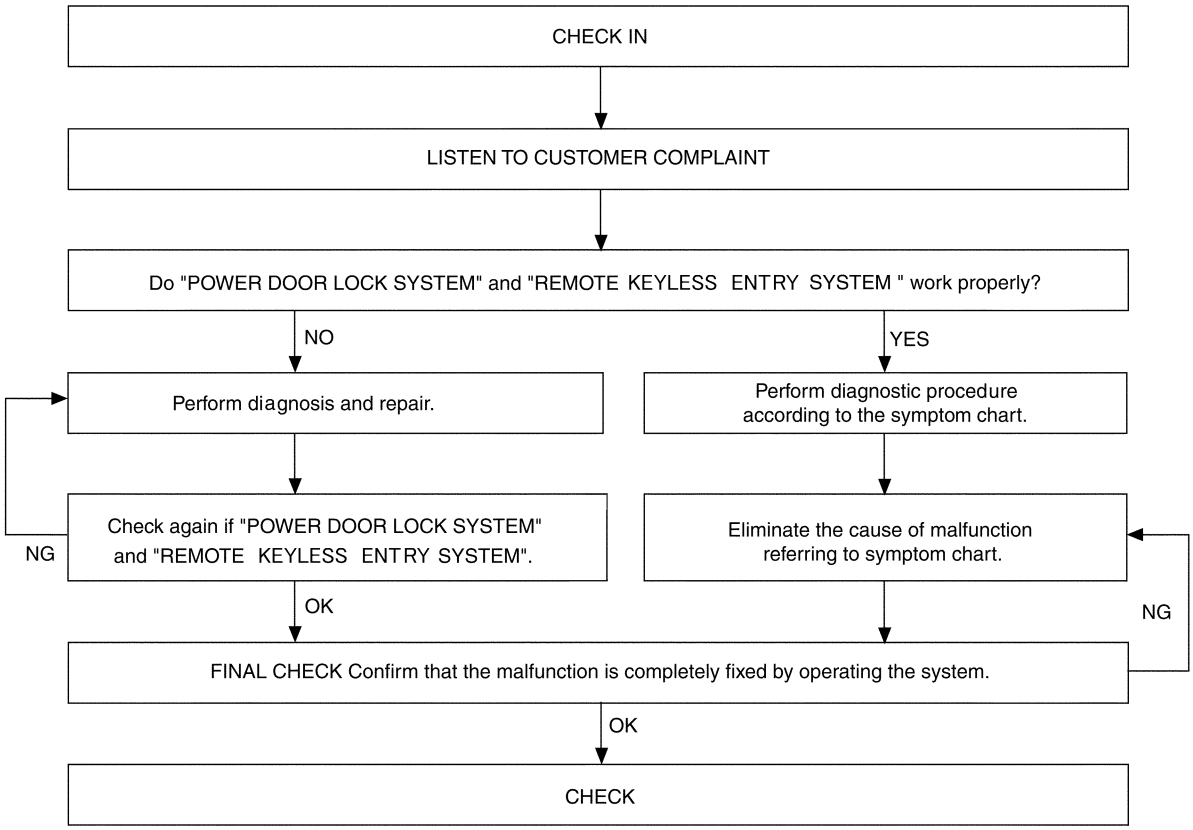

LIIA0123E

- “POWER DOOR LOCK SYSTEM” Diagnosis refer to BL-16, "POWER DOOR LOCK SYSTEM" .
- “REMOTE CONTROL SYSTEM” Diagnosis refer to BL-43, "REMOTE KEYLESS ENTRY SYSTEM" .

Preliminary Check

EIS000RI

The system operation is canceled by turning ignition switch to "ACC" at any step between START and ARMED in the following flow chart.

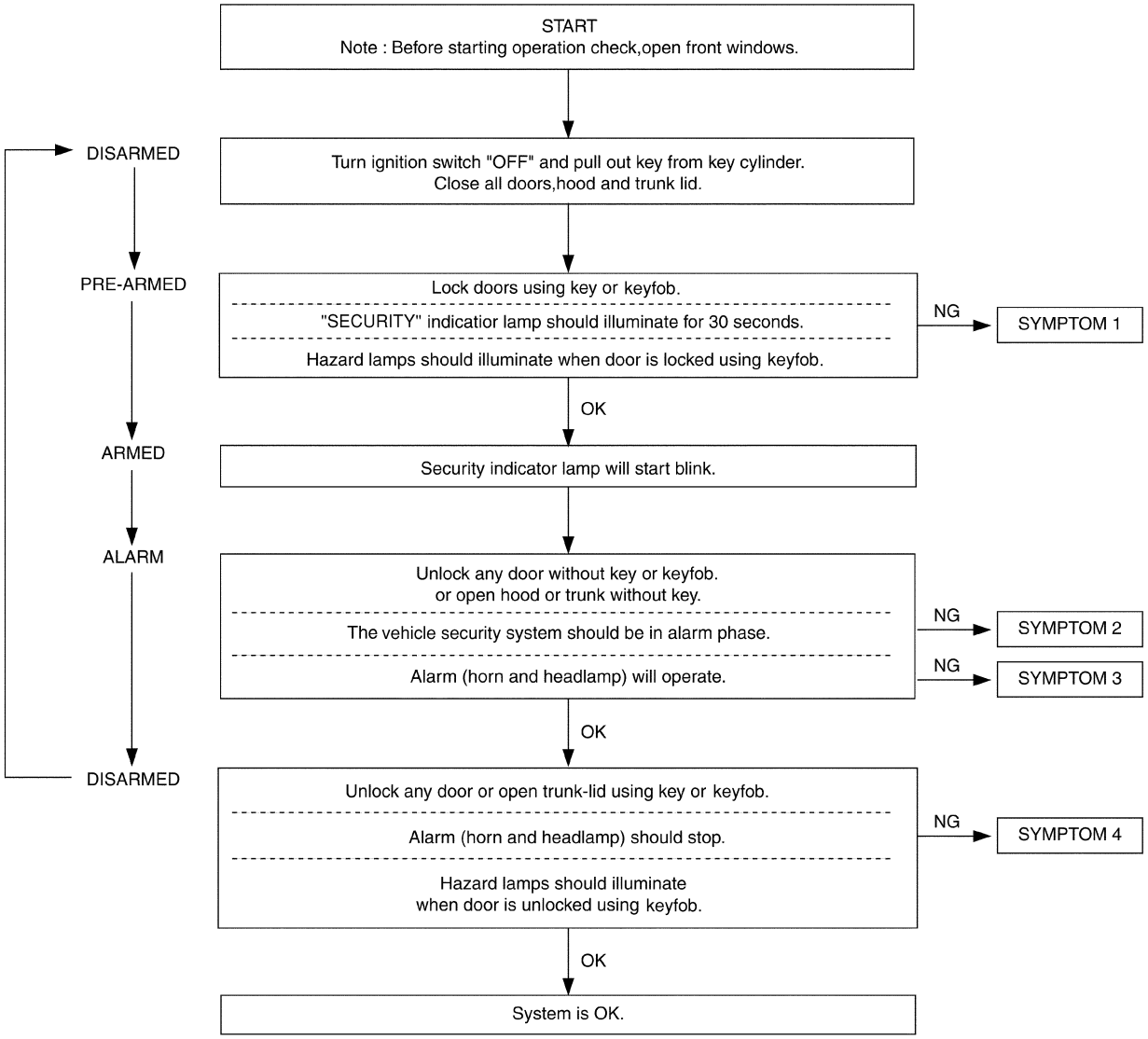

LIIA0124E

After performing preliminary check, go to symptom chart.

Symptom Chart

EIS000RJ

PROCEDURE / SYMPTOM			Diagnostic procedure
1	Vehicle security system cannot be set by ····	All items	Diagnostic Procedure 1 (Door, hood and trunk lamp and trunk release solenoid switch check) Refer to BL-106, "Diagnostic Procedure 1" .
			If the above systems are “OK”, replace BCM.
		Lock/unlock switch	Diagnostic Procedure 7 (Door lock/unlock switch check) Refer to BL-115, "Diagnostic Procedure 7" .
			If the above systems are “OK”, check main power window and door lock/ unlock switch.
		Door outside key	Diagnostic Procedure 3 (Door key cylinder switch check) Refer to BL-110, "Diagnostic Procedure 3" .
			If the above systems are “OK”, check main power window and door lock/ unlock switch.
	Security indicator does not turn “ON”.		Diagnostic Procedure 2 (Security indicator lamp check) Refer to BL-109, "Diagnostic Procedure 2" .
			If the above systems are “OK”, replace BCM.
2	*1 Vehicle security system does not alarm when ….	Any door is opened.	Diagnostic Procedure 1 (Door, hood and trunk room lamp switch check) Refer to BL-106, "Diagnostic Procedure 1" .
			If the above systems are “OK”, replace BCM.
3	Vehicle security alarm does not activate.	Horn alarm	Diagnostic Procedure 5 (Vehicle security horn alarm check) Refer to BL-113, "Diagnostic Procedure 5" .
			If the above systems are “OK”, check horn system. Refer to WW-32, "HORN" .
		Head lamp alarm	Diagnostic Procedure 6 (Head lamp alarm check) Refer to BL-114, "Diagnostic Procedure 6" .
			If the above systems are “OK”, replace BCM.
4	Vehicle security system cannot be canceled by ····	Door outside key	Diagnostic Procedure 3 (Door key cylinder switch check) Refer to BL-110, "Diagnostic Procedure 3" .
			If the above systems are “OK”, check main power window and door lock/ unlock switch.
		Trunk lid key	Diagnostic Procedure 4 (Trunk lid key cylinder switch check) Refer to BL-112, "Diagnostic Procedure 4" .
			If the above systems are “OK”, replace BCM.
		Key fob	Refer to .
			If the above systems are “OK”, replace BCM.

*1 : Make sure the system is in the armed phase.

Diagnostic Procedure 1

EIS000RK

1 – 1 DOOR SWITCH CHECK

1. CHECK DOOR SWITCH INPUT SIGNAL

With CONSULT-II

- Check door switch (“DOOR SW”) in "DATA MONITOR" mode with CONSULT-II.

When door is open : DOOR SW ON
When door is closed : DOOR SW OFF

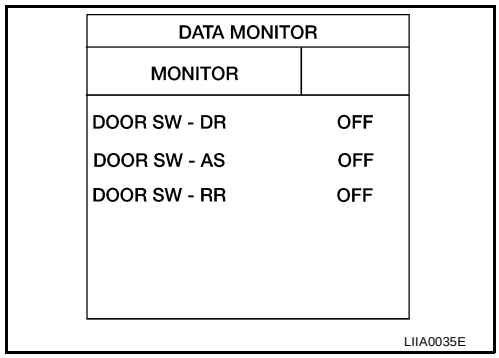

Without CONSULT–II

- Check voltage between BCM harness connector M21 terminals 10 (P/L), 11 (R/B) or 14 (SB) and ground.

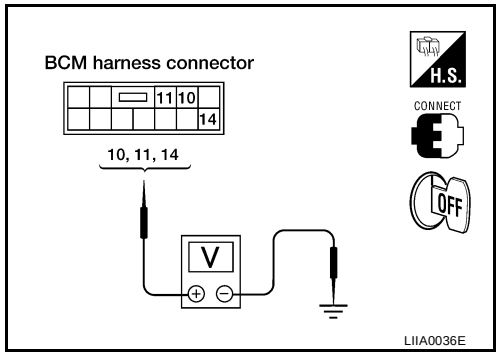

	Terminals	Condition	Voltage
Front door switch LH	14 (SB)– Ground	Open	0V
		Closed	Approx. 5V
Front door switch RH	11 (R/B)– Ground	Open	0V
		Closed	Approx. 5V
Rear door switches	10 (P/L)– Ground	Open	0V
		Closed	Approx. 5V

OK or NG

OK >> Door switch is OK.
NG >> GO TO 2.

2. CHECK DOOR SWITCH

1. Disconnect door switch connector.
2. Check continuity between following terminals and body ground.

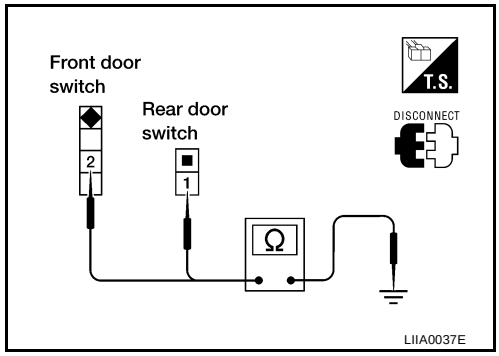

Door switch connector		Terminals	Condi-tion	Continu-ity
Front door switch	LH : B8	2 – Ground	Pressed	No
	RH : B108		Released	Yes
Rear door switch	LH : B18	1 – Ground	Pressed	No
	RH : B116		Released	Yes

OK or NG

OK >> Check the following.
- Door switch ground condition
- Harness for open or short between door switch and BCM

NG >> Replace door switch.

1 – 2 HOOD SWITCH CHECK

1. CHECK HOOD SWITCH

Check hood switch and hood fitting condition.

OK or NG

OK >> GO TO 2.
NG >> Adjust installation of hood switch.

2. CHECK HOOD SWITCH INPUT SIGNAL

With CONSULT-II

- Check “HOOD SW” in "DATA MONITOR" mode with CONSULT-II.

When hood is open : HOOD SW ON
When hood is closed : HOOD SW OFF

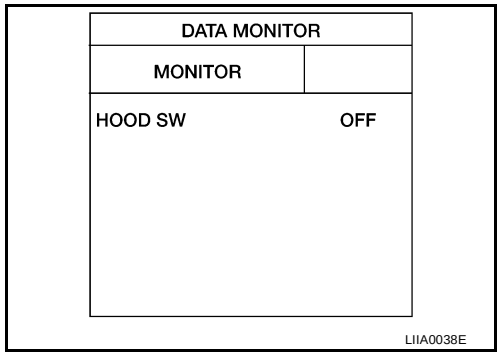

Without CONSULT-II

- Check voltage between IPDM E/R harness connector E121 terminal 51 (Y/B) and ground.
  Refer to BL-99, "FIG. 4" .

OK or NG

OK >> Hood switch is OK.
NG >> GO TO 3.

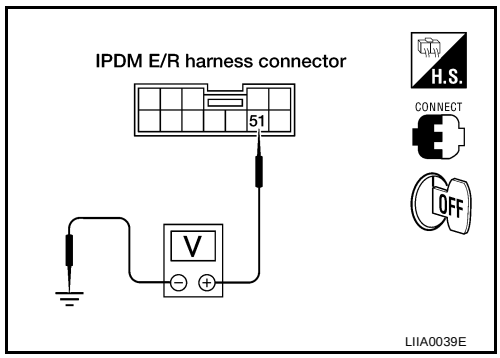

3. CHECK HOOD SWITCH

1. Disconnect hood switch connector.
2. Check continuity between hood switch connector E5 terminals 1 and 2.

Terminals	Condition	Continuity
1 – 2	Pressed	No
	Released	Yes

OK or NG

OK >> Check the following.
- Hood switch ground circuit
- Harness for open or short between hood switch and IPDM E/R

NG >> Replace hood switch.

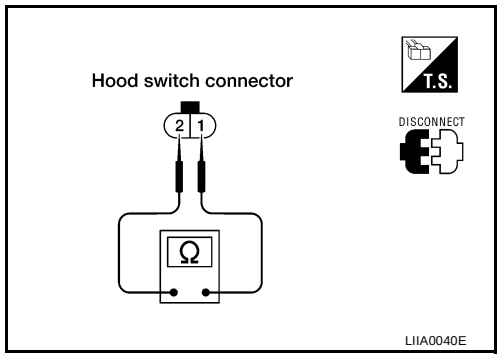

1 – 3 TRUNK LAMP AND TRUNK RELEASE SOLENOID SWITCH CHECK

1. CHECK TRUNK LAMP SWITCH AND TRUNK RELEASE SOLENOID INPUT SIGNAL

With CONSULT-II

- Check “TRUNK SW” in "DATA MONITOR" mode with CONSULT-II.

When trunk lid is open : TRNK OPN MNTR ON
When trunk lid is closed : TRNK OPN MNTR OFF

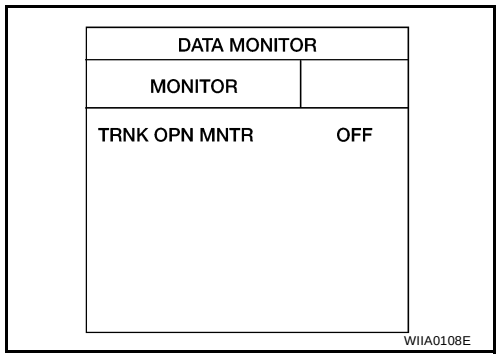

Without CONSULT-II

- Check voltage between BCM harness connector M21 terminal 18 (PU/W) and ground.
  Refer to BL-97, "FIG. 2" .

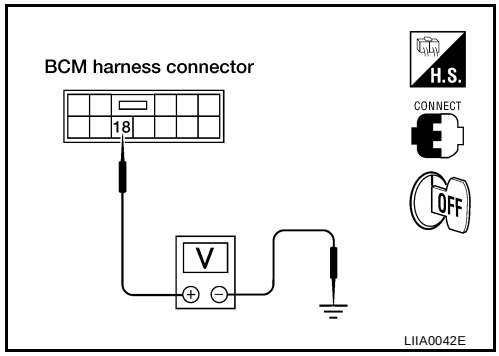

OK or NG

OK >> Trunk room lamp and trunk release solenoid switch is OK.

NG >> GO TO 2.

2. CHECK TRUNK LAMP AND TRUNK RELEASE SOLENOID SWITCH

1. Disconnect trunk lamp and trunk release solenoid switch connector.
2. Check continuity between trunk lamp and trunk release solenoid switch connector B32 terminals 1 and 2.

Connector	Terminals	Condition	Continuity
B32	1 – 2	Closed	No
		Open	Yes

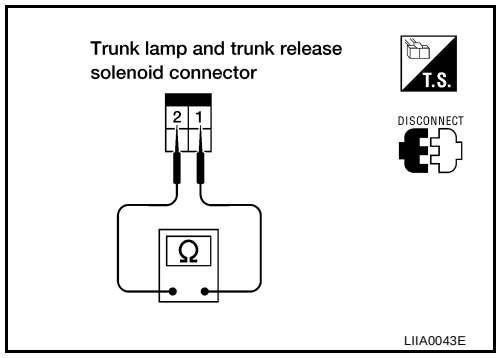

OK or NG

OK >> Check the following.

- Trunk lamp and trunk release solenoid switch ground circuit
- Harness for open or short between trunk lamp and trunk release solenoid switch and BCM

NG >> Replace trunk lamp and trunk release solenoid switch.

Diagnostic Procedure 2

EIS000RL

SECURITY INDICATOR LAMP CHECK

1. SECURITY INDICATOR LAMP ACTIVE TEST

With CONSULT-II

- Check "THEFT IND" in "ACTIVE TEST" mode with CONSULT-II.

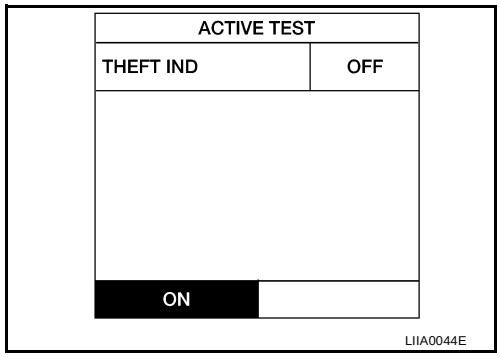

Without CONSULT-II

1. Disconnect BCM harness connector M18.
2. Check voltage between BCM harness connector M18 terminal 55 (G/OR) and ground.

Battery voltage should exist.

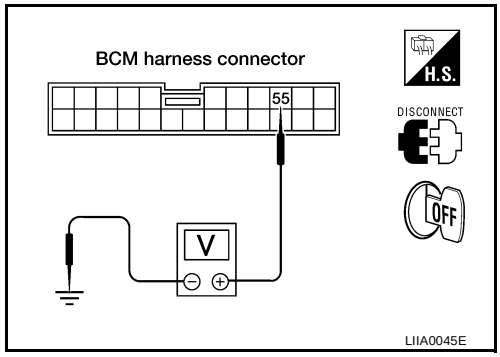

OK or NG

OK >> Security indicator lamp is OK.
NG >> GO TO 2.

2. SECURITY INDICATOR LAMP CHECK

Check indicator lamp condition.
Refer to BL-96, "FIG. 1" .

OK or NG

OK >> GO TO 3.
NG >> Replace indicator lamp.

3. CHECK POWER SUPPLY CIRCUIT FOR SECURITY INDICATOR LAMP

1. Disconnect security indicator lamp connector.
2. Check voltage between security indicator lamp harness connector M14 terminal 1 (Y/R) and ground.

Battery voltage should exist.

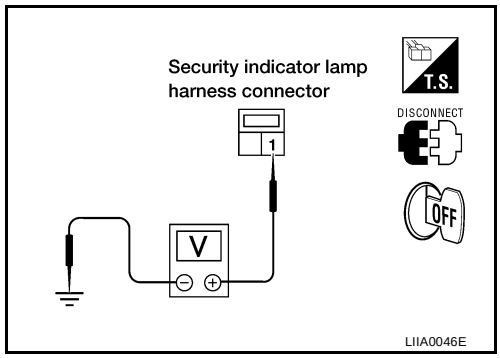

OK or NG

OK >> Check harness for open or short between security indicator lamp and BCM.
NG >> Check the following.
- 10A fuse [No. 19, located in fuse block (J/B)]
- Harness for open or short between security indicator lamp and fuse

Diagnostic Procedure 3

EIS000RM

3–1 DOOR KEY CYLINDER LOCK SWITCH CHECK

1. CHECK FRONT DOOR KEY CYLINDER SWITCH LH INPUT SIGNAL (LOCK SIGNAL)

With CONSULT-II

- Check front door key cylinder switch LH (“KEY CYL LK SW”) in "DATA MONITOR" mode with CONSULT-II.

“KEY CYL LK SW” should be “ON” when key inserted in door key cylinder was turned to lock.

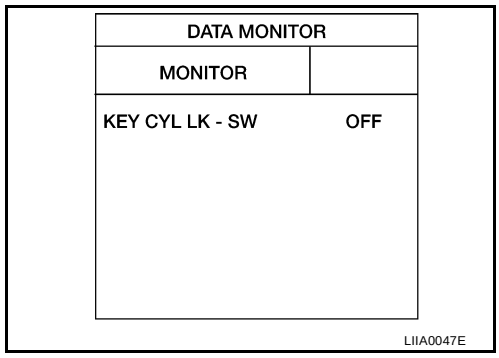

Without CONSULT-II

Check voltage between main power window and door lock/unlock switch harness connector D7 terminal 4 (P/L) and ground.

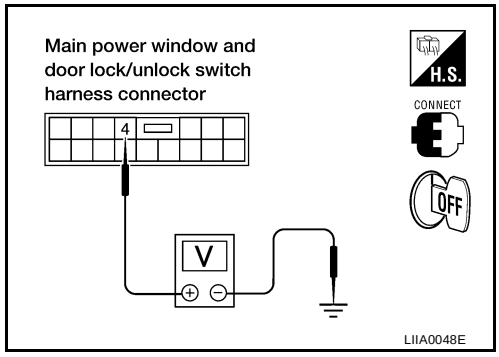

Key position	Voltage
Neutral / Unlock	Approx. 5V
Lock	0V

OK or NG

OK >> Front door key cylinder switch LH (lock) is OK.

NG >> GO TO 2.

2. CHECK FRONT DOOR KEY CYLINDER SWITCH LH

1. Disconnect front door key cylinder switch LH connector.
2. Check continuity between front door key cylinder switch LH connector D50 terminals 2 (Y) and 3 (B).

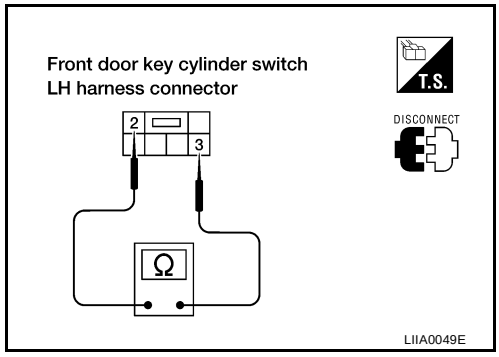

Key position	Continuity
Neutral / Unlock	No
Lock	Yes

OK or NG

OK >> Check the following.

- Front door key cylinder switch LH ground circuit
- Harness for open or short between main power window and door lock/unlock switch and front door key cylinder switch LH

NG >> Replace front door key cylinder switch LH.

3–2 DOOR KEY CYLINDER UNLOCK SWITCH CHECK

1. CHECK FRONT DOOR KEY CYLINDER SWITCH LH INPUT SIGNAL (UNLOCK SIGNAL)

With CONSULT-II

- Check front door key cylinder switch LH (“KEY CYL UN SW”) in "DATA MONITOR" mode with CONSULT-II.

“KEY CYL UN SW” should be “ON” when key inserted in door key cylinder was turned to unlock.

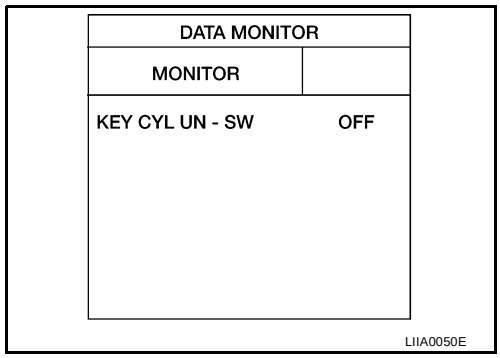

Without CONSULT-II

Check voltage between main power window and door lock/unlock switch harness connector D7 terminal 5 (W/L) and ground.

Key position	Voltage
Neutral / Lock	Approx. 5V
Unlock	0V

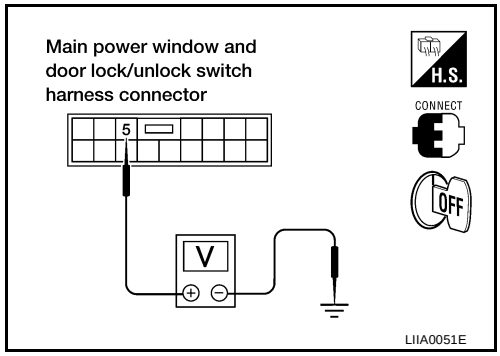

OK or NG

OK >> Front door key cylinder switch LH (unlock) is OK.

NG >> GO TO 2.

2. CHECK FRONT DOOR KEY CYLINDER SWITCH LH

1. Disconnect front door key cylinder switch LH connector.
2. Check continuity between front door key cylinder switch LH connector D50 terminals 1 (L) and 3 (B).

Key position	Continuity
Neutral / Lock	No
Unlock	Yes

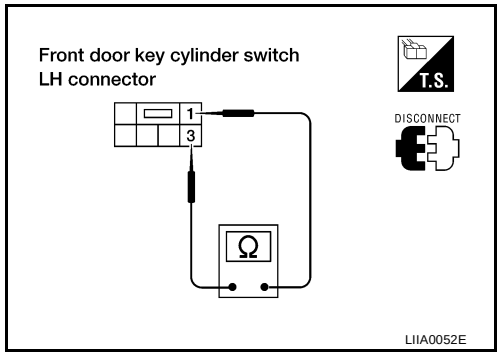

OK >> Check the following.

- Front door key cylinder switch LH ground circuit
- Harness for open or short between main power window and door lock/unlock switch and front door key cylinder switch LH

NG >> Replace front door key cylinder switch LH.

Diagnostic Procedure 4

EIS000RN

TRUNK LID KEY UNLOCK SIGNAL CHECK

1. CHECK TRUNK KEY CYLINDER SWITCH INPUT SIGNAL (UNLOCK SIGNAL)

With CONSULT-II

Check trunk key cylinder switch (“TRUNK KEY SW”) in "DATA MONITOR" mode with CONSULT-II.

- When key in key cylinder is at “NEUTRAL” position,

  TRUNK KEY SW : OFF

- When key is at “UNLOCK” position,

  TRUNK KEY SW : ON

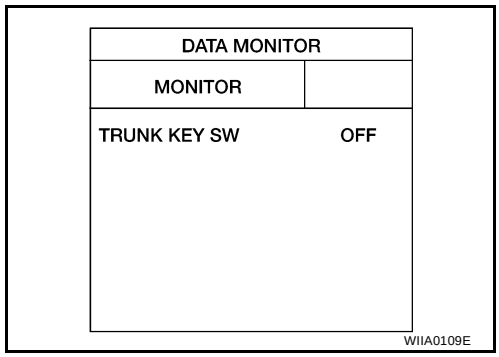

Without CONSULT-II

- Check voltage between BCM harness connector M21 terminal 17 (L/B) and ground.

Condition	Voltage
Neutral	Approx. 5V
Unlocked	0V

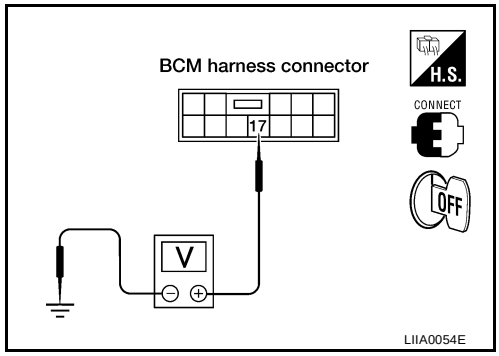

OK or NG

OK >> Trunk key cylinder switch is OK.

NG >> GO TO 2.

2. CHECK TRUNK KEY CYLINDER SWITCH (UNLOCK SWITCH)

1. Disconnect trunk key cylinder switch connector.
2. Check continuity between trunk key cylinder switch connector B34 terminals 1 and 2.

Condition	Continuity
Neutral	No
Unlocked	Yes

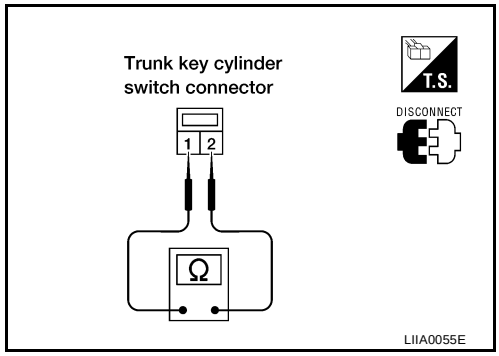

OK or NG

OK >> Check the following.

- Trunk key cylinder switch ground circuit
- Harness for open or short between trunk key cylinder switch and BCM

NG >> Replace trunk key cylinder switch.

Diagnostic Procedure 5

EIS000RO

VEHICLE SECURITY HORN ALARM CHECK

1. CHECK VEHICLE SECURITY HORN ALARM OPERATION

With CONSULT-II

- Check horn relay “HORN” in "ACTIVE TEST" mode with CONSULT-II.
- Perform operation shown on display.

Vehicle security horn alarm should operate.

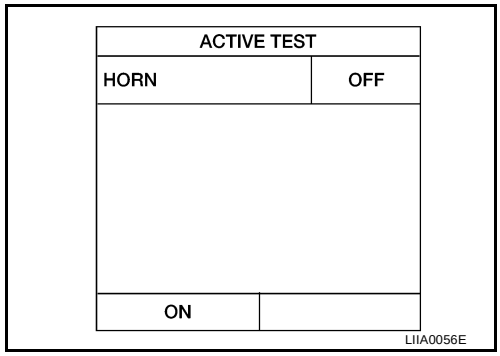

Without CONSULT-II

1. Disconnect IPDM E/R connector E121.
2. Apply ground to IPDM E/R harness connector E121 terminal 53 (G/W).

Does horn alarm activate?

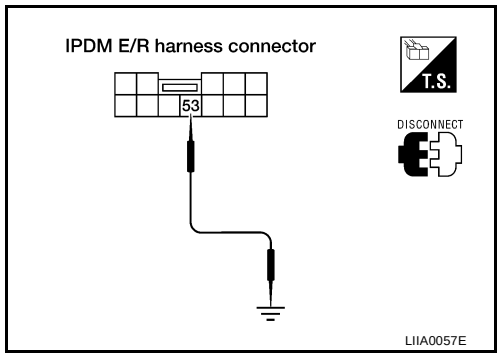

OK or NG

OK >> Horn alarm is OK.
NG >> GO TO 2.

2. CHECK HORN RELAY

Check horn relay condition.

OK or NG

OK >> GO TO 3.
NG >> Replace horn relay.

3. CHECK POWER SUPPLY FOR HORN RELAY

1. Disconnect horn relay connector.
2. Check voltage between horn relay connector H-1 terminal 1 and ground.

Battery voltage should exist.

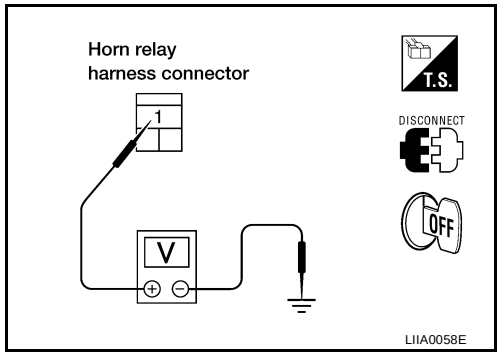

OK or NG

OK >> GO TO 4.
NG >> Check the following.

- 15A fuse (No. 25, located in the fuse and fusible link box)
- Harness for open or short between horn relay and fuse

4. CHECK HORN RELAY CIRCUIT

1. Disconnect horn relay connector.
2. Check voltage between horn relay connector H-1 terminals 2 and 3.

Battery voltage should exist

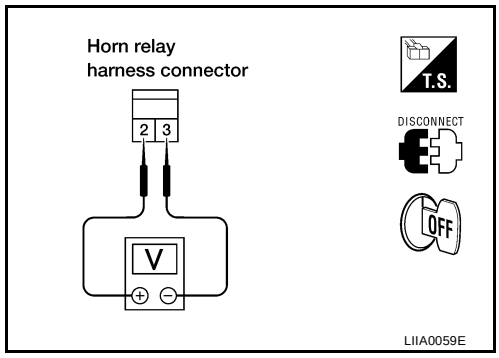

OK or NG

OK >> Check harness for open or short between horn relay and IPDM E/R.

NG >> Check harness for open or short.

Diagnostic Procedure 6

EIS000RP

VEHICLE SECURITY HEADLAMP ALARM CHECK

1. CHECK VEHICLE SECURITY HEADLAMP ALARM OPERATION

With CONSULT-II

- Check head lamp relay “HEAD LAMP” in "ACTIVE TEST" mode with CONSULT-II.
- Perform operation shown on display.

Vehicle security headlamp alarm should operate.

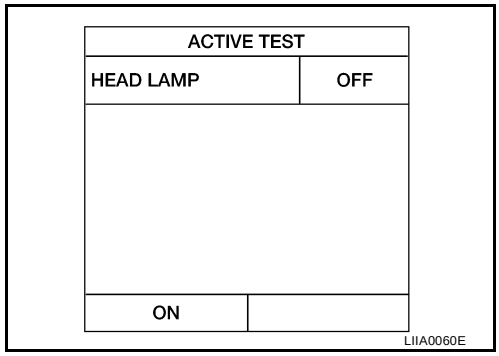

NOTE:
If CONSULT-II is not available, skip this procedure and go to the next procedure.

OK or NG

OK >> Headlamp alarm is OK.

NG >> GO TO 2.

2. CHECK HEAD LAMP RELAY 1

- Does headlamp come on when turning lighting switch “ON”?

YES or NO

YES >> Headlamp alarm is OK.

NO >> Check headlamp system. Refer to LT-5, "HEADLAMP (FOR USA)" or LT-28, "HEADLAMP (FOR CANADA) - DAYTIME LIGHT SYSTEM -" .

Diagnostic Procedure 7

EIS000RQ

DOOR LOCK/UNLOCK SWITCH CHECK

1. CHECK DOOR LOCK/UNLOCK SWITCH INPUT SIGNAL

With CONSULT-II

Check door lock/unlock switch ("LOCK SW DR/AS"/"UNLK SW DR/AS" in "DATA MONITOR" mode with CONSULT-II.

- When lock/unlock switch is turned to LOCK:

  LOCK SW DR/AS ON

- When lock/unlock switch is turned to UNLOCK:

  UNLK SW DR/AS ON

DATA MONITOR	
MONITOR	
LOCK SW DR/AS	OFF
UNLK SW DR/AS	OFF

LIIA0061E

Without CONSULT-II

Do doors lock/unlock when using main power window and door lock/unlock switch or front power window switch RH?

YES or NO?

YES >> Door lock/unlock switch is OK.

NO >> Refer to BL-33, "Door Lock/Unlock Switch Check (With left and right front power window anti–pinch system)" .

NVIS(NISSAN VEHICLE IMMOBILIZER SYSTEM-NATS)

PFP:28591

Component Parts and Harness Connector Location

EIS000RR

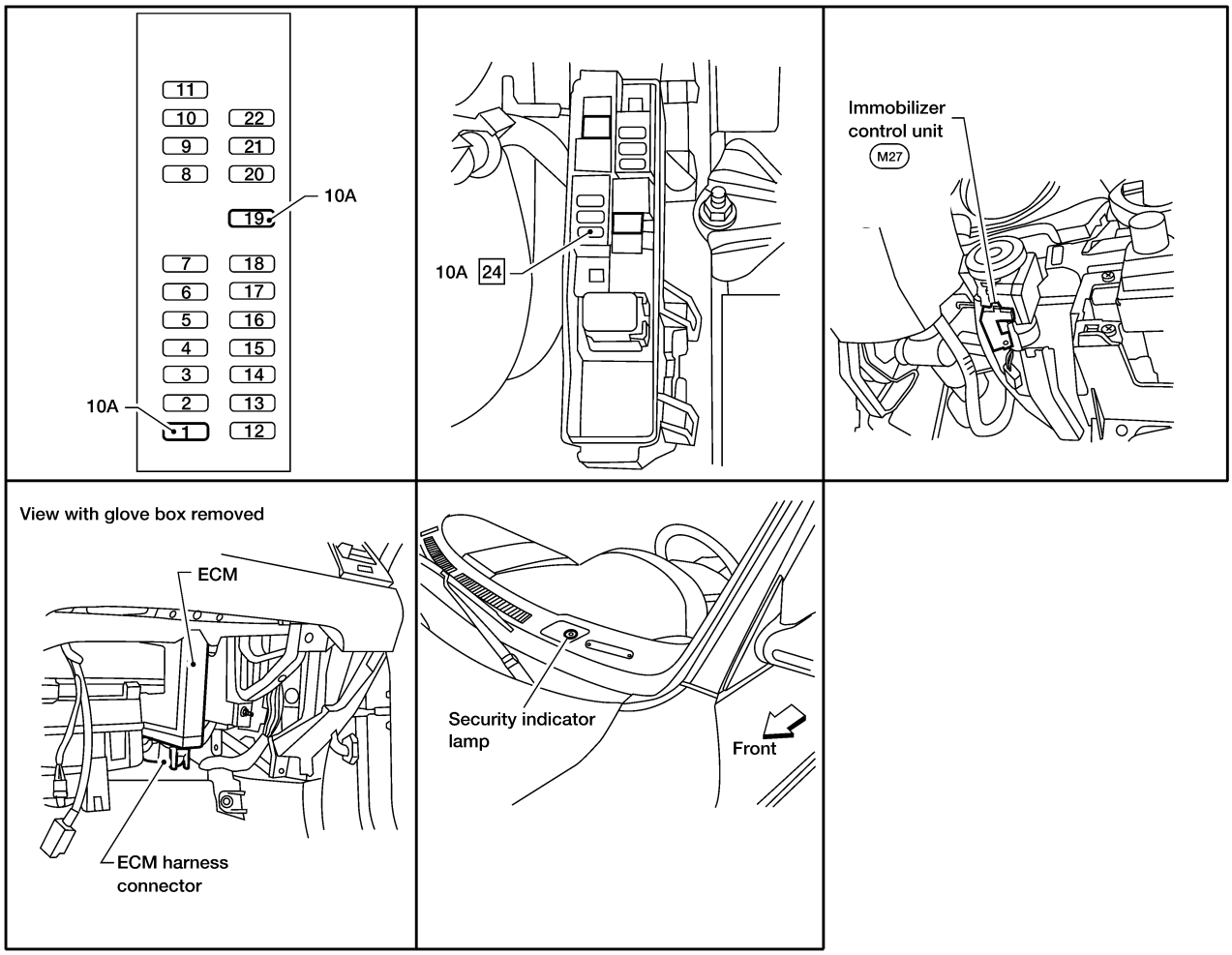

LIIA0150E

System Description

EIS000RS

NVIS (Nissan Vehicle Immobilizer System—NATS) has the following immobilizer functions:

- Since only NVIS (NATS) ignition keys, whose ID nos. have been registered into the ECM and IMMU of NVIS (NATS), allow the engine to run, operation of a stolen vehicle without a NVIS (NATS) registered key is prevented by NVIS (NATS). NVIS (NATS) will immobilize the engine if someone tries to start it without the registered key of NVIS (NATS).
- All of the originally supplied ignition key IDs have been NVIS (NATS) registered.
  If requested by the vehicle owner, a maximum of five key IDs can be registered into the NVIS (NATS) components.
- The security indicator lamp blinks when the ignition switch is in “OFF” or “ACC” position. Therefore, NVIS (NATS) warns outsiders that the vehicle is equipped with the system.
- When NVIS (NATS) detects trouble, the security indicator lamp lights up while ignition key is in the “ON” position.
- NVIS (NATS) trouble diagnoses, system initialization and additional registration for other NVIS (NATS) ignition key IDs must be carried out using CONSULT-II hardware and CONSULT-II NVIS (NATS) software. Regarding the procedures for NVIS (NATS) initialization and NVIS (NATS) ignition key ID registration, refer to CONSULT-II OPERATION MANUAL IVIS/NVIS.
- **When servicing a malfunction of the NVIS (indicated by lighting up of Security Indicator Lamp) or registering another NVIS ignition key ID no., it is necessary to re-register original key identification.**

Therefore, be sure to receive ALL KEYS from vehicle owner.

System Composition

EIS000RT

The immobilizer function of the NVIS (NATS) consists of the following:

- NVIS (NATS) ignition key
- NVIS (NATS) immobilizer control unit (IMMU) located around the ignition key cylinder
- ECM
- Security indicator lamp

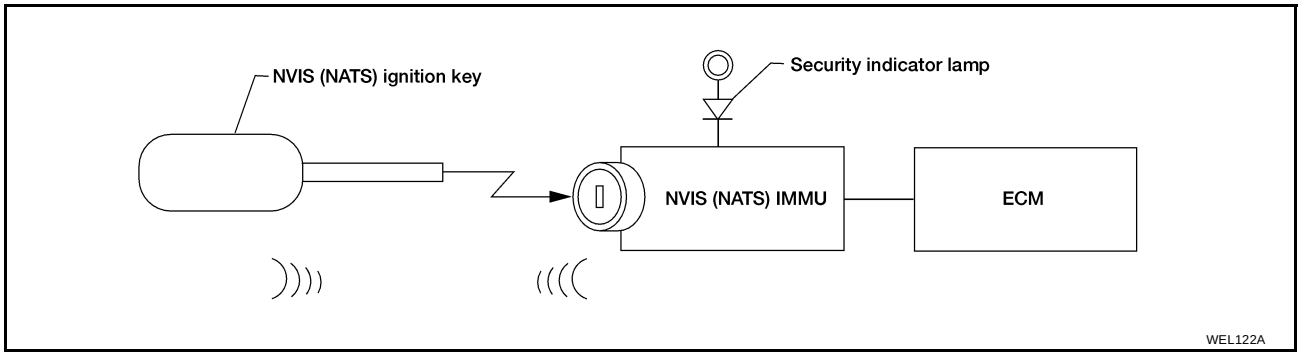

Wiring Diagram — NATS —

EIS000RU

BL-NATS-01

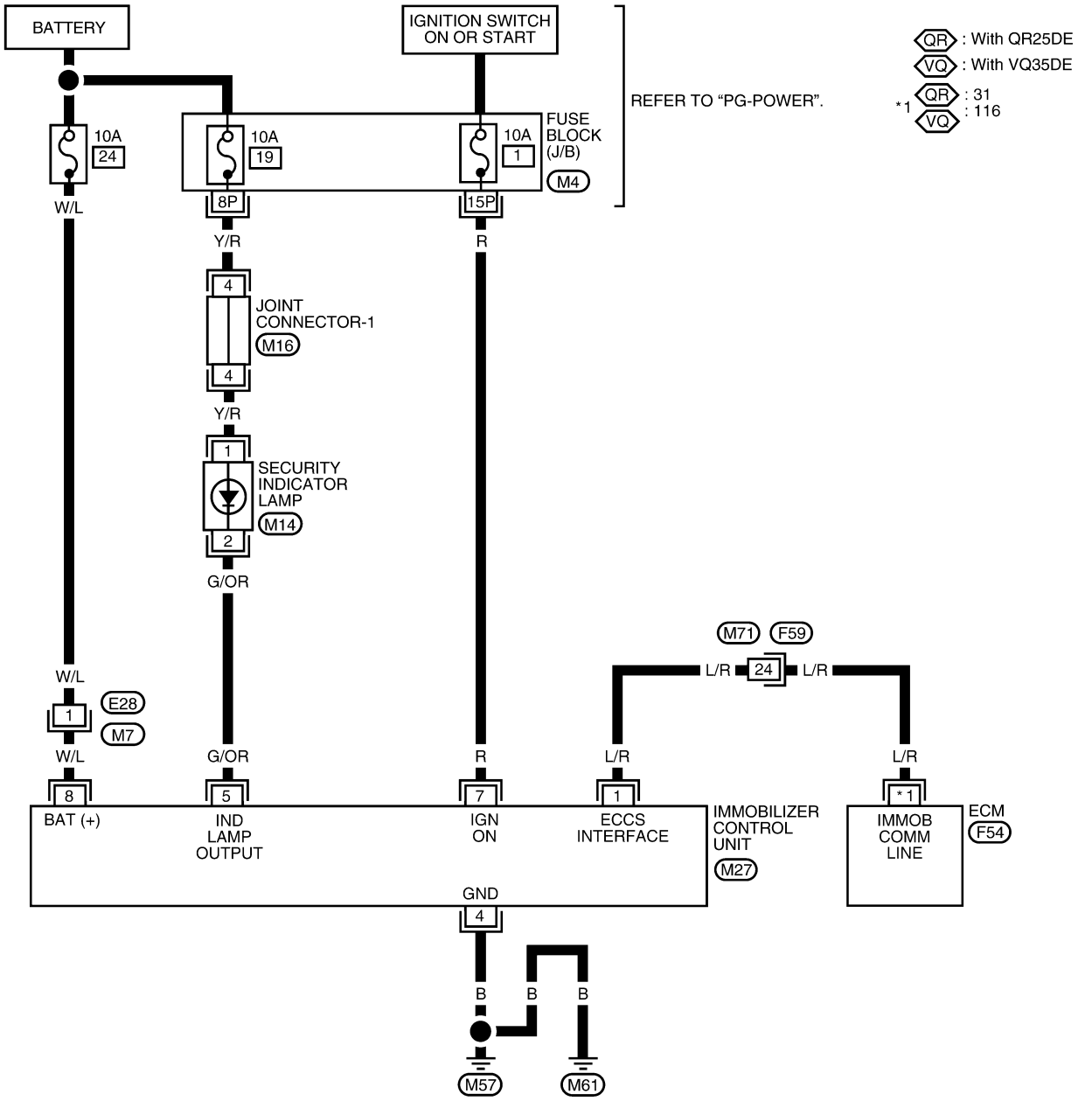

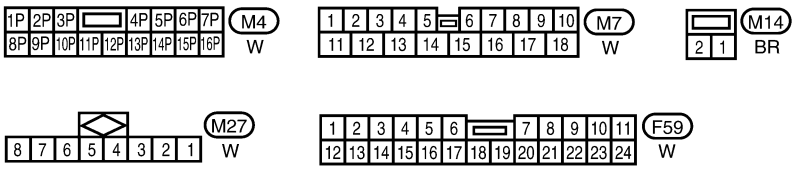

REFER TO THE FOLLOWING.

F54 - ELECTRICAL UNITS

M16 - JOINT CONNECTOR (J/C)

LIWA0022E

NVIS (NATS) IMMU CONTROL UNIT TERMINALS AND REFERENCE VALUE MEASURED BETWEEN EACH TERMINAL AND GROUND

TERMINAL	WIRE COLOR	ITEM	CONDITION	DATA (DC)
4	B	GROUND	—	—
5	G/OR	VEHICLE SECURITY INDICATOR	GOES OFF	BATTERY VOLTAGE
			ILLUMINATES	APPROX. 0V
7	R	IGNITION SWITCH (ON)	IGNITION KEY IS IN ON POSITION	BATTERY VOLTAGE
		IGNITION SWITCH (START)	IGNITION KEY IS IN START POSITION	BATTERY VOLTAGE
8	W/L	POWER SOURCE (FUSE)	—	BATTERY VOLTAGE

CONSULT-II

EIS000RV

CONSULT-II INSPECTION PROCEDURE

1. Turn ignition switch OFF.
2. Connect CONSULT-II to data link connector.

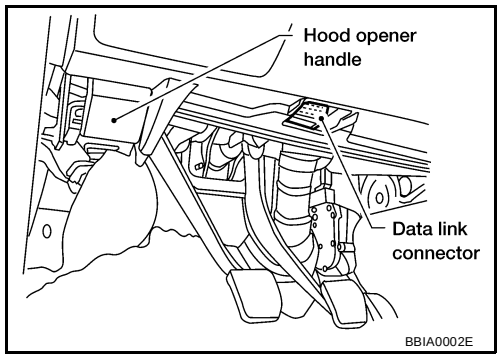

3. Insert NVIS (NATS) program card into CONSULT-II.

   Program card : NATS (AEN00A)

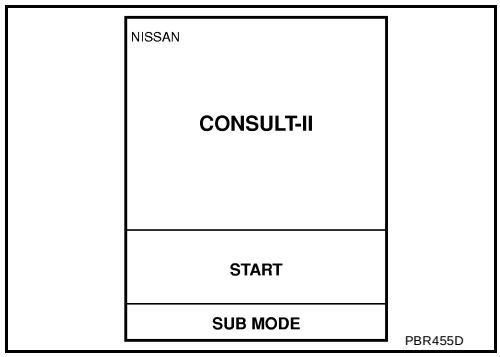

4. Turn ignition switch ON.
5. Touch “START”.
6. Select “NATS V.5.0”.

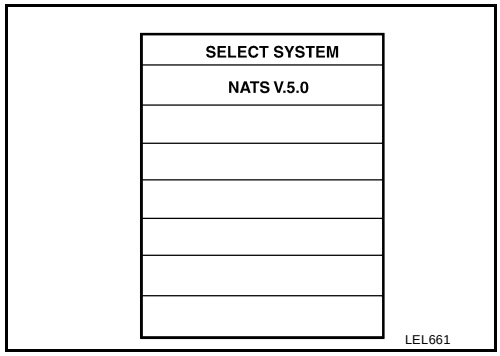

7. Perform each diagnostic test mode according to each service procedure.

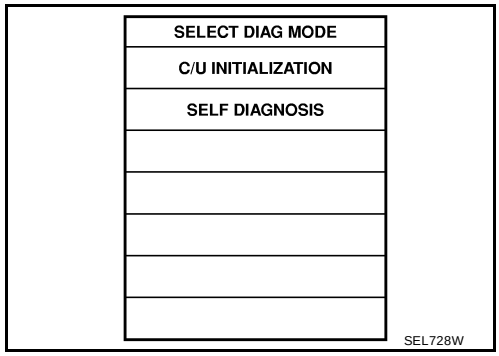

For further information, see the "CONSULT-II OPERATION MANUAL IVIS/NVIS".

CONSULT-II DIAGNOSTIC TEST MODE FUNCTION

CONSULT-II DIAGNOSTIC TEST MODE	Description
C/U INITIALIZATION	When replacing any of the following three components, C/U initialization is necessary. [NVIS (NATS) ignition key/IMMU/ECM]
SELF DIAGNOSIS	Detected items (screen terms) are as shown in the chart below.

NOTE:

- When any initialization is performed, all IDs previously registered will be erased and all NVIS (NATS) ignition keys must be registered again.
- The engine cannot be started with an unregistered key. In this case, the system may show "DIFFERENCE OF KEY" or "LOCK MODE" as a self-diagnostic result on the CONSULT-II screen.
- In rare cases, "CHAIN OF ECM-IMMU" might be stored as a self-diagnostic result during key registration procedure, even if the system is not malfunctioning.

HOW TO READ SELF-DIAGNOSTIC RESULTS

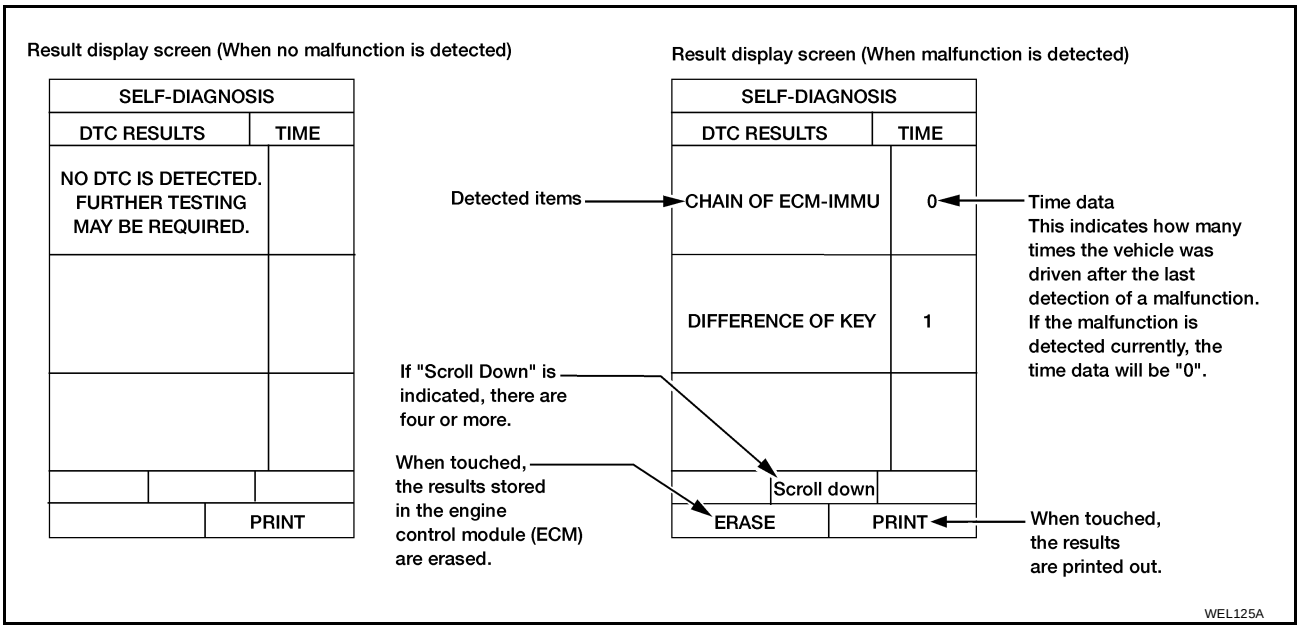

NVIS (NATS) SELF-DIAGNOSTIC RESULTS ITEM CHART

Detected items (NATS program card screen terms)	P No. Code (Self-diagnostic result of “ENGINE”	Malfunction is detected when	Reference page
ECM INT CIRC-IMMU	P1613	The malfunction of ECM internal circuit of IMMU communication line is detected.	BL-124
CHAIN OF ECM-IMMU	P1612	Communication impossible between ECM and IMMU (In rare cases, “CHAIN OF ECM-IMMU” might be stored during key registration procedure, even if the system is not malfunctioning.)	BL-125
DIFFERENCE OF KEY	P1615	IMMU can receive the key ID signal but the result of ID verification between key ID and IMMU is NG.	BL-128
CHAIN OF IMMU-KEY	P1614	IMMU cannot receive the key ID signal.	BL-129
ID DISCORD, IMM-ECM	P1611	The result of ID verification between IMMU and ECM is NG. System initialization is required.	BL-130
LOCK MODE	P1610	When the starting operation is carried out five or more times consecutively under the following conditions, NVIS (NATS) will shift the mode to one which prevents the engine from being started. ● Unregistered ignition key is used. ● IMMU or ECM is malfunctioning.	BL-133
DON'T ERASE BEFORE CHECKING ENG DIAG	—	Any engine trouble codes except NVIS (NATS) trouble codes have been detected in ECM.	BL-122

Trouble Diagnoses

EIS000RW

WORK FLOW

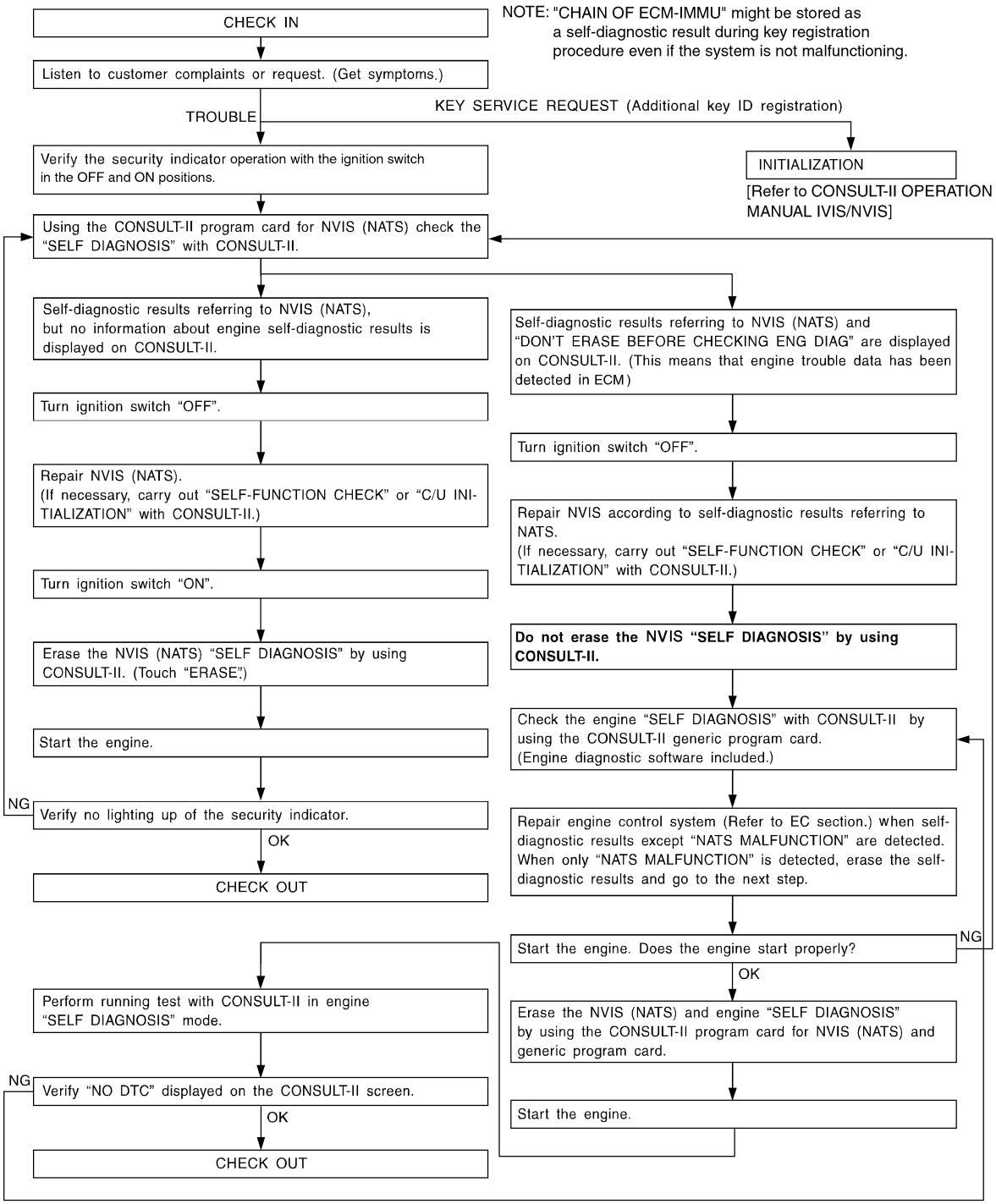

WEL126A

SYMPTOM MATRIX CHART 1 (SELF-DIAGNOSIS RELATED ITEM)

SYMPTOM	Displayed “SELF-DIAG RESULTS” on CONSULT-II screen.	DIAGNOSTIC PROCEDURE (Reference page)	SYSTEM (Malfunctioning part or mode)	REFERENCE PART NO. OF ILLUSTRATION, BL-124
	ECM INT CIRC-IMMU	PROCEDURE 1 BL-124	ECM	B
● Security indicator lighting up* ● Engine cranks but will not start			In rare cases, "CHAIN OF ECM-IMMU" might be stored during key registration procedure, even if the system is not malfunctioning.	—
	CHAIN OF ECM-IMMU	PROCEDURE 2 BL-125	Open circuit in battery voltage line of IMMU circuit	C1
			Open circuit in ignition line of IMMU circuit	C2
			Open circuit in ground line of IMMU circuit	C3
			Open circuit in communication line between IMMU and ECM	C4
			Short circuit between IMMU and ECM communication line and battery voltage line	C4
			Short circuit between IMMU and ECM communication line and ground line	C4
			ECM	B
			IMMU	A
	DIFFERENCE OF KEY	PROCEDURE 3 BL-128	Unregistered key	D
			IMMU	A
	CHAIN OF IMMU-KEY	PROCEDURE 4 BL-129	Malfunction of key ID chip	E
			IMMU	A
	ID DISCORD, IMM-ECM	PROCEDURE 5 BL-130	System initialization has not yet been completed	F
			ECM	F
	LOCK MODE	PROCEDURE 7 BL-133	LOCK MODE	D
● MIL staying ON ● Security indicator lighting up*	DON'T ERASE BEFORE CHECKING ENG DIAG	WORK FLOW BL-122	Engine trouble data and NVIS (NATS) trouble data have been detected in ECM	—

*: When NVIS (NATS) detects trouble, the security indicator lights up while ignition key is in the “ON” position.

SYMPTOM MATRIX CHART 2 (NON SELF-DIAGNOSIS RELATED ITEM)

SYMPTOM	DIAGNOSTIC PROCEDURE (Reference page)	SYSTEM (Malfunctioning part or mode)
Security indicator lamp does not light up.	PROCEDURE 6 BL-131	Security indicator lamp
		Open circuit between fuse and IMMU
		Continuation of initialization mode
		IMMU

DIAGNOSTIC SYSTEM DIAGRAM

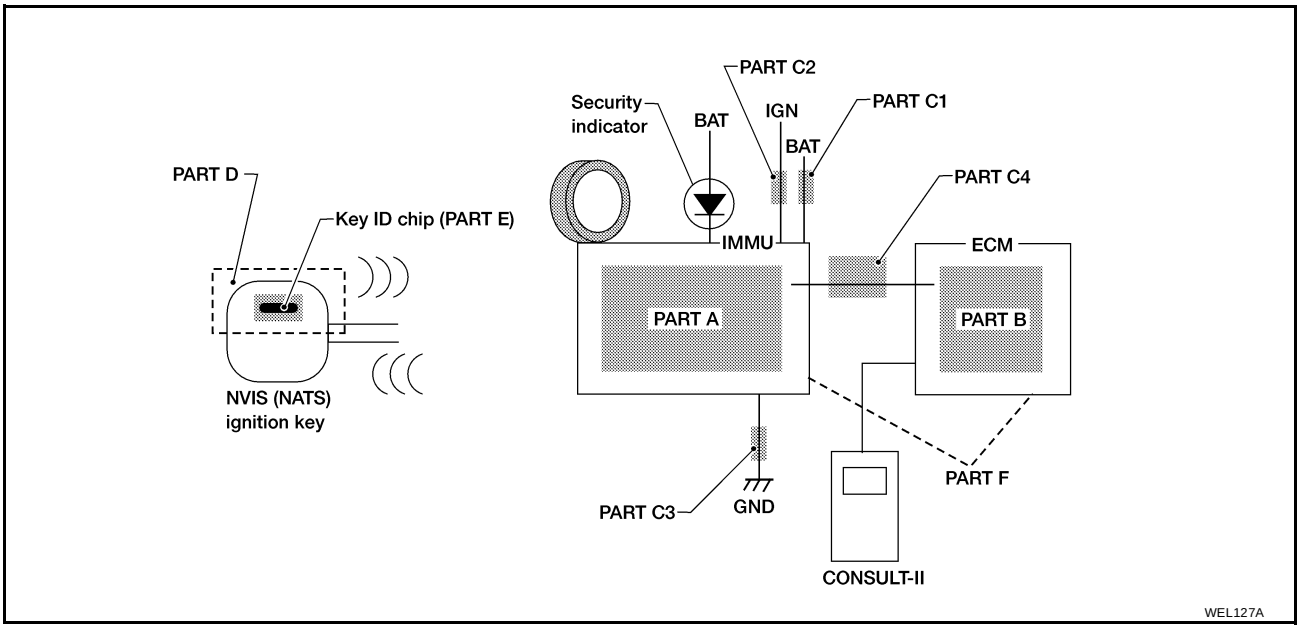

DIAGNOSTIC PROCEDURE 1

Self-diagnostic results:
"ECM INT CIRC-IMMU" displayed on CONSULT-II screen

1. Confirm SELF-DIAGNOSTIC RESULTS "ECM INT CIRC-IMMU" displayed on CONSULT-II screen. Ref. part No. B.
2. Replace ECM.
3. Perform initialization with CONSULT-II.
   For initialization, refer to "CONSULT-II OPERATION MANUAL IVIS/NVIS".

SELF DIAGNOSIS	
DTC RESULTS	TIME
ECM INT CIRC-IMMU	0

SEL314W

DIAGNOSTIC PROCEDURE 2

Self-diagnostic results:
“CHAIN OF ECM-IMMU” displayed on CONSULT-II screen

1. CONFIRM SELF-DIAGNOSTIC RESULTS

Confirm SELF-DIAGNOSTIC RESULTS “CHAIN OF ECM-IMMU” displayed on CONSULT-II screen.

NOTE:
In rare cases, “CHAIN OF ECM-IMMU” might be stored during key registration procedure, even if the system is not malfunctioning.

Is CONSULT-II screen displayed as shown?

Yes >> GO TO 2.
No >> GO TO BL-123, "SYMPTOM MATRIX CHART 1 (SELF-DIAGNOSIS RELATED ITEM)" .

SELF DIAGNOSIS	
DTC RESULTS	TIME
CHAIN OF ECM-IMMU	0

SEL292W

2. CHECK POWER SUPPLY CIRCUIT FOR NVIS (NATS) IMMU

1. Disconnect NVIS (NATS) IMMU connector.
2. Check voltage between NVIS (NATS) IMMU harness connector M27 terminal 8 (W/L) and ground with CONSULT-II or tester.

Battery voltage should exist.

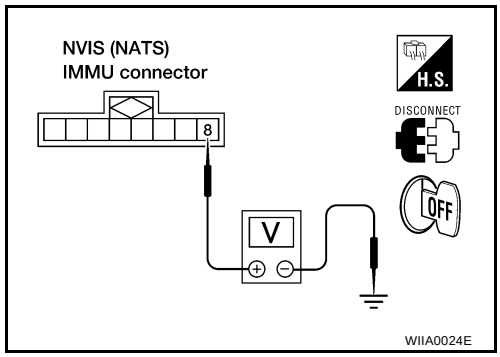

OK or NG

OK >> GO TO 3.
NG >> Check the following
- 10A fuse (No. 24, located in the fuse and fusible link box)
- Harness for open or short between fuse and NVIS (NATS) IMMU connector
  Ref. Part No. C1

3. CHECK IGN SW. ON SIGNAL

1. Turn ignition switch ON.
2. Check voltage between NVIS (NATS) IMMU harness connector M27 terminal 7 (R) and ground with CONSULT-II or tester.

Battery voltage should exist.

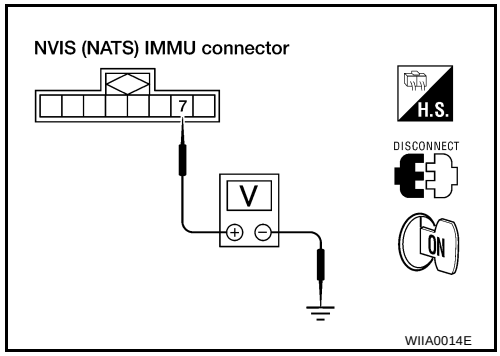

OK or NG

OK >> GO TO 4.
NG >> Check the following
- 10A fuse [No. 1, located in the fuse block (J/B)]
- Harness for open or short between fuse and NVIS (NATS) IMMU connector
  Ref. part No. C2

4. CHECK GROUND CIRCUIT FOR NVIS (NATS) IMMU

1. Turn ignition switch OFF.
2. Check harness continuity between NVIS (NATS) IMMU harness connector M27 terminal 4 (B) and ground.

Continuity should exist.

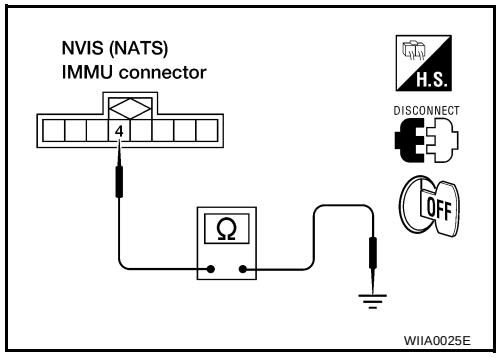

OK or NG

OK >> GO TO 5.
NG >> Repair harness. **Ref. part No. C3**

5. CHECK COMMUNICATION LINE OPEN CIRCUIT

1. Disconnect ECM connector.
2. Check harness continuity between ECM harness connector F54 terminal 31 (QR25DE) or 116 (VQ35DE) (L/R) and NVIS (NATS) IMMU connector M27 terminal 1 (L/R).

Continuity should exist.

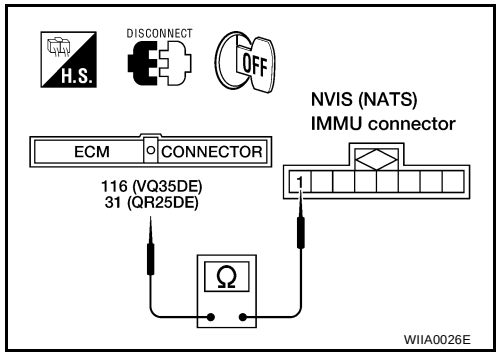

OK or NG

OK >> GO TO 6.
NG >> Repair harness or connector. Ref. part No. C4

6. CHECK COMMUNICATION LINE BATTERY SHORT CIRCUIT

1. Turn ignition switch ON.
2. Check voltage between ECM harness connector F54 terminal 31 (QR25DE) or 116 (VQ35DE) (L/R) or NVIS (NATS) IMMU harness connector M27 terminal 1 (L/R) and ground.

Voltage : 0V

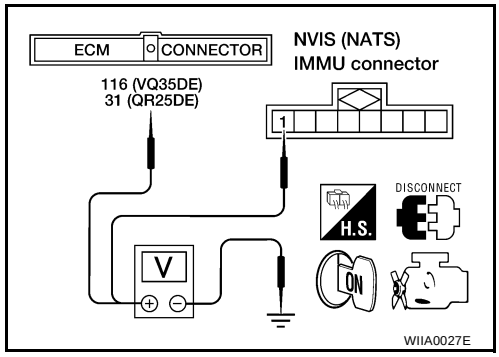

OK or NG

OK >> GO TO 7.
NG >>
- Communication line is short-circuited with battery voltage line or ignition switch ON line.
- Repair harness or connectors.
  Ref. part No. C4

7. CHECK COMMUNICATION LINE GROUND SHORT CIRCUIT

1. Turn ignition switch OFF.
2. Check continuity between ECM harness connector F54 terminal 31 (QR25DE) or 116 (VQ35DE) (L/R) or NVIS (NATS) IMMU connector M27 terminal 1 (L/R) and ground.

Continuity should not exist.

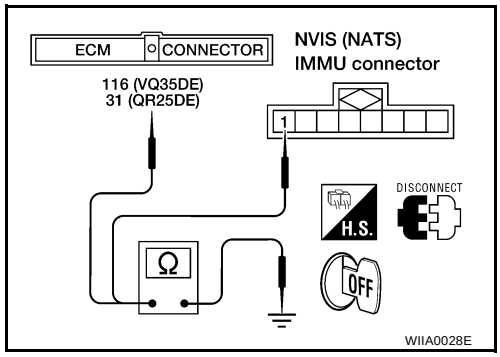

OK or NG

OK >> GO TO 8.

NG >>
- Communication line is short-circuited with ground line.
- Repair harness or connectors.
  Ref. part No. C4

8. SIGNAL FROM ECM TO NVIS (NATS) IMMU CHECK

1. Check the signal between ECM harness connector F54 terminal 31 (QR25DE) or 116 (VQ35DE) (L/R) and ground with CONSULT-II or oscilloscope when ignition switch is turned “ON”.
2. Make sure signals which are shown in the figure below can be detected during 750 msec. just after ignition switch is turned “ON”.

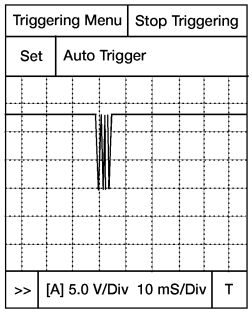

OK or NG

OK >>
- NVIS (NATS) IMMU is malfunctioning.
- Replace NVIS (NATS) IMMU. **Ref. part No. A**
- Perform initialization with CONSULT-II.
- For the operation of initialization, refer to “CONSULT-II OPERATION MANUAL IVIS/NVIS”.

NG >>
- ECM is malfunctioning.
- Replace ECM. **Ref. part No. B**
- Perform initialization with CONSULT-II.
- For the operation of initialization, refer to “CONSULT-II OPERATION MANUAL IVIS/NVIS”.

DIAGNOSTIC PROCEDURE 3

Self-diagnostic results:
“DIFFERENCE OF KEY” displayed on CONSULT-II screen

1. CONFIRM SELF-DIAGNOSTIC RESULTS

Confirm SELF-DIAGNOSTIC RESULTS “DIFFERENCE OF KEY” displayed on CONSULT-II screen.

SELF DIAGNOSIS	
DTC RESULTS	TIME
DIFFERENCE OF KEY	0

SEL293W

Is CONSULT-II screen displayed as above?

Yes >> GO TO 2.
No >> Go to BL-123, "SYMPTOM MATRIX CHART 1 (SELF-DIAGNOSIS RELATED ITEM)" .

2. PERFORM INITIALIZATION WITH CONSULT-II

Perform initialization with CONSULT-II. Re-register all NVIS (NATS) ignition key IDs.
For initialization, refer to “CONSULT-II OPERATION MANUAL IVIS/NVIS”.

IMMU INITIALIZATION
INITIALIZATION FAIL
THEN IGN KEY SW ‘OFF’ AND ‘ON’, AFTER CONFIRMING SELF-DIAG AND PASSWORD, PERFORM C/U INITIALIZATION AGAIN.

SEL297W

NOTE:
If the initialization is not completed or fails, CONSULT-II shows above message on the screen.

Can the system be initialized?

Yes >>
- Start engine. (END)
- (Ignition key ID was unregistered. **Ref. part No. D**)

No >>
- NVIS (NATS) IMMU is malfunctioning.
- Replace NVIS (NATS) IMMU. **Ref. part No. A**
- Perform initialization with CONSULT-II.
- For initialization, refer to “CONSULT-II OPERATION MANUAL IVIS/NVIS”.

DIAGNOSTIC PROCEDURE 4

Self-diagnostic results:
“CHAIN OF IMMU-KEY” displayed on CONSULT-II screen

1. CONFIRM SELF-DIAGNOSTIC RESULTS

Confirm SELF-DIAGNOSTIC RESULTS “CHAIN OF IMMU-KEY” displayed on CONSULT-II screen.

SELF DIAGNOSIS	
DTC RESULTS	TIME
CHAIN OF IMMU-KEY	0

SEL294W

Is CONSULT-II screen displayed as above?

Yes >> GO TO 2.
No >> Go to BL-123, "SYMPTOM MATRIX CHART 1 (SELF-DIAGNOSIS RELATED ITEM)" .

2. CHECK NVIS (NATS) IGNITION KEY ID CHIP

Start engine with another registered NVIS (NATS) ignition key.
Does the engine start?

Yes >>
- Ignition key ID chip is malfunctioning.
- Replace the ignition key.
- **Ref. part No. E**
- Perform initialization with CONSULT-II.
- For initialization, refer to “CONSULT-II OPERATION MANUAL IVIS/NVIS”.

No >> GO TO 3.

3. CHECK NVIS (NATS) IMMU INSTALLATION

Check NVIS (NATS) IMMU installation.
Refer to BL-134, "How to Replace NVIS (NATS) IMMU" .

OK or NG

OK >>
- NVIS (NATS) IMMU is malfunctioning.
- Replace NVIS (NATS) IMMU. **Ref. part No. A**
- Perform initialization with CONSULT-II.
- For initialization, refer to “CONSULT-II OPERATION MANUAL IVIS/NVIS”.

NG >> Reinstall NVIS (NATS) IMMU correctly.

DIAGNOSTIC PROCEDURE 5

Self-diagnostic results:
“ID DISCORD, IMM-ECM” displayed on CONSULT-II screen

1. CONFIRM SELF-DIAGNOSTIC RESULTS

Confirm SELF-DIAGNOSTIC RESULTS “ID DISCORD, IMM-ECM” displayed on CONSULT-II screen.

SELF DIAGNOSIS	
DTC RESULTS	TIME
ID DISCORD, IMM-ECM	0

SEL298W

NOTE:
“ID DISCORD IMM-ECM”:
Registered ID of NVIS (NATS) IMMU is in discord with that of ECM.

Is CONSULT-II screen displayed as above?

Yes >> GO TO 2.
No >> Go to BL-123, "SYMPTOM MATRIX CHART 1 (SELF-DIAGNOSIS RELATED ITEM)" .

2. PERFORM INITIALIZATION WITH CONSULT-II

Perform initialization with CONSULT-II. Re-register all NVIS (NATS) ignition key IDs.
For initialization, refer to “CONSULT-II OPERATION MANUAL IVIS/NVIS”.

IMMU INITIALIZATION
INITIALIZATION FAIL
THEN IGN KEY SW ‘OFF’ AND ‘ON’, AFTER CONFIRMING SELF-DIAG AND PASSWORD, PERFORM C/U INITIALIZATION AGAIN.

SEL297W

NOTE:
If the initialization is not completed or fails, CONSULT-II shows above message on the screen.

Can the system be initialized?

Yes >>
- Start engine. (END)
- (System initialization had not been completed. **Ref. part No. F**)

No >>
- ECM is malfunctioning.
- Replace ECM. **Ref. part No. F**
- Perform initialization with CONSULT-II.
- For initialization, refer to “CONSULT-II OPERATION MANUAL IVIS/NVIS”.

DIAGNOSTIC PROCEDURE 6

“SECURITY INDICATOR LAMP DOES NOT LIGHT UP”

1. CHECK FUSE

Check 10A fuse [No. 19, located in the fuse block (J/B)].

Is 10A fuse OK?

Yes >> GO TO 2.
No >> Replace fuse.

2. CHECK SECURITY INDICATOR LAMP

1. Install 10A fuse.
2. Perform initialization with CONSULT-II.
   For initialization, refer to “CONSULT-II OPERATION MANUAL IVIS/NVIS”.
3. Turn ignition switch OFF.
4. Start engine and turn ignition switch OFF.
5. Check the security indicator lamp lighting.

Security indicator lamp should light up.

OK or NG

OK >> INSPECTION END
NG >> GO TO 3.

3. CHECK SECURITY INDICATOR LAMP POWER SUPPLY CIRCUIT

1. Disconnect security indicator lamp connector.
2. Check voltage between security indicator lamp connector M14 terminal 1 (Y/R) and ground.

Battery voltage should exist.

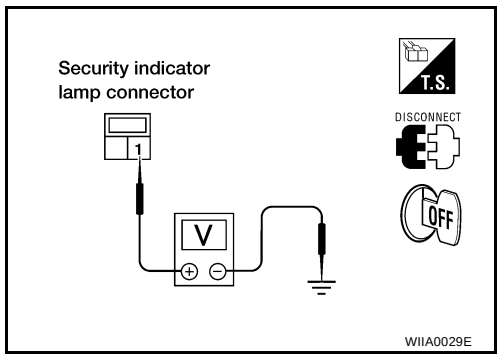

OK or NG

OK >> GO TO 4.
NG >> Check harness for open or short between fuse and security indicator lamp.

4. CHECK SECURITY INDICATOR LAMP

Check security indicator lamp.

Is security indicator lamp OK?

Yes >> GO TO 5.
No >> Replace security indicator lamp.

5. CHECK NVIS (NATS) IMMU FUNCTION

1. Connect NVIS (NATS) IMMU connector.
2. Disconnect security indicator lamp connector.
3. Check continuity between NVIS (NATS) IMMU connector M27 terminal 5 (G/OR) and ground.

Continuity should exist intermittently.

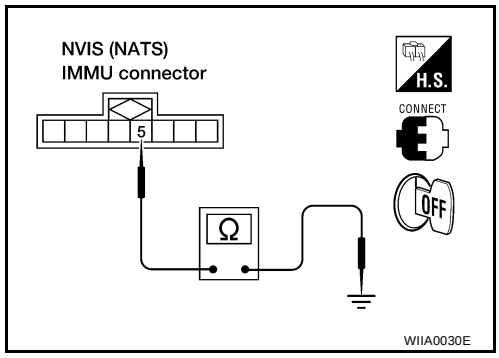

OK or NG

OK >> Check harness for open or short between security indicator lamp and NVIS (NATS) IMMU.

NG >>
- NVIS (NATS) IMMU is malfunctioning.
- Replace NVIS (NATS) IMMU.
- Perform initialization with CONSULT-II.
- For initialization, refer to “CONSULT-II OPERATION MANUAL IVIS/NVIS”.

DIAGNOSTIC PROCEDURE 7

Self-diagnostic results:
“LOCK MODE” displayed on CONSULT-II screen

1. CONFIRM SELF-DIAGNOSTIC RESULTS

Confirm SELF-DIAGNOSTIC RESULTS “LOCK MODE” is displayed on CONSULT-II screen.

SELF DIAGNOSIS	
DTC RESULTS	TIME
LOCK MODE	0

SEL295W

Is CONSULT-II screen displayed as above?

Yes >> GO TO 2.
No >> Go to BL-123, "SYMPTOM MATRIX CHART 1 (SELF-DIAGNOSIS RELATED ITEM)" .

2. ESCAPE FROM LOCK MODE

1. Turn ignition switch OFF.
2. Turn ignition switch ON with registered key. (Do not start engine.) Wait 5 seconds.
3. Return the key to OFF position.
4. Repeat steps 2 and 3 twice (total of three cycles).
5. Start the engine.

Does engine start?

Yes >> ● System is OK.
● (Now system is escaped from “LOCK MODE”.)
No >> GO TO 3.

3. CHECK NVIS (NATS) IMMU ILLUSTRATION

Check NVIS (NATS) IMMU installation. Refer to BL-134, "How to Replace NVIS (NATS) IMMU" .

OK or NG

OK >> GO TO 4.
NG >> Reinstall NVIS (NATS) IMMU correctly.

4. PERFORM INITIALIZATION WITH CONSULT-II

Perform initialization with CONSULT-II.
For initialization, refer to “CONSULT-II OPERATION MANUAL IVIS/NVIS”.

IMMU INITIALIZATION
INITIALIZATION FAIL
THEN IGN KEY SW ‘OFF’ AND ‘ON’, AFTER CONFIRMING SELF-DIAG AND PASSWORD, PERFORM C/U INITIALIZATION AGAIN.

SEL297W

NOTE:
If the initialization is not completed or fails, CONSULT-II shows the above message on the screen.

Can the system be initialized?

Yes >> System is OK.
No >> Check “CHAIN OF IMMU-KEY”. Refer to BL-129, "DIAGNOSTIC PROCEDURE 4" .

How to Replace NVIS (NATS) IMMU

EIS000RX

NOTE:

- **If NVIS (NATS) IMMU is not installed correctly, NVIS (NATS) system will not operate properly and SELF-DIAG RESULTS on CONSULT-II screen will show “LOCK MODE” or “CHAIN OF IMMU-KEY”.**

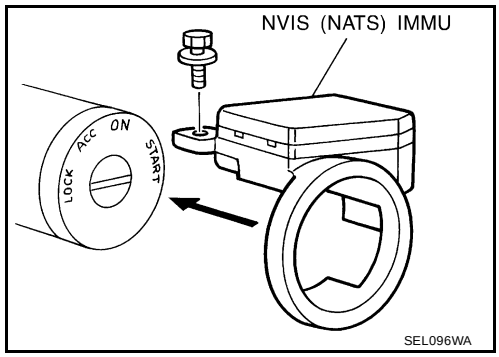

SEL096WA

INTEGRATED HOMELINK TRANSMITTER

PFP:96401

Wiring Diagram —TRNSCV—

EIS000RY

BL-TRNSCV-01

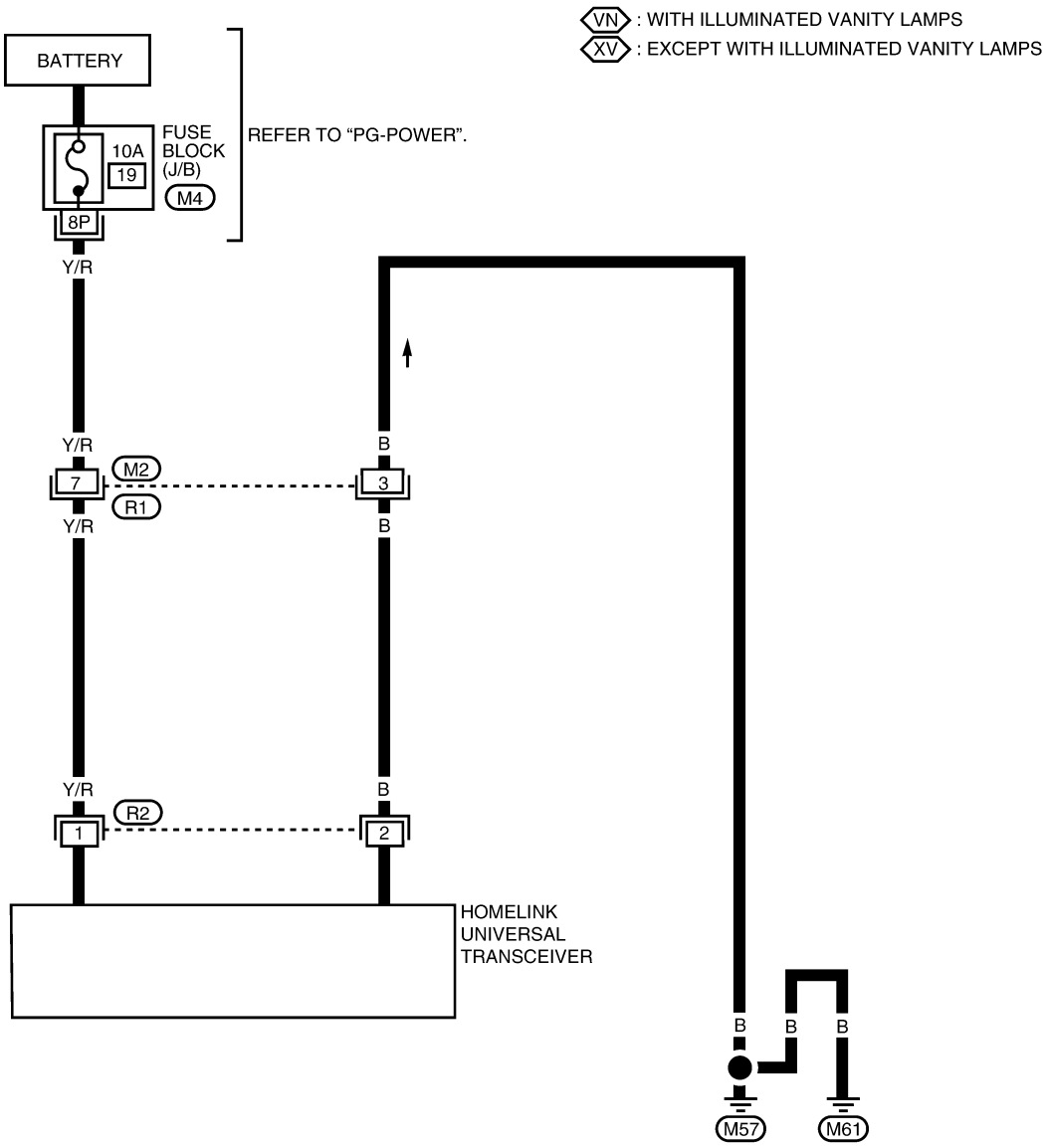

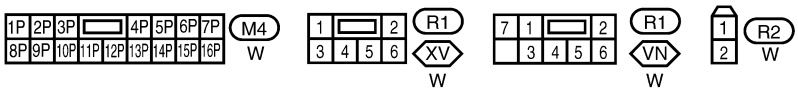

LIWA0040E

Trouble Diagnoses

EIS000RZ

DIAGNOSTIC PROCEDURE

SYMPTOM: Transmitter does not activate receiver.

Before conducting the procedure given below, make sure that system receiver (garage door opener, etc.) operates with original, hand-held transmitter. If NG, receiver or hand-held transmitter is at fault, not vehicle related.

1. ILLUMINATE CHECK

- Turn ignition switch “OFF”.
- Does red light (LED) of transmitter illuminate when any button is pressed?

YES or NO

YES >> GO TO 2.
NO >> GO TO 3.

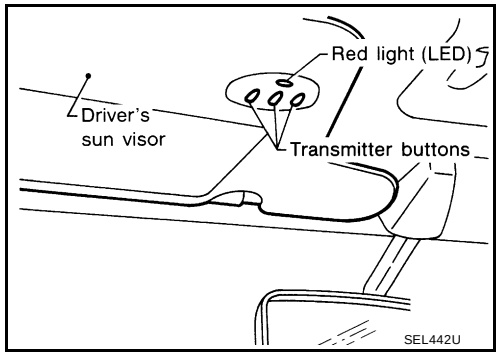

2. TRANSMITTER CHECK

Check transmitter with Tool*.
*:For details, refer to Technical Service Bulletin.

OK or NG

OK >> Receiver or handheld transmitter malfunction, not vehicle related.
NG >> Replace transmitter with sun visor assembly.

3. POWER SUPPLY CHECK

1. Disconnect transmitter connector.
2. Turn ignition switch “OFF”.
3. Check voltage between transmitter harness connector R2 terminal 1(Y/R) and body ground.

Battery voltage should exist.

OK or NG

OK >> GO TO 4.
NG >>
- Check 10A fuse [No. 19 located in the fuse block (J/B) No.1]
- Harness for open or short between fuse and transmitter

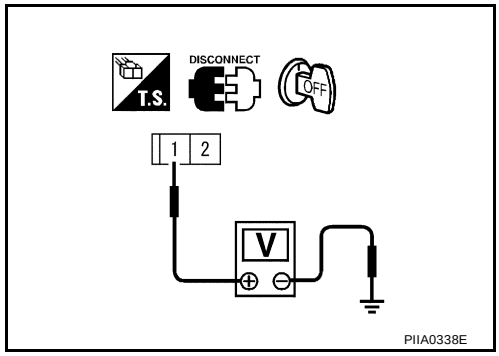

4. GROUND CIRCUIT CHECK

Check continuity between transmitter harness connector R2 terminal 2 (B) and body ground.

Continuity should exist.

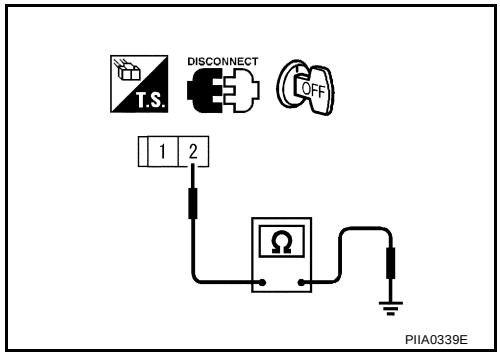

OK or NG

OK >> Replace transmitter with sun visor assembly.
NG >> Repair harness.

BODY REPAIR

PFP:60100

Body Exterior Paint Color

EIS000S0

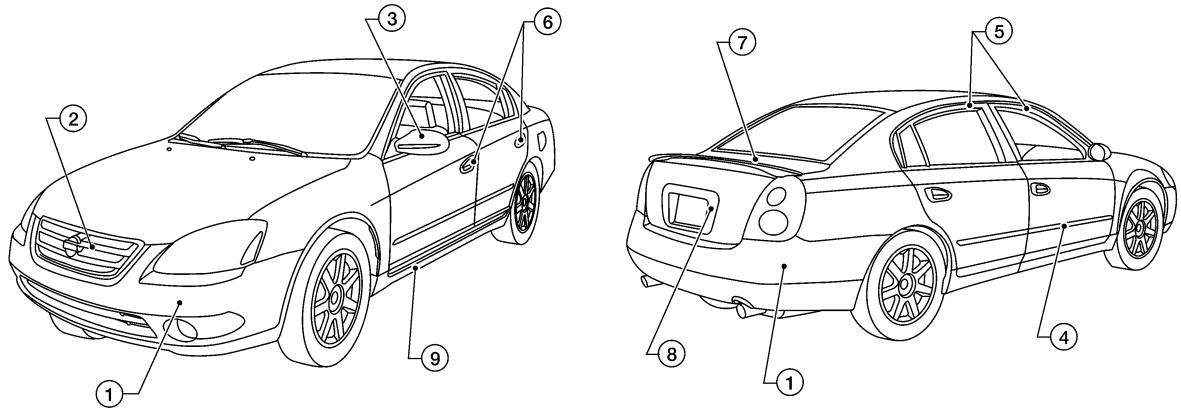

LIIA0126E

Component			Color code	BAX3	BBX4	BDY2	BEY1	BFY0	BKH3	BKY1	BKY2	BQM1	BQX3
			Description	Nouveau Ruby	Opal Blue Metallic	Mystic Emerald	Velvet Beige	Seascape	Super Black	Sheer Silver	Polished Pewter	Cloud White	Satin White
			Paint type	2P	2M	2M	2M	2M	2S	2M	2M	S	3P
			Hard clear coat	X	X	X	X	X	X	X	X	X	X
1	Bumper fascia	Body	Body color	BAX3	BBX4	BDY2	BEY1	BFY0	BKH3	BKY1	BKY2	BQM1	BQX3
2	Radiator grille	Center	Black	AG01	AG01	AG01	AG01	AG01	AG01	AG01	AG01	AG01	AG01
		Outer	Chrome	Cr	Cr	Cr	Cr	Cr	Cr	Cr	Cr	Cr	Cr
3	Outside mirror	Body	Body color	BAX3	BBX4	BDY2	BEY1	BFY0	BKH3	BKY1	BKY2	BQM1	BQX3
		Base	Black	AG01	AG01	AG01	AG01	AG01	AG01	AG01	AG01	AG01	AG01
4	Side guard molding	Body	Body color	BAX3	BBX4	BDY2	BEY1	BFY0	BKH3	BKY1	BKY2	BQM1	BQX3
		Base	Black	AG01	AG01	AG01	AG01	AG01	AG01	AG01	AG01	AG01	AG01
5	Door sash		Black tape	X	X	X	X	X	X	X	X	X	X
6	Outside handle		Body color	BAX3	BBX4	BDY2	BEY1	BFY0	BKH3	BKY1	BKY2	BQM1	BQX3
7	Rear Spoiler		Body color	BAX3	BBX4	BDY2	BEY1	BFY0	BKH3	BKY1	BKY2	BQM1	BQX3
8	Trunk lid finisher		Body color	BAX3	BBX4	BDY2	BEY1	BFY0	BKH3	BKY1	BKY2	BQM1	BQX3
9	Center mudgaurd		Body color	BAX3	BBX4	BDY2	BEY1	BFY0	BKH3	BKY1	BKY2	BQM1	BQX3

S: Solid Paint, 2S: Solid Color with Clear, 2M: Metallic with Clear, 2P:2-Coat Pearl, 3P:3-Coat Pearl

Body Component Parts

EIS001LF

UNDERBODY COMPONENT PARTS

LIIA0127E

1. Hoodledge assembly (RH, LH)
2. Hoodledge reinforcement (RH, LH)
3. Upper hoodledge (RH, LH)
4. Lower front hoodledge (RH, LH)
5. Rear hoodledge reinforcement (RH, LH)
6. Upper dash crossmember assembly
7. Upper dash assembly
8. Side cowl top
9. Lower dash
10. Side dash (RH, LH)
11. Front floor center
12. Front floor
13. Inner sill (RH, LH)
14. Rear seat crossmember assembly
15. Rear floor front
16. Rear seat crossmember
17. Rear floor belt anchor reinforcement
18. Rear seat back support assembly
19. Center rear crossmember
20. Rear floor rear
21. Muffler mounting bracket
22. Rear floor side (RH, LH)
23. Spare tire clamp bracket
24. Front side member closing plate assembly (RH, LH)
25. Front side member closing plate (RH, LH)
26. Front side member assembly (RH, LH)
27. Front side member (RH, LH)
28. Front side member outrigger assembly (RH, LH)
29. Front side member patch (RH, LH)
30. Front side member rear extension (RH, LH)
31. Rear side member (RH, LH)
32. Rear side member extension (RH, LH)

BODY COMPONENT PARTS

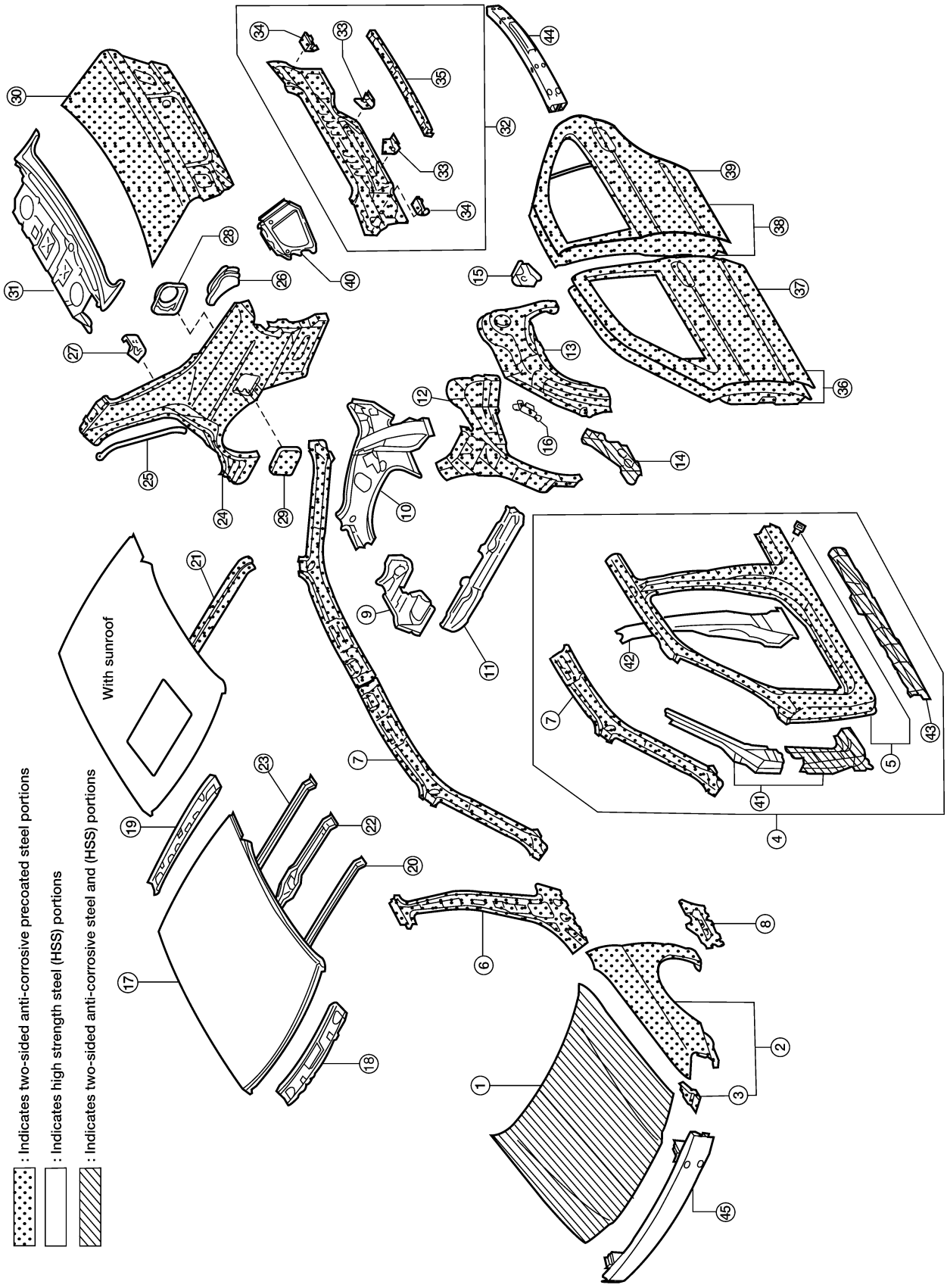

1. Hood
2. Front fender (RH, LH)
3. Front fender bracket (RH, LH)
4. Body side assembly (RH, LH)
5. Outer body side assembly (RH, LH)
6. Inner center pillar (RH, LH)
7. Upper inner front pillar (RH, LH)
8. Lower front pillar reinforcement (RH, LH)
9. Side parcel shelf (RH, LH)
10. Inner rear pillar (RH, LH)
11. Rear seat back support brace
12. Inner rear wheelhouse (RH, LH)
13. Outer rear wheelhouse (RH, LH)
14. Outer rear wheelhouse extension (RH, LH)
15. Rear floor side extension (RH, LH)
16. Rear seat crossmember reinforcement (RH, LH)
17. Roof
18. Front roof rail
19. Rear roof rail
20. Front roof bow
21. Roof reinforcement
22. Center roof bow
23. Rear roof bow
24. Rear fender (RH, LH)
25. Rear fender drip (RH, LH)
26. Rear fender corner (RH, LH)
27. Striker retainer (RH, LH)
28. Fuel filler lid base
29. Fuel filler lid
30. Trunk lid
31. Rear waist and parcel shelf
32. Rear panel assembly
33. Rear bumper side bracket
34. Rear bumper side bracket
35. Rear panel upper stiffener
36. Front door assembly (RH, LH)
37. Outer front door panel (RH, LH)
38. Rear door assembly (RH, LH)
39. Outer rear door panel (RH, LH)
40. Rear combination lamp base (RH, LH)
41. Front pillar reinforcement assembly (RH, LH)
42. Center pillar reinforcement (RH, LH)
43. Outer sill reinforcement
44. Rear bumper reinforcement
45. Front bumper reinforcement

Corrosion Protection

EIS001LG

DESCRIPTION

To provide improved corrosion prevention, the following anti-corrosive measures have been implemented in NISSAN production plants. When repairing or replacing body panels, it is necessary to use the same anti-corrosive measures.

ANTI-CORROSIVE PRECOATED STEEL (GALVANNEALED STEEL)

To improve repairability and corrosion resistance, a new type of anti-corrosive precoated steel sheet has been adopted replacing conventional zinc-coated steel sheet.
Galvannealed steel is electroplated and heated to form Zinc-iron alloy, which provides excellent and long term corrosion resistance with cationic electrodeposition primer.

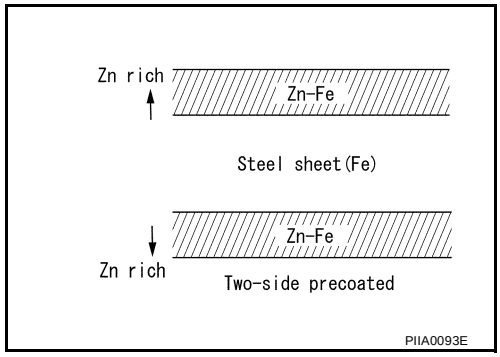

Nissan Genuine Service Parts are fabricated from galvannealed steel. Therefore, it is recommended that GENUINE NISSAN PARTS or equivalent be used for panel replacement to maintain the anti-corrosive performance built into the vehicle at the factory.

PHOSPHATE COATING TREATMENT AND CATIONIC ELECTRODEPOSITION PRIMER

A phosphate coating treatment and a cationic electrodeposition primer, which provide excellent corrosion protection, are employed on all body components.

CAUTION:

Confine paint removal during welding operations to an absolute minimum.

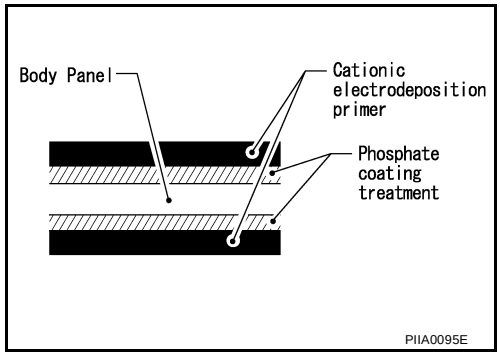

Nissan Genuine Service Parts are also treated in the same manner. Therefore, it is recommended that GENUINE NISSAN PARTS or equivalent be used for panel replacement to maintain anti-corrosive performance built into the vehicle at the factory.

ANTI-CORROSIVE WAX

To improve corrosion resistance, anti-corrosive wax is applied inside the body sill and inside other closed sections. Accordingly, when replacing these parts, be sure to apply anti-corrosive wax to the appropriate areas of the new parts. Select an excellent anti-corrosive wax which will penetrate after application and has a long shelf life.

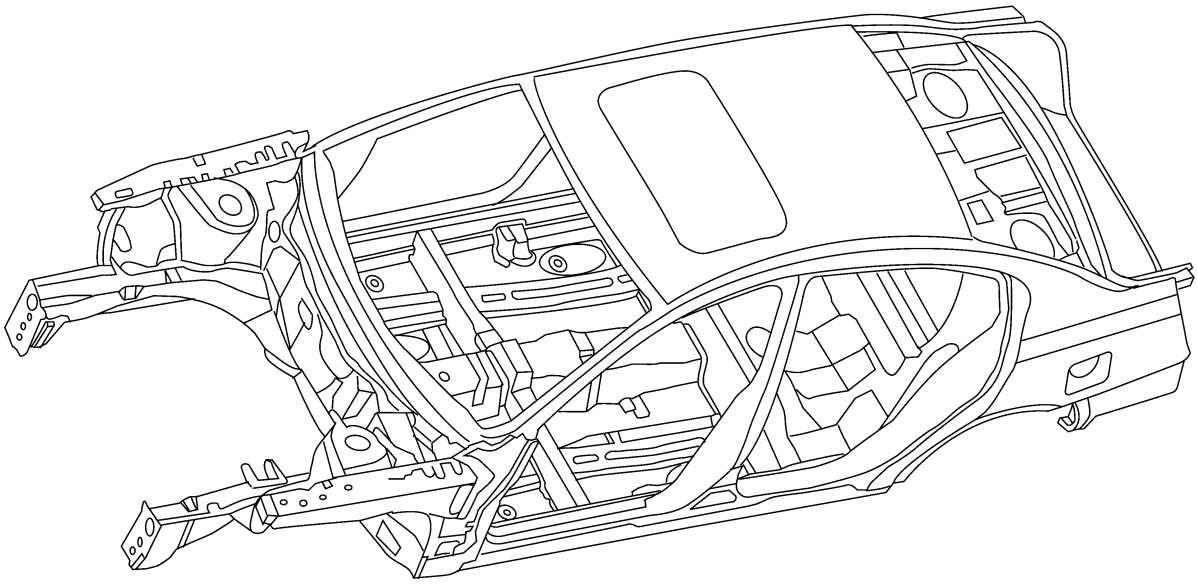

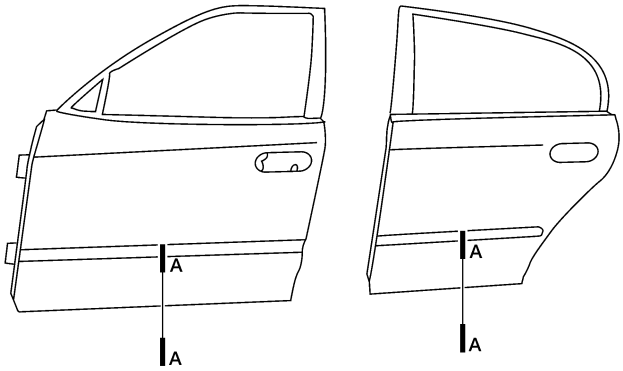

: Indicates anti-corrosive wax coated portions inside doors.

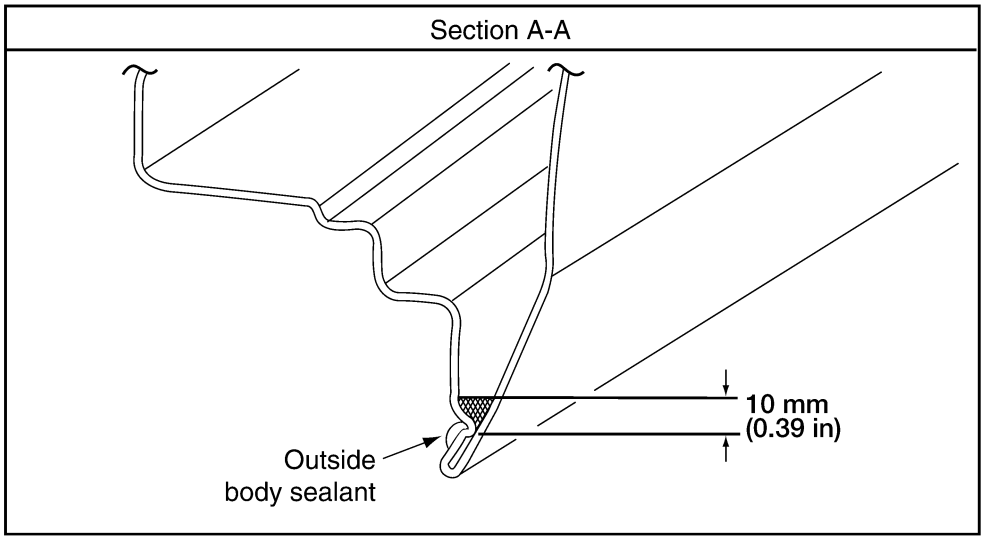

LIIA0005E

UNDERCOATING

The underside of the floor and wheelhouse are undercoated to prevent rust, vibration, noise and stone chipping. Therefore, when such a panel is replaced or repaired, apply undercoating to that part. Use an undercoating which is rust preventive, soundproof, vibration-proof, shock-resistant, adhesive, and durable.

Precautions in undercoating

1. Do not apply undercoating to any place unless specified (such as the areas above the muffler and three way catalyst which are subjected to heat).
2. Do not undercoat the exhaust pipe or other parts which become hot.
3. Do not undercoat rotating parts.
4. Apply bitumen wax after applying undercoating.

: Indicates undercoated portions.

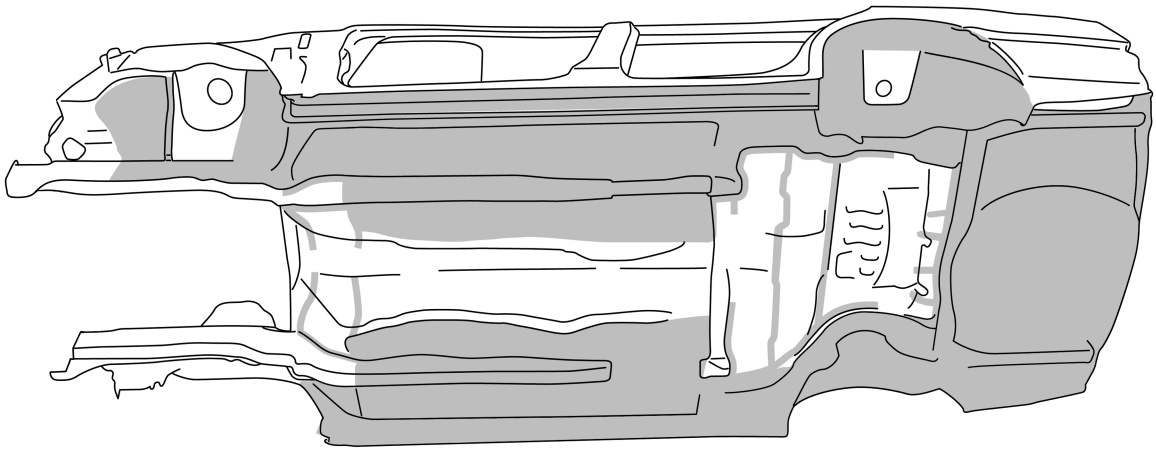

LIIA0129E

Body Sealing

EIS001LH

DESCRIPTION

The following figure shows the areas which are sealed at the factory. Sealant which has been applied to these areas should be smooth and free from cuts or gaps. Care should be taken not to apply an excess amount of sealant and not to allow other unaffected parts to come into contact with the sealant.

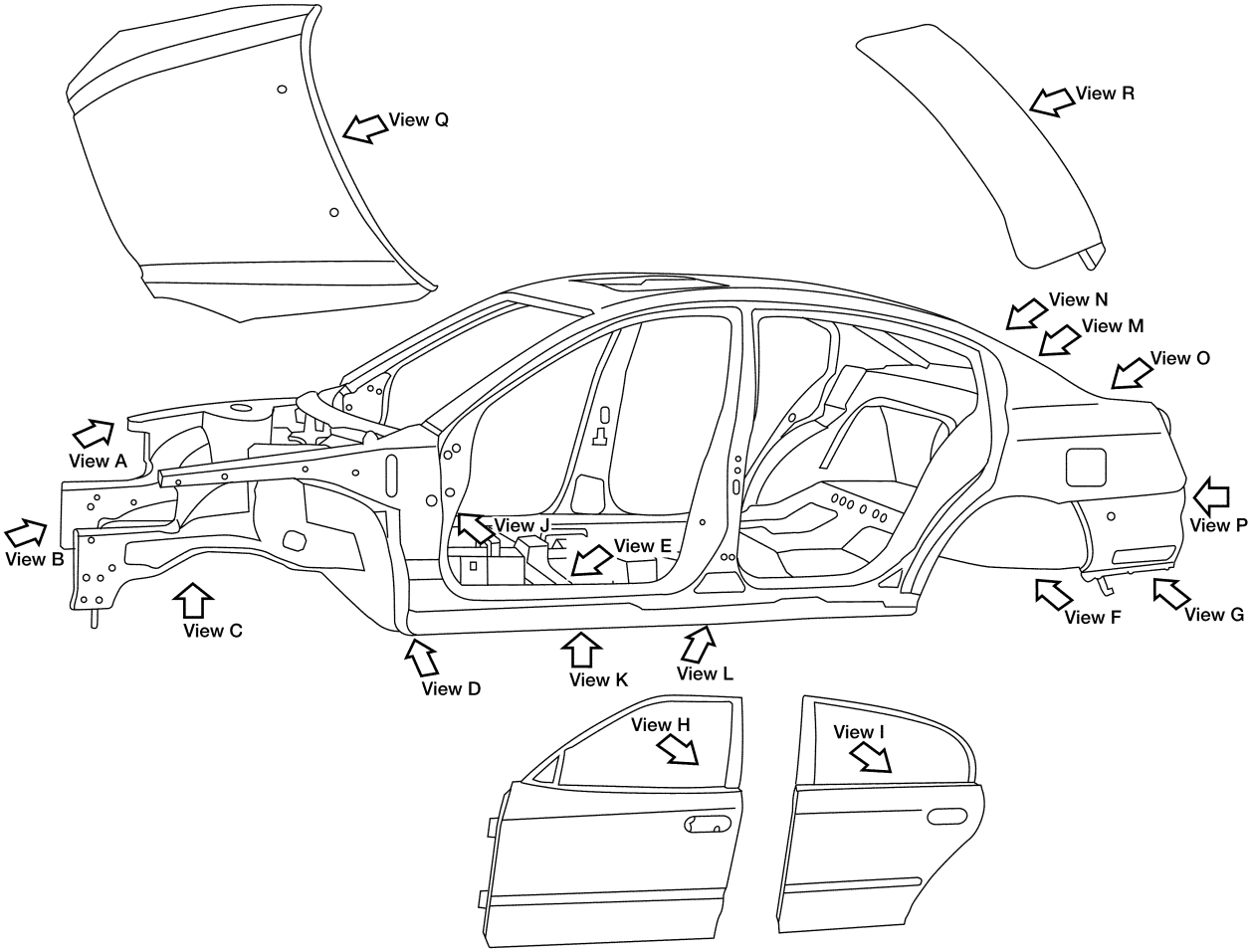

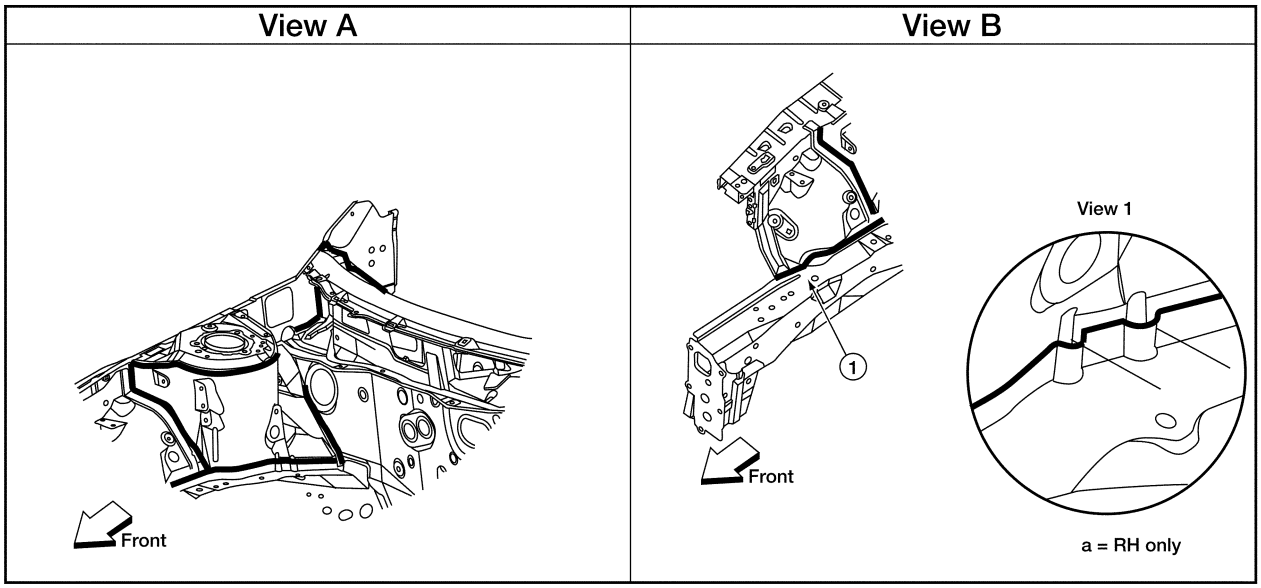

WIIA0138E

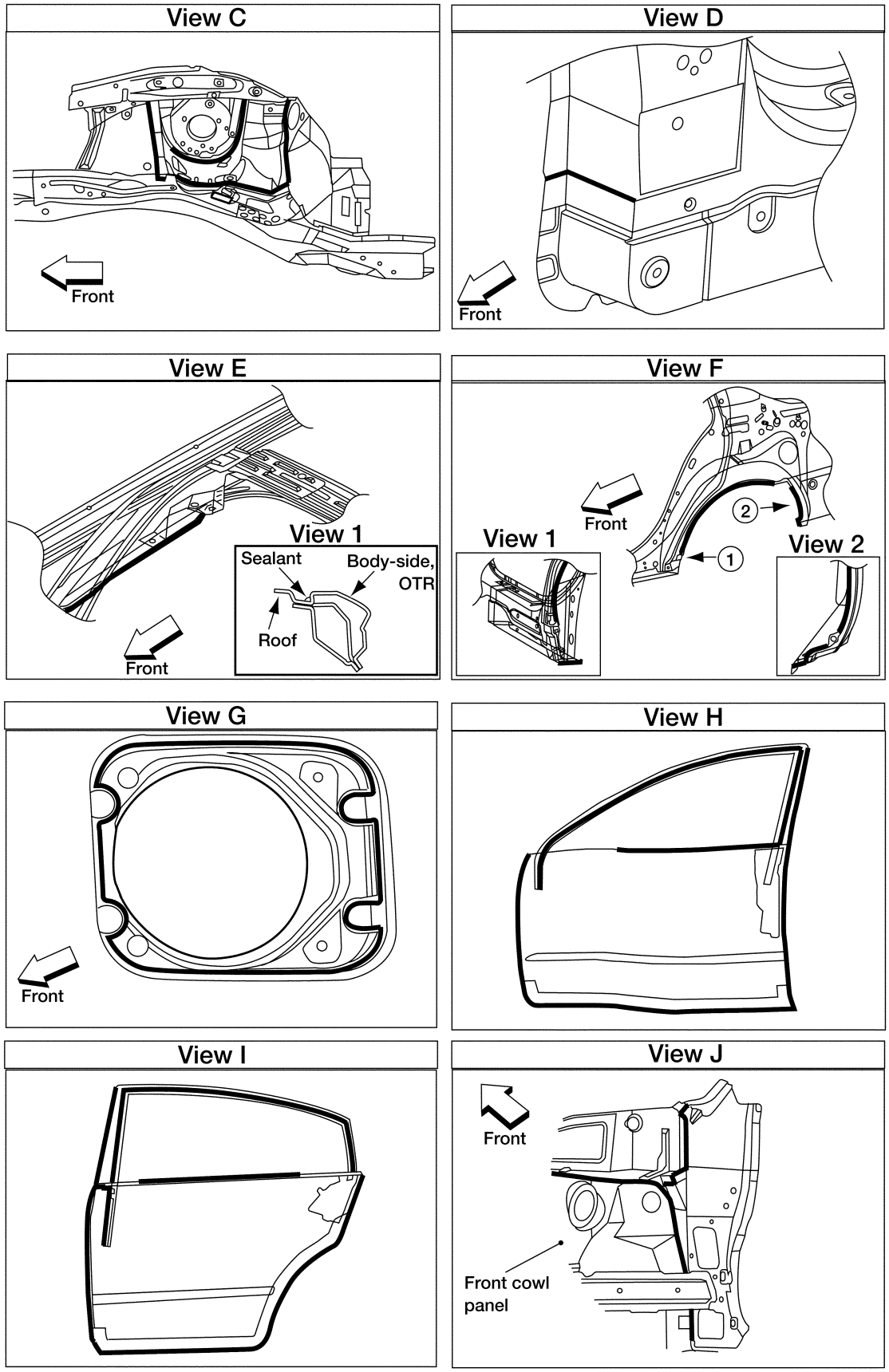
View C
Front
View D
Front
View E
View 1
Sealant
Body-side, OTR
Roof
Front
View F
Front
View 1
View 2
1
2
View G
Front
View H
View I
View J
Front
Front cowl panel

WIIA0129E

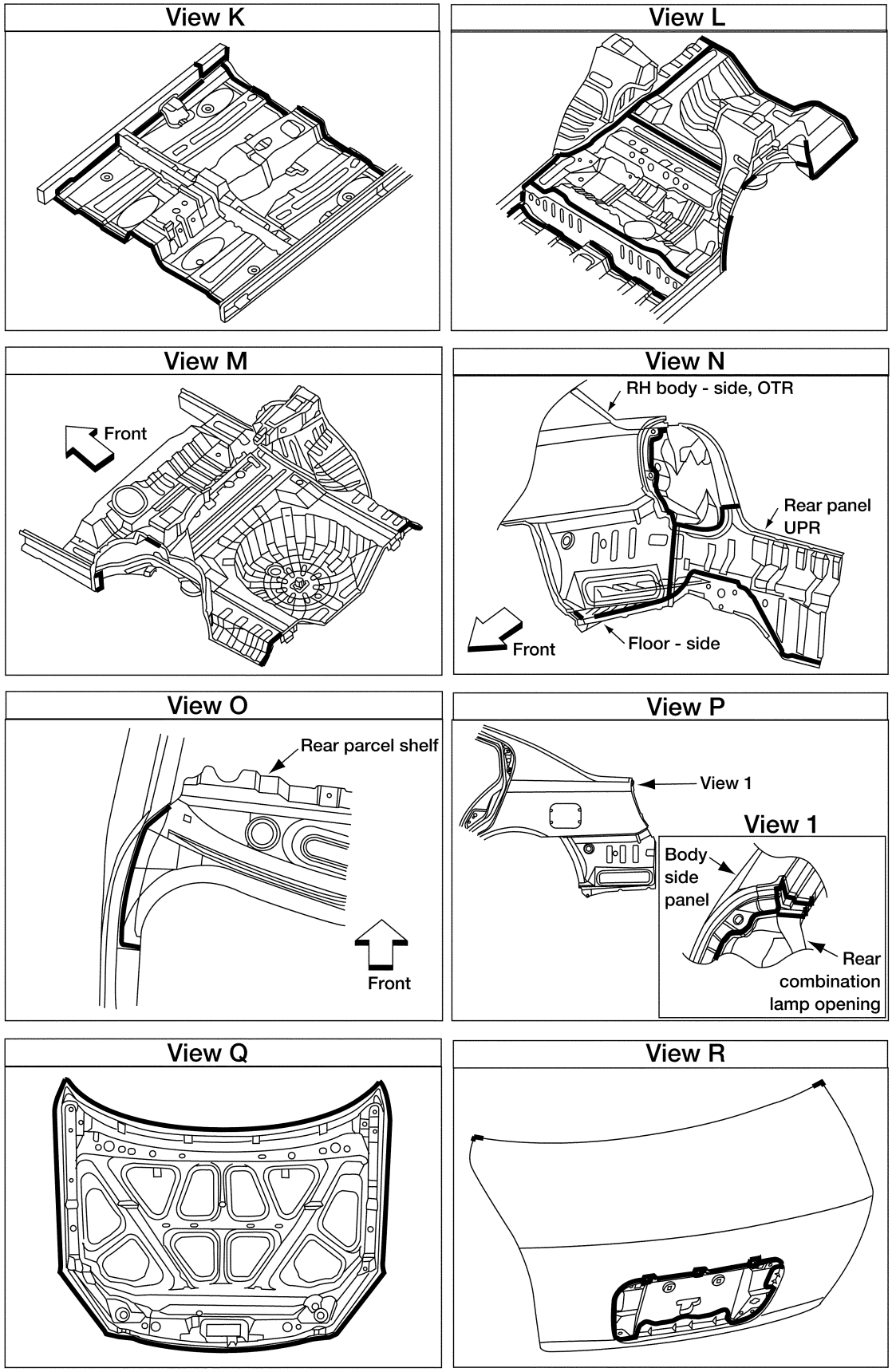
View K
View L
View M
Front
View N
RH body - side, OTR
Rear panel
UPR
Front
Floor - side
View O
Rear parcel shelf
Front
View P
View 1
View 1
Body
side
panel
Rear
combination
lamp opening
View Q
View R

WIIA0130E

Body Construction
BODY CONSTRUCTION

EIS001LI

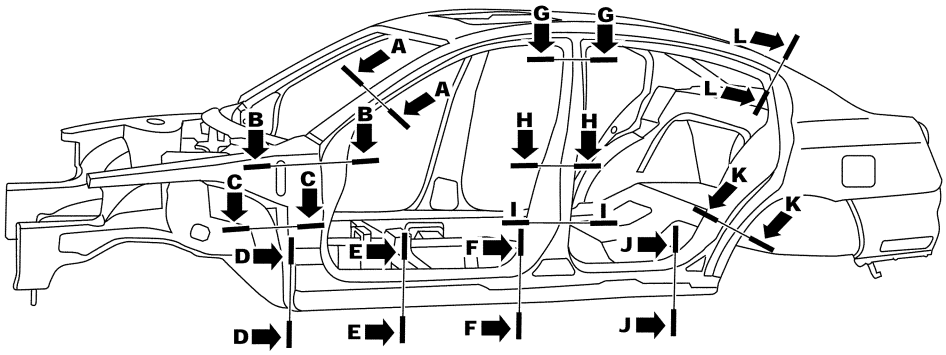

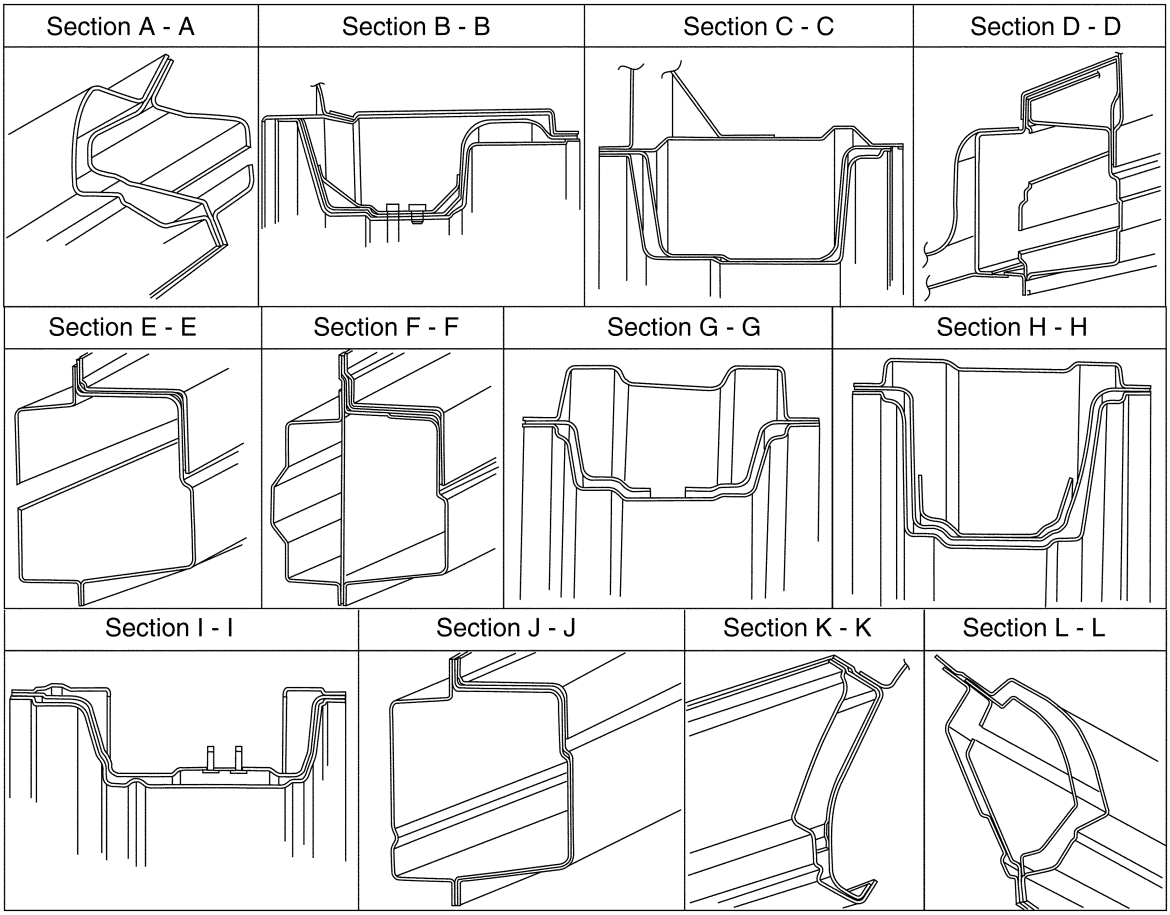

WIIA0131E

Body Alignment

EIS001LJ

BODY CENTER MARKS

A mark has been placed on each part of the body to indicate the vehicle center. When repairing parts damaged by an accident which might affect the vehicle frame (members, pillars, etc.), more accurate and effective repair will be possible by using these marks together with body alignment specifications.

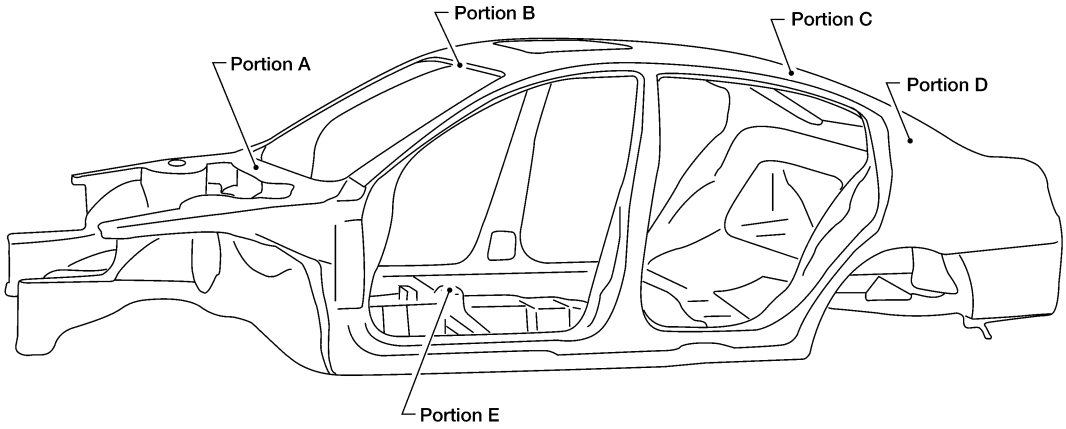

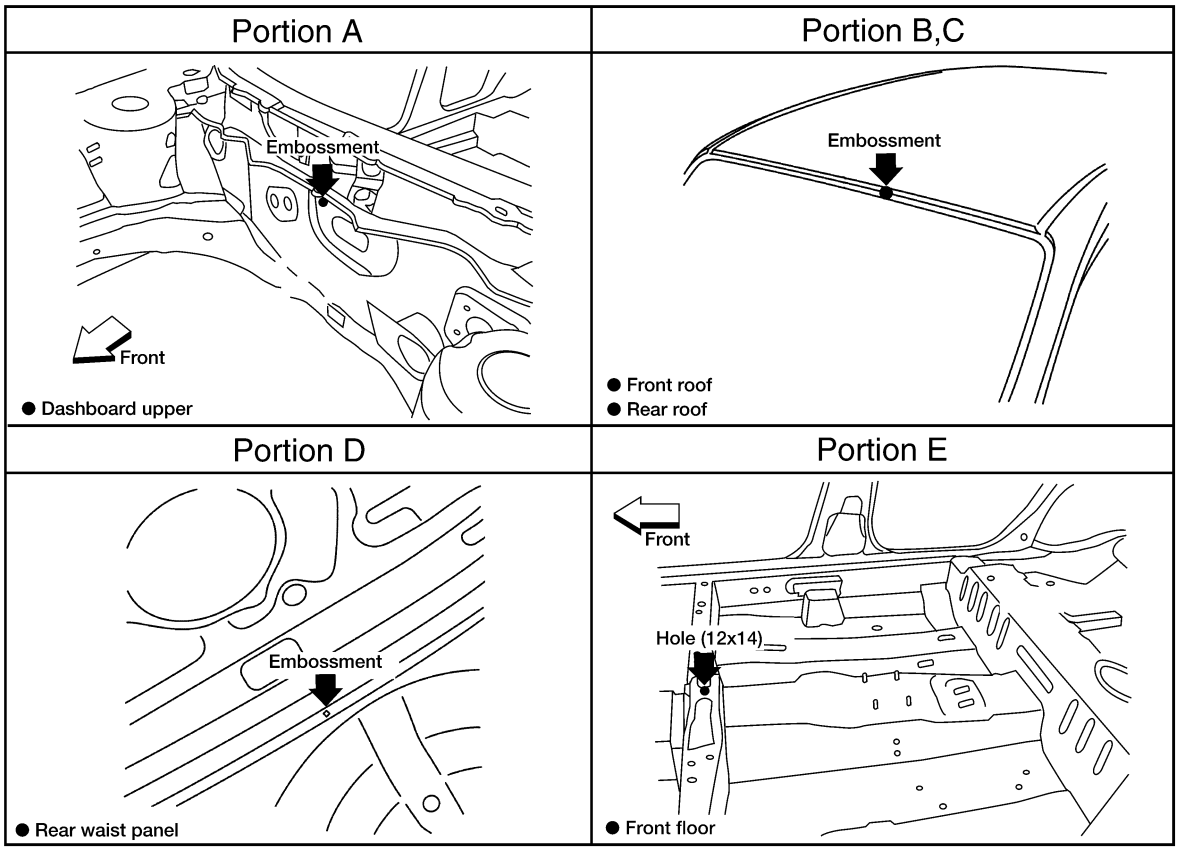

WIIA0147E

PANEL PARTS MATCHING MARKS

A mark has been placed on each body panel to indicate the parts matching positions. When repairing parts damaged by an accident which might affect the vehicle structure (members, pillars, etc.), more accurate and effective repair will be possible by using these marks together with body alignment specifications.

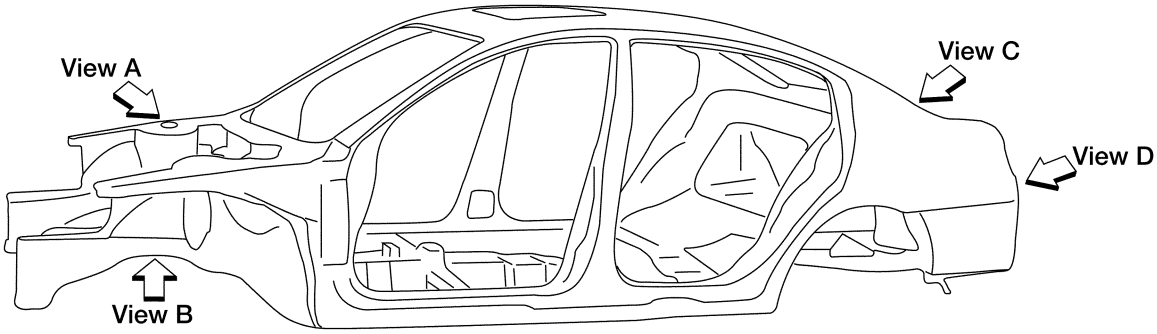

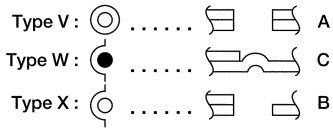

View A	View B
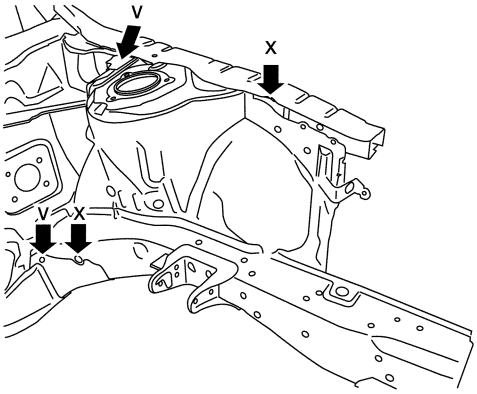	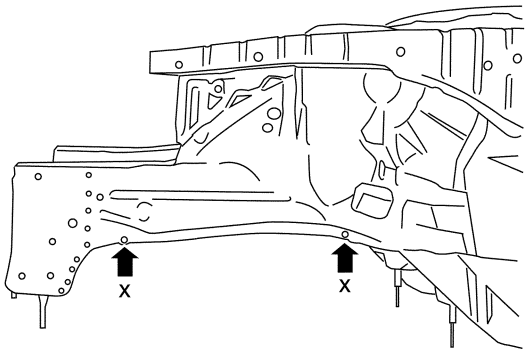
View C	**View D**
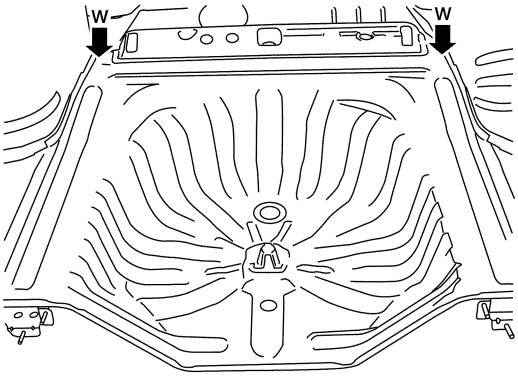	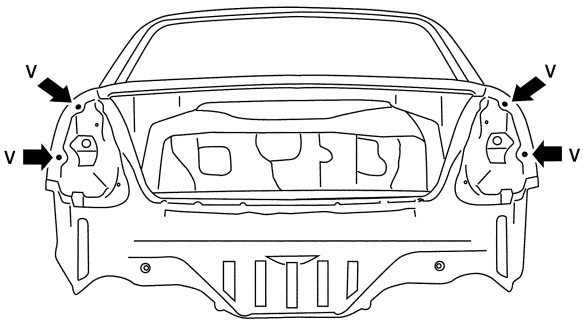

WIIA0132E

DESCRIPTION

- All dimensions indicated in the figures are actual.
- When using a tracking gauge, adjust both pointers to equal length. Then check the pointers and gauge itself to make sure there is no free play.
- When a measuring tape is used, check to be sure there is no elongation, twisting or bending.
- Measurements should be taken at the center of the mounting holes.
- An asterisk (*) following the value at the measuring point indicates that the measuring point on the other side is symmetrically the same value.
- The coordinates of the measurement points are the distances measured from the standard line of "X", "Y" and "Z".

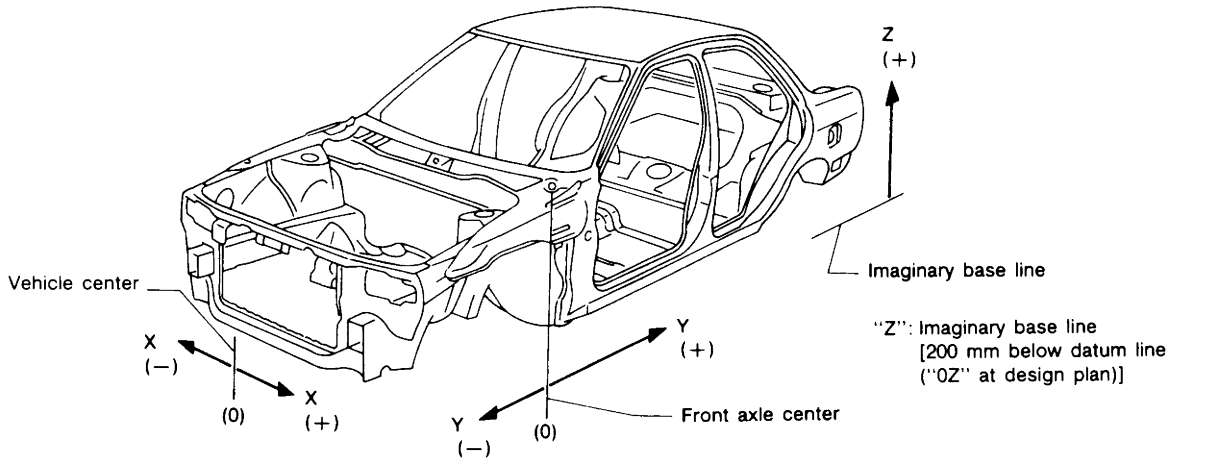

PIIA0104E

ENGINE COMPARTMENT MEASUREMENT

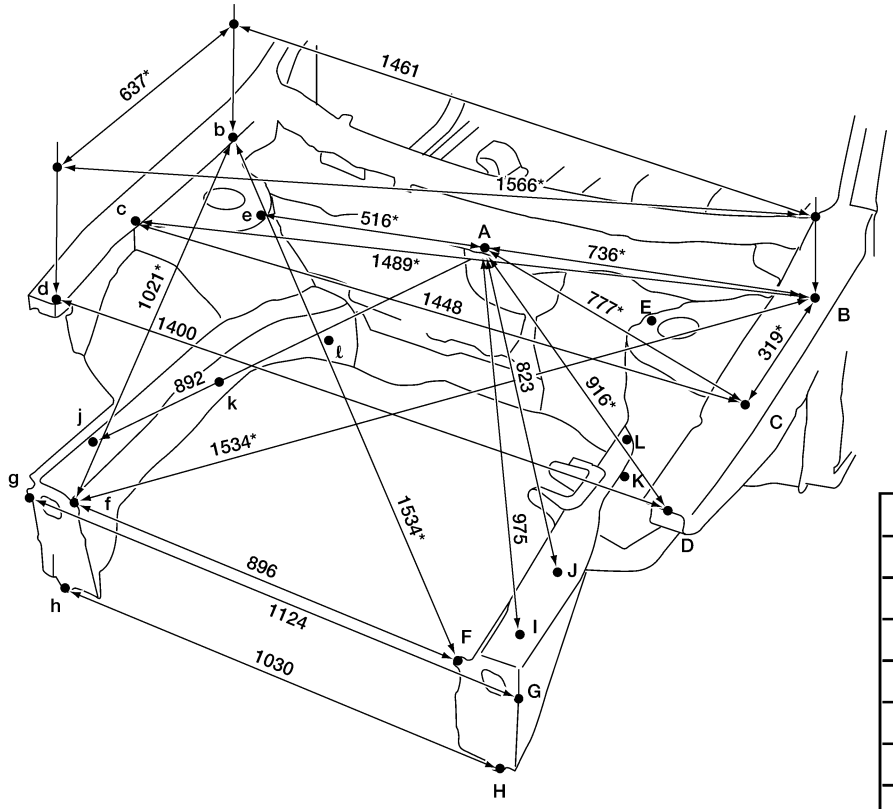

Point	Dimension
B-E	318*
B-e	1234*
E-e	973
E-d	483*
E-D	1263*
I-K	531
I-L	761
j-k	338
j-l	658

WIIA0148E

MEASUREMENT POINTS

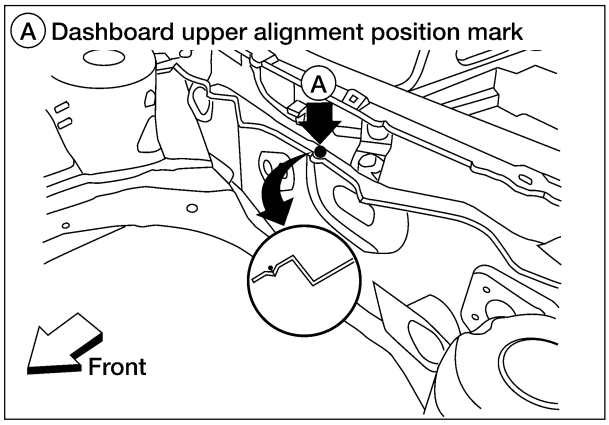

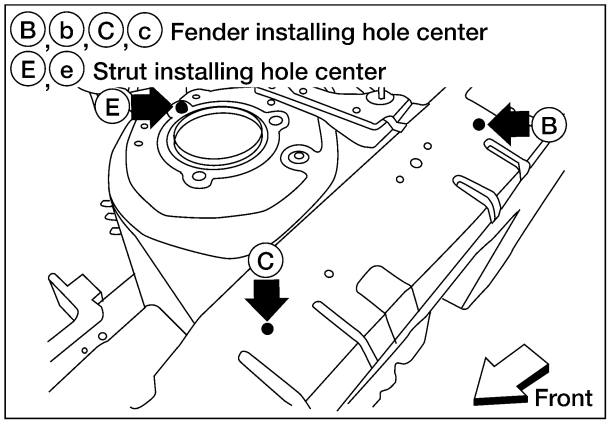

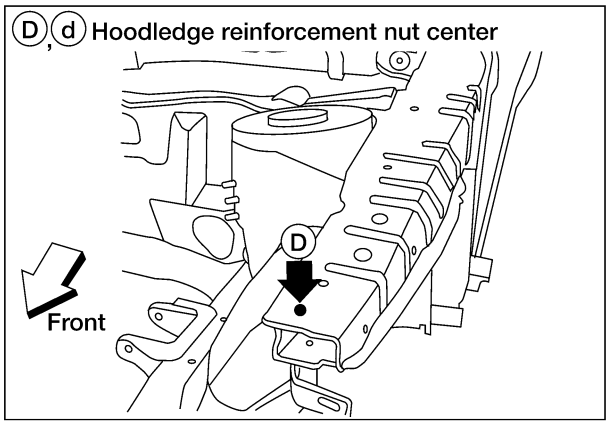

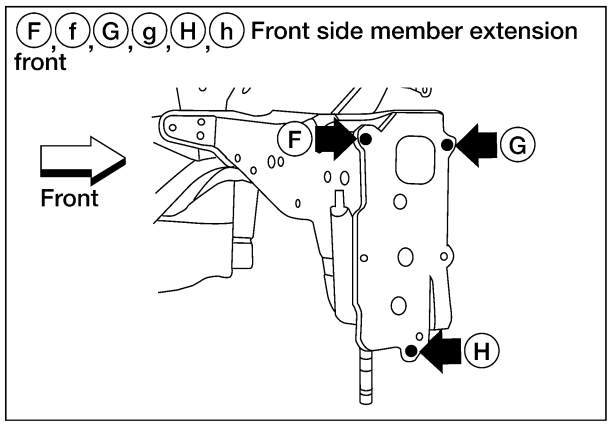

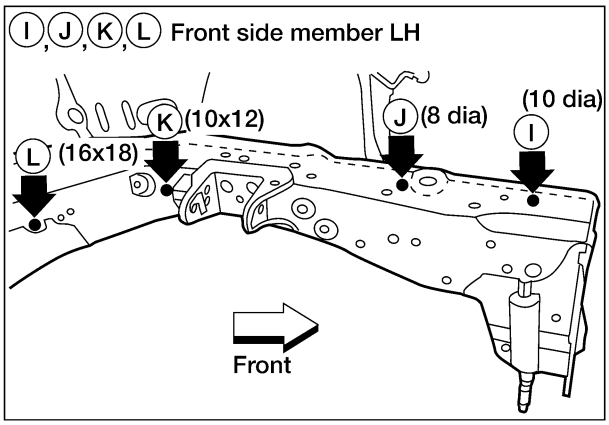

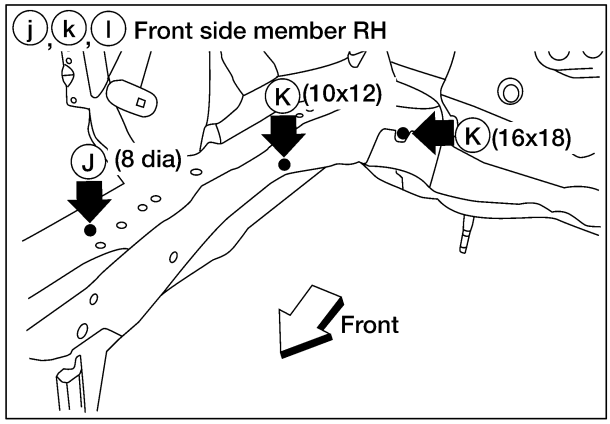

WIIA0149E

UNDERBODY MEASUREMENT

Unit : mm

Figures marked with a (*) indicate symmetrically identical dimensions on both right and left hand sides of the vehicle.

★ : Bolt head

As viewed from underside.

All dimensions indicated in this figure are actual.

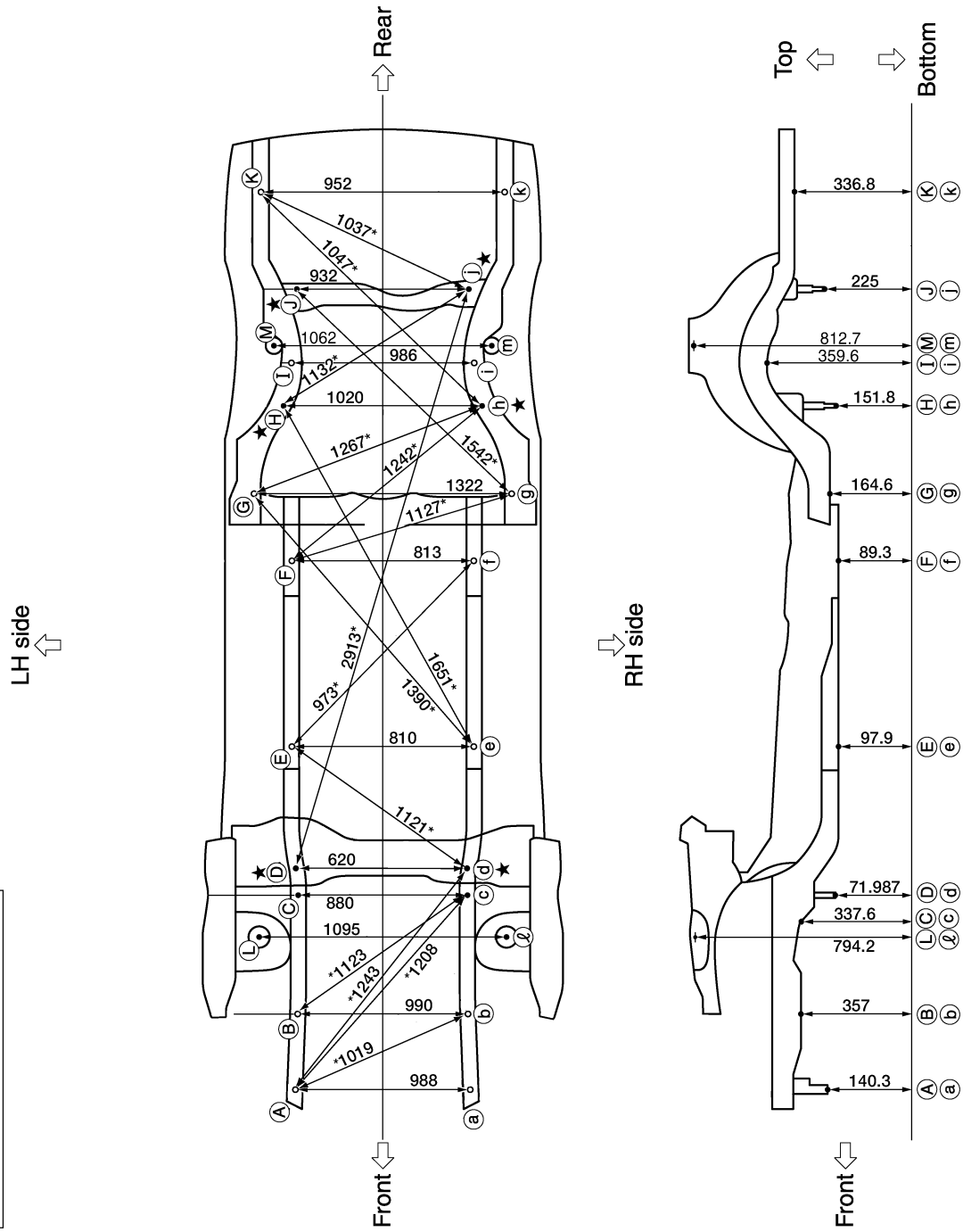

LIIA0087E

MEASUREMENT POINTS

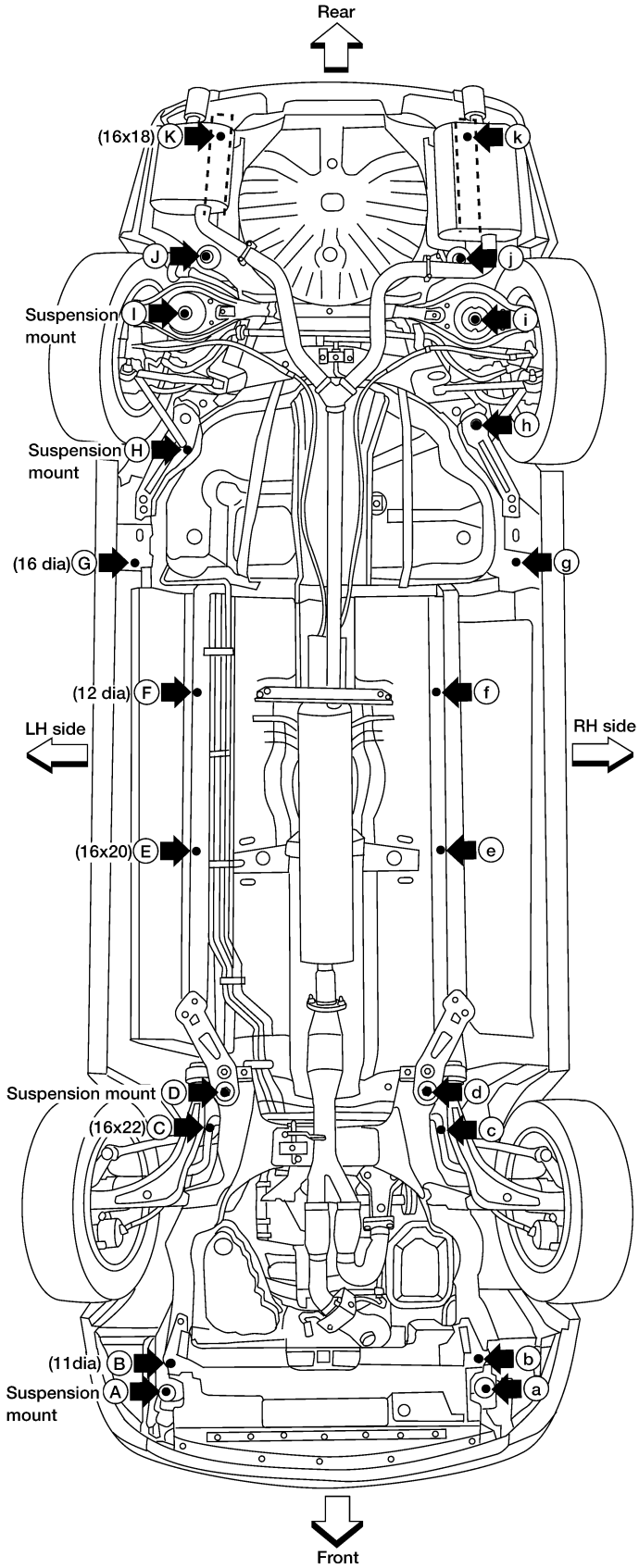

Coordinates:

Ⓐ,ⓐ
X : 494
Y : -617.5
Z : 140.3

Ⓑ,ⓑ
X : 495
Y : -500
Z : 357

Ⓒ,ⓒ
X : 440
Y : 122.2
Z : 337.6

Ⓓ,ⓓ
X : 310
Y : 327.5
Z : 71.987

Ⓔ,ⓔ
X : 405
Y : 1190
Z : 97.9

Ⓕ,ⓕ
X : 406.5
Y : 1727
Z : 89.3

Ⓖ,ⓖ
X : 661
Y : 2080
Z : 164.6

Ⓗ,ⓗ
X : 510
Y : 2563
Z : 151.8

Ⓘ,ⓘ
X : 496.0
Y : 2936.7
Z : 359.6

Ⓙ,ⓙ
X : 466
Y : 3132
Z : 225

Ⓚ,ⓚ
X : 476
Y : 3550
Z : 336.8

Strut tower centers

Coordinates:

Ⓛ,ⓛ Front
X : 547.6
Y : 28.9
Z : 794.2

Ⓜ,ⓜ Rear
X : 531.1
Y : 2833.1
Z : 812.7

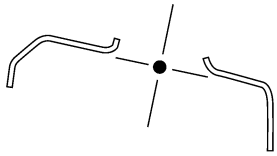

LIIA0086E

PASSENGER COMPARTMENT MEASUREMENT

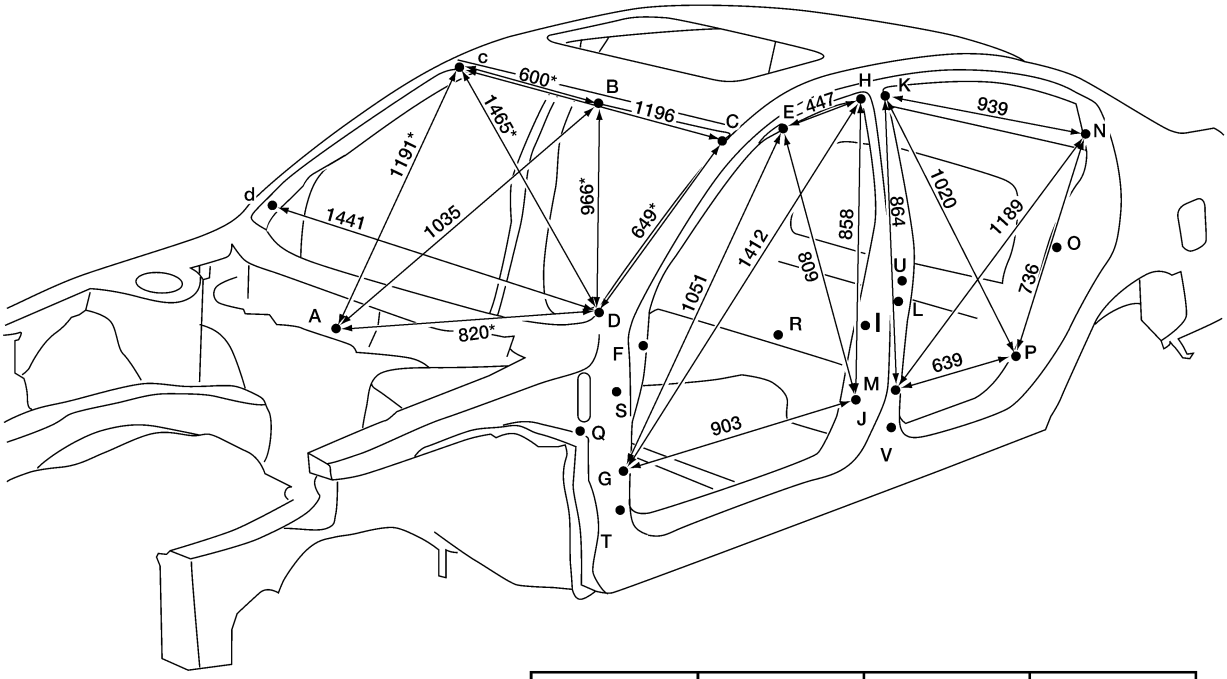

Point	Dimension	Point	Dimension
E-e	1192	Q-I*	939
F-f	1450	R-K	1075
G-g	1468	R-k	1167
I-i	1451	R-L	814
I-F	885	R-I	963
J-j	1467	R-M	751
L-l	1448	R-m	912
M-m	1469	R-N	1106
N-n	1332	R-n	1211
O-L*	840	R-P	697
P-p	1468	R-p	868
Q-G*	919	S-U*	1152
Q-H*	1255	T-V*	1132

*= Figures marked with a (*) indicate symmetrically identical dimensions on both right and left hand sides of the vehicle.

LIIA0090E

MEASUREMENT POINTS

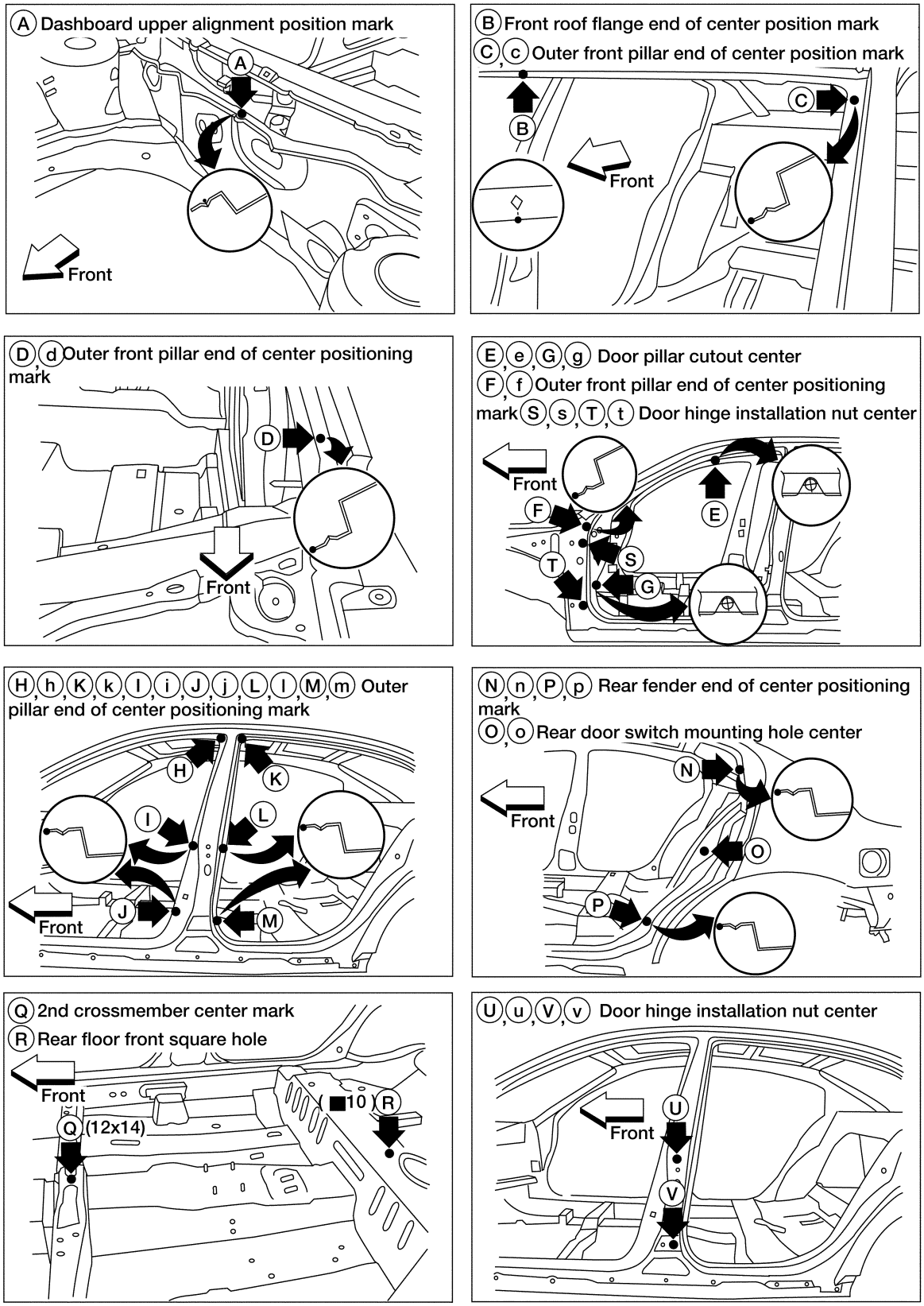

WIIA0134E

REAR BODY MEASUREMENT

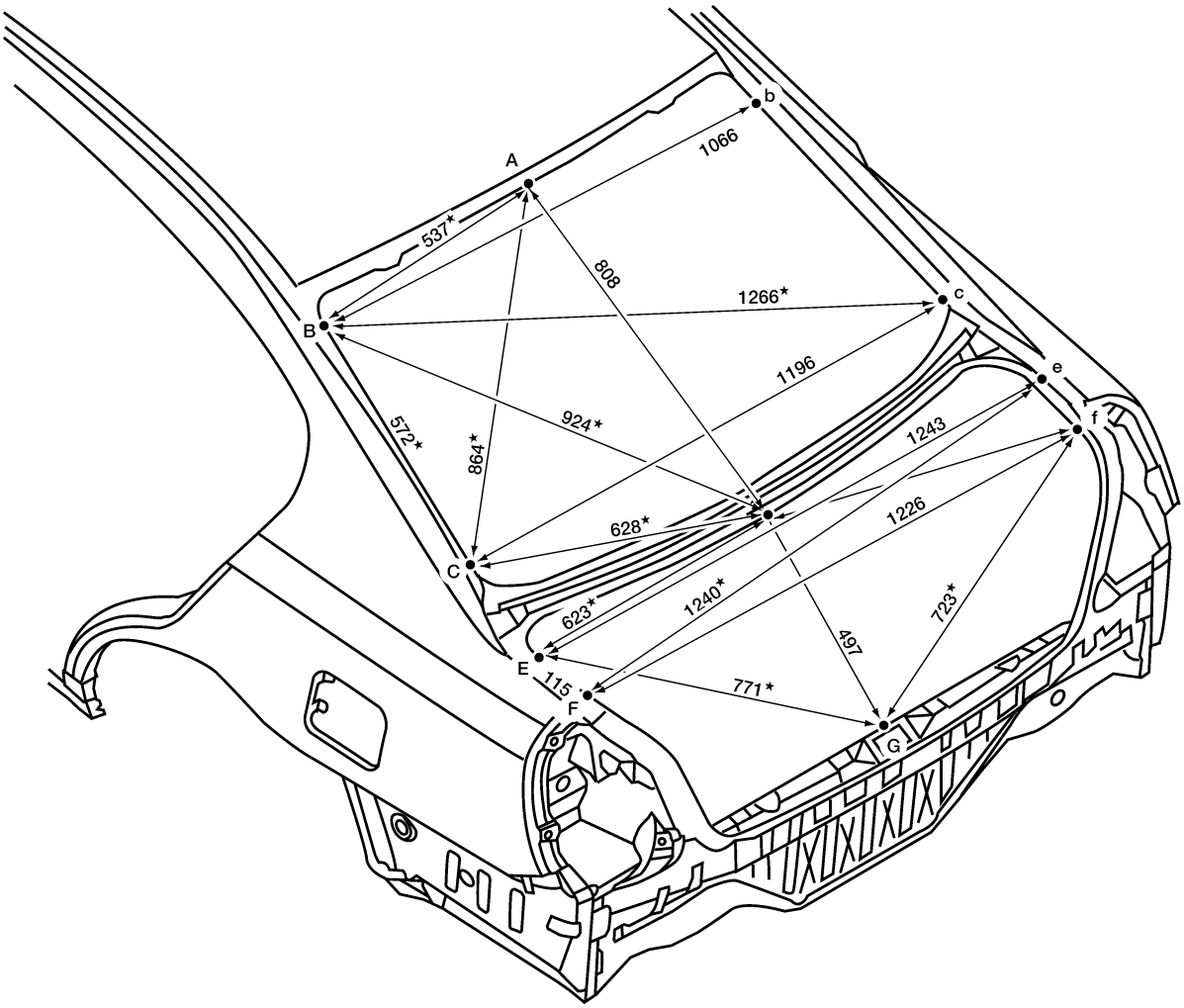

*= Figures marked with a (*) indicate symmetrically identical dimensions on both right and left hand sides of the vehicle.

LIIA0065E

MEASUREMENT POINTS

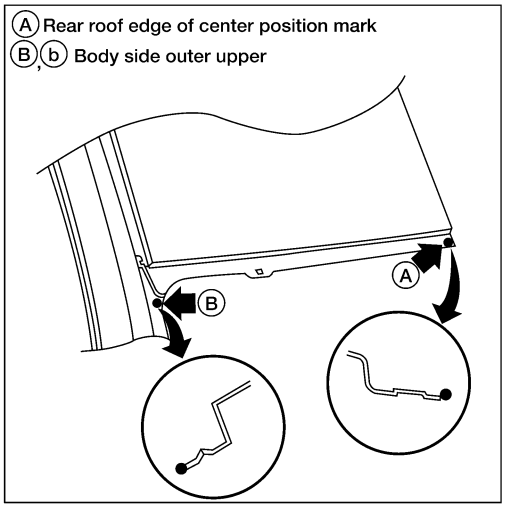

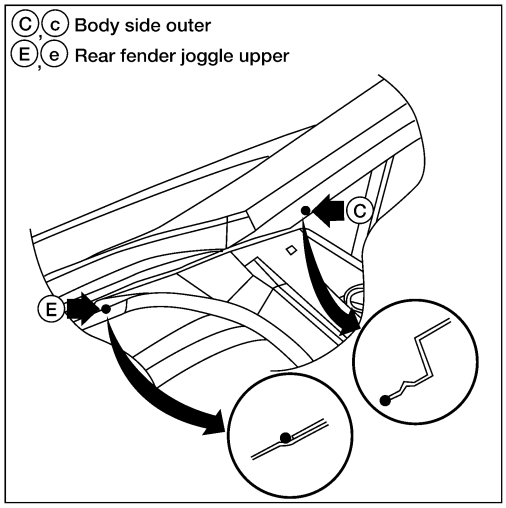

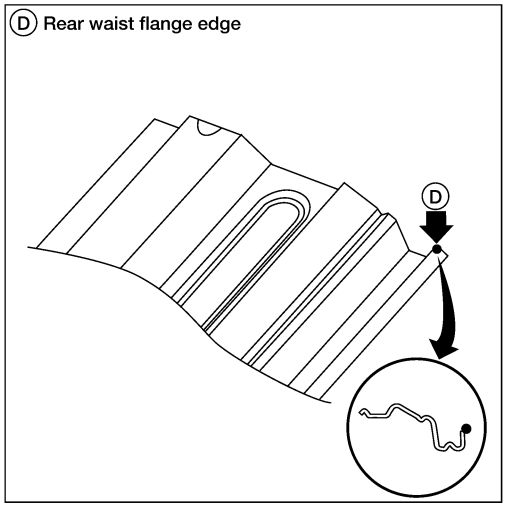

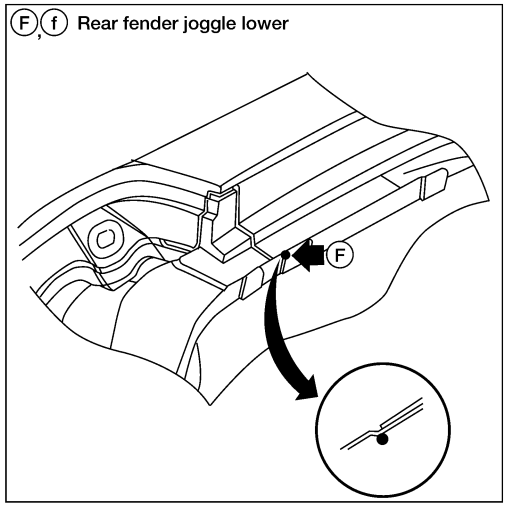

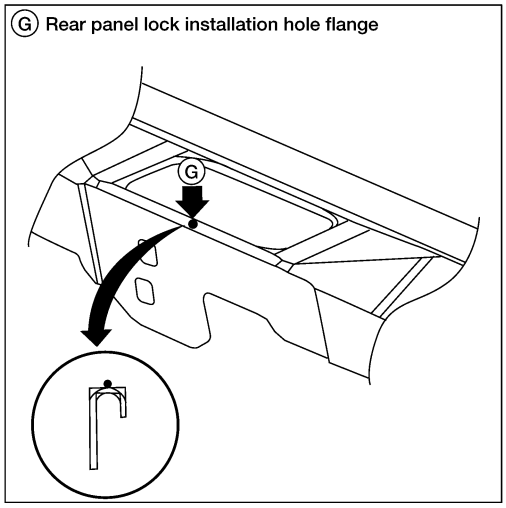

LIIA0066E

Handling Precautions for Plastics

EIS001LK

HANDLING PRECAUTIONS FOR PLASTICS

Abbre-viation	Material name	Heat resisting temperature °C (°F)	Resistance to gasoline and solvents	Other cautions
PE	Polyethylene	60 (140)	Gasoline and most solvents are harmless if applied for a very short time (wipe up quickly).	Flammable
PVC	Polyvinyl Chloride	80 (176)	Same as above.	Poison gas is emitted when burned.
EPM/ EPDM	Ethylene Propylene (Diene) rub-ber	80 (176)	Same as above.	Flammable
TPO/ TPR	Thermoplastic Olefine/ Thermoplastic Rubber	80 (176)	Same as above.	Flammable
PP	Polypropylene	90 (194)	Same as above.	Flammable, avoid bat-tery acid.
UP	Polyester thermoset	90 (194)	Same as above.	Flammable
PS	Polystyrene	80 (176)	Avoid solvents.	Flammable
ABS	Acrylonitrile Butadiene Styrene resin	80 (176)	Avoid gasoline and solvents.	
AES	Acrylonitrile Ethylene Styrene	80 (176)	Same as above.	
PMMA	Polymethyl Methacrylate	85 (185)	Same as above.	
AAS	Acrylonitrile Acrylic Styrene	85 (185)	Same as above.	
AS	Acrylonitrile Styrene	85 (185)	Same as above.	
EVA	Polyvinyl Ethyl Acetate	90 (194)	Same as above.	
ASA	Acrylonitrile Styrene Acrylate	100 (222)	Same as above.	Flammable
PPO/ PPE	Polyphenylene Oxide/ Polyphenylene Ether	110 (230)	Same as above.	
PC	Polycarbonate	120 (248)	Same as above.	
PAR	Polyacrylate	180 (356)	Same as above.	
L-LDPE	Lenear Low Density PE	45 (100)	Gasoline and most solvents are harmless.	Flammable
PUR	Polyurethane	90 (194)	Same as above.	
TPU	Thermoplastic Urethane	110 (230)	Same as above.	
PPC	Polypropylene Composite	115 (239)	Same as above.	Flammable
POM	Polyacetal	120 (248)	Same as above.	Avoid battery acid.
PBT+PC	Polybutylene Terephtha-late+Polycarbonate	120 (248)	Same as above.	Flammable
PA	Polyamide (Nylon)	140 (284)	Same as above.	Avoid immersing in wa-ter.
PBT	Polybutylene Terephthalate	140 (284)	Same as above.	
FRP	Fiber Reinforced Plastics	170 (338)	Same as above.	Avoid battery acid.
PET	Polyethylene Terephthalate	180 (356)	Same as above.	
PEI	Polyetherimide	200 (392)	Same as above.	

1. When repairing and painting a portion of the body adjacent to plastic parts, consider their characteristics (influence of heat and solvent) and remove them if necessary or take suitable measures to protect them.
2. Plastic parts should be repaired and painted using methods suiting the materials' characteristics.

LOCATION OF PLASTIC PARTS

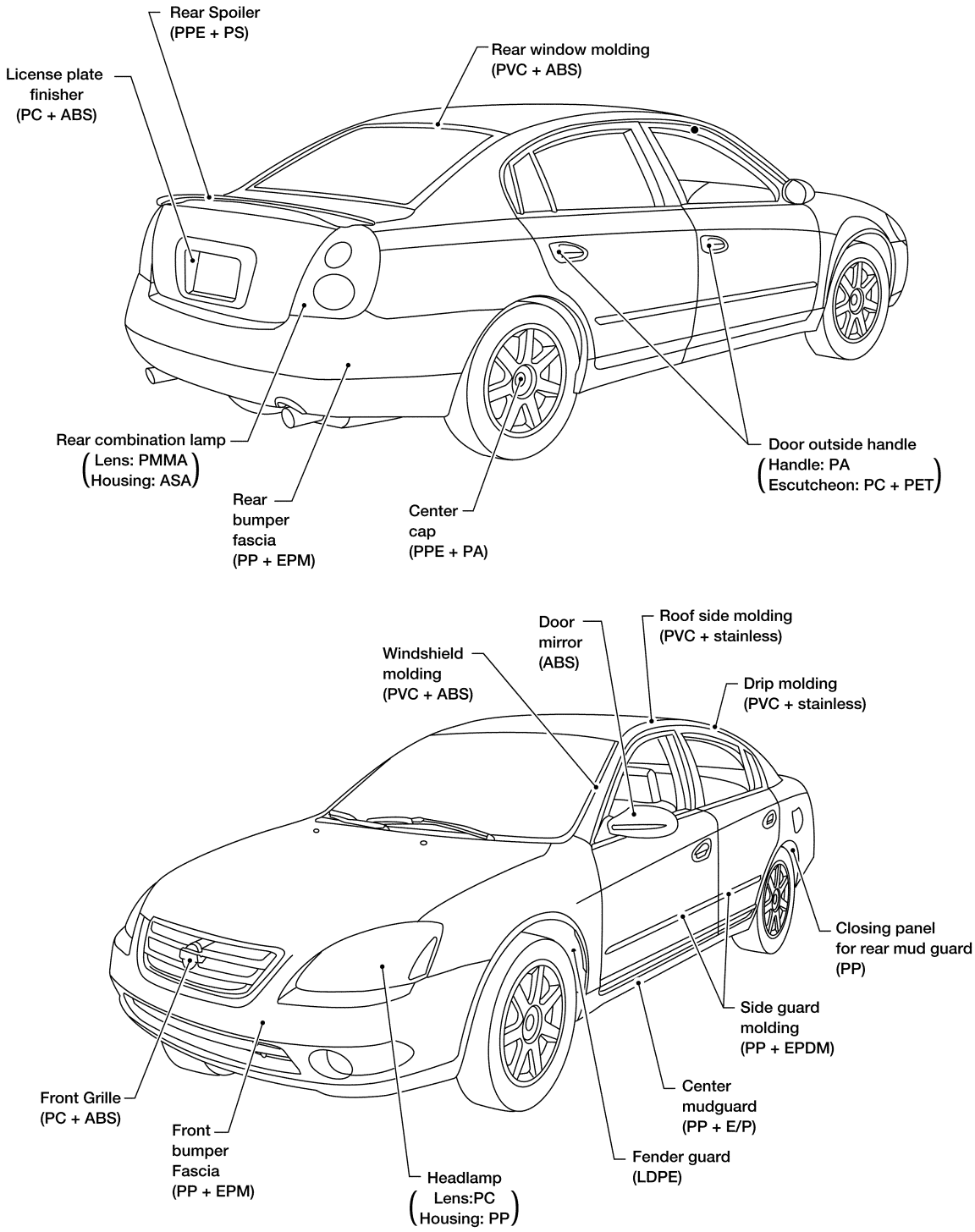

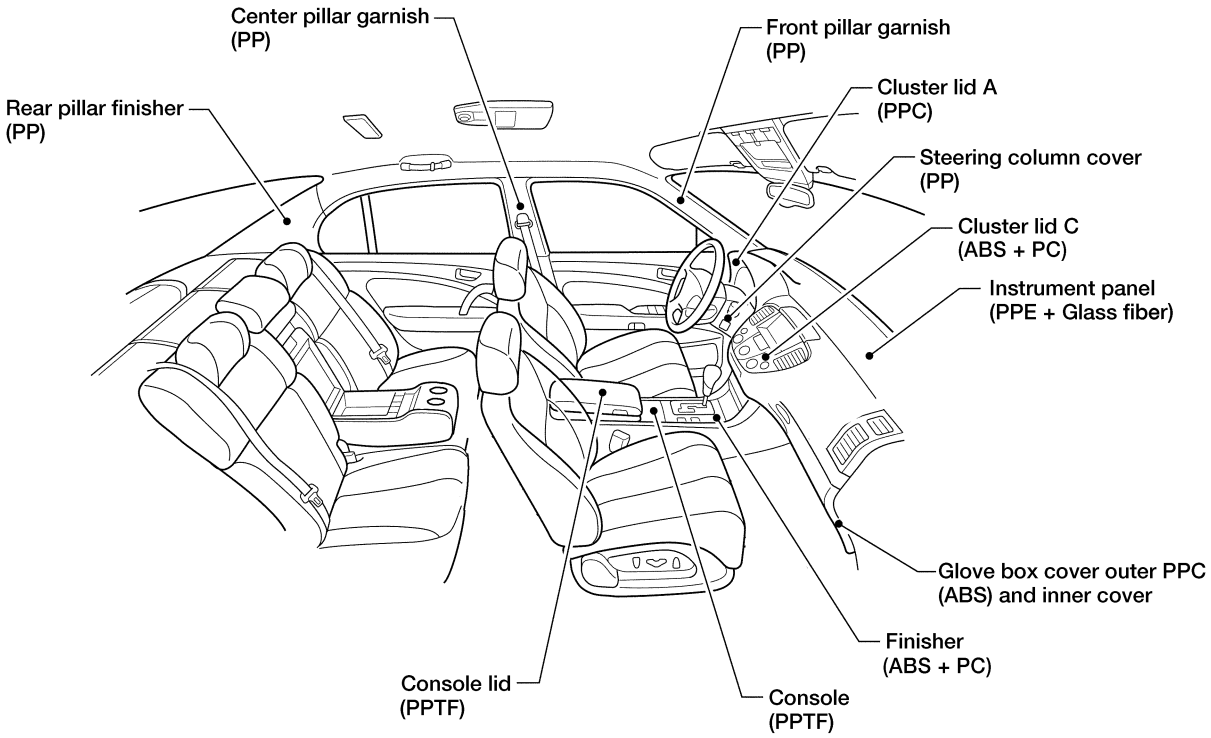
Center pillar garnish
(PP)
Front pillar garnish
(PP)
Rear pillar finisher
(PP)
Cluster lid A
(PPC)
Steering column cover
(PP)
Cluster lid C
(ABS + PC)
Instrument panel
(PPE + Glass fiber)
Glove box cover outer PPC
(ABS) and inner cover
Finisher
(ABS + PC)
Console lid
(PPTF)
Console
(PPTF)

WIIA0150E

Precautions in Repairing High Strength Steel

EIS001LL

High strength steel is used for body panels in order to reduce vehicle weight.
Accordingly, precautions in repairing automotive bodies made of high strength steel are described below:

HIGH STRENGTH STEEL (HSS) USED IN NISSAN VEHICLES

Tensile strength	Nissan/Infiniti designation	Major applicable parts
373 N/mm^2 (38kg/mm^2 ,54klb/sq in)	SP130	● Front side member assembly ● Upper hoodledge ● Upper pillar hinge brace assembly ● Rear side member extension ● Other reinforcements
785-981 N/mm^2 (80-100kg/mm^2 114-142klb/sq in)	SP150	● Front bumper reinforcement ● Rear bumper reinforcement

SP130 is the most commonly used HSS.
SP150 HSS is used only on parts that require much more strength.

Read the following precautions when repairing HSS:

1. Additional points to consider

- The repair of reinforcements (such as side members) by heating is not recommended since it may weaken the component. When heating is unavoidable, do not heat HSS parts above 550°C (1,022°F).
  Verify heating temperature with a thermometer.
  (Crayon-type and other similar type thermometer are appropriate.)

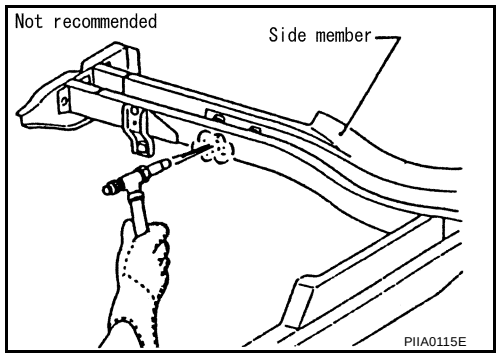

- When straightening body panels, use caution in pulling any HSS panel. Because HSS is very strong, pulling may cause deformation in adjacent portions of the body. In this case, increase the number of measuring points, and carefully pull the HSS panel.

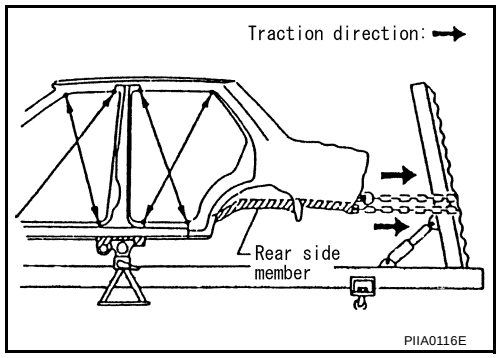

- When cutting HSS panels, avoid gas (torch) cutting if possible. Instead, use a saw to avoid weakening surrounding areas due to heat. If gas (torch) cutting is unavoidable, allow a minimum margin of 50 mm (1.97in).

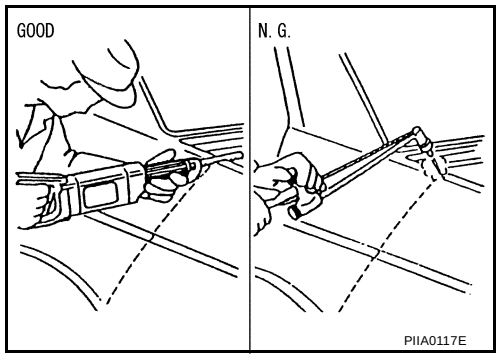

- When welding HSS panels, use spot welding whenever possible in order to minimize weakening surrounding areas due to heat.
  If spot welding is impossible, use M.I.G. welding. Do not use gas (torch) welding because it is inferior in welding strength.

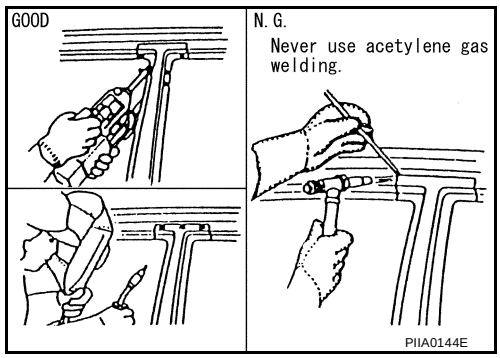

- The spot weld on HSS panels is harder than that of an ordinary steel panel.
  Therefore, when cutting spot welds on a HSS panel, use a low speed high torque drill (1,000 to 1,200 rpm) to increase drill bit durability and facilitate the operation.
- SP150 HSS panels with a tensile strength of 785 to 981 N/mm^2 (80 to 100 kg/mm^2 , 114 to 142 klb/sq in), used as reinforcement in the door guard beams, is too strong to repair. When these HSS parts are damaged, the outer panels also sustain substantial damage; therefore, the assembly parts must be replaced.

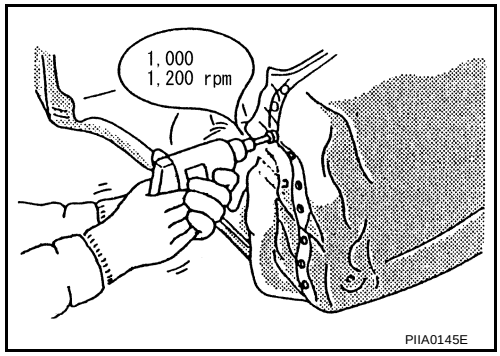

2. Precautions in spot welding HSS
   This work should be performed under standard working conditions. Always note the following when spot welding HSS:
   - The electrode tip diameter must be sized properly according to the metal thickness.

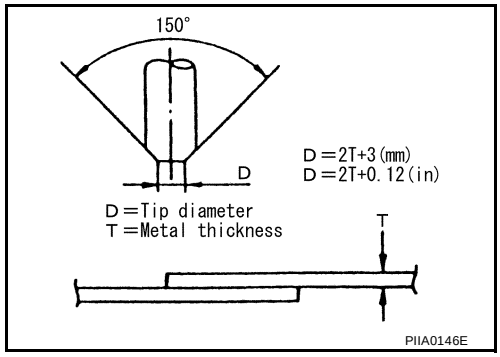

- The panel surfaces must fit flush to each other, leaving no gaps.

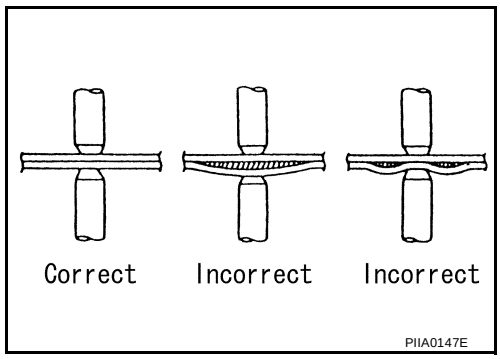

- Follow the specifications for the proper welding pitch.

Unit:mm

Thickness (t)	Minimum pitch (l)
0.6 (0.024)	10 (0.39) or over
0.8 (0.031)	12 (0.47) or over
1.0 (0.039)	18 (0.71) or over
1.2 (0.047)	20 (0.79) or over
1.6 (0.063)	27 (1.06) or over
1.8 (0.071)	31 (1.22) or over

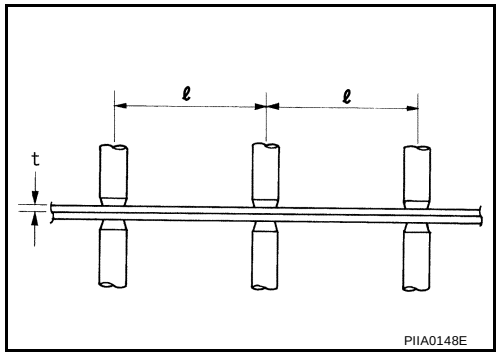

Replacement Operations

EIS001LM

DESCRIPTION

This section is prepared for technicians who have attained a high level of skill and experience in repairing collision-damaged vehicles and also use modern service tools and equipment. Persons unfamiliar with body repair techniques should not attempt to repair collision-damaged vehicles by using this section.

Technicians are also encouraged to read Body Repair Manual (Fundamentals) in order to ensure that the original functions and quality of the vehicle can be maintained. The Body Repair Manual (Fundamentals) contains additional information, including cautions and warnings, that are not including in this manual. Technicians should refer to both manuals to ensure proper repairs.

Please note that this information is prepared for worldwide usage, and as such, certain procedures may not apply in some regions or countries.

The symbols used in this section for cutting and welding / brazing operations are shown below.

Saw cut or air chisel cut		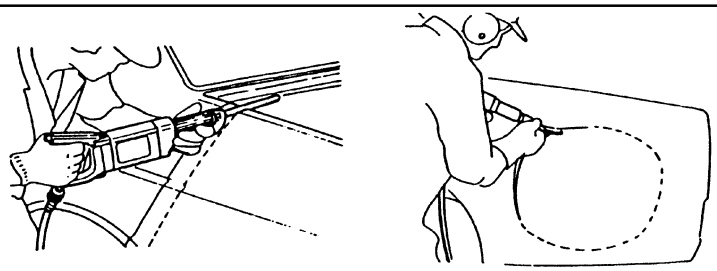
Spot weld	2-spot welds	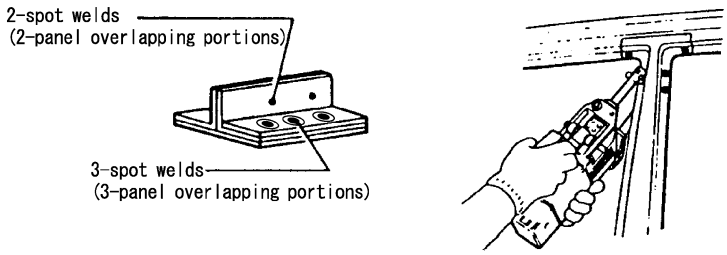
	3-spot welds	
MIG plug weld		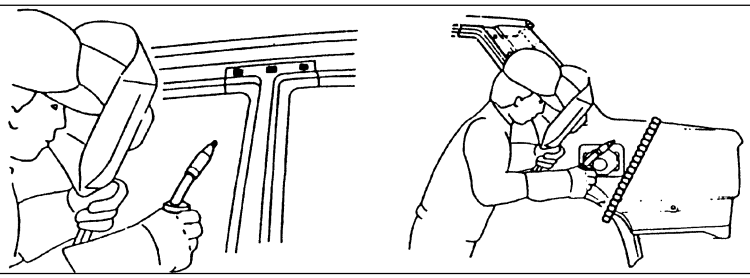
MIG seam weld/ Point weld		
Brazing		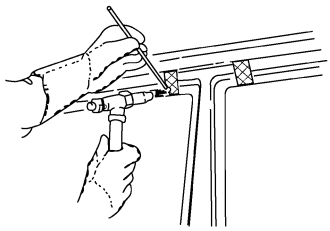
Soldering		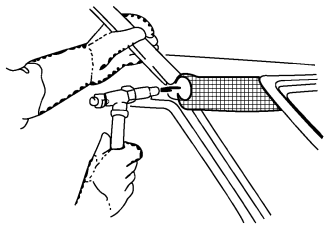
Sealing		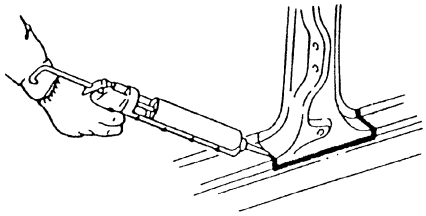

PIIA0149E

- Front pillar butt joint can be determined anywhere within shaded area as shown in the figure. The best location for the butt joint is at position A due to the construction of the vehicle. Refer to the front pillar section.

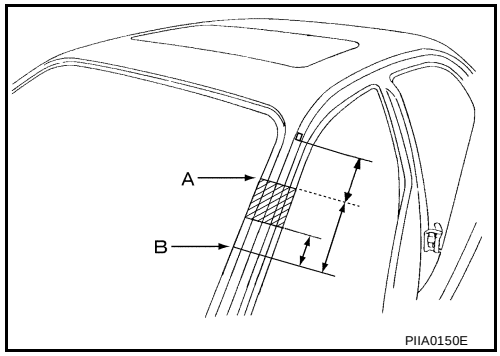

- Determine cutting position and record distance from the locating indent. Use this distance when cutting the service part. Cut outer front pillar over 60 mm above inner front pillar cut position.

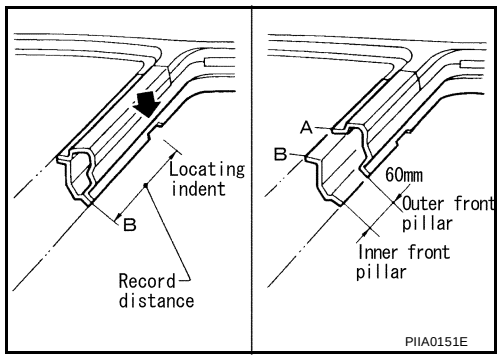

- Prepare a cutting jig to make outer pillar easier to cut. Also, this will permit service part to be accurately cut at joint position.

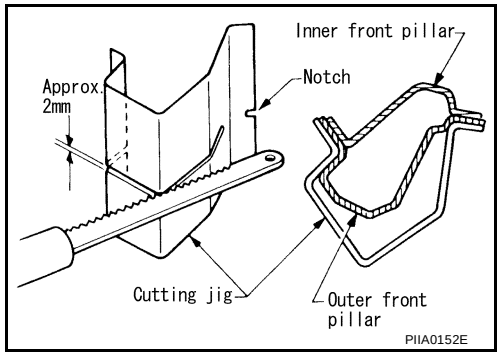

- An example of cutting operation using a cutting jig is as follows.

1. Mark cutting lines.
   A: Cut position of outer pillar
   B: Cut position of inner pillar
2. Align cutting line with notch on jig. Clamp jig to pillar.
3. Cut outer pillar along groove of jig. (At position A)
4. Remove jig and cut remaining portions.
5. Cut inner pillar at position B in same manner.

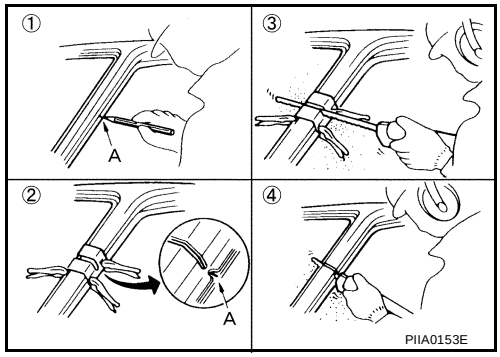

HOODLEDGE

- Work after radiator core support has been removed.

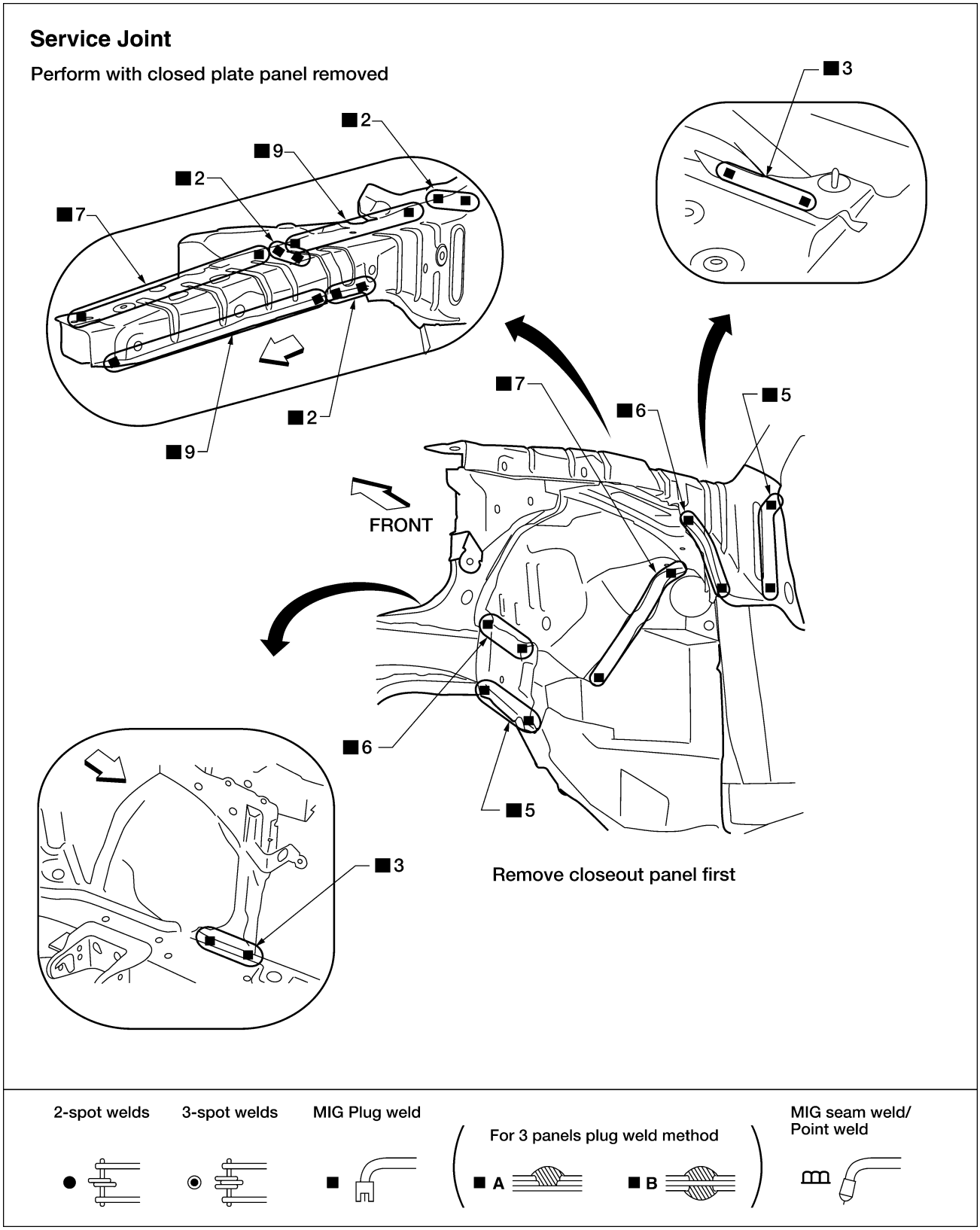

WIIA0151E

HOODLEDGE (PARTIAL REPLACEMENT)

- Work after radiator core support has been removed.

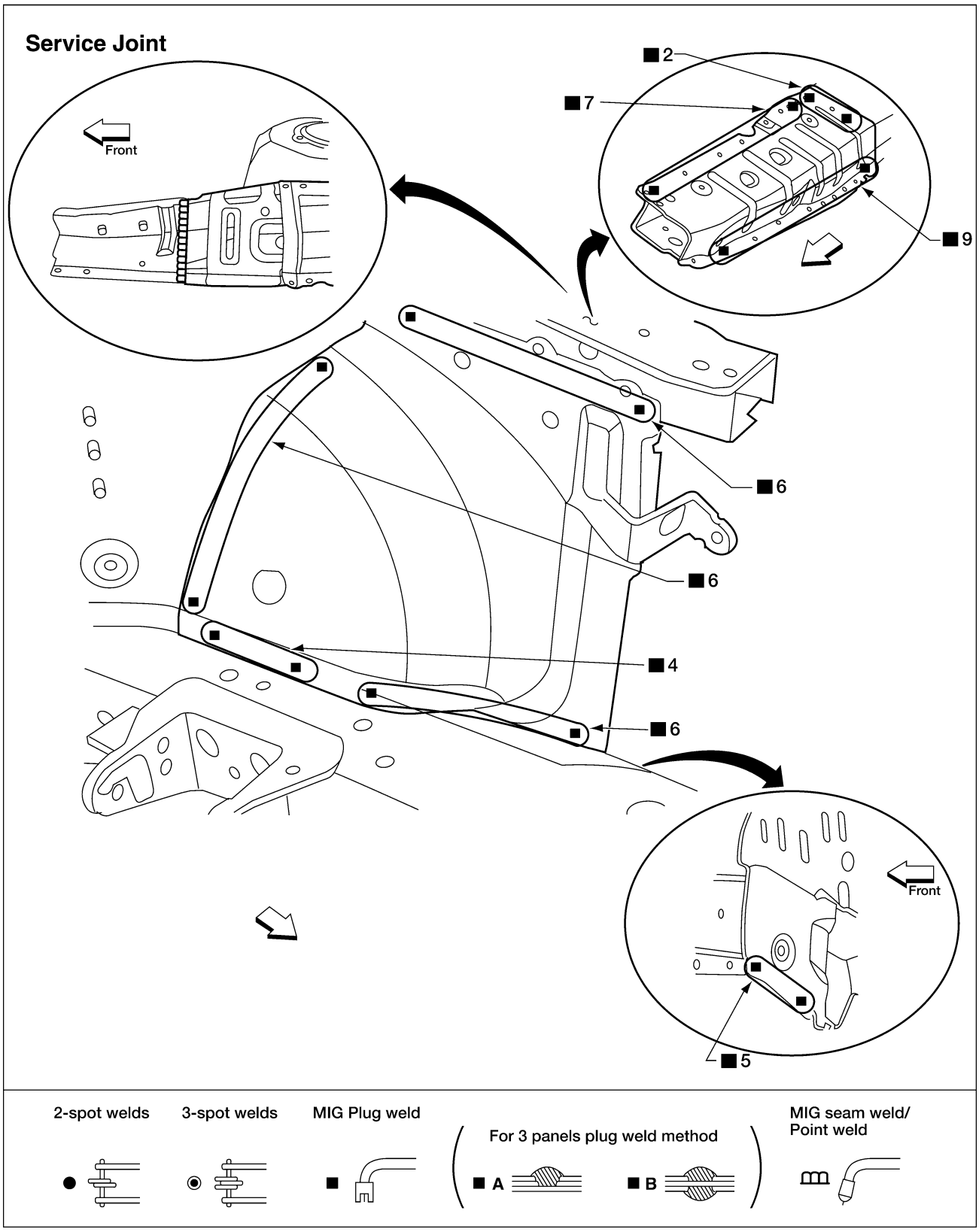

WIIA0152E

FRONT SIDE MEMBER

- Work after hoodledge and radiator core support have been removed.

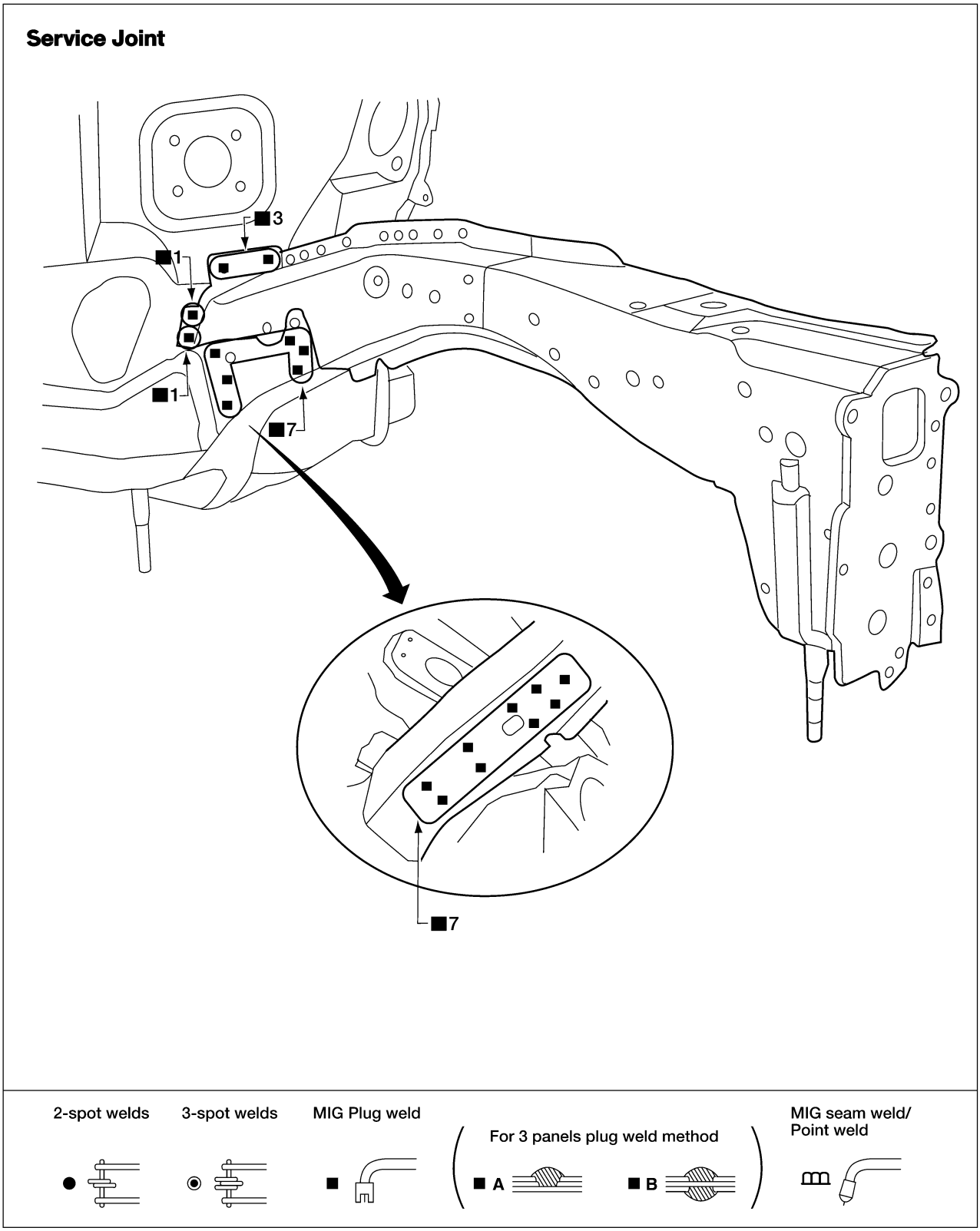

LIIA0136E

FRONT SIDE MEMBER (PARTIAL REPLACEMENT)

- Work after radiator core support has been removed.

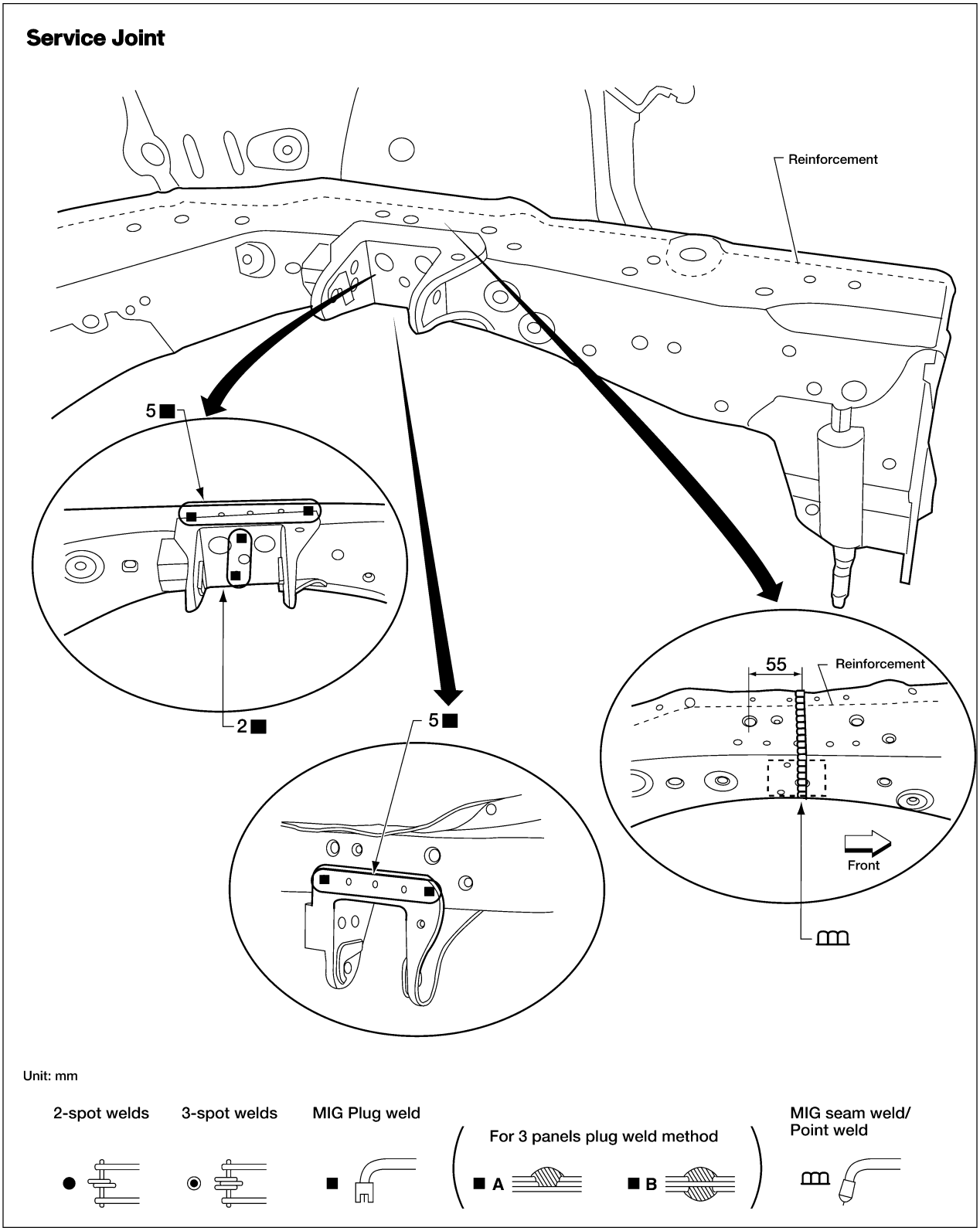

WIIA0158E

FRONT PILLAR

- Work after rear hoodledge reinforcement has been removed.

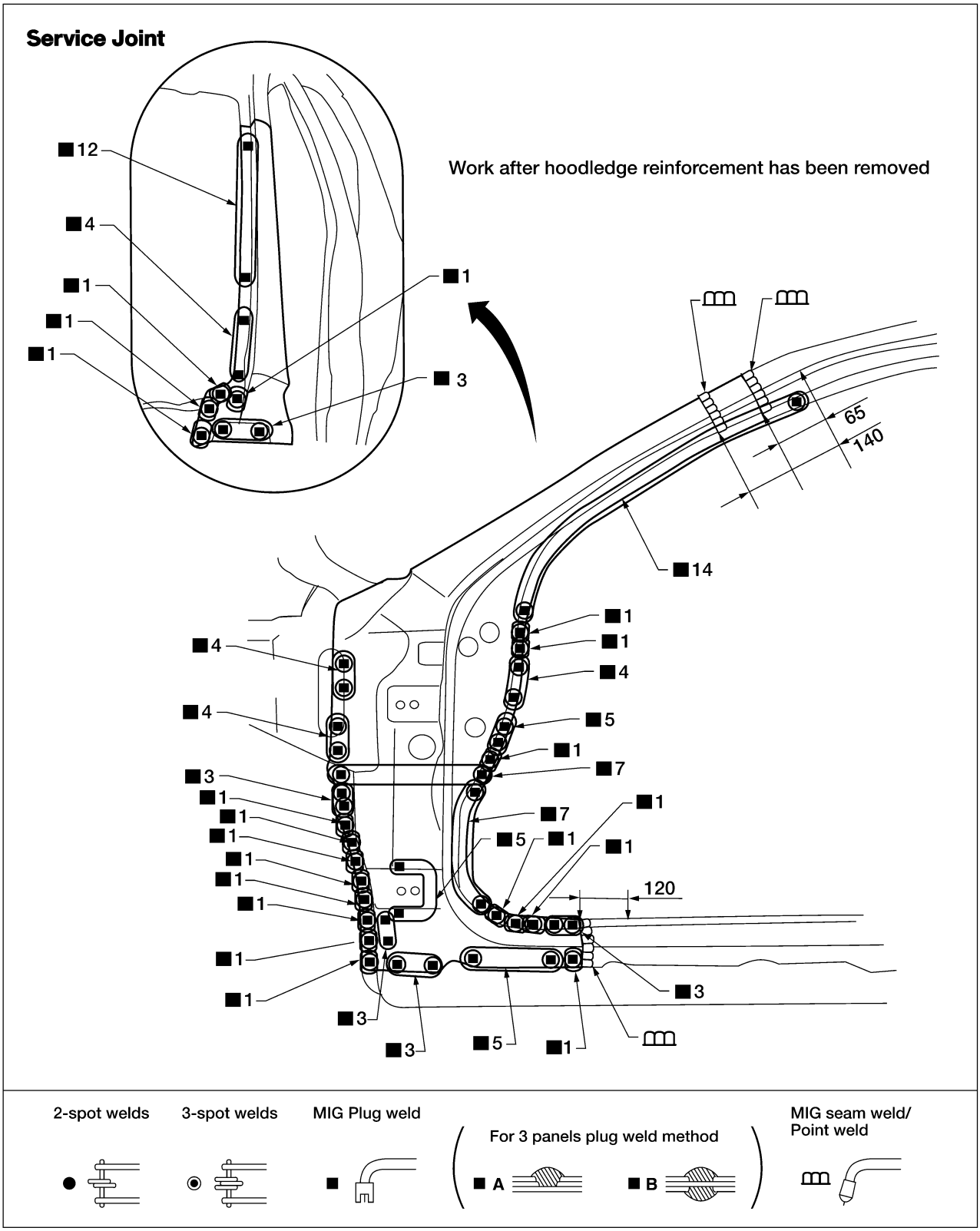

LIIA0138E

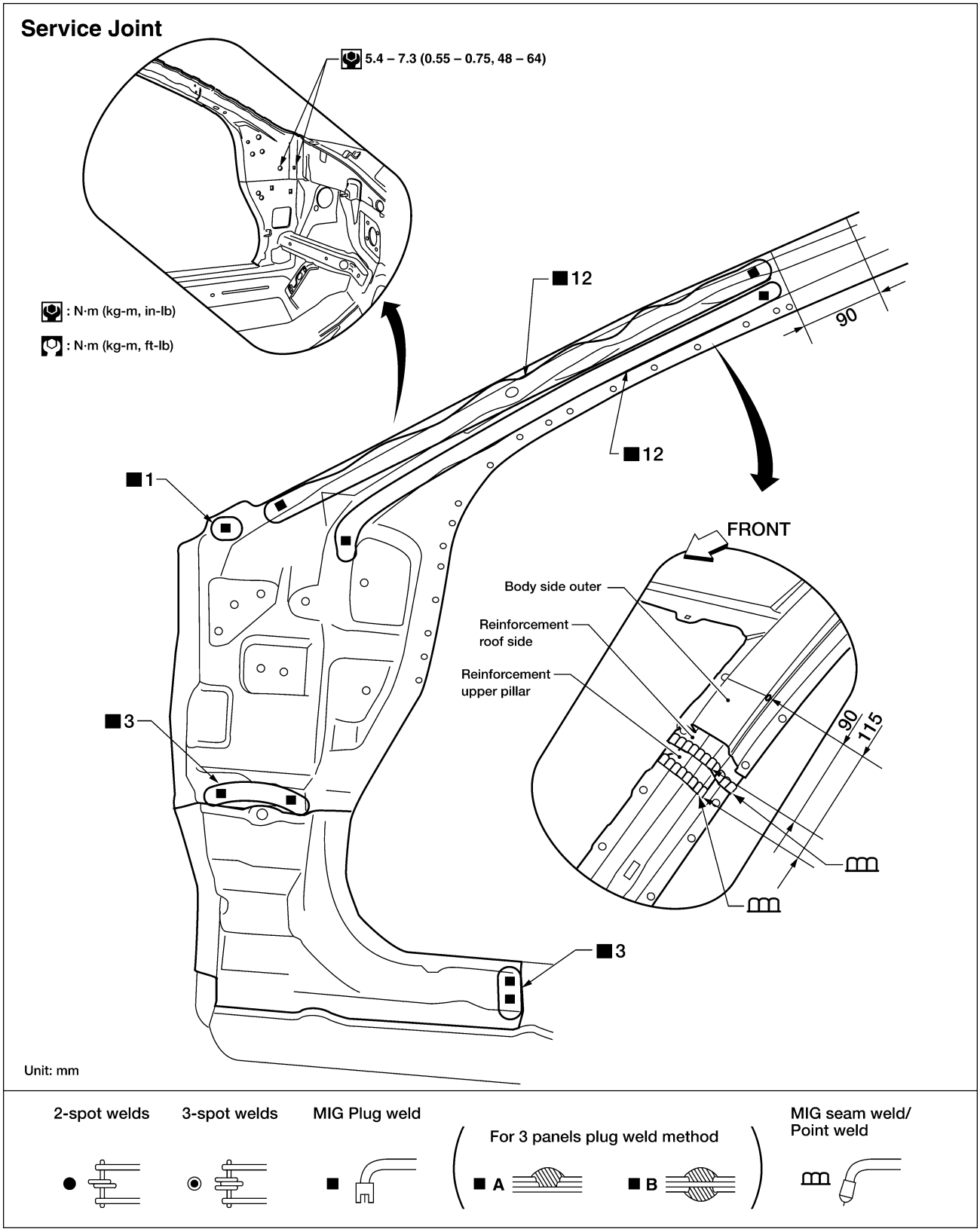
Service Joint
5.4 – 7.3 (0.55 – 0.75, 48 – 64)
: N·m (kg-m, in-lb)
: N·m (kg-m, ft-lb)
12
12
1
3
3
90
FRONT
Body side outer
Reinforcement roof side
Reinforcement upper pillar
90
115
Unit: mm
2-spot welds
3-spot welds
MIG Plug weld
For 3 panels plug weld method
A
B
MIG seam weld/ Point weld

WIIA0153E

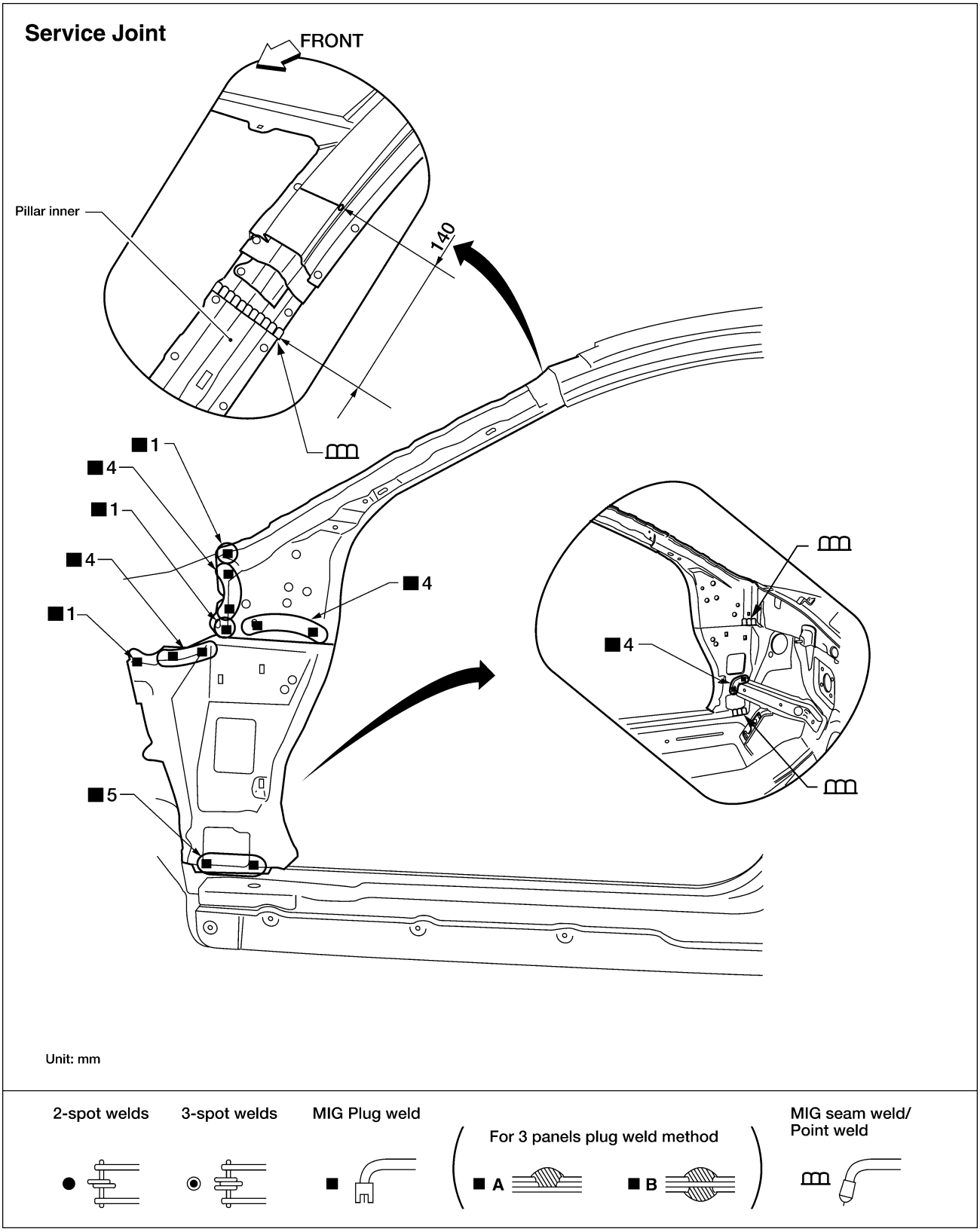
Service Joint
FRONT
Pillar inner
140
■1
■4
■1
■4
■1
■4
■4
■5
Unit: mm
2-spot welds
3-spot welds
MIG Plug weld
For 3 panels plug weld method
■ A
■ B
MIG seam weld/
Point weld

WIIA0154E

CENTER PILLAR

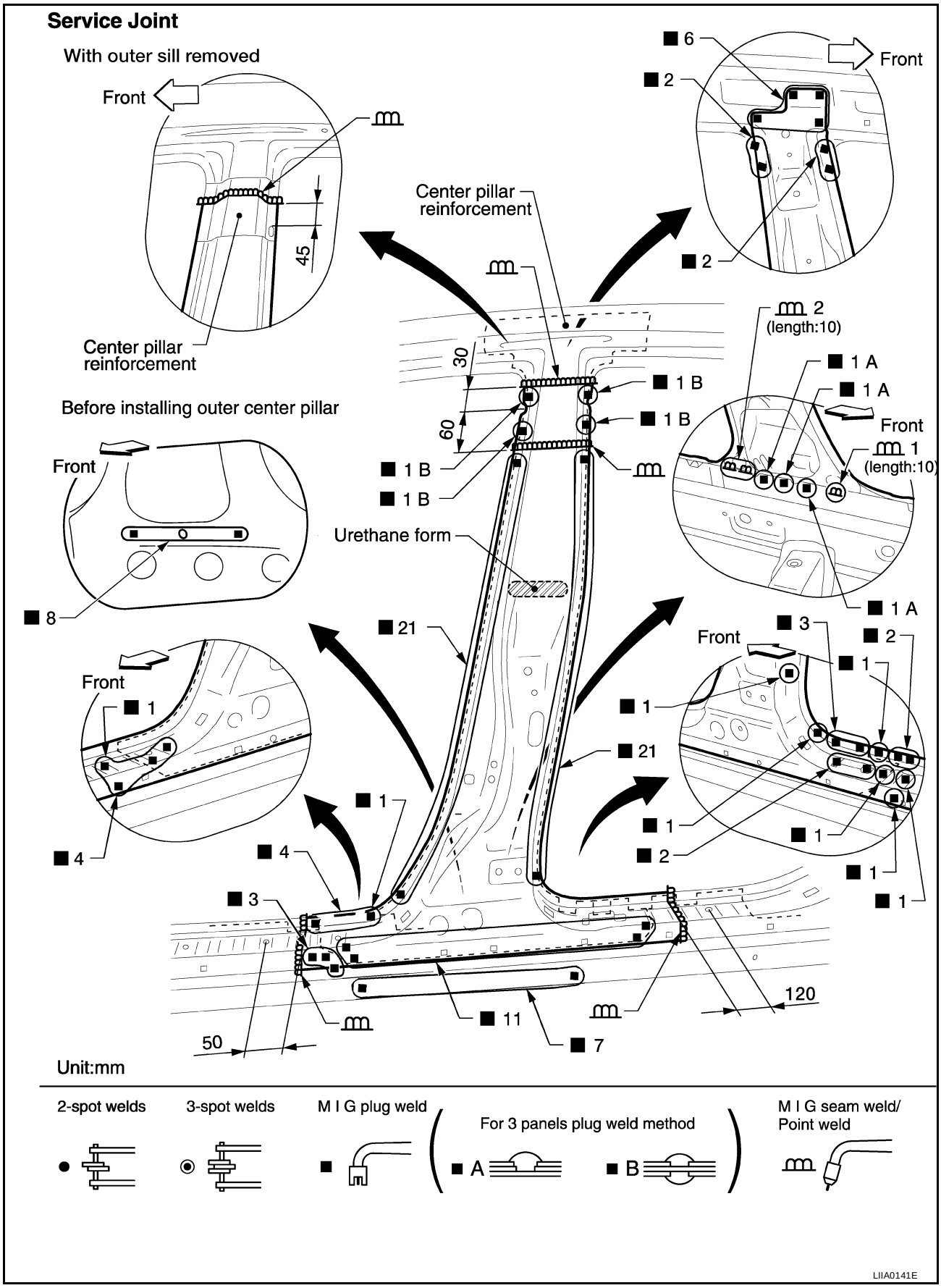

OUTER SILL

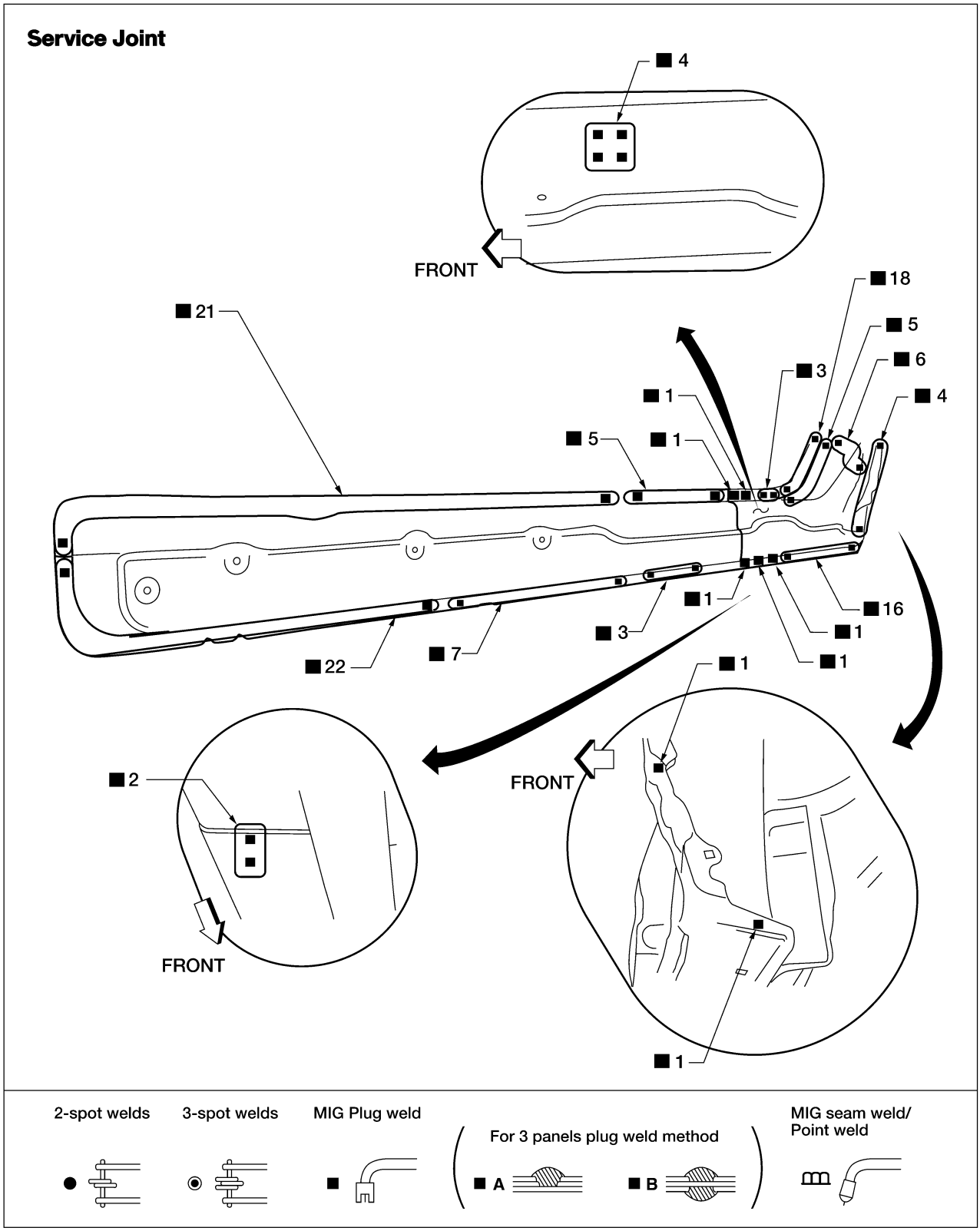

LIIA0142E

REAR FENDER

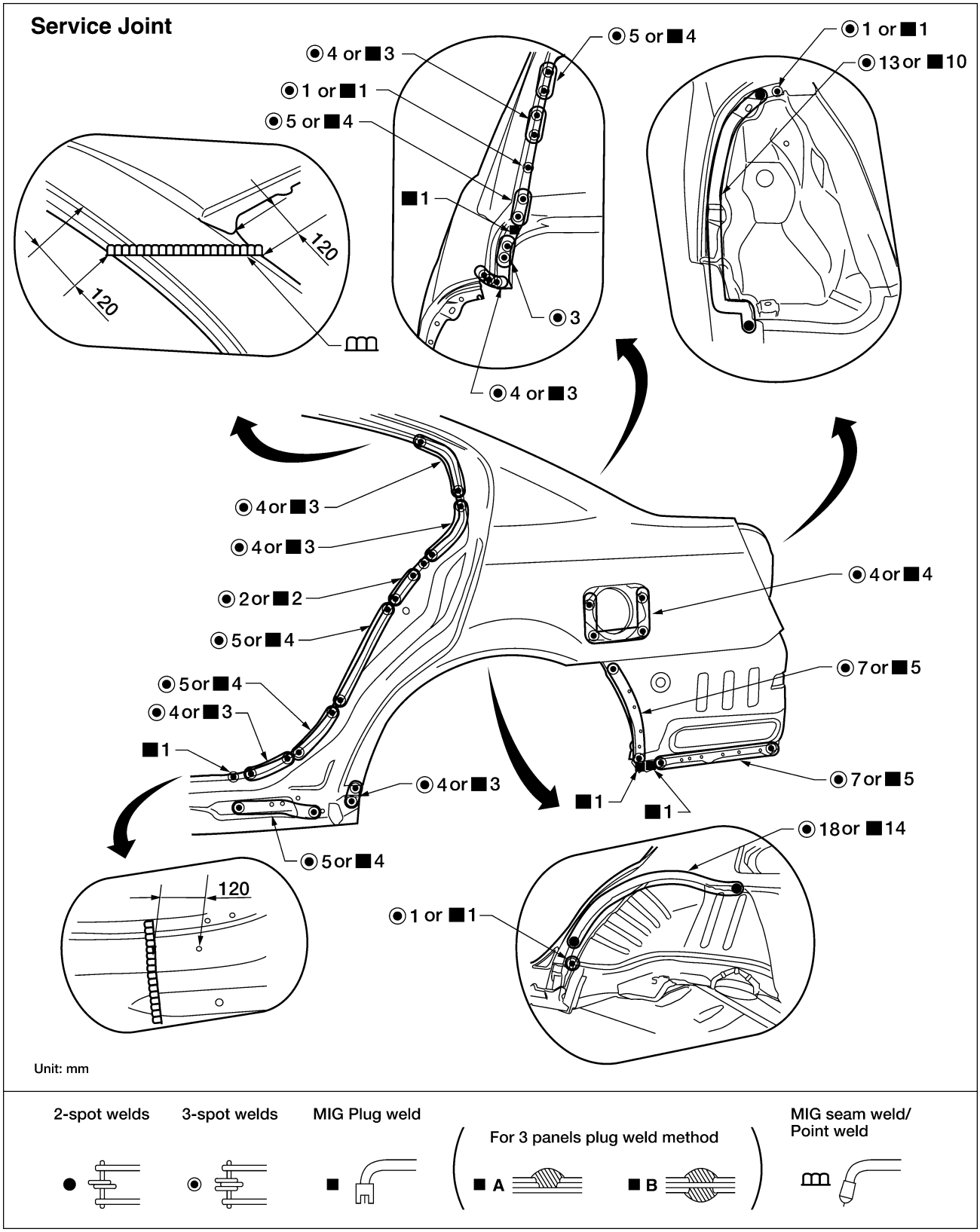

WIIA0155E

REAR PANEL

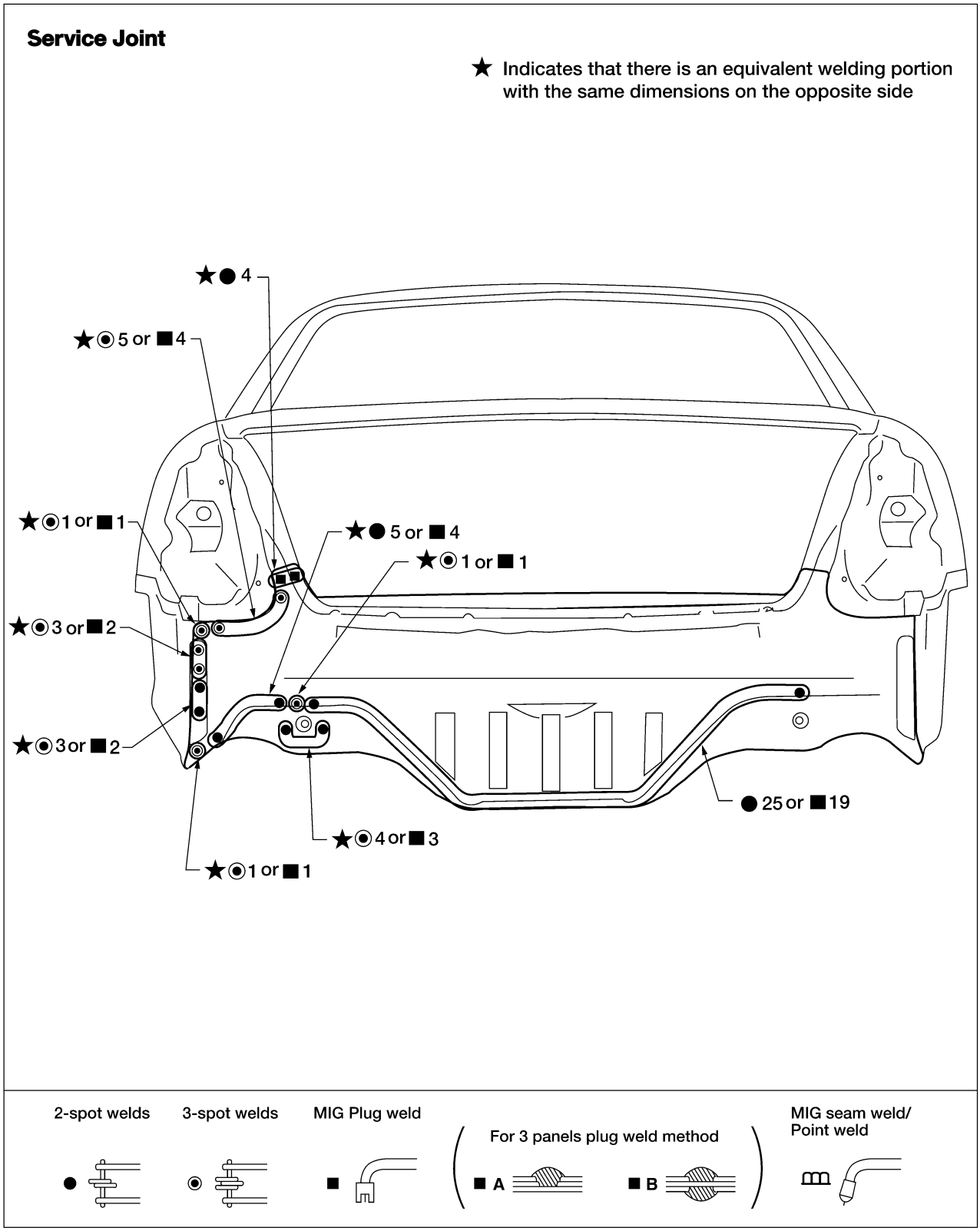

LIIA0144E

REAR FLOOR REAR

- Work after rear panel has been removed.

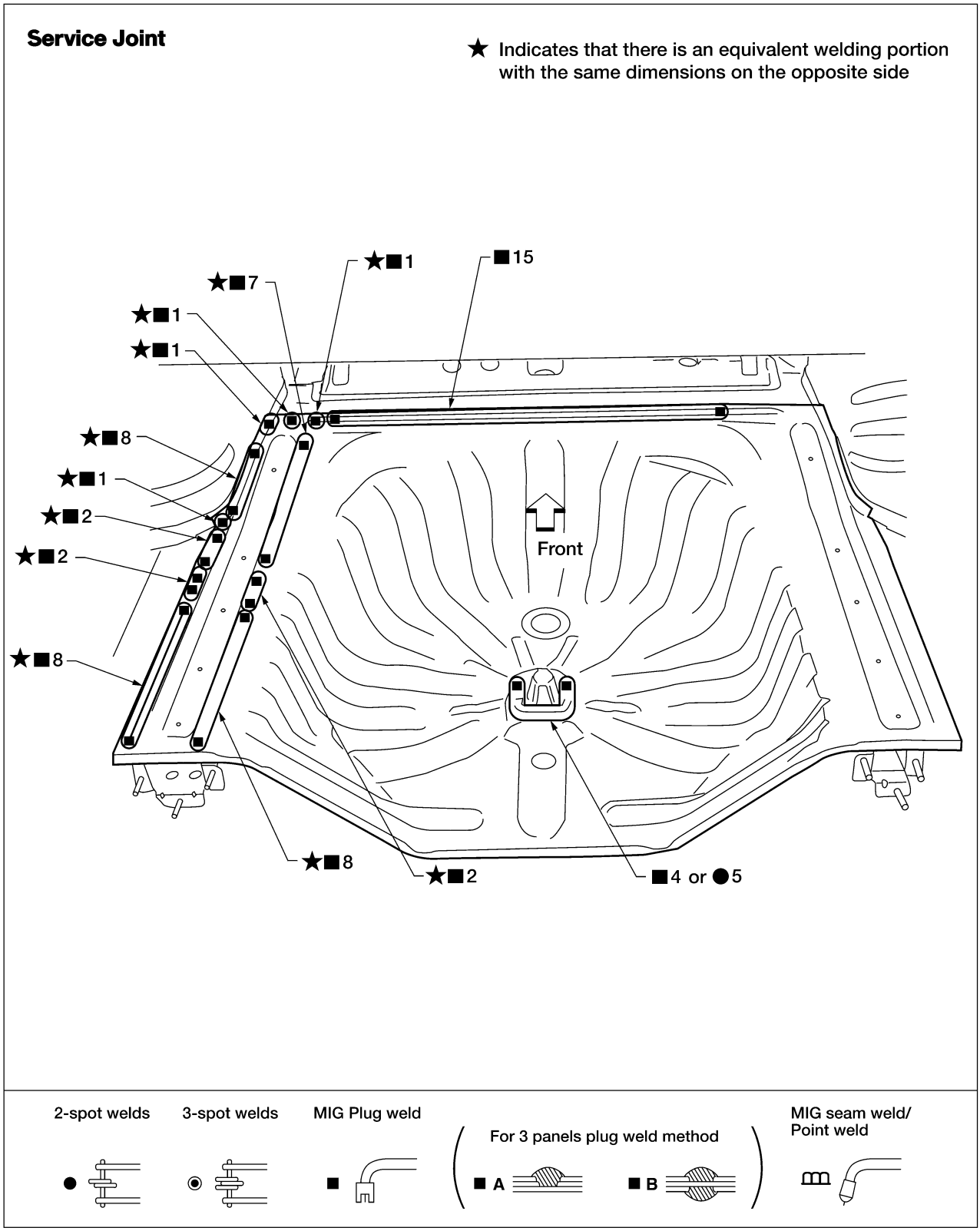

LIIA0145E

REAR SIDE MEMBER EXTENSION

- Work after rear panel and rear end crossmember have been removed.

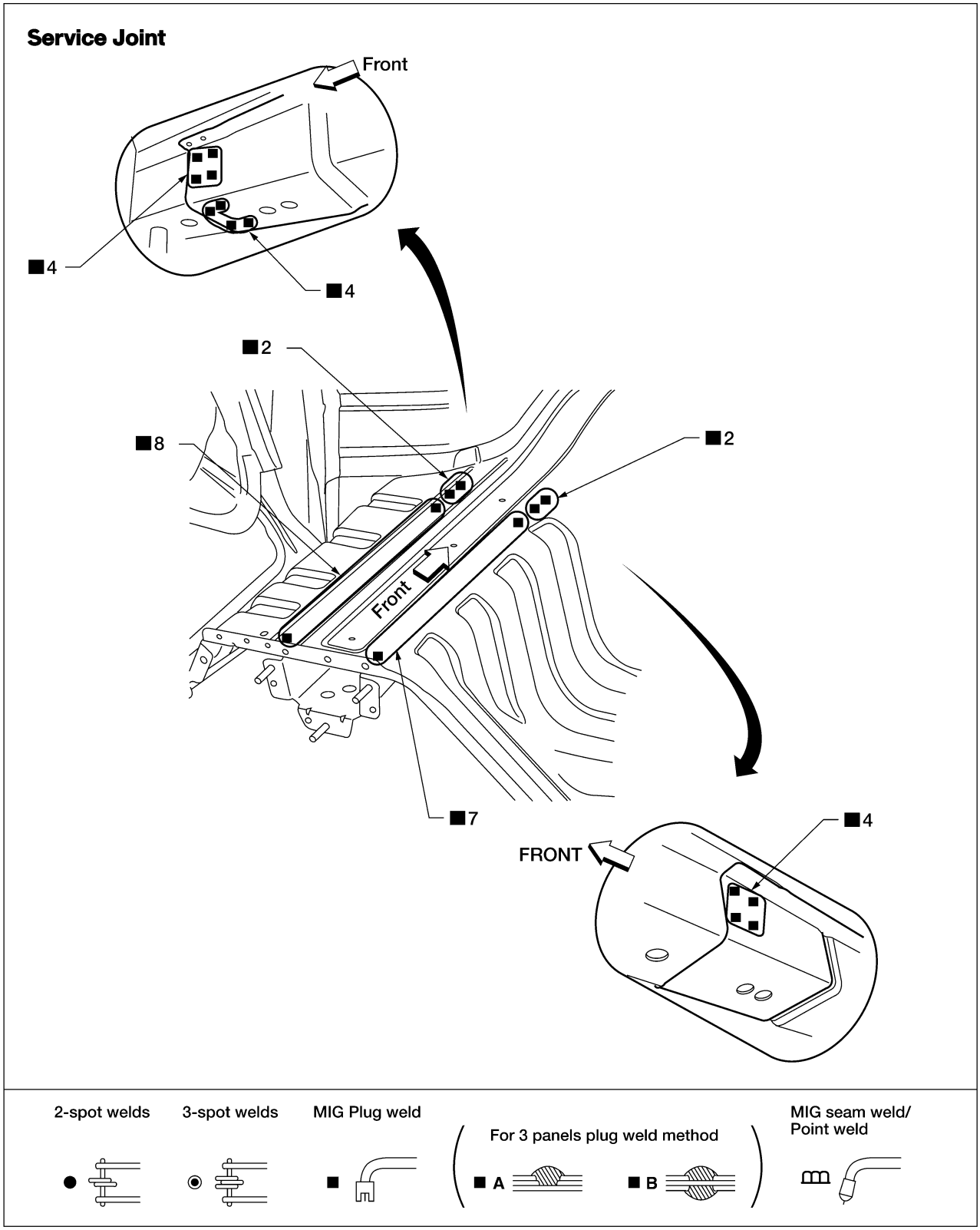

LIIA0146E

SECTION BR
BRAKE SYSTEM

CONTENTS

PRECAUTIONS 3
Precautions for Supplemental Restraint System (SRS) “AIR BAG” and “SEAT BELT PRE-TENSIONER” 3
Precautions for Brake System 3
Wiring Diagrams and Trouble Diagnosis 3
PREPARATION 4
Commercial Service Tools 4
NOISE, VIBRATION, AND HARSHNESS (NVH) TROUBLESHOOTING 5
NVH Troubleshooting Chart 5
BRAKE PEDAL 6
Inspection and Adjustment 6
Removal and Installation 7
REMOVAL 7
INSPECTION AFTER REMOVAL 7
INSTALLATION 8
BRAKE FLUID 9
Changing Brake Fluid 9
Bleeding Brake System 9
Checking Brake Fluid Level 9
BRAKE PIPING AND HOSE 10
Hydraulic Circuit 10
Front Brake Piping and Hose 10
REMOVAL 10
INSTALLATION 10
Rear Brake Piping and Hose 11
REMOVAL 11
INSTALLATION 11
Inspection 12
BRAKE MASTER CYLINDER 13
Removal and Installation 13
REMOVAL 13
INSTALLATION 13
Disassembly and Assembly 14
COMPONENTS 14
DISASSEMBLY 14
INSPECTION AFTER REMOVAL 15
ASSEMBLY 15
BRAKE BOOSTER 17
On-vehicle Service 17
OPERATING CHECK 17
AIRTIGHT CHECK 17
Removal and Installation 17
REMOVAL 17
INSPECTION AFTER REMOVAL 18
INSTALLATION 18
VACUUM LINES 19
Removal and Installation 19
Inspection 19
HOSES AND CONNECTORS 19
CHECK VALVE 19
FRONT DISC BRAKE 20
Component 20
On-vehicle Service 20
INSPECTION 20
PAD REPLACEMENT 21
Removal and Installation 21
REMOVAL 21
INSTALLATION 22
Disassembly and Assembly 22
DISASSEMBLY 22
INSPECTION AFTER DISASSEMBLY 23
ASSEMBLY 24
Brake Burnishing Procedure 25
REAR DISC BRAKE 26
Component 26
On-vehicle Service 26
INSPECTION 26
PAD REPLACEMENT 27
Removal and Installation 28
REMOVAL 28
INSTALLATION 28
Disassembly and Assembly 29
DISASSEMBLY 29
INSPECTION AFTER DISASSEMBLY 29
ASSEMBLY 30
Brake Burnishing Procedure 30
DUAL PROPORTIONING VALVE 31
Inspection 31

SERVICE DATA AND SPECIFICATIONS (SDS) 32
General Specifications 32
Disc Brake 32
Brake Pedal 32
Dual Proportioning Valve 32
Brake Booster 32

PRECAUTIONS

PFP:00001

Precautions for Supplemental Restraint System (SRS) “AIR BAG” and “SEAT BELT PRE-TENSIONER”

EFS001FF

The Supplemental Restraint System such as “AIR BAG” and “SEAT BELT PRE-TENSIONER”, used along with a front seat belt, helps to reduce the risk or severity of injury to the driver and front passenger for certain types of collision. Information necessary to service the system safely is included in the SRS and SB section of this Service Manual.

WARNING:

- **To avoid rendering the SRS inoperative, which could increase the risk of personal injury or death in the event of a collision which would result in air bag inflation, all maintenance must be performed by an authorized NISSAN/INFINITI dealer.**
- **Improper maintenance, including incorrect removal and installation of the SRS, can lead to personal injury caused by unintentional activation of the system. For removal of Spiral Cable and Air Bag Module, see the SRS section.**
- **Do not use electrical test equipment on any circuit related to the SRS unless instructed to in this Service Manual. SRS wiring harnesses can be identified by yellow and/or orange harness connectors.**

Precautions for Brake System

EFS001FG

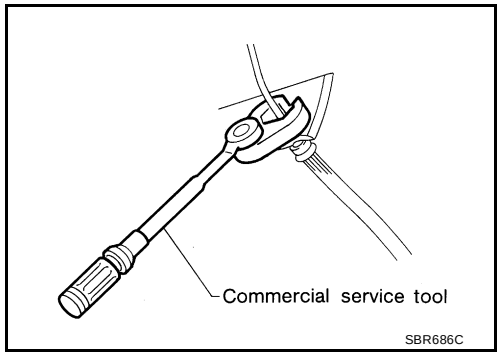

- **Recommended fluid is brake fluid “DOT 3”.**
- **Never reuse drained brake fluid.**
- **Be careful not to splash brake fluid on painted areas.**
- **To clean or wash all parts of master cylinder, disc brake caliper and wheel cylinder, use clean brake fluid.**
- **Never use mineral oils such as gasoline or kerosene. They will ruin rubber parts of the hydraulic system.**
- **Use flare nut wrench when removing and installing brake tube.**
- **Always tighten brake lines to specified torque when installing.**
- **Burnish the brake contact surfaces after refinishing or replacing drums or rotors, after replacing pads or linings, or if a soft pedal occurs at very low mileage.**
  Refer to BR-30 (Front disc brake) and BR-25 (Rear disc brake) for brake burnishing procedure.

WARNING:

- **Clean brake pads and shoes with a waste cloth, then wipe with a dust collector.**

Wiring Diagrams and Trouble Diagnosis

EFS001FH

When you read wiring diagrams, refer to the following:

- Refer to GI-12, "How to Read Wiring Diagrams" .
- Refer to PG-3, "POWER SUPPLY ROUTING CIRCUIT" for power distribution circuit.

When you perform trouble diagnosis, refer to the following:

- Refer to GI-10, "HOW TO FOLLOW TEST GROUPS IN TROUBLE DIAGNOSES" .
- Refer to GI-25, "How to Perform Efficient Diagnosis for an Electrical Incident" .
- For trouble diagnoses of models with ABS, refer to BRC-7, "TROUBLE DIAGNOSIS" .
- For trouble diagnoses of models with TCS even if the diagnostic items are related to the ABS system, refer to BRC-50, "TROUBLE DIAGNOSIS" .

PREPARATION

PFP:00002

Commercial Service Tools

EFS001FI

Tool name	Description
1 Flare nut crowfoot 2 Torque wrench 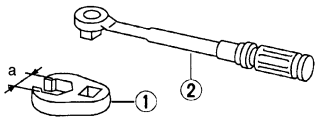 S-NT360	Removing and installing each brake piping **a: 10 mm (0.39 in)**
Brake fluid pressure gauge 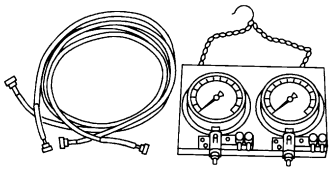 NT151	Measuring brake fluid pressure
Power tool 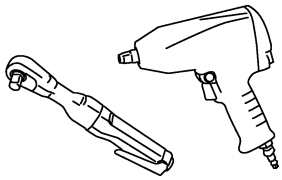 PBIC0190E	Loosening bolts and nuts

NOISE, VIBRATION, AND HARSHNESS (NVH) TROUBLESHOOTING

PFP:00003

NVH Troubleshooting Chart

EFS001FJ

Use the chart below to help you find the cause of the symptom. If necessary, repair or replace these parts.

Reference page			BR-20, BR-26	BR-20, BR-26	BR-20, BR-26	BR-23, BR-29	BR-20, BR-26	BR-23, BR-29	BR-23, BR-29	BR-23, BR-29	BR-25	BR-20, BR-26	FAX-4	FAX-4	FSU-4, RSU-4	WT-2	WT-2	PS-5
Possible cause and SUSPECTED PARTS			Pads - damaged	Pads - uneven wear	Shims damaged	Rotor imbalance	Rotor damage	Rotor runout	Rotor deformation	Rotor deflection	Rotor rust	Rotor thickness variation	DRIVE SHAFT	AXLE	SUSPENSION	TIRES	ROAD WHEEL	STEERING
Symptom	BRAKE	Noise	X	X	X								X	X	X	X	X	X
		Shake				X							X	X	X	X	X	X
		Shimmy, Judder				X	X	X	X	X	X	X		X	X	X	X	X

X: Applicable

BRAKE PEDAL

PFP:46501

Inspection and Adjustment

EFS002O0

Inspect the brake pedal free height "H" from dash reinforcement panel. Adjust if necessary.

Free height "H"	Refer to BR-32, "Brake Pedal" .	
Clearance between pedal stopper and threaded end of stop lamp switch and ASCD switch "C1, C2"	0.74 - 1.96 mm (0.0291 - 0.0772 in)	
Pedal height (with engine running, brake pedal force 490 N {50 kgf, 110 lbf}) "H2"	M/T vehicle	: More than 84 mm (3.31 in)
	A/T vehicle	: More than 90.3 mm (3.55 in)
Pedal play "A"	3 - 11 mm (0.12 - 0.43 in)	

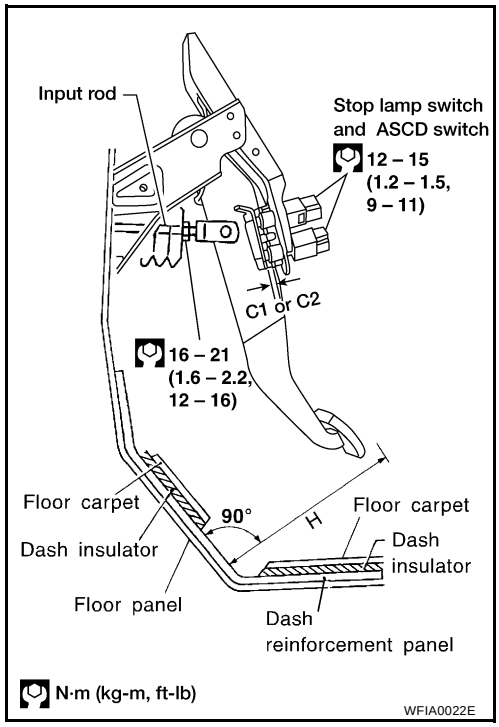

1. Loosen the stop lamp switch and ASCD switch (if equipped) by turning 45° counterclockwise.
2. Loosen lock nut on the input rod, then turn input rod to adjust the pedal to specified height. When finished adjusting, tighten lock nut.

   CAUTION:
   Make sure that the screw portion of the end of input rod is located inside the clevis.

   Lock nut : 16 - 21 N·m (1.6 - 2.2 kg-m, 12 - 16 ft-lb)

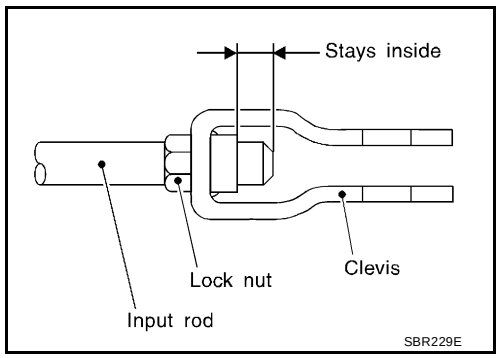

3. With the pedal pulled up and held by hand, press the stop lamp switch and the ASCD switch (if equipped) in until threaded ends contact rubber stops.
4. With the threaded ends of the stop lamp switch and ASCD switch (if equipped) contacting the rubber stops, turn the switches 45° clockwise to lock in place.

   CAUTION:
   Make sure that the gap (C^1 , C^2) between the rubber stops and switch ends are within specification.
5. Check the pedal play.

   CAUTION:
   Make sure that the stop lamp goes off when the pedal is released.
6. Start the engine and check the height of the brake pedal when depressing it.

Removal and Installation

EFS001FL

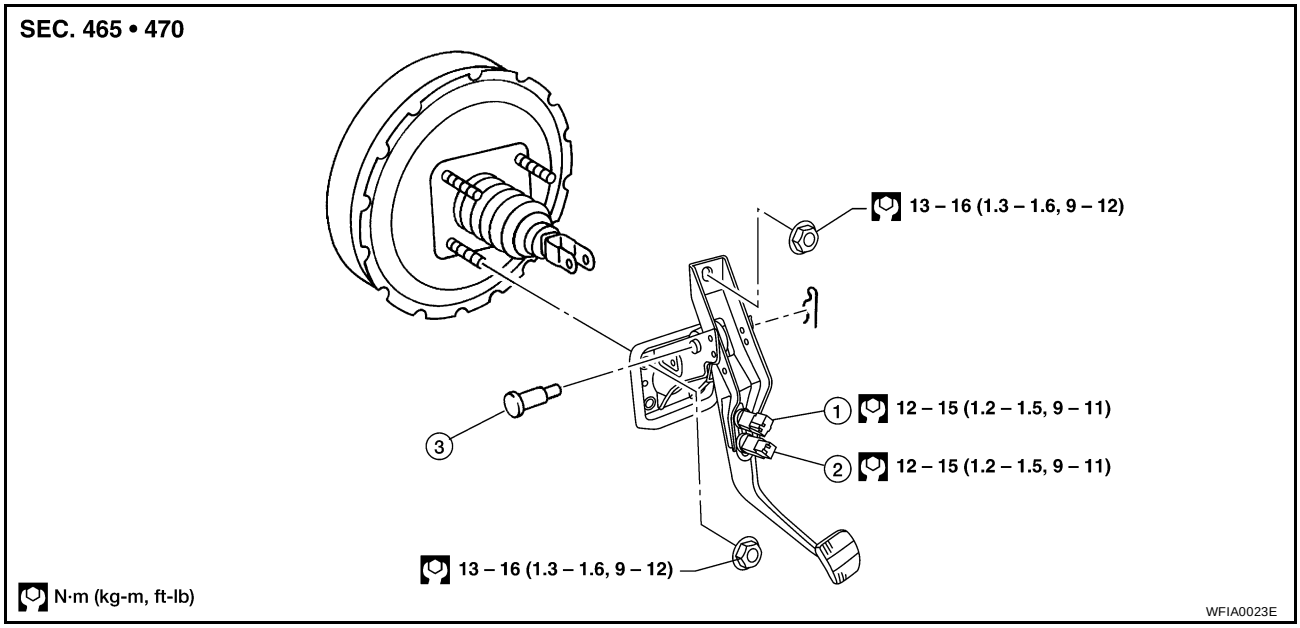

1. ASCD cancel switch
2. Stop lamp switch
3. Clevis pin

REMOVAL

WARNING:

Do not deform the brake tube.

1. Remove the instrument panel lower cover on driver side. Refer to IP-13, "Driver Lower Instrument Panel" .
2. Remove the stop lamp switch from the pedal assembly.
3. Remove snap pins and clevis pins from the clevis of brake booster.
4. Remove mounting nuts from the pedal assembly, then carefully remove the brake booster from the bulkhead so as not to deform the brake tube.
5. Remove the clevis of brake booster from the input rod.
6. Remove the steering column assembly from the steering member.
7. Pushing down the pedal assembly to the right, remove it from the vehicle while keeping the steering post bracket stay out.

INSPECTION AFTER REMOVAL

Check brake pedal for following items.

- Brake pedal bend
- Clevis pin deformation
- Crack of any welded portion
- Crack or deformation of clevis pin stopper

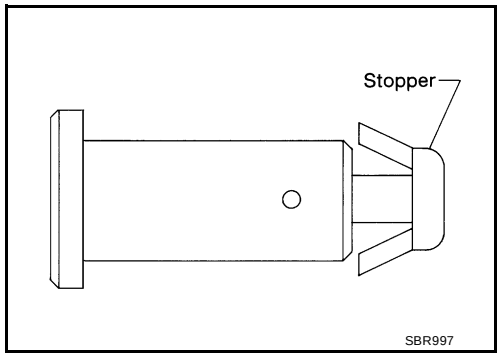

INSTALLATION

- Install all parts in the reverse order of removal.
- After installing the brake pedal assembly in the vehicle, be sure to adjust it.

BRAKE FLUID

PFP:KN100

Changing Brake Fluid

EFS002O1

CAUTION:

- **Refill with new brake fluid “DOT 3”.**
- **Always keep fluid level higher than minimum line on reservoir tank.**
- **Never reuse drained brake fluid.**
- **Be careful not to splash brake fluid on painted areas; it may cause paint damage. If brake fluid is splashed on painted areas, wash it away with water immediately.**

1. Connect a vinyl tube and container to the air bleeder.
2. Depressing the brake pedal, drain the brake fluid gradually from the air bleeder of each wheel.
3. Turn the ignition switch to OFF and disconnect the ABS actuator and control unit connector.
4. Clean inside of reservoir tank, and refill with new brake fluid.
5. Loosen the air bleeder, depress the pedal slowly to the full stroke and then release it. Repeat the procedure every 2 or 3 seconds until the new brake fluid comes out, then close the air bleeder while depressing the pedal. Refer to BR-9, "Bleeding Brake System" .

Bleeding Brake System

EFS001FN

CAUTION:

- **Carefully monitor brake fluid level at master cylinder during bleeding operation.**
- **Fill reservoir with new brake fluid “DOT 3”. Make sure it is full at all times while bleeding air out of system.**
- **Place a container under master cylinder to avoid spillage of brake fluid.**
- **Do not loosen the connecting portion of the actuator during air bleeding.**

1. For models with ABS, turn ignition switch OFF and disconnect ABS actuator and control unit connectors or battery ground cable.
2. Connect a transparent vinyl tube to air bleeder valve.
3. Fully depress brake pedal several times.
4. With brake pedal depressed, open air bleeder valve to release air.
5. Close air bleeder valve.
6. Release brake pedal slowly.
7. Tighten air bleeder valve.

   Tightening torque : 7 - 9 N·m (0.7 - 0.9 kg-m, 61 - 78 in-lb)

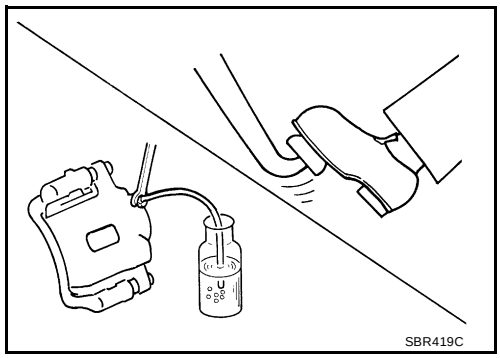

8. Repeat steps 2. through 7. until clear brake fluid comes out of air bleeder valve.
9. Bleed air in the following order.
   Right rear brake → Left front brake → Left rear brake → Right front brake

Checking Brake Fluid Level

EFS001FO

- Check fluid level in reservoir tank. It should be between Max and Min lines on reservoir tank.
- Visually check around the reservoir tank for leaks.
- If fluid level is extremely low, check brake system for leaks.
- Release parking brake lever and see if brake warning lamp goes off. If not, check brake system for leaks.

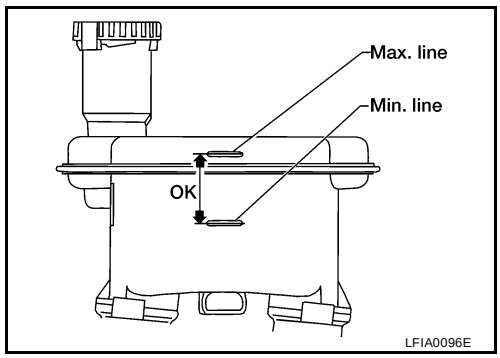

BRAKE PIPING AND HOSE

PFP:46210

Hydraulic Circuit

EFS001FP

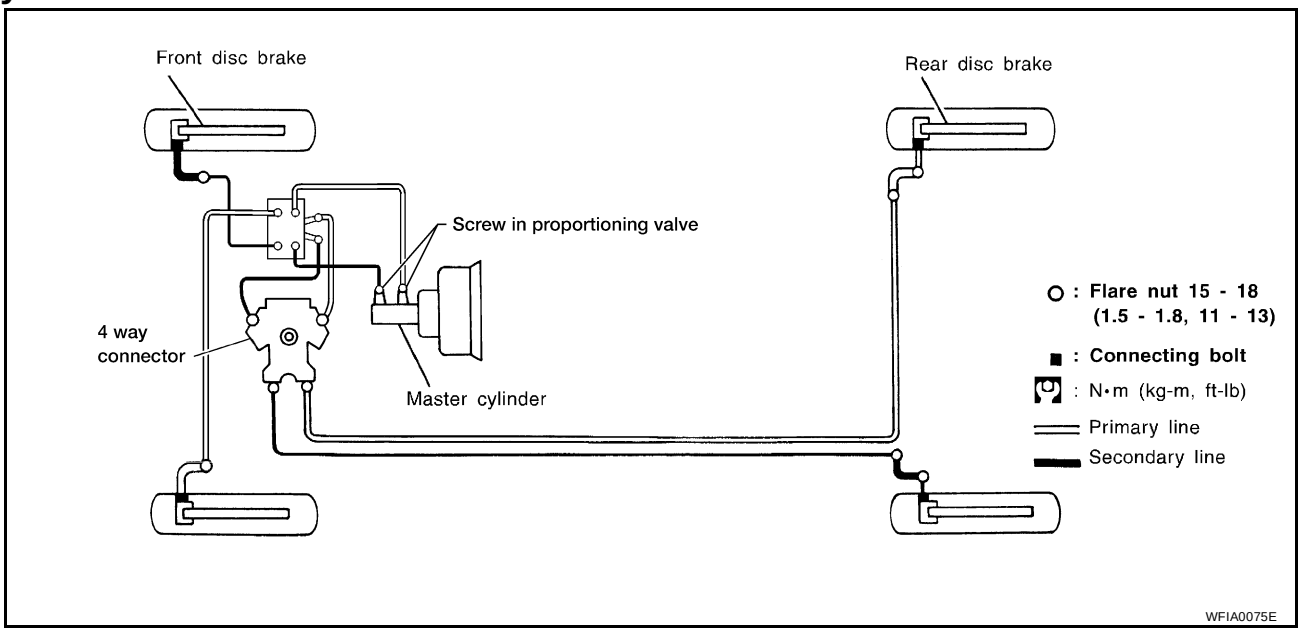

Front Brake Piping and Hose

EFS001FQ

REMOVAL

CAUTION:

- **Be careful not to splash brake fluid on painted areas; it may cause paint damage. If brake fluid is splashed on painted areas, wash it away with water immediately.**
- **All hoses must be free from excessive bending, twisting and pulling.**
- **Cover openings to prevent entrance of dirt whenever disconnecting brake line.**

1. Connect vinyl tube and container to air bleeder valve.
2. Drain brake fluid from each air bleeder valve by depressing brake pedal.
3. Remove flare nut connecting brake tube and hose, then withdraw lock spring.
4. Remove the connecting bolt and disconnect the caliper assembly from the brake hose.
5. Remove lock plates from the mounting portion of the brake tube and the mounting portion of the strut.

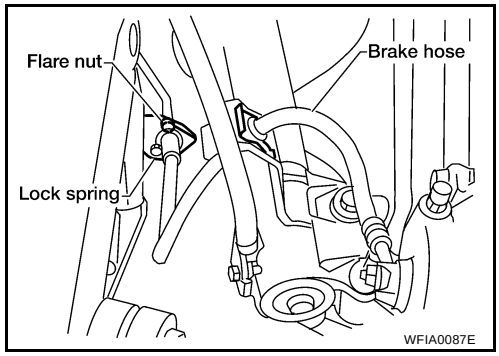

INSTALLATION

CAUTION:

- **Refill with new brake fluid “DOT 3”.**
- **Never reuse drained brake fluid.**

1. Attach the brake hose to the caliper assembly, then tighten the connecting bolts to the specified torque.

   CAUTION:
   - **Correctly attach the brake hose to the cylinder body.**
   - **The copper washer of the connecting bolt has to be replaced with a new one every time the fitting is disconnected.**
2. Attach the brake hose to the strut, then install a lock plate.
3. Attach the brake hose to the brake tube and temporarily tighten the flare nut as much as possible by hand, then install a lock plate.

4. Tighten all flare nuts and connecting bolts.

Specification

Flare nut	**: 5 - 18 N·m (1.5 - 1.8 kg-m, 11 - 13 ft-lb)**
Connecting bolt	**: 17 - 20 N·m (1.7 - 2.0 kg-m, 12 - 14 ft-lb)**

5. Refill until new brake fluid comes out of each air bleeder valve.
6. Bleed air. Refer to BR-9, "Bleeding Brake System" .

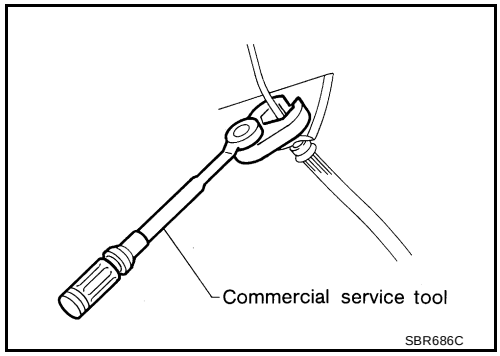

Rear Brake Piping and Hose

EFS001FR

REMOVAL

CAUTION:

- **Be careful not to splash brake fluid on painted areas; it may cause paint damage. If brake fluid is splashed on painted areas, wash it away with water immediately.**
- **All hoses must be free from excessive bending, twisting and pulling.**
- **Cover openings to prevent entrance of dirt whenever disconnecting brake line.**

1. Connect vinyl tube and container to air bleeder valve.
2. Drain brake fluid from each air bleeder valve by depressing brake pedal.
3. Remove flare nut connecting brake tube and hose, then withdraw lock spring.
4. Remove the lock plate and the connecting bolt, and then remove it from the vehicle.

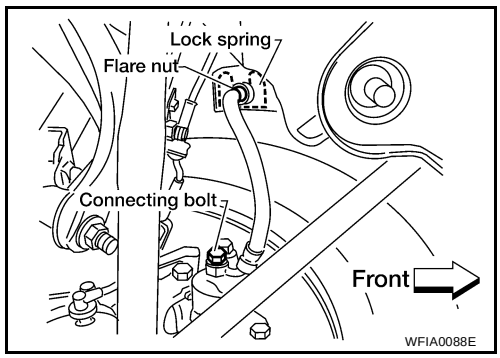

INSTALLATION

CAUTION:

- **Refill with new brake fluid “DOT 3”.**
- **Never reuse drained brake fluid.**

1. Attach the brake hose to the brake tube and temporarily tighten the flare nut as much as possible by hand.
2. Install the brake hose with a lock plate, then tighten the connecting bolt to the specified torque. Tighten the flare nut with a torque wrench to specification.

Specification

Flare nut	**: 5 - 18 N·m (1.5 - 1.8 kg-m, 11 - 13 ft-lb)**
Connecting bolt	**: 17 - 20 N·m (1.7 - 2.0 kg-m, 12 - 14 ft-lb)**

3. Refill until new brake fluid comes out of each air bleeder valve.
4. Bleed air. Refer to BR-9, "Bleeding Brake System" .

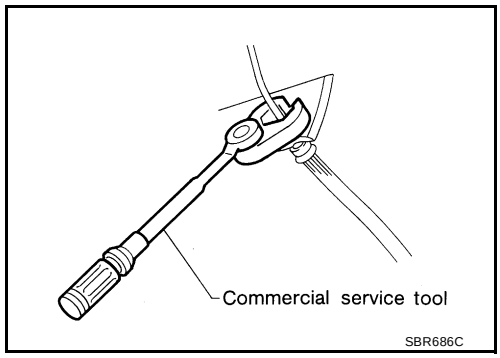

Inspection

EFS001FS

CAUTION:

If leakage occurs around joints, retighten or, if necessary, replace damaged parts.

1. Check brake lines (tubes and hoses) for leaks, cracks, distortion, deformation, without interfering with other parts or loosening connecting parts, deterioration or other damage. Replace any damaged parts.
2. Apply the stepping force of 784 N (80 kgf, 176 lbf) to the brake pedal with the engine running and keep it for about 5 seconds, then check each part for leaks.

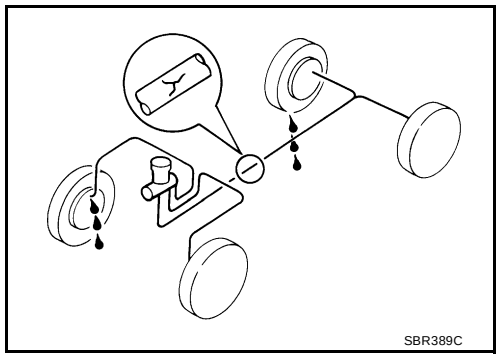

BRAKE MASTER CYLINDER

PFP:46010

Removal and Installation

EFS001FT

CAUTION:

Be careful not to splash brake fluid on painted areas; it may cause paint damage. If brake fluid is splashed on painted areas, wash it away with water immediately.

REMOVAL

1. Connect a vinyl tube and container to air bleeder valve.
2. Drain brake fluid from each air bleeder valve by depressing brake pedal to empty fluid from the master cylinder. Remove the harness connector of the liquid level sensor.
3. Remove brake pipe flare nuts.
4. Remove master cylinder mounting nuts.

INSTALLATION

CAUTION:

- **Refill with new brake fluid “DOT 3”.**
- **Never reuse drained brake fluid.**

1. Place master cylinder onto brake booster and secure mounting nuts lightly.
2. Tighten the mounting nuts.

   Tightening torque : 12 - 15 N·m (1.2 - 1.5 kg-m, 9 - 11 ft-lb)

3. Fill the reservoir tank with new brake fluid.
4. Plug all ports on master cylinder with fingers to prevent air suction while releasing brake pedal.
5. Have driver depress brake pedal slowly several times until no air comes out of master cylinder.
6. Fit brake lines to master cylinder.
7. Tighten flare nuts.

   Tightening torque : 15 - 18 N·m (1.5 - 1.8 kg-m, 11 - 13 ft-lb)

8. Bleed air from brake system. Refer to BR-9, "Bleeding Brake System" .

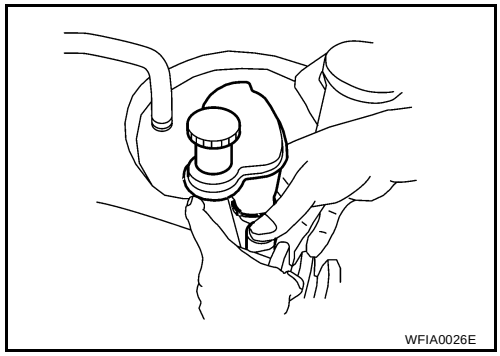

Disassembly and Assembly

EFS001FU

COMPONENTS

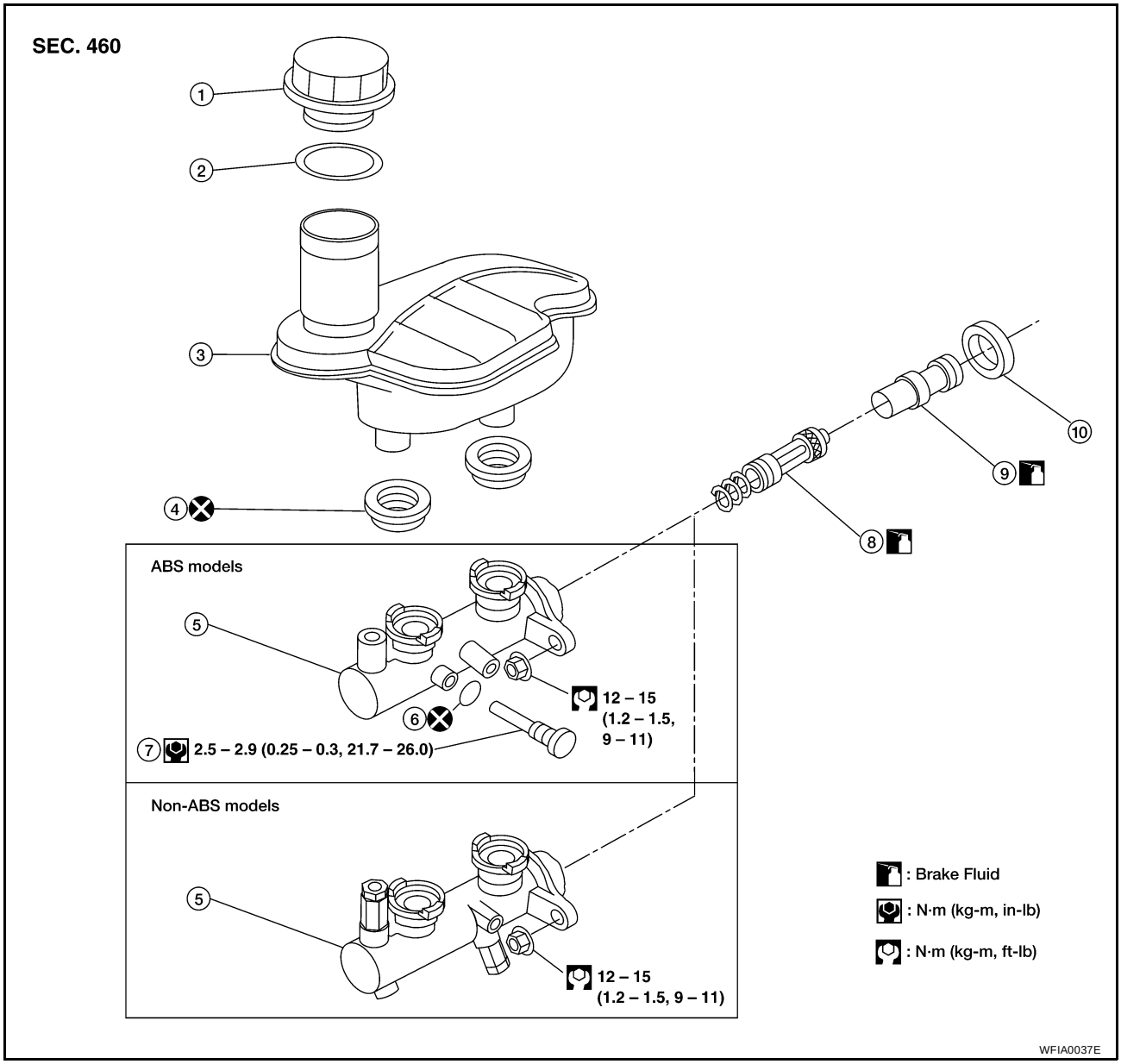

1. Reservoir cap
2. O-ring
3. Reservoir tank
4. Seal
5. Cylinder body
6. O-ring
7. Piston stopper
8. Secondary piston assembly
9. Primary piston assembly
10. Stopper cap

DISASSEMBLY

1. Bend claws of stopper cap outward.

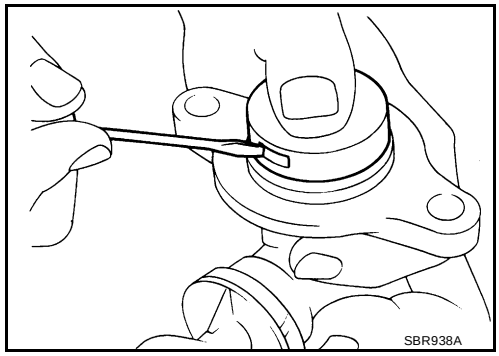

2. Remove piston stopper while piston is pushed into cylinder.

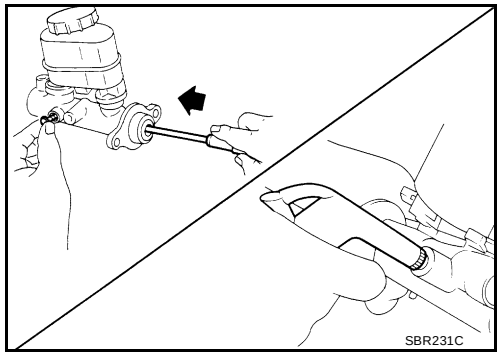

3. Remove piston assemblies.
   If it is difficult to remove secondary piston assembly, gradually apply compressed air through fluid outlet.
4. Draw out reservoir tank.

INSPECTION AFTER REMOVAL

Master Cylinder Inner Wall

- Check the inner wall of the cylinder for damage, abrasion, corrosion and pin holes. If NG, replace the cylinder.

Piston

- Check for deformation of or scratches on piston cups.

ASSEMBLY

1. Insert secondary piston assembly. Then insert primary piston assembly.
   - Pay attention to alignment of secondary piston slit with valve stopper mounting hole of cylinder body.

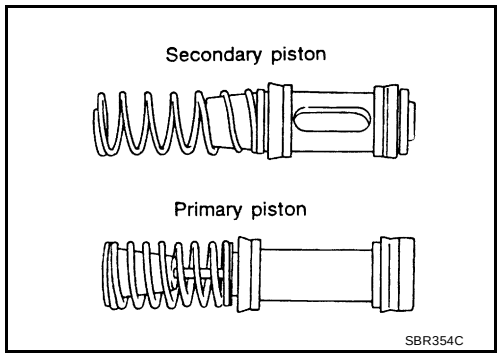

2. Install stopper cap.
   Before installing stopper cap, ensure that claws are bent inward.

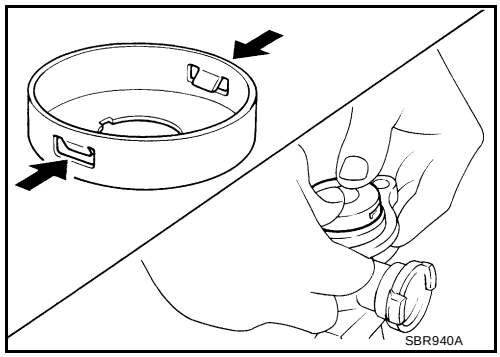

3. Push reservoir tank seals into cylinder body.
4. Push reservoir tank into cylinder body.

5. Install piston stopper while piston is pushed into cylinder.

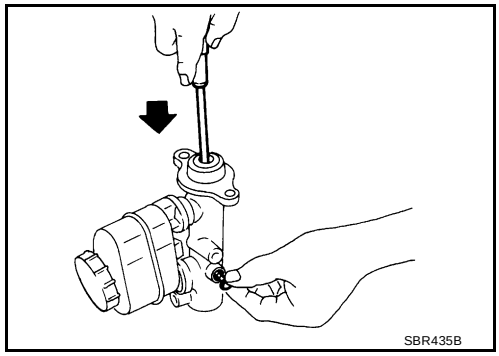

BRAKE BOOSTER

PFP:47200

On-vehicle Service

EFS001FV

OPERATING CHECK

1. Stop engine and depress brake pedal several times. Check that pedal stroke does not change.
2. Depress brake pedal, then start engine. If pedal goes down slightly, operation is normal.

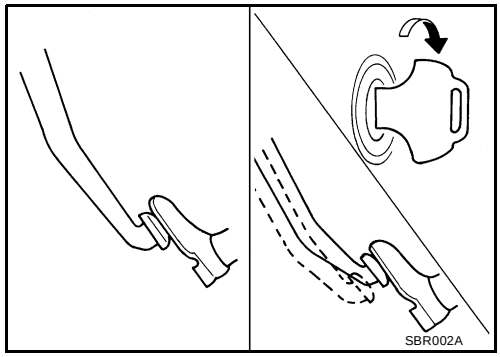

AIRTIGHT CHECK

- Start engine, and stop it after one or two minutes. Depress brake pedal several times slowly. The pedal should go further down the first time, and then it should gradually rise thereafter.
- Depress brake pedal while engine is running, and stop engine with pedal depressed. The pedal stroke should not change after holding pedal down for 30 seconds.

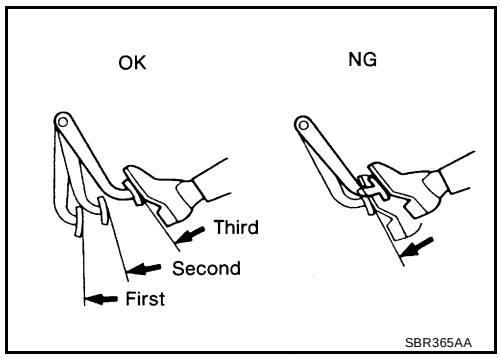

Removal and Installation

EFS001FW

REMOVAL

CAUTION:

- **Be careful not to splash brake fluid on painted areas; it may cause paint damage. If brake fluid is splashed on painted areas, wash it away with water immediately.**
- **Be careful not to deform or bend brake pipes during removal of booster.**
- **Replace clevis pin if damaged.**
- **Refill with new brake fluid “DOT 3”.**
- **Never reuse drained brake fluid.**
- **Take care not to damage brake booster mounting bolt thread when installing. Due to the acute angle of installation, the threads can be damaged with the dash panel.**

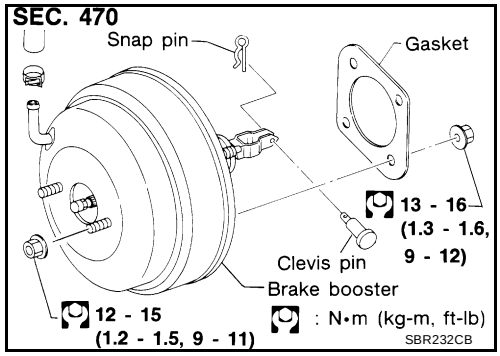

1. Remove the vacuum piping from the brake booster.
2. Remove the master cylinder.
3. Remove snap pin and clevis pin from clevis, then remove the input rod from the brake pedal.
4. Remove the mounting nuts from the brake booster and the brake pedal assembly.
5. Remove the booster assembly from the engine compartment.

INSPECTION AFTER REMOVAL

Output Rod Length Check

1. Apply vacuum of –66.7 kPa (–500 mmHg, –19.69 inHg) to brake booster with a hand vacuum pump.
2. Add preload of 19.6 N (2 kg, 4.4 lb) to output rod.
3. Check output rod length.

Specified length : 10.275 - 10.525 mm (0.4045 - 0.4144 in)

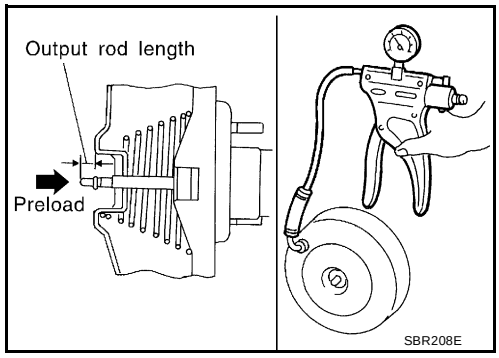

INSTALLATION

1. Adjust the length of the input rod by loosening the lock nut so that the dimensions shown match the standard value.

Standard value : 125 mm (4.92 in)

2. Tighten the lock nut temporarily and install the booster assembly in the vehicle.
3. Connect the brake pedal part to the clevis part of the input rod.
4. Tighten the mounting nut for the pedal assembly to the specified torque.

: 13 - 16 N·m (1.3 - 1.6 kg-m, 9 - 12 ft-lb)

5. Install the master cylinder in the booster assembly.
6. Adjust the height and play of the brake pedal.
7. Tighten the lock nut of the input rod to the specified torque.

: 16 - 21 N·m (1.6 - 2.2 kg-m, 12 - 15 ft-lb)

8. Bleed air. Refer to BR-9, "Bleeding Brake System" .

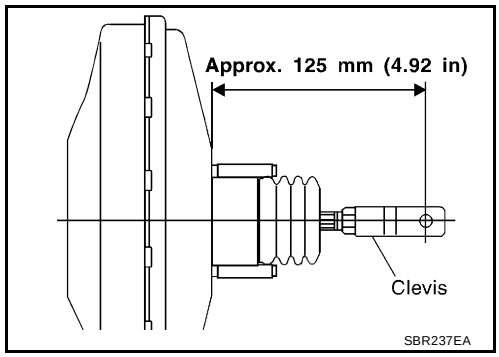

VACUUM LINES

PFP:41920

Removal and Installation

EFS001FX

CAUTION:

When installing vacuum hoses, pay attention to the following points.

- **Do not apply any oil or lubricants to vacuum hose with check valve.**
- **Insert vacuum tube into vacuum hose as shown.**
- **Install vacuum hose with internal check valve, paying attention to its direction.**

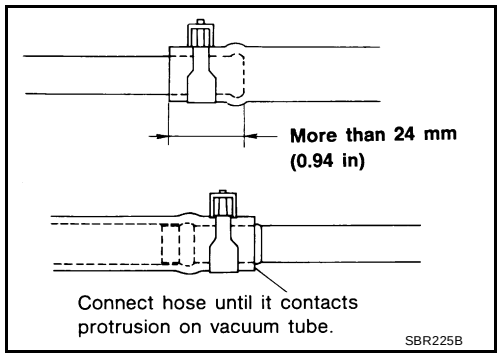

Inspection

EFS001FY

HOSES AND CONNECTORS

Check vacuum lines and connections for airtightness, improper attachment, chafing and deterioration.

CHECK VALVE

Check vacuum with a vacuum pump.

Connect to booster side	Vacuum should exist
Connect to engine side	Vacuum should not exist

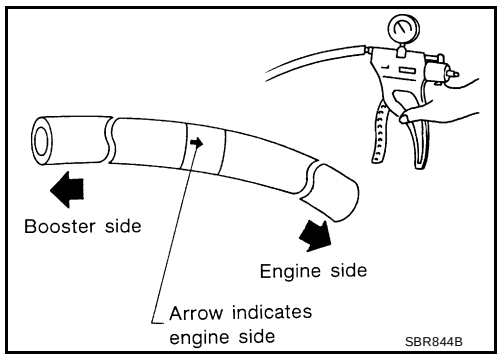

FRONT DISC BRAKE

PFP:41000

Component

EFS001FZ

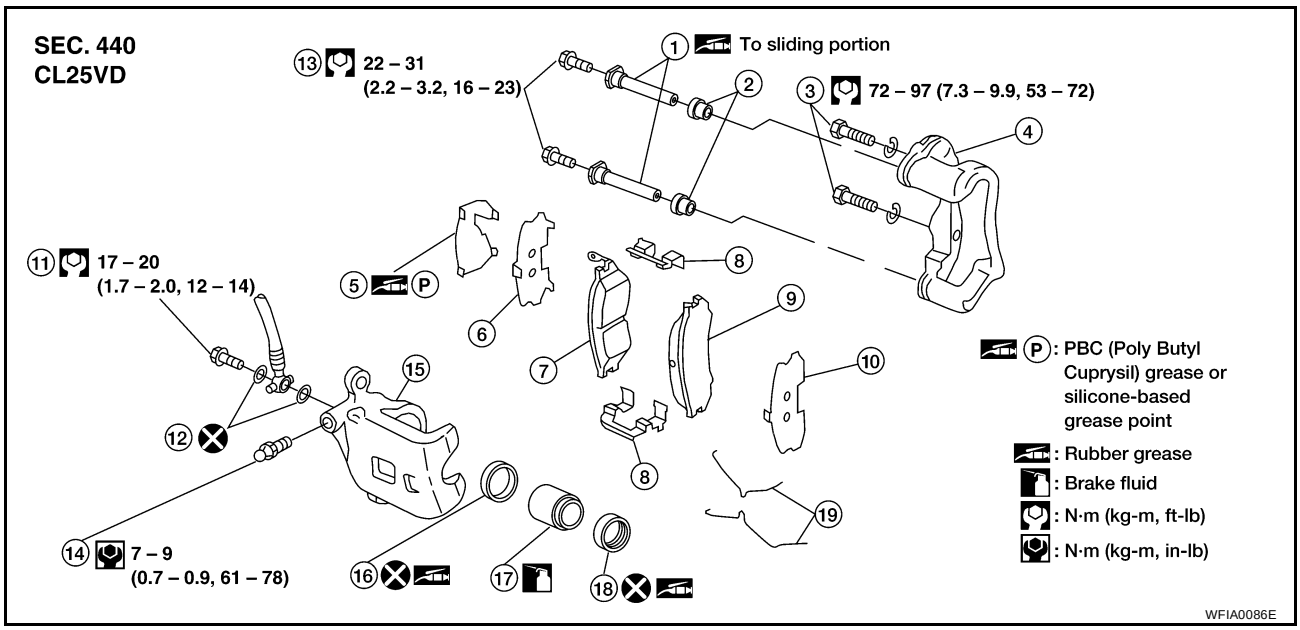

1.	Main pin	2.	Pin boot	3.	Torque member fixing bolt
4.	Torque member	5.	Shim cover	6.	Inner shim
7.	Inner pad	8.	Pad retainer	9.	Outer pad
10.	Outer shim	11.	Connecting bolt	12.	Copper washer
13.	Main pin bolt	14.	Bleed valve	15.	Cylinder body
16.	Piston seal	17.	Piston	18.	Piston boot
19.	Pad return spring				

WARNING:

Clean brake pads with a vacuum dust collector to minimize the hazard of airborne particles or other materials.

CAUTION:

- **When cylinder body is open, do not depress the brake pedal because the piston will pop out.**
- **It is not necessary to remove connecting bolt except for disassembly or replacement of caliper assembly. In this case, suspend cylinder body with wire so as not to stretch brake hose.**
- **Be careful not to damage piston boot or get oil on rotor. Always replace shims when replacing pads.**
- **Burnish the brake contact surfaces after refinishing or replacing drums or rotors, after replacing pads or linings or if a soft pedal occurs at very low mileage.**
  Refer to BR-25, "Brake Burnishing Procedure" .

On-vehicle Service

EFS002O8

INSPECTION

Pad Thickness

- Remove a wheel with the vehicle lifted up, and then check the thickness of the pad from the inspection hole of the cylinder body. If necessary, check it with a micrometer.

Standard pad thickness : 11 mm (0.43 in)

Pad wear limit : 2.0 mm (0.079 in)

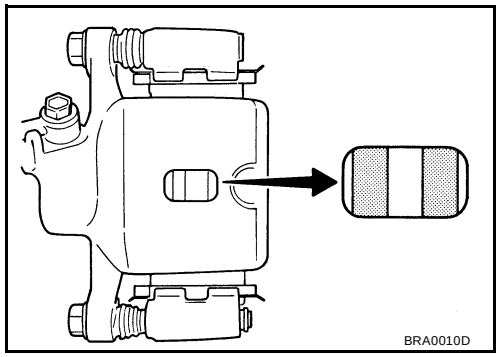

PAD REPLACEMENT

Removal

- If shims are rusted or show peeling of the rubber coat, replace them with new shims.
- Whenever the brake pads are replaced, the inner shim, the outer shim and the shim cover have to be replaced as a set.

1. Remove master cylinder reservoir cap.
2. Remove pin bolt, using power tool.

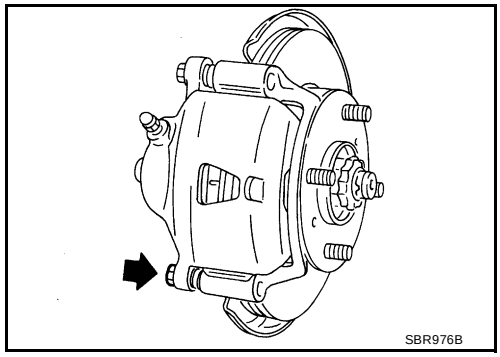

3. Suspend the cylinder body with wire. Then remove pads with retainers, inner and outer shims and pad return springs.

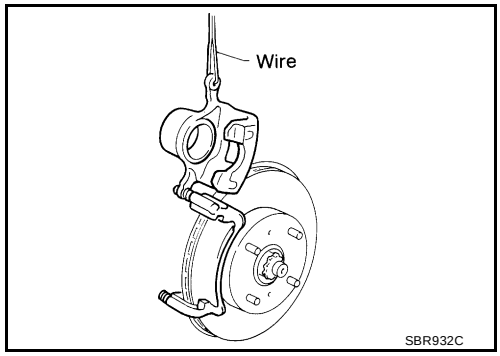

Installation

1. Attach the inner shim and shim cover to the inner pad and attach the outer shim to the outer pad.
2. Apply grease to the contact surface of pad retainer with the pads, then attach the pad retainer, pads and pad return spring to the torque member.
3. Install the cylinder body to the torque member.
4. Insert a main pin bolt (on the lower side) and tighten it to specification. Refer to BR-20, "Component" .
5. Check the brakes for drag.

CAUTION:

Burnish the brake contact surfaces after refinishing or replacing brake rotors, after replacing pads, or if a soft pedal occurs at very low mileage. Refer to BR-25, "Brake Burnishing Procedure" .

Removal and Installation

EFS002O9

REMOVAL

1. Connect the vinyl tube and container to the air bleeder.
2. Depress the brake pedal and drain the brake fluid gradually from the air bleeder.
3. Remove torque member fixing bolts using power tool and brake hose connecting bolt.
4. Remove the brake caliper, using power tool.
5. Remove brake rotor.

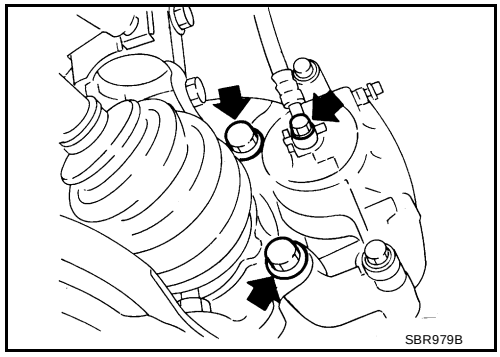

INSTALLATION

CAUTION:

- **Refill with new brake fluid “DOT 3”.**
- **Never reuse drained brake fluid.**

1. Install brake rotor.
2. Install the brake caliper and tighten main pin bolt to specification. Refer to BR-20, "Component" .

   CAUTION:
   When installing the caliper assembly in the vehicle, wipe oil from the seating surface of the knuckle spindle washer and the mounting surface of the caliper assembly.
3. Install brake hose to caliper and tighten connecting bolt to specification. Refer to BR-20, "Component" .

   CAUTION:
   - **The copper washer of the connecting bolt has to be replaced every time the fitting is disconnected.**
   - **Correctly attach the brake hose to the projecting portion of the cylinder body.**
4. Bleed air from brake system. Refer to BR-9, "Bleeding Brake System" .

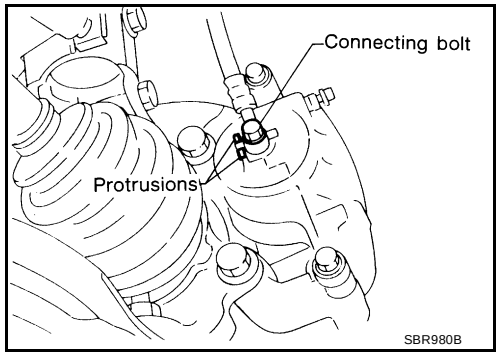

CAUTION:
Burnish the brake contact surfaces after refinishing or replacing brake rotors, after replacing pads, or if a soft pedal occurs at very low mileage. Refer to BR-25, "Brake Burnishing Procedure" .

Disassembly and Assembly

EFS002OA

DISASSEMBLY

1. Push out piston with piston boot using compressed air.

   WARNING:
   Do not place your fingers in front of piston.

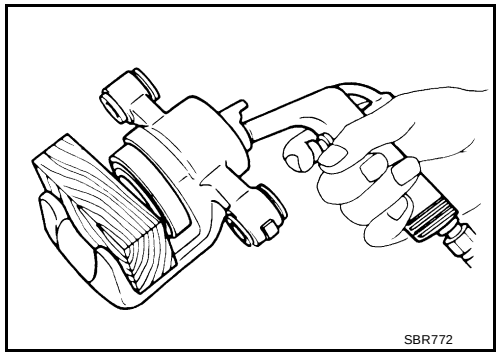

2. Remove piston seal with a suitable tool.

   CAUTION:
   Do not scratch or score cylinder wall.

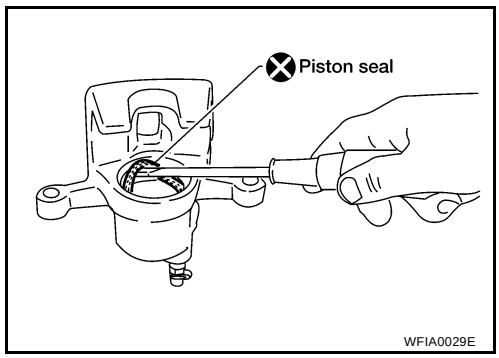

INSPECTION AFTER DISASSEMBLY

Caliper

CYLINDER BODY

CAUTION:

Use brake fluid to clean. Never use mineral oil.

- **Check inside surface of cylinder for score, rust, wear, damage or presence of foreign materials. If any of the above conditions are observed, replace cylinder body.**
- **Minor damage from rust or foreign materials may be eliminated by polishing surface with a fine emery paper. Replace cylinder body if necessary.**

TORQUE MEMBER

Check for wear, cracks or other damage. Replace if necessary.

PISTON

CAUTION:

Piston sliding surface is plated. Do not polish with emery paper even if rust or foreign materials are stuck to sliding surface.

Check piston for score, rust, wear, damage or presence of foreign materials. Replace if any of the above conditions are observed.

SLIDE PIN, PIN BOLT AND PIN BOOT

Check for wear, cracks or other damage. Replace if any of the conditions are observed.

Rotor

VISUAL INSPECTION

Check rotor for roughness, cracks or chips.

RUNOUT

1. Secure rotor to wheel hub with at least two nuts (M12 x 1.25).
2. Check runout using a dial indicator.
   Make sure that wheel bearing axial end play is within the specifications before measuring runout. Refer to FAX-5, "Front Wheel Bearing" .
3. Change relative positions of rotor and wheel hub so that runout is minimized.

   Maximum runout : 0.07 mm (0.0028 in)

4. If the runout is still out of specification, turn rotor with on-car brake lathe (“MAD, DL-8700”, “AMMCO 700 and 705” or equivalent).

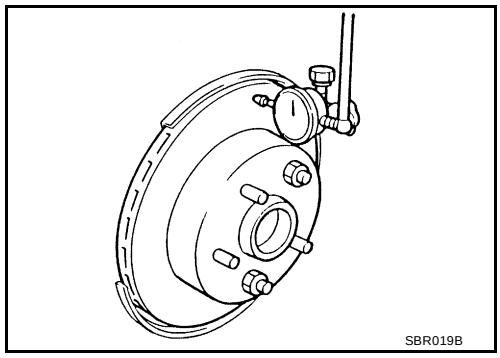

THICKNESS

- Check thickness using a micrometer.

  Thickness variation (At least 8 positions) : Maximum 0.015 mm (0.0006 in)

- If thickness variation exceeds the specification, turn rotor with on-car brake lathe.

  Rotor thickness repair limit : 22.0 mm (0.866 in)

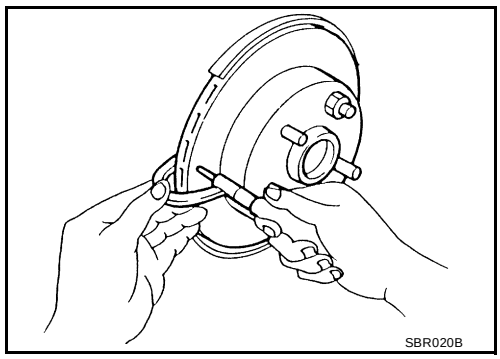

ASSEMBLY

1. Apply rubber grease to new piston seal and insert seal into groove on cylinder body.

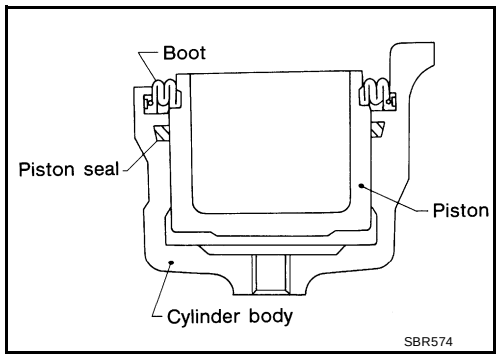

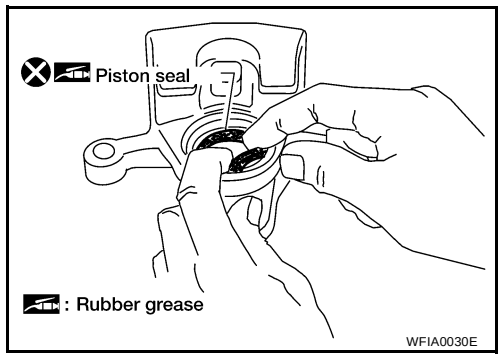

2. With piston boot fitted to piston, insert piston boot into groove on cylinder body and install piston.

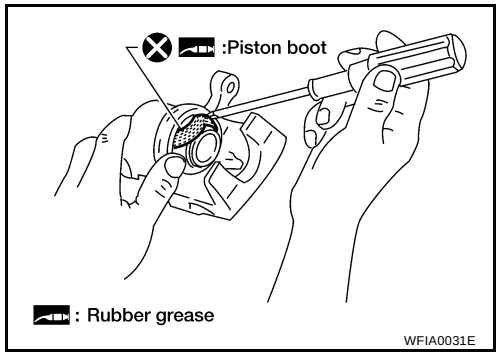

3. Make sure piston boot is properly installed.

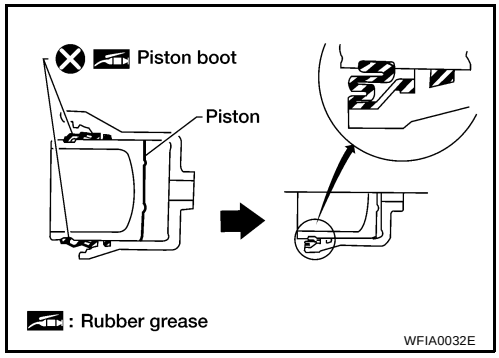

Brake Burnishing Procedure

EFS001G4

Burnish the brake contact surfaces according to the following procedure after refinishing or replacing brake rotors, after replacing pads or linings, or if a soft pedal occurs at very low mileage.

CAUTION:

Only perform this procedure under safe road and traffic conditions. Use extreme caution.

1. **Drive the vehicle on a straight smooth road at 50 km/h (31 MPH).**
2. **Use medium brake pedal/foot effort to bring the vehicle to a complete stop from 50 km/h (31 MPH). Adjust brake pedal/foot pressure so that vehicle stopping time equals 3 to 5 seconds.**
3. **To cool the brake system, drive the vehicle at 50 km/h (31 MPH) for 1 minute without stopping.**
4. **Repeat steps 1 to 3, 10 times or more to complete the burnishing procedure.**

REAR DISC BRAKE

PFP:44000

Component

EFS001G5

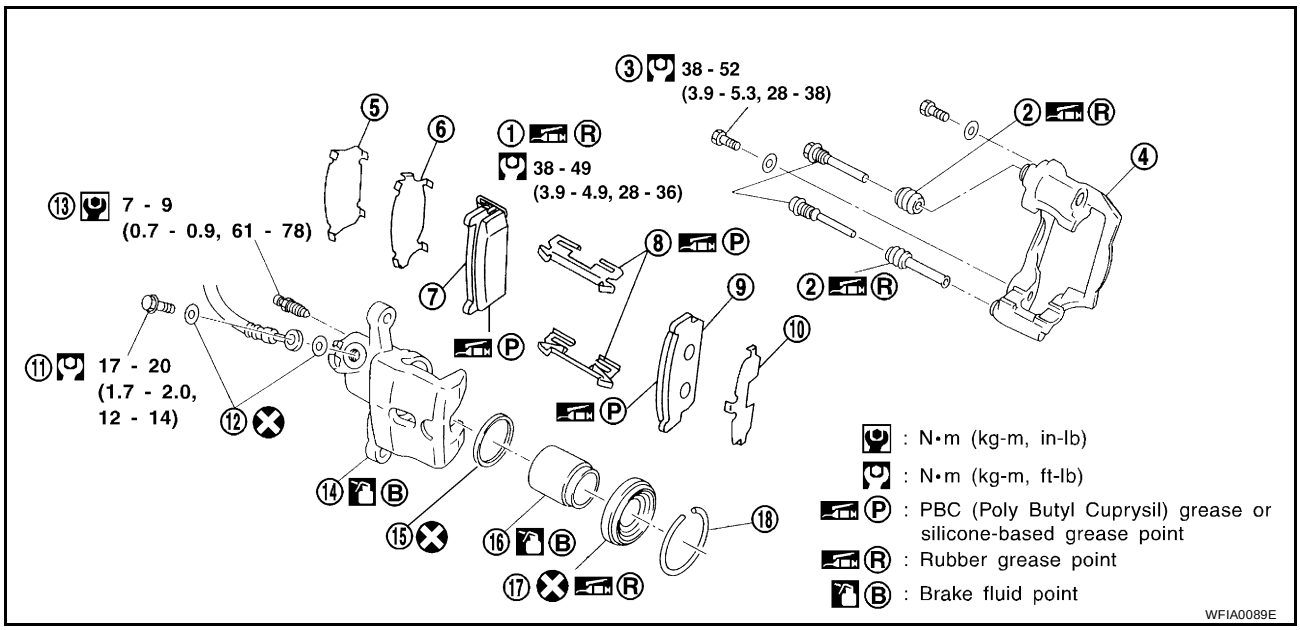

1.	Main pin bolt	2.	Pin boot	3.	Torque member fixing bolt
4.	Torque member	5.	Shim cover	6.	Inner shim
7.	Inner pad	8.	Pad retainer	9.	Outer pad
10.	Outer pad	11.	Connecting bolt	12.	Copper washer
13.	Bleed valve	14.	Cylinder body	15.	Piston seal
16.	Piston	17.	Piston boot	18.	Retainer

WARNING:

Clean brake pads with a vacuum dust collector to minimize the hazard of airborne particles or other materials.

CAUTION:

- **When cylinder body is open, do not depress brake pedal because piston will pop out.**
- **Be careful not to damage piston boot or get oil on rotor. Always replace shims when replacing pads.**
- **It is not necessary to remove connecting bolt except for disassembly or replacement of caliper assembly. In this case, suspend cylinder body with wire so as not to stretch brake hose.**
- **Burnish the brake contact surfaces after refinishing or replacing brake rotors, after replacing pads or linings, or if a soft pedal occurs at very low mileage.**
  Refer to BR-30, "Brake Burnishing Procedure" .

On-vehicle Service

EFS002O5

INSPECTION

Pad Thickness

- Remove a wheel with the vehicle lifted up, and then check the thickness of the pad from the inspection hole of the cylinder body. If necessary, check it with a scale.

Standard pad thickness : 8 mm (0.31 in)

Pad wear limit : 1.5 mm (0.059 in)

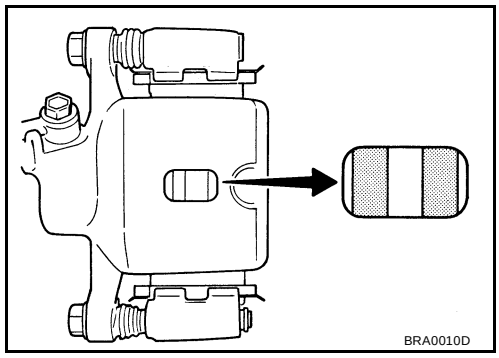

PAD REPLACEMENT

Removal

- If shims are rusted or show peeling of the rubber coat, replace them with new shims.
- Whenever the brake pads are replaced, the inner shim, the outer shim and the shim cover have to be replaced as a set.

1. Remove master cylinder reservoir cap.
2. Remove lower pin bolt, using power tool.

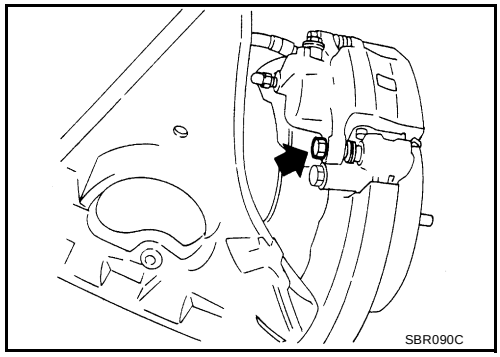

3. Open cylinder body upward and secure with wire. Then remove pad retainers, and inner and outer shims.

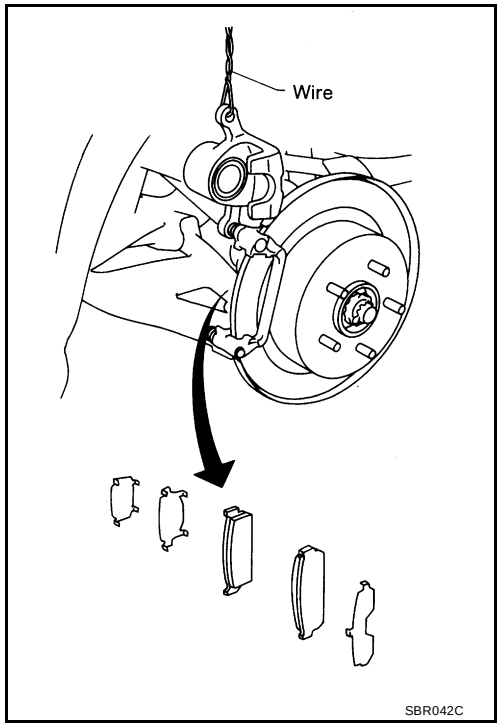

Installation

1. Apply grease to the inner and outer shim, and then attach them to the pads.
2. Attach the pad retainer to the torque member, and then attach it to the pad.
3. When installing new pads, push piston back into cylinder body.
   - Carefully monitor brake fluid level because brake fluid will return to the reservoir when pushing back piston.
4. Close cylinder body down into the torque member.
5. Insert a main pin bolt and tighten it to specified torque. Refer to BR-26, "Component" .
6. Check the brake for drag.

CAUTION:

Burnish the brake contact surfaces refinishing or replacing brake rotors, after replacing pads, or if a soft pedal occurs at very low mileage. Refer to BR-30, "Brake Burnishing Procedure" .

Removal and Installation

EFS002O6

REMOVAL

WARNING:

Clean brakes with a vacuum dust collector to minimize the hazard of airborne particles or other materials.

1. Connect the vinyl tube and container to the air bleeder.
2. Depress the brake pedal and drain the brake fluid gradually from the air bleeder.
3. Remove torque member fixing bolts using power tool and brake hose connecting bolt.

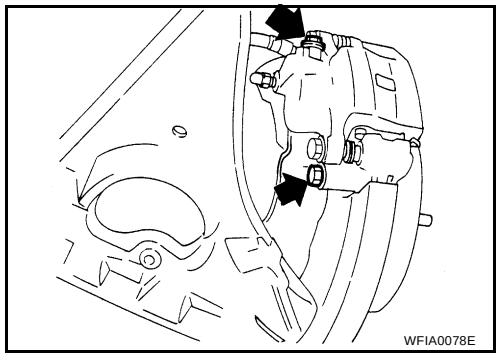

4. Remove caliper and brake rotor. If the brake rotor cannot be removed, remove as follows:
   - Make sure parking brake lever is completely disengaged.
   - Hold down the brake rotor with the wheel nut and remove the brake rotor plug.
   - Insert a flat-bladed screwdriver through the plug opening and rotate the star wheel on the adjuster assembly in the direction shown to loosen and retract the brake shoes.
   - Remove wheel nuts and rotor.

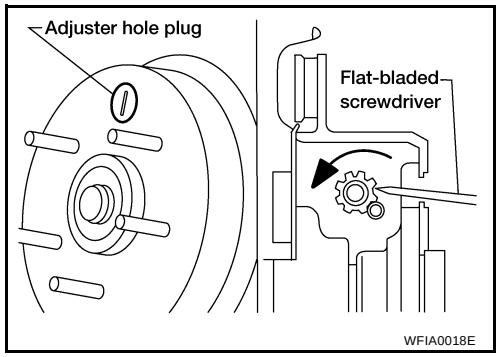

INSTALLATION

CAUTION:

- **Refill with new brake fluid “DOT 3”.**
- **Never reuse drained brake fluid.**

1. Install brake rotor.
2. Install caliper assembly and tighten main pin bolt to specification. Refer to BR-26, "Component" .
3. Install brake hose to caliper and tighten connecting bolt to specification. Refer to BR-26, "Component" .

   CAUTION:

   - **The copper washers for the connecting bolt have to be replaced every time the fitting is disconnected.**
4. Bleed air from brake system. Refer to BR-9, "Bleeding Brake System" .
5. Adjust the parking brake. Refer to PB-3, "Adjustment" .

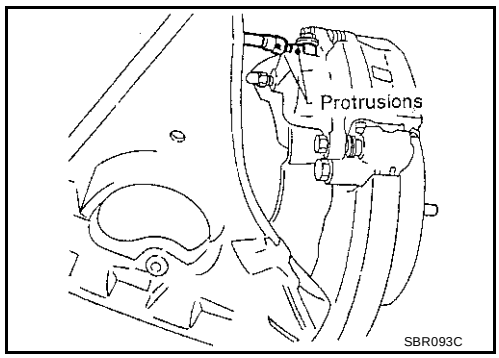

CAUTION:

Burnish the brake contact surfaces refinishing or replacing brake rotors, after replacing pads, or if a soft pedal occurs at very low mileage. Refer to BR-30, "Brake Burnishing Procedure" .

Disassembly and Assembly

EFS002O7

DISASSEMBLY

1. Remove piston boot retainer with a flat-bladed screwdriver.

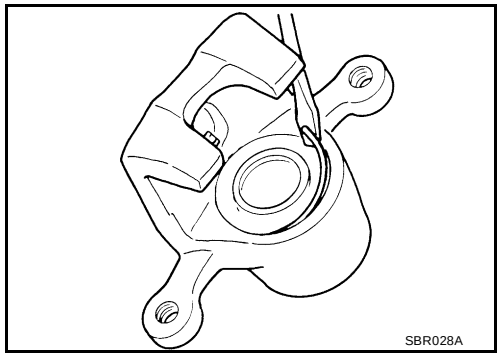

2. Push out piston and piston boot with compressed air.

   WARNING:
   Do not place your finger in front of piston.
3. Remove piston seal with a suitable tool.

   CAUTION:
   Do not scratch or score cylinder wall.

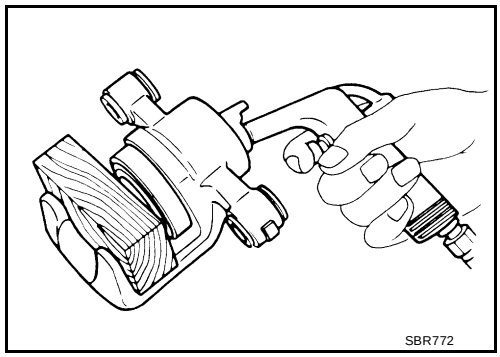

INSPECTION AFTER DISASSEMBLY

Caliper

CYLINDER BODY

CAUTION:
Use brake fluid to clean. Never use mineral oil.

- **Check inside surface of cylinder for score, rust, wear, damage or presence of foreign materials. If any of the above conditions are observed, replace cylinder body.**
- **Minor damage from rust or foreign materials may be eliminated by polishing surface with a fine emery paper. Replace cylinder body if necessary.**

TORQUE MEMBER

Check for wear, cracks or other damage. Replace if necessary.

PISTON

CAUTION:
Piston sliding surface is plated. Do not polish with emery paper even if rust or foreign materials are stuck to sliding surface.

Check piston for score, rust, wear, damage or presence of foreign materials. Replace if any of the above conditions are observed.

SLIDE PIN, PIN BOLT AND PIN BOOT

Check for wear, cracks or other damage. Replace if any of the conditions are observed.

Rotor

VISUAL INSPECTION

Check rotor for roughness, cracks or chips.

RUNOUT

1. Secure rotor to wheel hub with at least two nuts (M12 x 1.25).
2. Check runout using a dial indicator.
   Make sure that wheel bearing axial end play is within the specifications before measuring runout. Refer to RAX-5, "Rear Wheel Bearing" .
3. Change relative positions of rotor and wheel hub so that runout is minimized.

Maximum runout : 0.07 mm (0.0028 in)

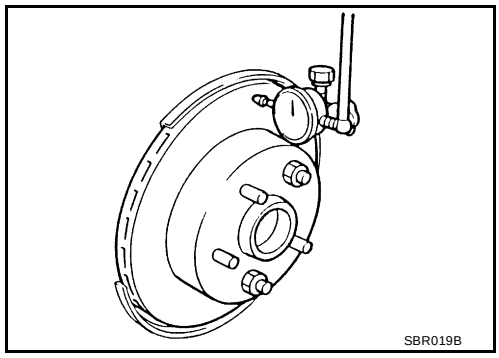

THICKNESS

Check thickness using a micrometer.

Rotor repair limit

Standard thickness	**: 9 mm (0.35 in)**
Minimum thickness	**: 8 mm (0.31 in)**
Thickness variation (At least 8 positions)	**: Maximum 0.015 mm (0.0006 in)**

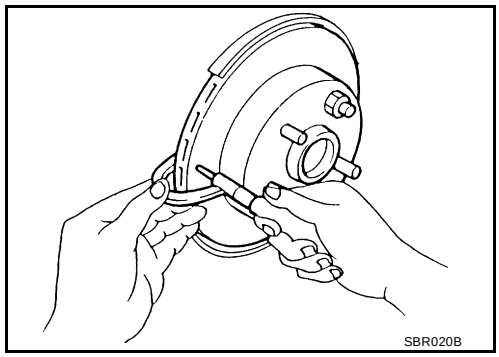

ASSEMBLY

1. Insert piston seal into groove on cylinder body.
2. With piston boot fitted to piston, insert piston boot into groove on cylinder body and install piston.
3. Secure piston boot with retainer.

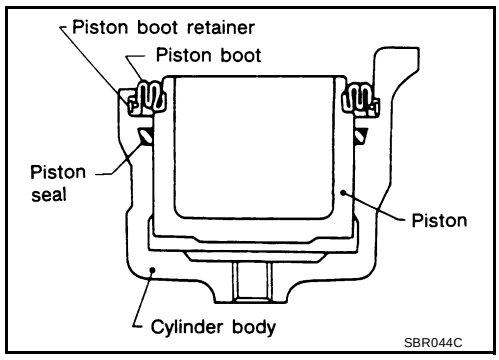

Brake Burnishing Procedure

EFS001GA

Burnish the brake contact surfaces according to the following procedure after refinishing or replacing brake rotors, after replacing pads or linings, or if a soft pedal occurs at very low mileage.

CAUTION:

Only perform this procedure under safe road and traffic conditions. Use extreme caution.

1. **Drive the vehicle on a straight smooth road at 50 km/h (31 MPH).**
2. **Use medium brake pedal/foot effort to bring the vehicle to a complete stop from 50 km/h (31 MPH). Adjust brake pedal/foot pressure such that vehicle stopping time equals 3 to 5 seconds.**
3. **To cool the brake system, drive the vehicle at 50 km/h (31 MPH) for 1 minute without stopping.**
4. **Repeat steps 1 to 3, 10 times or more to complete the burnishing procedure.**

DUAL PROPORTIONING VALVE

PFP:46400

Inspection

EFS001GB

CAUTION:

- **Carefully monitor brake fluid level at master cylinder.**
- **Use new brake fluid “DOT 3”.**
- **Be careful not to splash brake fluid on painted areas; it may cause paint damage. If brake fluid is splashed on paint areas, wash it away with water immediately.**

1. Connect Tool to air bleeders of front and rear brakes on either LH and RH side.

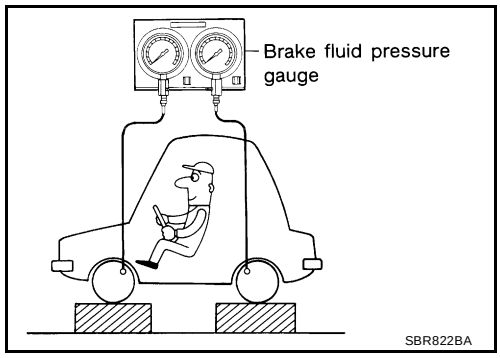

2. Bleed air from the Tool.
3. Check fluid pressure by depressing brake pedal.

Applied pressure (Front brake)	**: 7,355 kPa (75 kg/cm2, 1,067 psi)**
Output pressure (Rear brake)	**: 5,100 - 5,492 kPa (52 - 56 kg/cm2, 739 - 796 psi)**

If output pressure is out of specification, replace dual proportioning valve.

4. Bleed air after disconnecting the Tool. Refer to BR-9, "Bleeding Brake System" .

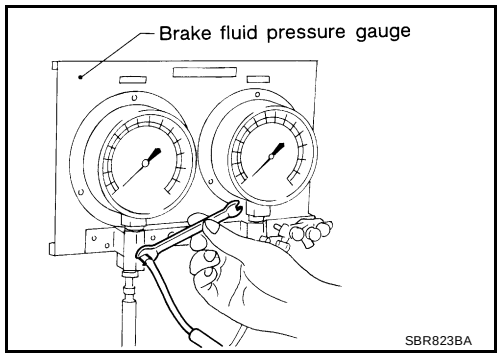

SERVICE DATA AND SPECIFICATIONS (SDS)

PFP:00030

General Specifications

EFS001GC

Unit: mm (in)

Front brake	Brake model		CLZ25VD disc brake
	Cylinder bore diameter		57.2 (2.252)
	Pad Length × width × thickness		125.6 × 46 × 11 (4.94 × 1.81 × 0.43)
	Rotor outer diameter × thickness		296 × 26 (11.65 × 1.02)
Rear brake	Brake model		AD9V disc brake
	Cylinder bore diameter		34.9 (1.3740)
	Pad Length × width × thickness		89.1 × 39.5 × 10 (3.508 × 1.555 × 0.31)
	Rotor outer diameter × thickness		292 × 9 (11.50 × 0.35)
Master cylinder	Cylinder bore diameter		23.81 (15/16)
Control valve	Screw in type		30 × 0.4 (1.18 × 0.02)
Brake booster	Booster model		M215T
	Diaphragm diameter	Primary	230 (9.06)
		Secondary	205 (8.07)
Recommended brake fluid			DOT 3

Disc Brake

EFS001GD

Unit: mm (in)

Brake model		CLZ25VD	AD9V
Pad wear limit	Minimum thickness	2.0 (0.079)	1.5 (0.059)
Rotor repair limit	Maximum runout	0.07 (0.0028)	0.07 (0.0028)
	Minimum thickness	22.0 (0.866)	8 (0.31)

Brake Pedal

EFS001GE

Unit: mm (in)

Free height “H”*	M/T	164.1 - 174.1 (6.46 - 6.85)
	A/T	173.1 - 183.1 (6.81 - 7.21)
Clearance “C” between pedal stopper and threaded end of stop lamp switch or ASCD switch		0.74 - 1.96 (0.0291 - 0.0772)

*: Measured from surface of dash reinforcement panel to surface of pedal pad

Dual Proportioning Valve

EFS001GF

Unit: kPa (kg/cm^2 , psi)

Applied pressure (front)	7,355 (75, 1,067)
Output pressure (rear)	5,100 - 5,492 (52 - 56, 739 - 796)

Brake Booster

EFS001GG

Unit: mm (in)

Output rod length	10.275 - 10.525 (0.4045 - 0.4144)
Clevis length	130 (5.12)

SECTION BRC
BRAKE CONTROL SYSTEM

CONTENTS

ABS

PRECAUTIONS 3
Precautions for Supplemental Restraint System (SRS) “AIR BAG” and “SEAT BELT PRE-TENSIONER” 3
Precautions for Brake System 3
Wiring Diagrams and Trouble Diagnosis 3
GENERAL INFORMATION 4
Description 4
PURPOSE 4
OPERATION 4
Fail Safe 4
Hydraulic Circuit 4
System Components 5
Control Unit 5
ABS Actuator and Electric Unit (Control Unit) 5
ABS ACTUATOR OPERATION 5
Wheel Sensors 6
TROUBLE DIAGNOSIS 7
How to Perform Trouble Diagnoses for Quick and Accurate Repair 7
INTRODUCTION 7
WORK FLOW 8
ASKING COMPLAINTS 9
EXAMPLE OF DIAGNOSIS SHEET 9
Component Parts and Harness Connector Location 10
Schematic 11
Wiring Diagram — ABS — 12
CONSULT–II Function 15
CONSULT-II APPLICATION TO ABS 15
SELF-DIAGNOSIS PROCEDURE 15
SELF-DIAGNOSTIC RESULTS MODE 17
DATA MONITOR PROCEDURE 18
DATA MONITOR MODE 19
ACTIVE TEST PROCEDURE 19
ACTIVE TEST MODE 20
Self-Diagnosis (Without CONSULT–II) 20
SELF-DIAGNOSIS PROCEDURE 21
HOW TO READ SELF-DIAGNOSTIC RESULTS (MALFUNCTION CODES) 21
HOW TO ERASE SELF-DIAGNOSTIC RESULTS (MALFUNCTION CODES) 22
Preliminary Check 22
Ground Circuit Check 24
ABS ACTUATOR AND ELECTRIC UNIT (CONTROL UNIT) GROUND 24
Malfunction Code Chart (Without CONSULT-II) 24
Symptom Chart 24
TROUBLE DIAGNOSIS FOR SELF-DIAGNOSTIC ITEMS 26
Wheel Sensor or Rotor 26
DIAGNOSTIC PROCEDURE 26
ABS Actuator Solenoid Valve or Solenoid Valve Relay 28
DIAGNOSTIC PROCEDURE 28
Motor Relay or Motor 31
DIAGNOSTIC PROCEDURE 31
Abnormal Battery Voltage 32
DIAGNOSTIC PROCEDURE 32
Controller Failure 34
DIAGNOSTIC PROCEDURE 34
TROUBLE DIAGNOSES FOR SYMPTOMS 35
1. ABS Works Frequently 35
2. Unexpected Pedal Action 35
3. Long Stopping Distance 36
4. ABS Does Not Work 36
5. Pedal Vibration and Noise 37
6. ABS Warning Lamp Does Not Come On When Ignition Switch Is Turned On 38
7. ABS Warning Lamp Stays On When Ignition Switch Is Turned On 40
WHEEL SENSORS 41
Removal and Installation 41
SENSOR ROTOR 42
Removal and Installation 42
REMOVAL 42
INSTALLATION 42

ACTUATOR AND ELECTRIC UNIT (ASSEMBLY)... 43
Removal and Installation 43
REMOVAL 43
INSTALLATION 43

TCS/ABS

PRECAUTIONS 44
Precautions for Supplemental Restraint System (SRS) “AIR BAG” and “SEAT BELT PRE-TENSIONER” 44
Precautions for Brake System 44
Wiring Diagrams and Trouble Diagnosis 44
GENERAL INFORMATION 45
Description 45
PURPOSE 45
ABS (ANTI-LOCK BRAKE SYSTEM) OPERATION 45
TCS (TRACTION CONTROL SYSTEM) OPERATION 45
Fail Safe 45
Hydraulic Circuit 46
System Components 46
Control Unit 47
ABS FUNCTION 47
TCS FUNCTION 47
ABS Actuator and Electric Unit 47
ABS ACTUATOR OPERATION 47
Wheel Sensors 47
CAN Communication System Description 48
FOR TCS MODELS 48
TROUBLE DIAGNOSIS 50
How to Perform Trouble Diagnoses for Quick and Accurate Repair 50
INTRODUCTION 50
WORK FLOW 51
ASKING COMPLAINTS 52
EXAMPLE OF DIAGNOSIS SHEET 52
Component Parts and Harness Connector Location.. 53
Schematic 54
Wiring Diagram — TCS — 55
CONSULT–II Function 58
CONSULT-II APPLICATION TO ABS/TCS 58
SELF-DIAGNOSIS PROCEDURE 58
SELF-DIAGNOSTIC RESULTS MODE 60
DATA MONITOR PROCEDURE 61
DATA MONITOR MODE 62
ACTIVE TEST PROCEDURE 63
ACTIVE TEST MODE 64
Self-Diagnosis (Without CONSULT–II) 64
FUNCTION 64
SELF-DIAGNOSIS PROCEDURE 64
HOW TO READ SELF-DIAGNOSTIC RESULTS (MALFUNCTION CODES) 65
HOW TO ERASE SELF-DIAGNOSTIC RESULTS (MALFUNCTION CODES) 66
Preliminary Check 66
Ground Circuit Check 68
ABS ACTUATOR AND ELECTRIC UNIT (CONTROL UNIT) GROUND 68
ABS WARNING LAMP, TCS OFF INDICATOR LAMP, SLIP INDICATOR LAMP ON/OFF TIMING.. 68
Malfunction Code Chart (Without CONSULT-II) 68
Symptom Chart 69
TROUBLE DIAGNOSIS FOR SELF-DIAGNOSTIC ITEMS 71
CAN Communication Line or ABS Actuator and Electric Unit (Control Unit) 71
DIAGNOSTIC PROCEDURE 71
Wheel Sensor or Rotor 71
DIAGNOSTIC PROCEDURE 71
ABS Actuator Solenoid Valve or Solenoid Valve Relay 74
DIAGNOSTIC PROCEDURE 74
Motor Relay or Motor 77
DIAGNOSTIC PROCEDURE 77
Abnormal Battery Voltage 78
DIAGNOSTIC PROCEDURE 78
Controller Failure 80
DIAGNOSTIC PROCEDURE 80
TROUBLE DIAGNOSES FOR SYMPTOMS 81
1. ABS Works Frequently 81
2. Unexpected Pedal Action 81
3. Long Stopping Distance 82
4. ABS Does Not Work 82
5. Pedal Vibration and Noise 83
6. ABS Warning Lamp Does Not Come On When Ignition Switch Is Turned On 84
7. ABS Warning Lamp Stays On When Ignition Switch Is Turned On 86
8. During ABS/TCS Control, Vehicle Behavior is Jerky. 86
WHEEL SENSORS 88
Removal and Installation 88
SENSOR ROTOR 89
Removal and Installation 89
REMOVAL 89
INSTALLATION 89
ACTUATOR AND ELECTRIC UNIT (ASSEMBLY)... 90
Removal and Installation 90
REMOVAL 90
INSTALLATION 90

PRECAUTIONS

PFP:00001

Precautions for Supplemental Restraint System (SRS) “AIR BAG” and “SEAT BELT PRE-TENSIONER”

EFS001GQ

The Supplemental Restraint System such as “AIR BAG” and “SEAT BELT PRE-TENSIONER”, used along with a front seat belt, helps to reduce the risk or severity of injury to the driver and front passenger for certain types of collision. Information necessary to service the system safely is included in the SRS and SB section of this Service Manual.

WARNING:

- **To avoid rendering the SRS inoperative, which could increase the risk of personal injury or death in the event of a collision which would result in air bag inflation, all maintenance must be performed by an authorized NISSAN/INFINITI dealer.**
- **Improper maintenance, including incorrect removal and installation of the SRS, can lead to personal injury caused by unintentional activation of the system. For removal of Spiral Cable and Air Bag Module, see the SRS section.**
- **Do not use electrical test equipment on any circuit related to the SRS unless instructed to in this Service Manual. SRS wiring harnesses can be identified by yellow and/or orange harness connectors.**

Precautions for Brake System

EFS001GR

CAUTION:

- **Recommended fluid is brake fluid “DOT 3”.**
- **Never reuse drained brake fluid.**
- **Be careful not to splash brake fluid on painted areas; it may cause paint damage. If brake fluid is splashed on painted areas, wash it away with water immediately.**
- **To clean or wash all parts of master cylinder and disc brake caliper, use clean brake fluid.**
- **Never use mineral oils such as gasoline or kerosene. They will ruin rubber parts of the hydraulic system.**
- **Use flare nut wrench when removing and installing brake tube.**
- **If a brake fluid leak is found, the part must be disassembled without fail. Then it has to be replaced with a new one if a defect exists.**
- **Turn the ignition switch OFF and remove the connector of the ABS actuator control unit or the battery terminal before performing the work.**
- **Always torque brake lines when installing.**
- **Burnish the brake contact surfaces after refinishing or replacing rotors, after replacing pads, or if a soft pedal occurs at very low mileage.**
  Refer to BR-25, "Brake Burnishing Procedure"

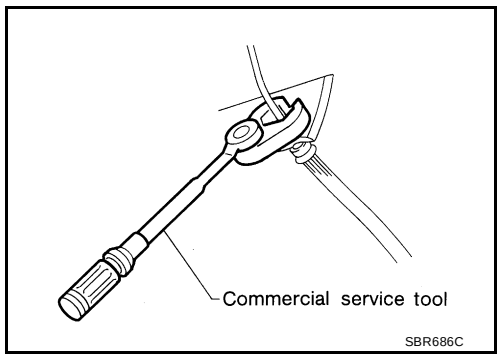

WARNING:

- **Clean brake pads and shoes with a waste cloth, then wipe with a dust collector.**

Wiring Diagrams and Trouble Diagnosis

EFS001GS

When you read wiring diagrams, refer to the following:

- GI-12, "How to Read Wiring Diagrams"
- PG-3, "POWER SUPPLY ROUTING CIRCUIT"

When you perform trouble diagnosis, refer to the following:

- GI-10, "HOW TO FOLLOW TEST GROUPS IN TROUBLE DIAGNOSES"
- GI-25, "How to Perform Efficient Diagnosis for an Electrical Incident"

GENERAL INFORMATION

PFP:00000

Description

EFS001GT

PURPOSE

The ABS consists of electronic and hydraulic components. It allows for control of braking force so that locking of the wheels can be avoided.

The ABS:

- Ensures proper tracking performance through steering wheel operation.
- Enables obstacles to be avoided through steering wheel operation.
- Ensures vehicle stability by preventing flat spins.

OPERATION

- When the vehicle speed is less than 10 km/h (6 MPH) this system does not work.
- The Anti-lock Brake System (ABS) has self-test capabilities. The system turns on the ABS warning lamp for 1 second after turning the ignition switch ON. The system performs another test the first time the vehicle reaches 6 km/h (4 MPH). A mechanical noise may be heard as the ABS performs a self-test. This is a normal part of the self-test feature. If a malfunction is found during this check, the ABS warning lamp will come on.
- During ABS operation, a mechanical noise may be heard. This is a normal condition.

Fail Safe

EFS001GU

If trouble occurs in the ABS, the ABS warning lamp in the combination meter comes on. At the same time, the vehicle stops the ABS control and braking becomes the same as that of a vehicle without ABS.

Hydraulic Circuit

EFS001GV

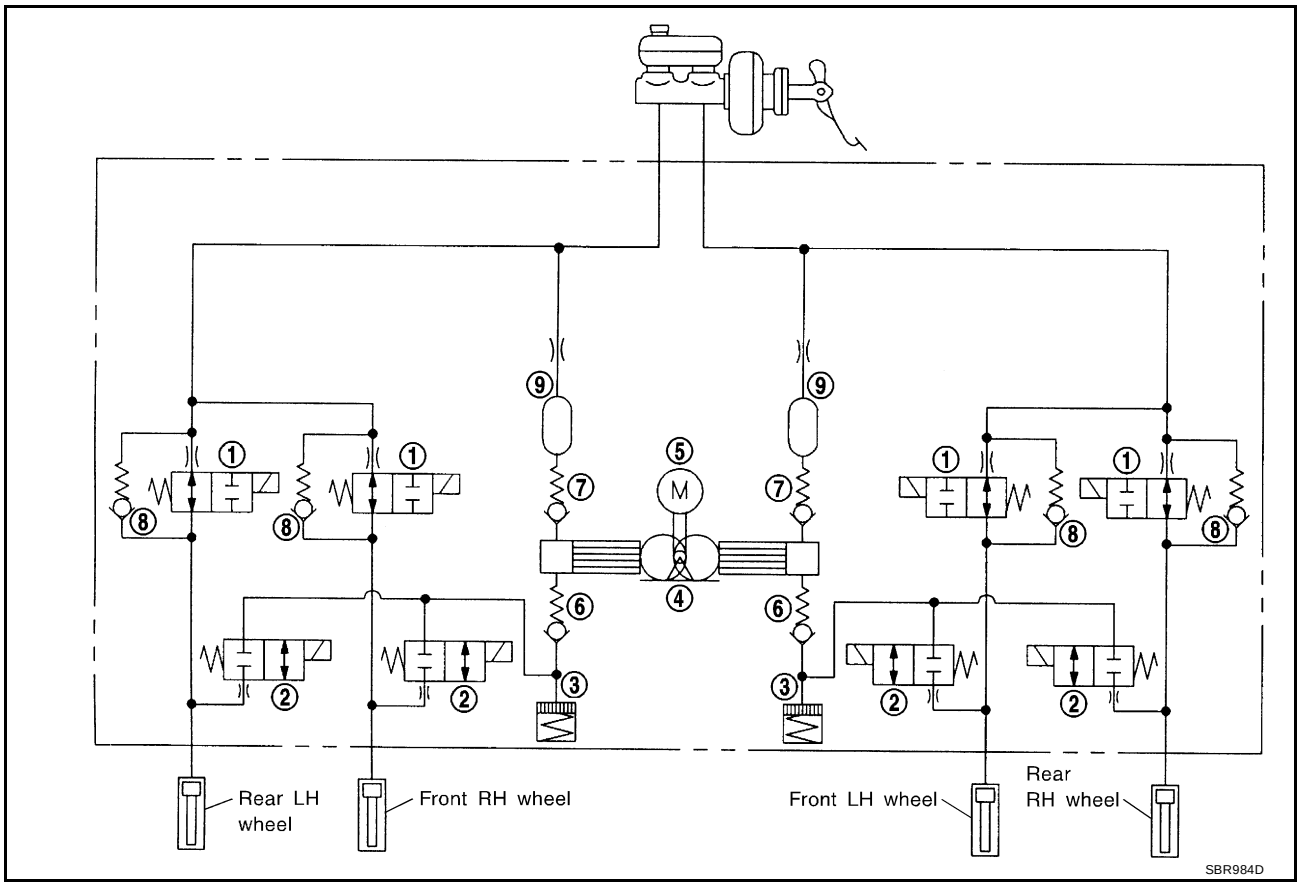

1. Inlet solenoid valve
2. Outlet solenoid valve
3. Reservoir
4. Pump
5. Motor
6. Inlet valve
7. Outlet valve
8. Bypass check valve
9. Damper

System Components

EFS001GW

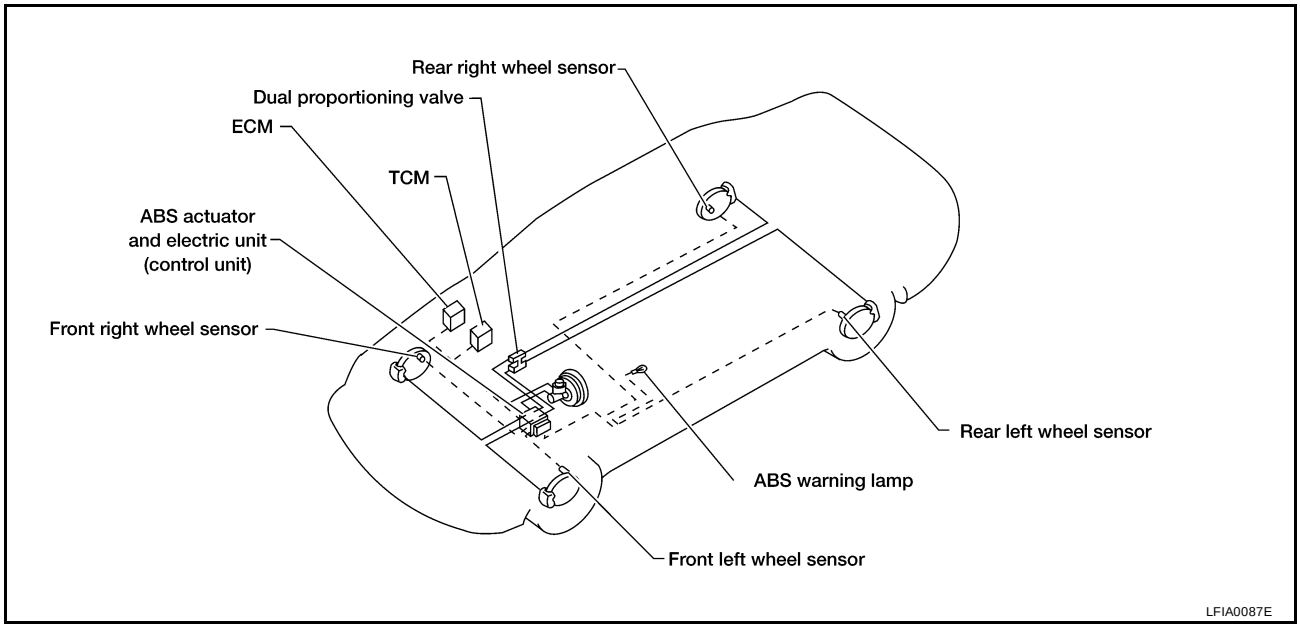

Control Unit

EFS001GX

The control unit computes the wheel rotating speed by the signal sent from the sensor. Then it supplies a DC current to the actuator solenoid valve. It also controls ON-OFF operation of the valve relay and motor relay. If any electrical malfunction should be detected in the system, the control unit causes the warning lamp to light up. In this condition, the ABS will be deactivated by the control unit, and the vehicle's brake system reverts to normal operation.

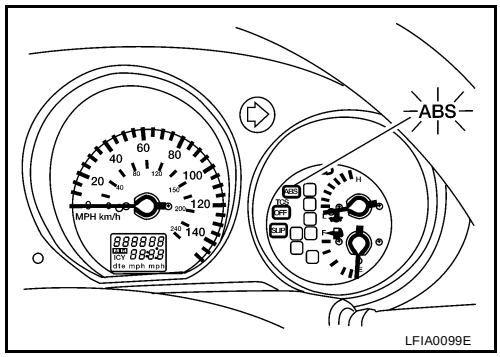

ABS Actuator and Electric Unit (Control Unit)

EFS001GY

The ABS actuator and electric unit (control unit) contains:

- An electric motor and pump
- Two relays
- Eight solenoid valves, each inlet and outlet for
  — LH front
  — RH front
  — LH rear
  — RH rear
- ABS control unit

This components controls the hydraulic circuit and increases, holds or decreases hydraulic pressure to all or individual wheels. The ABS actuator and electric unit (control unit) cannot be disassembled and must be replaced as an assembly.

ABS ACTUATOR OPERATION

	Inlet solenoid valve	Outlet solenoid valve	
Normal brake operation	OFF (Open)	OFF (Closed)	Master cylinder brake fluid pressure is directly transmitted to caliper via the inlet solenoid valve.

ABS operation	Pressure hold	ON (Closed)	OFF (Closed)	Hydraulic circuit is shut off to hold the caliper brake fluid pressure.
	Pressure decrease	ON (Closed)	ON (Open)	Caliper brake fluid is sent to reservoir via the outlet solenoid valve. Then it is pushed up to the master cylinder by pump.
	Pressure increase	OFF (Open)	OFF (Closed)	Master cylinder brake fluid pressure is transmitted to caliper.

Wheel Sensors

EFS001GZ

The front sensor units consist of a gear-shaped sensor rotor and a sensor element. the element contains a magnet around which a coil is wound. The front wheel sensors are installed on the front of the wheel knuckles. As the wheel rotates, the sensor generates a square-wave signal. The frequency increases as the wheel speed increases.

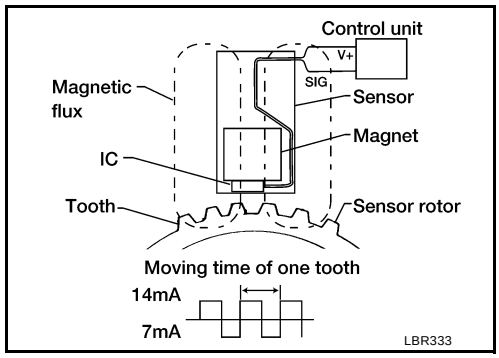

The rear sensor units consist of wheel hubs with a series of internal magnets and a sensor element. The rear wheel sensors are installed on the inner side of the wheel knuckles. As the wheel rotates, the sensor generates a square-wave signal. The frequency increases as the wheel speed increases.

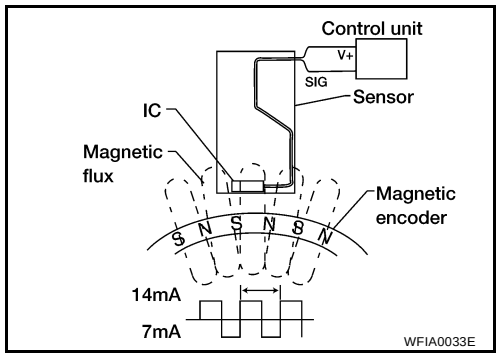

TROUBLE DIAGNOSIS

PFP:00000

How to Perform Trouble Diagnoses for Quick and Accurate Repair

EFS001H0

INTRODUCTION

The ABS system has an electronic control unit to control major functions. The control unit accepts input signals from sensors and controls operation of the actuator. It is also important to check for conventional problems such as air leaks in the booster or lines, lack of brake fluid, or other problems with the brake system.

It is much more difficult to diagnose a problem that occurs intermittently rather than continuously. Most intermittent problems are caused by poor electrical connections or faulty wiring. In this case, careful checking of suspicious circuits may help prevent the replacement of good parts.

A visual check only may not find the cause of the problem, so a road test should be performed.

Before undertaking actual checks, take just a few minutes to talk with a customer who approaches with an ABS complaint. The customer is a very good source of information on such problems, especially intermittent ones. Through the talks with the customer, find out what symptoms are present and under what conditions they occur.

Start your diagnosis by looking for “conventional” problems first. This is one of the best ways to troubleshoot brake problems on an ABS controlled vehicle. Also check related Service Bulletins for information.

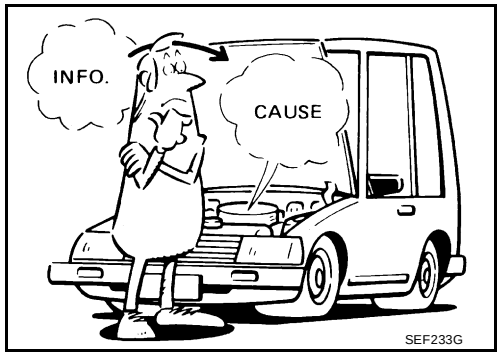

SEF233G

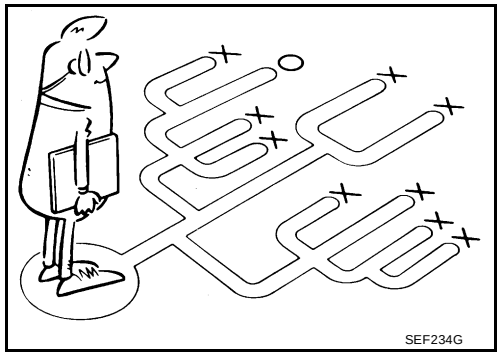
SEF234G

WORK FLOW

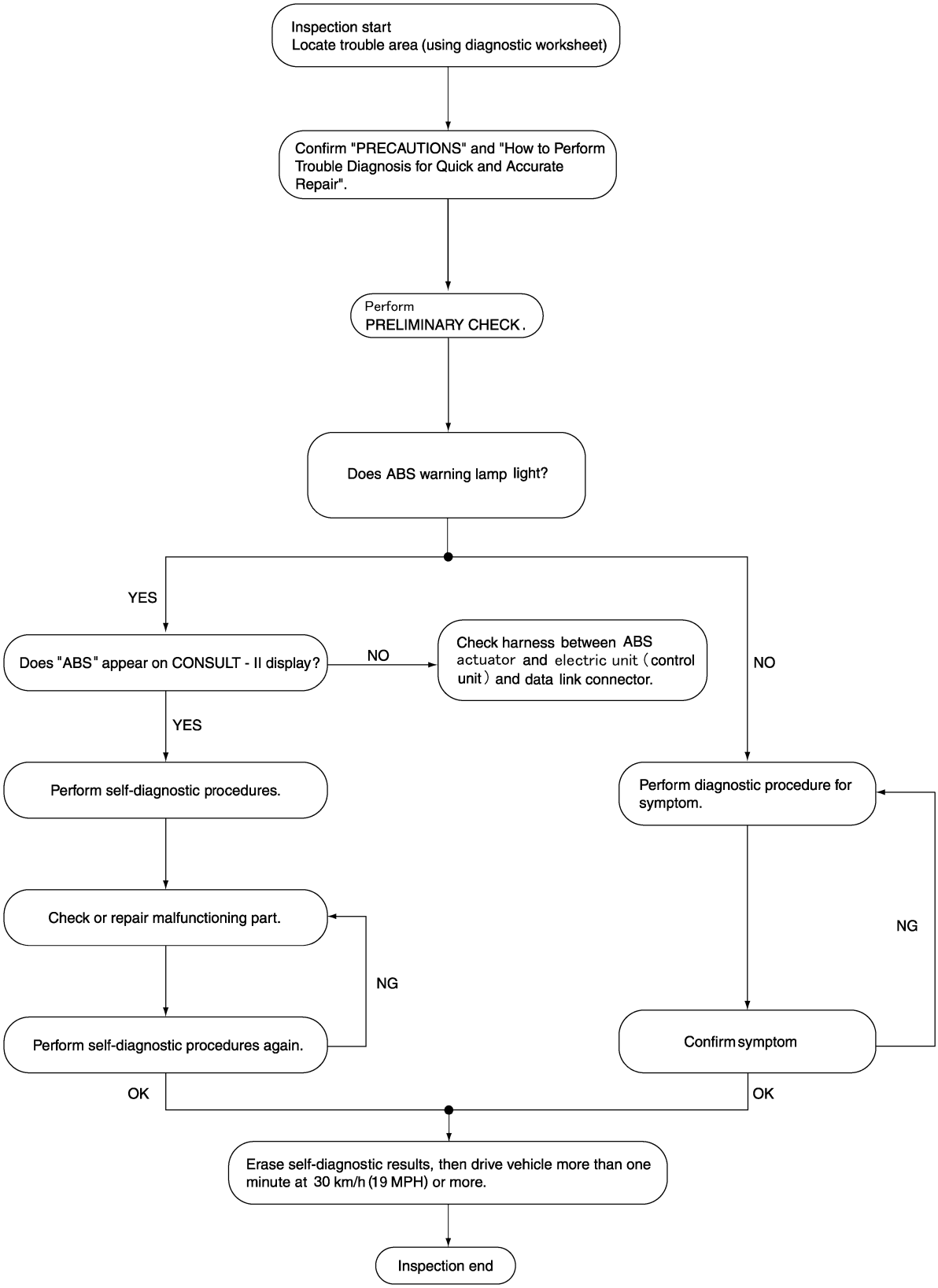

LFIA0197E

ASKING COMPLAINTS

- Complaints against a malfunction vary depending on each person. It is important to clarify the customer complaints.
- Ask the customer about what symptoms are present under what conditions. Use the information to reproduce the symptom while driving.
- It is also important to use the diagnosis sheet to understand what type of trouble the customer is having.

KEY POINTS

WHAT ..... Vehicle model
WHEN ..... Date, Frequencies
WHERE ..... Road conditions
HOW ..... Operating conditions, Weather conditions, Symptoms

SBR339B

EXAMPLE OF DIAGNOSIS SHEET

Customer name MR/MS	Model & Year		VIN
Engine #	Trans.		Mileage
Incident Date	Manuf. Date		In Service Date
Symptoms	☐ Noise and vibration (from engine compartment) ☐ Noise and vibration (from axle)	☐ Warning / Indicator activate	☐ Firm pedal operation Large stroke pedal operation
	☐ TCS does not work (Front wheels slip when accelerating)	☐ ABS does not work. (wheels slip when braking)	☐ Lack of sense of acceleration
Engine conditions	☐ When starting ☐ After starting		
Road conditions	☐ Low friction road (☐Snow ☐Gravel ☐Other) ☐ Bumps / potholes		
Driving conditions	☐ Full-acceleration ☐ High speed cornering ☐ Vehicle speed: Greater than 10 km/h (6 MPH) ☐ Vehicle speed: 10 km/h (6 MPH) or less ☐ Vehicle is stopped		
Applying brake conditions	☐ Suddenly ☐ Gradually		
Other conditions	☐ Operation of electrical equipment ☐ Shift change ☐ Other descriptions		

LFIA0198E

Component Parts and Harness Connector Location

EFS001H1

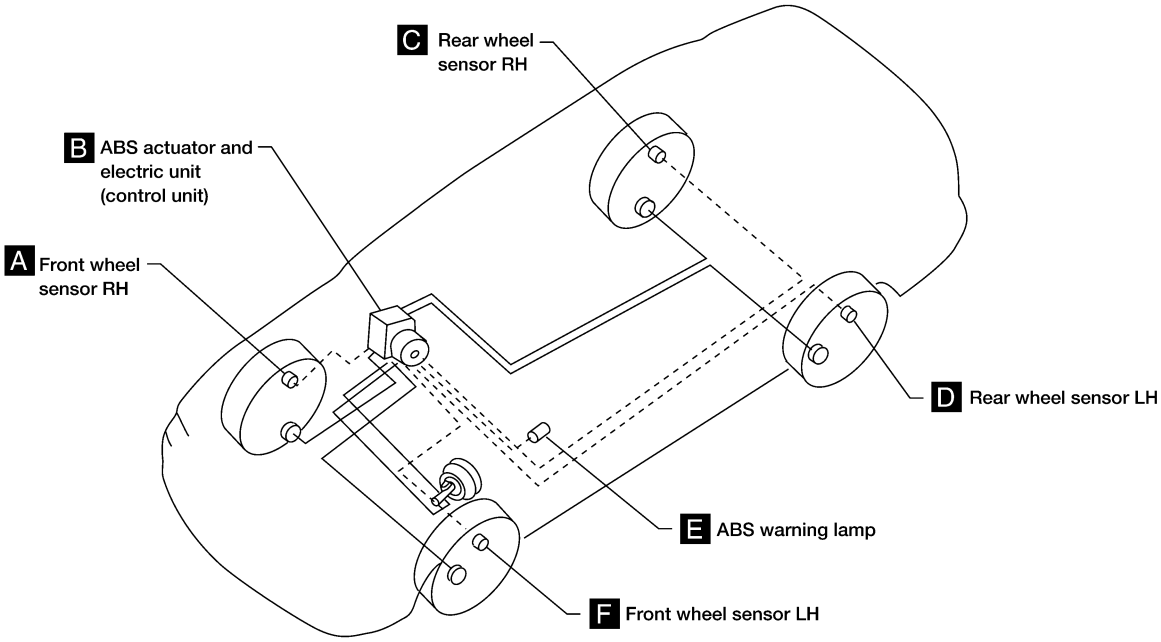

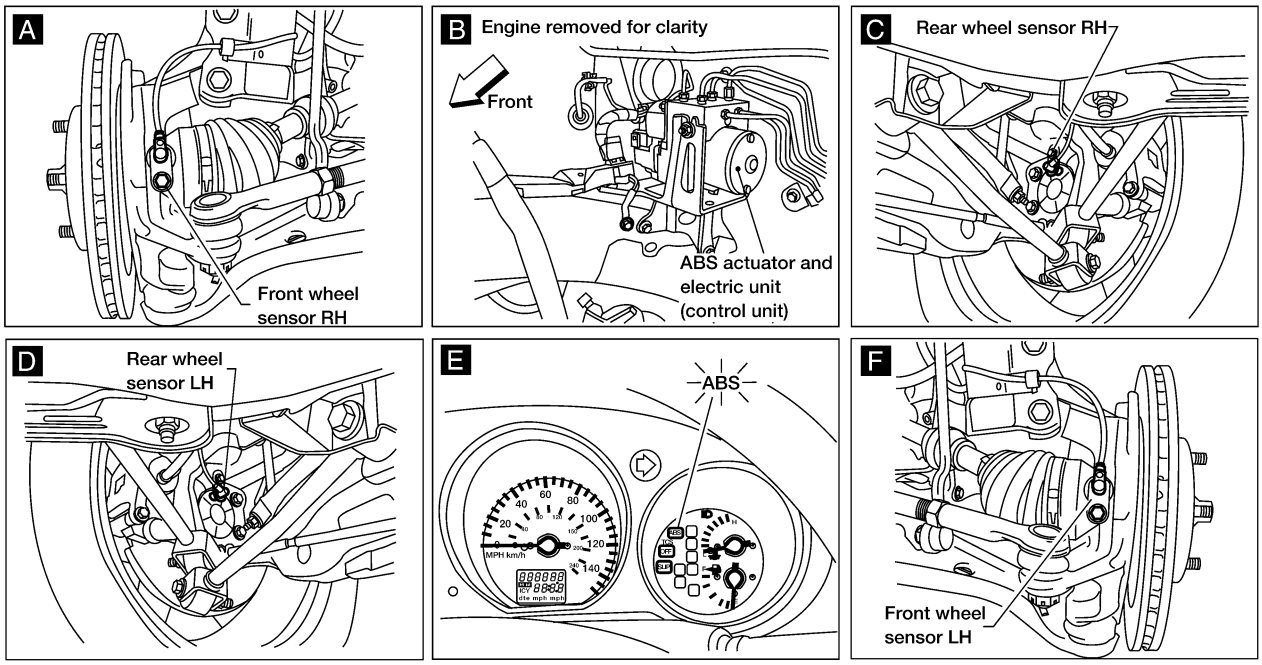

LFIA0101E

Schematic

EFS001H2

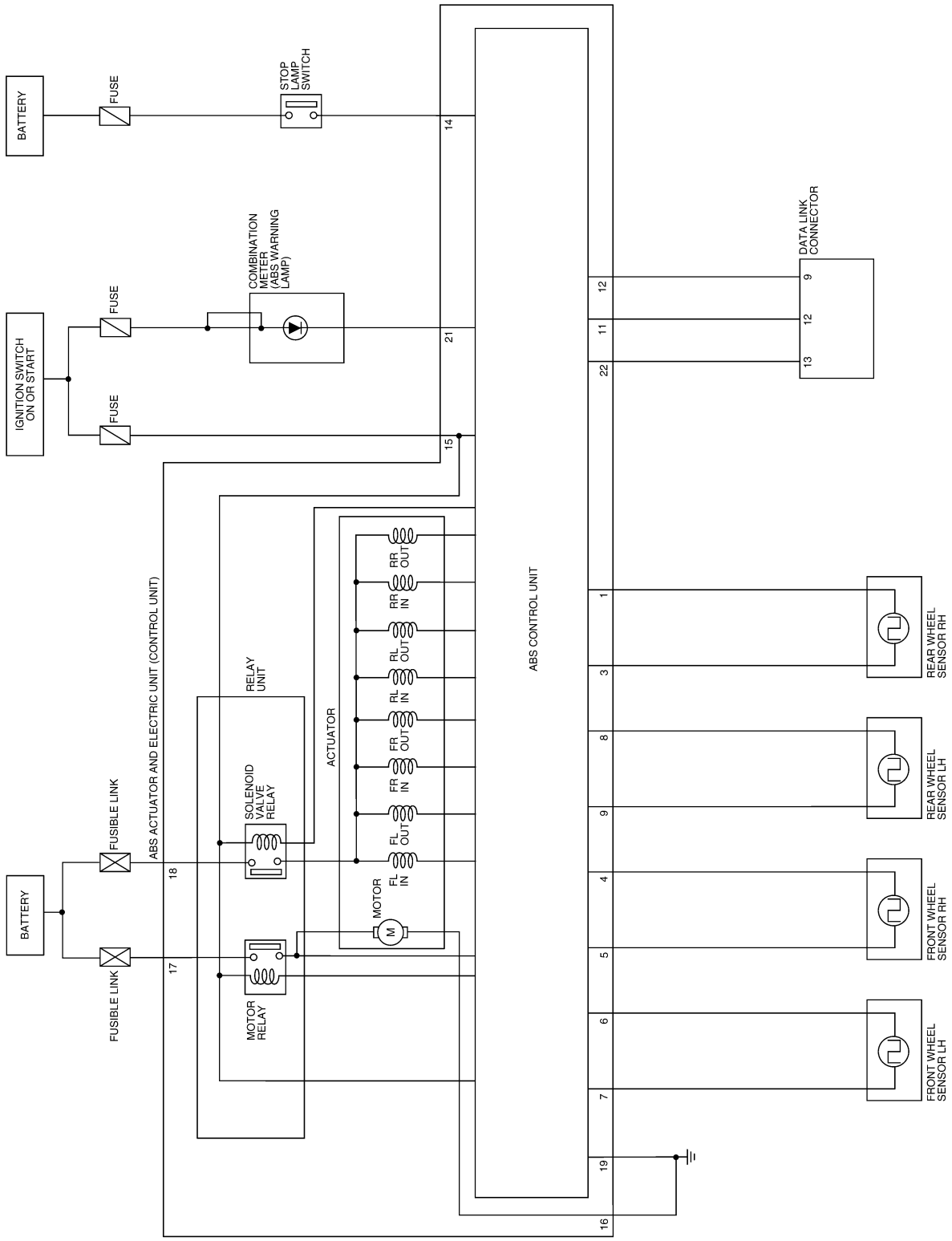

LFWA0009E

Wiring Diagram — ABS —

EFS001H3

BRC-ABS-01

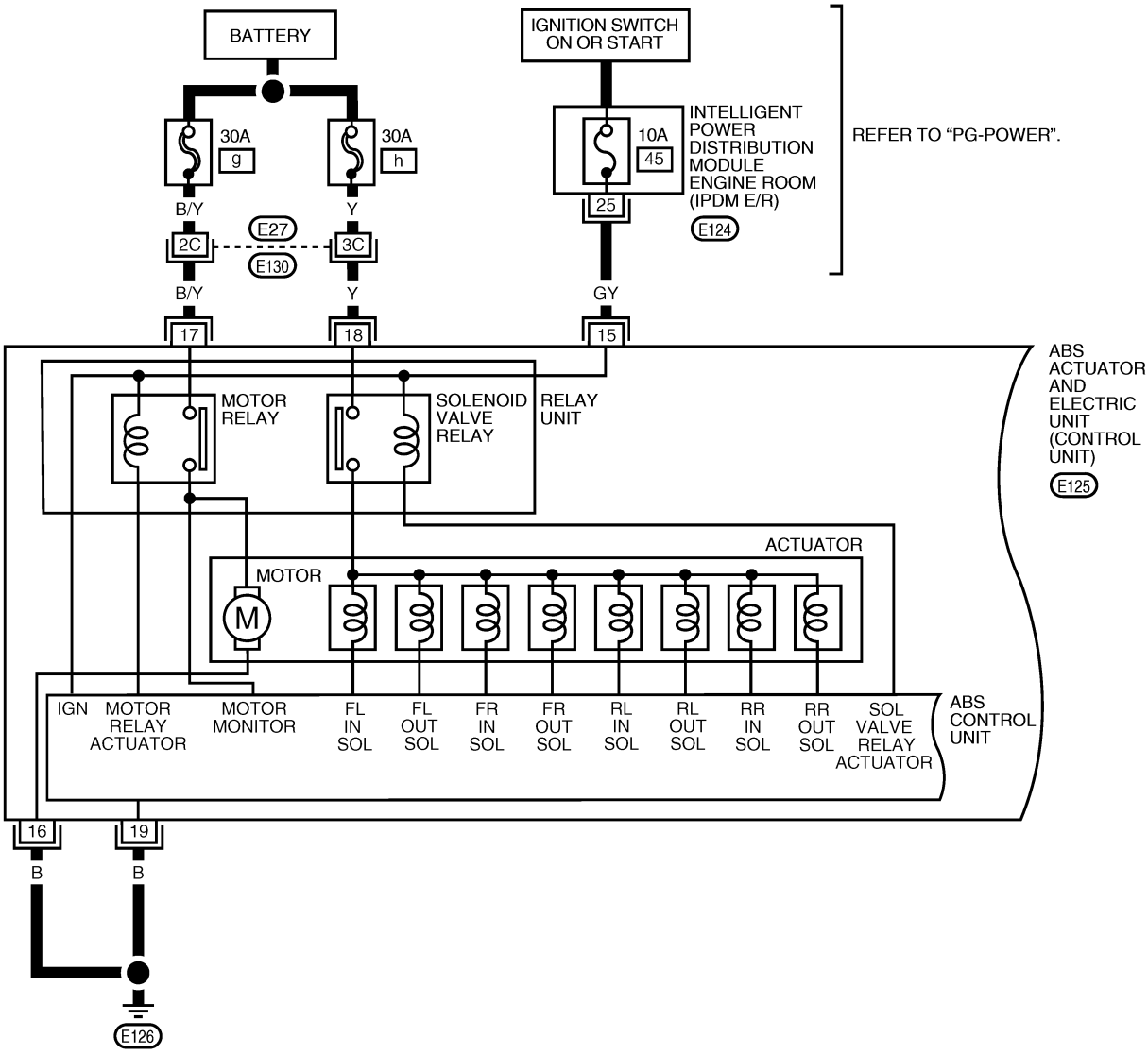

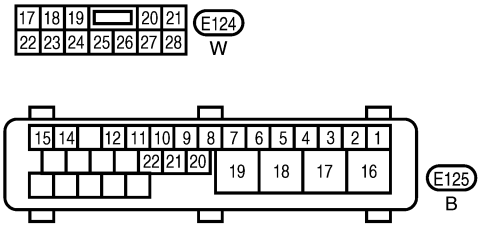

REFER TO THE FOLLOWING.

E130 - SUPER MULTIPLE JUNCTION (SMJ)

LFWA0047E

BRC-ABS-02

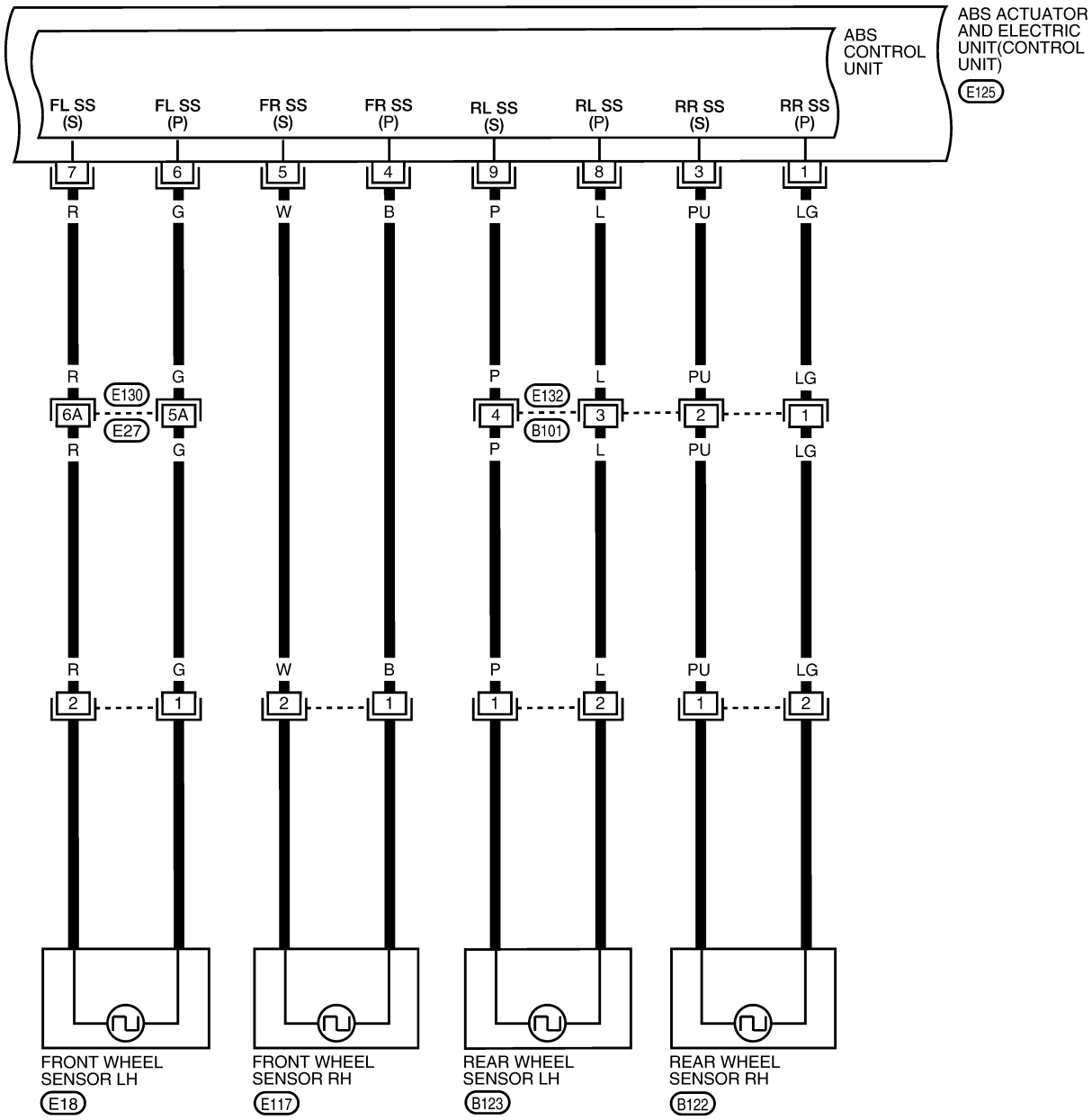

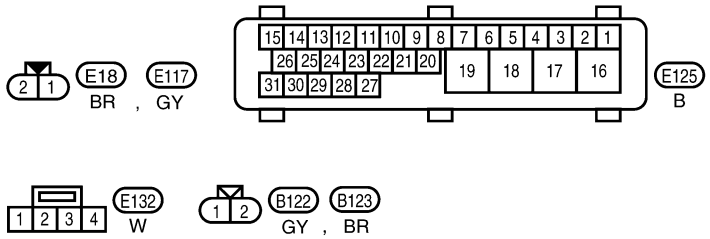

REFER TO THE FOLLOWING.
E130 - SUPER MULTIPLE JUNCTION (SMJ)

LFWA0048E

BRC-ABS-03

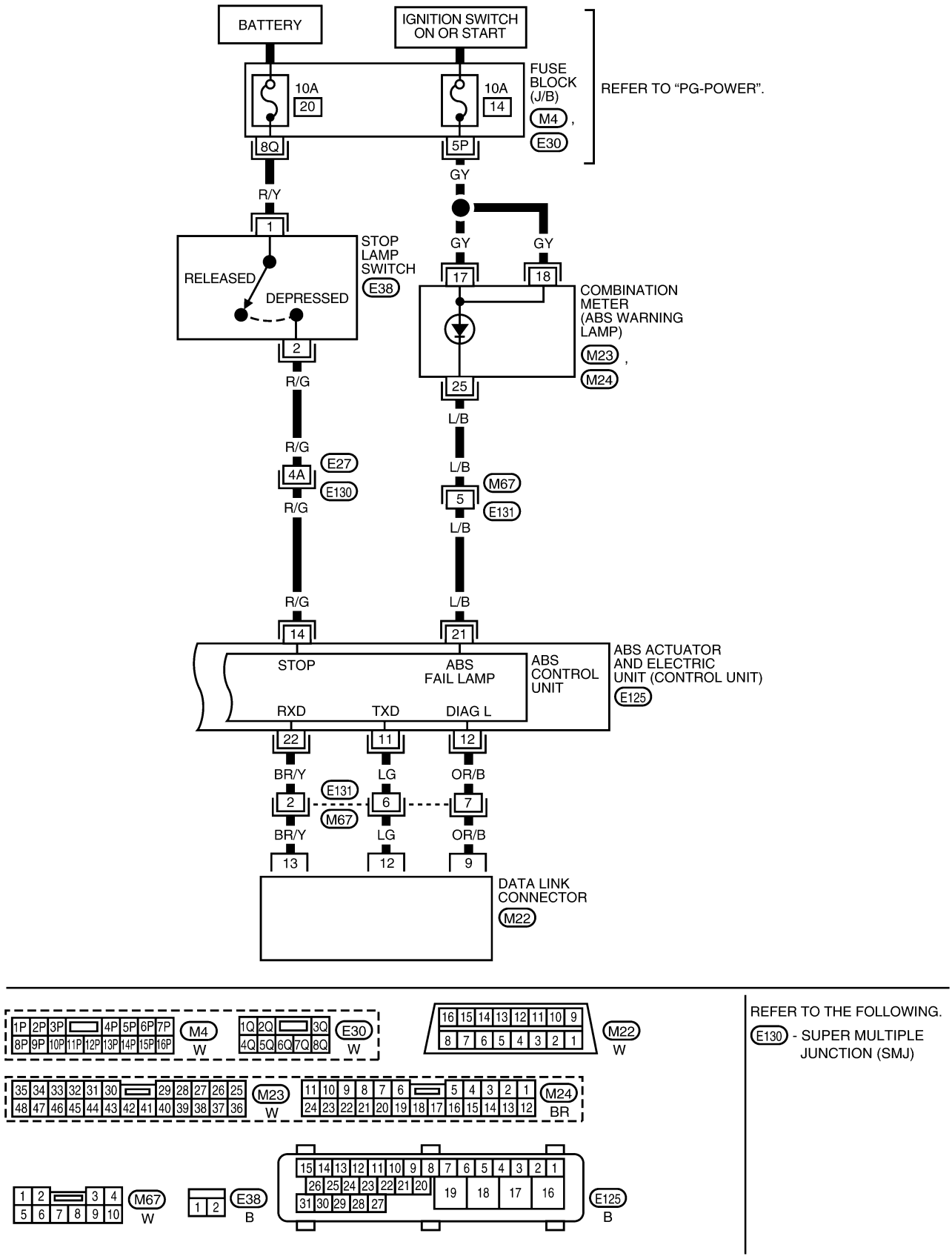
BATTERY
IGNITION SWITCH ON OR START
FUSE BLOCK (J/B)
M4 , E30
REFER TO “PG-POWER”.
10A 20
10A 14
8Q
5P
R/Y
GY
1
STOP LAMP SWITCH
E38
RELEASED
DEPRESSED
GY
GY
17
18
COMBINATION METER (ABS WARNING LAMP)
M23 , M24
2
R/G
25
L/B
R/G
4A
E27
E130
L/B
5
M67
E131
R/G
L/B
R/G
L/B
14
21
STOP
ABS FAIL LAMP
ABS CONTROL UNIT
ABS ACTUATOR AND ELECTRIC UNIT (CONTROL UNIT)
E125
RXD
TXD
DIAG L
22
11
12
BR/Y
LG
OR/B
E131
2
6
7
M67
BR/Y
LG
OR/B
13
12
9
DATA LINK CONNECTOR
M22
M4 W
E30 W
M22 W
M23 W
M24 BR
M67 W
E38 B
E125 B
REFER TO THE FOLLOWING.
E130 - SUPER MULTIPLE JUNCTION (SMJ)
LFWA0049E

CONSULT–II Function

EFS001H4

CONSULT-II APPLICATION TO ABS

ITEM	SELF-DIAGNOSTIC RESULTS	DATA MONITOR	ACTIVE TEST
Front right wheel sensor	X	X	—
Front left wheel sensor	X	X	—
Rear right wheel sensor	X	X	—
Rear left wheel sensor	X	X	—
Stop lamp switch	—	X	—
Front right inlet solenoid valve	X	X	X
Front right outlet solenoid valve	X	X	X
Front left inlet solenoid valve	X	X	X
Front left outlet solenoid valve	X	X	X
Rear right inlet solenoid valve	X	X	X
Rear right outlet solenoid valve	X	X	X
Rear left inlet solenoid valve	X	X	X
Rear left outlet solenoid valve	X	X	X
Actuator solenoid valve relay	X	X	—
Actuator motor relay	X	X	X
ABS warning lamp	—	X	—
Battery voltage	X	X	—
Control unit	X	—	—

X: Applicable
—: Not applicable

ECU (ABS Control Unit) Part Number Mode

Ignore the ECU part number displayed in the ECU PART NUMBER MODE. Refer to parts catalog to order the ABS actuator and electric unit (control unit).

SELF-DIAGNOSIS PROCEDURE

1. Turn ignition switch OFF.
2. Connect CONSULT-II to data link connector.

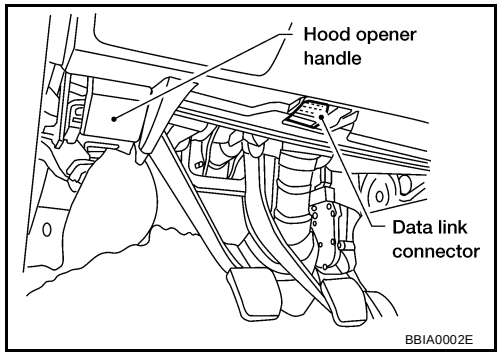

3. Start engine.
4. Drive vehicle over 30 km/h (19 MPH) for at least one minute.

5. Stop vehicle with engine running and touch “START” on CONSULT-II screen.

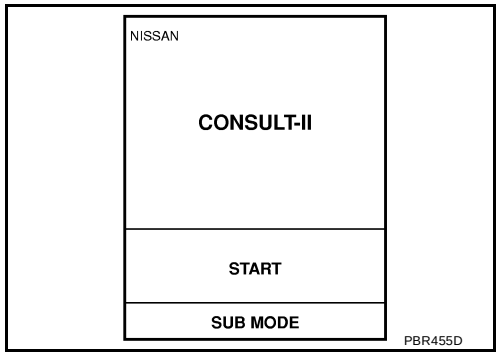

6. Touch “ABS”.

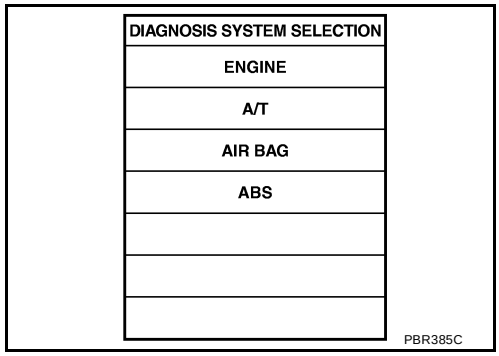

7. Touch “SELF-DIAG RESULTS”.
   - The screen shows the detected malfunction and how many times the ignition switch has been turned since the malfunction.

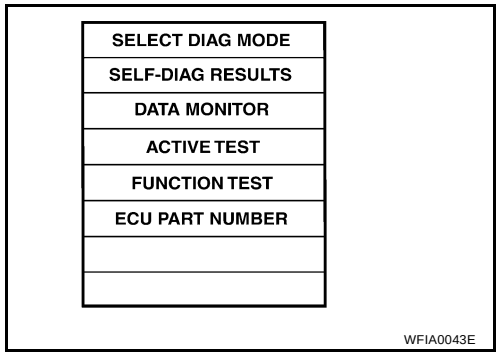

8. Make the necessary repairs following the diagnostic procedures.
9. After the malfunctions are repaired, erase the self-diagnostic results stored in the control unit by touching “ERASE”.
10. Check ABS warning lamp for deactivation after driving vehicle over 30 km/h (19 MPH) for at least one minute.

NOTE:
“SELF-DIAG RESULTS” screen shows the detected malfunction and how many times the ignition switch has been turned since the malfunction.

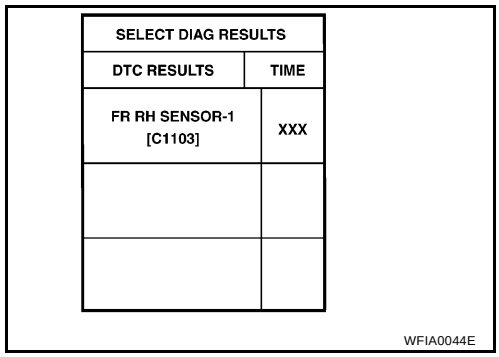

SELF-DIAGNOSTIC RESULTS MODE

Diagnostic item	Diagnosed condition	Diagnostic item is detected when ...	Reference Page
FR RH SENSOR-1 [C1103]*1	Open	● Circuit for front right wheel sensor is open.	BRC-26
FR LH SENSOR-1 [C1104]*1	Open	● Circuit for front left wheel sensor is open.	
RR RH SENSOR-1 [C1101]*1	Open	● Circuit for rear right wheel sensor is open.	
RR LH SENSOR-1 [C1102]*1	Open	● Circuit for rear left wheel sensor is open.	
FR RH SENSOR-2 [C1107]*1	Short	● Circuit for front right wheel sensor is shorted.	
FR LH SENSOR-2 [C1108]*1	Short	● Circuit for front left wheel sensor is shorted.	
RR RH SENSOR-2 [C1105]*1	Short	● Circuit for rear right wheel sensor is shorted.	
RR LH SENSOR-2 [C1106]*1	Short	● Circuit for rear left wheel sensor is shorted.	
ABS SENSOR [C1115]	Abnormal signal	● Teeth damage on sensor rotor or improper installation of wheel sensor.	
FR RH IN ABS SOL [C1122]	Abnormal (Open, Short)	● Circuit for front right inlet solenoid valve is open or shorted. (An excessively high or low output voltage is entered.)	BRC-28
FR LH IN ABS SOL [C1120]	Abnormal (Open, Short)	● Circuit for front left inlet solenoid valve is open or shorted. (An excessively high or low output voltage is entered.)	
FR RH OUT ABS SOL [C1123]	Abnormal (Open, Short)	● Circuit for front right outlet solenoid valve is open or shorted. (An excessively high or low output voltage is entered.)	
FR LH OUT ABS SOL [C1121]	Abnormal (Open, Short)	● Circuit for front left outlet solenoid valve is open or shorted. (An excessively high or low output voltage is entered.)	
RR RH IN ABS SOL [C1126]	Abnormal (Open, Short)	● Circuit for rear right inlet solenoid valve is open or shorted. (An excessively high or low output voltage is entered.)	
RR LH IN ABS SOL [C1124]	Abnormal (Open, Short)	● Circuit for rear left inlet solenoid valve is open or shorted. (An excessively high or low output voltage is entered.)	
RR RH OUT ABS SOL [C1127]	Abnormal (Open, Short)	● Circuit for rear right outlet solenoid valve is open or shorted. (An excessively high or low output voltage is entered.)	
RR LH OUT ABS SOL [C1125]	Abnormal (Open, Short)	● Circuit for rear left outlet solenoid valve is open or shorted. (An excessively high or low output voltage is entered.)	
MAIN RELAY [C1114]	Abnormal	● Actuator solenoid valve relay is ON, even if control unit sends off signal. ● Actuator solenoid valve relay is OFF, even if control unit sends on signal.	
PUMP MOTOR [C1111]	Abnormal	● Circuit for actuator motor is open or shorted. ● Actuator motor relay is stuck.	BRC-31
BATTERY VOLT [ABNORMAL] [C1109]	High or Low	● Power source voltage supplied to ABS control unit is abnormally high or low.	BRC-32
CONTROLLER FAILURE*2 [C1110]	Control Unit	● Function of calculation in ABS control unit has malfunctioned.	BRC-34

*1: Be sure to confirm the ABS warning lamp illuminates when the ignition switch is turned ON after repairing the shorted sensor circuit, but the lamp goes out when driving the vehicle over 30 km/h (19 MPH) for one minute in accordance with SELF-DIAGNOSIS PROCEDURE.

*2: When “CONTROLLER FAILURE” is displayed, check to see if the ABS warning lamp is burned out, and check the circuit between the ABS warning lamp and ABS actuator and electric unit (control unit) for open or short. Then check the ABS actuator and electric unit (control unit) and circuit.

DATA MONITOR PROCEDURE

1. Turn ignition switch OFF.
2. Connect CONSULT-II to data link connector.

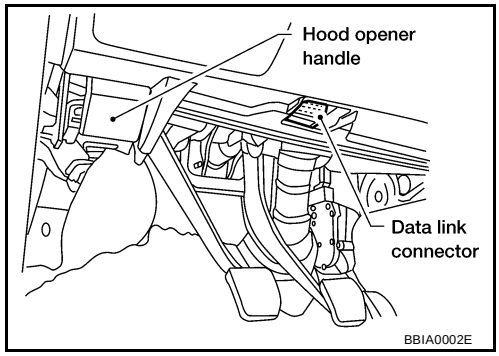

3. Turn ignition switch ON.
4. Touch “START” on CONSULT-II screen.

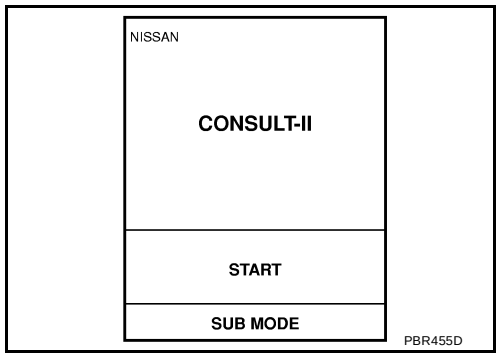

5. Touch “ABS”.

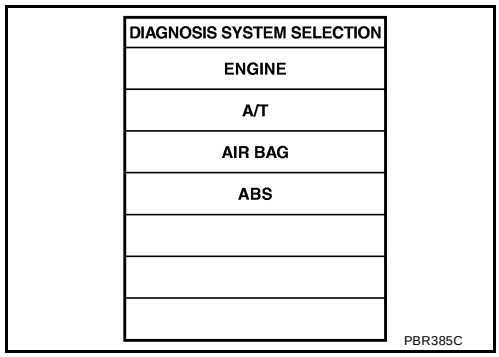

6. Touch “DATA MONITOR”.

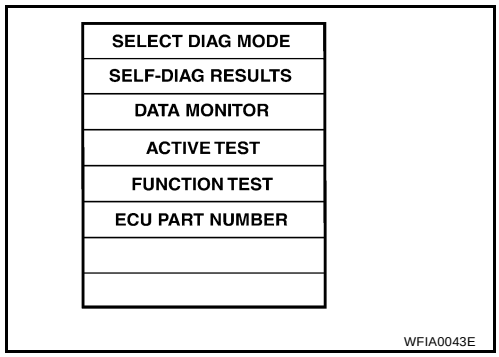

7. Touch “SETTING” on “SELECT MONITOR ITEM” screen.
8. Touch “LONG TIME” on “SET RECORDING COND” screen.
9. Touch “START” on “SELECT MONITOR ITEM”.

DATA MONITOR MODE

MONITOR ITEM	CONDITION	SPECIFICATION
FR RH SENSOR FR LH SENSOR RR RH SENSOR RR LH SENSOR	Drive vehicle. (Each wheel is rotating.)	Displays computed vehicle speed from wheel sensor signal. Almost the same speed as speedometer.
STOP LAMP SW	Turn ignition switch ON and depress brake pedal.	Depress the pedal: ON Release the pedal: OFF
FR RH IN SOL FR RH OUT SOL FR LH IN SOL FR LH OUT SOL RR RH IN SOL RR RH OUT SOL RR LH IN SOL RR LH OUT SOL	Ignition switch is turned ON or engine is running.	Operating conditions for each solenoid valve are indicated. ABS is not operating: OFF
ACTUATOR RLY	Ignition switch is turned ON or engine is running.	Displays ON/OFF condition of ABS actuator relay. When turning ignition switch ON, ABS actuator relay is operated.
MOTOR RELAY		ABS is not operating: OFF ABS is operating: ON
ABS WARN LAMP		Warning lamp is turned on: ON Warning lamp is turned off: OFF
BATTERY VOLT		Power supply voltage for control unit

ACTIVE TEST PROCEDURE

- When conducting active test, vehicle must be stationary.
- When ABS warning lamp stays on, never conduct active test.

1. Turn ignition switch OFF.
2. Connect CONSULT-II to data link connector.

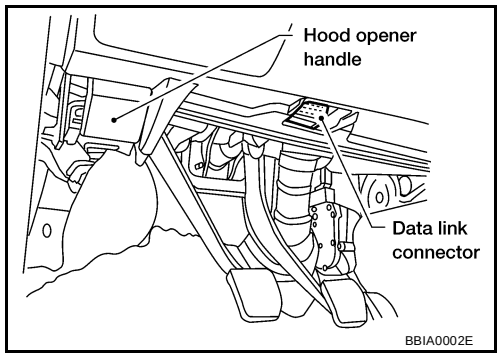

3. Start engine.
4. Touch “START” on CONSULT-II screen.

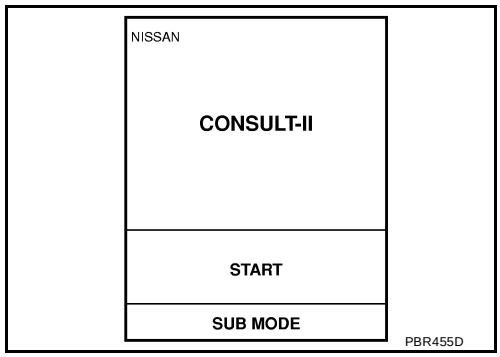

5. Touch “ABS”.

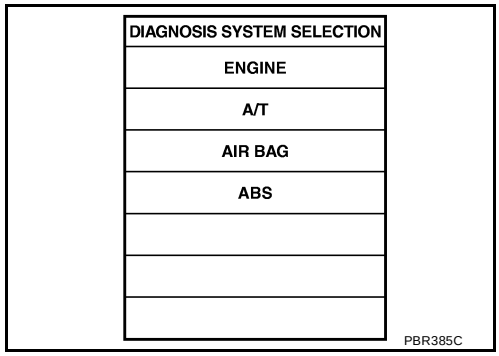

6. Touch “ACTIVE TEST”.

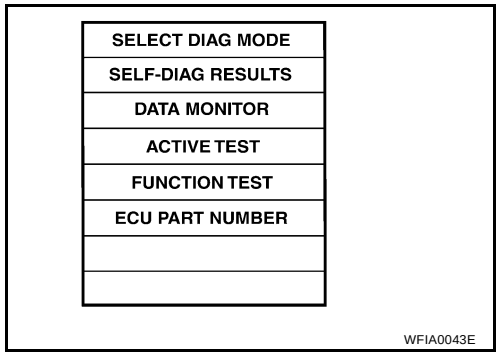

7. Select active test item by touching screen.

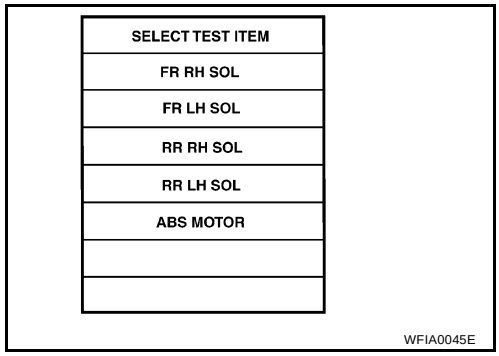

8. Touch “START”.
9. Carry out the active test by touching screen key.

ACTIVE TEST MODE

TEST ITEM	CONDITION	JUDGEMENT		
FR RH SOL FR LH SOL RR RH SOL RR LH SOL	Ignition switch is turned ON.	Brake fluid pressure control operation		
			IN SOL	OUT SOL
		UP (Increase):	OFF	OFF
		KEEP (Hold):	ON	OFF
		DOWN (Decrease):	ON	ON
ABS MOTOR		ABS actuator motor ON: Motor runs OFF: Motor stops		

NOTE:
Active test will automatically stop ten seconds after the test starts. (TEST IS STOPPED is displayed.)

Self-Diagnosis (Without CONSULT–II)

EFS001H5

When a problem occurs in the ABS, the ABS warning lamp on the instrument panel comes on. To activate the self-diagnostic results mode, ground the self-diagnostic (check) terminal located on data link connector. The location of the malfunction is indicated by the ABS warning lamp flashing.

SELF-DIAGNOSIS PROCEDURE

1. Drive vehicle over 30 km/h (19 MPH) for at least one minute.
2. Turn ignition switch OFF.
3. Ground terminal “9” of data link connector with a suitable harness.
4. Turn ignition switch ON while grounding terminal “9”.
   Do not depress brake pedal.
   Do not start engine.

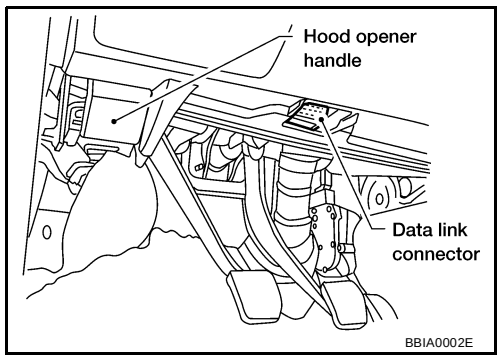

5. After 3.0 seconds, the ABS warning lamp starts flashing to indicate the malfunction code No. (See NOTE.)
6. Verify the location of the malfunction with the malfunction code chart. Refer to BRC-24, "Malfunction Code Chart (Without CONSULT-II)" . Then make the necessary repairs following the diagnostic procedures.
7. After the malfunctions are repaired, erase the malfunction codes stored in the control unit. Refer to BRC-22, "HOW TO ERASE SELF-DIAGNOSTIC RESULTS (MALFUNCTION CODES)" .
8. Rerun the self-diagnostic results mode to verify that the malfunction codes have been erased.

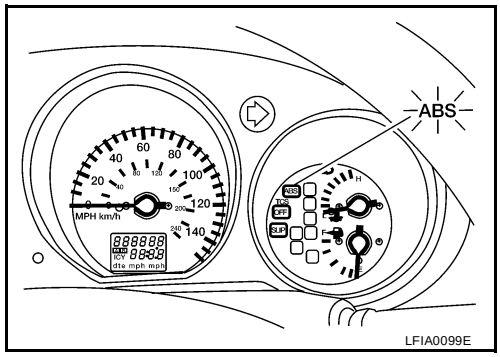

9. Disconnect the check terminal from the ground. The self-diagnostic results mode is now complete.
10. Check ABS warning lamp for deactivation after driving vehicle over 30 km/h (19 MPH) for at least one minute.
11. After making certain that ABS warning lamp does not come on, test the ABS SELF-DIAGNOSIS in a safe area to verify that it functions properly.

    NOTE:
    The indication terminates after five minutes.
    However, when the ignition switch is turned from OFF to ON, the indication starts flashing again.

HOW TO READ SELF-DIAGNOSTIC RESULTS (MALFUNCTION CODES)

1. Determine the code No. by counting the number of times the ABS warning lamp flashes on and off.
2. When several malfunctions occur at one time, up to three code numbers can be stored; the latest malfunction will be indicated first.
3. The indication begins with the start code 12. After that a maximum of three code numbers appear in the order of the latest one first. The indication then returns to the start code 12 to repeat (the indication will stay on for five minutes at the most).
4. Refer to BRC-24, "Malfunction Code Chart (Without CONSULT-II)" .

Example: Code No. 32 REAR SENSOR SHORT-CIRCUIT

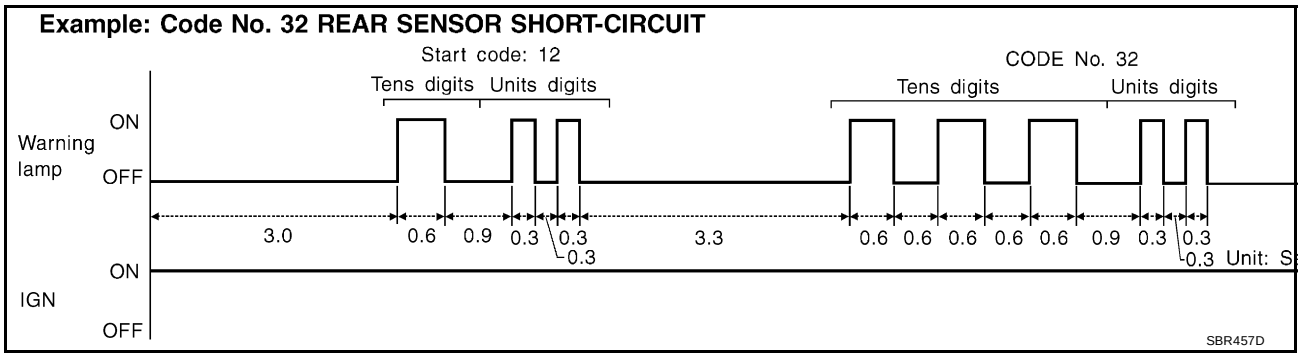

HOW TO ERASE SELF-DIAGNOSTIC RESULTS (MALFUNCTION CODES)

1. Disconnect the check terminal from ground (ABS warning lamp will stay lit).
2. Within 12.5 seconds, ground the check terminal 3 times. Each terminal ground must last more than 1 second. The ABS warning lamp goes out after the erase operation has been completed.
3. Perform self-diagnosis again. Refer to BRC-21, "SELF-DIAGNOSIS PROCEDURE" . Only the start code should appear, no malfunction codes.

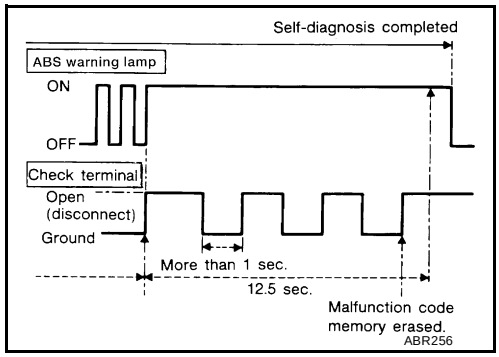

Preliminary Check

EFS001H6

1. CHECK BRAKE FLUID LEVEL

Low fluid level may indicate brake pad wear or leakage from brake line.

Is brake fluid filled between MAX and MIN lines on reservoir tank and is brake fluid uncontaminated?

OK >> GO TO 2.
NG >> Repair. GO TO 2.

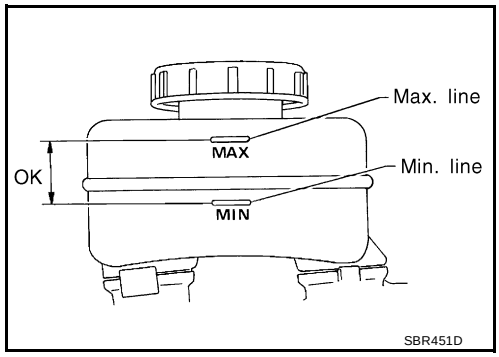

2. CHECK BRAKE LINE

Is leakage present at or around brake lines, tubes or hoses or are any of these parts cracked or damaged?

OK >> GO TO 3.
NG >> Repair. GO TO 3.

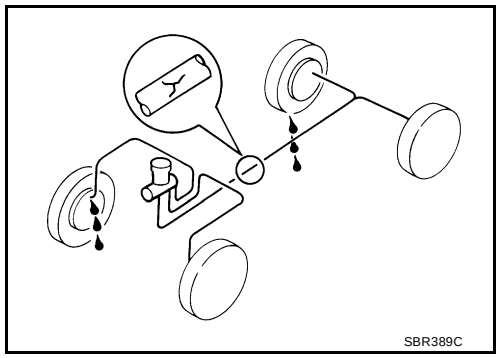

3. CHECK BRAKE BOOSTER OPERATION

Check brake booster for operation and air tightness.
Refer to BR-17, "AIRTIGHT CHECK" .

Is brake booster airtight and functioning properly?

Yes >> GO TO 4.
No >> Replace. GO TO 4.

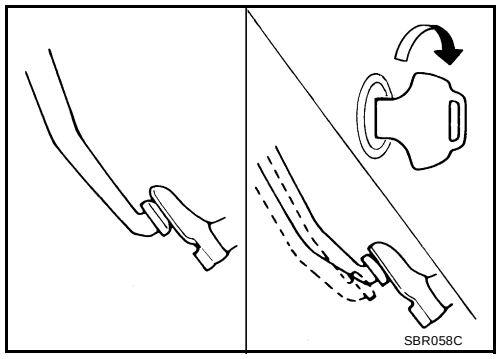

4. CHECK BRAKE PADS AND ROTORS

Check brake pads and rotors.
Refer to BR-20, "FRONT DISC BRAKE" and BR-26, "REAR DISC BRAKE" .

Are brake pads and rotors functioning properly?

Yes >> GO TO 5.
No >> Replace.

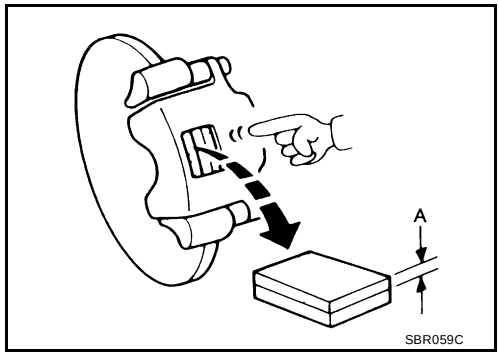

5. RECHECK BRAKE FLUID LEVEL

Check brake fluid level in reservoir tank again.

Is brake fluid filled between MAX and MIN lines on reservoir tank and is brake fluid uncontaminated?

OK >> GO TO 6.
NG >> Fill up brake fluid.

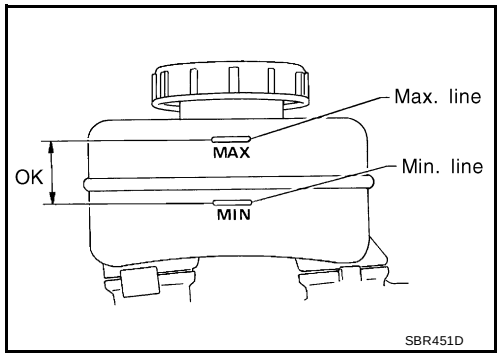

6. CHECK WARNING LAMP ACTIVATION

Does warning lamp turn on when ignition switch is turned ON?

Yes >> GO TO 7.
No >> Check fuse, warning lamp bulb and warning lamp circuit.

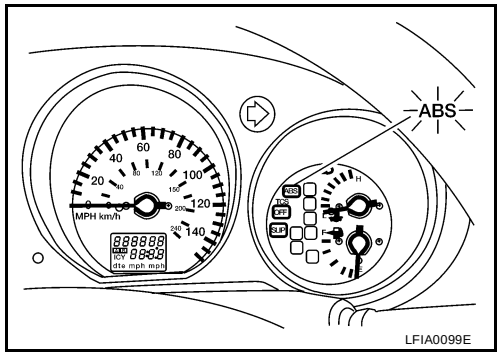

7. CHECK WARNING LAMP DEACTIVATION

Does warning lamp turn off when engine is started?

Yes >> GO TO 8.
No >> Go to Self-diagnosis. Refer to BRC-21, "SELF-DIAGNOSIS PROCEDURE" .

8. DRIVE VEHICLE

Drive vehicle at speeds over 30 km/h (19 MPH) for at least one minute.

Does warning lamp remain off after vehicle has been driven at 30 km/h (19 MPH) for at least one minute?

Yes >> INSPECTION END.
No >> Go to Self-diagnosis. Refer to BRC-21, "SELF-DIAGNOSIS PROCEDURE" .

Ground Circuit Check

EFS001H7

ABS ACTUATOR AND ELECTRIC UNIT (CONTROL UNIT) GROUND

- Check continuity between terminals and ground.

Continuity should exist.

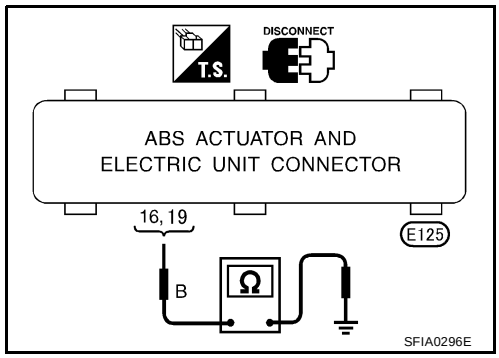

Malfunction Code Chart (Without CONSULT-II)

EFS001H8

Code No. (No. of LED flashes)	Malfunctioning part	Reference page
12	Self-diagnosis could not detect any malfunctions.	—
18	Sensor rotor malfunction	BRC-26
21, 22	Front right sensor	BRC-26
25, 26	Front left sensor	BRC-26
31, 32	Rear right sensor	BRC-26
35, 36	Rear left sensor	BRC-26
41	Actuator front right outlet solenoid valve	BRC-28
42	Actuator front right inlet solenoid valve	BRC-28
45	Actuator front left outlet solenoid valve	BRC-28
46	Actuator front left inlet solenoid valve	BRC-28
51	Actuator rear right outlet solenoid valve	BRC-28
52	Actuator rear right inlet solenoid valve	BRC-28
55	Actuator rear left outlet solenoid valve	BRC-28
56	Actuator rear left inlet solenoid valve	BRC-28
57*	Power supply (Abnormal voltage)	BRC-32
61	Actuator motor or motor relay	BRC-31
63	Solenoid valve relay	BRC-28
71	Control unit	BRC-34

*: Under voltage that is too low, the control unit will disable the ABS. It does not set the ABS in fail-safe condition. Instead, the ABS becomes a conventional brake system. After the power supply has resumed, the warning lamp goes off, making it possible for the ABS to be re-engaged.

Symptom Chart

EFS001IT

Symptom	Malfunctioning part	Reference page
ABS warning lamp stays on when ignition switch is turned on.	Control unit power supply circuit Warning lamp bulb circuit Control unit or control unit connector Solenoid valve relay stuck Power supply for solenoid valve relay coil	BRC-40
ABS warning lamp stays on, during self-diagnosis.	Control unit	—
ABS warning lamp does not come on when ignition switch is turned on.	Fuse, warning lamp bulb or warning lamp circuit Control unit	BRC-38
ABS warning lamp does not come on during self-diagnosis.	Control unit	—
Pedal vibration and noise	—	BRC-37

Symptom	Malfunctioning part	Reference page
Long stopping distance	—	BRC-36
Unexpected pedal action	—	BRC-35
ABS does not work.	—	BRC-36
ABS works frequently.	—	BRC-35

TROUBLE DIAGNOSIS FOR SELF-DIAGNOSTIC ITEMS

PFP:00000

Wheel Sensor or Rotor

EFS001H9

DIAGNOSTIC PROCEDURE

With CONSULT-II: Malfunction code No. C1101, C1102, C1103, C1104, C1105, C1106, C1107, C1108 or C1115

Without CONSULT-II: Malfunction code No. 21, 22, 25, 26, 31, 32, 35, 36 or 18

NOTE:
Wheel position should be identified by code No. except code No. 18 (sensor rotor).

1. INSPECTION START

Wheel sensor inspection.

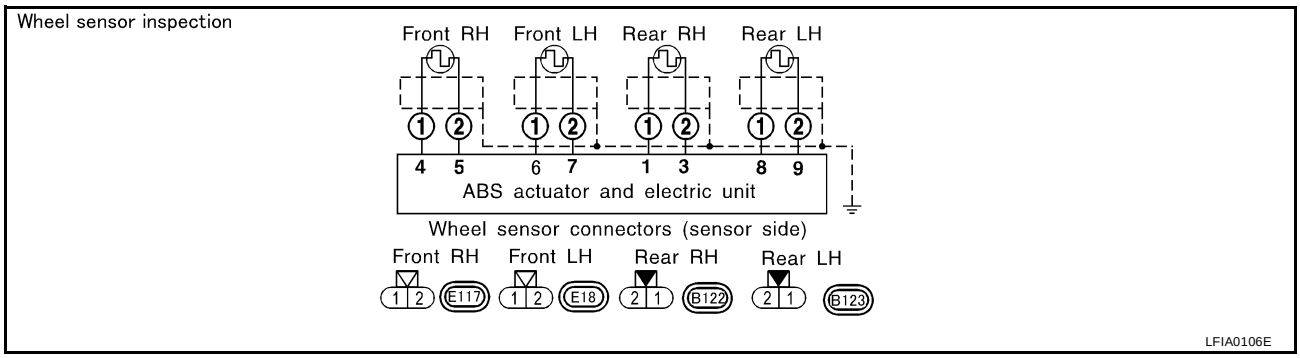

>> GO TO 2.

2. CHECK CONNECTOR

1. Disconnect connectors from ABS actuator and electric unit (control unit) and wheel sensor of malfunction code No. Check terminals for damage or loose connections. Then reconnect connectors.
2. Carry out self-diagnosis again.

Does warning lamp activate again?

Yes >> GO TO 3.
No >> **INSPECTION END**.

3. CHECK TIRE

Check for inflation pressure, wear and size of each tire.

Are tire pressure and size correct and is tire wear within specifications?

Yes >> GO TO 4.
No >> Adjust tire pressure or replace tire(s).

4. CHECK WHEEL BEARING

Check wheel bearing axial end play.

Is axial end play within specifications?

Yes >> GO TO 5.
No >> Repair as necessary. Refer to FAX-5, "Front Wheel Bearing" or RAX-5, "Rear Wheel Bearing" . Then retest.

5. CHECK WIRING HARNESS FOR SHORT CIRCUIT

1. Disconnect connector from wheel sensor of malfunction code No.
2. Check resistance between harness connector terminal and ground.

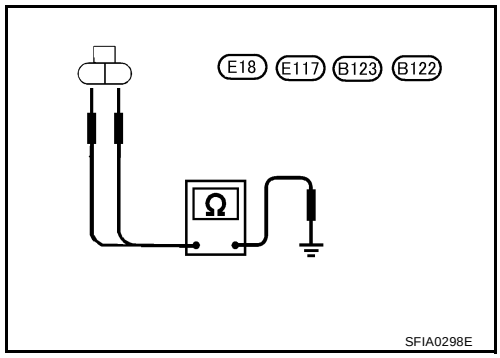

Continuity should not exist.

OK or NG?

OK >> GO TO 6.
NG >> Repair harness or connectors.

6. CHECK WIRING HARNESS FOR OPEN CIRCUIT

1. Disconnect ABS actuator and electric unit (control unit) connector and wheel sensor connector of malfunction code No.
2. Check continuity between both wiring harness ends.

Sensor	ABS actuator and electric unit (control unit)		Wheel sensor		Continuity
	Connector - terminal	Wire color	Connector - terminal	Wire color	
Front LH	E125 - 6	G	E18 - 1	G	Yes
	E125 - 7	R	E18 - 2	R	
Front RH	E125 - 4	B	E117 - 1	B	
	E125 - 5	W	E117 - 2	W	
Rear LH	E125 - 9	P	B123 - 1	P	
	E125 - 8	L	B123 - 2	L	
Rear RH	E125 - 3	PU	B122 - 1	PU	
	E125 - 1	LG	B122 - 2	LG	

Continuity should exist.

OK or NG?

OK >> GO TO 7.
NG >> Repair harness or connectors.

7. CHECK SENSOR ROTOR

Check sensor rotor for teeth damage.

Is sensor rotor free from damage?

Yes >> 1. Check ABS actuator and electric unit (control unit) pin terminals for damage or the connection of ABS actuator and electric unit (control unit) harness connector. Reconnect ABS actuator and electric unit (control unit) harness connector. Then retest.
2. If retest is NG, replace wheel sensor. Refer to BRC-41, "Removal and Installation" .

No >> Replace sensor rotor. Refer to BRC-42, "Removal and Installation" .

ABS Actuator Solenoid Valve or Solenoid Valve Relay

EFS001HA

DIAGNOSTIC PROCEDURE

With CONSULT-II: Malfunction code No. C1114, C1120, C1121, C1122, C1123, C1124, C1125, C1126 or C1127

Without CONSULT-II: Malfunction code No. 41, 42, 45, 46, 51, 52, 55, 56 or 63

1. INSPECTION START

Solenoid valve relay inspection.

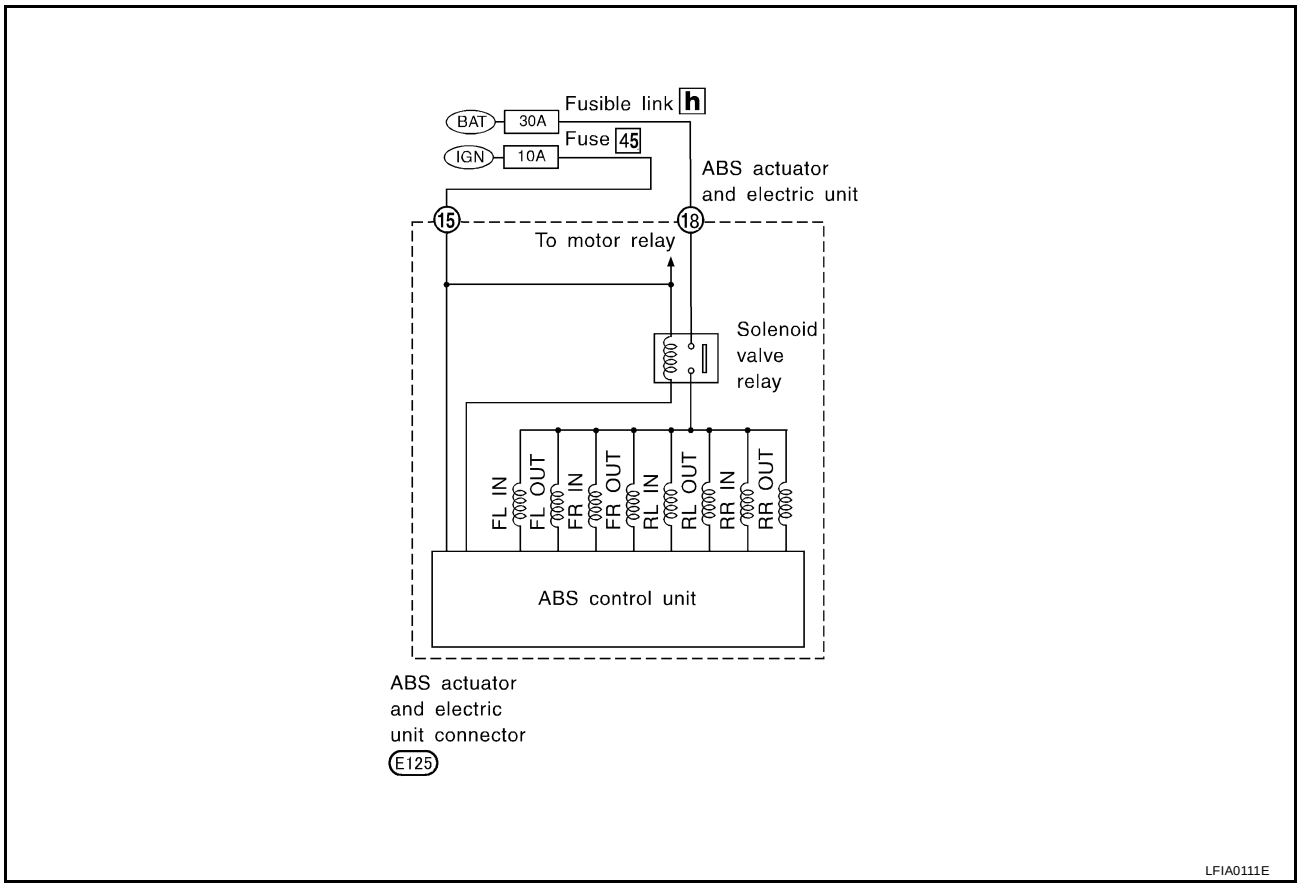

>> GO TO 2.

2. CHECK SOLENOID VALVE POWER SUPPLY CIRCUIT

Check 30A [**h**] fusible link (ABS ACTR) for ABS solenoid valve relay. For fusible link layout, refer to PG-3, "POWER SUPPLY ROUTING CIRCUIT" .

Is fusible link OK?

Yes >> GO TO 3.
No >> GO TO 7.

3. CHECK FUSE

Check 10A fuse No. 45. For fuse layout, refer to PG-3, "POWER SUPPLY ROUTING CIRCUIT" .

Is fuse OK?

Yes >> GO TO 4.
No >> GO TO 9.

4. CHECK CONNECTOR

1. Disconnect connectors from ABS actuator and electric unit (control unit). Check terminals for damage or loose connection. Then reconnect connectors.
2. Carry out self-diagnosis again.

Does warning lamp activate again?

Yes >> GO TO 5.
No >> **INSPECTION END**.

5. CHECK GROUND CIRCUIT

Refer to BRC-24, "ABS ACTUATOR AND ELECTRIC UNIT (CONTROL UNIT) GROUND" .

Is ground circuit OK?

Yes >> GO TO 6.
No >> Repair harness and connectors.

6. CHECK SOLENOID VALVE POWER SUPPLY CIRCUIT

1. Disconnect ABS actuator and electric unit (control unit) connector.
2. Check voltage between ABS actuator and electric unit (control unit) connector terminal 18 and ground.

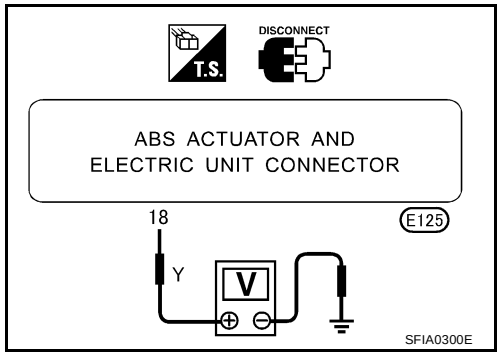

Does battery voltage exist?

Yes >> Replace ABS actuator and electric unit (control unit).
No >> Check the following.
- Harness connector E125
- Harness for open or short between ABS actuator and electric unit (control unit) and fusible link
  If NG, repair harness or connectors.

7. REPLACE FUSIBLE LINK

Replace fusible link.

Does the fusible link blow out when ignition switch is turned ON?

Yes >> GO TO 8.
No >> **INSPECTION END**.

8. CHECK RELAY UNIT POWER SUPPLY CIRCUIT

1. Disconnect ABS actuator and electric unit (control unit) connector.
2. Check continuity between ABS actuator and electric unit (control unit) connector terminal 18 and ground.

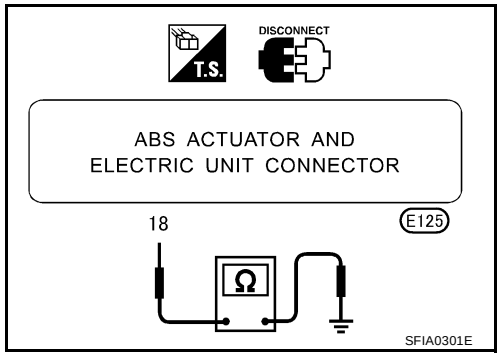

Does continuity exist?

Yes >> Check the following.
- Harness connector E125
- Harness for open or short between ABS actuator and electric unit (control unit) and fusible link If NG, repair harness or connectors.

No >> ● Replace ABS actuator and electric unit (control unit). Refer to BRC-43, "Removal and Installation" .

9. REPLACE FUSE

Replace fuse.

Does the fuse blow out when ignition switch is turned ON?

Yes >> Check the following.

- Harness connector E125
- Harness for open or short between ABS actuator and electric unit (control unit) and fuse
  If NG, repair harness or connectors.

No >> **INSPECTION END**.

Motor Relay or Motor

EFS001HB

DIAGNOSTIC PROCEDURE

With CONSULT-II: Malfunction code No. C1111
Without CONSULT-II: Malfunction code No. 61

1. INSPECTION START

ABS motor relay inspection.

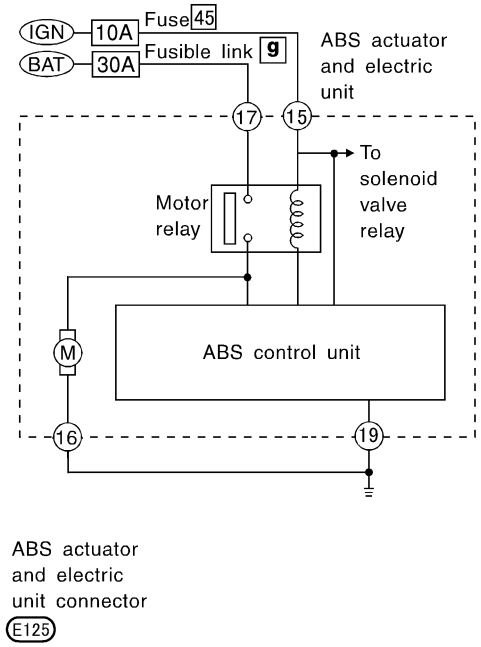

LFIA0196E

>> GO TO 2.

2. CHECK MOTOR POWER SUPPLY CIRCUIT

Check 30A [**g**] fusible link (ABS MTR) for ABS motor relay. For fusible link layout, refer to PG-3, "POWER SUPPLY ROUTING CIRCUIT" .

Is fusible link OK?

Yes >> GO TO 3.
No >> GO TO 6.

3. CHECK CONNECTOR

1. Disconnect ABS actuator and electric unit (control unit) connector. Check terminals for damage or loose connection. Then reconnect connectors.
2. Carry out self-diagnosis again.

Does warning lamp activate again?

Yes >> GO TO 4.
No >> **INSPECTION END**.

4. CHECK MOTOR RELAY POWER SUPPLY CIRCUIT

1. Disconnect ABS actuator and electric unit (control unit) connector.
2. Check voltage between ABS actuator and electric unit (control unit) connector terminal 17 and ground.

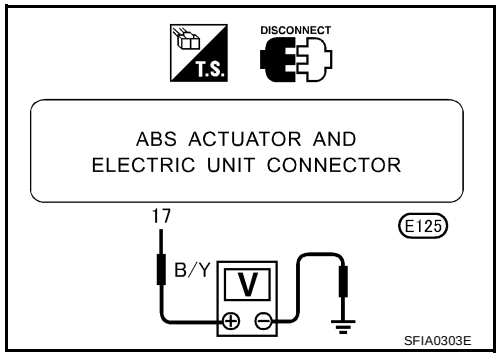

Does battery voltage exist?

Yes >> GO TO 5.
No >> Check the following.
- Harness connector E125
- Harness for open or short between ABS actuator and electric unit (control unit) and fusible link
  If NG, repair harness or connectors.

5. CHECK ABS ACTUATOR AND ELECTRIC UNIT (CONTROL UNIT) GROUND CIRCUIT

Refer to BRC-24, "ABS ACTUATOR AND ELECTRIC UNIT (CONTROL UNIT) GROUND" .

Is ground circuit OK?

Yes >> Replace ABS actuator and electric unit (control unit).
No >> Check the following.
- Harness connector E125
- Harness for open or short between ABS actuator and electric unit (control unit) and ground
  If NG, repair harness or connectors.

6. REPLACE FUSIBLE LINK

Replace fusible link.

Does the fusible link blow out when ignition switch is turned ON?

Yes >> GO TO 7.
No >> **INSPECTION END**.

7. CHECK ABS ACTUATOR MOTOR POWER SUPPLY CIRCUIT

1. Disconnect battery cable and ABS actuator and electric unit (control unit) connector.
2. Check continuity between ABS actuator and electric unit (control unit) connector terminal 17 and ground.

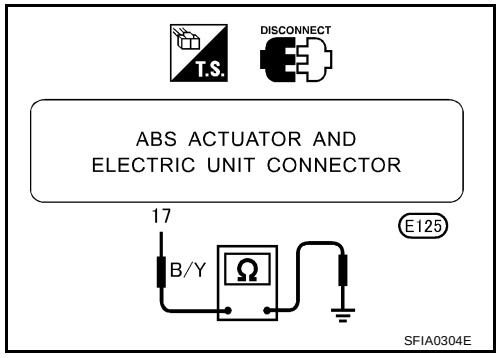

Does continuity exist?

Yes >> Check the following.
- Harness connector E125
- Harness for open or short between ABS actuator and electric unit (control unit) and fusible link
  If NG, repair harness or connectors.

No >> Check ABS actuator and electric unit (control unit) pin terminals for damage or the connection of ABS actuator and electric unit (control unit) harness connector. Reconnect ABS actuator and electric unit (control unit) harness connector. Then retest.

Abnormal Battery Voltage

EFS001HC

DIAGNOSTIC PROCEDURE

With CONSULT-II: Malfunction code No. C1109
Without CONSULT-II: Malfunction code No. 57

1. INSPECTION START

ABS actuator and electric unit (control unit) power supply and ground circuit inspection.

>> GO TO 2.

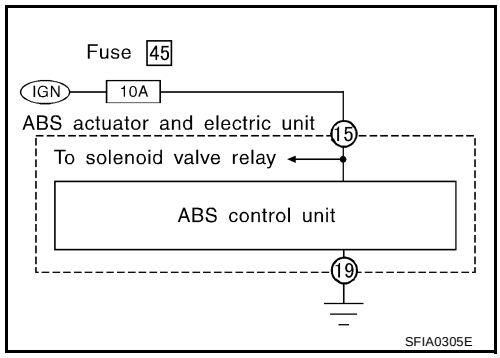

2. CHECK CONNECTOR

1. Disconnect ABS actuator and electric unit (control unit) connector. Check terminals for damage or loose connections. Then reconnect connector.
2. Carry out self-diagnosis again.

Does warning lamp activate again?

Yes >> GO TO 3.
No >> **INSPECTION END**.

3. CHECK ABS ACTUATOR AND ELECTRIC UNIT (CONTROL UNIT) POWER SUPPLY CIRCUIT

1. Disconnect ABS actuator and electric unit (control unit) connector.
2. Check voltage between ABS actuator and electric unit (control unit) connector terminal 15 and ground.

Does battery voltage exist when ignition switch is turned ON?

Yes >> GO TO 4.
No >> GO TO 5.

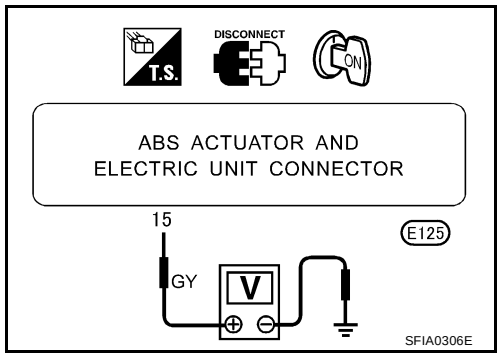

4. CHECK ABS ACTUATOR AND ELECTRIC UNIT (CONTROL UNIT) GROUND

Refer to BRC-24, "ABS ACTUATOR AND ELECTRIC UNIT (CONTROL UNIT) GROUND" .

Is ground circuit OK?

OK >> Check ABS actuator and electric unit (control unit) pin terminals for damage or the connection of ABS actuator and electric unit (control unit) harness connector. Reconnect ABS actuator and electric unit (control unit) harness connector. Then retest.
NG >> Check the following.
- Harness connector E125
- Harness for open or short between ABS actuator and electric unit (control unit) and ground
  If NG, repair harness or connectors.

5. CHECK FUSE

Check 10A fuse 45 (Engine control) for ABS actuator and electric unit (control unit). Refer to PG-3, "POWER SUPPLY ROUTING CIRCUIT" .

Is fuse OK?

Yes >> GO TO 6.
No >> If fuse is blown, be sure to eliminate cause of problem before installing new fuse.

6. CHECK ABS ACTUATOR AND ELECTRIC UNIT (CONTROL UNIT) POWER SUPPLY CIRCUIT

1. Turn ignition switch to ON position.
2. Check continuity between battery and ABS actuator and electric unit (control unit) connector terminal 15.

Does continuity exist?

Yes >> Check battery. Refer to SC-4, "BATTERY" .
No >> Check the following.
- Harness connector E125
- Harness for open or short between ABS actuator and electric unit (control unit) and fuse
  If NG, repair harness or connectors.

Controller Failure

EFS001HD

DIAGNOSTIC PROCEDURE

With CONSULT-II: Malfunction code No. C1110
Without CONSULT-II: Malfunction code No. 71

1. INSPECTION START

ABS actuator and electric unit (control unit) power supply and ground circuit inspection

>> GO TO 2.

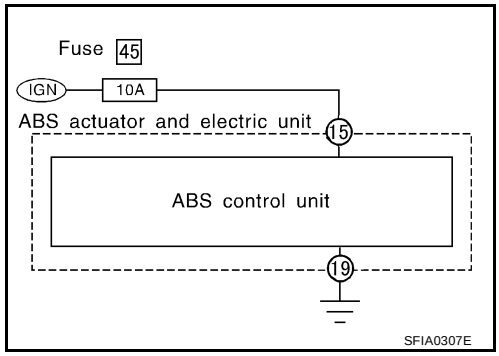

2. CHECK CONNECTOR

1. Disconnect ABS actuator and electric unit (control unit) connector.
   Check terminals for damage or loose connections. Then reconnect connectors.
2. Carry out self-diagnosis again.

Does warning lamp activate again?

Yes >> GO TO 3.
No >> **INSPECTION END**.

3. CHECK ABS ACTUATOR AND ELECTRIC UNIT (CONTROL UNIT) POWER SUPPLY CIRCUIT

Check voltage. Refer to BRC-32, "DIAGNOSTIC PROCEDURE" .

Does battery voltage exist when ignition switch is turned ON?

Yes >> GO TO 4.
No >> Repair.

4. CHECK WARNING LAMP INDICATION

Does warning lamp indicate code No. 71 again?

Yes >> Replace ABS actuator and electric unit (control unit). Refer to BRC-43, "Removal and Installation" .
No >> Inspect the system according to the code No.

TROUBLE DIAGNOSES FOR SYMPTOMS

PFP:99999

1. ABS Works Frequently

EFS001HE

1. CHECK BRAKE FLUID PRESSURE

Check brake fluid pressure distribution.
Refer to BR-31, "Inspection" .

Is brake fluid pressure distribution normal?

Yes >> GO TO 2.
No >> Perform Preliminary Check. Refer to BRC-22, "Preliminary Check" .

2. CHECK WHEEL SENSOR

1. Check wheel sensor connector for terminal damage or loose connections.
2. Perform wheel sensor check.
   Refer to BRC-26, "Wheel Sensor or Rotor" .

Are wheel sensors functioning properly?

Yes >> GO TO 3.
No >> Repair.

3. CHECK FRONT AXLE

Check front and rear axles for excessive looseness. Refer to FAX-5, "Front Wheel Bearing" or RAX-5, "Rear Wheel Bearing" .

Are front axles installed properly?

Yes >> Go to BRC-35, "2. Unexpected Pedal Action" .
No >> Repair.

2. Unexpected Pedal Action

EFS001HF

1. CHECK BRAKE PEDAL STROKE

Check brake pedal stroke. Is stroke excessively large?

Yes >> Perform Preliminary Check. Refer to BRC-22, "Preliminary Check" .
No >> GO TO 2.

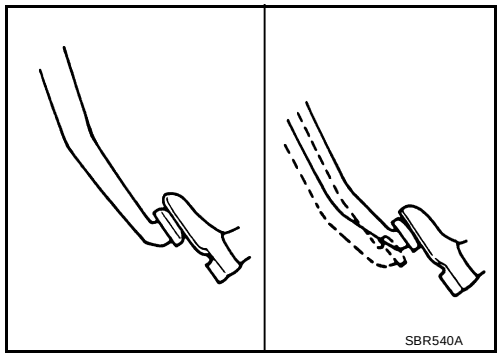

2. CHECK CONNECTOR AND PERFORMANCE

1. Disconnect ABS actuator and electric unit (control unit) connector.
2. Check whether brake is effective.

OK or NG

Yes >> GO TO 3.
No >> Perform Preliminary Check. Refer to BRC-22, "Preliminary Check" .

3. CHECK WARNING LAMP INDICATION

Ensure warning lamp remains off while driving.

Is warning lamp turned off?

Yes >> GO TO 4.
No >> Carry out self-diagnosis. Refer to BRC-15, "SELF-DIAGNOSIS PROCEDURE" .

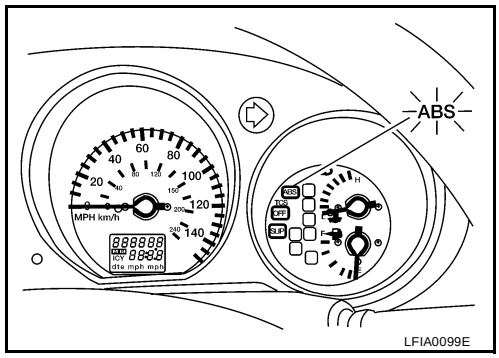

4. CHECK WHEEL SENSOR

1. Check wheel sensor connector for terminal damage or loose connection.
2. Perform wheel sensor mechanical check.

Is wheel sensor mechanism OK?

Yes >> Check ABS actuator and electric unit (control unit) pin terminals for damage or the connection of ABS actuator and electric unit (control unit) harness connector. Reconnect ABS actuator and electric unit (control unit) harness connector. Then retest.
No >> Repair.

3. Long Stopping Distance

EFS001HG

1. CHECK CONNECTOR AND PERFORMANCE

1. Cancel ABS by disconnecting ABS actuator and electric unit (control unit) connector.
2. Check whether stopping distance is still long.

OK or NG?

OK >> Perform Preliminary Check and air bleeding.
NG >> Go to BRC-35, "2. Unexpected Pedal Action" .

NOTE:
Stopping distance may be longer than vehicles without ABS when road condition is slippery.

4. ABS Does Not Work

EFS001HH

1. CHECK WARNING LAMP INDICATION

Does the ABS warning lamp activate?

Yes >> Carry out self-diagnosis. Refer to BRC-15, "SELF-DIAGNOSIS PROCEDURE" .
No >> Go to BRC-35, "2. Unexpected Pedal Action" .

NOTE:
ABS does not work when vehicle speed is under 10 km/h (6 MPH).

5. Pedal Vibration and Noise

EFS001HI

1. INSPECTION START

Pedal vibration and noise inspection.

>> GO TO 2.

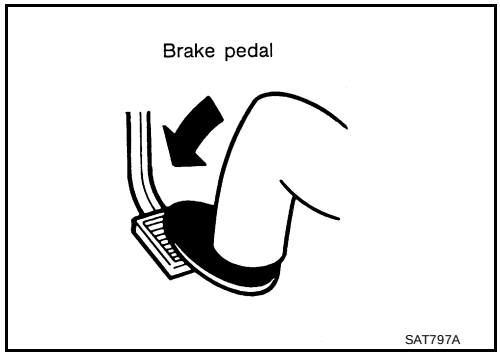

2. CHECK SYMPTOM

1. Apply brake.
2. Start engine.

Does the symptom appear only when engine is started?

Yes >> Carry out self-diagnosis. Refer to BRC-15, "SELF-DIAGNOSIS PROCEDURE" .
No >> GO TO 3.

3. RECHECK SYMPTOM

Does the symptom appear when electrical equipment switches (such as headlamp) are operated?

Yes >> **INSPECTION END**.
No >> Go to BRC-35, "2. Unexpected Pedal Action" .

NOTE:
ABS may operate and cause vibration under any of the following conditions.

- Applying brake gradually when shifting or operating clutch.
- Low friction (slippery) road.
- High speed cornering.
- Driving over bumps and pot holes.
- Engine speed is over 5,000 rpm with vehicle stopped.

6. ABS Warning Lamp Does Not Come On When Ignition Switch Is Turned On

EFS001HJ

1. INSPECTION START

Warning lamp circuit inspection.

>> GO TO 2.

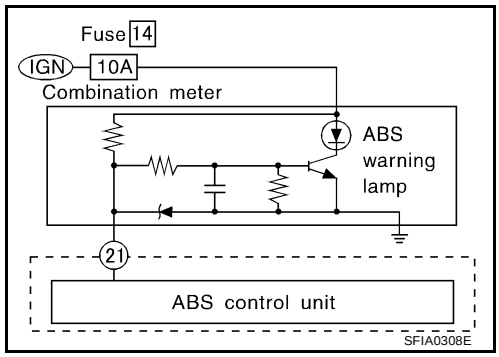

2. CHECK FUSE

Check 10A fuse No. 14 for warning lamp. For fuse layout, refer to PG-3, "POWER SUPPLY ROUTING CIRCUIT" .

Is fuse OK?

Yes >> GO TO 3.
No >> If fuse is blown, be sure to eliminate cause of problem before installing new fuse.

3. CHECK ABS ACTUATOR AND ELECTRIC UNIT (CONTROL UNIT) POWER SUPPLY CIRCUIT

1. Install 10A fuse.
2. Remove solenoid valve relay.
3. Disconnect connectors from ABS actuator and electric unit (control unit).
4. Check voltage between ABS actuator and electric unit (control unit) connector terminal 21 and ground after turning ignition switch ON.

Does battery voltage exist after turning ignition switch ON?

Yes >> GO TO 5.
No >> GO TO 4.

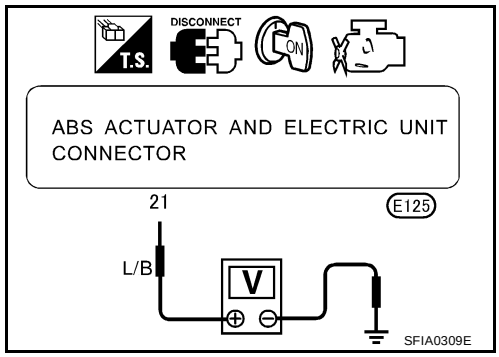

4. CHECK WARNING LAMP INDICATION

Disconnect ABS actuator and electric unit (control unit) connector.

Does the ABS warning lamp activate?

Yes >> GO TO 6.
No >> GO TO 5.

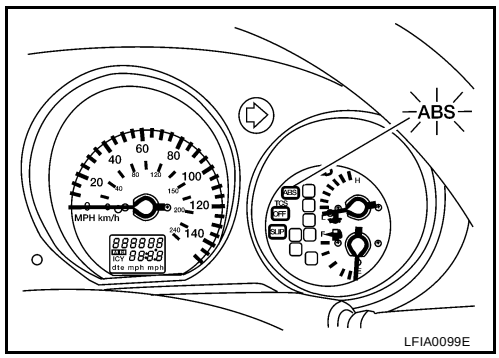

5. CHECK HARNESS FOR SHORT

1. Disconnect ABS actuator and electric unit (control unit) connector.
2. Check voltage between ABS actuator and electric unit (control unit) connector terminal 21 and ground.

Does battery voltage exist?

Yes >> Check combination meter. Refer to DI-4, "COMBINATION METERS" .

No >> Repair harness and connectors between fuse and ABS actuator and electric unit (control unit) connector terminal 21.

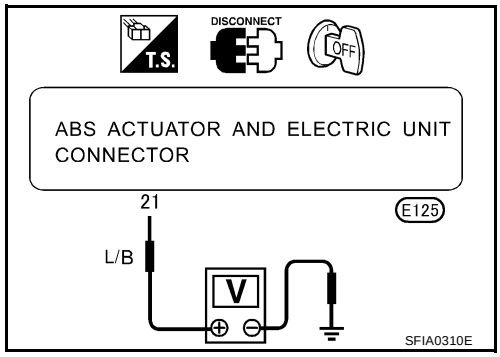

6. CHECK HARNESS CONNECTOR

Check ABS actuator and electric unit (control unit) pin terminals for damage or connection of ABS actuator and electric unit (control unit) harness connector. Reconnect ABS actuator and electric unit (control unit) harness connector. Then reset.

OK >> **INSPECTION END**.

NG >> Replace ABS actuator and electric unit (control unit). Refer to BRC-43, "Removal and Installation" .

7. ABS Warning Lamp Stays On When Ignition Switch Is Turned On

EFS001HK

1. INSPECTION START

ABS actuator and electric unit (control unit) inspection.

>> GO TO 2.

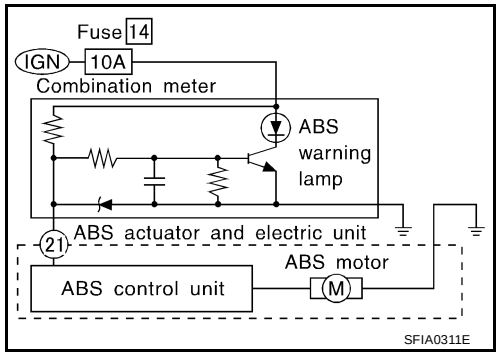

2. CHECK WARNING LAMP

1. Disconnect ABS actuator and electric unit (control unit) connector.
2. Connect suitable wire between ABS actuator and electric unit (control unit) connector terminal 21 and ground.

Does warning lamp activate?

Yes >> GO TO 3.
No >> Repair combination meter. Check the following.
- Harness connector E125
- Harness for open or short between ABS actuator and electric unit (control unit) and fuse.
  If NG, repair harness or connector.

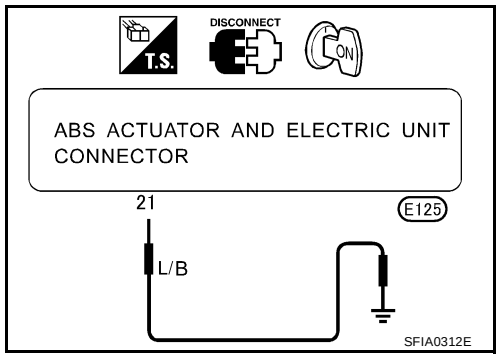

3. CHECK HARNESS CONNECTOR

Check ABS actuator and electric unit (control unit) pin terminals for damage or the connection of ABS actuator and electric unit (control unit) harness connector. Reconnect ABS actuator and electric unit (control unit) harness connector. Then retest.

OK >> **INSPECTION END**.
NG >> GO TO 4.

4. CHECK ABS MOTOR GROUND

1. Turn ignition switch OFF.
2. Check continuity between ABS motor and ground.

Does continuity exist?

Yes >> Replace ABS actuator and electric unit (control unit).
No >> Check the following.
- ABS motor ground harness
- ABS motor ground harness for open or short between ABS motor and ground
  If NG, repair harness.

WHEEL SENSORS

PFP:47910

Removal and Installation

EFS001HL

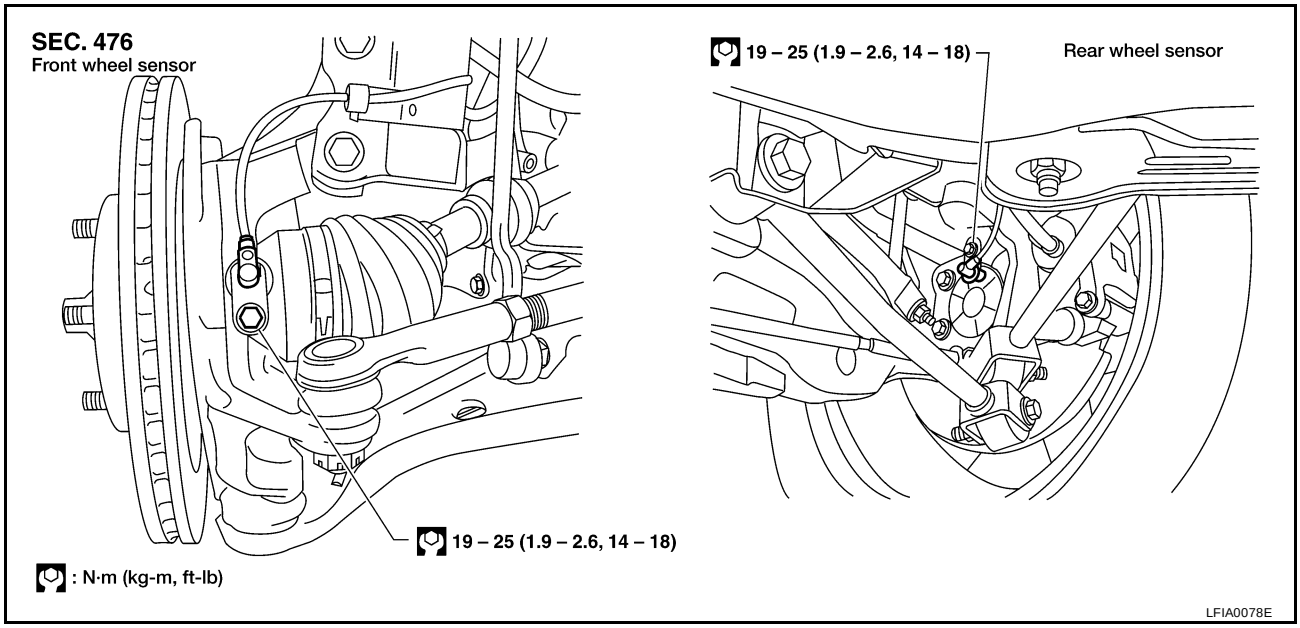

CAUTION:

Be careful not to damage sensor edge and sensor rotor teeth.

When removing the front or rear wheel hub assembly, first remove the ABS wheel sensor from the assembly. Failure to do so may result in damage to the sensor wires making the sensor inoperative.

CAUTION:

Pull out the sensor being careful to turn it as little as possible. Do not pull on the sensor harness. Installation should be performed while paying attention to the following, and then tighten mounting bolts and nuts to the specified torque.

- **Check if foreign objects such as iron fragments are adhered to the pick-up part of the sensor or to the inside of the hole for mounting the sensor, or if a foreign object is caught in the surface of the mounting for the rotor. If something wrong is found, fix it and then install the sensor.**

SENSOR ROTOR

PFP:47970

Removal and Installation

EFS001HM

NOTE:
The rear wheel sensor rotor is built into the rear wheel hub. For removal and installation procedure, refer to RAX-6, "Removal and Installation" .

REMOVAL

1. Remove the front wheel hub. Refer to FAX-6, "Removal and Installation" .
2. Remove the sensor rotor using suitable puller.

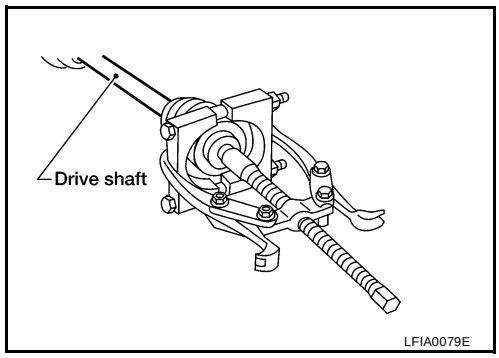

INSTALLATION

Install the sensor rotor using a hammer and a wooden block.

- Always replace sensor rotor with new one.

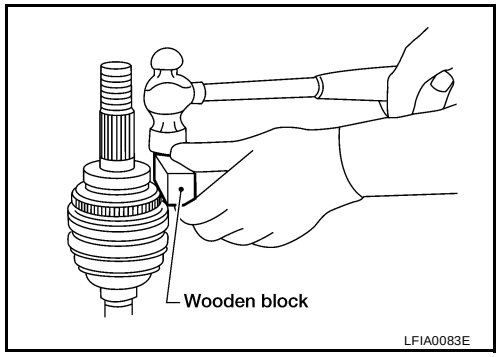

ACTUATOR AND ELECTRIC UNIT (ASSEMBLY)

PFP:47660

Removal and Installation

EFS001HN

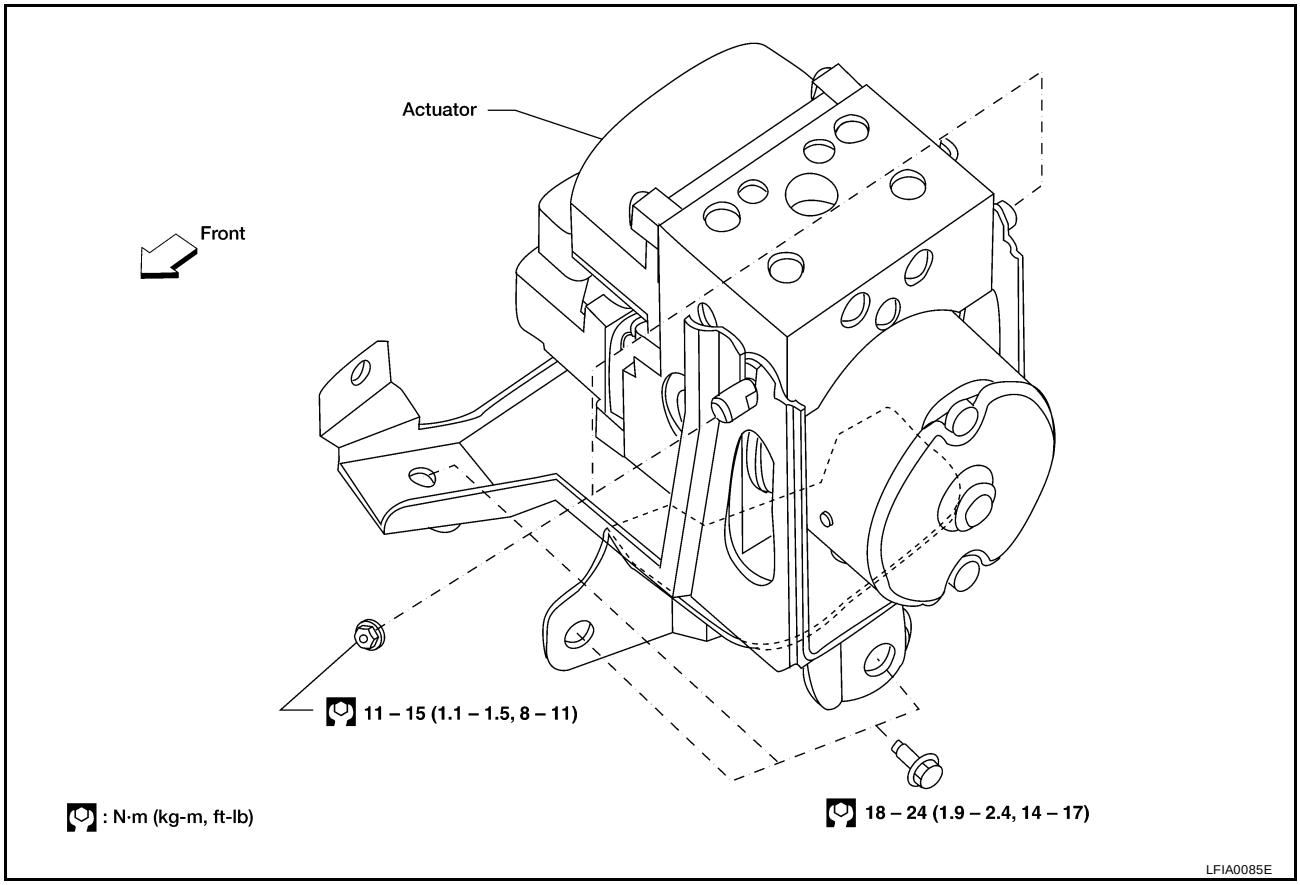

REMOVAL

1. Disconnect battery cable.
2. Remove windshield wiper motor and linkage assembly. Refer to WW-25, "REMOVAL" .
3. Drain brake fluid. Refer to BR-9, "Changing Brake Fluid" .
4. Disconnect harness connectors from ABS actuator and electric unit (control unit).
5. Disconnect brake pipes.
6. Remove fixing nuts and bolts for ABS actuator and electric unit (control unit) and remove from vehicle.

INSTALLATION

CAUTION:

After installation of ABS actuator and electric unit (control unit), refill brake fluid. Then bleed air from system. Refer to BR-9, "Bleeding Brake System" .

1. Position ABS actuator and electric unit (control unit) in vehicle.
2. Connect brake pipes and fixing nuts temporarily.
3. Tighten fixing nuts, bolts and brake pipes.
4. Connect ABS actuator and electric unit (control unit) harness connectors.
5. Install windshield wiper motor and linkage assembly. Refer to WW-25, "INSTALLATION" .
6. Reconnect battery cable.

PRECAUTIONS

PFP:00001

Precautions for Supplemental Restraint System (SRS) “AIR BAG” and “SEAT BELT PRE-TENSIONER”

EFS001HO

The Supplemental Restraint System such as “AIR BAG” and “SEAT BELT PRE-TENSIONER”, used along with a front seat belt, helps to reduce the risk or severity of injury to the driver and front passenger for certain types of collision. Information necessary to service the system safely is included in the SRS and SB section of this Service Manual.

WARNING:

- **To avoid rendering the SRS inoperative, which could increase the risk of personal injury or death in the event of a collision which would result in air bag inflation, all maintenance must be performed by an authorized NISSAN/INFINITI dealer.**
- **Improper maintenance, including incorrect removal and installation of the SRS, can lead to personal injury caused by unintentional activation of the system. For removal of Spiral Cable and Air Bag Module, see the SRS section.**
- **Do not use electrical test equipment on any circuit related to the SRS unless instructed to in this Service Manual. SRS wiring harnesses can be identified by yellow and/or orange harness connectors.**

Precautions for Brake System

EFS001HP

CAUTION:

- **Recommended fluid is brake fluid “DOT 3”.**
- **Never reuse drained brake fluid.**
- **Be careful not to splash brake fluid on painted areas; it may cause paint damage. If brake fluid is splashed on painted areas, wash it away with water immediately.**
- **To clean or wash all parts of master cylinder and disc brake caliper, use clean brake fluid.**
- **Never use mineral oils such as gasoline or kerosene. They will ruin rubber parts of the hydraulic system.**
- **Use flare nut wrench when removing and installing brake tube.**
- **If a brake fluid leak is found, the part must be disassembled without fail. Then it has to be replaced with a new one if a defect exists.**
- **Turn the ignition switch OFF and remove the connector of the ABS actuator control unit or the battery terminal before performing the work.**
- **Always torque brake lines when installing.**
- **Burnish the brake contact surfaces after refinishing or replacing rotors, after replacing pads, or if a soft pedal occurs at very low mileage.**
  Refer to BR-25, "Brake Burnishing Procedure"

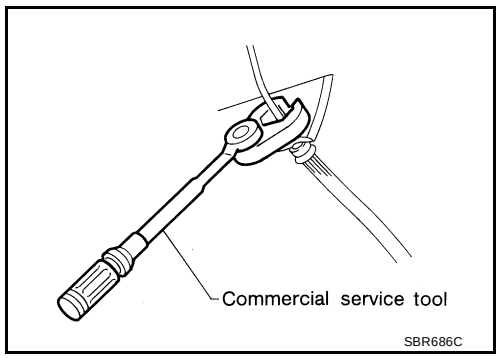

WARNING:

- **Clean brake pads and shoes with a waste cloth, then wipe with a dust collector.**

Wiring Diagrams and Trouble Diagnosis

EFS001HQ

When you read wiring diagrams, refer to the following:

- GI-12, "How to Read Wiring Diagrams"
- PG-3, "POWER SUPPLY ROUTING CIRCUIT"

When you perform trouble diagnosis, refer to the following:

- GI-10, "HOW TO FOLLOW TEST GROUPS IN TROUBLE DIAGNOSES"
- GI-25, "How to Perform Efficient Diagnosis for an Electrical Incident"

GENERAL INFORMATION

PFP:00000

Description

EFS001HR

PURPOSE

The ABS consists of electronic and hydraulic components. It allows for control of braking force so that locking of the wheels can be avoided.

The ABS:

- Ensures proper tracking performance through steering wheel operation.
- Enables obstacles to be avoided through steering wheel operation.
- Ensures vehicle stability by preventing flat spins.

ABS (ANTI-LOCK BRAKE SYSTEM) OPERATION

- When the vehicle speed is less than 10 km/h (6 MPH) this system does not work.
- The Anti-Lock Brake System (ABS) has self-test capabilities. The system turns on the ABS warning lamp for 1 second after turning the ignition switch ON. The system performs another test the first time the vehicle reaches 6 km/h (4 MPH). A mechanical noise may be heard as the ABS performs a self-test. This is a normal part of the self-test feature. If a malfunction is found during this check, the ABS warning lamp will come on.
- During ABS operation, a mechanical noise may be heard. This is a normal condition.

TCS (TRACTION CONTROL SYSTEM) OPERATION

- This system is designed to limit wheel slip during acceleration by cutting fuel to selected engine cylinders and changing the transmission shift schedule.
  The ABS actuator and electric unit (control unit) monitors wheel speed slips through the ABS wheel speed sensors and determines the desired torque reduction needed to minimize wheel spin.
  The torque reduction by the ABS actuator and electric unit (control unit) may result in a combination of fuel cutoff and transmission shift timing adjustments.
  The torque reduction is sent from the ABS actuator and electric unit (control unit) through the CAN (Controller Area Network) to the ECM and the TCM. The ECM will cut fuel and/or the TCM will change transmission shift schedule to achieve torque reduction.
  The TCS will be enabled when the TCS switch is in the ON position (TCS OFF indicator not illuminated), and if the catalytic converter temperature is within the normal operating range.
- During TCS operation, the system informs the driver of system operation by flashing the SLIP indicator lamp.
- This system has a self-diagnostic function. When the ignition switch is initially turned ON, the SLIP indicator lamp and TCS OFF indicator lamp will illuminate. If the ABS/TCS system is operating correctly, both indicator lamps will go out as soon as the engine starts.
- The TCS OFF switch cancels the TCS function. The TCS OFF indicator lamp then illuminates to indicate that the TCS system is not operating.
- This system utilizes a fuel-cut function to control drive torque. If fuel cut continues for an extended period of time during high-speed operation, the catalyst may melt and deteriorate. During continued TCS operation, the system will sometimes suspend the drive torque control function, preventing catalyst damage.

Fail Safe

EFS001HS

If trouble occurs in the ABS, the ABS warning lamp in the meter comes on. At the same time, the vehicle stops the ABS control and braking becomes the same as that of a vehicle without ABS.

Hydraulic Circuit

EFS001HT

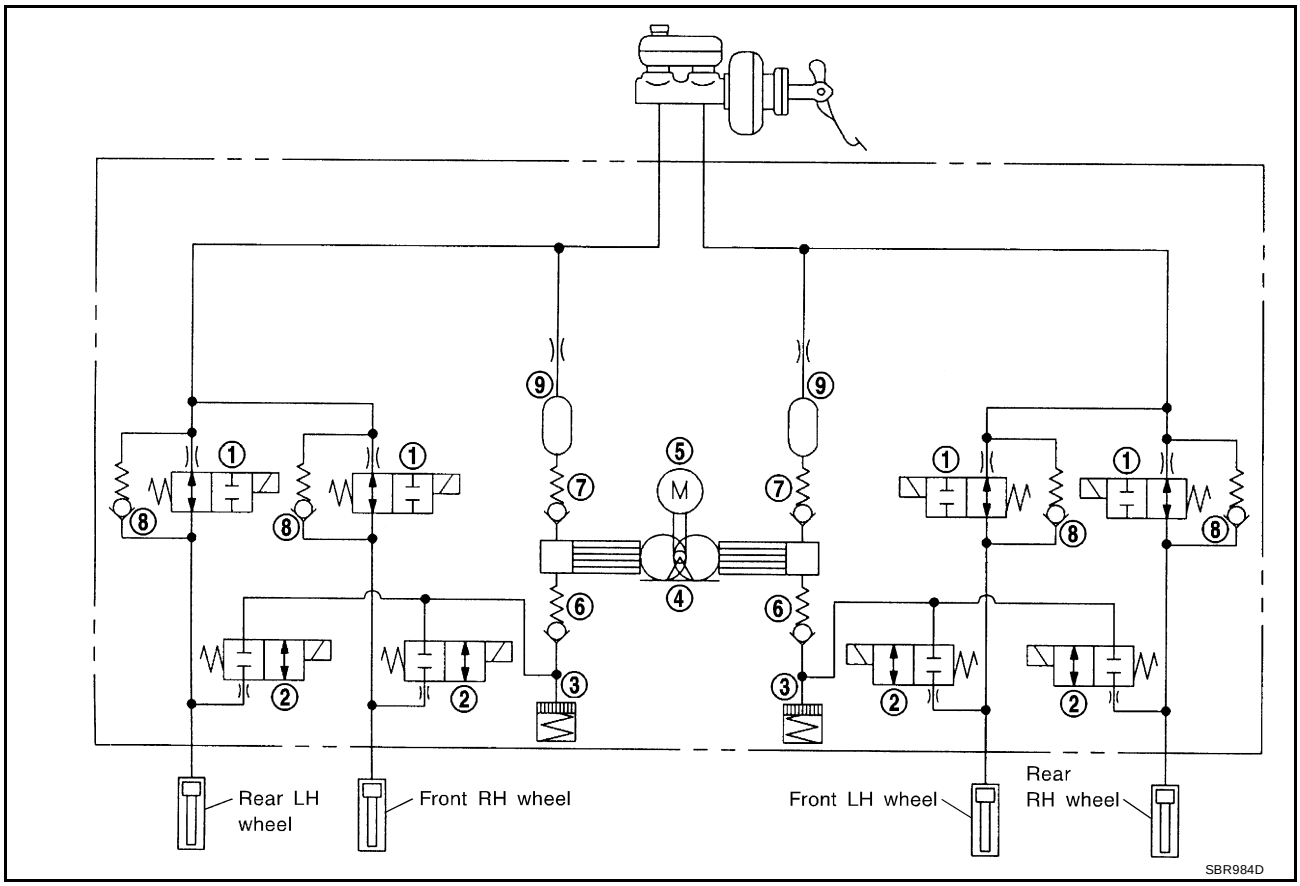

1. Inlet solenoid valve
2. Outlet solenoid valve
3. Reservoir
4. Pump
5. Motor
6. Inlet valve
7. Outlet valve
8. Bypass check valve
9. Damper

System Components

EFS001HU

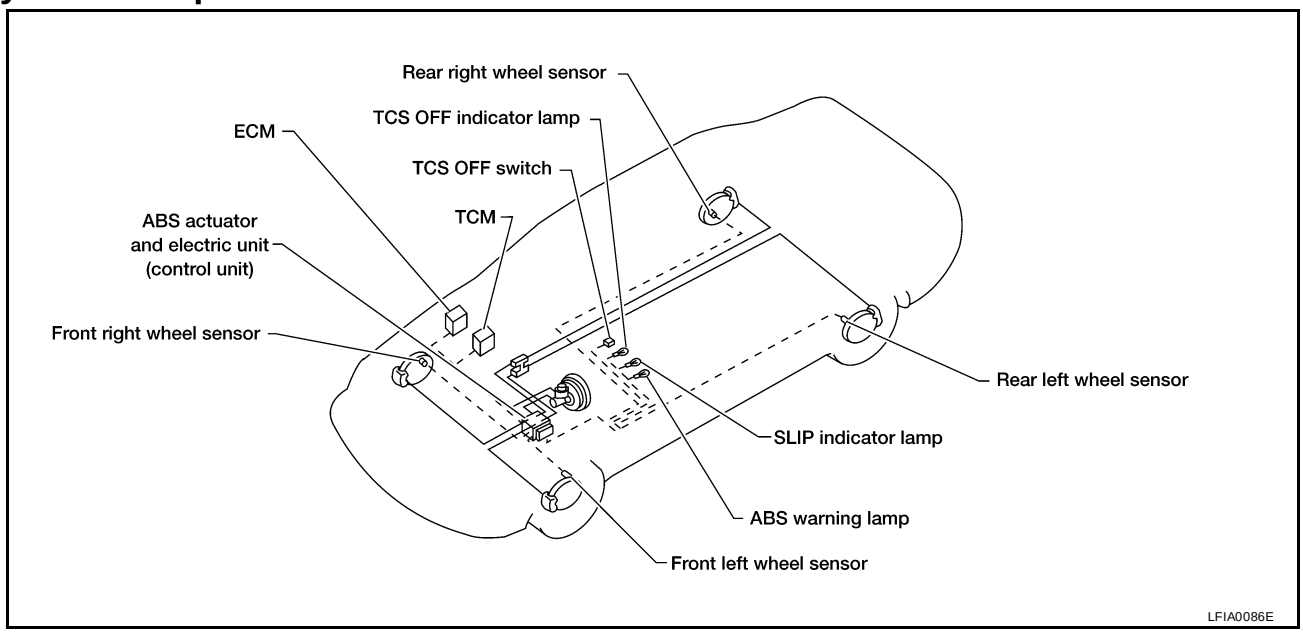

Control Unit

EFS001HV

ABS FUNCTION

The control unit computes the wheel rotating speed by the signal sent from the sensor. Then it supplies a DC current to the actuator solenoid valve. It also controls ON-OFF operation of the valve relay and motor relay. If any electrical malfunction should be detected in the system, the warning lamp is turned on. In this condition, the ABS will be deactivated, and the vehicle's brake system reverts to normal operation.

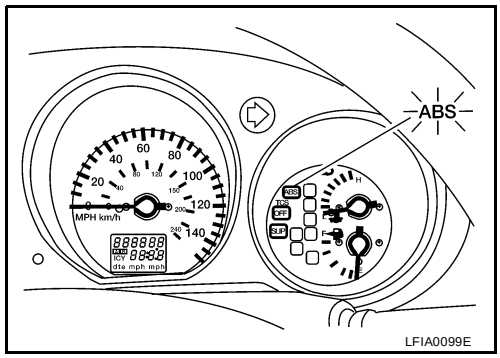

TCS FUNCTION

Drive wheel slippage is detected by the 4-wheel rotating speed signal. When the wheel slip becomes excessive, the TCS operates, causing the SLIP indicator lamp to flash. At the same time, a fuel-cut signal to be sent to the ECM and a signal requiring a change in the shift schedule is sent to the TCM. When the TCS OFF switch is used to cancel TCS function, the TCS OFF indicator lamp will light. (TCS does not activate.) In case of a malfunction in the TCS, both the SLIP indicator lamp and the TCS OFF indicator lamp will light, while shutting down the TCS system operation. The vehicle will operate in the same way as a vehicle not equipped with TCS.

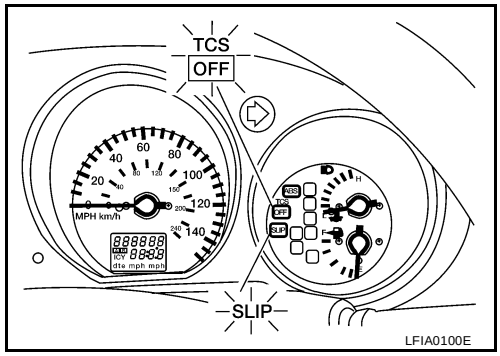

ABS Actuator and Electric Unit

EFS001HW

The ABS actuator and electric unit (control unit) contains:

- An electric motor and pump
- Two relays
- Eight solenoid valves, each inlet and outlet for
  — LH front
  — RH front
  — LH rear
  — RH rear
- ABS control unit

These components control the hydraulic circuit. The ABS actuator and electric unit (control unit) directs the actuator to increase, hold or decrease hydraulic pressure to all or individual wheels. The ABS actuator and control unit (control unit) cannot be disassembled and must be replaced as an assembly.

ABS ACTUATOR OPERATION

		Inlet solenoid valve	Outlet solenoid valve	
Normal brake operation		OFF (Open)	OFF (Closed)	Master cylinder brake fluid pressure is directly transmitted to caliper via the inlet solenoid valve.
ABS operation	Pressure hold	ON (Closed)	OFF (Closed)	Hydraulic circuit is shut off to hold the caliper brake fluid pressure.
	Pressure decrease	ON (Closed)	ON (Open)	Caliper brake fluid is sent to reservoir via the outlet solenoid valve. Then it is pushed up to the master cylinder by pump.
	Pressure increase	OFF (Open)	OFF (Closed)	Master cylinder brake fluid pressure is transmitted to caliper.

Wheel Sensors

EFS001HX

The front sensor units consist of a gear-shaped sensor rotor and a sensor element. the element contains a magnet around which a coil is wound. The front wheel sensors are installed on the front of the wheel knuckles. As the wheel rotates, the sensor generates a square-wave signal. The frequency increases as the wheel speed increases.

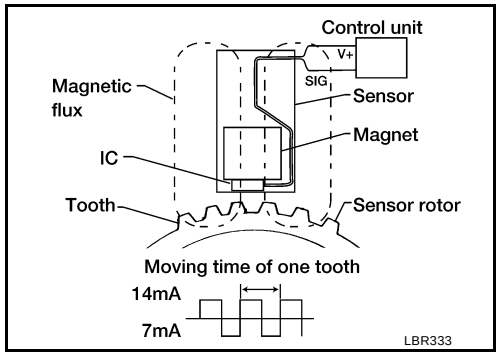

The rear sensor units consist of wheel hubs with a series of internal magnets and a sensor element. The rear wheel sensors are installed on the inner side of the wheel knuckles. As the wheel rotates, the sensor generates a square-wave signal. The frequency increases as the wheel speed increases.

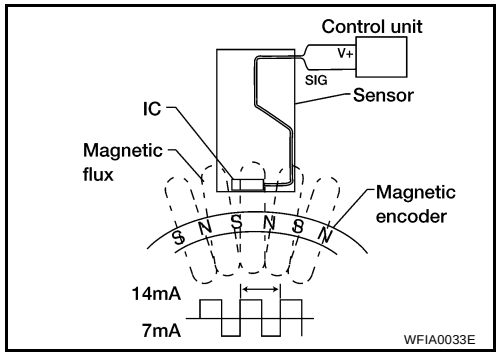

CAN Communication System Description

EFS001HY

CAN (Controller Area Network) is a serial communication line for real time application. It is an on-vehicle multiplex communication line with high data communication speed and excellent error detection ability. Many electronic control units are equipped onto a vehicle, and each control unit shares information and links with other control units during operation (not independent). In CAN communication, control units are connected with 2 communication lines (CAN H line, CAN L line) allowing a high rate of information transmission with less wiring. Each control unit transmits/receives data but selectively reads required data only.

FOR TCS MODELS

System diagram

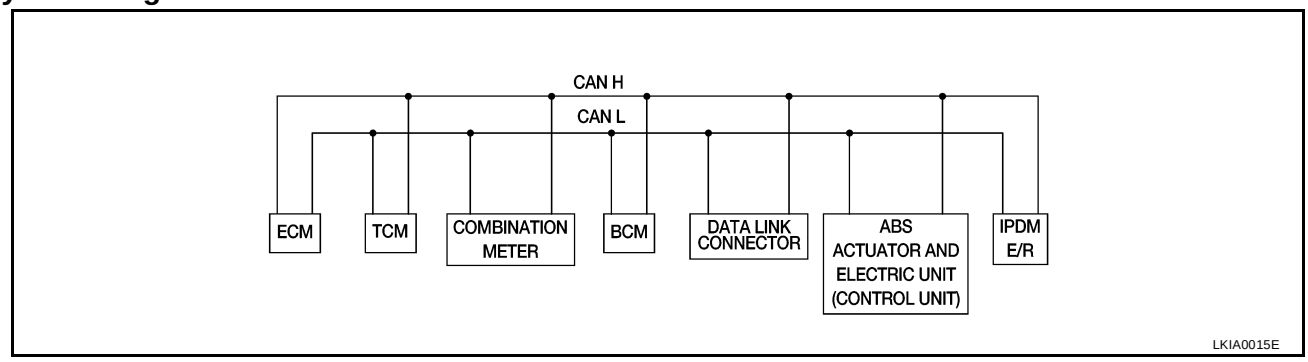

Input/output signal chart

T: Transmit R: Receive

Signals	ECM	TCM	COMBINATION METER	BCM	ABS/TCS control unit	IPDM E/R
Engine speed signal	T		R		R	
Engine coolant temperature signal	T		R			
Accelerator pedal position signal	T					
Fuel consumption monitor signal	T		R			
A/T warning lamp signal		T	R			
A/T position indicator signal	R	T	R	R(R range only)	R	

Signals	ECM	TCM	COMBINATION METER	BCM	ABS/TCS control unit	IPDM E/R
ABS operation signal	R				T	
TCS operation signal	R	R			T	
Air conditioner switch signal	R			T		
Air conditioner compressor signal	R					T
A/C compressor request signal	T					R
Cooling fan motor operation signal	R					T
Cooling fan speed request signal	T					R
Position lights request			R	T		R
Position lights status				R		T
Low beam request				T		R
Low beam status	R			R		T
High beam request			R	T		R
High beam status	R			R		T
Front fog lights request				T		R
Front fog light status				R		T
OD cancel switch signal		R	T			R
Brake switch signal		R	T			
Vehicle speed signal	R		T			
	R		T	R		
Oil pressure switch			R			T
Sleep request1			R	T		
Sleep request2				T		R
N range switch signal		R	T			
P range switch signal		R	T			
Seat belt buckle switch signal			T	R		
Door switch signal			R	T		R
Tail lamp request			R	T		R
Turn indicator signal			R	T		
Buzzer output signal			R	T		
Trunk switch signal			R	T		
ASCD main switch signal	T		R			
ASCD cruise signal	T		R			
Wiper operation				R		T
Wiper stop position signal				R		T
Rear window defogger switch signal				T		R
Rear window defogger control signal	R			R		T

TROUBLE DIAGNOSIS

PFP:00000

How to Perform Trouble Diagnoses for Quick and Accurate Repair

EFS001HZ

INTRODUCTION

The ABS/TCS system has an electronic control unit to control major functions. The control unit accepts input signals from sensors and controls actuator operation. It is also important to check for conventional problems such as air leaks in the booster or lines, lack of brake fluid, or other problems with the brake system.

It is much more difficult to diagnose a problem that occurs intermittently rather than continuously. Most intermittent problems are caused by poor electrical connections or faulty wiring. In this case, careful checking of suspicious circuits may help prevent the replacement of good parts.

A visual check only may not find the cause of the problem, so a road test should be performed.

Before undertaking actual checks, take just a few minutes to talk with a customer who approaches with an ABS/TCS complaint. The customer is a very good source of information on such problems, especially intermittent ones. Through the talks with the customer, find out what symptoms are present and under what conditions they occur.

Start your diagnosis by looking for “conventional” problems first. This is one of the best ways to troubleshoot brake problems on an ABS/TCS controlled vehicle. Also check related Service Bulletins for information.

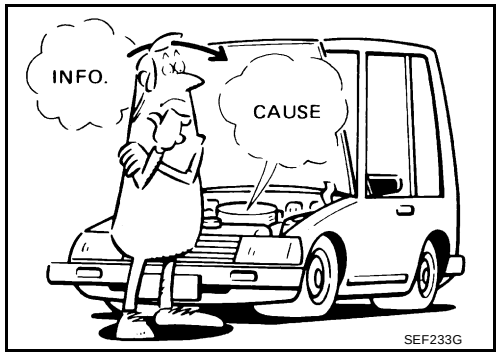

SEF233G

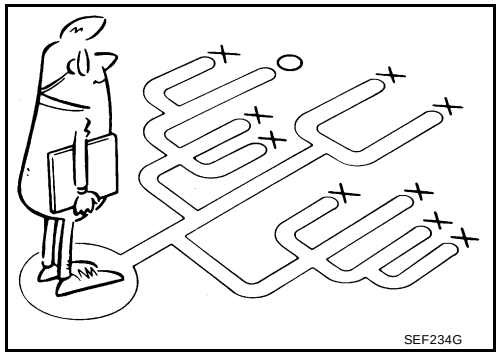
SEF234G

WORK FLOW

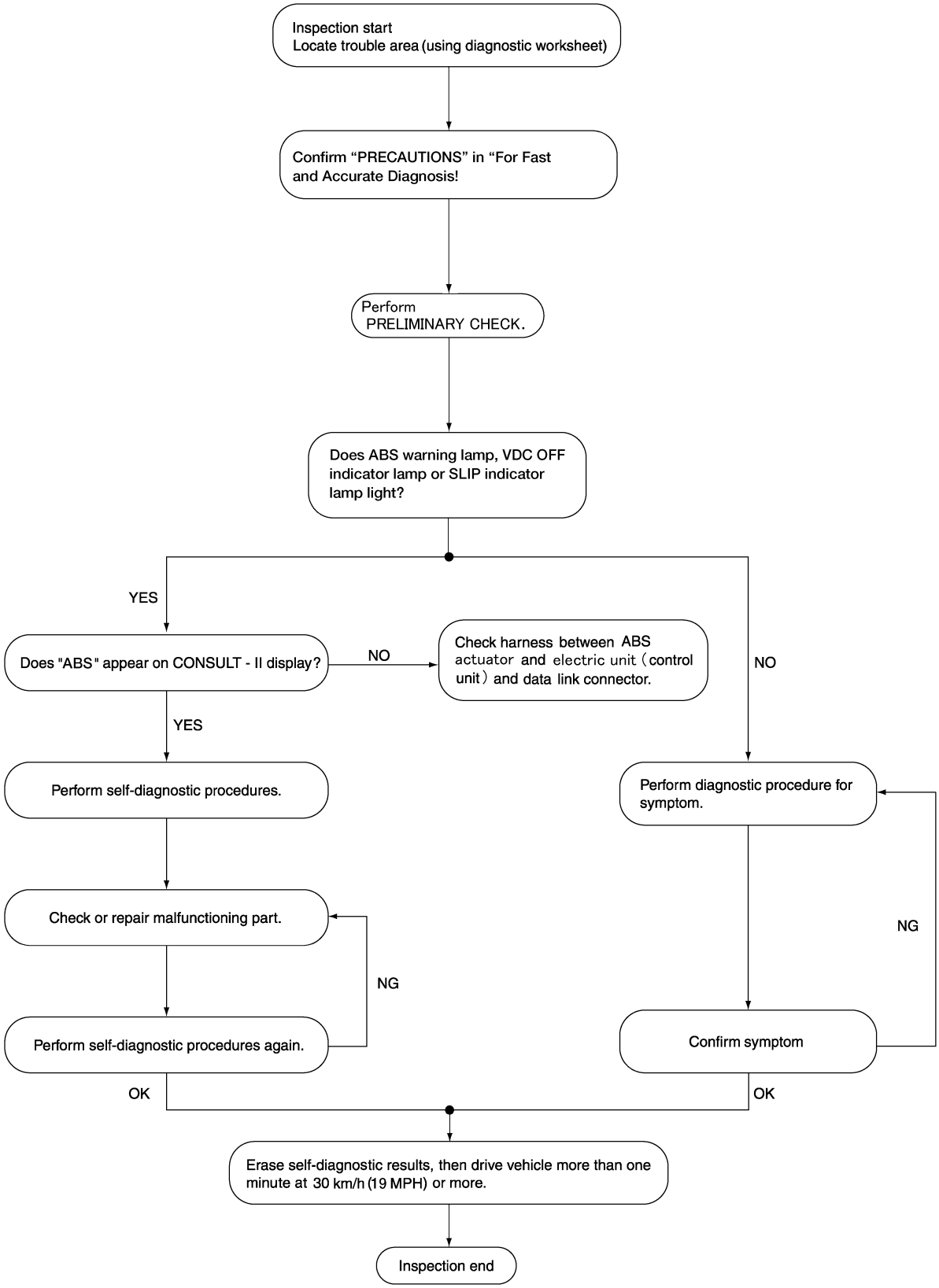

LFIA0199E

ASKING COMPLAINTS

- Complaints against a malfunction vary depending on each person. It is important to clarify the customer complaints.
- Ask the customer about what symptoms are present under what conditions. Use the information to reproduce the symptom while driving.
- It is also important to use the diagnosis sheet to understand what type of trouble the customer is having.

KEY POINTS

WHAT ..... Vehicle model
WHEN ..... Date, Frequencies
WHERE ..... Road conditions
HOW ..... Operating conditions, Weather conditions, Symptoms

SBR339B

EXAMPLE OF DIAGNOSIS SHEET

Customer name MR/MS	Model & Year	VIN	
Engine #	Trans.	Mileage	
Incident Date	Manuf. Date	In Service Date	
Symptoms	☐ Noise and vibration (from engine compartment) ☐ Noise and vibration (from axle)	☐ Warning / Indicator activate	☐ Firm pedal operation Large stroke pedal operation
	☐ TCS does not work (Front wheels slip when accelerating)	☐ ABS does not work. (wheels slip when braking)	☐ Lack of sense of acceleration
Engine conditions	☐ When starting ☐ After starting		
Road conditions	☐ Low friction road (☐Snow ☐Gravel ☐Other) ☐ Bumps / potholes		
Driving conditions	☐ Full-acceleration ☐ High speed cornering ☐ Vehicle speed: Greater than 10 km/h (6 MPH) ☐ Vehicle speed: 10 km/h (6 MPH) or less ☐ Vehicle is stopped		
Applying brake conditions	☐ Suddenly ☐ Gradually		
Other conditions	☐ Operation of electrical equipment ☐ Shift change ☐ Other descriptions		

LFIA0198E

Component Parts and Harness Connector Location

EFS001I0

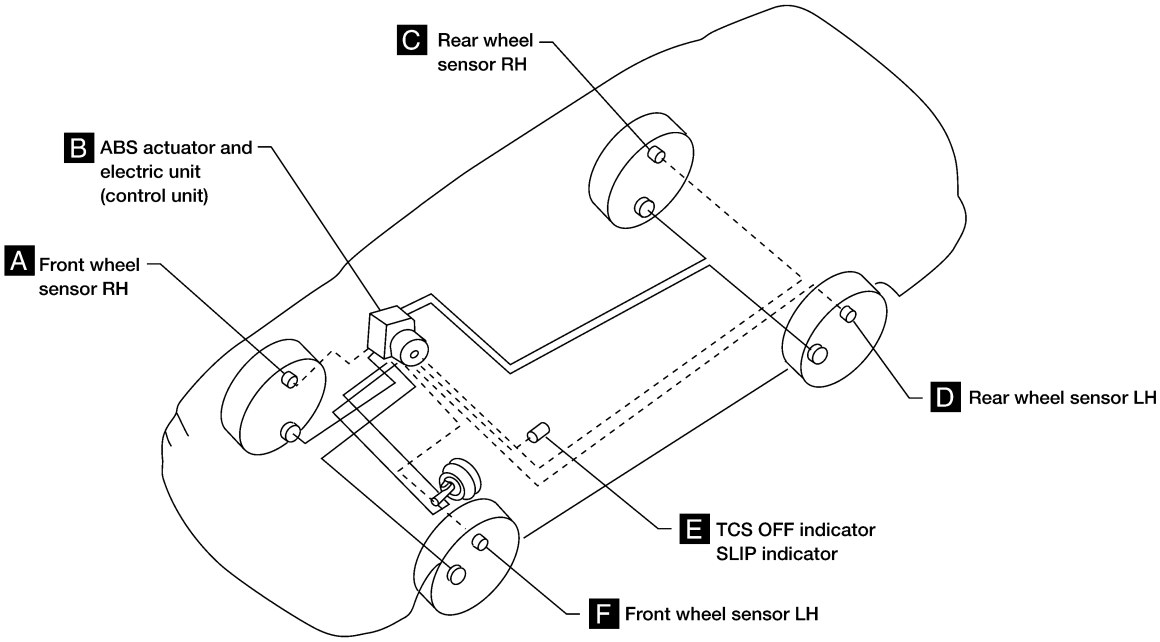

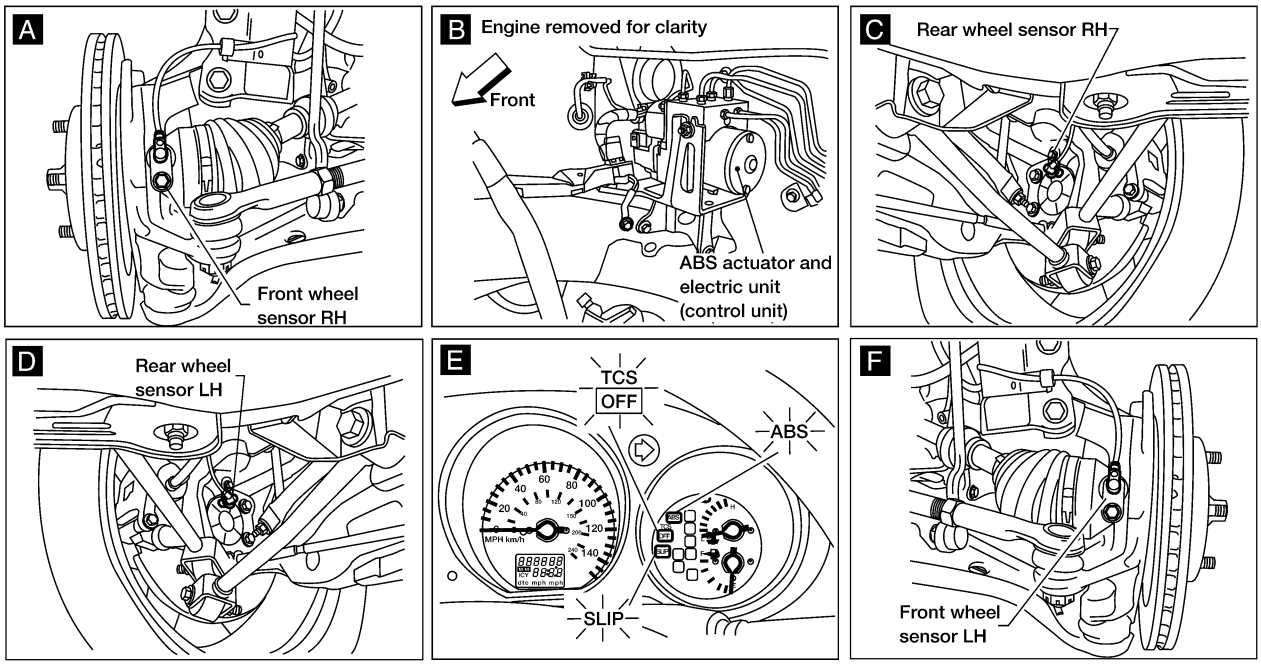

LFIA0102E

Schematic

EFS001I1

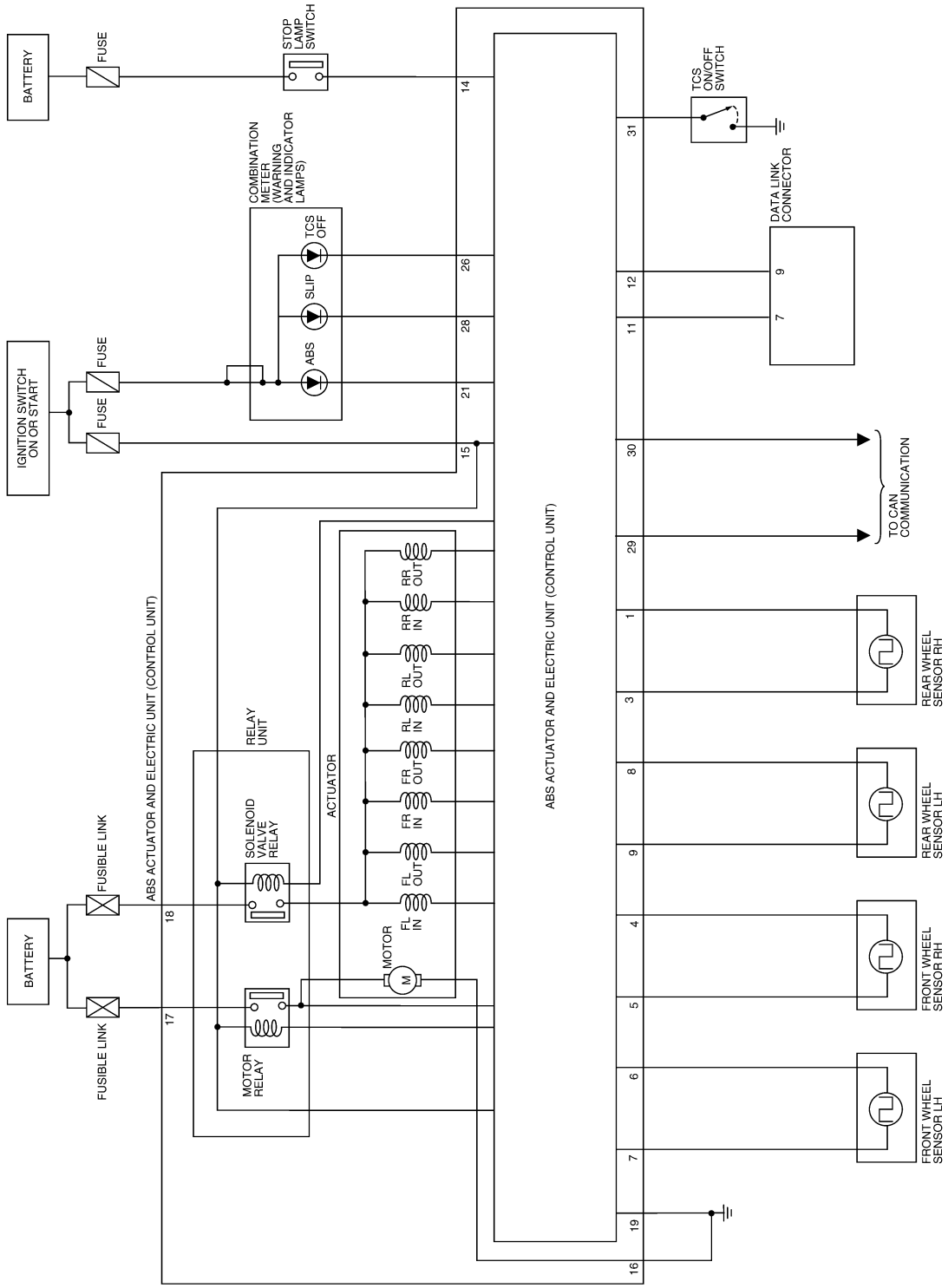

LFWA0013E

Wiring Diagram — TCS —

EFS001I2

BRC-TCS-01

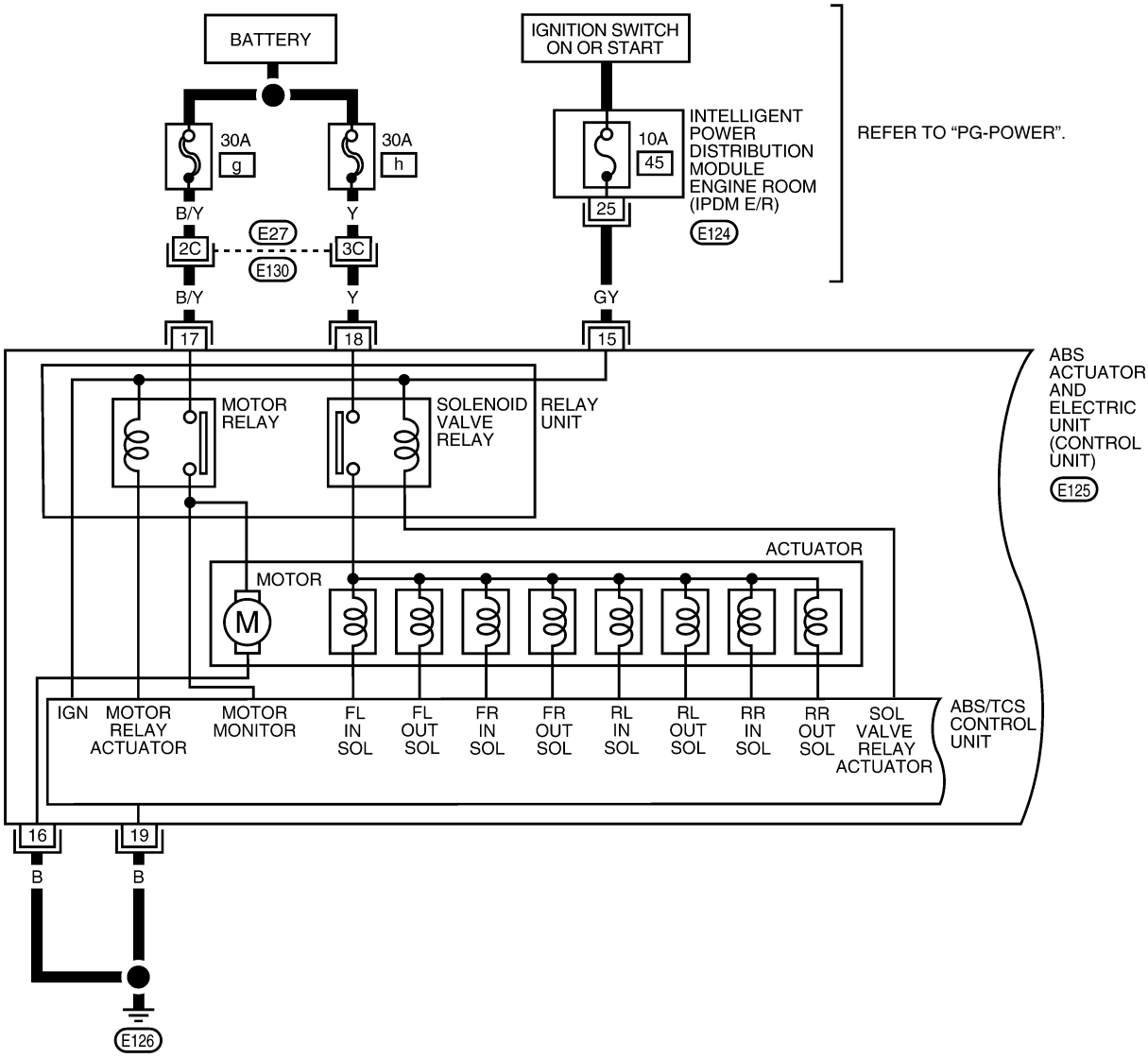

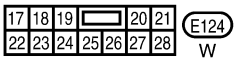

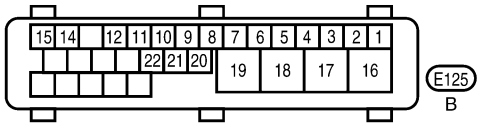

REFER TO THE FOLLOWING.

E130 - SUPER MULTIPLE JUNCTION (SMJ)

LFWA0050E

BRC-TCS-02

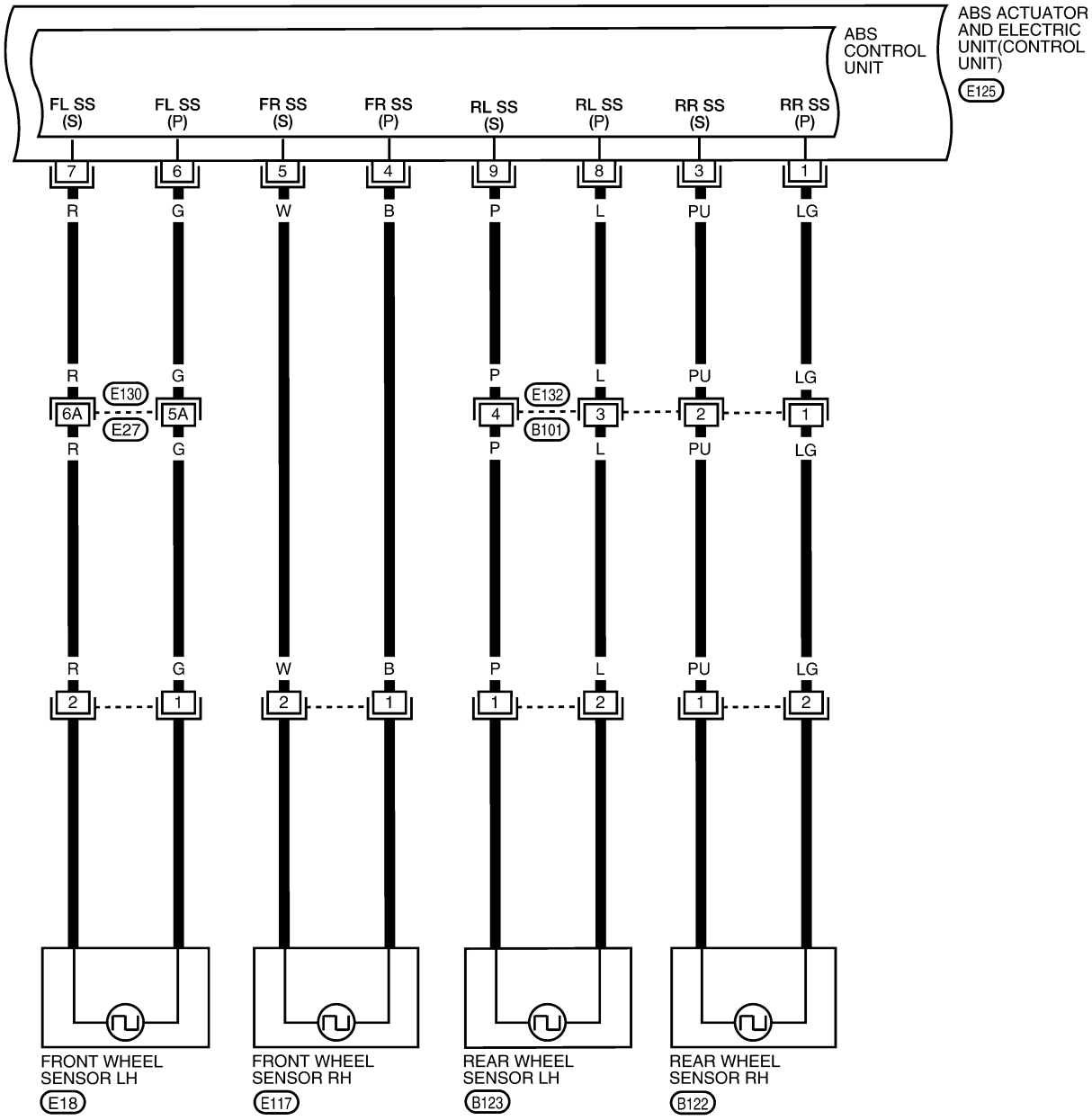

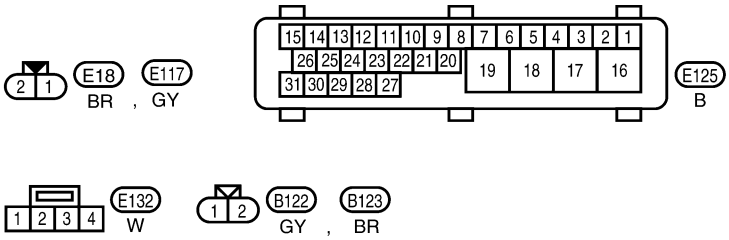

REFER TO THE FOLLOWING.

E130 - SUPER MULTIPLE JUNCTION (SMJ)

LFWA0051E

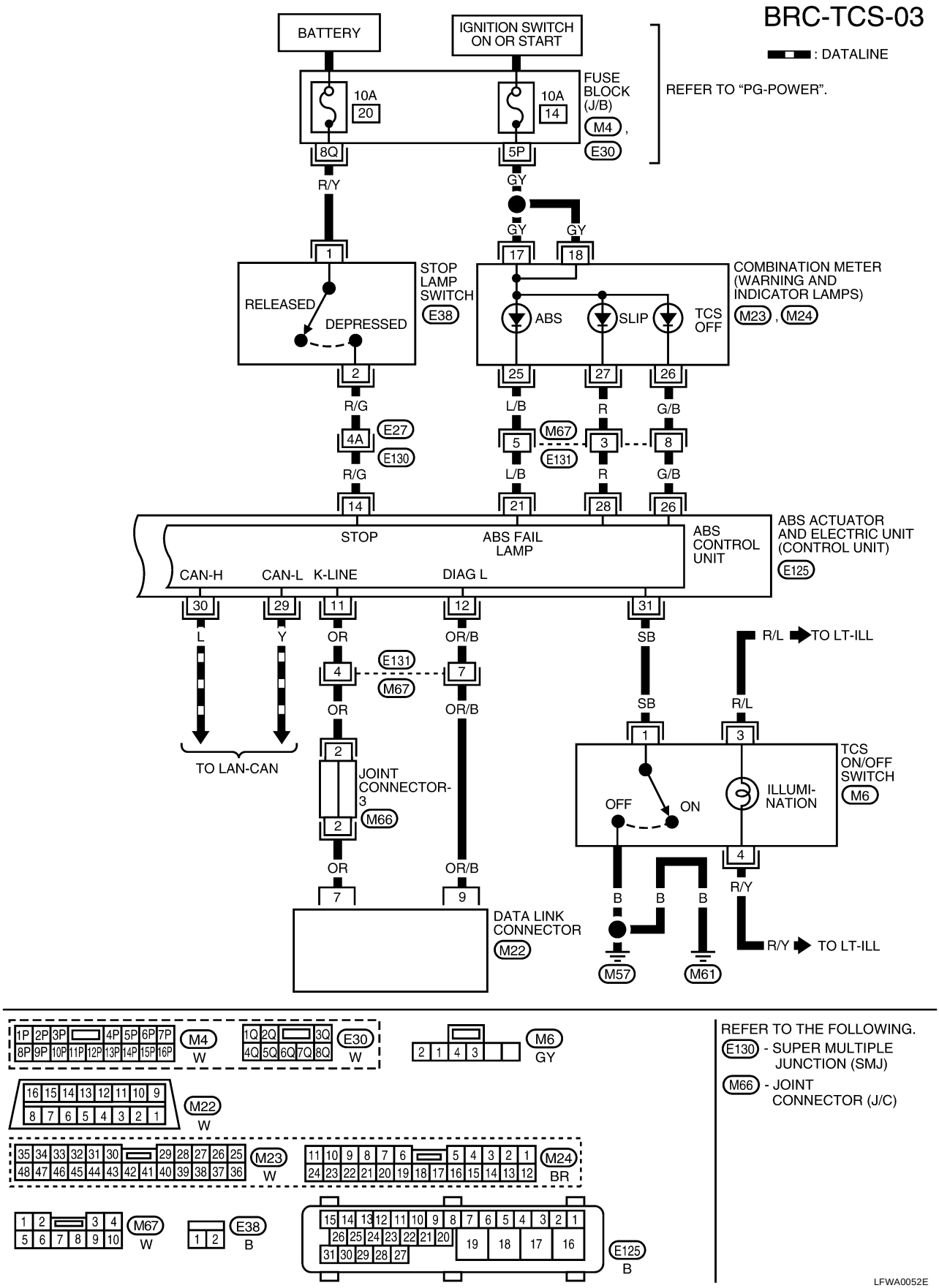
BRC-TCS-03
: DATALINE
BATTERY
IGNITION SWITCH ON OR START
FUSE BLOCK (J/B)
M4
E30
REFER TO "PG-POWER".
10A
20
10A
14
8Q
5P
R/Y
GY
GY
GY
1
17
18
STOP LAMP SWITCH
E38
RELEASED
DEPRESSED
COMBINATION METER (WARNING AND INDICATOR LAMPS)
ABS
SLIP
TCS OFF
M23
M24
2
25
27
26
R/G
L/B
R
G/B
4A
E27
E130
5
M67
E131
3
8
R/G
L/B
R
G/B
14
21
28
26
STOP
ABS FAIL LAMP
ABS CONTROL UNIT
ABS ACTUATOR AND ELECTRIC UNIT (CONTROL UNIT)
E125
CAN-H
CAN-L
K-LINE
DIAG L
30
29
11
12
31
L
Y
OR
OR/B
SB
R/L
TO LT-ILL
4
E131
M67
7
OR
OR/B
SB
R/L
1
3
TO LAN-CAN
2
JOINT CONNECTOR-3
M66
2
TCS ON/OFF SWITCH
M6
OFF
ON
ILLUMI-NATION
4
OR
OR/B
R/Y
7
9
B
B
B
DATA LINK CONNECTOR
M22
R/Y
TO LT-ILL
M57
M61
M4
W
E30
W
M6
GY
M22
W
M23
W
M24
BR
M67
W
E38
B
E125
B
REFER TO THE FOLLOWING.
E130 - SUPER MULTIPLE JUNCTION (SMJ)
M66 - JOINT CONNECTOR (J/C)
LFWA0052E

CONSULT–II Function

EFS001I3

CONSULT-II APPLICATION TO ABS/TCS

ITEM	SELF-DIAGNOSTIC RESULTS	DATA MONITOR	ACTIVE TEST
Front right wheel sensor	X	X	—
Front left wheel sensor	X	X	—
Rear right wheel sensor	X	X	—
Rear left wheel sensor	X	X	—
ABS sensor	X	—	—
Stop lamp switch	—	X	—
Front right inlet solenoid valve	X	X	X
Front right outlet solenoid valve	X	X	X
Front left inlet solenoid valve	X	X	X
Front left outlet solenoid valve	X	X	X
Rear right inlet solenoid valve	X	X	X
Rear right outlet solenoid valve	X	X	X
Rear left inlet solenoid valve	X	X	X
Rear left outlet solenoid valve	X	X	X
Actuator solenoid valve relay	X	X	—
Actuator motor relay	X	X	—
ABS warning lamp	—	X	—
Battery voltage	X	X	—
Control unit	X	—	—
Engine speed signal	X	X	—
ABS motor	X	X	X
A/T gear position signal	—	X	—
TCS OFF indicator lamp	—	X	—
SLIP indicator lamp	—	X	—
ECM	X	—	—
CAN communication circuit	X	—	—

X: Applicable
—: Not applicable

ECU (ABS/TCS Control Unit) Part Number Mode

Ignore the ECU part number displayed in the ECU PART NUMBER MODE. Refer to parts catalog to order the ECU.

SELF-DIAGNOSIS PROCEDURE

1. Turn ignition switch OFF.
2. Connect CONSULT-II to data link connector.

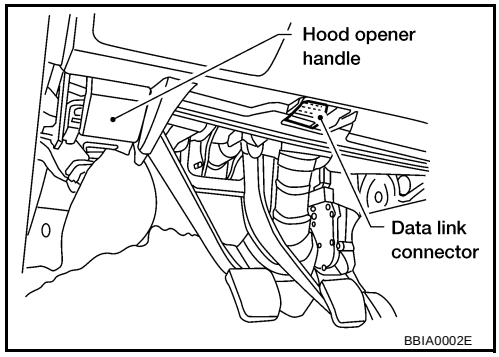

3. Start engine.
4. Drive vehicle over 30 km/h (19 MPH) for at least one minute.
5. Stop vehicle with engine running and touch “START” on CONSULT-II screen.

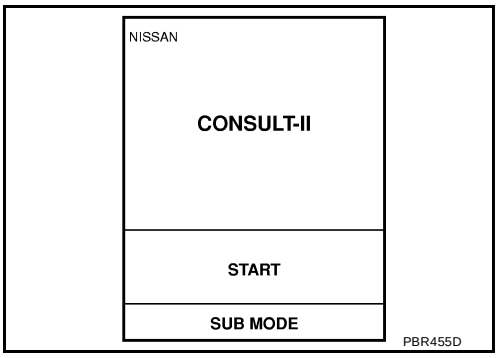

6. Touch “ABS”.

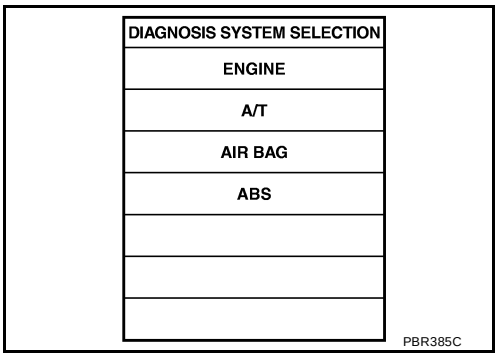

7. Touch “SELF-DIAG RESULTS”.
   - The screen shows the detected malfunction and how many times the ignition switch has been turned since the malfunction.

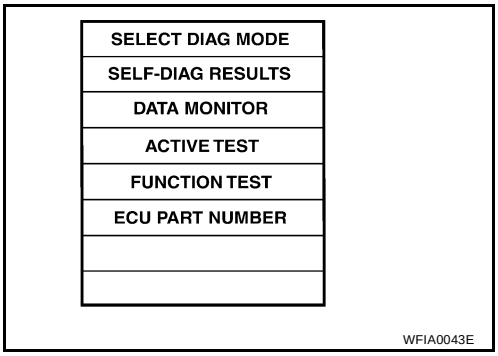

8. Make the necessary repairs following the diagnostic procedures.
9. After the malfunctions are repaired, erase the self-diagnostic results stored in the control unit by touching “ERASE”.
10. Check ABS warning lamp for deactivation after driving vehicle over 30 km/h (19 MPH) for at least one minute.

NOTE:
“SELF-DIAG RESULTS” screen shows the detected malfunction and how many times the ignition switch has been turned since the malfunction.

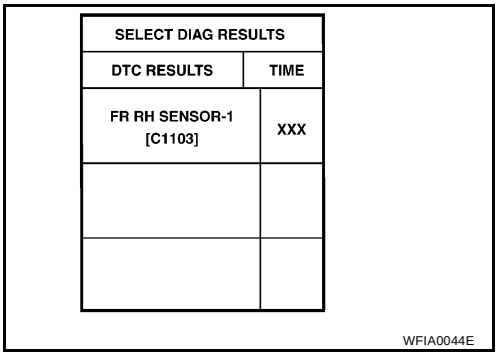

SELF-DIAGNOSTIC RESULTS MODE

Diagnostic item	Diagnosed condition	Diagnostic item is detected when ...	Reference Page
FR RH SENSOR-1 [C1103]*1	Open	● Circuit for front right wheel sensor is open.	BRC-71
FR LH SENSOR-1 [C1104]*1	Open	● Circuit for front left wheel sensor is open.	BRC-71
RR RH SENSOR-1 [C1101]*1	Open	● Circuit for rear right wheel sensor is open.	BRC-71
RR LH SENSOR-1 [C1102]*1	Open	● Circuit for rear left wheel sensor is open.	BRC-71
FR RH SENSOR-2 [C1107]*1	Short	● Circuit for front right wheel sensor is shorted.	BRC-71
FR LH SENSOR-2 [C1108]*1	Short	● Circuit for front left wheel sensor is shorted.	BRC-71
RR RH SENSOR-2 [C1105]*1	Short	● Circuit for rear right wheel sensor is shorted.	BRC-71
RR LH SENSOR-2 [C1106]*1	Short	● Circuit for rear left wheel sensor is shorted.	BRC-71
ABS SENSOR [C1115]	Abnormal signal	● Teeth damage on sensor rotor or improper installation of wheel sensor.	BRC-71
FR RH IN ABS SOL [C1122]	Abnormal (Open, Short)	● Circuit for front right inlet solenoid valve is open or shorted. (An excessively high or low output voltage is entered.)	BRC-74
FR LH IN ABS SOL [C1120]	Abnormal (Open, Short)	● Circuit for front left inlet solenoid valve is open or shorted. (An excessively high or low output voltage is entered.)	BRC-74
FR RH OUT ABS SOL [C1123]	Abnormal (Open, Short)	● Circuit for front right outlet solenoid valve is open or shorted. (An excessively high or low output voltage is entered.)	BRC-74
FR LH OUT ABS SOL [C1121]	Abnormal (Open, Short)	● Circuit for front left outlet solenoid valve is open or shorted. (An excessively high or low output voltage is entered.)	BRC-74
RR RH IN ABS SOL [C1126]	Abnormal (Open, Short)	● Circuit for rear right inlet solenoid valve is open or shorted. (An excessively high or low output voltage is entered.)	BRC-74
RR LH IN ABS SOL [C1124]	Abnormal (Open, Short)	● Circuit for rear left inlet solenoid valve is open or shorted. (An excessively high or low output voltage is entered.)	BRC-74
RR RH OUT ABS SOL [C1127]	Abnormal (Open, Short)	● Circuit for rear right outlet solenoid valve is open or shorted. (An excessively high or low output voltage is entered.)	BRC-74
RR LH OUT ABS SOL [C1125]	Abnormal (Open, Short)	● Circuit for rear left outlet solenoid valve is open or shorted. (An excessively high or low output voltage is entered.)	BRC-74
MAIN RELAY [C1114]	Abnormal	● Actuator solenoid valve relay is ON, even if control unit sends off signal. ● Actuator solenoid valve relay is OFF, even if control unit sends on signal.	BRC-77
PUMP MOTOR [C1111]	Abnormal	● Circuit for actuator motor is open or shorted. ● Actuator motor relay is stuck.	BRC-77
BATTERY VOLTAGE [ABNORMAL] [C1109]	High or Low	● Power source voltage supplied to ABS control unit is abnormally high or low.	BRC-78
CONTROLLER FAILURE*2 [C1110]	Control Unit	● Function of calculation in ABS control unit has malfunctioned.	BRC-80
ENG SIG 1 [C1130]	Abnormal	● Fuel cut control abnormal.	BRC-71
ENG SIG 2 [C1131]	Abnormal	● Electric throttle control abnormal.	BRC-71
ENG SIG 3 [C1132]	Abnormal	● ECM CAN communication abnormal.	BRC-71

Diagnostic item	Diagnosed condition	Diagnostic item is detected when ...	Reference Page
ENG SIG 4 [C1133]	Abnormal	● ECM communication to ABS actuator and electric unit (control unit) abnormal.	BRC-71
A/T SYSTEM [C1135]	Abnormal	● A/T data from TCM abnormal or not present.	BRC-71
CAN COMM CIRCUIT [U1000]	CAN Communication Failure	● CAN communication line is open or shorted.	BRC-71

*1: Be sure to confirm the ABS warning lamp illuminates when the ignition switch is turned ON after repairing the shorted sensor circuit, but the lamp goes out when driving the vehicle over 30 km/h (19 MPH) for one minute in accordance with SELF-DIAGNOSIS PROCEDURE.
*2: When "CONTROLLER FAILURE" is displayed, check to see if the ABS warning lamp is burned out, and check the circuit between the ABS warning lamp and ABS actuator and electric unit (control unit) for open or short. Then check the ABS actuator and electric unit (control unit) and circuit.

DATA MONITOR PROCEDURE

1. Turn ignition switch OFF.
2. Connect CONSULT-II to data link connector.

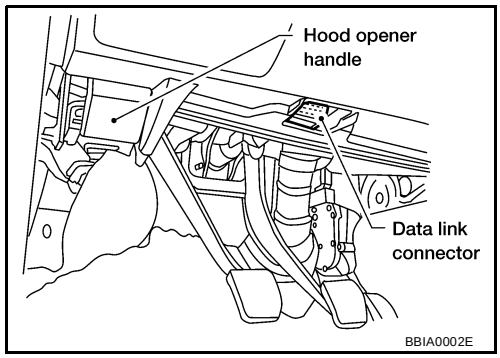

3. Turn ignition switch ON.
4. Touch “START” on CONSULT-II screen.

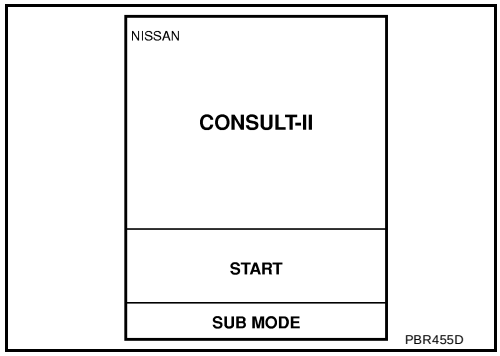

5. Touch “ABS”.

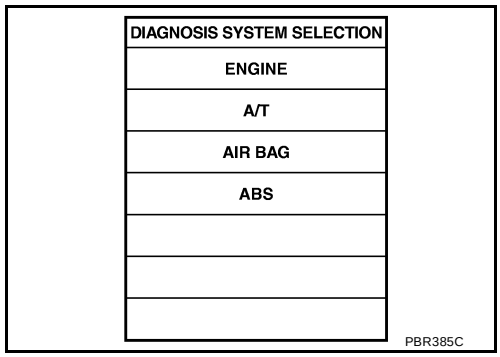

6. Touch “DATA MONITOR”.

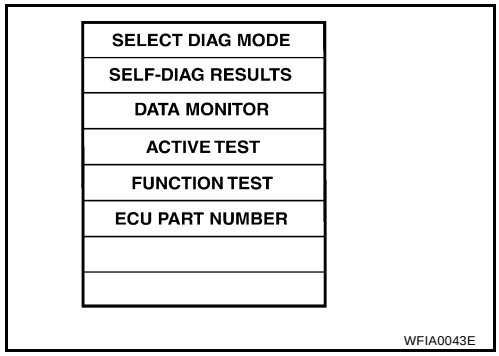

7. Touch “SETTING” on “SELECT MONITOR ITEM” screen.
8. Touch “LONG TIME” on “SET RECORDING COND” screen.
9. Touch “START” on “SELECT MONITOR ITEM”.

DATA MONITOR MODE

MONITOR ITEM	CONDITION	SPECIFICATION
FR RH SENSOR FR LH SENSOR RR RH SENSOR RR LH SENSOR	Drive vehicle. (Each wheel is rotating.)	Displays computed vehicle speed from wheel sensor signal. Almost the same speed as speedometer.
STOP LAMP SW	Turn ignition switch ON and depress brake pedal.	Depress the pedal: ON Release the pedal: OFF
ENGINE SPEED	Engine is running. (rpm)	Engine speed: 0 - 8,000 (rpm)
FR RH IN SOL FR RH OUT SOL FR LH IN SOL FR LH OUT SOL RR RH IN SOL RR RH OUT SOL RR LH IN SOL RR LH OUT SOL	Ignition switch is turned ON or engine is running.	Operating conditions for each solenoid valve are indicated. ABS is not operating: OFF
ACTUATOR RLY	Ignition switch is turned ON or engine is running.	Displays ON/OFF condition of ABS actuator relay. When turning ignition switch ON, ABS actuator relay is operated.
MOTOR RELAY		ABS is not operating: OFF ABS is operating: ON
ABS WARN LAMP		Warning lamp is turned on: ON Warning lamp is turned off: OFF
BATTERY VOLT		Power supply voltage for control unit
GEAR	A/T gear position signal detected by TCM via ECM is displayed.	Gear position: P, N: N.P 1st: 1 2nd: 2 3rd: 3 4th: 4
OFF SW	ON/OFF condition of signal from TCS switch is displayed.	TCS OFF S/W (all the time switch is pressed): ON TCS OFF S/W (released): OFF
OFF LAMP	● TCS OFF condition is displayed. ● The condition of malfunctioning TCS is displayed.	TCS OFF indicator “OFF”: OFF TCS OFF indicator “ON”: ON

MONITOR ITEM	CONDITION	SPECIFICATION
SLIP LAMP	The TCS functioning state is displayed by detecting rear wheel slip.	SLIP indicator “ON”: ON SLIP indicator “OFF”: OFF
SLCT LVR POSI	A/T selector lever position is displayed.	Park: P Reverse: R Neutral: N 4th: 4 3rd: 3 2nd: 2 1st: 1

ACTIVE TEST PROCEDURE

- When conducting active test, vehicle must be stationary.
- When ABS warning lamp stays on, never conduct active test.

1. Turn ignition switch OFF.
2. Connect CONSULT-II to data link connector.

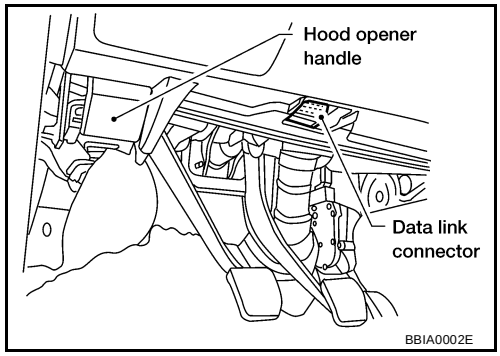

3. Start engine.
4. Touch “START” on CONSULT-II screen.

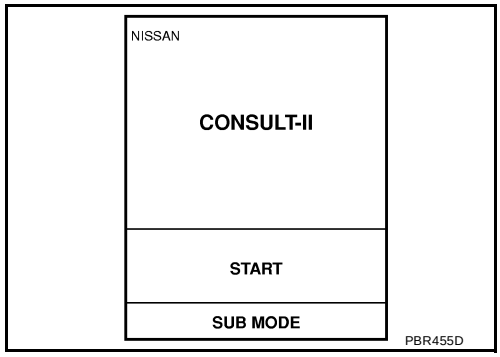

5. Touch “ABS”.

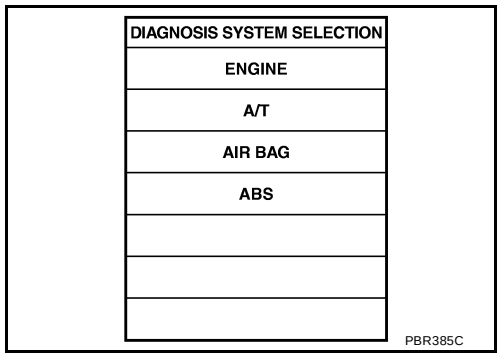

6. Touch “ACTIVE TEST”.

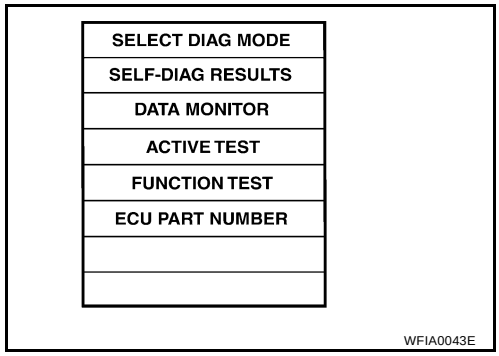

7. Select active test item by touching screen.

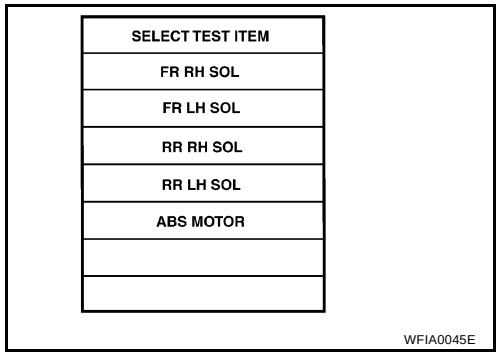

8. Touch “START”.
9. Carry out the active test by touching screen key.

ACTIVE TEST MODE

TEST ITEM	CONDITION	JUDGEMENT		
FR RH SOL FR LH SOL RR RH SOL RR LH SOL	Ignition switch is turned ON.	Brake fluid pressure control operation		
			IN SOL	OUT SOL
		UP (Increase):	OFF	OFF
		KEEP (Hold):	ON	OFF
		DOWN (Decrease):	ON	ON
ABS MOTOR		ABS actuator motor ON: Motor runs OFF: Motor stops		

NOTE:
Active test will automatically stop ten seconds after the test starts. (TEST IS STOPPED is displayed.)

Self-Diagnosis (Without CONSULT–II)

EFS001I4

FUNCTION

- When a problem occurs in the ABS, the ABS warning lamp on the instrument panel comes on. When a problem occurs in the TCS, the TCS OFF indicator lamp and SLIP indicator lamp on the instrument panel come on. To activate the self-diagnostic results mode, ground the self-diagnostic (check) terminal located on data link connector. The location of the malfunction is indicated by the ABS warning lamp or SLIP indicator lamp flashing.

SELF-DIAGNOSIS PROCEDURE

1. Drive vehicle over 30 km/h (19 MPH) for at least one minute.
2. Turn ignition switch OFF.

3. Ground terminal “9” of data link connector with a suitable harness.
4. Turn ignition switch ON while grounding terminal “9”.
   Do not depress brake pedal.
   Do not start engine.

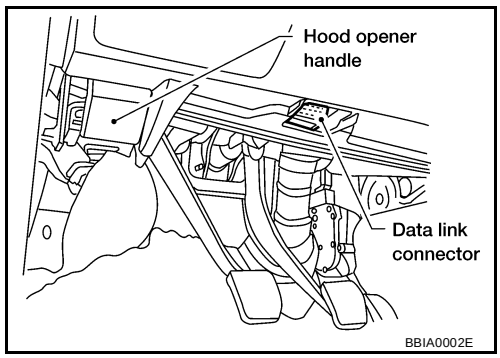

5. After 3.0 seconds, the SLIP indicator lamp starts flashing to indicate the malfunction code No. (See NOTE.)
6. Verify the location of the malfunction with the malfunction code chart. Refer to BRC-60, "SELF-DIAGNOSTIC RESULTS MODE" . Then make the necessary repairs following the diagnostic procedures.
7. After the malfunctions are repaired, erase the malfunction codes stored in the control unit. Refer to BRC-66, "HOW TO ERASE SELF-DIAGNOSTIC RESULTS (MALFUNCTION CODES)" .
8. Rerun the self-diagnostic results mode to verify that the malfunction codes have been erased.

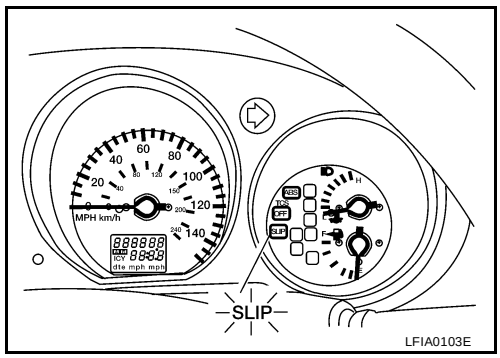

9. Disconnect the check terminal from the ground. The self-diagnostic results mode is now complete.
10. Check ABS warning lamp, TCS OFF indicator lamp and SLIP indicator lamp for deactivation after driving vehicle over 30 km/h (19 MPH) for at least one minute.
11. After making certain that ABS warning lamp, TCS OFF indicator lamp and SLIP indicator lamp do not come on, test the ABS/TCS SELF-DIAGNOSIS in a safe area to verify that it functions properly.

    NOTE:
    The indication terminates after five minutes.
    However, when the ignition switch is turned from OFF to ON, the SLIP indication starts flashing again. The TCS OFF indicator lamp and ABS warning lamp remain lighted.

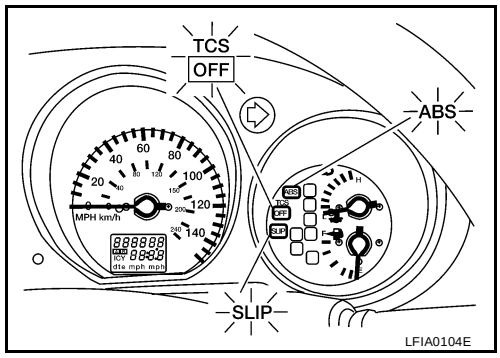

HOW TO READ SELF-DIAGNOSTIC RESULTS (MALFUNCTION CODES)

1. Determine the code No. by counting the number of times the ABS warning lamp or SLIP indicator lamp flashes on and off.
2. When several malfunctions occur at one time, up to three code numbers can be stored; the latest malfunction will be indicated first.
3. The indication begins with the start code 12. After that a maximum of three code numbers appear in the order of the latest one first. The indication then returns to the start code 12 to repeat (the indication will stay on for five minutes at the most).
4. Refer to BRC-60, "SELF-DIAGNOSTIC RESULTS MODE" .

Example: Code No. 32 REAR SENSOR SHORT-CIRCUIT

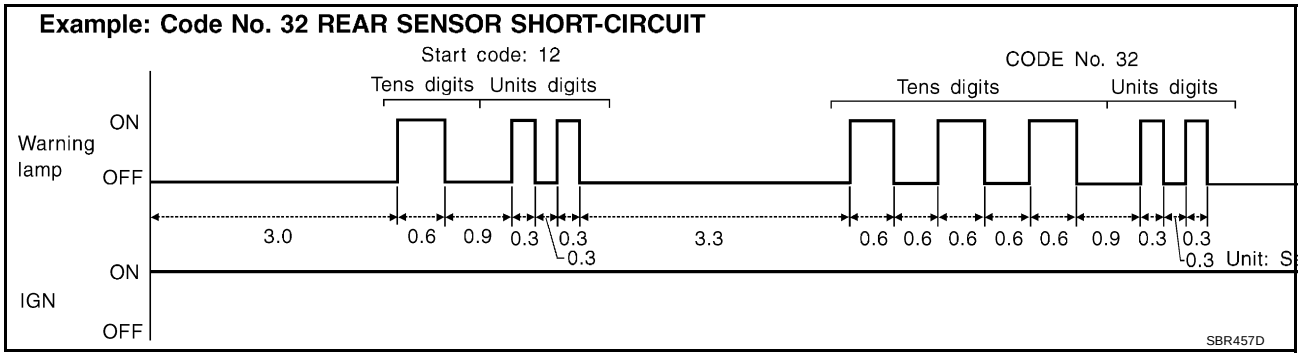

HOW TO ERASE SELF-DIAGNOSTIC RESULTS (MALFUNCTION CODES)

1. Under the self-diagnostic results mode, the malfunction memory erase mode starts when the check terminal is disconnected from the ground.
2. The self-diagnostic results (malfunction codes) can be erased by grounding the check terminal more than three times in succession within 12.5 seconds after the erase mode starts. (Each grounding must be longer than one second.)
   The ABS warning lamp or SLIP indicator lamp stays on while the self-diagnosis is in the erase mode, and goes out after the erase operation has been completed.
3. Perform self-diagnosis again. Refer to BRC-61, "DATA MONITOR PROCEDURE" . Only the start code should appear, no malfunction codes.

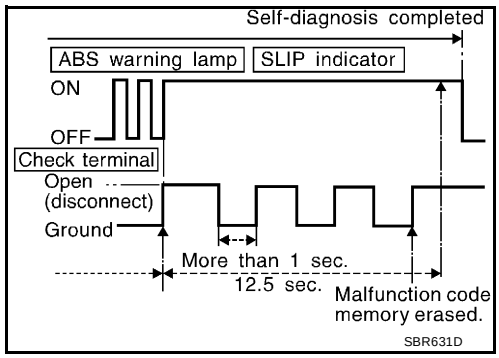

After the erase operation is completed, it is necessary to rerun the self-diagnostic mode to verify that malfunction codes no longer appear. Only the start code (12) should be indicated when erase operation is completed and system is functioning normally.

NOTE:
The TCS OFF indicator lamp and ABS warning lamp remain lighted.

Preliminary Check

EFS001I5

1. CHECK BRAKE FLUID LEVEL

Low fluid level may indicate brake pad wear or leakage from brake line.

Is brake fluid filled between MAX and MIN lines on reservoir tank and is brake fluid uncontaminated?

OK >> GO TO 2.
NG >> Repair. GO TO 2.

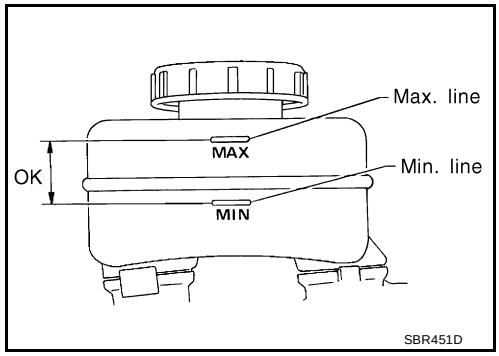

2. CHECK BRAKE LINE

Is leakage present at or around brake lines, tubes or hoses or are any of these parts cracked or damaged?

OK >> GO TO 3.
NG >> Repair. GO TO 3.

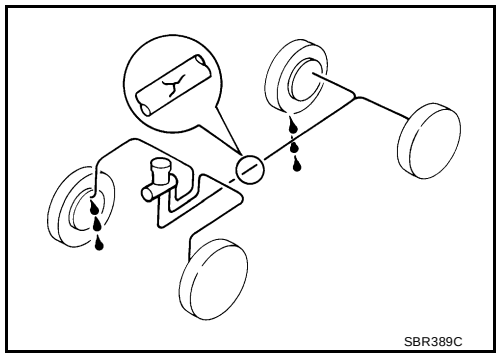

3. CHECK BRAKE BOOSTER OPERATION

Check brake booster for operation and air tightness.
Refer to BR-17, "AIRTIGHT CHECK" .

Is brake booster airtight and functioning properly?

Yes >> GO TO 4.
No >> Replace. GO TO 4.

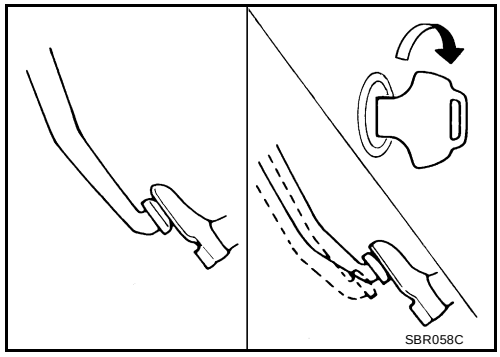

4. CHECK BRAKE PADS AND ROTORS

Check brake pads and rotors.
Refer to BR-20, "FRONT DISC BRAKE" and BR-26, "REAR DISC BRAKE" .

Are brake pads and rotors functioning properly?

Yes >> GO TO 5.
No >> Replace.

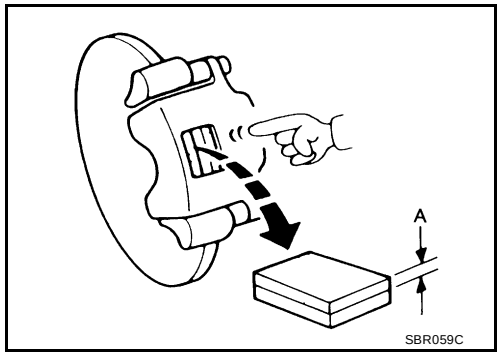

5. RECHECK BRAKE FLUID LEVEL

Check brake fluid level in reservoir tank again.

Is brake fluid filled between MAX and MIN lines on reservoir tank and is brake fluid uncontaminated?

OK >> GO TO 6.
NG >> Fill up brake fluid.

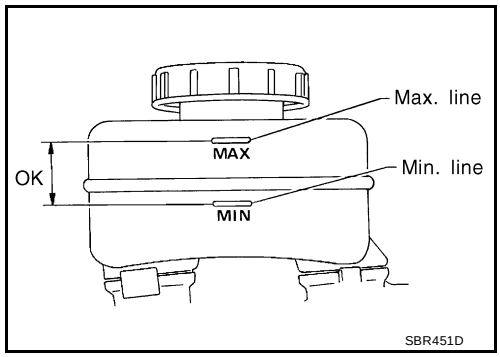

6. CHECK WARNING LAMP AND INDICATOR LAMPS ACTIVATION

Do ABS warning lamp, TCS OFF indicator lamp and SLIP indicator lamp turn on when ignition switch is turned ON?

Yes >> GO TO 7.
No >> Check fuses, warning lamp bulbs and warning lamp circuits.

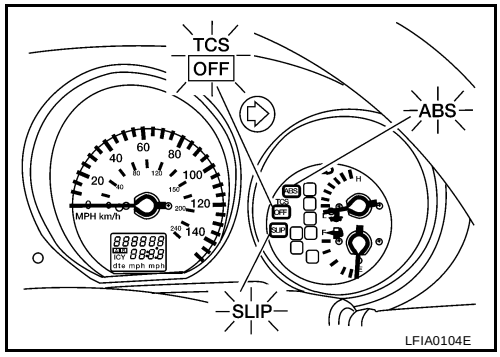

7. CHECK WARNING LAMP AND INDICATOR LAMPS DEACTIVATION

Do lamps turn off when engine is started?

Yes >> GO TO 8.
No >> Go to Self-diagnosis. Refer to BRC-58, "SELF-DIAGNOSIS PROCEDURE" .

8. DRIVE VEHICLE

Drive vehicle at speeds over 30 km/h (19 MPH) for at least one minute.

Do warning lamp and indicator lamps remain off after vehicle has been driven at 30 km/h (19 MPH) for at least one minute?

Yes >> **INSPECTION END.**
No >> Go to Self-diagnosis. Refer to BRC-58, "SELF-DIAGNOSIS PROCEDURE" .

Ground Circuit Check

EFS001I6

ABS ACTUATOR AND ELECTRIC UNIT (CONTROL UNIT) GROUND

- Check continuity between terminals and ground.

Continuity should exist.

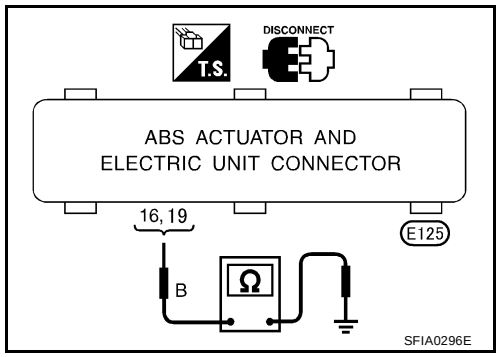

ABS WARNING LAMP, TCS OFF INDICATOR LAMP, SLIP INDICATOR LAMP ON/OFF TIMING

×: ON – : Lamp OFF

Condition	ABS warning lamp	TCS OFF indicator lamp	SLIP indicator lamp	Remarks
When the ignition switch is OFF	–	–	–	–
After the ignition switch is turned ON For approx. 0.5 seconds	×	×	×	–
Ignition switch ON Approx. 0.5 seconds later	–	–	–	Lamp goes off approx. 2 seconds after the engine start.
When the TCS OFF switch turns ON (TCS function OFF).	–	×	–	–
TCS/ABS malfunction	×	×	×	–
	×	×	–	When the TCS/ABS control unit is malfunctioning (power supply or ground malfunction).
When the TCS is malfunctioning.	–	×	×	–

Malfunction Code Chart (Without CONSULT-II)

EFS001I7

Code No. (No. of LED flashes)	Malfunctioning part	Reference page
12	Self-diagnosis could not detect any malfunctions.	—
18	Sensor rotor malfunction	BRC-71
21, 22	Front right sensor	BRC-71
25, 26	Front left sensor	BRC-71
31, 32	Rear right sensor	BRC-71
35, 36	Rear left sensor	BRC-71

Code No. (No. of LED flashes)	Malfunctioning part	Reference page
41	Actuator front right outlet solenoid valve	BRC-74
42	Actuator front right inlet solenoid valve	BRC-74
45	Actuator front left outlet solenoid valve	BRC-74
46	Actuator front left inlet solenoid valve	BRC-74
51	Actuator rear right outlet solenoid valve	BRC-74
52	Actuator rear right inlet solenoid valve	BRC-74
55	Actuator rear left outlet solenoid valve	BRC-74
56	Actuator rear left inlet solenoid valve	BRC-74
57*	Power supply (Abnormal voltage)	BRC-78
61	Actuator motor or motor relay	BRC-77
63	Solenoid valve relay	BRC-74
71	Control unit	BRC-80
77	CAN communication circuit (CAN initialize, Bus-off, Receive)	BRC-71
83	CAN ATMSG1 receive timeout	BRC-71
84	CAN TRQDNINH fault	BRC-71
86	CAN ETCOK fault	BRC-71
87	CAN FCOK fault	BRC-71
88	CAN CANOK fault	BRC-71

*: Under voltage that is too low, the control unit will disable the ABS. It does not set the ABS in fail-safe condition. Instead, the ABS becomes a conventional brake system. After the power supply has resumed, the warning lamp goes off, making it possible for the ABS to be re-engaged.

Symptom Chart

EFS001IU

Symptom	Malfunctioning part	Reference page
ABS warning lamp stays on when ignition switch is turned on.	Control unit power supply circuit Warning lamp bulb circuit Control unit or control unit connector Solenoid valve relay stuck Power supply for solenoid valve relay coil	BRC-86
ABS warning lamp stays on, during self-diagnosis.	Control unit	—
ABS warning lamp does not come on when ignition switch is turned on.	Fuse, warning lamp bulb or warning lamp circuit Control unit	BRC-84
ABS warning lamp does not come on during self-diagnosis.	Control unit	—
Pedal vibration and noise	—	BRC-83
Long stopping distance	—	BRC-82
Unexpected pedal action	—	BRC-81
ABS does not work.	—	BRC-82
ABS works frequently.	—	BRC-81

- Depending on the malfunction points in the ABS actuator and electric unit (control unit), only the SLIP indicator lamp will turn OFF.
- If an electronic malfunction occurs in the system components, the fail-safe function turns the ABS warning lamp ON.
  Depending on the malfunction condition, ABS and EBD operate as follows.
  - ABS is inactive, and EBD is active.
  - Both ABS and EBD are inactive (normal braking status)

- With the above status, the self-diagnosis when the ignition switch is turned on and the vehicle is initially started is performed. ABS self-diagnosis noise may be heard as usual.

TROUBLE DIAGNOSIS FOR SELF-DIAGNOSTIC ITEMS

PFP:00000

CAN Communication Line or ABS Actuator and Electric Unit (Control Unit)

EFS001I8

DIAGNOSTIC PROCEDURE

With CONSULT-II: Malfunction code No. C1130, C1131, C1132, C1133, C1135 or U1000
Without CONSULT-II: Malfunction code No. 77, 83, 84, 86, 87 or 88

1. SELF-DIAGNOSIS RESULT CHECK-1

Check the self-diagnosis results.

Malfunction codes	Diagnostic trouble codes
77, 83, 84, 86, 87 or 88	C1130, C1131, C1132, C1133, C1135 or U1000

Are any items other than above indicated in self-diagnosis results?

Yes >> Repair as necessary.
No >> GO TO 2.

2. CHECK THE HARNESS AND CONNECTOR

1. Disconnect the ABS actuator and electric unit (control unit), ECM and TCM harness connectors with the ignition switch OFF.
2. Check the connectors for open and shorted circuit.
3. Check each connector housing for disconnected, loose, bent, and collapsed terminals.

Is inspection result OK?

Yes >> GO TO 3.
No >> Repair harness or connector. GO TO 3.

3. SELF-DIAGNOSIS RESULT CHECK-2

1. Connect the ABS actuator and electric unit (control unit), ECM and TCM connectors and turn the ignition switch ON.
2. After erasing the self-diagnosis result, start the engine to perform the ABS actuator and electric unit (control unit) self-diagnosis again.

Is inspection result OK?

Yes >> System is OK.
No >> Refer to BRC-48, "CAN Communication System Description" .

Wheel Sensor or Rotor

EFS001IA

DIAGNOSTIC PROCEDURE

With CONSULT-II: Malfunction code No. C1101, C1102, C1103, C1104, C1105, C1106, C1107, C1108 or C1115
Without CONSULT-II: Malfunction code No. 21, 22, 25, 26, 31, 32, 35, 36 or 18

NOTE:
Wheel position should be identified by code No. Except code No. 18 (sensor rotor).

1. INSPECTION START

Wheel sensor inspection.

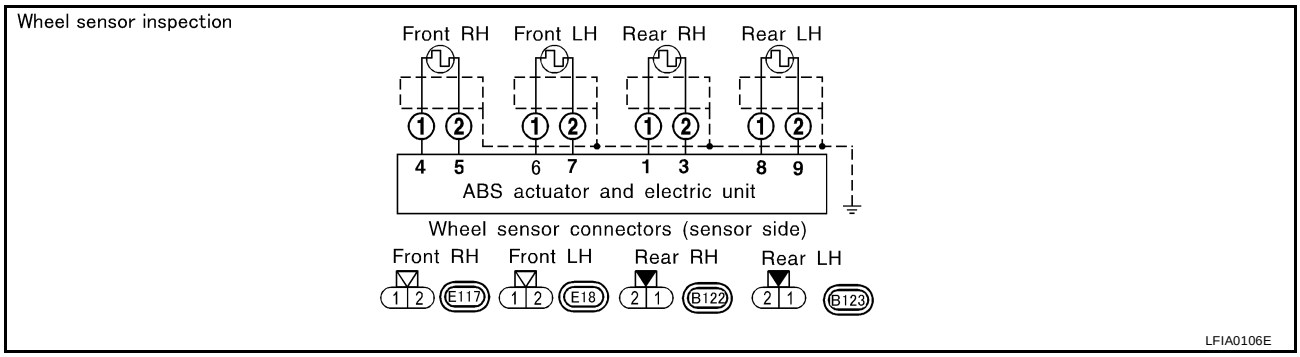

>> GO TO 2.

2. CHECK CONNECTOR

1. Disconnect connectors from ABS actuator and electric unit (control unit) and wheel sensor of malfunction code No. Check terminals for damage or loose connections. Then reconnect connectors.
2. Carry out self-diagnosis again.

Does warning lamp activate again?

Yes >> GO TO 3.
No >> **INSPECTION END**.

3. CHECK TIRE

Check for inflation pressure, wear and size of each tire.

Are tire pressure and size correct and is tire wear within specifications?

Yes >> GO TO 4.
No >> Adjust tire pressure or replace tire(s).

4. CHECK WHEEL BEARING

Check wheel bearing axial end play.

Is axial end play within specifications?

Yes >> GO TO 5.
No >> Repair as necessary. Refer to FAX-5, "Front Wheel Bearing" or RAX-5, "Rear Wheel Bearing" . Then retest.

5. CHECK WIRING HARNESS FOR SHORT CIRCUIT

1. Disconnect ABS actuator and electric unit (control unit) connector and wheel sensor connector of malfunction code No.
2. Check resistance between harness connector terminal and ground.

Continuity should not exist.

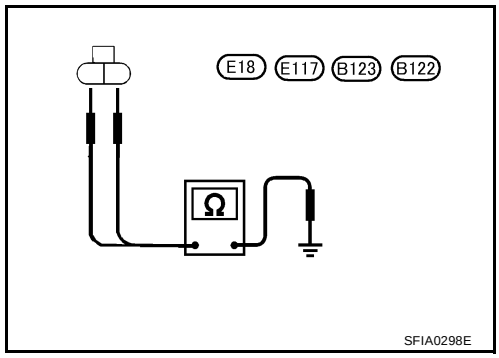

OK or NG

OK >> GO TO 6.
NG >> Repair harness or connectors.

6. CHECK WIRING HARNESS FOR OPEN CIRCUIT

1. Disconnect ABS actuator and electric unit (control unit) connector and wheel sensor connector of malfunction code No.
2. Check continuity between both wiring harness ends.

Sensor	ABS actuator and electric unit (control unit)		Wheel sensor		Continuity
	Connector - terminal	Wire color	Connector - terminal	Wire color	
Front LH	E125 - 6	G	E18 - 1	G	Yes
	E125 - 7	R	E18 - 2	R	
Front RH	E125 - 4	B	E117 - 1	B	
	E125 - 5	W	E117 - 2	W	
Rear LH	E125 - 9	P	B123 - 1	P	
	E125 - 8	L	B123 - 2	L	
Rear RH	E125 - 3	PU	B122 - 1	PU	
	E125 - 1	LG	B122 - 2	LG	

Continuity should exist.

OK or NG

OK >> GO TO 7.
NG >> Repair harness or connectors.

7. CHECK SENSOR ROTOR

Check sensor rotor for teeth damage.

Is sensor rotor free from damage?

Yes >> 1. Check ABS actuator and electric unit (control unit) pin terminals for damage or the connection of ABS actuator and electric unit (control unit) harness connector. Reconnect ABS actuator and electric unit (control unit) harness connector. Then retest.
2. If retest is NG, replace wheel sensor. Refer to BRC-88, "Removal and Installation" .

No >> Replace sensor rotor. Refer to BRC-89, "Removal and Installation" .

ABS Actuator Solenoid Valve or Solenoid Valve Relay

EFS001IB

DIAGNOSTIC PROCEDURE

With CONSULT-II: Malfunction code No. C1114, C1120, C1121, C1122, C1123, C1124, C1125, C1126 or C1127

Without CONSULT-II: Malfunction code No. 41, 42, 45, 46, 51, 52, 55, 56, or 63

1. INSPECTION START

Solenoid valve relay inspection.

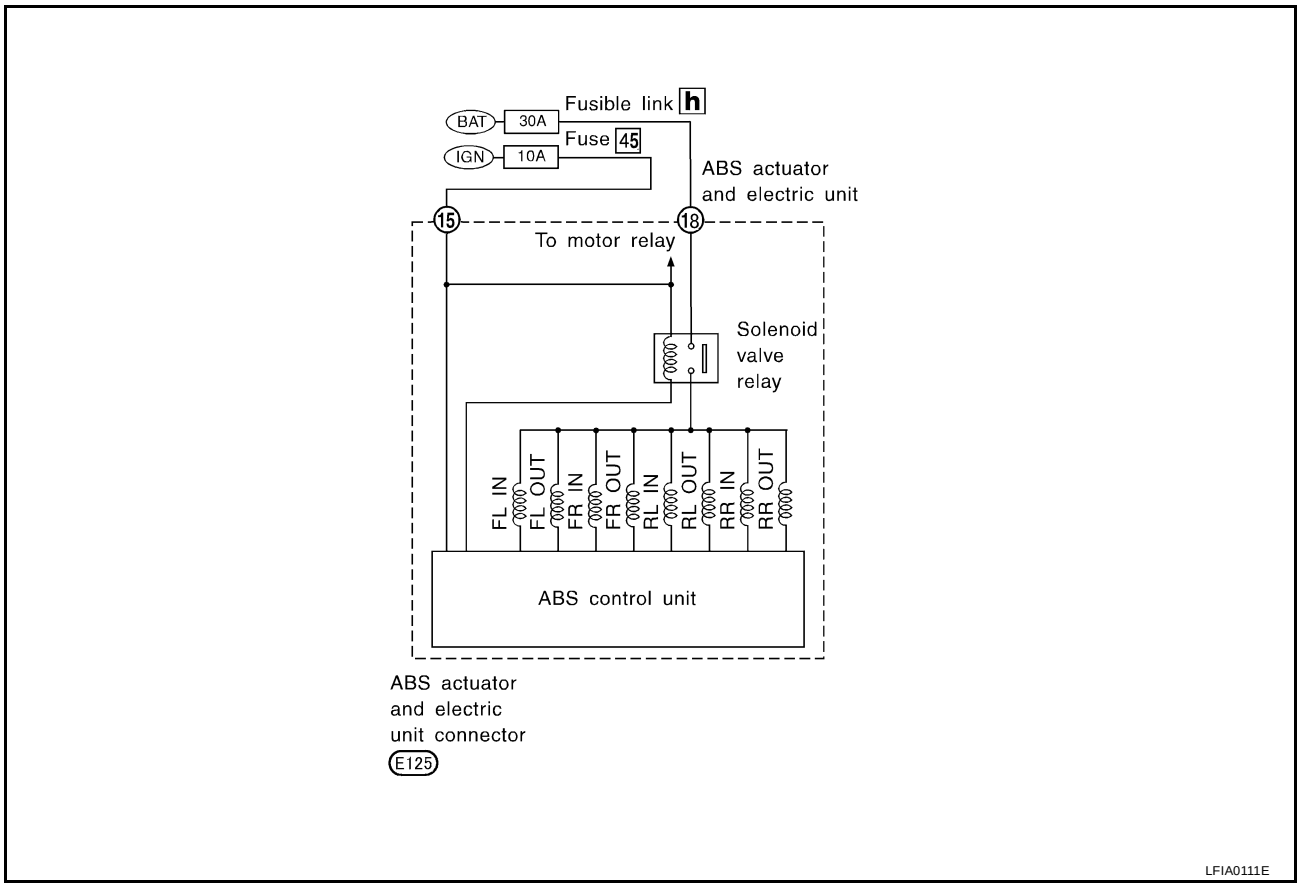

>> GO TO 2.

2. CHECK SOLENOID VALVE POWER SUPPLY CIRCUIT

Check 30A [**h**] fusible link (ABS ACTR) for ABS solenoid valve relay. For fusible link layout, refer to PG-3, "POWER SUPPLY ROUTING CIRCUIT" .

Is fusible link OK?

Yes >> GO TO 3.
No >> GO TO 7.

3. CHECK FUSE

Check 10A fuse No. 45. For fuse layout, refer to PG-3, "POWER SUPPLY ROUTING CIRCUIT" .

Is fuse OK?

Yes >> GO TO 4.
No >> GO TO 9.

4. CHECK CONNECTOR

1. Disconnect connectors from ABS actuator and electric unit (control unit). Check terminals for damage or loose connection. Then reconnect connectors.
2. Carry out self-diagnosis again.

Does warning lamp activate again?

Yes >> GO TO 5.
No >> **INSPECTION END**.

5. CHECK GROUND CIRCUIT

Refer to BRC-68, "ABS ACTUATOR AND ELECTRIC UNIT (CONTROL UNIT) GROUND" .

Is ground circuit OK?

Yes >> GO TO 6.
No >> Repair harness and connectors.

6. CHECK SOLENOID VALVE POWER SUPPLY CIRCUIT

1. Disconnect ABS actuator and electric unit (control unit) connector.
2. Check voltage between ABS actuator and electric unit (control unit) connector terminal 18 and ground.

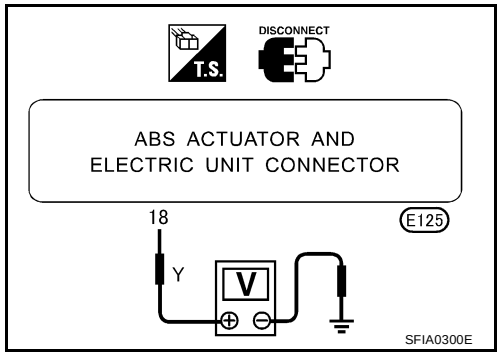

Does battery voltage exist?

Yes >> Replace ABS actuator and electric unit (control unit).
No >> Check the following.
- Harness connector E125
- Harness for open or short between ABS actuator and electric unit (control unit) and fusible link
  If NG, repair harness or connectors.

7. REPLACE FUSIBLE LINK

Replace fusible link.

Does the fusible link blow out when ignition switch is turned ON?

Yes >> GO TO 8.
No >> **INSPECTION END**.

8. CHECK RELAY UNIT POWER SUPPLY CIRCUIT

1. Disconnect ABS actuator and electric unit (control unit) connector.
2. Check continuity between ABS actuator and electric unit (control unit) connector terminal 18 and ground.

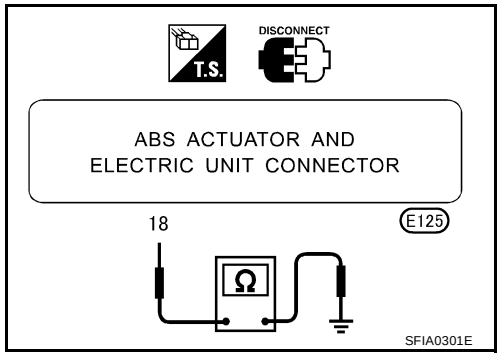

Does continuity exist?

Yes >> Check the following.
- Harness connector E125
- Harness for open or short between ABS actuator and electric unit (control unit) and fusible link
  If NG, repair harness or connectors.

No >> Replace ABS actuator and electric unit (control unit). Refer to BRC-90, "Removal and Installation" .

9. REPLACE FUSE

Replace fuse.

Does the fuse blow out when ignition switch is turned ON?

Yes >> Check the following.

- Harness connector E125
- Harness for open or short between ABS actuator and electric unit (control unit) and fuse
  If NG, repair harness or connectors.

No >> **INSPECTION END**.

Motor Relay or Motor

EFS001IC

DIAGNOSTIC PROCEDURE

With CONSULT-II: Malfunction code No. C1111
Without CONSULT-II: Malfunction code No. 61

1. INSPECTION START

ABS motor relay inspection.

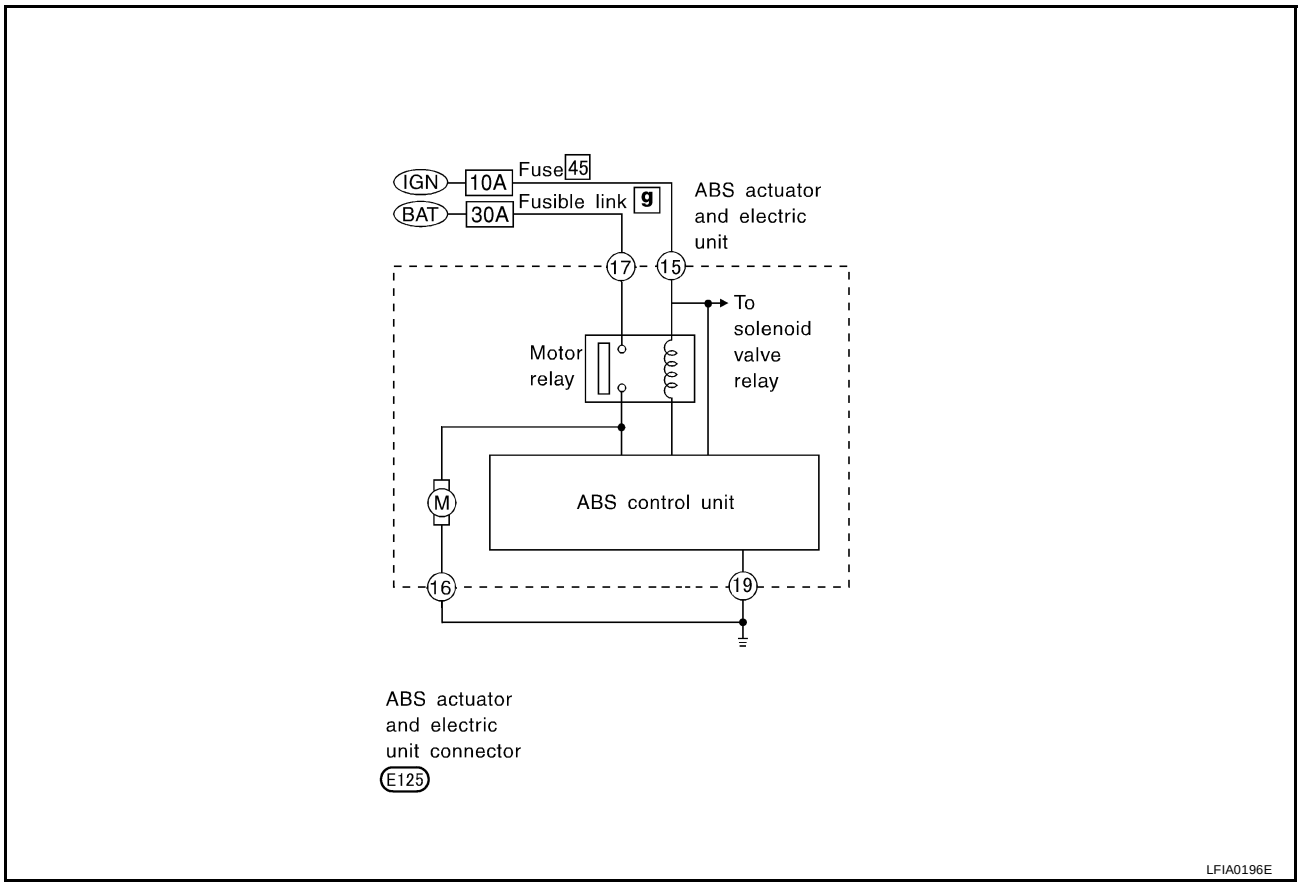

>> GO TO 2.

2. CHECK MOTOR POWER SUPPLY CIRCUIT

Check 30A [**g**] fusible link (ABS MTR) for ABS motor relay. For fusible link layout, refer to PG-3, "POWER SUPPLY ROUTING CIRCUIT" .

Is fusible link OK?

Yes >> GO TO 3.
No >> GO TO 6.

3. CHECK CONNECTOR

1. Disconnect ABS actuator and electric unit (control unit) connector. Check terminals for damage or loose connection. Then reconnect connectors.
2. Carry out self-diagnosis again.

Does warning lamp activate again?

Yes >> GO TO 4.
No >> **INSPECTION END**.

4. CHECK MOTOR RELAY POWER SUPPLY CIRCUIT

1. Disconnect ABS actuator and electric unit (control unit) connector.
2. Check voltage between ABS actuator and electric unit (control unit) connector terminal 17 and ground.

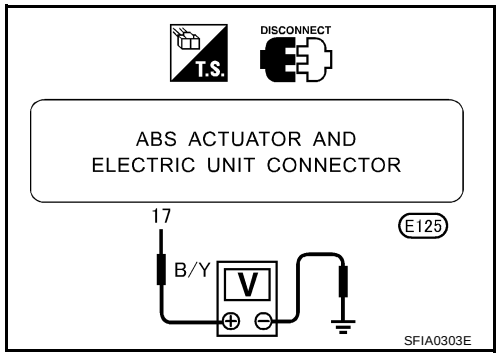

Does battery voltage exist?

Yes >> GO TO 5.
No >> Check the following.
- Harness connector E125
- Harness for open or short between ABS actuator and electric unit (control unit) and fusible link.
  If NG, repair harness or connectors.

5. CHECK ABS ACTUATOR AND ELECTRIC UNIT (CONTROL UNIT) GROUND CIRCUIT

Refer to BRC-68, "ABS ACTUATOR AND ELECTRIC UNIT (CONTROL UNIT) GROUND" .

Is ground circuit OK?

Yes >> Replace ABS actuator and electric unit (control unit).
No >> Check the following.
- Harness connector E125
- Harness for open or short between ABS actuator and electric unit (control unit) and ground
  If NG, repair harness or connectors.

6. REPLACE FUSIBLE LINK

Replace fusible link.

Does the fusible link blow out when ignition switch is turned ON?

Yes >> GO TO 7.
No >> **INSPECTION END**.

7. CHECK ABS ACTUATOR MOTOR POWER SUPPLY CIRCUIT

1. Disconnect battery cable and ABS actuator and electric unit (control unit) connector.
2. Check continuity between ABS actuator and electric unit (control unit) connector terminal 17 and ground.

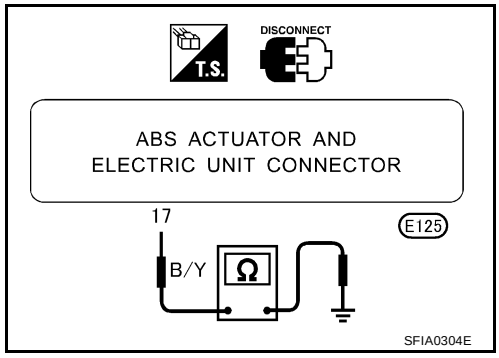

Does continuity exist?

Yes >> Check the following.
- Harness connector E125
- Harness for open or short between ABS actuator and electric unit (control unit) and fusible link
  If NG, repair harness or connectors.

No >> Check ABS actuator and electric unit (control unit) pin terminals for damage or the connection of ABS actuator and electric unit (control unit) harness connector. Reconnect ABS actuator and electric unit (control unit) harness connector. Then retest.

Abnormal Battery Voltage

EFS001ID

DIAGNOSTIC PROCEDURE

With CONSULT-II: Malfunction code No. C1109
Without CONSULT-II: Malfunction code No. 57

1. INSPECTION START

ABS actuator and electric unit (control unit) power supply and ground circuit inspection.

>> GO TO 2.

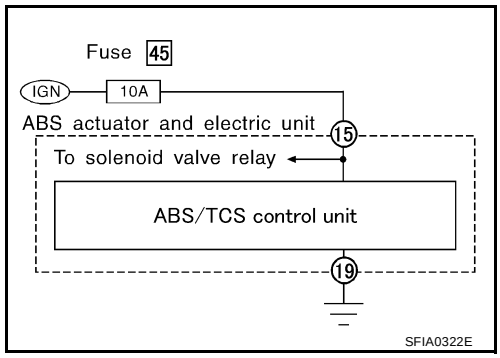

2. CHECK CONNECTOR

1. Disconnect ABS actuator and electric unit (control unit) connector. Check terminals for damage or loose connections. Then reconnect connector.
2. Carry out self-diagnosis again.

Does warning lamp activate again?

Yes >> GO TO 3.
No >> **INSPECTION END.**

3. CHECK ABS ACTUATOR AND ELECTRIC UNIT (CONTROL UNIT) POWER SUPPLY CIRCUIT

1. Disconnect ABS actuator and electric unit (control unit) connector.
2. Check voltage between ABS actuator and electric unit (control unit) connector terminal 15 and ground.

Does battery voltage exist when ignition switch is turned ON?

Yes >> GO TO 4.
No >> GO TO 5.

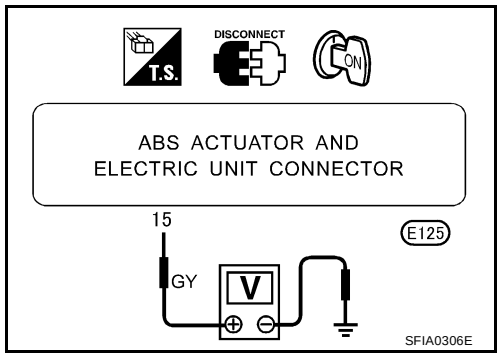

4. CHECK ABS ACTUATOR AND ELECTRIC UNIT (CONTROL UNIT) GROUND

Refer to BRC-68, "ABS ACTUATOR AND ELECTRIC UNIT (CONTROL UNIT) GROUND" .

Is ground circuit OK?

OK >> Check ABS actuator and electric unit (control unit) pin terminals for damage or the connection of ABS actuator and electric unit (control unit) harness connector. Reconnect ABS actuator and electric unit (control unit) harness connector. Then retest.
NG >> Check the following.
- Harness connector E125
- Harness for open or short between ABS actuator and electric unit (control unit) and ground
  If NG, repair harness or connectors.

5. CHECK FUSE

Check 10A fuse 45 (Engine control) for ABS actuator and electric unit (control unit). Refer to PG-3, "POWER SUPPLY ROUTING CIRCUIT" .

Is fuse OK?

Yes >> GO TO 6.
No >> If fuse is blown, be sure to eliminate cause of problem before installing new fuse.

6. CHECK ABS ACTUATOR AND ELECTRIC UNIT (CONTROL UNIT) POWER SUPPLY CIRCUIT

1. Turn ignition switch to ON position.
2. Check continuity between battery and ABS actuator and electric unit (control unit) connector terminal 15.

Does continuity exist?

Yes >> Check battery. Refer to SC-4, "BATTERY" .
No >> Check the following.
- Harness connector E125
- Harness for open or short between ABS actuator and electric unit (control unit) and fuse
  If NG, repair harness or connectors.

Controller Failure

EFS001IE

DIAGNOSTIC PROCEDURE

With CONSULT-II: Malfunction code No. C1110
Without CONSULT-II: Malfunction code No. 71

1. INSPECTION START

ABS actuator and electric unit (control unit) power supply and ground circuit inspection.

>> GO TO 2.

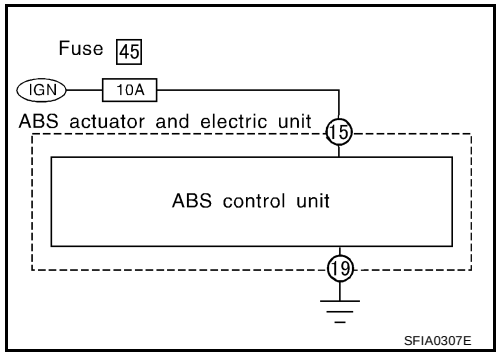

2. CHECK CONNECTOR

1. Disconnect ABS actuator and electric unit (control unit) connector.
   Check terminals for damage or loose connections. Then reconnect connectors.
2. Carry out self-diagnosis again.

Does warning lamp activate again?

Yes >> GO TO 3.
No >> **INSPECTION END.**

3. CHECK ABS ACTUATOR AND ELECTRIC UNIT (CONTROL UNIT) POWER SUPPLY CIRCUIT

Check voltage. Refer to BRC-78, "DIAGNOSTIC PROCEDURE" .

Does battery voltage exist when ignition switch is turned ON?

Yes >> GO TO 4.
No >> Repair.

4. CHECK WARNING LAMP INDICATION

Does warning lamp indicate code No. 71 again?

Yes >> Replace ABS actuator and electric unit (control unit). Refer to BRC-90, "Removal and Installation" .
No >> Inspect the system according to the code No.

TROUBLE DIAGNOSES FOR SYMPTOMS

PFP:99999

1. ABS Works Frequently

EFS001II

1. CHECK BRAKE FLUID PRESSURE

Check brake fluid pressure distribution.
Refer to BR-31, "Inspection" .

Is brake fluid pressure distribution normal?

Yes >> GO TO 2.
No >> Perform Preliminary Check. Refer to BRC-66, "Preliminary Check" .

2. CHECK WHEEL SENSOR

1. Check wheel sensor connector for terminal damage or loose connections.
2. Perform wheel sensor mechanical check.
   Refer to BRC-71, "Wheel Sensor or Rotor" .

Are wheel sensors functioning properly?

Yes >> GO TO 3.
No >> Repair.

3. CHECK FRONT AXLE

Check front and rear axles for excessive looseness. Refer to FAX-5, "Front Wheel Bearing" or RAX-5, "Rear Wheel Bearing" .

Are front axles installed properly?

Yes >> Go to BRC-81, "2. Unexpected Pedal Action" .
No >> Repair.

2. Unexpected Pedal Action

EFS001IJ

1. CHECK BRAKE PEDAL STROKE

Check brake pedal stroke. Is stroke excessively large?

Yes >> Perform Preliminary Check. Refer to BRC-66, "Preliminary Check" .
No >> GO TO 2.

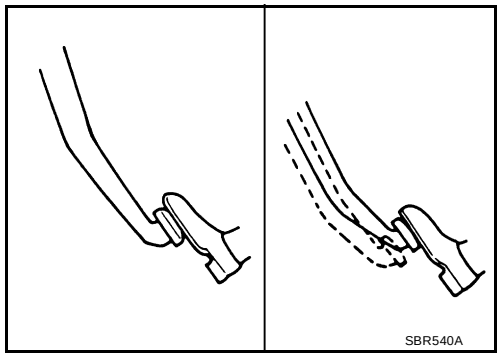

2. CHECK CONNECTOR AND PERFORMANCE

1. Disconnect ABS actuator and electric unit (control unit) connector.
2. Check whether brake is effective.

OK or NG

Yes >> GO TO 3.
No >> Perform Preliminary Check. Refer to BRC-66, "Preliminary Check" .

3. CHECK WARNING LAMP INDICATION

Ensure warning lamp remains off while driving.

Is warning lamp turned off?

Yes >> GO TO 4.
No >> Carry out self-diagnosis. Refer to BRC-58, "SELF-DIAGNOSIS PROCEDURE" .

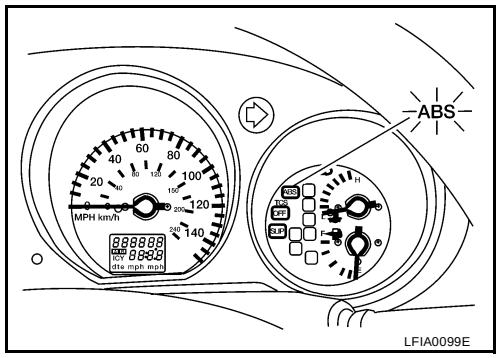

4. CHECK WHEEL SENSOR

1. Check wheel sensor connector for terminal damage or loose connection.
2. Perform wheel sensor mechanical check.

Is wheel sensor mechanism OK?

Yes >> Check ABS actuator and electric unit (control unit) pin terminals for damage and the connection of harness connector. Reconnect ABS actuator and electric unit (control unit) harness connector. Then retest.
No >> Repair.

3. Long Stopping Distance

EFS001IK

1. CHECK CONNECTOR AND PERFORMANCE

1. Cancel ABS by disconnecting ABS actuator and electric unit (control unit) connector.
2. Check whether stopping distance is still long.

OK or NG?

OK >> Perform Preliminary Check and air bleeding.
NG >> Go to BRC-81, "2. Unexpected Pedal Action" .

NOTE:
Stopping distance may be longer than vehicles without ABS when road condition is slippery.

4. ABS Does Not Work

EFS001IL

1. CHECK WARNING LAMP INDICATION

Does the ABS warning lamp activate?

Yes >> Carry out self-diagnosis. Refer to BRC-58, "SELF-DIAGNOSIS PROCEDURE" .
No >> Go to BRC-82, "4. ABS Does Not Work" .

NOTE:
ABS does not work when vehicle speed is under 10 km/h (6 MPH).

5. Pedal Vibration and Noise

EFS001IM

1. INSPECTION START

Pedal vibration and noise inspection.

>> GO TO 2.

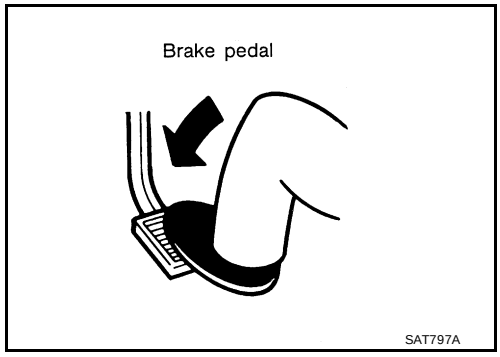

2. CHECK SYMPTOM

1. Apply brake.
2. Start engine.

Does the symptom appear only when engine is started?

Yes >> Carry out self-diagnosis. Refer to BRC-58, "SELF-DIAGNOSIS PROCEDURE" .
No >> GO TO 3.

3. RECHECK SYMPTOM

Does the symptom appear when electrical equipment switches (such as headlamp) are operated?

Yes >> **INSPECTION END**.
No >> Go to BRC-81, "2. Unexpected Pedal Action" .

NOTE:
ABS may operate and cause vibration under any of the following conditions.

- Applying brake gradually when shifting or operating clutch.
- Low friction (slippery) road.
- High speed cornering.
- Driving over bumps and pot holes.
- Engine speed is over 5,000 rpm with vehicle stopped.

6. ABS Warning Lamp Does Not Come On When Ignition Switch Is Turned On

EFS001IN

1. INSPECTION START

Warning lamp circuit inspection.

>> GO TO 2.

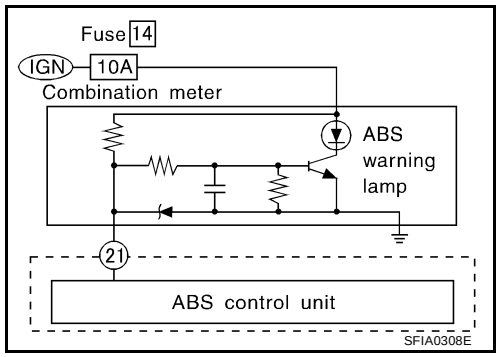

2. CHECK FUSE

Check 10A fuse No. 14 for warning lamp. For fuse layout, refer to PG-3, "POWER SUPPLY ROUTING CIRCUIT" .

Is fuse OK?

Yes >> GO TO 3
No >> If fuse is blown, be sure to eliminate cause of problem before installing new fuse.

3. CHECK ABS ACTUATOR AND ELECTRIC UNIT (CONTROL UNIT) POWER SUPPLY CIRCUIT

1. Install 10A fuse.
2. Remove solenoid valve relay.
3. Disconnect ABS actuator and electric unit (control unit) connector.
4. Check voltage between connector terminal 21 and ground after turning ignition switch ON.

Does battery voltage exist after turning ignition switch ON?

Yes >> GO TO 5.
No >> GO TO 4.

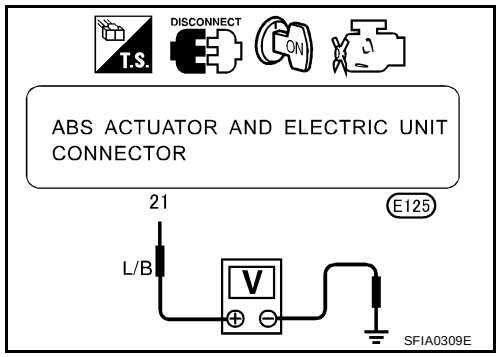

4. CHECK WARNING LAMP INDICATION

Disconnect ABS actuator and electric unit (control unit) connector.

Does the ABS warning lamp activate?

Yes >> GO TO 6.
No >> GO TO 5.

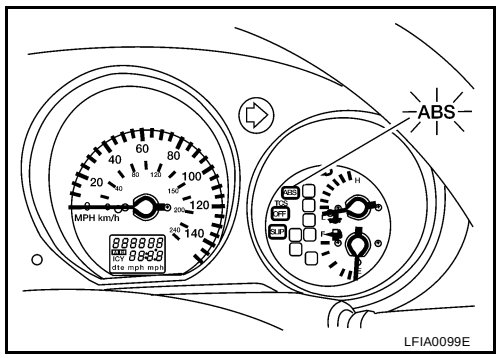

5. CHECK HARNESS FOR SHORT

1. Disconnect ABS actuator and electric unit (control unit) connector.
2. Check voltage between ABS actuator and electric unit (control unit) connector terminal 21 and ground.

Does battery voltage exist?

Yes >> Check combination meter. Refer to DI-4, "COMBINATION METERS" .

No >> Repair harness and connectors between fuse and ABS actuator and electric unit (control unit) connector terminal 21.

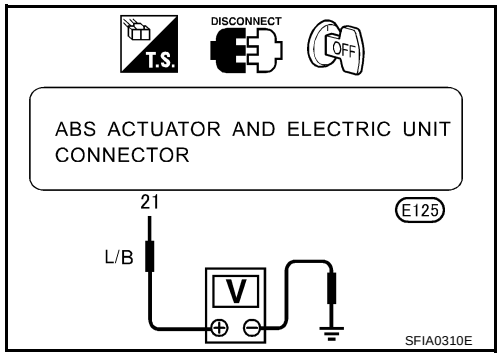

6. CHECK HARNESS CONNECTOR

Check ABS actuator and electric unit (control unit) pin terminals for damage and the connection of harness connector. Reconnect ABS actuator and electric unit (control unit) harness connector. Then reset.

OK >> **INSPECTION END**.

NG >> Replace ABS actuator and electric unit (control unit). Refer to BRC-90, "Removal and Installation" .

7. ABS Warning Lamp Stays On When Ignition Switch Is Turned On

EFS001IO

1. INSPECTION START

ABS control unit inspection.

>> GO TO 2.

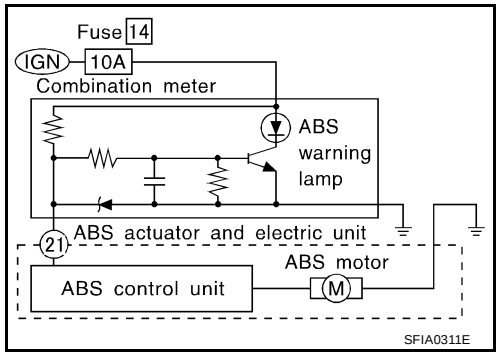

2. CHECK WARNING LAMP

1. Disconnect ABS actuator and electric unit (control unit) connector.
2. Connect suitable wire between ABS actuator and electric unit (control unit) connector terminal 21 and ground.

Does warning lamp activate?

Yes >> GO TO 3.
No >> Repair combination meter. Check the following.
- Harness connector E125
- Harness for open or short between ABS actuator and electric unit (control unit) and fuse
  If NG, repair harness or connector.

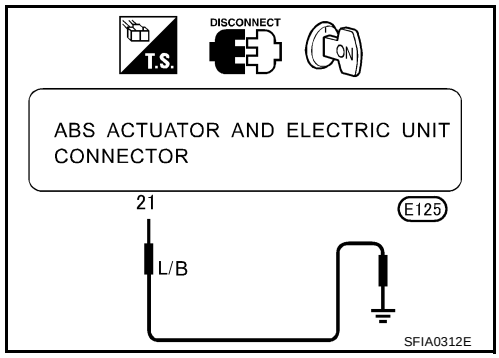

3. CHECK HARNESS CONNECTOR

Check ABS actuator and electric unit (control unit) pin terminals for damage and the connection of harness connector. Reconnect ABS actuator and electric unit (control unit) harness connector. Then retest.

OK >> **INSPECTION END**.
NG >> GO TO 4.

4. CHECK ABS MOTOR GROUND

1. Turn ignition switch OFF.
2. Check continuity between ABS motor and ground.

Does continuity exist?

Yes >> Replace ABS actuator and electric unit (control unit).
No >> Check the following.
- ABS motor ground harness
- ABS motor ground harness for open or short between ABS motor and ground
  If NG, repair harness.

8. During ABS/TCS Control, Vehicle Behavior is Jerky.

EFS001IP

1. ENGINE SPEED SIGNAL INSPECTION

Perform data monitor with CONSULT-II for the ABS/TCS control unit.

Is the engine speed at idle 400 rpm or higher?

Yes >> Condition is normal.
No >> GO TO 2.

2. SELF-DIAGNOSIS RESULT ITEM CHECK 1

Perform the TCS/ABS control unit self-diagnosis.

Is the self-diagnosis result displayed?

Yes >> After checking and repairing the applicable item, perform the ABS/TCS control unit self-diagnosis again.
No >> GO TO 3.

3. ECM SELF-DIAGNOSIS RESULT ITEM CHECK

Perform the ECM self-diagnosis. Refer to EC-732, "CONSULT-II INSPECTION PROCEDURE" .

Does the self-diagnosis result indicate camshaft position sensor?

Yes >> Repair or replace the camshaft position sensor system.
No >> GO TO 4.

4. SELF-DIAGNOSIS RESULT ITEM CHECK 2

Disconnect the connectors for the ABS actuator and electric unit (control unit) and ECM, and reconnect them correctly to perform the self-diagnosis again.

Is inspection result OK?

OK >> Connector malfunction. Repair or replace the connector.
NG >> GO TO 5.

5. SELF-DIAGNOSIS RESULT ITEM CHECK 3

Perform the A/T self-diagnosis.

Is inspection result OK?

OK >> GO TO 6.
NG >> Repair or replace the applicable part.

6. SELF-DIAGNOSIS RESULTS ITEM CHECK 4

Perform the ABS/TCS control unit self-diagnosis again.

Is the self-diagnosis result displayed?

Yes >> Repair or replace the applicable item.
No >> GO TO 7.

7. CIRCUIT CHECK BETWEEN THE ABS ACTUATOR AND ELECTRIC UNIT (CONTROL UNIT) AND ECM

1. Disconnect the connectors for the ABS actuator and electric unit (control unit) and ECM.
2. Check the engine speed signal harness between the ABS actuator and electric unit (control unit) and ECM for an open/shorted circuit.
3. Check the connectors for the ABS actuator and electric unit (control unit) and ECM.

Is inspection result OK?

OK >> **INSPECTION END.**
NG >> Connect the connectors to perform the ABS actuator and electric unit (control unit) self-diagnosis again.

WHEEL SENSORS

PFP:47910

Removal and Installation

EFS001IQ

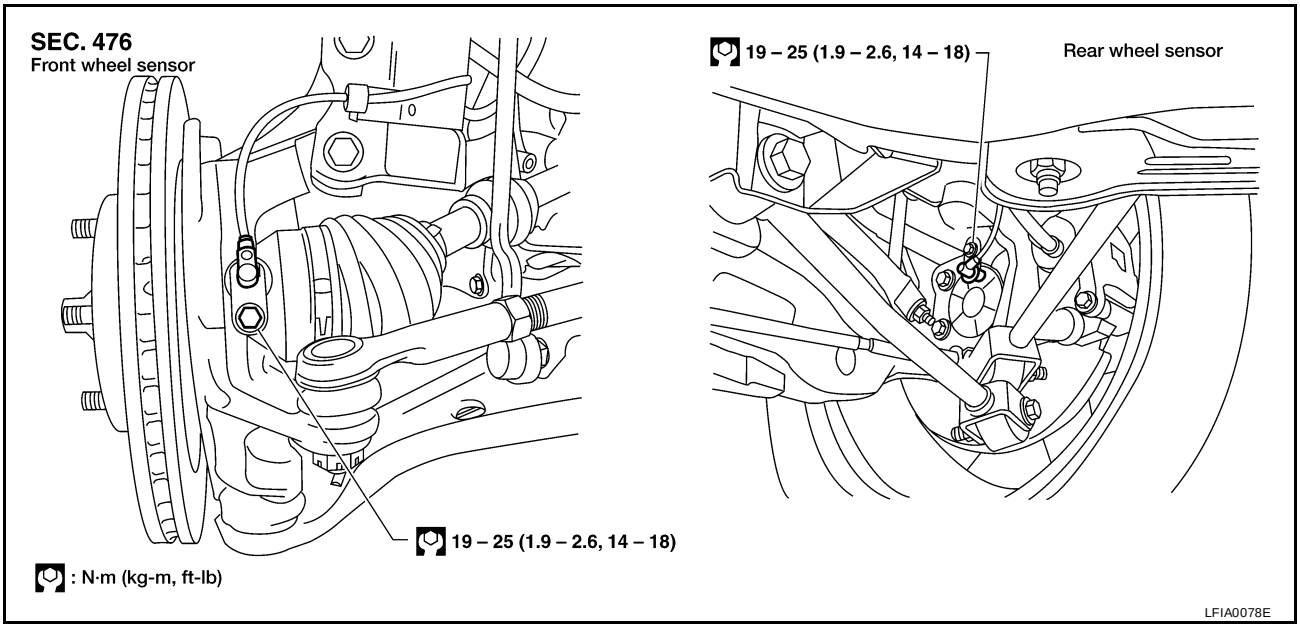

CAUTION:

Be careful not to damage sensor edge and sensor rotor teeth.

When removing the front or rear wheel hub assembly, first remove the ABS wheel sensor from the assembly. Failure to do so may result in damage to the sensor wires making the sensor inoperative.

CAUTION:

Pull out the sensor being careful to turn it as little as possible. Do not pull on the sensor harness.

Installation should be performed while paying attention to the following, and then tighten mounting bolts and nuts to the specified torque.

- **Check if foreign objects such as iron fragments are adhered to the pick-up part of the sensor or to the inside of the hole for mounting the sensor, or if a foreign object is caught in the surface of the mounting for the rotor. If something wrong is found, fix it and then install the sensor.**

SENSOR ROTOR

PFP:47970

Removal and Installation

EFS001IR

NOTE:
The rear wheel sensor rotor is built into the rear wheel hub. For removal and installation procedure, refer to RAX-6, "Removal and Installation" .

REMOVAL

1. Remove the front wheel hub. Refer to FAX-6, "Removal and Installation" .
2. Remove the sensor rotor using suitable puller.

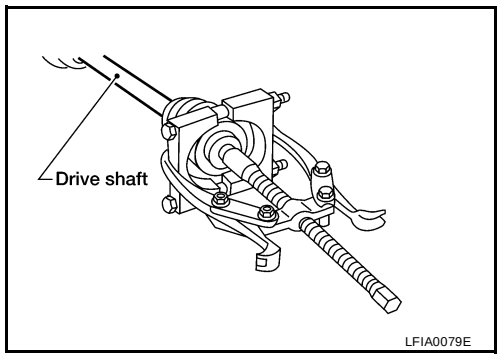

INSTALLATION

Install the sensor rotor using a hammer and a wooden block.

- Always replace sensor rotor with new one.

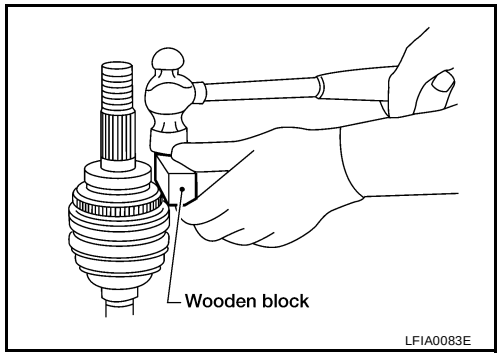

ACTUATOR AND ELECTRIC UNIT (ASSEMBLY)

PFP:47660

Removal and Installation

EFS001IS

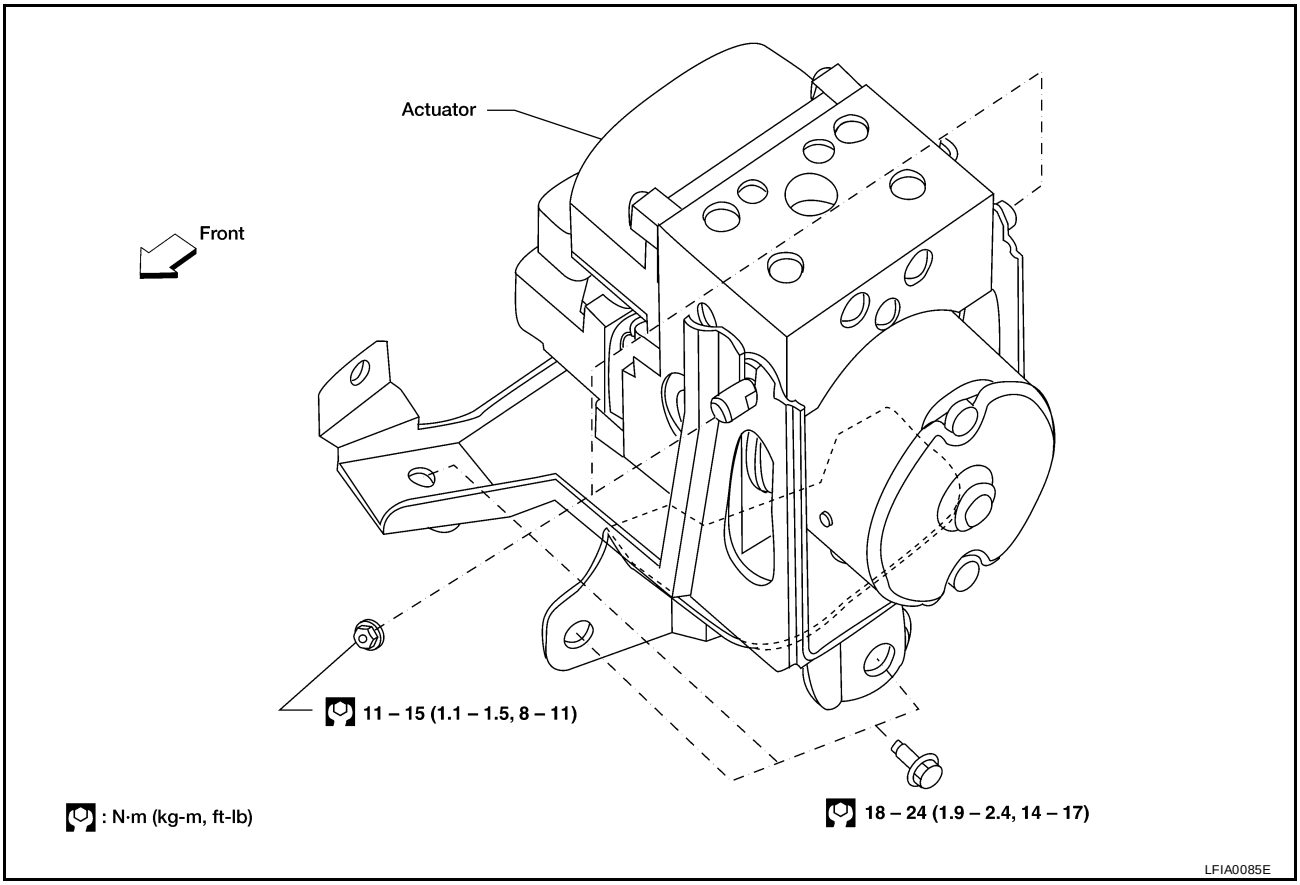

REMOVAL

1. Disconnect battery cable.
2. Remove windshield wiper and linkage assembly. Refer to WW-25, "REMOVAL" .
3. Drain brake fluid. Refer to BR-9, "Changing Brake Fluid" .
4. Disconnect harness connectors from ABS actuator and electric unit (control unit).
5. Disconnect brake pipes.
6. Remove fixing nuts and bolts for ABS actuator and electric unit (control unit) and remove from vehicle.

INSTALLATION

CAUTION:

After installation of ABS actuator and electric unit (control unit), refill brake fluid. Then bleed air from system. Refer to BR-9, "Bleeding Brake System" .

1. Position ABS actuator and electric unit (control unit) in vehicle.
2. Connect brake pipes and fixing nuts temporarily.
3. Tighten fixing nuts, bolts and brake pipes.
4. Connect ABS actuator and electric unit (control unit) harness connectors.
5. Install windshield wiper and linkage assembly. Refer to WW-25, "INSTALLATION" .
6. Reconnect battery cable.

SECTION CL
CLUTCH

CONTENTS

PRECAUTIONS 2
Precautions 2
PREPARATION 3
Special Service Tools 3
Commercial Service Tools 3
NOISE, VIBRATION, AND HARSHNESS (NVH) TROUBLESHOOTING 4
NVH TROUBLESHOOTING CHART 4
CLUTCH PEDAL 5
Components 5
On-vehicle Inspection and Adjustment 6
Removal and Installation 6
INSPECTION AFTER REMOVAL 6
CLUTCH FLUID 7
Air Bleeding Procedure 7
CLUTCH MASTER CYLINDER 8
Removal and Installation 8
REMOVAL 8
INSTALLATION 8
Disassembly and Assembly 9
DISASSEMBLY 9
INSPECTION AFTER DISASSEMBLY 9
ASSEMBLY 9
OPERATING CYLINDER 10
Removal and Installation 10
REMOVAL 10
INSTALLATION 10
Disassembly and Assembly 10
DISASSEMBLY 10
INSPECTION AFTER DISASSEMBLY 11
ASSEMBLY 11
CLUTCH PIPING 12
Removal and Installation 12
REMOVAL 12
INSTALLATION 12
CLUTCH RELEASE MECHANISM 13
Removal and Installation 13
REMOVAL 13
INSPECTION AFTER REMOVAL 13
INSTALLATION 13
CLUTCH DISC, CLUTCH COVER AND FLYWHEEL.. 15
Removal and Installation 15
REMOVAL 15
INSTALLATION 15
Inspection and Adjustment after Removal 15
CLUTCH DISC 15
CLUTCH COVER 16
FLYWHEEL 16
SERVICE DATA AND SPECIFICATIONS (SDS) 17
Clutch Control System 17
Clutch Master Cylinder 17
Clutch Operating Cylinder 17
Clutch Disc 17
Clutch Cover 17
Clutch Pedal 17

PRECAUTIONS

PFP:00001

Precautions

ECS004P9

- **Recommended fluid is brake fluid “DOT 3”.**
- **Never reuse drained brake fluid.**
- **Be careful not to splash brake fluid on painted areas.**
- **When removing and installing clutch piping, use Tool.**
- **Use new brake fluid to clean or wash all parts of master cylinder and operating cylinder.**
- **Never use mineral oils such as gasoline or kerosene. It will ruin the rubber parts of the hydraulic system.**

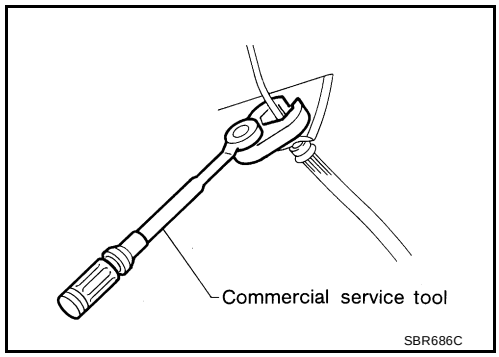

WARNING:

After cleaning clutch disc, wipe it with a dust collector. Do not use compressed air.

PREPARATION

PFP:00002

Special Service Tools

ECS004PA

The actual shapes of Kent-Moore tools may differ from those of special service tools illustrated here.

Tool number (Kent-Moore No.) Tool name	Description
ST20630000 (J26366) Clutch aligning bar 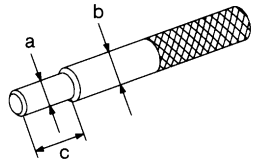 NT405	Installing clutch cover and clutch disc **a: 15.8 mm (0.622 in) dia.** **b: 22.9 mm (0.902 in) dia.** **c: 45.0 mm (1.772 in)**
ST20050240 (—) Diaphragm spring adjusting wrench 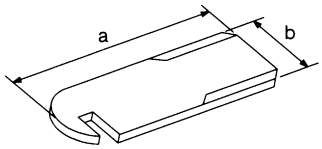 NT404	Adjusting unevenness of diaphragm spring of clutch cover **a: 150 mm (5.91 in)** **b: 25 mm (0.98 in)**
KV32101000 (J25689-A) Pin punch 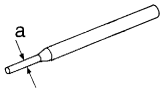 NT410	Removing and installing spring pin **a: 4 mm (0.16 in) dia.**

Commercial Service Tools

ECS004PB

Tool name	Description
1 Flare nut crowfoot 2 Torque wrench 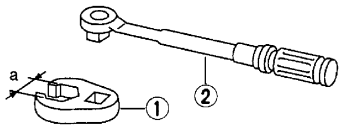 NT360	Removing and installing clutch piping **a: 10 mm (0.39 in)**
Power tool 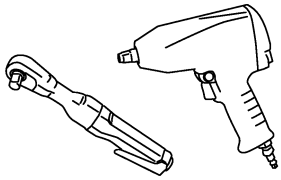 PBIC0190E	Loosening bolts and nuts

NOISE, VIBRATION, AND HARSHNESS (NVH) TROUBLESHOOTING

PFP:00003

NVH TROUBLESHOOTING CHART

ECS004PC

Use the chart below to help you find the cause of the symptom. The numbers indicate the order of the inspection. If necessary, repair or replace these parts.

Reference page		CL-6	CL-7	CL-9	CL-11	EM-63, "Removal and Installation" (QR25DE), EC-1009, "Diagnostic Procedure" (VQ35DE)	CL-13	CL-15	CL-15	CL-15	CL-15	CL-15	CL-15	CL-15	CL-15	CL-16	CL-16	CL-16	CL-16, "FLYWHEEL"
SUSPECTED PARTS (Possible cause)		CLUTCH PEDAL (Inspection and adjustment)	CLUTCH LINE (Air in line)	MASTER CYLINDER PISTON CUP (Damaged)	OPERATING CYLINDER PISTON CUP (Damaged)	ENGINE MOUNTING (Loose)	RELEASE BEARING (Worn, dirty or damaged)	CLUTCH DISC (Out of true)	CLUTCH DISC (Runout is excessive)	CLUTCH DISC (Lining broken)	CLUTCH DISC (Dirty or burned)	CLUTCH DISC (Oily)	CLUTCH DISC (Worn out)	CLUTCH DISC (Hardened)	CLUTCH DISC (Lack of spline grease)	DIAPHRAGM SPRING (Damaged)	DIAPHRAGM SPRING (Out of tip alignment)	PRESSURE PLATE (Distortion)	FLYWHEEL (Distortion)
Symptom	Clutch grabs/chatters					1			2			2	2	2			2		
	Clutch pedal spongy		1	2	2														
	Clutch noisy						1												
	Clutch slips	1										2	2			3		4	5
	Clutch does not disengage	1	2	3	4			5	5	5	5	5			5	6	6	7	

CLUTCH PEDAL

PFP:46540

Components

ECS004PD

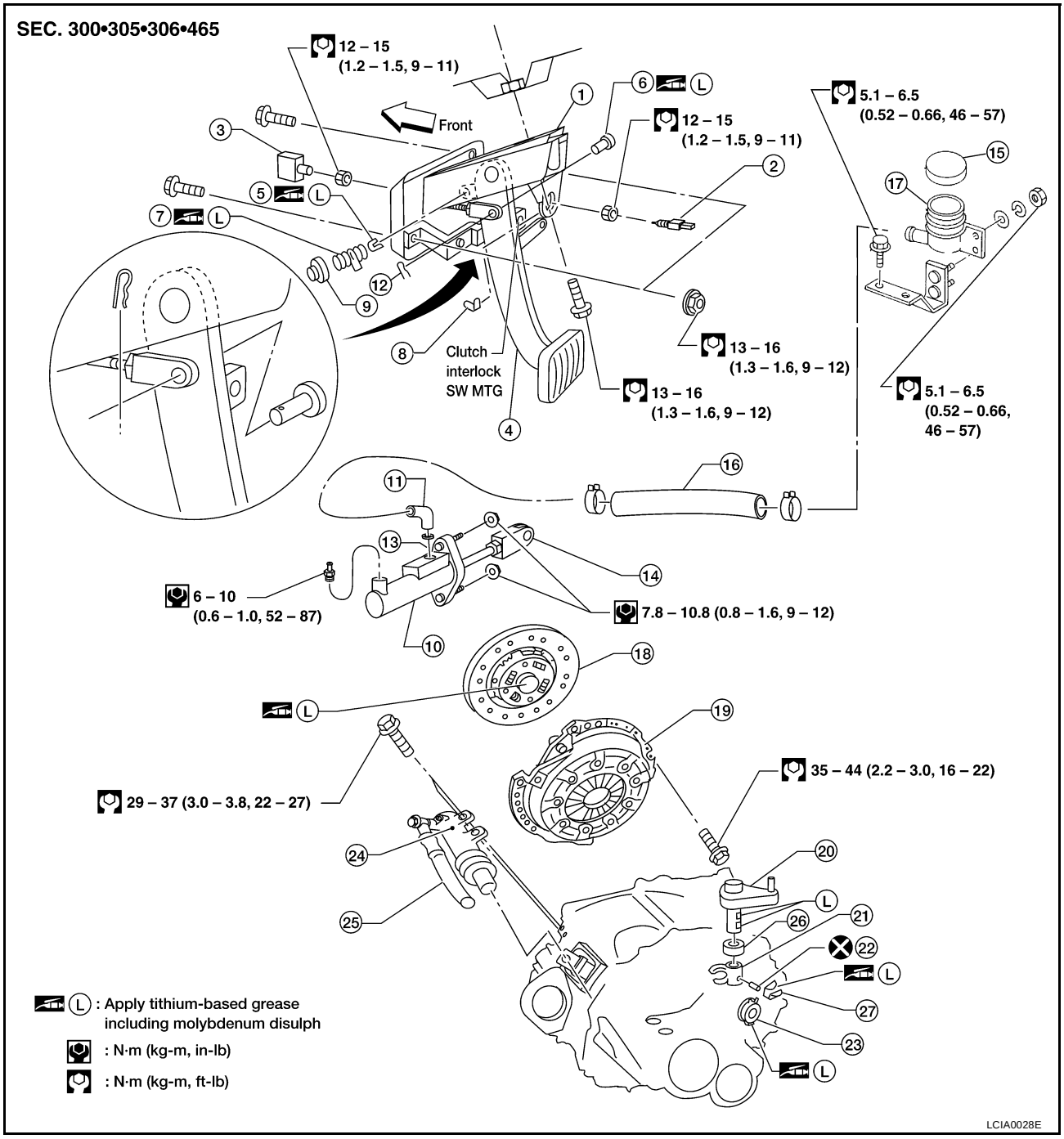

1.	Clutch pedal bracket	2.	ASCD clutch switch	3.	Clutch interlock switch
4.	Clutch pedal	5.	Bushing	6.	Clevis pin
7.	Assist spring	8.	Stopper rubber	9.	Bushing
10.	Clutch master cylinder	11.	Nipple	12.	Snap pin
13.	Seal	14.	Clevis	15.	Reservoir cap
16.	Hose	17.	Reservoir tank	18.	Clutch disc
19.	Clutch cover	20.	Withdrawal lever	21.	Clutch lever
22.	Spring pin	23.	Release bearing	24.	Operating cylinder
25.	Clutch hose	26.	Spacer	27.	Holder

On-vehicle Inspection and Adjustment

ECS004PE

1. Check to see if the clutch pedal clevis pin floats freely in the bore of the clutch pedal. It should not be bound by the clevis or clutch pedal.

a. If the pin is not free, check that the ASCD switch or pedal stopper bolt is not applying pressure to the clutch pedal causing the pin to bind. To adjust, loosen the ASCD switch or pedal stopper bolt lock nut and turn the ASCD switch or pedal stopper bolt.

b. Tighten the lock nut.

c. Verify that the clutch pedal clevis pin floats freely in the bore of the clutch pedal. It should not be bound by the clevis or clutch pedal.

d. If the pin is still not free, remove the pin and check for deformation or damage. Replace the pin if necessary. Leave the pin removed for step 2.

2. Check the clutch pedal stroke for free range of movement.

a. With the clutch pedal clevis pin removed, manually move the pedal up and down to determine if it moves freely.

b. If any sticking is noted, replace the related parts (clutch pedal, pedal bracket, assist spring, bushing, etc.). Reassemble the pedal and re-verify that the clevis pin floats freely in the bore of the pedal.

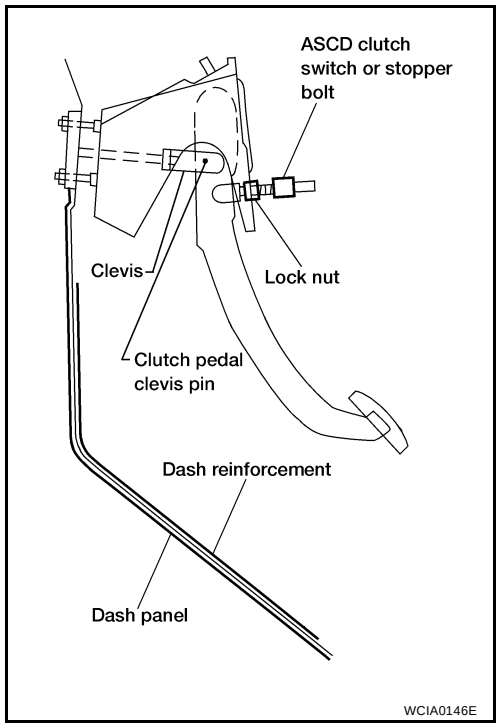

3. Adjust the clearance “C” while fully depressing the clutch pedal (with the clutch interlock switch) as shown.

Clearance "C" : 0.1 - 1.0 mm (0.004 - 0.039 in)

4. Check the clutch hydraulic system components (clutch master cylinder, clutch operating cylinder, Clutch withdrawal lever, clutch release bearing, etc.) for sticking or binding.

a. If any sticking or binding is noted, repair or replace the related parts as necessary.

b. If any hydraulic system repair was necessary, bleed the clutch hydraulic system. Refer to CL-7, "Air Bleeding Procedure" .

NOTE:
Do not use a vacuum assist or any other type of power bleeder on this system. Use of a vacuum assist or power bleeder will not purge all of the air from the system.

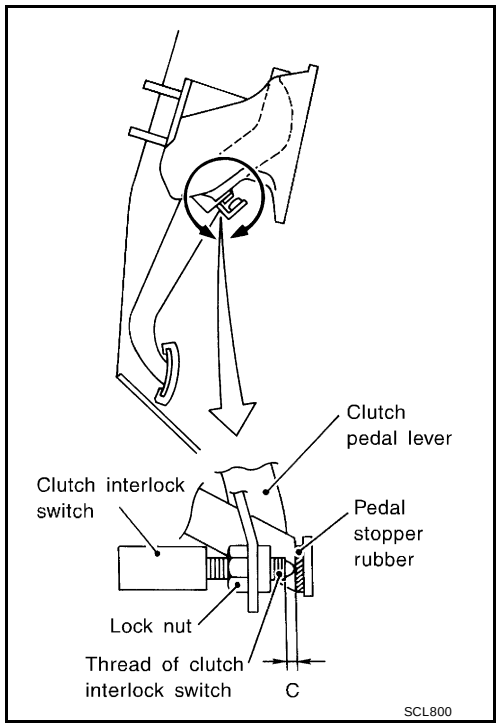

Removal and Installation

ECS004PF

Refer to CL-5, "Components" .

INSPECTION AFTER REMOVAL

- Inspect for clutch bending, damage and welding cracks. Replace if necessary.
- Make sure that the assist spring and return spring have not lost their spring. Replace if necessary.

CLUTCH FLUID

PFP:00017

Air Bleeding Procedure

ECS004PG

NOTE:
Do not use a vacuum assist or any other type of power bleeder on this system. Use of a vacuum assist or power bleeder will not purge all of the air from the system.

- Bleed air according to the following procedure.
- Carefully monitor fluid level at reservoir tank during bleeding operation.
- When bleeding the air from the clutch fluid, first bleed the air from the operating cylinder air bleed valve and then from the bleed connector air bleed valve.

1. Top off reservoir with new recommended brake fluid.
2. Connect a transparent vinyl tube to the air bleeder valve on the clutch operating cylinder.
3. Fully depress the clutch pedal several times.
4. With clutch pedal depressed, open the bleeder valve to release air.
5. Close the bleeder valve.

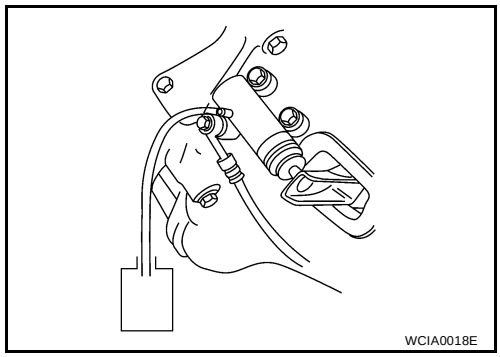

6. Repeat steps 3 through 5 until clear brake fluid comes out of the air bleeder valve.

   Air bleeder valve tightening torque : 5.9 - 9.8 N·m (0.6 - 1.0 kg-m, 52 - 87 in-lb)

7. Perform steps 1 through 6 for bleeding air from the air bleeder valve on the bleed connector.

CLUTCH MASTER CYLINDER

PFP:30610

Removal and Installation

ECS004PH

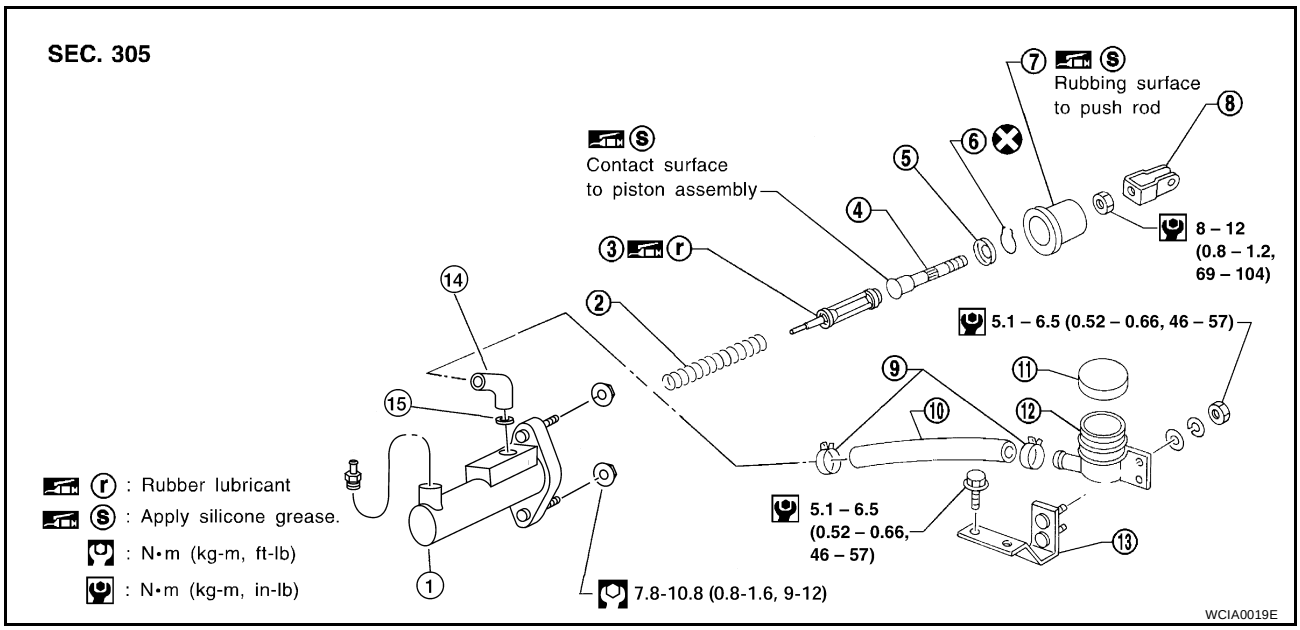

1.	Clutch master cylinder	2.	Return spring	3.	Piston assembly
4.	Push rod	5.	Stopper	6.	Stopper ring
7.	Dust cover	8.	Clevis	9.	Hose clamp
10.	Hose	11.	Reservoir cap	12.	Reservoir tank
13.	Bracket	14.	Nipple	15.	Seal

REMOVAL

1. Drain brake fluid from hydraulic clutch system.

   CAUTION:
   Be careful not to splash brake fluid on painted areas; it may cause paint damage. If brake fluid is splashed on painted areas, wash it away with water immediately.
2. Remove clutch tube using a flare nut wrench.
3. Remove snap pin between clutch pedal and push rod, and remove clevis pin.
4. Unscrew master cylinder assembly mounting nuts and reservoir tank bracket mounting bolts to remove master cylinder assembly from vehicle.

INSTALLATION

1. Connect clutch tube to master cylinder assembly, and hand-tighten flare nut.
2. Install master cylinder assembly to vehicle, and tighten mounting nuts to the specified torque.

   Master cylinder assembly tightening torque : 7.8 - 10.8 N·m (0.8 - 1.1 kg-m, 69 - 95 in-lb)
3. Tighten reservoir tank bracket mounting bolts.

   Reservoir tank bracket tightening torque : 5.1 - 6.5 N·m (0.52 - 0.66 kg-m, 45.1 - 57.3 in-lb)
4. Tighten clutch tube flare nut using a flare nut torque wrench.

   Clutch tube flare nut tightening torque : 15 - 18 N·m (1.5 - 1.8 kg-m, 11 - 13 ft-lb)
5. After installing clevis pin, install snap pin to connect clutch pedal to push rod.
   After finishing the operation, bleed air from clutch piping. (Refer to CL-7, "Air Bleeding Procedure" .)

Disassembly and Assembly

ECS004PI

DISASSEMBLY

1. Loosen push rod lock nut A to remove clevis and lock nut A.
2. Remove dust cover.
3. Remove stopper ring and stopper, and remove push rod from cylinder body. During removal, keep push rod depressed, to prevent piston inside master cylinder from popping out.
4. Remove piston assembly from cylinder body.

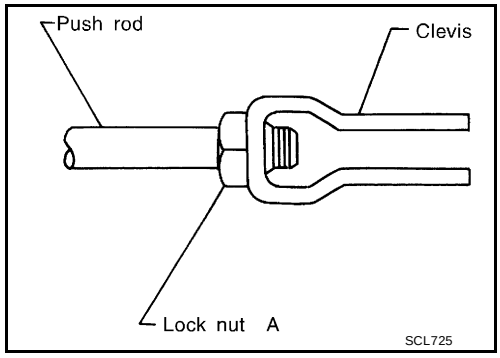

INSPECTION AFTER DISASSEMBLY

Inspect for the following, and replace parts if necessary.

- Damage, wear, rust, and pinholes on the cylinder inner wall
- Damage and deformation of the reservoir tank
- Weak spring
- Crack and deformation of the dust cover

ASSEMBLY

1. Apply rubber lubricant to the sliding part of piston assembly, and insert piston assembly.
2. After installing stopper to push rod, install stopper ring while keeping piston assembly depressed by hand, so that piston assembly will not pop out.

   CAUTION:
   Stopper ring cannot be reused. Always use a new stopper ring for assembly.
3. Install dust cover.
4. Install clevis to push rod, and tighten lock nut "A" to the specified torque.

   Lock nut "A" tightening torque : 7.8 - 11.8 N·m (0.8 - 1.2 kg-m, 69 - 104 in-lb)
5. Install seal and nipple to cylinder body, and install spring pin using a pin punch.

OPERATING CYLINDER

PFP:30620

Removal and Installation

ECS004PJ

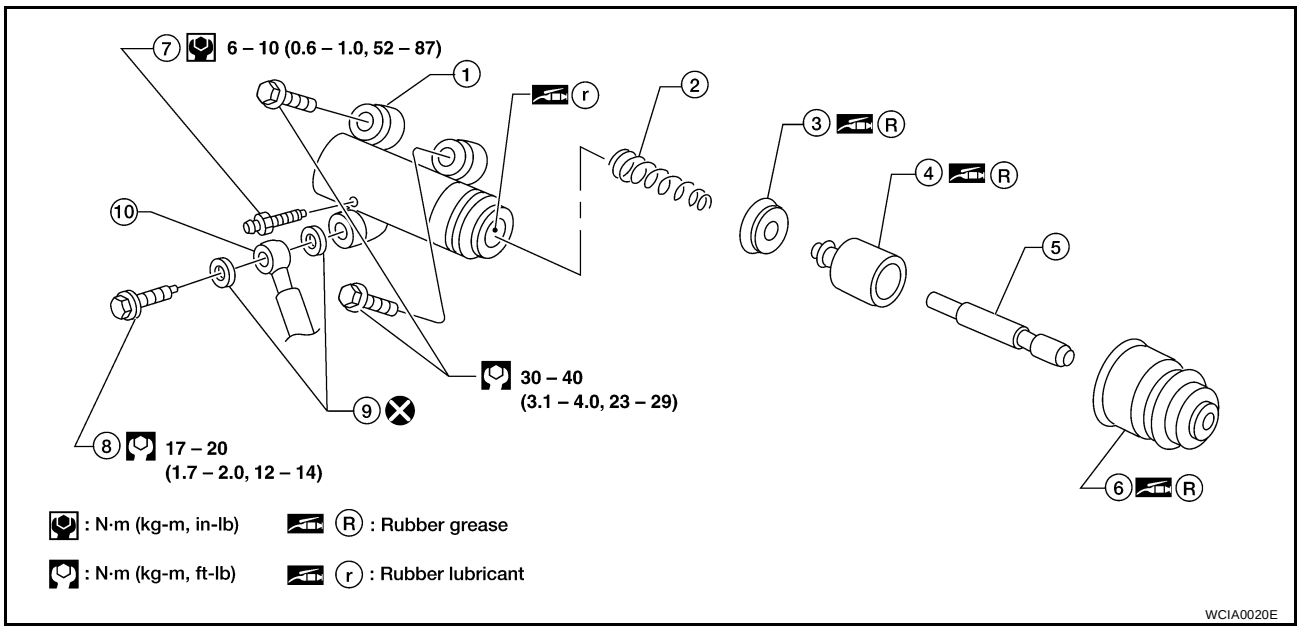

1.	Cylinder body	2.	Piston spring	3.	Piston cup
4.	Piston	5.	Push rod	6.	Dust cover
7.	Air bleeder	8.	Union bolt	9.	Copper washer
10.	Clutch hose				

REMOVAL

1. Drain the brake fluid from hydraulic clutch system.

   CAUTION:
   Be careful not to splash brake fluid on painted areas; it may cause paint damage. If brake fluid is splashed on painted areas, wash it away with water immediately.
2. Remove the union bolt and clutch hose from operating cylinder.
3. Remove the operating cylinder mounting bolts, and remove the operating cylinder.

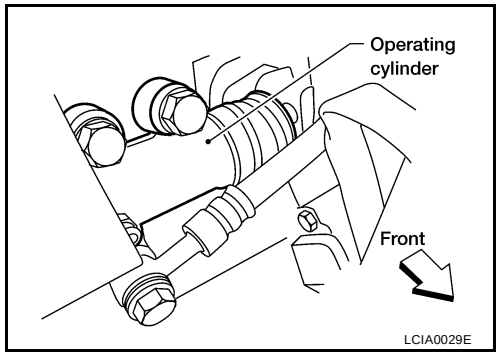

INSTALLATION

Installation is in the reverse order of removal.

CAUTION:

- **Install the hose without twisting it.**
- **The copper washer of the union bolt should not be reused. Always use a new copper washer for installation.**
- **After finishing the operation, bleed air from the clutch piping. Refer to CL-7, "Air Bleeding Procedure" .**

Disassembly and Assembly

ECS004PK

DISASSEMBLY

Remove the dust cover, and remove the piston assembly from the cylinder body.

INSPECTION AFTER DISASSEMBLY

Inspect for the following, and replace any parts if necessary.

- Damage, foreign material, wear, rust, and pinholes on the cylinder inner surface, piston, and sliding part of the piston cup.
- Weak spring.
- Cracking and deformation of the dust cover.

ASSEMBLY

Assembly is in the reverse order of disassembly.

CAUTION:

Apply recommended rubber grease to the piston cup and piston before assembly.

CLUTCH PIPING

PFP:30650

Removal and Installation

ECS004PL

REMOVAL

1. Remove the fuel filter mounting bracket.
2. Remove the air cleaner and air duct. Refer to EM-110, "AIR CLEANER AND AIR DUCT" (QR25DE), EM-14, "AIR CLEANER AND AIR DUCT" (VQ35DE).
3. Drain brake fluid from hydraulic clutch system.

   CAUTION:
   Be careful not to splash brake fluid on painted areas; it may cause paint damage. If brake fluid is splashed on painted areas, wash it away with water immediately.
4. Remove flare nut using a flare nut wrench.
5. Remove clutch hose from the operating cylinder and the clutch tube.

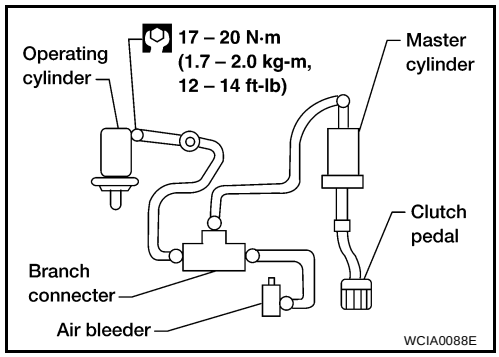

INSTALLATION

1. When installing clutch hose to bracket, face lock plate in the correct direction as shown to secure clutch hose.

   CAUTION:
   Install clutch hose without twisting or bending it.
2. Tighten flare nut to the specified torque, using a flare nut wrench.

   Flare nut : 15 - 18 N·m (1.5 - 1.8 kg-m, 11 - 13 ft-lb)

   CAUTION:
   Be careful not to damage flare nut and clutch tube.

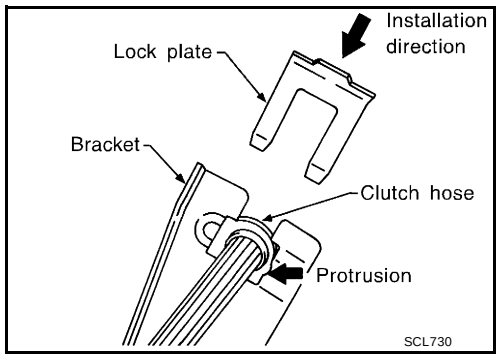

3. Install clutch hose to operating cylinder, and tighten mounting bolts to the specified torque.

   Clutch hose fitting : 17 - 20 N·m (1.7 - 2.0 kg-m, 12 - 14 ft-lb)
4. Install the remaining components in the reverse order of removal.
5. After finishing the installation, bleed the air from the clutch hydraulic system. Refer to CL-7, "Air Bleeding Procedure" .

CLUTCH RELEASE MECHANISM

PFP:30502

Removal and Installation

ECS004PM

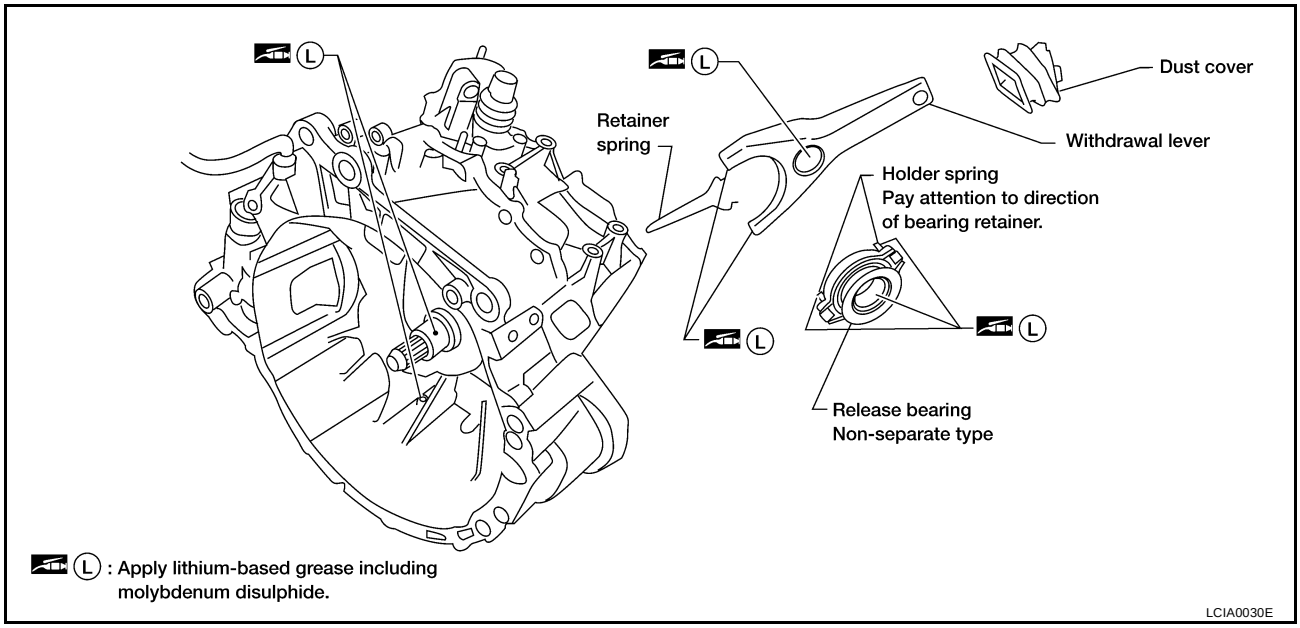

REMOVAL

1. Remove the manual transaxle from the vehicle. Refer to MT-16, "Removal and Installation" .
2. Move withdrawal lever enough to remove release bearing, and remove release bearing from clutch lever.
3. Remove withdrawal lever retainer spring.
4. Pull out withdrawal lever and remove dust cover.

INSPECTION AFTER REMOVAL

- Replace the release bearing if it is seized, damaged, faulty in rotation direction, or has poor aligning function.
- Replace the withdrawal lever if its contact surface is worn abnormally.
- Replace the dust seal if it is deformed or cracked.

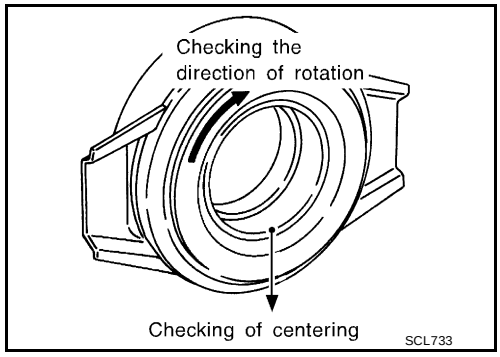

INSTALLATION

Installation is in the reverse order of removal.

NOTE:

- Clean old grease and abrasive materials off the grease application areas.

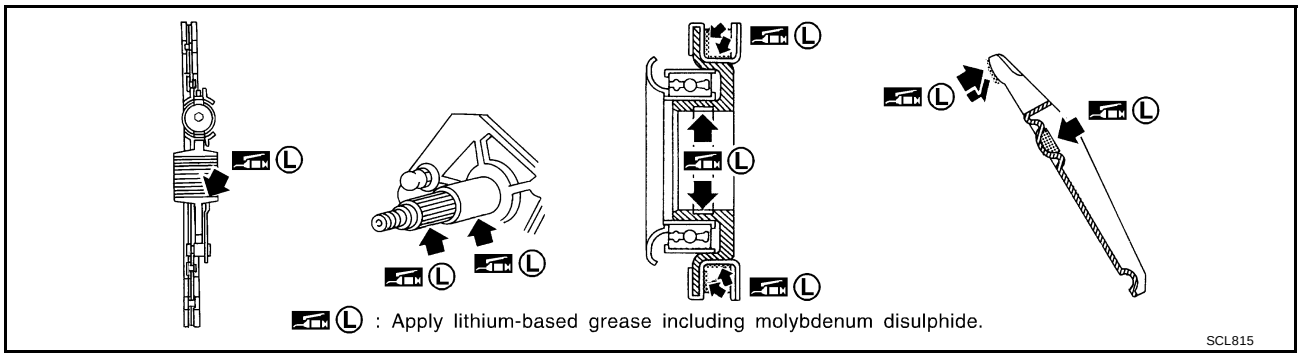

- Apply approximately 1 mm (0.04 in) thick coat of clutch sleeve grease to withdrawal lever and holder spring frictional surfaces.
- Apply a coat of clutch sleeve grease to the grooves on contact surfaces of the withdrawal lever ball pin and inner surface of release bearing; make sure that grease is flush with grooves.
- Apply a thin coat of clutch sleeve grease to release bearing frictional surface. After grease application, install release bearing. Wipe off excess grease forced out during bearing installation.

CLUTCH DISC, CLUTCH COVER AND FLYWHEEL

PFP:30100

Removal and Installation

ECS004PN

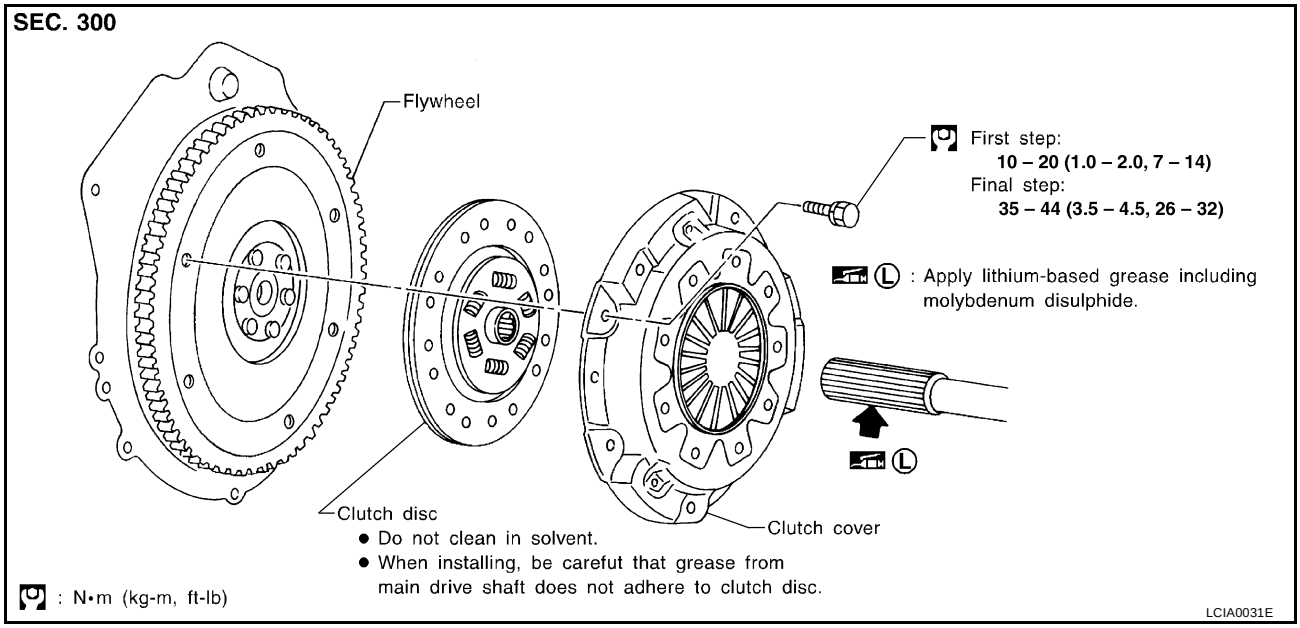

REMOVAL

1. Remove the manual transaxle from the vehicle. Refer to MT-16, "Removal and Installation" .
2. Evenly loosen the bolts holding the clutch cover, using power tool. Then remove the clutch cover and the clutch disc.

INSTALLATION

Installation is in the reverse order of removal.

- Insert Tool into clutch disc hub when installing clutch cover and disc as shown.
- Be careful not to allow grease to contaminate the clutch facing.
- Tighten bolts in numerical order as shown, in two steps to specification.

First step : 10 - 20 N·m (1.0 - 2.0 kg-m, 7 - 14 ft-lb)

Final step : 35 - 44 N·m (3.5 - 4.5 kg-m, 26 - 32 ft-lb)

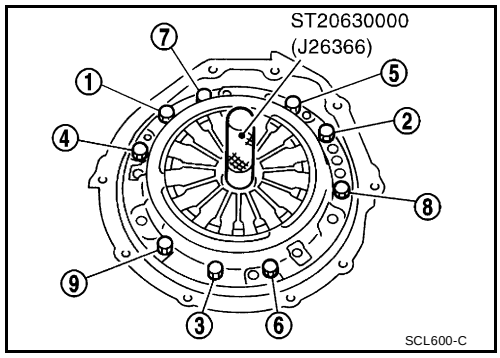

Inspection and Adjustment after Removal

ECS004PO

CLUTCH DISC

Check clutch disc for wear of facing surface left above the rivet head as shown.

Wear limit of facing surface to rivet head : 0.3 mm (0.012 in)

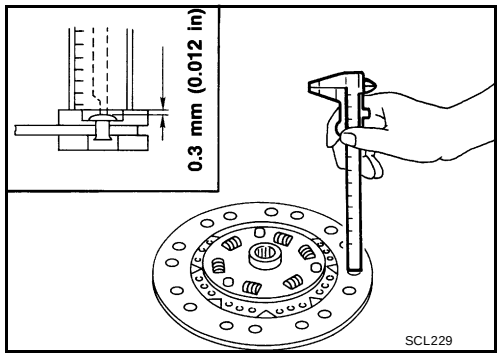

- Check clutch disc for backlash of spline and runout of facing.

Maximum backlash of spline (at outer edge of disc)	**: 1.0 mm (0.039 in)**
Runout limit	**: 1.0 mm (0.039 in)**
Distance of runout check point (from hub center)	**QR25DE: 230 mm (9.06 in)** **VQ35DE: 240 mm (9.45 in)**

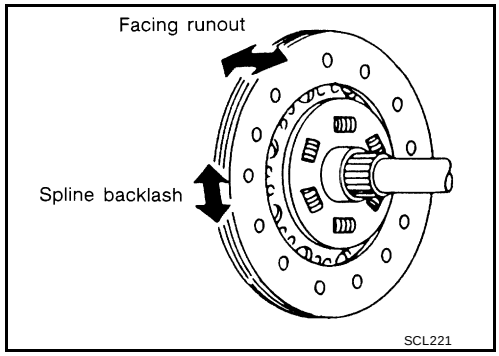

- Check clutch disc for burns, discoloration or oil or grease leakage. Replace if necessary.

CLUTCH COVER

- Check clutch cover installed on vehicle for unevenness of diaphragm spring toe height.

Uneven limit : 1.0 mm (0.039 in)

- If out of limit, adjust the height with Tool.

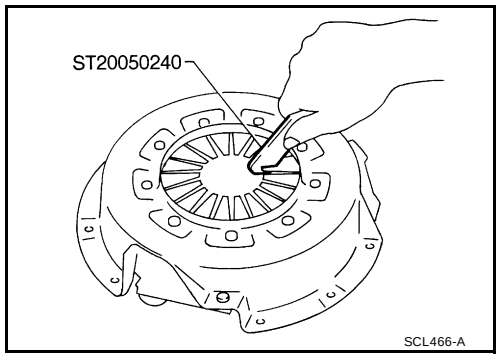

FLYWHEEL

- Check contact surface of flywheel for slight burns or discoloration. Repair flywheel with emery paper.
- Check flywheel runout.

Maximum allowable runout : Refer to EM-90, "MOVEMENT AMOUNT OF FLYWHEEL (M/T MODEL)" (QR25DE), EM-204, "Movement Around in the Radial (rotation) Direction" (VQ35DE).

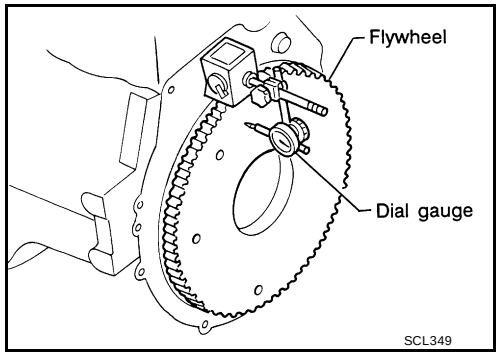

SERVICE DATA AND SPECIFICATIONS (SDS)

PFP:00100

Clutch Control System

ECS004PP

Type of clutch control	Hydraulic

Clutch Master Cylinder

ECS004PQ

Unit: mm (in)

Inner diameter	15.87 (5/8)

Clutch Operating Cylinder

ECS004PR

Unit: mm (in)

Inner diameter	19.05 (3/4)

Clutch Disc

ECS004PS

Engine	QR25DE	VQ35DE
Model	240	250
Facing size (Outer dia. × inner dia. × thickness)	240 mm × 160 mm × 3.5 mm (9.45 in × 6.30 in × 0.138 in)	250 mm × 160 mm × 3.5 mm (9.84 in × 6.30 in × 0.138 in)
Thickness of disc assembly With load	8.1 mm (0.319 in) with 5,884 N (600 kg, 1,322 lb)	8.3 mm (0.327 in) with 4903 N (500 kg, 1102 lb)
Wear limit of facing surface to rivet head	0.3 mm (0.012 in)	
Facing runout limit	1.0 mm (0.039 in)	
Distance of runout check point (from the hub center)	230 mm (9.06 in)	240 mm (9.45 in)
Maximum spline backlash (at outer edge of disc)	1.0 mm (0.039 in)	

Clutch Cover

ECS004PT

Engine	QR25DE	VQ35DE
Model	240	250
Set load	5,688 N (580 kg, 1,279 lb)	7,355 N (750 kg, 1,654 lb)
Set height	38 mm (1.50 in)	40.5 (1.59 in)
Uneven limit of diaphragm spring toe height	1.0 mm (0.039 in)	

Clutch Pedal

ECS004PU

Unit: mm (in)

Clearance “C” between pedal stopper rubber and clutch interlock switch threaded end while clutch pedal is fully depressed.	0.1 - 1.0 (0.004 - 0.039)

SECTION CO
ENGINE COOLING SYSTEM

CONTENTS

QR25DE

PRECAUTIONS 3
Precautions for Supplemental Restraint System (SRS) “AIR BAG” and “SEAT BELT PRE-TENSIONER” 3
Precautions for Liquid Gasket 3
REMOVAL OF LIQUID GASKET 3
LIQUID GASKET APPLICATION PROCEDURE.... 3
PREPARATION 5
Special Service Tools 5
Commercial Service Tools 5
PREPARATION FOR CHANGING ENGINE COOLANT 6
OVERHEATING CAUSE ANALYSIS 7
Troubleshooting Chart 7
COOLING SYSTEM 9
Cooling Circuit 9
ENGINE COOLANT 10
System Check 10
CHECKING COOLING SYSTEM HOSES 10
CHECKING RESERVOIR LEVEL 10
CHECKING COOLING SYSTEM FOR LEAKS... 10
CHECKING RADIATOR 10
CHECKING RADIATOR CAP 11
Refilling Engine Coolant 11
RADIATOR 12
Removal and Installation 12
REMOVAL 12
INSTALLATION 12
Disassembly and Assembly 13
PREPARATION 13
DISASSEMBLY 13
ASSEMBLY 14
INSPECTION 16
Disassembly and Assembly of Radiator Fan 17
DISASSEMBLY 17
ASSEMBLY 17
WATER PUMP 18
Removal and Installation 18
REMOVAL 18
INSPECTION AFTER REMOVAL 18
INSTALLATION 19
INSPECTION AFTER INSTALLATION 19
THERMOSTAT AND THERMOSTAT HOUSING 20
Removal and Installation 20
REMOVAL 20
INSPECTION AFTER REMOVAL 21
INSTALLATION 21
WATER CONTROL VALVE 22
Removal and Installation 22
REMOVAL 22
INSPECTION AFTER REMOVAL 23
INSTALLATION 23
SERVICE DATA AND SPECIFICATIONS (SDS) 24
Capacity 24
Thermostat 24
Water Control Valve 24
Radiator 24

VQ35DE

PRECAUTIONS 25
Precautions for Supplemental Restraint System (SRS) “AIR BAG” and “SEAT BELT PRE-TENSIONER” 25
Precautions for Liquid Gasket 25
REMOVAL OF LIQUID GASKET SEALING 25
LIQUID GASKET APPLICATION PROCEDURE.. 25
PREPARATION 27
Special Service Tools 27
Commercial Service Tools 27
PREPARATION FOR CHANGING ENGINE COOLANT 28
OVERHEATING CAUSE ANALYSIS 29
Troubleshooting Chart 29
COOLING SYSTEM 31
Cooling Circuit 31

ENGINE COOLANT 32
System Check 32
CHECKING COOLING SYSTEM HOSES 32
CHECKING RESERVOIR LEVEL 32
CHECKING COOLING SYSTEM FOR LEAKS ... 32
CHECKING RADIATOR 32
CHECKING RADIATOR CAP 33
Refilling Engine Coolant 33
RADIATOR 34
Removal and Installation 34
REMOVAL 34
INSTALLATION 34
CHECKING RADIATOR CAP 35
CHECKING RADIATOR 35
Disassembly and Assembly 35
PREPARATION 36
DISASSEMBLY 36
ASSEMBLY 37
INSPECTION 39
Disassembly and Assembly Radiator Fan 39
DISASSEMBLY 39
ASSEMBLY 40
WATER PUMP 41
Removal and Installation 41
REMOVAL 41
INSPECTION AFTER REMOVAL 43
INSTALLATION 43
THERMOSTAT AND THERMOSTAT HOUSING 45
Removal and Installation 45
REMOVAL 45
INSPECTION AFTER REMOVAL 45
INSTALLATION 46
SERVICE DATA AND SPECIFICATIONS (SDS) 47
Capacity 47
Thermostat 47
Radiator 47

PRECAUTIONS

PFP:00001

Precautions for Supplemental Restraint System (SRS) “AIR BAG” and “SEAT BELT PRE-TENSIONER”

EBS007RB

The Supplemental Restraint System such as “AIR BAG” and “SEAT BELT PRE-TENSIONER”, used along with a front seat belt, helps to reduce the risk or severity of injury to the driver and front passenger for certain types of collision. Information necessary to service the system safely is included in the SRS and SB section of this Service Manual.

WARNING:

- **To avoid rendering the SRS inoperative, which could increase the risk of personal injury or death in the event of a collision which would result in air bag inflation, all maintenance must be performed by an authorized NISSAN/INFINITI dealer.**
- **Improper maintenance, including incorrect removal and installation of the SRS, can lead to personal injury caused by unintentional activation of the system. For removal of Spiral Cable and Air Bag Module, see the SRS section.**
- **Do not use electrical test equipment on any circuit related to the SRS unless instructed to in this Service Manual. SRS wiring harnesses can be identified by yellow and/or orange harness connectors.**

Precautions for Liquid Gasket

EBS00G4L

REMOVAL OF LIQUID GASKET

- After removing the mounting bolts and nuts, separate the mating surface using a seal cutter and remove the sealant.

CAUTION:

Be careful not to damage the mating surfaces.

- In areas where the cutter is difficult to use, use a plastic hammer to lightly tap the areas where the sealant is applied.

CAUTION:

If for some unavoidable reason a tool such as a flat-bladed screwdriver is used, be careful not to damage the mating surfaces.

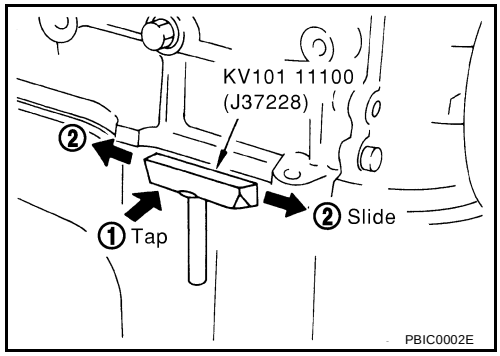

LIQUID GASKET APPLICATION PROCEDURE

1. Using a scraper, remove the old sealant adhering to the mating surface.
   - Remove the sealant completely from the groove, mounting bolts, and bolt holes.
2. Clean the mating surface thoroughly to remove adhering moisture, grease and foreign materials.
3. Install the sealant tube into the tube presser.
   Use Genuine RTV Silicone Sealant or equivalent. Refer to **GI-42, "Recommended Chemical Products and Sealants"** **.**

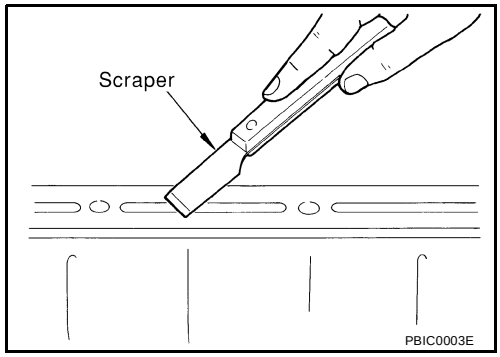

4. Apply the sealant without breaks to the specified area with the specified dimensions.
   - If there is a groove for the sealant application, apply the sealant to the groove.

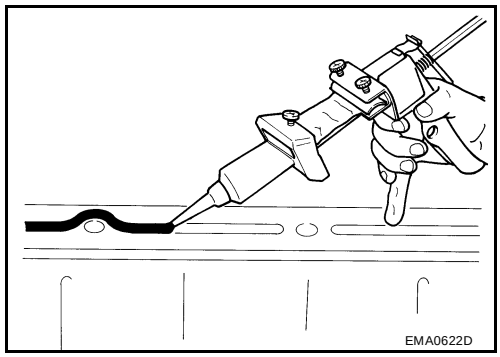

- As for the bolt holes, normally apply the sealant inside the holes. If specified, it should be applied outside the holes. Make sure to read the instructions in this manual.
- Within five minutes of sealant application, install the mating component.
- If the sealant protrudes, wipe it off immediately.
- Do not retighten after the installation.
- After 30 minutes or more have passed from the installation, fill the engine with the correct oil and coolant. Refer to GI-42, "Recommended Chemical Products and Sealants" .

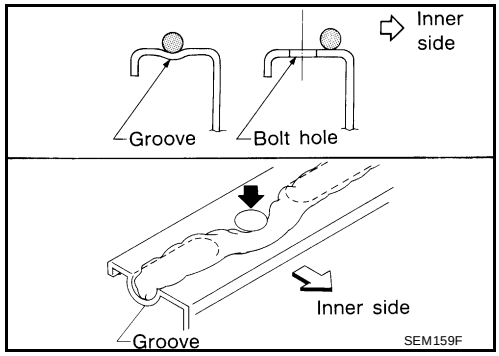

CAUTION:

If there are specific instructions in the service manual, observe them.

PREPARATION

PFP:00002

Special Service Tools

EBS007RD

The actual shape of the Kent-Moore tools may differ from those tools illustrated here.

Tool number (Kent-Moore No.) Tool name	Description
WS39930000 (-—) Tube presser 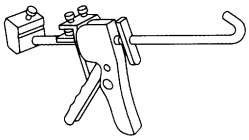 S-NT052	Pressing the tube of liquid gasket
EG17650301 (J33984-A) Radiator cap tester adapter 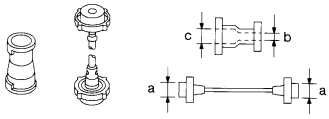 S-NT564	Adapting radiator cap tester to radiator filler neck: **a: 28 (1.10) dia.** **b: 31.4 (1.236) dia.** **c: 41.3 (1.626) dia.** Unit: mm (in)
KV99103510 (—) Radiator plate pliers A 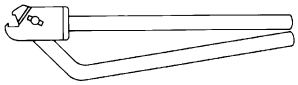 S-NT224	Installing radiator upper and lower tanks
KV99103520 (—) Radiator plate pliers B 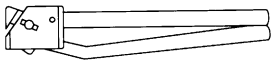 S-NT225	Removing radiator upper and lower tanks

Commercial Service Tools

EBS007RE

Tool name	Description
Power tool 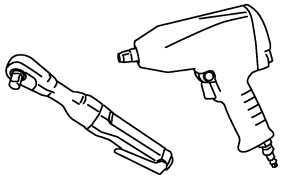 PBIC0190E	Loosening bolts and nuts

PREPARATION FOR CHANGING ENGINE COOLANT

Prepare an empty one gallon bottle, such as used for windshield washer fluid. Obtain a 1,371mm (54 in) length of hose with the same inner diameter as the coolant reservoir hose. Modify the one gallon bottle by making a hole at the bottom slightly smaller than the hose outer diameter to seal against leaks when the bottle is full of fluid.

- Insert the hose in the bottom of the bottle.
- Seal the hose to the bottle so it will not leak.

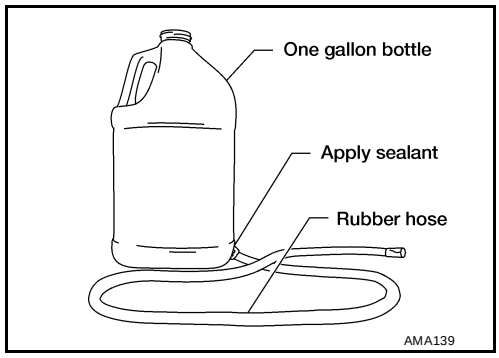

OVERHEATING CAUSE ANALYSIS

PFP:00012

Troubleshooting Chart

EBS00F18

	Symptom		Check items	
Cooling system parts malfunction	Poor heat transfer	Water pump malfunction	Worn or loose drive belt	—
		Thermostat stuck closed		
		Damaged fins	Dust contamination or rock clogging	
			Mechanical damage	
		Clogged radiator cooling tube	Excess foreign material (rust, dirt, sand, etc.)	
	Reduced air flow	Cooling fan does not operate	—	—
		High resistance to fan rotation		
		Damaged fan blades		
	Damaged radiator shroud	—	—	—
	Improper coolant mixture ratio	—	—	—
	Poor coolant quality	—	Periodic maintenance	—
	Insufficient coolant	Coolant leaks	Cooling hose	Loose clamp
				Cracked hose
			Water pump	Poor sealing
			Radiator cap	Loose
				Poor sealing
			Radiator	O-ring for damage, deterioration or improper fitting
				Cracked radiator tank
				Cracked radiator core
			Reservoir tank	Cracked reservoir tank
		Overflowing reservoir tank	Exhaust gas leaks into cooling system	Cylinder head deterioration
				Cylinder head gasket deterioration

	Symptom		Check items	
Except cooling system parts malfunction	—	Overload on engine	Abusive driving	High engine rpm under no load
				Driving in low gear for extended time
				Driving at extremely high speed
			Powertrain system malfunction	—
			Installed improper size wheels and tires	
			Dragging brakes	
			Improper ignition timing	
	Blocked or restricted air flow	Blocked bumper	—	—
		Blocked radiator grille	Installed car brassiere	
			Mud contamination or paper clogging	
		Blocked radiator	—	
		Blocked condenser	—	
		Installed large fog lamp		

COOLING SYSTEM

PFP:21020

Cooling Circuit

EBS007RG

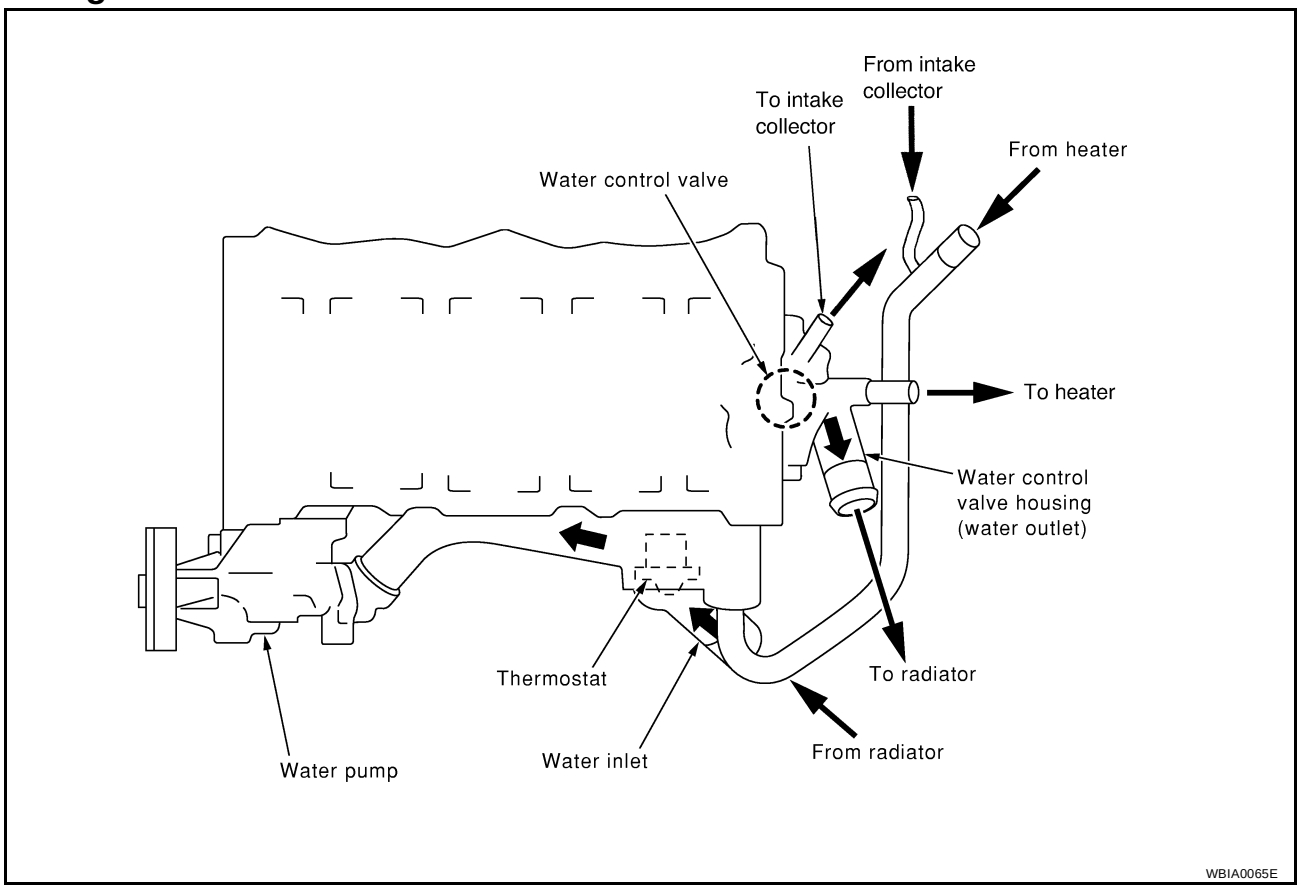

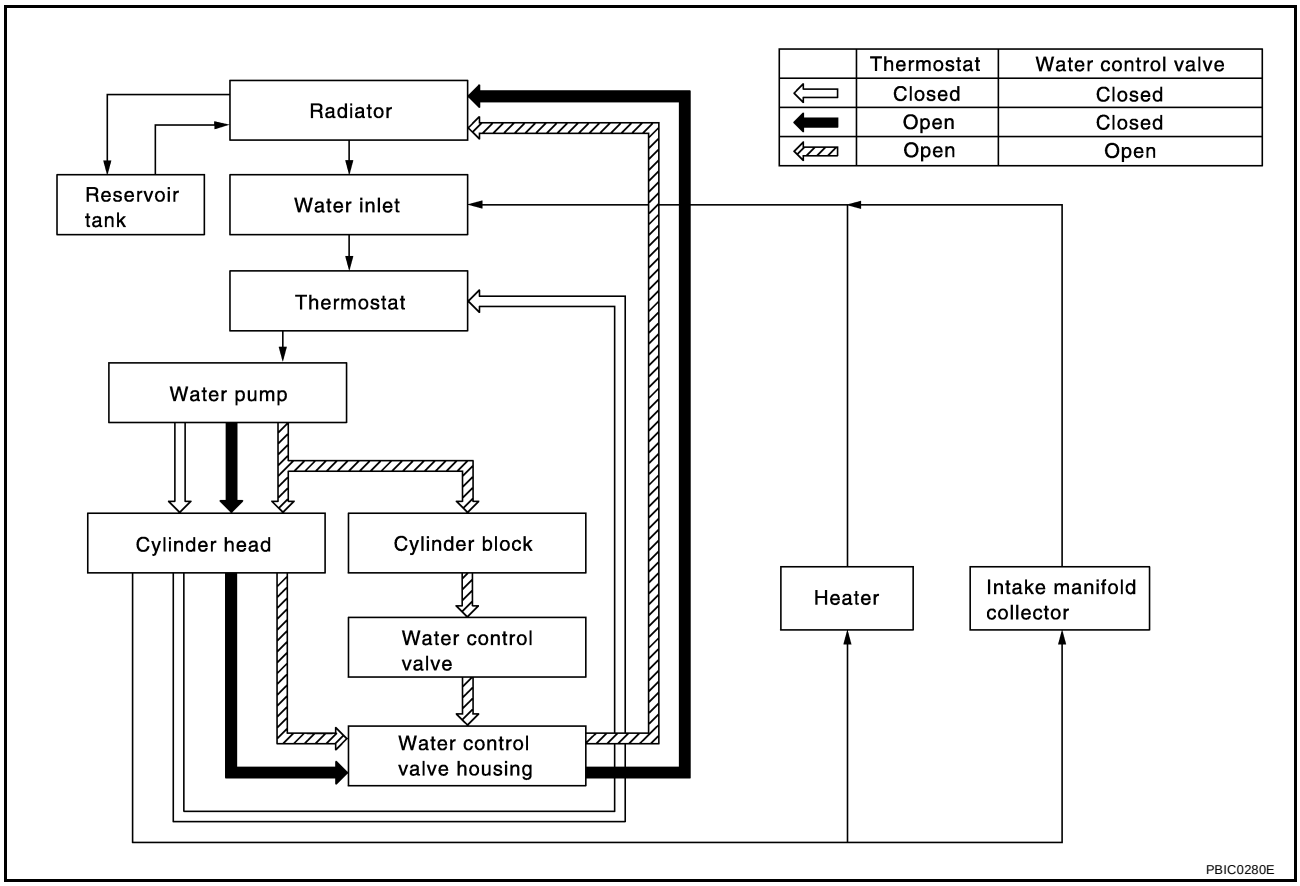

ENGINE COOLANT

PFP:KQ100

System Check

EBS00F1E

WARNING:
Never remove the radiator cap when the engine is hot. Serious burns could occur from high pressure fluid escaping from the radiator.
Wrap a thick cloth around the cap. Slowly push down and turn it a quarter turn to allow built-up pressure to escape. Carefully remove the cap by pushing down and turning it all the way.

CHECKING COOLING SYSTEM HOSES

Check hoses for the following:

- Improper attachment
- Leaks
- Cracks
- Damage
- Loose connections
- Chafing
- Deterioration

CHECKING RESERVOIR LEVEL

- Check if the reservoir tank coolant level is within MIN to MAX when the engine is cool.
- Adjust coolant level if it is too much or too little.

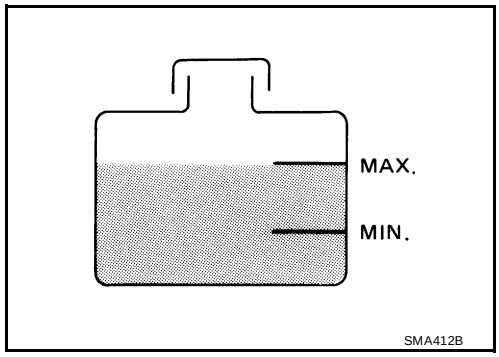

CHECKING COOLING SYSTEM FOR LEAKS

To check for leakage, apply pressure to the cooling system with a tester.

Testing pressure : 157 kPa (1.6 kg/cm^2 , 23 psi)

WARNING:
Never remove the radiator cap when the engine is hot. Serious burns could occur from high pressure coolant escaping from the radiator.

CAUTION:
Higher pressure than specified may cause radiator damage.

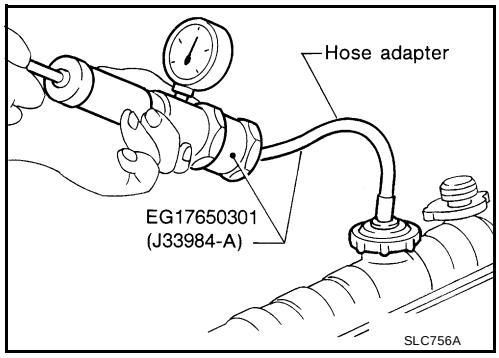

CHECKING RADIATOR

Check radiator for mud or clogging. If necessary, clean radiator as follows.

- Be careful not to bend or damage the radiator fins.
- When radiator is cleaned without removal, remove all surrounding parts such as cooling fan, radiator shroud and horns. Then tape the harness and connectors to prevent water from entering.

1. Apply water by hose to the back side of the radiator core vertically downward.
2. Apply water again to all radiator core surfaces once per minute.
3. Stop washing when clear water flows off of the radiator.
4. Blow air into the back side of radiator core vertically downward.
   - Use compressed air lower than 490 kPa (5 kg/cm^2 , 71 psi) and keep distance more than 300 mm (11.8 in).

5. Blow air again into all the radiator core surfaces once per minute until no water sprays out.
6. Check for leakage.

CHECKING RADIATOR CAP

- To check radiator cap, apply pressure to cap with a tester.

Radiator cap relief pressure	
Standard	**: 78 - 98 kPa (0.8 - 1.0 kg/cm^2 , 11 - 14 psi)**
Limit	**: 59 kPa (0.6 kg/cm^2 , 14 psi)**

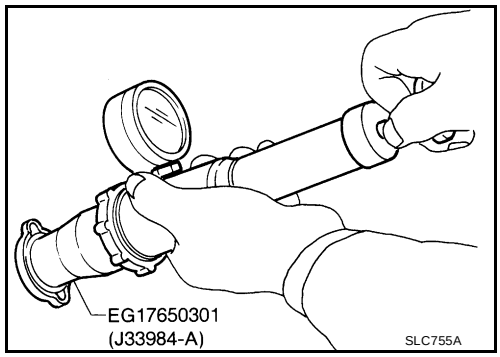

- Pull the negative pressure valve to open it.
- Check that it closes completely when released.

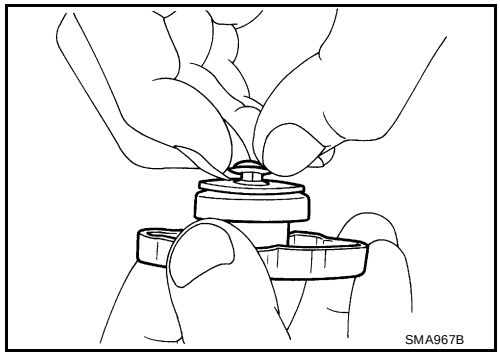

Refilling Engine Coolant

EBS00F1C

Changing the engine coolant is part of the required maintenance of the engine. Refer to MA-14, "Changing Engine Coolant" .

RADIATOR

PFP:21400

Removal and Installation

EBS00F19

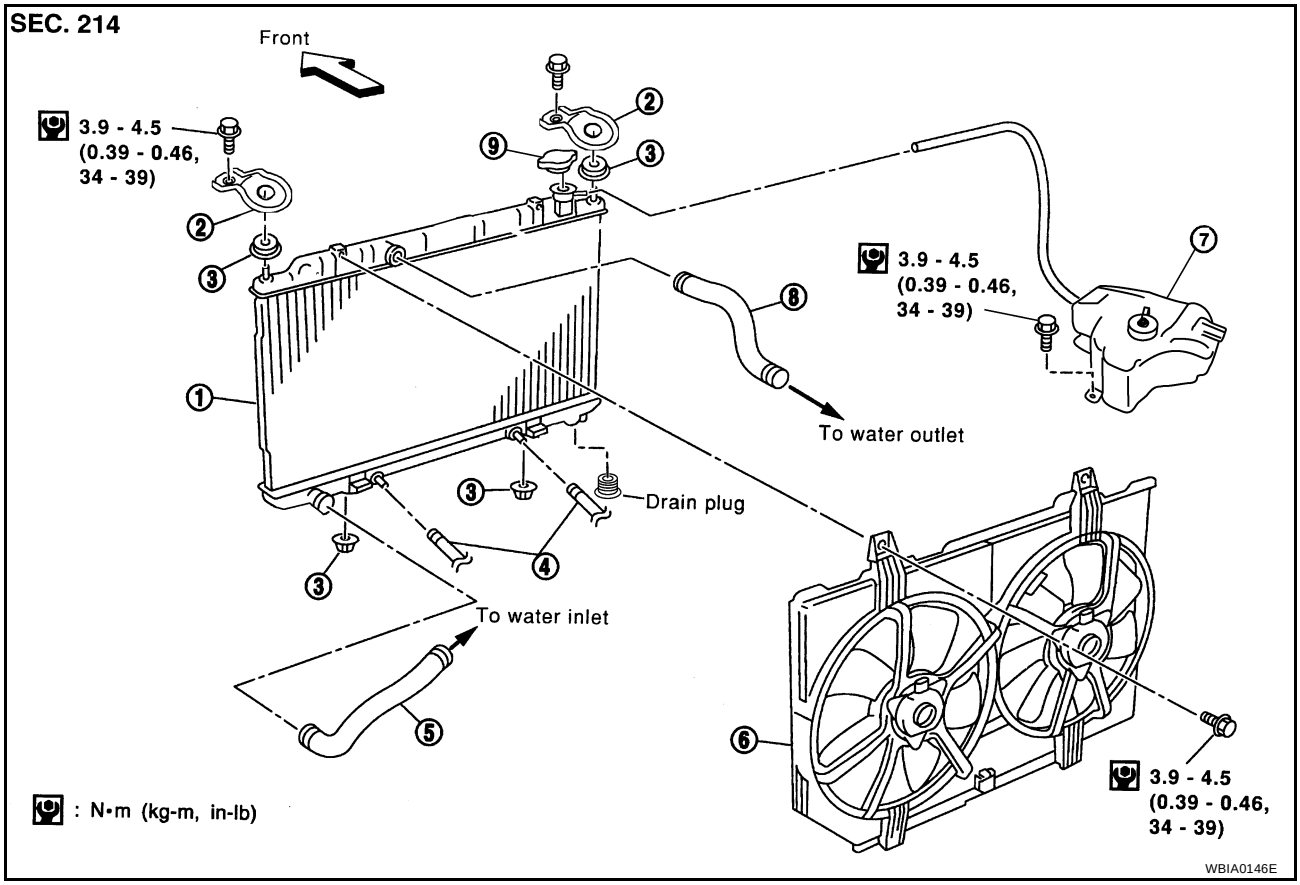

1.	Radiator	2.	Bracket	3.	Mounting rubber
4.	A/T oil cooler hose (if equipped)	5.	Radiator hose (lower)	6.	Radiator fan assembly
7.	Reservoir tank	8.	Radiator hose (upper)	9.	Radiator filler cap

WARNING:

Never remove the radiator cap when the engine is hot. Serious burns could occur from high pressure coolant escaping from the radiator. Wrap a thick cloth around the cap. Slowly turn it a quarter turn to allow built-up pressure to escape. Carefully remove the cap by turning it all the way.

REMOVAL

1. Drain coolant. Refer to MA-14, "Changing Engine Coolant" .
2. Remove air duct with air cleaner assembly.
3. Disconnect radiator upper hose, lower hoses and mounting bracket.
4. Disconnect the A/T oil cooler hoses, if equipped. Plug the hoses to prevent A/T oil loss.
5. Remove radiator and radiator fan assembly.

CAUTION:

- **Do not damage or scratch the radiator core when removing.**

INSTALLATION

- Installation is in the reverse order of removal.

Disassembly and Assembly

EBS007RK

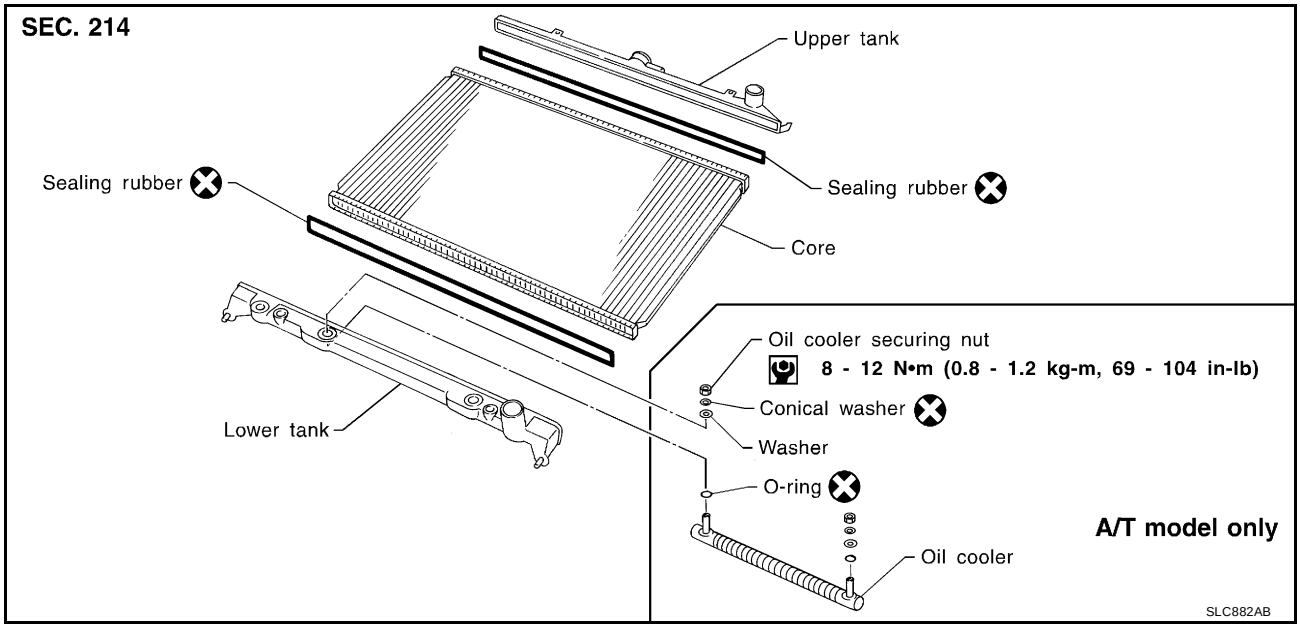

PREPARATION

1. Attach the spacer to the tip of the radiator plate pliers A.
   Spacer specification: 1.5 mm (0.059 in) thick x 18 mm (0.71 in) wide x 8.5 mm (0.335 in) long.
2. Make sure that when radiator plate pliers A are closed dimension H″ is approx. 7.6 mm (0.299 in).
3. Adjust dimension H″ with the spacer, if necessary.

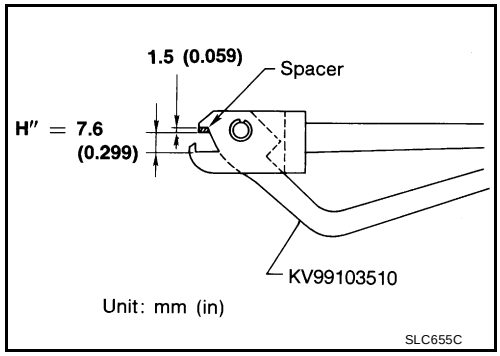

DISASSEMBLY

1. Remove tank with Tool.

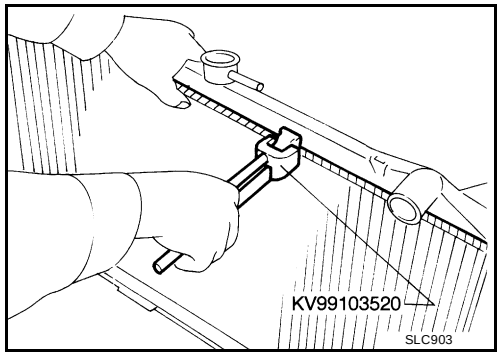

- Grip the crimped edge and bend it upwards so that Tool slips off.
  Do not bend excessively.

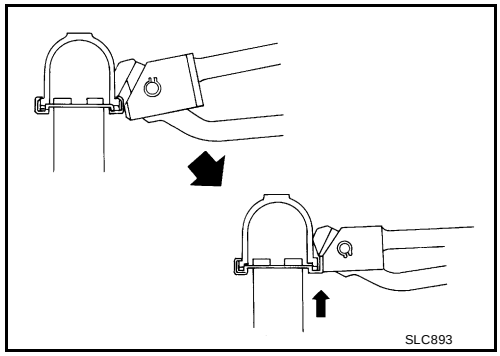

- In areas where Tool cannot be used, use a screwdriver to bend the edge up.
  Be careful not to damage tank.

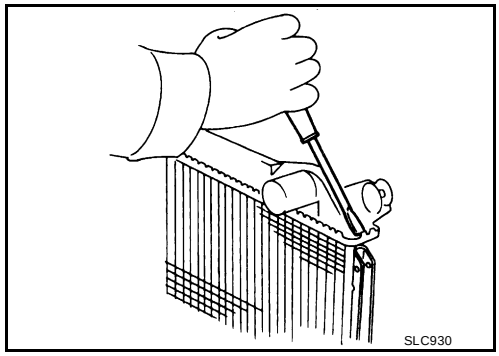

2. Make sure the edge stands straight up.
3. Remove oil cooler from tank (A/T model only).

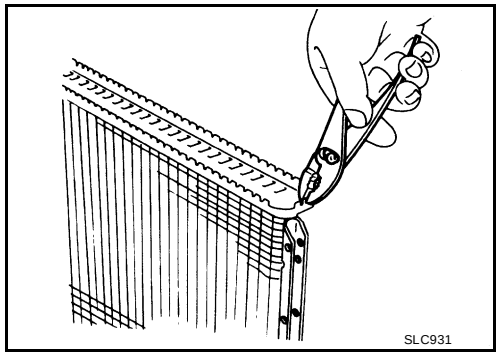

ASSEMBLY

1. Install oil cooler into the tank (A/T model only).
   Pay attention to direction of conical washer.

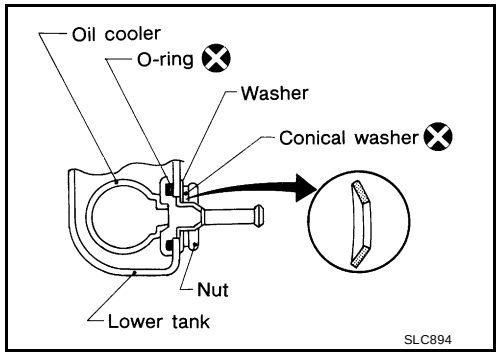

2. Clean contact portion of tank.

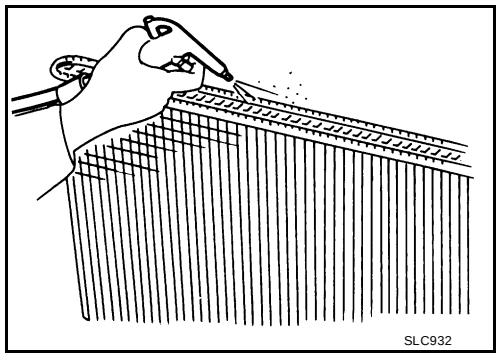

3. Install sealing rubber gasket.
   Push it into the tank groove with your fingers.
   Be careful not to twist sealing rubber gasket.

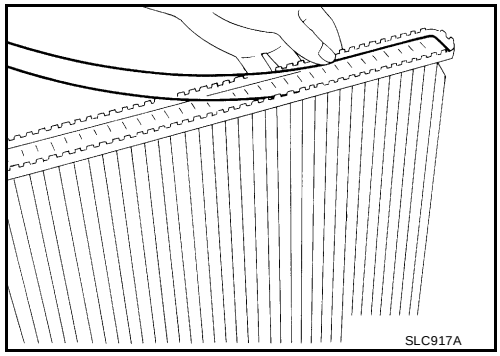

4. Caulk tank in specified sequence with Tool.

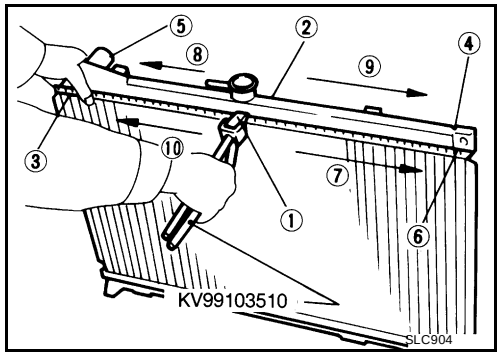

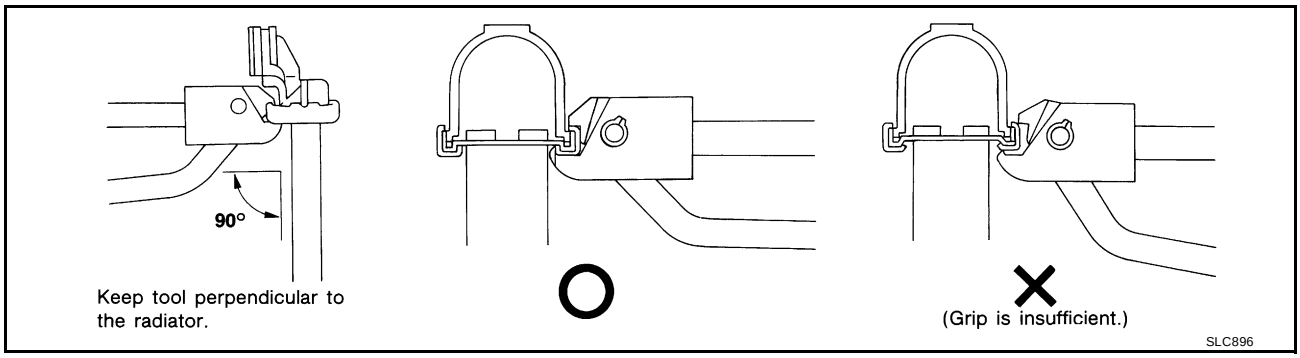

- Use pliers in the locations where Tool cannot be used.

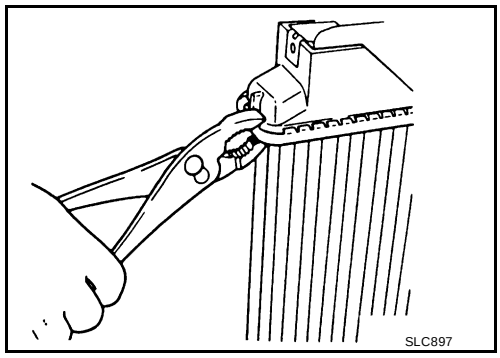

5. Make sure that the rim is completely crimped down.

   Standard height "H" : 8.0 - 8.4 mm (0.315 - 0.331 in)

6. Confirm that there is no leakage.
   Refer to CO-16, "INSPECTION" .

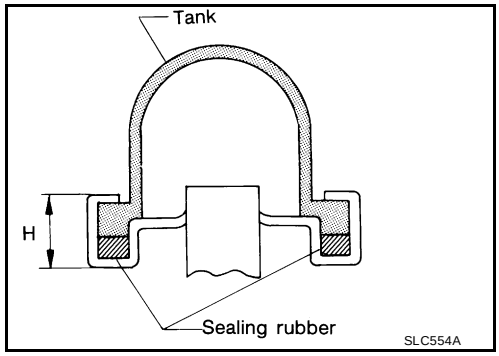

INSPECTION

1. Apply pressure with Tool.

   Specified pressure value : 157 kPa (1.57 bar, 1.6 kg/cm^2 , 23 psi)

   WARNING:
   To prevent the risk of the hose coming undone while under pressure, securely fasten it down with a hose clamp.
   Attach a hose to the oil cooler as well (A/T model only).

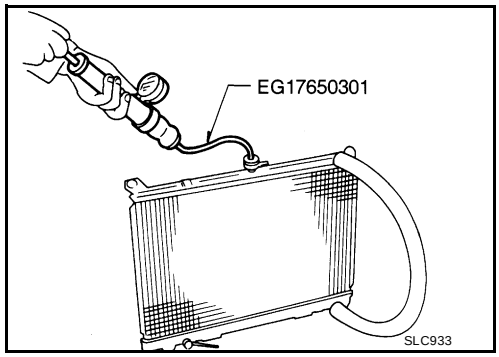

2. Check for leakage.

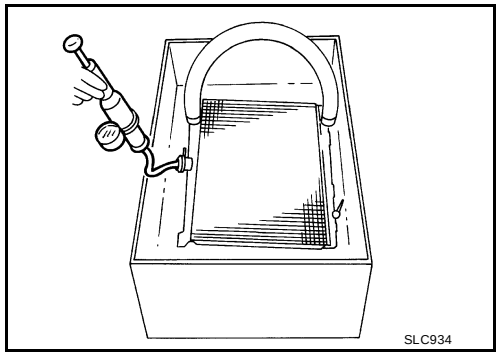

Disassembly and Assembly of Radiator Fan

EBS007RL

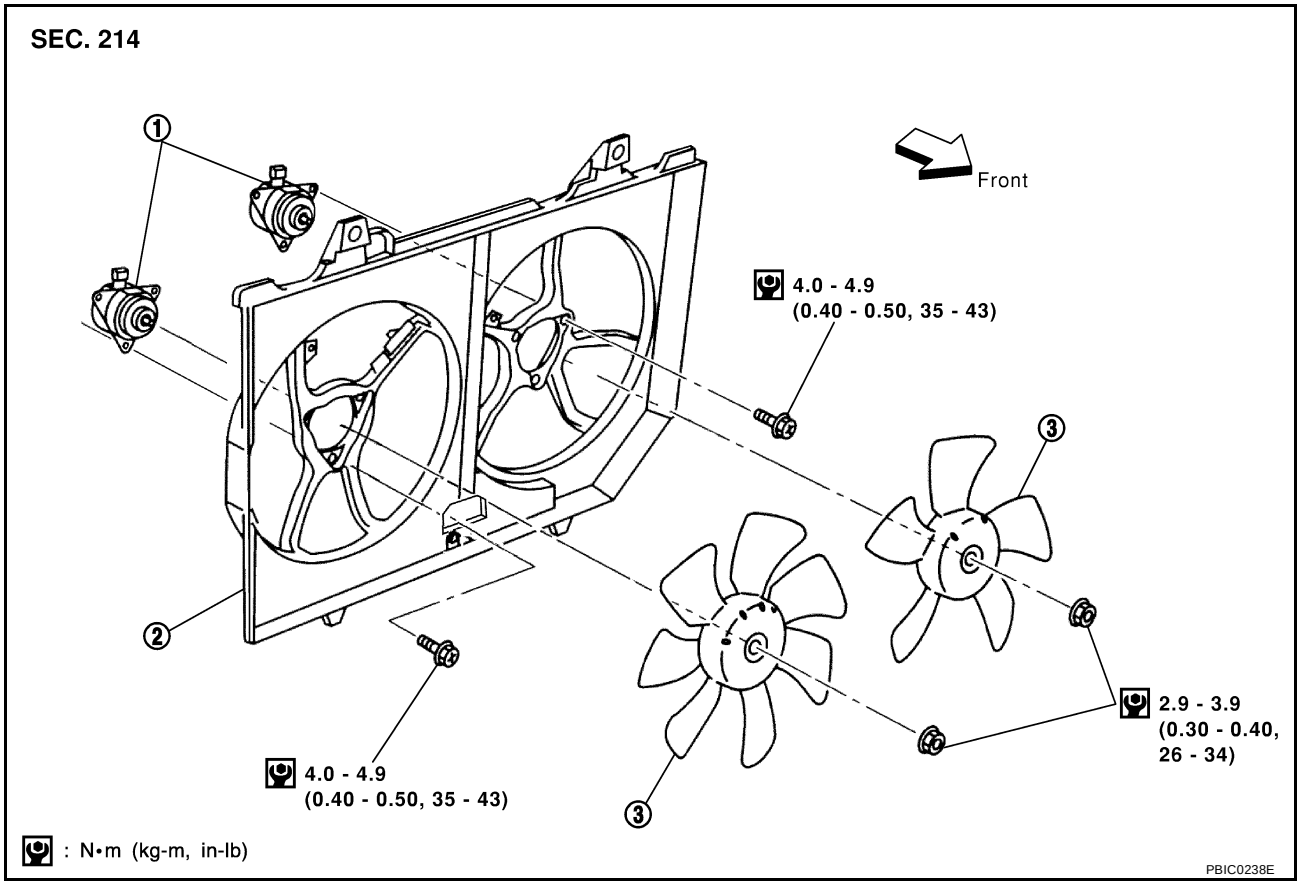

1. Fan motors
2. Fan shroud
3. Fan blade

DISASSEMBLY

1. Remove fan blade.
2. Remove fan motors from fan shroud.

ASSEMBLY

Assembly is in the reverse order of disassembly.

WATER PUMP

PFP:21020

Removal and Installation

EBS007RN

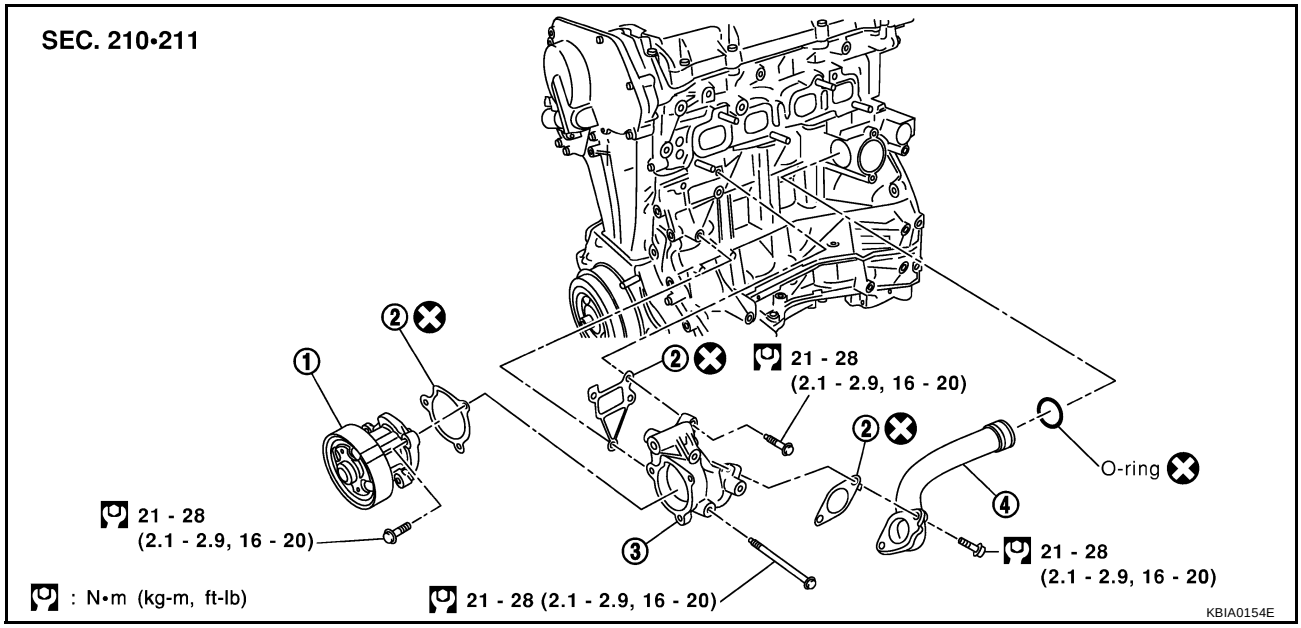

1. Water pump
2. Gasket
3. Water pump housing
4. Water pipe

WARNING:
Never remove the radiator cap when the engine is hot. Serious burns could occur from high pressure coolant escaping from the radiator.

REMOVAL

1. Drain coolant. Refer to MA-14, "Changing Engine Coolant" .

   CAUTION:
   Perform when the engine is cold.
2. Remove the following parts:
   - Under cover, using power tools.
   - Alternator, water pump and air compressor drive belt.
3. Remove the water pump.

   NOTE:
   If necessary, the alternator and exhaust manifold catalytic convertor assembly must be removed to remove the water pipe.

   CAUTION:
   - **Handle the water pump vane so that it does not contact any other parts.**
   - **Water pump cannot be disassembled and should be replaced as an assembly.**

INSPECTION AFTER REMOVAL

- Visually check that there is no significant dirt or rusting on the water pump body and vane.
- Check that there is no looseness in the vane shaft, and that it turns smoothly when rotated by hand.
- If the water pump does not perform properly, replace the water pump assembly.

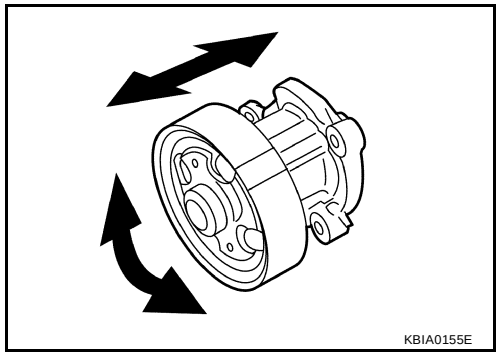

INSTALLATION

- Installation is in the reverse order of removal.

INSPECTION AFTER INSTALLATION

- After installing the water pump, check for leaks using the radiator cap tester.

THERMOSTAT AND THERMOSTAT HOUSING

PFP:21200

Removal and Installation

EBS007RO

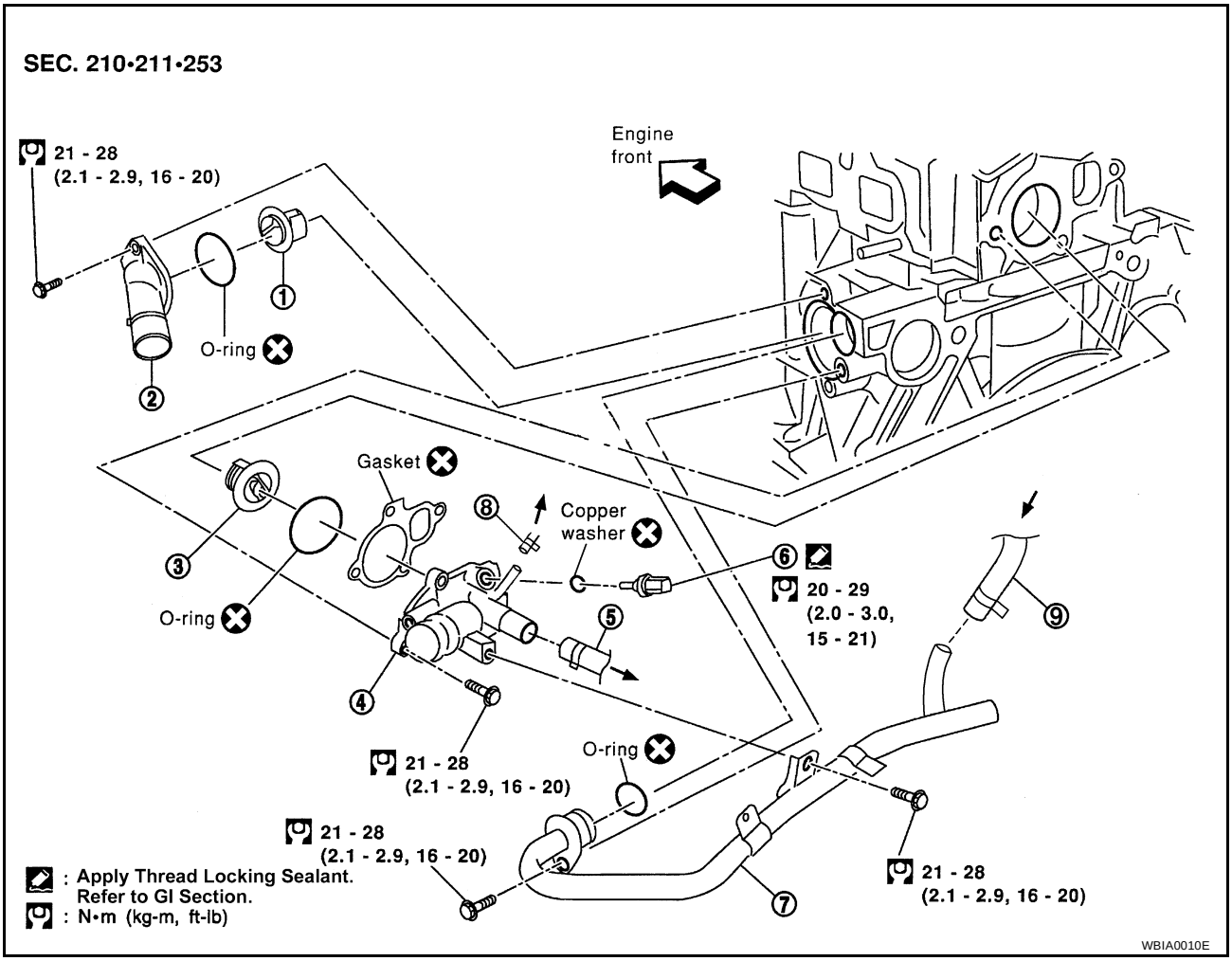

1. Thermostat	2. Engine coolant inlet	3. Engine coolant control valve
4. Engine coolant outlet	5. Heater hose	6. Engine coolant temperature sensor
7. Heater pipe	8. Throttle body inlet hose	9. Throttle body outlet hose

WARNING:

Never remove the radiator cap when the engine is hot. Serious burns could occur from high pressure coolant escaping from the radiator.

REMOVAL

CAUTION:

Perform when the engine is cold.

1. Drain engine coolant. Refer to MA-14, "Changing Engine Coolant" .
2. Remove radiator lower hose from the engine coolant inlet side.
3. Remove engine coolant inlet and thermostat.

INSPECTION AFTER REMOVAL

- Place a thread so that it is caught in the valves of the thermostat. Immerse fully in a container filled with water. Heat while stirring.
- The valve opening temperature is the temperature at which the valve opens and the falls from the thread.
- Continue heating. Check the full-open lift amount.

  NOTE:
  The full-open lift amount standard temperature for the thermostat is the reference value.
- After checking the full-open lift amount, lower the water temperature and check the valve closing temperature.

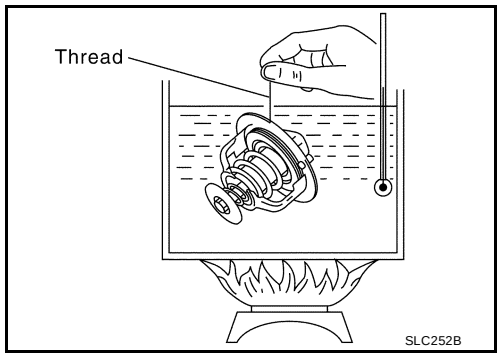

Thermostat	Standard Values
Valve opening temperature	82°C (180°F)
Full-open lift amount	8.6 mm / 95°C (0.339 in / 203°F)
Valve closing temperature	77°C (171°F)

INSTALLATION

Installation is in the reverse order of removal.

- Install the thermostat with the whole circumference of the flange part fitting securely inside the rubber ring.
- Install the thermostat with the jiggle valve facing upwards. The position deviation may be within the range of ±10°.
- If necessary, to install the heater pipe, first apply a mild detergent to the O-ring and then quickly insert the pipe into the housing.

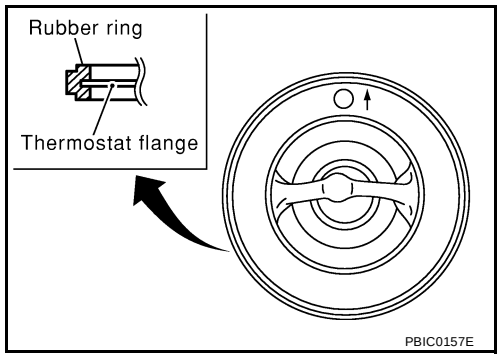

WATER CONTROL VALVE

PFP:21230

Removal and Installation

EBS007RP

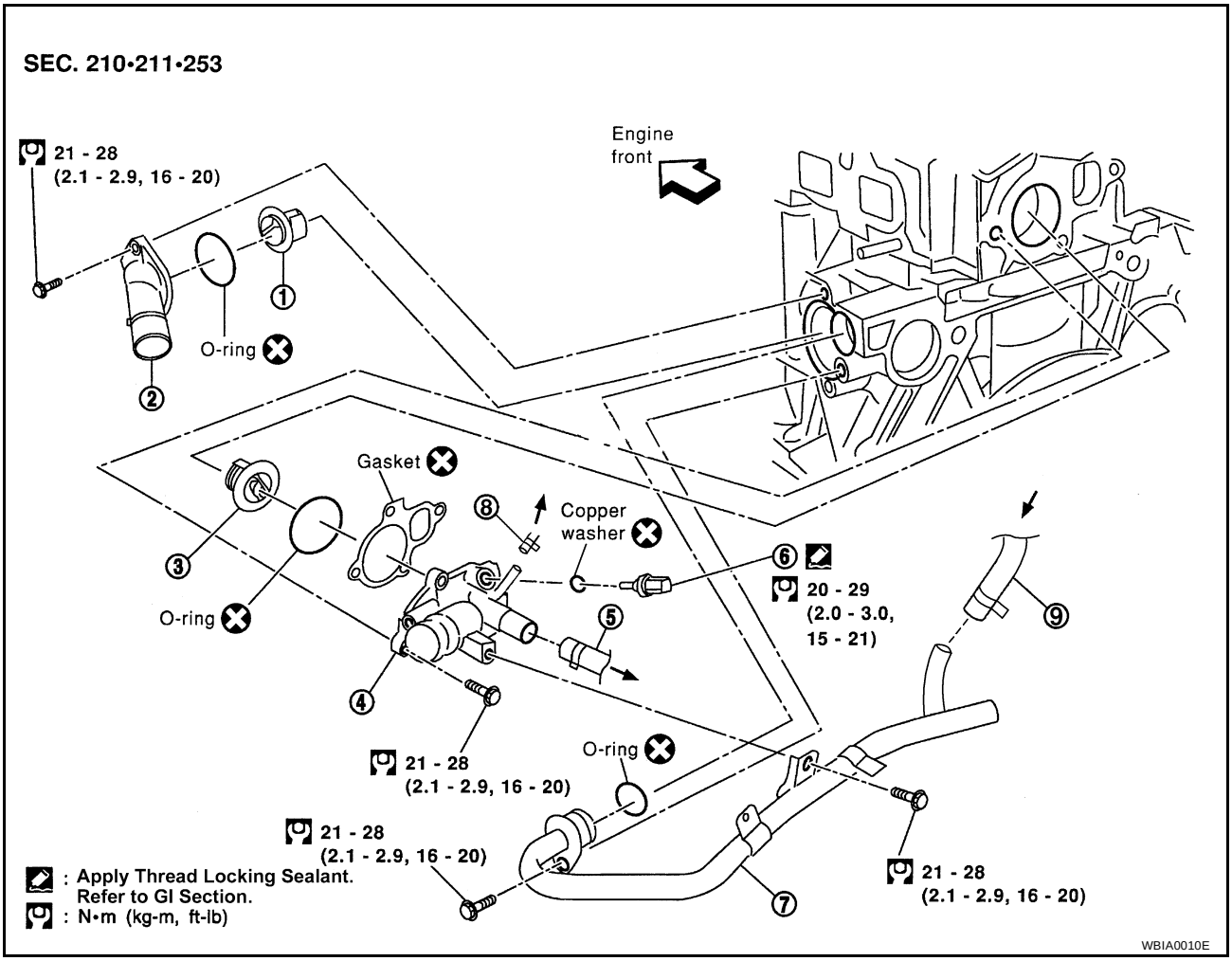

1. Thermostat	2. Engine coolant inlet	3. Engine coolant control valve
4. Engine coolant outlet	5. Heater hose	6. Engine coolant temperature sensor
7. Heater pipe	8. Throttle body inlet hose	9. Throttle body outlet hose

WARNING:

Never remove the radiator cap when the engine is hot. Serious burns could occur from high pressure coolant escaping from the radiator.

REMOVAL

CAUTION:

Perform when the engine cold.

1. Drain the engine coolant. Refer to MA-14, "Changing Engine Coolant" .
2. Remove the upper radiator hose, heater pipe, throttle body inlet hose, and heater hose.
3. Remove the engine coolant outlet.
4. Remove the engine coolant control valve.

INSPECTION AFTER REMOVAL

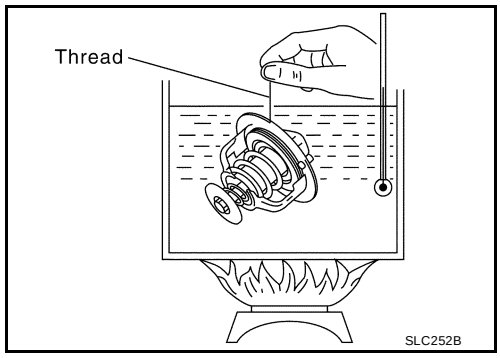

- Place a thread so that it is caught in the valve of the water control valve. Immerse fully in a container filled with water. Heat while stirring.
- The valve opening temperature is the temperature at which the valve opens and the falls from the thread.
- Continue heating. Check the full-open lift amount.

  NOTE:
  The full-open lift amount standard temperature for the water control valve is the reference value.
- After checking the full-open lift amount, lower the water temperature and check the valve closing temperature.

Standard values

Water Control Valve	Standard Value
Valve opening temperature	93.5° - 96.5°C (200° - 206°F)
Full-open lift amount	8 mm / 108°C (0.315 in / 226° F)
Valve closing temperature	90°C (194° F) or higher

INSTALLATION

Installation is in the reverse order of removal.

- Install the water control valve with the whole circumference of the flange part fitting securely inside the rubber ring.
- Install the water control valve with the up-mark facing up and the frame center part facing upwards. The position deviation may be within the range of ±10°.

SERVICE DATA AND SPECIFICATIONS (SDS)

PFP:00030

Capacity

EBS007RQ

Coolant capacity (without reservoir tank)	6.9 ℓ (7 1/4 qt.)
Reservoir tank coolant capacity (at MAX level)	0.7 ℓ (3/4 qt.)

Thermostat

EBS007RR

Valve opening temperature	80.5 - 83.5°C (177 - 182°F)
Valve lift	More than 8 mm / 95°C (0.315 in / 203°F)

Water Control Valve

EBS007RS

Valve opening temperature	93.5-96.5°C (200-206°F)
Valve lift	More than 8 mm / 108°C (0.315 in / 226°F)

Radiator

EBS007RT

Unit: kPa (bar, kg / cm^2 , psi)

Cap relief pressure	Standard	78 - 98 (0.78 - 0.98, 0.8 - 1.0, 11 - 14)
	Limit	59 - 98 (0.59 - 0.98, 0.6 - 1.0, 9 - 14)
Leakage test pressure		157 (1.57, 1.6, 23)

PRECAUTIONS

PFP:00001

Precautions for Supplemental Restraint System (SRS) “AIR BAG” and “SEAT BELT PRE-TENSIONER”

EBS007RU

The Supplemental Restraint System such as “AIR BAG” and “SEAT BELT PRE-TENSIONER”, used along with a front seat belt, helps to reduce the risk or severity of injury to the driver and front passenger for certain types of collision. Information necessary to service the system safely is included in the SRS and SB section of this Service Manual.

WARNING:

- **To avoid rendering the SRS inoperative, which could increase the risk of personal injury or death in the event of a collision which would result in air bag inflation, all maintenance must be performed by an authorized NISSAN/INFINITI dealer.**
- **Improper maintenance, including incorrect removal and installation of the SRS, can lead to personal injury caused by unintentional activation of the system. For removal of Spiral Cable and Air Bag Module, see the SRS section.**
- **Do not use electrical test equipment on any circuit related to the SRS unless instructed to in this Service Manual. SRS wiring harnesses can be identified by yellow and/or orange harness connectors.**

Precautions for Liquid Gasket

EBS00G4M

REMOVAL OF LIQUID GASKET SEALING

- After removing the mounting bolts and nuts, separate the mating surface using a seal cutter and remove the sealant.

CAUTION:

Be careful not to damage the mating surfaces.

- In areas where the cutter is difficult to use, use a plastic hammer to lightly tap the areas where the sealant is applied.

CAUTION:

If for some unavoidable reason a tool such as a flat-bladed screwdriver is used, be careful not to damage the mating surfaces.

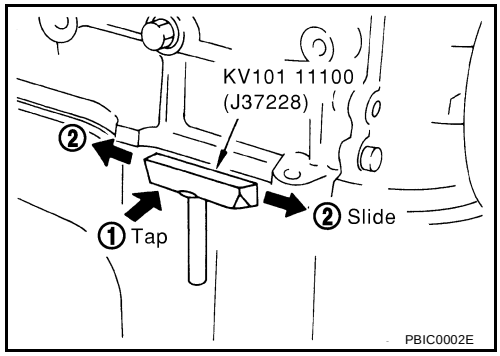

LIQUID GASKET APPLICATION PROCEDURE

1. Using a scraper, remove the old sealant adhering to the mating surface.
   - Remove the sealant completely from the groove, mounting bolts, and bolt holes.
2. Thoroughly clean the mating surface removing any adhering moisture, grease and foreign material.
3. Attach the sealant tube to the tube presser.
   Use Genuine RTV Silicone Sealant or equivalent. Refer to **GI-42, "Recommended Chemical Products and Sealants"** **.**

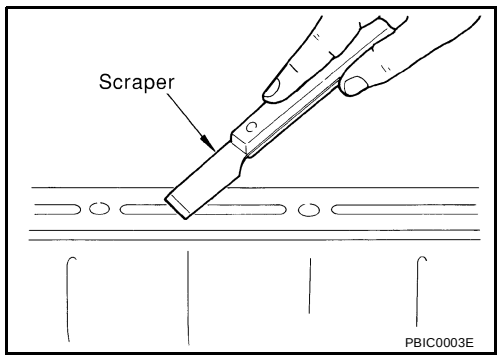

4. Apply the sealant without breaks to the specified location with the specified dimensions.
   - If there is a groove for the sealant application, apply the sealant to the groove.

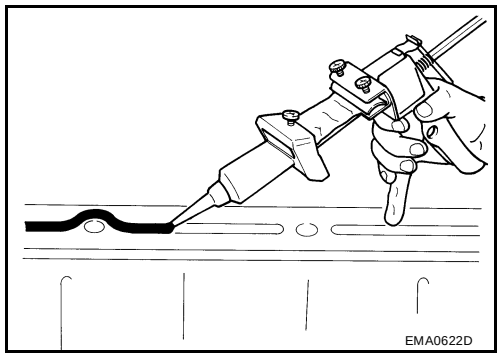

- As for the bolt holes, normally apply the sealant inside the holes. Occasionally, it should be applied outside the holes. Make sure to read the text of service manual.
- Within five minutes of sealant application, install the mating component.
- If the sealant protrudes, wipe it off immediately.
- Do not retighten after the installation.
- After 30 minutes or more have passed from the installation, fill the engine with the proper oil and coolant. Refer to GI-42, "Recommended Chemical Products and Sealants" .

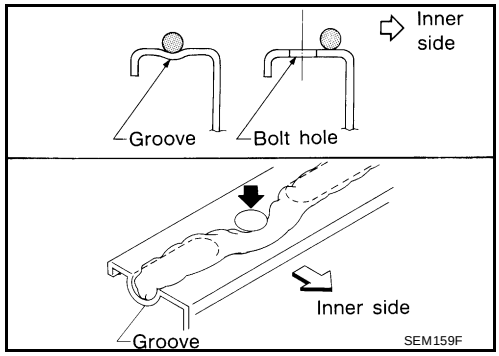

PREPARATION

PFP:00002

Special Service Tools

EBS007RW

The actual shapes of Kent-Moore tools may from those of special service tools illustrated here.

Tool number (Kent-Moore No.) Tool name	Description
WS39930000 (–) Tube pressure 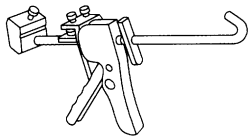 S-NT052	Pressing the tube of liquid gasket
EG17650301 (J33984-A) Radiator cap tester adapter 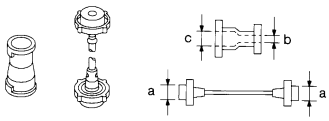 S-NT564	Adapting radiator cap tester to radiator cap and radiator filler neck **a: 28 (1.10) dia.** **b: 31.4 (1.236) dia.** **c: 41.3 (1.626) dia.** Unit: mm (in)
KV99103510 (–) Radiator plate pliers A 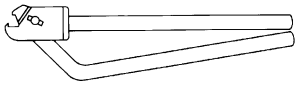 S-NT224	Installing radiator upper and lower tanks
KV99103520 (–) Radiator plate pliers B 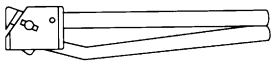 S-NT225	Removing radiator upper and lower tanks

Commercial Service Tools

EBS007RX

Tool name	Description
Power tool 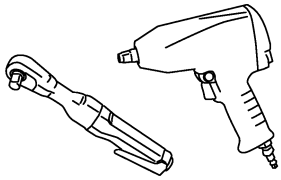 PBIC0190E	Loosening bolts and nuts

PREPARATION FOR CHANGING ENGINE COOLANT

Prepare an empty one gallon bottle, such as used for windshield washer fluid. Obtain a 1,371mm (54 in) length of hose with the same inner diameter as the coolant reservoir hose. Modify the one gallon bottle by making a hole at the bottom slightly smaller than the hose outer diameter to seal against leaks when the bottle is full of fluid.

- Insert the hose in the bottom of the bottle.
- Seal the hose to the bottle so it will not leak.

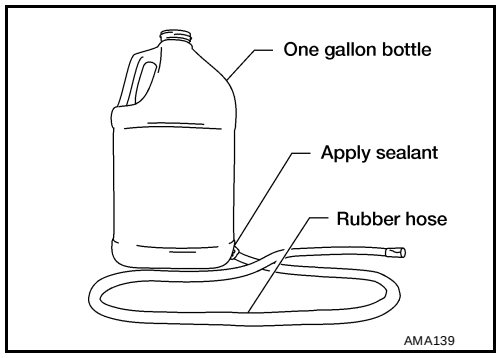

OVERHEATING CAUSE ANALYSIS

PFP:00012

Troubleshooting Chart

EBS00F1A

	Symptom		Check items	
Cooling system parts malfunction	Poor heat transfer	Water pump malfunction	Worn or loose drive belt	—
		Thermostat stuck closed	—	
		Damaged fins	Dust contamination or paper clogging	
			Physical damage	
		Clogged radiator cooling tube	Excess foreign material (rust, dirt, sand, etc.)	
	Reduced air flow	Cooling fan does not operate	Fan assembly	—
		High resistance to fan rotation		
		Damaged fan blades		
	Damaged radiator shroud	—	—	—
	Improper coolant mixture ratio	—	—	—
	Poor coolant quality	—	Coolant viscosity	—
	Insufficient coolant	Coolant leaks	Cooling hose	Loose clamp
				Cracked hose
			Water pump	Poor sealing
			Radiator cap	Loose
				Poor sealing
			Radiator	O-ring for damage, deterioration or improper fitting
				Cracked radiator tank
				Cracked radiator core
			Reservoir tank	Cracked reservoir tank
		Overflowing reservoir tank	Exhaust gas leaks into cooling system	Cylinder head deterioration
				Cylinder head gasket deterioration

	Symptom		Check items	
Except cooling system parts malfunction	—	Overload on engine	Abusive driving	High engine rpm under no load
				Driving in low gear for extended time
				Driving at extremely high speed
			Powertrain system malfunction	—
			Installed improper size wheels and tires	
			Dragging brakes	
			Improper ignition timing	
	Blocked or restricted air flow	Blocked bumper	—	—
		Blocked radiator grille	Installed car brassiere	
			Mud contamination or paper clogging	
		Blocked radiator	—	
		Blocked condenser	Blocked air flow	
		Installed large fog lamp		

COOLING SYSTEM

PFP:21020

Cooling Circuit

EBS007RZ

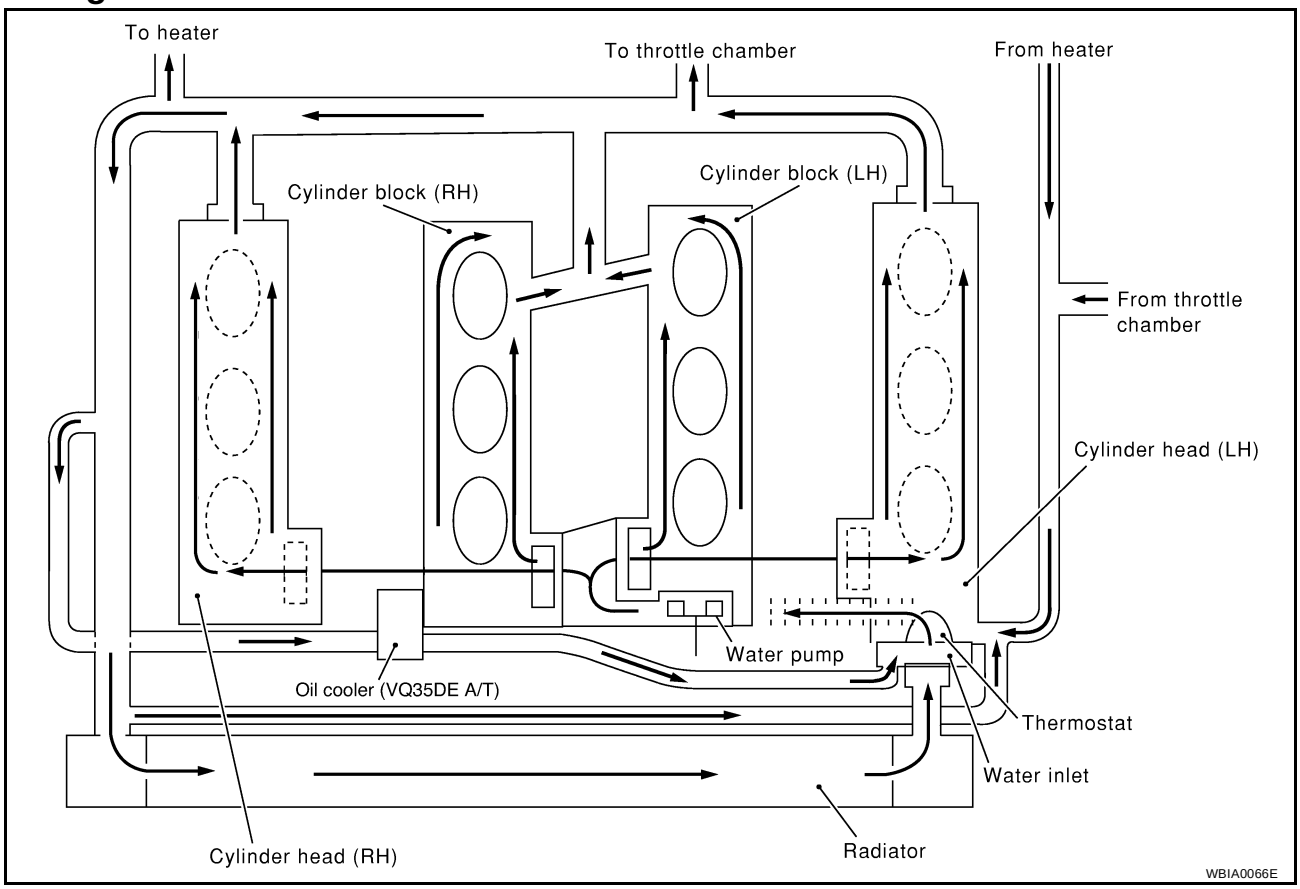

ENGINE COOLANT

PFP:KQ100

System Check

EBS00F1F

WARNING:
Never remove the radiator cap when the engine is hot. Serious burns could occur from high pressure fluid escaping from the radiator.
Wrap a thick cloth around the cap. Slowly push down and turn it a quarter turn to allow built-up pressure to escape. Carefully remove the cap by pushing down and turning it all the way.

CHECKING COOLING SYSTEM HOSES

Check hoses for the following:

- Improper attachment
- Leaks
- Cracks
- Damage
- Loose connections
- Chafing
- Deterioration

CHECKING RESERVOIR LEVEL

- Check if the reservoir tank coolant level is within MIN to MAX when the engine is cool.
- Adjust coolant level if it is too much or too little.

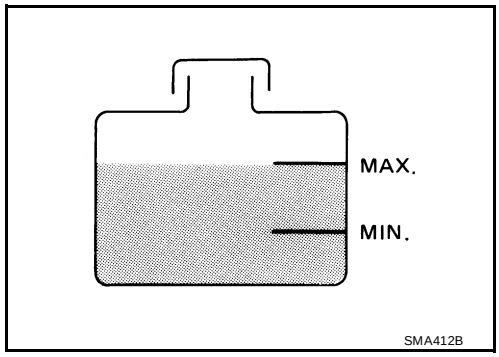

CHECKING COOLING SYSTEM FOR LEAKS

To check for leakage, apply pressure to the cooling system with a tester.

Testing pressure : 157 kPa (1.6 kg/cm^2 , 23 psi)

WARNING:
Never remove the radiator cap when the engine is hot. Serious burns could occur from high pressure coolant escaping from the radiator.

CAUTION:
Higher pressure than specified may cause radiator damage.

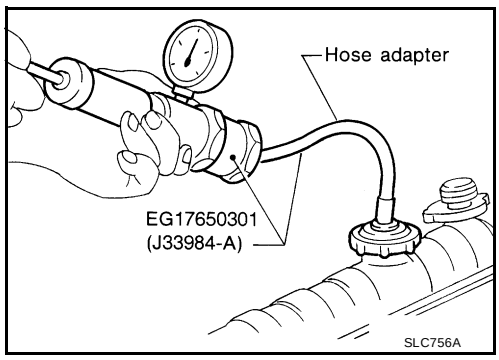

CHECKING RADIATOR

Check radiator for mud or clogging. If necessary, clean radiator as follows.

- Be careful not to bend or damage the radiator fins.
- When radiator is cleaned without removal, remove all surrounding parts such as cooling fan, radiator shroud and horns. Then tape the harness and connectors to prevent water from entering.

1. Apply water by hose to the back side of the radiator core vertically downward.
2. Apply water again to all radiator core surfaces once per minute.
3. Stop washing when clear water flows off of the radiator.
4. Blow air into the back side of radiator core vertically downward.
   - Use compressed air lower than 490 kPa (5 kg/cm^2 , 71 psi) and keep distance more than 300 mm (11.8 in).

5. Blow air again into all the radiator core surfaces once per minute until no water sprays out.
6. Check for leakage.

CHECKING RADIATOR CAP

- To check radiator cap, apply pressure to cap with a tester.

Radiator cap relief pressure	
Standard	**: 78 - 98 kPa (0.8 - 1.0 kg/cm^2 , 11 - 14 psi)**
Limit	**: 59 kPa (0.6 kg/cm^2 , 14 psi)**

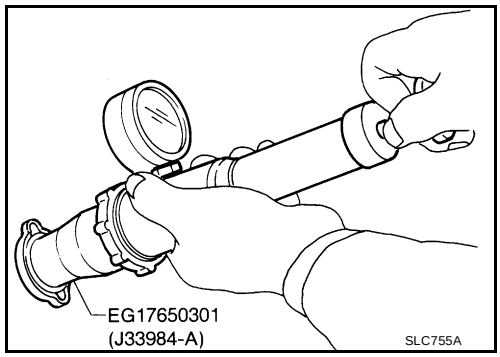

- Pull the negative pressure valve to open it.
- Check that it closes completely when released.

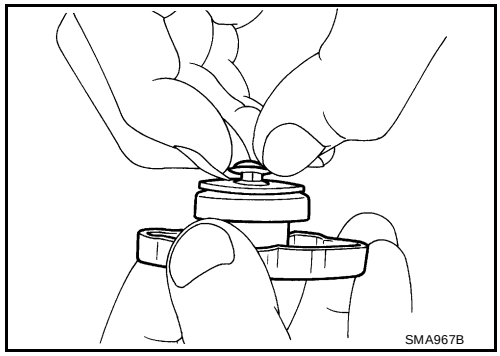

Refilling Engine Coolant

EBS00F1D

Changing the engine coolant is part of the required maintenance of the engine. Refer to MA-14, "Changing Engine Coolant" .

RADIATOR

PFP:21400

Removal and Installation

EBS00F1B

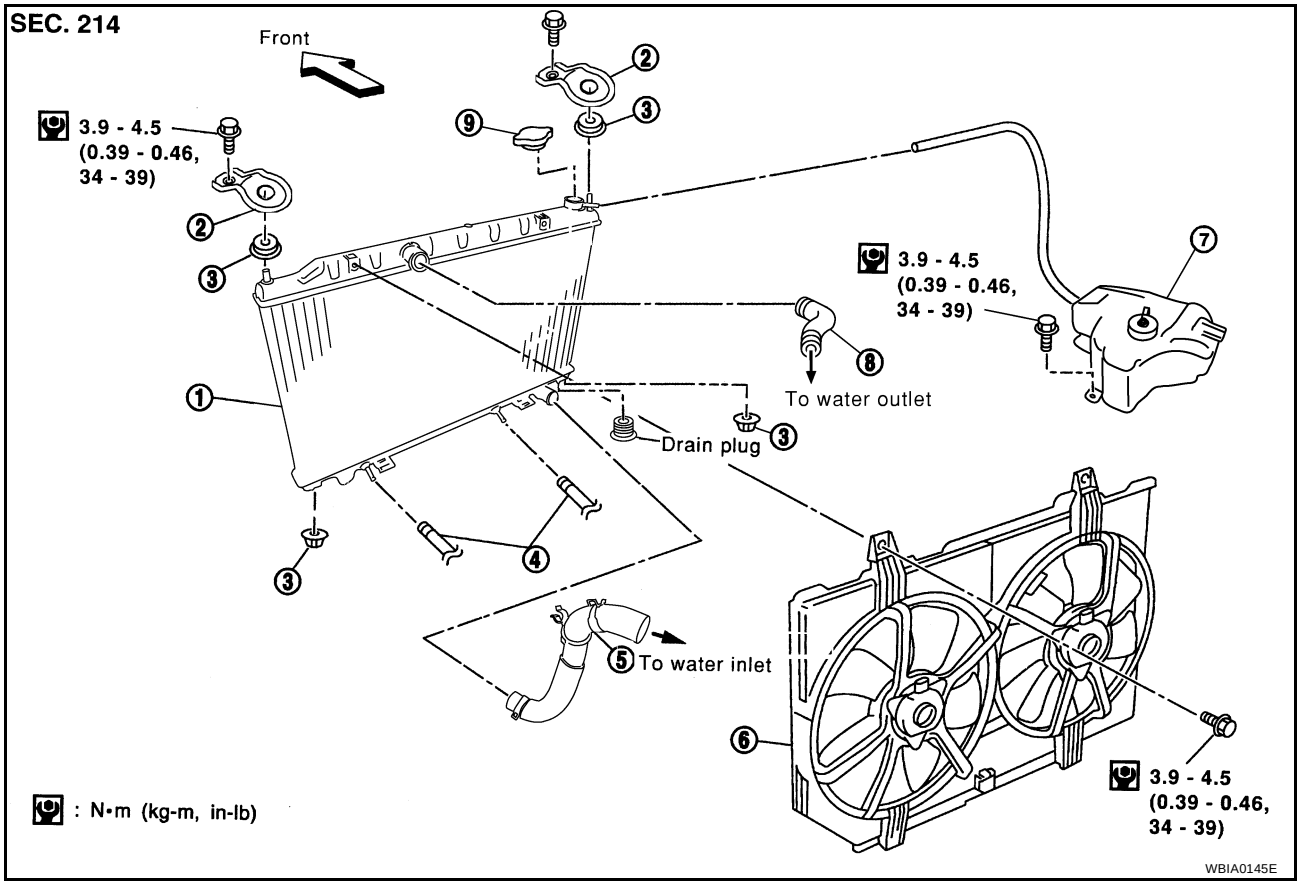

1. Radiator	2. Bracket	3. Mounting rubber
4. A/T oil cooler hose (if equipped)	5. Radiator hose (lower)	6. Radiator fan assembly
7. Reservoir tank	8. Radiator hose (upper)	9. Radiator filler cap

WARNING:
Never remove the radiator cap when the engine is hot. Serious burns could occur from high pressure coolant escaping from the radiator.

REMOVAL

1. Remove the undercover using power tool.
2. Drain the coolant from the radiator. Refer to MA-14, "Changing Engine Coolant" .

   CAUTION:
   Perform when engine is cold.
3. Disconnect radiator upper and lower hoses.
4. Remove the A/T oil cooler hoses, if equipped.
   - Plug hoses to avoid leakage of A/T fluid.
5. Disconnect the reservoir tank hose.
6. Remove the radiator mounting brackets.
7. Remove the radiator and radiator fan assembly.

INSTALLATION

Installation is in the reverse order of removal.

- **Fill the radiator with coolant. Refer to MA-14, "Changing Engine Coolant" .**

CHECKING RADIATOR CAP

1. Pull the negative-pressure valve to open it and check that it closes completely when released.

- Check that there is no dirt or damage on the valve seat of the radiator cap negative-pressure valve.
- Check that there are no abnormalities in the opening and closing conditions of the negative-pressure valve.

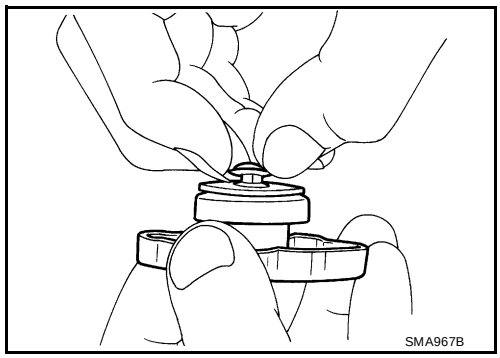

2. Check radiator cap relief pressure.

Standard: 78 – 98 kPa (0.8 – 1.0 kg/cm^2 , 11 – 14 psi)

Limit: 59 kPa (0.6 kg/cm^2 , 9 psi)

- When connecting the radiator cap to the tester, apply water or coolant to the cap seal surface.
- Replace the radiator cap if there is an abnormality in the negative-pressure valve, or if the open-valve pressure is outside of the standard values.

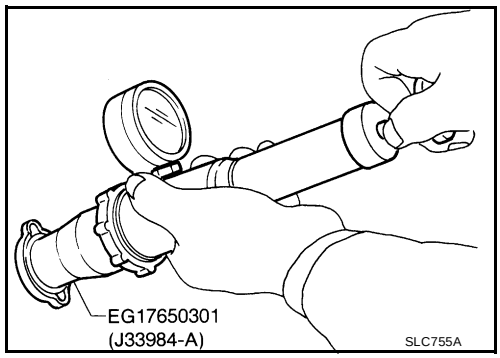

CHECKING RADIATOR

Check radiator for mud or clogging. If necessary, clean radiator as follows.

- Be careful not to bend or damage the radiator fins.
- When radiator is cleaned without removal, remove all surrounding parts such as cooling fan shroud and horns. Then tape the harness and electrical connectors to prevent water from entering.

1. Apply water by hose to the back side of the radiator core, with the hose pointed vertically downward.
2. Apply water again to all radiator core surfaces once per minute.
3. Stop washing if any stains no longer flow out from the radiator.
4. Blow air into the back side of radiator core, with the air hose pointed vertically downward.

- Use compressed air lower than 490 kPa (5 kg/cm^2 , 71 psi) and keep distance more than 30 cm (11.8 in).

5. Blow air again into all the radiator core surfaces once per minute until no water sprays out.

Disassembly and Assembly

EBS007S3

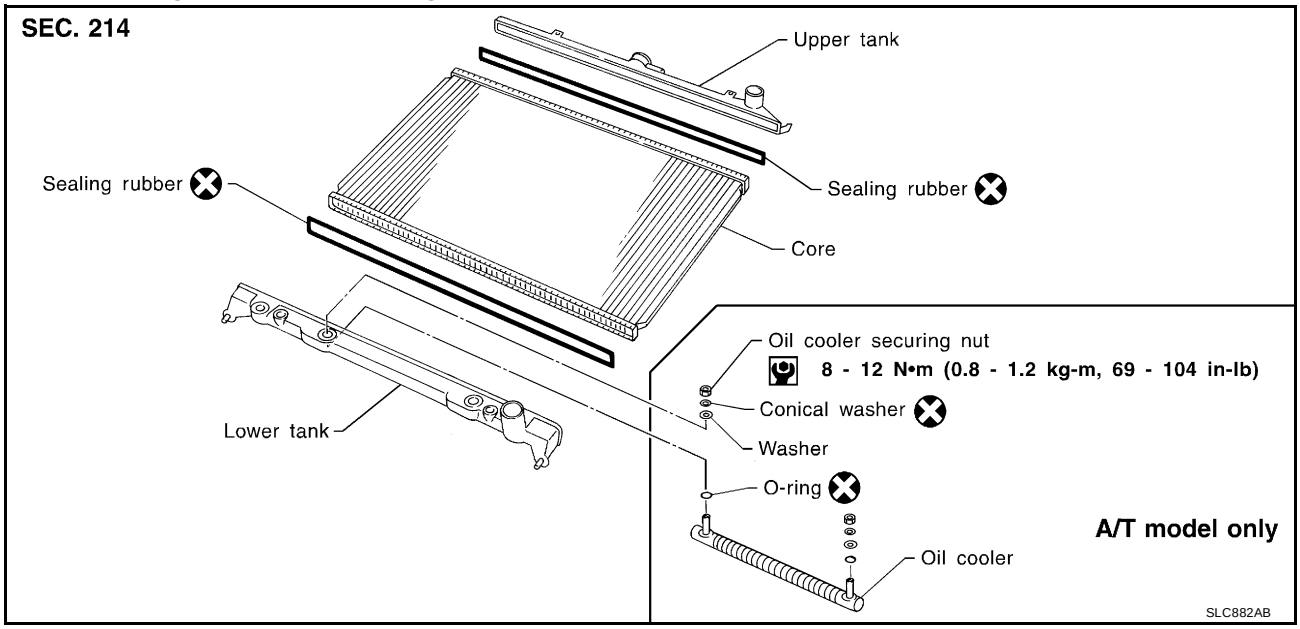

PREPARATION

1. Attach the spacer to the tip of the radiator plate pliers A.
   Spacer specification: 1.5 mm (0.059 in) thick x 18 mm (0.71 in) wide x 8.5 mm (0.335 in) long.
2. Make sure that when radiator plate pliers A are closed dimension H″ is approx. 7.6 mm (0.299 in).
3. Adjust dimension H″ with the spacer, if necessary.

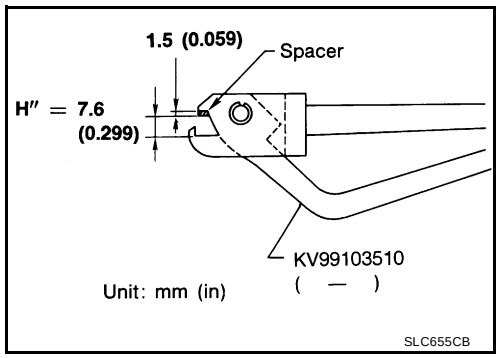

DISASSEMBLY

1. Remove the tank with Tool.

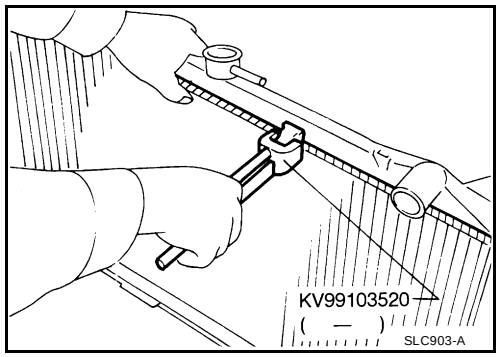

- Grip the crimped edge and bend it upwards so that Tool slips off.
  Do not bend excessively.

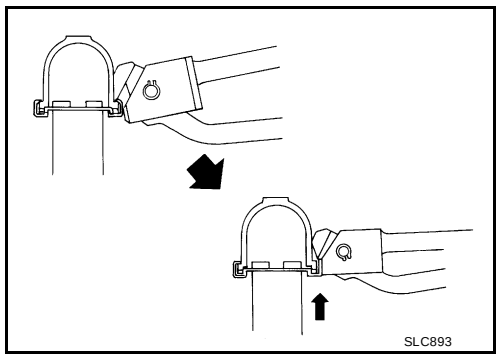

- In areas where Tool cannot be used, use a screwdriver to bend the edge up.
  Be careful not to damage tank.

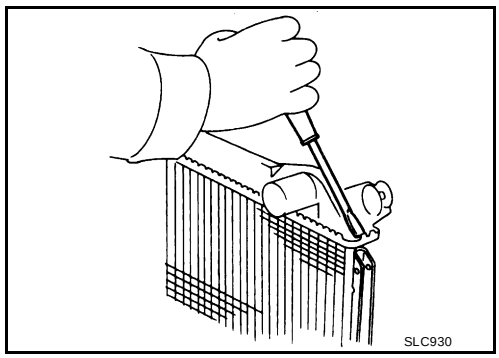

2. Make sure the edge stands straight up.
3. Remove oil cooler from tank (A/T model only).

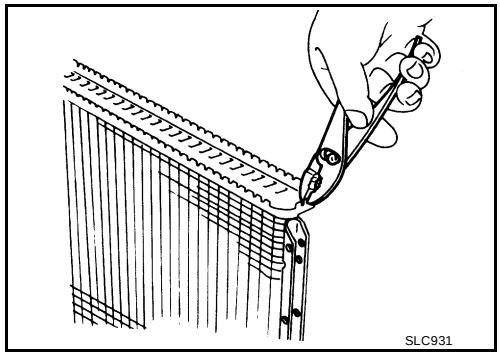

ASSEMBLY

1. Install the oil cooler (A/T model only).
   Pay attention to direction of conical washer.

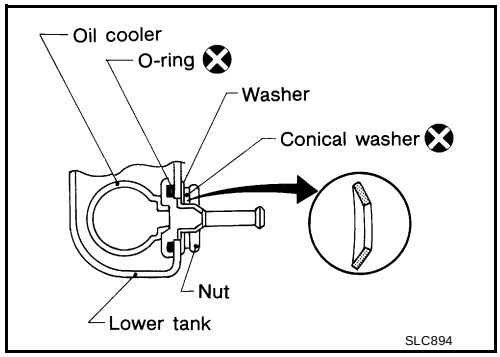

2. Clean the contact portion of the tank.

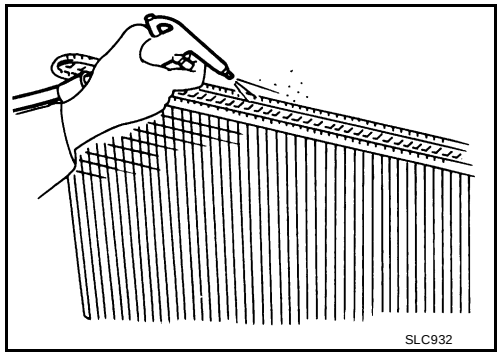

3. Install sealing rubber.
   Push it in with fingers.
   Be careful not to twist sealing rubber.

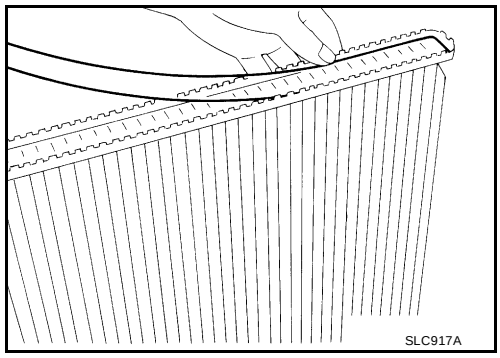

4. Caulk tank in specified sequence with Tool.

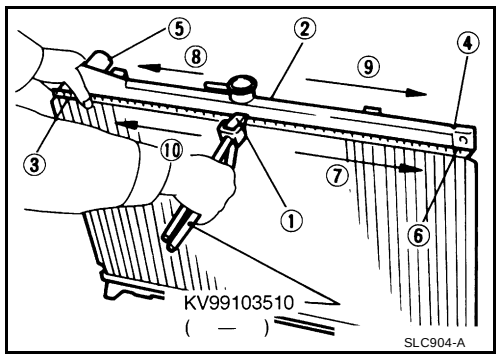

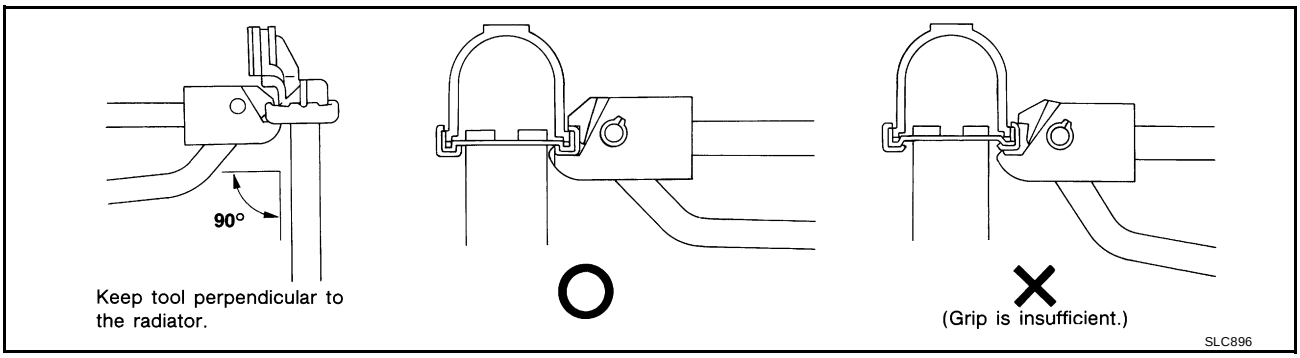

- Use pliers in the locations where Tool cannot be used.

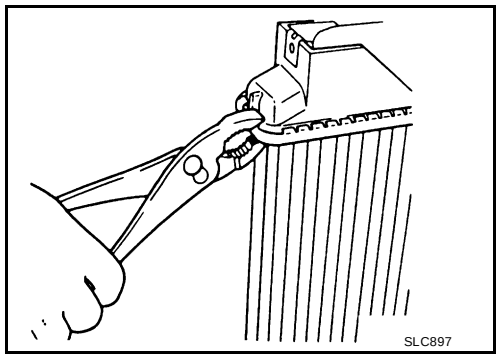

5. Make sure that the rim is completely crimped down.

   Standard height "H" : 8.0 - 8.4 mm (0.315 - 0.331 in)

6. Confirm that there is no leakage.
   Refer to CO-39, "INSPECTION" .

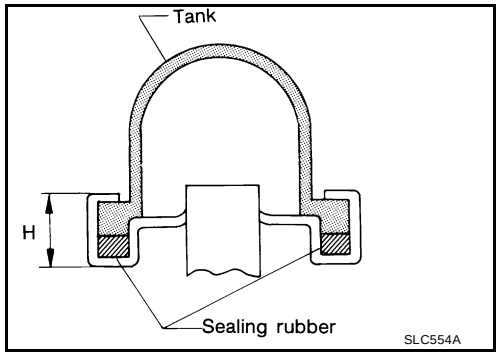

INSPECTION

1. Apply pressure with Tool.

Specified pressure value **: 157 kPa (1.57 bar, 1.6 kg/cm^2 , 23 psi)**

WARNING:
To prevent the risk of the hose coming undone while under pressure, securely fasten it down with a hose clamp.
Attach a hose to the oil cooler as well (A/T model only).

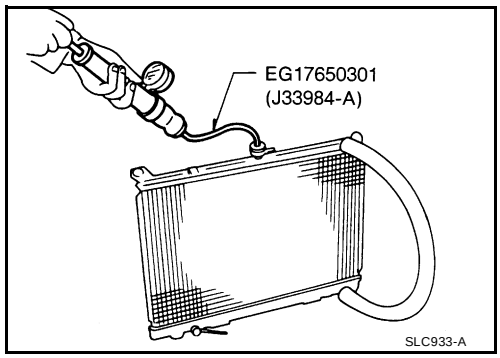

2. Check for leakage.

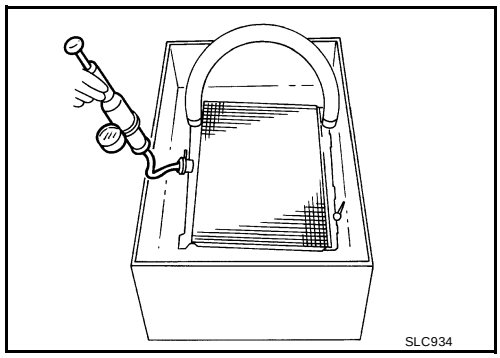

Disassembly and Assembly Radiator Fan

EBS007S4

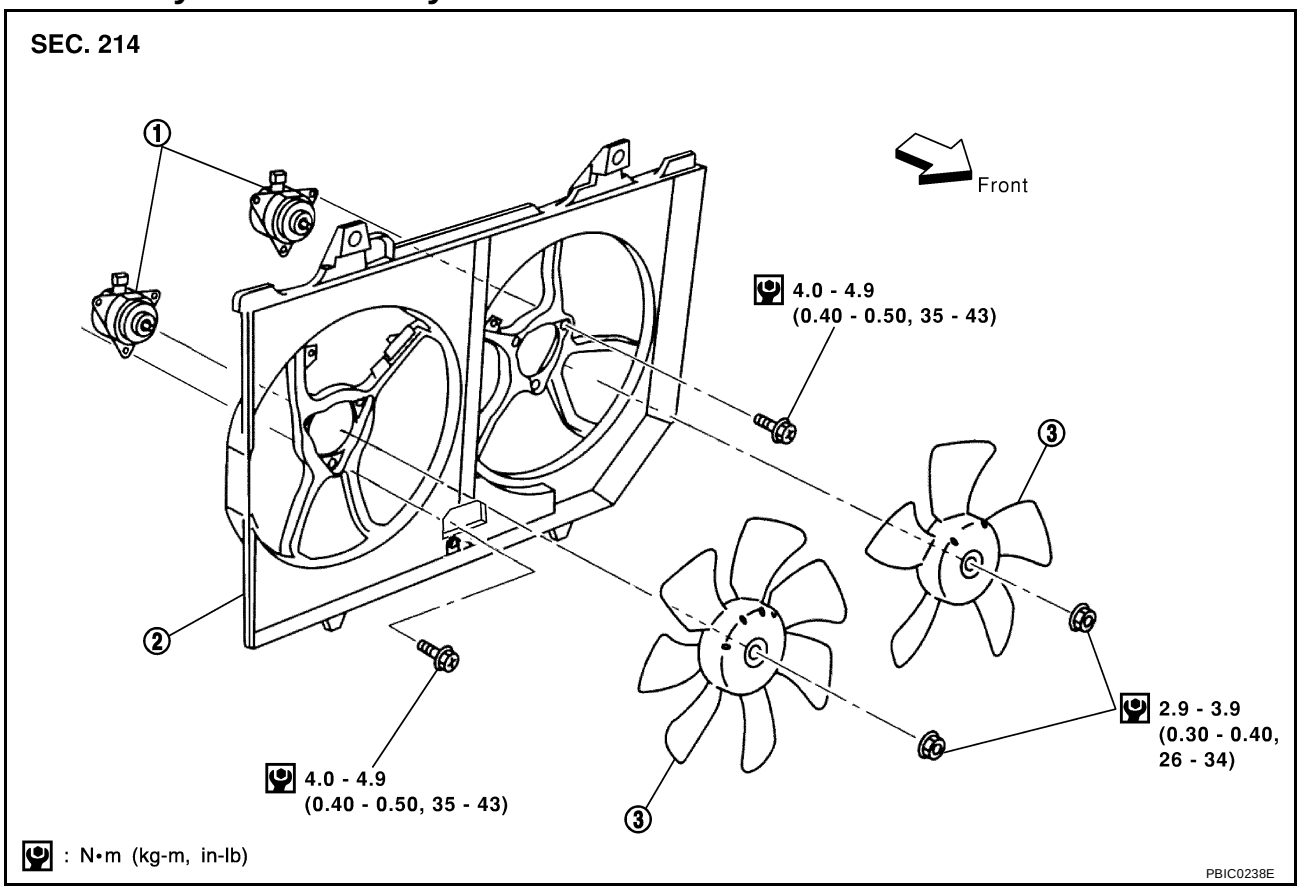

1. Fan motors
2. Fan shroud
3. Fan blade

DISASSEMBLY

1. Remove fan blade.

2. Remove fan motor from fan shroud.

ASSEMBLY

- Assemble in the reverse order of disassembly.

WATER PUMP

PFP:21020

Removal and Installation

EBS007S5

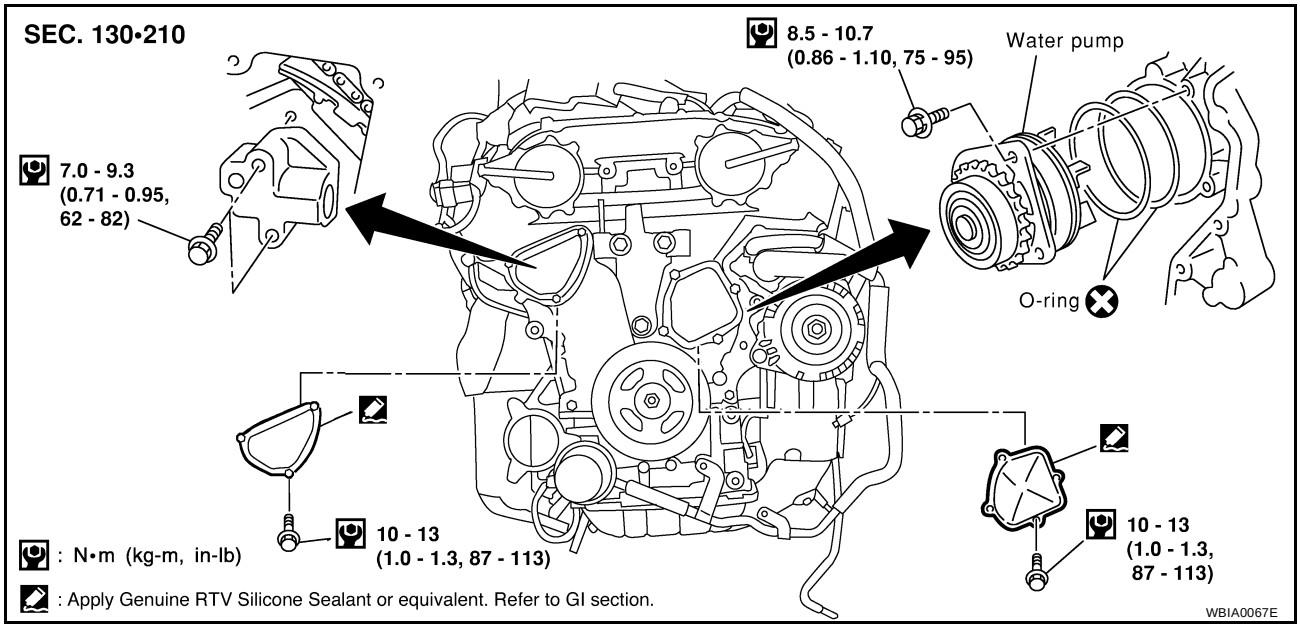

CAUTION:

- **When removing water pump assembly, be careful not to get coolant on drive belt.**
- **Water pump cannot be disassembled and should be replaced as a unit.**
- **After installing water pump, connect hose and clamp securely, then check for leaks using radiator cap tester.**

REMOVAL

1. Remove undercover, using power tools.
2. Remove suspension member stay.
3. Drain coolant from radiator. Refer to MA-14, "Changing Engine Coolant" .
4. Remove radiator shrouds.
5. Remove drive belts.
6. Remove cooling fan.
7. Remove water drain plug on water pump side of cylinder block.
8. Remove chain tensioner cover and water pump cover.
9. Remove the chain tensioner assembly.

a. Pull the lever down and release the plunger stopper tab.
b. Insert the stopper pin into the tensioner body hole to hold the lever and keep the stopper tab released
c. Insert the plunger into the tensioner body by pressing the timing chain slack guide.
d. Keep the slack guide pressed and hold the plunger in by pushing the stopper pin deeper through the lever and into the tensioner body hole
e. Make a gap between water pump gear and timing chain, by turning the crankshaft pulley 20° counter-clockwise.

10. Remove the three water pump mounting bolts.

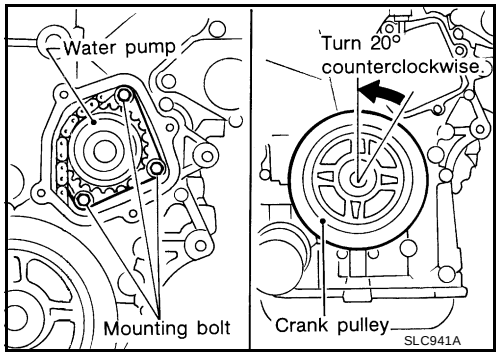

11. Install two bolts into the water pump body bolt holes.

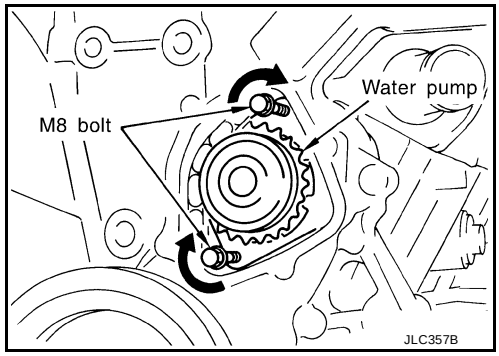

12. Tighten the two bolts by turning half turn alternately until they reach timing chain rear case.
    - In order to prevent damage to the water pump or timing chain rear case, do not tighten one bolt continuously. Always turn each bolt a half turn each time.
13. Lift up the water pump and remove it.
    - When lifting up on the water pump, do not allow the water pump gear to hit the timing chain.

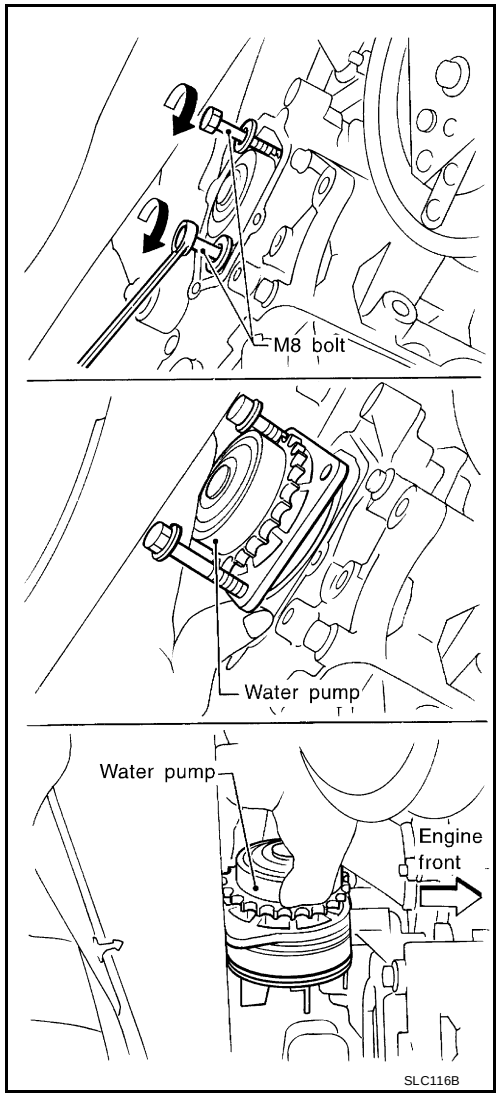

INSPECTION AFTER REMOVAL

1. Check for badly rusted or corroded water pump body assembly.
2. Check for rough operation due to excessive end play.

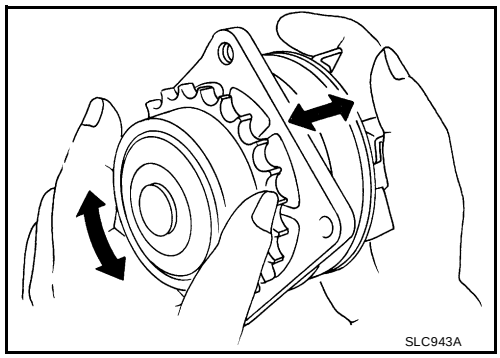

INSTALLATION

1. Apply engine oil and coolant to the O-rings as shown.

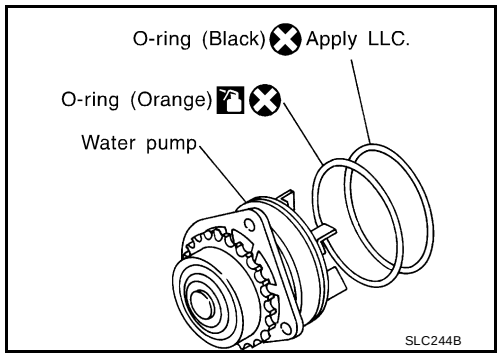

2. Install the water pump.
   - **Do not allow cylinder block to interfere with the O-rings when installing the water pump.**

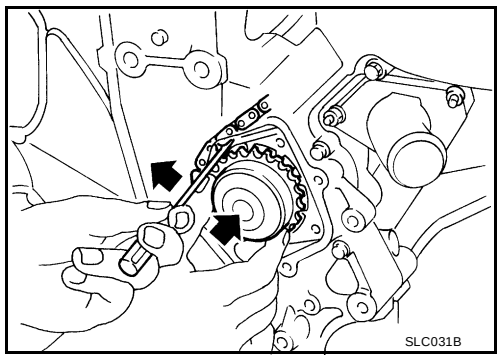

3. Before installing, remove all traces of RTV Silicone Sealant from mating surface of water pump cover and chain tensioner cover using a scraper.
   Also remove traces of RTV Silicone Sealant from the mating surface of the front cover.

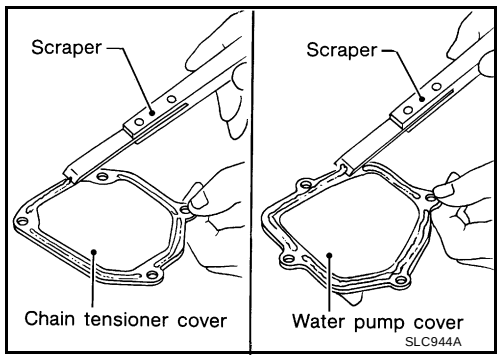

4. Apply a continuous bead of Genuine RTV Silicone Sealant, or equivalent, to mating surface of chain tensioner cover and water pump cover. Refer to GI-42, "RECOMMENDED CHEMICAL PRODUCTS AND SEALANTS" .

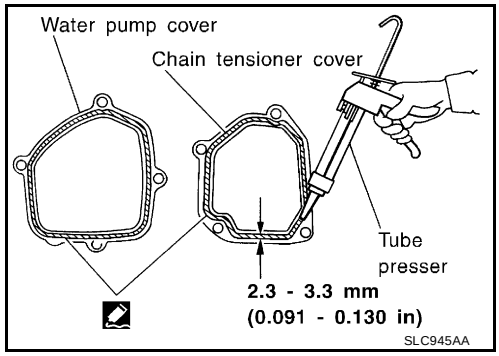

5. Return the crankshaft pulley to its original position by turning it 20° clockwise.

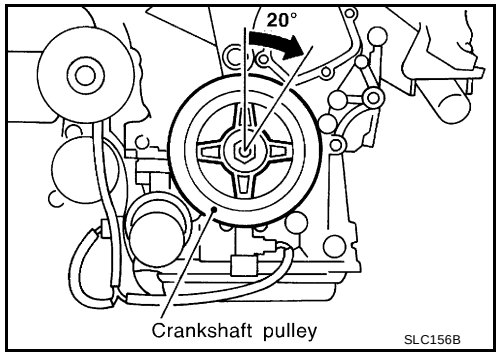

6. Install the timing chain tensioner, then remove the stopper pin.
   - **When installing the timing chain tensioner, engine oil should be applied to the oil hole and tensioner.**
   - **After starting engine, let idle for three minutes, then rev engine up to 3,000 rpm under no load to purge air from the high-pressure chamber of the chain tensioner. The engine may produce a rattling noise. This indicates that air still remains in the chamber and is not a matter of concern.**
7. Installation is in the reverse order of removal.

THERMOSTAT AND THERMOSTAT HOUSING

PFP:21200

Removal and Installation

EBS007S6

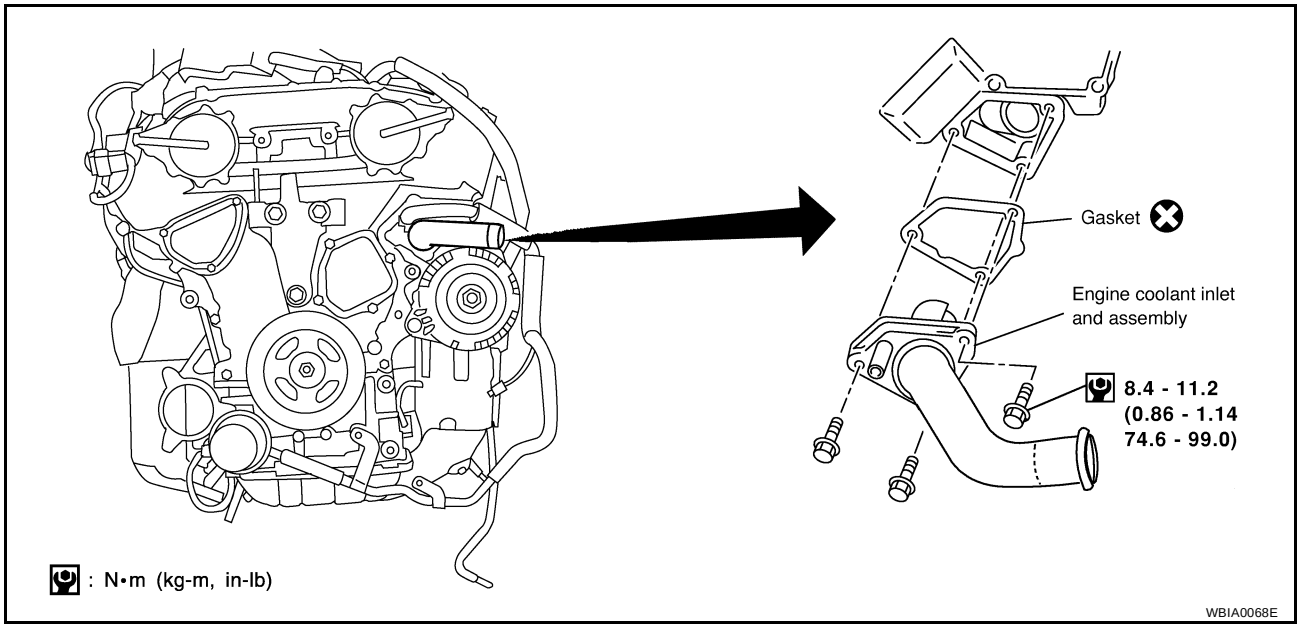

REMOVAL

1. Remove undercover.
2. Drain coolant from radiator. Refer to MA-14, "Changing Engine Coolant" .
3. Remove drive belts.
4. Remove water drain plug on water pump side of the engine.
5. Disconnect lower radiator hose.
6. Remove engine coolant inlet and thermostat assembly.
   - **Do not disassemble engine coolant inlet and thermostat. Replace them as a unit, if necessary.**

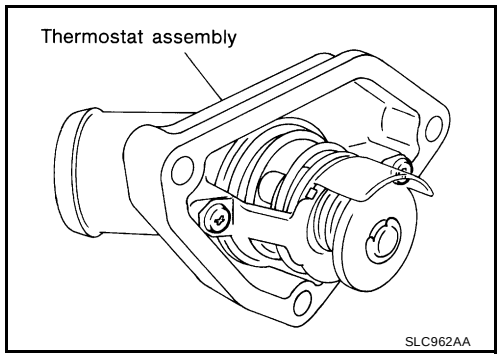

INSPECTION AFTER REMOVAL

1. Check valve seating condition at ordinary room temperatures. It should seat tightly.
2. Check valve opening temperature and maximum valve lift.

Thermostat	Standard Values
Valve opening temperature	82°C (180°F)
Valve lift	8.6 mm / 95°C (0.339 in / 203°F)

3. Then check if valve closes at 5°C (9°F) below valve opening temperature.

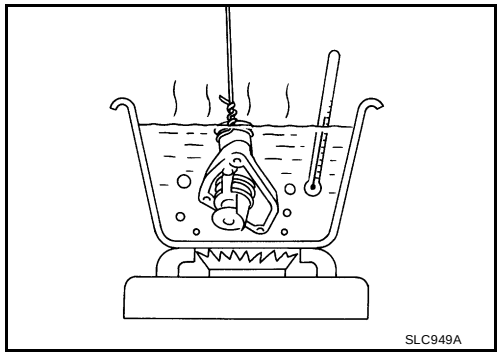

INSTALLATION

1. Install thermostat with jiggle valve facing upward.
   - **After installation, run engine for a few minutes, and check for leaks.**
   - **Be careful not to spill coolant over engine compartment. Use a rag to absorb coolant.**
2. Installation is in the reverse order of removal.

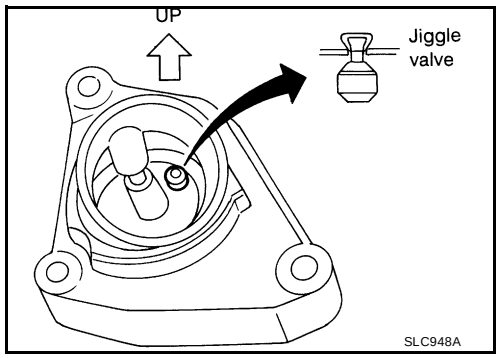

SERVICE DATA AND SPECIFICATIONS (SDS)

PFP:00100

Capacity

EBS007S7

Coolant capacity (without reservoir tank)	7.5 ℓ (7 7/8 qt.)
Reservoir tank coolant capacity (at MAX level)	0.7 ℓ (3/4 qt.)

Thermostat

EBS007S8

Valve opening temperature	82°C (180°F)
Valve lift	8.6 mm / 95°C (0.339 in / 203°F)

Radiator

EBS007S9

Unit: kPa (kg/cm^2 , psi)

Cap relief pressure	Standard	78 - 98 (0.8 - 1.0, 11 - 14)
	Limit	59 - 98 (0.6 - 1.0, 9 - 14)
Leakage test pressure		157 (1.6, 23)

SECTION DI
DRIVER INFORMATION SYSTEM

CONTENTS

PRECAUTION 3
Precautions for Supplemental Restraint System (SRS) “AIR BAG” and “SEAT BELT PRE-TENSIONER” 3
Wiring Diagrams and Trouble Diagnosis 3
COMBINATION METERS 4
Component Parts and Harness Connector Location 4
System Description 4
UNIFIED CONTROL METER 4
HOW TO CHANGE THE DISPLAY FOR ODO/TRIP METER 4
POWER SUPPLY AND GROUND CIRCUIT 5
WATER TEMPERATURE GAUGE 5
TACHOMETER 5
FUEL GAUGE 5
SPEEDOMETER 5
CAN Communication System Description 5
FOR TCS MODELS 5
FOR A/T MODELS 7
FOR M/T MODELS 8
Combination Meter 10
CHECK 10
Schematic 11
Wiring Diagram — METER — 12
Terminals and Reference Value for Combination Meter 13
Meter/Gauges Operation and Odo/Trip Meter 13
SELF–DIAGNOSIS FUNCTION 13
HOW TO ALTERNATE DIAGNOSIS MODE 13
How to Proceed With Trouble Diagnosis 14
Diagnosis Flow 14
Power Supply and Ground Circuit Check 15
Trouble Diagnosis Chart by Symptom 16
DIAGNOSIS RESULTS 16
Fuel System 16
FUEL GAUGE 16
LOW-FUEL WARNING LAMP 16
Tachometer System 17
Engine Coolant Temperature System 18
Inspection/Water Temperature Gauge 18
Vehicle Speed System 19
Position Indication System (Position Other Than P/N) 19
The Fuel Gauge Pointer Fluctuates, Indicator Wrong Value Or Varies 20
The Fuel Gauge Does Not Move to F- position 20
The Fuel Gauge Does Not Work 20
Low Fuel Warning Lamp Illuminates at All Times or Does Not Illuminate 21
Electrical Components Inspection 21
FUEL LEVEL SENSOR UNIT CHECK 21
Removal and Installation 21
WARNING LAMPS 22
System Description 22
OUTLINE 22
MALFUNCTION INDICATOR LAMP 22
LOW WASHER FLUID LEVEL WARNING LAMP 22
AIR BAG WARNING LAMP 22
SEAT BELT WARNING LAMP 22
LOW FUEL LEVEL WARNING LAMP 22
CHARGE WARNING LAMP 22
BRAKE WARNING LAMP 23
LOW OIL PRESSURE WARNING LAMP 23
DOOR WARNING LAMP 23
TRUNK WARNING LAMP 23
ASCD SET INDICATOR LAMP 23
CRUISE INDICATOR LAMP 23
ABS WARNING LAMP 23
TCS OFF WARNING LAMP 23
SLIP WARNING LAMP 24
CAN Communication System Description 24
FOR TCS MODELS 24
FOR A/T MODELS 25
FOR M/T MODELS 27
Schematic 29
Wiring Diagram — WARN — 30
Terminals And Reference Value For BCM 34
Work Flow 34
Preliminary Check 34
INSPECTION FOR POWER SUPPLY AND

GROUND CIRCUIT 34
CONSULT–II Function 35
DIAGNOSTIC ITEMS DESCRIPTION 35
SELF-DIAGNOSIS PROCEDURE 35
DATA MONITOR 36
ACTIVE TEST 37
On-Board Diagnosis 37
DIAGNOSIS ITEM 37
SWITCH MONITOR 37
Trouble Diagnosis For Door Warning Lamp 38
Oil Pressure Warning Lamp Stays Off (Ignition Switch ON) 38
Oil Pressure Warning Lamp Does Not Turn Off (Oil Pressure Is Normal) 39
Component Inspection 40
OIL PRESSURE SWITCH 40
A/T INDICATOR 41
Wiring Diagram — AT/IND — 41
Trouble Diagnosis 42
SYMPTOM CHART 42
WARNING CHIME 43
Component Parts and Harness Connector Location.. 43
System Description 43
FUNCTION 43
IGNITION KEY WARNING CHIME 43
LIGHT WARNING CHIME 44
SEAT BELT WARNING CHIME 44
CAN Communication System Description 44
FOR TCS MODELS 44
FOR A/T MODELS 46
FOR M/T MODELS 47
Major Component Parts and Function 48
Wiring Diagram — CHIME — 49
Terminals and Reference Value for BCM 51
How to Proceed With Trouble Diagnosis 51
Preliminary Check 51
INSPECTION FOR POWER SUPPLY AND GROUND CIRCUIT 51
CONSULT–II Function 52
DIAGNOSTIC ITEMS DESCRIPTION 52
CONSULT-II BASIC OPERATION PROCEDURE ... 53
DATA MONITOR 53
ACTIVE TEST 54
SELF-DIAGNOSTIC RESULTS 54
All Warnings Are Not Operated 55
Key Warning Chime Does Not Operate 56
Light Warning Chime Does Not Operate 58
Seat Warning Chime Does Not Operate 58
BOARD COMPUTER 59
System Description 59
FUNCTION 59
OUTSIDE AIR TEMPERATURE INDICATION 59
DTE (DISTANCE TO EMPTY) INDICATION 59
TRIP DISTANCE 59
TRIP TIME 59
AVERAGE FUEL CONSUMPTION 59
AVERAGE VEHICLE SPEED 59
HOW TO CHANGE/RESET INDICATION 59
CAN Communication System Description 60
FOR TCS MODELS 60
FOR A/T MODELS 61
FOR M/T MODELS 63
Wiring Diagram — B/COMP — 65
Trouble Diagnoses 67
SEGMENT CHECK 67
PRELIMINARY CHECK 67
DIAGNOSIS PROCEDURE 67
Electrical Components Inspection 68
AMBIENT SENSOR 68

PRECAUTION

PFP:00011

Precautions for Supplemental Restraint System (SRS) “AIR BAG” and “SEAT BELT PRE-TENSIONER”

EKS002GT

The Supplemental Restraint System such as “AIR BAG” and “SEAT BELT PRE-TENSIONER”, used along with a front seat belt, helps to reduce the risk or severity of injury to the driver and front passenger for certain types of collision. Information necessary to service the system safely is included in the SRS and SB section of this Service Manual.

WARNING:

- **To avoid rendering the SRS inoperative, which could increase the risk of personal injury or death in the event of a collision which would result in air bag inflation, all maintenance must be performed by an authorized NISSAN/INFINITI dealer.**
- **Improper maintenance, including incorrect removal and installation of the SRS, can lead to personal injury caused by unintentional activation of the system. For removal of Spiral Cable and Air Bag Module, see the SRS section.**
- **Do not use electrical test equipment on any circuit related to the SRS unless instructed to in this Service Manual. SRS wiring harnesses can be identified by yellow and/or orange harness connectors.**

Wiring Diagrams and Trouble Diagnosis

EKS002GU

When you read wiring diagrams, refer to the followings:

- Refer to GI-12, "How to Read Wiring Diagrams" .
- Refer to PG-3, "POWER SUPPLY ROUTING CIRCUIT" for power distribution circuit.

When you perform trouble diagnosis, refer to the followings:

- Refer to GI-10, "HOW TO FOLLOW TEST GROUPS IN TROUBLE DIAGNOSES" .
- Refer to GI-25, "How to Perform Efficient Diagnosis for an Electrical Incident" .

COMBINATION METERS

PFP:24814

Component Parts and Harness Connector Location

EKS002GV

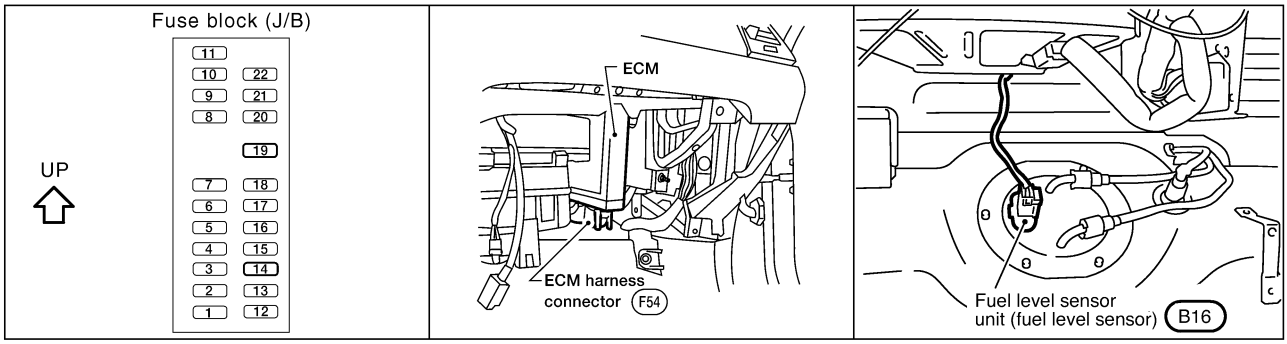

WKIA0059E

System Description

EKS002GW

UNIFIED CONTROL METER

- Speedometer, odo/trip meter, tachometer, fuel gauge and water temperature gauge are controlled by the unified meter control unit, which is built into the combination meter.
- Digital meter is adopted for odo/trip meter.*
  *The record of the odo meter is kept even if the battery cable is disconnected. The record of the trip meter is erased when the battery cable is disconnected.
- Odo/trip meter and A/T indicator segments can be checked in diagnosis mode.
- Meter/gauge can be checked in diagnosis mode.

HOW TO CHANGE THE DISPLAY FOR ODO/TRIP METER

- The vehicle speed signal and the memory signals from the meter memory circuit are processed by the combination meter and the mileage is displayed.
- Depressing the odometer/trip switch toggles the mode in the following order.

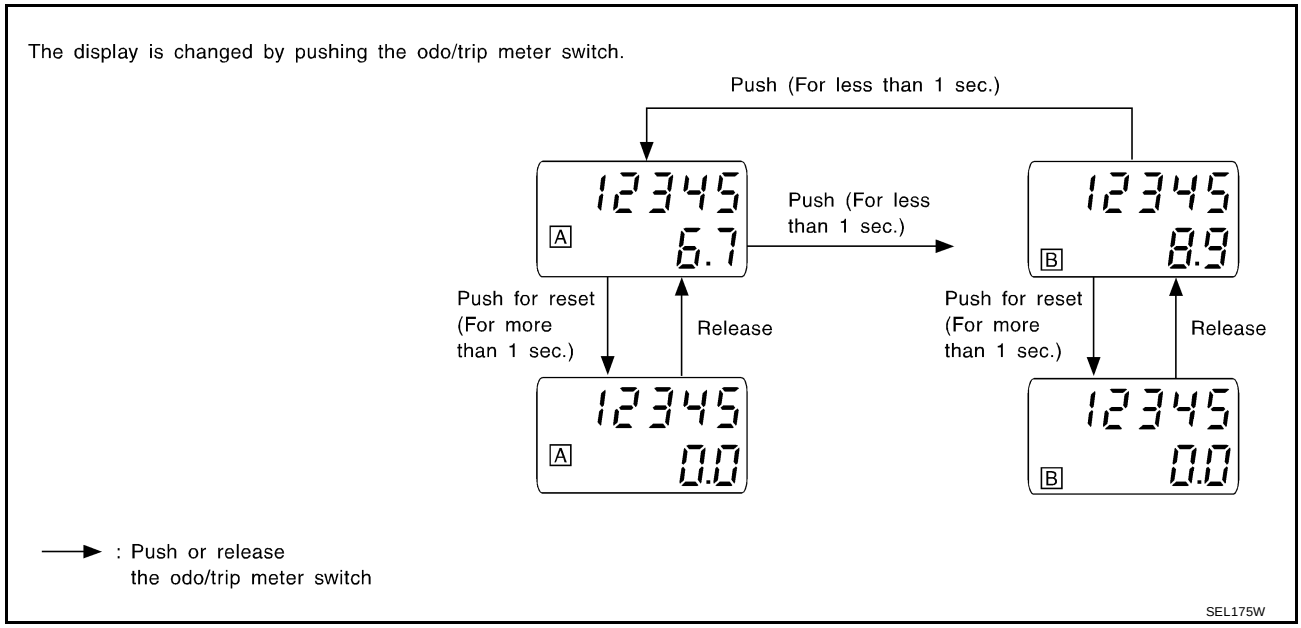

- The odo/trip meter display mode toggling and trip display resetting can be identified by the amount of time that elapses from pressing the odo/trip meter switch to releasing it.
- When resetting with trip A displayed, only trip A display is reset (Trip B operates the same way).

POWER SUPPLY AND GROUND CIRCUIT

Power is supplied at all times

- through 10A fuse [No. 19, located in the fuse block (J/B)]
- to combination meter terminal 5.

With the ignition switch in the ON or START position, power is supplied

- through 10A fuse [No. 14, located in the fuse block (J/B)]
- to combination meter terminals 17 and 18.

Ground is supplied

- to combination meter terminals 6 and 39
- through body grounds M57 and M61.

WATER TEMPERATURE GAUGE

The water temperature gauge indicates the engine coolant temperature.
ECM provides a water temperature signal to combination meter for water temperature gauge with CAN communication line.

TACHOMETER

The tachometer indicates engine speed in revolutions per minute (rpm).
ECM provides an engine speed signal to combination meter for tachometer with CAN communication line.

FUEL GAUGE

The fuel gauge indicates the approximate fuel level in the fuel tank.
The fuel gauge is regulated by a variable ground signal supplied

- to combination meter terminal 12 for the fuel level sensor
- from terminal G of the fuel level sensor unit
- through terminal E of the fuel level sensor unit and
- through body grounds M57 and M61.

SPEEDOMETER

The vehicle speed sensor provides a vehicle speed signal to the combination meter for speedometer indication.

CAN Communication System Description

EKS002GX

CAN (Controller Area Network) is a serial communication line for real time application. It is an on-vehicle multiplex communication line with high data communication speed and excellent error detection ability. Many electronic control units are equipped onto a vehicle, and each control unit shares information and links with other control units during operation (not independent). In CAN communication, control units are connected with 2 communication lines (CAN H line, CAN L line) allowing a high rate of information transmission with less wiring. Each control unit transmits/receives data but selectively reads required data only.

FOR TCS MODELS

System Diagram

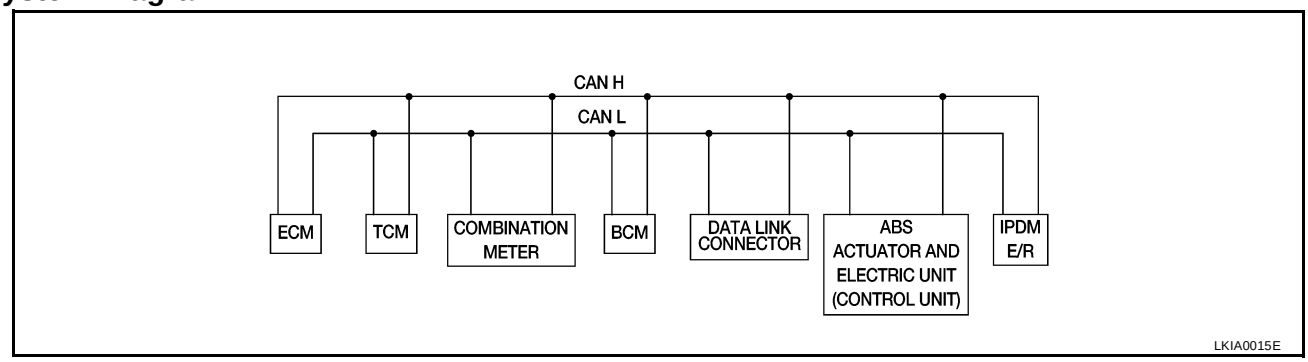

Input/Output Signal Chart

T: Transmit R: Receive

Signals	ECM	TCM	COMBINA-TION METER	BCM	ABS/TCS control unit	IPDM E/R
Engine speed signal	T		R		R	
Engine coolant temperature signal	T		R			
Accelerator pedal position signal	T					
Fuel consumption monitor signal	T		R			
A/T warning lamp signal		T	R			
A/T position indicator signal	R	T	R	R(R range only)	R	
ABS operation signal	R				T	
TCS operation signal	R	R			T	
Air conditioner switch signal	R			T		
Air conditioner compressor signal	R					T
A/C compressor request signal	T					R
Cooling fan motor operation signal	R					T
Cooling fan speed request signal	T					R
Position lights request			R	T		R
Position lights status				R		T
Low beam request				T		R
Low beam status	R			R		T
High beam request			R	T		R
High beam status	R			R		T
Front fog lights request				T		R
Front fog light status				R		T
OD cancel switch signal		R	T			R
Brake switch signal		R	T			
Vehicle speed signal	R		T			
	R		T	R		
Oil pressure switch			R			T
Sleep request1			R	T		
Sleep request2				T		R
N range switch signal		R	T			
P range switch signal		R	T			
Seat belt buckle switch signal			T	R		
Door switch signal			R	T		R
Tail lamp request			R	T		R
Turn indicator signal			R	T		
Buzzer output signal			R	T		
Trunk switch signal			R	T		
ASCD main switch signal	T		R			
ASCD cruise signal	T		R			
Wiper operation				R		T
Wiper stop position signal				R		T

Signals	ECM	TCM	COMBINATION METER	BCM	ABS/TCS control unit	IPDM E/R
Rear window defogger switch signal				T		R
Rear window defogger control signal	R			R		T

FOR A/T MODELS

System Diagram

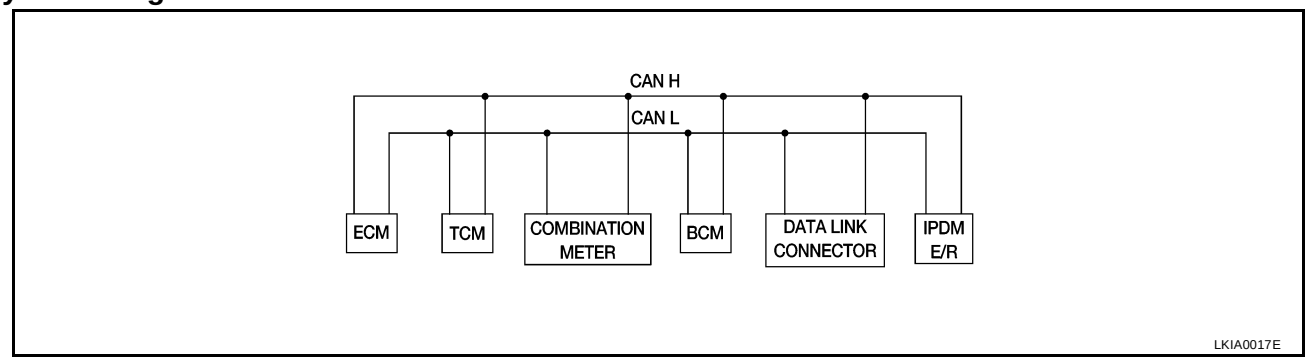

Input/Output Signal Chart

T: Transmit R: Receive

Signals	ECM	TCM	COMBINATION METER	BCM	IPDM E/R
Engine speed signal	T		R		
Engine coolant temperature signal	T		R		
Accelerator pedal position signal	T				R
Fuel consumption monitor signal	T		R		
A/T warning lamp signal		T	R		
A/T position indicator signal	R	T	R	R(R range only)	
Air conditioner switch signal	R			T	
Air conditioner compressor signal	R				T
A/C compressor request signal	T				R
Blower fan switch signal	R(QR25DE)			T	
Cooling fan motor operation signal	R			T	
Cooling fan speed request signal	T				R
Position lights request			R	T	R
Position lights status				R	T
Low beam request				T	R
Low beam status	R			R	T
High beam request			R	T	R
High beam status	R			R	T
Front fog lights request				T	R
Front fog light status				R	T
OD cancel switch signal		R	T		R
Brake switch signal		R	T		
Vehicle speed signal	R		T		
	R		T	R	
Oil pressure switch			R		T
Sleep request1			R	T	

Signals	ECM	TCM	COMBINATION METER	BCM	IPDM E/R
Sleep request2				T	R
N range switch signal		R	T		
P range switch signal		R	T		
Seat belt buckle switch signal			T	R	
Door switch signal			R	T	R
Tail lamp request			R	T	R
Turn indicator signal			R	T	
Buzzer output signal			R	T	
Trunk switch signal			R	T	
ASCD main switch signal	T		R		
ASCD cruise signal	T		R		
Wiper operation				R	T
Wiper stop position signal				R	T
Rear window defogger switch signal				T	R
Rear window defogger control signal	R			R	T

FOR M/T MODELS

System Diagram

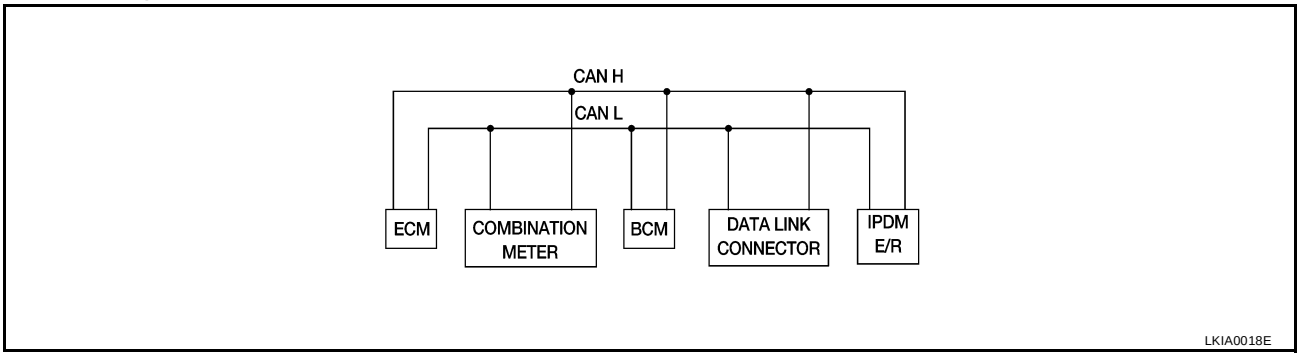

Input/Output Signal Chart

T: Transmit R: Receive

Signals	ECM	COMBINATION METER	BCM	IPDM E/R
Engine speed signal	T			
Engine coolant temperature signal	T			
Fuel consumption monitor signal	T			
Air conditioner switch signal	R		T	
Air conditioner compressor signal	R			T
A/C compressor request signal	T			R
Blower fan switch signal	R(QR25DE)		T	
Cooling fan motor operation signal	R			T
Cooling fan speed request signal	T			R
Position lights request		R	T	R
Position lights status			R	T
Low beam request			T	R
Low beam status	R		R	T
High beam request		R	T	R

Signals	ECM	COMBINATION METER	BCM	IPDM E/R
High beam status	R		R	T
Front fog lights request			T	R
Front fog light status			R	T
Vehicle speed signal	R	T		
Oil pressure switch		R		T
Sleep request1		R	T	
Sleep request2			T	R
Seat belt buckle switch signal		T	R	
Door switch signal		R	T	R
Tail lamp request		R	T	R
Turn indicator signal		R	T	
Buzzer output signal		R	T	
Trunk switch signal		R	T	
ASCD main switch signal	T	R		
ASCD cruise signal	T	R		
Wiper operation			R	T
Wiper stop position signal			R	T
Rear window defogger switch signal			T	R
Rear window defogger control signal	R		R	T

Combination Meter
CHECK

EKS002GY

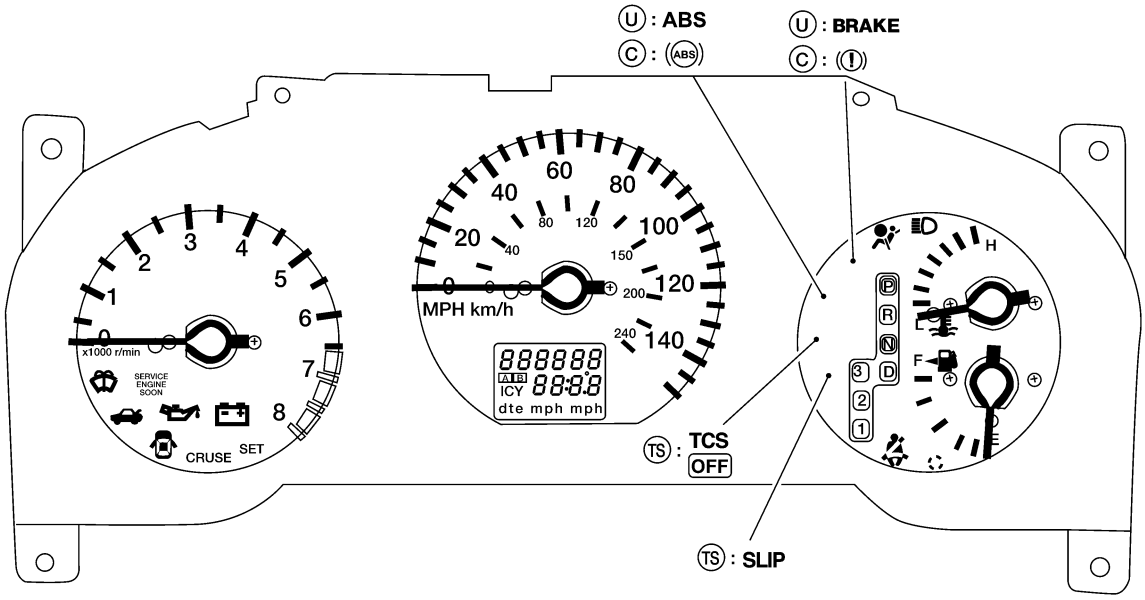

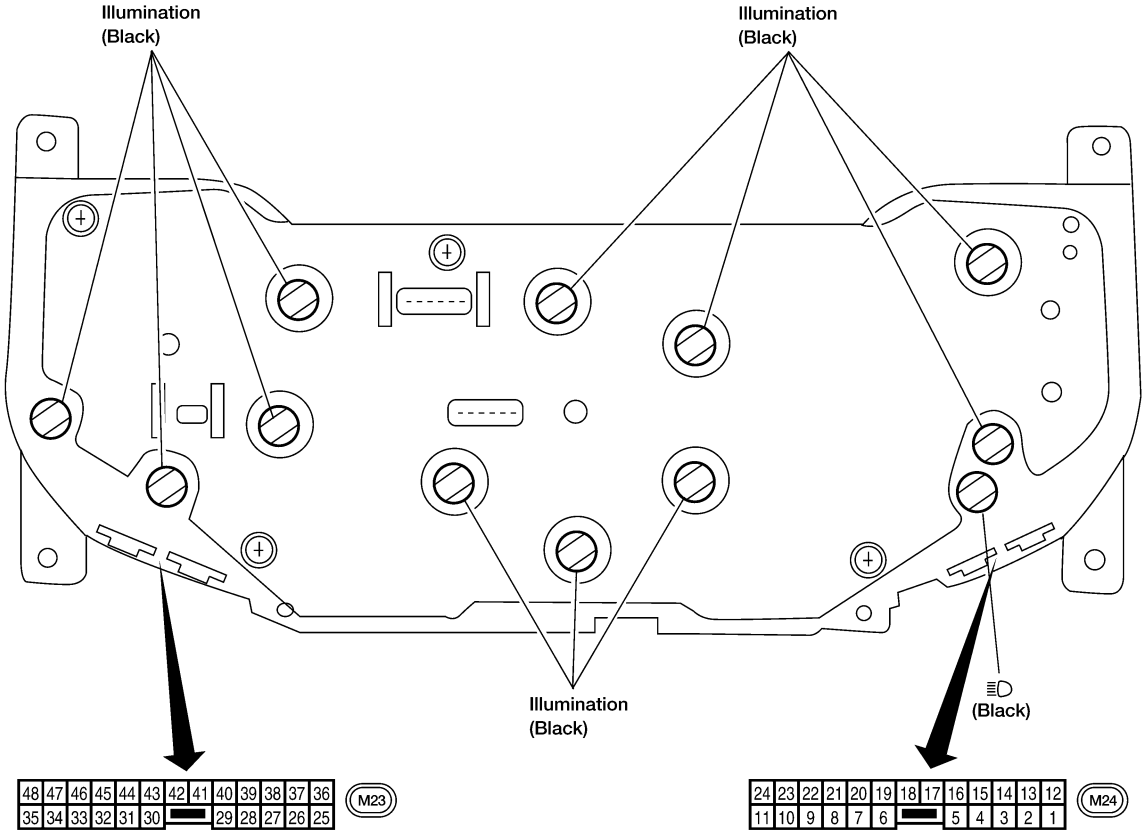

Bulb socket color	Bulb wattage
Black	3.0W

( ): Warning bulb socket color

U : For USA
C : For Canada
TS : With TCS

WKIA0056E

Schematic

EKS002GZ

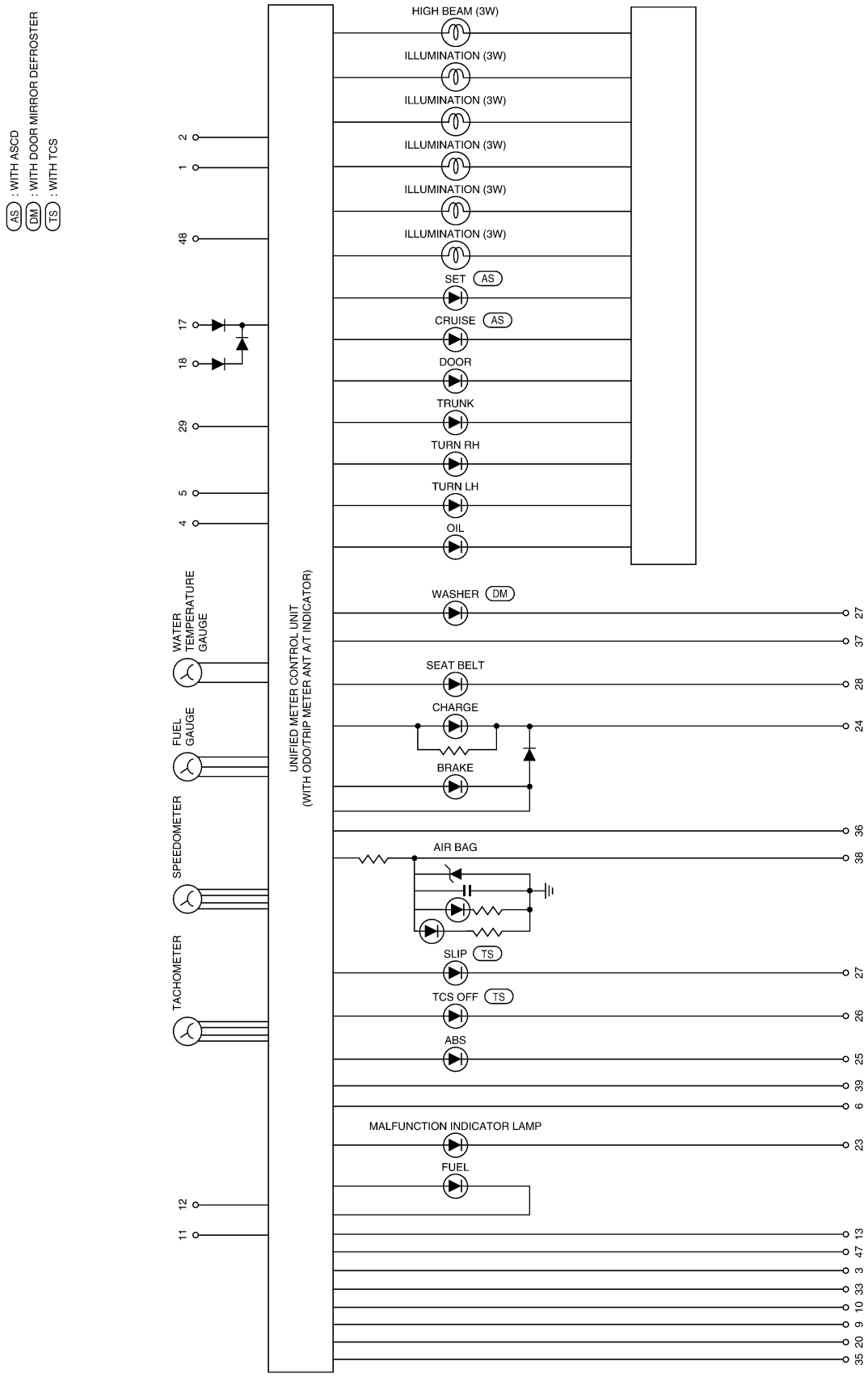

LKWA0078E

Wiring Diagram — METER —

EKS002H0

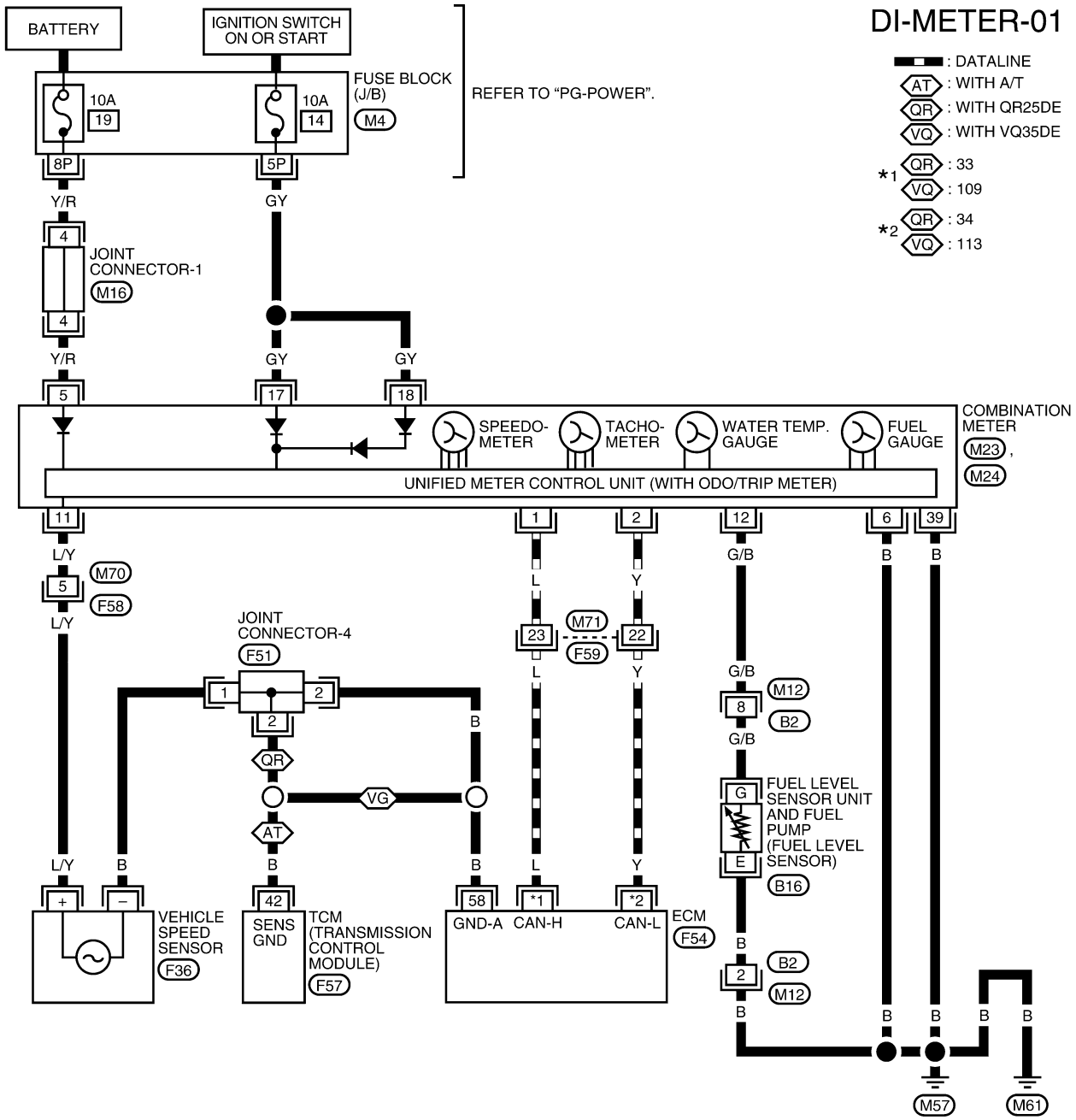

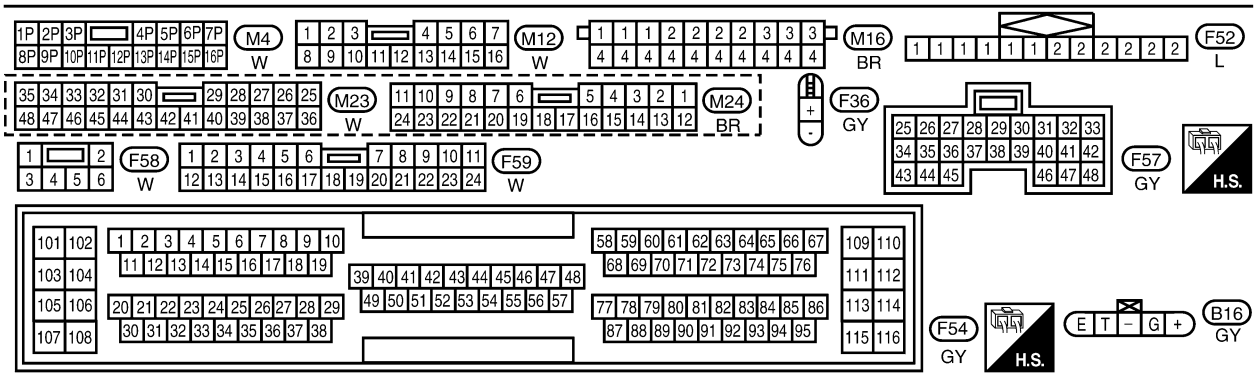

LKWA0018E

Terminals and Reference Value for Combination Meter

EKS002H1

TERMI-NAL	WIRE COLOR	ITEM	CONDITION		Voltage (V)
			Ignition switch	Operation or condition	
1	L	CAN-H	—	—	—
2	Y	CAN-L	—	—	—
5	Y/R	Battery power supply	OFF	—	Approx. 12V
6	B	Ground	ON	—	Approx. 0V
9	L/Y	Vehicle speed signal (8-pulse)	ON	Speedometer operated [When vehicle speed is approx. 40 km/h (25 MPH)]	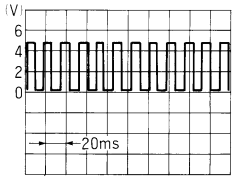 ELF1084D
10	L/Y	Vehicle speed signal (2-pulse)	ON	Speedometer operated [When vehicle speed is approx. 40 km/h (25 MPH)]	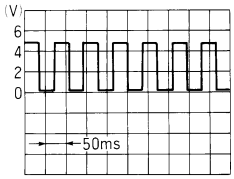 ELF1080D
11	L/Y	Vehicle speed signal	ON	Speedometer operated [When vehicle speed is approx. 20 km/h (12 MPH)]	Approx. 240 Hz
12	G/B	Fuel level sensor signal	ON	—	Refer to DI-21, "FUEL LEVEL SENSOR UNIT CHECK" .
17	GY	Ignition switch ON or START	ON	—	Approx. 12V
18	GY	Ignition switch ON or START	ON	—	Approx. 12V
20	B	Fuel level sensor ground	ON	—	Approx. 0V
35	B	Ground	ON	—	Approx. 0V
39	B	Ground	ON	—	Approx. 0V

Meter/Gauges Operation and Odo/Trip Meter

EKS002H2

SELF–DIAGNOSIS FUNCTION

- Odo/trip meter (board computer) segment operation can be checked in self-diagnosis mode.
- Meters/gauges can be checked in self-diagnosis mode.

HOW TO ALTERNATE DIAGNOSIS MODE

1. Turn the ignition switch ON, and switch the odometer/trip meter to “trip A” or “trip B”.

   NOTE:
   If the diagnosis function is activated with the trip meter A displayed, the mileage on the tripmeter A will indicate 000.0 miles, but the actual trip mileage will be retained. (Trip B operates the same way).
2. Turn the ignition switch OFF.
3. While pushing the odo/trip meter switch, turn the ignition switch ON again.
4. Check that the tripmeter displays "000.0".
5. Push the odo/trip meter switch at least 7 times within 7 seconds.

6. All the segments on the odo/trip meter illuminate, and simultaneously the low-fuel warning lamp indicator illuminates. At this time, the unified meter control unit is turned to diagnosis mode.

   NOTE:
   If any of the segments is not displayed, replace the combination meter.

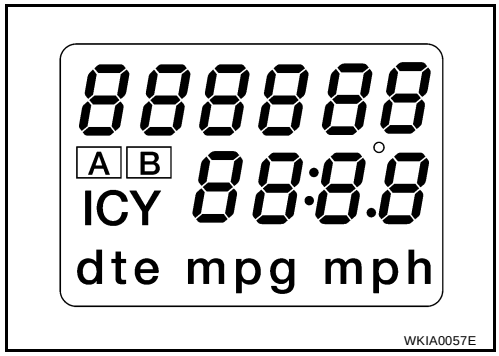

7. Push the odo/trip meter switch. Each meter/gauge should indicate as shown in the figure while pushing odo/trip meter switch. (at this time, the low-fuel warning lamp goes off).

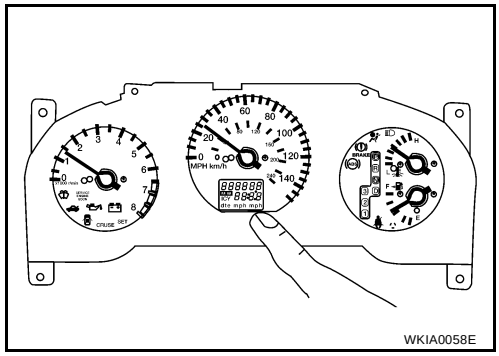

How to Proceed With Trouble Diagnosis

EKS002H3

1. Confirm the trouble symptom or customer complaint.
2. Perform diagnosis according to diagnosis flow. Refer to DI-14, "Diagnosis Flow" .
3. According to the trouble diagnosis chart, repair or replace the cause of the trouble symptom. Refer to DI-16, "Trouble Diagnosis Chart by Symptom" .
4. Does the meter operate normally? Yes: Go to 5. No: Go to 2.
5. INSPECTION END.

Diagnosis Flow

EKS002H4

1. WARNING LAMP ILLUMINATION INSPECTION

1. Turn the ignition switch ON.
2. Check that warning lamps (such as MIL and oil pressure warning lamp) illuminate.

Do warning lamps illuminate?

Yes >> GO TO 2.
No >> Check ignition power supply system of combination meter. Refer to DI-15, "Power Supply and Ground Circuit Check" .

2. SELF-DIAGNOSIS OPERATION CHECK

Perform combination meter self-diagnosis. Refer to DI-13, "SELF–DIAGNOSIS FUNCTION" .

Does self-diagnosis function operate?

Yes >> GO TO 3.
No >> Check battery power supply of combination meter and ground system. Refer to DI-15, "Power Supply and Ground Circuit Check" .

3. ODO/TRIP METER OPERATION CHECK

Check segment display status of odo/trip meter. Refer to DI-13, "SELF–DIAGNOSIS FUNCTION" .

Is the display normal?

Yes >> GO TO 4.
No >> Replace the combination meter.

4. FUEL WARNING LAMP ILLUMINATION CONFIRMATION

During fuel warning lamp check, confirm illumination of fuel warning lamp. Refer to DI-13, "SELF–DIAGNOSIS FUNCTION" .

Does fuel warning lamp illuminate?

Yes >> GO TO 5.
No >> Replace the combination meter.

5. METER CIRCUIT CHECK

During meter circuit check, confirm meter illumination. Refer to DI-13, "SELF–DIAGNOSIS FUNCTION" .

Is the display normal?

Yes >> Go to diagnosis results. Refer to DI-16, "DIAGNOSIS RESULTS" .
No >> Replace the combination meter.

Power Supply and Ground Circuit Check

EKS002H5

1. CHECK FUSES

- Check for blown combination meter fuses.

Unit	Power source	Fuse No.
Combination meter	Battery	5
	Ignition switch ON or START	17
	Ignition switch ON or START	18

OK or NG

OK >> GO TO 2.
NG >> If fuse is blown, be sure to eliminate cause of problem before installing new fuse. Refer to PG-3, "POWER SUPPLY ROUTING CIRCUIT" .

2. POWER SUPPLY CIRCUIT CHECK

1. Disconnect the combination meter connector.
2. Check voltage between combination meter harness connectors M24 terminal 5 (Y/R), 17 (GY), 18 (GY) and ground.

Terminals			Ignition switch position		
(+)		(–)	OFF	ACC	ON
Connector	Terminal (Wire color)				
M24	5 (Y/R)	Ground	Battery voltage	Battery voltage	Battery voltage
M24	17 (GY)		0V	0V	Battery voltage
M24	18 (GY)		0V	0V	Battery voltage

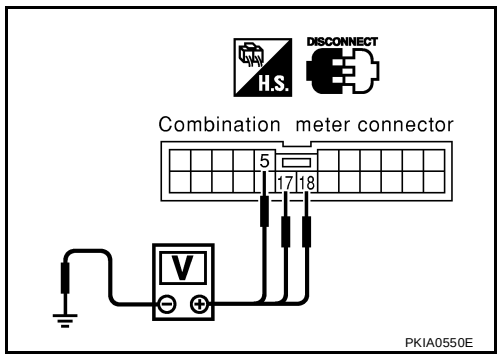

OK or NG

OK >> GO TO 3.
NG >> Check harness for open or short between combination meter and fuse.

3. GROUND CIRCUIT CHECK

Check continuity between combination meter harness connector terminal 6 (B), 12 (B), 39 (B) and ground.

Terminals			Continuity
(+)		(–)	
Connector	Terminal (Wire color)		

M23	6 (B)	Ground	Yes
	12 (B)		
M24	39 (B)		

OK or NG

OK >> INSPECTION END.
NG >> Check ground harness.

Trouble Diagnosis Chart by Symptom

EKS002H6

DIAGNOSIS RESULTS

Trouble phenomenon	Inspection contents		Possible cause
Fuel warning lamp indication is irregular.	Inspect the sensor system of the gauge (warning lamp) with the irregular indication.	NG	● Refer to DI-16, "Fuel System" . ● Refer to DI-17, "Tachometer System" . ● Refer to DI-18, "Engine Coolant Temperature System" .
Indication is not normal for one of the following: tachometer, fuel gauge, or water temperature gauge		OK	Combination meter
Indication is irregular for the speedometer and odo/trip meter.	Inspect the vehicle speed input signal.	NG	Refer to DI-19, "Vehicle Speed System" .
		OK	Combination meter
Indications are irregular for more than one gauge.	—		Combination meter
A/T position indication (other than P or N) is not normal.	—		Refer to DI-19, "Position Indication System (Position Other Than P/N)" .

Fuel System

EKS002H7

The following symptoms do not indicate a malfunction.

FUEL GAUGE

- Depending on vehicle position or driving circumstance, the fuel in the tank flows and the pointer may fluctuate.
- If the vehicle is fueled with the ignition switch ON, the pointer will move slowly.

LOW-FUEL WARNING LAMP

Depending on vehicle position or driving circumstance, the fuel in the tank flows and the warning lamp ON timing may change.

1. CONNECTOR INSPECTION

1. Turn the ignition switch OFF.
2. Check meter, fuel level sensor unit and terminals (meter-side, unit-side, harness-side) for looseness or bent terminals.

OK or NG

OK >> GO TO 2.
NG >> Repair terminal or connector.

2. CONTINUITY INSPECTION BETWEEN COMBINATION METER AND FUEL LEVEL SENSOR UNIT

1. Disconnect combination meter connector and fuel level sensor unit connector.
2. Check continuity (open circuit) between combination meter harness connector M24 terminal 12 (G/B) and fuel level sensor unit harness connector B16 terminal G (B).
3. Check continuity (short circuit) between combination meter harness connector M24 terminal 12 (G/B) and ground.

12 - G	**: Continuity should exist.**
12 - Ground	**: Continuity should not exist.**

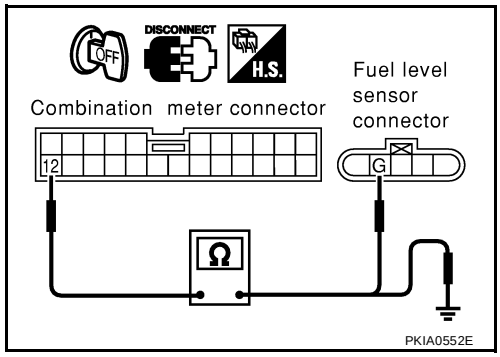

OK or NG

OK >> GO TO 3.
NG >> Repair harness or connector.

3. GROUND CIRCUIT INSPECTION OF FUEL LEVEL SENSOR

- Check continuity (open circuit) between fuel level sensor unit harness connector B16 terminal E (B) and ground.

E - Ground	**: Continuity should exist.**

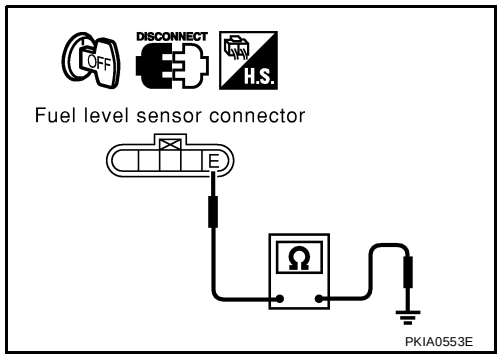

OK or NG

OK >> GO TO 4.
NG >> Repair harness or connector.

4. FUEL LEVEL SENSOR INSPECTION

Check components. Refer to DI-21, "FUEL LEVEL SENSOR UNIT CHECK" .

OK or NG

OK >> GO TO 5.
NG >> Replace fuel level sensor unit.

5. CHECK INSTALLATION CONDITION

Check fuel level sensor unit installation, and check whether the float arm interferes or binds with any of the internal components in the fuel tank.

OK or NG

OK >> Replace the combination meter.
NG >> Install the fuel level sensor unit properly.

Tachometer System

EKS002H8

1. VISUAL INSPECTION

Check if tachometer fluctuates when the engine starts.

Is the fluctuation acceptable?

Yes >> GO TO 2.
No >> GO TO 3.

2. ENGINE SPEED INSPECTION

Compare the values indicated in the engine speed and tachometer.

Does the engine speed correspond to the speed indicated?

Yes >> Condition is normal.
No >> Replace the combination meter.

3. ECM SYSTEM INSPECTION

Perform ECM self-diagnosis. Refer to EC-106, "CONSULT-II Function" (QR25DE) or EC-730, "CONSULT-II Function" (VQ35DE).

OK or NG

OK >> GO TO 3.
NG >> Go to ECM trouble diagnosis.

4. SELF-DIAGNOSIS INSPECTION

Perform combination meter self-diagnosis. Refer to DI-13, "SELF–DIAGNOSIS FUNCTION" .

OK or NG

OK >> Condition is normal.
NG >> Replace the combination meter.

Engine Coolant Temperature System

EKS002H9

1. CONNECTOR INSPECTION

1. Turn the ignition switch OFF.
2. Check terminals (meter-side, control unit-side, and harness-side) on the meter and ECM for disconnection and bend.

OK or NG

OK >> GO TO 2.
NG >> Repair terminal or connector.

2. ECM SYSTEM INSPECTION

- Perform ECM self-diagnosis. Refer to EC-106, "CONSULT-II Function" (QR25DE) or EC-730, "CONSULT-II Function" (VQ35DE).

OK or NG

OK >> GO TO 3.
NG >> Go to ECM trouble diagnosis.

3. SELF-DIAGNOSIS INSPECTION

- Perform combination meter self-diagnosis. Refer to DI-13, "SELF–DIAGNOSIS FUNCTION" .

OK or NG

OK >> Condition is normal.
NG >> Replace the combination meter.

Inspection/Water Temperature Gauge

EKS002HA

1. ECM INSPECTION

Preform the ECM self-diagnosis. Refer to EC-106, "CONSULT-II Function" (QR25DE) or EC-730, "CONSULT-II Function" (VQ35DE).

OK or NG

OK >> GO TO 3.
NG >> Go to ECM trouble diagnosis.

2. SELF-DIAGNOSIS INSPECTION

Perform combination meter self-diagnosis. Refer to DI-13, "SELF–DIAGNOSIS FUNCTION" .

OK or NG

OK >> The combination meter is OK.
NG >> Replace combination meter.

Vehicle Speed System

EKS002HB

1. CHECK VEHICLE SPEED SENSOR

1. Remove vehicle speed sensor.
2. Check voltage between combination meter harness connector M24 terminal 11 (L/Y) and ECM harness connector F54 terminal 58 (B).

11 - 58 : Approx. 0.5V

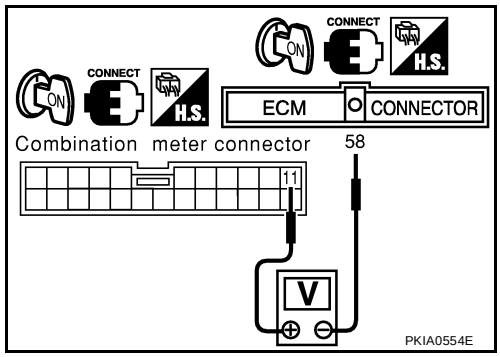

OK or NG

OK >> Vehicle speed sensor is OK.
NG >> GO TO 2.

2. CHECK VEHICLE SPEED SENSOR

Check resistance between vehicle speed sensor terminals + and -.

+ - – : Approx. 250Ω

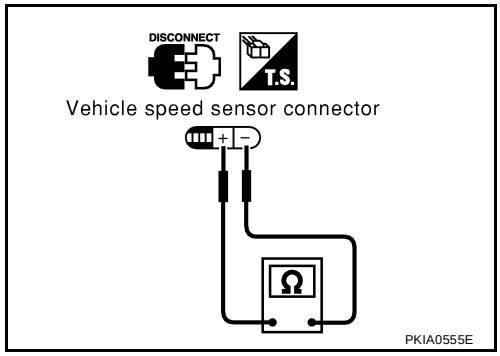

OK or NG

OK >> Check harness or connector between combination meter, vehicle speed sensor and ECM.
NG >> Replace vehicle speed sensor.

Position Indication System (Position Other Than P/N)

EKS002HC

1. TCM INSPECTION

Perform TCM self-diagnosis. Refer to AT-40, "SELF-DIAGNOSTIC PROCEDURE (WITH CONSULT-II)" .

OK or NG

OK >> GO TO 2.
NG >> Go to TCM trouble diagnosis.

2. SELF-DIAGNOSIS INSPECTION

Perform combination meter self-diagnosis. Refer to DI-13, "SELF–DIAGNOSIS FUNCTION" .

OK or NG

OK >> Condition is normal.
NG >> Replace the combination meter.

The Fuel Gauge Pointer Fluctuates, Indicator Wrong Value Or Varies

EKS002HD

1. CHECK FUEL GAUGE FLUCTUATION

Test drive vehicle to see if gauge fluctuates only during driving or before or after stopping.

Does the indication value vary only during driving or before or after stopping?

Yes >> The pointer fluctuation may be caused by fuel level change in the fuel tank. Condition is normal.
No >> Ask the customer about the situation when the symptom occurs in detail, and perform the trouble diagnosis.

The Fuel Gauge Does Not Move to F- position

EKS002HE

1. QUESTIONNAIRE 1

Does it take a long time for the pointer to move to F- position?

Yes or No

Yes >> GO TO 2.
No >> GO TO 3.

2. QUESTIONNAIRE 2

Was the vehicle fueled with the ignition switch ON?

Yes or No

Yes >> Be sure to fuel the vehicle with the ignition switch OFF. Otherwise, it will take a long time to move to F- position because of the characteristic of the fuel gauge.
No >> GO TO 3.

3. QUESTIONNAIRE 3

Is the vehicle parked on an incline?

Yes or No

Yes >> Check the fuel level indication with vehicle on a level surface.
No >> GO TO 4.

4. QUESTIONNAIRE 4

During driving, does the fuel gauge pointer move gradually toward E - position?

Yes or No

Yes >> Check the components. Refer to DI-21, "FUEL LEVEL SENSOR UNIT CHECK" .
No >> The float arm may interfere or bind with any of the components in the fuel tank.

The Fuel Gauge Does Not Work

EKS002HF

1. HARNESS CONNECTOR INSPECTION

1. Turn the ignition switch OFF.
2. Check combination meter, fuel level sensor unit, and terminals (meter-side, module-side, lead-side, and harness-side) for poor connection and bend.

OK or NG

OK >> GO TO 2.
NG >> Repair terminal or connector.

2. CHECK INSTALLATION CONDITION

Check fuel level sensor unit installation (refer to FL-5, "FUEL LEVEL SENSOR UNIT, FUEL FILTER AND FUEL PUMP ASSEMBLY" , and check whether the float arm interferes or binds with any components inside the fuel tank.

OK or NG

OK >> Fuel level sensor unit is OK.
NG >> Check fuel level sensor unit. Refer to DI-21, "FUEL LEVEL SENSOR UNIT CHECK" .

Low Fuel Warning Lamp Illuminates at All Times or Does Not Illuminate

EKS002HG

1. SELF-DIAGNOSIS INSPECTION

Perform combination meter self-diagnosis. Refer to DI-13, "SELF–DIAGNOSIS FUNCTION" .

OK or NG

OK >> Check fuel level sensor unit. Refer to DI-21, "FUEL LEVEL SENSOR UNIT CHECK" .
NG >> Replace combination meter.

Electrical Components Inspection

EKS002HH

FUEL LEVEL SENSOR UNIT CHECK

- For removal, refer to FL-5, "Removal and Installation" .
- Check the resistance between terminals G and E.

Measurement terminal		Float position mm (in)		Resistance value (Approx.)
G	E	Full (1)	82.7 (3.3)	4.5 – 5.5Ω
		1/2 (2)	200.3 (7.9)	31.5 – 5.5Ω
		Empty (3)	325.0 (12.8)	80.0 – 83.0Ω

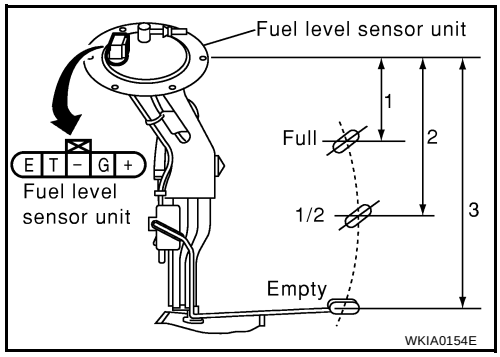

Removal and Installation

EKS002HI

For removal and installation procedure, refer to IP-14, "Combination Meter" .

WARNING LAMPS

PFP:24814

System Description

EKS002HJ

OUTLINE

With ignition switch in the ON or START position, power is supplied

- through 10A fuse [No. 14, located in the fuse block (J/B)]
- to combination meter terminals 17 and 18.

Ground is supplied

- to combination meter terminals 6 and 39
- through body grounds M57 and M61, and
- to seat belt buckle switch terminal 2
- through body grounds B7 and B19, and
- to brake fluid level switch terminal 1
- through body grounds E15 and E24, and
- to washer level switch terminal +
- through body grounds E115 and E129.

MALFUNCTION INDICATOR LAMP

During prove out or when an engine control malfunction occurs, ground is supplied

- to combination meter terminal 23
- from ECM terminal 18 (QR25DE engines) or terminal 33 (VQ35DE engines).

When power and ground are supplied, the malfunction indicator lamp illuminates.

LOW WASHER FLUID LEVEL WARNING LAMP

When the washer fluid level is low, ground is supplied

- to combination meter terminal 22
- from washer fluid level switch terminal +.

When power and ground are supplied, the low washer level warning lamp illuminates.

AIR BAG WARNING LAMP

During prove out or when an air bag malfunction occurs, the ground path is interrupted

- from the air bag diagnosis sensor unit terminal 15
- to combination meter terminal 38.

Ground is supplied

- through combination meter terminals 6 and 39.

When power and ground are supplied, the air bag warning lamp illuminates.

SEAT BELT WARNING LAMP

When the driver's seat belt is unfastened, ground is supplied

- to combination meter terminal 28
- from seat belt buckle switch terminal 1.

When power and ground are supplied, the seat belt warning lamp illuminates.

LOW FUEL LEVEL WARNING LAMP

The amount of fuel in the fuel tank is determined by the fuel level sensor in the fuel tank. A signal is sent

- to combination meter terminal 12
- from fuel level sensor unit terminal G.

The fuel level sensor will illuminate the low fuel level warning lamp when the fuel level is low.
When power and ground are supplied, the low fuel level warning lamp illuminates.

CHARGE WARNING LAMP

During prove out or when a alternator malfunction occurs, ground is supplied

- to combination meter terminal 24
- from generator terminal L.

When power and ground are supplied, the charge warning lamp and brake lamp illuminate.

BRAKE WARNING LAMP

When the parking brake is applied, or if the brake fluid level is low, ground is supplied

- to combination meter terminal 36
- from parking brake switch terminal 1, or
- to combination meter terminal 37
- from brake fluid level switch terminal 1.

When power and ground are supplied, the brake warning lamp illuminates.

LOW OIL PRESSURE WARNING LAMP

Low oil pressure warning lamp is controlled by the IPDM E/R (Intelligent Power Distribution Module Engine Room).
Low oil pressure causes oil pressure switch terminal + to provide ground to IPDM E/R terminal 50. The IPDM E/R then signals the combination meter (unified meter control unit) via the CAN lines and ground is provided to the low oil pressure warning lamp.
When power and ground are supplied, the low oil pressure warning lamp illuminates.

DOOR WARNING LAMP

Door warning lamp is controlled by the BCM.
When one of the doors is opened, ground is supplied to the BCM terminals 10, 11, 14 or 54. The BCM then signals the combination meter (unified meter control unit) via the CAN lines and ground is provided to the door warning lamp.
When power and ground are supplied, the door warning lamp illuminates.

TRUNK WARNING LAMP

Trunk warning lamp is controlled by the BCM.
When the trunk is open, ground is supplied

- to BCM terminal 19
- through body grounds B7 and B19.

The BCM then signals the combination meter (unified meter control unit) via the CAN lines and ground is provided to the trunk warning lamp.
When power and ground are supplied, the trunk warning lamp illuminates.

ASCD SET INDICATOR LAMP

The ASCD set indicator lamp is controlled by the ECM.
When the ASCD system is turned on and the speed is set, the ECM signals the combination meter (unified meter control unit) via the CAN lines and ground is provided to the set indicator lamp.
When power and ground are supplied, the set indicator lamp illuminates.

CRUISE INDICATOR LAMP

The cruise indicator lamp is controlled by the ECM.
When the ASCD system is turned on, the ECM signals the combination meter (unified meter control unit) via the CAN lines and ground is provided to the cruise indicator lamp.
When power and ground are supplied, the cruise indicator lamp illuminates.

ABS WARNING LAMP

When an ABS malfunction occurs, ground is supplied

- to combination meter terminal 25
- from ABS actuator and electric unit (control unit) terminal 21.

When power and ground are supplied, the ABS warning lamp illuminates.

TCS OFF WARNING LAMP

When TCS OFF switch is in OFF position, or an TCS malfunction occurs, ground is supplied

- to combination meter terminal 26
- from ABS actuator and electric unit (control unit) terminal 26.

When power and ground are supplied, the TCS OFF warning lamp illuminates.

SLIP WARNING LAMP

When TCS is in operation, or a TCS malfunction occurs, ground is supplied

- to combination meter terminal 27
- from ABS actuator and electric unit (control unit) terminal 28.

When power and ground are supplied, the slip warning lamp illuminates.

CAN Communication System Description

EKS002HK

CAN (Controller Area Network) is a serial communication line for real time application. It is an on-vehicle multiplex communication line with high data communication speed and excellent error detection ability. Many electronic control units are equipped onto a vehicle, and each control unit shares information and links with other control units during operation (not independent). In CAN communication, control units are connected with 2 communication lines (CAN H line, CAN L line) allowing a high rate of information transmission with less wiring. Each control unit transmits/receives data but selectively reads required data only.

FOR TCS MODELS

System Diagram

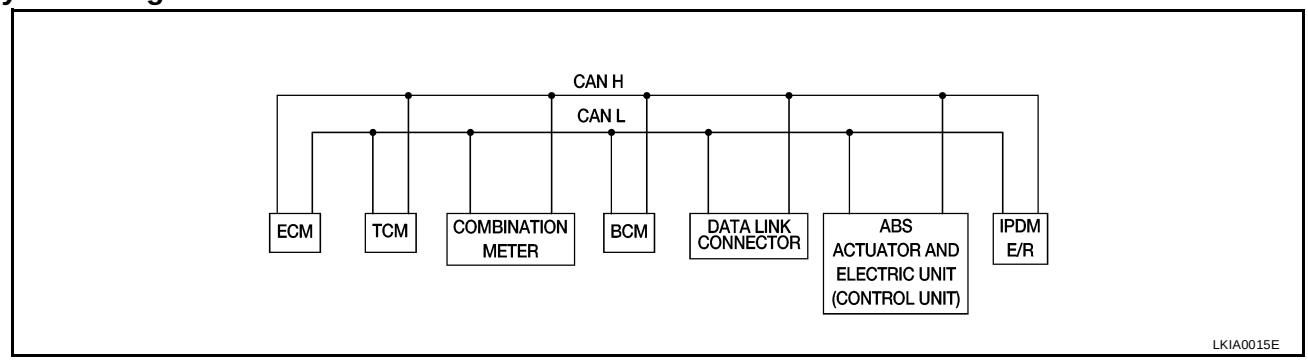

Input/Output Signal Chart

T: Transmit R: Receive

Signals	ECM	TCM	COMBINATION METER	BCM	ABS/TCS control unit	IPDM E/R
Engine speed signal	T		R		R	
Engine coolant temperature signal	T		R			
Accelerator pedal position signal	T					
Fuel consumption monitor signal	T		R			
A/T warning lamp signal		T	R			
A/T position indicator signal	R	T	R	R(R range only)	R	
ABS operation signal	R				T	
TCS operation signal	R	R			T	
Air conditioner switch signal	R			T		
Air conditioner compressor signal	R					T
A/C compressor request signal	T					R
Cooling fan motor operation signal	R					T
Cooling fan speed request signal	T					R
Position lights request			R	T		R
Position lights status				R		T
Low beam request				T		R
Low beam status	R			R		T
High beam request			R	T		R
High beam status	R			R		T
Front fog lights request				T		R

Signals	ECM	TCM	COMBINATION METER	BCM	ABS/TCS control unit	IPDM E/R
Front fog light status				R		T
OD cancel switch signal		R	T			R
Brake switch signal		R	T			
Vehicle speed signal	R		T			
	R		T	R		
Oil pressure switch			R			T
Sleep request1			R	T		
Sleep request2				T		R
N range switch signal		R	T			
P range switch signal		R	T			
Seat belt buckle switch signal			T	R		
Door switch signal			R	T		R
Tail lamp request			R	T		R
Turn indicator signal			R	T		
Buzzer output signal			R	T		
Trunk switch signal			R	T		
ASCD main switch signal	T		R			
ASCD cruise signal	T		R			
Wiper operation				R		T
Wiper stop position signal				R		T
Rear window defogger switch signal				T		R
Rear window defogger control signal	R			R		T

FOR A/T MODELS

System Diagram

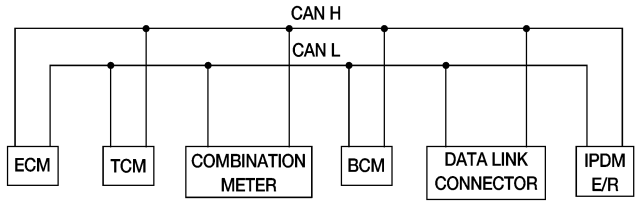

LKIA0017E

Input/Output Signal Chart

T: Transmit R: Receive

Signals	ECM	TCM	COMBINATION METER	BCM	IPDM E/R
Engine speed signal	T		R		
Engine coolant temperature signal	T		R		
Accelerator pedal position signal	T				R
Fuel consumption monitor signal	T		R		
A/T warning lamp signal		T	R		
A/T position indicator signal	R	T	R	R(R range only)	

Signals	ECM	TCM	COMBINATION METER	BCM	IPDM E/R
Air conditioner switch signal	R			T	
Air conditioner compressor signal	R				T
A/C compressor request signal	T				R
Blower fan switch signal	R(QR25DE)			T	
Cooling fan motor operation signal	R			T	
Cooling fan speed request signal	T				R
Position lights request			R	T	R
Position lights status				R	T
Low beam request				T	R
Low beam status	R			R	T
High beam request			R	T	R
High beam status	R			R	T
Front fog lights request				T	R
Front fog light status				R	T
OD cancel switch signal		R	T		R
Brake switch signal		R	T		
Vehicle speed signal	R		T		
	R		T	R	
Oil pressure switch			R		T
Sleep request1			R	T	
Sleep request2				T	R
N range switch signal		R	T		
P range switch signal		R	T		
Seat belt buckle switch signal			T	R	
Door switch signal			R	T	R
Tail lamp request			R	T	R
Turn indicator signal			R	T	
Buzzer output signal			R	T	
Trunk switch signal			R	T	
ASCD main switch signal	T		R		
ASCD cruise signal	T		R		
Wiper operation				R	T
Wiper stop position signal				R	T
Rear window defogger switch signal				T	R
Rear window defogger control signal	R			R	T

FOR M/T MODELS

System Diagram

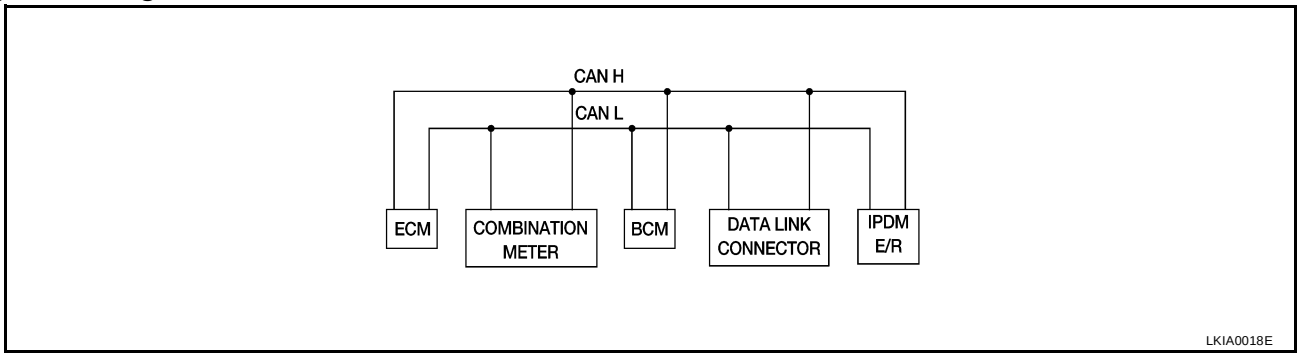

Input/Output Signal Chart

T: Transmit R: Receive

Signals	ECM	COMBINATION METER	BCM	IPDM E/R
Engine speed signal	T			
Engine coolant temperature signal	T			
Fuel consumption monitor signal	T			
Air conditioner switch signal	R		T	
Air conditioner compressor signal	R			T
A/C compressor request signal	T			R
Blower fan switch signal	R(QR25DE)		T	
Cooling fan motor operation signal	R			T
Cooling fan speed request signal	T			R
Position lights request		R	T	R
Position lights status			R	T
Low beam request			T	R
Low beam status	R		R	T
High beam request		R	T	R
High beam status	R		R	T
Front fog lights request			T	R
Front fog light status			R	T
Vehicle speed signal	R	T		
Oil pressure switch		R		T
Sleep request1		R	T	
Sleep request2			T	R
Seat belt buckle switch signal		T	R	
Door switch signal		R	T	R
Tail lamp request		R	T	R
Turn indicator signal		R	T	
Buzzer output signal		R	T	
Trunk switch signal		R	T	
ASCD main switch signal	T	R		
ASCD cruise signal	T	R		
Wiper operation			R	T
Wiper stop position signal			R	T

Signals	ECM	COMBINATION METER	BCM	IPDM E/R
Rear window defogger switch signal			T	R
Rear window defogger control signal	R		R	T

Schematic

EKS002HL

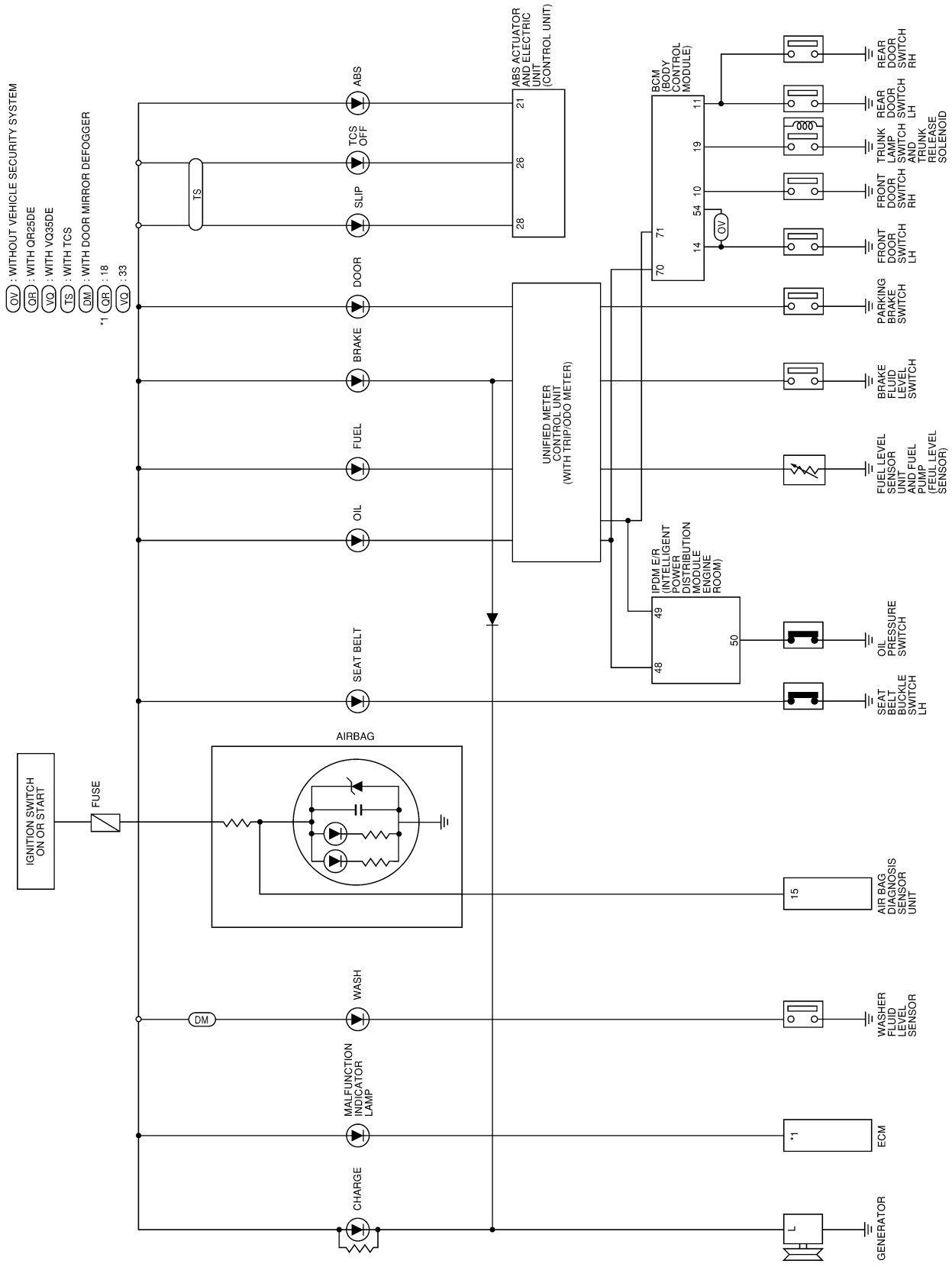

WKWA0390E

Wiring Diagram — WARN —

EKS002HM

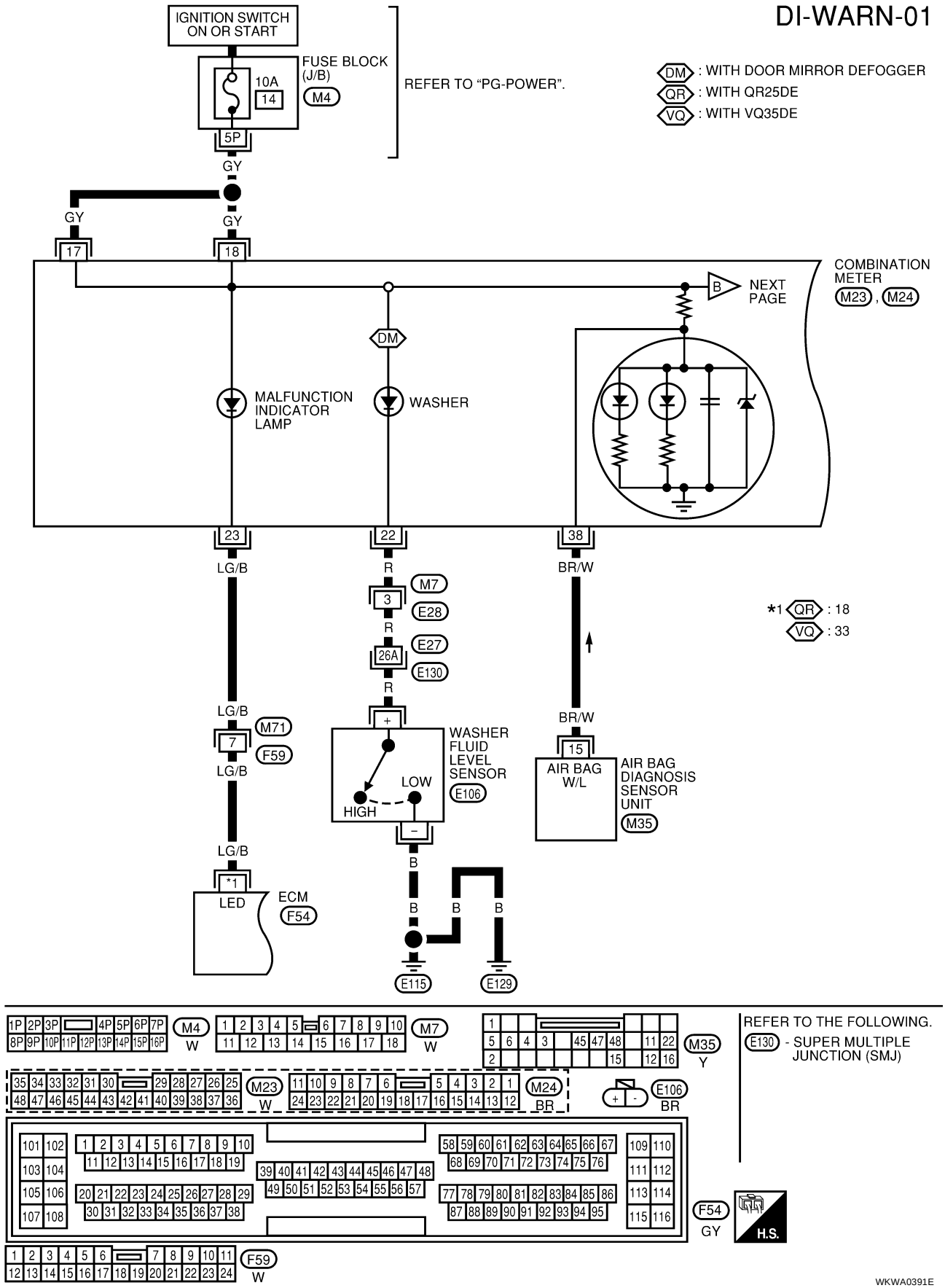

DI-WARN-02

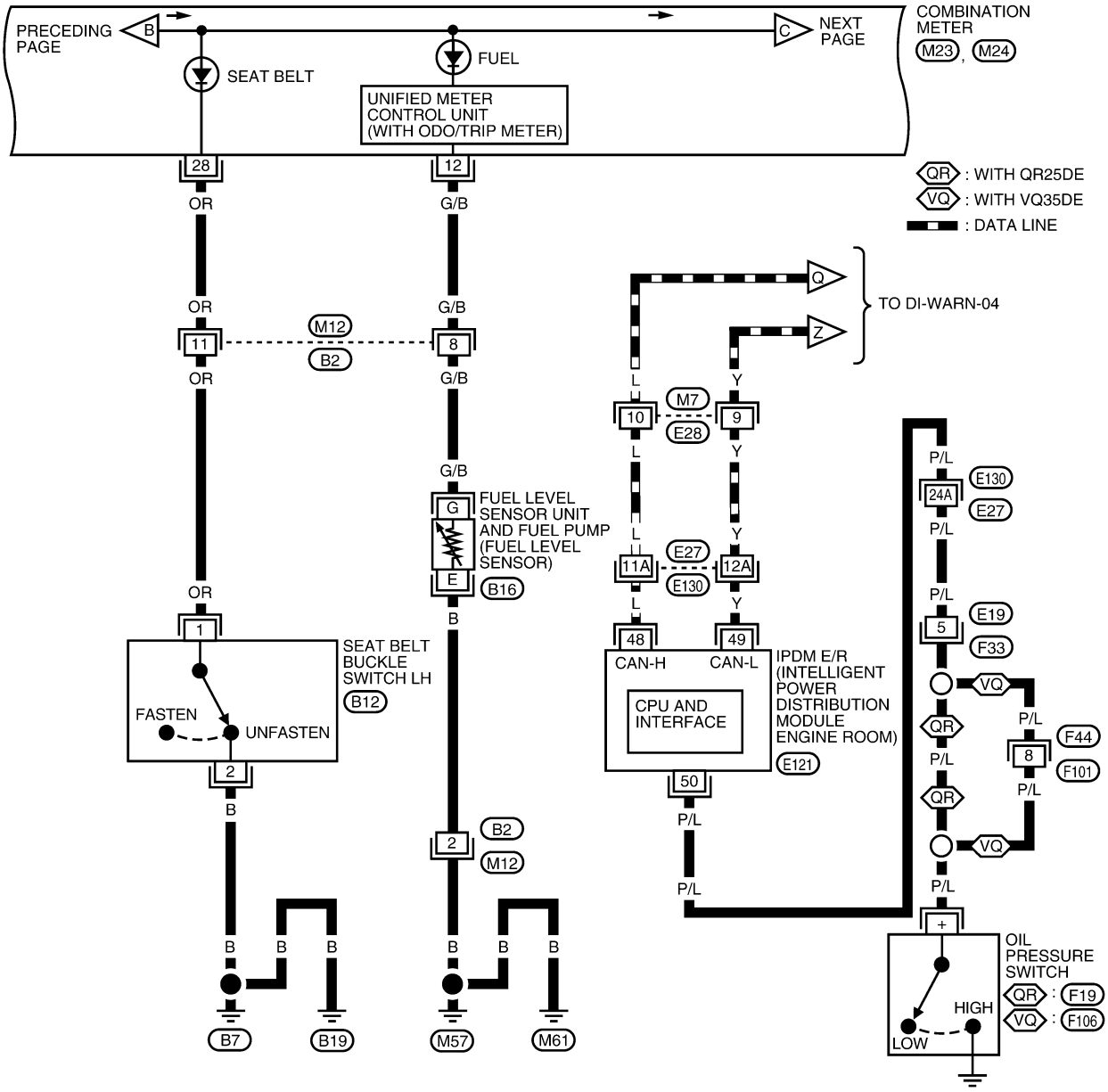

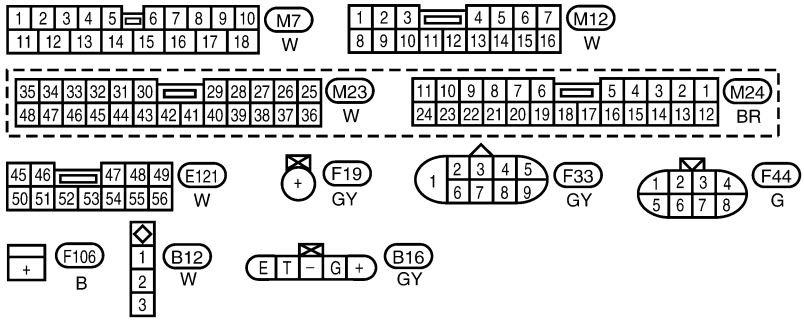

REFER TO THE FOLLOWING.
E130 - SUPER MULTIPLE JUNCTION (SMJ)

LKWA0055E

DI-WARN-03

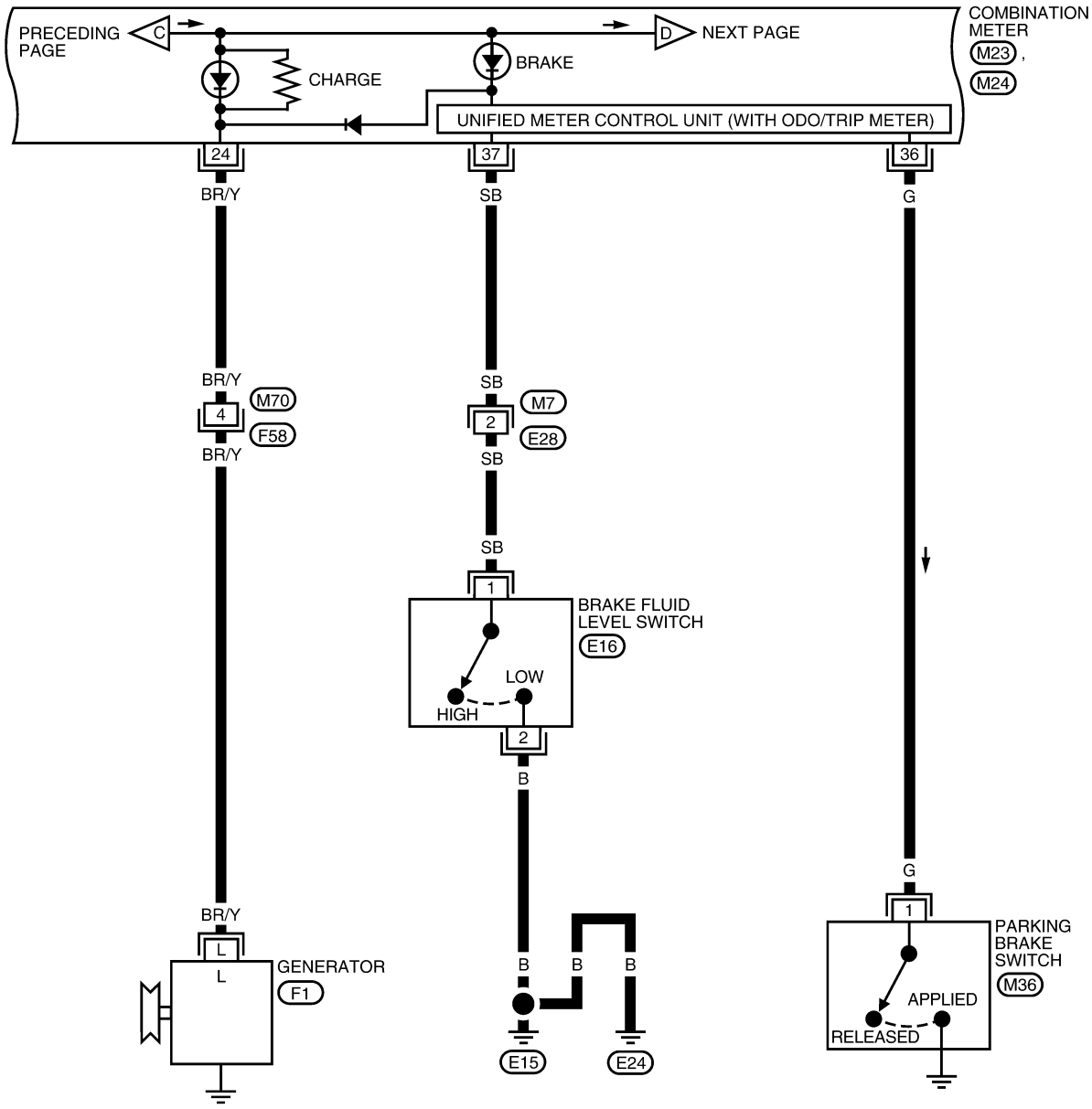

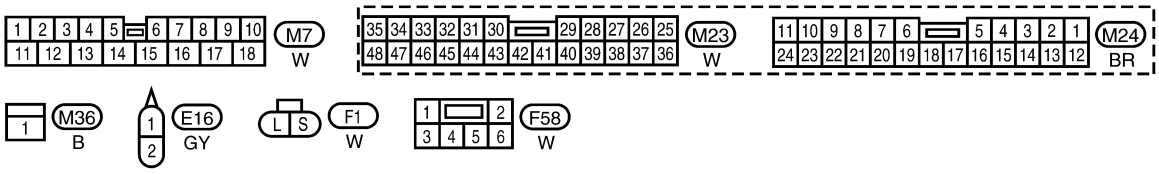

LKWA0056E

DI-WARN-04

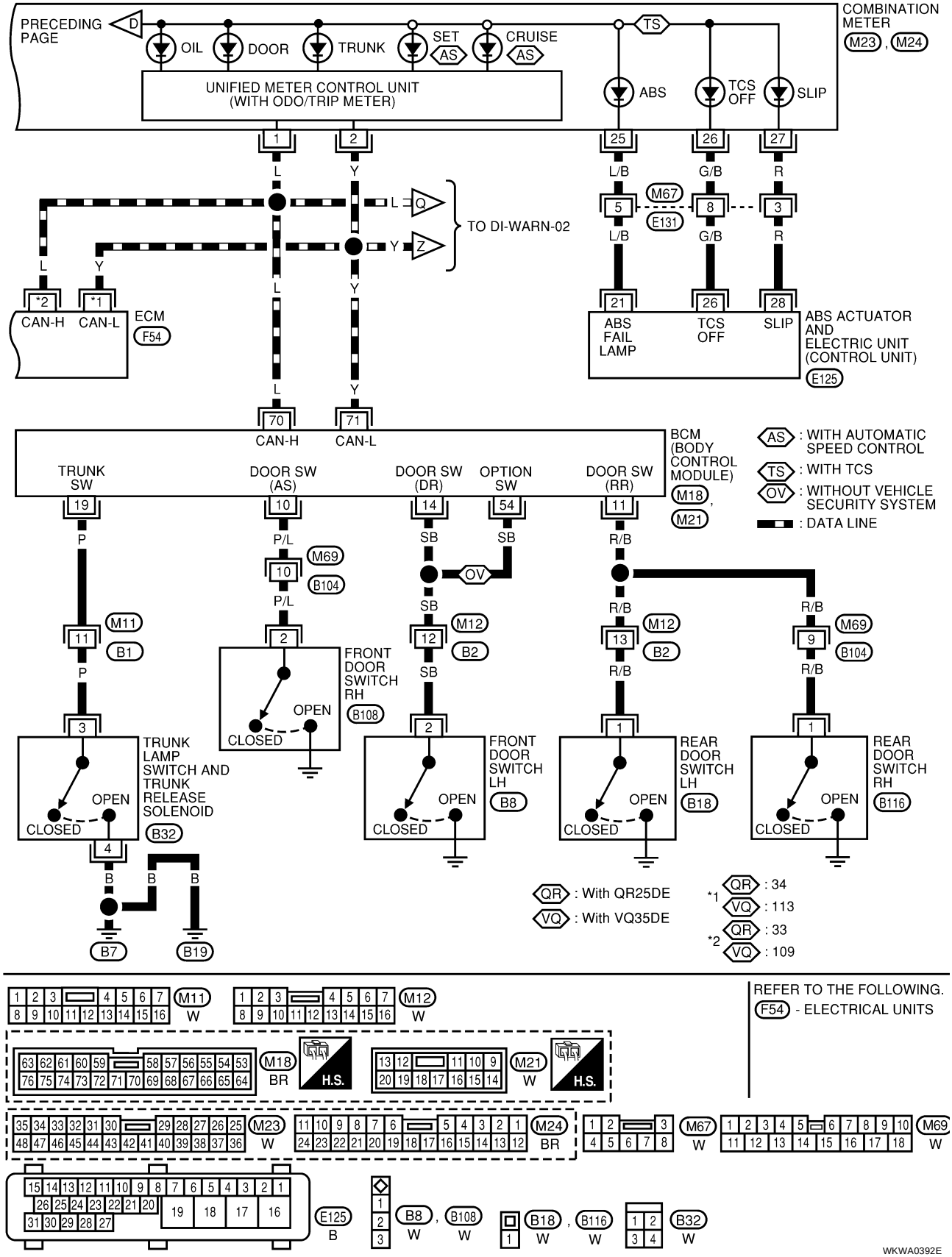
PRECEDING PAGE
D
OIL
DOOR
TRUNK
SET
AS
CRUISE
AS
TS
COMBINATION METER
M23 , M24
UNIFIED METER CONTROL UNIT (WITH ODO/TRIP METER)
ABS
TCS OFF
SLIP
1
2
25
26
27
L
Y
L/B
G/B
R
M67
5
8
3
E131
TO DI-WARN-02
Q
Z
*2
*1
CAN-H
CAN-L
ECM
F54
21
26
28
ABS FAIL LAMP
TCS OFF
SLIP
ABS ACTUATOR AND ELECTRIC UNIT (CONTROL UNIT)
E125
70
71
CAN-H
CAN-L
BCM (BODY CONTROL MODULE)
M18 , M21
AS : WITH AUTOMATIC SPEED CONTROL
TS : WITH TCS
OV : WITHOUT VEHICLE SECURITY SYSTEM
: DATA LINE
TRUNK SW
DOOR SW (AS)
DOOR SW (DR)
OPTION SW
DOOR SW (RR)
19
10
14
54
11
P
P/L
SB
R/B
M69
10
B104
OV
M11
11
B1
M12
12
B2
M12
13
B2
M69
9
B104
2
FRONT DOOR SWITCH RH
B108
OPEN
CLOSED
3
TRUNK LAMP SWITCH AND TRUNK RELEASE SOLENOID
B32
4
B
B7
B19
FRONT DOOR SWITCH LH
B8
REAR DOOR SWITCH LH
B18
REAR DOOR SWITCH RH
B116
QR : With QR25DE
VQ : With VQ35DE
*1 QR : 34
VQ : 113
*2 QR : 33
VQ : 109
M11
W
M12
W
M18
BR
H.S.
M21
W
M23
W
M24
BR
M67
W
M69
W
E125
B
B8 , B108
W
B18 , B116
W
B32
W
REFER TO THE FOLLOWING.
F54 - ELECTRICAL UNITS
WKWA0392E

Terminals And Reference Value For BCM

EKS002HN

TERMI-NAL	WIRE COLOR	ITEM	CONDITION			DATA (DC Voltage) (Approx.)
			IGNITION SWITCH	OPERATION		
10	P/L	Passenger door switch	OFF	Passenger door switch	ON (open)	0
					OFF (closed)	12
11	R/B	Rear door switch(es)	OFF	Rear door switch LH or RH	ON (open)	0
					OFF (closed)	12
14	SB	Driver door switch (with vehicle security system)	OFF	Driver door switch	ON (open)	0
					OFF (closed)	12
19	P	Trunk switch	OFF	Trunk switch	ON (open)	0
					OFF (closed)	12
54	SB	Driver door switch (without vehicle security system)	OFF	Driver door switch	ON (open)	0
					OFF (closed)	12
70	L	CAN H	—			—
71	Y	CAN L	—			—

Work Flow

EKS002HO

1. Check the trouble symptom and customer's requests.
2. Understand the outline of system. Refer to DI-22, "System Description" .
3. Perform the preliminary check. Refer to DI-34, "Preliminary Check" .
4. Referring to Trouble diagnosis chart, repair or replace the cause of the incident. Refer to DI-38, "Trouble Diagnosis For Door Warning Lamp"
5. Does warning chime system operate normally? If it operates normally, go to step 6. If not, go to step 4.
6. INSPECTION END.

Preliminary Check

EKS002HP

INSPECTION FOR POWER SUPPLY AND GROUND CIRCUIT

1. CHECK FUSES

- Check for blown BCM fuses.

UNIT	POWER SOURCE	FUSE No.
BCM	Battery	f

Refer to DI-49, "Wiring Diagram — CHIME —" .

OK or NG

OK >> GO TO 2.

NG >> If fuse is blown, be sure to eliminate cause of problem before installing new fuse. Refer to PG-3, "POWER SUPPLY ROUTING CIRCUIT" .

2. POWER SUPPLY CIRCUIT CHECK

1. Disconnect BCM connector.
2. Check voltage between BCM connector E39 terminal 7 (W/B) and ground.

Terminals			Ignition switch position
(+)		(-)	OFF
Connector	Terminal (Wire color)		
E39	7 (W/B)	Ground	Battery voltage

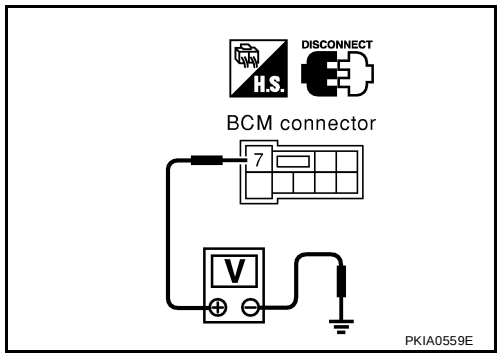

OK or NG

OK >> GO TO 3.
NG >> Check harness for open or short between BCM and fuse.

3. GROUND CIRCUIT CHECK

Check continuity between BCM harness connector E39 terminal 8 and body ground.

Terminals			Continuity
(+)		(–)	
Connector	Terminal		
E39	8	Ground	Yes

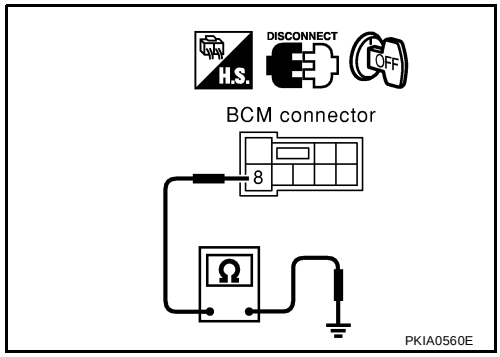

OK or NG

OK >> INSPECTION END.
NG >> Check harness ground circuit.

CONSULT–II Function

EKS002HQ

- CONSULT-II executes the following functions by combining data reception and command transmission via the communication line from BCM. CAN system inspection, IVMS work support, self-diagnosis, data monitor, and active test display.

DIAGNOSTIC ITEMS DESCRIPTION

IVMS diagnosis position	Diagnosis mode	Description
DOOR OPEN-WARN	Data monitor	The input data to the BCM control unit is displayed in real time.
	Active test	Operation of electrical loads can be checked by sending driving signal to them.
BCM PART NUMBER		Displays BCM part No.

SELF-DIAGNOSIS PROCEDURE

1. With the ignition switch OFF, connect CONSULT-II to the data link connector, and turn the ignition switch ON.

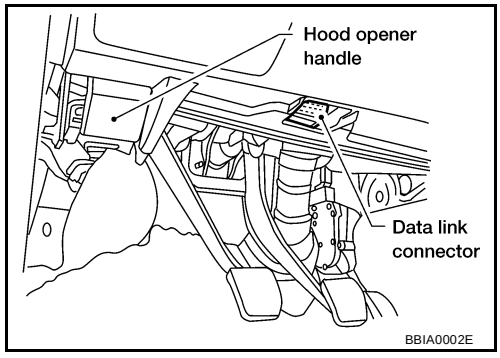

2. Touch “START”.

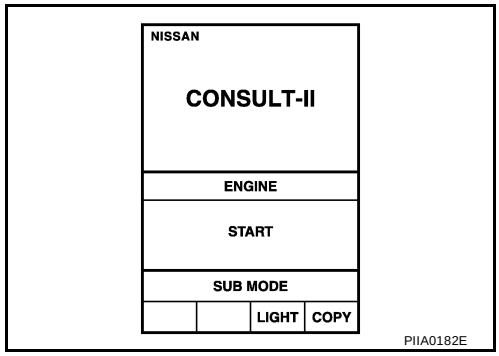

3. Select the desired part to be diagnosed on the “DIAGNOSIS SYSTEM SELECTION” screen.

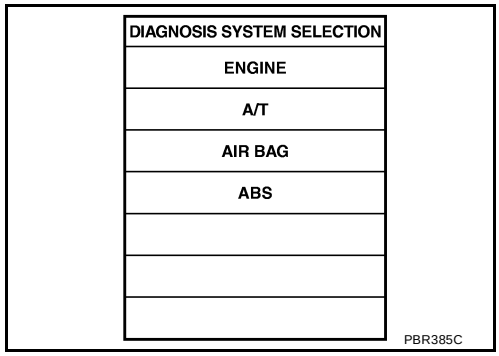

4. Touch “SELF-DIAG RESULTS”.
   - The screen shows the detected malfunction and how many times the ignition switch has been turned since the malfunction.
5. Make the necessary repairs following the diagnostic procedures.

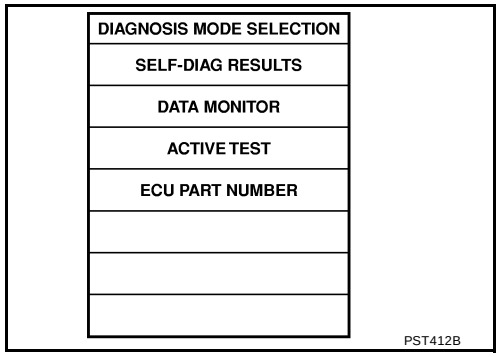

6. After the malfunctions are repaired, erase the self-diagnostic results stored in the control unit by touching “ERASE”.

NOTE:
“SELF-DIAG RESULTS” screen shows the detected malfunction and how many times the ignition switch has been turned since the malfunction.

DATA MONITOR

Operation Procedure

1. Touch “DOOR OPEN WARNING” on “SELECT TEST ITEM” screen.
2. Touch “DATA MONITOR” on “SELECT DIAG MODE” screen.
3. Touch “MAIN SIGNALS” or “SELECTION FROM MENU” on “DATA MONITOR" screen.

MAIN SIGNALS	Monitors the main items.
SELECTION FROM MENU	Selects and monitors the items.

4. Touch “START”.
5. If “SELECTION FROM MENU” is selected, touch the desired monitor item. If “MAIN SIGNALS” is selected, the main item required to control is monitored.
6. During monitoring, touching “COPY” can start recording the monitor item status.

Data Monitor Item

Monitored item	Description
IGN ON SW	Indicates [ON/OFF] condition of ignition switch.
DOOR SW-DR	Indicates [ON/OFF] condition of front door switch (driver side).
DOOR SW-AS	Indicates [ON/OFF] condition of front door switch (passenger side).
DOOR SW-RL	Indicates [ON/OFF] condition of rear door switch LH.
DOOR SW-RR	Indicates [ON/OFF] condition of rear door switch RH.

ACTIVE TEST

Operation Procedure

1. Touch “DOOR OPEN WARNING” on “SELECT TEST ITEM” screen.
2. Touch “ACTIVE TEST” on “SELECT DIAG MODE” screen.
3. Touch the item to be tested, and check the operation.
4. During the operation check, touching “OFF” deactivates the operation.

Active Test Item

Test item	Malfunction detecting condition
DR OPN WARN LAMP	This test is able to check door warning lamp operation. Door warning lamp indicates when to touch “ON” on CONSULT-II screen.

On-Board Diagnosis

EKS002HR

ON BOARD DIAGNOSTIC RESULTS INDICATOR LAMP

- Front map lamps and step lamps (all seats) act as the indicators for the On-Board Diagnosis.

DIAGNOSIS ITEM

Diagnosis item	Description
Switch monitor	Monitoring conditions of switches connected to BCM.

SWITCH MONITOR

- Perform the diagnosis on the switch system to each control unit.

How To Perform Switch Monitor

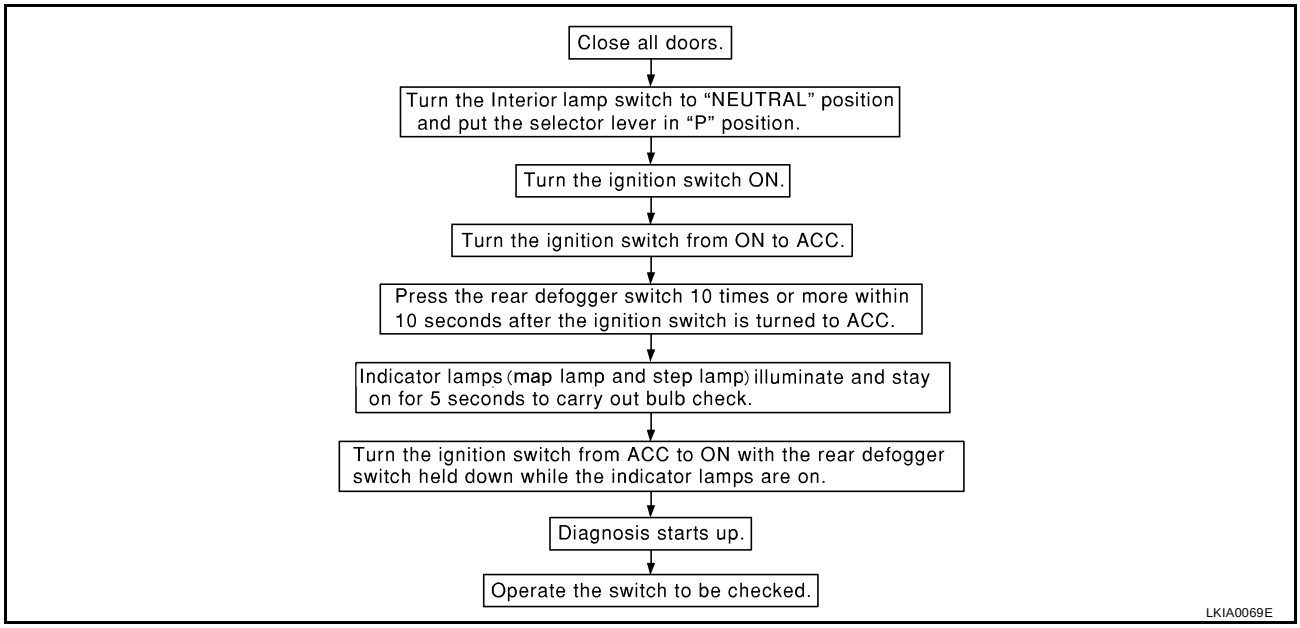

DESCRIPTION

- In this mode, when BCM detects the input signal from a switch in IVMS as shown below, the detection is indicated by the front map lamp and front step lamps with buzzer.

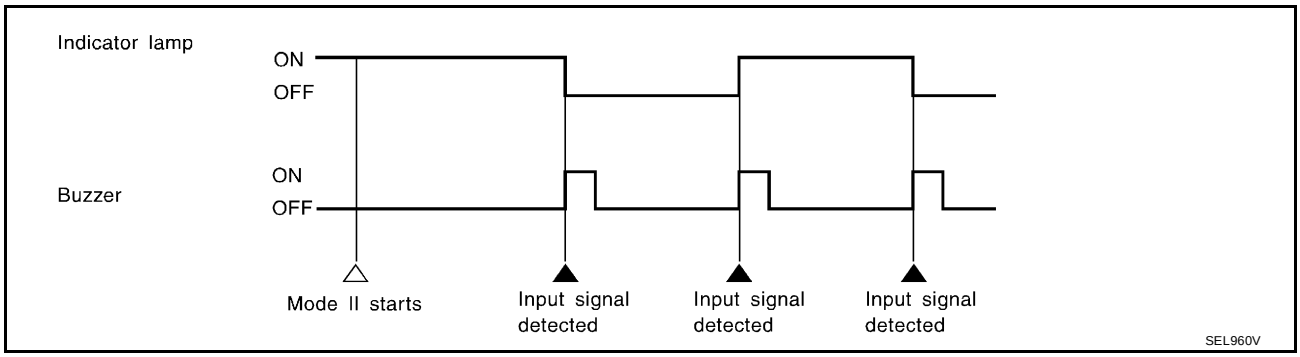

SWITCH MONITOR ITEM

- The status of the switch (except the ignition switch, interior lamp switch, and map lamp switch) as input to each control unit can be monitored.

BCM	Front door switch (driver side)
	Front door switch (passenger side)
	Rear door switch LH
	Rear door switch RH

CANCEL OF SWITCH MONITOR

- Turn ignition switch OFF.
- Drive the vehicle at more than 7 km/h (4 MPH).

Trouble Diagnosis For Door Warning Lamp

EKS002HS

Symptom	Diagnostic procedure and repair order
Door warning lamp does not illuminate with any of doors open.	● Check combination meter circuit. Refer to DI-15, "Power Supply and Ground Circuit Check" . ● Check front door switch. Refer to DI-37, "SWITCH MONITOR" . ● Check rear door switch. Refer to DI-37, "SWITCH MONITOR" . If the above systems work properly, replace the BCM.
Door warning lamp illuminates constantly.	● Check combination meter circuit. Refer to DI-15, "Power Supply and Ground Circuit Check" . ● Check front door switch. Refer to DI-37, "SWITCH MONITOR" . ● Check rear door switch. Refer to DI-37, "SWITCH MONITOR" . If the above systems work properly, replace the BCM.

Oil Pressure Warning Lamp Stays Off (Ignition Switch ON)

EKS002HT

1. INSPECTION 1 BETWEEN IPDM E/R AND COMBINATION METER

1. Activate IPDM E/R auto active test. Refer to PG-19, "Auto Active Test" .

Does auto active test activate?

Yes >> Replace combination meter.
No >> GO TO 2.

2. CHECK OIL PRESSURE SWITCH CIRCUIT

1. Disconnect IPDM E/R connector and oil pressure switch connector.
2. Check continuity between IPDM E/R harness connector E121 terminal 50 (P/L) and oil pressure switch connector terminal + (P/L).

50 - + **Continuity should exist.**

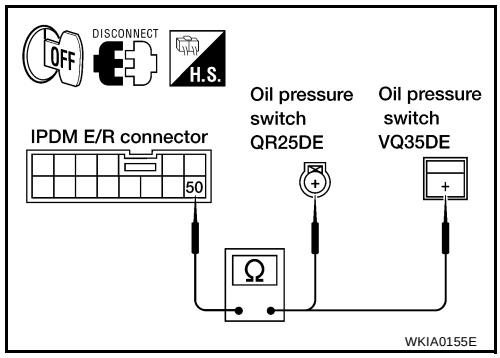

OK or NG

OK >> GO TO 3.
NG >> Repair harness or connector.

3. CHECK OIL PRESSURE SWITCH

1. Check oil pressure switch. Refer to DI-40, "OIL PRESSURE SWITCH"

OK or NG

OK >> GO TO 4.
NG >> Replace the oil pressure switch.

4. IPDM E/R VOLTAGE INSPECTION

1. Connect IPDM E/R connector.
2. Turn the ignition switch ON.
3. Check voltage between IPDM E/R harness connector E121 terminal 50 (P/L) and body ground.

50 - Ground **Approx. 0V**

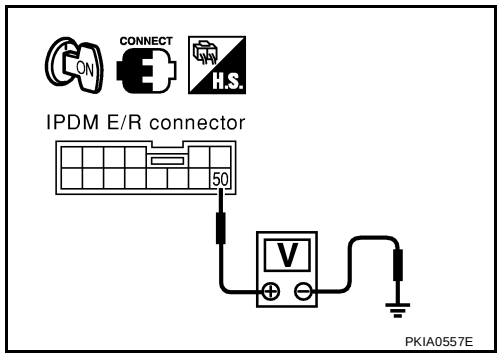

OK or NG

OK >> Perform BCM self-diagnosis.
NG >> Replace IPDM E/R.

Oil Pressure Warning Lamp Does Not Turn Off (Oil Pressure Is Normal)

EKS002HU

NOTE:
For oil pressure inspection, refer to LU-6, "OIL PRESSURE CHECK" (QR25DE) or LU-17, "OIL PRESSURE CHECK" (VQ35DE).

1. HARNESS CONTINUITY INSPECTION

1. Disconnect IPDM E/R connector and oil pressure switch connector.
2. Check continuity between IPDM E/R harness connector E121 terminal 50 (P/L) and ground.

50 - Ground **Continuity should not exist.**

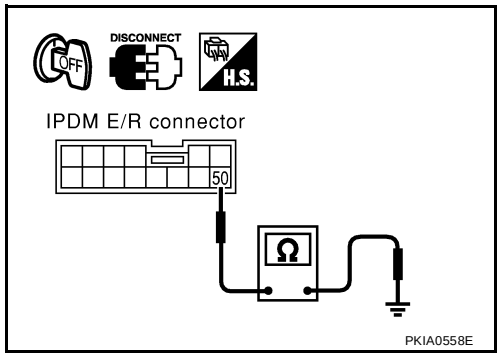

OK or NG

OK >> GO TO 2.
NG >> Repair harness or connector.

2. IPDM E/R VOLTAGE INSPECTION

1. Connect IPDM E/R connector.
2. Turn the ignition switch ON.
3. Check voltage between IPDM E/R harness connector E121 terminal 50 (P/L) and body ground.

50 - Ground **Approx. 12V**

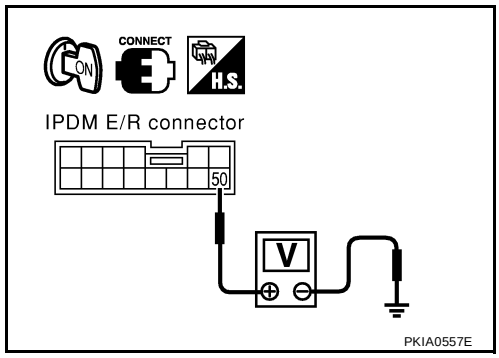

OK or NG

OK >> Check oil pressure switch. Refer to DI-40, "OIL PRESSURE SWITCH" .

NG >> Replace IPDM E/R.

Component Inspection

EKS002HV

OIL PRESSURE SWITCH

Check continuity between the oil pressure switch and body ground.

	Oil pressure kPa (kg/cm^2)	Continuity
Engine stopped	Less than 0.029 (0.3)	Yes
Engine running	More than 0.029 (0.3)	No

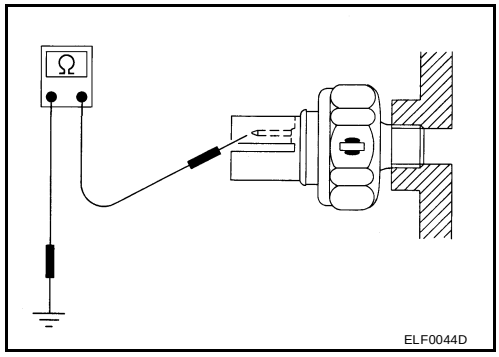

A/T INDICATOR

PFP:24814

Wiring Diagram — AT/IND —

EKS002HW

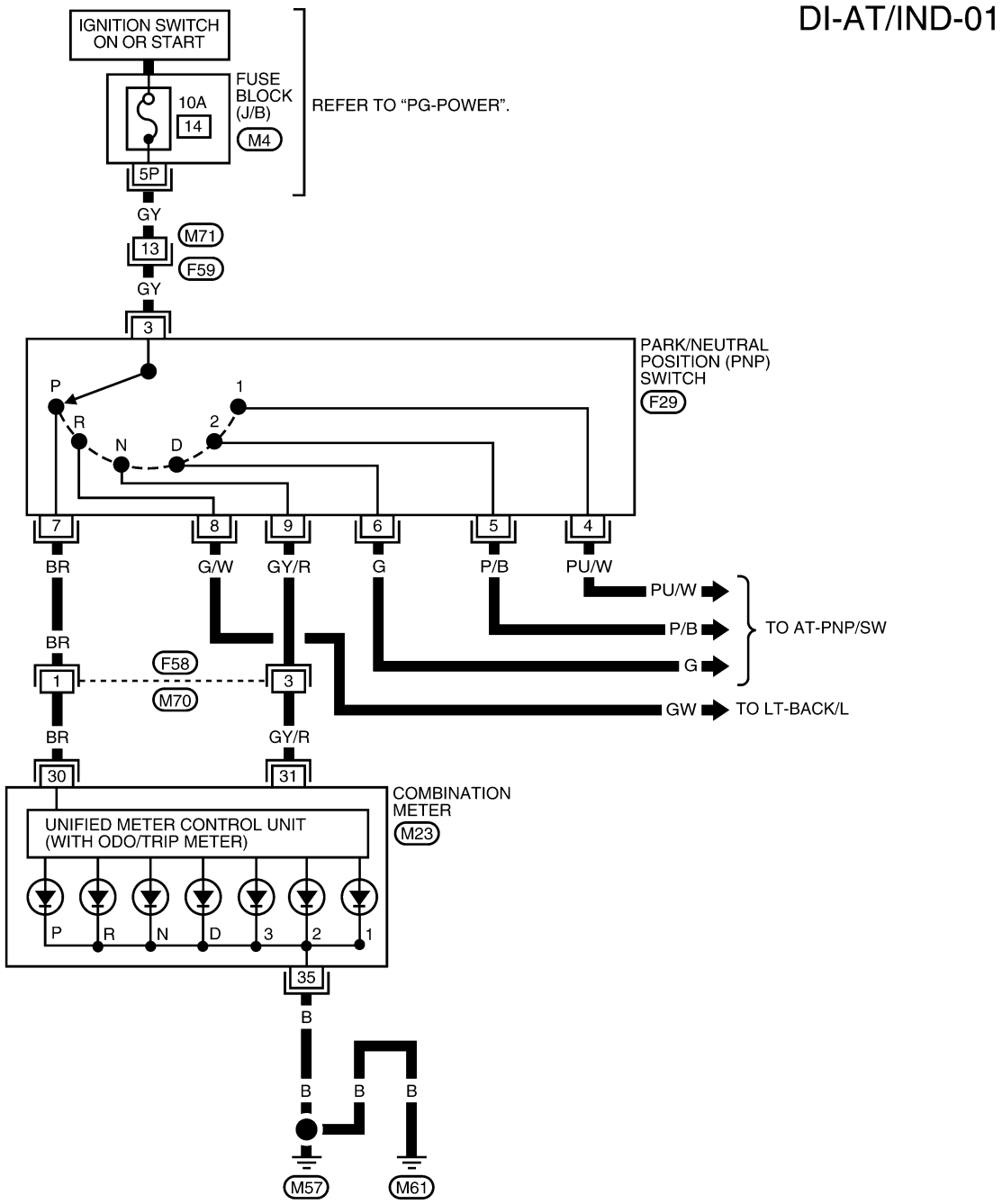

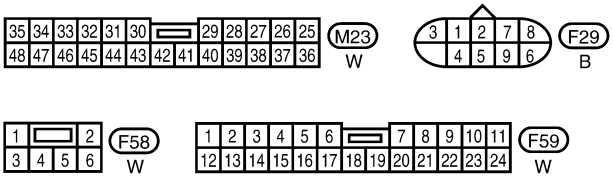

REFER TO THE FOLLOWING.
M4 - FUSE BLOCK (J/B)

LKWA0058E

Trouble Diagnosis

EKS002HX

SYMPTOM CHART

Symptom		Possible cause
A/T indicator lamp is abnormal.	All the lamps are inactive	A/T indicator does not illuminate. Refer to AT-213, "1. A/T Check (Position) Indicator Lamp Does Not Come On" .
	One lamp is inactive	● Check the combination meter connectors. If OK, replace combination meter.

WARNING CHIME

PFP:24814

Component Parts and Harness Connector Location

EKS002HZ

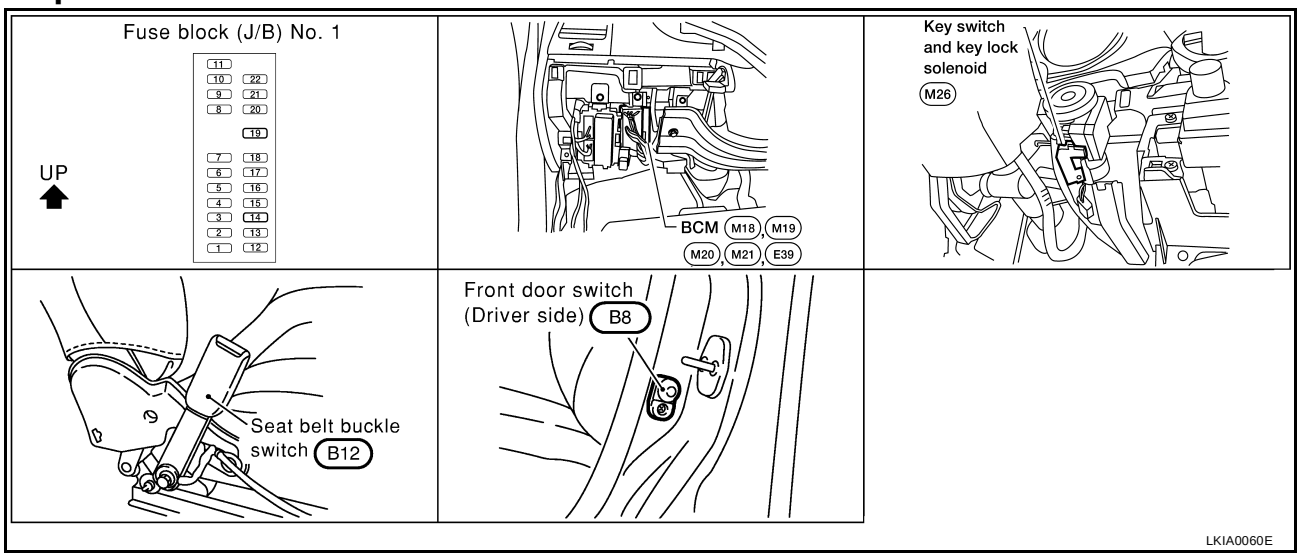

System Description

EKS002I0

FUNCTION

Item	Description
Ignition key warning chime	Sounds warning chime when driver's door is opened with key in ignition key cylinder and ignition switch "OFF" or "ACC" position.
Light warning chime	Sounds warning chime when driver's door is opened with lighting switch in the 1st or 2nd position and ignition switch "OFF" or "ACC" position.
Seat belt warning chime	Sounds warning chime for about 6 seconds if ignition switch is turned "ON" when driver's seat belt is unfastened.

Power is supplied at all times

- through 50A fuse (letter f, located in the fuse and fusible link box)
- to BCM terminal 7,
- through 10A fuse [No. 19, located in the fuse block (J/B)]
- to key switch and key lock solenoid terminal 3.

Ground is supplied

- to BCM terminal 8
- through body grounds E15 and E24 and
- to combination meter terminals 6 and 39
- through body grounds M57 and M61.

When a signal, or combination of signals, is received by the combination meter, the warning chime will sound.

IGNITION KEY WARNING CHIME

With the key inserted into the ignition switch, and the driver's door open, the warning chime will sound. Power is supplied

- through key switch and key lock solenoid terminal 4
- to BCM terminal 62, and

Ground is supplied

- to BCM terminal 14
- through front door switch LH terminal 2.

Front door switch LH is case grounded.

LIGHT WARNING CHIME

With the key removed from the ignition switch, the driver's door open, and the lighting switch in 1ST or 2ND position, the warning chime will sound. [Except when headlamp battery saver control operates (for 5 minutes after ignition switch is turned to OFF or ACC position) and headlamps do not illuminate.]
Signal is supplied

- from combination switch (lighting switch) terminals 40, 41, 42, 43, 47, 48, 49, 50, 51 and 52
- to BCM terminals 1, 2, 3, 4, 5, 6, 7, 8, 9 and 10.

Ground is supplied

- from door switch LH terminal 2
- to BCM terminal 14.

Front door switch LH is case grounded.

SEAT BELT WARNING CHIME

With ignition switch turned ON and seat belt unfastened (seat belt switch ON), warning chime will sound for approximately 6 seconds.
Ground is supplied

- from seat belt buckle switch terminal 1
- to BCM terminal 28.

Seat belt terminal 2 is grounded through body grounds B7 and B19.

CAN Communication System Description

EKS002I1

CAN (Controller Area Network) is a serial communication line for real time application. It is an on-vehicle multiplex communication line with high data communication speed and excellent error detection ability. Many electronic control units are equipped onto a vehicle, and each control unit shares information and links with other control units during operation (not independent). In CAN communication, control units are connected with 2 communication lines (CAN H line, CAN L line) allowing a high rate of information transmission with less wiring. Each control unit transmits/receives data but selectively reads required data only.

FOR TCS MODELS

System Diagram

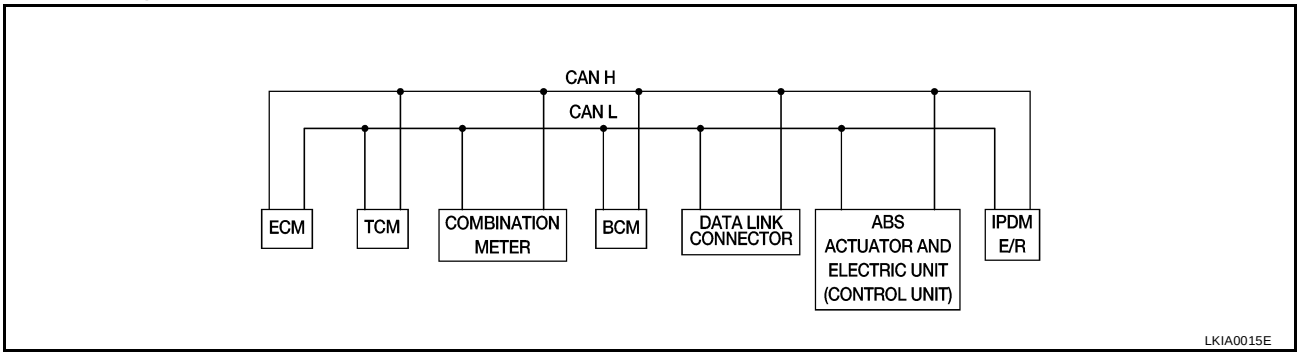

Input/Output Signal Chart

T: Transmit R: Receive

Signals	ECM	TCM	COMBINATION METER	BCM	ABS/TCS control unit	IPDM E/R
Engine speed signal	T		R		R	
Engine coolant temperature signal	T		R			
Accelerator pedal position signal	T					
Fuel consumption monitor signal	T		R			
A/T warning lamp signal		T	R			
A/T position indicator signal	R	T	R	R(R range only)	R	
ABS operation signal	R				T	
TCS operation signal	R	R			T	

Signals	ECM	TCM	COMBINA-TION METER	BCM	ABS/TCS control unit	IPDM E/R
Air conditioner switch signal	R			T		
Air conditioner compressor signal	R					T
A/C compressor request signal	T					R
Cooling fan motor operation signal	R					T
Cooling fan speed request signal	T					R
Position lights request			R	T		R
Position lights status				R		T
Low beam request				T		R
Low beam status	R			R		T
High beam request			R	T		R
High beam status	R			R		T
Front fog lights request				T		R
Front fog light status				R		T
OD cancel switch signal		R	T			R
Brake switch signal		R	T			
Vehicle speed signal	R		T			
	R		T	R		
Oil pressure switch			R			T
Sleep request1			R	T		
Sleep request2				T		R
N range switch signal		R	T			
P range switch signal		R	T			
Seat belt buckle switch signal			T	R		
Door switch signal			R	T		R
Tail lamp request			R	T		R
Turn indicator signal			R	T		
Buzzer output signal			R	T		
Trunk switch signal			R	T		
ASCD main switch signal	T		R			
ASCD cruise signal	T		R			
Wiper operation				R		T
Wiper stop position signal				R		T
Rear window defogger switch signal				T		R
Rear window defogger control signal	R			R		T

FOR A/T MODELS

System Diagram

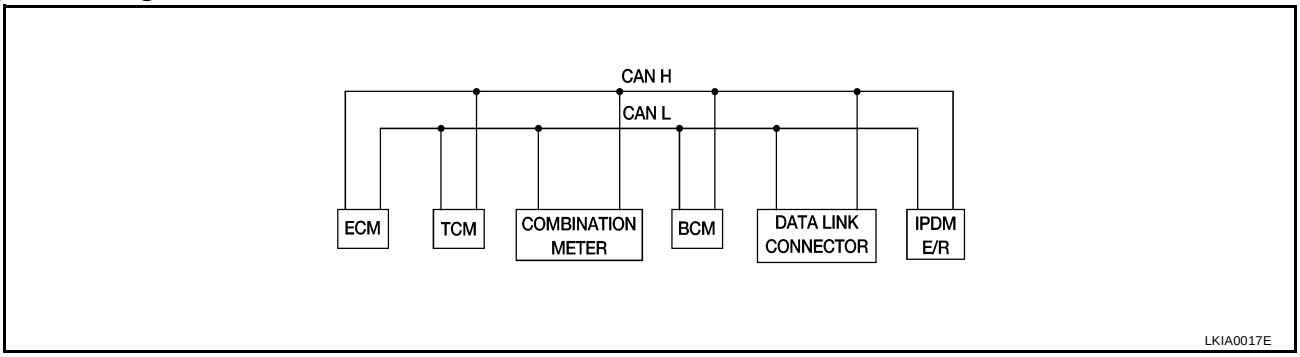

Input/Output Signal Chart

T: Transmit R: Receive

Signals	ECM	TCM	COMBINATION METER	BCM	IPDM E/R
Engine speed signal	T		R		
Engine coolant temperature signal	T		R		
Accelerator pedal position signal	T				R
Fuel consumption monitor signal	T		R		
A/T warning lamp signal		T	R		
A/T position indicator signal	R	T	R	R(R range only)	
Air conditioner switch signal	R			T	
Air conditioner compressor signal	R				T
A/C compressor request signal	T				R
Blower fan switch signal	R(QR25DE)			T	
Cooling fan motor operation signal	R			T	
Cooling fan speed request signal	T				R
Position lights request			R	T	R
Position lights status				R	T
Low beam request				T	R
Low beam status	R			R	T
High beam request			R	T	R
High beam status	R			R	T
Front fog lights request				T	R
Front fog light status				R	T
OD cancel switch signal		R	T		R
Brake switch signal		R	T		
Vehicle speed signal	R		T		
	R		T	R	
Oil pressure switch			R		T
Sleep request1			R	T	
Sleep request2				T	R
N range switch signal		R	T		
P range switch signal		R	T		
Seat belt buckle switch signal			T	R	
Door switch signal			R	T	R

Signals	ECM	TCM	COMBINATION METER	BCM	IPDM E/R
Tail lamp request			R	T	R
Turn indicator signal			R	T	
Buzzer output signal			R	T	
Trunk switch signal			R	T	
ASCD main switch signal	T		R		
ASCD cruise signal	T		R		
Wiper operation				R	T
Wiper stop position signal				R	T
Rear window defogger switch signal				T	R
Rear window defogger control signal	R			R	T

FOR M/T MODELS

System Diagram

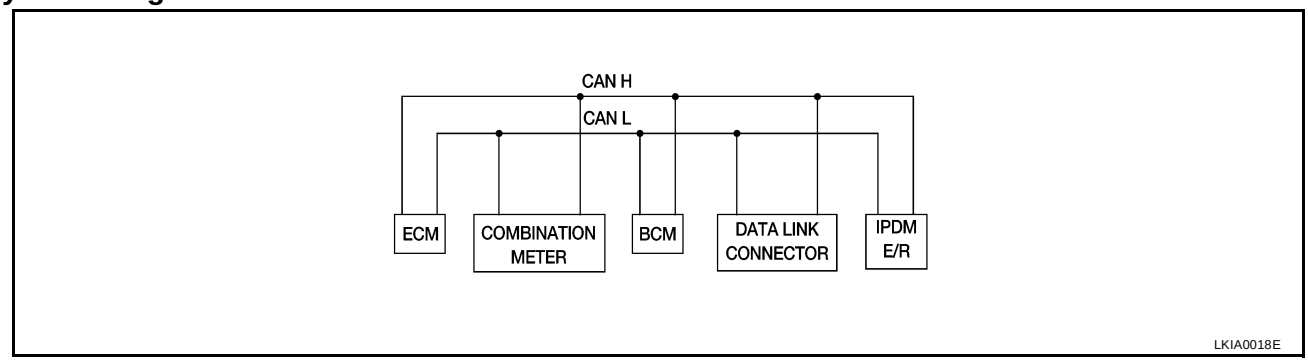

Input/Output Signal Chart

T: Transmit R: Receive

Signals	ECM	COMBINATION METER	BCM	IPDM E/R
Engine speed signal	T			
Engine coolant temperature signal	T			
Fuel consumption monitor signal	T			
Air conditioner switch signal	R		T	
Air conditioner compressor signal	R			T
A/C compressor request signal	T			R
Blower fan switch signal	R(QR25DE)		T	
Cooling fan motor operation signal	R			T
Cooling fan speed request signal	T			R
Position lights request		R	T	R
Position lights status			R	T
Low beam request			T	R
Low beam status	R		R	T
High beam request		R	T	R
High beam status	R		R	T
Front fog lights request			T	R
Front fog light status			R	T
Vehicle speed signal	R	T		
Oil pressure switch		R		T

Signals	ECM	COMBINATION METER	BCM	IPDM E/R
Sleep request1		R	T	
Sleep request2			T	R
Seat belt buckle switch signal		T	R	
Door switch signal		R	T	R
Tail lamp request		R	T	R
Turn indicator signal		R	T	
Buzzer output signal		R	T	
Trunk switch signal		R	T	
ASCD main switch signal	T	R		
ASCD cruise signal	T	R		
Wiper operation			R	T
Wiper stop position signal			R	T
Rear window defogger switch signal			T	R
Rear window defogger control signal	R		R	T

Major Component Parts and Function

EKS002I2

Components	Functions
BCM	It operates the warning chime intermittently by signals from the ignition switch, key detection switch, lighting switch, or front door switch (driver side) or seat belt buckle switch (driver side).
Warning chime	It generates intermittent sounds by signals from the BCM.

Wiring Diagram — CHIME —

EKS002I3

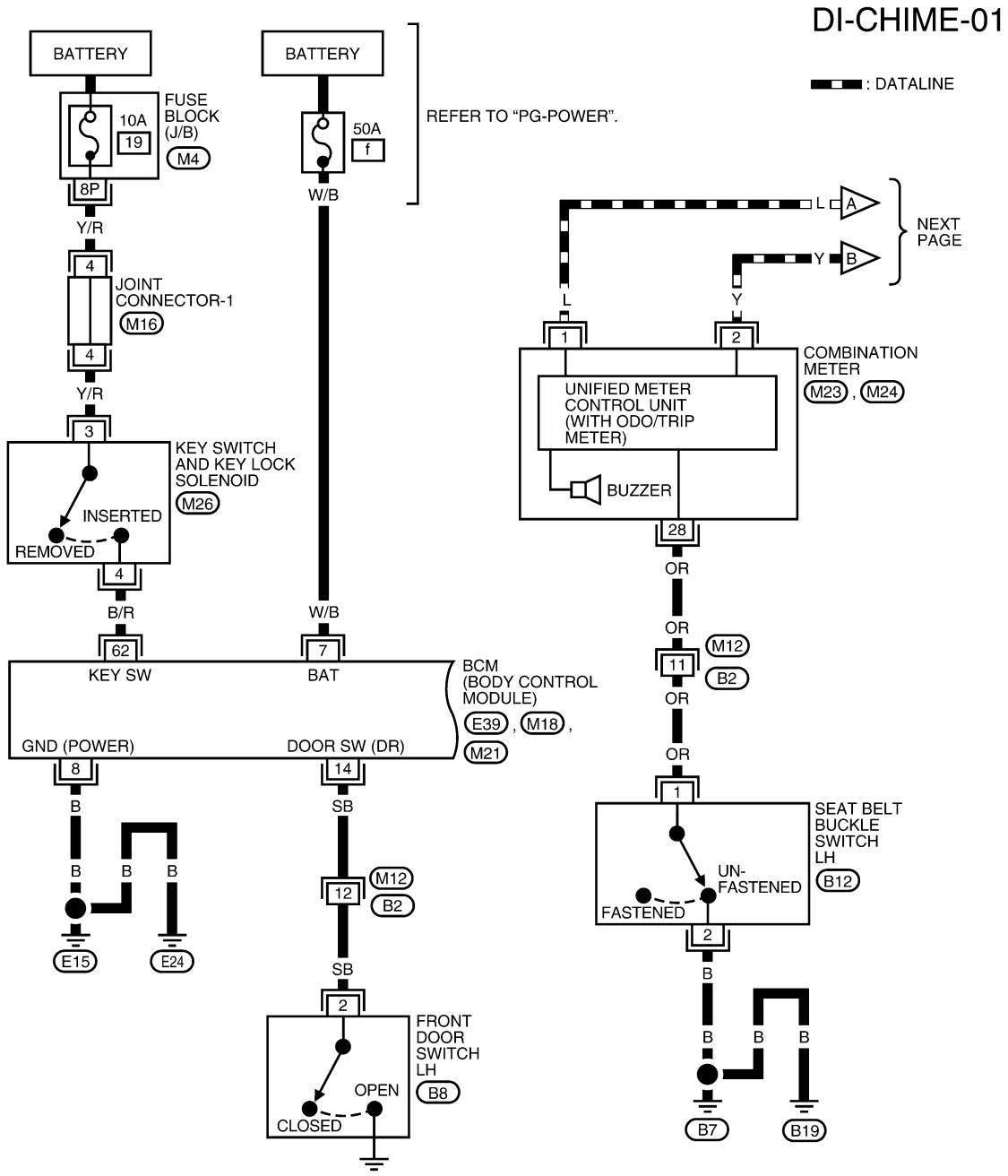

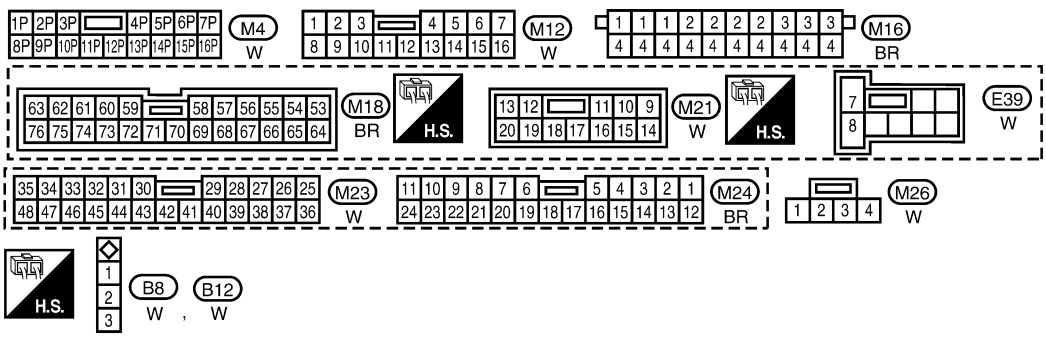

LKWA0059E

DI-CHIME-02

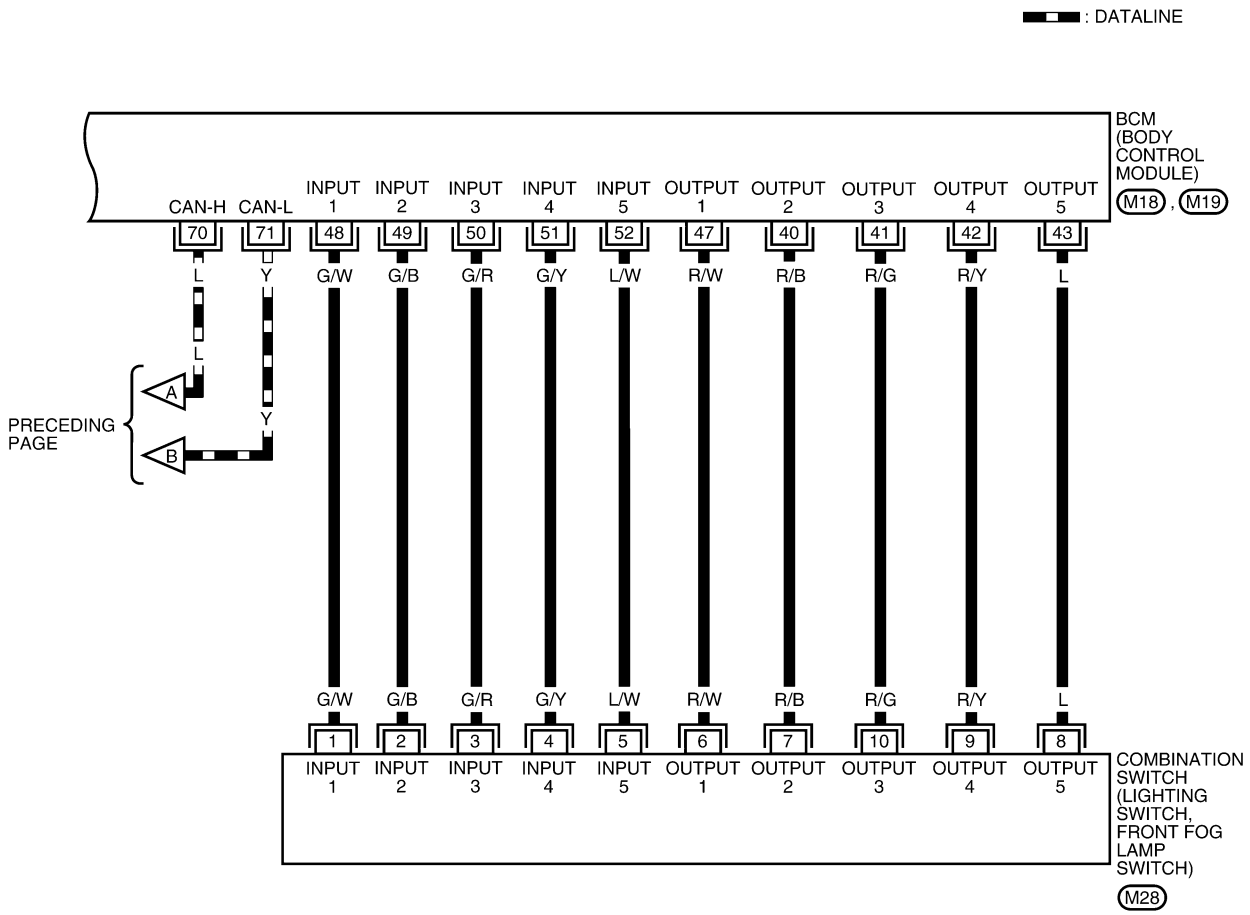

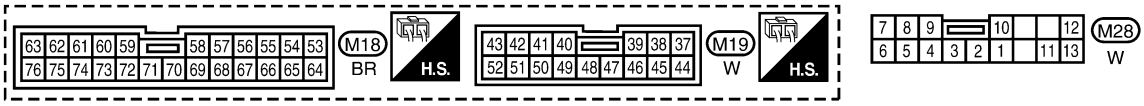

LKWA0060E

Terminals and Reference Value for BCM

EKS002I4

Terminal No.	Wire color	Item	Condition			Voltage (V) (Approx.)
			Ignition switch	Measurement method		
7	W/B	Battery power supply	OFF	—		12V
8	B	Ground	ON	—		0
51	G/Y	Combination switch input 4	ON	Lighting switch and wiper switch are OFF.		5 or more
52	L/W	Combination switch input 5	ON	Lighting switch and wiper switch are OFF.		5 or more
14	SB	Front door switch signal	OFF	Driver door	ON (open)	0
					OFF (closed)	5
42	R/Y	COMB SW OUTPUT 4	ON	—		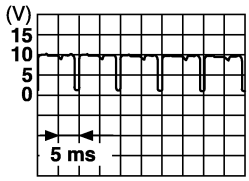 SKIA1119J
43	L	COMB SW OUTPUT 5	ON	—		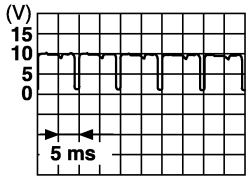 SKIA1119J
62	B/R	Key switch signal	OFF	Key is removed.		0
				Key is inserted.		12V
70	L	CAN H	OFF	—		—
71	Y	CAN L	OFF	—		—

How to Proceed With Trouble Diagnosis

EKS002I5

1. Confirm the trouble symptom or customer complaint.
2. Understand operation description and function description. Refer to DI-43, "System Description" .
3. Carry out the Preliminary Check. Refer to DI-51, "Preliminary Check" .
4. Check symptom and repair or replace the cause of malfunction.
5. Does the warning chime operate normally? Yes: Go to 6. No: Go to 4.
6. INSPECTION END.

Preliminary Check

EKS002I6

INSPECTION FOR POWER SUPPLY AND GROUND CIRCUIT

1. CHECK FUSES

- Check for blown BCM fuses.

UNIT	POWER SOURCE	FUSE No.
BCM	Battery	f

Refer to DI-49, "Wiring Diagram — CHIME —" .

OK or NG

OK >> GO TO 2.

NG >> If fuse is blown, be sure to eliminate cause of problem before installing new fuse. Refer to PG-3, "POWER SUPPLY ROUTING CIRCUIT" .

2. POWER SUPPLY CIRCUIT CHECK

1. Disconnect BCM connector.
2. Check voltage between BCM connector E39 terminal 7 (W/B) and ground.

Terminals			Ignition switch position
(+)		(-)	OFF
Connector	Terminal (Wire color)		
E39	7 (W/B)	Ground	Battery voltage

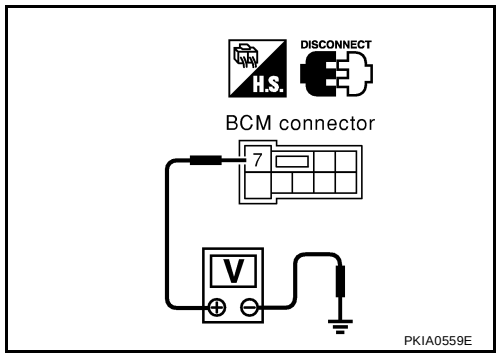

OK or NG

OK >> GO TO 3.
NG >> Check harness for open or short between BCM and fuse.

3. GROUND CIRCUIT CHECK

Check continuity between BCM harness connector E39 terminal 8 and body ground.

Terminals			Continuity
(+)		(–)	
Connector	Terminal		
E39	8	Ground	Yes

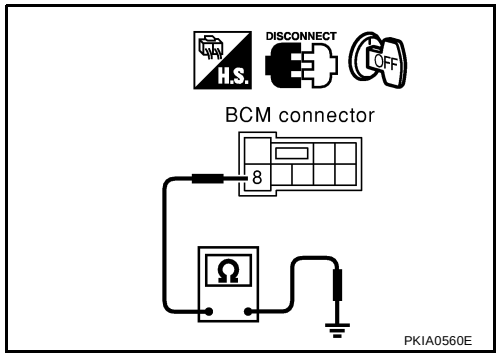

OK or NG

OK >> INSPECTION END.
NG >> Check harness ground circuit.

CONSULT–II Function

EKS002I7

- CONSULT-II executes the following functions by combining data reception and command transmission via the communication line from BCM. IVMS communication inspection, work support, self-diagnosis, data monitor, and active test display.

DIAGNOSTIC ITEMS DESCRIPTION

BCM diagnosis position	Diagnosis mode	Description
KEY WARN ALM	Data monitor	The input data to the BCM control unit is displayed in real time.
	Active test	Operation of electrical loads can be checked by sending driving signal to them.
LIGHT WARN ALM	Data monitor	The input data to the BCM control unit is displayed in real time.
	Active test	Operation of electrical loads can be checked by sending driving signal to them.
SEAT BELT ALM	Data monitor	The input data to the BCM control unit is displayed in real time.
	Active test	Operation of electrical loads can be checked by sending driving signal to them.
BCM	Self-diagnostic	BCM performs self-diagnosis of CAN communication and combination switch.

CONSULT-II BASIC OPERATION PROCEDURE

1. With the ignition switch OFF, connect CONSULT-II to the data link connector, and turn the ignition switch ON.

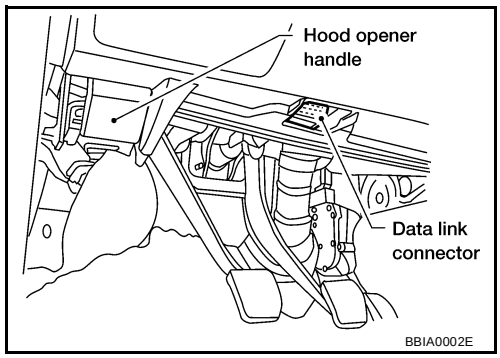

2. Touch “START”.

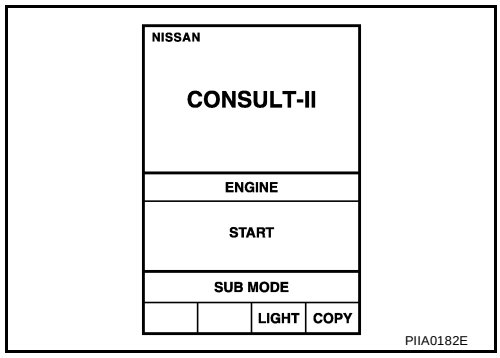

3. Touch “BCM”.

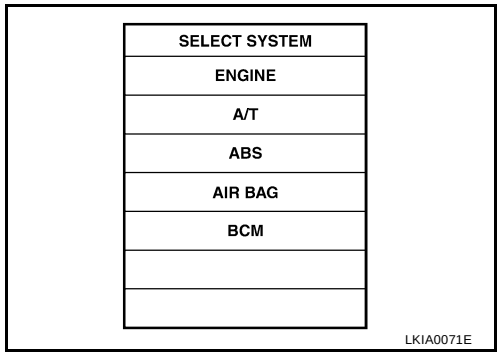

4. Touch “KEY WARN ALM”, “LIGHT WARN ALM”, “SEAT BELT ALM” or “BCM C/U” .
5. Select “DATA MONITOR” “ACTIVE TEST” or “SELF-DIAG RESULTS”.

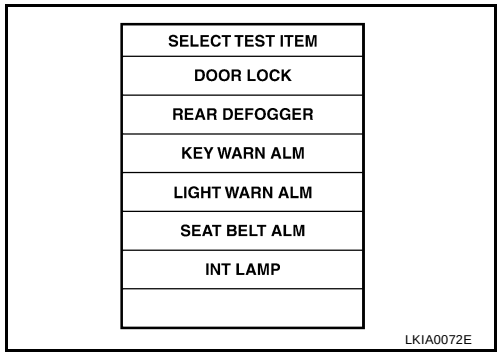

DATA MONITOR

Operation procedure

1. Touch “IGN WARN ALM”, “LIGHT WARN ALM” or “SEAT BELT ALM” on “SELECT TEST ITEM” screen.
2. Touch “DATA MONITOR” on “SELECT DIAG MODE” screen.
3. Touch “ALL SIGNALS” or “SELECTION FROM MENU” on “DATA MONITOR" screen.

ALL SIGNALS	Monitors the main items.
SELECTION FROM MENU	Selects and monitors the items.

4. Touch “START”.

5. If “SELECTION FROM MENU” is selected, touch the desired monitor item. If “ALL SIGNALS” is selected, all items required to control are monitored.
6. During monitoring, touching “RECORD” can start recording the monitored item status.

Data monitor item (Key warning chime)

Monitored item	Description
IGN ON SW	Indicates [ON/OFF] condition of electronic key switch.
KEY ON SW	Indicates [ON/OFF] condition of ignition switch.
DOOR SW-DR	Indicates [ON/OFF] condition of front door switch LH.

Data monitor item (Light warning chime)

Monitored item	Description
IGN ON SW	Indicates [ON/OFF] condition of ignition switch.
DOOR SW-DR	Indicates [ON/OFF] condition of front door switch LH.
TAIL LAMP SW	Indicates [ON/OFF] condition of lighting switch.
FR FOG SW	Indicates [ON/OFF] condition of front fog lamp switch.

Data monitor item (Seat belt warning chime)

Monitored item	Description
IGN ON SW	Indicates [ON/OFF] condition of ignition switch.
SEAT BELT SW	Indicates [ON/OFF] condition of seat belt buckle switch.

ACTIVE TEST

Operation procedure

1. Touch “IGN WARN ALM”, “LIGHT WARN ALM” or “SEAT BELT ALM” on “SELECT TEST ITEM” screen.
2. Touch “ACTIVE TEST” on “SELECT DIAG MODE” screen.
3. Touch the item to be tested, and check the operation.
4. During the operation check, touching “OFF” deactivates the operation.

Active test item (Key warning chime)

Test item	Malfunction detecting condition
CHIME	This test is able to check key warning chime operation. Key warning chime sounds for 2 seconds after touching “ON” on CONSULT-II screen.

Active test item (Light warning chime)

Test item	Malfunction detecting condition
CHIME	This test is able to check light warning chime operation. Light warning chime sounds for 2 seconds after touching “ON” on CONSULT-II screen.

Active test item (Seat belt warning chime)

Test item	Malfunction detecting condition
CHIME	This test is able to check seat belt warning chime operation. Seat belt warning chime sounds for 2 seconds after touching “ON” on CONSULT-II screen.

SELF-DIAGNOSTIC RESULTS

Operation Procedure

1. Touch “BCM C/U” on “DIAGNOSIS ITEM SELECTION” screen.
2. Touch “SELF-DIAG RESULTS” on “SELECT DIAG MODE” screen.
3. Self-diagnostic results are displayed.

Display Item List

Items to be displayed	CONSULT-II display	Description
CAN communication	CAN communication [U1000]	Malfunction is detected in CAN communication.
CAN communication system	CAN communication system 1 to 6 [U1000]	Malfunction is detected in CAN system.
Combination switch	Diagnosis 1 - 5 systems open circuit	Malfunction is detected in combination switch system.

All Warnings Are Not Operated

EKS002I8

1. CHIME OPERATION INSPECTION

Select “KEY WARN ALM”, “LIGHT WARN ALM” or “SEAT BELT ALM” on CONSULT-II, and perform “CHIME” active test.

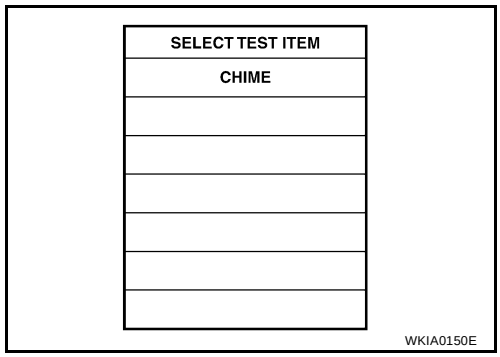

Does chime sound?

OK >> GO TO 4.
NG >> GO TO 2.

2. BCM SELF-DIAGNOSIS

Select BCM on CONSULT-II, and perform “BCM C/U” self-diagnosis.

Self-diagnostic results content

No malfunction detected>> GO TO 3.
CAN communication or CAN communication system>> Check BCM CAN communication system. Go to LAN-4, "CAN COMMUNICATION" .
Diagnosis 1 - 5 systems open circuit>> Malfunction in combination switch system. Go to BCS-16, "Combination Switch Inspection According to Self-Diagnostic Results" according to self-diagnostic results.

3. DATA MONITOR INSPECTION

Select BCM on CONSULT-II. Operate each switch with data monitor of “KEY WARN ALM”, “LIGHT WARN ALM” or “SEAT BELT ALM” and check operation status of applicable switches.

Switch operation	CONSULT-II display	Operation status
Ignition switch (ON)	IGN ON SW	ON
Ignition switch (OFF)		OFF
Ignition switch (key in switch)	KEY ON SW	ON
Ignition switch (key out of switch)		OFF
Driver door (open)	DOOR SW-DR	ON
Driver door (closed)		OFF
Headlamp switch (1st position)	TAIL LAMP SW	ON
Headlamp switch (OFF)		OFF
Fog lamp switch (ON)	FR FOG SW	ON
Fog lamp switch (OFF)		OFF
Seat belt switch (closed)	SEAT BELT SW	ON
Seat belt switch (open)		OFF

OK or NG

OK >> Replace combination meter.
NG >> GO TO 4.

4. CONTINUITY INSPECTION OF DOOR SWITCH CIRCUIT

1. Disconnect BCM connector and driver door switch connector.
2. Check harness continuity (open circuit) between BCM harness connector M21 terminal 14 (SB) and driver door switch harness connector B8 terminal 2 (SB).

   14 - 2 : Continuity should exist.

3. Check continuity (short circuit) between BCM harness connector M21 terminal 14 (SB) and ground.

   14 - Ground : Continuity should not exist.

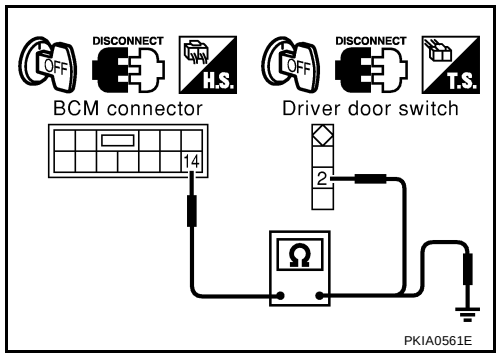

OK or NG

OK >> Replace driver door switch.
NG >> Repair harness or connector.

Key Warning Chime Does Not Operate

EKS002I9

1. CHECK FUSE

Check if the key detection switch fuse is blown. Refer to DI-49, "Wiring Diagram — CHIME —" .

Is the fuse blown?

OK >> Replace fuse. Be sure to repair the cause of the problem before installing new fuse.
NG >> GO TO 2.

2. KEY SWITCH INSPECTION

With “KEY WARN ALM” on the data monitor, insert the key into the ignition cylinder to check ON/OFF operation.

Switch operation	CONSULT-II display	Operation status
Ignition switch (ON)	IGN ON SW	ON
Ignition switch (OFF)		OFF
Ignition switch (key in switch)	KEY ON SW	ON
Ignition switch (key out of switch)		OFF
Driver door (open)	DOOR SW-DR	ON
Driver door (closed)		OFF

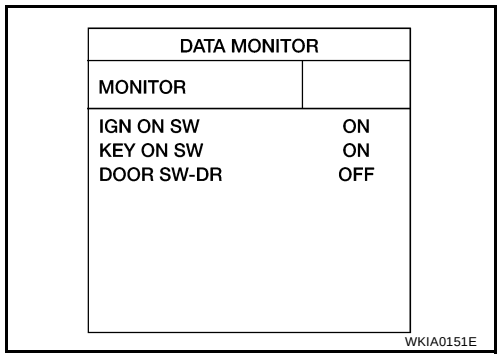

OK or NG

OK >> Replace BCM.
NG >> GO TO 3.

3. IGNITION SWITCH VOLTAGE INSPECTION

1. Remove key from ignition cylinder.
2. Disconnect key switch.
3. Check voltage between key switch harness connector M26 terminal 3 (Y/R) and ground.

3 - Ground : Approx. 12V

OK or NG

OK >> GO TO 4.
NG >> Repair harness or connector.

4. HARNESS CONTINUITY INSPECTION

1. Disconnect BCM connector.
2. Check harness continuity (open circuit) between BCM harness connector M18 terminal 62 (B/R) and key switch harness connector M26 terminal 4 (B/R).

62 - 4 : Continuity should exist.

3. Check harness continuity (short circuit) between BCM harness connector M18 terminal 62 (B/R) and ground.

62 - Ground : Continuity should not exist.

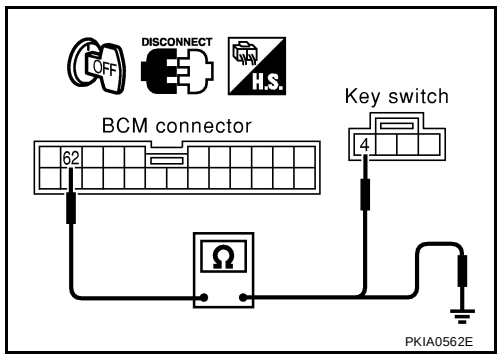

OK or NG

OK >> Replace key switch.
NG >> Repair harness or connector.

Light Warning Chime Does Not Operate

EKS002IA

1. DATA MONITOR INSPECTION

With "LIGHT WARN ALM" on the data monitor, confirm “TAIL LAMP SW” and “FR FOG SW” turn ON/OFF when lighting switch and front fog switch are operated.

Switch operation	CONSULT-II display	Operation status
Headlamp switch (1st position)	TAIL LAMP SW	ON
Headlamp switch (OFF)		OFF
Fog lamp switch (ON)	FR FOG SW	ON
Fog lamp switch (OFF)		OFF

DATA MONITOR	
MONITOR	
IGN ON SW	ON
DOOR SW-DR	OFF
TAIL LAMP SW	OFF
FR FOG SW	OFF

WKIA0152E

OK or NG

OK >> GO TO 2.
NG >> Replace lighting switch.

2. INSPECTION BETWEEN COMBINATION SWITCH AND BCM

Select BCM on CONSULT-II, and perform “BCM C/U” self-diagnosis.

Self-diagnostic results content

No malfunction detected>> Replace BCM.
CAN communication or CAN communication system>> Check BCM CAN communication system. Go to LAN-4, "CAN COMMUNICATION" .
Diagnosis 1 - 5 systems open circuit>> Malfunction in combination switch system. Go to BCS-16, "Combination Switch Inspection According to Self-Diagnostic Results" according to self-diagnostic results.

Seat Warning Chime Does Not Operate

EKS002IB

1. DATA MONITOR INSPECTION

With "SEAT BELT ALM" on the data monitor, confirm “SEAT BELT SW” when the seat belt buckle switch is operated.

Switch operation	CONSULT-II display	Operation status
Seat belt switch (closed)	SEAT BELT SW	ON
Seat belt switch (open)		OFF

DATA MONITOR	
MONITOR	
IGN ON SW	ON
SEAT BELT SW	OFF

WKIA0153E

OK or NG

OK >> GO TO 2.
NG >> Replace seat belt buckle switch.

2. INSPECTION BETWEEN COMBINATION SWITCH AND BCM

Select BCM on CONSULT-II, and perform “BCM C/U” self-diagnosis.

Self-diagnostic results content

No malfunction detected>> Replace BCM.
CAN communication or CAN communication system>> Check BCM CAN communication system. Go to LAN-4, "CAN COMMUNICATION" .
Diagnosis 1 - 5 systems open circuit>> Malfunction in combination switch system. Go to BCS-16, "Combination Switch Inspection According to Self-Diagnostic Results" according to self-diagnostic results.

BOARD COMPUTER

PFP:24810

System Description

EKS002IC

FUNCTION

The board computer can indicate the following items.

- Outside air temperature
- DTE (distance to empty)
- Trip distance
- Trip time
- Average fuel consumption
- Average vehicle speed

OUTSIDE AIR TEMPERATURE INDICATION

The outside air temperature indication is displayed while the ignition switch is in the ON position.
Signal is supplied

- through ambient sensor terminal 1
- to combination meter (board computer) terminal 13.

Indication range is between -30 and 55°C (-22 and 131°F). When outside temperature is less than -30°C (-22°F), display shows ICY. When outside temperature is more than 55°C (131°F), indication will be blank. When outside temperature is less than 3°C (37°F) continuously, display will blink as a warning. In this case, the display will change to the outside air temperature mode even though the display is showing a different mode. The indicated temperature is not affected by engine heat. It changes only when one of the following conditions exists.

- When vehicle speed is more than 20 km/h (12 MPH).
- The ignition switch has been turned OFF for more than 3.5 hours.
- When outside air temperature is less than the indicated temperature.

DTE (DISTANCE TO EMPTY) INDICATION

The range indication provides the driver with an estimation of the distance that can be driven before refueling. The range is calculated by signals from the fuel level sensor unit (fuel remaining), ECM (fuel consumption) and vehicle speed sensor. The indication will be refreshed every 30 seconds. When fuel remaining is less than approximately 10 ℓ (10 5/8 US quarts, 8 3/4 Imp quarts), the indication will blink as a warning. If the fuel remaining is less than approximately 8 ℓ (8 1/2 US quarts, 7 Imp quarts), the indication will show "---". In this case, the display will change to the DTE mode even though the display is showing a different mode. When the battery is disconnected and reconnected, DTE mode will display "---" until the vehicle is driven 500 miles (804.5 km).

TRIP DISTANCE

Trip distance is calculated by signal from the vehicle speed sensor. If trip distance is reset, trip time will be reset at the same time.

TRIP TIME

Trip time displays accumulate ignition switch ON time. If trip time is reset, trip distance will be reset at the same time.

AVERAGE FUEL CONSUMPTION

Average fuel consumption indication is calculated by signals from the vehicle speed sensor and the ECM (fuel consumption). The indication will be refreshed every 30 seconds.

AVERAGE VEHICLE SPEED

Average vehicle speed indication is calculated by running distance and running time. The indication will be refreshed every 30 seconds. If average vehicle speed is reset, average fuel consumption will be reset at the same time. After resetting, the display will show "---" for 30 seconds.

HOW TO CHANGE/RESET INDICATION

Indication can be changed in the following order by momentarily depressing the board computer switch or the board computer steering switch.
Outside air temperature → DTE → Trip distance → Trip time → Average fuel consumption → Average vehicle speed.

Holding the switch for more than 0.8 second will reset the indication of the currently displayed mode (trip distance, trip time, average vehicle speed or average fuel consumption).

NOTE:
After the display changes automatically, the indication can be changed to the last mode by pushing the board computer switch or the board computer steering switch.

CAN Communication System Description

EKS002ID

CAN (Controller Area Network) is a serial communication line for real time application. It is an on-vehicle multiplex communication line with high data communication speed and excellent error detection ability. Many electronic control units are equipped onto a vehicle, and each control unit shares information and links with other control units during operation (not independent). In CAN communication, control units are connected with 2 communication lines (CAN H line, CAN L line) allowing a high rate of information transmission with less wiring. Each control unit transmits/receives data but selectively reads required data only.

FOR TCS MODELS

System Diagram

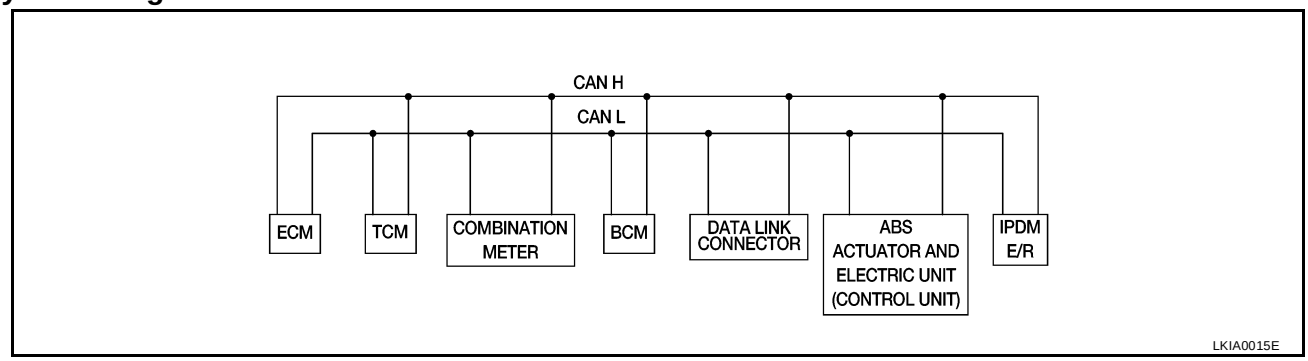

Input/Output Signal Chart

T: Transmit R: Receive

Signals	ECM	TCM	COMBINATION METER	BCM	ABS/TCS control unit	IPDM E/R
Engine speed signal	T		R		R	
Engine coolant temperature signal	T		R			
Accelerator pedal position signal	T					
Fuel consumption monitor signal	T		R			
A/T warning lamp signal			R			
A/T position indicator signal	R	T	R	R(R range only)	R	
ABS operation signal	R				T	
TCS operation signal	R	R			T	
Air conditioner switch signal	R			T		
Air conditioner compressor signal	R					T
A/C compressor request signal	T					R
Cooling fan motor operation signal	R					T
Cooling fan speed request signal	T					R
Position lights request			R	T		R
Position lights status				R		T
Low beam request				T		R
Low beam status	R			R		T
High beam request			R	T		R
High beam status	R			R		T
Front fog lights request				T		R

Signals	ECM	TCM	COMBINATION METER	BCM	ABS/TCS control unit	IPDM E/R
Front fog light status				R		T
OD cancel switch signal		R	T			R
Brake switch signal		R	T			
Vehicle speed signal	R		T			
	R		T	R		
Oil pressure switch			R			T
Sleep request1			R	T		
Sleep request2				T		R
N range switch signal		R	T			
P range switch signal		R	T			
Seat belt buckle switch signal			T	R		
Door switch signal			R	T		R
Tail lamp request			R	T		R
Turn indicator signal			R	T		
Buzzer output signal			R	T		
Trunk switch signal			R	T		
ASCD main switch signal	T		R			
ASCD cruise signal	T		R			
Wiper operation				R		T
Wiper stop position signal				R		T
Rear window defogger switch signal				T		R
Rear window defogger control signal	R			R		T

FOR A/T MODELS

System Diagram

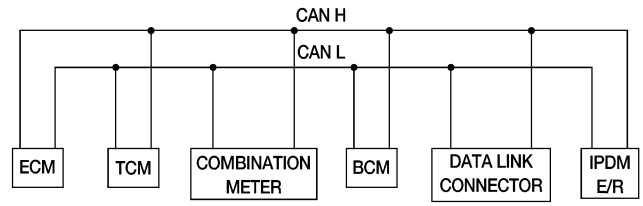

LKIA0017E

Input/Output Signal Chart

T: Transmit R: Receive

Signals	ECM	TCM	COMBINATION METER	BCM	IPDM E/R
Engine speed signal	T		R		
Engine coolant temperature signal	T		R		
Accelerator pedal position signal	T				R
Fuel consumption monitor signal	T		R		
A/T warning lamp signal		T	R		
A/T position indicator signal	R	T	R	R(R range only)	

Signals	ECM	TCM	COMBINATION METER	BCM	IPDM E/R
Air conditioner switch signal	R			T	
Air conditioner compressor signal	R				T
A/C compressor request signal	T				R
Blower fan switch signal	R(QR25DE)			T	
Cooling fan motor operation signal	R			T	
Cooling fan speed request signal	T				R
Position lights request			R	T	R
Position lights status				R	T
Low beam request				T	R
Low beam status	R			R	T
High beam request			R	T	R
High beam status	R			R	T
Front fog lights request				T	R
Front fog light status				R	T
OD cancel switch signal		R	T		R
Brake switch signal		R	T		
Vehicle speed signal	R		T		
	R		T	R	
Oil pressure switch			R		T
Sleep request1			R	T	
Sleep request2				T	R
N range switch signal		R	T		
P range switch signal		R	T		
Seat belt buckle switch signal			T	R	
Door switch signal			R	T	R
Tail lamp request			R	T	R
Turn indicator signal			R	T	
Buzzer output signal			R	T	
Trunk switch signal			R	T	
ASCD main switch signal	T		R		
ASCD cruise signal	T		R		
Wiper operation				R	T
Wiper stop position signal				R	T
Rear window defogger switch signal				T	R
Rear window defogger control signal	R			R	T

FOR M/T MODELS

System Diagram

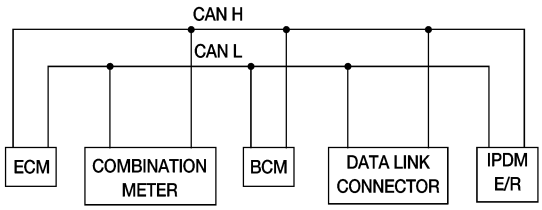

LKIA0018E

Input/Output Signal Chart

T: Transmit R: Receive

Signals	ECM	COMBINATION METER	BCM	IPDM E/R
Engine speed signal	T			
Engine coolant temperature signal	T			
Fuel consumption monitor signal	T			
Air conditioner switch signal	R		T	
Air conditioner compressor signal	R			T
A/C compressor request signal	T			R
Blower fan switch signal	R(QR25DE)		T	
Cooling fan motor operation signal	R			T
Cooling fan speed request signal	T			R
Position lights request		R	T	R
Position lights status			R	T
Low beam request			T	R
Low beam status	R		R	T
High beam request		R	T	R
High beam status	R		R	T
Front fog lights request			T	R
Front fog light status			R	T
Vehicle speed signal	R	T		
Oil pressure switch		R		T
Sleep request1		R	T	
Sleep request2			T	R
Seat belt buckle switch signal		T	R	
Door switch signal		R	T	R
Tail lamp request		R	T	R
Turn indicator signal		R	T	
Buzzer output signal		R	T	
Trunk switch signal		R	T	
ASCD main switch signal	T	R		
ASCD cruise signal	T	R		
Wiper operation			R	T
Wiper stop position signal			R	T

Signals	ECM	COMBINATION METER	BCM	IPDM E/R
Rear window defogger switch signal			T	R
Rear window defogger control signal	R		R	T

Wiring Diagram — B/COMP —

EKS002IE

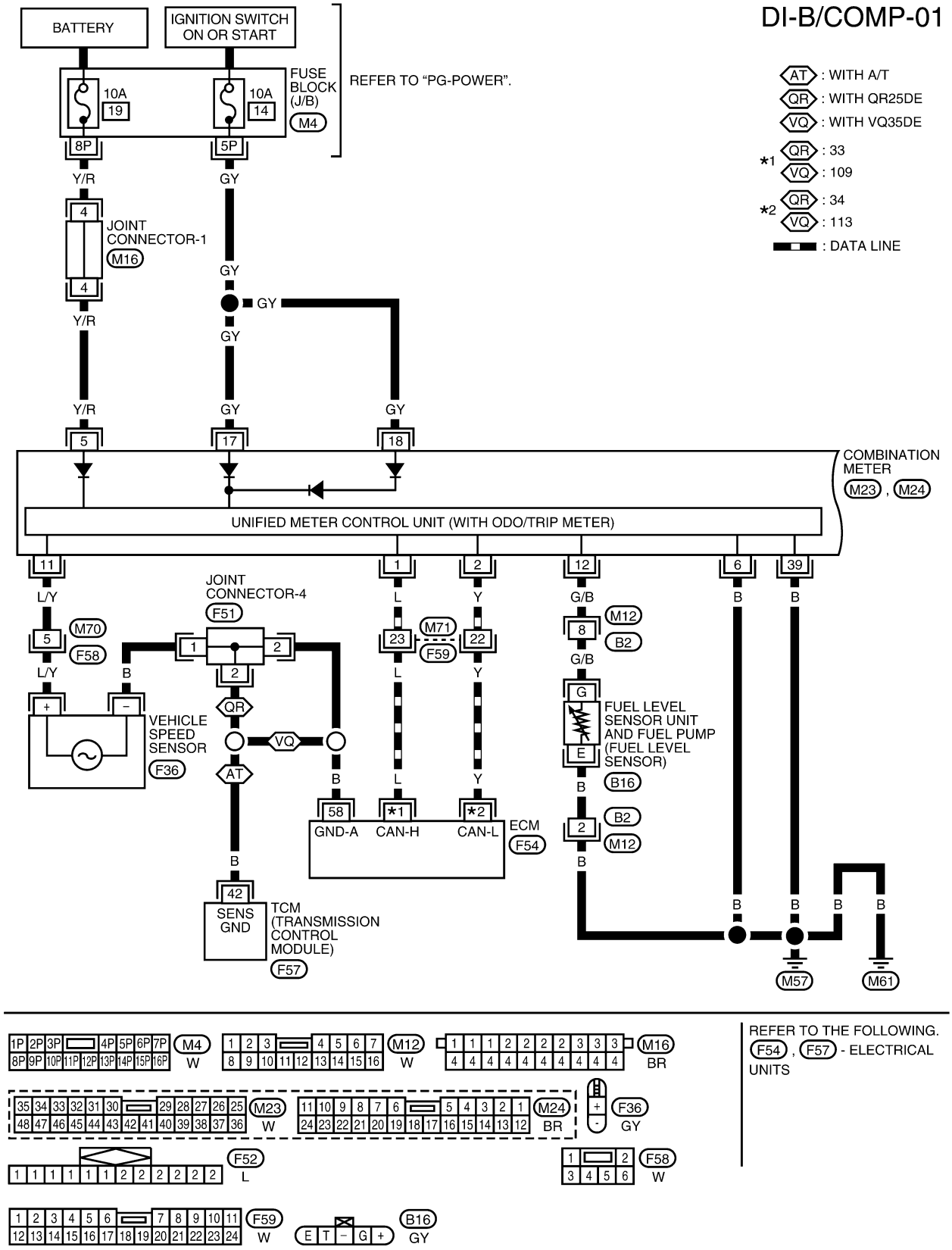

DI-B/COMP-02

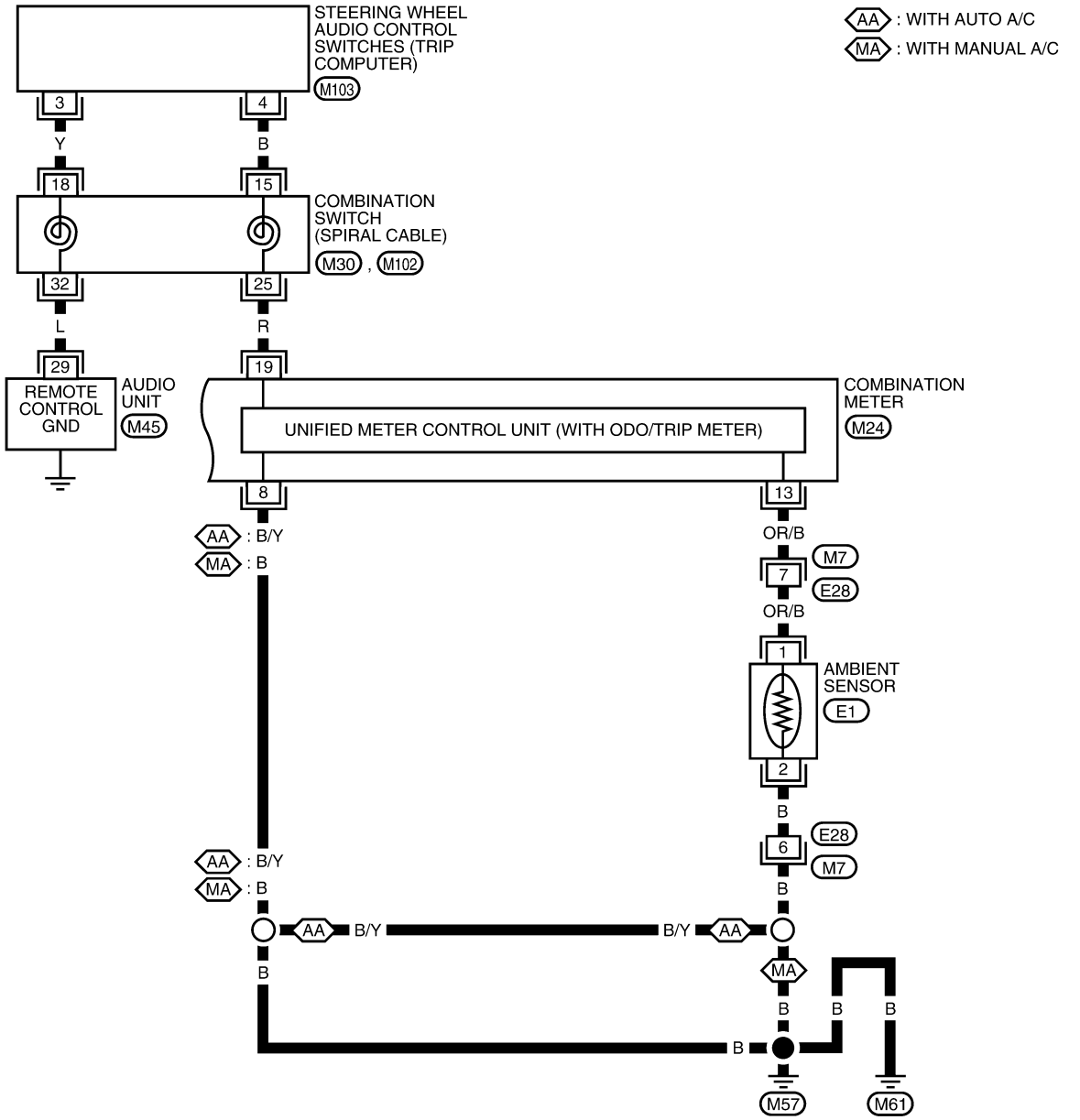

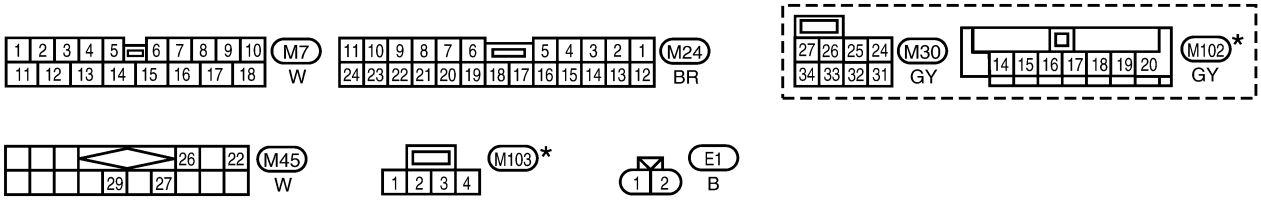

* This connector is not shown in "HARNESS LAYOUT" of PG section.

LKWA0074E

Trouble Diagnoses

EKS002IF

SEGMENT CHECK

The board computer segment display can be checked by entering combination meter self-diagnostic mode. Refer to DI-13, "SELF–DIAGNOSIS FUNCTION" .

PRELIMINARY CHECK

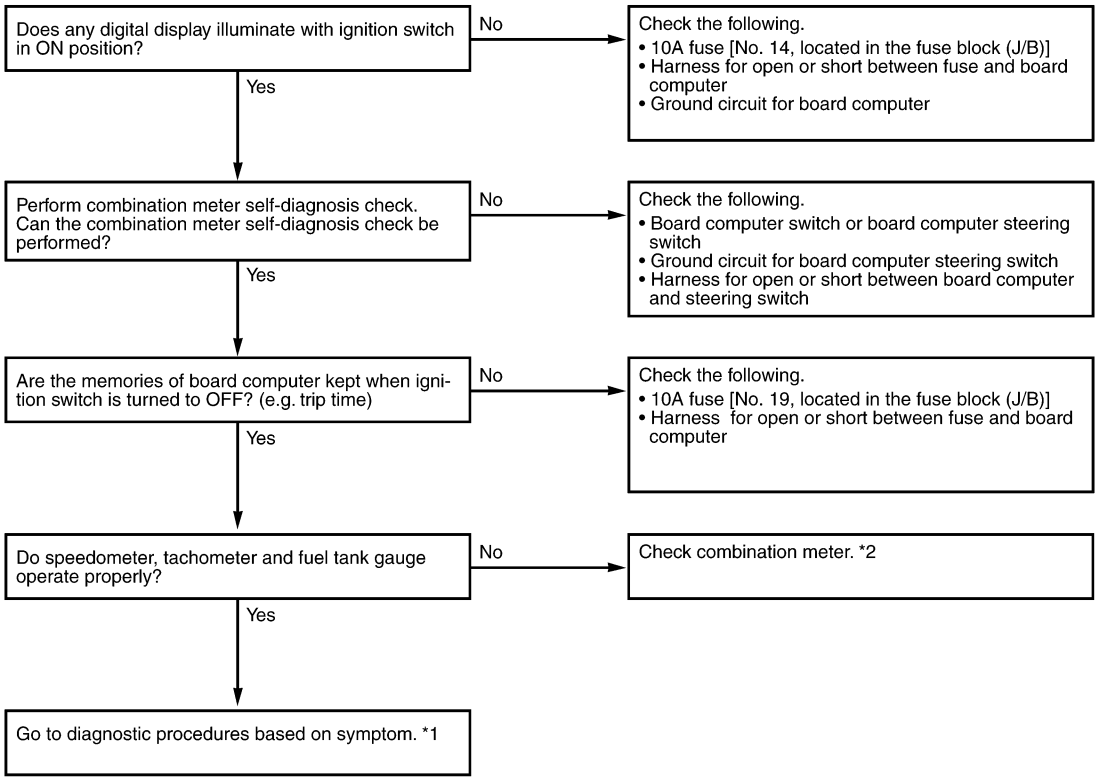

LKIA0061E

*1 DI-67, "DIAGNOSIS PROCEDURE" *2 DI-10, "CHECK"

DIAGNOSIS PROCEDURE

Symptom	Possible cause	Repair order
Outside air temperature display is not displayed properly. (It may take a short time to steady the indication after ignition switch is turned ON.) **NOTE:** If the meter is powered up with the ambient sensor disconnected, outside air temperature display will show "---" even if the sensor is reconnected. In this case, with the sensor connected, disconnect and reconnect the battery, then the correct temperature will be displayed.	1. Ambient sensor 2. Ambient sensor circuit 3. Vehicle speed sensor signal	1. Check ambient sensor. 2. Check harness for open or short between ambient sensor and board computer. 3. Check harness for open or short between combination meter terminal 11 and vehicle speed sensor.
DTE (distance to empty) is not displayed properly.)	1. Average fuel consumption display 2. Fuel tank gauge signal circuit.	1. Make sure fuel consumption is displayed properly. If NG, check fuel consumption display. 2. Make sure fuel gauge operates properly. If NG, check fuel gauge.
Trip distance is not indicated properly.	1. Vehicle speed sensor signal circuit	1. Check harness for open or short between combination meter terminal 11 and vehicle speed sensor.

Symptom	Possible cause	Repair order
Trip time is not indicated properly.	1. Fuse	1. 10A fuse [No. 19 (located in fuse block (J/B)]. Verify battery voltage is present at combination meter terminal 5.
Average fuel consumption is not displayed properly.	1. Trip distance display 2. Fuel consumption signal	1. Check harness for open or short between combination meter terminal 11 and vehicle speed sensor. 2. Check CAN lines for open or short between ECM and combination meter.
Average vehicle speed is not indicated properly.	1. Trip distance display 2. Trip time display	1. Check harness for open or short between combination meter terminal 11 and vehicle speed sensor. 2. Make sure trip time is displayed properly. If NG, check trip time display.

Electrical Components Inspection

EKS002IG

AMBIENT SENSOR

After disconnecting ambient sensor harness connector, measure resistance between terminals 2 and 1 at sensor harness side, using the table below.

Temperature °C (°F)	Resistance kΩ
-15 (5)	12.73
-10 (14)	9.92
-5 (23)	7.80
0 (32)	6.19
5 (41)	4.95
10 (50)	3.99
15 (59)	3.24
20 (68)	2.65
25 (77)	2.19
30 (86)	1.81
35 (95)	1.51
40 (104)	1.27
45 (113)	1.07

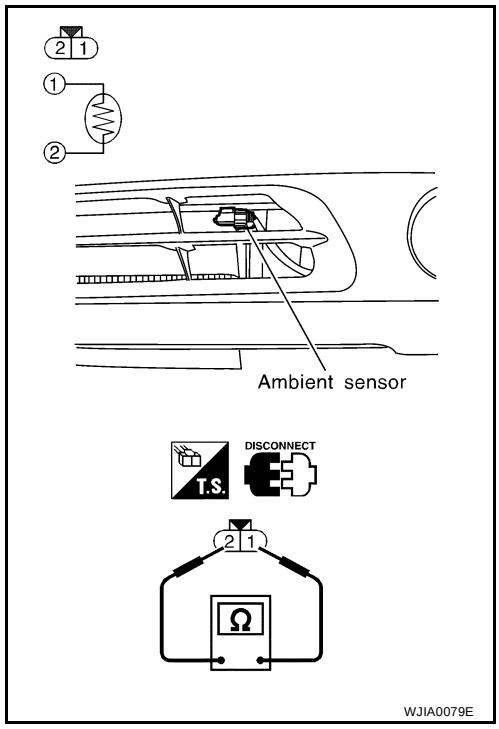

If NG, replace ambient sensor.

SECTION EC
ENGINE CONTROL SYSTEM

CONTENTS

QR

INDEX FOR DTC 15
Alphabetical Index 15
DTC No. Index 18
PRECAUTIONS 22
Precautions for Supplemental Restraint System (SRS) “AIR BAG” and “SEAT BELT PRE-TENSIONER” 22
On Board Diagnostic (OBD) System of Engine and A/T 22
Precaution 22
Wiring Diagrams and Trouble Diagnosis 25
PREPARATION 26
Special Service Tools 26
Commercial Service Tools 26
ENGINE CONTROL SYSTEM 28
System Diagram 28
Vacuum Hose Drawing 29
System Chart 30
Multiport Fuel Injection (MFI) System 31
Electronic Ignition (EI) System 33
Air Conditioning Cut Control 34
Fuel Cut Control (at No Load and High Engine Speed) 34
CAN communication 34
BASIC SERVICE PROCEDURE 38
Idle Speed and Ignition Timing Check 38
Idle Speed/Ignition Timing/Idle Mixture Ratio Adjustment 39
Accelerator Pedal Released Position Learning 49
Throttle Valve Closed Position Learning 49
Idle Air Volume Learning 49
Fuel Pressure Check 51
ON BOARD DIAGNOSTIC (OBD) SYSTEM 54
Introduction 54
Two Trip Detection Logic 54
Emission-related Diagnostic Information 55
VIS (Nissan Vehicle Immobilizer System — NATS) 68
Malfunction Indicator Lamp (MIL) 69
OBD System Operation Chart 72
TROUBLE DIAGNOSIS 77
Trouble Diagnosis Introduction 77
DTC Inspection Priority Chart 81
Fail-safe Chart 82
Basic Inspection 84
Symptom Matrix Chart 89
Engine Control Component Parts Location 93
Circuit Diagram 97
ECM Harness Connector Terminal Layout 99
ECM Terminals and Reference Value 99
CONSULT-II Function 106
Generic Scan Tool (GST) Function 119
CONSULT-II Reference Value in Data Monitor 120
Major Sensor Reference Graph in Data Monitor Mode 123
TROUBLE DIAGNOSIS - SPECIFICATION VALUE 126
Description 126
Testing Condition 126
Inspection Procedure 126
Diagnostic Procedure 127
TROUBLE DIAGNOSIS FOR INTERMITTENT INCIDENT 130
Description 130
Diagnostic Procedure 130
POWER SUPPLY CIRCUIT FOR ECM 131
Wiring Diagram 131
Diagnostic Procedure 134
DTC U1000, U1001 CAN COMMUNICATION LINE 138
Description 138
On Board Diagnosis Logic 138
DTC Confirmation Procedure 138
Wiring Diagram 139
Diagnostic Procedure 140
DTC P0011 IVT CONTROL 141
Description 141
CONSULT-II Reference Value in Data Monitor Mode 141
On Board Diagnosis Logic 142
DTC Confirmation Procedure 142
Diagnostic Procedure 142

DTC P0031, P0032 HO2S1 HEATER 144
Description 144
CONSULT-II Reference Value in Data Monitor Mode . 144
On Board Diagnosis Logic 144
DTC Confirmation Procedure 144
Wiring Diagram 146
Diagnostic Procedure 147
Component Inspection 148
Removal and Installation 148
DTC P0037, P0038 HO2S2 HEATER 149
Description 149
CONSULT-II Reference Value in Data Monitor Mode . 149
On Board Diagnosis Logic 149
DTC Confirmation Procedure 149
Wiring Diagram 151
Diagnostic Procedure 152
Component Inspection 153
Removal and Installation 153
DTC P0101 MAF SENSOR 154
Component Description 154
CONSULT-II Reference Value in Data Monitor Mode . 154
On Board Diagnosis Logic 154
DTC Confirmation Procedure 154
Overall Function Check 156
Wiring Diagram 157
Diagnostic Procedure 158
Component Inspection 160
Removal and Installation 160
DTC P0102, P0103 MAF SENSOR 161
Component Description 161
CONSULT-II Reference Value in Data Monitor Mode . 161
On Board Diagnosis Logic 161
DTC Confirmation Procedure 161
Wiring Diagram 163
Diagnostic Procedure 164
Component Inspection 166
Removal and Installation 166
DTC P0112, P0113 IAT SENSOR 167
Component Description 167
On Board Diagnosis Logic 167
DTC Confirmation Procedure 167
Wiring Diagram 169
Diagnostic Procedure 170
Component Inspection 171
Removal and Installation 171
DTC P0117, P0118 ECT SENSOR 172
Component Description 172
On Board Diagnosis Logic 172
DTC Confirmation Procedure 173
Wiring Diagram 174
Diagnostic Procedure 175
Component Inspection 176
Removal and Installation 176
DTC P0125 ECT SENSOR 177
Description 177
On Board Diagnosis Logic 177
DTC Confirmation Procedure 177
Diagnostic Procedure 178
Component Inspection 178
Removal and Installation 179
DTC P0127 IAT SENSOR 180
Component Description 180
On Board Diagnosis Logic 180
DTC Confirmation Procedure 180
Diagnostic Procedure 181
Component Inspection 181
Removal and Installation 182
DTC P0128 THERMOSTAT FUNCTION 183
On Board Diagnosis Logic 183
DTC Confirmation Procedure 183
Diagnostic Procedure 183
Component Inspection 184
Removal and Installation 184
DTC P0132 HO2S1 185
Component Description 185
CONSULT-II Reference Value in Data Monitor Mode . 185
On Board Diagnosis Logic 185
DTC Confirmation Procedure 186
Wiring Diagram 187
Diagnostic Procedure 188
Component Inspection 189
Removal and Installation 190
DTC P0133 HO2S1 191
Component Description 191
CONSULT-II Reference Value in Data Monitor Mode . 191
On Board Diagnosis Logic 191
DTC Confirmation Procedure 192
Overall Function Check 193
Wiring Diagram 194
Diagnostic Procedure 195
Component Inspection 197
Removal and Installation 199
DTC P0134 HO2S1 200
Component Description 200
CONSULT-II Reference Value in Data Monitor Mode . 200
On Board Diagnosis Logic 200
DTC Confirmation Procedure 201
Overall Function Check 201
Wiring Diagram 203
Diagnostic Procedure 204
Component Inspection 205
Removal and Installation 206
DTC P0138 HO2S2 207
Component Description 207
CONSULT-II Reference Value in Data Monitor Mode . 207
On Board Diagnosis Logic 207
DTC Confirmation Procedure 207
Overall Function Check 208
Wiring Diagram 209
Diagnostic Procedure 210

Component Inspection 211
Removal and Installation 212
DTC P0139 HO2S2 213
Component Description 213
CONSULT-II Reference Value in Data Monitor Mode . 213
On Board Diagnosis Logic 213
DTC Confirmation Procedure 213
Overall Function Check 214
Wiring Diagram 215
Diagnostic Procedure 216
Component Inspection 218
Removal and Installation 219
DTC P0171 FUEL INJECTION SYSTEM FUNCTION 220
On Board Diagnosis Logic 220
DTC Confirmation Procedure 220
Wiring Diagram 222
Diagnostic Procedure 223
DTC P0172 FUEL INJECTION SYSTEM FUNCTION 226
On Board Diagnosis Logic 226
DTC Confirmation Procedure 226
Wiring Diagram 228
Diagnostic Procedure 229
DTC P0181 FTT SENSOR 232
Component Description 232
On Board Diagnosis Logic 232
DTC Confirmation Procedure 232
Diagnostic Procedure 233
Component Inspection 233
Removal and Installation 233
DTC P0182, P0183 FTT SENSOR 234
Component Description 234
On Board Diagnosis Logic 234
DTC Confirmation Procedure 234
Wiring Diagram 235
Diagnostic Procedure 236
Component Inspection 237
Removal and Installation 237
DTC P0217 COOLANT OVERTEMPERATURE ENRICHMENT PROTECTION 238
System Description 238
CONSULT-II Reference Value in Data Monitor Mode . 238
On Board Diagnosis Logic 239
Overall Function Check 239
Wiring Diagram 242
Diagnostic Procedure 243
Main 12 Causes of Overheating 248
Component Inspection 249
DTC P0221 TP SENSOR 250
Component Description 250
CONSULT-II Reference Value in Data Monitor Mode . 250
On Board Diagnosis Logic 250
DTC Confirmation Procedure 250
Wiring Diagram 252
Diagnostic Procedure 253
Component Inspection 255
Remove and Installation 256
DTC P0222, P0223 TP SENSOR 257
Component Description 257
CONSULT-II Reference Value in Data Monitor Mode . 257
On Board Diagnosis Logic 257
DTC Confirmation Procedure 257
Wiring Diagram 259
Diagnostic Procedure 260
Component Inspection 262
Remove and Installation 262
DTC P0226 APP SENSOR 263
Component Description 263
CONSULT-II Reference Value in Data Monitor Mode . 263
On Board Diagnosis Logic 263
DTC Confirmation Procedure 263
Wiring Diagram 265
Diagnostic Procedure 266
Component Inspection 268
Remove and Installation 268
DTC P0227, P0228 APP SENSOR 269
Component Description 269
CONSULT-II Reference Value in Data Monitor Mode . 269
On Board Diagnosis Logic 269
DTC Confirmation Procedure 269
Wiring Diagram 271
Diagnostic Procedure 272
Component Inspection 274
Removal and Installation 274
DTC P0300 - P0304 MULTIPLE CYLINDER MISFIRE, NO. 1 - 4 CYLINDER MISFIRE 275
On Board Diagnosis Logic 275
DTC Confirmation Procedure 275
Diagnostic Procedure 276
DTC P0327, P0328 KS 280
Component Description 280
On Board Diagnosis Logic 280
DTC Confirmation Procedure 280
Wiring Diagram 281
Diagnostic Procedure 282
Component Inspection 283
Removal and Installation 283
DTC P0335 CKP SENSOR (POS) 284
Component Description 284
CONSULT-II Reference Value in Data Monitor Mode . 284
On Board Diagnosis Logic 284
DTC Confirmation Procedure 284
Wiring Diagram 286
Diagnostic Procedure 287
Component Inspection 289
Removal and Installation 290
DTC P0340 CMP SENSOR (PHASE) 291
Component Description 291
On Board Diagnosis Logic 291
DTC Confirmation Procedure 291
Wiring Diagram 292
Diagnostic Procedure 293

Component Inspection 295
Removal and Installation 296
DTC P0420 THREE WAY CATALYST FUNCTION . 297
On Board Diagnosis Logic 297
DTC Confirmation Procedure 297
Overall Function Check 298
Diagnostic Procedure 299
DTC P0441 EVAP CONTROL SYSTEM 301
System Description 301
On Board Diagnosis Logic 301
DTC Confirmation Procedure 301
Overall Function Check 302
Diagnostic Procedure 303
DTC P0442 EVAP CONTROL SYSTEM 307
On Board Diagnosis Logic 307
DTC Confirmation Procedure 308
Diagnostic Procedure 309
Component Inspection 314
DTC P0444, P0445 EVAP CANISTER PURGE VOLUME CONTROL SOLENOID VALVE 315
Description 315
CONSULT-II Reference Value in Data Monitor Mode . 315
On Board Diagnosis Logic 316
DTC Confirmation Procedure 316
Wiring Diagram 317
Diagnostic Procedure 318
Component Inspection 320
Removal and Installation 320
DTC P0447 EVAP CANISTER VENT CONTROL VALVE 321
Component Description 321
CONSULT-II Reference Value in Data Monitor Mode . 321
On Board Diagnosis Logic 321
DTC Confirmation Procedure 321
Wiring Diagram 323
Diagnostic Procedure 324
Component Inspection 326
DTC P0452 EVAP CONTROL SYSTEM PRESSURE SENSOR 328
Component Description 328
CONSULT-II Reference Value in Data Monitor Mode . 328
On Board Diagnosis Logic 328
DTC Confirmation Procedure 328
Wiring Diagram 330
Diagnostic Procedure 331
Component Inspection 333
DTC P0453 EVAP CONTROL SYSTEM PRESSURE SENSOR 334
Component Description 334
CONSULT-II Reference Value in Data Monitor Mode . 334
On Board Diagnosis Logic 334
DTC Confirmation Procedure 334
Wiring Diagram 336
Diagnostic Procedure 337
Component Inspection 340
DTC P0455 EVAP CONTROL SYSTEM 341
On Board Diagnosis Logic 341
DTC Confirmation Procedure 341
Diagnostic Procedure 343
DTC P0456 EVAP CONTROL SYSTEM 349
On Board Diagnosis Logic 349
DTC Confirmation Procedure 350
Overall Function Check 351
Diagnostic Procedure 352
Component Inspection 357
DTC P0460 FUEL LEVEL SENSOR 358
Component Description 358
On Board Diagnosis Logic 358
DTC Confirmation Procedure 358
Wiring Diagram 359
Diagnostic Procedure 360
Removal and Installation 362
DTC P0461 FUEL LEVEL SENSOR 363
Component Description 363
On Board Diagnosis Logic 363
Overall Function Check 363
DTC P0462, P0463 FUEL LEVEL SENSOR 365
Component Description 365
On Board Diagnosis Logic 365
DTC Confirmation Procedure 365
Wiring Diagram 366
Diagnostic Procedure 367
Removal and Installation 369
DTC P0500 VSS 370
Description 370
On Board Diagnosis Logic 370
DTC Confirmation Procedure 370
Overall Function Check 370
Diagnostic Procedure 371
DTC P0506 ISC SYSTEM 372
Description 372
On Board Diagnosis Logic 372
DTC Confirmation Procedure 372
Diagnostic Procedure 373
DTC P0507 ISC SYSTEM 374
Description 374
On Board Diagnosis Logic 374
DTC Confirmation Procedure 374
Diagnostic Procedure 375
DTC P0605 ECM 376
Component Description 376
On Board Diagnosis Logic 376
DTC Confirmation Procedure 376
Diagnostic Procedure 377
DTC P0650 MIL 379
Component Description 379
On Board Diagnosis Logic 379
DTC Confirmation Procedure 379
Wiring Diagram 380
Diagnostic Procedure 381
DTC P1065 ECM POWER SUPPLY 383
Component Description 383
On Board Diagnosis Logic 383
DTC Confirmation Procedure 383

Wiring Diagram 384
Diagnostic Procedure 385
DTC P1102 MAF SENSOR 387
Component Description 387
CONSULT-II Reference Value in Data Monitor Mode . 387
On Board Diagnosis Logic 387
DTC Confirmation Procedure 387
Wiring Diagram 389
Diagnostic Procedure 390
Component Inspection 392
Removal and Installation 392
DTC P1111 IVT CONTROL SOLENOID VALVE ... 393
Component Description 393
CONSULT-II Reference Value in Data Monitor Mode . 393
On Board Diagnosis Logic 393
DTC Confirmation Procedure 393
Wiring Diagram 394
Diagnostic Procedure 395
Component Inspection 396
Removal and Installation 396
DTC P1121 ELECTRIC THROTTLE CONTROL ACTUATOR 397
Component Description 397
On Board Diagnosis Logic 397
DTC Confirmation Procedure 397
Diagnostic Procedure 398
DTC P1122 ELECTRIC THROTTLE CONTROL FUNCTION 399
Description 399
On Board Diagnosis Logic 399
DTC Confirmation Procedure 399
Wiring Diagram 400
Diagnostic Procedure 401
Component Inspection 405
Remove and Installation 405
DTC P1124, P1126 THROTTLE CONTROL MOTOR RELAY 406
Component Description 406
CONSULT-II Reference Value in Data Monitor Mode . 406
On Board Diagnosis Logic 406
DTC Confirmation Procedure 406
Wiring Diagram 408
Diagnostic Procedure 409
DTC P1128 THROTTLE CONTROL MOTOR 411
Component Description 411
On Board Diagnosis Logic 411
DTC Confirmation Procedure 411
Wiring Diagram 412
Diagnostic Procedure 413
Component Inspection 415
Removal and Installation 415
DTC P1143 HO2S1 416
Component Description 416
CONSULT-II Reference Value in Data Monitor Mode . 416
On Board Diagnosis Logic 416
DTC Confirmation Procedure 417
Overall Function Check 417
Diagnostic Procedure 418
Component Inspection 420
Removal and Installation 421
DTC P1144 HO2S1 422
Component Description 422
CONSULT-II Reference Value in Data Monitor Mode . 422
On Board Diagnosis Logic 422
DTC Confirmation Procedure 423
Overall Function Check 423
Diagnostic Procedure 424
Component Inspection 426
Removal and Installation 427
DTC P1146 HO2S2 428
Component Description 428
CONSULT-II Reference Value in Data Monitor Mode . 428
On Board Diagnosis Logic 428
DTC Confirmation Procedure 428
Overall Function Check 429
Wiring Diagram 430
Diagnostic Procedure 431
Component Inspection 433
Removal and Installation 434
DTC P1147 HO2S2 435
Component Description 435
CONSULT-II Reference Value in Data Monitor Mode . 435
On Board Diagnosis Logic 435
DTC Confirmation Procedure 435
Overall Function Check 436
Wiring Diagram 437
Diagnostic Procedure 438
Component Inspection 440
Removal and Installation 441
DTC P1148 CLOSED LOOP CONTROL 442
On Board Diagnosis Logic 442
DTC Confirmation Procedure 442
Overall Function Check 442
Diagnostic Procedure 443
DTC P1217 ENGINE OVER TEMPERATURE 444
System Description 444
CONSULT-II Reference Value in Data Monitor Mode . 444
On Board Diagnosis Logic 445
Overall Function Check 445
Wiring Diagram 447
Diagnostic Procedure 448
Main 12 Causes of Overheating 453
Component Inspection 454
DTC P1223, P1224 TP SENSOR 455
Component Description 455
CONSULT-II Reference Value in Data Monitor Mode . 455
On Board Diagnosis Logic 455
DTC Confirmation Procedure 455
Wiring Diagram 457

Diagnostic Procedure 458
Component Inspection 460
Remove and Installation 460
DTC P1225 TP SENSOR 461
Component Description 461
On Board Diagnosis Logic 461
DTC Confirmation Procedure 461
Diagnostic Procedure 462
Remove and Installation 462
DTC P1226 TP SENSOR 463
Component Description 463
On Board Diagnosis Logic 463
DTC Confirmation Procedure 463
Diagnostic Procedure 464
Remove and Installation 464
DTC P1227, P1228 APP SENSOR 465
Component Description 465
CONSULT-II Reference Value in Data Monitor Mode 465
On Board Diagnosis Logic 465
DTC Confirmation Procedure 465
Wiring Diagram 467
Diagnostic Procedure 468
Component Inspection 470
Remove and Installation 470
DTC P1229 SENSOR POWER SUPPLY 471
On Board Diagnosis Logic 471
DTC Confirmation Procedure 471
Wiring Diagram 472
Diagnostic Procedure 473
DTC P1442 EVAP CONTROL SYSTEM 475
On Board Diagnosis Logic 475
DTC Confirmation Procedure 476
Diagnostic Procedure 476
DTC P1444 EVAP CANISTER PURGE VOLUME CONTROL SOLENOID VALVE 477
Description 477
CONSULT-II Reference Value in Data Monitor Mode 477
On Board Diagnosis Logic 478
DTC Confirmation Procedure 478
Wiring Diagram 479
Diagnostic Procedure 480
Component Inspection 484
Removal and Installation 484
DTC P1446 EVAP CANISTER VENT CONTROL VALVE 485
Component Description 485
CONSULT-II Reference Value in Data Monitor Mode 485
On Board Diagnosis Logic 485
DTC Confirmation Procedure 485
Wiring Diagram 487
Diagnostic Procedure 488
Component Inspection 490
DTC P1448 EVAP CANISTER VENT CONTROL VALVE 491
Component Description 491
CONSULT-II Reference Value in Data Monitor Mode 491
On Board Diagnosis Logic 491
DTC Confirmation Procedure 491
Overall Function Check 493
Wiring Diagram 494
Diagnostic Procedure 495
Component Inspection 497
DTC P1456 EVAP CONTROL SYSTEM 498
On Board Diagnosis Logic 498
DTC Confirmation Procedure 499
Overall Function Check 500
Diagnostic Procedure 501
Component Inspection 506
DTC P1464 FUEL LEVEL SENSOR 507
Component Description 507
On Board Diagnosis Logic 507
DTC Confirmation Procedure 507
Wiring Diagram 508
Diagnostic Procedure 509
Removal and Installation 509
DTC P1490 VACUUM CUT VALVE BYPASS VALVE 510
Description 510
CONSULT-II Reference Value in Data Monitor Mode 510
On Board Diagnosis Logic 510
DTC Confirmation Procedure 510
Wiring Diagram 512
Diagnostic Procedure 513
Component Inspection 515
DTC P1491 VACUUM CUT VALVE BYPASS VALVE 517
Description 517
CONSULT-II Reference Value in Data Monitor Mode 517
On Board Diagnosis Logic 517
DTC Confirmation Procedure 518
Overall Function Check 518
Wiring Diagram 520
Diagnostic Procedure 521
Component Inspection 524
DTC P1564 ASCD STEERING SWITCH 526
Component Description 526
CONSULT-II Reference Value in Data Monitor Mode 526
On Board Diagnosis Logic 526
DTC Confirmation Procedure 526
Wiring Diagram 528
Diagnostic Procedure 530
Component Inspection 531
DTC P1572 ASCD BRAKE SWITCH 533
Component Description 533
CONSULT-II Reference Value in Data Monitor Mode 533
On Board Diagnosis Logic 533
DTC Confirmation Procedure 533
Wiring Diagram 535
Diagnostic Procedure 536
Component Inspection 541
DTC P1574 ASCD VEHICLE SPEED SENSOR 543
Component Description 543

On Board Diagnosis Logic 543
DTC Confirmation Procedure 543
Diagnostic Procedure 544
DTC P1706 PNP SWITCH 545
Component Description 545
CONSULT-II Reference Value in Data Monitor Mode . 545
On Board Diagnosis Logic 545
DTC Confirmation Procedure 545
Overall Function Check 546
Wiring Diagram 547
Diagnostic Procedure 548
DTC P1805 BRAKE SWITCH 549
Description 549
CONSULT-II Reference Value in Data Monitor Mode . 549
On Board Diagnosis Logic 549
DTC Confirmation Procedure 549
Wiring Diagram 550
Diagnostic Procedure 551
Component Inspection 553
IGNITION SIGNAL 554
Component Description 554
Wiring Diagram 555
Diagnostic Procedure 560
Component Inspection 563
Removal and Installation 564
VIAS 565
Description 565
CONSULT-II Reference Value in Data Monitor Mode . 566
Wiring Diagram 567
Diagnostic Procedure 569
Component Inspection 572
Removal and Installation 573
INJECTOR CIRCUIT 574
Component Description 574
CONSULT-II Reference Value in Data Monitor Mode . 574
Wiring Diagram 575
Diagnostic Procedure 576
Component Inspection 579
Removal and Installation 579
START SIGNAL 580
CONSULT-II Reference Value in Data Monitor Mode . 580
Wiring Diagram 581
Diagnostic Procedure 582
FUEL PUMP CIRCUIT 584
Description 584
CONSULT-II Reference Value in Data Monitor Mode . 584
Wiring Diagram 585
Diagnostic Procedure 586
Component Inspection 589
Removal and Installation 590
POWER STEERING OIL PRESSURE SWITCH ... 591
Component Description 591
CONSULT-II Reference Value in Data Monitor Mode . 591
Wiring Diagram 592
Diagnostic Procedure 594
Component Inspection 595
Removal and Installation 595
REFRIGERANT PRESSURE SENSOR 596
Component Description 596
Wiring Diagram 597
Diagnostic Procedure 598
Removal and Installation 600
ELECTRICAL LOAD SIGNAL 601
Description 601
Diagnostic Procedure 601
ASCD BRAKE SWITCH 602
Component Description 602
CONSULT-II Reference Value in Data Monitor Mode . 602
Wiring Diagram 603
Diagnostic Procedure 604
ASCD INDICATOR 610
Component Description 610
CONSULT-II Reference Value in Data Monitor Mode . 610
Wiring Diagram 611
Diagnostic Procedure 612
DATA LINK CONNECTOR 613
Wiring Diagram 613
EVAPORATIVE EMISSION SYSTEM 614
Description 614
Component Inspection 617
How to Detect Fuel Vapor Leakage 618
ON BOARD REFUELING VAPOR RECOVERY (ORVR) 620
System Description 620
Diagnostic Procedure 621
Component Inspection 623
POSITIVE CRANKCASE VENTILATION 626
Description 626
Component Inspection 626
AUTOMATIC SPEED CONTROL DEVICE (ASCD) . 628
System Description 628
Component Description 629
SERVICE DATA AND SPECIFICATIONS (SDS) ... 630
Fuel Pressure 630
Idle Speed and Ignition Timing 630
Calculated Load Value 630
Mass Air Flow Sensor 630
Intake Air Temperature Sensor 630
Engine Coolant Temperature Sensor 630
Heated Oxygen Sensor 1 Heater 630
Heated Oxygen sensor 2 Heater 630
Crankshaft Position Sensor (POS) 630
Camshaft Position Sensor (PHASE) 630
Throttle Control Motor 630
Injector 631
Fuel Pump 631

VQ

INDEX FOR DTC 632
Alphabetical Index 632
DTC No. Index 635
PRECAUTIONS 640
Precautions for Supplemental Restraint System (SRS) “AIR BAG” and “SEAT BELT PRE-TENSIONER” 640
On Board Diagnostic (OBD) System of Engine and A/T 640
Precaution 640
Wiring Diagrams and Trouble Diagnosis 643
PREPARATION 644
Special Service Tools 644
Commercial Service Tools 644
ENGINE CONTROL SYSTEM 646
System Diagram 646
Vacuum Hose Drawing 647
System Chart 648
Multiport Fuel Injection (MFI) System 649
Electronic Ignition (EI) System 651
Air Conditioning Cut Control 652
Fuel Cut Control (at No Load and High Engine Speed) 652
CAN communication 653
BASIC SERVICE PROCEDURE 657
Idle Speed and Ignition Timing Check 657
Idle Speed/Ignition Timing/Idle Mixture Ratio Adjustment 658
Accelerator Pedal Released Position Learning ... 668
Throttle Valve Closed Position Learning 669
Idle Air Volume Learning 669
Fuel Pressure Check 671
ON BOARD DIAGNOSTIC (OBD) SYSTEM 673
Introduction 673
Two Trip Detection Logic 673
Emission-related Diagnostic Information 674
NVIS (Nissan Vehicle Immobilizer System — NATS) . 689
Malfunction Indicator Lamp (MIL) 689
OBD System Operation Chart 693
TROUBLE DIAGNOSIS 698
Trouble Diagnosis Introduction 698
DTC Inspection Priority Chart 701
Fail-safe Chart 703
Basic Inspection 705
Symptom Matrix Chart 710
Engine Control Component Parts Location 714
Circuit Diagram 720
ECM Harness Connector Terminal Layout 722
ECM Terminals and Reference Value 722
CONSULT-II Function 730
Generic Scan Tool (GST) Function 743
CONSULT-II Reference Value in Data Monitor 746
Major Sensor Reference Graph in Data Monitor Mode 749
TROUBLE DIAGNOSIS - SPECIFICATION VALUE 752
Description 752
Testing Condition 752
Inspection Procedure 752
Diagnostic Procedure 753
TROUBLE DIAGNOSIS FOR INTERMITTENT INCIDENT 756
Description 756
Diagnostic Procedure 756
POWER SUPPLY CIRCUIT FOR ECM 757
Wiring Diagram 757
Diagnostic Procedure 758
DTC U1000, U1001 CAN COMMUNICATION LINE. 763
Description 763
On Board Diagnosis Logic 763
DTC Confirmation Procedure 763
Wiring Diagram 764
Diagnostic Procedure 765
DTC P0011, P0021 IVT CONTROL 766
Description 766
CONSULT-II Reference Value in Data Monitor Mode . 766
On Board Diagnosis Logic 767
DTC Confirmation Procedure 767
Wiring Diagram 768
Diagnostic Procedure 771
Component Inspection 773
Removal and Installation 773
DTC P0031, P0032, P0051, P0052 HO2S1 HEATER. 774
Description 774
CONSULT-II Reference Value in Data Monitor Mode . 774
On Board Diagnosis Logic 774
DTC Confirmation Procedure 774
Wiring Diagram 776
Diagnostic Procedure 779
Component Inspection 780
Removal and Installation 781
DTC P0037, P0038, P0057, P0058 HO2S2 HEATER. 782
Description 782
CONSULT-II Reference Value in Data Monitor Mode . 782
On Board Diagnosis Logic 782
DTC Confirmation Procedure 782
Wiring Diagram 784
Diagnostic Procedure 787
Component Inspection 789
Removal and Installation 789
DTC P0101 MAF SENSOR 790
Component Description 790
CONSULT-II Reference Value in Data Monitor Mode . 790
On Board Diagnosis Logic 790
DTC Confirmation Procedure 790
Overall Function Check 792
Wiring Diagram 793
Diagnostic Procedure 794
Component Inspection 796
Removal and Installation 797
DTC P0102, P0103 MAF SENSOR 798
Component Description 798

CONSULT-II Reference Value in Data Monitor Mode . 798
On Board Diagnosis Logic 798
DTC Confirmation Procedure 798
Wiring Diagram 800
Diagnostic Procedure 801
Component Inspection 803
Removal and Installation 803
DTC P0107, P0108 ABSOLUTE PRESSURE SENSOR 804
Component Description 804
On Board Diagnosis Logic 804
DTC Confirmation Procedure 804
Diagnostic Procedure 805
DTC P0112, P0113 IAT SENSOR 806
Component Description 806
On Board Diagnosis Logic 806
DTC Confirmation Procedure 806
Wiring Diagram 808
Diagnostic Procedure 809
Component Inspection 810
Removal and Installation 810
DTC P0117, P0118 ECT SENSOR 811
Component Description 811
On Board Diagnosis Logic 811
DTC Confirmation Procedure 812
Wiring Diagram 813
Diagnostic Procedure 814
Component Inspection 815
Removal and Installation 815
DTC P0125 ECT SENSOR 816
Component Description 816
On Board Diagnosis Logic 816
DTC Confirmation Procedure 816
Wiring Diagram 818
Diagnostic Procedure 819
Component Inspection 819
Removal and Installation 819
DTC P0127 IAT SENSOR 820
Component Description 820
On Board Diagnosis Logic 820
DTC Confirmation Procedure 820
Wiring Diagram 822
Diagnostic Procedure 823
Component Inspection 824
Removal and Installation 824
DTC P0128 THERMOSTAT FUNCTION 825
On Board Diagnosis Logic 825
DTC Confirmation Procedure 825
Diagnostic Procedure 825
Component Inspection 826
Removal and Installation 826
DTC P0132, P0152 HO2S1 827
Component Description 827
CONSULT-II Reference Value in Data Monitor Mode . 827
On Board Diagnosis Logic 827
DTC Confirmation Procedure 828
Wiring Diagram 829
Diagnostic Procedure 832
Component Inspection 834
Removal and Installation 835
DTC P0133, P0153 HO2S1 836
Component Description 836
CONSULT-II Reference Value in Data Monitor Mode . 836
On Board Diagnosis Logic 836
DTC Confirmation Procedure 837
Overall Function Check 838
Wiring Diagram 839
Diagnostic Procedure 842
Component Inspection 845
Removal and Installation 846
DTC P0134, P0154 HO2S1 847
Component Description 847
CONSULT-II Reference Value in Data Monitor Mode . 847
On Board Diagnosis Logic 847
DTC Confirmation Procedure 848
Overall Function Check 848
Wiring Diagram 850
Diagnostic Procedure 853
Component Inspection 855
Removal and Installation 856
DTC P0138, P0158 HO2S2 857
Component Description 857
CONSULT-II Reference Value in Data Monitor Mode . 857
On Board Diagnosis Logic 857
DTC Confirmation Procedure 857
Overall Function Check 858
Wiring Diagram 859
Diagnostic Procedure 862
Component Inspection 865
Removal and Installation 866
DTC P0139, P0159 HO2S2 867
Component Description 867
CONSULT-II Reference Value in Data Monitor Mode . 867
On Board Diagnosis Logic 867
DTC Confirmation Procedure 867
Overall Function Check 868
Wiring Diagram 869
Diagnostic Procedure 872
Component Inspection 875
Removal and Installation 876
DTC P0171, P0174 FUEL INJECTION SYSTEM FUNCTION 877
On Board Diagnosis Logic 877
DTC Confirmation Procedure 877
Wiring Diagram 879
Diagnostic Procedure 881
DTC P0172, P0175 FUEL INJECTION SYSTEM FUNCTION 885
On Board Diagnosis Logic 885
DTC Confirmation Procedure 885
Wiring Diagram 887
Diagnostic Procedure 889

DTC P0181 FTT SENSOR 892
Component Description 892
On Board Diagnosis Logic 892
DTC Confirmation Procedure 892
Wiring Diagram 894
Diagnostic Procedure 895
Component Inspection 896
Removal and Installation 896
DTC P0182, P0183 FTT SENSOR 897
Component Description 897
On Board Diagnosis Logic 897
DTC Confirmation Procedure 897
Wiring Diagram 898
Diagnostic Procedure 899
Component Inspection 900
Removal and Installation 900
DTC P0221 TP SENSOR 901
Component Description 901
CONSULT-II Reference Value in Data Monitor Mode . 901
On Board Diagnosis Logic 901
DTC Confirmation Procedure 901
Wiring Diagram 903
Diagnostic Procedure 904
Component Inspection 906
Removal and Installation 907
DTC P0222, P0223 TP SENSOR 908
Component Description 908
CONSULT-II Reference Value in Data Monitor Mode . 908
On Board Diagnosis Logic 908
DTC Confirmation Procedure 908
Wiring Diagram 910
Diagnostic Procedure 911
Component Inspection 913
Removal and Installation 914
DTC P0226 APP SENSOR 915
Component Description 915
CONSULT-II Reference Value in Data Monitor Mode . 915
On Board Diagnosis Logic 915
DTC Confirmation Procedure 915
Wiring Diagram 917
Diagnostic Procedure 918
Component Inspection 920
Removal and Installation 921
DTC P0227, P0228 APP SENSOR 922
Component Description 922
CONSULT-II Reference Value in Data Monitor Mode . 922
On Board Diagnosis Logic 922
DTC Confirmation Procedure 922
Wiring Diagram 924
Diagnostic Procedure 925
Component Inspection 927
Removal and Installation 927
DTC P0300 - P0306 MULTIPLE CYLINDER MISFIRE, NO. 1 - 6 CYLINDER MISFIRE 928
On Board Diagnosis Logic 928
DTC Confirmation Procedure 928
Diagnostic Procedure 929
DTC P0327, P0328 KS 934
Component Description 934
On Board Diagnosis Logic 934
DTC Confirmation Procedure 934
Wiring Diagram 935
Diagnostic Procedure 936
Component Inspection 937
Removal and Installation 937
DTC P0335 CKP SENSOR (POS) 938
Component Description 938
CONSULT-II Reference Value in Data Monitor Mode . 938
On Board Diagnosis Logic 938
DTC Confirmation Procedure 938
Wiring Diagram 940
Diagnostic Procedure 941
Component Inspection 943
Removal and Installation 944
DTC P0340, P0345 CMP SENSOR (PHASE) 945
Component Description 945
On Board Diagnosis Logic 945
DTC Confirmation Procedure 945
Wiring Diagram 946
Diagnostic Procedure 949
Component Inspection 951
Removal and Installation 952
DTC P0420, P0430 THREE WAY CATALYST FUNCTION 953
On Board Diagnosis Logic 953
DTC Confirmation Procedure 953
Overall Function Check 954
Diagnostic Procedure 955
DTC P0441 EVAP CONTROL SYSTEM 957
System Description 957
On Board Diagnosis Logic 957
DTC Confirmation Procedure 957
Overall Function Check 958
Diagnostic Procedure 959
DTC P0442 EVAP CONTROL SYSTEM 963
On Board Diagnosis Logic 963
DTC Confirmation Procedure 964
Diagnostic Procedure 965
Component Inspection 970
DTC P0444, P0445 EVAP CANISTER PURGE VOLUME CONTROL SOLENOID VALVE 972
Description 972
CONSULT-II Reference Value in Data Monitor Mode . 972
On Board Diagnosis Logic 973
DTC Confirmation Procedure 973
Wiring Diagram 974
Diagnostic Procedure 975
Component Inspection 977
Removal and Installation 977
DTC P0447 EVAP CANISTER VENT CONTROL VALVE 978
Component Description 978

CONSULT-II Reference Value in Data Monitor Mode . 978
On Board Diagnosis Logic 978
DTC Confirmation Procedure 978
Wiring Diagram 980
Diagnostic Procedure 981
Component Inspection 983
DTC P0452 EVAP CONTROL SYSTEM PRESSURE SENSOR 985
Component Description 985
CONSULT-II Reference Value in Data Monitor Mode . 985
On Board Diagnosis Logic 985
DTC Confirmation Procedure 985
Wiring Diagram 987
Diagnostic Procedure 988
Component Inspection 990
DTC P0453 EVAP CONTROL SYSTEM PRESSURE SENSOR 991
Component Description 991
CONSULT-II Reference Value in Data Monitor Mode . 991
On Board Diagnosis Logic 991
DTC Confirmation Procedure 991
Wiring Diagram 993
Diagnostic Procedure 994
Component Inspection 997
DTC P0456 EVAP CONTROL SYSTEM 998
On Board Diagnosis Logic 998
DTC Confirmation Procedure 999
Overall Function Check 999
Diagnostic Procedure 1000
Component Inspection 1005
DTC P0460 FUEL LEVEL SENSOR 1007
Component Description 1007
On Board Diagnosis Logic 1007
DTC Confirmation Procedure 1007
Wiring Diagram 1008
Diagnostic Procedure 1009
Removal and Installation 1011
DTC P0461 FUEL LEVEL SENSOR 1012
Component Description 1012
On Board Diagnosis Logic 1012
Overall Function Check 1012
DTC P0462, P0463 FUEL LEVEL SENSOR 1014
Component Description 1014
On Board Diagnosis Logic 1014
DTC Confirmation Procedure 1014
Wiring Diagram 1015
Diagnostic Procedure 1016
Removal and Installation 1018
DTC P0500 VSS 1019
Description 1019
On Board Diagnosis Logic 1019
DTC Confirmation Procedure 1019
Overall Function Check 1019
Diagnostic Procedure 1020
DTC P0506 ISC SYSTEM 1021
Description 1021
On Board Diagnosis Logic 1021
DTC Confirmation Procedure 1021
Diagnostic Procedure 1022
DTC P0507 ISC SYSTEM 1023
Description 1023
On Board Diagnosis Logic 1023
DTC Confirmation Procedure 1023
Diagnostic Procedure 1024
DTC P0550 PSP SENSOR 1025
Component Description 1025
CONSULT-II Reference Value in Data Monitor Mode 1025
On Board Diagnosis Logic 1025
DTC Confirmation Procedure 1025
Wiring Diagram 1026
Diagnostic Procedure 1027
Component Inspection 1028
DTC P0605 ECM 1030
Component Description 1030
On Board Diagnosis Logic 1030
DTC Confirmation Procedure 1030
Diagnostic Procedure 1031
DTC P0650 MIL 1033
Component Description 1033
On Board Diagnosis Logic 1033
DTC Confirmation Procedure 1033
Wiring Diagram 1034
Diagnostic Procedure 1035
DTC P1065 ECM POWER SUPPLY 1037
Component Description 1037
On Board Diagnosis Logic 1037
DTC Confirmation Procedure 1037
Wiring Diagram 1038
Diagnostic Procedure 1039
DTC P1102 MAF SENSOR 1041
Component Description 1041
CONSULT-II Reference Value in Data Monitor Mode 1041
On Board Diagnosis Logic 1041
DTC Confirmation Procedure 1041
Wiring Diagram 1043
Diagnostic Procedure 1044
Component Inspection 1046
Removal and Installation 1046
DTC P1121 ELECTRIC THROTTLE CONTROL ACTUATOR 1047
Component Description 1047
On Board Diagnosis Logic 1047
DTC Confirmation Procedure 1047
Diagnostic Procedure 1048
DTC P1122 ELECTRIC THROTTLE CONTROL FUNCTION 1049
Description 1049
On Board Diagnosis Logic 1049
DTC Confirmation Procedure 1049
Wiring Diagram 1050
Diagnostic Procedure 1051
Component Inspection 1055
Remove and Installation 1055

DTC P1124, P1126 THROTTLE CONTROL MOTOR RELAY 1056
Component Description 1056
CONSULT-II Reference Value in Data Monitor Mode 1056
On Board Diagnosis Logic 1056
DTC Confirmation Procedure 1056
Wiring Diagram 1058
Diagnostic Procedure 1059
DTC P1128 THROTTLE CONTROL MOTOR 1061
Component Description 1061
On Board Diagnosis Logic 1061
DTC Confirmation Procedure 1061
Wiring Diagram 1062
Diagnostic Procedure 1063
Component Inspection 1064
Removal and Installation 1065
DTC P1143, P1163 HO2S1 1066
Component Description 1066
CONSULT-II Reference Value in Data Monitor Mode 1066
On Board Diagnosis Logic 1066
DTC Confirmation Procedure 1067
Overall Function Check 1067
Diagnostic Procedure 1068
Component Inspection 1070
Removal and Installation 1071
DTC P1144, P1164 HO2S1 1072
Component Description 1072
CONSULT-II Reference Value in Data Monitor Mode 1072
On Board Diagnosis Logic 1072
DTC Confirmation Procedure 1073
Overall Function Check 1073
Diagnostic Procedure 1074
Component Inspection 1077
Removal and Installation 1078
DTC P1146, P1166 HO2S2 1079
Component Description 1079
CONSULT-II Reference Value in Data Monitor Mode 1079
On Board Diagnosis Logic 1079
DTC Confirmation Procedure 1079
Overall Function Check 1080
Wiring Diagram 1081
Diagnostic Procedure 1084
Component Inspection 1087
Removal and Installation 1088
DTC P1147, P1167 HO2S2 1089
Component Description 1089
CONSULT-II Reference Value in Data Monitor Mode 1089
On Board Diagnosis Logic 1089
DTC Confirmation Procedure 1089
Overall Function Check 1090
Wiring Diagram 1091
Diagnostic Procedure 1094
Component Inspection 1097
Removal and Installation 1098
DTC P1148, P1168 CLOSED LOOP CONTROL 1099
On Board Diagnosis Logic 1099
DTC Confirmation Procedure 1099
Overall Function Check 1099
Diagnostic Procedure 1100
DTC P1211 ABS/TCS CONTROL UNIT 1101
Description 1101
On Board Diagnosis Logic 1101
DTC Confirmation Procedure 1101
Diagnostic Procedure 1101
DTC P1212 ABS/TCS COMMUNICATION LINE 1102
Description 1102
On Board Diagnosis Logic 1102
DTC Confirmation Procedure 1102
Diagnostic Procedure 1102
DTC P1217 ENGINE OVER TEMPERATURE 1103
System Description 1103
CONSULT-II Reference Value in Data Monitor Mode 1103
On Board Diagnosis Logic 1104
Overall Function Check 1104
Wiring Diagram 1106
Diagnostic Procedure 1107
Main 12 Causes of Overheating 1113
Component Inspection 1113
DTC P1223, P1224 TP SENSOR 1114
Component Description 1114
CONSULT-II Reference Value in Data Monitor Mode 1114
On Board Diagnosis Logic 1114
DTC Confirmation Procedure 1114
Wiring Diagram 1116
Diagnostic Procedure 1117
Component Inspection 1119
Removal and Installation 1120
DTC P1225 TP SENSOR 1121
Component Description 1121
On Board Diagnosis Logic 1121
DTC Confirmation Procedure 1121
Diagnostic Procedure 1122
Removal and Installation 1122
DTC P1226 TP SENSOR 1123
Component Description 1123
On Board Diagnosis Logic 1123
DTC Confirmation Procedure 1123
Diagnostic Procedure 1124
Removal and Installation 1124
DTC P1227, P1228 APP SENSOR 1125
Component Description 1125
CONSULT-II Reference Value in Data Monitor Mode 1125
On Board Diagnosis Logic 1125
DTC Confirmation Procedure 1125
Wiring Diagram 1127
Diagnostic Procedure 1128
Component Inspection 1130
Removal and Installation 1130
DTC P1229 SENSOR POWER SUPPLY 1131
On Board Diagnosis Logic 1131

DTC Confirmation Procedure 1131
Wiring Diagram 1132
Diagnostic Procedure 1133
DTC P1444 EVAP CANISTER PURGE VOLUME CONTROL SOLENOID VALVE 1135
Description 1135
CONSULT-II Reference Value in Data Monitor Mode 1135
On Board Diagnosis Logic 1136
DTC Confirmation Procedure 1136
Wiring Diagram 1137
Diagnostic Procedure 1138
Component Inspection 1142
Removal and Installation 1142
DTC P1446 EVAP CANISTER VENT CONTROL VALVE 1143
Component Description 1143
CONSULT-II Reference Value in Data Monitor Mode 1143
On Board Diagnosis Logic 1143
DTC Confirmation Procedure 1143
Wiring Diagram 1145
Diagnostic Procedure 1146
Component Inspection 1147
DTC P1448 EVAP CANISTER VENT CONTROL VALVE 1149
Component Description 1149
CONSULT-II Reference Value in Data Monitor Mode 1149
On Board Diagnosis Logic 1149
DTC Confirmation Procedure 1149
Overall Function Check 1151
Wiring Diagram 1152
Diagnostic Procedure 1153
Component Inspection 1155
DTC P1464 FUEL LEVEL SENSOR 1157
Component Description 1157
On Board Diagnosis Logic 1157
DTC Confirmation Procedure 1157
Wiring Diagram 1158
Diagnostic Procedure 1159
Removal and Installation 1159
DTC P1490 VACUUM CUT VALVE BYPASS VALVE 1160
Description 1160
CONSULT-II Reference Value in Data Monitor Mode 1160
On Board Diagnosis Logic 1160
DTC Confirmation Procedure 1160
Wiring Diagram 1162
Diagnostic Procedure 1163
Component Inspection 1165
DTC P1491 VACUUM CUT VALVE BYPASS VALVE 1166
Description 1166
CONSULT-II Reference Value in Data Monitor Mode 1166
On Board Diagnosis Logic 1166
DTC Confirmation Procedure 1167
Overall Function Check 1167
Wiring Diagram 1169
Diagnostic Procedure 1170
Component Inspection 1173
DTC P1564 ASCD STEERING SWITCH 1174
Component Description 1174
CONSULT-II Reference Value in Data Monitor Mode 1174
On Board Diagnosis Logic 1174
DTC Confirmation Procedure 1174
Wiring Diagram 1176
Diagnostic Procedure 1178
Component Inspection 1180
DTC P1572 ASCD BRAKE SWITCH 1181
Component Description 1181
CONSULT-II Reference Value in Data Monitor Mode 1181
On Board Diagnosis Logic 1181
DTC confirmation Procedure 1181
Wiring Diagram 1183
Diagnostic Procedure 1184
Component Inspection 1190
DTC P1574 ASCD VEHICLE SPEED SENSOR ...1192
Component Description 1192
On Board Diagnosis Logic 1192
DTC Confirmation Procedure 1192
Diagnostic Procedure 1193
DTC P1706 PNP SWITCH 1194
Component Description 1194
CONSULT-II Reference Value in Data Monitor Mode 1194
On Board Diagnosis Logic 1194
DTC Confirmation Procedure 1194
Overall Function Check 1195
Wiring Diagram 1196
Diagnostic Procedure 1197
DTC P1800 VIAS CONTROL SOLENOID VALVE 1199
Description 1199
On Board Diagnosis Logic 1200
CONSULT-II Reference Value in Data Monitor Mode 1200
DTC Confirmation Procedure 1200
Wiring Diagram 1201
Diagnostic Procedure 1202
Component Inspection 1203
Removal and Installation 1204
DTC P1805 BRAKE SWITCH 1205
Description 1205
CONSULT-II Reference Value in Data Monitor Mode 1205
On Board Diagnosis Logic 1205
DTC Confirmation Procedure 1205
Wiring Diagram 1206
Diagnostic Procedure 1207
Component Inspection 1209
IGNITION SIGNAL 1210
Component Description 1210
Wiring Diagram 1211
Diagnostic Procedure 1216
Component Inspection 1220
Removal and Installation 1221

VIAS **1222**
Description 1222
CONSULT-II Reference Value in Data Monitor Mode 1223
Wiring Diagram 1224
Diagnostic Procedure 1225
Component Inspection 1228
Removal and Installation 1229
INJECTOR CIRCUIT **1230**
Component Description 1230
CONSULT-II Reference Value in Data Monitor Mode 1230
Wiring Diagram 1231
Diagnostic Procedure 1232
Component Inspection 1235
Removal and Installation 1235
START SIGNAL **1236**
CONSULT-II Reference Value in Data Monitor Mode 1236
Wiring Diagram 1237
Diagnostic Procedure 1238
FUEL PUMP CIRCUIT **1240**
Description 1240
CONSULT-II Reference Value in Data Monitor Mode 1240
Wiring Diagram 1241
Diagnostic Procedure 1242
Component Inspection 1245
Removal and Installation 1246
ELECTRONIC CONTROLLED ENGINE MOUNT **1247**
System Description 1247
CONSULT-II Reference Value in Data Monitor Mode 1247
Wiring Diagram 1248
Diagnostic Procedure 1249
REFRIGERANT PRESSURE SENSOR **1252**
Component Description 1252
Wiring Diagram 1253
Diagnostic Procedure 1254
Removal and Installation 1256
ELECTRICAL LOAD SIGNAL **1257**
Description 1257
Diagnostic Procedure 1257
ASCD BRAKE SWITCH **1258**
Component Description 1258
CONSULT-II Reference Value in Data Monitor Mode 1258
Wiring Diagram 1259
Diagnostic Procedure 1261
ASCD INDICATOR **1268**
Component Description 1268
CONSULT-II Reference Value in Data Monitor Mode 1268
Wiring Diagram 1269
Diagnostic Procedure 1270
DATA LINK CONNECTOR **1271**
Wiring Diagram 1271
EVAPORATIVE EMISSION SYSTEM **1272**
Description 1272
Component Inspection 1275
How to Detect Fuel Vapor Leakage 1276
ON BOARD REFUELING VAPOR RECOVERY (ORVR) **1278**
System Description 1278
Diagnostic Procedure 1279
Component Inspection 1281
POSITIVE CRANKCASE VENTILATION **1284**
Description 1284
Component Inspection 1284
AUTOMATIC SPEED CONTROL DEVICE (ASCD) **1286**
System Description 1286
Component Description 1286
SERVICE DATA AND SPECIFICATIONS (SDS) **1288**
Fuel Pressure 1288
Idle Speed and Ignition Timing 1288
Calculated Load Value 1288
Mass Air Flow Sensor 1288
Intake Air Temperature Sensor 1288
Engine Coolant Temperature Sensor 1288
Heated Oxygen Sensor 1 Heater 1288
Heated Oxygen sensor 2 Heater 1288
Crankshaft Position Sensor (POS) 1288
Camshaft Position Sensor (PHASE) 1288
Throttle Control Motor 1288
Injector 1289
Fuel Pump 1289

INDEX FOR DTC

PFP:00024

Alphabetical Index

UBS002NR

NOTE:
If DTC U1000 or U1001 is displayed with other DTC, first perform the trouble diagnosis for DTC U1000, U1001. Refer to EC-138, "DTC U1000, U1001 CAN COMMUNICATION LINE" .

Items (CONSULT-II screen terms)	DTC*1		Reference page
	CONSULT-II GST*2	ECM*3	
A/T 1ST GR FNCTN	P0731	0731	AT-124
A/T 2ND GR FNCTN	P0732	0732	AT-129
A/T 3RD GR FNCTN	P0733	0733	AT-134
A/T 4TH GR FNCTN	P0734	0734	AT-139
A/T TCC S/V FNCTN	P0744	0744	AT-151
APP SEN 1/CIRC*5	P0227	0227	EC-269
APP SEN 1/CIRC*5	P0228	0228	EC-269
APP SEN 2/CIRC*5	P1227	1227	EC-465
APP SEN 2/CIRC*5	P1228	1228	EC-465
APP SENSOR*5	P0226	0226	EC-263
ASCD BRAKE SW	P1572	1572	EC-533
ASCD SW	P1564	1564	EC-526
ASCD VHL SPD SEN	P1574	1574	EC-543
ATF TEMP SEN/CIRC	P0710	0710	AT-109
BRAKE SW/CIRCUIT	P1805	1805	EC-549
CAN COMM CIRCUIT	U1000	1000*6	EC-138
CAN COMM CIRCUIT	U1001	1001*6	EC-138
CKP SEN/CIRCUIT	P0335	0335	EC-284
CLOSED LOOP-B1	P1148	1148	EC-442
CMP SEN/CIRC-B1	P0340	0340	EC-291
CTP LEARNING	P1225	1225	EC-461
CTP LEARNING	P1226	1226	EC-463
CYL 1 MISFIRE	P0301	0301	EC-275
CYL 2 MISFIRE	P0302	0302	EC-275
CYL 3 MISFIRE	P0303	0303	EC-275
CYL 4 MISFIRE	P0304	0304	EC-275
ECM	P0605	0605	EC-376
ECM BACK UP/CIRC	P1065	1065	EC-383
ECT SEN/CIRCUIT*5	P0117	0117	EC-172
ECT SEN/CIRCUIT*5	P0118	0118	EC-172
ECT SENSOR	P0125	0125	EC-177
ENG OVER TEMP	P0217	0217	EC-238
ENG OVER TEMP	P1217	1217	EC-444
ENGINE SPEED SIG	P0725	0725	AT-120
ETC ACTR*5	P1121	1121	EC-397
ETC FUNCTION/CIRC*5	P1122	1122	EC-399

Items (CONSULT-II screen terms)	DTC*1		Reference page
	CONSULT-II GST*2	ECM*3	
ETC MOT	P1128	1128	EC-411
ETC MOT PWR	P1124	1124	EC-406
ETC MOT PWR*5	P1126	1126	EC-406
EVAP GROSS LEAK	P0455	0455	EC-341
EVAP PURG FLOW/MON	P0441	0441	EC-301
EVAP SMALL LEAK	P0442	0442	EC-307
EVAP SMALL LEAK	P1442	1442	EC-475
EVAP SYS PRES SEN	P0452	0452	EC-328
EVAP SYS PRES SEN	P0453	0453	EC-334
EVAP VERY SML LEAK	P0456	0456	EC-349
EVAP VERY SML LEAK	P1456	1456	EC-498
FTT SEN/CIRCUIT	P0182	0182	EC-234
FTT SEN/CIRCUIT	P0183	0183	EC-234
FTT SENSOR	P0181	0181	EC-232
FUEL LEV SEN SLOSH	P0460	0460	EC-358
FUEL LEVEL SEN/CIRC	P1464	1464	EC-507
FUEL LEVEL SENSOR	P0461	0461	EC-363
FUEL LEVL SEN/CIRC	P0462	0462	EC-365
FUEL LEVL SEN/CIRC	P0463	0463	EC-365
FUEL SYS-LEAN-B1	P0171	0171	EC-220
FUEL SYS-RICH-B1	P0172	0172	EC-226
HO2S1 (B1)	P0132	0132	EC-185
HO2S1 (B1)	P0133	0133	EC-191
HO2S1 (B1)	P0134	0134	EC-200
HO2S1 (B1)	P1143	1143	EC-416
HO2S1 (B1)	P1144	1144	EC-422
HO2S1 HTR (B1)	P0031	0031	EC-144
HO2S1 HTR (B1)	P0032	0032	EC-144
HO2S2 (B1)	P0138	0138	EC-207
HO2S2 (B1)	P0139	0139	EC-213
HO2S2 (B1)	P1146	1146	EC-428
HO2S2 (B1)	P1147	1147	EC-435
HO2S2 HTR (B1)	P0037	0037	EC-149
HO2S2 HTR (B1)	P0038	0038	EC-149
IAT SEN/CIRCUIT	P0112	0112	EC-167
IAT SEN/CIRCUIT	P0113	0113	EC-167
IAT SENSOR	P0127	0127	EC-180
INT/V TIM CONT-B1	P0011	0011	EC-141
INT/V TIM V/CIR-B1	P1111	1111	EC-393
ISC SYSTEM	P0506	0506	EC-372
ISC SYSTEM	P0507	0507	EC-374
KNOCK SEN/CIRC-B1	P0327	0327	EC-280

Items (CONSULT-II screen terms)	DTC*1		Reference page
	CONSULT-II GST*2	ECM*3	
KNOCK SEN/CIRC-B1	P0328	0328	EC-280
L/PRESS SOL/CIRC	P0745	0745	AT-159
MAF SEN/CIRCUIT	P0101	0101	EC-154
MAF SEN/CIRCUIT*5	P0102	0102	EC-161
MAF SEN/CIRCUIT*5	P0103	0103	EC-161
MAF SENSOR*5	P1102	1102	EC-387
MIL/CIRC	P0650	0650	EC-379
MULTI CYL MISFIRE	P0300	0300	EC-275
NATS MALFUNCTION	P1610 - P1615	1610 - 1615	EC-68
NO DTC IS DETECTED. FURTHER TESTING MAY BE REQUIRED.	No DTC	Flashing*4	EC-69
NO DTC IS DETECTED. FURTHER TESTING MAY BE REQUIRED.	**P0000**	**0000**	**—**
O/R CLTCH SOL/CIRC	P1760	1760	AT-180
P-N POS SW/CIRCUIT	P1706	1706	EC-545
PNP SW/CIRC	P0705	0705	AT-103
PURG VOLUME CONT/V	P0444	0444	EC-315
PURG VOLUME CONT/V	P0445	0445	EC-315
PURG VOLUME CONT/V	P1444	1444	EC-477
SENSOR POWER/CIRC*5	P1229	1229	EC-471
SFT SOL A/CIRC	P0750	0750	AT-165
SFT SOL B/CIRC	P0755	0755	AT-170
TCC SOLENOID/CIRC	P0740	0740	AT-146
THERMSTAT FNCTN	P0128	0128	EC-183
TP SEN 1/CIRC*5	P0222	0222	EC-257
TP SEN 1/CIRC*5	P0223	0223	EC-257
TP SEN 2/CIRC*5	P1223	1223	EC-455
TP SEN 2/CIRC*5	P1224	1224	EC-455
TP SENSOR*5	P0221	0221	EC-250
TPV SEN/CIRC A/T	P1705	1705	AT-175
TW CATALYST SYS-B1	P0420	0420	EC-297
VC CUT/V BYPASS/V	P1491	1491	EC-517
VC/V BYPASS/V	P1490	1490	EC-510
VEH SPD SEN/CIR AT*7	P0720	0720	AT-115
VEH SPEED SEN/CIRC*7	P0500	0500	EC-370
VENT CONTROL VALVE	P0447	0447	EC-321
VENT CONTROL VALVE	P1446	1446	EC-485
VENT CONTROL VALVE	P1448	1448	EC-491

*1: 1st trip DTC No. is the same as DTC No.
*2: These numbers are prescribed by SAE J2012.
*3: In Diagnostic Test Mode II (Self-diagnostic results), these numbers are controlled by NISSAN.

*4: When engine is running.
*5: When the fail-safe operation occurs, the MIL illuminates.
*6: The troubleshooting for this DTC needs CONSULT-II.
*7: When the fail-safe operations for both self-diagnoses occur, the MIL illuminates.

DTC No. Index

UBS002NS

NOTE:
If DTC U1000 or U1001 is displayed with other DTC, first perform the trouble diagnosis for DTC U1000, U1001. Refer to EC-138, "DTC U1000, U1001 CAN COMMUNICATION LINE" .

DTC*1		Items (CONSULT-II screen terms)	Reference page
CONSULT-II GST*2	ECM*3		
No DTC	Flashing*4	NO DTC IS DETECTED. FURTHER TESTING MAY BE REQUIRED.	EC-69
U1000	1000*6	CAN COMM CIRCUIT	EC-138
U1001	1001*6	CAN COMM CIRCUIT	EC-138
P0000	**0000**	**NO DTC IS DETECTED. FURTHER TESTING MAY BE REQUIRED.**	**—**
P0011	0011	INT/V TIM CONT-B1	EC-141
P0031	0031	HO2S1 HTR (B1)	EC-144
P0032	0032	HO2S1 HTR (B1)	EC-144
P0037	0037	HO2S2 HTR (B1)	EC-149
P0038	0038	HO2S2 HTR (B1)	EC-149
P0101	0101	MAF SEN/CIRCUIT	EC-154
P0102	0102	MAF SEN/CIRCUIT*5	EC-161
P0103	0103	MAF SEN/CIRCUIT*5	EC-161
P0112	0112	IAT SEN/CIRCUIT	EC-167
P0113	0113	IAT SEN/CIRCUIT	EC-167
P0117	0117	ECT SEN/CIRCUIT*5	EC-172
P0118	0118	ECT SEN/CIRCUIT*5	EC-172
P0125	0125	ECT SENSOR	EC-177
P0127	0127	IAT SENSOR	EC-180
P0128	0128	THERMSTAT FNCTN	EC-183
P0132	0132	HO2S1 (B1)	EC-185
P0133	0133	HO2S1 (B1)	EC-191
P0134	0134	HO2S1 (B1)	EC-200
P0138	0138	HO2S2 (B1)	EC-207
P0139	0139	HO2S2 (B1)	EC-213
P0171	0171	FUEL SYS-LEAN-B1	EC-220
P0172	0172	FUEL SYS-RICH-B1	EC-226
P0181	0181	FTT SENSOR	EC-232
P0182	0182	FTT SEN/CIRCUIT	EC-234
P0183	0183	FTT SEN/CIRCUIT	EC-234
P0217	0217	ENG OVER TEMP	EC-238
P0221	0221	TP SENSOR*5	EC-250
P0222	0222	TP SEN 1/CIRC*5	EC-257

DTC*1		Items (CONSULT-II screen terms)	Reference page
CONSULT-II GST*2	ECM*3		
P0223	0223	TP SEN 1/CIRC*5	EC-257
P0226	0226	APP SENSOR*5	EC-263
P0227	0227	APP SEN 1/CIRC*5	EC-269
P0228	0228	APP SEN 1/CIRC*5	EC-269
P0300	0300	MULTI CYL MISFIRE	EC-275
P0301	0301	CYL 1 MISFIRE	EC-275
P0302	0302	CYL 2 MISFIRE	EC-275
P0303	0303	CYL 3 MISFIRE	EC-275
P0304	0304	CYL 4 MISFIRE	EC-275
P0327	0327	KNOCK SEN/CIRC-B1	EC-280
P0328	0328	KNOCK SEN/CIRC-B1	EC-280
P0335	0335	CKP SEN/CIRCUIT	EC-284
P0340	0340	CMP SEN/CIRC-B1	EC-291
P0420	0420	TW CATALYST SYS-B1	EC-297
P0441	0441	EVAP PURG FLOW/MON	EC-301
P0442	0442	EVAP SMALL LEAK	EC-307
P0444	0444	PURG VOLUME CONT/V	EC-315
P0445	0445	PURG VOLUME CONT/V	EC-315
P0447	0447	VENT CONTROL VALVE	EC-321
P0452	0452	EVAP SYS PRES SEN	EC-328
P0453	0453	EVAP SYS PRES SEN	EC-334
P0455	0455	EVAP GROSS LEAK	EC-341
P0456	0456	EVAP VERY SML LEAK	EC-349
P0460	0460	FUEL LEV SEN SLOSH	EC-358
P0461	0461	FUEL LEVEL SENSOR	EC-363
P0462	0462	FUEL LEVL SEN/CIRC	EC-365
P0463	0463	FUEL LEVL SEN/CIRC	EC-365
P0500	0500	VEH SPEED SEN/CIRC*7	EC-370
P0506	0506	ISC SYSTEM	EC-372
P0507	0507	ISC SYSTEM	EC-374
P0605	0605	ECM	EC-376
P0650	0650	MIL/CIRC	EC-379
P0705	0705	PNP SW/CIRC	AT-103
P0710	0710	ATF TEMP SEN/CIRC	AT-109
P0720	0720	VEH SPD SEN/CIR AT*7	AT-115
P0725	0725	ENGINE SPEED SIG	AT-120
P0731	0731	A/T 1ST GR FNCTN	AT-124
P0732	0732	A/T 2ND GR FNCTN	AT-129
P0733	0733	A/T 3RD GR FNCTN	AT-134
P0734	0734	A/T 4TH GR FNCTN	AT-139
P0740	0740	TCC SOLENOID/CIRC	AT-146
P0744	0744	A/T TCC S/V FNCTN	AT-151

DTC*1		Items (CONSULT-II screen terms)	Reference page
CONSULT-II GST*2	ECM*3		
P0745	0745	L/PRESS SOL/CIRC	AT-159
P0750	0750	SFT SOL A/CIRC	AT-165
P0755	0755	SFT SOL B/CIRC	AT-170
P1065	1065	ECM BACK UP/CIRC	EC-383
P1102	1102	MAF SENSOR*5	EC-387
P1111	1111	INT/V TIM V/CIR-B1	EC-393
P1121	1121	ETC ACTR*5	EC-397
P1122	1122	ETC FUNCTION/CIRC*5	EC-399
P1124	1124	ETC MOT PWR	EC-406
P1126	1126	ETC MOT PWR*5	EC-406
P1128	1128	ETC MOT	EC-411
P1143	1143	HO2S1 (B1)	EC-416
P1144	1144	HO2S1 (B1)	EC-422
P1146	1146	HO2S2 (B1)	EC-428
P1147	1147	HO2S2 (B1)	EC-435
P1148	1148	CLOSED LOOP-B1	EC-442
P1217	1217	ENG OVER TEMP	EC-444
P1223	1223	TP SEN 2/CIRC*5	EC-455
P1224	1224	TP SEN 2/CIRC*5	EC-455
P1225	1225	CTP LEARNING	EC-461
P1226	1226	CTP LEARNING	EC-463
P1227	1227	APP SEN 2/CIRC*5	EC-465
P1228	1228	APP SEN 2/CIRC*5	EC-465
P1229	1229	SENSOR POWER/CIRC*5	EC-471
P1442	1442	EVAP SMALL LEAK	EC-475
P1444	1444	PURG VOLUME CONT/V	EC-477
P1446	1446	VENT CONTROL VALVE	EC-485
P1448	1448	VENT CONTROL VALVE	EC-491
P1456	1456	EVAP VERY SML LEAK	EC-498
P1464	1464	FUEL LEVEL SEN/CIRC	EC-507
P1490	1490	VC/V BYPASS/V	EC-510
P1491	1491	VC CUT/V BYPASS/V	EC-517
P1564	1564	ASCD SW	EC-526
P1572	1572	ASCD BRAKE SW	EC-533
P1574	1574	ASCD VHL SPD SEN	EC-543
P1610 - P1615	1610 - 1615	NATS MALFUNCTION	EC-68
P1705	1705	TPV SEN/CIRC A/T	AT-175
P1706	1706	P-N POS SW/CIRCUIT	EC-545
P1760	1760	O/R CLTCH SOL/CIRC	AT-180
P1805	1805	BRAKE SW/CIRCUIT	EC-549

*1: 1st trip DTC No. is the same as DTC No.
*2: These numbers are prescribed by SAE J2012.

*3: In Diagnostic Test Mode II (Self-diagnostic results), these numbers are controlled by NISSAN.
*4: When engine is running.
*5: When the fail-safe operation occurs, the MIL illuminates.
*6: The troubleshooting for this DTC needs CONSULT-II.
*7: When the fail-safe operations for both self-diagnoses occur, the MIL illuminates.

PRECAUTIONS

PFP:00001

Precautions for Supplemental Restraint System (SRS) “AIR BAG” and “SEAT BELT PRE-TENSIONER”

UBS002NT

The Supplemental Restraint System such as “AIR BAG” and “SEAT BELT PRE-TENSIONER”, used along with a front seat belt, helps to reduce the risk or severity of injury to the driver and front passenger for certain types of collision. Information necessary to service the system safely is included in the SRS and SB section of this Service Manual.

WARNING:

- **To avoid rendering the SRS inoperative, which could increase the risk of personal injury or death in the event of a collision which would result in air bag inflation, all maintenance must be performed by an authorized NISSAN/INFINITI dealer.**
- **Improper maintenance, including incorrect removal and installation of the SRS, can lead to personal injury caused by unintentional activation of the system. For removal of Spiral Cable and Air Bag Module, see the SRS section.**
- **Do not use electrical test equipment on any circuit related to the SRS unless instructed to in this Service Manual. SRS wiring harnesses can be identified by yellow and/or orange harness connectors.**

On Board Diagnostic (OBD) System of Engine and A/T

UBS002NU

The ECM has an on board diagnostic system. It will light up the malfunction indicator (MIL) to warn the driver of a malfunction causing emission deterioration.

CAUTION:

- **Be sure to turn the ignition switch OFF and disconnect the battery ground cable before any repair or inspection work. The open/short circuit of related switches, sensors, solenoid valves, etc. will cause the MIL to light up.**
- **Be sure to connect and lock the connectors securely after work. A loose (unlocked) connector will cause the MIL to light up due to the open circuit. (Be sure the connector is free from water, grease, dirt, bent terminals, etc.)**
- **Certain systems and components, especially those related to OBD, may use a new style slide-locking type harness connector. For description and how to disconnect, refer to PG-64, "HARNESS CONNECTOR" .**
- **Be sure to route and secure the harnesses properly after work. The interference of the harness with a bracket, etc. may cause the MIL to light up due to the short circuit.**
- **Be sure to connect rubber tubes properly after work. A misconnected or disconnected rubber tube may cause the MIL to light up due to the malfunction of the fuel injection system, etc.**
- **Be sure to erase the unnecessary malfunction information (repairs completed) from the ECM and TCM (Transmission control module) before returning the vehicle to the customer.**

Precaution

UBS002NV

- **Always use a 12 volt battery as power source.**
- **Do not attempt to disconnect battery cables while engine is running.**
- **Before connecting or disconnecting the ECM harness connector, turn ignition switch OFF and disconnect battery ground cable. Failure to do so may damage the ECM because battery voltage is applied to ECM even if ignition switch is turned off.**
- **Before removing parts, turn ignition switch OFF and then disconnect battery ground cable.**

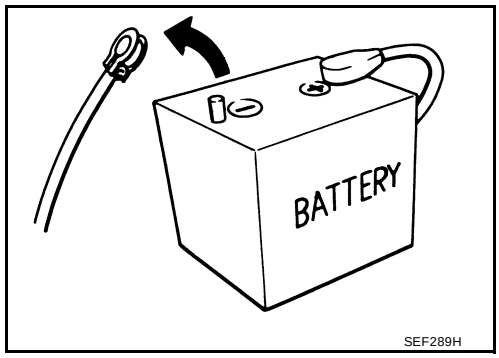

- **Do not disassemble ECM.**
- **If battery cable is disconnected, the memory will return to the initial ECM values.**
  The ECM will now start to self-control at its initial values. Engine operation can vary slightly when the cable is disconnected. However, this is not an indication of a problem. Do not replace parts because of a slight variation.

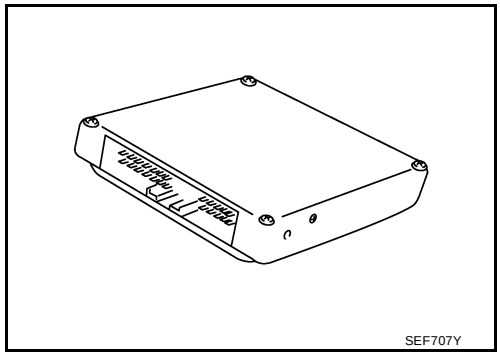

- **When connecting ECM harness connector, fasten it securely with a lever as far as it will go as shown at right.**

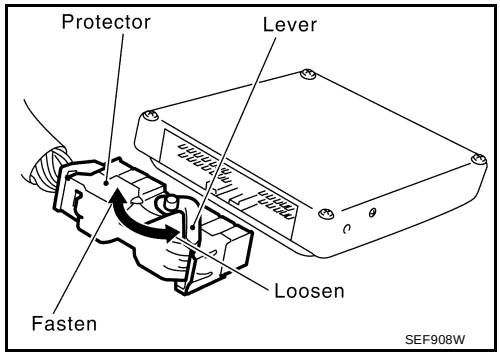

- **When connecting or disconnecting pin connectors into or from ECM, take care not to damage pin terminals (bend or break).**
  Make sure that there are not any bends or breaks on ECM pin terminal, when connecting pin connectors.
- **Securely connect ECM harness connectors.**
  A poor connection can cause an extremely high (surge) voltage to develop in coil and condenser, thus resulting in damage to ICs.
- **Keep engine control system harness at least 10 cm (4 in) away from adjacent harness, to prevent engine control system malfunctions due to receiving external noise, degraded operation of ICs, etc.**
- **Keep engine control system parts and harness dry.**

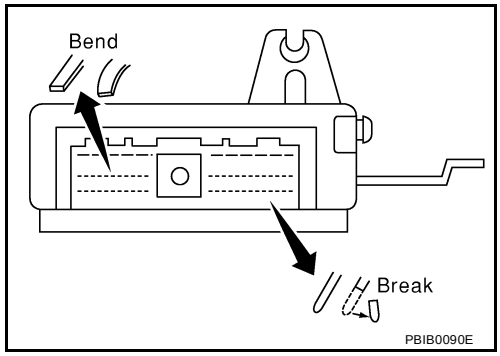

- **Before replacing ECM, perform “ECM Terminals and Reference Value” inspection and make sure ECM functions properly. Refer to EC-99 .**
- **Handle mass air flow sensor carefully to avoid damage.**
- **Do not disassemble mass air flow sensor.**
- **Do not clean mass air flow sensor with any type of detergent.**
- **Do not disassemble electric throttle control actuator.**
- **Even a slight leak in the air intake system can cause serious problems.**
- **Do not shock or jar the camshaft position sensor (PHASE), crankshaft position sensor (POS).**

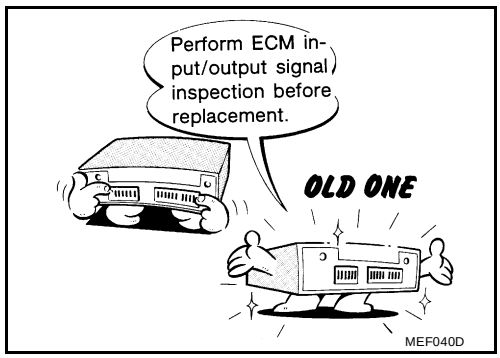

- **After performing each TROUBLE DIAGNOSIS, perform "DTC Confirmation Procedure" or "Overall Function Check".**
  The DTC should not be displayed in the "DTC Confirmation Procedure" if the repair is completed. The "Overall Function Check" should be a good result if the repair is completed.

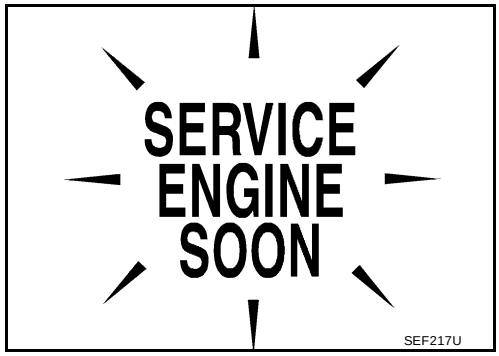

- **When measuring ECM signals with a circuit tester, never allow the two tester probes to contact.**
  Accidental contact of probes will cause a short circuit and damage the ECM power transistor.
- **Do not use ECM ground terminals when measuring input/output voltage. Doing so may result in damage to the ECM's transistor. Use a ground other than ECM terminals, such as the ground.**

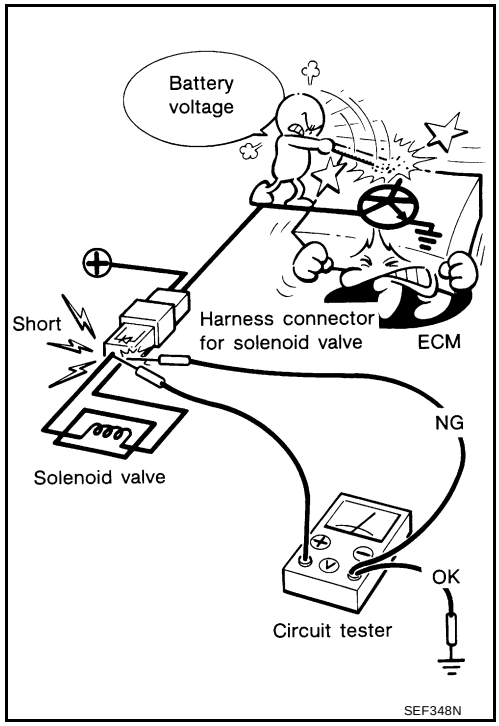

- **Do not operate fuel pump when there is no fuel in lines.**
- **Tighten fuel hose clamps to the specified torque.**

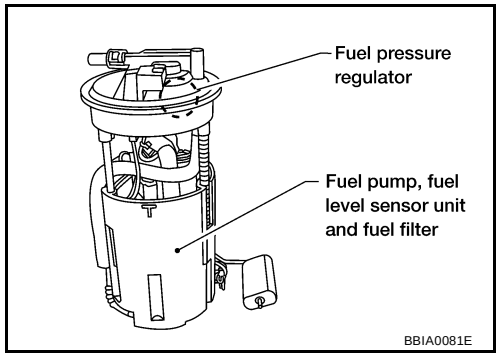

- **Do not depress accelerator pedal when starting.**
- **Immediately after starting, do not rev up engine unnecessarily.**
- **Do not rev up engine just prior to shutdown.**

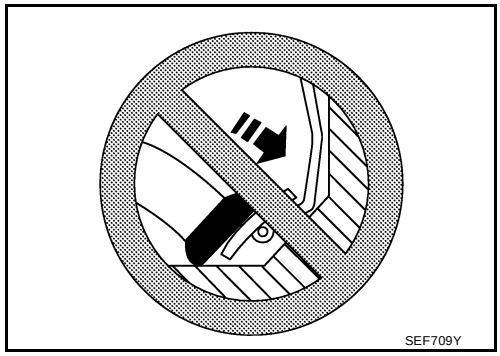

- **When installing C.B. ham radio or a mobile phone, be sure to observe the following as it may adversely affect electronic control systems depending on installation location.**
  - **Keep the antenna as far as possible from the electronic control units.**
  - **Keep the antenna feeder line more than 20 cm (8 in) away from the harness of electronic controls.**
    Do not let them run parallel for a long distance.
  - **Adjust the antenna and feeder line so that the standing-wave radio can be kept smaller.**
  - **Be sure to ground the radio to vehicle body.**

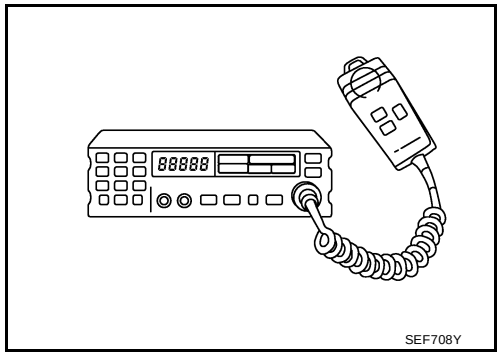

Wiring Diagrams and Trouble Diagnosis

UBS002NW

When you read wiring diagrams, refer to the following:

- GI-12, "How to Read Wiring Diagrams"
- PG-3, "POWER SUPPLY ROUTING CIRCUIT" for power distribution circuit

When you perform trouble diagnosis, refer to the following:

- GI-10, "HOW TO FOLLOW TEST GROUPS IN TROUBLE DIAGNOSES"
- GI-25, "How to Perform Efficient Diagnosis for an Electrical Incident"

PREPARATION

PFP:00002

Special Service Tools

UBS002NX

The actual shapes of Kent-Moore tools may differ from those of special service tools illustrated here.

Tool number Tool name	Description	
KV10117100 Heated oxygen sensor wrench	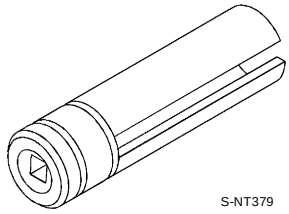 S-NT379	Loosening or tightening heated oxygen sensors with 22 mm (0.87 in) hexagon nut
KV10114400 Heated oxygen sensor wrench	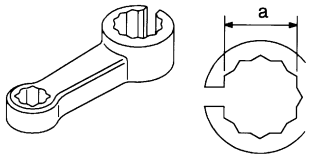 S-NT636	Loosening or tightening heated oxygen sensors **a: 22 mm (0.87 in)**
Fuel pressure gauge kit (J44321)	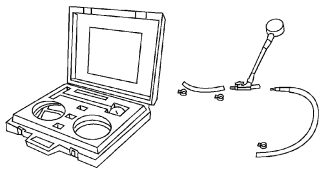 LEC642	Checking fuel pressure
Fuel filler cap adapter (J45356)	 S-NT815	Checking fuel tank vacuum relief valve opening pressure

Commercial Service Tools

UBS002NY

Tool name (Kent-Moore No.)	Description	
Quick connector release (J45488)	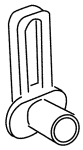 PBIC0198E	Removing fuel tube quick connectors in engine room (Available in SEC. 164 of PARTS CATALOG: Part No. 16441 6N210)
Leak detector (J41416)	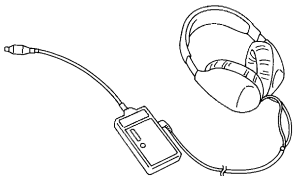 S-NT703	Locating the EVAP leak

Tool name (Kent-Moore No.)	Description	
EVAP service port adapter (J41413-OBD)	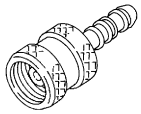 S-NT704	Applying positive pressure through EVAP service port
Socket wrench	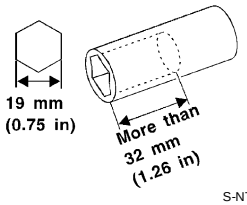 S-NT705	Removing and installing engine coolant temperature sensor
Oxygen sensor thread cleaner ie: (J-43897-18) (J-43897-12)	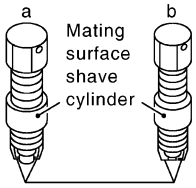 S-NT778	Reconditioning the exhaust system threads before installing a new oxygen sensor. Use with anti-seize lubricant shown below. **a: 18 mm diameter with pitch 1.5 mm for Zirconia Oxygen Sensor** **b: 12 mm diameter with pitch 1.25 mm for Titania Oxygen Sensor**
Anti-seize lubricant ie: (Permatex™ 133AR or equivalent meeting MIL specification MIL-A-907)	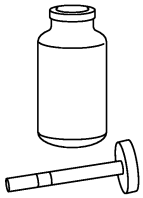 S-NT779	Lubricating oxygen sensor thread cleaning tool when reconditioning exhaust system threads.

ENGINE CONTROL SYSTEM

PFP:23710

System Diagram

UBS002NZ

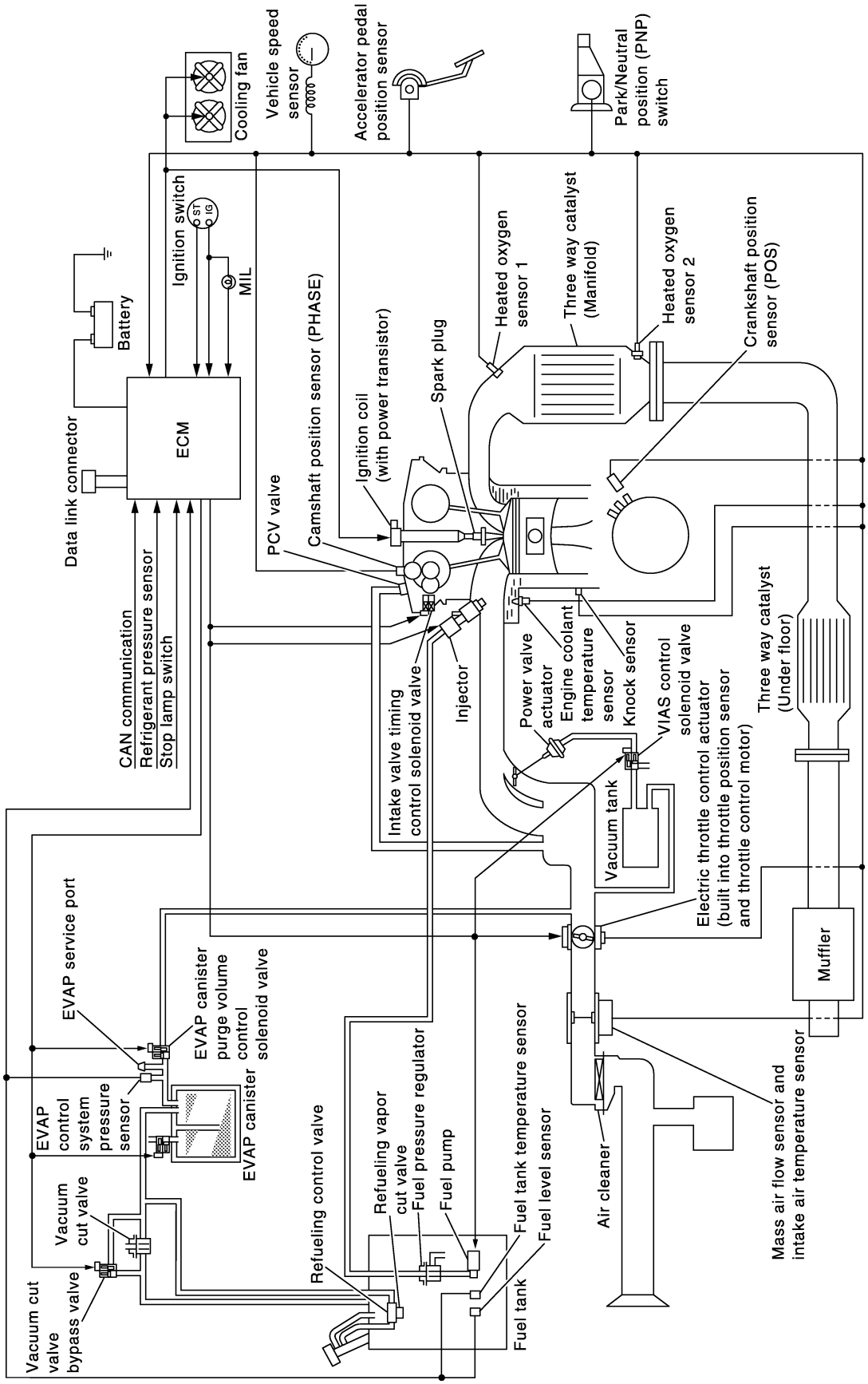

PBIB0821E

Vacuum Hose Drawing

UBS002O0

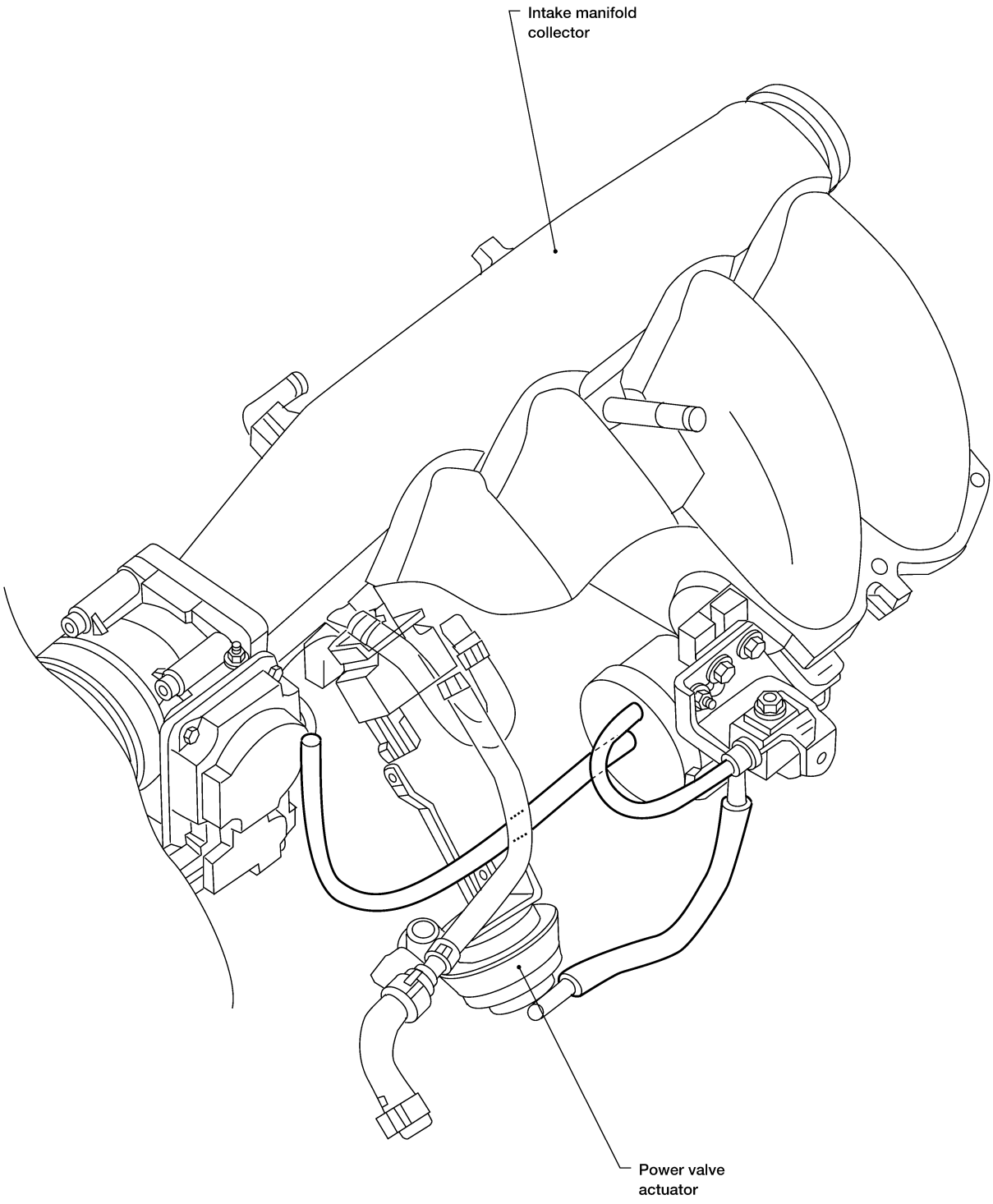

BBIA0050E

Refer to EC-28, "System Diagram" for Vacuum Control System.

System Chart

UBS002O1

Input (Sensor)	ECM Function	Output (Actuator)
● Camshaft position sensor (PHASE) ● Crankshaft position sensor (POS) ● Mass air flow sensor ● Engine coolant temperature sensor ● Heated oxygen sensor 1 ● Throttle position sensor ● Accelerator pedal position sensor ● Park/neutral position (PNP) switch ● Intake air temperature sensor ● Power steering oil pressure switch ● Ignition switch ● Battery voltage ● Knock sensor ● Refrigerant pressure sensor ● Stop lamp switch ● ASCD steering switch ● ASCD brake switch ● ASCD clutch switch ● Fuel level sensor*1 ● EVAP control system pressure sensor ● Fuel tank temperature sensor*1 ● Heated oxygen sensor 2 *2 ● TCM (Transmission control module) *3 ● Air conditioner switch*3 ● Vehicle speed sensor*3 ● Electrical load signal*3	Fuel injection & mixture ratio control	Fuel injectors
	Electronic ignition system	Power transistor
	Fuel pump control	Fuel pump relay *4
	ASCD vehicle speed control	Electric throttle control actuator
	On board diagnostic system	MIL (On the instrument panel)
	Power valve control	VIAS control solenoid valve
	Heated oxygen sensor 1 heater control	Heated oxygen sensor 1 heater
	Heated oxygen sensor 2 heater control	Heated oxygen sensor 2 heater
	EVAP canister purge flow control	EVAP canister purge volume control solenoid valve
	Air conditioning cut control	Air conditioner relay *4
	Cooling fan control	Cooling fan relays *4
	ON BOARD DIAGNOSIS for EVAP system	● EVAP canister vent control valve ● Vacuum cut valve bypass valve

*1: These sensors are not used to control the engine system. They are used only for the on board diagnosis.
*2: This sensor is not used to control the engine system under normal conditions.
*3: The signals are sent to the ECM through CAN communication line.
*4: These relays are built into IPDM E/R.

Multiport Fuel Injection (MFI) System

UBS002O2

INPUT/OUTPUT SIGNAL CHART

Sensor	Input Signal to ECM	ECM function	Actuator
Crankshaft position sensor (POS)	Engine speed	Fuel injection & mixture ratio control	Fuel injectors
Camshaft position sensor (PHASE)	Engine speed and piston position		
Mass air flow sensor	Amount of intake air		
Engine coolant temperature sensor	Engine coolant temperature		
Heated oxygen sensor 1	Density of oxygen in exhaust gas		
Throttle position sensor	Throttle position		
Accelerator pedal position sensor	Accelerator pedal position		
Park/neutral position (PNP) switch	Gear position		
Ignition switch	Start signal		
Knock sensor	Engine knocking condition		
Battery	Battery voltage		
Power steering oil pressure switch	Power steering operation		
Heated oxygen sensor 2 *1	Density of oxygen in exhaust gas		
Vehicle speed sensor *2	Vehicle speed		
Air conditioner switch *2	Air conditioner operation		

*1: Under normal conditions, this sensor is not for engine control operation.
*2: This signal is sent to the ECM through CAN communication line.

SYSTEM DESCRIPTION

The amount of fuel injected from the fuel injector is determined by the ECM. The ECM controls the length of time the valve remains open (injection pulse duration). The amount of fuel injected is a program value in the ECM memory. The program value is preset by engine operating conditions. These conditions are determined by input signals (for engine speed and intake air) from both the crankshaft position sensor and the mass air flow sensor.

VARIOUS FUEL INJECTION INCREASE/DECREASE COMPENSATION

In addition, the amount of fuel injected is compensated to improve engine performance under various operating conditions as listed below.

<Fuel increase>

- During warm-up
- When starting the engine
- During acceleration
- Hot-engine operation
- When selector lever is changed from “N” to “D” (A/T models)
- High-load, high-speed operation

<Fuel decrease>

- During deceleration
- During high engine speed operation

MIXTURE RATIO FEEDBACK CONTROL (CLOSED LOOP CONTROL)

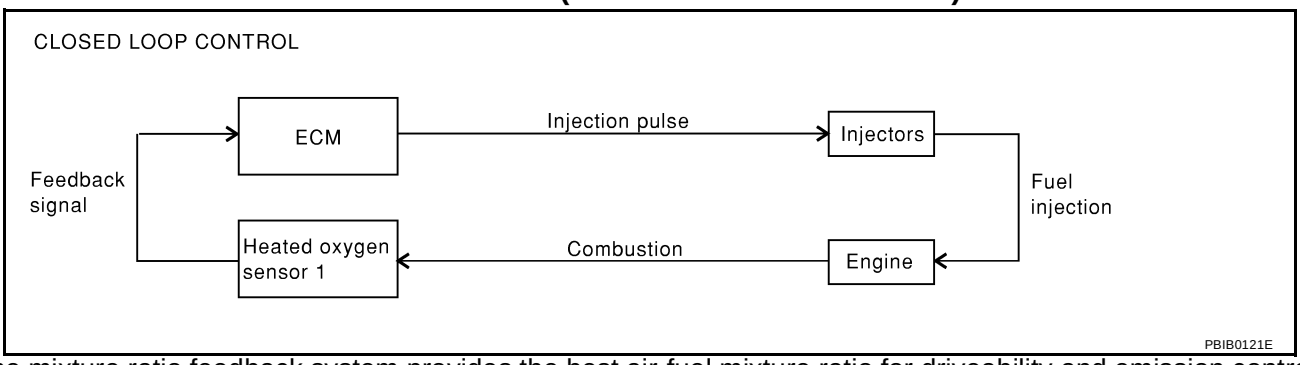

The mixture ratio feedback system provides the best air-fuel mixture ratio for driveability and emission control. The three way catalyst (manifold) can then better reduce CO, HC and NOx emissions. This system uses heated oxygen sensor 1 in the exhaust manifold to monitor if the engine operation is rich or lean. The ECM adjusts the injection pulse width according to the sensor voltage signal. For more information about heated oxygen sensor 1, refer to EC-185 . This maintains the mixture ratio within the range of stoichiometric (ideal air-fuel mixture).
This stage is referred to as the closed loop control condition.
Heated oxygen sensor 2 is located downstream of the three way catalyst (manifold). Even if the switching characteristics of heated oxygen sensor 1 shift, the air-fuel ratio is controlled to stoichiometric by the signal from heated oxygen sensor 2.

Open Loop Control

The open loop system condition refers to when the ECM detects any of the following conditions. Feedback control stops in order to maintain stabilized fuel combustion.

- Deceleration and acceleration
- High-load, high-speed operation
- Malfunction of heated oxygen sensor 1 or its circuit
- Insufficient activation of heated oxygen sensor 1 at low engine coolant temperature
- High engine coolant temperature
- During warm-up
- After shifting from “N” to “D” (A/T models)
- When starting the engine

MIXTURE RATIO SELF-LEARNING CONTROL

The mixture ratio feedback control system monitors the mixture ratio signal transmitted from heated oxygen sensor 1. This feedback signal is then sent to the ECM. The ECM controls the basic mixture ratio as close to the theoretical mixture ratio as possible. However, the basic mixture ratio is not necessarily controlled as originally designed. Both manufacturing differences (i.e., mass air flow sensor hot film) and characteristic changes during operation (i.e., injector clogging) directly affect mixture ratio.
Accordingly, the difference between the basic and theoretical mixture ratios is monitored in this system. This is then computed in terms of “injection pulse duration” to automatically compensate for the difference between the two ratios.
“Fuel trim” refers to the feedback compensation value compared against the basic injection duration. Fuel trim includes short term fuel trim and long term fuel trim.
“Short term fuel trim” is the short-term fuel compensation used to maintain the mixture ratio at its theoretical value. The signal from heated oxygen sensor 1 indicates whether the mixture ratio is RICH or LEAN compared to the theoretical value. The signal then triggers a reduction in fuel volume if the mixture ratio is rich, and an increase in fuel volume if it is lean.
“Long term fuel trim” is overall fuel compensation carried out long-term to compensate for continual deviation of the short term fuel trim from the central value. Such deviation will occur due to individual engine differences, wear over time and changes in the usage environment.

FUEL INJECTION TIMING

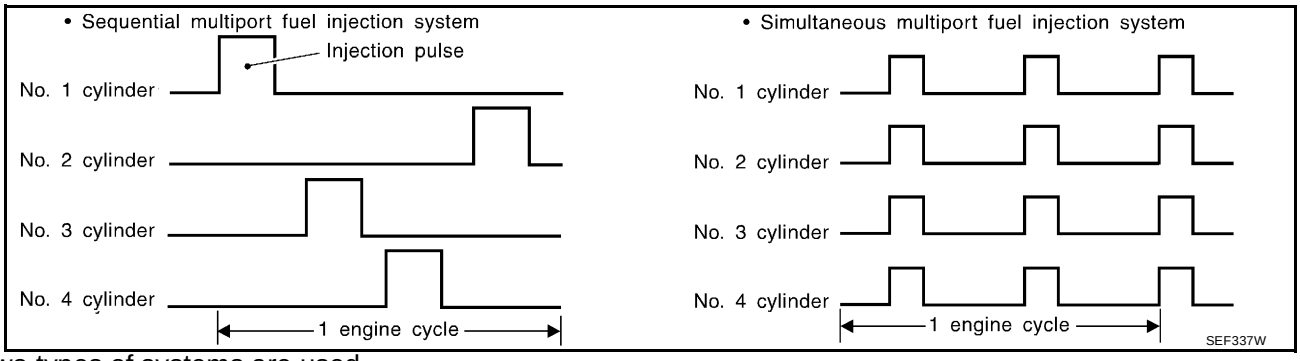

Two types of systems are used.

Sequential Multiport Fuel Injection System

Fuel is injected into each cylinder during each engine cycle according to the firing order. This system is used when the engine is running.

Simultaneous Multiport Fuel Injection System

Fuel is injected simultaneously into all four cylinders twice each engine cycle. In other words, pulse signals of the same width are simultaneously transmitted from the ECM.
The four injectors will then receive the signals two times for each engine cycle.
This system is used when the engine is being started and/or if the fail-safe system (CPU) is operating.

FUEL SHUT-OFF

Fuel to each cylinder is cut off during deceleration or operation of the engine at excessively high speeds.

Electronic Ignition (EI) System

UBS002O3

INPUT/OUTPUT SIGNAL CHART

Sensor	Input Signal to ECM	ECM function	Actuator
Crankshaft position sensor (POS)	Engine speed	Ignition timing control	Power transistor
Camshaft position sensor (PHASE)	Engine speed and piston position		
Mass air flow sensor	Amount of intake air		
Engine coolant temperature sensor	Engine coolant temperature		
Throttle position sensor	Throttle position		
Accelerator pedal position sensor	Accelerator pedal position		
Ignition switch	Start signal		
Knock sensor	Engine knocking		
Park/neutral position (PNP) switch	Gear position		
Battery	Battery voltage		
Vehicle speed sensor	Vehicle speed		

SYSTEM DESCRIPTION

The ignition timing is controlled by the ECM to maintain the best air-fuel ratio for every running condition of the engine. The ignition timing data is stored in the ECM. This data forms the map shown.
The ECM receives information such as the injection pulse width and camshaft position sensor signal. Computing this information, ignition signals are transmitted to the power transistor.
e.g., N: 1,800 rpm, Tp: 1.50 msec
A °BTDC

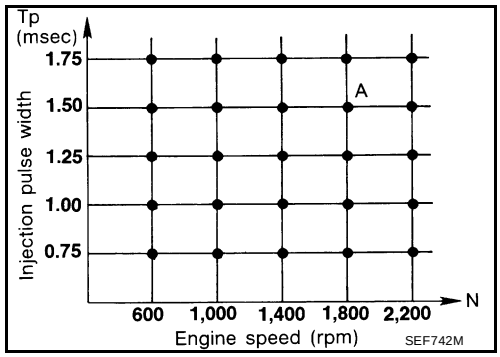

During the following conditions, the ignition timing is revised by the ECM according to the other data stored in the ECM.

- At starting
- During warm-up
- At idle

- At low battery voltage
- During acceleration

The knock sensor retard system is designed only for emergencies. The basic ignition timing is programmed within the anti-knocking zone, if recommended fuel is used under dry conditions. The retard system does not operate under normal driving conditions. If engine knocking occurs, the knock sensor monitors the condition. The signal is transmitted to the ECM. The ECM retards the ignition timing to eliminate the knocking condition.

Air Conditioning Cut Control

UBS002O4

INPUT/OUTPUT SIGNAL CHART

Sensor	Input Signal to ECM	ECM function	Actuator
Air conditioner switch	Air conditioner “ON” signal	Air conditioner cut control	Air conditioner relay
Throttle position sensor	Throttle valve opening angle		
Crankshaft position sensor (POS) Camshaft position sensor (PHASE)	Engine speed		
Engine coolant temperature sensor	Engine coolant temperature		
Ignition switch	Start signal		
Refrigerant pressure sensor	Refrigerant pressure		
Power steering oil pressure switch	Power steering operation		
Vehicle speed sensor	Vehicle speed		

SYSTEM DESCRIPTION

This system improves engine operation when the air conditioner is used.
Under the following conditions, the air conditioner is turned off.

- When the accelerator pedal is fully depressed.
- When cranking the engine.
- At high engine speeds.
- When the engine coolant temperature becomes excessively high.
- When operating power steering during low engine speed or low vehicle speed.
- When engine speed is excessively low.
- When refrigerant pressure is excessively low or high.

Fuel Cut Control (at No Load and High Engine Speed)

UBS002O5

INPUT/OUTPUT SIGNAL CHART

Sensor	Input Signal to ECM	ECM function	Actuator
Park/neutral position (PNP) switch	Neutral position	Fuel cut control	Fuel injectors
Throttle position sensor	Throttle position		
Accelerator pedal position sensor	Accelerator pedal position		
Engine coolant temperature sensor	Engine coolant temperature		
Crankshaft position sensor (POS) Camshaft position sensor (PHASE)	Engine speed		
Vehicle speed sensor	Vehicle speed		

SYSTEM DESCRIPTION

If the engine speed is above 1,800 rpm with no load (for example, in neutral and engine speed over 1,800 rpm) fuel will be cut off after some time. The exact time when the fuel is cut off varies based on engine speed. Fuel cut will operate until the engine speed reaches 1,500 rpm, then fuel cut is cancelled.

NOTE:
This function is different from deceleration control listed under “Multiport Fuel Injection (MFI) System”, EC-31 .

CAN communication

UBS002O6

SYSTEM DESCRIPTION

CAN (Controller Area Network) is a serial communication line for real time application. It is an on-vehicle multiplex communication line with high data communication speed and excellent error detection ability. Many elec-

tronic control units are equipped onto a vehicle, and each control unit shares information and links with other control units during operation (not independent). In CAN communication, control units are connected with 2 communication lines (CAN H line, CAN L line) allowing a high rate of information transmission with less wiring. Each control unit transmits/receives data but selectively reads required data only.

FOR A/T MODELS

System Diagram

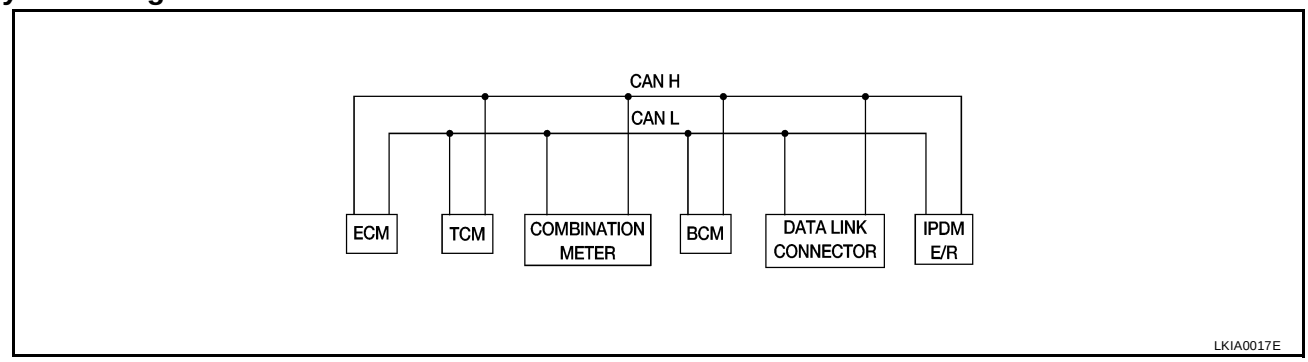

Input/Output Signal Chart

T: Transmit R: Receive

Signals	ECM	TCM	COMBINATION METER	BCM	IPDM E/R
Engine speed signal	T	R	R		R
Engine coolant temperature signal	T	R	R		
Accelerator pedal position signal	T	R			R
Fuel consumption monitor signal	T		R		
A/T warning lamp signal		T	R		
A/T position indicator signal	R	T	R	R(R range only)	
Air conditioner switch signal	R			T	
Air conditioner compressor signal	R				T
A/C compressor request signal	T				R
Blower fan switch signal	R(QR25DE)			T	
Cooling fan motor operation signal	R			T	
Cooling Fan Speed Request signal	T				R
Position Lights Request			R	T	R
Position Lights Status				R	T
Low Beam Request				T	R
Low Beam Status	R			R	T
High Beam Request			R	T	R
High Beam Status	R			R	T
Front Fog Lights Request				T	R
Front Fog Light Status				R	T
OD cancel switch signal		R	T		R
Brake switch signal		R	T		
Vehicle speed signal	R		T		
	R		T	R	
Oil Pressure Switch			R		T
Sleep Request1			R	T	
Sleep Request2				T	R
N range switch signal		R	T		

Signals	ECM	TCM	COMBINATION METER	BCM	IPDM E/R
P range switch signal		R	T		
Seat belt buckle switch signal			T	R	
Door switch signal			R	T	R
Tail lamp request			R	T	R
Turn indicator signal			R	T	
Buzzer output signal			R	T	
Trunk switch signal			R	T	
ASCD main switch signal	T		R		
ASCD cruise signal	T		R		
Wiper operation				R	T
Wiper stop position signal				R	T
Rear window defogger switch signal				T	R
Rear window defogger control signal	R				T

FOR M/T MODELS

System Diagram

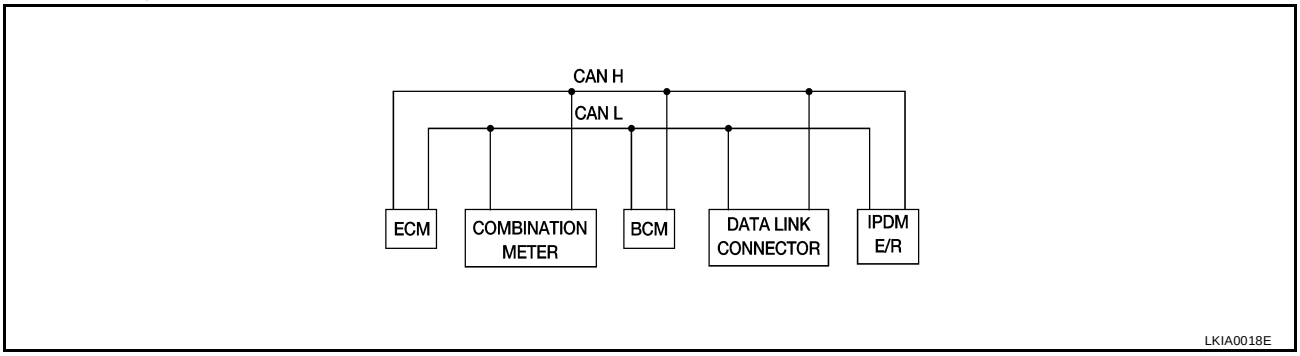

Input/Output Signal Chart

T: Transmit R: Receive

Signals	ECM	COMBINATION METER	BCM	IPDM E/R
Engine speed signal	T	R		R
Engine coolant temperature signal	T	R		
Fuel consumption monitor signal	T	R		
Air conditioner switch signal	R		T	
Air conditioner compressor signal	R			T
A/C compressor request signal	T			R
Blower fan switch signal	R(QR25DE)		T	
Cooling fan motor operation signal	R			T
Cooling Fan Speed Request signal	T			R
Position Lights Request		R	T	R
Position Lights Status			R	T
Low Beam Request			T	R
Low Beam Status	R		R	T
High Beam Request		R	T	R
High Beam Status	R		R	T
Front Fog Lights Request			T	R

Signals	ECM	COMBINATION METER	BCM	IPDM E/R
Front Fog Light Status			R	T
Vehicle speed signal	R	T		
Oil Pressure Switch		R		T
Sleep Request 1		R	T	
Sleep Request 2			T	R
Seat belt buckle switch signal		T	R	
Door switch signal		R	T	R
Tail lamp request		R	T	R
Turn indicator signal		R	T	
Buzzer output signal		R	T	
Trunk switch signal		R	T	
ASCD main switch signal	T	R		
ASCD cruise signal	T	R		
Wiper operation			R	T
Wiper stop position signal			R	T
Rear window defogger switch signal			T	R
Rear window defogger control signal	R			T

BASIC SERVICE PROCEDURE

PFP:00018

Idle Speed and Ignition Timing Check

UBS002O7

IDLE SPEED

With CONSULT-II

Check idle speed in “DATA MONITOR” mode with CONSULT-II.

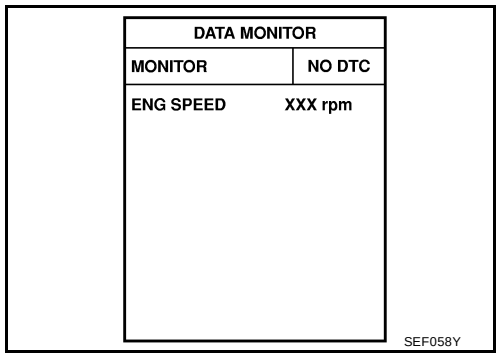

With GST

Check idle speed in "MODE 1" with GST.

IGNITION TIMING

Any of following two methods may be used.

Method A

1. Remove the engine cover (if equipped)
2. Slide the harness protector of ignition coil No. 1 to access the wires.
3. Attach timing light to the wires.
4. Check ignition timing.

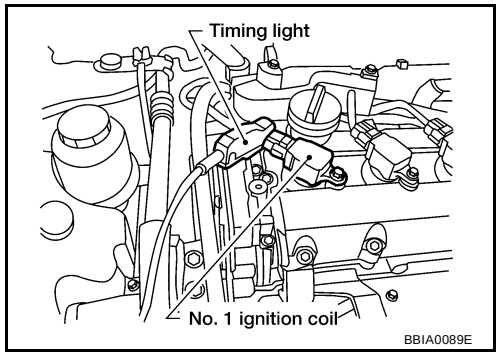

Method B

1. Remove No. 1 ignition coil.

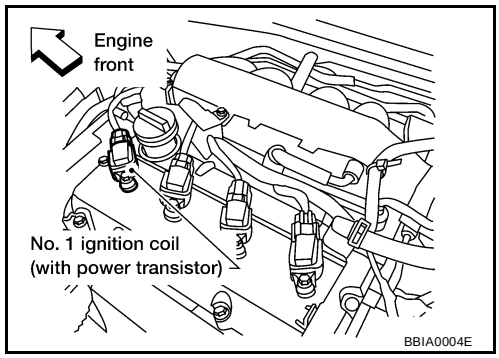

2. Connect No. 1 ignition coil and No. 1 spark plug with suitable high-tension wire as shown, and attach timing light clamp to this wire.

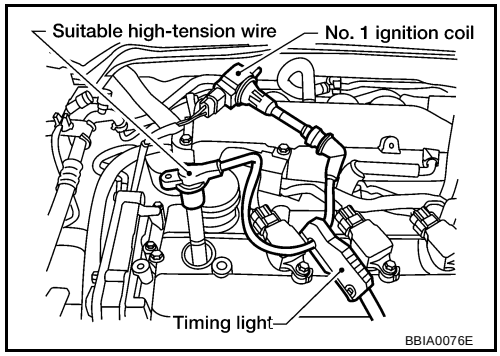

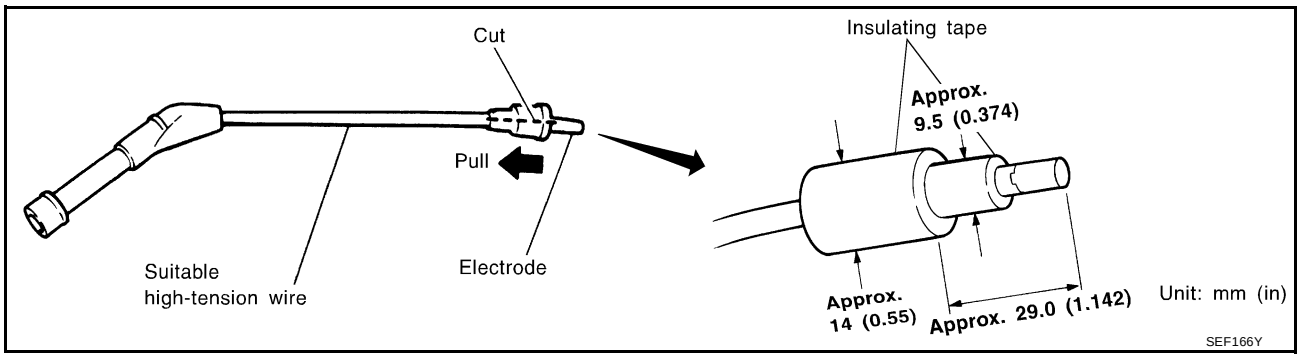

3. Check ignition timing.

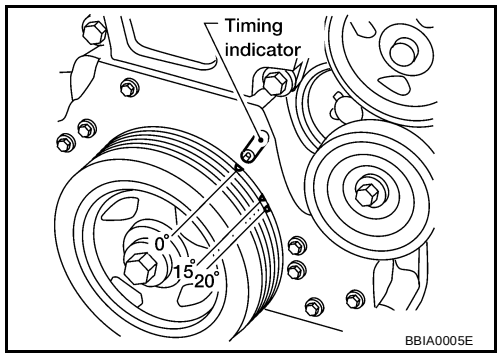

Idle Speed/Ignition Timing/Idle Mixture Ratio Adjustment

UBS002O8

PREPARATION

1. Make sure that the following parts are in good order.
   - Battery
   - Ignition system
   - Engine oil and coolant levels
   - Fuses
   - ECM harness connector
   - Vacuum hoses
   - Air intake system
     (Oil filler cap, oil level gauge, etc.)
   - Fuel pressure
   - Engine compression
   - Throttle valve
   - Evaporative emission system
2. On air conditioner equipped models, checks should be carried out while the air conditioner is “OFF”.
3. On automatic transmission equipped models, when checking idle rpm, ignition timing and mixture ratio, checks should be carried out while shift lever is in “N” position.
4. When measuring “CO” percentage, insert probe more than 40 cm (15.7 in) into tail pipe.
5. Turn off headlamps, heater blower, rear window defogger.

6. Keep front wheels pointed straight ahead.

OVERALL INSPECTION SEQUENCE

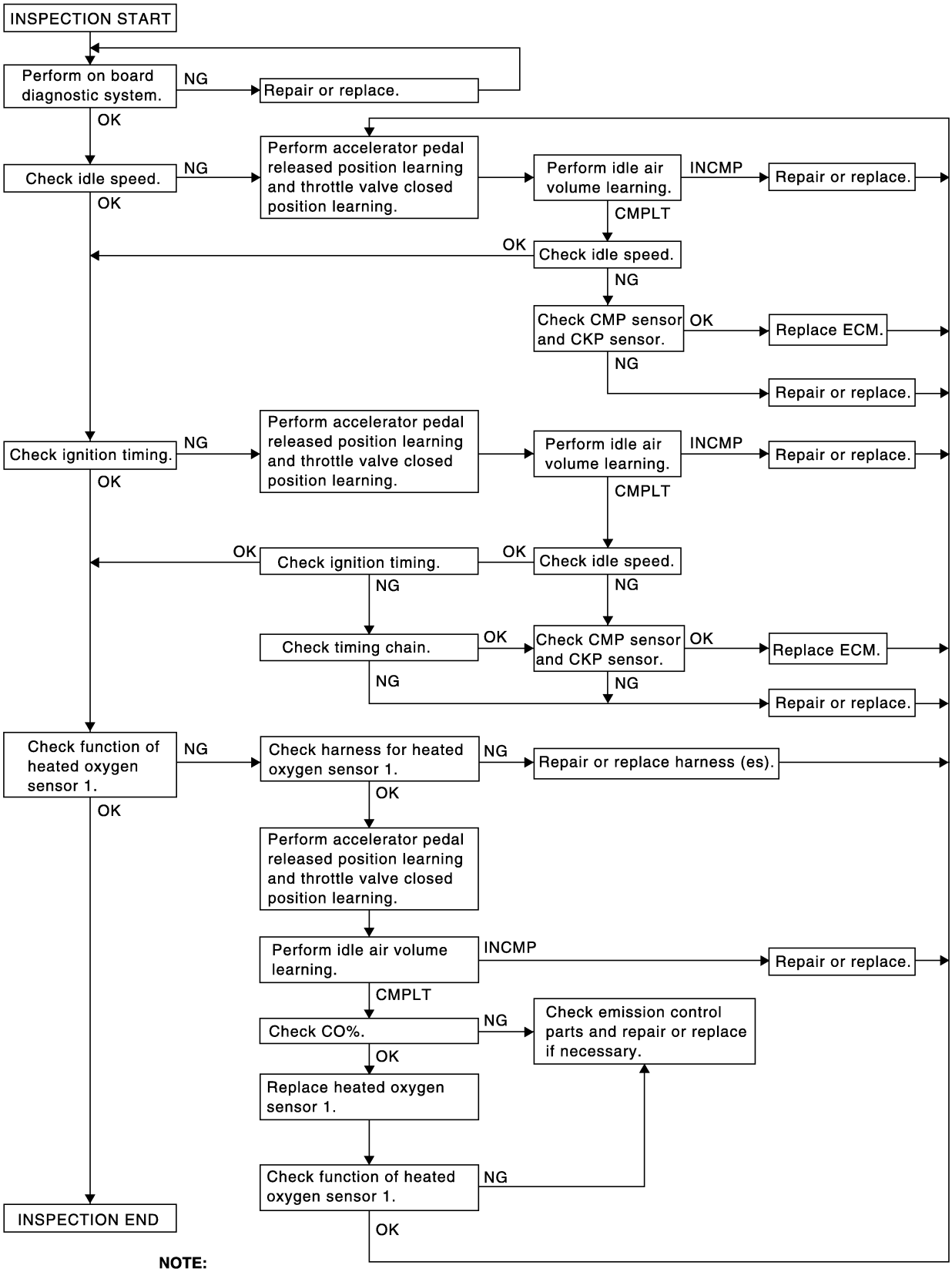

NOTE:
If a vehicle contains a part which is operating outside of design specifications with no MIL illumination, the part shall not be replaced prior to emission testing unless it is determined that the part has been tampered with or abused in such a way that the diagnostic system cannot reasonably be expected to detect the resulting malfunction.

SEC154D

INSPECTION PROCEDURE

1. INSPECTION START

1. Check service records for any recent repairs that may indicate a related problem, or a current need for scheduled maintenance.
2. Open engine hood and check the following:
- Harness connectors for improper connections
- Wiring harness for improper connections, pinches and cut
- Vacuum hoses for splits, kinks and improper connections
- Hoses and ducts for leaks
- Air cleaner clogging
- Gasket

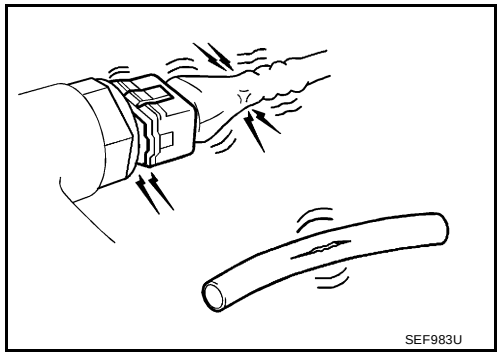

3. Confirm that electrical or mechanical loads are not applied.
- Headlamp switch is OFF.
- Air conditioner switch is OFF.
- Rear window defogger switch is OFF.
- Steering wheel is in the straight-ahead position, etc.
4. Start engine and warm it up until engine coolant temperature indicator points the middle of gauge.
   Ensure engine stays below 1,000 rpm.

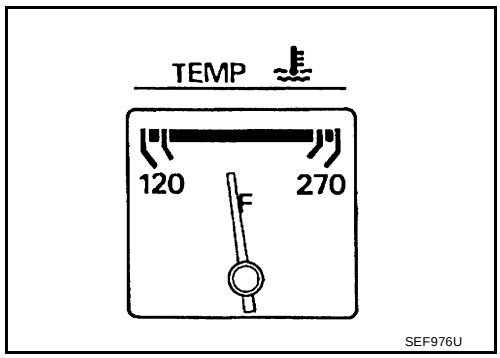

5. Run engine at about 2,000 rpm for about 2 minutes under no-load.
6. Make sure that no DTC is displayed with CONSULT-II or GST.

OK or NG

OK >> GO TO 3.
NG >> GO TO 2.

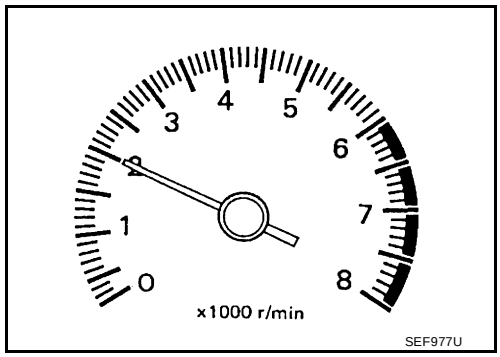

2. REPAIR OR REPLACE

Repair or replace components as necessary according to corresponding “Diagnostic Procedure”.

>> GO TO 3.

3. CHECK TARGET IDLE SPEED

With CONSULT-II

1. Run engine at about 2,000 rpm for about 2 minutes under no-load.
2. Rev engine (2,000 to 3,000 rpm) two or three times under no-load, then run engine at idle speed for about 1 minute.

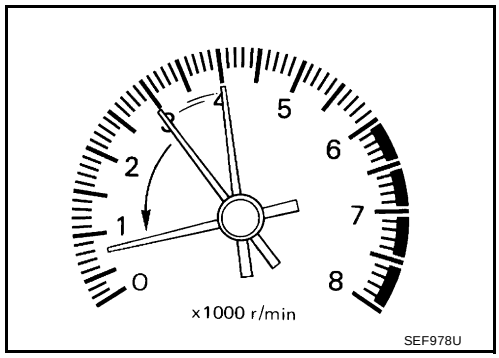

3. Read idle speed in “DATA MONITOR” mode with CONSULT-II.

   M/T: 700 ± 50 rpm

   A/T: 700 ± 50 rpm (in "P" or "N" position)

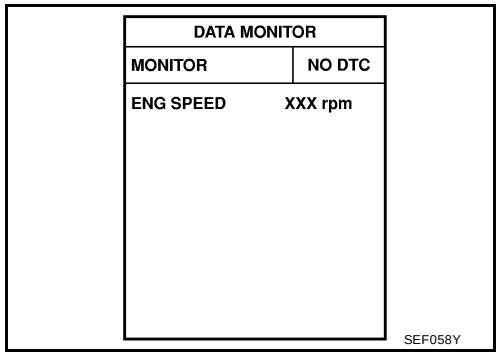

Without CONSULT-II

1. Run engine at about 2,000 rpm for about 2 minutes under no-load.
2. Rev engine (2,000 to 3,000 rpm) two or three times under no-load, then run engine at idle speed for about 1 minute.
3. Check idle speed.

   M/T: 700 ± 50 rpm

   A/T: 700 ± 50 rpm (in "P" or "N" position)

OK or NG

OK >> GO TO 10.
NG >> GO TO 4.

4. PERFORM ACCELERATOR PEDAL RELEASED POSITION LEARNING

1. Stop engine.
2. Perform EC-49, "Accelerator Pedal Released Position Learning" .

>> GO TO 5.

5. PERFORM THROTTLE VALVE CLOSED POSITION LEARNING

Perform EC-49, "Throttle Valve Closed Position Learning" .

>> GO TO 6.

6. PERFORM IDLE AIR VOLUME LEARNING

Perform EC-49, "Idle Air Volume Learning" .
Which is the result CMPLT or INCMP?

CMPLT or INCMP

CMPLT >> GO TO 7.
INCMP >> 1. Follow the construction of “Idle Air Volume Learning”.
2. GO TO 4.

7. CHECK TARGET IDLE SPEED AGAIN

With CONSULT-II

1. Start engine and warm it up to normal operating temperature.
2. Read idle speed in “DATA MONITOR” mode with CONSULT-II.

M/T: 700 ± 50 rpm
A/T: 700 ± 50 rpm (in "P" or "N" position)

Without CONSULT-II

1. Start engine and warm it up to normal operating temperature.
2. Check idle speed.

M/T: 700 ± 50 rpm
A/T: 700 ± 50 rpm (in "P" or "N" position)

OK or NG

OK >> GO TO 10.
NG >> GO TO 8.

8. DETECT MALFUNCTIONING PART

Check the following.

- Check camshaft position sensor (PHASE) and circuit. Refer to EC-291 .
- Check crankshaft position sensor (POS) and circuit. Refer to EC-284 .

OK or NG

OK >> GO TO 9.
NG >> 1. Repair or replace.
2. GO TO 4.

9. CHECK ECM FUNCTION

1. Substitute another known-good ECM to check ECM function. (ECM may be the cause of a problem, but this is the rarely the case.)
2. Perform initialization of NVIS (NATS) system and registration of NVIS (NATS) ignition key IDs. Refer to EC-68, "VIS (Nissan Vehicle Immobilizer System — NATS)" .

>> GO TO 4.

10. CHECK IGNITION TIMING

1. Run engine at idle.
2. Check ignition timing with a timing light.

M/T: 15 ± 5° BTDC

A/T: 15 ± 5° BTDC (in "P" or "N" position)

OK or NG

OK (With CONSULT-II)>>GO TO 19.
OK (Without CONSULT-II)>>GO TO 20.
NG >> GO TO 11.

11. PERFORM ACCELERATOR PEDAL RELEASED POSITION LEARNING

1. Stop engine.
2. Perform EC-49, "Accelerator Pedal Released Position Learning" .

>> GO TO 12.

12. PERFORM THROTTLE VALVE CLOSED POSITION LEARNING

Perform EC-49, "Throttle Valve Closed Position Learning" .

>> GO TO 13.

13. PERFORM IDLE AIR VOLUME LEARNING

Perform EC-49, "Idle Air Volume Learning" .

Which is the result CMPLT or INCMP?

CMPLT or INCMP

CMPLT >> GO TO 14.
INCMP >> 1. Follow the construction of “Idle Air Volume Learning”.
2. GO TO 4.

14. CHECK TARGET IDLE SPEED AGAIN

With CONSULT-II

1. Start engine and warm it up to normal operating temperature.
2. Read idle speed in “DATA MONITOR” mode with CONSULT-II.

M/T: 700 ± 50 rpm

A/T: 700 ± 50 rpm (in "P" or "N" position)

Without CONSULT-II

1. Start engine and warm it up to normal operating temperature.
2. Check idle speed.

M/T: 700 ± 50 rpm

A/T: 700 ± 50 rpm (in "P" or "N" position)

OK or NG

OK >> GO TO 15.
NG >> GO TO 17.

15. CHECK IGNITION TIMING AGAIN

1. Run engine at idle.
2. Check ignition timing with a timing light.

M/T: 15 ± 5° BTDC

A/T: 15 ± 5° BTDC (in "P" or "N" position)

OK or NG

OK (With CONSULT-II)>>GO TO 19.
OK (Without CONSULT-II)>>GO TO 20.
NG >> GO TO 16.

16. CHECK TIMING CHAIN INSTALLATION

Check timing chain installation. Refer to EM-45, "TIMING CHAIN" .

OK or NG

OK >> GO TO 17.
NG >> 1. Repair the timing chain installation.
2. GO TO 4.

17. DETECT MALFUNCTIONING PART

Check the following.

- Check camshaft position sensor (PHASE) and circuit. Refer to EC-291 .
- Check crankshaft position sensor (POS) and circuit. Refer to EC-284 .

OK or NG

OK >> GO TO 18.
NG >> 1. Repair or replace.
2. GO TO 4.

18. CHECK ECM FUNCTION

1. Substitute another known-good ECM to check ECM function. (ECM may be the cause of a problem, but this is the rarely the case.)
2. Perform initialization of NVIS (NATS) system and registration of NVIS (NATS) ignition key IDs. Refer to EC-68, "VIS (Nissan Vehicle Immobilizer System — NATS)" .

>> GO TO 4.

19. CHECK HEATED OXYGEN SENSOR 1 SIGNAL

With CONSULT-II

1. Run engine at about 2,000 rpm for about 2 minutes under no-load.
2. See “HO2S1 MNTR (B1)” in “DATA MONITOR” mode.
3. Running engine at 2,000 rpm under no-load (The engine is warmed up to normal operating temperature.), check that the monitor fluctuates between LEAN and RICH more than 5 times during 10 seconds.

1 time: RICH → LEAN → RICH

2 times: RICH → LEAN → RICH → LEAN → RICH

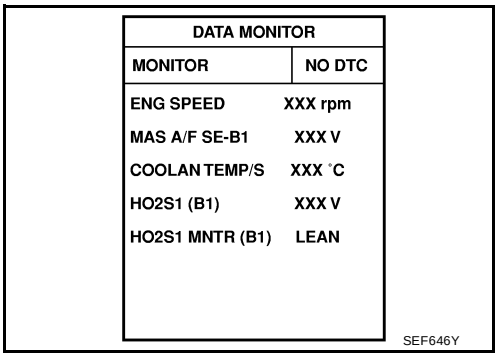

DATA MONITOR	
MONITOR	NO DTC
ENG SPEED	XXX rpm
MAS A/F SE-B1	XXX V
COOLAN TEMP/S	XXX °C
HO2S1 (B1)	XXX V
HO2S1 MNTR (B1)	LEAN

SEF646Y

OK or NG

OK >> **INSPECTION END**
NG (Monitor does not fluctuate.)>>GO TO 21.
NG (Monitor fluctuates less than 5 times.)>>GO TO 28.

20. CHECK HEATED OXYGEN SENSOR 1 SIGNAL

Without CONSULT-II

1. Stop engine and set ECM to Self-diagnostic mode II (Heated oxygen sensor 1 monitor). Refer to EC-70, "HOW TO SWITCH DIAGNOSTIC TEST MODE" .
2. Start engine and run it at about 2,000 rpm for about 2 minutes under no-load.
3. Running engine at 2,000 rpm under no-load (The engine is warmed up to normal operating temperature.), check that the MIL comes on more than 5 times during 10 seconds.

OK or NG

OK >> **INDPECTION END**
NG (MIL does not come on)>>GO TO 21.
NG (MIL comes on less than 5 times)>>GO TO 28.

21. CHECK HEATED OXYGEN SENSOR 1 HARNESS

1. Turn ignition switch "OFF" and disconnect battery ground cable.
2. Disconnect ECM harness connector.
3. Disconnect heated oxygen sensor 1 harness connector.
4. Check harness continuity between ECM terminal 92 and heated oxygen sensor 1 terminal 1. Refer to EC-187, "Wiring Diagram" .

   Continuity should exist.

5. Also check harness for short to ground and short to power.

OK or NG

OK >> GO TO 22.
NG >> 1. Repair or replace harness between ECM and heated oxygen sensor 1.
2. GO TO 4.

22. PERFORM ACCELERATOR PEDAL RELEASED POSITION LEARNING

1. Reconnect ECM harness connector.
2. Perform EC-49, "Accelerator Pedal Released Position Learning" .

>> GO TO 23.

23. PERFORM THROTTLE VALVE CLOSED POSITION LEARNING

Perform EC-49, "Throttle Valve Closed Position Learning" .

>> GO TO 24.

24. PERFORM IDLE AIR VOLUME LEARNING

Refer to EC-49, "Idle Air Volume Learning" .

Which is the result CMPLT or INCMP?

CMPLT or INCMP

CMPLT (With CONSULT-II)>>GO TO 25.
CMPLT (Without CONSULT-II)>>GO TO 26.
INCMP >> 1. Follow the construction of "Idle Air Volume Learning".
2. GO TO 4.

25. CHECK "CO"%

With CONSULT-II

1. Start engine and warm it up until engine coolant temperature indicator points the middle of gauge.
2. Turn ignition switch "OFF", wait at least 10 seconds and then turn "ON".
3. Select "ENG COOLANT TEMP" in "ACTIVE TEST" mode.
4. Set "ENG COOLANT TEMP" to 5°C (41°F) by touching "DWN" and "Qd".
5. Start engine and rev it (2,000 to 3,000 rpm) two or three times under no-load, then run engine at idle speed.
6. Check "CO"%.

Idle CO: 0.3 – 9.5% and engine runs smoothly.

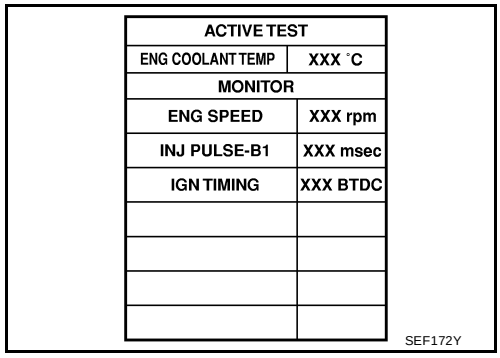

ACTIVE TEST	
ENG COOLANT TEMP	XXX °C
MONITOR	
ENG SPEED	XXX rpm
INJ PULSE-B1	XXX msec
IGN TIMING	XXX BTDC

SEF172Y

OK or NG

OK >> GO TO 28.
NG >> GO TO 27.

26. CHECK "CO"%

Without CONSULT-II

1. Start engine and warm it up until engine coolant temperature indicator points to the middle of gauge.
2. Turn ignition switch "OFF".
3. Disconnect engine coolant temperature sensor harness connector.
4. Connect a resistor (4.4 kΩ) between terminals of engine coolant temperature sensor harness connector.
5. Start engine and rev it (2,000 to 3,000 rpm) two or three times under no-load, then run engine at idle speed.
6. Check "CO"%.

Idle CO: 0.3 – 9.5% and engine runs smoothly.

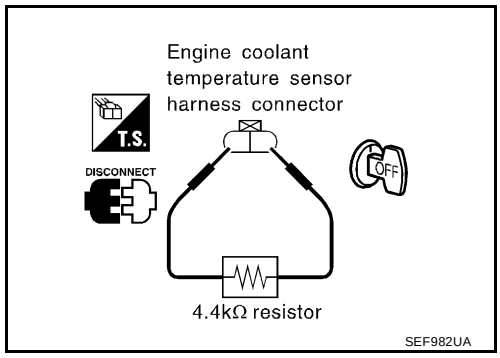

7. After checking "CO"%, turn ignition switch "OFF", disconnect the resistor from the terminals of engine coolant temperature sensor harness connector, and then connect engine coolant temperature sensor harness connector to engine coolant temperature sensor.

OK or NG

OK >> GO TO 28.
NG >> GO TO 27.

27. RECONNECT HEATED OXYGEN SENSOR 1 HARNESS CONNECTOR

1. Turn ignition switch "OFF".
2. Reconnect heated oxygen sensor 1 harness connector.

>> GO TO 31.

28. REPLACE HEATED OXYGEN SENSOR 1

1. Stop engine.
2. Replace heated oxygen sensor 1.

With CONSULT-II>>GO TO 29.
Without CONSULT-II>>GO TO 30.

29. CHECK HEATED OXYGEN SENSOR 1 SIGNAL

With CONSULT-II

1. Start engine and warm it up until engine coolant temperature indicator points the middle of gauge.
2. See "HO2S1 MNTR (B1)" in "DATA MONITOR" mode.
3. Running engine at 2,000 rpm under no-load (The engine is warmed up to normal operating temperature.), check that the monitor fluctuates between LEAN and RICH more than 5 times during 10 seconds.

1 time: **RICH → LEAN → RICH**

2 times: **RICH → LEAN → RICH → LEAN → RICH**

OK or NG

OK >> GO TO 4.
NG >> GO TO 31.

30. CHECK HEATED OXYGEN SENSOR 1 SIGNAL

Without CONSULT-II

1. Set ECM to Self-diagnostic mode II (Heated oxygen sensor 1 monitor). Refer to EC-70, "HOW TO SWITCH DIAGNOSTIC TEST MODE" .
2. Running engine at 2,000 rpm under no-load (The engine is warmed up to normal operating temperature.), check that the MIL comes on more than 5 times during 10 seconds.

OK or NG

OK >> GO TO 4.
NG >> GO TO 31.

31. DETECT MALFUNCTIONING PART

Check the following.

- Check fuel pressure regulator and repair or replace if necessary. Refer to EC-51, "Fuel Pressure Check" .
- Check mass air flow sensor and its circuit, and repair or replace if necessary. Refer to EC-154 , EC-161 and EC-387 .
- Check injector and its circuit, and repair or replace if necessary. Refer to EC-574 .
- Check engine coolant temperature sensor and its circuit, and repair or replace if necessary. Refer to EC-172 and EC-177 .

OK or NG

OK >> GO TO 33.
NG >> 1. Repair or replace.
2. GO TO 32.

32. ERASE UNNECESSARY DTC

After this inspection, unnecessary DTC might be displayed.
Erase the stored memory in ECM and TCM. Refer to EC-67, "HOW TO ERASE EMISSION-RELATED DIAGNOSTIC INFORMATION" and AT-38 .

>> GO TO 4.

33. CHECK ECM FUNCTION

1. Substitute another known-good ECM to check ECM function. (ECM may be the cause of a problem, but this is the rarely the case.)
2. Perform initialization of NVIS (NATS) system and registration of NVIS (NATS) ignition key IDs. Refer to EC-68, "VIS (Nissan Vehicle Immobilizer System — NATS)" .

>> GO TO 4.

Accelerator Pedal Released Position Learning

UBS002O9

DESCRIPTION

"Accelerator Pedal Released Position Learning" is an operation to learn the fully released position of the accelerator pedal by monitoring the accelerator pedal position sensor output signal. It must be performed each time harness connector of accelerator pedal position sensor or ECM is disconnected.

OPERATION PROCEDURE

1. Make sure that accelerator pedal is fully released.
2. Turn ignition switch "ON" and wait at least 2 seconds.
3. Turn ignition switch "OFF" wait at least 10 seconds.
4. Turn ignition switch "ON" and wait at least 2 seconds.
5. Turn ignition switch "OFF" wait at least 10 seconds.

Throttle Valve Closed Position Learning

UBS002OA

DESCRIPTION

"Throttle Valve Closed Position Learning" is an operation to learn the fully closed position of the throttle valve by monitoring the throttle position sensor output signal. It must be performed each time harness connector of electric throttle control actuator or ECM is disconnected.

OPERATION PROCEDURE

1. Make sure that accelerator pedal is fully released.
2. Turn ignition switch "ON".
3. Turn ignition switch "OFF" wait at least 10 seconds.
   Make sure that throttle valve moves during above 10 seconds by confirming the operating sound.

Idle Air Volume Learning

UBS002OB

DESCRIPTION

"Idle Air Volume Learning" is an operation to learn the idle air volume that keeps each engine within the specific range. It must be performed under any of the following conditions:

- Each time electric throttle control actuator or ECM is replaced.
- Idle speed or ignition timing is out of specification.

PREPARATION

Before performing "Idle Air Volume Learning", make sure that all of the following conditions are satisfied.
Learning will be cancelled if any of the following conditions are missed for even a moment.

- Battery voltage: More than 12.9V (At idle)
- Engine coolant temperature: 70 - 95°C (158 - 203°F)
- PNP switch: ON
- Electric load switch: OFF
  (Air conditioner, headlamp, rear window defogger)
  On vehicles equipped with daytime light systems, set lighting switch to the 1st position to light only small lamps.
- Steering wheel: Neutral (Straight-ahead position)
- Vehicle speed: Stopped
- Transmission: Warmed-up
  For A/T models with CONSULT-II, drive vehicle until "FLUID TEMP SE" in "DATA MONITOR" mode of "A/T" system indicates less than 0.9V.
  For A/T models without CONSULT-II and M/T models, drive vehicle for 10 minutes.

OPERATION PROCEDURE

With CONSULT-II

1. Perform EC-49, "Accelerator Pedal Released Position Learning" .
2. Perform EC-49, "Throttle Valve Closed Position Learning" .
3. Start engine and warm it up to normal operating temperature.
4. Check that all items listed under the topic "PRE-CONDITIONING" (previously mentioned) are in good order.

5. Select “IDLE AIR VOL LEARN” in “WORK SUPPORT” mode.

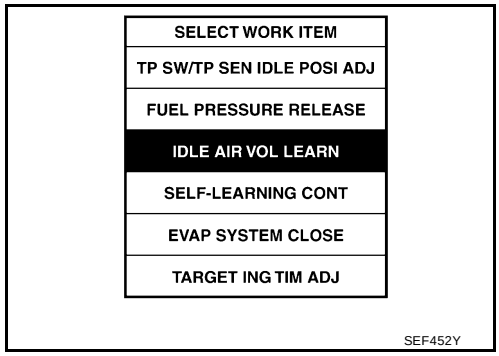

6. Touch “START” and wait 20 seconds.

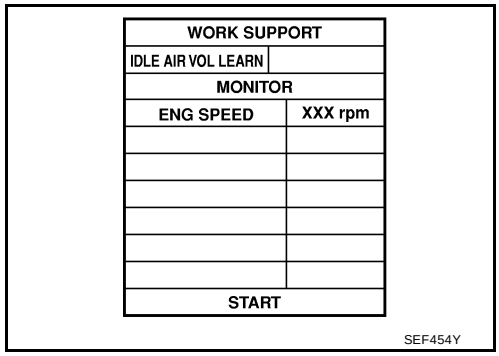

7. Make sure that “CMPLT” is displayed on CONSULT-II screen. If “INCMP” is displayed, “Idle Air Volume Learning” will not be carried out successfully. In this case, find the cause of the problem by referring to the “Diagnostic Procedure” below.
8. Rev up the engine two or three times and make sure that idle speed and ignition timing are within the specifications.

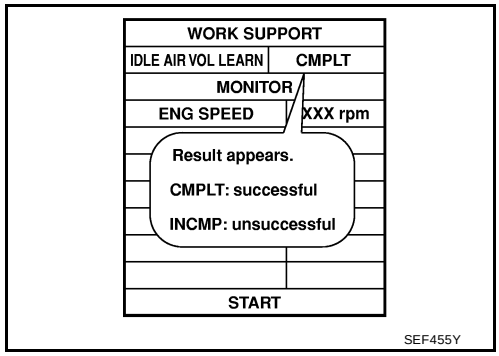

ITEM	SPECIFICATION
Idle speed	M/T: 700±50 rpm A/T: 700±50 rpm (in “P” or “N” position)
Ignition timing	M/T: 15±5° BTDC A/T: 15±5° BTDC (in “P” or “N” position)

Without CONSULT-II

NOTE:

- **It is better to count the time accurately with a clock.**
- **It is impossible to switch the diagnostic mode when an accelerator pedal position sensor circuit has a malfunction.**

1. Perform EC-49, "Accelerator Pedal Released Position Learning" .
2. Perform EC-49, "Throttle Valve Closed Position Learning" .
3. Start engine and warm it up to normal operating temperature.
4. Check that all items listed under the topic “PRE-CONDITIONING” (previously mentioned) are in good order.
5. Turn ignition switch “OFF” and wait at least 10 seconds.
6. Confirm that accelerator pedal is fully released, turn ignition switch “ON” and wait 3 seconds.
7. Repeat the following procedure quickly five times within 5 seconds.

a. Fully depress the accelerator pedal.
b. Fully release the accelerator pedal.

8. Wait 7 seconds, fully depress the accelerator pedal and keep it for approx. 20 seconds until the MIL stops blinking and turned ON.
9. Fully release the accelerator pedal within 3 seconds after the MIL goes off.

10. Start engine and let it idle.
11. Wait 20 seconds.

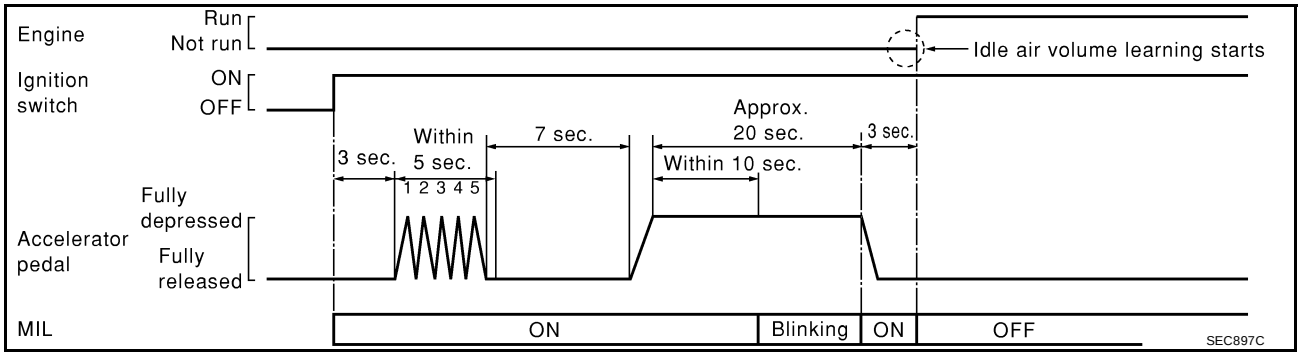

12. Rev up the engine two or three times and make sure that idle speed and ignition timing are within the specifications.

ITEM	SPECIFICATION
Idle speed	M/T: 700±50 rpm A/T: 700±50 rpm (in “P” or “N” position)
Ignition timing	M/T: 15±5° BTDC A/T: 15±5° BTDC (in “P” or “N” position)

13. If idle speed and ignition timing are not within the specification, the result will be incomplete. In this case, find the cause of the problem by referring to the “Diagnostic Procedure” below.

DIAGNOSTIC PROCEDURE

If idle air volume learning cannot be performed successfully, proceed as follows:

1. **Check that throttle valve is fully closed.**
2. **Check PCV valve operation.**
3. **Check that downstream of throttle valve is free from air leakage.**
4. **When the above three items check out OK, engine component parts and their installation condition are questionable. Check and eliminate the cause of the problem.**
   It is useful to perform **EC-126, "TROUBLE DIAGNOSIS - SPECIFICATION VALUE"** **.**
5. **If any of the following conditions occur after the engine has started, eliminate the cause of the problem and perform “Idle air volume learning” all over again:**

- **Engine stalls.**
- **Erroneous idle.**

Fuel Pressure Check

UBS002OC

FUEL PRESSURE RELEASE

Before disconnecting fuel line, release fuel pressure from fuel line to eliminate danger.

NOTE:
Prepare pans or saucers under the disconnected fuel line because the fuel may spill out. The fuel pressure cannot be completely released because L31 models do not have fuel return system.

With CONSULT-II

1. Turn ignition switch “ON”.
2. Perform “FUEL PRESSURE RELEASE” in “WORK SUPPORT” mode with CONSULT-II.
3. Start engine.
4. After engine stalls, crank it two or three times to release all fuel pressure.
5. Turn ignition switch “OFF”.

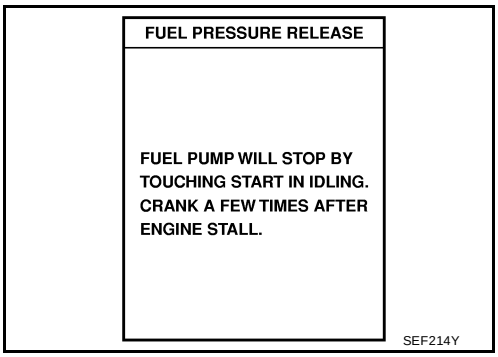

Without CONSULT-II

1. Remove fuel pump fuse located in IPDM E/R.
2. Start engine.
3. After engine stalls, crank it two or three times to release all fuel pressure.
4. Turn ignition switch “OFF”.
5. Reinstall fuel pump fuse after servicing fuel system.

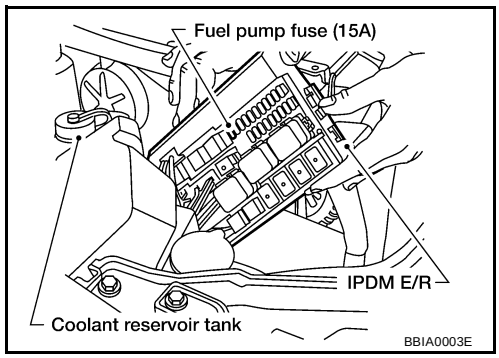

FUEL PRESSURE CHECK

CAUTION:

- **The fuel hose connection method used when taking fuel pressure check must not be used for other purposes.**
- **Be careful not to scratch or put debris around connection area when servicing, so that the quick connector maintains sealability with O-rings inside.**
- **Do not perform fuel pressure check with electrical systems operating (i.e. lights, rear defogger, A/C, etc.). Fuel pressure gauge may indicate false readings due to varying engine load and changes in manifold vacuum.**

1. Release fuel pressure to zero. Refer to EC-51, "FUEL PRESSURE RELEASE" .
2. Prepare fuel hose for fuel pressure check, and connect fuel pressure gauge.
   - Use suitable fuel hose for fuel pressure check (genuine NISSAN fuel hose without quick connector).
   - To avoid unnecessary force or tension to hose, use moderately long fuel hose for fuel pressure check.
   - Do not use the fuel hose for checking fuel pressure with damage or cracks on it.
   - Use Pressure Gauge to check fuel pressure.
3. Remove fuel hose. Refer to EM-16, "INTAKE MANIFOLD" .
   - Do not twist or kink fuel hose because it is plastic hose.
   - Do not remove fuel hose from quick connector.
   - Keep the original fuel hose to be free from intrusion of dust or foreign substances with a suitable cover.
4. Install the fuel pressure gauge as shown in the figure.
   - Wipe off oil or dirt from hose insertion part using cloth moistened with gasoline.
   - Apply proper amount of gasoline between top of the fuel tube and No.1 spool.
   - Insert fuel hose for fuel pressure check until it touches the No.1 spool on fuel tube.
   - Use NISSAN genuine hose clamp (part number: 16439 N4710 or 16439 40U00).
   - When reconnecting fuel line, always use new clamps.
   - When reconnecting fuel hose, check the original fuel hose for damage and abnormality.
   - Use a torque driver to tighten clamps.

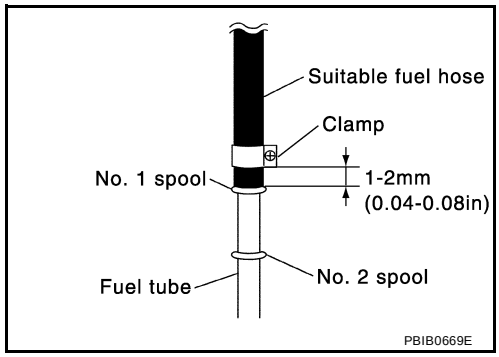

- Install hose clamp to the position within 1 - 2 mm (0.04 - 0.08 in).

Tightening torque: 1 - 1.5 N·m (0.1 - 0.15 kg-m, 9 - 13 in-lb)

- Make sure that clamp screw does not contact adjacent parts.

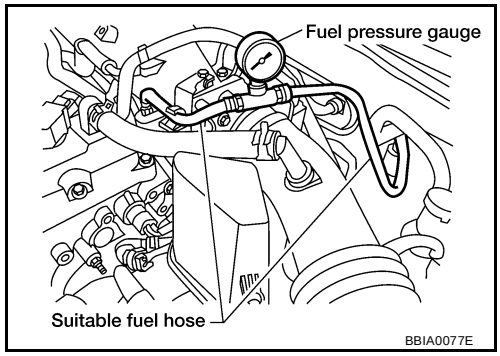

5. After connecting fuel hose for fuel pressure check, pull the hose with a force of approximately 98 N (10 kg, 22 lb) to confirm fuel tube does not come off.
6. Turn ignition switch "ON", and check for fuel leakage.
7. Start engine and check for fuel leakage.
8. Read the indication of fuel pressure gauge.
   - Do not perform fuel pressure check with system operating. Fuel pressure gauge may indicate false readings.
   - During fuel pressure check, confirm for fuel leakage from fuel connection every 3 minutes.

At idling: Approximately 350 kPa (3.7 kg/cm^2 , 51 psi)

9. If result is unsatisfactory, go to next step.
10. Check the following.
    - Fuel hoses and fuel tubes for clogging
    - Fuel filter for clogging
    - Fuel pump
    - Fuel pressure regulator for clogging

    If OK, replace fuel pressure regulator.
    If NG, repair or replace.

ON BOARD DIAGNOSTIC (OBD) SYSTEM

PFP:00028

Introduction

UBS002OD

The ECM has an on board diagnostic system, which detects malfunctions related to engine sensors or actuators. The ECM also records various emission-related diagnostic information including:

Emission-related diagnostic information	SAE Mode
Diagnostic Trouble Code (DTC)	Mode 3 of SAE J1979
Freeze Frame data	Mode 2 of SAE J1979
System Readiness Test (SRT) code	Mode 1 of SAE J1979
1st Trip Diagnostic Trouble Code (1st Trip DTC)	Mode 7 of SAE J1979
1st Trip Freeze Frame data	
Test values and Test limits	Mode 6 of SAE J1979
Calibration ID	Mode 9 of SAE J1979

The above information can be checked using procedures listed in the table below.

×: Applicable —: Not applicable

	DTC	1st trip DTC	Freeze Frame data	1st trip Freeze Frame data	SRT code	Test value
CONSULT-II	×	×	×	×	×	—
GST	×	×*1	×	—	×	×
ECM	×	×*2	—	—	—	—

*1: 1st trip DTCs for self-diagnoses concerning SRT items cannot be shown on the GST display.
*2: When DTC and 1st trip DTC simultaneously appear on the display, they cannot be clearly distinguished from each other.

The malfunction indicator lamp (MIL) on the instrument panel lights up when the same malfunction is detected in two consecutive trips (Two trip detection logic), or when the ECM enters fail-safe mode. (Refer to EC-82 .)

Two Trip Detection Logic

UBS002OE

When a malfunction is detected for the first time, 1st trip DTC and 1st trip Freeze Frame data are stored in the ECM memory. The MIL will not light up at this stage. <1st trip>
If the same malfunction is detected again during the next drive, the DTC and Freeze Frame data are stored in the ECM memory, and the MIL lights up. The MIL lights up at the same time when the DTC is stored. <2nd trip> The “trip” in the “Two Trip Detection Logic” means a driving mode in which self-diagnosis is performed during vehicle operation. Specific on board diagnostic items will cause the ECM to light up or blink the MIL, and store DTC and Freeze Frame data, even in the 1st trip, as shown below.

×: Applicable —: Not applicable

Items	MIL				DTC		1st trip DTC	
	1st trip		2nd trip		1st trip displaying	2nd trip displaying	1st trip displaying	2nd trip displaying
	Blinking	Lighting up	Blinking	Lighting up				
Coolant overtemperature enrichment protection — DTC: P0217	—	×	—	—	×	—	—	—
Misfire (Possible three way catalyst damage) — DTC: P0300 - P0304 is being detected	×	—	—	—	—	—	×	—
Misfire (Possible three way catalyst damage) — DTC: P0300 - P0304 is being detected	—	—	×	—	—	×	—	—
Throttle control motor — DTC: P1128	—	×	—	—	×	—	—	—
Closed loop control — DTC: P1148	—	×	—	—	×	—	—	—
Fail-safe items (Refer to EC-82 .)	—	×	—	—	×	—	×	—
Except above	—	—	—	×	—	×	×	—

Emission-related Diagnostic Information

UBS002OF

EMISSION-RELATED DIAGNOSTIC INFORMATION ITEMS

Items (CONSULT-II screen terms)	DTC*1 *2		SRT code	Test value/ Test limit (GST only)	1st trip DTC	Reference page
	CONSULT-II GST	ECM				
CAN COMM CIRCUIT	U1000	1000*6	—	—	×	EC-138
CAN COMM CIRCUIT	U1001	1001*6	—	—	×	EC-138
NO DTC IS DETECTED. FURTHER TESTING MAY BE REQUIRED.	**P0000**	**0000**	—	—	—	—
INT/V TIM CONT-B1	P0011	0011	—	—	×	EC-141
HO2S1 HTR (B1)	P0031	0031	×	×	×*5	EC-144
HO2S1 HTR (B1)	P0032	0032	×	×	×*5	EC-144
HO2S2 HTR (B1)	P0037	0037	×	×	×*5	EC-149
HO2S2 HTR (B1)	P0038	0038	×	×	×*5	EC-149
MAF SEN/CIRCUIT	P0101	0101	—	—	×	EC-154
MAF SEN/CIRCUIT*3	P0102	0102	—	—	—	EC-161
MAF SEN/CIRCUIT*3	P0103	0103	—	—	—	EC-161
IAT SEN/CIRCUIT	P0112	0112	—	—	×	EC-167
IAT SEN/CIRCUIT	P0113	0113	—	—	×	EC-167
ECT SEN/CIRCUIT*3	P0117	0117	—	—	—	EC-172
ECT SEN/CIRCUIT*3	P0118	0118	—	—	—	EC-172
ECT SENSOR	P0125	0125	—	—	×	EC-177
IAT SENSOR	P0127	0127	—	—	×	EC-180
THERMSTAT FNCTN	P0128	0128	—	—	×	EC-183
HO2S1 (B1)	P0132	0132	×	×	×*5	EC-185
HO2S1 (B1)	P0133	0133	×	×	×*5	EC-191
HO2S1 (B1)	P0134	0134	×	×	×*5	EC-200
HO2S2 (B1)	P0138	0138	×	×	×*5	EC-207
HO2S2 (B1)	P0139	0139	×	×	×*5	EC-213
FUEL SYS-LEAN-B1	P0171	0171	—	—	×	EC-220
FUEL SYS-RICH-B1	P0172	0172	—	—	×	EC-226
FTT SENSOR	P0181	0181	—	—	×	EC-232
FTT SEN/CIRCUIT	P0182	0182	—	—	×	EC-234
FTT SEN/CIRCUIT	P0183	0183	—	—	×	EC-234
ENG OVER TEMP	P0217	0217	—	—	×	EC-238
TP SENSOR*3	P0221	0221	—	—	—	EC-250
TP SEN 1/CIRC*3	P0222	0222	—	—	—	EC-257
TP SEN 1/CIRC*3	P0223	0223	—	—	—	EC-257
APP SENSOR*3	P0226	0226	—	—	—	EC-263
APP SEN 1/CIRC*3	P0227	0227	—	—	—	EC-269
APP SEN 1/CIRC*3	P0228	0228	—	—	—	EC-269
MULTI CYL MISFIRE	P0300	0300	—	—	×	EC-275

Items (CONSULT-II screen terms)	DTC*1 *2		SRT code	Test value/ Test limit (GST only)	1st trip DTC	Reference page
	CONSULT-II GST	ECM				
CYL 1 MISFIRE	P0301	0301	—	—	×	EC-275
CYL 2 MISFIRE	P0302	0302	—	—	×	EC-275
CYL 3 MISFIRE	P0303	0303	—	—	×	EC-275
CYL 4 MISFIRE	P0304	0304	—	—	×	EC-275
KNOCK SEN/CIRC-B1	P0327	0327	—	—	×	EC-280
KNOCK SEN/CIRC-B1	P0328	0328	—	—	×	EC-280
CKP SEN/CIRCUIT	P0335	0335	—	—	×	EC-284
CMP SEN/CIRC-B1	P0340	0340	—	—	×	EC-291
TW CATALYST SYS-B1	P0420	0420	×	×	×*5	EC-297
EVAP PURG FLOW/MON	P0441	0441	×	×	×*5	EC-301
EVAP SMALL LEAK	P0442	0442	×	×	×*5	EC-307
PURG VOLUME CONT/V	P0444	0444	—	—	×	EC-315
PURG VOLUME CONT/V	P0445	0445	—	—	×	EC-315
VENT CONTROL VALVE	P0447	0447	—	—	×	EC-321
EVAP SYS PRES SEN	P0452	0452	—	—	×	EC-328
EVAP SYS PRES SEN	P0453	0453	—	—	×	EC-334
EVAP GROSS LEAK	P0455	0455	—	×	×*5	EC-341
EVAP VERY SML LEAK	P0456	0456	×*4	×	×*5	EC-349
FUEL LEV SEN SLOSH	P0460	0460	—	—	×	EC-358
FUEL LEVEL SENSOR	P0461	0461	—	—	×	EC-363
FUEL LEVL SEN/CIRC	P0462	0462	—	—	×	EC-365
FUEL LEVL SEN/CIRC	P0463	0463	—	—	×	EC-365
VEH SPEED SEN/CIRC*6	P0500	0500	—	—	×	EC-370
ISC SYSTEM	P0506	0506	—	—	×	EC-372
ISC SYSTEM	P0507	0507	—	—	×	EC-374
ECM	P0605	0605	—	—	×	EC-376
MIL/CIRC	P0650	0650	—	—	×	EC-379
PNP SW/CIRC	P0705	0705	—	—	×	AT-103
ATF TEMP SEN/CIRC	P0710	0710	—	—	×	AT-109
VEH SPD SEN/CIR AT*6	P0720	0720	—	—	×	AT-115
ENGINE SPEED SIG	P0725	0725	—	—	×	AT-120
A/T 1ST GR FNCTN	P0731	0731	—	—	×	AT-124
A/T 2ND GR FNCTN	P0732	0732	—	—	×	AT-129
A/T 3RD GR FNCTN	P0733	0733	—	—	×	AT-134
A/T 4TH GR FNCTN	P0734	0734	—	—	×	AT-139
TCC SOLENOID/CIRC	P0740	0740	—	—	×	AT-146
A/T TCC S/V FNCTN	P0744	0744	—	—	×	AT-151
L/PRESS SOL/CIRC	P0745	0745	—	—	×	AT-159
SFT SOL A/CIRC	P0750	0750	—	—	×	AT-165
SFT SOL B/CIRC	P0755	0755	—	—	×	AT-170
ECM BACK UP/CIRC	P1065	1065	—	—	×	EC-383

Items (CONSULT-II screen terms)	DTC*1 *2		SRT code	Test value/ Test limit (GST only)	1st trip DTC	Reference page
	CONSULT-II GST	ECM				
MAF SENSOR*3	P1102	1102	—	—	—	EC-387
INT/V TIM V/CIR-B1	P1111	1111	—	—	×	EC-393
ETC ACTR*3	P1121	1121	—	—	—	EC-397
ETC FUNCTION/CIRC*3	P1122	1122	—	—	—	EC-399
ETC MOT PWR	P1124	1124	—	—	×	EC-406
ETC MOT PWR*3	P1126	1126	—	—	—	EC-406
ETC MOT	P1128	1128	—	—	—	EC-411
HO2S1 (B1)	P1143	1143	×	×	×*5	EC-416
HO2S1 (B1)	P1144	1144	×	×	×*5	EC-422
HO2S2 (B1)	P1146	1146	×	×	×*5	EC-428
HO2S2 (B1)	P1147	1147	×	×	×*5	EC-435
CLOSED LOOP-B1	P1148	1148	—	—	—	EC-442
ENG OVER TEMP	P1217	1217	—	—	×	EC-444
TP SEN 2/CIRC*3	P1223	1223	—	—	—	EC-455
TP SEN 2/CIRC*3	P1224	1224	—	—	—	EC-455
CTP LEARNING	P1225	1225	—	—	×	EC-461
CTP LEARNING	P1226	1226	—	—	×	EC-463
APP SEN 2/CIRC*3	P1227	1227	—	—	—	EC-465
APP SEN 2/CIRC*3	P1228	1228	—	—	—	EC-465
SENSOR POWER/CIRC*3	P1229	1229	—	—	—	EC-471
EVAP SMALL LEAK	P1442	1442	×	×	×*5	EC-475
PURG VOLUME CONT/V	P1444	1444	—	—	×	EC-477
VENT CONTROL VALVE	P1446	1446	—	—	×	EC-485
VENT CONTROL VALVE	P1448	1448	—	—	×	EC-491
EVAP VERY SML LEAK	P1456	1456	×*4	×	×*5	EC-498
FUEL LEVEL SEN/CIRC	P1464	1464	—	—	×	EC-507
VC/V BYPASS/V	P1490	1490	—	—	×	EC-510
VC CUT/V BYPASS/V	P1491	1491	—	—	×	EC-517
ASCD SW	P1564	1564	—	—	×	EC-526
ASCD BRAKE SW	P1572	1572	—	—	×	EC-533
ASCD VHL SPD SEN	P1574	1574	—	—	×	EC-543
TPV SEN/CIRC A/T	P1705	1705	—	—	×	AT-175
P-N POS SW/CIRCUIT	P1706	1706	—	—	×	EC-545
O/R CLTCH SOL/CIRC	P1760	1760	—	—	×	AT-180
BRAKE SW/CIRCUIT	P1805	1805	—	—	×	EC-549

*1: 1st trip DTC No. is the same as DTC No.
*2: These numbers are prescribed by SAE J2012.
*3: When the fail-safe operation occurs, the MIL illuminates.
*4: SRT code will not be set if the self-diagnostic result is NG.
*5: These are not displayed with GST.
*6: When the fail-safe operations for both self-diagnoses occur at the same time, the MIL illuminates.

DTC AND 1ST TRIP DTC

The 1st trip DTC (whose number is the same as the DTC number) is displayed for the latest self-diagnostic result obtained. If the ECM memory was cleared previously, and the 1st trip DTC did not reoccur, the 1st trip DTC will not be displayed.
If a malfunction is detected during the 1st trip, the 1st trip DTC is stored in the ECM memory. The MIL will not light up (two trip detection logic). If the same malfunction is not detected in the 2nd trip (meeting the required driving pattern), the 1st trip DTC is cleared from the ECM memory. If the same malfunction is detected in the 2nd trip, both the 1st trip DTC and DTC are stored in the ECM memory and the MIL lights up. In other words, the DTC is stored in the ECM memory and the MIL lights up when the same malfunction occurs in two consecutive trips. If a 1st trip DTC is stored and a non-diagnostic operation is performed between the 1st and 2nd trips, only the 1st trip DTC will continue to be stored. For malfunctions that blink or light up the MIL during the 1st trip, the DTC and 1st trip DTC are stored in the ECM memory.
Procedures for clearing the DTC and the 1st trip DTC from the ECM memory are described in EC-67, "HOW TO ERASE EMISSION-RELATED DIAGNOSTIC INFORMATION" .
For malfunctions in which 1st trip DTCs are displayed, refer to EC-55, "EMISSION-RELATED DIAGNOSTIC INFORMATION ITEMS" . These items are required by legal regulations to continuously monitor the system/component. In addition, the items monitored non-continuously are also displayed on CONSULT-II.
1st trip DTC is specified in Mode 7 of SAE J1979. 1st trip DTC detection occurs without lighting up the MIL and therefore does not warn the driver of a problem. However, 1st trip DTC detection will not prevent the vehicle from being tested, for example during Inspection/Maintenance (I/M) tests.
When a 1st trip DTC is detected, check, print out or write down and erase (1st trip) DTC and Freeze Frame data as specified in “Work Flow” procedure Step II, refer to EC-78, "WORK FLOW" . Then perform “DTC Confirmation Procedure” or “Overall Function Check” to try to duplicate the problem. If the malfunction is duplicated, the item requires repair.

How to Read DTC and 1st Trip DTC

DTC and 1st trip DTC can be read by the following methods.

WITH CONSULT-II

WITH GST

CONSULT-II or GST (Generic Scan Tool) Examples: P0340, P1148, P1706, etc.
These DTCs are prescribed by SAE J2012.
(CONSULT-II also displays the malfunctioning component or system.)

NO TOOLS

The number of blinks of the MIL in the Diagnostic Test Mode II (Self-Diagnostic Results) indicates the DTC. Example: 0340, 1148, 1706, etc.
These DTCs are controlled by NISSAN.

- **1st trip DTC No. is the same as DTC No.**
- **Output of a DTC indicates a malfunction. However, GST or the Diagnostic Test Mode II do not indicate whether the malfunction is still occurring or has occurred in the past and has returned to normal. CONSULT-II can identify malfunction status as shown below. Therefore, using CONSULT-II (if available) is recommended.**

A sample of CONSULT-II display for DTC and 1st trip DTC is shown below. DTC or 1st trip DTC of a malfunction is displayed in SELF-DIAGNOSTIC RESULTS mode of CONSULT-II. Time data indicates how many times the vehicle was driven after the last detection of a DTC.
If the DTC is being detected currently, the time data will be “0”.
If a 1st trip DTC is stored in the ECM, the time data will be “[1t]”.

DTC display

SELF DIAG RESULTS	
DTC RESULTS	TIME
MAF SEN/CIRCUIT [P0101]	0

1st trip DTC display

SELF DIAG RESULTS	
DTC RESULTS	TIME
MAF SEN/CIRCUIT [P0101]	1t

SEC745C

FREEZE FRAME DATA AND 1ST TRIP FREEZE FRAME DATA

The ECM records the driving conditions such as fuel system status, calculated load value, engine coolant temperature, short term fuel trim, long term fuel trim, engine speed, vehicle speed, base fuel schedule and intake air temperature at the moment a malfunction is detected.
Data which are stored in the ECM memory, along with the 1st trip DTC, are called 1st trip freeze frame data. The data, stored together with the DTC data, are called freeze frame data and displayed on CONSULT-II or GST. The 1st trip freeze frame data can only be displayed on the CONSULT-II screen, not on the GST. For details, see EC-110, "Freeze Frame Data and 1st Trip Freeze Frame Data" .
Only one set of freeze frame data (either 1st trip freeze frame data or freeze frame data) can be stored in the ECM. 1st trip freeze frame data is stored in the ECM memory along with the 1st trip DTC. There is no priority for 1st trip freeze frame data and it is updated each time a different 1st trip DTC is detected. However, once freeze frame data (2nd trip detection/MIL on) is stored in the ECM memory, 1st trip freeze frame data is no longer stored. Remember, only one set of freeze frame data can be stored in the ECM. The ECM has the following priorities to update the data.

Priority	Items	
1	Freeze frame data	Misfire — DTC: P0300 - P0304 Fuel Injection System Function — DTC: P0171, P0172
2		Except the above items (Includes A/T related items)
3	1st trip freeze frame data	

For example, the EGR malfunction (Priority: 2) was detected and the freeze frame data was stored in the 2nd trip. After that when the misfire (Priority: 1) is detected in another trip, the freeze frame data will be updated from the EGR malfunction to the misfire. The 1st trip freeze frame data is updated each time a different malfunction is detected. There is no priority for 1st trip freeze frame data. However, once freeze frame data is stored in the ECM memory, 1st trip freeze data is no longer stored (because only one freeze frame data or 1st trip freeze frame data can be stored in the ECM). If freeze frame data is stored in the ECM memory and freeze frame data with the same priority occurs later, the first (original) freeze frame data remains unchanged in the ECM memory.
Both 1st trip freeze frame data and freeze frame data (along with the DTCs) are cleared when the ECM memory is erased. Procedures for clearing the ECM memory are described in EC-55, "EMISSION-RELATED DIAGNOSTIC INFORMATION ITEMS" .

SYSTEM READINESS TEST (SRT) CODE

System Readiness Test (SRT) code is specified in Mode 1 of SAE J1979.
As part of an enhanced emissions test for Inspection & Maintenance (I/M), certain states require the status of SRT be used to indicate whether the ECM has completed self-diagnosis of major emission systems and components. Completion must be verified in order for the emissions inspection to proceed.
If a vehicle is rejected for a State emissions inspection due to one or more SRT items indicating “INCMP”, use the information in this Service Manual to set the SRT to “CMPLT”.
In most cases the ECM will automatically complete its self-diagnosis cycle during normal usage, and the SRT status will indicate “CMPLT” for each application system. Once set as “CMPLT”, the SRT status remains “CMPLT” until the self-diagnosis memory is erased.
Occasionally, certain portions of the self-diagnostic test may not be completed as a result of the customer's normal driving pattern; the SRT will indicate “INCMP” for these items.

NOTE:
The SRT will also indicate “INCMP” if the self-diagnosis memory is erased for any reason or if the ECM memory power supply is interrupted for several hours.
If, during the state emissions inspection, the SRT indicates “CMPLT” for all test items, the inspector will continue with the emissions test. However, if the SRT indicates “INCMP” for one or more of the SRT items the vehicle is returned to the customer untested.

NOTE:
If MIL is “ON” during the state emissions inspection, the vehicle is also returned to the customer untested even though the SRT indicates “CMPLT” for all test items. Therefore, it is important to check SRT (“CMPLT”) and DTC (No DTCs) before the inspection.

SRT Item

The table below shows required self-diagnostic items to set the SRT to “CMPLT”.

SRT item (CONSULT-II indication)	Perfor-mance Priority*1	Required self-diagnostic items to set the SRT to “CMPLT”	Corresponding DTC No.
CATALYST	2	Three way catalyst function	P0420
EVAP SYSTEM	1	EVAP control system	P0442, P1442
	2	EVAP control system	P0456, P1456
	2	EVAP control system purge flow monitoring	P0441
HO2S	2	Heated oxygen sensor 1	P0132
		Heated oxygen sensor 1	P0133
		Heated oxygen sensor 1	P0134
		Heated oxygen sensor 1	P1143
		Heated oxygen sensor 1	P1144
		Heated oxygen sensor 2	P0138
		Heated oxygen sensor 2	P0139
		Heated oxygen sensor 2	P1146
		Heated oxygen sensor 2	P1147
HO2S HTR	2	Heated oxygen sensor 1 heater	P0031, P0032
		Heated oxygen sensor 2 heater	P0037, P0038

*1: If completion of several SRTs is required, perform driving patterns (DTC confirmation procedure), one by one based on the priority for models with CONSULT-II.

SRT Set Timing

SRT is set as “CMPLT” after self-diagnosis has been performed one or more times. Completion of SRT is done regardless of whether the result is OK or NG. The set timing is different between OK and NG results and is shown in the table below.

Self-diagnosis result		Example				
		Diagnosis	Ignition cycle ← ON → OFF	← ON → OFF	← ON → OFF	← ON →
All OK	Case 1	P0400	OK (1)	— (1)	OK (2)	— (2)
		P0402	OK (1)	— (1)	— (1)	OK (2)
		P1402	OK (1)	OK (2)	— (2)	— (2)
		SRT of EGR	“CMPLT”	“CMPLT”	“CMPLT”	“CMPLT”
	Case 2	P0400	OK (1)	— (1)	— (1)	— (1)
		P0402	— (0)	— (0)	OK (1)	— (1)
		P1402	OK (1)	OK (2)	— (2)	— (2)
		SRT of EGR	“INCMP”	“INCMP”	“CMPLT”	“CMPLT”
NG exists	Case 3	P0400	OK	OK	—	—
		P0402	—	—	—	—
		P1402	NG	—	NG	NG (Consecutive NG)
		(1st trip) DTC	1st trip DTC	—	1st trip DTC	DTC (= MIL “ON”)
		SRT of EGR	“INCMP”	“INCMP”	“INCMP”	“CMPLT”

OK: Self-diagnosis is carried out and the result is OK.
NG: Self-diagnosis is carried out and the result is NG.
—: Self-diagnosis is not carried out.

When all SRT related self-diagnoses showed OK results in a single cycle (Ignition OFF-ON-OFF), the SRT will indicate “CMPLT”. → Case 1 above
When all SRT related self-diagnoses showed OK results through several different cycles, the SRT will indicate “CMPLT” at the time the respective self-diagnoses have at least one OK result. → Case 2 above
If one or more SRT related self-diagnoses showed NG results in 2 consecutive cycles, the SRT will also indicate “CMPLT”. → Case 3 above
The table above shows that the minimum number of cycles for setting SRT as “INCMP” is one (1) for each self-diagnosis (Case 1 & 2) or two (2) for one of self-diagnoses (Case 3). However, in preparation for the state emissions inspection, it is unnecessary for each self-diagnosis to be executed twice (Case 3) for the following reasons:

- The SRT will indicate “CMPLT” at the time the respective self-diagnoses have one (1) OK result.
- The emissions inspection requires “CMPLT” of the SRT only with OK self-diagnosis results.
- When, during SRT driving pattern, 1st trip DTC (NG) is detected prior to “CMPLT” of SRT, the self-diagnosis memory must be erased from ECM after repair.
- If the 1st trip DTC is erased, all the SRT will indicate “INCMP”.

  NOTE:
  SRT can be set as “CMPLT” together with the DTC(s). Therefore, DTC check must always be carried out prior to the state emission inspection even though the SRT indicates “CMPLT”.

SRT Service Procedure

If a vehicle has failed the state emissions inspection due to one or more SRT items indicating “INCMP”, review the flowchart diagnostic sequence on the next page.

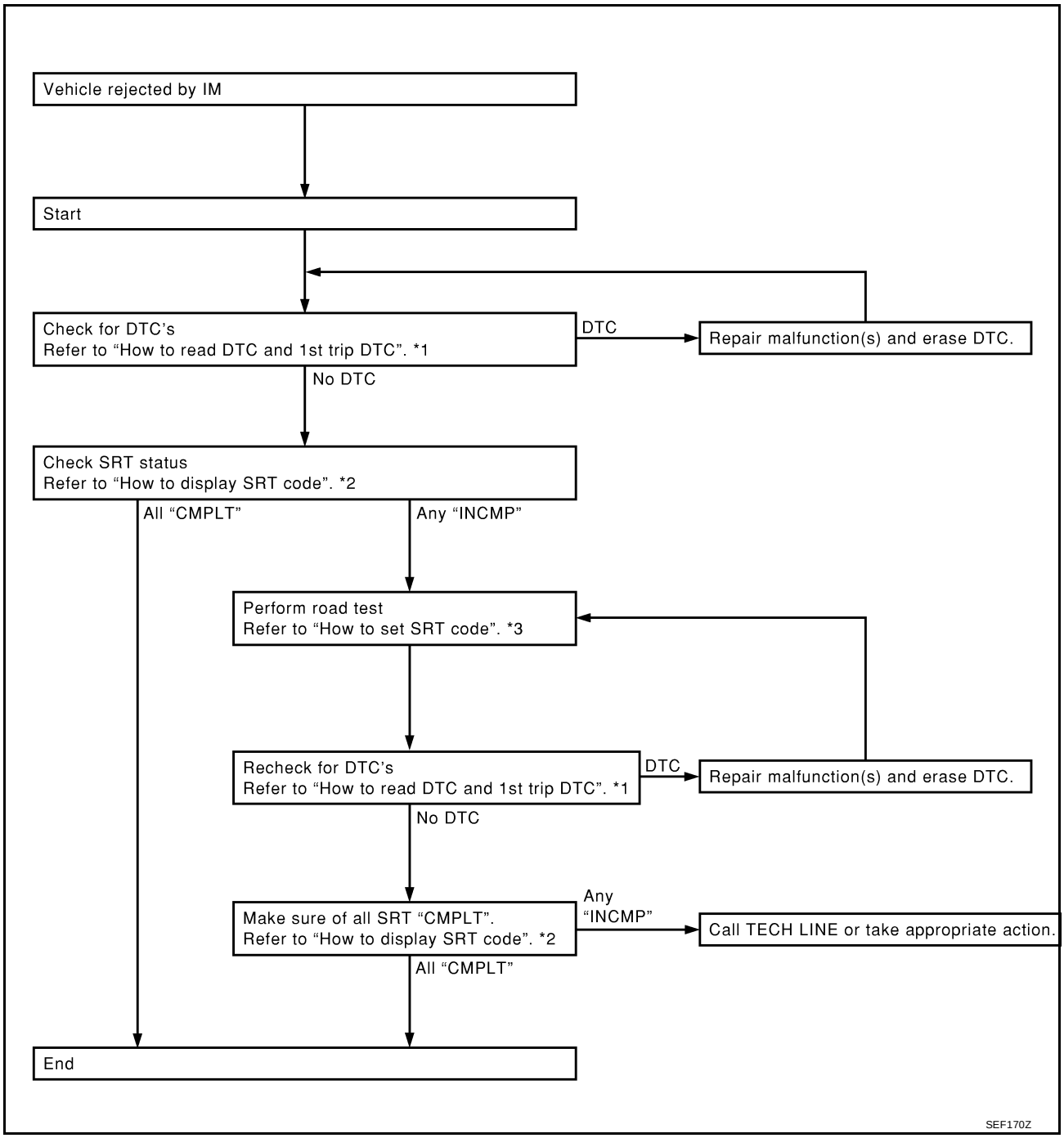

*1 EC-58 *2 EC-62 *3 EC-63

How to Display SRT Code

WITH CONSULT-II

Selecting "SRT STATUS" in "DTC CONFIRMATION" mode with CONSULT-II.

For items whose SRT codes are set, a "CMPLT" is displayed on the CONSULT-II screen; for items whose SRT codes are not set, "INCMP" is displayed.

A sample of CONSULT-II display for SRT code is shown at right.

"INCMP" means the self-diagnosis is incomplete and SRT is not set.

"CMPLT" means the self-diagnosis is complete and SRT is set.

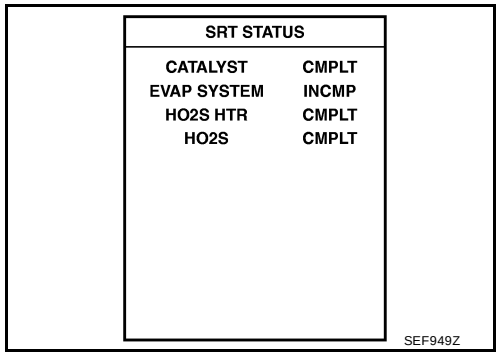

SRT STATUS	
CATALYST	CMPLT
EVAP SYSTEM	INCMP
HO2S HTR	CMPLT
HO2S	CMPLT

SEF949Z

WITH GST

Selecting Mode 1 with GST (Generic Scan Tool)

How to Set SRT Code

To set all SRT codes, self-diagnosis for the items indicated above must be performed one or more times. Each diagnosis may require a long period of actual driving under various conditions.

WITH CONSULT-II

Perform corresponding DTC Confirmation Procedure one by one based on “Performance Priority” in the table on EC-60, "SRT Item" .

WITHOUT CONSULT-II

The most efficient driving pattern in which SRT codes can be properly set is explained on the next page. The driving pattern should be performed one or more times to set all SRT codes.

Driving Pattern

Driving pattern

Note: Always drive vehicle in safe manner according to traffic conditions and obey all traffic laws.
Refer to next page for more information and explanation of chart.

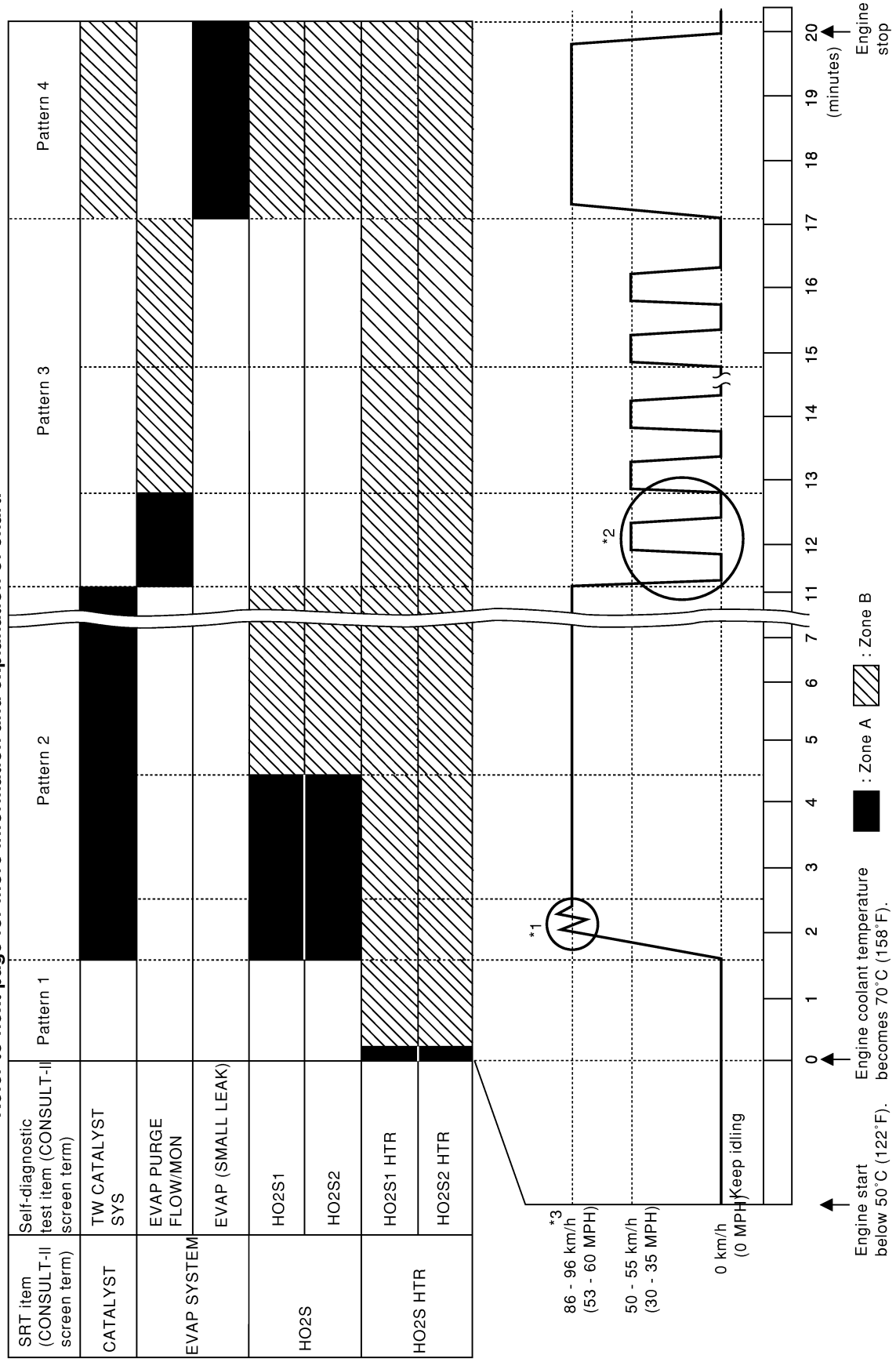

PBIB0123E

- The time required for each diagnosis varies with road surface conditions, weather, altitude, individual driving habits, etc.
  Zone A refers to the range where the time, required for the diagnosis under normal conditions*, is the shortest.
  Zone B refers to the range where the diagnosis can still be performed if the diagnosis is not completed within zone A.

*: Normal conditions refer to the following:

- Sea level
- Flat road
- Ambient air temperature: 20 - 30°C (68 - 86°F)
- Diagnosis is performed as quickly as possible under normal conditions.
  Under different conditions [For example: ambient air temperature other than 20 - 30°C (68 - 86°F)], diagnosis may also be performed.

Pattern 1:

- **The engine is started at the engine coolant temperature of –10 to 35°C (14 to 95°F) (where the voltage between the ECM terminal 93 and ground is 3.0 - 4.3V).**
- **The engine must be operated at idle speed until the engine coolant temperature is greater than 70°C (158°F) (where the voltage between the ECM terminal 93 and ground is lower than 1.4V).**
- **The engine is started at the fuel tank temperature of warmer than 0°C (32°F) (where the voltage between the ECM terminal 70 and ground is less than 4.1V).**

Pattern 2:

- When steady-state driving is performed again even after it is interrupted, each diagnosis can be conducted. In this case, the time required for diagnosis may be extended.

Pattern 3:

- The driving pattern outlined in *2 must be repeated at least 3 times.

Pattern 4:

- Tests are performed after the engine has been operated for at least 17 minutes.
- The accelerator pedal must be held very steady during steady-state driving.
- If the accelerator pedal is moved, the test must be conducted all over again.

*1: Depress the accelerator pedal until vehicle speed is 90 km/h (56 MPH), then release the accelerator pedal and keep it released for more than 10 seconds. Depress the accelerator pedal until vehicle speed is 90 km/h (56 MPH) again.

*2: Operate the vehicle in the following driving pattern.

1. Decelerate vehicle to 0 km/h (0 MPH) and let engine idle.
2. Repeat driving pattern shown at right at least 10 times.

– **During acceleration, hold the accelerator pedal as steady as possible.**

*3: Checking the vehicle speed with GST is advised.

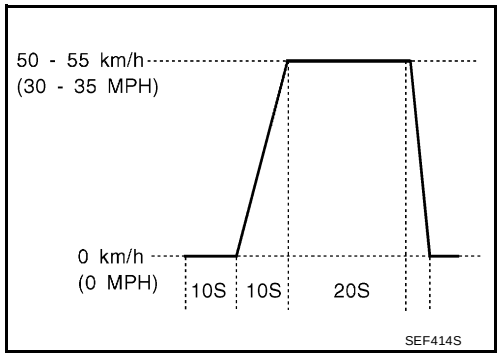

Suggested Transmission Gear Position for A/T Models

Set the selector lever in the “D” position with the overdrive switch turned ON.

Suggested upshift speeds for M/T models

Shown below are suggested vehicle speeds for shifting into a higher gear. These suggestions relate to fuel economy and vehicle performance. Actual upshift speeds will vary according to road conditions, the weather and individual driving habits.

	For normal acceleration in low altitude areas [less than 1,219 m (4,000 ft)]:	For quick acceleration in low altitude areas	For high attitude areas [over 1,219m (4,000 ft)]:
Gear change	ACCEL shift point km/h (MPH)	km/h (MPH)	km/h (MPH)
1st to 2nd	24 (15)	24 (15)	24 (15)
2nd to 3rd	29 (18)	40 (25)	40 (25)
3rd to 4th	48 (30)	58 (36)	64 (40)
4th to 5th	62 (39)	64 (40)	75 (45)

Suggested Maximum Speed in Each Gear

Downshift to a lower gear if the engine is not running smoothly, or if you need to accelerate.
Do not exceed the maximum suggested speed (shown below) in any gear. For level road driving, use the highest gear suggested for that speed. Always observe posted speed limits and drive according to the road conditions to ensure safe operation. Do not over-rev the engine when shifting to a lower gear as it may cause engine damage or loss of vehicle control.

Gear	km/h (MPH)
1st	48 (30)
2nd	88 (55)
3rd	—
4th	—
5th	—

TEST VALUE AND TEST LIMIT (GST ONLY — NOT APPLICABLE TO CONSULT-II)

The following is the information specified in Mode 6 of SAE J1979.
The test value is a parameter used to determine whether a system/circuit diagnostic test is “OK” or “NG” while being monitored by the ECM during self-diagnosis. The test limit is a reference value which is specified as the maximum or minimum value and is compared with the test value being monitored.
Items for which these data (test value and test limit) are displayed are the same as SRT code items (30 test items).
These data (test value and test limit) are specified by Test ID (TID) and Component ID (CID) and can be displayed on the GST screen.

×: Applicable —: Not applicable

SRT item	Self-diagnostic test item	Test value (GST display)		Test limit	Application
		TID	CID		
CATALYST	Three way catalyst function	01H	01H	Max.	×
		02H	81H	Min.	×
EVAP SYSTEM	EVAP control system (Small leak)	05H	03H	Max.	×
	EVAP control system purge flow monitoring	06H	83H	Min.	×
	EVAP control system (Very small leak)	07H	03H	Max.	×
HO2S	Heated oxygen sensor 1	09H	04H	Max.	×
		0AH	84H	Min.	×
		0BH	04H	Max.	×
		0CH	04H	Max.	×
		0DH	04H	Max.	×
	Heated oxygen sensor 2	19H	86H	Min.	×
		1AH	86H	Min.	×
		1BH	06H	Max.	×
		1CH	06H	Max.	×

SRT item	Self-diagnostic test item	Test value (GST display)		Test limit	Application
		TID	CID		
HO2S HTR	Heated oxygen sensor 1 heater	29H	08H	Max.	×
		2AH	88H	Min.	×
	Heated oxygen sensor 2 heater	2DH	0AH	Max.	×
		2EH	8AH	Min.	×

HOW TO ERASE EMISSION-RELATED DIAGNOSTIC INFORMATION

How to Erase DTC (With CONSULT-II)

The emission related diagnostic information in the ECM can be erased by selecting “ERASE” in the “SELF-DIAG RESULTS” mode with CONSULT-II.
If DTCs are displayed for both ECM and TCM (Transmission control module), they need to be erased individually from the ECM and TCM (Transmission control module).

NOTE:
If the DTC is not for A/T related items (see EC-15), skip steps 2 through 4.

1. If the ignition switch stays “ON” after repair work, be sure to turn ignition switch “OFF” once. Wait at least 10 seconds and then turn it “ON” (engine stopped) again.
2. Turn CONSULT-II “ON” and touch “A/T”.
3. Touch “SELF-DIAG RESULTS”.
4. Touch “ERASE”. [The DTC in the TCM (Transmission control module) will be erased.] Then touch “BACK” twice.
5. Touch “ENGINE”.
6. Touch “SELF-DIAG RESULTS”.
7. Touch “ERASE”. (The DTC in the ECM will be erased.)

How to erase DTC (With CONSULT-II)

1. If the ignition switch stays “ON” after repair work, be sure to turn ignition switch “OFF” once. Wait at least 10 seconds and then turn it “ON” (engine stopped) again.

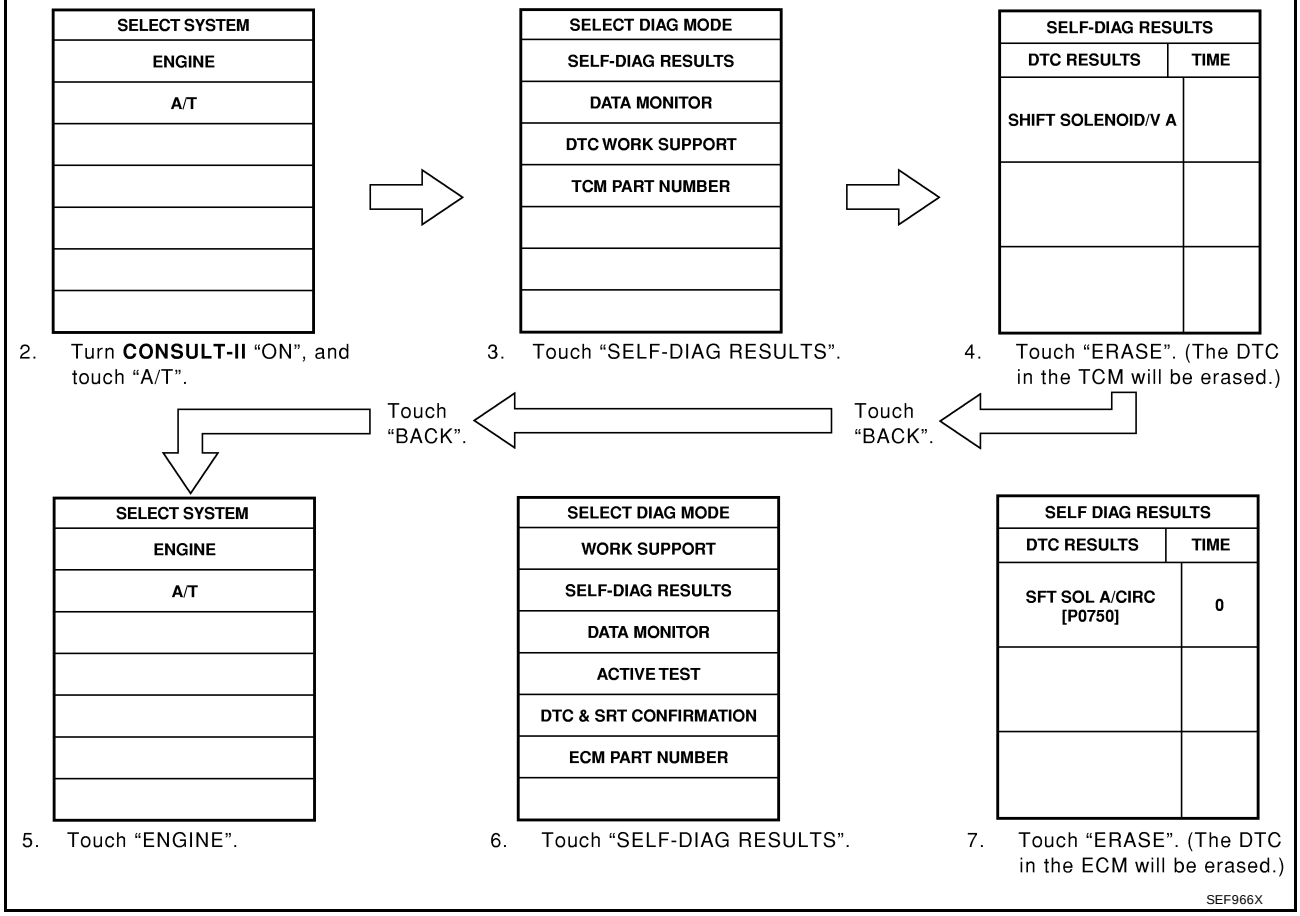

How to Erase DTC (With GST)

The emission related diagnostic information in the ECM can be erased by selecting Mode 4 with GST.

NOTE:
If the DTC is not for A/T related items (see EC-15), skip step 2.

1. If the ignition switch stays “ON” after repair work, be sure to turn ignition switch “OFF” once. Wait at least 10 seconds and then turn it “ON” (engine stopped) again.
2. Perform “SELF-DIAGNOSTIC PROCEDURE (Without CONSULT-II)” in AT section titled “TROUBLE DIAGNOSIS”, “Self-diagnosis”. (The engine warm-up step can be skipped when performing the diagnosis only to erase the DTC.)
3. Select Mode 4 with GST (Generic Scan Tool).

How to Erase DTC (No Tools)

1. If the ignition switch stays "ON" after repair work, be sure to turn ignition switch "OFF" once.
2. Wait at least 10 seconds and then turn it "ON" (engine stopped) again.
3. Change the diagnostic test mode from Mode II to Mode I by depressing the accelerator pedal. Refer to EC-70, "HOW TO SWITCH DIAGNOSTIC TEST MODE" .

- **If the battery is disconnected, the emission-related diagnostic information will be lost after approx. 24 hours.**
- **The following data are cleared when the ECM memory is erased.**

1. Diagnostic trouble codes
2. 1st trip diagnostic trouble codes
3. Freeze frame data
4. 1st trip freeze frame data
5. System readiness test (SRT) codes
6. Test values
7. Others

Actual work procedures are explained using a DTC as an example. Be careful so that not only the DTC, but all of the data listed above, are cleared from the ECM memory during work procedures.

VIS (Nissan Vehicle Immobilizer System — NATS)

UBS002OG

- **If the security indicator lights up with the ignition switch in the “ON” position or “NATS MALFUNCTION” is displayed on “SELF-DIAG RESULTS” screen, perform self-diagnostic results mode with CONSULT-II using NATS program card. Refer to BL-116, "NVIS(NISSAN Vehicle Immobilizer System-NATS)" .**
- **Confirm no self-diagnostic results of NVIS (NATS) is displayed before touching “ERASE” in “SELF-DIAG RESULTS” mode with CONSULT-II.**
- **When replacing ECM, initialization of NVIS (NATS) system and registration of all NVIS (NATS) ignition key IDs must be carried out with CONSULT-II using NATS program card.**
  Therefore, be sure to receive all keys from vehicle owner. Regarding the procedures of NVIS (NATS) initialization and NVIS (NATS) ignition key ID registration, refer to CONSULT-II operation manual, IVIS/NVIS.

SELF DIAG RESULTS	
DTC RESULTS	TIME
NATS MALFUNCTION [P1610]	0

SEF543X

Malfunction Indicator Lamp (MIL)

UBS002OH

DESCRIPTION

The MIL is located on the instrument panel.

1. The MIL will light up when the ignition switch is turned ON without the engine running. This is a bulb check.
   If the MIL does not light up, refer to DI-22, "WARNING LAMPS" , or see EC-379 .
2. When the engine is started, the MIL should go off.
   If the MIL remains on, the on board diagnostic system has detected an engine system malfunction.

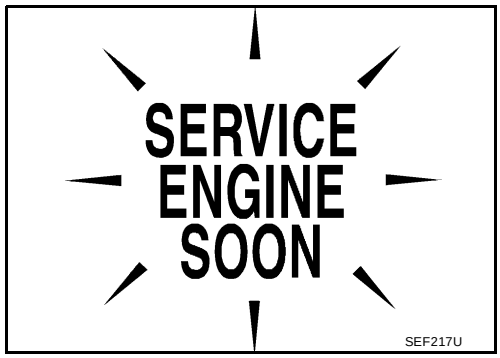

ON BOARD DIAGNOSTIC SYSTEM FUNCTION

The on board diagnostic system has the following four functions.

Diagnostic Test Mode	KEY and ENG. Status	Function	Explanation of Function
Mode I	Ignition switch in “ON” position Engine stopped	BULB CHECK	This function checks the MIL bulb for damage (blown, open circuit, etc.). If the MIL does not come on, check MIL circuit.
	Engine running	MALFUNCTION WARNING	This is a usual driving condition. When a malfunction is detected twice in two consecutive driving cycles (two trip detection logic), the MIL will light up to inform the driver that a malfunction has been detected. The following malfunctions will light up or blink the MIL in the 1st trip. ● "Coolant overtemperature enrichment protection" ● “Misfire (Possible three way catalyst damage)” ● “Closed loop control” ● "Throttle control motor" ● Fail-safe mode
Mode II	Ignition switch in “ON” position Engine stopped	SELF-DIAGNOSTIC RESULTS	This function allows DTCs and 1st trip DTCs to be read.
	Engine running	HEATED OXYGEN SENSOR 1 MONITOR	This function allows the fuel mixture condition (lean or rich), monitored by heated oxygen sensor 1, to be read.

MIL Flashing Without DTC

If the ECM is in Diagnostic Test Mode II, MIL may flash when engine is running. In this case, check ECM diagnostic test mode. EC-70, "HOW TO SWITCH DIAGNOSTIC TEST MODE" .
How to switch the diagnostic test (function) modes, and details of the above functions are described later.EC-70, "HOW TO SWITCH DIAGNOSTIC TEST MODE" .
The following emission-related diagnostic information is cleared when the ECM memory is erased.

1. Diagnostic trouble codes
2. 1st trip diagnostic trouble codes
3. Freeze frame data
4. 1st trip freeze frame data
5. System readiness test (SRT) codes
6. Test values
7. Others

HOW TO SWITCH DIAGNOSTIC TEST MODE

NOTE:

- **It is better to count the time accurately with a clock.**
- **It is impossible to switch the diagnostic mode when an accelerator pedal position sensor circuit has a malfunction.**
- **Always ECM returns to Diagnostic Test Mode I after ignition switch is turned “OFF”.**

How to Set Diagnostic Test Mode II (Self-diagnostic Results)

1. Confirm that accelerator pedal is fully released, turn ignition switch “ON” and wait 3 seconds.
2. Repeat the following procedure quickly five times within 5 seconds.

a. Fully depress the accelerator pedal.

b. Fully release the accelerator pedal.

3. Wait 7 seconds, fully depress the accelerator pedal and keep it for approx. 10 seconds until the MIL starts blinking.
4. Fully release the accelerator pedal.
   ECM has entered to Diagnostic Test Mode II (Self-diagnostic results).

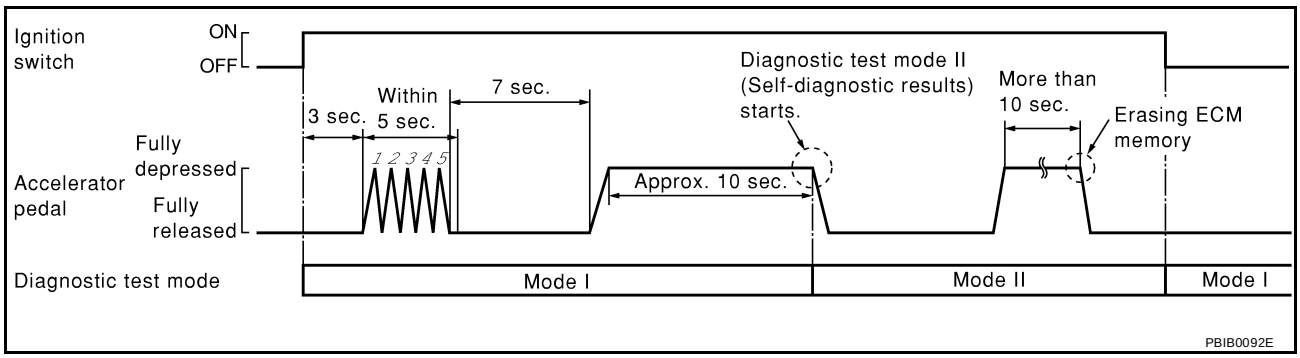

How to Set Diagnostic Test Mode II (Heated Oxygen Sensor 1 Monitor)

1. Set the ECM in Diagnostic Test Mode II (Self-diagnostic results). Refer to EC-70, "How to Set Diagnostic Test Mode II (Self-diagnostic Results)" .
2. Start Engine.
   ECM has entered to Diagnostic Test Mode II (Heated oxygen sensor 1 monitor).
   ECM will start heated oxygen sensor 1 monitoring from the bank 1 sensor.

How to Erase Diagnostic Test Mode II (Self-diagnostic Results)

1. Set ECM in Diagnostic Test Mode II (Self-diagnostic results). Refer to EC-70, "How to Set Diagnostic Test Mode II (Self-diagnostic Results)" .
2. Fully depress the accelerator pedal and keep it for more than 10 seconds.
   The emission-related diagnostic information has been erased from the backup memory in the ECM.
3. Fully release the accelerator pedal, and confirm the DTC 0000 is displayed.

DIAGNOSTIC TEST MODE I — BULB CHECK

In this mode, the MIL on the instrument panel should stay ON. If it remains OFF, check the bulb. Refer to DI-22, "WARNING LAMPS" or see EC-379 .

DIAGNOSTIC TEST MODE I — MALFUNCTION WARNING

MIL	Condition
ON	When the malfunction is detected or the ECM's CPU is malfunctioning.
OFF	No malfunction.

These DTC numbers are clarified in Diagnostic Test Mode II (SELF-DIAGNOSTIC RESULTS)

DIAGNOSTIC TEST MODE II — SELF-DIAGNOSTIC RESULTS

In this mode, the DTC and 1st trip DTC are indicated by the number of blinks of the MIL as shown below. The DTC and 1st trip DTC are displayed at the same time. If the MIL does not illuminate in diagnostic test mode I (Malfunction warning), all displayed items are 1st trip DTCs. If only one code is displayed when the MIL illuminates in diagnostic test mode II (SELF-DIAGNOSTIC RESULTS), it is a DTC; if two or more codes are displayed, they may be either DTCs or 1st trip DTCs. DTC No. is same as that of 1st trip DTC. These unidentified codes can be identified by using the CONSULT-II or GST. A DTC will be used as an example for how to read a code.

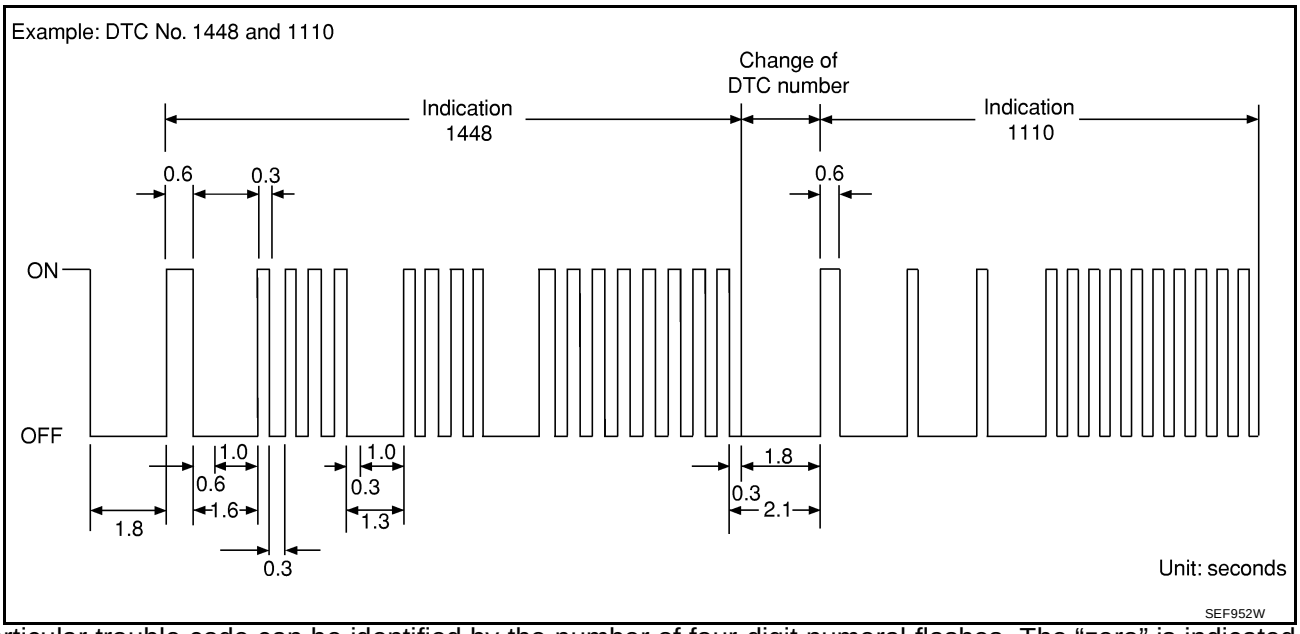

A particular trouble code can be identified by the number of four-digit numeral flashes. The “zero” is indicated by the number of ten flashes. The length of time the 1,000th-digit numeral flashes on and off is 1.2 seconds consisting of an ON (0.6-second) - OFF (0.6-second) cycle.
The 100th-digit numeral and lower digit numerals consist of a 0.3-second ON and 0.3-second OFF cycle.
A change from one digit numeral to another occurs at an interval of 1.0-second OFF. In other words, the later numeral appears on the display 1.3 seconds after the former numeral has disappeared.
A change from one trouble code to another occurs at an interval of 1.8-second OFF.
In this way, all the detected malfunctions are classified by their DTC numbers. The DTC “0000” refers to no malfunction. (See EC-15, "INDEX FOR DTC")

How to Erase Diagnostic Test Mode II (Self-diagnostic Results)

The DTC can be erased from the back up memory in the ECM by depressing accelerator pedal. Refer to EC-70, "How to Erase Diagnostic Test Mode II (Self-diagnostic Results)" .

- **If the battery is disconnected, the DTC will be lost from the backup memory after approx 24 hours.**
- **Be careful not to erase the stored memory before starting trouble diagnoses.**

DIAGNOSTIC TEST MODE II — HEATED OXYGEN SENSOR 1 MONITOR

In this mode, the MIL displays the condition of the fuel mixture (lean or rich) which is monitored by the heated oxygen sensor 1.

MIL	Fuel mixture condition in the exhaust gas	Air fuel ratio feedback control condition
ON	Lean	Closed loop system
OFF	Rich	
*Remains ON or OFF	Any condition	Open loop system

*: Maintains conditions just before switching to open loop.

To check the heated oxygen sensor 1 function, start engine in the Diagnostic Test Mode II and warm it up until engine coolant temperature indicator points to the middle of the gauge.
Next run engine at about 2,000 rpm for about 2 minutes under no-load conditions. Then make sure that the MIL comes ON more than 5 times within 10 seconds with engine running at 2,000 rpm under no-load.

OBD System Operation Chart

UBS002OI

RELATIONSHIP BETWEEN MIL, 1ST TRIP DTC, DTC, AND DETECTABLE ITEMS

- When a malfunction is detected for the first time, the 1st trip DTC and the 1st trip freeze frame data are stored in the ECM memory.
- When the same malfunction is detected in two consecutive trips, the DTC and the freeze frame data are stored in the ECM memory, and the MIL will come on. For details, refer to EC-54, "Two Trip Detection Logic" .
- The MIL will go off after the vehicle is driven 3 times with no malfunction. The drive is counted only when the recorded driving pattern is met (as stored in the ECM). If another malfunction occurs while counting, the counter will reset.
- The DTC and the freeze frame data will be stored until the vehicle is driven 40 times (driving pattern A) without the same malfunction recurring (except for Misfire and Fuel Injection System). For Misfire and Fuel Injection System, the DTC and freeze frame data will be stored until the vehicle is driven 80 times (driving pattern C) without the same malfunction recurring. The “TIME” in “SELF-DIAGNOSTIC RESULTS” mode of CONSULT-II will count the number of times the vehicle is driven.
- The 1st trip DTC is not displayed when the self-diagnosis results in “OK” for the 2nd trip.

SUMMARY CHART

Items	Fuel Injection System	Misfire	Other
MIL (goes off)	3 (pattern B)	3 (pattern B)	3 (pattern B)
DTC, Freeze Frame Data (no display)	80 (pattern C)	80 (pattern C)	40 (pattern A)
1st Trip DTC (clear)	1 (pattern C), *1	1 (pattern C), *1	1 (pattern B)
1st Trip Freeze Frame Data (clear)	*1, *2	*1, *2	1 (pattern B)

For details about patterns “B” and “C” under “Fuel Injection System” and “Misfire”, see EC-74 .
For details about patterns “A” and “B” under “Other”, see EC-76 .
*1: Clear timing is at the moment OK is detected.
*2: Clear timing is when the same malfunction is detected in the 2nd trip.

RELATIONSHIP BETWEEN MIL, DTC, 1ST TRIP DTC AND DRIVING PATTERNS FOR “MISFIRE <EXHAUST QUALITY DETERIORATION>”, “FUEL INJECTION SYSTEM”

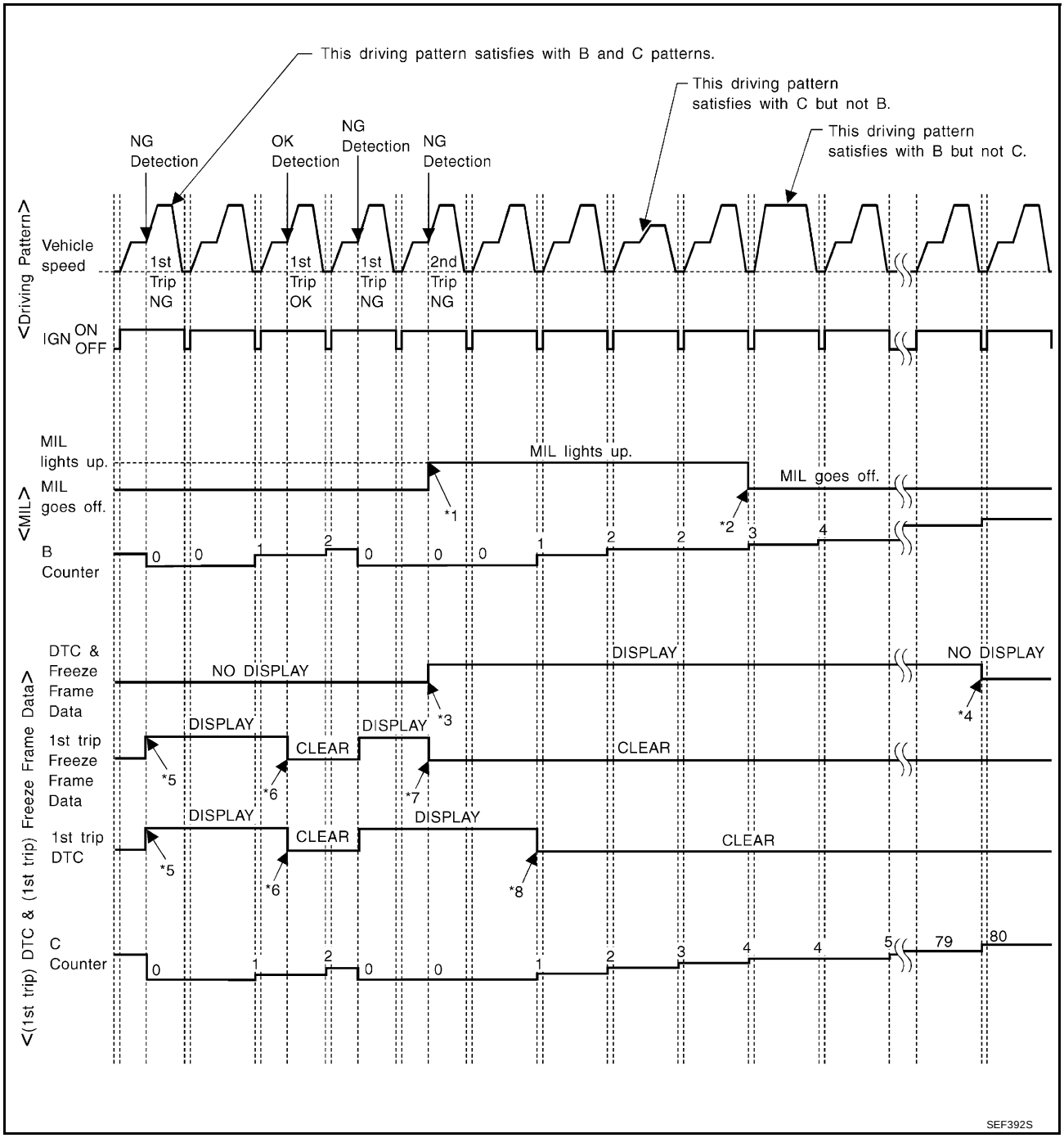

*1: When the same malfunction is detected in two consecutive trips, MIL will light up.

*2: MIL will go off after vehicle is driven 3 times (pattern B) without any malfunctions.

*3: When the same malfunction is detected in two consecutive trips, the DTC and the freeze frame data will be stored in ECM.

*4: The DTC and the freeze frame data will not be displayed any longer after vehicle is driven 80 times (pattern C) without the same malfunction. (The DTC and the freeze frame data still remain in ECM.)

*5: When a malfunction is detected for the first time, the 1st trip DTC and the 1st trip freeze frame data will be stored in ECM.

*6: The 1st trip DTC and the 1st trip freeze frame data will be cleared at the moment OK is detected.

*7: When the same malfunction is detected in the 2nd trip, the 1st trip freeze frame data will be cleared.

*8: 1st trip DTC will be cleared when vehicle is driven once (pattern C) without the same malfunction after DTC is stored in ECM.

EXPLANATION FOR DRIVING PATTERNS FOR “MISFIRE <EXHAUST QUALITY DETERIORATION>”, “FUEL INJECTION SYSTEM”

<Driving Pattern B>

Driving pattern B means the vehicle operation as follows:
All components and systems should be monitored at least once by the OBD system.

- The B counter will be cleared when the malfunction is detected once regardless of the driving pattern.
- The B counter will be counted up when driving pattern B is satisfied without any malfunction.
- The MIL will go off when the B counter reaches 3. (*2 in “OBD SYSTEM OPERATION CHART”)

<Driving Pattern C>

Driving pattern C means the vehicle operation as follows:
The following conditions should be satisfied at the same time:
Engine speed: (Engine speed in the freeze frame data) ±375 rpm
Calculated load value: (Calculated load value in the freeze frame data) x (1±0.1) [%]
Engine coolant temperature (T) condition:

- When the freeze frame data shows lower than 70°C (158°F), “T” should be lower than 70°C (158°F).
- When the freeze frame data shows higher than or equal to 70°C (158°F), “T” should be higher than or equal to 70°C (158°F).

Example:
If the stored freeze frame data is as follows:
Engine speed: 850 rpm, Calculated load value: 30%, Engine coolant temperature: 80°C (176°F)
To be satisfied with driving pattern C, the vehicle should run under the following conditions:
Engine speed: 475 - 1,225 rpm, Calculated load value: 27 - 33%, Engine coolant temperature: more than 70°C (158°F)

- The C counter will be cleared when the malfunction is detected regardless of (1).
- The C counter will be counted up when (1) is satisfied without the same malfunction.
- The DTC will not be displayed after C counter reaches 80.
- The 1st trip DTC will be cleared when C counter is counted once without the same malfunction after DTC is stored in ECM.

RELATIONSHIP BETWEEN MIL, DTC, 1ST TRIP DTC AND DRIVING PATTERNS EXCEPT FOR "MISFIRE <EXHAUST QUALITY DETERIORATION>", "FUEL INJECTION SYSTEM"

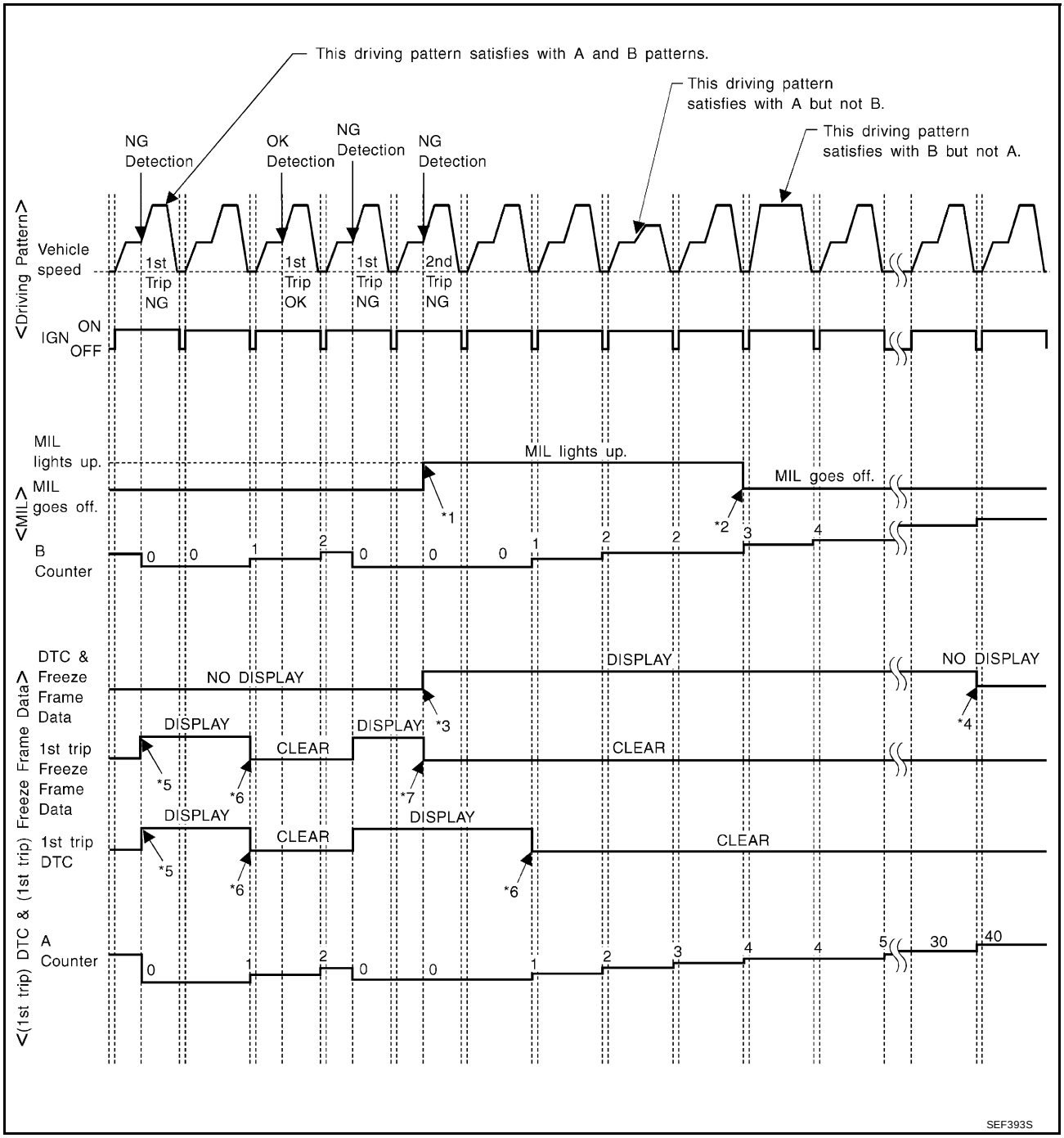

*1: When the same malfunction is detected in two consecutive trips, MIL will light up.

*2: MIL will go off after vehicle is driven 3 times (pattern B) without any malfunctions.

*3: When the same malfunction is detected in two consecutive trips, the DTC and the freeze frame data will be stored in ECM.

*4: The DTC and the freeze frame data will not be displayed any longer after vehicle is driven 40 times (pattern A) without the same malfunction. (The DTC and the freeze frame data still remain in ECM.)

*5: When a malfunction is detected for the first time, the 1st trip DTC and the 1st trip freeze frame data will be stored in ECM.

*6: 1st trip DTC will be cleared after vehicle is driven once (pattern B) without the same malfunction.

*7: When the same malfunction is detected in the 2nd trip, the 1st trip freeze frame data will be cleared.

EXPLANATION FOR DRIVING PATTERNS EXCEPT FOR “MISFIRE <EXHAUST QUALITY DETERIORATION>”, “FUEL INJECTION SYSTEM”

<Driving Pattern A>

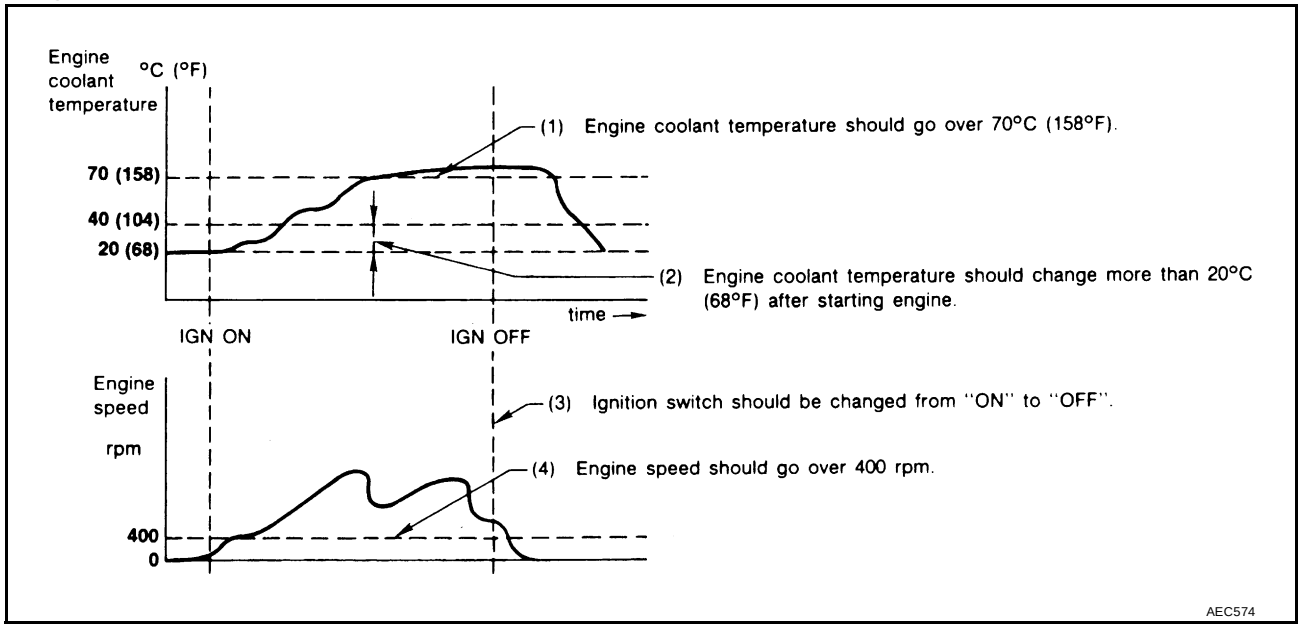

- The A counter will be cleared when the malfunction is detected regardless of (1) - (4).
- The A counter will be counted up when (1) - (4) are satisfied without the same malfunction.
- The DTC will not be displayed after the A counter reaches 40.

<Driving Pattern B>

Driving pattern B means the vehicle operation as follows:
All components and systems should be monitored at least once by the OBD system.

- The B counter will be cleared when the malfunction is detected once regardless of the driving pattern.
- The B counter will be counted up when driving pattern B is satisfied without any malfunctions.
- The MIL will go off when the B counter reaches 3 (*2 in “OBD SYSTEM OPERATION CHART”).

TROUBLE DIAGNOSIS

PFP:00004

Trouble Diagnosis Introduction

UBS002OJ

INTRODUCTION

The engine has an ECM to control major systems such as fuel control, ignition control, idle air control system, etc. The ECM accepts input signals from sensors and instantly drives actuators. It is essential that both input and output signals are proper and stable. At the same time, it is important that there are no problems such as vacuum leaks, fouled spark plugs, or other problems with the engine.

It is much more difficult to diagnose a problem that occurs intermittently rather than continuously. Most intermittent problems are caused by poor electric connections or improper wiring. In this case, careful checking of suspected circuits may help prevent the replacement of good parts.

A visual check only may not find the cause of the problems. A road test with CONSULT-II (or GST) or a circuit tester connected should be performed. Follow the “Work Flow” on EC-78 .

Before undertaking actual checks, take a few minutes to talk with a customer who approaches with a driveability complaint. The customer can supply good information about such problems, especially intermittent ones. Find out what symptoms are present and under what conditions they occur. A “Diagnostic Worksheet” like the example on EC-81 should be used.

Start your diagnosis by looking for “conventional” problems first. This will help troubleshoot driveability problems on an electronically controlled engine vehicle.

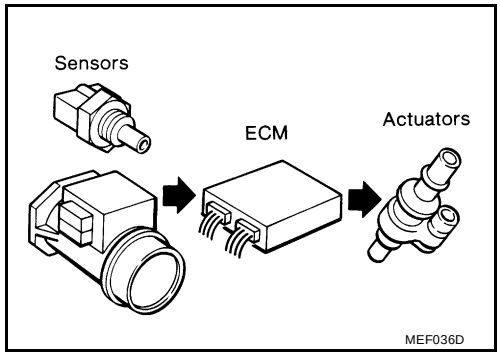

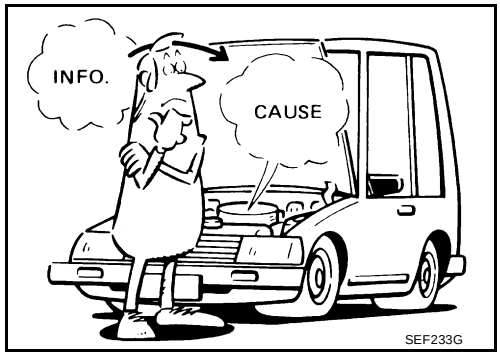

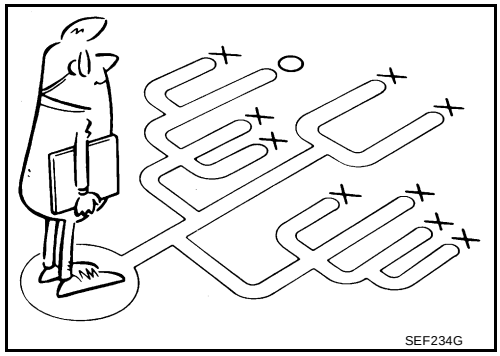

WORK FLOW

Flow Chart

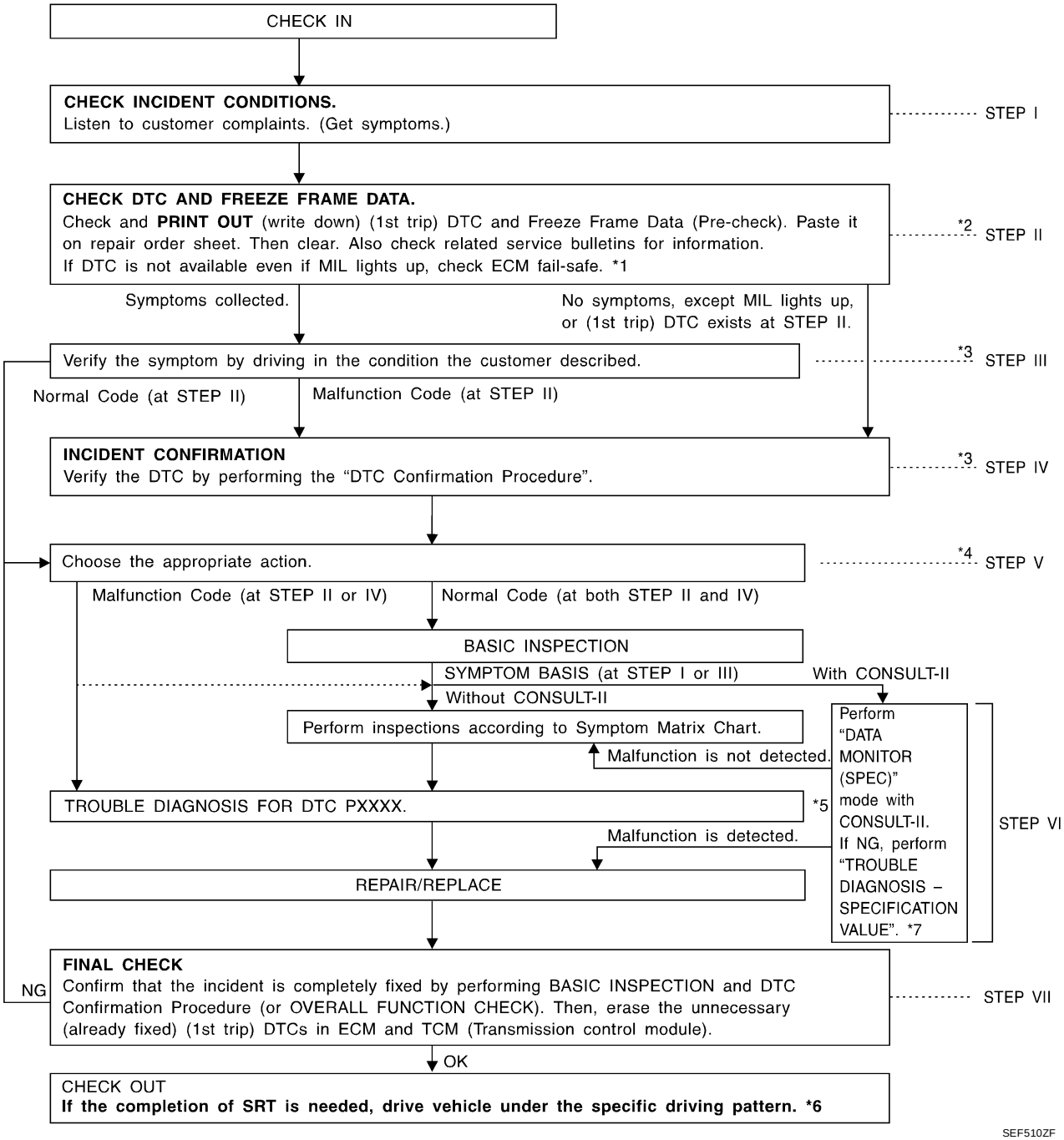

*1 EC-82

*2 If time data of "SELF-DIAG RESULTS" is other than "0" or "[1t]", perform EC-130, "TROUBLE DIAGNOSIS FOR INTERMITTENT INCIDENT" .

*3 If the incident cannot be verified, perform EC-130, "TROUBLE DIAGNOSIS FOR INTERMITTENT INCIDENT" .

*4 If the on board diagnostic system cannot be performed, check main power supply and ground circuit. Refer to EC-131, "POWER SUPPLY CIRCUIT FOR ECM" .

*5 If malfunctioning part cannot be detected, perform EC-130, "TROUBLE DIAGNOSIS FOR INTERMITTENT INCIDENT" .

*6 EC-64

*7 EC-126

Description for Work Flow

STEP	DESCRIPTION
STEP I	Get detailed information about the conditions and the environment when the incident/symptom occurred using the “DIAGNOSTIC WORK SHEET”, EC-80 .
STEP II	Before confirming the concern, check and write down (print out using CONSULT-II or GST) the (1st trip) DTC and the (1st trip) freeze frame data, then erase the DTC and the data. (Refer to EC-67 .) The (1st trip) DTC and the (1st trip) freeze frame data can be used when duplicating the incident at STEP III & IV. If the incident cannot be verified, perform EC-130, "TROUBLE DIAGNOSIS FOR INTERMITTENT INCIDENT" . Study the relationship between the cause, specified by (1st trip) DTC, and the symptom described by the customer. (The “Symptom Matrix Chart” will be useful. See EC-89 .) Also check related service bulletins for information.
STEP III	Try to confirm the symptom and under what conditions the incident occurs. The “DIAGNOSTIC WORK SHEET” and the freeze frame data are useful to verify the incident. Connect CONSULT-II to the vehicle in DATA MONITOR (AUTO TRIG) mode and check real time diagnosis results. If the incident cannot be verified, perform EC-130, "TROUBLE DIAGNOSIS FOR INTERMITTENT INCIDENT" . If the malfunction code is detected, skip STEP IV and perform STEP V.
STEP IV	Try to detect the (1st trip) DTC by driving in (or performing) the “DTC Confirmation Procedure”. Check and read the (1st trip) DTC and (1st trip) freeze frame data by using CONSULT-II or GST. During the (1st trip) DTC verification, be sure to connect CONSULT-II to the vehicle in DATA MONITOR (AUTO TRIG) mode and check real time diagnosis results. If the incident cannot be verified, perform EC-130, "TROUBLE DIAGNOSIS FOR INTERMITTENT INCIDENT" . In case the “DTC Confirmation Procedure” is not available, perform the “Overall Function Check” instead. The (1st trip) DTC cannot be displayed by this check, however, this simplified “check” is an effective alternative. The “NG” result of the “Overall Function Check” is the same as the (1st trip) DTC detection.
STEP V	Take the appropriate action based on the results of STEP I through IV. If the malfunction code is indicated, proceed to TROUBLE DIAGNOSIS FOR DTC PXXXX. If the normal code is indicated, proceed to the BASIC INSPECTION. (Refer to EC-84 .) If COSULT-II is available, perform "DATA MONITOR (SPEC)" mode with CONSULT-II and proceed to the "TOROUBLE DIAGNOSIS – SPECIFICATION VALUE". (Refer to EC-126 .) (If malfunction is detected, proceed to "PERAIR/REPLACE".) Then perform inspections according to the Symptom Matrix Chart. (Refer to EC-89 .)
STEP VI	Identify where to begin diagnosis based on the relationship study between symptom and possible causes. Inspect the system for mechanical binding, loose connectors or wiring damage using (tracing) “Harness Layouts”. Gently shake the related connectors, components or wiring harness with CONSULT-II set in “DATA MONITOR (AUTO TRIG)” mode. Check the voltage of the related ECM terminals or monitor the output data from the related sensors with CONSULT-II. Refer to EC-99 , EC-120 . The “Diagnostic Procedure” in EC section contains a description based on open circuit inspection. A short circuit inspection is also required for the circuit check in the Diagnostic Procedure. For details, refer to “Circuit Inspection” in GI-25, "How to Perform Efficient Diagnosis for an Electrical Incident" . Repair or replace the malfunction parts. If malfunctioning part cannot be detected, perform EC-130, "TROUBLE DIAGNOSIS FOR INTERMITTENT INCIDENT" .
STEP VII	Once you have repaired the circuit or replaced a component, you need to run the engine in the same conditions and circumstances which resulted in the customer's initial complaint. Perform the “DTC Confirmation Procedure” and confirm the normal code [DTC No. P0000] is detected. If the incident is still detected in the final check, perform STEP VI by using a method different from the previous one. Before returning the vehicle to the customer, be sure to erase the unnecessary (already fixed) (1st trip) DTC in ECM and TCM (Transmission control module). (Refer to EC-67, "HOW TO ERASE EMISSION-RELATED DIAGNOSTIC INFORMATION" and AT-38, "HOW TO ERASE DTC" .)

DIAGNOSTIC WORKSHEET

Description

There are many operating conditions that lead to the malfunction of engine components. A good grasp of such conditions can make troubleshooting faster and more accurate.

In general, each customer feels differently about a problem. It is important to fully understand the symptoms or conditions for a customer complaint.

Utilize a diagnostic worksheet like the one on the next page in order to organize all the information for troubleshooting.

Some conditions may cause the MIL to come on steady or blink and DTC to be detected. Examples:

- Vehicle ran out of fuel, which caused the engine to misfire.
- Fuel filler cap was left off or incorrectly screwed on, allowing fuel to evaporate into the atmosphere.

KEY POINTS

WHAT ..... Vehicle & engine model
WHEN ..... Date, Frequencies
WHERE..... Road conditions
HOW ..... Operating conditions, Weather conditions, Symptoms

SEF907L

Worksheet Sample

Customer name MR/MS		Model & Year	VIN
Engine #		Trans.	Mileage
Incident Date		Manuf. Date	In Service Date
Fuel and fuel filler cap		☐ Vehicle ran out of fuel causing misfire ☐ Fuel filler cap was left off or incorrectly screwed on.	
Symptoms	☐ Startability	☐ Impossible to start ☐ No combustion ☐ Partial combustion ☐ Partial combustion affected by throttle position ☐ Partial combustion NOT affected by throttle position ☐ Possible but hard to start ☐ Others [ ]	
	☐ Idling	☐ No fast idle ☐ Unstable ☐ High idle ☐ Low idle ☐ Others [ ]	
	☐ Driveability	☐ Stumble ☐ Surge ☐ Knock ☐ Lack of power ☐ Intake backfire ☐ Exhaust backfire ☐ Others [ ]	
	☐ Engine stall	☐ At the time of start ☐ While idling ☐ While accelerating ☐ While decelerating ☐ Just after stopping ☐ While loading	
Incident occurrence		☐ Just after delivery ☐ Recently ☐ In the morning ☐ At night ☐ In the daytime	
Frequency		☐ All the time ☐ Under certain conditions ☐ Sometimes	
Weather conditions		☐ Not affected	
	Weather	☐ Fine ☐ Raining ☐ Snowing ☐ Others [ ]	
	Temperature	☐ Hot ☐ Warm ☐ Cool ☐ Cold ☐ Humid ˚F	
Engine conditions		☐ Cold ☐ During warm-up ☐ After warm-up Engine speed 0 2,000 4,000 6,000 8,000 rpm	
Road conditions		☐ In town ☐ In suburbs ☐ Highway ☐ Off road (up/down)	
Driving conditions		☐ Not affected ☐ At starting ☐ While idling ☐ At racing ☐ While accelerating ☐ While cruising ☐ While decelerating ☐ While turning (RH/LH) Vehicle speed 0 10 20 30 40 50 60 MPH	
Malfunction indicator lamp		☐ Turned on ☐ Not turned on	

MTBL0017

DTC Inspection Priority Chart

UBS002OK

If some DTCs are displayed at the same time, perform inspections one by one based on the following priority chart.

NOTE:
If DTC U1000 and/or U1001 is displayed with other DTC, first perform the trouble diagnosis for DTC U1000 and U1001. Refer to EC-138 .

Priority	Detected items (DTC)
1	● U1000 U1001 CAN communication line ● P0101 P0102 P0103 P1102 Mass air flow sensor ● P0112 P0113 P0127 Intake air temperature sensor ● P0117 P0118 P0125 Engine coolant temperature sensor ● P0128 Thermostat function ● P0181 P0182 P0183 Fuel tank temperature sensor ● P0221 P0222 P0223 P1223 P1224 P1225 P1226 P1229 Throttle position sensor ● P0226 P0227 P0228 P1227 P1228 Accelerator pedal position sensor ● P0327 P0328 Knock sensor ● P0335 Crankshaft position sensor (POS) ● P0340 Camshaft position sensor (PHASE) ● P0460 P0461 P0462 P0463 P1464 Fuel level sensor ● P0500 Vehicle speed sensor ● P0605 ECM ● P1610-P1615 NATS ● P1706 Park/Neutral position (PNP) switch
2	● P0031 P0032 Heated oxygen sensor 1 heater ● P0037 P0038 Heated oxygen sensor 2 heater ● P0132 P0133 P0134 P1143 P1144 Heated oxygen sensor 1 ● P0138 P0139 P1146 P1147 Heated oxygen sensor 2 ● P0217 Coolant overtemperature enrichment protection ● P0441 EVAP control system purge flow monitoring ● P0444 P0445 P1444 EVAP canister purge volume control solenoid valve ● P0447 P1446 P1448 EVAP canister vent control valve ● P0452 P0453 EVAP control system pressure sensor ● P0506 P0507 Idle speed control system ● P0650 MIL ● P0705-P0725, P0740-P0755, P1705 P1760 A/T related sensors and solenoid valves ● P1065 ECM power supply ● P1111 Intake valve timing control solenoid valve ● P1122 Electric throttle control function ● P1124 P1126 P1128 Electric throttle control actuator ● P1490 P1491 Vacuum cut valve bypass valve ● P1805 Brake switch
3	● P0011 Intake valve timing control ● P0171 P0172 Fuel injection system function ● P0300 - P0304 Misfire ● P0420 Three way catalyst function ● P0442/P1442 P0456/P1456 EVAP control system (SMALL LEAK, VERY SMALL LEAK) ● P0455 EVAP control system (GROSS LEAK) ● P0731-P0734 A/T function ● P1121 Electric throttle control actuator ● P1148 Closed loop control ● P1217 Engine over temperature (OVERHEAT) ● P1564 ASCD steering switch ● P1572 ASCD brake switch ● P1574 ASCD vehicle speed sensor

Fail-safe Chart

UBS002OL

The ECM enters fail-safe mode, if any of the following malfunctions is detected. When the ECM enters the fail-safe mode, the MIL illuminates.

DTC No.	Detected items	Engine operating condition in fail-safe mode
P0102 P0103 P1102	Mass air flow sensor circuit	Engine speed will not rise more than 2,400 rpm due to the fuel cut.
P0117 P0118	Engine coolant temperature sensor circuit	Engine coolant temperature will be determined by ECM based on the time after turning ignition switch “ON” or “START”. CONSULT-II displays the engine coolant temperature decided by ECM.

Condition	Engine coolant temperature decided (CONSULT-II display)
Just as ignition switch is turned ON or Start	40°C (104°F)
More than approx. 4 minutes after ignition ON or Start	80°C (176°F)
Except as shown above	40 - 80°C (104 - 176°F) (Depends on the time)

When the fail-safe system for engine coolant temperature sensor is activated, the cooling fan operates while engine is running.

P0221 P0222 P0223 P1223 P1224	Throttle position sensor	The ECM controls the electric throttle control actuator in regulating the throttle opening in order for the idle position to be within +10 degrees. The ECM regulates an opening speed of approx. 5 seconds to an opening of 10 degrees. So, the acceleration will be poor.
P0226 P0227 P0228 P1227 P1228	Accelerator pedal position sensor	The ECM controls the electric throttle control actuator in regulating the throttle opening in order for the idle position to be within +10 degrees. The ECM regulates an opening speed of approx. 5 seconds to an opening of 10 degrees. So, the acceleration will be poor.
P1121	Electric throttle control actuator (ECM detect the throttle valve is stuck open.)	While the vehicle is driving, it slows down gradually by fuel cut. After the vehicle stops, the engine stalls. The engine can restart in "N" or "P" position, and engine speed will not exceed 1,000 rpm or more.
P1122	Electric throttle control function	ECM stops the electric throttle control actuator control, throttle valve is maintained at a fixed opening (approx. 5 degrees) by the return spring.
P1126	Throttle control relay	ECM stops the electric throttle control actuator control, throttle valve is maintained at a fixed opening (approx. 5 degrees) by the return spring.
P1229	Sensor power supply	ECM stops the electric throttle control actuator control, throttle valve is maintained at a fixed opening (approx. 5 degrees) by the return spring.

Basic Inspection

UBS002OM

1. INSPECTION START

1. Check service records for any recent repairs that may indicate a related problem, or a current need for scheduled maintenance.
2. Open engine hood and check the following:
- Harness connectors for improper connections
- Wiring harness for improper connections, pinches and cut
- Vacuum hoses for splits, kinks and improper connections
- Hoses and ducts for leaks
- Air cleaner clogging
- Gasket

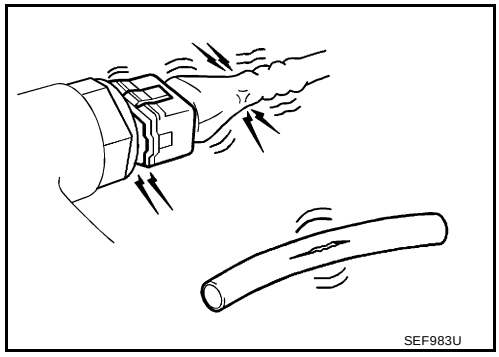

3. Confirm that electrical or mechanical loads are not applied.
- Headlamp switch is OFF.
- Air conditioner switch is OFF.
- Rear window defogger switch is OFF.
- Steering wheel is in the straight-ahead position, etc.
4. Start engine and warm it up until engine coolant temperature indicator points the middle of gauge.
   Ensure engine stays below 1,000 rpm.

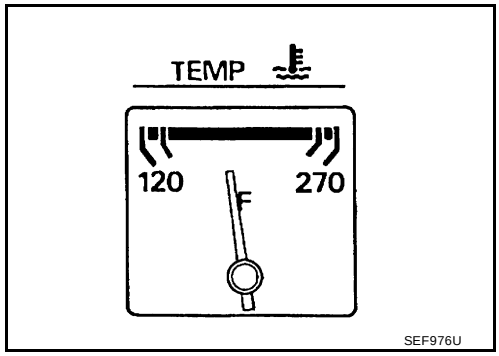

5. Run engine at about 2,000 rpm for about 2 minutes under no-load.
6. Make sure that no DTC is displayed with CONSULT-II or GST.

OK or NG

OK >> GO TO 3.
NG >> GO TO 2.

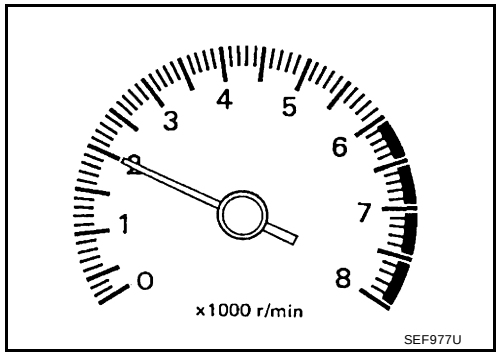

2. REPAIR OR REPLACE

Repair or replace components as necessary according to corresponding “Diagnostic Procedure”.

>> GO TO 3.

3. CHECK TARGET IDLE SPEED

With CONSULT-II

1. Run engine at about 2,000 rpm for about 2 minutes under no-load.
2. Rev engine (2,000 to 3,000 rpm) two or three times under no-load, then run engine at idle speed for about 1 minute.

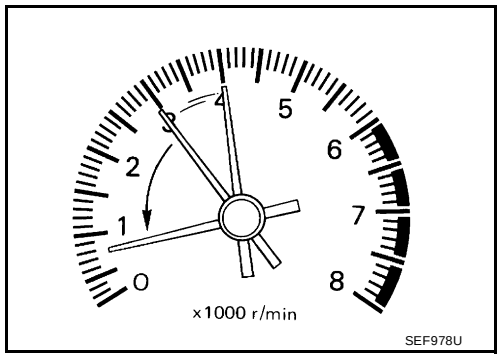

3. Read idle speed in “DATA MONITOR” mode with CONSULT-II.

   M/T: 700 ± 50 rpm
   A/T: 700 ± 50 rpm (in "P" or "N" position)

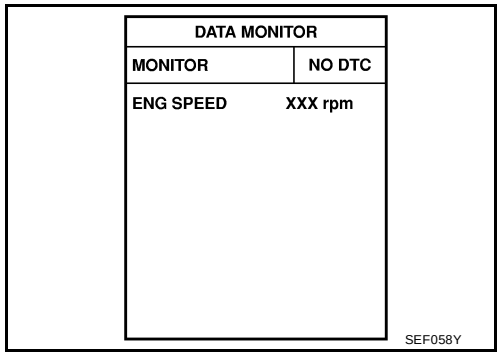

Without CONSULT-II

1. Run engine at about 2,000 rpm for about 2 minutes under no-load.
2. Rev engine (2,000 to 3,000 rpm) two or three times under no-load, then run engine at idle speed for about 1 minute.
3. Check idle speed.

   M/T: 700 ± 50 rpm
   A/T: 700 ± 50 rpm (in "P" or "N" position)

OK or NG

OK >> GO TO 10.
NG >> GO TO 4.

4. PERFORM ACCELERATOR PEDAL RELEASED POSITION LEARNING

1. Stop engine.
2. Perform EC-49, "Accelerator Pedal Released Position Learning" .

>> GO TO 5.

5. PERFORM THROTTLE VALVE CLOSED POSITION LEARNING

1. Stop engine.
2. Perform EC-49, "Throttle Valve Closed Position Learning" .

>> GO TO 6.

6. PERFORM IDLE AIR VOLUME LEARNING

Refer to EC-49, "Idle Air Volume Learning" .

Which is the result CMPLT or INCMP

CMPLT or INCMP

CMPLT >> GO TO 7.
INCMP >> 1. Follow the construction of “Idle Air Volume Learning”.
2. GO TO 4.

7. CHECK TARGET IDLE SPEED AGAIN

With CONSULT-II

1. Start engine and warm it up to normal operating temperature.
2. Read idle speed in “DATA MONITOR” mode with CONSULT-II.

M/T: 700 ± 50 rpm
A/T: 700 ± 50 rpm (in "P" or "N" position)

Without CONSULT-II

1. Start engine and warm it up to normal operating temperature.
2. Check idle speed.

M/T: 700 ± 50 rpm
A/T: 700 ± 50 rpm (in "P" or "N" position)

OK or NG

OK >> GO TO 10.
NG >> GO TO 8.

8. DETECT MALFUNCTIONING PART

Check the following.

- Check camshaft position sensor (PHASE) and circuit. Refer to EC-291 .
- Check crankshaft position sensor (POS) and circuit. Refer to EC-284 .

OK or NG

OK >> GO TO 9.
NG >> 1. Repair or replace.
2. GO TO 4.

9. CHECK ECM FUNCTION

1. Substitute another known-good ECM to check ECM function. (ECM may be the cause of a problem, but this is the rarely the case.)
2. Perform initialization of NATS system and registration of NATS ignition key IDs. Refer to EC-68, "VIS (Nissan Vehicle Immobilizer System — NATS)" .

>> GO TO 4.

10. CHECK IGNITION TIMING

1. Run engine at idle.
2. Check ignition timing with a timing light.

M/T: 15 ± 5° BTDC
A/T: 15 ± 5° BTDC (in "P" or "N" position)

OK or NG

OK >> **INSPECTION END**
NG >> GO TO 11.

11. PERFORM ACCELERATOR PEDAL RELEASED POSITION LEARNING

1. Stop engine.
2. Perform EC-49, "Accelerator Pedal Released Position Learning" .

>> GO TO 12.

12. PERFORM THROTTLE VALVE CLOSED POSITION LEARNING

1. Stop engine.
2. Perform EC-49, "Throttle Valve Closed Position Learning" .

>> GO TO 13.

13. PERFORM IDLE AIR VOLUME LEARNING

Refer to EC-49, "Idle Air Volume Learning" .

Which is the result CMPLT or INCMP

CMPLT or INCMP

CMPLT >> GO TO 14.
INCMP >> 1. Follow the construction of “Idle Air Volume Learning”.
2. GO TO 4.

14. CHECK TARGET IDLE SPEED AGAIN

With CONSULT-II

1. Start engine and warm it up to normal operating temperature.
2. Read idle speed in “DATA MONITOR” mode with CONSULT-II.

M/T: 700 ± 50 rpm
A/T: 700 ± 50 rpm (in "P" or "N" position)

Without CONSULT-II

1. Start engine and warm it up to normal operating temperature.
2. Check idle speed.

M/T: 700 ± 50 rpm
A/T: 700 ± 50 rpm (in "P" or "N" position)

OK or NG

OK >> GO TO 15.
NG >> GO TO 17.

15. CHECK IGNITION TIMING AGAIN

1. Run engine at idle.
2. Check ignition timing with a timing light.

M/T: 15 ± 5° BTDC
A/T: 15 ± 5° BTDC (in "P" or "N" position)

OK or NG

OK >> **INSPECTION END**
NG >> GO TO 16.

16. CHECK TIMING CHAIN INSTALLATION

Check timing chain installation. Refer to EM-45, "TIMING CHAIN" .

OK or NG

OK >> GO TO 17.
NG >> 1. Repair the timing chain installation.
2. GO TO 4.

17. DETECT MALFUNCTIONING PART

Check the following.

- Check camshaft position sensor (PHASE) and circuit. Refer to EC-291 .
- Check crankshaft position sensor (POS) and circuit. Refer to EC-284 .

OK or NG

OK >> GO TO 18.
NG >> 1. Repair or replace.
2. GO TO 4.

18. CHECK ECM FUNCTION

1. Substitute another known-good ECM to check ECM function. (ECM may be the cause of a problem, but this is the rarely the case.)
2. Perform initialization of NATS system and registration of NATS ignition key IDs. Refer to EC-68, "VIS (Nissan Vehicle Immobilizer System — NATS)" .

>> GO TO 4.

Symptom Matrix Chart

UBS002ON

SYSTEM — BASIC ENGINE CONTROL SYSTEM

		SYMPTOM													Reference page
		HARD/NO START/RESTART (EXCP. HA)	ENGINE STALL	HESITATION/SURGING/FLAT SPOT	SPARK KNOCK/DETONATION	LACK OF POWER/POOR ACCELERATION	HIGH IDLE/LOW IDLE	ROUGH IDLE/HUNTING	IDLING VIBRATION	SLOW/NO RETURN TO IDLE	OVERHEATS/WATER TEMPERATURE HIGH	EXCESSIVE FUEL CONSUMPTION	EXCESSIVE OIL CONSUMPTION	BATTERY DEAD (UNDER CHARGE)	
Warranty symptom code		AA	AB	AC	AD	AE	AF	AG	AH	AJ	AK	AL	AM	HA	
Fuel	Fuel pump circuit	1	1	2	3	2		2	2			3		2	EC-584
	Fuel pressure regulator system	3	3	4	4	4	4	4	4	4		4			EC-51
	Injector circuit	1	1	2	3	2		2	2			2			EC-574
	Evaporative emission system	3	3	4	4	4	4	4	4	4		4			EC-614
Air	Positive crankcase ventilation system	3	3	4	4	4	4	4	4	4		4	1		EC-626
	Incorrect idle speed adjustment	3	3				1	1	1	1		1			EC-84
	Electric throttle control actuator	1	1	2	3	3	2	2	2	2		2		2	EC-397, EC-399 , EC-406 , EC-411
Ignition	Incorrect ignition timing adjustment	3	3	1	1	1		1	1			1			EC-84
	Ignition circuit	1	1	2	2	2		2	2			2			EC-554
Main power supply and ground circuit		2	2	3	3	3		3	3		2	3			EC-131
Mass air flow sensor circuit		1	1	2	2	2		2	2			2			EC-154, EC-161 , EC-387
Engine coolant temperature sensor circuit		1	1	2	2	2	3	2	2	3	1	2			EC-172, EC-177
Throttle position sensor circuit			1	2		2	2	2	2	2		2			EC-250, EC-257 , EC-455 , EC-461 , EC-463 , EC-471
Accelerator pedal position sensor circuit				3	2	1	2			2					EC-263, EC-269 , EC-465
Heated oxygen sensor 1 circuit			1	2	3	2		2	2			2			EC-185, EC-191 , EC-200 , EC-416 , EC-422
Knock sensor circuit				2	2							3			EC-280
Crankshaft position sensor (POS) circuit		2	2												EC-284
Camshaft position sensor (PHASE) circuit		2	2												EC-291

	SYMPTOM													Reference page
	HARD/NO START/RESTART (EXCP. HA)	ENGINE STALL	HESITATION/SURGING/FLAT SPOT	SPARK KNOCK/DETONATION	LACK OF POWER/POOR ACCELERATION	HIGH IDLE/LOW IDLE	ROUGH IDLE/HUNTING	IDLING VIBRATION	SLOW/NO RETURN TO IDLE	OVERHEATS/WATER TEMPERATURE HIGH	EXCESSIVE FUEL CONSUMPTION	EXCESSIVE OIL CONSUMPTION	BATTERY DEAD (UNDER CHARGE)	
Warranty symptom code	AA	AB	AC	AD	AE	AF	AG	AH	AJ	AK	AL	AM	HA	
Vehicle speed signal circuit		2	3		3						3			EC-370
Power steering oil pressure switch circuit		2				3	3	3	3					EC-591
ECM	2	2	3	3	3	3	3	3	3	3	3			EC-376, EC-383
Intake valve timing control solenoid valve circuit	3	3	2		1	3	2	2	3		3			EC-393
VIAS control solenoid valve circuit					1									EC-565
PNP switch circuit			3		3	3	3	3	3		3			EC-545
Start signal circuit	2													EC-580
Refrigerant pressure sensor circuit		2				3	3	3	3		4			EC-596
Electrical load signal circuit						3	3	3	3					EC-601
Air conditioner circuit	2	2	3	3	3	3	3	3	3		3		2	MTC-28

1 - 6: The numbers refer to the order of inspection.

(continued on next page)

SYSTEM — ENGINE MECHANICAL & OTHER

		SYMPTOM													Reference page
		HARD/NO START/RESTART (EXCP. HA)	ENGINE STALL	HESITATION/SURGING/FLAT SPOT	SPARK KNOCK/DETONATION	LACK OF POWER/POOR ACCELERATION	HIGH IDLE/LOW IDLE	ROUGH IDLE/HUNTING	IDLING VIBRATION	SLOW/NO RETURN TO IDLE	OVERHEATS/WATER TEMPERATURE HIGH	EXCESSIVE FUEL CONSUMPTION	EXCESSIVE OIL CONSUMPTION	BATTERY DEAD (UNDER CHARGE)	
Warranty symptom code		AA	AB	AC	AD	AE	AF	AG	AH	AJ	AK	AL	AM	HA	
Fuel	Fuel tank	5	5												FL-8
	Fuel piping			5	5	5		5	5			5			EC-1116, EM-29
	Vapor lock														—
	Valve deposit	5		5	5	5		5	5			5			—
	Poor fuel (Heavy weight gasoline, Low octane)														—
Air	Air duct	5	5	5	5	5	5	5	5	5		5			EM-14
	Air cleaner														EM-14
	Air leakage from air duct (Mass air flow sensor —electric throttle control actuator)														EM-14
	Electric throttle control actuator														EM-16
	Air leakage from intake manifold/ Collector/Gasket														EM-16
Cranking	Battery	1	1	1		1		1	1			1		1	SC-4
	Generator circuit														SC-25
	Starter circuit	3													SC-9
	Signal plate/Flywheel/Drive plate	6													EM-67
	PNP switch	4													MT-12 or AT-103
Engine	Cylinder head	5	5	5	5	5		5	5			5			EM-53
	Cylinder head gasket										4		3		
	Cylinder block	6	6	6	6	6		6	6			6	4		EM-67
	Piston														
	Piston ring														
	Connecting rod														
	Bearing														
	Crankshaft														

		SYMPTOM													Reference page
		HARD/NO START/RESTART (EXCP. HA)	ENGINE STALL	HESITATION/SURGING/FLAT SPOT	SPARK KNOCK/DETONATION	LACK OF POWER/POOR ACCELERATION	HIGH IDLE/LOW IDLE	ROUGH IDLE/HUNTING	IDLING VIBRATION	SLOW/NO RETURN TO IDLE	OVERHEATS/WATER TEMPERATURE HIGH	EXCESSIVE FUEL CONSUMPTION	EXCESSIVE OIL CONSUMPTION	BATTERY DEAD (UNDER CHARGE)	
Warranty symptom code		AA	AB	AC	AD	AE	AF	AG	AH	AJ	AK	AL	AM	HA	
Valve mechanism	Timing chain	5	5	5	5	5		5	5			5			EM-45
	Camshaft														EM-34
	Intake valve timing control														EM-45
	Intake valve												3		EM-53
	Exhaust valve														
Exhaust	Exhaust manifold/Tube/Muffler/Gasket	5	5	5	5	5		5	5			5			EM-21, EX-3
	Three way catalyst														
Lubrication	Oil pan/Oil strainer/Oil pump/Oil filter/Oil gallery	5	5	5	5	5		5	5			5	2		EM-23, LU-8 , LU-9 , LU-4
	Oil level (Low)/Filthy oil														LU-6
Cooling	Radiator/Hose/Radiator filler cap	5	5	5	5	5		5	5		2	5			CO-12
	Thermostat									5					CO-20
	Water pump														CO-18
	Water gallery														CO-9
	Cooling fan									5					CO-12
	Coolant level (low)/Contaminated coolant														CO-10
NVIS (NISSAN Vehicle Immobilizer System — NATS)		1	1												EC-68 or BL-116

1 - 6: The numbers refer to the order of inspection.

Engine Control Component Parts Location

UBS002OO

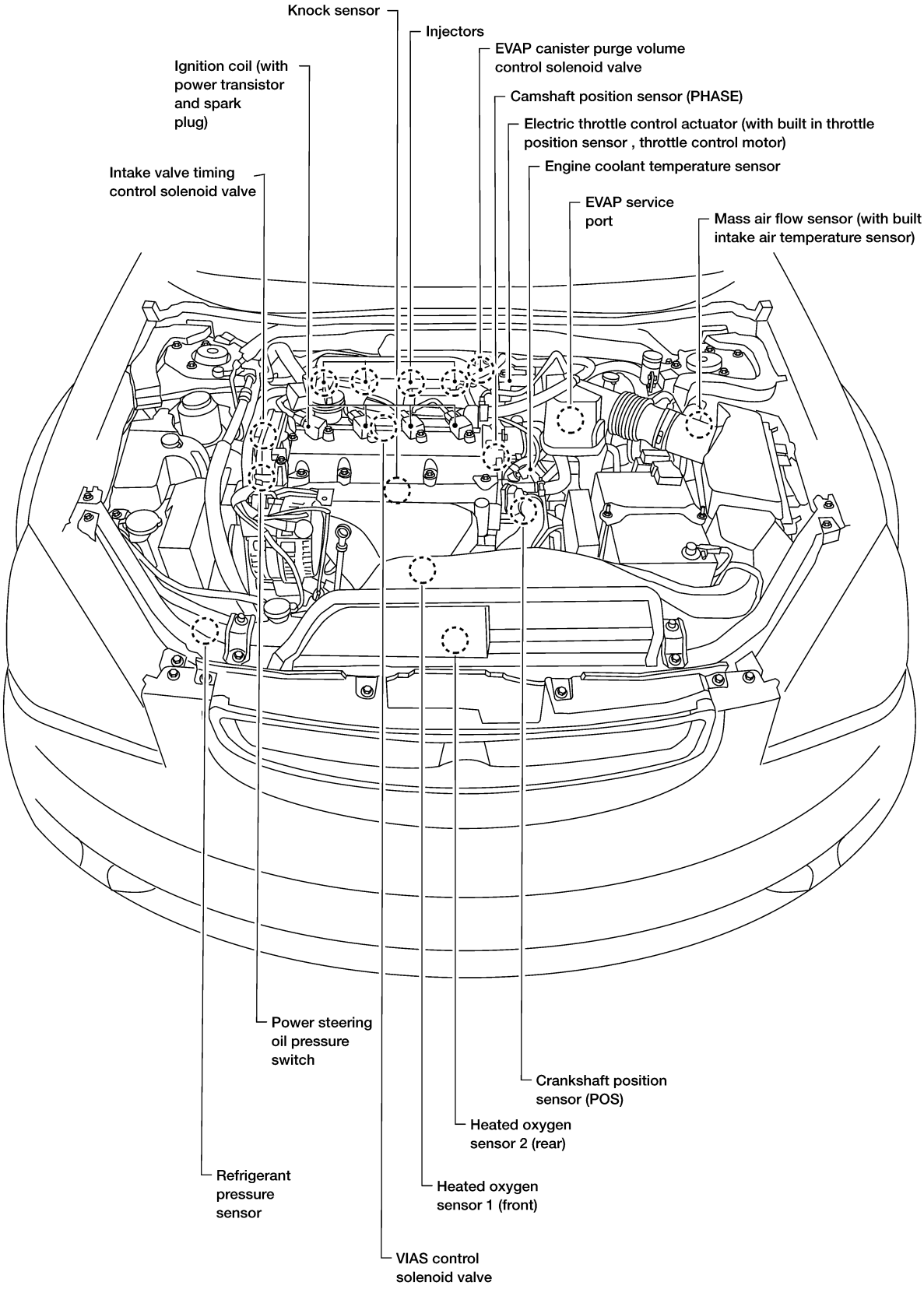

BBIA0001E

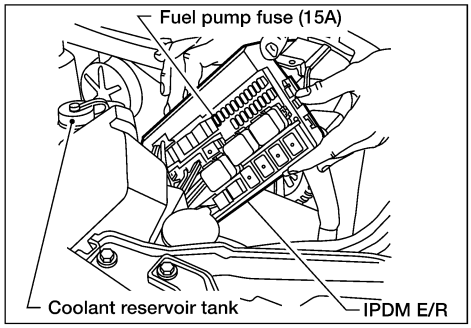
Fuel pump fuse (15A)
Coolant reservoir tank
IPDM E/R

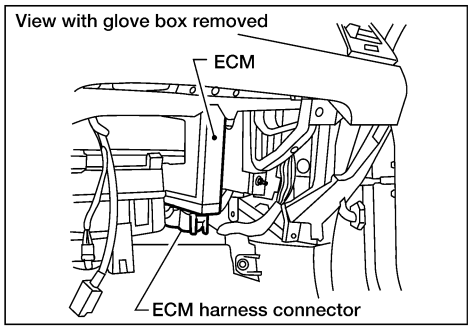
View with glove box removed
ECM
ECM harness connector

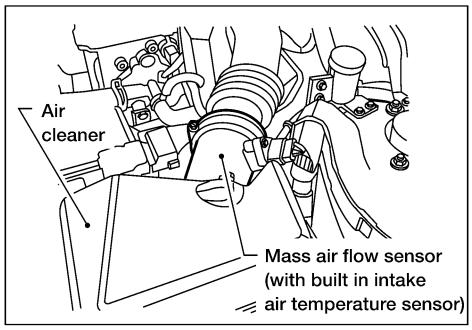
Air cleaner
Mass air flow sensor (with built in intake air temperature sensor)

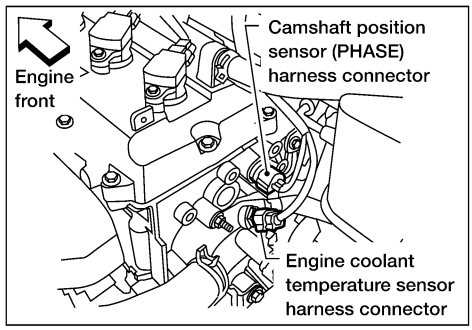
Engine front
Camshaft position sensor (PHASE) harness connector
Engine coolant temperature sensor harness connector

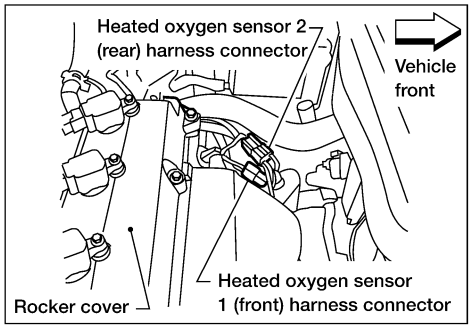
Heated oxygen sensor 2 (rear) harness connector
Vehicle front
Rocker cover
Heated oxygen sensor 1 (front) harness connector

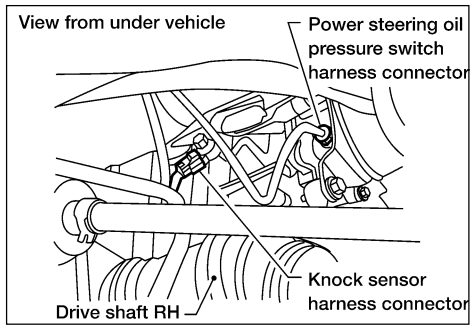
View from under vehicle
Power steering oil pressure switch harness connector
Knock sensor harness connector
Drive shaft RH

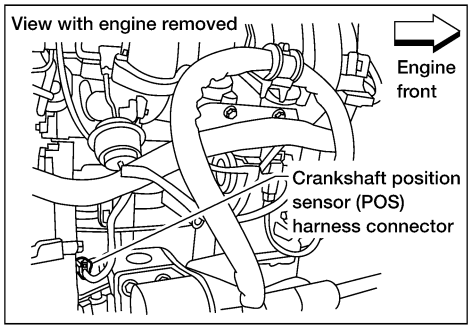
View with engine removed
Engine front
Crankshaft position sensor (POS) harness connector

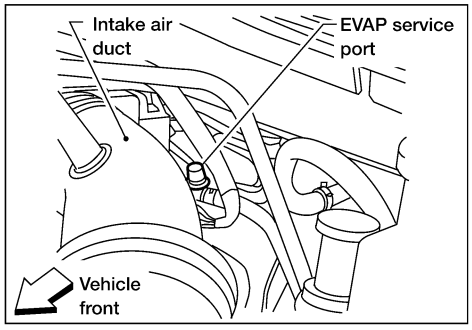
Intake air duct
EVAP service port
Vehicle front

BBIA0090E

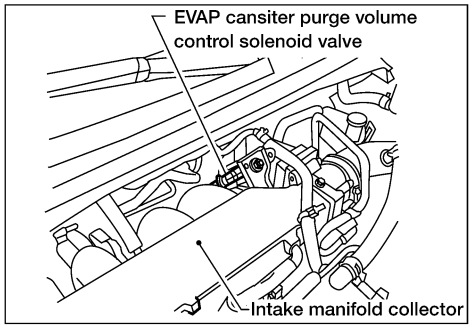
EVAP cansiter purge volume control solenoid valve
Intake manifold collector

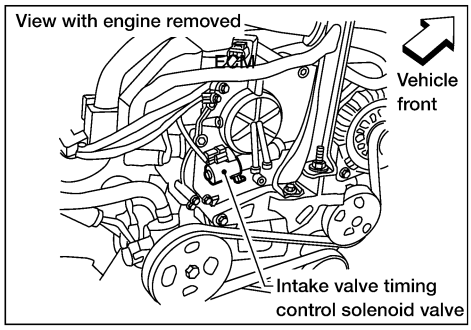
View with engine removed
Vehicle front
Intake valve timing control solenoid valve

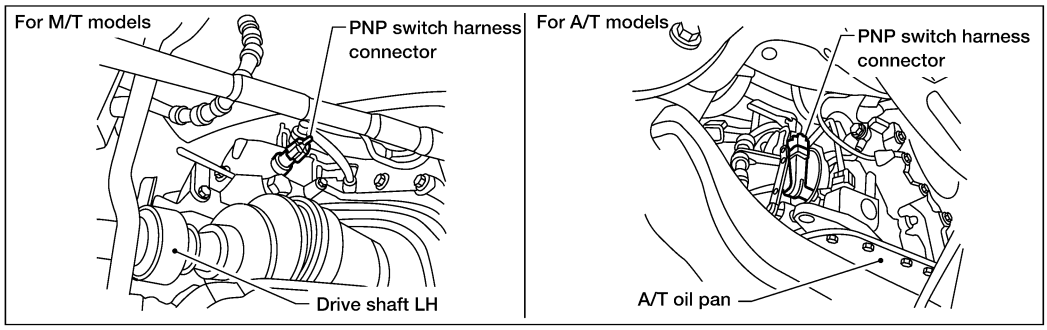
For M/T models
PNP switch harness connector
Drive shaft LH
For A/T models
PNP switch harness connector
A/T oil pan

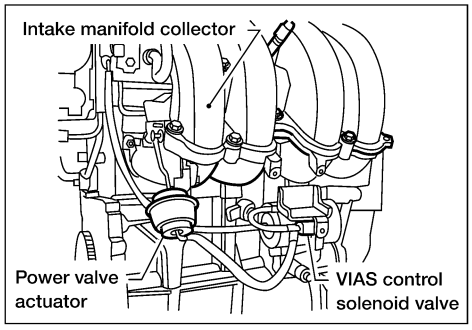
Intake manifold collector
Power valve actuator
VIAS control solenoid valve

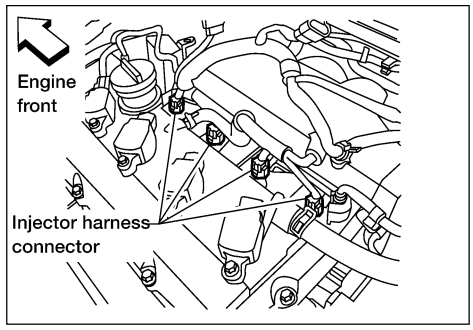
Engine front
Injector harness connector

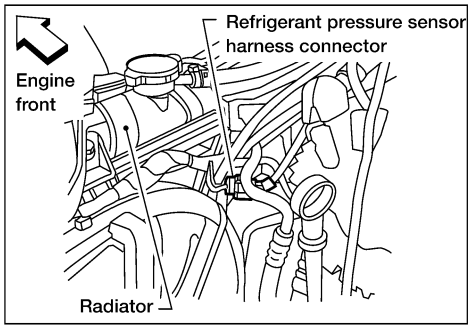
Engine front
Refrigerant pressure sensor harness connector
Radiator

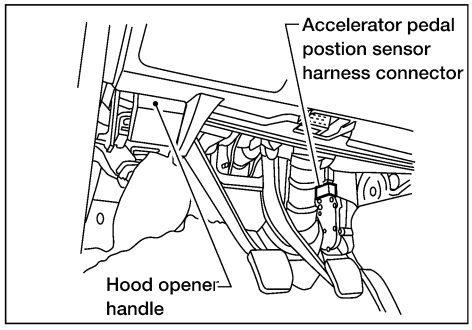
Accelerator pedal postion sensor harness connector
Hood opener handle

BBIA0224E

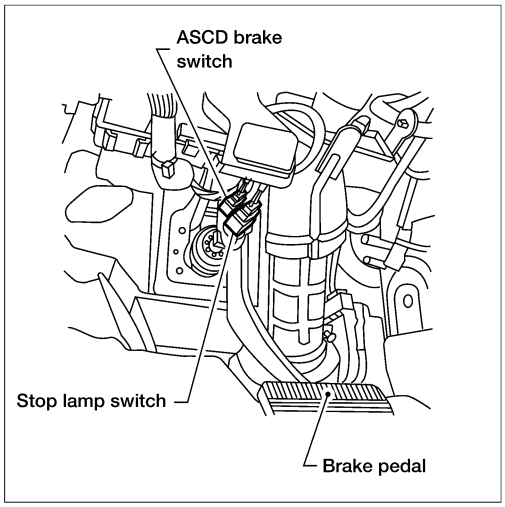
ASCD brake switch
Stop lamp switch
Brake pedal

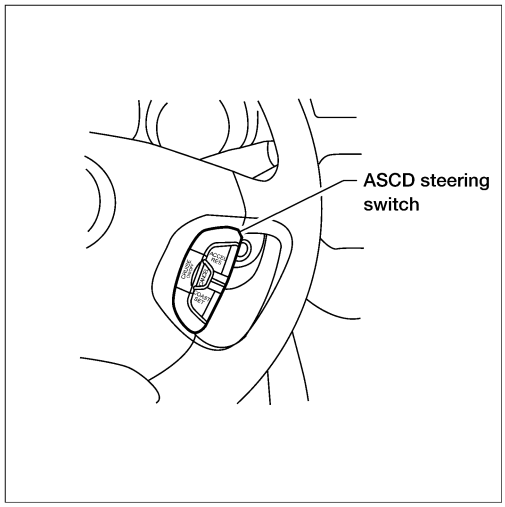
ASCD steering switch

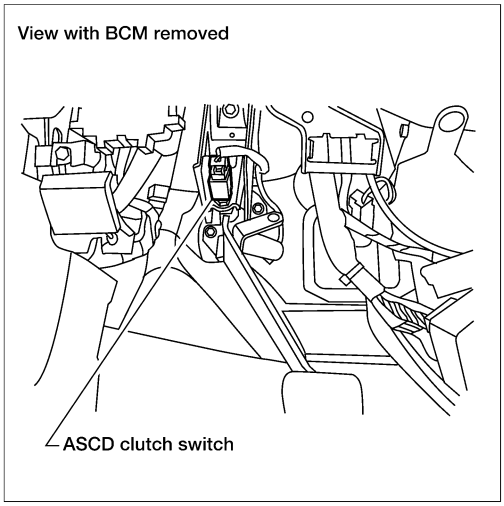
View with BCM removed
ASCD clutch switch

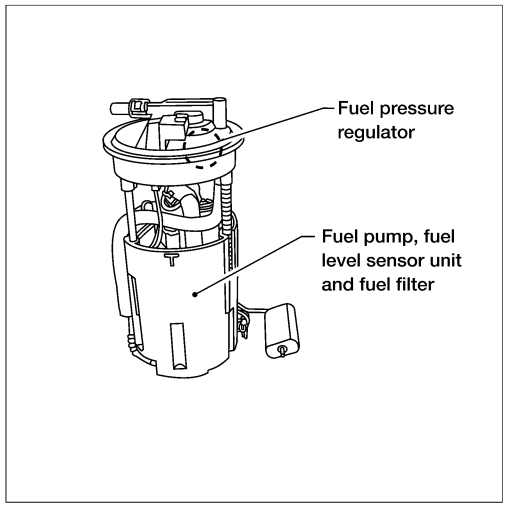
Fuel pressure regulator
Fuel pump, fuel level sensor unit and fuel filter

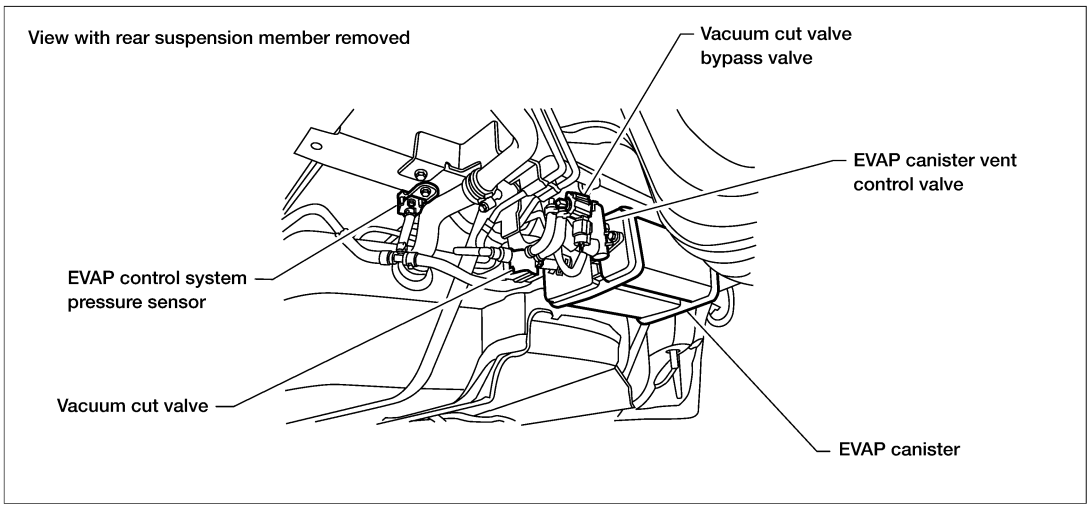
View with rear suspension member removed
Vacuum cut valve bypass valve
EVAP canister vent control valve
EVAP control system pressure sensor
Vacuum cut valve
EVAP canister

BBIA0092E

Circuit Diagram

UBS002OP

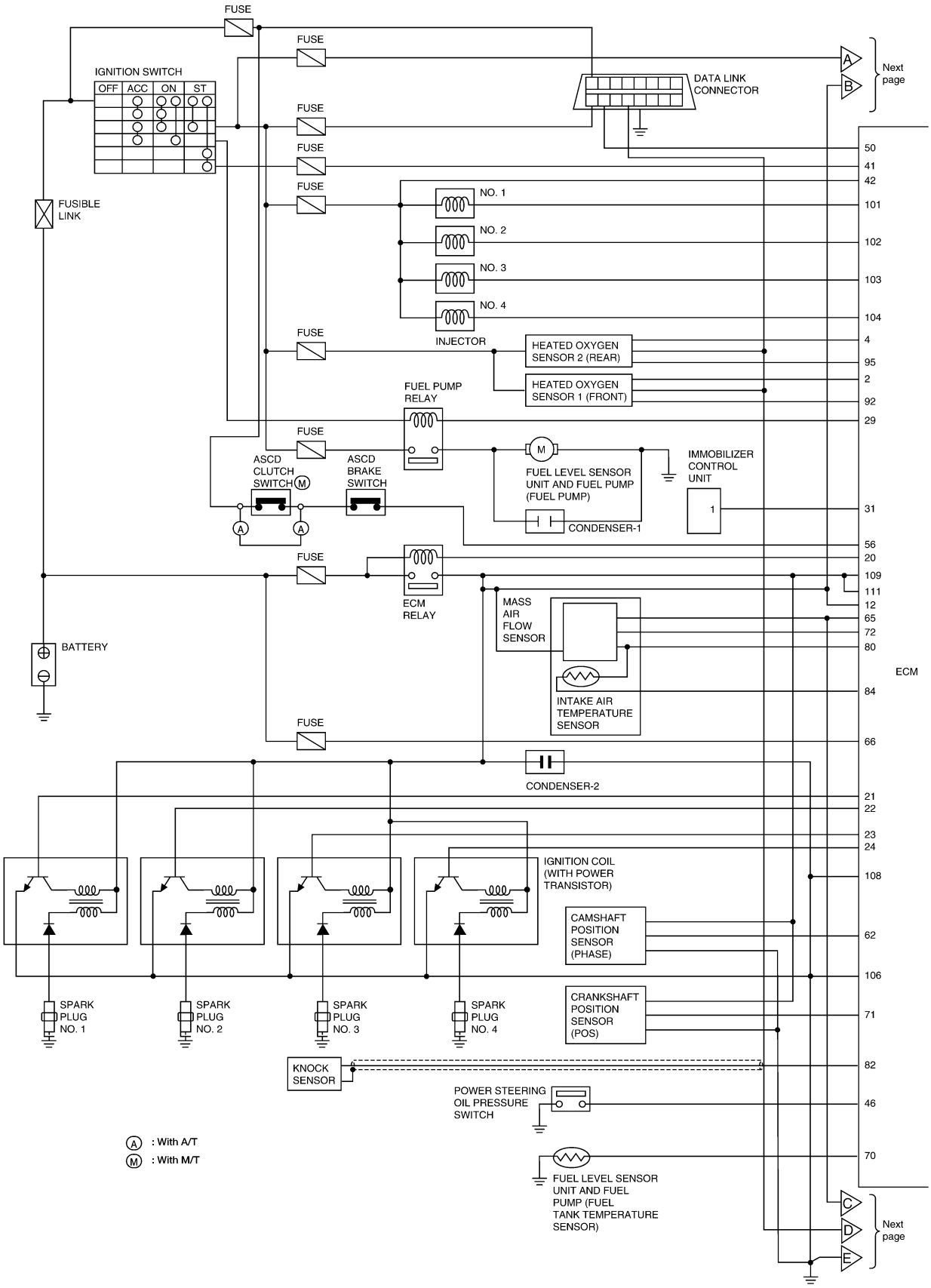

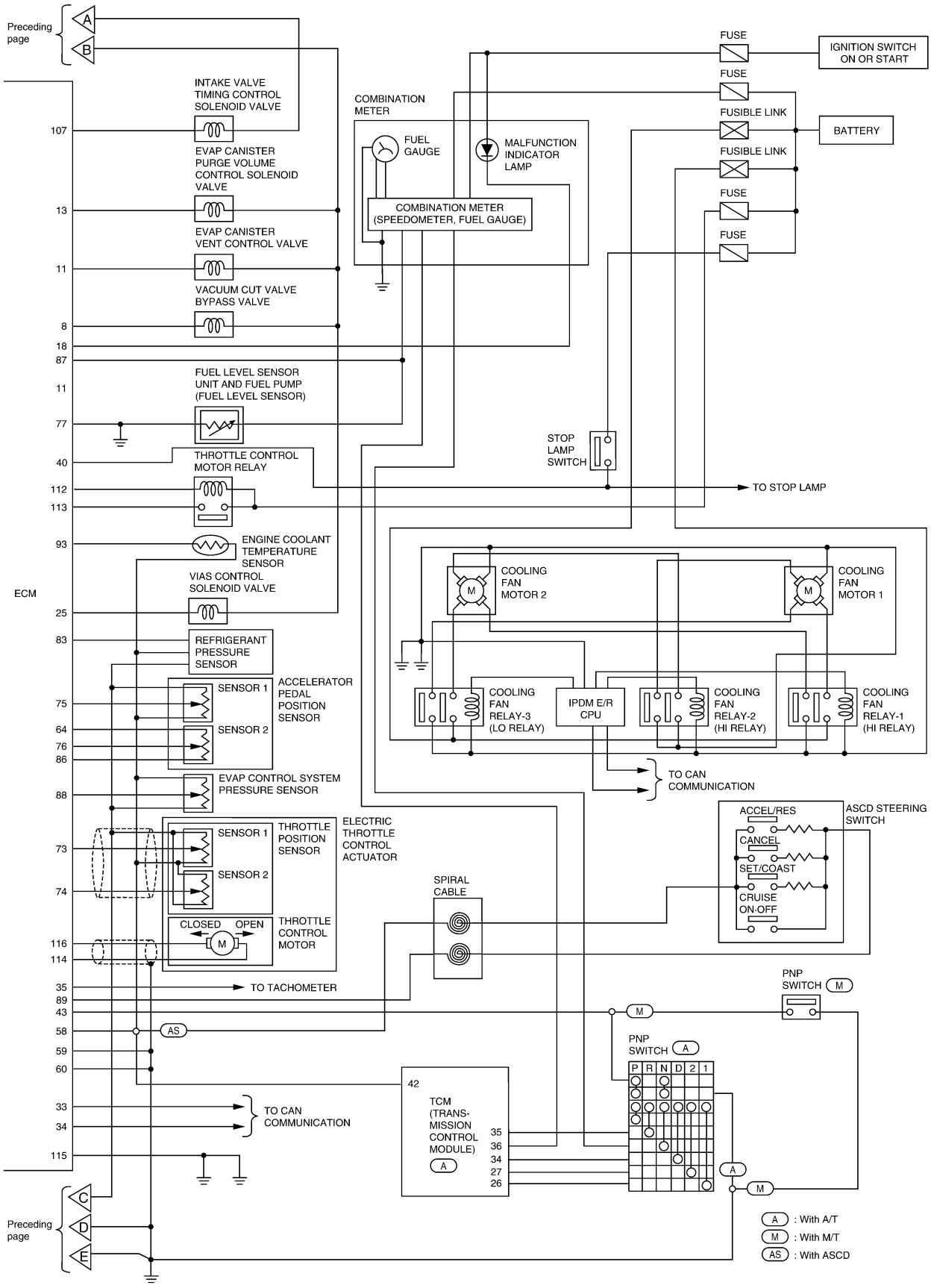
Preceding page
A
B
INTAKE VALVE TIMING CONTROL SOLENOID VALVE
107
EVAP CANISTER PURGE VOLUME CONTROL SOLENOID VALVE
13
EVAP CANISTER VENT CONTROL VALVE
11
VACUUM CUT VALVE BYPASS VALVE
8
18
87
FUEL LEVEL SENSOR UNIT AND FUEL PUMP (FUEL LEVEL SENSOR)
11
77
40
THROTTLE CONTROL MOTOR RELAY
112
113
93
ENGINE COOLANT TEMPERATURE SENSOR
VIAS CONTROL SOLENOID VALVE
ECM
25
83
REFRIGERANT PRESSURE SENSOR
ACCELERATOR PEDAL POSITION SENSOR
SENSOR 1
SENSOR 2
75
64
76
86
EVAP CONTROL SYSTEM PRESSURE SENSOR
88
ELECTRIC THROTTLE CONTROL ACTUATOR
THROTTLE POSITION SENSOR
SENSOR 1
SENSOR 2
73
74
THROTTLE CONTROL MOTOR
CLOSED
OPEN
M
116
114
35
TO TACHOMETER
89
43
58
AS
59
60
33
34
TO CAN COMMUNICATION
115
Preceding page
C
D
E
COMBINATION METER
FUEL GAUGE
MALFUNCTION INDICATOR LAMP
COMBINATION METER (SPEEDOMETER, FUEL GAUGE)
FUSE
FUSE
FUSIBLE LINK
FUSIBLE LINK
FUSE
FUSE
IGNITION SWITCH ON OR START
BATTERY
STOP LAMP SWITCH
TO STOP LAMP
COOLING FAN MOTOR 2
COOLING FAN MOTOR 1
M
COOLING FAN RELAY-3 (LO RELAY)
IPDM E/R CPU
COOLING FAN RELAY-2 (HI RELAY)
COOLING FAN RELAY-1 (HI RELAY)
TO CAN COMMUNICATION
ACCEL/RES
CANCEL
SET/COAST
CRUISE ON-OFF
ASCD STEERING SWITCH
SPIRAL CABLE
PNP SWITCH
M
PNP SWITCH
A
P R N D 2 1
42
TCM (TRANS-MISSION CONTROL MODULE)
A
35
36
34
27
26
A : With A/T
M : With M/T
AS : With ASCD
BBWA0002E

ECM Harness Connector Terminal Layout

UBS002OQ

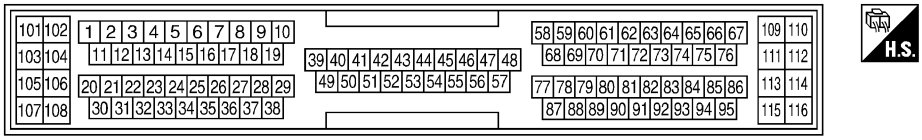

SEF970W

ECM Terminals and Reference Value

UBS002OR

PREPARATION

1. ECM is located behind the glove box. For this inspection, remove glove box.
2. Remove ECM harness protector.

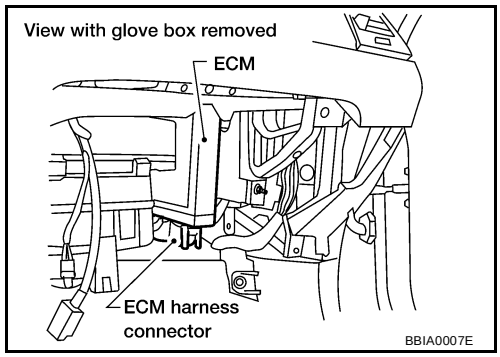

BBIA0007E

3. Perform all voltage measurements with the connector connected. Extend tester probe as shown to perform tests easily.
   - Open harness securing clip to make testing easier.
   - Use extreme care not to touch 2 pins at one time.
   - Data is for comparison and may not be exact.

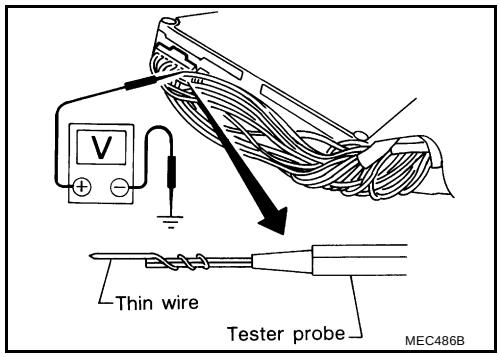

MEC486B

ECM INSPECTION TABLE

Specification data are reference values and are measured between each terminal and body ground.

CAUTION:

Do not use ECM ground terminals when measuring input/output voltage. Doing so may result in damage to the ECM's transistor. Use a ground other than ECM terminals, such as the ground.

TERMINAL NO.	WIRE COLOR	ITEM	CONDITION	DATA (DC Voltage)
2	OR/B	Heated oxygen sensor 1 heater	**[Engine is running]** ● **Warm-up condition.** ● Engine speed is below 3,600 rpm.	Approximately 7.0V 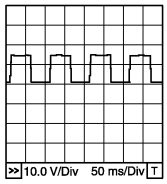 PBIB0519E
			[Engine is running] ● Engine speed is above 3,600 rpm.	BATTERY VOLTAGE (11 - 14V)

TERMINAL NO.	WIRE COLOR	ITEM	CONDITION	DATA (DC Voltage)
4	P/B	Heated oxygen sensor 2 heater	**[Engine is running]** ● Engine speed is below 3,600 rpm. ● After driving for 2 minutes at a speed of 70 km/h (43 MPH) or more.	0 - 1.0V
			[Ignition switch “ON”] ● Engine stopped **[Engine is running]** ● Engine speed is above 3,600 rpm.	BATTERY VOLTAGE (11 - 14V)
8	BR	Vacuum cut valve bypass valve	**[Ignition switch “ON”]**	BATTERY VOLTAGE (11 - 14V)
11	OR	EVAP canister vent control valve	**[Ignition switch “ON”]**	BATTERY VOLTAGE (11 - 14V)
12	R	Counter current return	**[Ignition switch "ON"]**	BATTERY VOLTAGE (11 - 14V)
13	PU/R	EVAP canister purge volume control solenoid valve	**[Engine is running]** ● Idle speed	BATTERY VOLTAGE (11 - 14V)★ 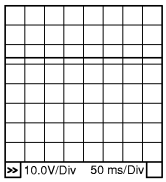 PBIB0050E
			[Engine is running] ● Engine speed is about 2,000 rpm (More than 100 seconds after starting engine)	Approximately 10V★ 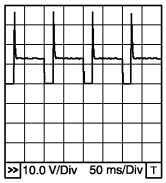 PBIB0520E
18	LG/B	MIL	**[Ignition switch “ON”]**	0 - 1.0V
			[Engine is running] ● Idle speed	BATTERY VOLTAGE (11 - 14V)
20	W/B	ECM relay (Self shut-off)	**[Engine is running]** **[Ignition switch “OFF”]** ● For 3 seconds after turning ignition switch “OFF”	0 - 1.0V
			[Ignition switch “OFF”] ● 3 seconds passed after turning ignition switch “OFF”	BATTERY VOLTAGE (11 - 14V)

TERMINAL NO.	WIRE COLOR	ITEM	CONDITION	DATA (DC Voltage)
21 22 23 24	Y/R G/R L/R G/Y	Ignition signal No. 1 Ignition signal No. 2 Ignition signal No. 3 Ignition signal No. 4	**[Engine is running]** ● **Warm-up condition** ● Idle speed	0 - 0.1V★ 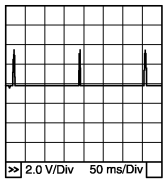 PBIB0521E
			[Engine is running] ● **Warm-up condition** ● Engine speed is 2,000 rpm.	0 - 0.2V★ 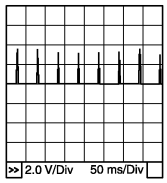 PBIB0522E
25	Y/G	VIAS control solenoid valve	**[Engine is running]** ● Idle speed	BATTERY VOLTAGE (11 - 14V)
			[Engine is running] ● Engine speed is above 5,000 rpm	0 - 1.0V
29	B/OR	Fuel pump relay	**[Ignition switch "ON"]** ● For 1 seconds after turning ignition switch "ON" **[Engine is running]**	0 - 1.0V
			[Ignition switch "ON"] ● More than 1 seconds after turning ignition switch "ON".	BATTERY VOLTAGE (11 - 14V)
33	L	CAN communication line	**[Ignition switch "ON"]**	Approximately 2.6 - 3.2V Output voltage varies with the communication status.
34	Y	CAN communication line	**[Ignition switch "ON"]**	Approximately 1.7 - 2.3V Output voltage varies with the communication status.
40	R/G	Stop lamp switch	**[Engine is running]** ● Brake pedal fully released	Approximately 0V
			[Engine is running] ● Brake pedal depressed	BATTERY VOLTAGE (11 - 14V)
41	BR/W	Start signal	**[Ignition switch "ON"]**	Approximately 0V
			[Ignition switch "START"]	9 - 14V
42	R	Ignition switch	**[Ignition switch "OFF"]**	0V
			[Ignition switch "ON"]	BATTERY VOLTAGE (11 - 14V)
43	G/R (A/T) G/W (M/T)	PNP switch	**[Ignition switch "ON"]** ● Shift lever position is "P" or "N" (A/T models), "Neutral" (M/T models).	Approximately 0V
			[Ignition switch "ON"] ● Except the above gear position	**A/T models** BATTERY VOLTAGE (11 - 14V) **M/T models** Approximately 5V

TERMINAL NO.	WIRE COLOR	ITEM	CONDITION	DATA (DC Voltage)
46	G	Power steering oil pressure switch	**[Engine is running]** ● Steering wheel is being turned	Approximately 0V
			[Engine is running] ● Steering wheel is not being turned	BATTERY VOLTAGE (11 - 14V)
50	OR	Data link connector	**[Ignition switch "ON"]** ● CONSULT-II or GST is disconnected.	Approximately 5V
56	G/B (A/T) G/R (M/T)	ASCD brake switch	**[Ignition switch "ON"]** ● Brake pedal is depressed ● Clutch pedal is depressed (M/T models)	Approximately 0V
			[Ignition switch "ON"] ● Brake pedal is fully released ● Clutch pedal is fully released (M/T models)	BATTERY VOLTAGE (11 - 14V)
58	B	Sensors' ground	**[Engine is running]** ● **Warm-up condition** ● Idle speed	Approximately 0V
59 60 106 108	B B B B	ECM ground	**[Engine is running]** ● Idle speed	Engine ground
62	W	Camshaft position sensor (PHASE)	**[Engine is running]** ● **Warm-up condition** ● Idle speed	1.0 - 4.0V★ 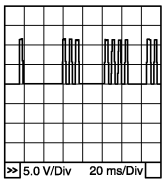 PBIB0525E
			[Engine is running] ● Engine speed is 2,000 rpm.	1.0 - 4.0V★ 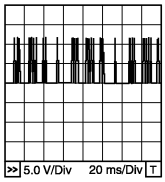 PBIB0526E
64	OR	Accelerator pedal position sensor 2 power supply	**[Ignition switch "ON"]**	Approximately 2.5V
65	R	Sensor's power supply	**[Ignition switch "ON"]**	Approximately 5V
66	W/L	Power supply for ECM (Buck-up)	**[Ignition switch "OFF"]**	BATTERY VOLTAGE (11 - 14V)
70	P/L	Fuel tank temperature sensor	**[Engine is running]**	Approximately 0 - 4.8V Output voltage varies with fuel tank temperature.

TERMINAL NO.	WIRE COLOR	ITEM	CONDITION	DATA (DC Voltage)
71	W	Crankshaft position sensor (POS)	**[Engine is running]** ● **Warm-up condition** ● Idle speed	Approximately 3V★ 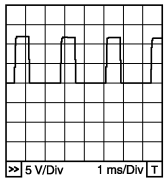 PBIB0527E
			[Engine is running] ● Engine speed is 2,000 rpm	Approximately 3V★ 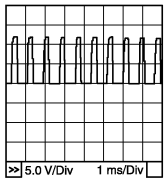 PBIB0528E
72	W	Mass air flow sensor	**[Engine is running]** ● **Warm-up condition** ● Idle speed	1.1 - 1.5V
			[Engine is running] ● **Warm-up condition** ● Engine speed is 2,500 rpm.	1.6 - 2.0V
73	W	Throttle position sensor 1	**[Ignition switch "ON"]** ● Shift lever position is "D" (A/T model) ● Shift lever position is "1st" (M/T model) ● Accelerator pedal fully released	More than 0.36V
			[Ignition switch “ON”] ● Shift lever position is "D" (A/T model) ● Shift lever position is "1st" (M/T model) ● Accelerator pedal fully depressed	Less than 4.75V
74	G	Throttle position sensor 2	**[Ignition switch "ON"]** ● Shift lever position is "D" (A/T model) ● Shift lever position is "1st" (M/T model) ● Accelerator pedal fully released	Less than 4.75V
			[Ignition switch “ON”] ● Shift lever position is "D" (A/T model) ● Shift lever position is "1st" (M/T model) ● Accelerator pedal fully depressed	More than 0.36V
75	W	Accelerator pedal position sensor 1	**[Ignition switch "ON"]** ● Accelerator pedal fully released	0.41 - 0.71V
			[Ignition switch "ON"] ● Accelerator pedal fully depressed	More than 4.2V
76	W/B	Accelerator pedal position sensor 2	**[Ignition switch "ON"]** ● Accelerator pedal fully released	0.21 - 0.36V
			[Ignition switch "ON"] ● Accelerator pedal fully depressed	More than 2.1V
77	B/R	Fuel level sensor ground	**[Engine is running]** ● Idle speed	Approximately 0V

TERMINAL NO.	WIRE COLOR	ITEM	CONDITION	DATA (DC Voltage)
80	B	Mass air flow sensor ground	**[Engine is running]** ● **Warm-up condition** ● Idle speed	Approximately 0V
82	W	Knock sensor	**[Engine is running]** ● Idle speed	Approximately 2.5V
83	W	Refrigerant pressure sensor	**[Engine is running]** ● **Warm-up condition** ● Both A/C switch and blower switch are “ON”. (Compressor operates.)	1.0 - 4.0V
84	Y/G	Intake air temperature sensor	**[Engine is running]**	Approximately 0 - 4.8V Output voltage varies with intake air temperature.
86	G	Accelerator pedal position sensor 2 ground	**[Ignition switch “ON”]**	Approximately 0V
87	G/B	Fuel level sensor	**[Ignition switch “ON”]**	Approximately 0 - 4.8V Output voltage varies with fuel level.
88	W	EVAP control system pressure sensor	**[Ignition switch “ON”]**	Approximately 1.8 - 4.8V
89	G/Y	ASCD steering switch	**[Ignition switch “ON”]** ● ASCD steering switch is “OFF”.	Approximately 4.0V
			[Ignition switch “ON”] ● CRUISE switch is “ON”.	Approximately 0V
			[Ignition switch “ON”] ● CANCEL switch is “ON”.	Approximately 1V
			[Ignition switch “ON”] ● SET/COAST switch is “ON”.	Approximately 2V
			[Ignition switch “ON”] ● RESUME/ACCEL switch is “ON”.	Approximately 3V
90	W	Accelerator pedal position sensor signal output	**[Ignition switch "ON"]** ● Accelerator pedal fully released	0.41 - 0.71V
			[Ignition switch “ON”] ● Accelerator pedal fully depressed	More than 4.2V
92	W	Heated oxygen sensor 1	**[Engine is running]** ● **Warm-up condition** ● Engine speed is 2,000 rpm.	0 - Approximately 1.0V (Periodically change)
93	Y	Engine coolant temperature sensor	**[Engine is running]**	Approximately 0 - 4.8V Output voltage varies with engine coolant temperature.
95	W	Heated oxygen sensor 2	**[Engine is running]** ● **Warm-up condition** ● Engine speed is 2,000 rpm.	0 - Approximately 1.0V

TERMINAL NO.	WIRE COLOR	ITEM	CONDITION	DATA (DC Voltage)
101 102 103 104	R/B R/W R/Y R/L	Injector No. 1 Injector No. 2 Injector No. 3 Injector No. 4	**[Engine is running]** ● **Warm-up condition** ● Idle speed	BATTERY VOLTAGE (11 - 14V)★ 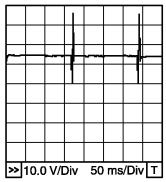 PBIB0529E
			[Engine is running] ● **Warm-up condition** ● Engine speed is 2,000 rpm	BATTERY VOLTAGE (11 - 14V)★ 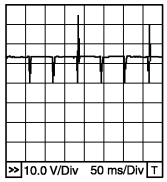 PBIB0530E
107	G	Intake valve timing control solenoid valve	**[Engine is running]** ● **Warm-up condition** ● Idle speed	BATTERY VOLTAGE (11 - 14V)
			[Engine is running] ● **Warm-up condition** ● Engine speed is 2,000 rpm	Approximately 9V★ 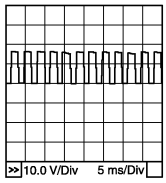 PBIB0532E
109 111	R/G R/G	Power supply for ECM	**[Ignition switch “ON”]**	BATTERY VOLTAGE (11 - 14V)
112	OR	Throttle control motor relay	**[Ignition switch "OFF"]**	BATTERY VOLTAGE (11 - 14V)
			[Ignition switch "ON"]	0 - 1.0V
113	R	Throttle control motor relay power supply	**[Ignition switch "ON"]**	BATTERY VOLTAGE (11 - 14V)
114	Y	Throttle control motor (Open)	**[Ignition switch "ON"]** ● Shift lever position is "D" (A/T model) ● Shift lever position is "1st" (M/T model) ● Accelerator pedal is depressing	0 - 14V★ 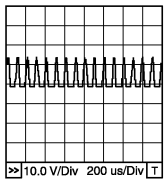 PBIB0533E

TERMINAL NO.	WIRE COLOR	ITEM	CONDITION	DATA (DC Voltage)
115	B	Throttle control motor ground	**[Engine is running]** ● Idle speed	Approximately 0V
116	BR	Throttle control motor (Close)	**[Ignition switch "ON"]** ● Shift lever position is "D" (A/T model) ● Shift lever position is "1st" (M/T model) ● Accelerator pedal is releasing	0 - 14V★ 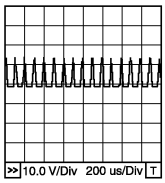 PBIB0534E

★: Average voltage for pulse signal (Actual pulse signal can be confirmed by oscilloscope.)

CONSULT-II Function

UBS002OS

FUNCTION

Diagnostic test mode	Function
Work support	This mode enables a technician to adjust some devices faster and more accurately by following the indications on the CONSULT-II unit.
Self-diagnostic results	Self-diagnostic results such as 1st trip DTC, DTCs and 1st trip freeze frame data or freeze frame data can be read and erased quickly.*1
Data monitor	Input/Output data in the ECM can be read.
Data monitor (SPEC)	Input/Output of the specification for Basic fuel schedule, AFM, A/F feedback control value and the other data monitor items can be read.
Active test	Diagnostic Test Mode in which CONSULT-II drives some actuators apart from the ECMs and also shifts some parameters in a specified range.
Function test	This mode is used to inform customers when their vehicle condition requires periodic maintenance.
DTC & SRT confirmation	The status of system monitoring tests and the self-diagnosis status/result can be confirmed.
ECM part number	ECM part number can be read.

*1 The following emission-related diagnostic information is cleared when the ECM memory is erased.

1. Diagnostic trouble codes
2. 1st trip diagnostic trouble codes
3. Freeze frame data
4. 1st trip freeze frame data
5. System readiness test (SRT) codes
6. Test values
7. Others

ENGINE CONTROL COMPONENT PARTS/CONTROL SYSTEMS APPLICATION

Item			DIAGNOSTIC TEST MODE							
			WORK SUP-PORT	SELF-DIAGNOSTIC RESULTS		DATA MONI-TOR	DATA MONI-TOR (SPEC)	ACTIVE TEST	DTC & SRT CONFIRMATION	
				DTC*1	FREEZE FRAME DATA*2				SRT STATUS	DTC WORK SUP-PORT
ENGINE CONTROL COMPONENT PARTS	INPUT	Crankshaft position sensor (POS)		×	×	×	×			
		Camshaft position sensor (PHASE)		×		×	×			
		Mass air flow sensor		×		×	×			
		Engine coolant temperature sensor		×	×	×	×	×		
		Heated oxygen sensor 1		×		×	×		×	×
		Heated oxygen sensor 2		×		×	×		×	×
		Vehicle speed sensor		×	×	×	×			
		Accelerator pedal position sensor		×		×	×			
		Throttle position sensor		×		×	×			
		Fuel tank temperature sensor		×		×	×	×		
		EVAP control system pressure sensor		×		×	×			
		Intake air temperature sensor		×		×	×			
		Knock sensor		×						
		Refrigerant pressure sensor				×	×			
		Ignition switch (start signal)				×	×			
		Closed throttle position switch (accelerator pedal position sensor signal)				×	×			
		Air conditioner switch				×	×			
		Park/neutral position (PNP) switch		×		×	×			
		Stop lamp switch		×		×	×			
		Power steering oil pressure switch				×	×			
		Battery voltage				×	×			
		Load signal				×	×			
		Fuel level sensor		×		×	×			
		ASCD steering switch		×		×	×			
		ASCD brake switch		×		×	×			

Item			DIAGNOSTIC TEST MODE							
			WORK SUP-PORT	SELF-DIAGNOSTIC RESULTS		DATA MONI-TOR	DATA MONI-TOR (SPEC)	ACTIVE TEST	DTC & SRT CONFIRMATION	
				DTC*1	FREEZE FRAME DATA*2				SRT STATUS	DTC WORK SUP-PORT
ENGINE CONTROL COMPONENT PARTS	OUTPUT	Injectors				×	×	×		
		Power transistor (Ignition timing)				×	×	×		
		Throttle control motor relay		×		×	×			
		Throttle control motor		×						
		EVAP canister purge volume control solenoid valve		×		×	×	×		×
		Air conditioner relay				×	×			
		Fuel pump relay	×			×	×	×		
		Cooling fan relay		×		×	×	×		
		Heated oxygen sensor 1 heater		×		×	×		×	
		Heated oxygen sensor 2 heater		×		×	×		×	
		EVAP canister vent control valve		×		×	×	×		
		Vacuum cut valve bypass valve		×		×	×	×		×
		Intake valve timing control solenoid valve		×		×	×	×		
		VIAS control solenoid valve				×	×	×		
		Calculated load value			×	×	×			

X: Applicable

*1: This item includes 1st trip DTCs.

*2: This mode includes 1st trip freeze frame data or freeze frame data. The items appear on CONSULT-II screen in freeze frame data mode only if a 1st trip DTC or DTC is detected. For details, refer to EC-59 .

CONSULT-II INSPECTION PROCEDURE

1. Turn ignition switch OFF.
2. Connect “CONSULT-II” to data link connector, which is located under LH dash panel.
3. Turn ignition switch ON.

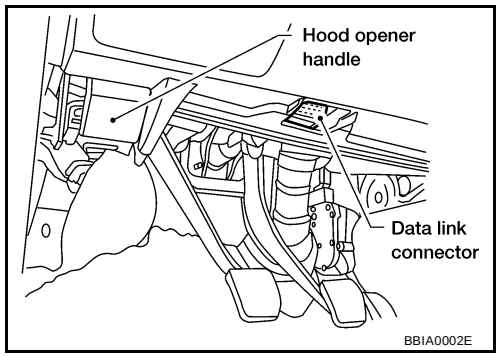

4. Touch “START”.

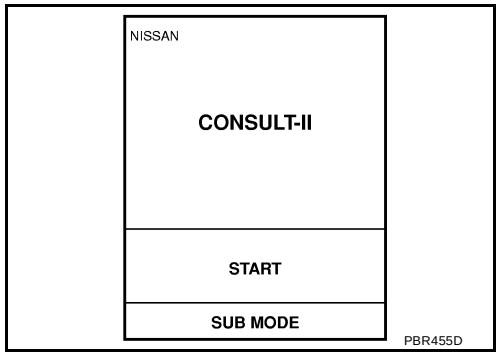

5. Touch “ENGINE”.

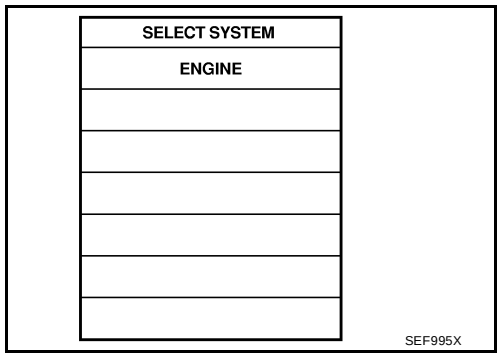

6. Perform each diagnostic test mode according to each service procedure.

For further information, see the CONSULT-II Operation Manual.

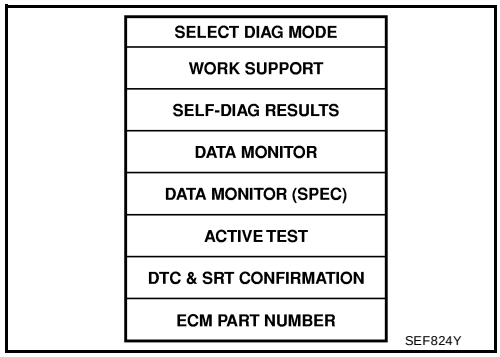

WORK SUPPORT MODE

Work Item

WORK ITEM	CONDITION	USAGE
FUEL PRESSURE RELEASE	● FUEL PUMP WILL STOP BY TOUCHING “START” DURING IDLING. CRANK A FEW TIMES AFTER ENGINE STALLS.	When releasing fuel pressure from fuel line
IDLE AIR VOL LEARN	● THE IDLE AIR VOLUME THAT KEEPS THE ENGINE WITHIN THE SPECIFIED RANGE IS MEMORIZED IN ECM.	When learning the idle air volume
SELF-LEARNING CONT	● THE COEFFICIENT OF SELF-LEARNING CONTROL MIXTURE RATIO RETURNS TO THE ORIGINAL COEFFICIENT.	When clearing the coefficient of self-learning control value
EVAP SYSTEM CLOSE	OPEN THE VACUUM CUT VALVE BYPASS VALVE AND CLOSE THE EVAP CANISTER VENT CONTROL VALVE IN ORDER TO MAKE EVAP SYSTEM CLOSE UNDER THE FOLLOWING CONDITIONS. ● IGN SW “ON” ● ENGINE NOT RUNNING ● AMBIENT TEMPERATURE IS ABOVE 0°C (32°F). ● NO VACUUM AND NO HIGH PRESSURE IN EVAP SYSTEM ● FUEL TANK TEMP. IS MORE THAN 0°C (32°F). ● WITHIN 10 MINUTES AFTER STARTING “EVAP SYSTEM CLOSE” ● WHEN TRYING TO EXECUTE “EVAP SYSTEM CLOSE” UNDER THE CONDITION EXCEPT ABOVE, CONSULT-II WILL DISCONTINUE IT AND DISPLAY APPROPRIATE INSTRUCTION. **NOTE:** **WHEN STARTING ENGINE, CONSULT-II MAY DISPLAY “BATTERY VOLTAGE IS LOW. CHARGE BATTERY”, EVEN IN USING CHARGED BATTERY.**	When detecting EVAP vapor leak point of EVAP system

WORK ITEM	CONDITION	USAGE
TARGET IDLE RPM ADJ*	● IDLE CONDITION	When setting target idle speed
TARGET IGN TIM ADJ*	● IDLE CONDITION	When adjusting target ignition timing After adjustment, confirm target ignition timing with a timing light.

*: This function is not necessary in the usual service procedure.

SELF-DIAG RESULTS MODE

Self Diagnostic Item

Regarding items of “DTC and 1st trip DTC”, refer to EC-15, "INDEX FOR DTC" .)

Freeze Frame Data and 1st Trip Freeze Frame Data

Freeze frame data item*1	Description
DIAG TROUBLE CODE [PXXXX]	● The engine control component part/control system has a trouble code, it is displayed as “PXXXX”. (Refer to EC-15, "INDEX FOR DTC" .)
FUEL SYS-B1	● “Fuel injection system status” at the moment a malfunction is detected is displayed. ● One mode in the following is displayed. “MODE 2”: Open loop due to detected system malfunction “MODE 3”: Open loop due to driving conditions (power enrichment, deceleration enrichment) “MODE 4”: Closed loop - using oxygen sensor(s) as feedback for fuel control “MODE 5”: Open loop - has not yet satisfied condition to go to closed loop
CAL/LD VALUE [%]	● The calculated load value at the moment a malfunction is detected is displayed.
COOLANT TEMP [°C] or [°F]	● The engine coolant temperature at the moment a malfunction is detected is displayed.
L-FUEL TRIM-B1 [%]	● “Long-term fuel trim” at the moment a malfunction is detected is displayed. ● The long-term fuel trim indicates much more gradual feedback compensation to the base fuel schedule than short-term fuel trim.
S-FUEL TRIM-B1 [%]	● “Short-term fuel trim” at the moment a malfunction is detected is displayed. ● The short-term fuel trim indicates dynamic or instantaneous feedback compensation to the base fuel schedule.
ENGINE SPEED [rpm]	● The engine speed at the moment a malfunction is detected is displayed.
VHCL SPEED [km/h] or [mph]	● The vehicle speed at the moment a malfunction is detected is displayed.
B/FUEL SCHDL [msec]	● The base fuel schedule at the moment a malfunction is detected is displayed.
INT/A TEMP SE [°C] or [°F]	● The intake air temperature at the moment a malfunction is detected is displayed.

*1: The items are the same as those of 1st trip freeze frame data.

DATA MONITOR MODE
Monitored Item

×: Applicable

Monitored item [Unit]	ECM INPUT SIG-NALS	MAIN SIG-NALS	CAN DIAG SUP-PORT MNTR	Description	Remarks
ENG SPEED [rpm]	×	×		● Indicates the engine speed computed from the signals of the crankshaft position sensor (POS) and camshaft position sensor (PHASE).	● Accuracy becomes poor if engine speed drops below the idle rpm. ● If the signal is interrupted while the engine is running, an abnormal value may be indicated.
MAS A/F SE-B1 [V]	×	×		● The signal voltage of the mass air flow sensor is displayed.	● When the engine is stopped, a certain value is indicated.
B/FUEL SCHDL [msec]		×		● “Base fuel schedule” indicates the fuel injection pulse width programmed into ECM, prior to any learned on board correction.	
A/F ALPHA-B1 [%]		×		● The mean value of the air-fuel ratio feedback correction factor per cycle is indicated.	● When the engine is stopped, a certain value is indicated. ● This data also includes the data for the air-fuel ratio learning control.
COOLAN TEMP/S [°C] or [°F]	×	×		● The engine coolant temperature (determined by the signal voltage of the engine coolant temperature sensor) is displayed.	● When the engine coolant temperature sensor is open or short-circuited, ECM enters fail-safe mode. The engine coolant temperature determined by the ECM is displayed.
HO2S1 (B1) [V]	×	×		● The signal voltage of the heated oxygen sensor 1 is displayed.	
HO2S2 (B1) [V]	×	×		● The signal voltage of the heated oxygen sensor 2 is displayed.	
HO2S1 MNTR (B1) [RICH/LEAN]	×	×		● Display of heated oxygen sensor 1 signal during air-fuel ratio feedback control: RICH ... means the mixture became “rich”, and control is being affected toward a leaner mixture. LEAN ... means the mixture became “lean”, and control is being affected toward a rich mixture.	● After turning ON the ignition switch, “RICH” is displayed until air-fuel mixture ratio feedback control begins. ● When the air-fuel ratio feedback is clamped, the value just before the clamping is displayed continuously.
HO2S2 MNTR (B1) [RICH/LEAN]	×			● Display of heated oxygen sensor 2 signal: RICH ... means the amount of oxygen after three way catalyst is relatively small. LEAN ... means the amount of oxygen after three way catalyst is relatively large.	● When the engine is stopped, a certain value is indicated.
VHCL SPEED SE [km/h] or [mph]	×	×		● The vehicle speed computed from the vehicle speed signal is displayed.	
BATTERY VOLT [V]	×	×		● The power supply voltage of ECM is displayed.	
ACCEL SEN 1 [V]	×	×		● The accelerator pedal position sensor signal voltage is displayed.	
ACCEL SEN 2 [V]	×				
THRTL SEN 1 [V]	×	×		● The throttle position sensor signal voltage is displayed.	
THRTL SEN 2 [V]	×				

Monitored item [Unit]	ECM INPUT SIG-NALS	MAIN SIG-NALS	CAN DIAG SUP-PORT MNTR	Description	Remarks
FUEL T/TEMP SE [°C] or [°F]	×			● The fuel temperature (determined by the signal voltage of the fuel tank temperature sensor) is displayed.	
INT/A TEMP SE [°C] or [°F]	×	×		● The intake air temperature (determined by the signal voltage of the intake air temperature sensor) is indicated.	
EVAP SYS PRES [V]	×			● The signal voltage of EVAP control system pressure sensor is displayed.	
ABSOL PRES/SE [V]	×			● The signal voltage of EVAP control system pressure sensor is displayed.	
FUEL LEVEL SE [V]	×			● The signal voltage of the fuel level sensor is displayed.	
START SIGNAL [ON/OFF]	×	×		● Indicates [ON/OFF] condition from the starter signal.	● After starting the engine, [OFF] is displayed regardless of the starter signal.
CLSD THL POS [ON/OFF]	×	×		● Indicates idle position [ON/OFF] computed by ECM according to the accelerator pedal position sensor signal.	
AIR COND SIG [ON/OFF]	×	×		● Indicates [ON/OFF] condition of the air conditioner switch as determined by the air conditioner signal.	
P/N POSI SW [ON/OFF]	×	×		● Indicates [ON/OFF] condition from the park/neutral position (PNP) switch signal.	
PW/ST SIGNAL [ON/OFF]	×	×		● [ON/OFF] condition of the power steering oil pressure switch as determined by the power steering oil pressure signal is indicated.	
LOAD SIGNAL [ON/OFF]	×	×		● Indicates [ON/OFF] condition from the electrical load signal. ON ... Rear window defogger switch is ON and/or lighting switch is in 2nd position. OFF ... Both rear window defogger switch and lighting switch are OFF.	
IGNITION SW [ON/OFF]	×	×		● Indicates [ON/OFF] condition from ignition switch.	
HEATER FAN SW [ON/OFF]	×			● Indicates [ON/OFF] condition from the heater fan switch signal.	
BRAKE SW [ON/OFF]	×			● Indicates [ON/OFF] condition from the stop lamp switch signal.	
INJ PULSE-B1 [msec]		×		● Indicates the actual fuel injection pulse width compensated by ECM according to the input signals.	● When the engine is stopped, a certain computed value is indicated.
IGN TIMING [BTDC]		×		● Indicates the ignition timing computed by ECM according to the input signals.	● When the engine is stopped, a certain value is indicated.
CAL/LD VALUE [%]				● “Calculated load value” indicates the value of the current airflow divided by peak airflow.	
MASS AIRFLOW [g·m/s]				● Indicates the mass airflow computed by ECM according to the signal voltage of the mass air flow sensor.	

Monitored item [Unit]	ECM INPUT SIG-NALS	MAIN SIG-NALS	CAN DIAG SUP-PORT MNTR	Description	Remarks
PURG VOL C/V [%]				● Indicates the EVAP canister purge volume control solenoid valve control value computed by the ECM according to the input signals. ● The opening becomes larger as the value increases.	
INT/V TIM (B1) [°CA]				● Indicates [°CA] of intake camshaft advanced angle.	
INT/V SOL (B1) [%]				● The control condition of the intake valve timing control solenoid valve (determined by ECM according to the input signals) is indicated. ON ... intake valve timing control is operating. OFF ... Intake valve timing control is not operating.	
VIAS S/V [ON/OFF]				● The control condition of the VIAS control solenoid valve (determined by ECM according to the input signals) is indicated. ON ... VIAS control solenoid valve is operating. OFF ... VIAS control solenoid valve is not operating.	
AIR COND RLY [ON/OFF]		×		● The air conditioner relay control condition (determined by ECM according to the input signals) is indicated.	
FUEL PUMP RLY [ON/OFF]		×		● Indicates the fuel pump relay control condition determined by ECM according to the input signals.	
VC/V BYPASS/V [ON/OFF]				● The control condition of the vacuum cut valve bypass valve (determined by ECM according to the input signals) is indicated. ON ... Open OFF ... Closed	
VENT CONT/V [ON/OFF]				● The control condition of the EVAP canister vent control valve (determined by ECM according to the input signals) is indicated. ON ... Closed OFF ... Open	
THRTL RELAY [ON/OFF]				● Indicates the throttle control motor relay control condition determined by the ECM according to the input signals.	
COOLING FAN [HI/LOW/OFF]				● Indicates the condition of the cooling fan (determined by ECM according to the input signals). HI ... High speed operation LOW ... Low speed operation OFF ... Stop	
HO2S1 HTR (B1) [ON/OFF]				● Indicates [ON/OFF] condition of heated oxygen sensor 1 heater determined by ECM according to the input signals.	

Monitored item [Unit]	ECM INPUT SIG-NALS	MAIN SIG-NALS	CAN DIAG SUP-PORT MNTR	Description	Remarks
HO2S2 HTR (B1) [ON/OFF]				● Indicates [ON/OFF] condition of heated oxygen sensor 2 heater determined by ECM according to the input signals.	
IDL A/V LEARN [YET/CMPLT/ INCMP]				● Display the condition of idle air volume learning YET ... Idle air volume learning has not been performed yet. CMPLT ... Idle air volume learning has already been performed successfully. INCMP ... Idle air volume learning has not been performed successfully.	
TRVL AFTER MIL [km] or [mile]				● Distance traveled while MIL is activated.	
AC PRESS SEN [V]				● The signal voltage from the refrigerant pressure sensor is displayed.	
VHCL SPEED SE [km/h] or [mph]				● The vehicle speed computed from the vehicle speed signal sent from TCM is displayed.	
SET VHCL SPD [km/h] or [mph]				● The preset vehicle speed is displayed.	
MAIN SW [ON/OFF]				● Indicates [ON/OFF] condition from CRUISE switch signal.	
CANCEL SW [ON/OFF]				● Indicates [ON/OFF] condition from CAN-CEL switch signal.	
RESUME/ACC SW [ON/OFF]				● Indicates [ON/OFF] condition from ACCEL/RES switch signal.	
SET SW [ON/OFF]				● Indicates [ON/OFF] condition from COAST/SET switch signal.	
BRAKE SW1 SW [ON/OFF]				● Indicates [ON/OFF] condition from ASCD brake switch signal, and ASCD clutch switch signal (M/T models).	
BRAKE SW2 SW [ON/OFF]				● Indicates [ON/OFF] condition of stop lamp switch signal.	
VHCL SPD CUT [NON/CUT]				● Indicates the vehicle cruise condition. NON ... Vehicle speed is maintained at the ASCD set speed. CUT ...Vehicle speed increased to excessively high compared with the ASCD set speed, and ASCD operation is cut off.	
LO SPEED CUT [NON/CUT]				● Indicates the vehicle cruise condition. NON ... Vehicle speed is maintained at the ASCD set speed. CUT ...Vehicle speed decreased to excessively low compared with the ASCD set speed, and ASCD operation is cut off.	
AT OD MONITOR [ON/OFF]				● Indicates [ON/OFF] condition of A/T O/D according to the input signal from the TCM.	
AT OD CANCEL [ON/OFF]				● Indicates [ON/OFF] condition of A/T O/D cancel signal sent from the TCM.	

Monitored item [Unit]	ECM INPUT SIG-NALS	MAIN SIG-NALS	CAN DIAG SUP-PORT MNTR	Description	Remarks
CRUISE LAMP [ON/OFF]				● Indicates [ON/OFF] condition of CRUISE lamp determined by the ECM according to the input signals.	
SET LAMP [ON/OFF]				● Indicates [ON/OFF] condition of SET lamp determined by the ECM according to the input signals.	
Voltage [V]				● Voltage, frequency, duty cycle or pulse width measured by the probe.	● Only “#” is displayed if item is unable to be measured. ● Figures with “#”s are temporary ones. They are the same figures as an actual piece of data which was just previously measured.
Frequency [msec], [Hz] or [%]					
DUTY-HI					
DUTY-LOW					
PLS WIDTH-HI					
PLS WIDTH-LOW					
CAN COMM [OK/NG]			×	● Indicates the communication condition of CAN communication line.	● These items are not displayed in "SELECTION FROM MENU" mode.
CAN CIRC 1 [OK/UNKWN]			×		
CAN CIRC 2 [OK/UNKWN]			×		
CAN CIRC 3 [OK/UNKWN]			×		
CAN CIRC 4 [OK/UNKWN]			×		
CAN CIRC 5 [OK/UNKWN]			×		
CAN CIRC 6 [OK/UNKWN]			×		
CAN CIRC 7 [OK/UNKWN]			×		

NOTE:
- Any monitored item that does not match the vehicle being diagnosed is deleted from the display automatically.

DATA MONITOR (SPEC) MODE

Monitored Item

Monitored item [Unit]	ECM input signals	Main signals	Description	Remarks
ENG SPEED [rpm]	×		● Indicates the engine speed computed from the signal of the crankshaft position sensor (POS).	
MAS A/F SE-B1 [V]	×	×	● The signal voltage of the mass air flow sensor specification is displayed.	● When engine is running specification range is indicated.
B/FUEL SCHDL [msec]			● “Base fuel schedule” indicates the fuel injection pulse width programmed into ECM, prior to any learned on board correction.	● When engine is running specification range is indicated.
A/F ALPHA-B1 [%]		×	● The mean value of the air-fuel ratio feedback correction factor per cycle is indicated.	● When engine is running specification range is indicated. ● This data also includes the data for the air-fuel ratio learning control.

NOTE:
- Any monitored item that does not match the vehicle being diagnosed is deleted from the display automatically.

ACTIVE TEST MODE

Test Item

TEST ITEM	CONDITION	JUDGEMENT	CHECK ITEM (REMEDY)
FUEL INJECTION	● Engine: Return to the original trouble condition ● Change the amount of fuel injection using CONSULT-II.	If trouble symptom disappears, see CHECK ITEM.	● Harness and connectors ● Fuel injectors ● Heated oxygen sensor 1
IGNITION TIMING	● Engine: Return to the original trouble condition ● Timing light: Set ● Retard the ignition timing using CONSULT-II.	If trouble symptom disappears, see CHECK ITEM.	● Perform “Idle Air Volume Learning”.
POWER BALANCE	● Engine: After warming up, idle the engine. ● A/C switch “OFF” ● Shift lever “N” ● Cut off each injector signal one at a time using CONSULT-II.	Engine runs rough or dies.	● Harness and connectors ● Compression ● Fuel injectors ● Power transistor ● Spark plugs ● Ignition coils
COOLING FAN	● Ignition switch: ON ● Turn the cooling fan “ON” and “OFF” with CONSULT-II.	Cooling fan moves and stops.	● Harness and connectors ● Cooling fan relay ● Cooling fan motor
ENG COOLANT TEMP	● Engine: Return to the original trouble condition ● Change the engine coolant temperature using CONSULT-II.	If trouble symptom disappears, see CHECK ITEM.	● Harness and connectors ● Engine coolant temperature sensor ● Fuel injectors
FUEL PUMP RELAY	● Ignition switch: ON (Engine stopped) ● Turn the fuel pump relay “ON” and “OFF” using CONSULT-II and listen to operating sound.	Fuel pump relay makes the operating sound.	● Harness and connectors ● Fuel pump relay
VIAS SOL VALVE	● Ignition switch: ON ● Turn solenoid valve “ON” and “OFF” with CONSULT-II and listen for operating sound.	Solenoid valve makes an operating sound.	● Harness and connectors ● Solenoid valve
PURG VOL CONT/V	● Engine: After warming up, run engine at 1,500 rpm. ● Change the EVAP canister purge volume control solenoid valve opening percent using CONSULT-II.	Engine speed changes according to the opening percent.	● Harness and connectors ● Solenoid valve
FUEL/T TEMP SEN	● Change the fuel tank temperature using CONSULT-II.		
VENT CONTROL/V	● Ignition switch: ON (Engine stopped) ● Turn solenoid valve “ON” and “OFF” with the CONSULT-II and listen to operating sound.	Solenoid valve makes an operating sound.	● Harness and connectors ● Solenoid valve

TEST ITEM	CONDITION	JUDGEMENT	CHECK ITEM (REMEDY)
VC/V BYPASS/V	● Ignition switch: ON (Engine stopped) ● Turn solenoid valve “ON” and “OFF” with the CONSULT-II and listen to operating sound.	Solenoid valve makes an operating sound.	● Harness and connectors ● Solenoid valve
V/T ASSIGN ANGLE	● Engine: Return to the original trouble condition ● Change intake valve timing using CONSULT-II.	If trouble symptom disappears, see CHECK ITEM.	● Harness and connectors ● Intake valve timing control solenoid valve

DTC & SRT CONFIRMATION MODE

SRT STATUS Mode

For details, refer to EC-59, "SYSTEM READINESS TEST (SRT) CODE" .

SRT Work Support Mode

This mode enables a technician to drive a vehicle to set the SRT while monitoring the SRT status.

DTC Work Support Mode

Test mode	Test item	Condition	Reference page
EVAP SYSTEM	PURGE FLOW P0441	Refer to corresponding trouble diagnosis for DTC.	EC-301
	EVAP SML LEAK P0442/P1442		EC-307, EC-475
	EVAP V/S SML LEAK P0456/P1456		EC-349, EC-498
	PURG VOL CN/V P1444		EC-477
	VC CUT/V BP/V P1491		EC-517
HO2S1	HO2S1 (B1) P0133		EC-191
	HO2S1 (B1) P0134		EC-200
	HO2S1 (B1) P1143		EC-416
	HO2S1 (B1) P1144		EC-422
H02S2	HO2S2 (B1) P0139		EC-213
	HO2S2 (B1) P1146		EC-428
	HO2S2 (B1) P1147		EC-435

REAL TIME DIAGNOSIS IN DATA MONITOR MODE (RECORDING VEHICLE DATA)

Description

CONSULT-II has two kinds of triggers and they can be selected by touching “SETTING” in “DATA MONITOR” mode.

1. “AUTO TRIG” (Automatic trigger):
   - The malfunction will be identified on the CONSULT-II screen in real time.
     In other words, DTC/1st trip DTC and malfunction item will be displayed if the malfunction is detected by ECM.
     At the moment a malfunction is detected by ECM, “MONITOR” in “DATA MONITOR” screen is changed to “Recording Data ... xx%” as shown at right, and the data after the malfunction detection is recorded. Then when the percentage reached 100%, “REAL-TIME DIAG” screen is displayed. If “STOP” is touched on the screen during “Recording Data ... xx%”, “REAL-TIME DIAG” screen is also displayed.
     The recording time after the malfunction detection and the

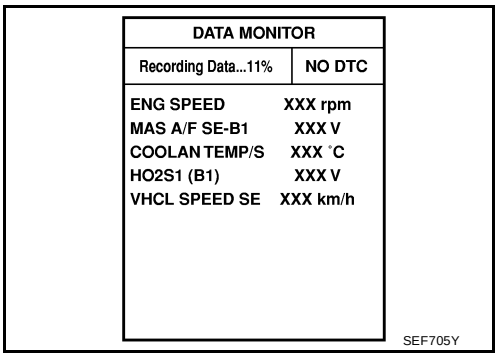

recording speed can be changed by “TRIGGER POINT” and “Recording Speed”. Refer to CONSULT-II OPERATION MANUAL.

2. “MANU TRIG” (Manual trigger):
   - DTC/1st trip DTC and malfunction item will not be displayed automatically on CONSULT-II screen even though a malfunction is detected by ECM.
     DATA MONITOR can be performed continuously even though a malfunction is detected.

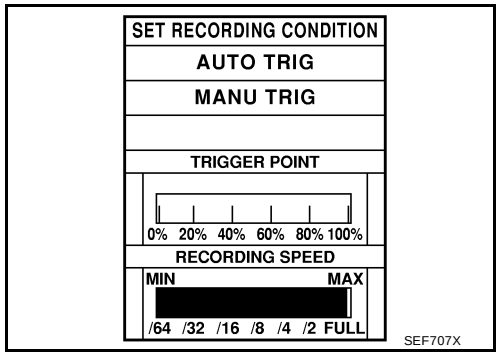

Operation

1. “AUTO TRIG”
   - While trying to detect the DTC/1st trip DTC by performing the “DTC Confirmation Procedure”, be sure to select to “DATA MONITOR (AUTO TRIG)” mode. You can confirm the malfunction at the moment it is detected.
   - While narrowing down the possible causes, CONSULT-II should be set in “DATA MONITOR (AUTO TRIG)” mode, especially in case the incident is intermittent.
     When you are inspecting the circuit by gently shaking (or twisting) the suspicious connectors, components and harness in the “DTC Confirmation Procedure”, the moment a malfunction is found the DTC/1st trip DTC will be displayed. (Refer to “Incident Simulation Tests” in GI-25, "How to Perform Efficient Diagnosis for an Electrical Incident" .)
2. “MANU TRIG”
   - If the malfunction is displayed as soon as “DATA MONITOR” is selected, reset CONSULT-II to “MANU TRIG”. By selecting “MANU TRIG” you can monitor and store the data. The data can be utilized for further diagnosis, such as a comparison with the value for the normal operating condition.

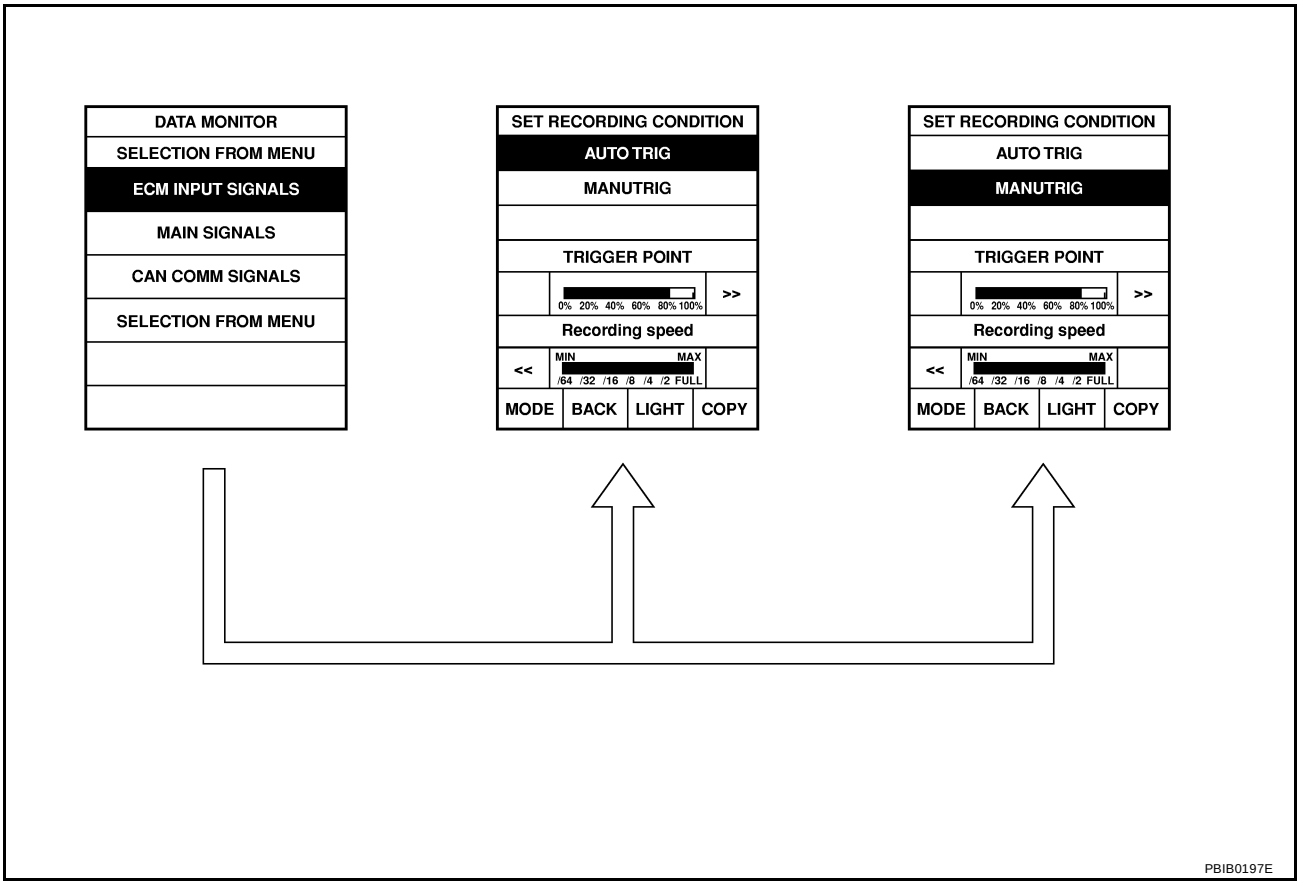

Generic Scan Tool (GST) Function

UBS002OT

DESCRIPTION

Generic Scan Tool (OBDII scan tool) complying with SAE J1978 has 8 different functions explained below.
ISO9141 is used as the protocol.
The name “GST” or “Generic Scan Tool” is used in this service manual.

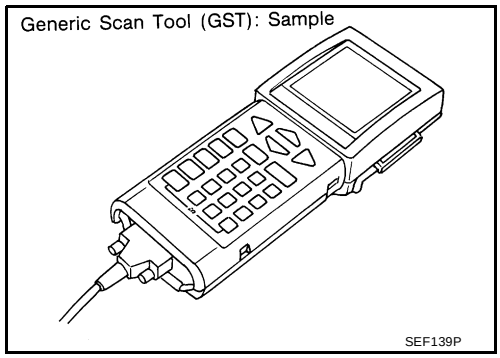

FUNCTION

Diagnostic test mode		Function
MODE 1	READINESS TESTS	This mode gains access to current emission-related data values, including analog inputs and outputs, digital inputs and outputs, and system status information.
MODE 2	(FREEZE DATA)	This mode gains access to emission-related data value which were stored by ECM during the freeze frame. For details, refer to EC-59, "FREEZE FRAME DATA AND 1ST TRIP FREEZE FRAME DATA" .
MODE 3	DTCs	This mode gains access to emission-related power train trouble codes which were stored by ECM.
MODE 4	CLEAR DIAG INFO	This mode can clear all emission-related diagnostic information. This includes: ● Clear number of diagnostic trouble codes (MODE 1) ● Clear diagnostic trouble codes (MODE 3) ● Clear trouble code for freeze frame data (MODE 1) ● Clear freeze frame data (MODE 2) ● Reset status of system monitoring test (MODE 1) ● Clear on board monitoring test results (MODE 6 and 7)
MODE 6	(ON BOARD TESTS)	This mode accesses the results of on board diagnostic monitoring tests of specific components/systems that are not continuously monitored.
MODE 7	(ON BOARD TESTS)	This mode enables the off board test drive to obtain test results for emission-related powertrain components/systems that are continuously monitored during normal driving conditions.
MODE 8	—	This mode can close EVAP system in ignition switch “ON” position (Engine stopped). When this mode is performed, the following parts can be opened or closed. ● EVAP canister vent control valve open ● Vacuum cut valve bypass valve closed In the following conditions, this mode cannot function. ● Low ambient temperature ● Low battery voltage ● Engine running ● Ignition switch “OFF” ● Low fuel temperature ● Too much pressure is applied to EVAP system
MODE 9	(CALIBRATION ID)	This mode enables the off-board test device to request specific vehicle information such as Vehicle Identification Number (VIN) and Calibration IDs.

GST INSPECTION PROCEDURE

1. Turn ignition switch OFF.

2. Connect “GST” to data link connector, which is located under LH dash panel near the fuse box cover.
3. Turn ignition switch ON.

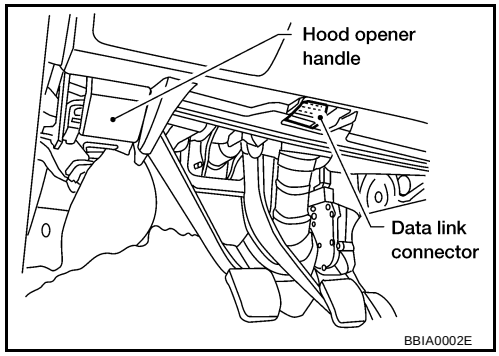

4. Enter the program according to instruction on the screen or in the operation manual.

(*: Regarding GST screens in this section, sample screens are shown.)

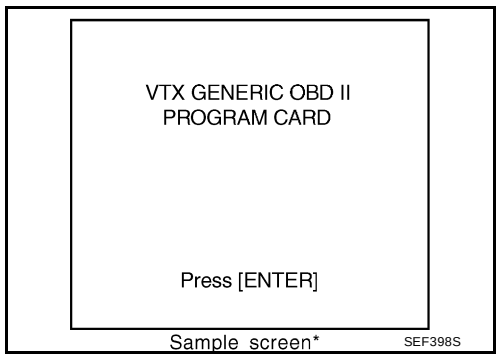

5. Perform each diagnostic mode according to each service procedure.

For further information, see the GST Operation Manual of the tool maker.

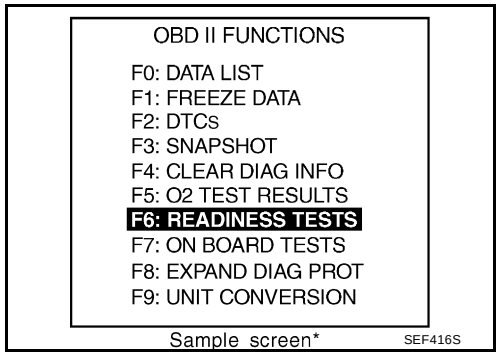

CONSULT-II Reference Value in Data Monitor

UBS002OU

Remarks:
- Specification data are reference values.
- Specification data are output/input values which are detected or supplied by the ECM at the connector.
  * Specification data may not be directly related to their components signals/values/operations.
  i.e. Adjust ignition timing with a timing light before monitoring IGN TIMING, because the monitor may show the specification data in spite of the ignition timing not being adjusted to the specification data. This IGN TIMING monitors the data calculated by the ECM according to the signals input from the camshaft position sensor and other ignition timing related sensors.

MONITOR ITEM	CONDITION		SPECIFICATION
ENG SPEED	● Tachometer: Connect ● Run engine and compare tachometer indication with the CONSULT-II value.		Almost the same speed as the CONSULT-II value.
MAS A/F SE-B1	● Engine: After warming up ● Air conditioner switch: OFF ● Shift lever: N ● No-load	Idle	Approx. 1.1 - 1.5V
		2,500 rpm	Approx. 1.6 - 2.0V
B/FUEL SCHDL	● Engine: After warming up ● Shift lever: N ● Air conditioner switch: OFF ● No-load	Idle	2.5 - 3.5 msec
		2,000 rpm	2.5 - 3.5 msec
A/F ALPHA-B1	● Engine: After warming up	Maintaining engine speed at 2,000 rpm	54% - 155%

MONITOR ITEM	CONDITION		SPECIFICATION
COOLAN TEMP/S	● Engine: After warming up		More than 70°C (158°F)
HO2S1 (B1)	● Engine: After warming up	Maintaining engine speed at 2,000 rpm	0 - 0.3V ←→ Approx. 0.6 - 1.0V
HO2S2 (B1)	● Engine: After warming up	Revving engine from idle to 3,000 rpm quickly.	0 - 0.3V ←→ Approx. 0.6 - 1.0V
HO2S1 MNTR (B1)	● Engine: After warming up	Maintaining engine speed at 2,000 rpm	LEAN ←→ RICH Changes more than 5 times during 10 seconds.
HO2S2 MNTR (B1)	● Engine: After warming up	Revving engine from idle to 3,000 rpm quickly.	LEAN ←→ RICH
VEH SPEED SE	● Turn drive wheels and compare speedometer indication with the CONSULT-II value.		Almost the same speed as the CONSULT-II value
BATTERY VOLT	● Ignition switch: ON (Engine stopped)		11 - 14V
ACCEL SEN1 ACCEL SEN2	● Ignition switch: ON (engine stopped)	Accelerator pedal: Fully released	0.41 - 0.71V
		Accelerator pedal: Fully depressed	More than 4.2V
THRTL SEN1 THRTL SEN2	● Ignition switch: ON (Engine stopped) ● Shift lever: D (A/T model) 1st (M/T model)	Accelerator pedal: Fully released	More than 0.36V
		Accelerator pedal: Fully depressed	Less than 4.75V
EVAP SYS PRES	● Ignition switch: ON		Approx. 1.8 - 4.8V
ABSOL PRES/SE	● Ignition switch: ON		Approx. 4.4V
START SIGNAL	● Ignition switch: ON → START → ON		OFF → ON → OFF
CLSD THL POS	● Ignition switch: ON	Accelerator pedal: Fully released	ON
		Accelerator pedal: Slightly depressed	OFF
AIR COND SIG	● Engine: After warming up, idle the engine	Air conditioner switch: OFF	OFF
		Air conditioner switch: ON (Compressor operates.)	ON
P/N POSI SW	● Ignition switch: ON	Shift lever: P or N (A/T model) Neutral (M/T model)	ON
		Shift lever: Except above	OFF
PW/ST SIGNAL	● Engine: After warming up, idle the engine	Steering wheel is in neutral position. (Forward direction)	OFF
		Steering wheel is turned.	ON
LOAD SIGNAL	● Ignition switch: ON	Rear window defogger switch is ON and/or lighting switch is in 2nd.	ON
		Rear window defogger switch is OFF and lighting switch is OFF.	OFF
IGNITION SW	● Ignition switch: ON → OFF → ON		ON → OFF → ON
HEATER FAN SW	● Engine: After warming up, idle the engine	Heater fan is operating.	ON
		Heater fan is not operating	OFF
BRAKE SW	● Ignition switch: ON	Brake pedal: Fully released	OFF
		Brake pedal: Slightly depressed	ON
INJ PULSE-B1	● Engine: After warming up ● Shift lever: N ● Air conditioner switch: OFF ● No-load	Idle	2.0 - 3.0 msec
		2,000 rpm	1.9 - 2.9 msec

MONITOR ITEM	CONDITION		SPECIFICATION
IGN TIMING	● Engine: After warming up ● Shift lever: N ● Air conditioner switch: OFF ● No-load	Idle	10° - 20° BTDC
		2,000 rpm	25° - 45° BTDC
CAL/LD VALUE	● Engine: After warming up ● Shift lever: N ● Air conditioner switch: OFF ● No-load	Idle	10% - 35%
		2,500 rpm	10% - 35%
MASS AIRFLOW	● Engine: After warming up ● Shift lever: N ● Air conditioner switch: OFF ● No-load	Idle	1.0 - 4.0 g·m/s
		2,500 rpm	4.0 - 10.0 g·m/s
PURG VOL C/V	● Engine: After warming up ● Shift lever: N ● Air conditioner switch: OFF ● No-load	Idle	0%
		2,000 rpm	20 - 30%
INT/V TIM (B1)	● Engine: After warming up ● Shift lever: N ● Air conditioner switch: OFF ● No-load	Idle	–5° - 5°CA
		2,000 rpm	Approx. 0° - 20°CA
INT/V SOL (B1)	● Engine: After warming up ● Shift lever: N ● Air conditioner switch: OFF ● No-load	Idle	0% - 2%
		2,000 rpm	Approx. 25% - 60%
AIR COND RLY	● Engine: After warming up, idle the engine	Air conditioner switch: OFF	OFF
		Air conditioner switch: ON (Compressor operates)	ON
VIAS S/V	● Engine: After warming up	Idle	OFF
		More than 5,000 rpm	ON
FUEL PUMP RLY	● For 1 seconds after turning ignition switch ON ● Engine running or cranking		ON
	● Except above conditions		OFF
VC/V BYPAS S/V	● Ignition switch: ON		OFF
VENT CONT/V	● Ignition switch: ON		OFF
THRTL RELAY	● Ignition switch: ON		ON
COOLING FAN	● Engine: After warming up, idle the engine ● Air conditioner switch: OFF	Engine coolant temperature is 94°C (201°F) or less	OFF
		Engine coolant temperature is between 95°C (203°F) and 99°C (210°F)	LOW
		Engine coolant temperature is 100°C (212°F) or more	HIGH
HO2S1 HTR (B1)	● Engine: After warming up ● Engine speed: Below 3,600 rpm		ON
	● Engine speed: Above 3,600 rpm		OFF
HO2S2 HTR (B1)	● Engine speed: Below 3,600 rpm [After driving for 2 minutes at a speed of 70 km/h (43 MPH) or more]		ON
	● Engine speed: Above 3,600 rpm		OFF

MONITOR ITEM	CONDITION		SPECIFICATION
TRVL AFTER MIL	● Ignition switch: ON	Vehicle has traveled after MIL has turned ON.	0 - 65,535 km (0 - 40,723 mile)
AC PRESS SEN	● Ignition switch: ON (Engine stopped)		Approx. 0V
	● Engine: Idle ● Air conditioner switch: OFF		1.0 - 4.0V
VEH SPEED SE	● Turn drive wheels and compare speedometer indication with the CONSULT-II value.		Almost the same speed as the CONSULT-II value
SET VHCL SPD	● Engine: Running	ASCD: Operating	The preset vehicle speed is displayed.
MAIN SW	● Ignition switch: ON	CRUISE switch: Depressed	ON
		CRUISE switch: Released	OFF
CANCEL SW	● Ignition switch: ON	CANCEL switch: Depressed	ON
		CANCEL switch: Released	OFF
RESUME/ACC SW	● Ignition switch: ON	ACCEL/RES switch: Depressed	ON
		ACCEL/RES switch: Released	OFF
SET SW	● Ignition switch: ON	COAST/SET switch: Depressed	ON
		COAST/SET switch: Released	OFF
BRAKE SW1	● Ignition switch: ON	Brake pedal: Fully released	OFF
		Brake pedal: Slightly depressed	ON
BRAKE SW2	● Ignition switch: ON	Brake pedal: Fully released	OFF
		Brake pedal: Slightly depressed	ON
CRUISE LAMP	● Ignition switch: ON	CRUISE lamp: Illuminated	ON
		CRUISE lamp: Not illuminated	OFF
SET LAMP	● Ignition switch: ON	SET lamp: Illuminated	ON
		SET lamp: Not illuminated	OFF
CAN COMM	● Ignition switch: ON		OK
CAN CIRC 1			OK
CAN CIRC 2			OK (A/T models) UNKWN (M/T models)
CAN CIRC 3			UNKWN
CAN CIRC 4			OK
CAN CIRC 5			UNKWN
CAN CIRC 6			OK
CAN CIRC 7			OK

Major Sensor Reference Graph in Data Monitor Mode

UBS002OV

The following are the major sensor reference graphs in “DATA MONITOR” mode.

CLSD THL POS, ACCEL SEN 1, THRTL SEN 1

Below is the data for “CLSD THL POS”, “ACCEL SEN 1” and “THRTL SEN 1” when depressing the accelerator pedal with the ignition switch “ON” and with selector lever in "D" position (A/T models) or with shift lever in "1st" position (M/T models).

The signal of “ACCEL SEN 1” and “THRTL SEN 1” should rise gradually without any intermittent drop or rise after “CLSD THL POS” is changed from “ON” to “OFF”.

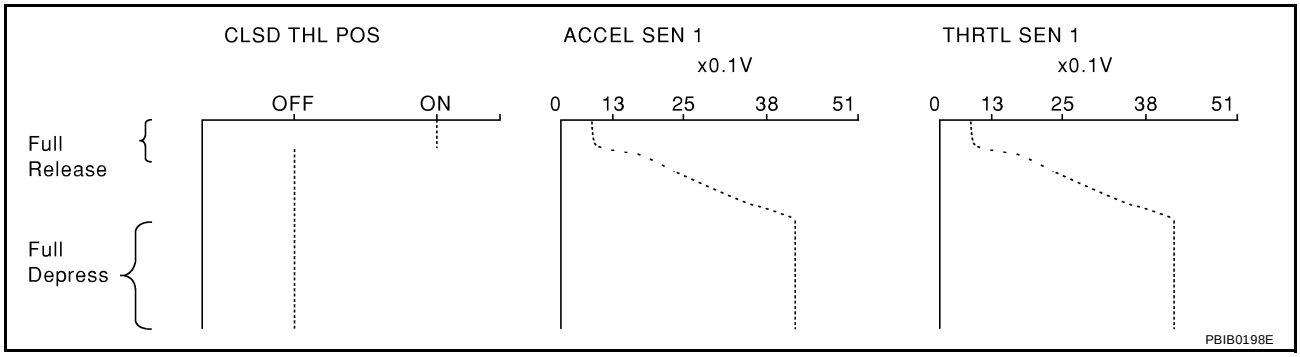

ENG SPEED, MAS A/F SE-B1, THRTL SEN 1, HO2S2 (B1), HO2S1 (B1), INJ PULSE-B1

Below is the data for “ENG SPEED”, “MAS A/F SE-B1”, “THRTL SEN 1”, “HO2S2 (B1)”, “HO2S1 (B1)” and “INJ PULSE-B1” when revving engine quickly up to 4,800 rpm under no load after warming up engine sufficiently.

Each value is for reference, the exact value may vary.

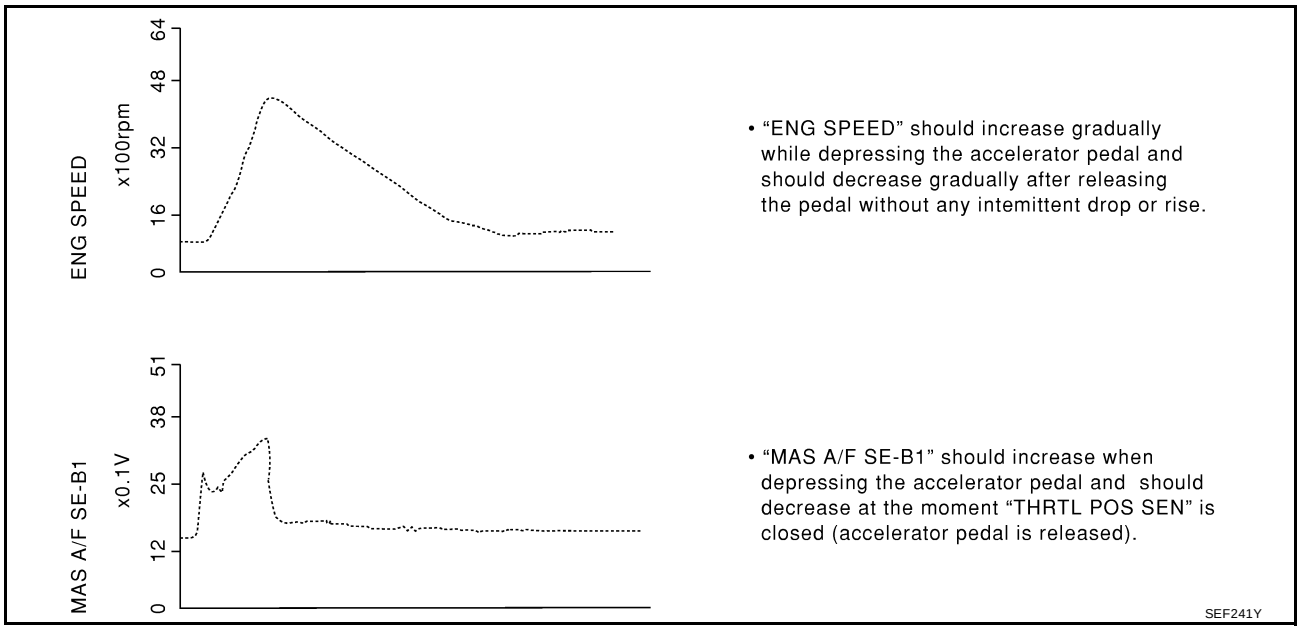

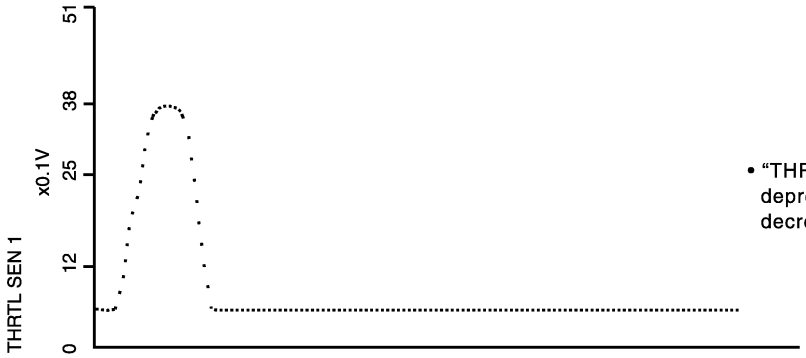

- “THRTL SEN 1” should increase while depressing the accelerator pedal and should decrease while releasing it.

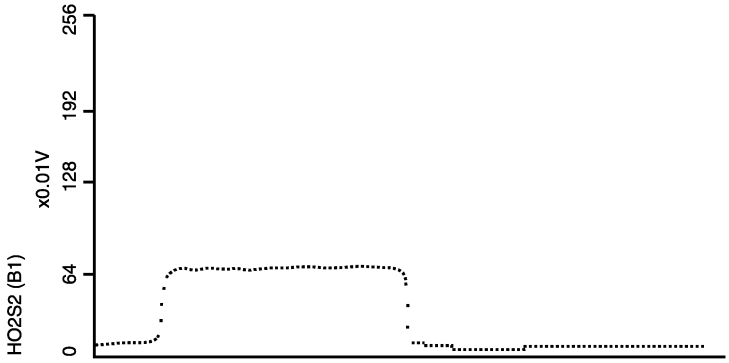

- “HO2S2 (B1)” may increase immediately after depressing the accelerator pedal and may decrease after releasing the pedal.

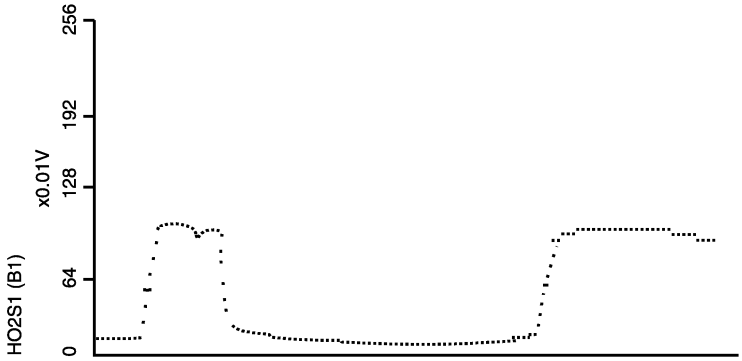

- “HO2S1 (B1)” may increase immediately after depressing the accelerator pedal and may decrease after releasing the pedal.

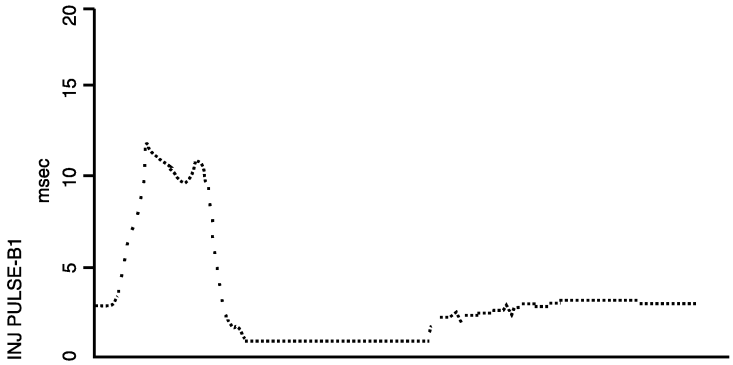

- “INJ PULSE-B1” should increase when depressing the accelerator pedal and should decrease when the pedal is released.

PBIB0668E

TROUBLE DIAGNOSIS - SPECIFICATION VALUE

PFP:00031

Description

UBS002OW

The specification (SP) value indicates the tolerance of the value that is displayed in “DATA MONITOR (SPEC)” mode of CONSULT-II during normal operation of the Engine Control System. When the value in “DATA MONITOR (SPEC)” mode is within the SP value, the Engine Control System is confirmed OK. When the value in “DATA MONITOR (SPEC)” mode is NOT within the SP value, the Engine Control System may have one or more malfunctions.
The SP value is used to detect malfunctions that may affect the Engine Control System, but will not light the MIL.
The SP value will be displayed for the following three items:

- B/FUEL SCHDL (The fuel injection pulse width programmed into ECM prior to any learned on board correction)
- A/F ALPHA-B1 (The mean value of air-fuel ratio feedback correction factor per cycle)
- MAS A/F SE-B1 (The signal voltage of the mass air flow sensor)

Testing Condition

UBS002OX

- Vehicle driven distance: More than 5,000 km (3,017 miles)
- Barometric pressure: 98.3 - 104.3 kPa (1.003 - 1.064 kg/cm^2 , 14.25 - 15.12 psi)
- Atmospheric temperature: 20 - 30°C (68 - 86°F)
- Engine coolant temperature: 75 - 95°C (167 - 203°F)
- Transmission: Warmed-up*1
- Electrical load: Not applied*2
- Engine speed: Idle

*1: For A/T models with CONSULT-II, after the engine is warmed up to normal operating temperature, drive vehicle until “FLUID TEMP SE” (A/T fluid temperature sensor signal) indicates more than 60°C (140°F).
For A/T models without CONSUT-II and M/T models, after the engine is warmed up to normal operating temperature, drive vehicle for 5 minutes.
*2: Rear window defogger switch, air conditioner switch, lighting switch are “OFF”. Steering wheel is straight ahead.

Inspection Procedure

UBS002OY

NOTE:
Perform “DATA MONITOR (SPEC)” mode in maximum scale display.

1. Perform EC-84, "Basic Inspection" .
2. Confirm that the testing conditions indicated above are met.
3. Select “B/FUEL SCHDL”, “A/F ALPHA-B1” and “MAS A/F SE-B1” in “DATA MONITOR (SPEC)” mode with CONSULT-II.
4. Make sure that monitor items are within the SP value.
5. If NG, go to EC-127, "Diagnostic Procedure" .

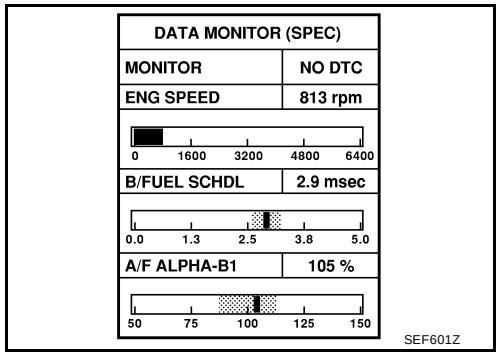

Diagnostic Procedure

UBS002OZ

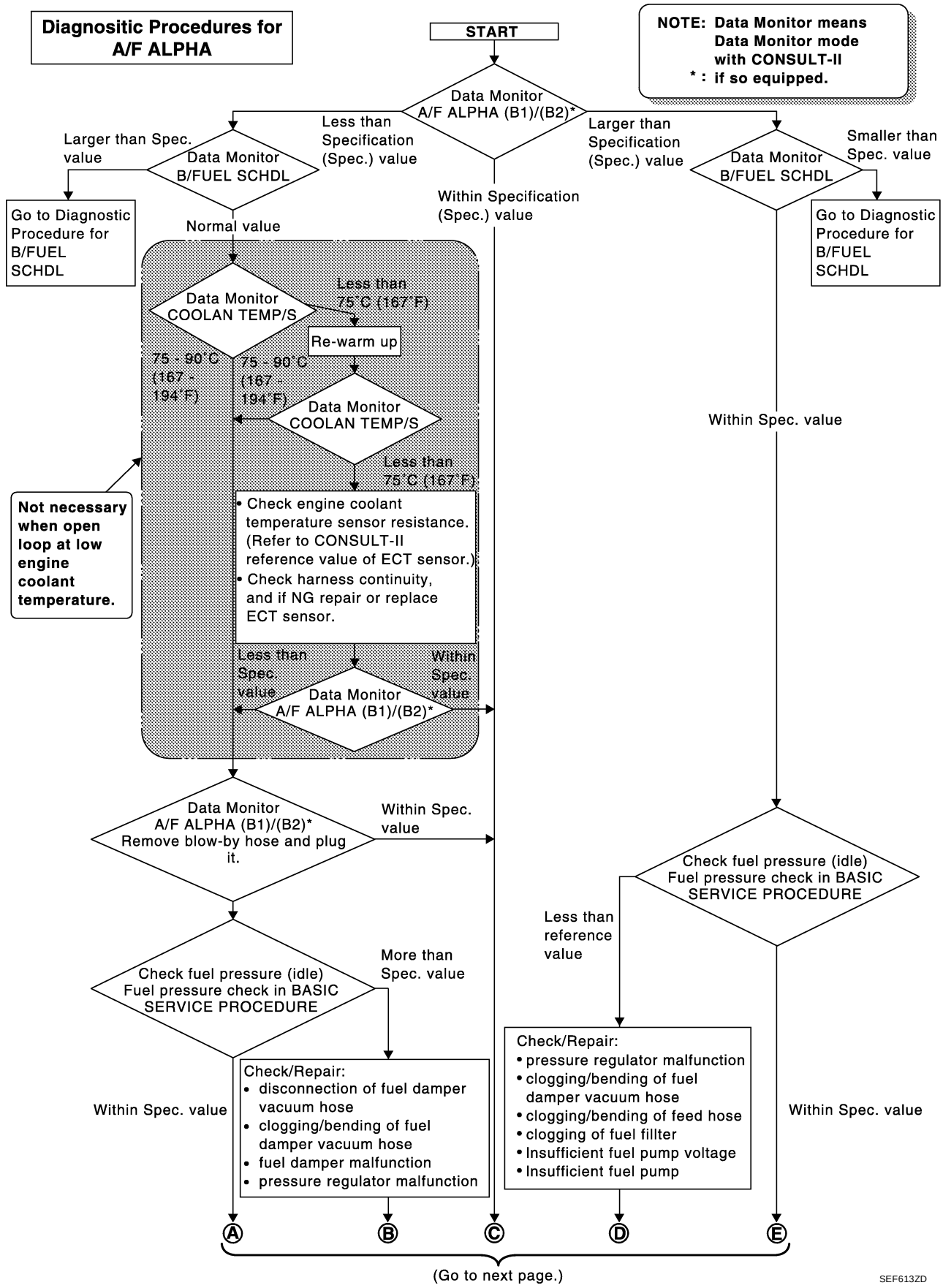

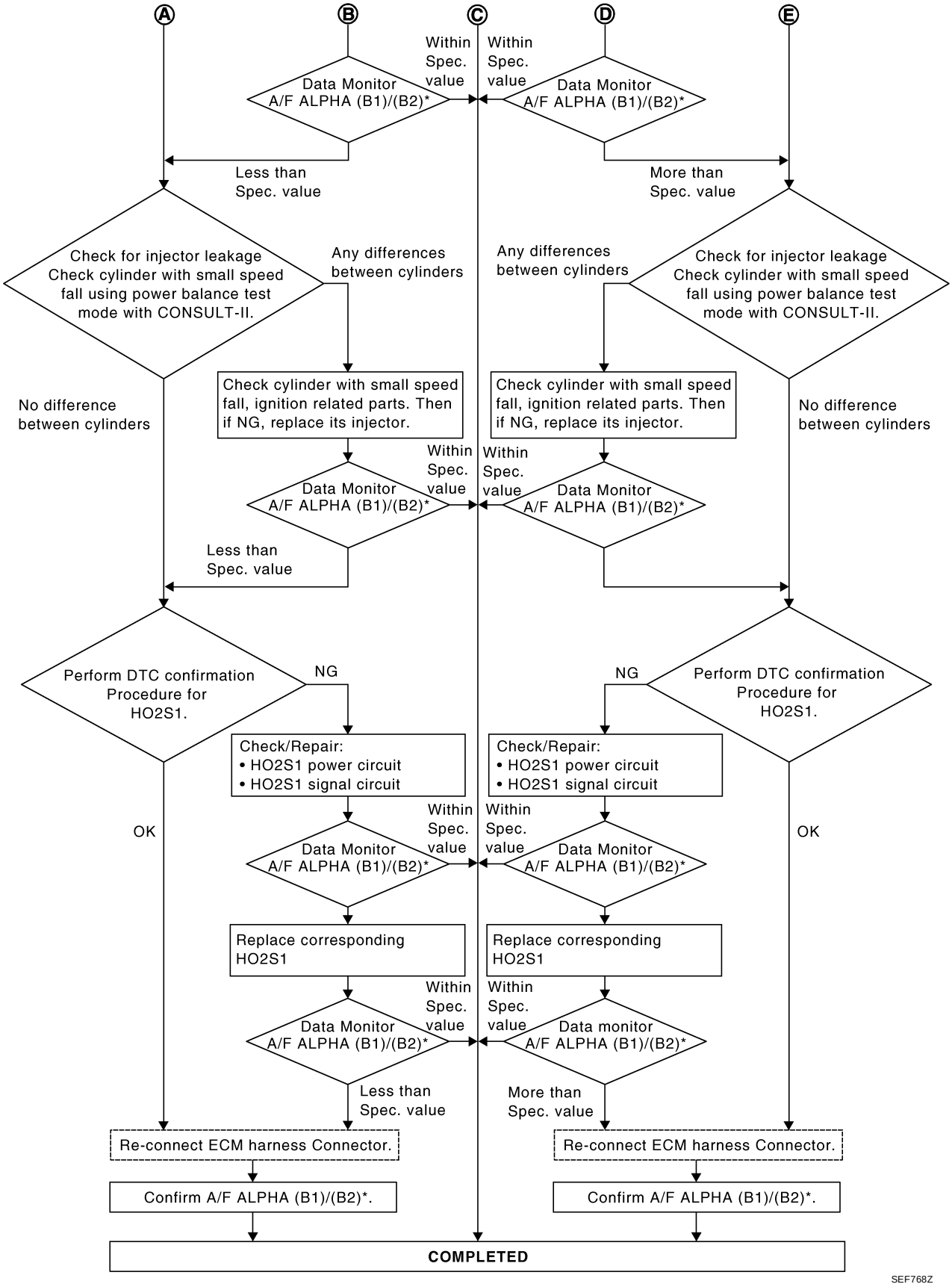
A
B
C
D
E
Within Spec. value
Within Spec. value
Data Monitor A/F ALPHA (B1)/(B2)*
Data Monitor A/F ALPHA (B1)/(B2)*
Less than Spec. value
More than Spec. value
Check for injector leakage Check cylinder with small speed fall using power balance test mode with CONSULT-II.
Any differences between cylinders
Any differences between cylinders
Check for injector leakage Check cylinder with small speed fall using power balance test mode with CONSULT-II.
No difference between cylinders
Check cylinder with small speed fall, ignition related parts. Then if NG, replace its injector.
Check cylinder with small speed fall, ignition related parts. Then if NG, replace its injector.
No difference between cylinders
Within Spec. value
Within Spec. value
Data Monitor A/F ALPHA (B1)/(B2)*
Data Monitor A/F ALPHA (B1)/(B2)*
Less than Spec. value
Perform DTC confirmation Procedure for HO2S1.
NG
NG
Perform DTC confirmation Procedure for HO2S1.
Check/Repair: • HO2S1 power circuit • HO2S1 signal circuit
Check/Repair: • HO2S1 power circuit • HO2S1 signal circuit
OK
Within Spec. value
Within Spec. value
OK
Data Monitor A/F ALPHA (B1)/(B2)*
Data Monitor A/F ALPHA (B1)/(B2)*
Replace corresponding HO2S1
Replace corresponding HO2S1
Within Spec. value
Within Spec. value
Data Monitor A/F ALPHA (B1)/(B2)*
Data monitor A/F ALPHA (B1)/(B2)*
Less than Spec. value
More than Spec. value
Re-connect ECM harness Connector.
Re-connect ECM harness Connector.
Confirm A/F ALPHA (B1)/(B2)*.
Confirm A/F ALPHA (B1)/(B2)*.
COMPLETED
SEF768Z

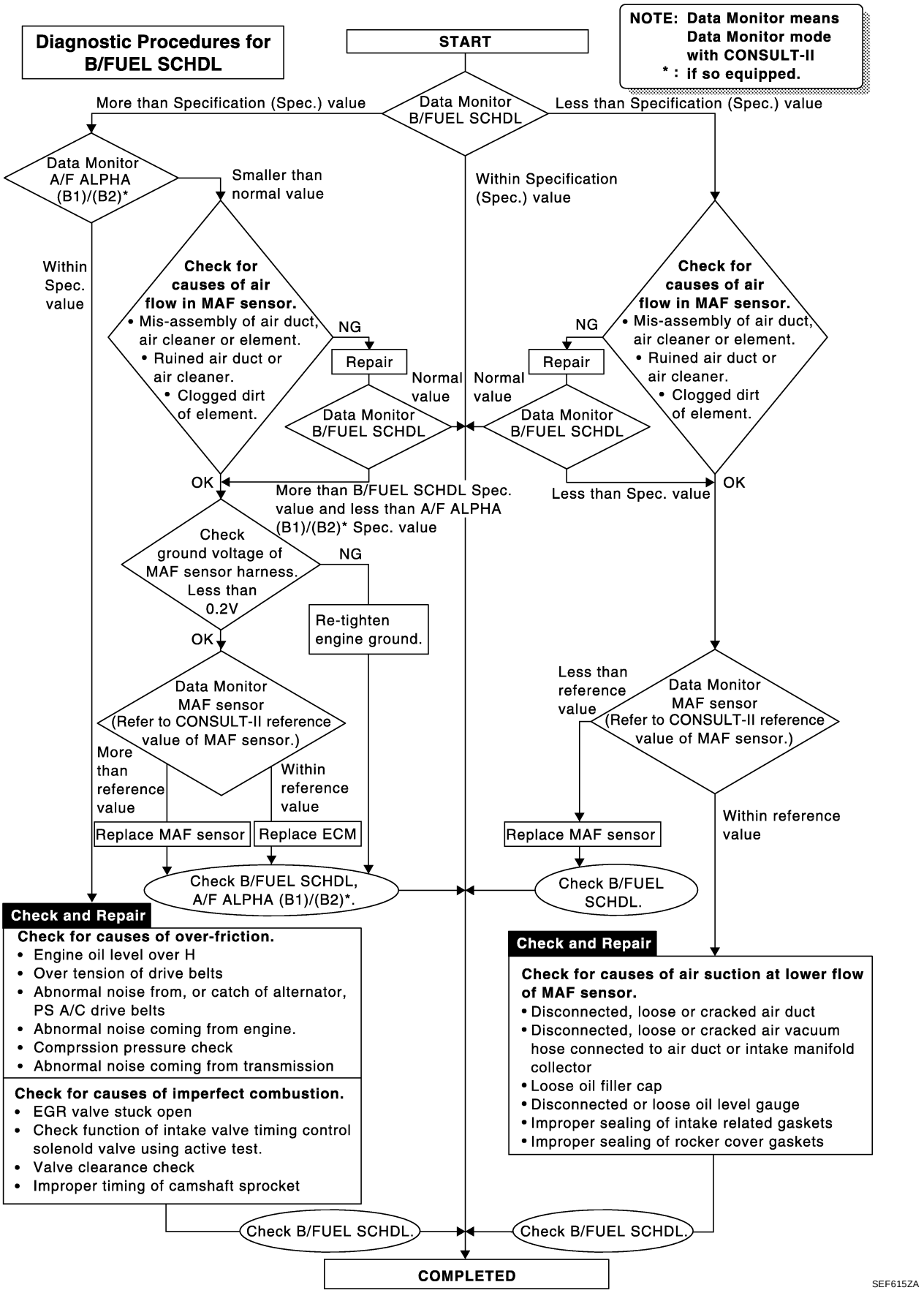
Diagnostic Procedures for B/FUEL SCHDL
START
NOTE: Data Monitor means Data Monitor mode with CONSULT-II
* : if so equipped.
Data Monitor B/FUEL SCHDL
More than Specification (Spec.) value
Less than Specification (Spec.) value
Within Specification (Spec.) value
Data Monitor A/F ALPHA (B1)/(B2)*
Smaller than normal value
Within Spec. value
Check for causes of air flow in MAF sensor.
• Mis-assembly of air duct, air cleaner or element.
• Ruined air duct or air cleaner.
• Clogged dirt of element.
NG
Repair
Normal value
Data Monitor B/FUEL SCHDL
OK
More than B/FUEL SCHDL Spec. value and less than A/F ALPHA (B1)/(B2)* Spec. value
Less than Spec. value
Check ground voltage of MAF sensor harness. Less than 0.2V
Re-tighten engine ground.
Data Monitor MAF sensor (Refer to CONSULT-II reference value of MAF sensor.)
More than reference value
Within reference value
Less than reference value
Replace MAF sensor
Replace ECM
Check B/FUEL SCHDL, A/F ALPHA (B1)/(B2)*.
Check B/FUEL SCHDL.
Check and Repair
Check for causes of over-friction.
• Engine oil level over H
• Over tension of drive belts
• Abnormal noise from, or catch of alternator, PS A/C drive belts
• Abnormal noise coming from engine.
• Comprssion pressure check
• Abnormal noise coming from transmission
Check for causes of imperfect combustion.
• EGR valve stuck open
• Check function of intake valve timing control solenold valve using active test.
• Valve clearance check
• Improper timing of camshaft sprocket
Check for causes of air suction at lower flow of MAF sensor.
• Disconnected, loose or cracked air duct
• Disconnected, loose or cracked air vacuum hose connected to air duct or intake manifold collector
• Loose oil filler cap
• Disconnected or loose oil level gauge
• Improper sealing of intake related gaskets
• Improper sealing of rocker cover gaskets
COMPLETED
SEF615ZA

TROUBLE DIAGNOSIS FOR INTERMITTENT INCIDENT

PFP:00006

Description

UBS002P0

Intermittent incidents (I/I) may occur. In many cases, the problem resolves itself (the part or circuit function returns to normal without intervention). It is important to realize that the symptoms described in the customer's complaint often do not recur on (1st trip) DTC visits. Realize also that the most frequent cause of I/I occurrences is poor electrical connections. Because of this, the conditions under which the incident occurred may not be clear. Therefore, circuit checks made as part of the standard diagnostic procedure may not indicate the specific problem area.

Common I/I Report Situations

STEP in Work Flow	Situation
II	The CONSULT-II is used. The SELF-DIAG RESULTS screen shows time data other than “0” or “[1t]”.
III	The symptom described by the customer does not recur.
IV	(1st trip) DTC does not appear during the DTC Confirmation Procedure.
VI	The Diagnostic Procedure for PXXXX does not indicate the problem area.

Diagnostic Procedure

UBS002P1

1. INSPECTION START

Erase (1st trip) DTCs. Refer to EC-67, "HOW TO ERASE EMISSION-RELATED DIAGNOSTIC INFORMATION" .

>> GO TO 2.

2. CHECK GROUND TERMINALS

Check ground terminals for corroding or loose connection.
Refer to GI-25, "How to Perform Efficient Diagnosis for an Electrical Incident" , "Incident Simulation Tests".

OK or NG

OK >> GO TO 3.
NG >> Repair or replace.

3. SEARCH FOR ELECTRICAL INCIDENT

Perform GI-25, "How to Perform Efficient Diagnosis for an Electrical Incident" , "Incident Simulation Tests".

OK or NG

OK >> GO TO 4.
NG >> Repair or replace.

4. CHECK CONNECTOR TERMINALS

Refer to GI-22, "How to Check Terminal" , "HOW TO PROBE CONNECTORS", “How to Check Enlarged Contact Spring of Terminal”.

OK or NG

OK >> **INSPECTION END**
NG >> Repair or replace connector.

POWER SUPPLY CIRCUIT FOR ECM

PFP:24110

Wiring Diagram

UBS002P2

EC-MAIN-01

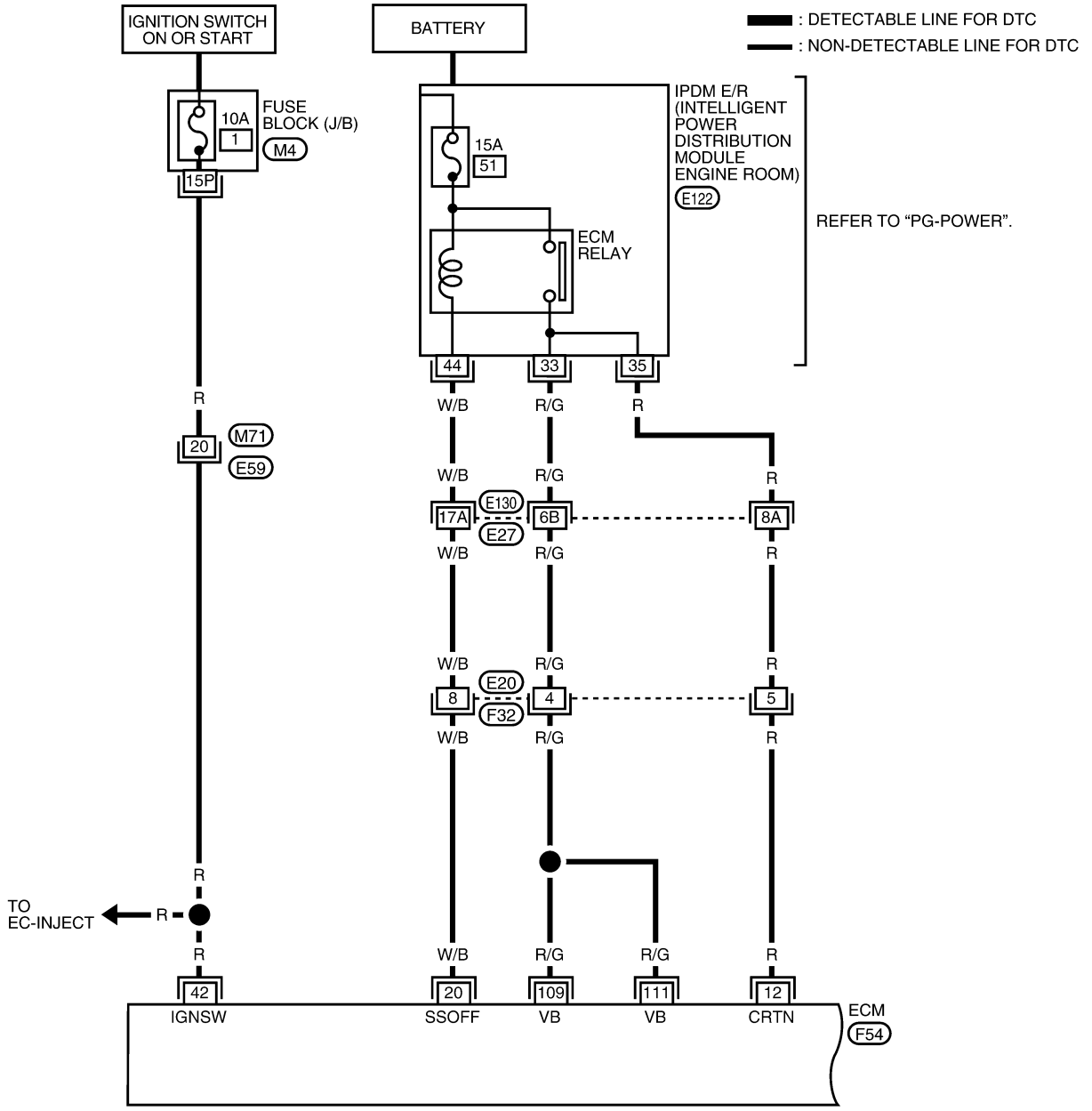

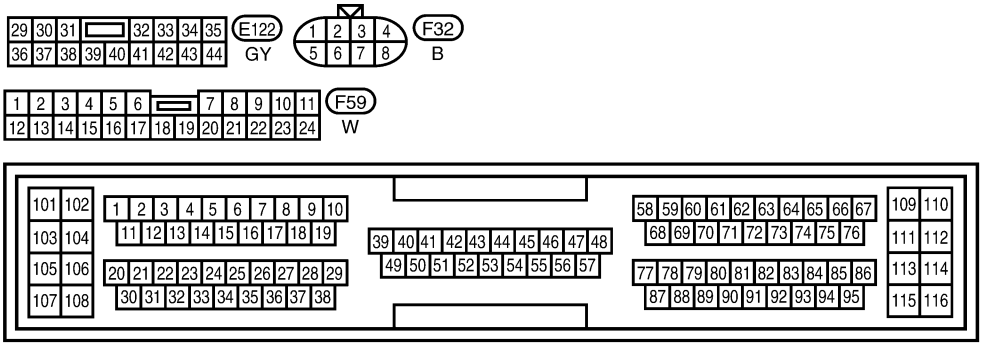

REFER TO THE FOLLOWING.
E130 - SUPER MULTIPLE JUNCTION (SMJ)
M4 - FUSE BLOCK -JUNCTION BOX (J/B)

Specification data are reference values and are measured between each terminal and ground.

CAUTION:

Do not use ECM ground terminals when measuring input/output voltage. Doing so may result in damage to the ECM's transistor. Use a ground other than ECM terminals, such as the ground.

TERMINAL NO.	WIRE COLOR	ITEM	CONDITION	DATA (DC Voltage)
12	R	Counter current return	**[Ignition switch "ON"]**	BATTERY VOLTAGE (11 - 14V)
20	W/B	ECM relay (Self shut-off)	**[Engine is running]** **[Ignition switch "OFF"]** ● For 3 seconds after turning ignition switch "OFF"	0 - 1.0V
			[Ignition switch "OFF"] ● 3 seconds passed after turning ignition switch "OFF"	BATTERY VOLTAGE (11 - 14V)
42	R	Ignition switch	**[Ignition switch "OFF"]**	0V
			[Ignition switch "ON"]	BATTERY VOLTAGE (11 - 14V)
109 111	R/G R/G	Power supply for ECM	**[Ignition switch "ON"]**	BATTERY VOLTAGE (11 - 14V)

EC-MAIN-02

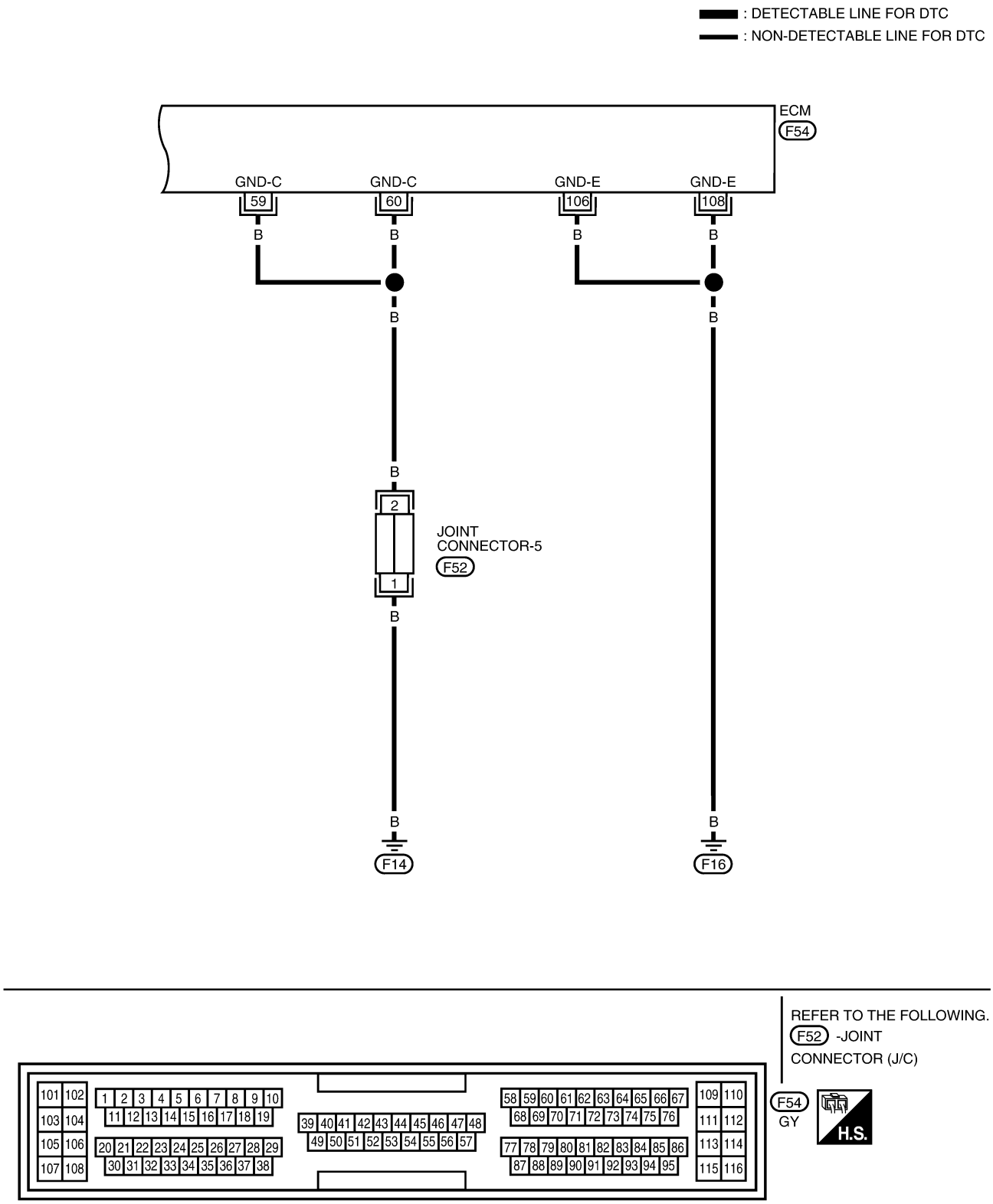

Specification data are reference values and are measured between each terminal and ground.

CAUTION:
Do not use ECM ground terminals when measuring input/output voltage. Doing so may result in damage to the ECM's transistor. Use a ground other than ECM terminals, such as the ground.

TERMINAL NO.	WIRE COLOR	ITEM	CONDITION	DATA (DC Voltage)
59 60 106 108	B B B B	ECM ground	**[Engine is running]** ● Idle speed	Engine ground

Diagnostic Procedure

UBS002P3

1. INSPECTION START

Start engine.
Is engine running?

Yes or No

Yes >> GO TO 7.
No >> GO TO 2.

2. CHECK ECM POWER SUPPLY CIRCUIT-I

1. Turn ignition switch “OFF” and then “ON”.
2. Check voltage between ECM terminal 42 and ground with CONSULT-II or tester.

Voltage: Battery voltage

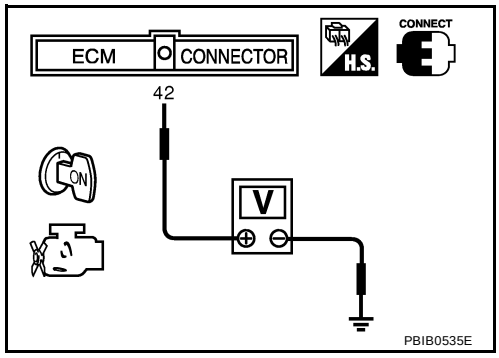

OK or NG

OK >> GO TO 4.
NG >> GO TO 3.

3. DETECT MALFUNCTIONING PART

Check the following.

- Harness connectors M71, F59
- Fuse block (J/B) connector M4
- 10A fuse
- Harness for open or short between ECM and fuse

>> Repair harness or connectors.

4. CHECK ECM GROUND CIRCUIT FOR OPEN AND SHORT-I

1. Turn ignition switch “OFF”.
2. Disconnect ECM harness connector.
3. Check harness continuity between ECM terminals 59, 60, 106, 108 and engine ground.
   Refer to Wiring Diagram.

Continuity should exist.

4. Also check harness for short to power.

OK or NG

OK >> GO TO 5.
NG >> Repair open circuit or short to power in harness or connectors.

5. DETECT MALFUNCTIONING PART

Check the following.

- Joint connector-5
- Harness for open or short between ECM and ground

>> Repair harness or connectors.

6. CHECK ECM POWER SUPPLY CIRCUIT-II

1. Reconnect ECM harness connector.
2. Turn ignition switch "ON".
3. Check voltage between ECM terminal 12 and ground with CONSULT-II or tester.

Voltage: Battery voltage

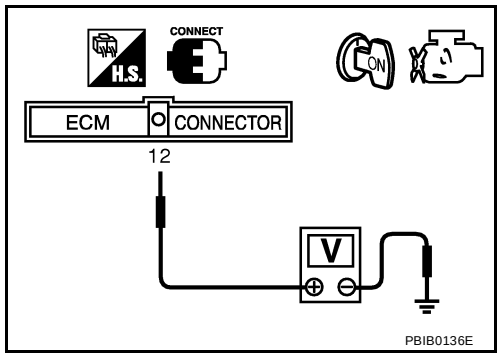

OK or NG

OK >> Go to EC-554, "IGNITION SIGNAL" .
NG >> GO TO 7.

7. CHECK ECM POWER SUPPLY CIRCUIT-II

1. Turn ignition switch “ON” and then “OFF”.
2. Check voltage between ECM terminals 109, 111 and ground with CONSULT-II or tester.

Voltage: After turning ignition switch "OFF", battery voltage will exist for a few seconds, then drop approximately 0V.

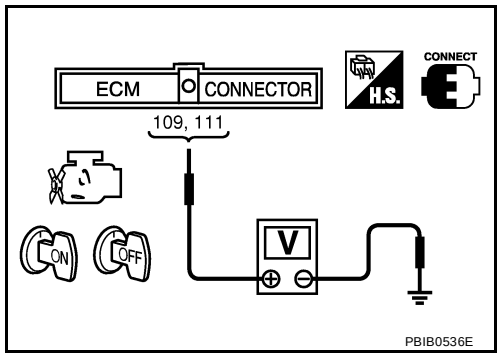

OK or NG

OK >> GO TO 8.
NG (Battery voltage does not exist.)>>GO TO 10.
NG (Battery voltage exists for more than a few seconds.)>>GO TO 18.

8. CHECK ECM POWER SUPPLY CIRCUIT-IV

1. Disconnect IPDM E/R harness connector.
2. Check harness continuity between ECM terminal 12 and IPDM E/R terminal 35. Refer to Wiring Diagram.

Continuity should exist.

3. Also check harness for short to ground and short to power.

OK or NG

OK >> GO TO 18.
NG >> GO TO 9.

9. DETECT MALFUNCTIONING PART

Check the following.

- Harness or connectors E130, E27
- Harness or connectors E20, F32
- Harness for open or short between ECM and IPDM E/R

>> Repair open circuit or short to ground or short to power in harness or connectors.

10. CHECK ECM POWER SUPPLY CIRCUIT-V

1. Turn ignition switch “OFF”.
2. Check voltage between ECM terminal 20 and ground with CONSULT-II or tester.

Voltage: Battery voltage

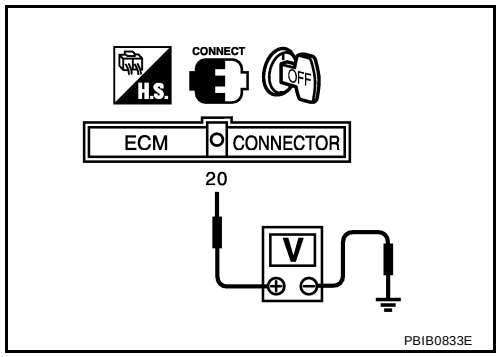

OK or NG

OK >> GO TO 11.
NG >> GO TO 13.

11. CHECK ECM POWER SUPPLY CIRCUIT-VI

1. Disconnect ECM harness connector.
2. Disconnect IPDM E/R harness connector.
3. Check harness continuity between ECM terminals 109, 111 and IPDM E/R terminal 33.
   Refer to Wiring Diagram.

Continuity should exist.

4. Also check harness for short to ground and short to power.

OK or NG

OK >> GO TO 16.
NG >> GO TO 12.

12. DETECT MALFUNCTIONING PART

Check the following.

- Harness or connectors E130, E27
- Harness or connectors E20, F32
- Harness for open or short between ECM and IPDM E/R

>> Repair open circuit or short to ground or short to power in harness or connectors.

13. CHECK ECM POWER SUPPLY CIRCUIT-VII

1. Disconnect IPDM E/R harness connector.
2. Check harness continuity between ECM terminal 20 and IPDM E/R terminal 44.
   Refer to Wiring Diagram.

   Continuity should exist.

3. Also check harness for short to ground and short to power.

OK or NG

OK >> GO TO 15.
NG >> GO TO 14.

14. DETECT MALFUNCTIONING PART

Check the following.

- Harness or connectors E130, E27
- Harness or connectors E20, F32
- Harness for open or short between ECM and IPDM E/R

>> Repair open circuit or short to ground or short to power in harness or connectors.

15. CHECK 15A FUSE

1. Disconnect 15A fuse from IPDM E/R.
2. Check 15A fuse.

OK or NG

OK >> GO TO 18.
NG >> Replace 15A fuse.

16. CHECK ECM GROUND CIRCUIT FOR OPEN AND SHORT-II

1. Turn ignition switch “OFF”.
2. Disconnect ECM harness connector.
3. Check harness continuity between ECM terminals 59, 60, 106, 108 and engine ground.
   Refer to Wiring Diagram.

   Continuity should exist.

4. Also check harness for short to power.

OK or NG

OK >> GO TO 18.
NG >> GO TO 17.

17. DETECT MALFUNCTIONING PART

Check the following.

- Joint connector-5
- Harness for open or short between ECM and ground

>> Repair or replace.

18. CHECK INTERMITTENT INCIDENT

Refer to EC-130, "TROUBLE DIAGNOSIS FOR INTERMITTENT INCIDENT" .

OK or NG

OK >> Replace IPDM E/R.
NG >> Repair open circuit or short to power in harness or connectors.

DTC U1000, U1001 CAN COMMUNICATION LINE

PFP:23710

Description

UBS002P4

CAN (Controller Area Network) is a serial communication line for real time application. It is an on-vehicle multiplex communication line with high data communication speed and excellent error detection ability. Many electronic control units are equipped onto a vehicle, and each control unit shares information and links with other control units during operation (not independent). In CAN communication, control units are connected with 2 communication lines (CAN H line, CAN L line) allowing a high rate of information transmission with less wiring. Each control unit transmits/receives data but selectively reads required data only.

On Board Diagnosis Logic

UBS002P5

DTC No.	Trouble diagnosis name	DTC detecting condition	Possible cause
U1000 1000	CAN communication line	● ECM cannot communicate to other control unit. ● ECM cannot communicate for more than the specified time.	● Harness or connectors (CAN communication line is open or shorted)
U1001 1001			

DTC Confirmation Procedure

UBS002P6

1. Turn ignition switch “ON” and wait at least 3 seconds.
2. Select “DATA MONITOR” mode with CONSULT-II.
3. If 1st trip DTC is detected, go to EC-140, "Diagnostic Procedure" .

Wiring Diagram

UBS002P7

EC-CAN-01

: DETECTABLE LINE FOR DTC
: NON-DETECTABLE LINE FOR DTC
: DATA LINE

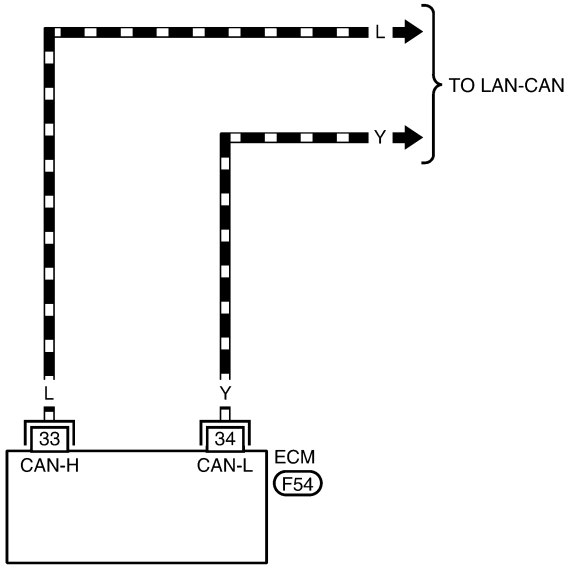

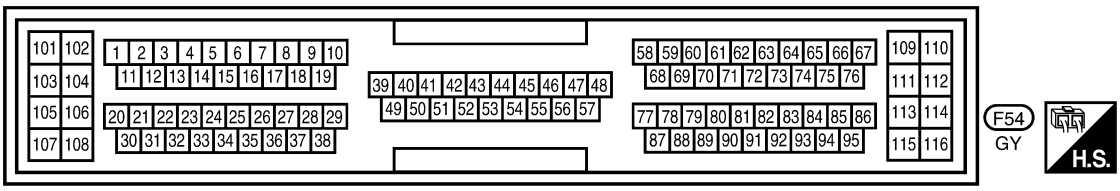

BBWA0005E

Diagnostic Procedure

UBS002P8

1. INSPECTION START

1. Turn ignition switch ON.
2. Select “CAN DIAG SUPPORT MNTR” in “DATA MONITOR” mode with CONSULT-II.
3. Print out the CONSULT-II screen.

A/T models

OK data

DATA MONITOR	
MONITOR	NO DTC
CAN COMM	OK
CAN CIRC 1	OK
CAN CIRC 2	OK
CAN CIRC 3	UNKWN
CAN CIRC 4	OK
CAN CIRC 5	UNKWN
CAN CIRC 6	OK
CAN CIRC 7	OK

NG data

DATA MONITOR	
MONITOR	NO DTC
CAN COMM	OK
CAN CIRC 1	UNKWN
CAN CIRC 2	UNKWN
CAN CIRC 3	UNKWN
CAN CIRC 4	UNKWN
CAN CIRC 5	UNKWN
CAN CIRC 6	UNKWN
CAN CIRC 7	UNKWN

PBIB0892E

M/T models

OK data

DATA MONITOR	
MONITOR	NO DTC
CAN COMM	OK
CAN CIRC 1	OK
CAN CIRC 2	UNKWN
CAN CIRC 3	UNKWN
CAN CIRC 4	OK
CAN CIRC 5	UNKWN
CAN CIRC 6	OK
CAN CIRC 7	OK

NG data

DATA MONITOR	
MONITOR	NO DTC
CAN COMM	OK
CAN CIRC 1	UNKWN
CAN CIRC 2	UNKWN
CAN CIRC 3	UNKWN
CAN CIRC 4	UNKWN
CAN CIRC 5	UNKWN
CAN CIRC 6	UNKWN
CAN CIRC 7	UNKWN

PBIB0893E

>> Go to LAN-27, "CAN SYSTEM (FOR A/T MODELS)" or LAN-43, "CAN SYSTEM (FOR M/T MODELS)" .

DTC P0011 IVT CONTROL

PFP:23796

Description

UBS002P9

SYSTEM DESCRIPTION

Sensor	Input signal to ECM	ECM function	Actuator
Crankshaft position sensor (POS)	Engine speed	Intake valve timing control	Intake valve timing control solenoid valve
Camshaft position sensor (PHASE)			
Engine coolant temperature sensor	Engine coolant temperature		
Vehicle speed sensor	Vehicle speed		

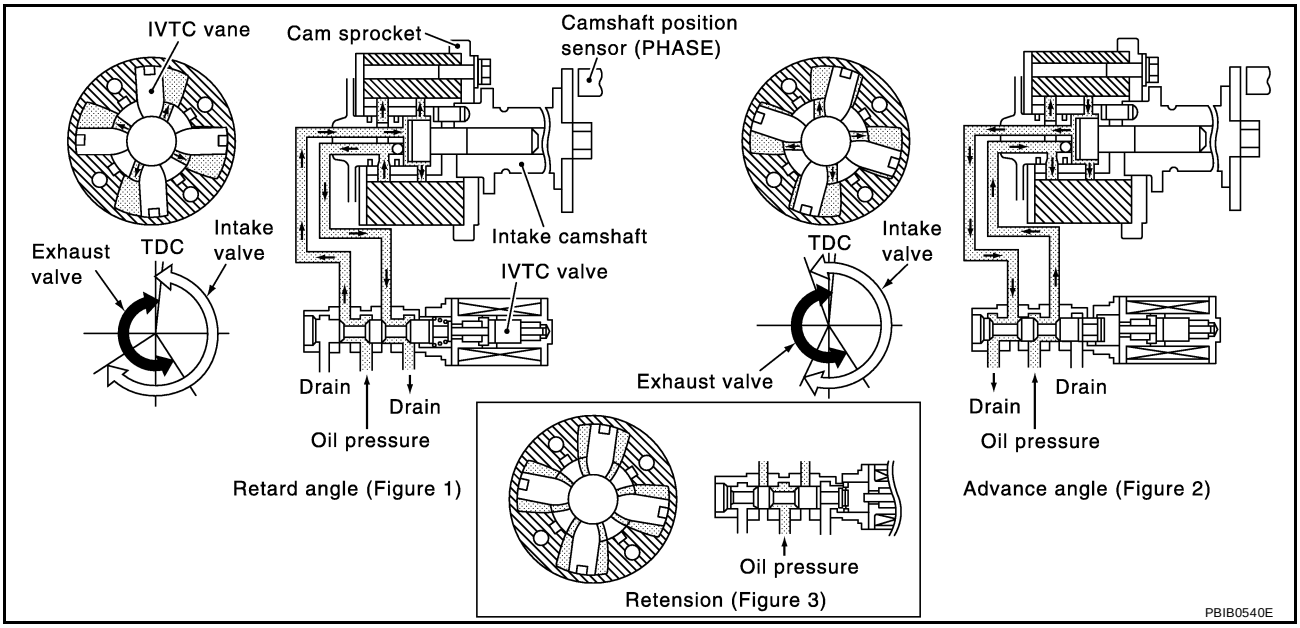

This mechanism hydraulically controls cam phases continuously with the fixed operating angle of the intake valve.

The ECM receives signals such as crankshaft position, camshaft position, engine speed, and engine coolant temperature. Then, the ECM sends ON/OFF pulse duty signals to the intake valve timing control solenoid valve depending on driving status. This makes it possible to control the shut/open timing of the intake valve to increase engine torque in low/mid speed range and output in high-speed range.

CONSULT-II Reference Value in Data Monitor Mode

UBS002PA

Specification data are reference values.

MONITOR ITEM	CONDITION		SPECIFICATION
INT/V TIM (B1)	● Engine: After warming up ● Shift lever: N ● Air conditioner switch: OFF ● No-load	Idle	–5° - 5°CA
		2,000 rpm	Approx. 0° - 20°CA
INT/V SOL (B1)	● Engine: After warming up ● Shift lever: N ● Air conditioner switch: OFF ● No-load	Idle	0% - 2%
		2,000 rpm	Approx. 25% - 60%

On Board Diagnosis Logic

UBS002PB

DTC No.	Trouble diagnosis name	Detecting condition	Possible cause
P0011 0011	Intake valve timing control performance	There is a gap between angle of target and phase-control angle degree.	● Crankshaft position sensor (POS) ● Camshaft position sensor (PHASE) ● Accumulation of debris to the signal pick-up portion of the camshaft

FAIL-SAFE MODE

ECM enters in fail-safe mode when the malfunction is detected.

Detected items	Engine operating condition in fail-safe mode
Intake valve timing control	The signal is not energized to the solenoid valve and the valve control does not function

DTC Confirmation Procedure

UBS002PC

CAUTION:

Always drive at a safe speed.

NOTE:

- **If DTC P0011 is displayed with DTC P1111, first perform trouble diagnosis for "DTC P1111". See EC-393 .**
- If "DTC Confirmation Procedure" has been previously conducted, always turn ignition switch "OFF" and wait at least 10 seconds before conducting the next test.

TESTING CONDITION:

Before performing the following procedure, confirm that battery voltage is between 10V and 16V at idle.

WITH CONSULT-II

1. Turn ignition switch "ON".
2. Select "DATA MONITOR" mode with CONSULT-II.
3. Maintain the following conditions for at least 20 consecutive seconds.

ENG SPEED	1,700 - 3,175 rpm (A constant rotation is maintained.)
COOLANT TEMPS	70 - 105°C (158 - 221°F)
Selector lever	1st or 2nd position
Driving location uphill	Driving vehicle uphill (Increased engine load will help maintain the driving conditions required for this test.)

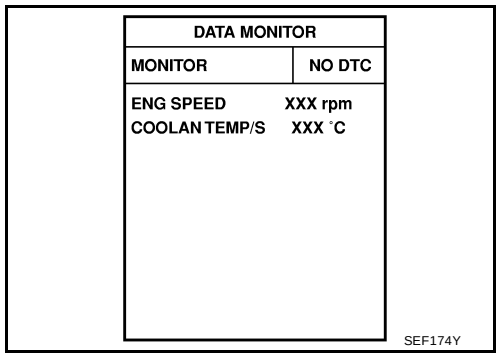

4. If 1st trip DTC is detected, go to EC-142, "Diagnostic Procedure" .

WITH GST

Follow the procedure "WITH CONSULT-II" above.

Diagnostic Procedure

UBS002PD

1. CHECK CRANKSHAFT POSITION SENSOR (POS)

Refer to EC-289, "Component Inspection" .

OK or NG

OK >> GO TO 2.
NG >> Replace crankshaft position sensor (POS).

2. CHECK CAMSHAFT POSITION SENSOR (PHASE)

Refer to EC-295, "Component Inspection" .

OK or NG

OK >> GO TO 3.
NG >> Replace camshaft position sensor (PHASE).

3. CHECK CAMSHAFT (INTAKE)

Check the following.

- Accumulation of debris to the signal plate of camshaft rear end
- Chipping signal plate of camshaft rear end

OK or NG

OK >> GO TO 4.
NG >> Remove debris and clean the signal plate of camshaft rear end or replace camshaft.

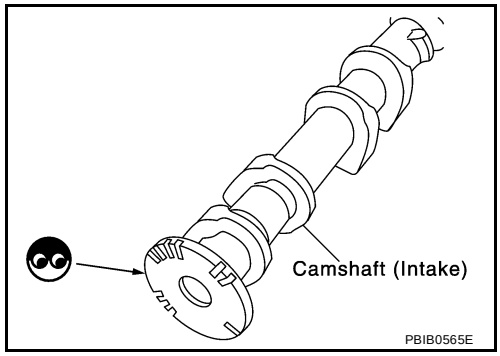

4. CHECK INTERMITTENT INCIDENT

Refer to EC-130, "TROUBLE DIAGNOSIS FOR INTERMITTENT INCIDENT" .
For wiring diagram refer to CKP sensor (POS) EC-286 and CMP sensor (PHASE) EC-292 .

>> **INSPECTION END**

DTC P0031, P0032 HO2S1 HEATER

PFP:22690

Description

UBS002PE

SYSTEM DESCRIPTION

Sensor	Input Signal to ECM	ECM function	Actuator
Camshaft position sensor (PHASE) Crankshaft position sensor (POS)	Engine speed	Heated oxygen sensor 1 heater control	Heated oxygen sensor 1 heater
Engine coolant temperature sensor	Engine coolant temperature		

The ECM performs ON/OFF duty control of the heated oxygen sensor 1 heater corresponding to the engine speed and engine coolant temperature. The duty percent varies with engine coolant temperature when engine is started.

OPERATION

Engine speed rpm	Heated oxygen sensor 1 heater
Above 3,600	OFF
Below 3,600	ON

CONSULT-II Reference Value in Data Monitor Mode

UBS002PF

Specification data are reference values.

MONITOR ITEM	CONDITION	SPECIFICATION
HO2S1 HTR (B1)	● Engine: After warming up ● Engine speed: Below 3,600 rpm	ON
	● Engine speed: Above 3,600 rpm	OFF

On Board Diagnosis Logic

UBS002PG

DTC No.	Trouble diagnosis name	DTC detecting condition	Possible cause
P0031 0031	Heated oxygen sensor 1 heater control circuit low	The current amperage in the heated oxygen sensor 1 heater circuit is out of the normal range. (An excessively low voltage signal is sent to ECM through the heated oxygen sensor 1 heater.)	● Harness or connectors (The heated oxygen sensor 1 heater circuit is open or shorted.) ● Heater oxygen sensor 1 heater
P0032 0032	Heated oxygen sensor 1 heater control circuit high	The current amperage in the heated oxygen sensor 1 heater circuit is out of the normal range. (An excessively high voltage signal is sent to ECM through the heated oxygen sensor 1 heater.)	● Harness or connectors (The heated oxygen sensor 1 heater circuit is shorted.) ● Heater oxygen sensor 1 heater

DTC Confirmation Procedure

UBS002PH

NOTE:
If “DTC Confirmation Procedure” has been previously conducted, always turn ignition switch “OFF” and wait at least 10 seconds before conducting the next test.

TESTING CONDITION:
Before performing the following procedure, confirm that battery voltage is between 10.5V and 16V at idle.

WITH CONSULT-II

1. Start engine and warm it up to normal operating temperature.
2. Turn ignition switch "OFF" and wait at least 10 seconds.

3. Turn ignition switch “ON” and select “DATA MONITOR” mode with CONSULT-II.
4. Start engine and run it for at least 6 seconds at idle speed.
5. f 1st trip DTC is detected, go to EC-147, "Diagnostic Procedure" .

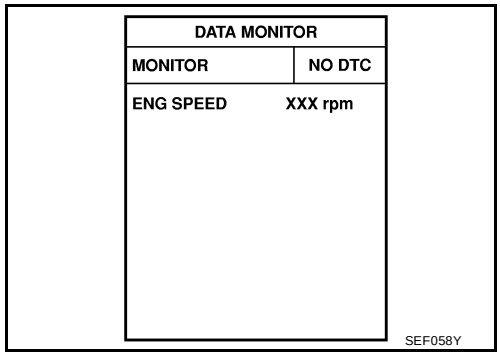

WITH GST

1. Start engine and warm it up to normal operating temperature.
2. Turn ignition switch "OFF" and wait at least 10 seconds.
3. Start engine and run it for at least 6 seconds at idle speed.
4. Turn ignition switch “OFF” and wait at least 10 seconds.
5. Start engine and run it for at least 6 seconds at idle speed.
6. Select “MODE 3” with GST.
7. If DTC is detected, go to EC-147, "Diagnostic Procedure" .

- **When using GST, “DTC Confirmation Procedure” should be performed twice as much as when using CONSULT-II because GST cannot display MODE 7 (1st trip DTC) concerning this diagnosis. Therefore, using CONSULT-II is recommended.**

Wiring Diagram

UBS002PI

EC-HO2S1H-01

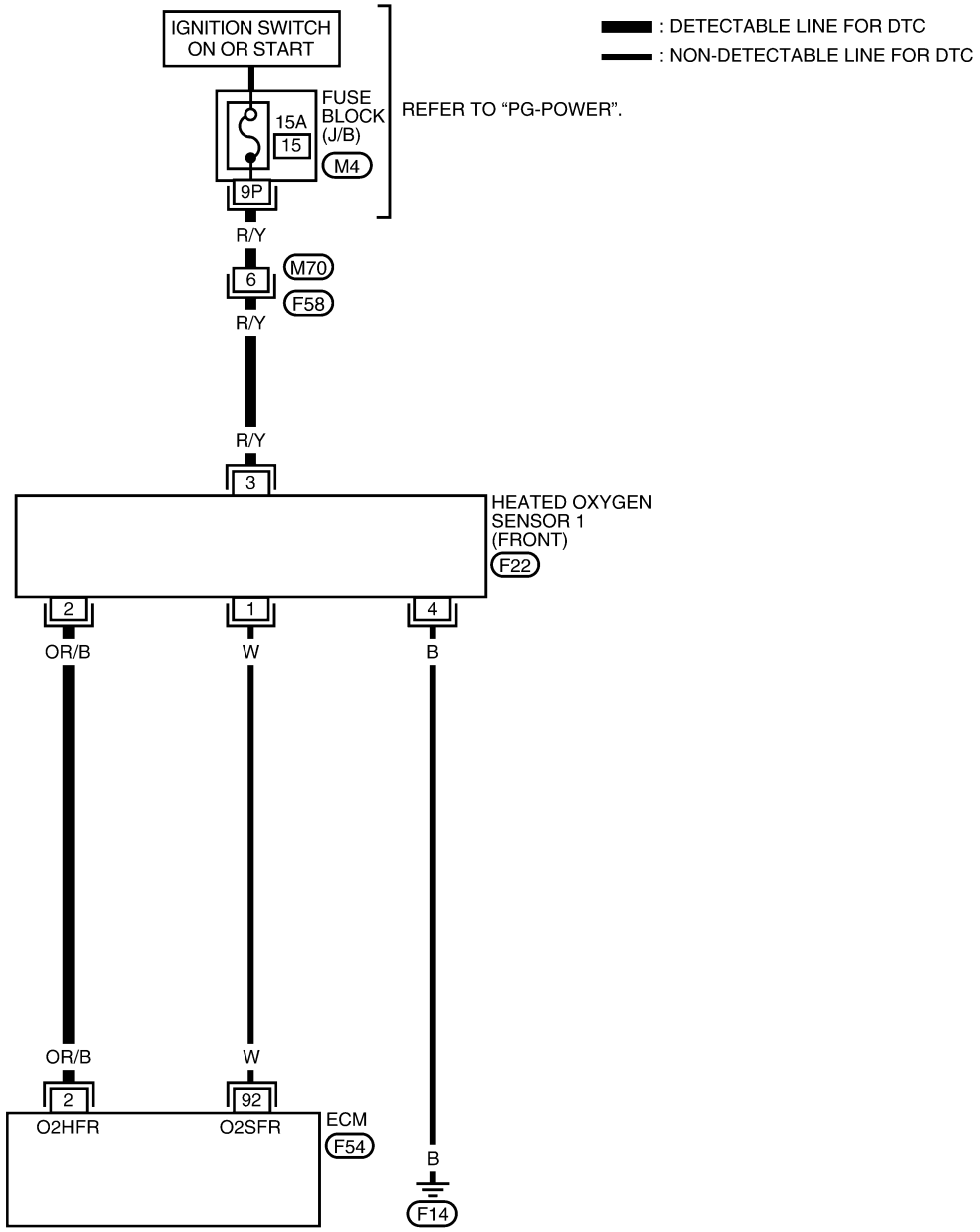

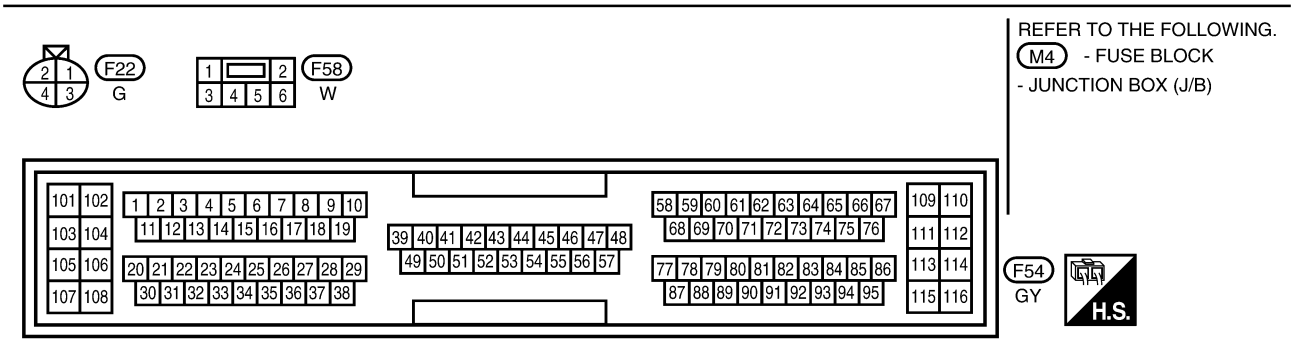

BBWA0010E

Specification data are reference values and are measured between each terminal and ground.

CAUTION:
Do not use ECM ground terminals when measuring input/output voltage. Doing so may result in damage to the ECM's transistor. Use a ground other than ECM terminals, such as the ground.

TERMINAL NO.	WIRE COLOR	ITEM	CONDITION	DATA (DC Voltage)
2	OR/B	Heated oxygen sensor 1 heater	**[Engine is running]** ● **Warm-up condition.** ● Engine speed is below 3,600 rpm.	Approximately 7.0V 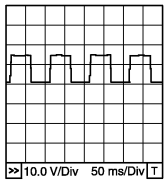 PBIB0519E
			[Engine is running] ● Engine speed is above 3,600 rpm.	BATTERY VOLTAGE (11 - 14V)

★: Average voltage for pulse signal (Actual pulse signal can be confirmed by oscilloscope.)

Diagnostic Procedure

UBS002PJ

1. CHECK HO2S1 POWER SUPPLY CIRCUIT

1. Turn ignition switch “OFF”.
2. Disconnect heated oxygen sensor 1 harness connector.
3. Turn ignition switch “ON”.

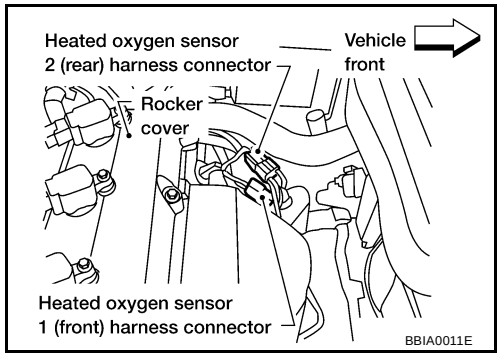

4. Check voltage between HO2S1 terminal 3 and ground with CONSULT-II or tester.

Voltage: Battery voltage

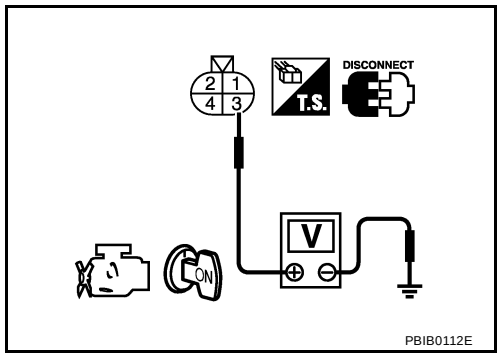

OK or NG

OK >> GO TO 3.
NG >> GO TO 2.

2. DETECT MALFUNCTIONING PART

Check the following.

- Harness connectors M70, F58
- Fuse block (J/B) connector M4
- 15A fuse
- Harness for open or short between heated oxygen sensor 1 and fuse

>> Repair harness or connectors.

3. CHECK HO2S1 OUTPUT SIGNAL CIRCUIT FOR OPEN AND SHORT

1. Turn ignition switch “OFF”.
2. Disconnect ECM harness connector.
3. Check harness continuity between ECM terminal 2 and HO2S1 terminal 2.
   Refer to Wiring Diagram.

   Continuity should exist.

4. Also check harness for short to ground and short to power.

OK or NG

OK >> GO TO 4.
NG >> Repair open circuit or short to ground or short to power in harness or connectors.

4. CHECK HEATED OXYGEN SENSOR 1 HEATER

Refer to EC-148, "Component Inspection" .

OK or NG

OK >> GO TO 5.
NG >> Replace heated oxygen sensor 1.

5. CHECK INTERMITTENT INCIDENT

Refer to EC-130, "TROUBLE DIAGNOSIS FOR INTERMITTENT INCIDENT" .

>> **INSPECTION END**

Component Inspection

UBS002PK

HEATED OXYGEN SENSOR 1 HEATER

1. Check resistance between HO2S1 terminals as follows.

Terminal No.	Resistance
2 and 3	2.3 - 4.3 Ω at 25°C (77°F)
1 and 2, 3, 4	∞ Ω (Continuity should not exist)
4 and 1, 2, 3	

2. If NG, replace heated oxygen sensor 1.

CAUTION:

- **Discard any heated oxygen sensor which has been dropped from a height of more than 0.5 m (19.7 in) onto a hard surface such as a concrete floor; use a new one.**
- **Before installing new oxygen sensor, clean exhaust system threads using Oxygen Sensor Thread Cleaner tool J-43897-18 or J-43897-12 and approved anti-seize lubricant.**

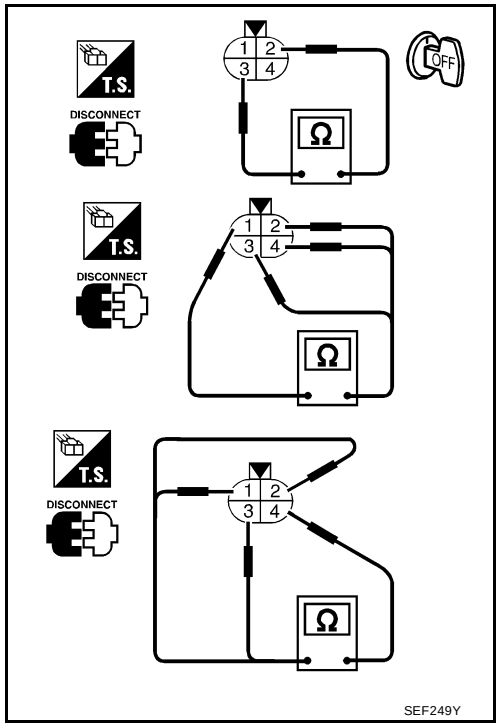

Removal and Installation

UBS002PL

HEATED OXYGEN SENSOR 1

Refer to EM-21, "EXHAUST MANIFOLD AND THREE WAY CATALYST" .

DTC P0037, P0038 HO2S2 HEATER

PFP:226A0

Description

UBS002PM

SYSTEM DESCRIPTION

Sensor	Input Signal to ECM	ECM function	Actuator
Camshaft position sensor (PHASE)	Engine speed	Heated oxygen sensor 2 heater control	Heated oxygen sensor 2 heater
Crankshaft position sensor (POS)			

The ECM performs ON/OFF control of the heated oxygen sensor 2 heater corresponding to the engine speed.

OPERATION

Engine speed rpm	Heated oxygen sensor 2 heater
Above 3,600	OFF
Below 3,600	ON

CONSULT-II Reference Value in Data Monitor Mode

UBS002PN

Specification data are reference values.

MONITOR ITEM	CONDITION	SPECIFICATION
HO2S2 HTR (B1)	● Engine speed: Below 3,600 rpm [After driving for 2 minutes at a speed of 70 km/h (43 MPH) or more]	ON
	● Engine speed: Above 3,600 rpm	OFF

On Board Diagnosis Logic

UBS002PO

DTC No.	Trouble diagnosis name	DTC detecting condition	Possible cause
P0037 0037	Heated oxygen sensor 2 heater control circuit low	The current amperage in the heated oxygen sensor 2 heater circuit is out of the normal range. (An excessively low voltage signal is sent to ECM through the heated oxygen sensor 1 heater.)	● Harness or connectors (The heated oxygen sensor 1 heater circuit is open or shorted.) ● Heater oxygen sensor 1 heater
P0038 0038	Heated oxygen sensor 2 heater control circuit high	The current amperage in the heated oxygen sensor 2 heater circuit is out of the normal range. (An excessively high voltage signal is sent to ECM through the heated oxygen sensor 1 heater.)	● Harness or connectors (The heated oxygen sensor 1 heater circuit is shorted.) ● Heater oxygen sensor 1 heater

DTC Confirmation Procedure

UBS002PP

NOTE:
If “DTC Confirmation Procedure” has been previously conducted, always turn ignition switch “OFF” and wait at least 10 seconds before conducting the next test.

TESTING CONDITION:
Before performing the following procedure, confirm that battery voltage is between 10.5V and 16V at idle.

WITH CONSULT-II

1. Turn ignition switch “ON” and select “DATA MONITOR” mode with CONSULT-II.
2. Start engine.
3. Drive vehicle at a speed of more than 70 km/h (43 MPH) for 2 consecutive minutes.

4. Stop vehicle and let engine idle for at least 6 seconds.
5. If 1st trip DTC is detected, go to EC-152, "Diagnostic Procedure"
.

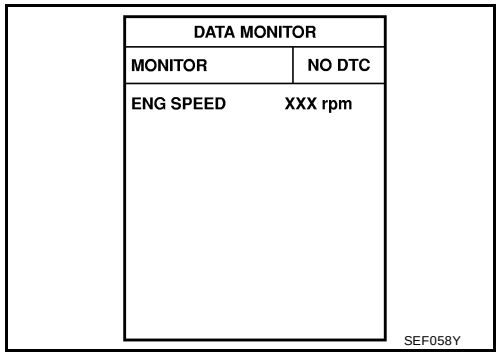

WITH GST

1. Start engine.
2. Drive vehicle at a speed of more than 70 km/h (43 MPH) for 2 consecutive minutes.
3. Stop vehicle and let engine idle for at least 6 seconds.
4. Turn ignition switch “OFF” and wait at least 10 seconds.
5. Start engine.
6. Drive vehicle at a speed of more than 70 km/h (43 MPH) for 2 consecutive minutes.
7. Stop vehicle and let engine idle for at least 6 seconds.
8. Select “MODE 3” with GST.
9. If DTC is detected, go to EC-152, "Diagnostic Procedure" .

- **When using GST, “DTC Confirmation Procedure” should be performed twice as much as when using CONSULT-II because GST cannot display MODE 7 (1st trip DTC) concerning this diagnosis. Therefore, using CONSULT-II is recommended.**

Wiring Diagram

UBS002PQ

EC-HO2S2H-01

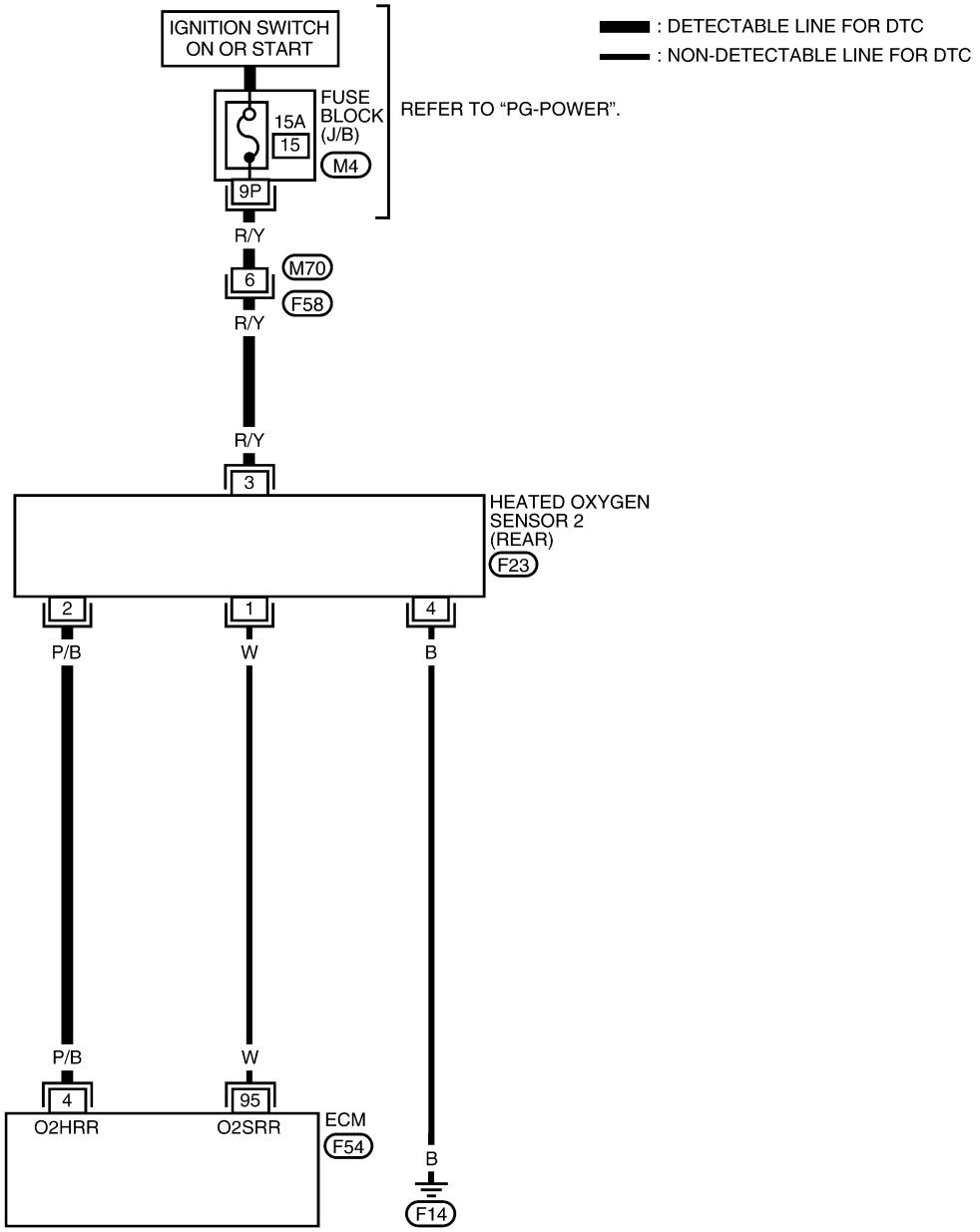

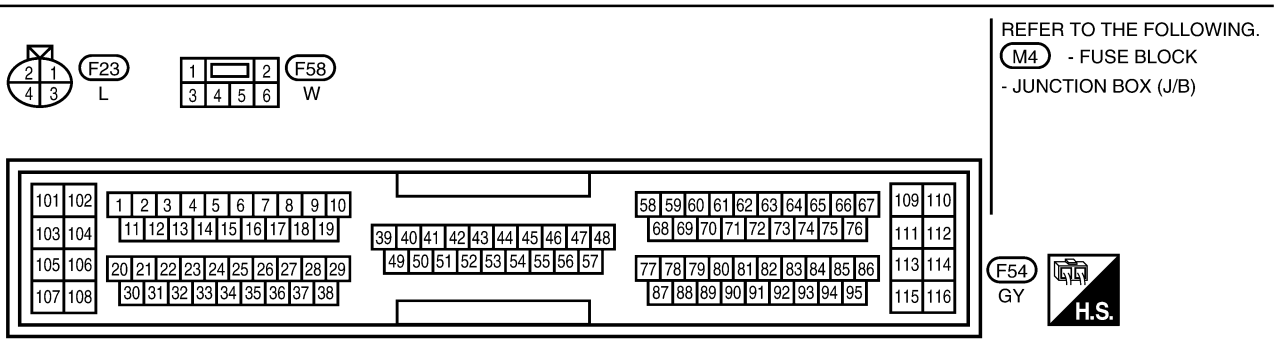

BBWA0012E

Specification data are reference values and are measured between each terminal and ground.

CAUTION:
Do not use ECM ground terminals when measuring input/output voltage. Doing so may result in damage to the ECM's transistor. Use a ground other than ECM terminals, such as the ground.

TERMINAL NO.	WIRE COLOR	ITEM	CONDITION	DATA (DC Voltage)
4	P/B	Heated oxygen sensor 2 heater	**[Engine is running]** ● Engine speed is below 3,600 rpm. ● After driving for 2 minutes at a speed of 70 km/h (43 MPH) or more.	0 - 1.0V
			[Ignition switch "ON"] ● Engine stopped **[Engine is running]** ● Engine speed is above 3,600 rpm.	BATTERY VOLTAGE (11 - 14V)

Diagnostic Procedure

UBS002PR

1. CHECK HO2S2 POWER SUPPLY CIRCUIT

1. Turn ignition switch "OFF".
2. Disconnect heated oxygen sensor 2 harness connector.
3. Turn ignition switch "ON".

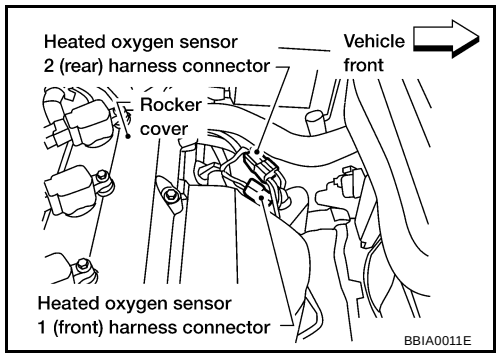

4. Check voltage between HO2S2 terminal 3 and ground with CONSULT-II or tester.

Voltage: Battery voltage

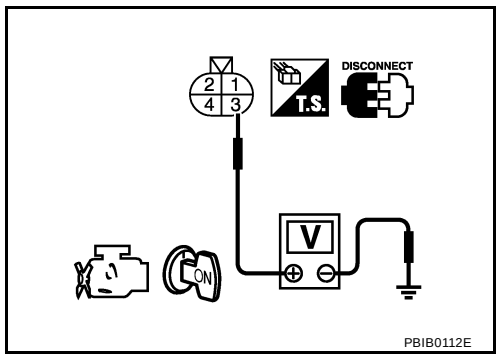

OK or NG

OK >> GO TO 3.
NG >> GO TO 2.

2. DETECT MALFUNCTIONING PART

Check the following.

- Harness connectors M70, F58
- Fuse block (J/B) connector M4
- 15A fuse
- Harness for open or short between heated oxygen sensor 2 and fuse

>> Repair harness or connectors.

3. CHECK HO2S2 OUTPUT SIGNAL CIRCUIT FOR OPEN AND SHORT

1. Turn ignition switch “OFF”.
2. Disconnect ECM harness connector.
3. Check harness continuity between ECM terminal 4 and HO2S2 terminal 2.
   Refer to Wiring Diagram.

   Continuity should exist.

4. Also check harness for short to ground and short to power.

OK or NG

OK >> GO TO 4.
NG >> Repair harness or connectors.

4. CHECK HEATED OXYGEN SENSOR 2 HEATER

Refer to EC-153, "Component Inspection" .

OK or NG

OK >> GO TO 5.
NG >> Replace heated oxygen sensor 2.

5. CHECK INTERMITTENT INCIDENT

Refer to EC-130, "TROUBLE DIAGNOSIS FOR INTERMITTENT INCIDENT" .

>> **INSPECTION END**

Component Inspection

UBS002PS

HEATED OXYGEN SENSOR 2 HEATER

1. Check resistance between HO2S2 terminals as follows.

Terminal No.	Resistance
2 and 3	2.3 - 4.3 Ω at 25°C (77°F)
1 and 2, 3, 4	∞ Ω (Continuity should not exist)
4 and 1, 2, 3	

2. If NG, replace heated oxygen sensor 2.

CAUTION:

- **Discard any heated oxygen sensor which has been dropped from a height of more than 0.5 m (19.7 in) onto a hard surface such as a concrete floor; use a new one.**
- **Before installing new oxygen sensor, clean exhaust system threads using Oxygen Sensor Thread Cleaner tool J-43897-18 or J-43897-12 and approved anti-seize lubricant.**

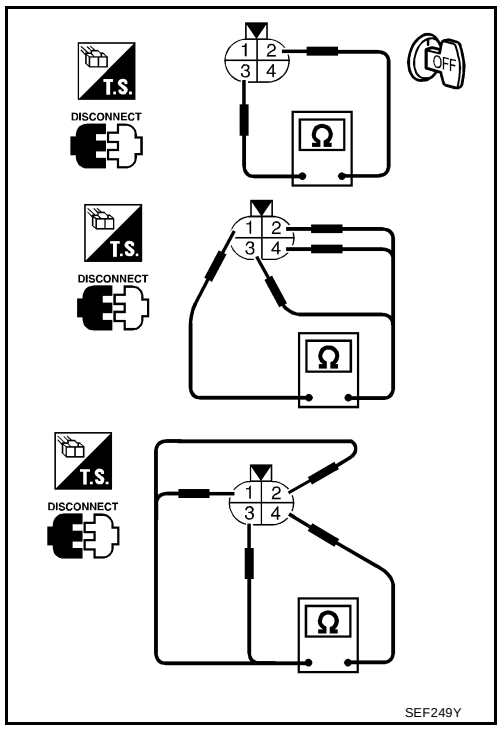

Removal and Installation

UBS002PT

HEATED OXYGEN SENSOR 2

Refer to EX-3, "EXHAUST SYSTEM (QR25DE)" .

DTC P0101 MAF SENSOR

PFP:22680

Component Description

UBS002PU

The mass air flow sensor is placed in the stream of intake air. It measures the intake flow rate by measuring a part of the entire intake flow. It consists of a hot film that is supplied with electric current from the ECM. The temperature of the hot film is controlled by the ECM a certain amount. The heat generated by the hot film is reduced as the intake air flows around it. The more air, the greater the heat loss.
Therefore, the ECM must supply more electric current to maintain the temperature of the hot film as air flow increases. The ECM detects the air flow by means of this current change.

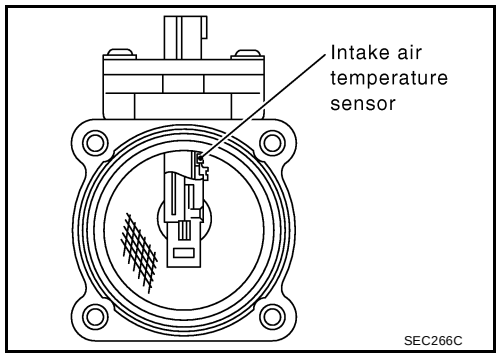

CONSULT-II Reference Value in Data Monitor Mode

UBS002PV

Specification data are reference values.

MONITOR ITEM	CONDITION		SPECIFICATION
MAS A/F SE-B1	● Engine: After warming up ● Air conditioner switch: OFF ● Shift lever: N ● No-load	Idle	Approx. 1.1 - 1.5V
		2,500 rpm	Approx. 1.6 - 2.0V
CAL/LD VALUE	● Engine: After warming up ● Shift lever: N ● Air conditioner switch: OFF ● No-load	Idle	10% - 35%
		2,500 rpm	10% - 35%
MASS AIRFLOW	● Engine: After warming up ● Shift lever: N ● Air conditioner switch: OFF ● No-load	Idle	1.0 - 4.0 g·m/s
		2,500 rpm	4.0 - 10.0 g·m/s

On Board Diagnosis Logic

UBS002PW

DTC No.	Trouble diagnosis name	DTC detecting condition		Possible cause
P0101 0101	Mass air flow sensor circuit range/performance problem	A)	A high voltage from the sensor is sent to ECM under light load driving condition.	● Harness or connectors (The sensor circuit is open or shorted.) ● Mass air flow sensor
		B)	A low voltage from the sensor is sent to ECM under heavy load driving condition.	● Harness or connectors (The sensor circuit is open or shorted.) ● Intake air leaks ● Mass air flow sensor

DTC Confirmation Procedure

UBS002PX

Perform "PROCEDURE FOR MALFUNCTION A" first.
If the 1st trip DTC cannot be confirmed, perform "PROCEDURE FOR MALFUNCTION B".

NOTE:
If “DTC Confirmation Procedure” has been previously conducted, always turn ignition switch “OFF” and wait at least 10 seconds before conducting the next test.

PROCEDURE FOR MALFUNCTION A

NOTE:
If engine will not start or stops soon, wait at least 10 seconds with engine stopped (Ignition switch "ON") instead of running engine at idle speed.

With CONSULT-II

1. Turn ignition switch “ON”.
2. Select “DATA MONITOR” mode with CONSULT-II.
3. Start engine and warm it up to normal operating temperature.
4. Run engine for at least 10 seconds at idle speed.
5. If 1st trip DTC is detected, go to EC-158, "Diagnostic Procedure" .

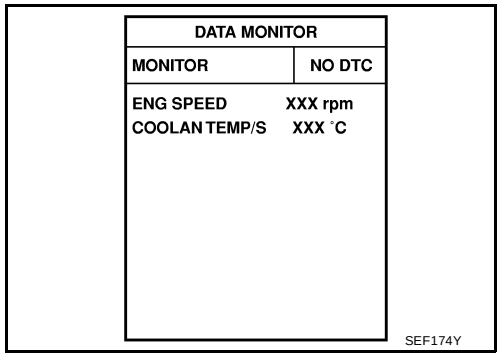

With GST

Follow the procedure “With CONSULT-II” above.

PROCEDURE FOR MALFUNCTION B

CAUTION:

Always drive vehicle at a safe speed.

With CONSULT-II

1. Turn ignition switch “ON”.
2. Start engine and warm it up to normal operating temperature.
   If engine cannot be started, go to EC-158, "Diagnostic Procedure" .
3. Select "DATA MONITOR" mode with CONSULT-II.
4. Check the voltage of "MAS A/F SE-B1" with "DATA MONITOR".
5. Increases engine speed to about 4,000 rpm.
6. Monitor the linear voltage rise in response to engine speed increases.
   If NG, go to EC-158, "Diagnostic Procedure" .
   If OK, go to following step.

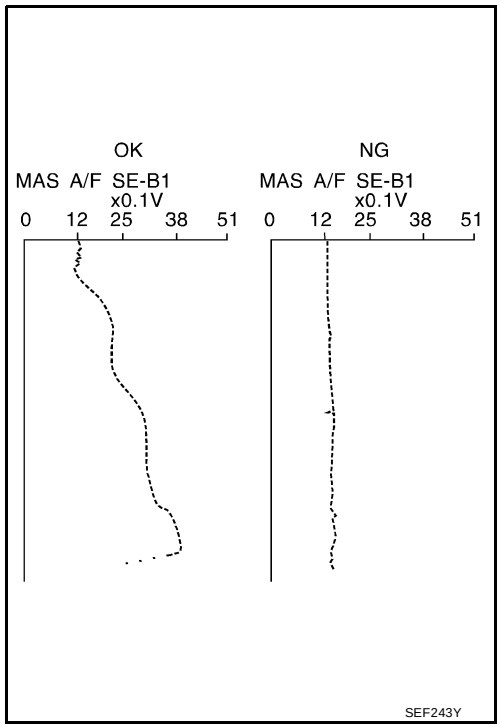

7. Maintain the following conditions for at least 10 consecutive seconds.

ENG SPEED	More than 2,000 rpm
THRTL SEN 1	More than 3V
THRTL SEN 2	More than 3V
Selector lever	Suitable position
Driving location	Driving vehicle uphill (Increased engine load) will help maintain the driving conditions required for this test.

8. If 1st trip DTC is detected, go to EC-158, "Diagnostic Procedure" .

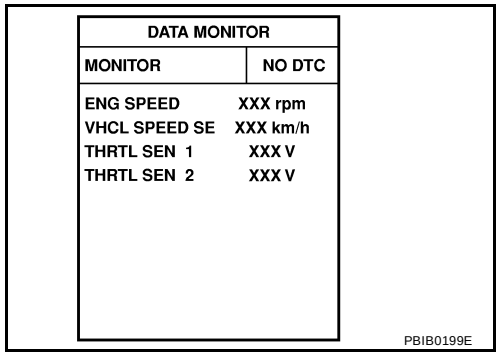

Overall Function Check

UBS002PY

PROCEDURE FOR MALFUNCTION B

Use this procedure to check the overall function of the mass air flow sensor circuit. During this check, a 1st trip DTC might not be confirmed.

With GST

1. Start engine and warm it up to normal operating temperature.
2. Select "MODE 1" with GST.
3. Check the mass air flow sensor signal with "MODE 1".
4. Check for linear mass air flow sensor signal value rise in response to increases to about 4,000 rpm in engine speed.
5. If NG, go to EC-158, "Diagnostic Procedure" .

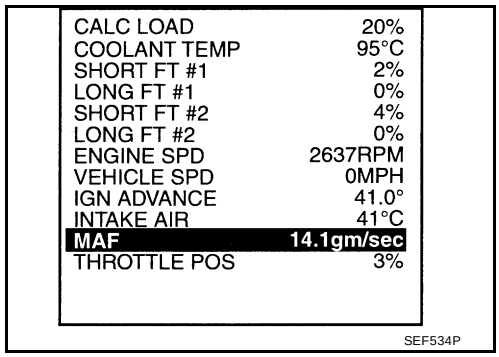

Wiring Diagram

UBS002PZ

EC-MAFS-01

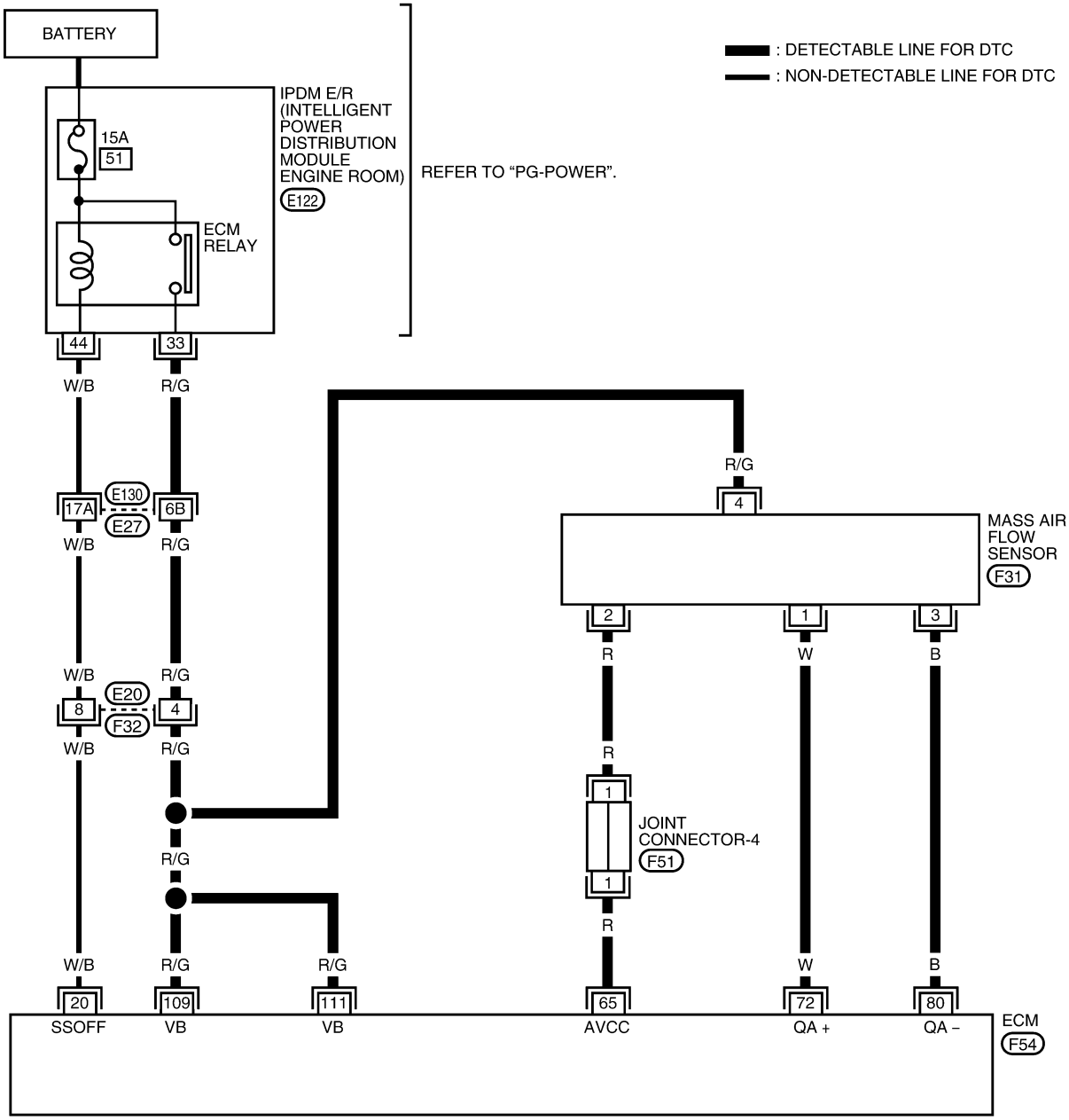

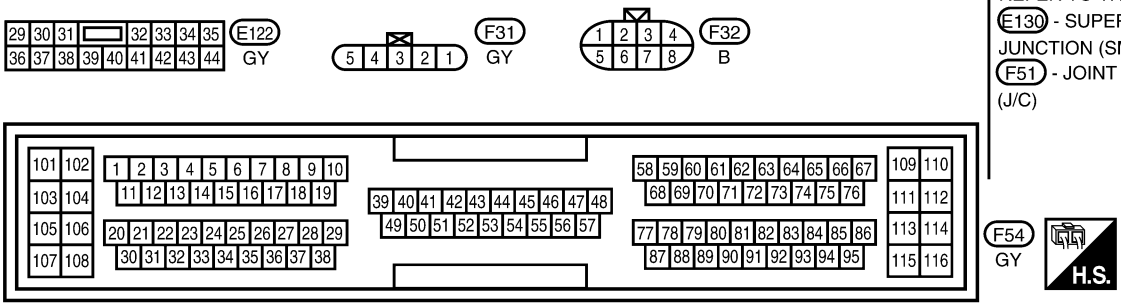

REFER TO THE FOLLOWING.
E130 - SUPER MULTIPLE JUNCTION (SMJ)
F51 - JOINT CONNECTOR (J/C)

BBWA0006E

Specification data are reference values and are measured between each terminal and ground.

CAUTION:
Do not use ECM ground terminals when measuring input/output voltage. Doing so may result in damage to the ECM's transistor. Use a ground other than ECM terminals, such as the ground.

TERMINAL NO.	WIRE COLOR	ITEM	CONDITION	DATA (DC Voltage)
65	R	Sensor's power supply	**[Ignition switch "ON"]**	Approximately 5V
72	W	Mass air flow sensor	**[Engine is running]** ● **Warm-up condition** ● Idle speed	1.1 - 1.5V
			[Engine is running] ● **Warm-up condition** ● Engine speed is 2,500 rpm.	1.6 - 2.0V
80	B	Mass air flow sensor ground	**[Engine is running]** ● **Warm-up condition** ● Idle speed	Approximately 0V

Diagnostic Procedure

UBS002Q0

1. INSPECTION START

Which malfunction (A or B) is duplicated?

A or B

A >> GO TO 3.
B >> GO TO 2.

2. CHECK INTAKE SYSTEM

Check the following for connection.

- Air duct
- Vacuum hoses
- Intake air passage between air duct to intake manifold

OK or NG

OK >> GO TO 3.
NG >> Reconnect the parts.

3. RETIGHTEN GROUND SCREWS

1. Turn ignition switch "OFF".
2. Loosen and retighten engine ground screws.

>> GO TO 4.

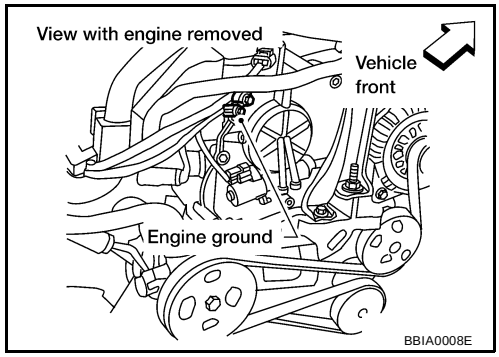

4. CHECK MAF SENSOR POWER SUPPLY CIRCUIT

1. Disconnect MAF sensor harness connector.
2. Turn ignition switch “ON”.

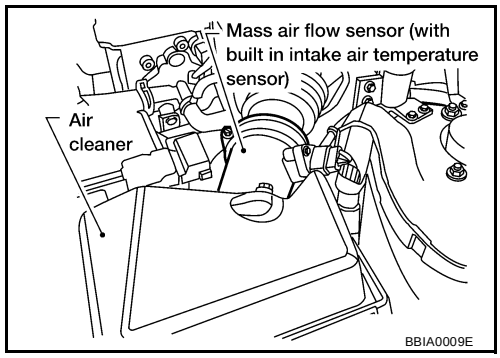

3. Check voltage between MAF sensor terminals 2, 4 and ground with CONSULT-II or tester.

Terminal	Voltage
2	Approximately 5V
4	Battery voltage

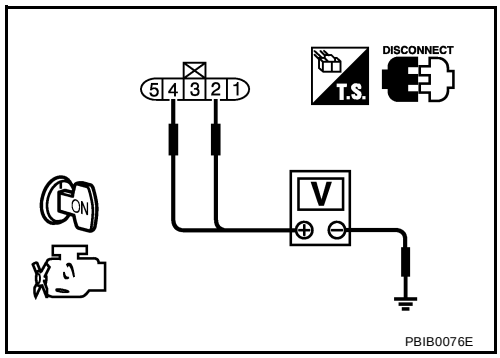

OK or NG

OK >> GO TO 6.
NG >> GO TO 5.

5. DETECT MALFUNCTIONING PART

Check the following.

- Harness connectors E130, E27
- Harness connectors E20, F32
- Joint connector-4
- Harness for open or short between mass air flow sensor and IPDM E/R
- Harness for open or short between mass air flow sensor and ECM

>> Repair harness or connectors.

6. CHECK MAF SENSOR GROUND CIRCUIT FOR OPEN AND SHORT

1. Turn ignition switch “OFF”.
2. Disconnect ECM harness connector.
3. Check harness continuity between MAF sensor terminal 3 and ECM terminal 80. Refer to Wiring Diagram.

Continuity should exist.

4. Also check harness for short to ground and short to power.

OK or NG

OK >> GO TO 7.
NG >> Repair open circuit or short to ground or short to power in harness or connectors.

7. CHECK MAF SENSOR INPUT SIGNAL CIRCUIT FOR OPEN AND SHORT

1. Check harness continuity between MAF sensor terminal 1 and ECM terminal 72.
   Refer to Wiring Diagram.

   Continuity should exist.

2. Also check harness for short to ground and short to power.

OK or NG

OK >> GO TO 8.
NG >> Repair open circuit or short to ground or short to power in harness or connectors.

8. CHECK MASS AIR FLOW SENSOR

Refer to EC-160, "Component Inspection" .

OK or NG

OK >> GO TO 9.
NG >> Replace mass air flow sensor.

9. CHECK INTERMITTENT INCIDENT

Refer to EC-130, "TROUBLE DIAGNOSIS FOR INTERMITTENT INCIDENT" .

>> **INSPECTION END**

Component Inspection

UBS002Q1

MASS AIR FLOW SENSOR

1. Reconnect harness connectors disconnected.
2. Start engine and warm it up to normal operating temperature.
3. Check voltage between ECM terminal 72 (Mass air flow sensor signal) and ground.

Condition	Voltage V
Ignition switch "ON" (Engine stopped.)	Approx. 1.0
Idle (Engine is warmed-up to normal operating temperature.)	1.1 - 1.5
2,500 rpm (Engine is warmed-up to normal operating temperature.)	1.6 - 2.0
Idle to about 4,000 rpm*	1.5 - 2.0 to Approx. 4.0

*: Check for linear voltage rise in response to engine being increased to about 4,000 rpm.

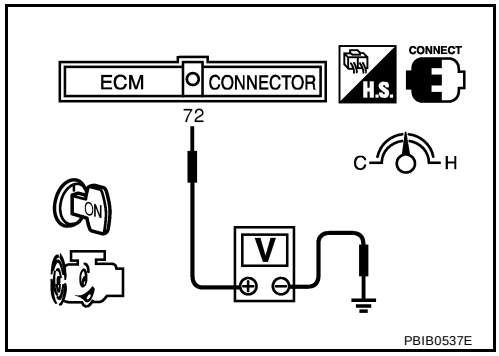

4. If the voltage is out of specification, proceed the following.

a. Turn ignition switch "OFF".
b. Disconnect mass air flow sensor harness connector and reconnect it again.
c. Perform steps 2 and 3 again.

5. If NG, remove mass air flow sensor from air duct. Check hot film for damage or dust.
6. If NG, clean or replace mass air flow sensor.

Removal and Installation

UBS002Q2

MASS AIR FLOW SENSOR

Refer to EM-14, "AIR CLEANER AND AIR DUCT" .

DTC P0102, P0103 MAF SENSOR

PFP:22680

Component Description

UBS002Q3

The mass air flow sensor is placed in the stream of intake air. It measures the intake flow rate by measuring a part of the entire intake flow. It consists of a hot film that is supplied with electric current from the ECM. The temperature of the hot film is controlled by the ECM a certain amount. The heat generated by the hot film is reduced as the intake air flows around it. The more air, the greater the heat loss.
Therefore, the ECM must supply more electric current to maintain the temperature of the hot film as air flow increases. The ECM detects the air flow by means of this current change.

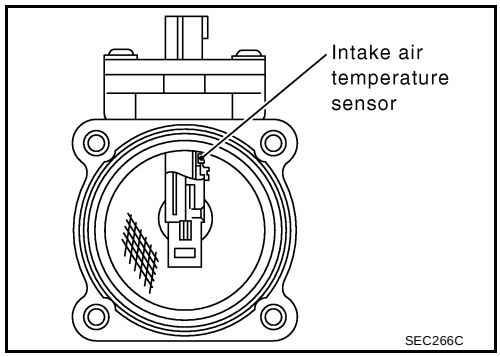

CONSULT-II Reference Value in Data Monitor Mode

UBS002Q4

Specification data are reference values.

MONITOR ITEM	CONDITION		SPECIFICATION
MAS A/F SE-B1	● Engine: After warming up ● Air conditioner switch: OFF ● Shift lever: N ● No-load	Idle	Approx. 1.1 - 1.5V
		2,500 rpm	Approx. 1.6 - 2.0V
CAL/LD VALUE	● Engine: After warming up ● Shift lever: N ● Air conditioner switch: OFF ● No-load	Idle	10% - 35%
		2,500 rpm	10% - 35%
MASS AIRFLOW	● Engine: After warming up ● Shift lever: N ● Air conditioner switch: OFF ● No-load	Idle	1.0 - 4.0 g·m/s
		2,500 rpm	4.0 - 10.0 g·m/s

On Board Diagnosis Logic

UBS002Q5

These self-diagnoses have the one trip detection logic.

DTC No.	Trouble diagnosis name	DTC detecting condition	Possible cause
P0102 0102	Mass air flow sensor circuit low input	An excessively low voltage from the sensor is sent to ECM.	● Harness or connectors (The sensor circuit is open or shorted.) ● Intake air leaks ● Mass air flow sensor
P0103 0103	Mass air flow sensor circuit high input	An excessively high voltage from the sensor is sent to ECM.	● Harness or connectors (The sensor circuit is open or shorted.) ● Mass air flow sensor

FAIL-SAFE MODE

When the malfunction is detected, the ECM enters fail-safe mode and the MIL lights up.

Detected items	Engine operating condition in fail-safe mode
Mass air flow sensor circuit	Engine speed will not rise more than 2,400 rpm due to the fuel cut.

DTC Confirmation Procedure

UBS002Q6

NOTE:
If “DTC Confirmation Procedure” has been previously conducted, always turn ignition switch “OFF” and wait at least 10 seconds before conducting the next test.

PROCEDURE FOR DTC P0102

With CONSULT-II

1. Turn ignition switch “ON”.
2. Select “DATA MONITOR” mode with CONSULT-II.
3. Start engine and wait 5 seconds at most.
4. If DTC is detected, go to EC-164, "Diagnostic Procedure" .

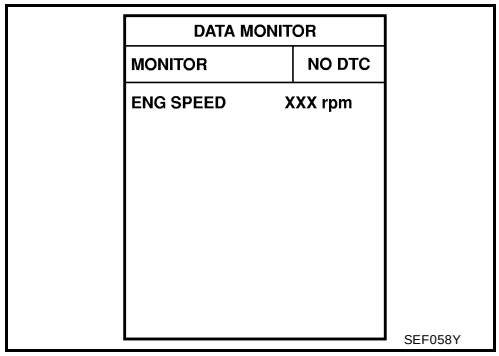

With GST

Follow the procedure “With CONSULT-II” above.

PROCEDURE FOR DTC P0103

With CONSULT-II

1. Turn ignition switch “ON”.
2. Select “DATA MONITOR” mode with CONSULT-II.
3. Wait at least 5 seconds.
4. If DTC is detected, go to EC-164, "Diagnostic Procedure" .
   If DTC is not detected, go to next step.
5. Start engine and wait at least 5 seconds.
6. If DTC is detected, go to EC-164, "Diagnostic Procedure" .

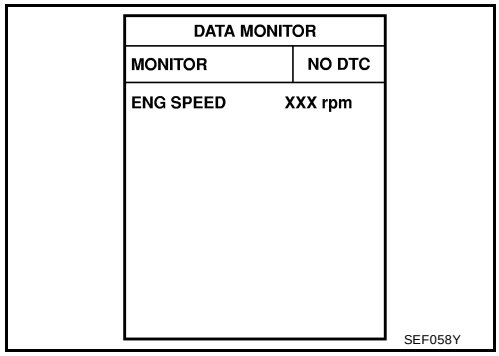

With GST

Follow the procedure “With CONSULT-II” above.

Wiring Diagram

UBS002Q7

EC-MAFS-01

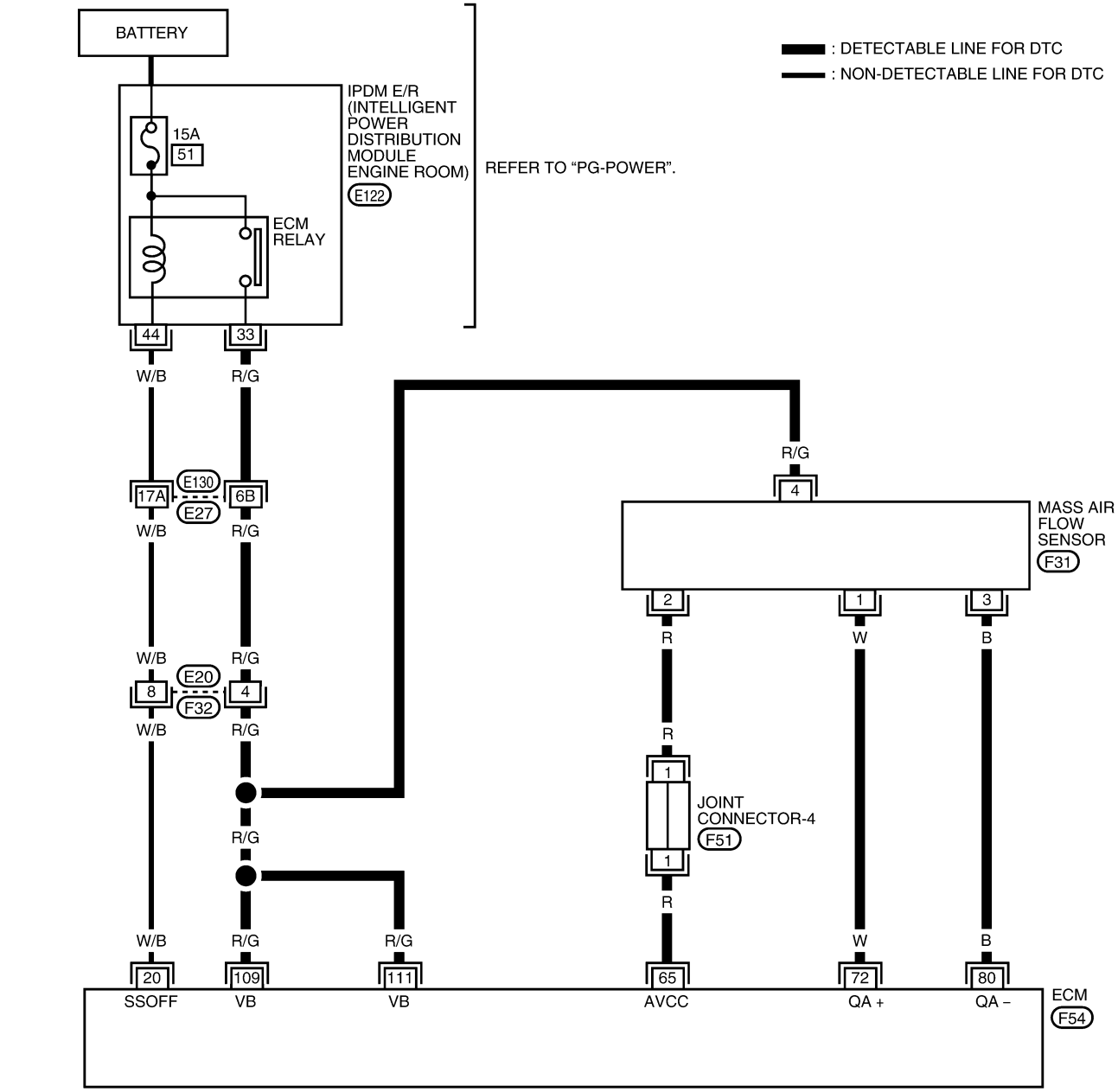

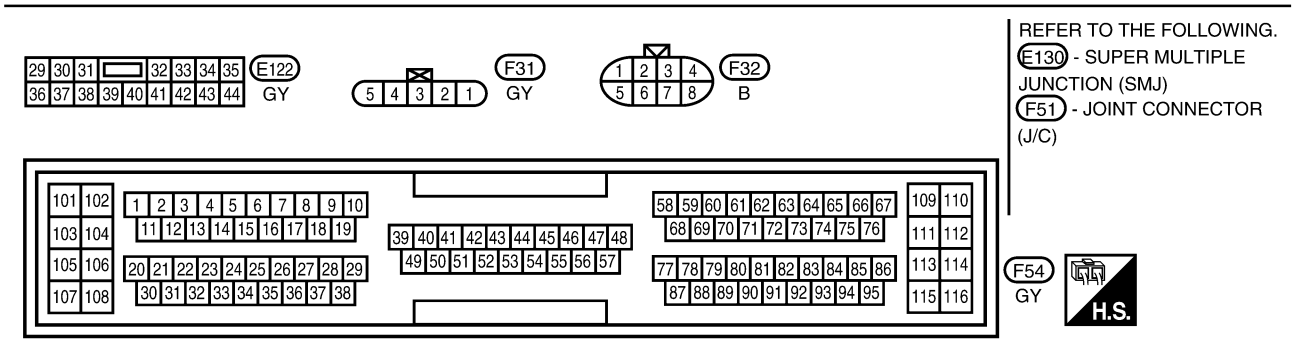

BBWA0006E

Specification data are reference values and are measured between each terminal and ground.

CAUTION:
Do not use ECM ground terminals when measuring input/output voltage. Doing so may result in damage to the ECM's transistor. Use a ground other than ECM terminals, such as the ground.

TERMINAL NO.	WIRE COLOR	ITEM	CONDITION	DATA (DC Voltage)
65	R	Sensor's power supply	**[Ignition switch "ON"]**	Approximately 5V
72	W	Mass air flow sensor	**[Engine is running]** ● **Warm-up condition** ● Idle speed	1.1 - 1.5V
			[Engine is running] ● **Warm-up condition** ● Engine speed is 2,500 rpm.	1.6 - 2.0V
80	B	Mass air flow sensor ground	**[Engine is running]** ● **Warm-up condition** ● Idle speed	Approximately 0V

Diagnostic Procedure

UBS002Q8

1. INSPECTION START

Which malfunction (P0102 or P0103) is duplicated?

P0102 or P0103

P0102 >> GO TO 2.
P0103 >> GO TO 3.

2. CHECK INTAKE SYSTEM

Check the following for connection.

- Air duct
- Vacuum hoses
- Intake air passage between air duct to intake manifold

OK or NG

OK >> GO TO 3.
NG >> Reconnect the parts.

3. RETIGHTEN GROUND SCREWS

1. Turn ignition switch "OFF".
2. Loosen and retighten engine ground screws.

>> GO TO 4.

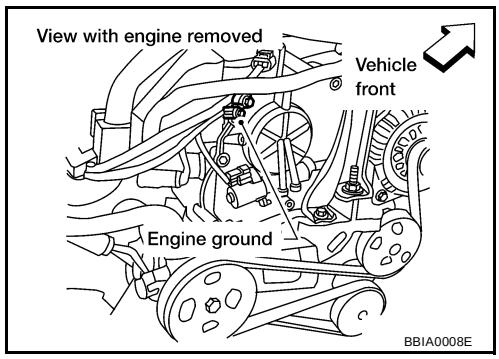

4. CHECK MAF SENSOR POWER SUPPLY CIRCUIT

1. Disconnect MAF sensor harness connector.
2. Turn ignition switch “ON”.

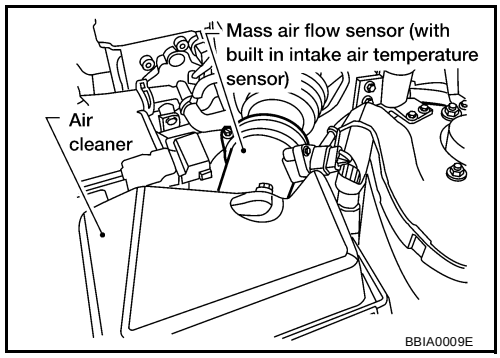

3. Check voltage between MAF sensor terminals 2, 4 and ground with CONSULT-II or tester.

Terminal	Voltage
2	Approximately 5V
4	Battery voltage

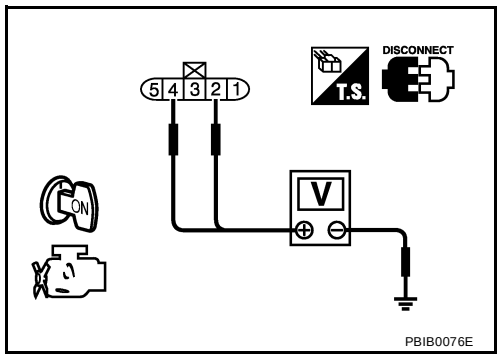

OK or NG

OK >> GO TO 6.
NG >> GO TO 5.

5. DETECT MALFUNCTIONING PART

Check the following.

- Harness connectors E130, E27
- Harness connectors E20, F32
- Joint connector-4
- Harness for open or short between ECM relay and mass air flow sensor
- Harness for open or short between mass air flow sensor and ECM

>> Repair harness or connectors.

6. CHECK MAF SENSOR GROUND CIRCUIT FOR OPEN AND SHORT

1. Turn ignition switch “OFF”.
2. Disconnect ECM harness connector.
3. Check harness continuity between MAF sensor terminal 3 and ECM terminal 80. Refer to Wiring Diagram.

Continuity should exist.

4. Also check harness for short to ground and short to power.

OK or NG

OK >> GO TO 7.
NG >> Repair open circuit or short to ground or short to power in harness or connectors.

7. CHECK MAF SENSOR INPUT SIGNAL CIRCUIT FOR OPEN AND SHORT

1. Check harness continuity between MAF sensor terminal 1 and ECM terminal 72.
   Refer to Wiring Diagram.

   Continuity should exist.

2. Also check harness for short to ground and short to power.

OK or NG

OK >> GO TO 8.
NG >> Repair open circuit or short to ground or short to power in harness or connectors.

8. CHECK MASS AIR FLOW SENSOR

Refer to EC-166, "Component Inspection" .

OK or NG

OK >> GO TO 9.
NG >> Replace mass air flow sensor.

9. CHECK INTERMITTENT INCIDENT

Refer to EC-130, "TROUBLE DIAGNOSIS FOR INTERMITTENT INCIDENT" .

>> **INSPECTION END**

Component Inspection

UBS002Q9

MASS AIR FLOW SENSOR

1. Reconnect harness connectors disconnected.
2. Start engine and warm it up to normal operating temperature.
3. Check voltage between ECM terminal 72 (Mass air flow sensor signal) and ground.

Condition	Voltage V
Ignition switch "ON" (Engine stopped.)	Approx. 1.0
Idle (Engine is warmed-up to normal operating temperature.)	1.1 - 1.5
2,500 rpm (Engine is warmed-up to normal operating temperature.)	1.6 - 2.0
Idle to about 4,000 rpm*	1.5 - 2.0 to Approx. 4.0

*: Check for linear voltage rise in response to engine being increased to about 4,000 rpm.

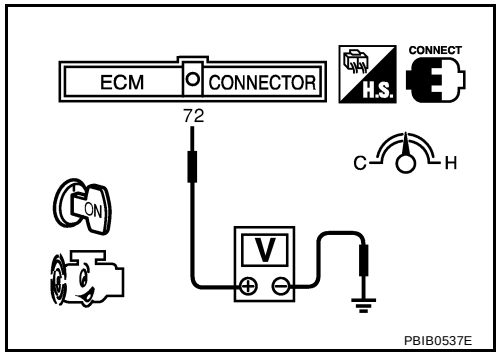

4. If the voltage is out of specification, proceed the following.

a. Turn ignition switch "OFF".
b. Disconnect mass air flow sensor harness connector and reconnect it again.
c. Perform steps 2 and 3 again.

5. If NG, remove mass air flow sensor from air duct. Check hot film for damage or dust.
6. If NG, clean or replace mass air flow sensor.

Removal and Installation

UBS002QA

MASS AIR FLOW SENSOR

Refer to EM-14, "AIR CLEANER AND AIR DUCT" .

DTC P0112, P0113 IAT SENSOR

PFP:22630

Component Description

UBS002QB

The intake air temperature sensor is built into mass air flow sensor. The sensor detects intake air temperature and transmits a signal to the ECM.
The temperature sensing unit uses a thermistor which is sensitive to the change in temperature. Electrical resistance of the thermistor decreases in response to the temperature rise.

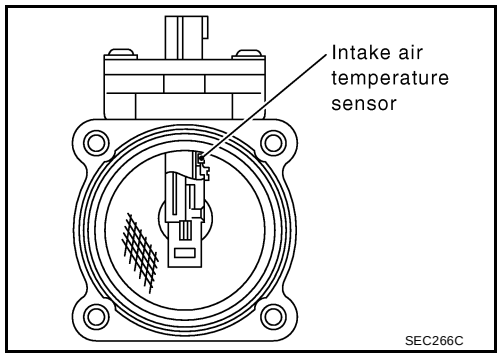

<Reference data>

Intake air temperature °C (°F)	Voltage* V	Resistance kΩ
–10 (14)	4.43	7.9 - 9.3
25 (77)	3.32	1.9 - 2.1
80 (176)	1.23	0.31 - 0.37

*: These data are reference values and are measured between ECM terminal 84 (Intake air temperature sensor) and ground.

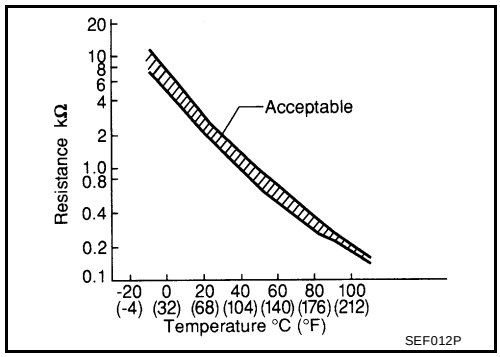

CAUTION:
Do not use ECM ground terminals when measuring input/output voltage. Doing so may result in damage to the ECM's transistor. Use a ground other than ECM terminals, such as the ground.

On Board Diagnosis Logic

UBS002QC

DTC No.	Trouble diagnosis name	DTC detecting condition	Possible cause
P0112 0112	Intake air temperature sensor circuit low input	An excessively low voltage from the sensor is sent to ECM.	● Harness or connectors (The sensor circuit is open or shorted.) ● Intake air temperature sensor
P0113 0113	Intake air temperature sensor circuit high input	An excessively low voltage from the sensor is sent to ECM.	

DTC Confirmation Procedure

UBS002QD

NOTE:
If “DTC Confirmation Procedure” has been previously conducted, always turn ignition switch “OFF” and wait at least 10 seconds before conducting the next test.

WITH CONSULT-II

1. Turn ignition switch “ON”.
2. Select “DATA MONITOR” mode with CONSULT-II.
3. Wait at least 5 seconds.
4. If 1st trip DTC is detected, go to EC-170, "Diagnostic Procedure"
.

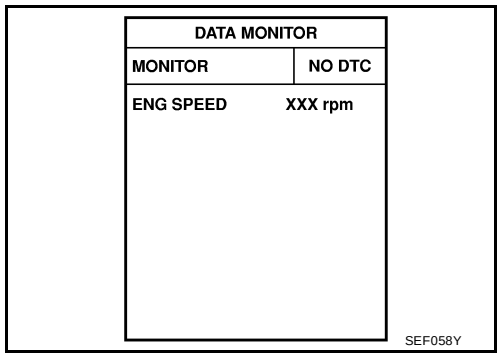

WITH GST

Follow the procedure “With CONSULT-II” above.

Wiring Diagram

UBS002QE

EC-IATS-01

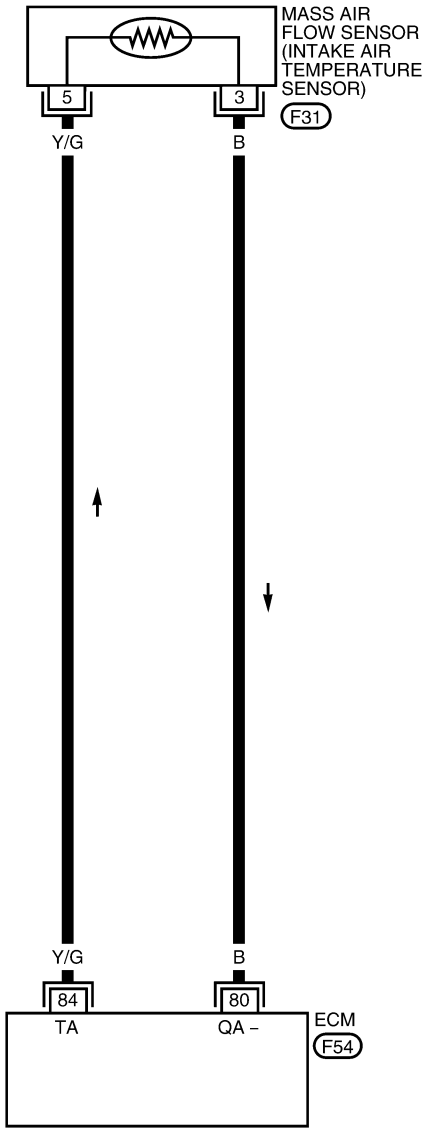

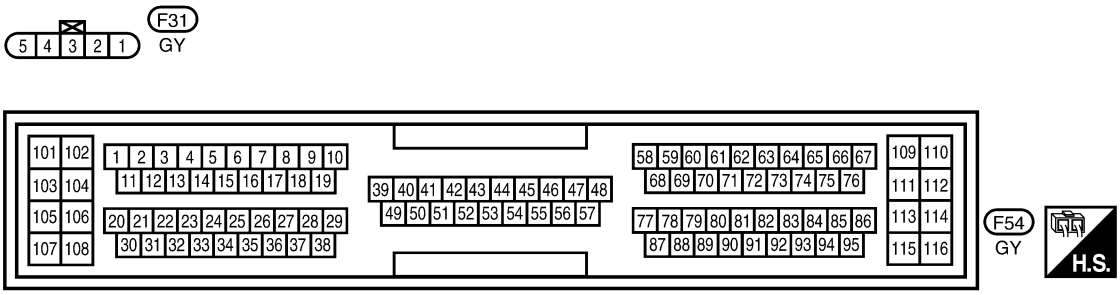

BBWA0007E

Diagnostic Procedure

UBS002QF

1. CHECK INTAKE AIR TEMPERATURE SENSOR POWER SUPPLY CIRCUIT

1. Turn ignition switch “OFF”.
2. Disconnect mass air flow sensor (intake air temperature sensor is built-into) harness connector.
3. Turn ignition switch “ON”.

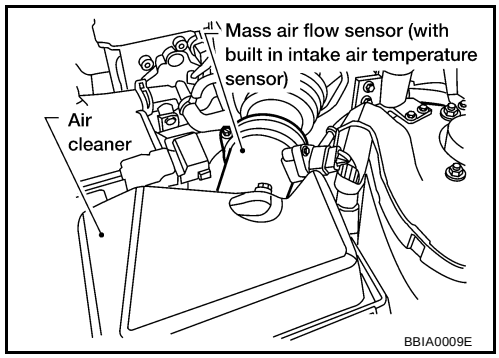

4. Check voltage between MAF sensor terminal 5 and ground.

Voltage: Approximately 5V

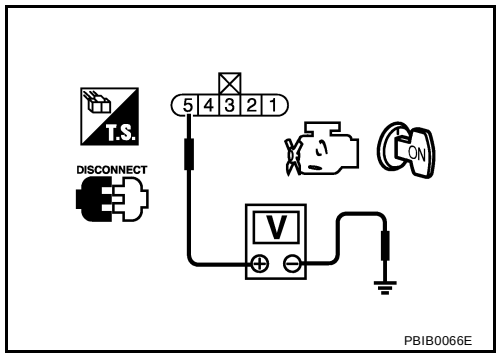

OK or NG

OK >> GO TO 2.
NG >> Repair harness or connectors.

2. CHECK INTAKE AIR TEMPERATURE SENSOR GROUND CIRCUIT FOR OPEN AND SHORT

1. Turn ignition switch “OFF”.
2. Check harness continuity between MAF sensor terminal 3 and ECM terminal 80. Refer to Wiring Diagram.

Continuity should exist.

3. Also check harness for short to ground and short to power.

OK or NG

OK >> GO TO 3.
NG >> Repair harness or connectors.

3. CHECK INTAKE AIR TEMPERATURE SENSOR

Refer to EC-171, "Component Inspection" .

OK or NG

OK >> GO TO 4.
NG >> Replace mass air flow sensor (with intake air temperature sensor).

4. CHECK INTERMITTENT INCIDENT

Refer to EC-130, "TROUBLE DIAGNOSIS FOR INTERMITTENT INCIDENT" .

>> **INSPECTION END**

Component Inspection

UBS002QG

INTAKE AIR TEMPERATURE SENSOR

1. Check resistance between intake air temperature sensor terminals 3 and 5 under the following conditions.

Intake air temperature °C (°F)	Resistance kΩ
25 (77)	1.9 - 2.1

2. If NG, replace mass air flow sensor (with intake air temperature sensor).

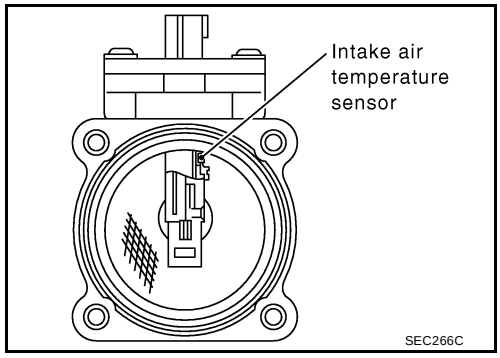

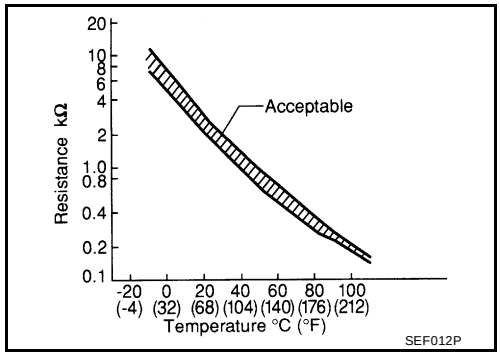

Removal and Installation

UBS002QH

MASS AIR FLOW SENSOR

Refer to EM-14, "AIR CLEANER AND AIR DUCT" .

DTC P0117, P0118 ECT SENSOR

PFP:22630

Component Description

UBS002QI

The engine coolant temperature sensor is used to detect the engine coolant temperature. The sensor modifies a voltage signal from the ECM. The modified signal returns to the ECM as the engine coolant temperature input. The sensor uses a thermistor which is sensitive to the change in temperature. The electrical resistance of the thermistor decreases as temperature increases.

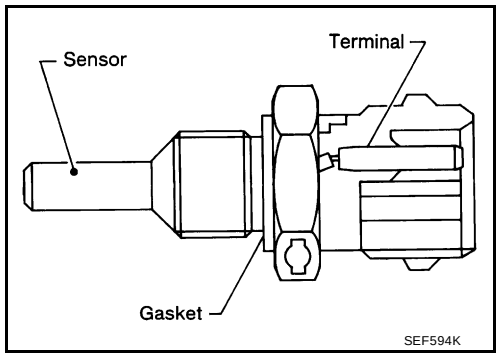

<Reference data>

Engine coolant temperature °C (°F)	Voltage* V	Resistance kΩ
–10 (14)	4.4	7.0 - 11.4
20 (68)	3.5	2.1 - 2.9
50 (122)	2.2	0.68 - 1.00
90 (194)	0.9	0.236 - 0.260

*: These data are reference values and are measured between ECM terminal 93 (Engine coolant temperature sensor) and ground.

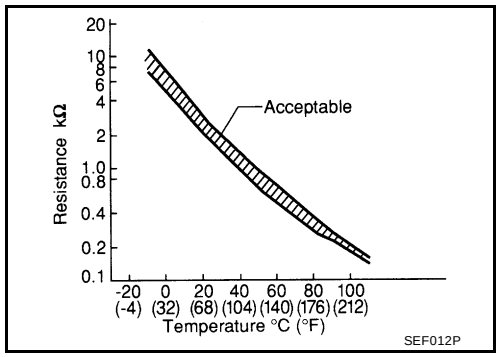

CAUTION:

Do not use ECM ground terminals when measuring input/output voltage. Doing so may result in damage to the ECM's transistor. Use a ground other than ECM terminals, such as the ground.

On Board Diagnosis Logic

UBS002QJ

These self-diagnoses have the one trip detection logic.

DTC No.	Trouble Diagnosis Name	DTC Detecting Condition	Possible Cause
P0117 0117	Engine coolant temperature sensor circuit low input	An excessively low voltage from the sensor is sent to ECM.	● Harness or connectors (The sensor circuit is open or shorted.) ● Engine coolant temperature sensor
P0118 0118	Engine coolant temperature sensor circuit high input	An excessively high voltage from the sensor is sent to ECM.	

FAIL-SAFE MODE

When this malfunction is detected, the ECM enters fail-safe mode and the MIL lights up.

Detected items	Engine operating condition in fail-safe mode	
Engine coolant temperature sensor circuit	Engine coolant temperature will be determined by ECM based on the time after turning ignition switch “ON” or “START”. CONSULT-II displays the engine coolant temperature decided by ECM.	
	Condition	Engine coolant temperature decided (CONSULT-II display)
	Just as ignition switch is turned ON or Start	40°C (104°F)
	More than approx. 4 minutes after ignition ON or Start	80°C (176°F)
	Except as shown above	40 - 80°C (104 - 176°F) (Depends on the time)
	When the fail-safe system for engine coolant temperature sensor is activated, the cooling fan operates while engine is running.	

DTC Confirmation Procedure

UBS002QK

NOTE:
If “DTC Confirmation Procedure” has been previously conducted, always turn ignition switch “OFF” and wait at least 10 seconds before conducting the next test.

WITH CONSULT-II

1. Turn ignition switch “ON”.
2. Select “DATA MONITOR” mode with CONSULT-II.
3. Wait at least 5 seconds.
4. If DTC is detected, go to EC-175, "Diagnostic Procedure" .

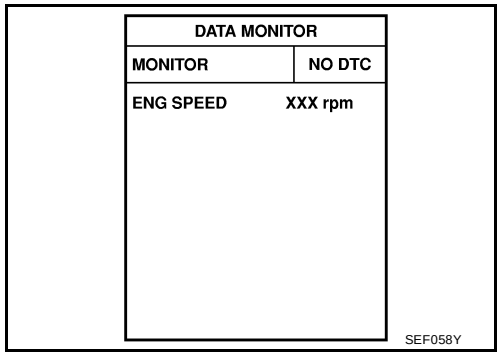

WITH GST

Follow the procedure “WITH CONSULT-II” above.

Wiring Diagram

UBS002QL

EC-ECTS-01

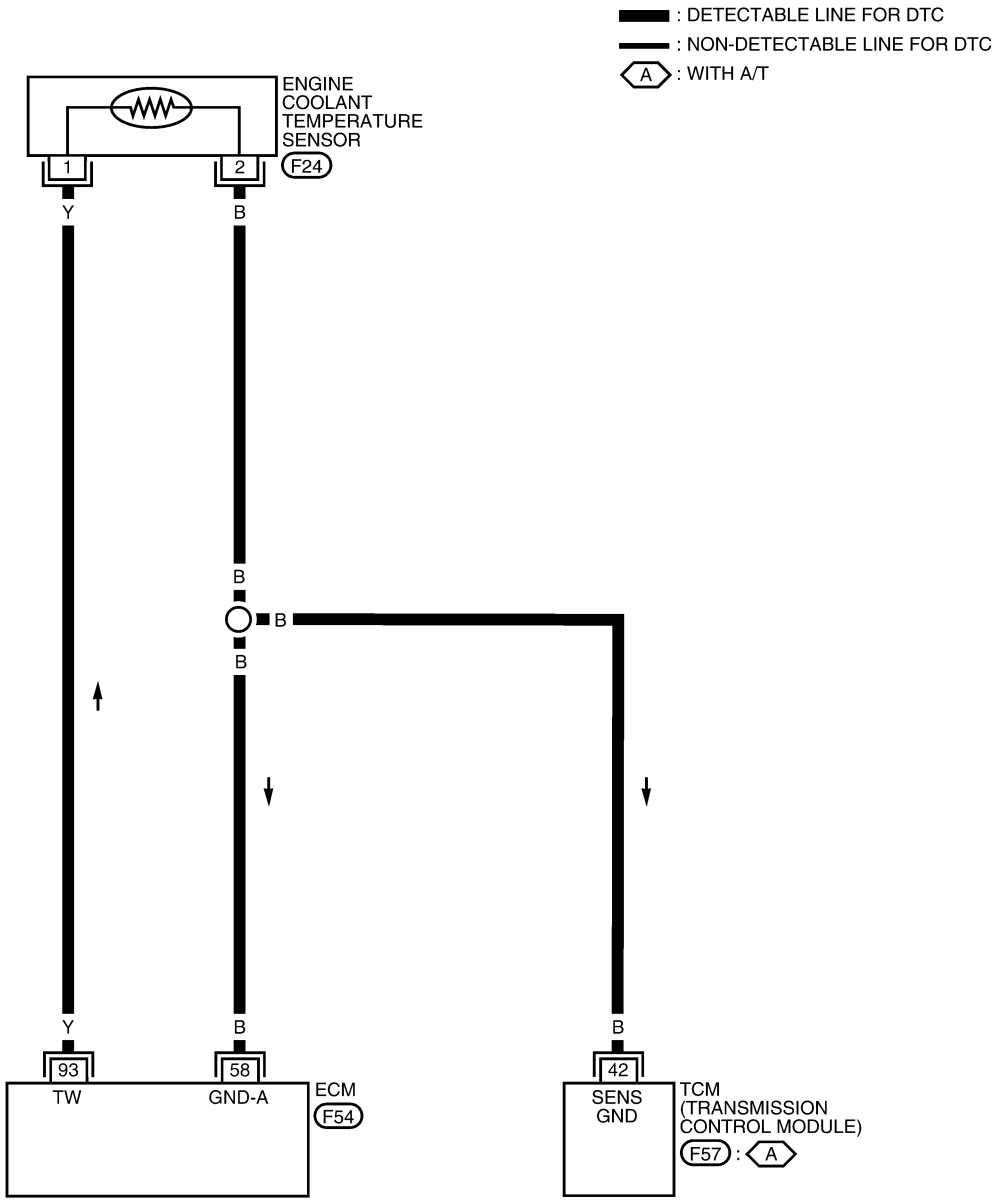

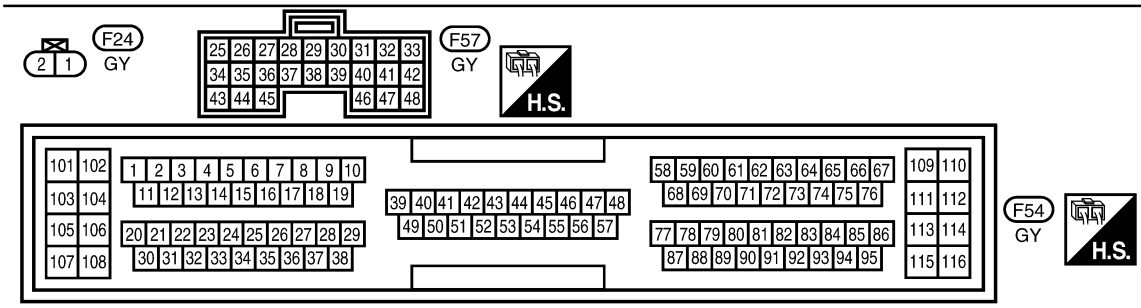

BBWA0008E

Diagnostic Procedure

UBS002QM

1. CHECK ECT SENSOR POWER SUPPLY CIRCUIT

1. Turn ignition switch “OFF”.
2. Disconnect engine coolant temperature (ECT) sensor harness connector.
3. Turn ignition switch “ON”.

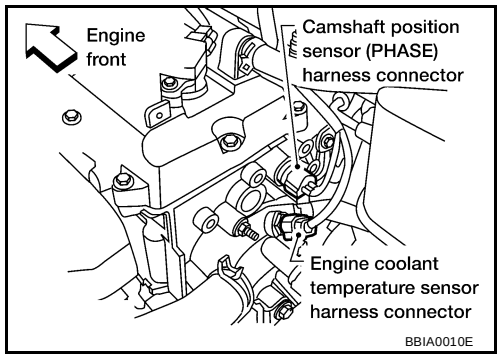

4. Check voltage between ECT sensor terminal 1 and ground with CONSULT-II or tester.

Voltage: Approximately 5V

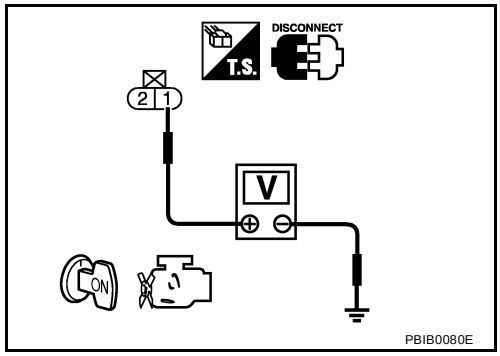

OK or NG

OK >> GO TO 2.
NG >> Repair open circuit or short to ground or short to power in harness or connectors.

2. CHECK ECT SENSOR GROUND CIRCUIT FOR OPEN AND SHORT

1. Turn ignition switch “OFF”.
2. Check harness continuity between ECT sensor terminal 2 and engine ground. Refer to Wiring Diagram.

Continuity should exist.

3. Also check harness for short to ground and short to power.

OK or NG

OK >> GO TO 4.
NG >> GO TO 3.

3. DETECT MALFUNCTIONING PART

Check the following.

- Harness for open or short between engine coolant temperature sensor and ECM
- Harness for open or short between engine coolant temperature sensor and TCM

>> Repair open circuit or short to ground or short to power in harness or connectors.

4. CHECK ENGINE COOLANT TEMPERATURE SENSOR

Refer to EC-176, "Component Inspection" .

OK or NG

OK >> GO TO 5.
NG >> Replace engine coolant temperature sensor.

5. CHECK INTERMITTENT INCIDENT

Refer to EC-130, "TROUBLE DIAGNOSIS FOR INTERMITTENT INCIDENT" .

>> **INSPECTION END**

Component Inspection

UBS002QN

ENGINE COOLANT TEMPERATURE SENSOR

1. Check resistance between engine coolant temperature sensor terminals 1 and 2 as shown in the figure.

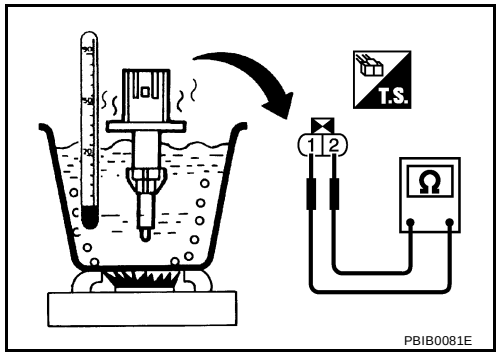

<Reference data>

Engine coolant temperature °C (°F)	Voltage* V	Resistance kΩ
–10 (14)	4.4	7.0 - 11.4
20 (68)	3.5	2.1 - 2.9
50 (122)	2.2	0.68 - 1.00
90 (194)	0.9	0.236 - 0.260

*: These data are reference values and are measured between ECM terminal 93 (Engine coolant temperature sensor) and ground.

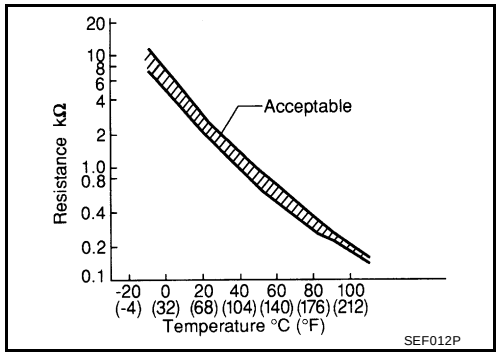

2. If NG, replace engine coolant temperature sensor.

Removal and Installation

UBS002QO

ENGINE COOLANT TEMPERATURE SENSOR

Refer to CO-20, "THERMOSTAT AND THERMOSTAT HOUSING" .

DTC P0125 ECT SENSOR

PFP:22630

Description

UBS002QP

NOTE:
If DTC P0125 is displayed with P0117 or P0118, first perform the trouble diagnosis for DTC P0117 or P0118. Refer to EC-172 .

COMPONENT DESCRIPTION

The engine coolant temperature sensor is used to detect the engine coolant temperature. The sensor modifies a voltage signal from the ECM. The modified signal returns to the ECM as the engine coolant temperature input. The sensor uses a thermistor which is sensitive to the change in temperature. The electrical resistance of the thermistor decreases as temperature increases.

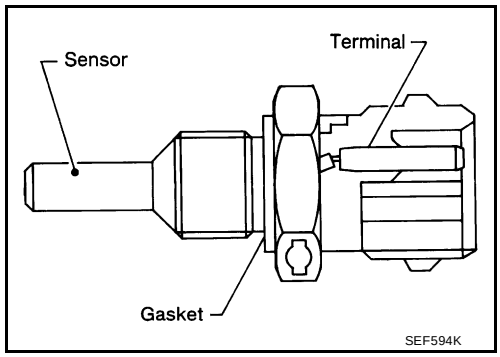

<Reference data>

Engine coolant temperature °C (°F)	Voltage* V	Resistance kΩ
–10 (14)	4.4	7.0 - 11.4
20 (68)	3.5	2.1 - 2.9
50 (122)	2.2	0.68 - 1.00
90 (194)	0.9	0.236 - 0.260

*: These data are reference values and are measured between ECM terminal 93 (Engine coolant temperature sensor) and ground.

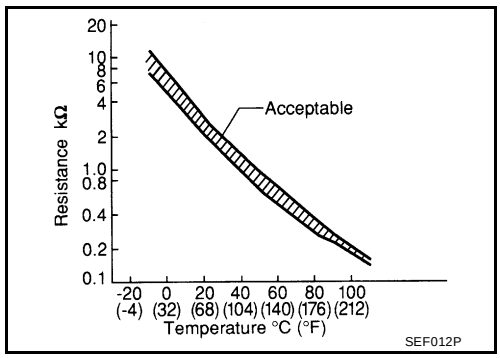

CAUTION:
Do not use ECM ground terminals when measuring input/output voltage. Doing so may result in damage to the ECM's transistor. Use a ground other than ECM terminals, such as the ground.

On Board Diagnosis Logic

UBS002QQ

DTC No.	Trouble diagnosis name	DTC detecting condition	Possible cause
P0125 0125	Insufficient engine coolant temperature for closed loop fuel control	● Voltage sent to ECM from the sensor is not practical, even when some time has passed after starting the engine. ● Engine coolant temperature is insufficient for closed loop fuel control.	● Harness or connectors (High resistance in the circuit) ● Engine coolant temperature sensor ● Thermostat

DTC Confirmation Procedure

UBS002QR

CAUTION:
Be careful not to overheat engine.

NOTE:
If “DTC Confirmation Procedure” has been previously conducted, always turn ignition switch “OFF” and wait at least 10 seconds before conducting the next test.

WITH CONSULT-II

1. Turn ignition switch “ON”.

2. Select “DATA MONITOR” mode with CONSULT-II.
3. Check that "COOLAN TEMP/S" is above 10°C (50°F).
   If it is above 10°C (50°F), the test result will be OK.
   If it is below 10°C (50°F), go to following step.
4. Start engine and run it for 65 minutes at idle speed.
   If "COOLAN TEMP/S" increases to more than 10°C (50°F) within 65 minutes, stop engine because the test result will be OK.
5. If 1st trip DTC is detected, go to EC-178, "Diagnostic Procedure".

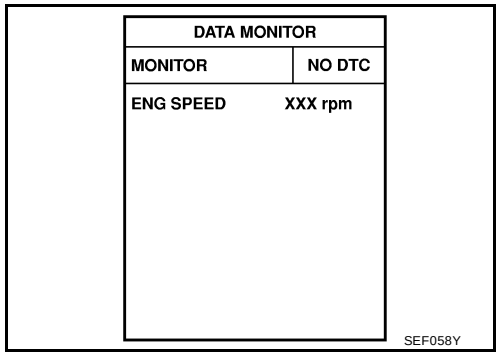

WITH GST

Follow the procedure “WITH CONSULT-II” above.

Diagnostic Procedure

UBS002QS

1. CHECK ENGINE COOLANT TEMPERATURE SENSOR

Refer to EC-178, "Component Inspection".

OK or NG

OK >> GO TO 2.
NG >> Replace engine coolant temperature sensor.

2. CHECK THERMOSTAT OPERATION

When the engine is cold [lower than 70°C (158°F)] condition, grasp lower radiator hose and confirm the engine coolant does not flow.

OK or NG

OK >> GO TO 3.
NG >> Repair or replace thermostat. Refer to CO-20, "THERMOSTAT AND THERMOSTAT HOUSING".

3. CHECK INTERMITTENT INCIDENT

Refer to EC-130, "TROUBLE DIAGNOSIS FOR INTERMITTENT INCIDENT".

>> **INSPECTION END**

Component Inspection

UBS002QT

ENGINE COOLANT TEMPERATURE SENSOR

1. Check resistance between engine coolant temperature sensor terminals 1 and 2 as shown in the figure.

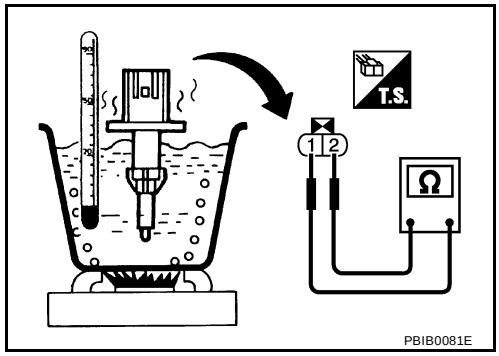

<Reference data>

Engine coolant temperature °C (°F)	Voltage* V	Resistance kΩ
–10 (14)	4.4	7.0 - 11.4
20 (68)	3.5	2.1 - 2.9
50 (122)	2.2	0.68 - 1.00
90 (194)	0.9	0.236 - 0.260

*: These data are reference values and are measured between ECM terminal 93 (Engine coolant temperature sensor) and ground.

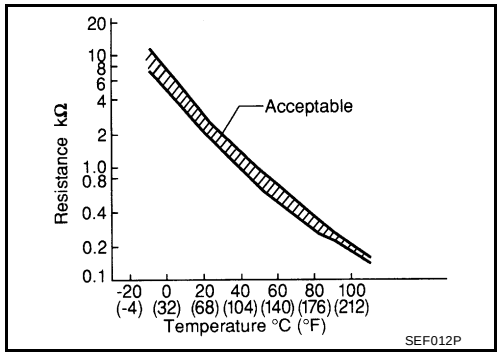

2. If NG, replace engine coolant temperature sensor.

Removal and Installation

UBS002QU

ENGINE COOLANT TEMPERATURE SENSOR

Refer to CO-20, "THERMOSTAT AND THERMOSTAT HOUSING" .

DTC P0127 IAT SENSOR

PFP:22630

Component Description

UBS002QV

The intake air temperature sensor is built into mass air flow sensor. The sensor detects intake air temperature and transmits a signal to the ECM.
The temperature sensing unit uses a thermistor which is sensitive to the change in temperature. Electrical resistance of the thermistor decreases in response to the temperature rise.

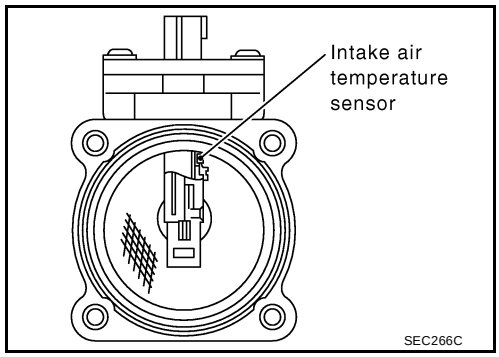

<Reference data>

Intake air temperature °C (°F)	Voltage* V	Resistance kΩ
–10 (14)	4.43	7.9 - 9.3
25 (77)	3.32	1.9 - 2.1
80 (176)	1.23	0.31 - 0.37

*: These data are reference values and are measured between ECM terminal 84 (Intake air temperature sensor) and ground.

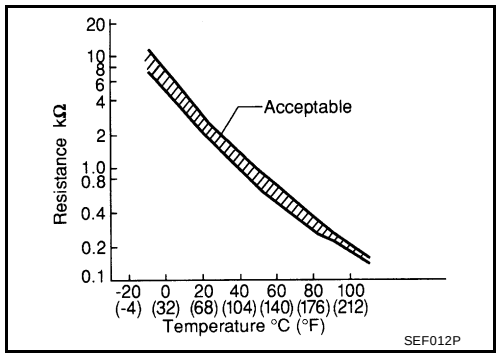

CAUTION:
Do not use ECM ground terminals when measuring input/output voltage. Doing so may result in damage to the ECM's transistor. Use a ground other than ECM terminals, such as the ground.

On Board Diagnosis Logic

UBS002QW

DTC No.	Trouble diagnosis name	DTC detecting condition	Possible cause
P0127 0127	Intake air temperature too high	Rationally incorrect voltage from the sensor is sent to ECM, compared with the voltage signal from engine coolant temperature sensor.	● Harness or connectors (The sensor circuit is open or shorted) ● Intake air temperature sensor

DTC Confirmation Procedure

UBS002QX

CAUTION:
Always drive vehicle at a safe speed.

NOTE:
If “DTC Confirmation Procedure” has been previously conducted, always turn ignition switch “OFF” and wait at least 10 seconds before conducting the next test.

TESTING CONDITION:
This test may be conducted with the drive wheels lifted in the shop or by driving the vehicle. If a road test is expected to be easier, it is unnecessary to lift the vehicle.

WITH CONSULT-II

1. Wait until engine coolant temperature is less than 90°C (194°F)

a. Turn ignition switch “ON”.

b. Select “DATA MONITOR” mode with CONSULT-II.
c. Check the engine coolant temperature.
d. If the engine coolant temperature is not less than 90°C (194°F), turn ignition switch "OFF" and cool down engine.
   - Perform the following steps before engine coolant temperature is above 90°C (194°F).
2. Turn ignition switch "ON".
3. Select "DATA MONITOR" mode with CONSULT-II.
4. Start engine.
5. Hold vehicle speed at more than 70 km/h (43 MPH) for 100 consecutive seconds.
6. If 1st trip DTC is detected, go to EC-181, "Diagnostic Procedure" .

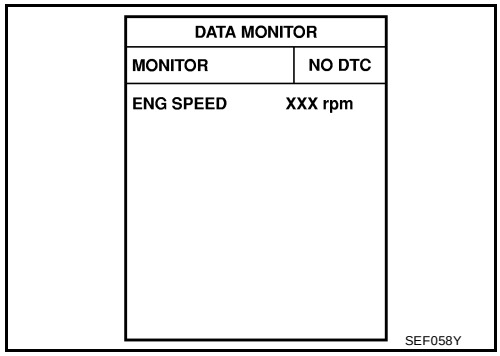

WITH GST

Follow the procedure “With CONSULT-II” above.

Diagnostic Procedure

UBS002QY

1. CHECK INTAKE AIR TEMPERATURE SENSOR

Refer to EC-181, "Component Inspection" .

OK or NG

OK >> GO TO 2.
NG >> Replace mass air flow sensor (with intake air temperature sensor).

2. CHECK INTERMITTENT INCIDENT

Refer to EC-130, "TROUBLE DIAGNOSIS FOR INTERMITTENT INCIDENT" .
Refer to EC-169, "Wiring Diagram" .

>> **INSPECTION END**

Component Inspection

UBS002QZ

INTAKE AIR TEMPERATURE SENSOR

1. Check resistance between intake air temperature sensor terminals 3 and 5 under the following conditions.

Intake air temperature °C (°F)	Resistance kΩ
25 (77)	1.9 - 2.1

2. If NG, replace mass air flow sensor (with intake air temperature sensor).

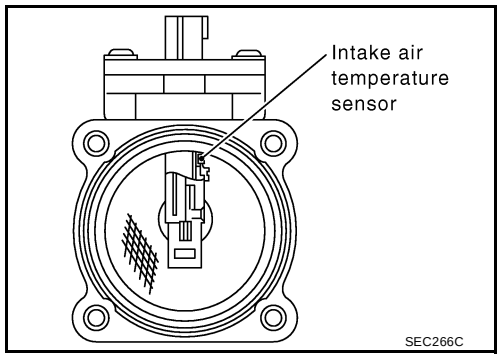

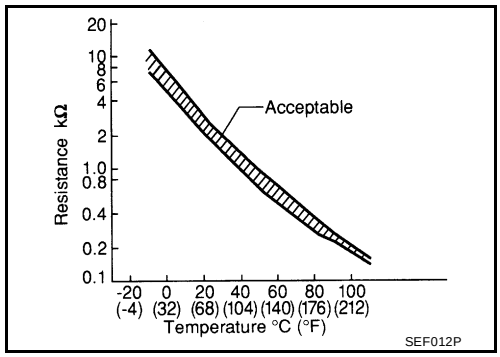

Removal and Installation

UBS002R0

MASS AIR FLOW SENSOR

Refer to EM-14, "AIR CLEANER AND AIR DUCT" .

DTC P0128 THERMOSTAT FUNCTION

PFP:21200

On Board Diagnosis Logic

UBS002R1

Engine coolant temperature has not risen enough to open the thermostat even though the engine has run long enough.
This is due to a leak in the seal or the thermostat stuck open.

DTC No.	Trouble diagnosis name	DTC detecting condition	Possible cause
P0128 0128	Thermostat function	The engine coolant temperature does not reach to specified temperature even though the engine has run long enough.	● Thermostat function ● Leakage from sealing portion of thermostat ● Engine coolant temperature sensor

DTC Confirmation Procedure

UBS002R2

NOTE:
If "DTC Confirmation Procedure" has been previously conducted, always turn ignition switch "OFF" and wait at least 10 seconds before conducting the next test.

TESTING CONDITION:

- **For best results, perform at ambient temperature of –10°C (14°F) or higher.**
- **For best results, perform at engine coolant temperature of –10°C (14°F) to 60°C (140°F).**

WITH CONSULT-II

1. Replace thermostat with new one. Refer to CO-20, "THERMOSTAT AND THERMOSTAT HOUSING" . Use only a genuine NISSAN thermostat as a replacement. If an incorrect thermostat is used, the MIL may come on.
2. Turn ignition switch "ON".
3. Select "COOLAN TEMP/S" in "DATA MONITOR" mode with CONSULT-II.
4. Check that the "COOLAN TEMP/S" is above 60°C (140°F).
   If it is below 60°C (140°F), go to following step.
   If it is above 60°C (140°F), stop engine and cool down the engine to less than 60°C (140°F), then retry from step 1.
5. Drive vehicle for 10 consecutive minutes under the following conditions.

VHCL SPEED SE	80 - 120 km/h (50 - 75 MPH)

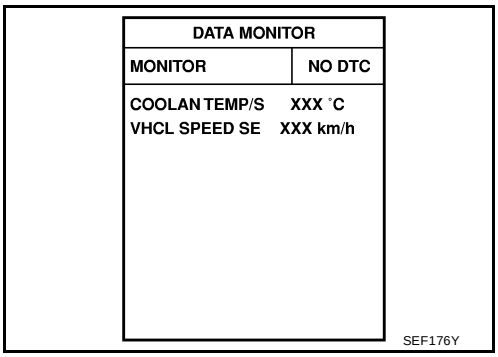

If 1st trip DTC is detected, go to EC-183, "Diagnostic Procedure" .

WITH GST

Follow the procedure "WITH CONSULT-II" above.

Diagnostic Procedure

UBS002R3

1. CHECK ENGINE COOLANT TEMPERATURE SENSOR

Refer to EC-184, "Component Inspection" .

OK or NG

OK >> **INSPECTION END**
NG >> Replace engine coolant temperature sensor.

Component Inspection

UBS002R4

ENGINE COOLANT TEMPERATURE SENSOR

1. Check resistance between engine coolant temperature sensor terminals 1 and 2 as shown in the figure.

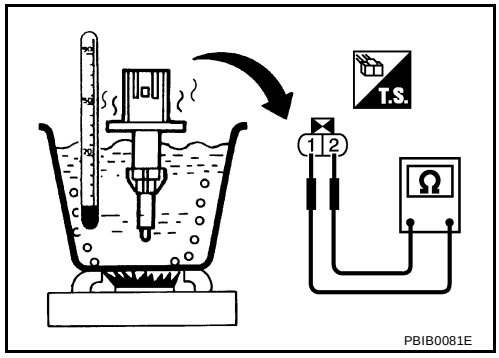

<Reference data>

Engine coolant temperature °C (°F)	Voltage* V	Resistance kΩ
–10 (14)	4.4	7.0 - 11.4
20 (68)	3.5	2.1 - 2.9
50 (122)	2.2	0.68 - 1.00
90 (194)	0.9	0.236 - 0.260

*: These data are reference values and are measured between ECM terminal 93 (Engine coolant temperature sensor) and ground.

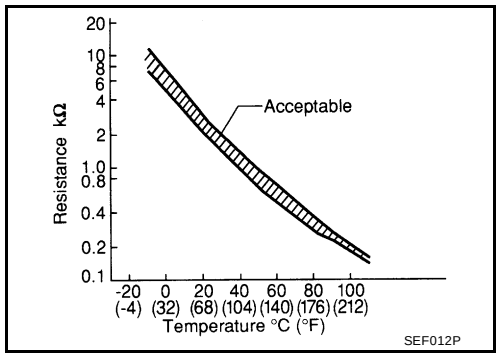

2. If NG, replace engine coolant temperature sensor.

Removal and Installation

UBS002R5

ENGINE COOLANT TEMPERATURE SENSOR

Refer to CO-20, "THERMOSTAT AND THERMOSTAT HOUSING" .

DTC P0132 HO2S1

PFP:22690

Component Description

UBS002R6

The heated oxygen sensor 1 is placed into the front tube. It detects the amount of oxygen in the exhaust gas compared to the outside air. The heated oxygen sensor 1 has a closed-end tube made of ceramic zirconia. The zirconia generates voltage from approximately 1V in richer conditions to 0V in leaner conditions. The heated oxygen sensor 1 signal is sent to the ECM. The ECM adjusts the injection pulse duration to achieve the ideal air-fuel ratio. The ideal air-fuel ratio occurs near the radical change from 1V to 0V.

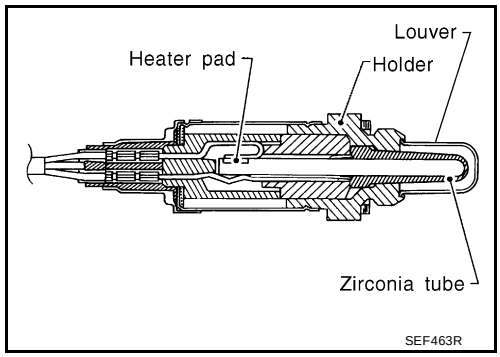

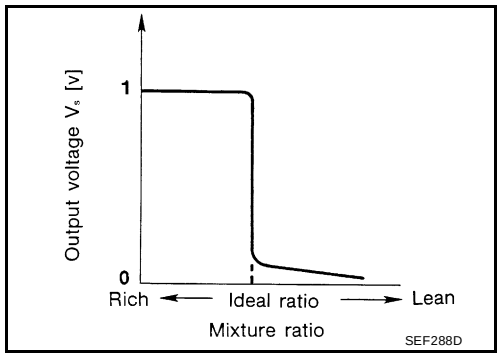

CONSULT-II Reference Value in Data Monitor Mode

UBS002R7

Specification data are reference values.

MONITOR ITEM	CONDITION		SPECIFICATION
HO2S1 (B1)	● Engine: After warming up	Maintaining engine speed at 2,000 rpm	0 - 0.3V ←→ Approx. 0.6 - 1.0V
HO2S1 MNTR (B1)	● Engine: After warming up	Maintaining engine speed at 2,000 rpm	LEAN ←→ RICH Changes more than 5 times during 10 seconds.

On Board Diagnosis Logic

UBS002R8

To judge the malfunction, the diagnosis checks that the heated oxygen sensor 1 output is not inordinately high.

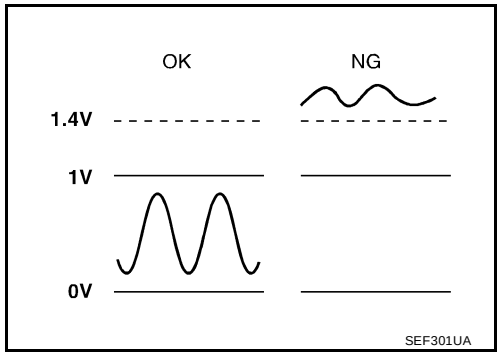

DTC No.	Trouble diagnosis name	DTC detecting condition	Possible cause
P0132 0132	Heated oxygen sensor 1 circuit high voltage	An excessively high voltage from the sensor is sent to ECM.	● Harness or connectors (The sensor circuit is open or shorted) ● Heated oxygen sensor 1

DTC Confirmation Procedure

UBS002R9

NOTE:
If “DTC Confirmation Procedure” has been previously conducted, always turn ignition switch “OFF” and wait at least 10 seconds before conducting the next test.

WITH CONSULT-II

1. Start engine and warm it up to normal operating temperature.
2. Turn ignition switch “OFF” and wait at least 10 seconds.
3. Turn ignition switch “ON”.
4. Select “DATA MONITOR” mode with CONSULT-II.
5. Restart engine and let it idle for 2 minutes.
6. If 1st trip DTC is detected, go to EC-188, "Diagnostic Procedure" .

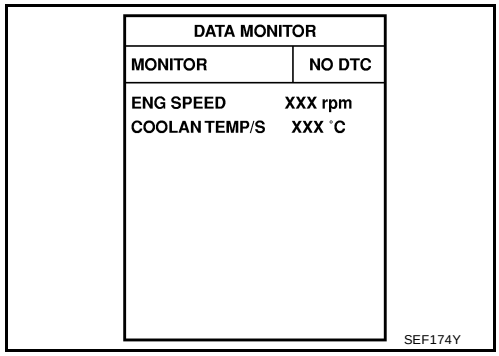

WITH GST

1. Start engine and warm it up to normal operating temperature.
2. Turn ignition switch “OFF” and wait at least 10 seconds.
3. Restart engine and let it idle for 2 minutes.
4. Turn ignition switch “OFF” and wait at least 10 seconds.
5. Restart engine and let it idle for 2 minutes.
6. Select “MODE 3” with GST.
7. If DTC is detected, go to EC-188, "Diagnostic Procedure" .

- **When using GST, “DTC Confirmation Procedure” should be performed twice as much as when using CONSULT-II because GST cannot display MODE 7 (1st trip DTC) concerning this diagnosis. Therefore, using CONSULT-II is recommended.**

Wiring Diagram

UBS002RA

EC-HO2S1-01

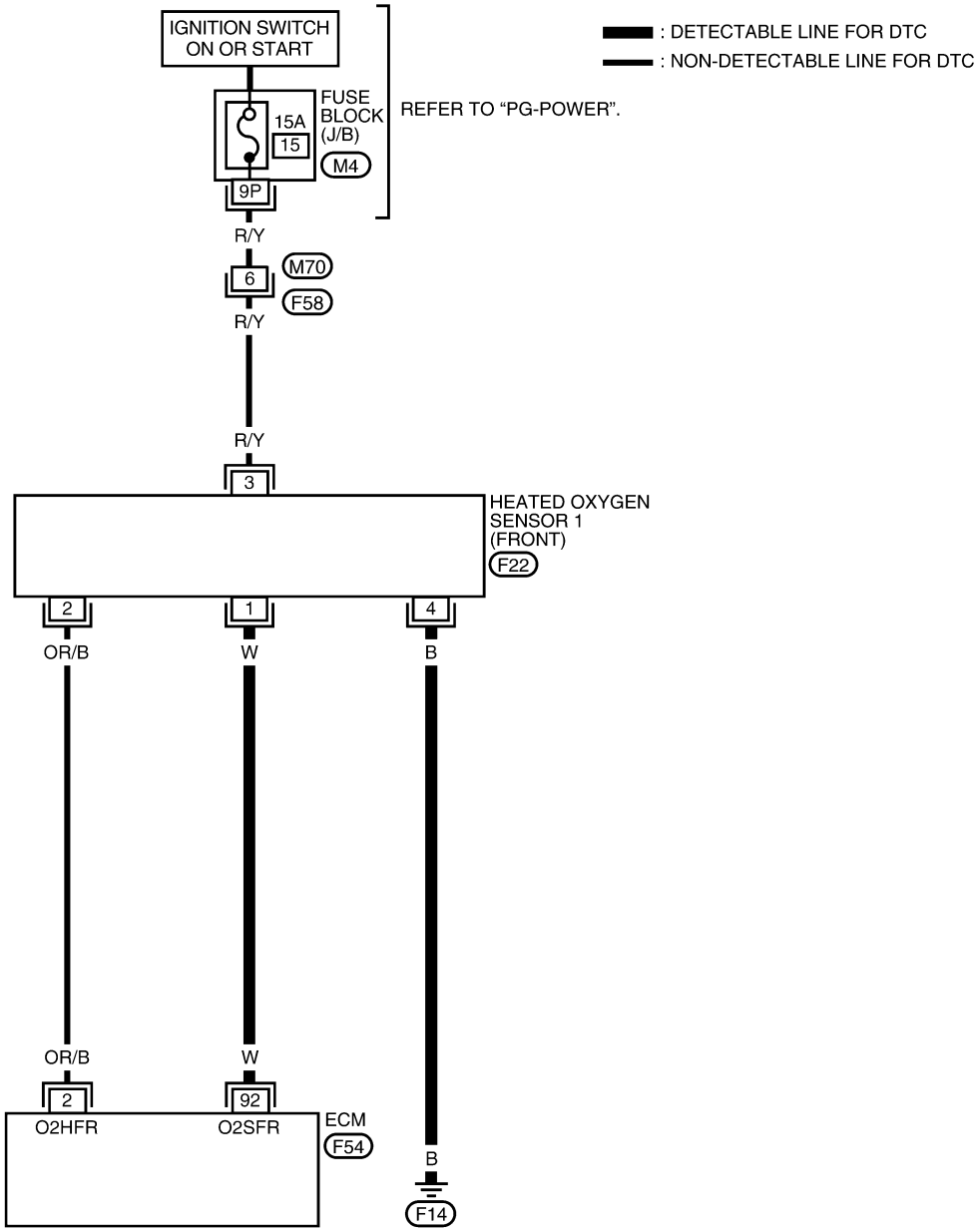

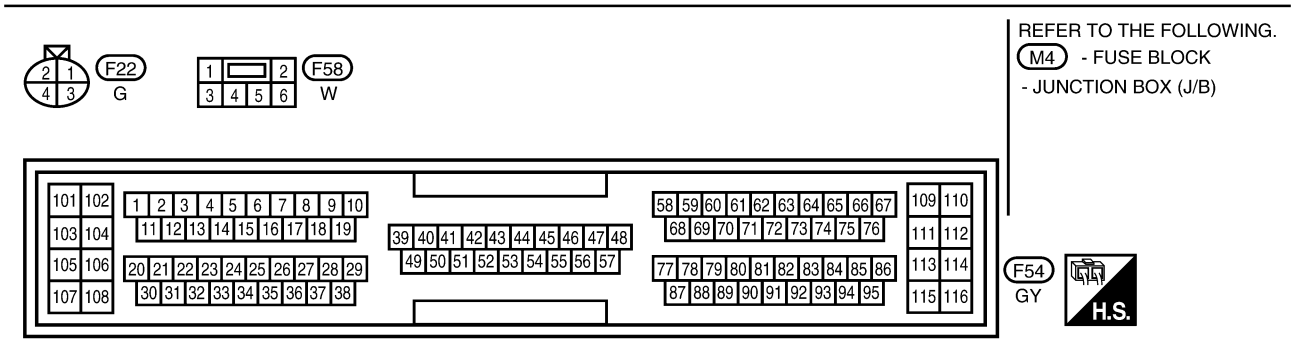

BBWA0009E

Specification data are reference values and are measured between each terminal and ground.

CAUTION:
Do not use ECM ground terminals when measuring input/output voltage. Doing so may result in damage to the ECM's transistor. Use a ground other than ECM terminals, such as the ground.

TERMINAL NO.	WIRE COLOR	ITEM	CONDITION	DATA (DC Voltage)
92	OR/B	Heated oxygen sensor 1	**[Engine is running]** ● **Warm-up condition** ● Engine speed is 2,000 rpm.	0 - Approximately 1.0V (Periodically change)

Diagnostic Procedure

UBS002RB

1. RETIGHTEN HEATED OXYGEN SENSOR 1

Loosen and retighten heated oxygen sensor 1.

Tightening torque: 40 - 50 N·m (4.1 - 5.1 kg-m, 30 - 37 ft-lb)

>> GO TO 2.

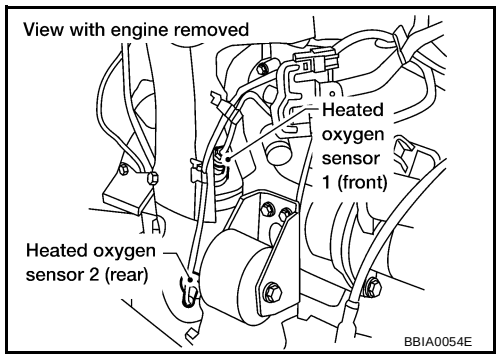

2. CHECK HO2S1 GROUND CIRCUIT FOR OPEN AND SHORT

1. Turn ignition switch "OFF".
2. Check harness continuity between HO2S1 terminal 4 and engine ground.
   Refer to Wiring Diagram.

   Continuity should exist.

3. Also check harness for short to power.

OK or NG

OK >> GO TO 3.
NG >> Repair open circuit or short to power in harness or connectors.

3. CHECK HO2S1 INPUT SIGNAL CIRCUIT FOR OPEN AND SHORT

1. Disconnect heated oxygen sensor 1 harness connector.
2. Disconnect ECM harness connector.
3. Check harness continuity between ECM terminal 92 and HO2S1 terminal 1.
   Refer to Wiring Diagram.

   Continuity should exist.

4. Check harness continuity between ECM terminal 92 or HO2S1 terminal 1 and ground.
   Refer to Wiring Diagram.

   Continuity should not exist.

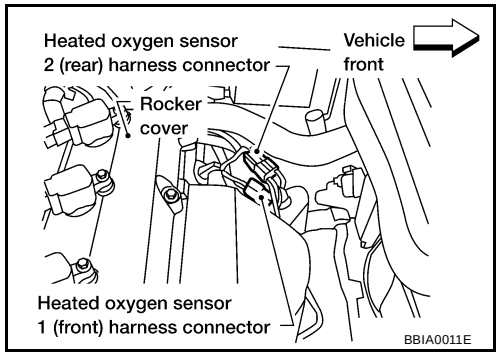

5. Also check harness for short to power.

OK or NG

OK >> GO TO 4.
NG >> Repair open circuit or short to ground or short to power in harness or connectors.

4. CHECK HO2S1 CONNECTOR FOR WATER

1. Turn ignition switch “OFF”.
2. Disconnect heated oxygen sensor 1 harness connector.
3. Check connectors for water.

Water should not exist.

OK or NG

OK >> GO TO 5.
NG >> Repair or replace harness or connectors.

5. CHECK HEATED OXYGEN SENSOR 1

Refer to EC-189, "Component Inspection" .

OK or NG

OK >> GO TO 6.
NG >> Replace heated oxygen sensor 1.

6. CHECK INTERMITTENT INCIDENT

Refer to EC-130, "TROUBLE DIAGNOSIS FOR INTERMITTENT INCIDENT" .

>> **INSPECTION END**

Component Inspection

UBS002RC

HEATED OXYGEN SENSOR 1

With CONSULT-II

1. Start engine and warm it up to normal operating temperature.
2. Select “MANU TRIG” and adjust “TRIGGER POINT” to 100% in “DATA MONITOR” mode with CONSULT-II.
3. Select “HO2S1 (B1)” and “HO2S1 MNTR (B1)”.
4. Hold engine speed at 2,000 rpm under no load during the following steps.
5. Touch “RECORD” on CONSULT-II screen.

DATA MONITOR	
MONITOR	NO DTC
ENG SPEED	XXX rpm
MAS A/F SE-B1	XXX V
COOLAN TEMP/S	XXX °C
HO2S1 (B1)	XXX V
HO2S1 MNTR (B1)	LEAN

SEF646Y

6. Check the following.
   - “HO2S1 MNTR (B1)” in “DATA MONITOR” mode changes from “RICH” to “LEAN” to “RICH” 5 times in 10 seconds.
     5 times (cycles) are counted as shown at right.
   - “HO2S1 (B1)” voltage goes above 0.6V at least once.
   - “HO2S1 (B1)” voltage goes below 0.3V at least once.
   - “HO2S1 (B1)” voltage never exceeds 1.0V.

cycle	1	2	3	4	5
HO2S1 MNTR (B1)	R-L	R-L	R-L	R-L	R-L-R

R means HO2S1 MNTR (B1) indicates RICH
L means HO2S1 MNTR (B1) indicates LEAN

SEF217YA

Trigger	ENG SPEED	HO2S1 (B1)
	rpm	V
XXX	XXX	XXX
XXX	XXX	XXX
XXX	XXX	XXX
XXX	XXX	XXX
XXX	XXX	XXX
XXX	XXX	XXX
XXX	XXX	XXX
XXX	XXX	XXX
XXX	XXX	XXX
XXX	XXX	XXX
XXX	XXX	XXX
XXX	XXX	XXX

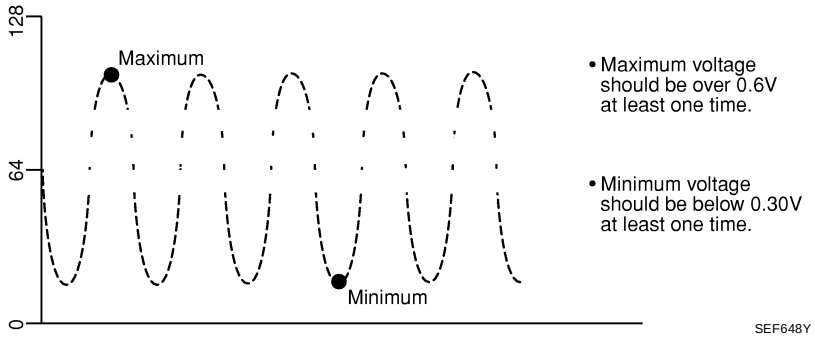

CAUTION:

- **Discard any heated oxygen sensor which has been dropped from a height of more than 0.5 m (19.7 in) onto a hard surface such as a concrete floor; use a new one.**
- **Before installing new oxygen sensor, clean exhaust system threads using Oxygen Sensor Thread Cleaner tool J-43897-18 or J-43897-12 and approved anti-seize lubricant.**

Without CONSULT-II

1. Start engine and warm it up to normal operating temperature.
2. Set voltmeter probes between ECM terminal 92 [HO2S1 (B1) signal] and engine ground.
3. Check the following with engine speed held at 2,000 rpm constant under no load.
   - The voltage fluctuates between 0 to 0.3V and 0.6 to 1.0V more than 5 times within 10 seconds.
   - The maximum voltage is over 0.6V at least one time.
   - The minimum voltage is below 0.3V at least one time.
   - The voltage never exceeds 1.0V.

   1 time: 0 - 0.3V → 0.6 - 1.0V → 0 - 0.3V
   2 times: 0 - 0.3V → 0.6 - 1.0V → 0 - 0.3V → 0.6 - 1.0V

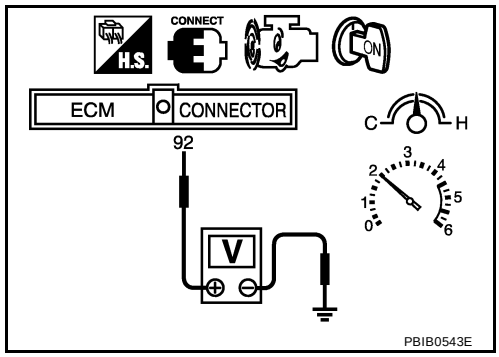

CAUTION:

- **Discard any heated oxygen sensor which has been dropped from a height of more than 0.5 m (19.7 in) onto a hard surface such as a concrete floor; use a new one.**
- **Before installing new oxygen sensor, clean exhaust system threads using Oxygen Sensor Thread Cleaner tool J-43897-18 or J-43897-12 and approved anti-seize lubricant.**

Removal and Installation

UBS002RD

HEATED OXYGEN SENSOR 1

Refer to EM-21, "EXHAUST MANIFOLD AND THREE WAY CATALYST" .

DTC P0133 HO2S1

PFP:22690

Component Description

UBS002RE

The heated oxygen sensor 1 is placed into the front tube. It detects the amount of oxygen in the exhaust gas compared to the outside air. The heated oxygen sensor 1 has a closed-end tube made of ceramic zirconia. The zirconia generates voltage from approximately 1V in richer conditions to 0V in leaner conditions. The heated oxygen sensor 1 signal is sent to the ECM. The ECM adjusts the injection pulse duration to achieve the ideal air-fuel ratio. The ideal air-fuel ratio occurs near the radical change from 1V to 0V.

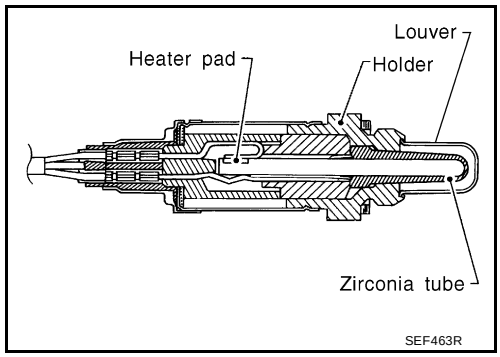

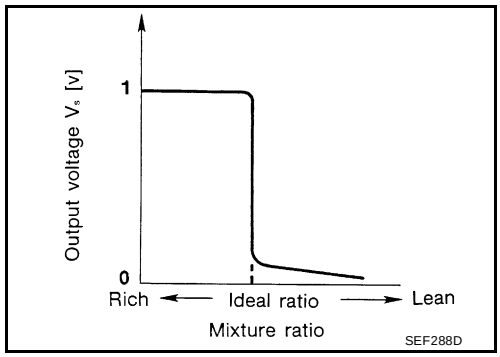

CONSULT-II Reference Value in Data Monitor Mode

UBS002RF

Specification data are reference values.

MONITOR ITEM	CONDITION		SPECIFICATION
HO2S1 (B1)	● Engine: After warming up	Maintaining engine speed at 2,000 rpm	0 - 0.3V ←→ Approx. 0.6 - 1.0V
HO2S1 MNTR (B1)	● Engine: After warming up	Maintaining engine speed at 2,000 rpm	LEAN ←→ RICH Changes more than 5 times during 10 seconds.

On Board Diagnosis Logic

UBS002RG

To judge the malfunction of heated oxygen sensor 1, this diagnosis measures response time of heated oxygen sensor 1 signal. The time is compensated by engine operating (speed and load), fuel feedback control constant, and heated oxygen sensor 1 temperature index. Judgment is based on whether the compensated time (heated oxygen sensor 1 cycling time index) is inordinately long or not.

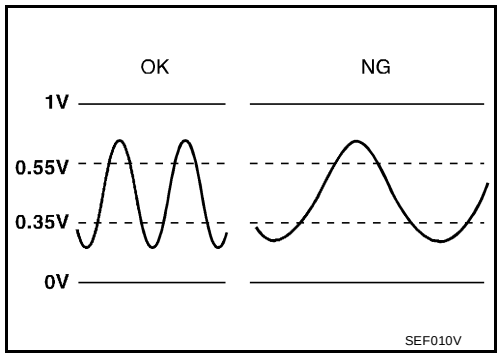

DTC No.	Trouble diagnosis name	DTC detecting condition	Possible cause
P0133 0133	Heated oxygen sensor 1 circuit slow response	The response of the voltage signal from the sensor takes more than the specified time.	● Harness or connectors (The sensor circuit is open or shorted) ● Heated oxygen sensor 1 ● Heated oxygen sensor 1 heater ● Fuel pressure ● Injectors ● Intake air leaks ● Exhaust gas leaks ● PCV valve ● Mass air flow sensor

DTC Confirmation Procedure

UBS002RH

CAUTION:
Always drive vehicle at a safe speed.

NOTE:
If “DTC Confirmation Procedure” has been previously conducted, always turn ignition switch “OFF” and wait at least 10 seconds before conducting the next test.

TESTING CONDITION:

- **Always perform at a temperature above –10°C (14°F).**
- **Before performing the following procedure, confirm that battery voltage is more than 11V at idle.**

WITH CONSULT-II

1. Start engine and warm it up to normal operating temperature.
2. Stop engine and wait at least 10 seconds.
3. Turn ignition switch “ON” and select “HO2S1 (B1) P0133" of “HO2S1” in “DTC WORK SUPPORT” mode with CONSULT-II.
4. Touch “START”.
5. Start engine and let it idle for at least 3 minutes.

   NOTE:
   Never raise engine speed above 3,600 rpm after this step. If the engine speed limit is exceeded, return to step 5.

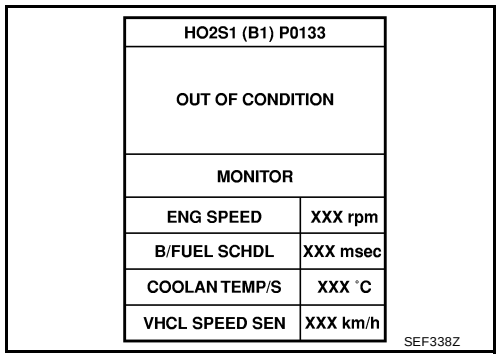

6. When the following conditions are met, “TESTING” will be displayed on the CONSULT-II screen. Maintain the conditions continuously until “TESTING” changes to “COMPLETED”. (It will take approximately 20 to 50 seconds.)

ENG SPEED	1,200 - 3,200 rpm
Vehicle speed	More than 80 km/h (50 MPH)
B/FUEL SCHDL	1.9 - 13.0 msec
Selector lever	Suitable position

   If “TESTING” is not displayed after 5 minutes, retry from step 2.

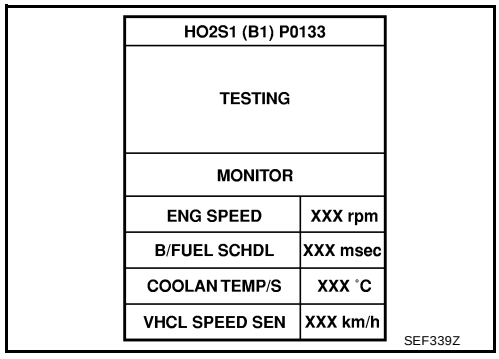

7. Make sure that “OK” is displayed after touching “SELF-DIAG RESULTS”. If “NG” is displayed, refer to EC-195, "Diagnostic Procedure" .

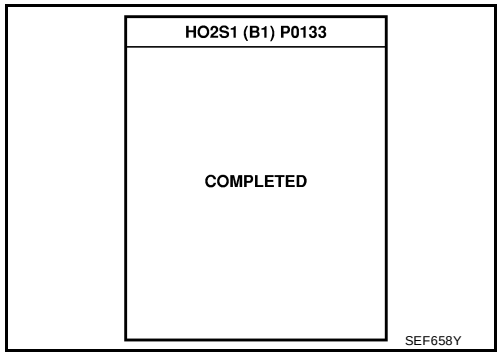

Overall Function Check

UBS002RI

Use this procedure to check the overall function of the heated oxygen sensor 1 circuit. During this check, a 1st trip DTC might not be confirmed.

WITH GST

1. Start engine and warm it up to normal operating temperature.
2. Set voltmeter probes between ECM terminal 92 [HO2S1(B1) signal] and engine ground.
3. Check the following with engine speed held at 2,000 rpm constant under no load.
   - The voltage fluctuates between 0 to 0.3V and 0.6 to 1.0V more than 5 times within 10 seconds.

     1 time: 0 - 0.3V → 0.6 - 1.0V → 0 - 0.3V

     2 times: 0 - 0.3V → 0.6 - 1.0V → 0 - 0.3V → 0.6 - 1.0V → 0 - 0.3V
4. If NG, go to EC-195, "Diagnostic Procedure" .

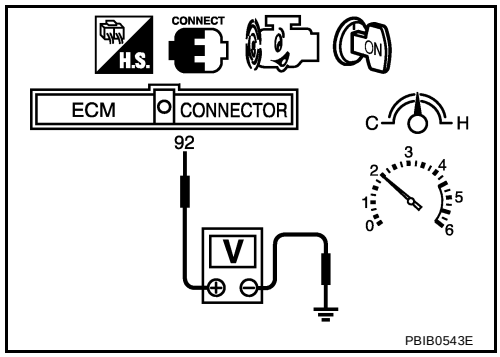

Wiring Diagram

UBS002RJ

EC-HO2S1-01

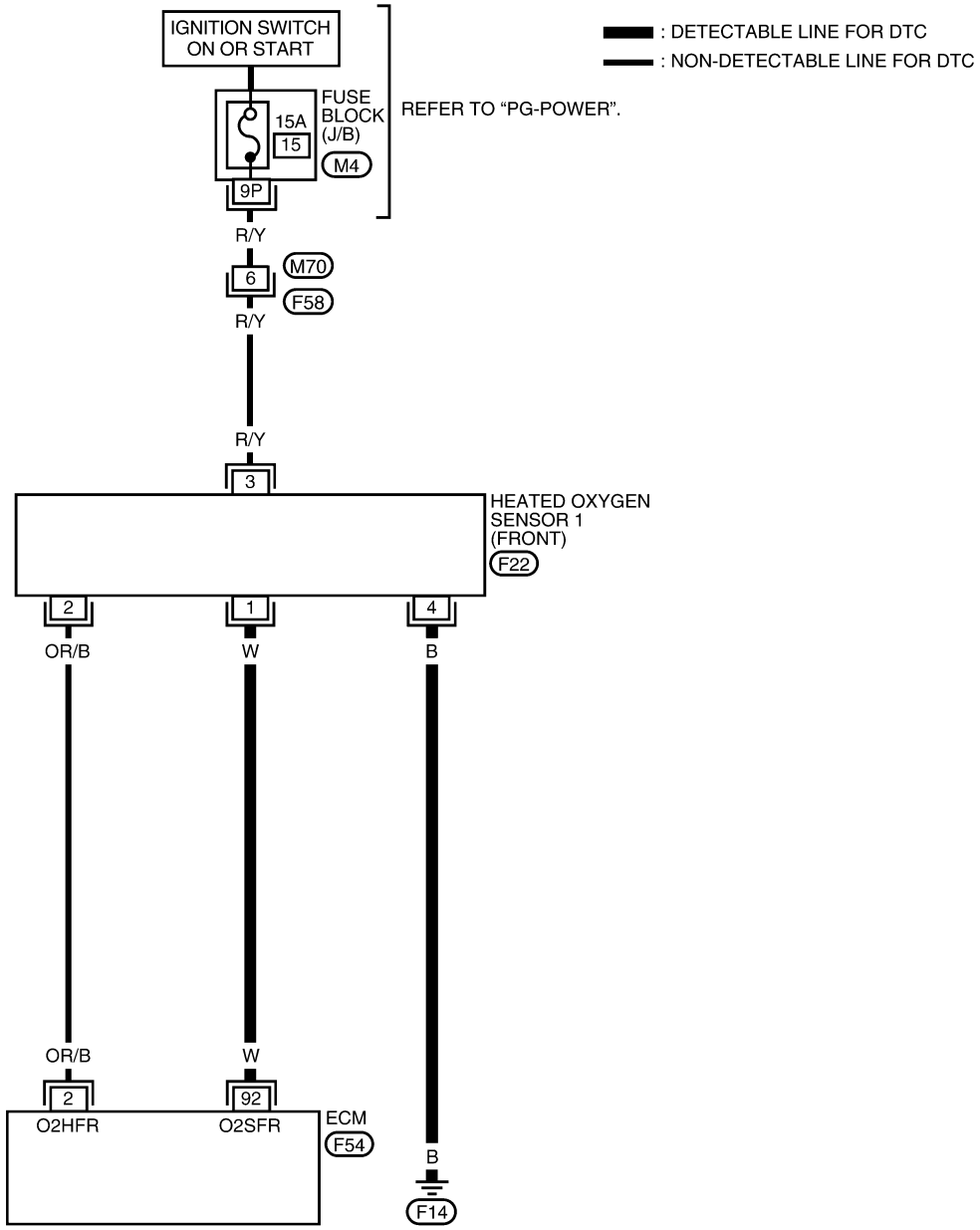

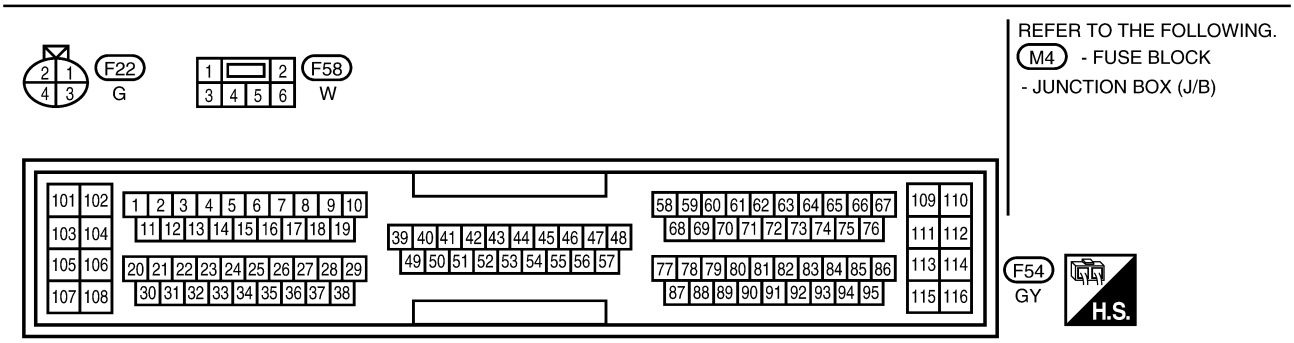

BBWA0009E

Specification data are reference values and are measured between each terminal and ground.

CAUTION:
Do not use ECM ground terminals when measuring input/output voltage. Doing so may result in damage to the ECM's transistor. Use a ground other than ECM terminals, such as the ground.

TERMINAL NO.	WIRE COLOR	ITEM	CONDITION	DATA (DC Voltage)
92	W	Heated oxygen sensor 1	**[Engine is running]** ● **Warm-up condition** ● Engine speed is 2,000 rpm.	0 - Approximately 1.0V (Periodically change)

Diagnostic Procedure

UBS002RK

1. RETIGHTEN GROUND SCREWS

1. Turn ignition switch “OFF”.
2. Loosen and retighten engine ground screws.

>> GO TO 2.

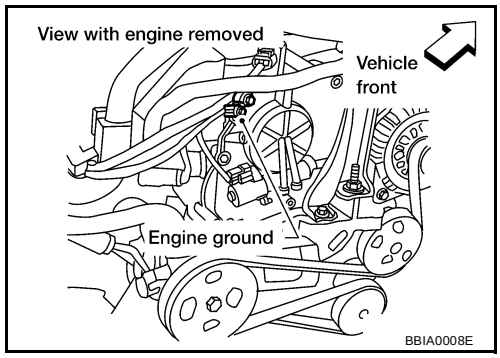

2. RETIGHTEN HEATED OXYGEN SENSOR 1

Loosen and retighten heated oxygen sensor 1.

Tightening torque: 40 - 50 N·m (4.1 - 5.1 kg-m, 30 - 37 ft-lb)

>> GO TO 3.

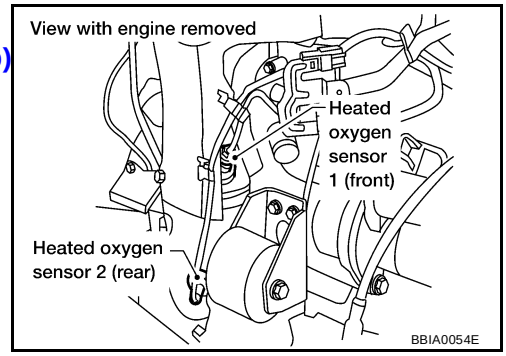

3. CHECK FOR EXHAUST AIR LEAK

1. Start engine and run it at idle.
2. Listen for an exhaust air leak before three way catalyst (Manifold).

OK or NG

OK >> GO TO 4.
NG >> Repair or replace.

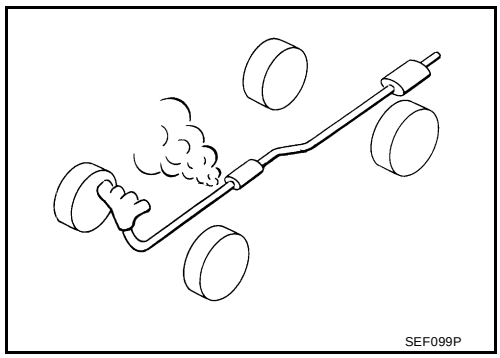

4. CHECK FOR INTAKE AIR LEAK

Listen for an intake air leak after the mass air flow sensor.

OK or NG

OK >> GO TO 5.
NG >> Repair or replace.

5. CLEAR THE SELF-LEARNING DATA

With CONSULT-II

1. Start engine and warm it up to normal operating temperature.
2. Select “SELF-LEARNING CONT” in “WORK SUPPORT” mode with CONSULT-II.
3. Clear the self-learning control coefficient by touching “CLEAR”.
4. Run engine for at least 10 minutes at idle speed.
   Is the 1st trip DTC P0171 or P0172 detected?
   Is it difficult to start engine?

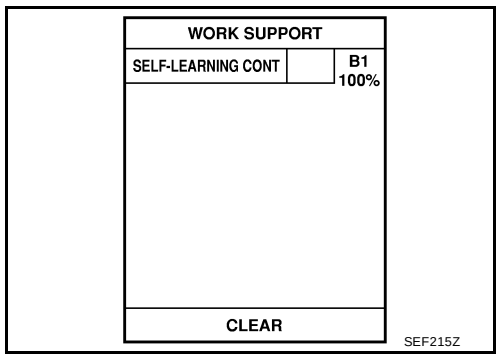

Without CONSULT-II

1. Start engine and warm it up to normal operating temperature.
2. Turn ignition switch “OFF”.
3. Disconnect mass air flow sensor harness connector, and restart and run engine for at least 5 seconds at idle speed.
4. Stop engine and reconnect mass air flow sensor harness connector.
5. Make sure DTC P0102 is displayed.
6. Erase the DTC memory. Refer to EC-67, "HOW TO ERASE EMISSION-RELATED DIAGNOSTIC INFORMATION" .
7. Make sure DTC P0000 is displayed.
8. Run engine for at least 10 minutes at idle speed.
   Is the 1st trip DTC P0171 or P0172 detected?
   Is it difficult to start engine?

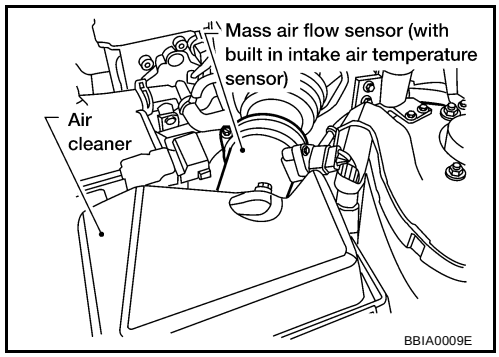

Yes or No

Yes >> Perform trouble diagnosis for DTC P0171 or DTC P0172 (Refer to EC-220 or EC-226).
No >> GO TO 6.

6. CHECK HO2S1 GROUND CIRCUIT FOR OPEN AND SHORT

1. Turn ignition switch "OFF".
2. Check harness continuity between HO2S1 terminal 4 and engine ground.
   Refer to Wiring Diagram.

   Continuity should exist.

3. Also check harness for short to power.

OK or NG

OK >> GO TO 7.
NG >> Repair open circuit or short to power in harness or connectors.

7. CHECK HO2S1 INPUT SIGNAL CIRCUIT FOR OPEN AND SHORT

1. Disconnect heated oxygen sensor 1 harness connector.
2. Disconnect ECM harness connector.
3. Check harness continuity between ECM terminal 92 and HO2S1 terminal 1.
   Refer to Wiring Diagram.

   Continuity should exist.

4. Check harness continuity between ECM terminal 92 or HO2S1 terminal 1 and ground.
   Refer to Wiring Diagram.

   Continuity should not exist.

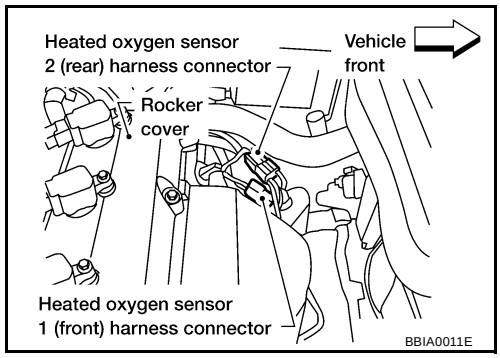

5. Also check harness for short to power.

OK or NG

OK >> GO TO 8.
NG >> Repair open circuit or short to ground or short to power in harness or connectors.

8. CHECK HEATED OXYGEN SENSOR 1 HEATER

Refer to EC-148, "Component Inspection" .

OK or NG

OK >> GO TO 9.
NG >> Replace malfunctioning heated oxygen sensor 1.

9. CHECK MASS AIR FLOW SENSOR

Refer to EC-160, "Component Inspection" .

OK or NG

OK >> GO TO 10.
NG >> Replace mass air flow sensor.

10. CHECK PCV VALVE

Refer to EC-626, "Component Inspection" .

OK or NG

OK >> GO TO 11.
NG >> Replace PCV valve.

11. CHECK HEATED OXYGEN SENSOR 1

Refer to EC-197, "Component Inspection" .

OK or NG

OK >> GO TO 12.
NG >> Replace heated oxygen sensor 1.

12. CHECK INTERMITTENT INCIDENT

Refer to EC-130, "TROUBLE DIAGNOSIS FOR INTERMITTENT INCIDENT" .

>> **INSPECTION END**

Component Inspection

UBS002RL

HEATED OXYGEN SENSOR 1

With CONSULT-II

1. Start engine and warm it up to normal operating temperature.

2. Select “MANU TRIG” and adjust “TRIGGER POINT” to 100% in “DATA MONITOR” mode with CONSULT-II.
3. Select “HO2S1 (B1)” and “HO2S1 MNTR (B1)”.
4. Hold engine speed at 2,000 rpm under no load during the following steps.
5. Touch “RECORD” on CONSULT-II screen.

DATA MONITOR	
MONITOR	NO DTC
ENG SPEED	XXX rpm
MAS A/F SE-B1	XXX V
COOLAN TEMP/S	XXX °C
HO2S1 (B1)	XXX V
HO2S1 MNTR (B1)	LEAN

SEF646Y

6. Check the following.
   - “HO2S1 MNTR (B1)” in “DATA MONITOR” mode changes from “RICH” to “LEAN” to “RICH” 5 times in 10 seconds.
     5 times (cycles) are counted as shown at right.
   - “HO2S1 (B1)” voltage goes above 0.6V at least once.
   - “HO2S1 (B1)” voltage goes below 0.3V at least once.
   - “HO2S1 (B1)” voltage never exceeds 1.0V.

cycle	1	2	3	4	5
HO2S1 MNTR (B1)	R-L-R-L-R-L-R-L-R-L-R				

R means HO2S1 MNTR (B1) indicates RICH
L means HO2S1 MNTR (B1) indicates LEAN

SEF217YA

Trigger	ENG SPEED	HO2S1 (B1)
	rpm	V
XXX	XXX	XXX
XXX	XXX	XXX
XXX	XXX	XXX
XXX	XXX	XXX
XXX	XXX	XXX
XXX	XXX	XXX
XXX	XXX	XXX
XXX	XXX	XXX
XXX	XXX	XXX
XXX	XXX	XXX
XXX	XXX	XXX
XXX	XXX	XXX
XXX	XXX	XXX

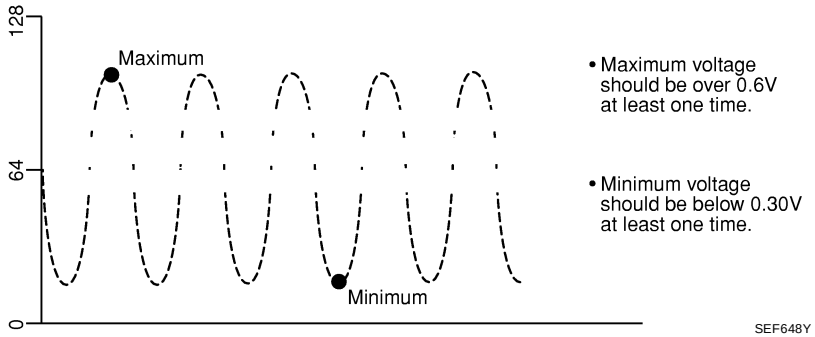

CAUTION:

- **Discard any heated oxygen sensor which has been dropped from a height of more than 0.5 m (19.7 in) onto a hard surface such as a concrete floor; use a new one.**
- **Before installing new oxygen sensor, clean exhaust system threads using Oxygen Sensor Thread Cleaner tool J-43897-18 or J-43897-12 and approved anti-seize lubricant.**

Without CONSULT-II

1. Start engine and warm it up to normal operating temperature.
2. Set voltmeter probes between ECM terminal 92 [HO2S1 (B1) signal] and engine ground.
3. Check the following with engine speed held at 2,000 rpm constant under no load.
   - The voltage fluctuates between 0 to 0.3V and 0.6 to 1.0V more than 5 times within 10 seconds.
   - The maximum voltage is over 0.6V at least one time.
   - The minimum voltage is below 0.3V at least one time.
   - The voltage never exceeds 1.0V.

   1 time: 0 - 0.3V → 0.6 - 1.0V → 0 - 0.3V
   2 times: 0 - 0.3V → 0.6 - 1.0V → 0 - 0.3V → 0.6 - 1.0V

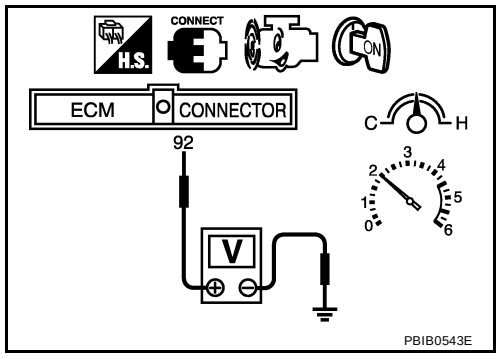

CAUTION:

- **Discard any heated oxygen sensor which has been dropped from a height of more than 0.5 m (19.7 in) onto a hard surface such as a concrete floor; use a new one.**
- **Before installing new oxygen sensor, clean exhaust system threads using Oxygen Sensor Thread Cleaner tool J-43897-18 or J-43897-12 and approved anti-seize lubricant.**

Removal and Installation

UBS002RM

HEATED OXYGEN SENSOR 1

Refer to EM-21, "EXHAUST MANIFOLD AND THREE WAY CATALYST" .

DTC P0134 HO2S1

PFP:22690

Component Description

UBS002RN

The heated oxygen sensor 1 is placed into the front tube. It detects the amount of oxygen in the exhaust gas compared to the outside air. The heated oxygen sensor 1 has a closed-end tube made of ceramic zirconia. The zirconia generates voltage from approximately 1V in richer conditions to 0V in leaner conditions. The heated oxygen sensor 1 signal is sent to the ECM. The ECM adjusts the injection pulse duration to achieve the ideal air-fuel ratio. The ideal air-fuel ratio occurs near the radical change from 1V to 0V.

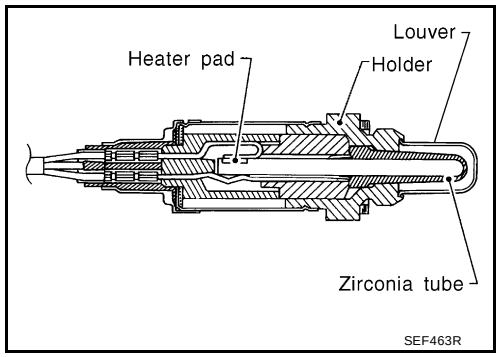

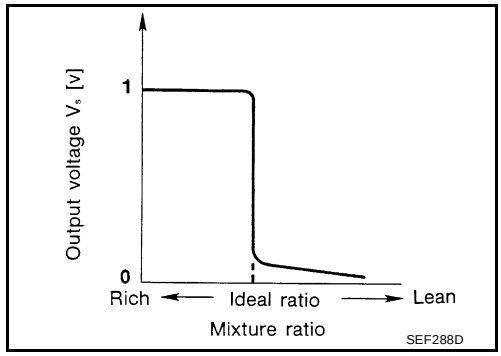

CONSULT-II Reference Value in Data Monitor Mode

UBS002RO

Specification data are reference values.

MONITOR ITEM	CONDITION		SPECIFICATION
HO2S1 (B1)	● Engine: After warming up	Maintaining engine speed at 2,000 rpm	0 - 0.3V ←→ Approx. 0.6 - 1.0V
HO2S1 MNTR (B1)	● Engine: After warming up	Maintaining engine speed at 2,000 rpm	LEAN ←→ RICH Changes more than 5 times during 10 seconds.

On Board Diagnosis Logic

UBS002RP

Under the condition in which the heated oxygen sensor 1 signal is not input, the ECM circuits will read a continuous approximately 0.3V. Therefore, for this diagnosis, the time that output voltage is within 200 to 400 mV range is monitored, and the diagnosis checks that this time is not inordinately long.

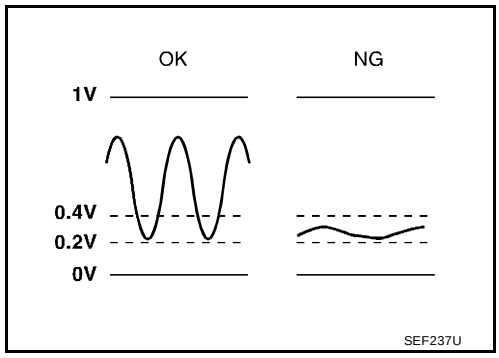

DTC No.	Trouble diagnosis name	DTC detecting condition	Possible cause
P0134 0134	Heated oxygen sensor 1 circuit high no activity detected	The voltage from the sensor is constantly approx. 0.3V.	● Harness or connectors (The sensor circuit is open or shorted) ● Heated oxygen sensor 1

DTC Confirmation Procedure

UBS002RQ

CAUTION:
Always drive vehicle at a safe speed.

NOTE:
If "DTC Confirmation Procedure" has been previously conducted, always turn ignition switch "OFF" and wait at least 10 seconds before conducting the next test.

TESTING CONDITION:
Before performing the following procedure, confirm that battery voltage is more than 11V at idle.

WITH CONSULT-II

1. Start engine and warm it up to normal operating temperature.
2. Select "HO2S1 (B1) P0134" of "HO2S1" in "DTC WORK SUPPORT" mode with CONSULT-II.
3. Touch "START".
4. Let it idle for at least 3 minutes.

   NOTE:
   Never raise engine speed above 3,600 rpm after this step. If the engine speed limit is exceeded, return to step 4.

HO2S1 (B1) P0134	
OUT OF CONDITION	
MONITOR	
ENG SPEED	XXX rpm
B/FUEL SCHDL	XXX msec
COOLAN TEMP/S	XXX °C
VHCL SPEED SEN	XXX km/h

PBIB0544E

5. When the following conditions are met, "TESTING" will be displayed on the CONSULT-II screen. Maintain the conditions continuously until "TESTING" changes to "COMPLETED". (It will take approximately 10 to 60 seconds.)

ENG SPEED	1,200 - 3,200 rpm
Vehicle speed	More than 64 km/h (40 MPH)
B/FUEL SCHDL	1.9 - 13.0 msec
Selector lever	Suitable position

   If "TESTING" is not displayed after 5 minutes, retry from step 2.

HO2S1 (B1) P0134	
TESTING	
MONITOR	
ENG SPEED	XXX rpm
B/FUEL SCHDL	XXX msec
COOLAN TEMP/S	XXX °C
VHCL SPEED SEN	XXX km/h

PBIB0545E

6. Make sure that "OK" is displayed after touching "SELF-DIAG RESULTS". If "NG" is displayed, refer to EC-204, "Diagnostic Procedure" .

HO2S1 (B1) P0134
COMPLETED

SEC750C

Overall Function Check

UBS002RR

Use this procedure to check the overall function of the heated oxygen sensor 1 circuit. During this check, a 1st trip DTC might not be confirmed.

WITH GST

1. Start engine and warm it up to normal operating temperature.
2. Set voltmeter probes between ECM terminal 92 [HO2S1 (B1) signal] and engine ground.

3. Check the following with engine speed held at 2,000 rpm constant under no load.

- The voltage does not remain in the range of 0.2 - 0.4V.

4. If NG, go to EC-204, "Diagnostic Procedure" .

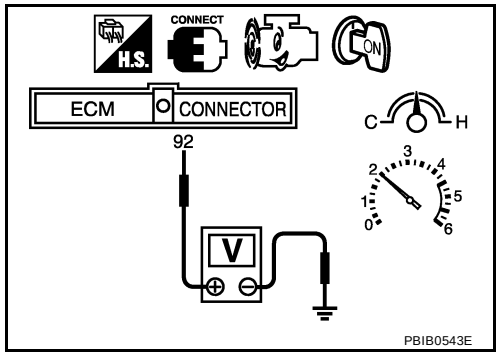

Wiring Diagram

UBS002RS

EC-HO2S1-01

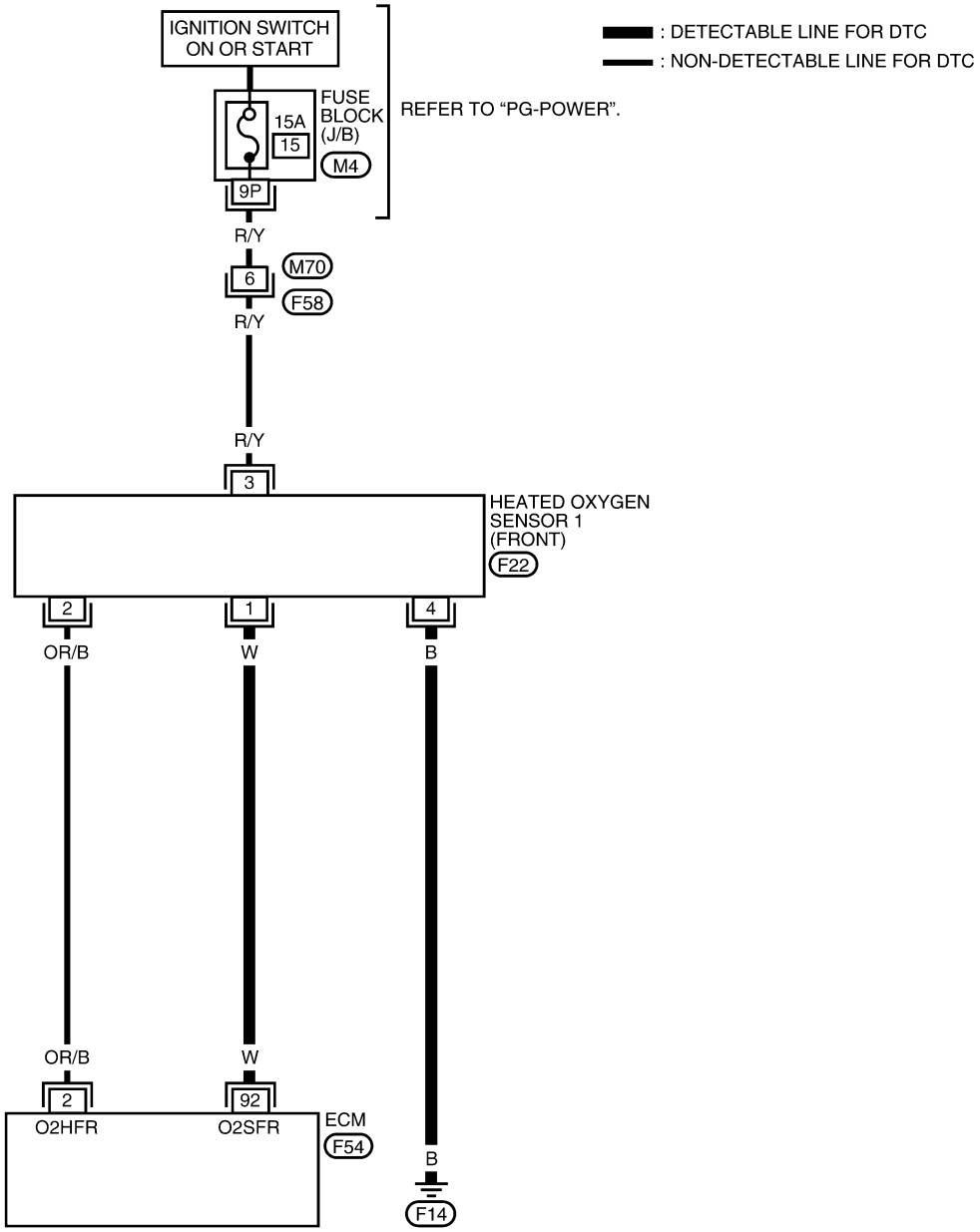

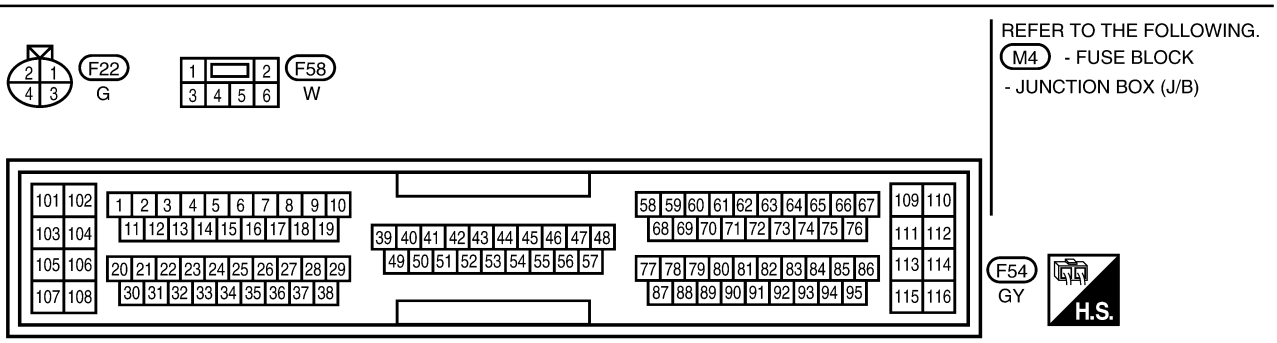

BBWA0009E

Specification data are reference values and are measured between each terminal and ground.

CAUTION:
Do not use ECM ground terminals when measuring input/output voltage. Doing so may result in damage to the ECM's transistor. Use a ground other than ECM terminals, such as the ground.

TERMINAL NO.	WIRE COLOR	ITEM	CONDITION	DATA (DC Voltage)
92	W	Heated oxygen sensor 1	**[Engine is running]** ● **Warm-up condition** ● Engine speed is 2,000 rpm.	0 - Approximately 1.0V (Periodically change)

Diagnostic Procedure

UBS002RT

1. INSPECTION START

1. Turn ignition switch “OFF”.
2. Loosen and retighten engine ground screws.

>> GO TO 2.

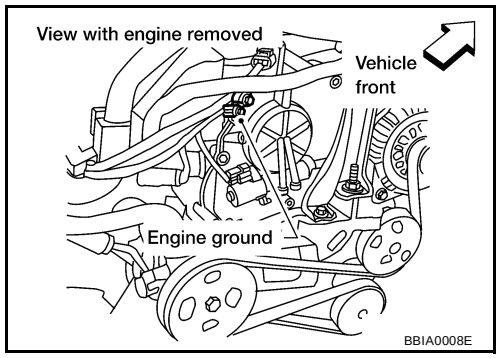

2. CHECK HO2S1 GROUND CIRCUIT FOR OPEN AND SHORT

1. Turn ignition switch "OFF".
2. Check harness continuity between HO2S1 terminal 4 and engine ground.
   Refer to Wiring Diagram.

   Continuity should exist.

3. Also check harness for short to power.

OK or NG

OK >> GO TO 3.
NG >> Repair open circuit or short to power in harness or connectors.

3. CHECK HO2S1 INPUT SIGNAL CIRCUIT FOR OPEN AND SHORT

1. Disconnect ECM harness connector.
2. Check harness continuity between ECM terminal 92 and HO2S1 terminal 1.
   Refer to Wiring Diagram.

   Continuity should exist.

3. Check harness continuity between ECM terminal 92 or HO2S1 terminal 1 and ground.
   Refer to Wiring Diagram.

   Continuity should not exist.

4. Also check harness for short to power.

OK or NG

OK >> GO TO 4.
NG >> Repair open circuit or short to ground or short to power in harness or connectors.

4. CHECK HEATED OXYGEN SENSOR 1

Refer to EC-205, "Component Inspection" .

OK or NG

OK >> GO TO 5.
NG >> Replace heated oxygen sensor 1.

5. CHECK INTERMITTENT INCIDENT

Refer to EC-130, "TROUBLE DIAGNOSIS FOR INTERMITTENT INCIDENT" .

>> **INSPECTION END**

Component Inspection

UBS002RU

HEATED OXYGEN SENSOR 1

With CONSULT-II

1. Start engine and warm it up to normal operating temperature.
2. Select “MANU TRIG” and adjust “TRIGGER POINT” to 100% in “DATA MONITOR” mode with CONSULT-II.
3. Select “HO2S1 (B1)” and “HO2S1 MNTR (B1)”.
4. Hold engine speed at 2,000 rpm under no load during the following steps.
5. Touch “RECORD” on CONSULT-II screen.

DATA MONITOR	
MONITOR	NO DTC
ENG SPEED	XXX rpm
MAS A/F SE-B1	XXX V
COOLAN TEMP/S	XXX °C
HO2S1 (B1)	XXX V
HO2S1 MNTR (B1)	LEAN

SEF646Y

6. Check the following.
   - “HO2S1 MNTR (B1)” in “DATA MONITOR” mode changes from “RICH” to “LEAN” to “RICH” 5 times in 10 seconds.
     5 times (cycles) are counted as shown at right.
   - “HO2S1 (B1)” voltage goes above 0.6V at least once.
   - “HO2S1 (B1)” voltage goes below 0.3V at least once.
   - “HO2S1 (B1)” voltage never exceeds 1.0V.

cycle	1	2	3	4	5
HO2S1 MNTR (B1)	R-L-R-L-R-L-R-L-R-L-R				

R means HO2S1 MNTR (B1) indicates RICH
L means HO2S1 MNTR (B1) indicates LEAN

SEF217YA

Trigger	ENG SPEED	HO2S1 (B1)
	rpm	V
XXX	XXX	XXX
XXX	XXX	XXX
XXX	XXX	XXX
XXX	XXX	XXX
XXX	XXX	XXX
XXX	XXX	XXX
XXX	XXX	XXX
XXX	XXX	XXX
XXX	XXX	XXX
XXX	XXX	XXX
XXX	XXX	XXX
XXX	XXX	XXX

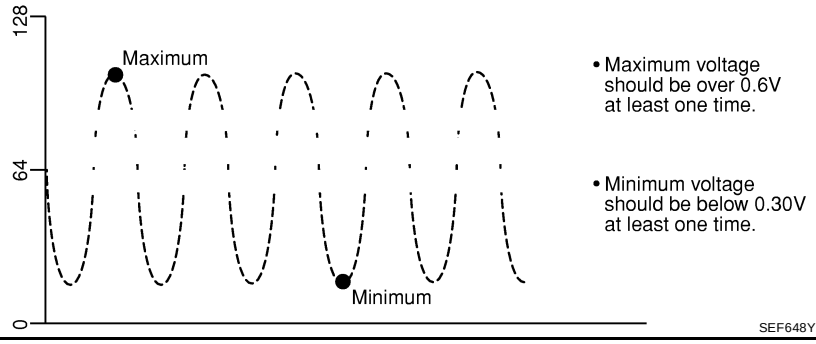

CAUTION:

- **Discard any heated oxygen sensor which has been dropped from a height of more than 0.5 m (19.7 in) onto a hard surface such as a concrete floor; use a new one.**

- **Before installing new oxygen sensor, clean exhaust system threads using Oxygen Sensor Thread Cleaner tool J-43897-18 or J-43897-12 and approved anti-seize lubricant.**

Without CONSULT-II

1. Start engine and warm it up to normal operating temperature.
2. Set voltmeter probes between ECM terminal 92 [HO2S1 (B1) signal] and engine ground.
3. Check the following with engine speed held at 2,000 rpm constant under no load.
   - The voltage fluctuates between 0 to 0.3V and 0.6 to 1.0V more than 5 times within 10 seconds.
   - The maximum voltage is over 0.6V at least one time.
   - The minimum voltage is below 0.3V at least one time.
   - The voltage never exceeds 1.0V.

   1 time: 0 - 0.3V → 0.6 - 1.0V → 0 - 0.3V
   2 times: 0 - 0.3V → 0.6 - 1.0V → 0 - 0.3V → 0.6 - 1.0V

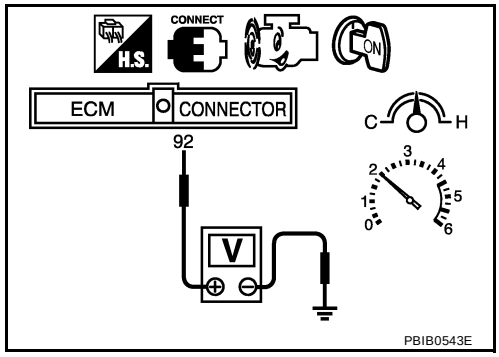

CAUTION:

- **Discard any heated oxygen sensor which has been dropped from a height of more than 0.5 m (19.7 in) onto a hard surface such as a concrete floor; use a new one.**
- **Before installing new oxygen sensor, clean exhaust system threads using Oxygen Sensor Thread Cleaner tool J-43897-18 or J-43897-12 and approved anti-seize lubricant.**

Removal and Installation

UBS002RV

HEATED OXYGEN SENSOR 1

Refer to EM-21, "EXHAUST MANIFOLD AND THREE WAY CATALYST" .

DTC P0138 HO2S2

PFP:226A0

Component Description

UBS002RW

The heated oxygen sensor 2, after three way catalyst, monitors the oxygen level in the exhaust gas on each bank.
Even if switching characteristics of the heated oxygen sensor 1 are shifted, the air fuel ratio is controlled to stoichiometric, by the signal from the heated oxygen sensor 2.
This sensor is made of ceramic zirconia. The zirconia generates voltage from approximately 1V in richer conditions to 0V in leaner conditions.
Under normal conditions the heated oxygen sensor 2 is not used for engine control operation.

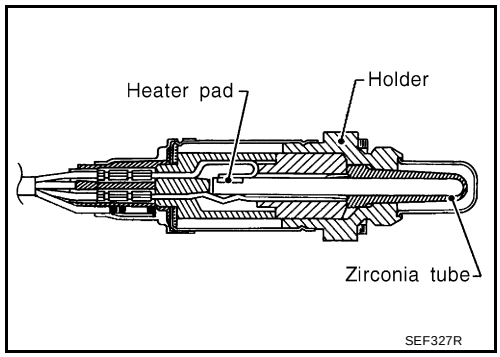

CONSULT-II Reference Value in Data Monitor Mode

UBS002RX

Specification data are reference values.

MONITOR ITEM	CONDITION		SPECIFICATION
HO2S2 (B1)	● Engine: After warming up	Revving engine from idle to 3,000 rpm quickly.	0 - 0.3V ←→ Approx. 0.6 - 1.0V
HO2S2 MNTR (B1)	● Engine: After warming up	Revving engine from idle to 3,000 rpm quickly.	LEAN ←→ RICH

On Board Diagnosis Logic

UBS002RY

The heated oxygen sensor 2 has a much longer switching time between rich and lean than the heated oxygen sensor 1. The oxygen storage capacity before the three way catalyst causes the longer switching time. To judge the malfunctions of heated oxygen sensor 2, ECM monitors whether the voltage is unusually high during the various driving condition such as fuel-cut.

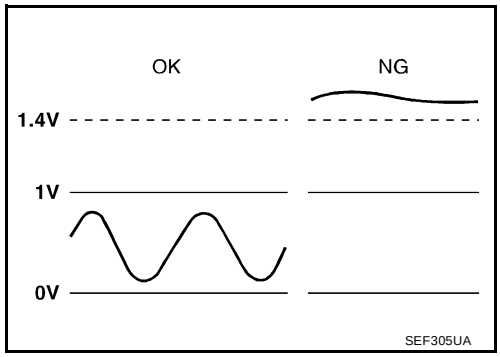

DTC No.	Trouble diagnosis name	DTC detecting condition	Possible cause
P0138 0138	Heated oxygen sensor 2 circuit high voltage	An excessively high voltage from the sensor is sent to ECM.	● Harness or connectors (The sensor circuit is open or shorted) ● Heated oxygen sensor 2

DTC Confirmation Procedure

UBS002RZ

CAUTION:
Always drive vehicle at a safe speed.

NOTE:
If “DTC Confirmation Procedure” has been previously conducted, always turn ignition switch “OFF” and wait at least 10 seconds before conducting the next test.

WITH CONSULT-II

1. Turn ignition switch “ON” and select “DATA MONITOR” mode with CONSULT-II.
2. Start engine and drive vehicle at a speed of more than 70 km/h (43 MPH) for 2 consecutive minutes.
3. Stop vehicle with engine running.
4. Let engine idle for 1 minute.
5. If 1st trip DTC is detected, go to EC-210, "Diagnostic Procedure" .

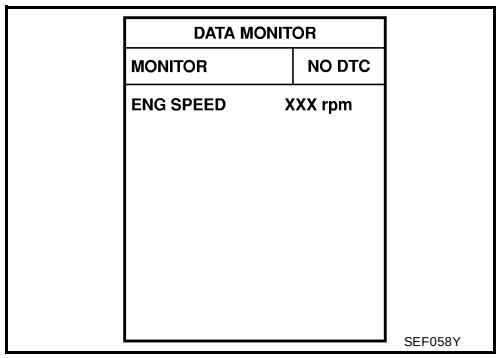

Overall Function Check

UBS002S0

Use this procedure to check the overall function of the heated oxygen sensor 2 circuit. During this check, a 1st trip DTC might not be confirmed.

CAUTION:
Always drive vehicle at a safe speed.

WITH GST

1. Start engine and drive vehicle at a speed of more than 70 km/h (43 MPH) for 2 consecutive minutes.
2. Stop vehicle with engine running.
3. Set voltmeter probes between ECM terminal 95 [HO2S2 (B1) signal] and engine ground.
4. Check the voltage when revving up to 4,000 rpm under no load at least 10 times.
   (Depress and release accelerator pedal as soon as possible.)
   The voltage should be below 1.4V during this procedure.
5. If NG, go to EC-210, "Diagnostic Procedure" .

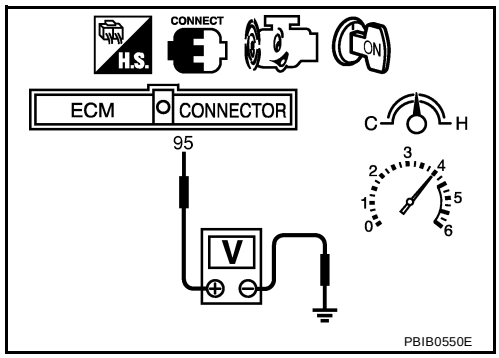

Wiring Diagram

UBS002S1

EC-HO2S2-01

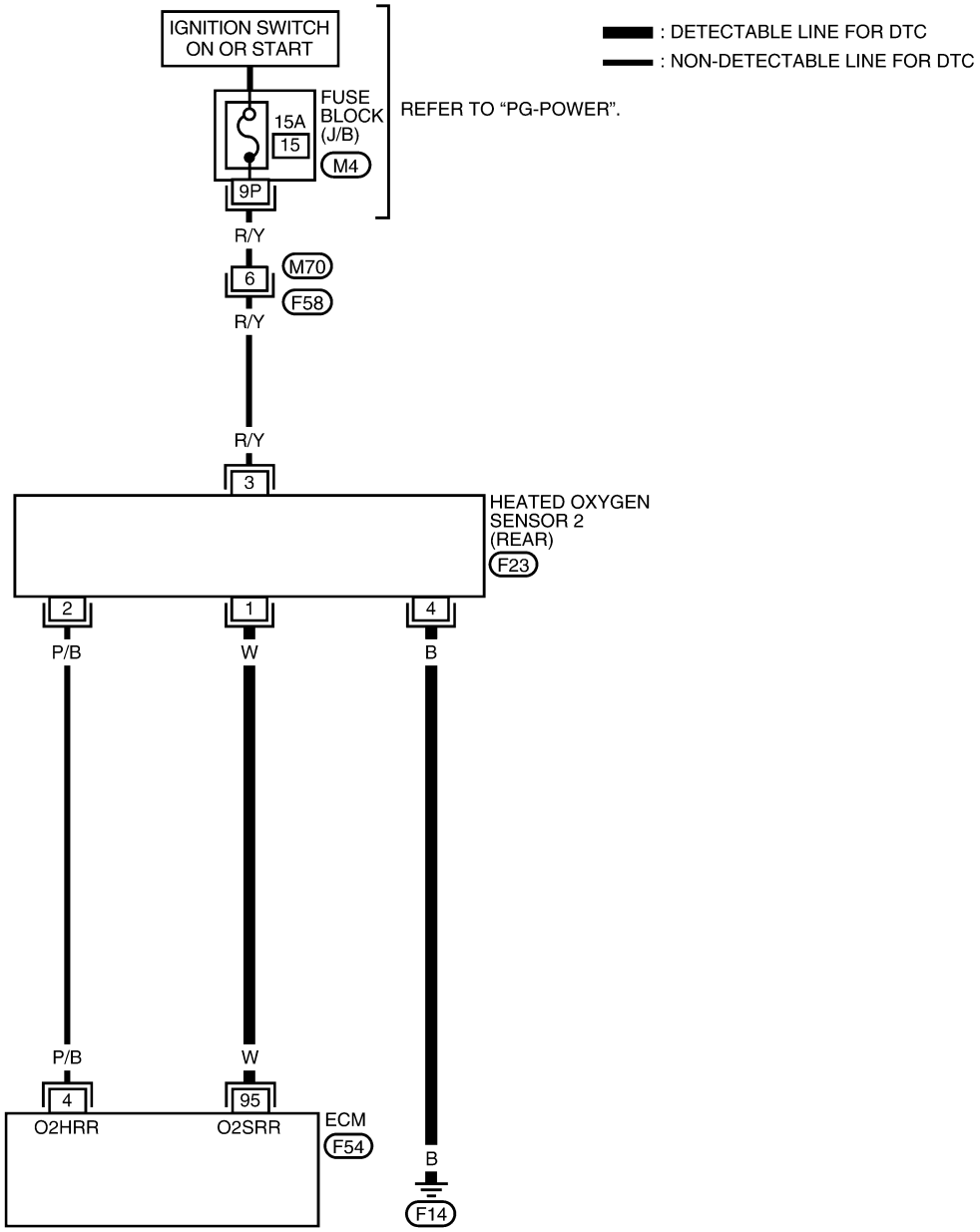

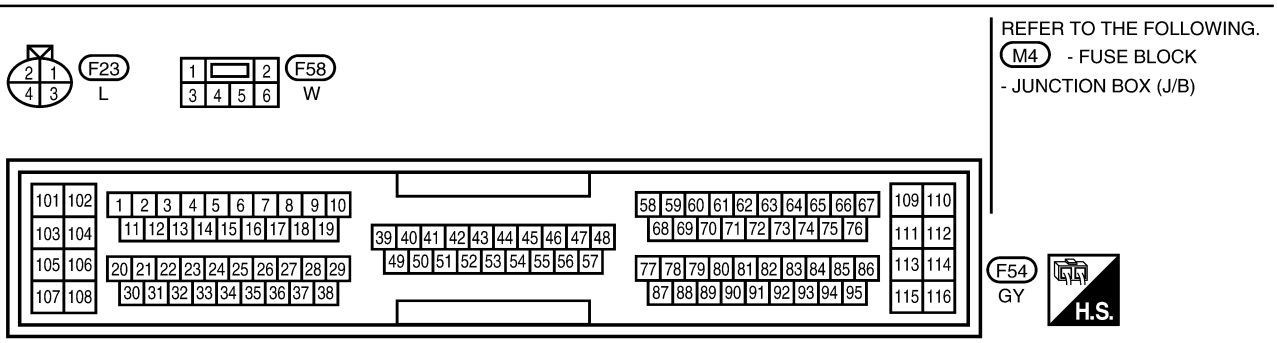

BBWA0011E

Specification data are reference values and are measured between each terminal and ground.

CAUTION:
Do not use ECM ground terminals when measuring input/output voltage. Doing so may result in damage to the ECM's transistor. Use a ground other than ECM terminals, such as the ground.

TERMINAL NO.	WIRE COLOR	ITEM	CONDITION	DATA (DC Voltage)
95	W	Heated oxygen sensor 2	**[Engine is running]** ● **Warm-up condition** ● Engine speed is 2,000 rpm.	0 - Approximately 1.0V

Diagnostic Procedure

UBS002S2

1. RETIGHTEN GROUND SCREWS

1. Turn ignition switch “OFF”.
2. Loosen and retighten engine ground screws.

>> GO TO 2.

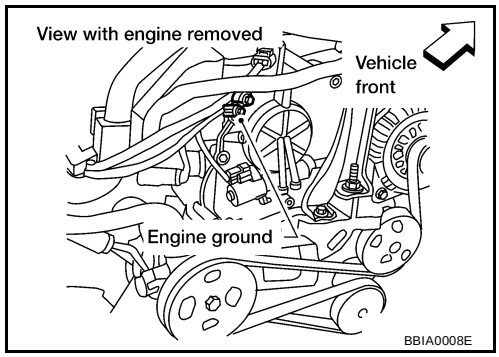

2. CHECK HO2S2 GROUND CIRCUIT FOR OPEN AND SHORT

1. Turn ignition switch “OFF”.
2. Disconnect heated oxygen sensor 2 harness connector.
3. Check harness continuity between HO2S2 terminal 4 and engine ground.
   Refer to Wiring Diagram.

   Continuity should exist.

4. Also check harness for short to power.

OK or NG

OK >> GO TO 3.
NG >> Repair open circuit or short to power in harness or connectors.

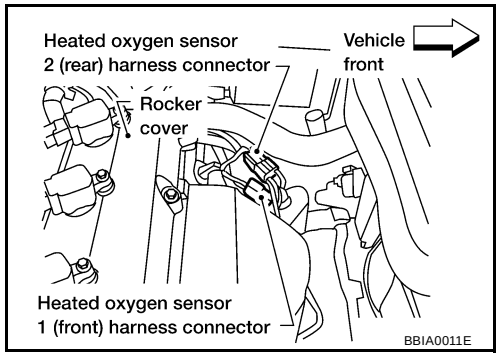

3. CHECK HO2S2 INPUT SIGNAL CIRCUIT FOR OPEN AND SHORT

1. Disconnect ECM harness connector.
2. Check harness continuity between ECM terminal 95 and HO2S2 terminal 1.
   Refer to Wiring Diagram.

   Continuity should exist.

3. Check harness continuity between ECM terminal 95 or HO2S2 terminal 1 and ground.
   Refer to Wiring Diagram.

   Continuity should not exist.

4. Also check harness for short to ground or short to power.

OK or NG

OK >> GO TO 4.
NG >> Repair open circuit or short to ground or short to power in harness or connectors.

4. CHECK HARNESS CONNECTOR

Check HO2S2 harness connector for water.

Water should not exist.

OK or NG

OK >> GO TO 5.
NG >> Repair or replace harness connector.

5. CHECK HEATED OXYGEN SENSOR 2

Refer to EC-211, "Component Inspection" .

OK or NG

OK >> GO TO 6.
NG >> Replace heated oxygen sensor 2.

6. CHECK INTERMITTENT INCIDENT

Refer to EC-130, "TROUBLE DIAGNOSIS FOR INTERMITTENT INCIDENT" .

>> **INSPECTION END**

Component Inspection

UBS002S3

HEATED OXYGEN SENSOR 2

With CONSULT-II

1. Start engine and drive vehicle at a speed of more than 70 km/h (43 MPH) for 2 consecutive minutes.
2. Stop vehicle with engine running.
3. Select “FUEL INJECTION” in “ACTIVE TEST” mode, and select “HO2S2 (B1)” as the monitor item with CONSULT-II.

ACTIVE TEST	
FUEL INJECTION	25 %
MONITOR	
ENG SPEED	XXX rpm
HO2S1 (B1)	XXX V
HO2S2 (B1)	XXX V
HO2S1 MNTR (B1)	RICH
HO2S2 MNTR (B1)	RICH

SEF662Y

4. Check “HO2S2 (B1)” at idle speed when adjusting “FUEL INJECTION” to ±25%.

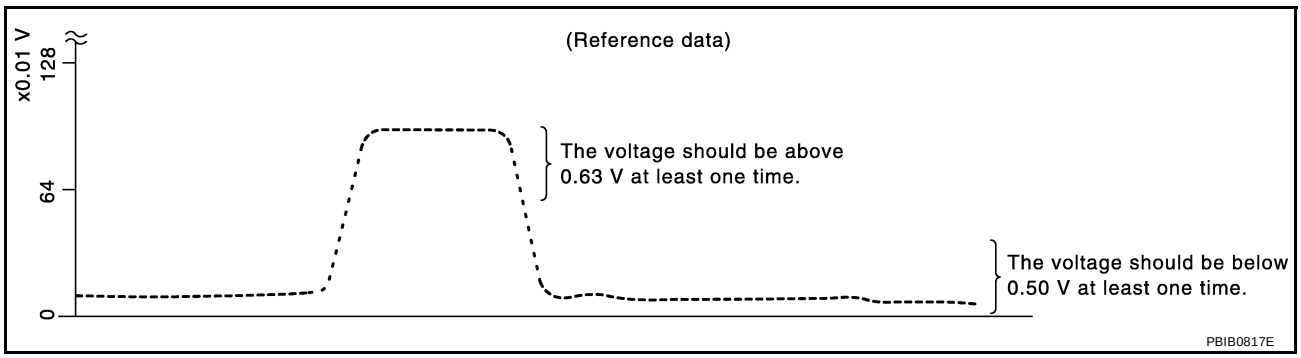

“HO2S2 (B1)” should be above 0.63V at least once when the “FUEL INJECTION” is +25%.
“HO2S2 (B1)” should be below 0.50V at least once when the “FUEL INJECTION” is –25%.

CAUTION:

- **Discard any heated oxygen sensor which has been dropped from a height of more than 0.5 m (19.7 in) onto a hard surface such as a concrete floor; use a new one.**

- **Before installing new oxygen sensor, clean exhaust system threads using Oxygen Sensor Thread Cleaner tool J-43897-18 or J-43897-12 and approved anti-seize lubricant.**

Without CONSULT-II

1. Start engine and drive vehicle at a speed of more than 70 km/h (43 MPH) for 2 consecutive minutes.
2. Stop vehicle with engine running.
3. Set voltmeter probes between ECM terminal 95 [HO2S2 (B1) signal] and engine ground.
4. Check the voltage when revving up to 4,000 rpm under no load at least 10 times.
   (Depress and release accelerator pedal as soon as possible.)
   The voltage should be above 0.63V at least once during this procedure.
   If the voltage is above 0.63V at step 4, step 5 is not necessary.
5. Keep vehicle idling for 10 minutes, then check voltage. Or check the voltage when coasting from 80 km/h (50 MPH) in “D” position with “OD” OFF (A/T), 3rd gear position (M/T).
   The voltage should be below 0.50V at least once during this procedure.

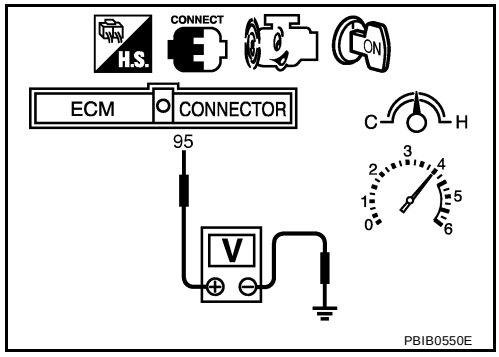

6. If NG, replace heated oxygen sensor 2.

CAUTION:

- **Discard any heated oxygen sensor which has been dropped from a height of more than 0.5 m (19.7 in) onto a hard surface such as a concrete floor; use a new one.**
- **Before installing new oxygen sensor, clean exhaust system threads using Oxygen Sensor Thread Cleaner tool J-43897-18 or J-43897-12 and approved anti-seize lubricant.**

Removal and Installation

UBS002S4

HEATED OXYGEN SENSOR 2

Refer to EX-3, "EXHAUST SYSTEM (QR25DE)" .

DTC P0139 HO2S2

PFP:226A0

Component Description

UBS002S5

The heated oxygen sensor 2, after three way catalyst, monitors the oxygen level in the exhaust gas on each bank.
Even if switching characteristics of the heated oxygen sensor 1 are shifted, the air fuel ratio is controlled to stoichiometric, by the signal from the heated oxygen sensor 2.
This sensor is made of ceramic zirconia. The zirconia generates voltage from approximately 1V in richer conditions to 0V in leaner conditions.
Under normal conditions the heated oxygen sensor 2 is not used for engine control operation.

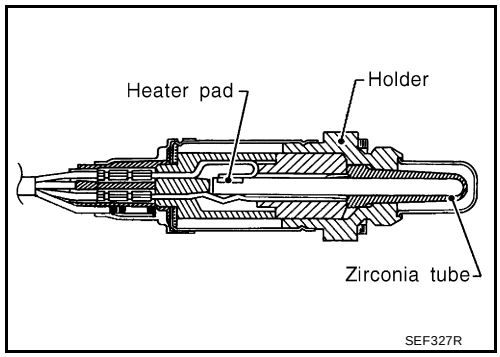

CONSULT-II Reference Value in Data Monitor Mode

UBS002S6

Specification data are reference values.

MONITOR ITEM	CONDITION		SPECIFICATION
HO2S2 (B1)	● Engine: After warming up	Revving engine from idle to 3,000 rpm quickly.	0 - 0.3V ←→ Approx. 0.6 - 1.0V
HO2S2 MNTR (B1)	● Engine: After warming up	Revving engine from idle to 3,000 rpm quickly.	LEAN ←→ RICH

On Board Diagnosis Logic

UBS002S7

The heated oxygen sensor 2 has a much longer switching time between rich and lean than the heated oxygen sensor 1. The oxygen storage capacity before the three way catalyst causes the longer switching time. To judge the malfunctions of heated oxygen sensor 2, ECM monitors whether the switching response of the sensor's voltage is faster than specified during the various driving condition such as fuel-cut.

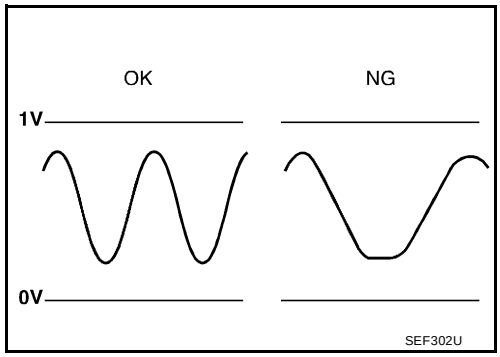

DTC No.	Trouble diagnosis name	DTC detecting condition	Possible cause
P0139 0139	Heated oxygen sensor 2 circuit slow response	It takes more time for the sensor to respond between rich and lean than the specified time.	● Harness or connectors (The sensor circuit is open or shorted) ● Heated oxygen sensor 2 ● Fuel pressure ● Injectors ● Intake air leaks

DTC Confirmation Procedure

UBS002S8

NOTE:
If “DTC Confirmation Procedure” has been previously conducted, always turn ignition switch “OFF” and wait at least 10 seconds before conducting the next test.
TESTING CONDITION:
Open engine hood before conducting following procedure.

WITH CONSULT-II

1. Start engine and warm it up to normal operating temperature.
2. Turn ignition switch “OFF” and wait at least 10 seconds.
3. Turn ignition switch "ON".
4. Select "DATA MONITOR" mode with CONSULT-II.

5. Make sure that "COOLAN TEMP/S" indicates more than 70°C (158°F).
6. Select “HO2S2 (B1) P0139” of “HO2S2” in “DTC WORK SUPPORT” mode with CONSULT-II.
7. Start engine and following the instruction of CONSULT-II.

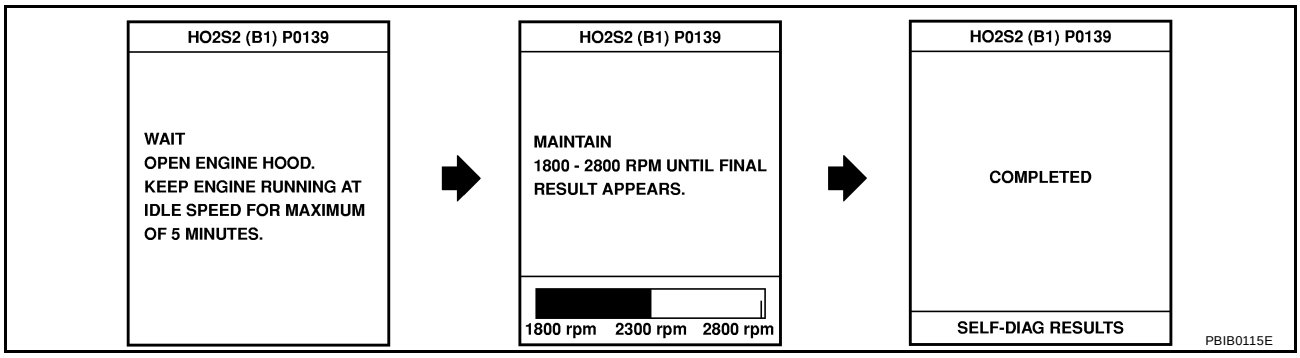

8. Make sure that “OK” is displayed after touching “SELF-DIAG RESULTS”.
   If "NG" is displayed, refer to EC-216, "Diagnostic Procedure" .
   If "CAN NOT BE DIAGNOSED" is displayed, perform the following.

a. Stop engine and cool down until "COOLAN TEMP/S" indicates less than 70°C (158°F).
b. Turn ignition switch "ON".
c. Select "DATA MONITOR" mode with CONSULT-II.
d. Start engine.
e. Return to step 6 again when the "COOLAN TEMP/S" reaches to 70°C (158°F).

Overall Function Check

UBS002S9

Use this procedure to check the overall function of the heated oxygen sensor 2 circuit. During this check, a 1st trip DTC might not be confirmed.

CAUTION:
Always drive vehicle at a safe speed.

WITH GST

1. Start engine and drive vehicle at a speed of more than 70 km/h (43 MPH) for 2 consecutive minutes.
2. Stop vehicle with engine running.
3. Set voltmeter probes between ECM terminal 95 [HO2S2 (B1) signal] and engine ground.
4. Check the voltage when revving up to 4,000 rpm under no load at least 10 times.
   (Depress and release accelerator pedal as soon as possible.)
   The voltage should change at more than 0.06V for 1 second during this procedure.
   If the voltage can be confirmed in step 4, step 5 is not necessary.

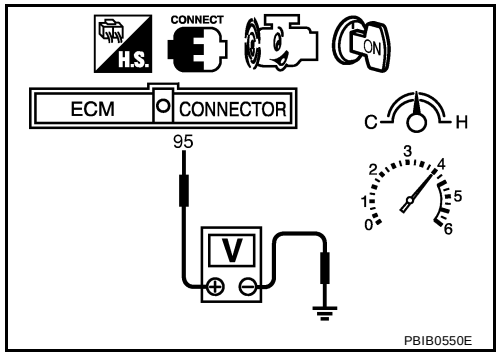

5. Keep vehicle at idling for 10 minutes, then check the voltage. Or check the voltage when coasting from 80 km/h (50 MPH) in “D” position with “OD” OFF (A/T), 3rd gear position (M/T).
   The voltage should change at more than 0.06V for 1 second during this procedure.
6. If NG, go to EC-216, "Diagnostic Procedure" .

Wiring Diagram

UBS002SA

EC-HO2S2-01

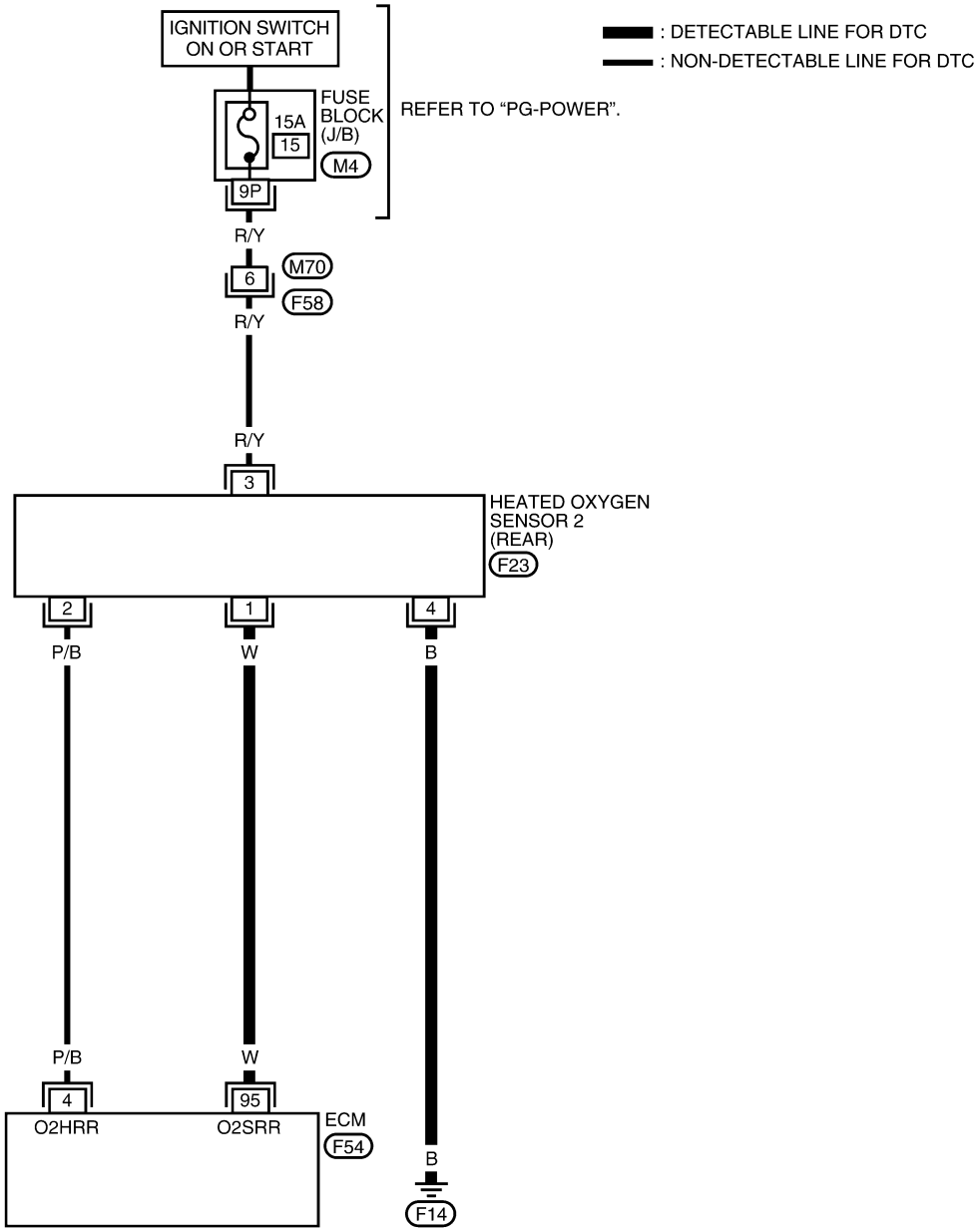

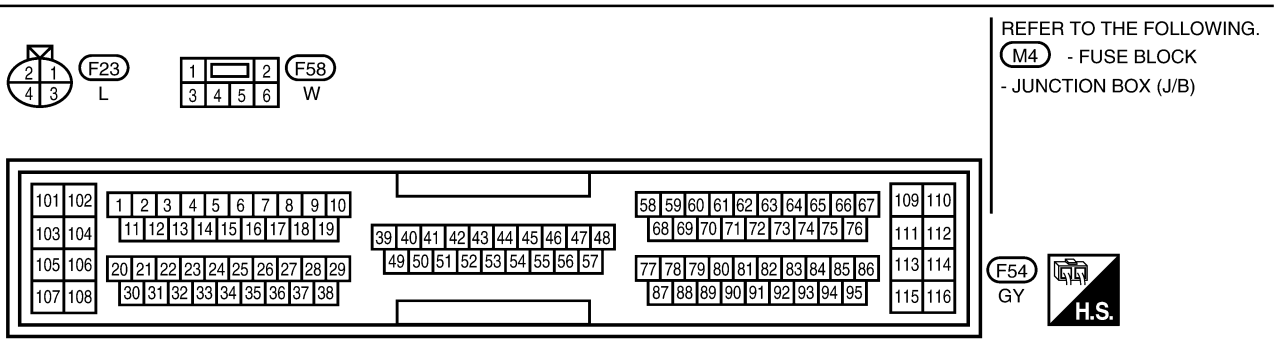

BBWA0011E

Specification data are reference values and are measured between each terminal and ground.

CAUTION:
Do not use ECM ground terminals when measuring input/output voltage. Doing so may result in damage to the ECM's transistor. Use a ground other than ECM terminals, such as the ground.

TERMINAL NO.	WIRE COLOR	ITEM	CONDITION	DATA (DC Voltage)
95	W	Heated oxygen sensor 2	**[Engine is running]** ● **Warm-up condition** ● Engine speed is 2,000 rpm.	0 - Approximately 1.0V

Diagnostic Procedure

UBS002SB

1. RETIGHTEN GROUND SCREWS

1. Turn ignition switch “OFF”.
2. Loosen and retighten engine ground screws.

>> GO TO 2.

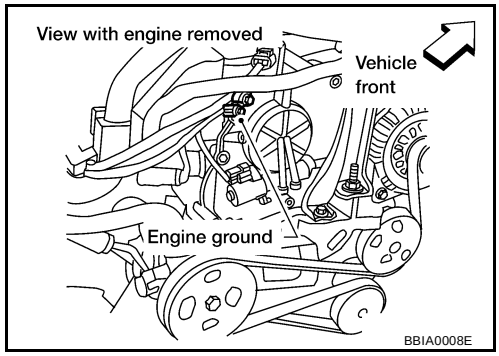

2. CLEAR THE SELF-LEARNING DATA

With CONSULT-II

1. Start engine and warm it up to normal operating temperature.
2. Select “SELF-LEARNING CONT” in “WORK SUPPORT” mode with CONSULT-II.
3. Clear the self-learning control coefficient by touching “CLEAR”.
4. Run engine for at least 10 minutes at idle speed.
   Is the 1st trip DTC P0171 or P0172 detected?
   Is it difficult to start engine?

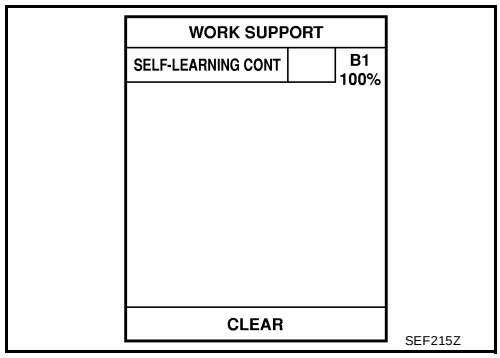

Without CONSULT-II

1. Start engine and warm it up to normal operating temperature.
2. Turn ignition switch “OFF”.
3. Disconnect mass air flow sensor harness connector, and restart and run engine for at least 5 seconds at idle speed.
4. Stop engine and reconnect mass air flow sensor harness connector.
5. Make sure DTC P0102 is displayed.
6. Erase the DTC memory. Refer to EC-67, "HOW TO ERASE EMISSION-RELATED DIAGNOSTIC INFORMATION" .
7. Make sure DTC P0000 is displayed.
8. Run engine for at least 10 minutes at idle speed.
   Is the 1st trip DTC P0171 or P0172 detected?
   Is it difficult to start engine?

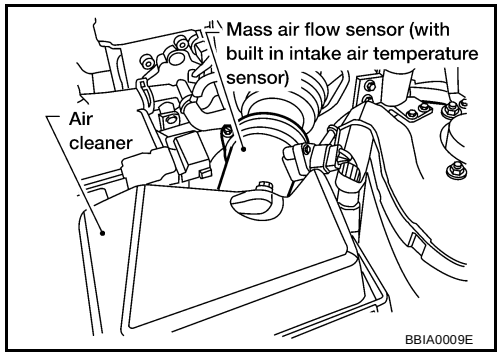

Yes or No

Yes >> Perform trouble diagnosis for DTC P0171 or P0172. Refer to EC-220 or EC-226 .
No >> GO TO 3.

3. CHECK HO2S2 GROUND CIRCUIT FOR OPEN AND SHORT

1. Turn ignition switch “OFF”.
2. Disconnect heated oxygen sensor 2 harness connector.
3. Check harness continuity between HO2S2 terminal 4 and engine ground.
   Refer to Wiring Diagram.

   Continuity should exist.

4. Also check harness for short to power.

OK or NG

OK >> GO TO 4.
NG >> Repair open circuit or short to power in harness or connectors.

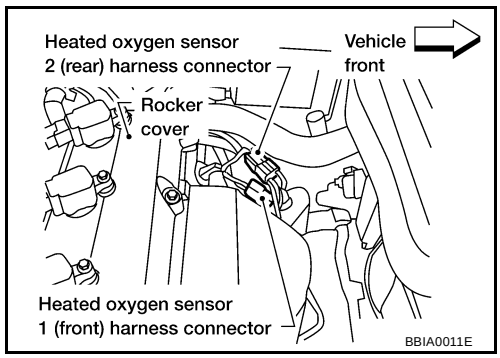

4. CHECK HO2S2 INPUT SIGNAL CIRCUIT FOR OPEN AND SHORT

1. Disconnect ECM harness connector.
2. Check harness continuity between ECM terminal 95 and HO2S2 terminal 1.
   Refer to Wiring Diagram.

   Continuity should exist.

3. Check harness continuity between ECM terminal 95 or HO2S2 terminal 1 and ground.
   Refer to Wiring Diagram.

   Continuity should not exist.

4. Also check harness for short to ground or short to power.

OK or NG

OK >> GO TO 5.
NG >> Repair open circuit or short to ground or short to power in harness or connectors.

5. CHECK HEATED OXYGEN SENSOR 2

Refer to EC-218, "Component Inspection" .

OK or NG

OK >> GO TO 6.
NG >> Replace heated oxygen sensor 2.

6. CHECK INTERMITTENT INCIDENT

Refer to EC-130, "TROUBLE DIAGNOSIS FOR INTERMITTENT INCIDENT" .

>> **INSPECTION END**

Component Inspection

UBS002SC

HEATED OXYGEN SENSOR 2

With CONSULT-II

1. Start engine and drive vehicle at a speed of more than 70 km/h (43 MPH) for 2 consecutive minutes.
2. Stop vehicle with engine running.
3. Select “FUEL INJECTION” in “ACTIVE TEST” mode, and select “HO2S2 (B1)” as the monitor item with CONSULT-II.

ACTIVE TEST	
FUEL INJECTION	25 %
MONITOR	
ENG SPEED	XXX rpm
HO2S1 (B1)	XXX V
HO2S2 (B1)	XXX V
HO2S1 MNTR (B1)	RICH
HO2S2 MNTR (B1)	RICH

SEF662Y

4. Check “HO2S2 (B1)” at idle speed when adjusting “FUEL INJECTION” to ±25%.

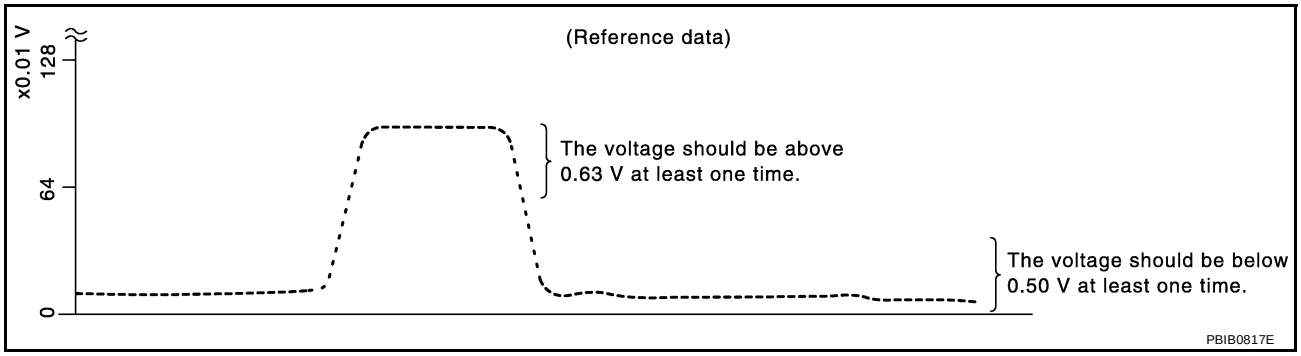

“HO2S2 (B1)” should be above 0.63V at least once when the “FUEL INJECTION” is +25%.
“HO2S2 (B1)” should be below 0.50V at least once when the “FUEL INJECTION” is –25%.

CAUTION:

- **Discard any heated oxygen sensor which has been dropped from a height of more than 0.5 m (19.7 in) onto a hard surface such as a concrete floor; use a new one.**
- **Before installing new oxygen sensor, clean exhaust system threads using Oxygen Sensor Thread Cleaner tool J-43897-18 or J-43897-12 and approved anti-seize lubricant.**

Without CONSULT-II

1. Start engine and drive vehicle at a speed of more than 70 km/h (43 MPH) for 2 consecutive minutes.
2. Stop vehicle with engine running.
3. Set voltmeter probes between ECM terminal 95 [HO2S2 (B1) signal] and engine ground.
4. Check the voltage when revving up to 4,000 rpm under no load at least 10 times.
   (Depress and release accelerator pedal as soon as possible.)
   The voltage should be above 0.63V at least once during this procedure.
   If the voltage is above 0.63V at step 4, step 5 is not necessary.
5. Keep vehicle idling for 10 minutes, then check voltage. Or check the voltage when coasting from 80 km/h (50 MPH) in “D” position with “OD” OFF (A/T), 3rd gear position (M/T).
   The voltage should be below 0.50V at least once during this procedure.

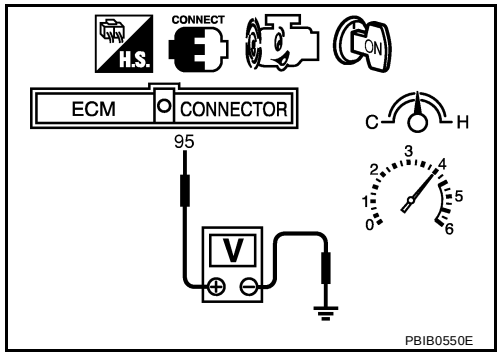

6. If NG, replace heated oxygen sensor 2.

CAUTION:

- **Discard any heated oxygen sensor which has been dropped from a height of more than 0.5 m (19.7 in) onto a hard surface such as a concrete floor; use a new one.**
- **Before installing new oxygen sensor, clean exhaust system threads using Oxygen Sensor Thread Cleaner tool J-43897-18 or J-43897-12 and approved anti-seize lubricant.**

Removal and Installation

UBS002SD

HEATED OXYGEN SENSOR 2

Refer to EX-3, "EXHAUST SYSTEM (QR25DE)" .

DTC P0171 FUEL INJECTION SYSTEM FUNCTION

PFP:16600

On Board Diagnosis Logic

UBS002SE

With the Air/Fuel Mixture Ratio Self-Learning Control, the actual mixture ratio can be brought closely to the theoretical mixture ratio based on the mixture ratio feedback signal from the heated oxygen sensor 1. The ECM calculates the necessary compensation to correct the offset between the actual and the theoretical ratios.
In case the amount of the compensation value is extremely large (The actual mixture ratio is too lean.), the ECM judges the condition as the fuel injection system malfunction and light up the MIL (2 trip detection logic).

Sensor	Input Signal to ECM	ECM function	Actuator
Heated oxygen sensors 1	Density of oxygen in exhaust gas (Mixture ratio feedback signal)	Fuel injection control	Fuel injectors

DTC No.	Trouble diagnosis name	DTC detecting condition	Possible cause
P0171 0171	Fuel injection system too lean	● Fuel injection system does not operate properly. ● The amount of mixture ratio compensation is too large. (The mixture ratio is too lean.)	● Intake air leaks ● Heated oxygen sensor 1 ● Injectors ● Exhaust gas leaks ● Incorrect fuel pressure ● Lack of fuel ● Mass air flow sensor ● Incorrect PCV hose connection

DTC Confirmation Procedure

UBS002SF

NOTE:
If “DTC Confirmation Procedure” has been previously conducted, always turn ignition switch “OFF” and wait at least 10 seconds before conducting the next test.

WITH CONSULT-II

1. Start engine and warm it up to normal operating temperature.
2. Turn ignition switch “OFF” and wait at least 10 seconds.
3. Turn ignition switch “ON” and select “SELF-LEARNING CONT” in “WORK SUPPORT” mode with CONSULT-II.
4. Clear the self-learning control coefficient by touching “CLEAR”.
5. Select “DATA MONITOR” mode with CONSULT-II.
6. Start engine again and let it idle for at least 10 minutes.
   The 1st trip DTC P0171 should be detected at this stage, if a malfunction exists. If so, go to EC-223, "Diagnostic Procedure" .
7. If it is difficult to start engine at step 6, the fuel injection system has a malfunction, too.
8. Crank engine while depressing accelerator pedal. If engine starts, go to EC-223, "Diagnostic Procedure" . If engine does not start, check exhaust and intake air leak visually.

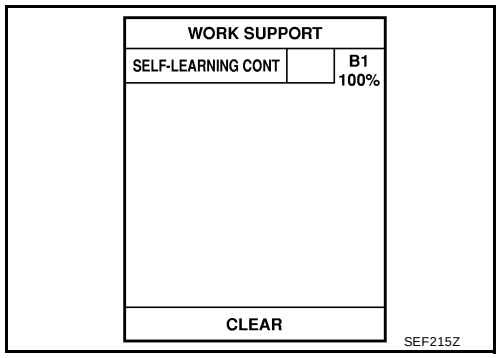

WITH GST

1. Start engine and warm it up to normal operating temperature.
2. Turn ignition switch “OFF” and wait at least 10 seconds.

3. Disconnect mass air flow sensor harness connector. Then restart and run engine for at least 5 seconds at idle speed.
4. Stop engine and reconnect mass air flow sensor harness connector.
5. Select “MODE 3” with GST. Make sure DTC P0102 is detected.
6. Select “MODE 4” with GST and erase the DTC P0102.
7. Start engine again and let it idle for at least 10 minutes.
8. Select “MODE 7” with GST. The 1st trip DTC P0171 should be detected at this stage, if a malfunction exists. If so, go to EC-223, "Diagnostic Procedure" .
9. If it is difficult to start engine at step 7, the fuel injection system has a malfunction.
10. Crank engine while depressing accelerator pedal. If engine starts, go to EC-223, "Diagnostic Procedure" . If engine does not start, check exhaust and intake air leak visually.

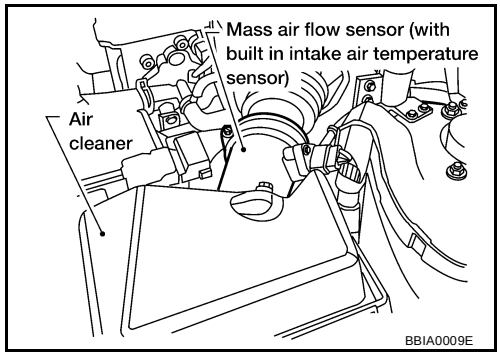

Wiring Diagram

UBS002SG

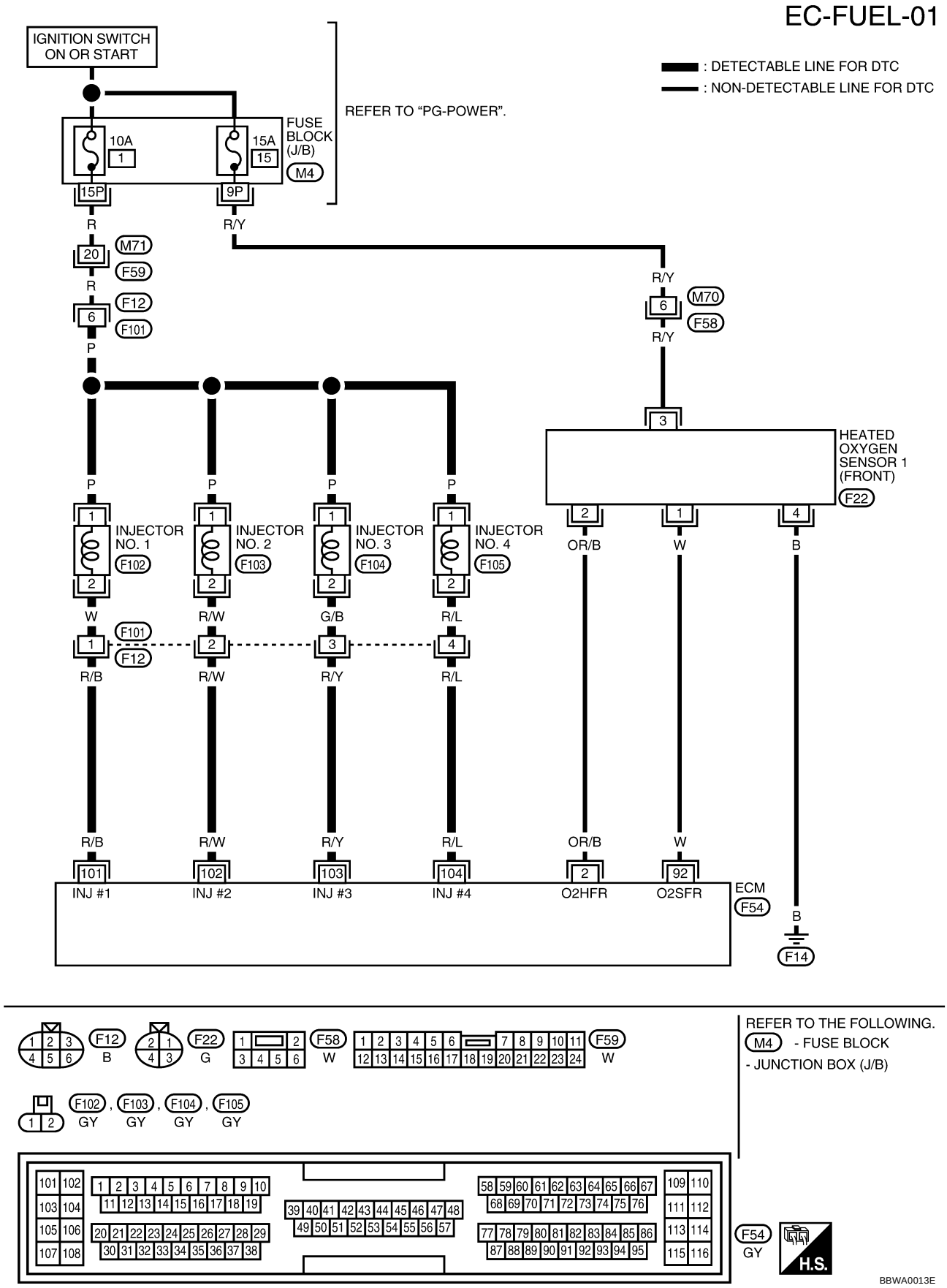

Diagnostic Procedure

UBS002SH

1. CHECK EXHAUST AIR LEAK

1. Start engine and run it at idle.
2. Listen for an exhaust air leak before three way catalyst.

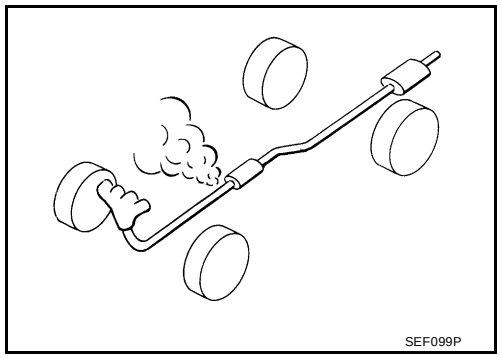

OK or NG

OK >> GO TO 2.
NG >> Repair or replace.

2. CHECK FOR INTAKE AIR LEAK AND PCV HOSE

1. Listen for an intake air leak after the mass air flow sensor.
2. Check PCV hose connection.

OK or NG

OK >> GO TO 3.
NG >> Repair or replace.

3. CHECK HEATED OXYGEN SENSOR 1 CIRCUIT FOR OPEN AND SHORT

1. Turn ignition switch “OFF”.
2. Disconnect corresponding heated oxygen sensor 1 (HO2S1) harness connector.
3. Disconnect ECM harness connector.
4. Check harness continuity between ECM terminal 92 and HO2S1 terminal 1.
   Refer to Wiring Diagram.

   Continuity should exist.

5. Check harness continuity between ECM terminal 92 or HO2S1 terminal 1 and ground.
   Refer to Wiring Diagram.

   Continuity should not exist.

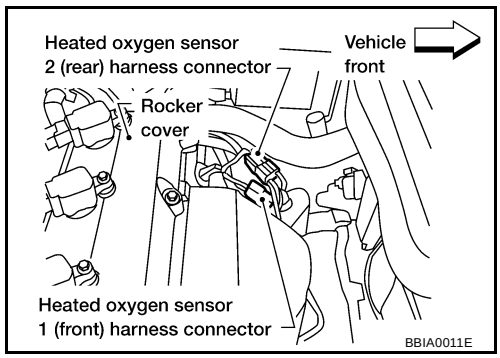

6. Also check harness for short to power.

OK or NG

OK >> GO TO 4.
NG >> Repair open circuit or short to ground or short to power in harness or connectors.

4. CHECK FUEL PRESSURE

1. Release fuel pressure to zero. Refer to EC-51, "FUEL PRESSURE RELEASE" .
2. Install fuel pressure gauge and check fuel pressure. Refer to EC-51, "Fuel Pressure Check" .

   At idling: Approximately 350 kPa (3.7 kg/cm^2 , 51 psi)

OK or NG

OK >> GO TO 5.
NG >> Follow the construction of "FUEL PRESSURE CHECK".

5. CHECK MASS AIR FLOW SENSOR

With CONSULT-II

1. Install all removed parts.
2. Check “MASS AIR FLOW” in “DATA MONITOR” mode with CONSULT-II.

1.0 - 4.0 g·m/sec: at idling

4.0 - 10 g·m/sec: at 2,500 rpm

With GST

1. Install all removed parts.
2. Check mass air flow sensor signal in MODE 1 with GST.

1.0 - 4.0 g·m/sec: at idling

4.0 - 10 g·m/sec: at 2,500 rpm

OK or NG

OK >> GO TO 6.

NG >> Check connectors for rusted terminals or loose connections in the mass air flow sensor circuit or engine grounds. Refer to EC-161, "DTC P0102, P0103 MAF SENSOR" .

6. CHECK FUNCTION OF INJECTORS

With CONSULT-II

1. Start engine.
2. Perform “POWER BALANCE” in “ACTIVE TEST” mode with CONSULT-II.
3. Make sure that each circuit produces a momentary engine speed drop.

ACTIVE TEST	
POWER BALANCE	
MONITOR	
ENG SPEED	XXX rpm
MAS A/F SE-B1	XXX V

PBIB0133E

Without CONSULT-II

1. Start engine.
2. Listen to each injector operating sound.

Clicking noise should be heard.

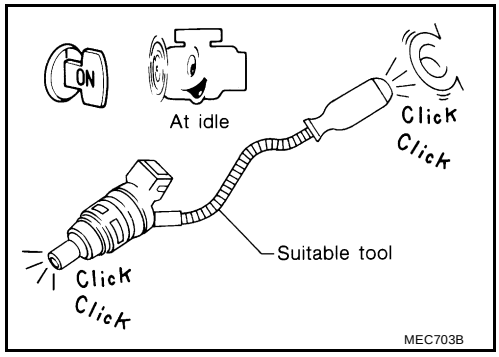

OK or NG

OK >> GO TO 7.

NG >> Perform trouble diagnosis for EC-574, "INJECTOR CIRCUIT" .

7. CHECK INJECTOR

1. Confirm that the engine is cooled down and there are no fire hazards near the vehicle.
2. Turn ignition switch “OFF”.
3. Disconnect injector harness connectors.
4. Remove injector gallery assembly. Refer to EM-29, "FUEL INJECTOR AND FUEL TUBE" .
   Keep fuel hose and all injectors connected to injector gallery.
   The injector harness connectors should remain connected.
5. Disconnect all ignition coil harness connectors.
6. Prepare pans or saucers under each injector.
7. Crank engine for about 3 seconds. Make sure that fuel sprays out from injectors.

Fuel should be sprayed evenly for each injector.

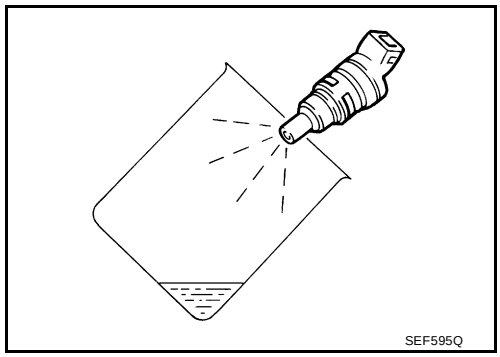

OK or NG

OK >> GO TO 8.
NG >> Replace injectors from which fuel does not spray out. Always replace O-ring with new ones.

8. CHECK INTERMITTENT INCIDENT

Refer to EC-130, "TROUBLE DIAGNOSIS FOR INTERMITTENT INCIDENT" .

>> **INSPECTION END**

DTC P0172 FUEL INJECTION SYSTEM FUNCTION

PFP:16600

On Board Diagnosis Logic

UBS002SI

With the Air/Fuel Mixture Ratio Self-Learning Control, the actual mixture ratio can be brought closely to the theoretical mixture ratio based on the mixture ratio feedback signal from the heated oxygen sensors 1. The ECM calculates the necessary compensation to correct the offset between the actual and the theoretical ratios.
In case the amount of the compensation value is extremely large (The actual mixture ratio is too rich.), the ECM judges the condition as the fuel injection system malfunction and light up the MIL (2 trip detection logic).

Sensor	Input Signal to ECM	ECM function	Actuator
Heated oxygen sensors 1	Density of oxygen in exhaust gas (Mixture ratio feedback signal)	Fuel injection control	Fuel injectors

DTC No.	Trouble diagnosis name	DTC detecting condition	Possible cause
P0172 0172	Fuel injection system too rich	● Fuel injection system does not operate properly. ● The amount of mixture ratio compensation is too large. (The mixture ratio is too rich.)	● Heated oxygen sensor 1 ● Injectors ● Exhaust gas leaks ● Incorrect fuel pressure ● Mass air flow sensor

DTC Confirmation Procedure

UBS002SJ

NOTE:
If “DTC Confirmation Procedure” has been previously conducted, always turn ignition switch “OFF” and wait at least 10 seconds before conducting the next test.

WITH CONSULT-II

1. Start engine and warm it up to normal operating temperature.
2. Turn ignition switch “OFF” and wait at least 10 seconds.
3. Turn ignition switch “ON” and select “SELF-LEARNING CONT” in “WORK SUPPORT” mode with CONSULT-II.
4. Clear the self-learning control coefficient by touching “CLEAR”.
5. Select “DATA MONITOR” mode with CONSULT-II.
6. Start engine again and let it idle for at least 10 minutes.
   The 1st trip DTC P0172 should be detected at this stage, if a malfunction exists. If so, go to EC-229, "Diagnostic Procedure" .
7. If it is difficult to start engine at step 6, the fuel injection system has a malfunction, too.
8. Crank engine while depressing accelerator pedal.
   If engine starts, go to EC-229, "Diagnostic Procedure" . If engine does not start, remove ignition plugs and check for fouling, etc.

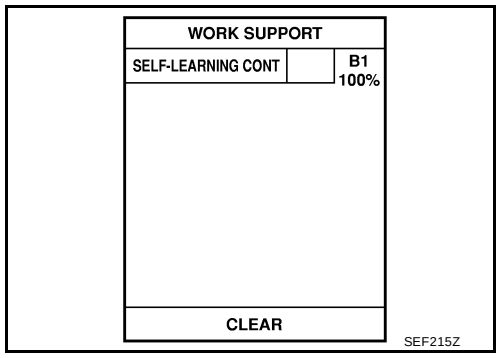

WITH GST

1. Start engine and warm it up to normal operating temperature.
2. Turn ignition switch “OFF” and wait at least 10 seconds.

3. Disconnect mass air flow sensor harness connector. Then restart and run engine for at least 5 seconds at idle speed.
4. Stop engine and reconnect mass air flow sensor harness connector.
5. Select “MODE 3” with GST. Make sure DTC P0102 is detected.
6. Select “MODE 4” with GST and erase the DTC P0102.
7. Start engine again and let it idle for at least 10 minutes.
8. Select “MODE 7” with GST. The 1st trip DTC P0172 should be detected at this stage, if a malfunction exists. If so, go to EC-229, "Diagnostic Procedure" .
9. If it is difficult to start engine at step 7, the fuel injection system has a malfunction.
10. Crank engine while depressing accelerator pedal.
    If engine starts, go to EC-229, "Diagnostic Procedure" . If engine does not start, check exhaust and intake air leak visually.

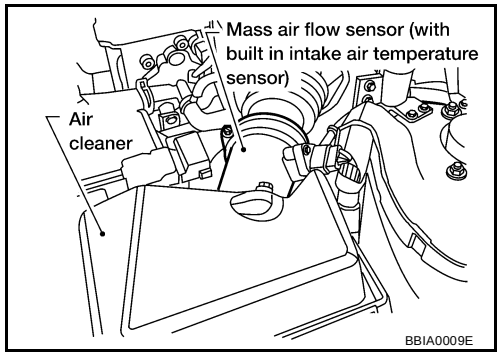

Wiring Diagram

UBS002SK

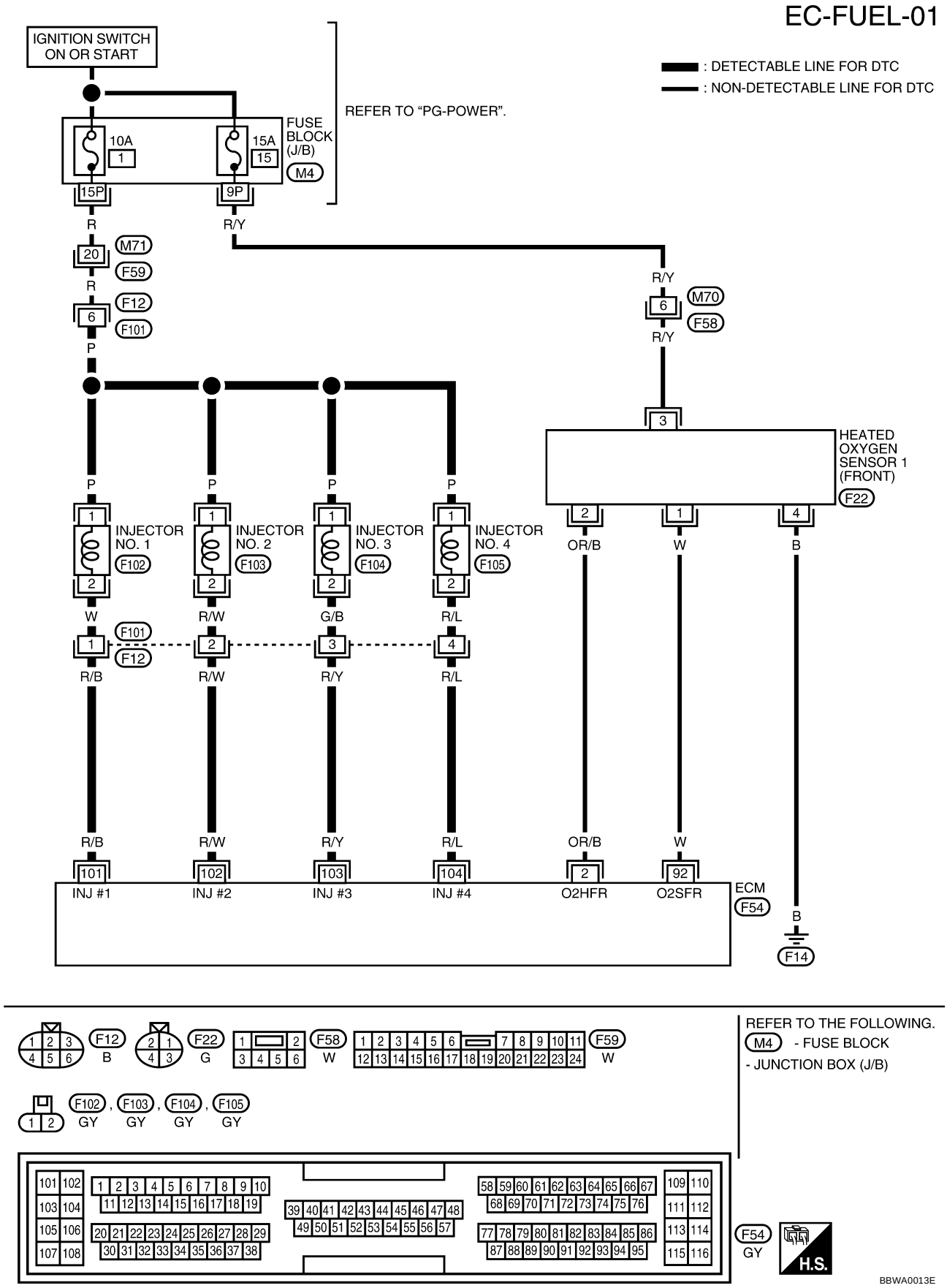

Diagnostic Procedure

UBS002SL

1. CHECK EXHAUST AIR LEAK

1. Start engine and run it at idle.
2. Listen for an exhaust air leak before three way catalyst.

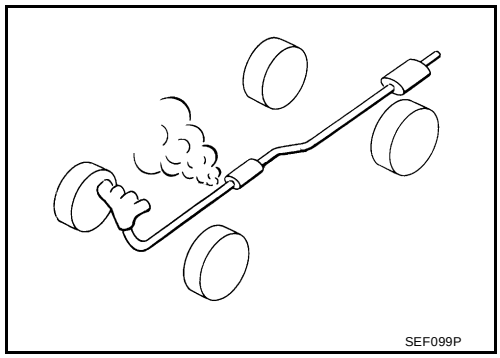

OK or NG

OK >> GO TO 2.
NG >> Repair or replace.

2. CHECK FOR INTAKE AIR LEAK

Listen for an intake air leak after the mass air flow sensor.

OK or NG

OK >> GO TO 3.
NG >> Repair or replace.

3. CHECK HEATED OXYGEN SENSOR 1 CIRCUIT FOR OPEN AND SHORT

1. Turn ignition switch “OFF”.
2. Disconnect corresponding heated oxygen sensor 1 (HO2S1) harness connector.
3. Disconnect ECM harness connector.
4. Check harness continuity between ECM terminal 92 and HO2S1 terminal 1.
   Refer to Wiring Diagram.

   Continuity should exist.

5. Check harness continuity between ECM terminal 92 or HO2S1 terminal 1 and ground.
   Refer to Wiring Diagram.

   Continuity should not exist.

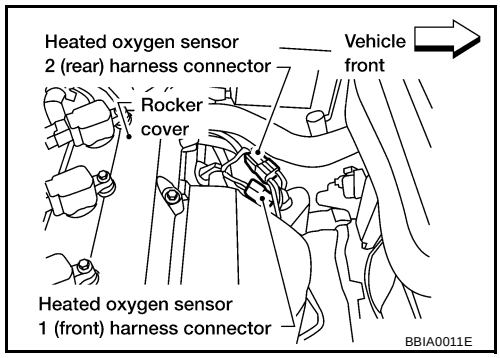

6. Also check harness for short to power.

OK or NG

OK >> GO TO 4.
NG >> Repair open circuit or short to ground or short to power in harness or connectors.

4. CHECK FUEL PRESSURE

1. Release fuel pressure to zero. Refer to EC-51, "FUEL PRESSURE RELEASE" .
2. Install fuel pressure gauge and check fuel pressure. Refer to EC-51, "Fuel Pressure Check" .

   At idling: 350 kPa (3.7 kg/cm2, 51 psi)

OK or NG

OK >> GO TO 5.
NG >> Follow the construction of "FUEL PRESSURE CHECK".

5. CHECK MASS AIR FLOW SENSOR

With CONSULT-II

1. Install all removed parts.
2. Check “MASS AIR FLOW” in “DATA MONITOR” mode with CONSULT-II.

1.0 - 4.0 g·m/sec: at idling
4.0 - 10 g·m/sec: at 2,500 rpm

With GST

1. Install all removed parts.
2. Check mass air flow sensor signal in MODE 1 with GST.

1.0 - 4.0 g·m/sec: at idling
4.0 - 10 g·m/sec: at 2,500 rpm

OK or NG

OK >> GO TO 6.
NG >> Check connectors for rusted terminals or loose connections in the mass air flow sensor circuit or engine grounds. Refer to EC-161, "DTC P0102, P0103 MAF SENSOR" .

6. CHECK FUNCTION OF INJECTORS

With CONSULT-II

1. Start engine.
2. Perform “POWER BALANCE” in “ACTIVE TEST” mode with CONSULT-II.
3. Make sure that each circuit produces a momentary engine speed drop.

ACTIVE TEST	
POWER BALANCE	
MONITOR	
ENG SPEED	XXX rpm
MAS A/F SE-B1	XXX V

PBIB0133E

Without CONSULT-II

1. Start engine.
2. Listen to each injector operating sound.

Clicking noise should be heard.

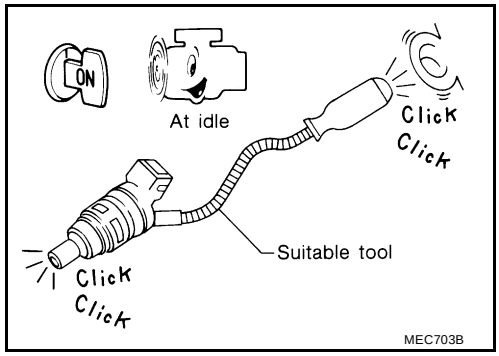

OK or NG

OK >> GO TO 7.
NG >> Perform trouble diagnosis for EC-574, "INJECTOR CIRCUIT" .

7. CHECK INJECTOR

1. Remove injector assembly. Refer to EM-29, "FUEL INJECTOR AND FUEL TUBE" .
   Keep fuel hose and all injectors connected to injector gallery.
2. Confirm that the engine is cooled down and there are no fire hazards near the vehicle.
3. Disconnect injector harness connectors.
   The injector harness connectors should remain connected.
4. Disconnect all ignition coil harness connectors.
5. Prepare pans or saucers under each injectors.
6. Crank engine for about 3 seconds.
   Make sure fuel does not drip from injector.

OK or NG

OK (Does not drip.)>>GO TO 8.
NG (Drips.)>>Replace the injectors from which fuel is dripping. Always replace O-ring with new one.

8. CHECK INTERMITTENT INCIDENT

Refer to EC-130, "TROUBLE DIAGNOSIS FOR INTERMITTENT INCIDENT" .

>> **INSPECTION END**

DTC P0181 FTT SENSOR

PFP:22630

Component Description

UBS002SM

The fuel tank temperature sensor is used to detect the fuel temperature inside the fuel tank. The sensor modifies a voltage signal from the ECM. The modified signal returns to the ECM as the fuel temperature input. The sensor uses a thermistor which is sensitive to the change in temperature. The electrical resistance of the thermistor decreases as temperature increases.

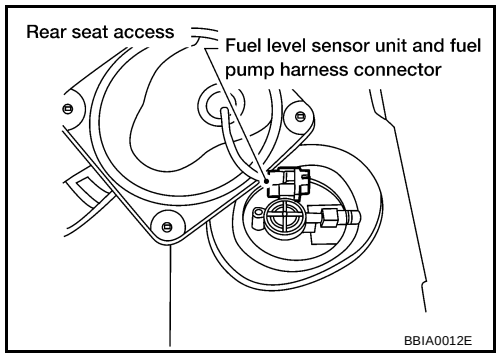

<Reference data>

Fluid temperature °C (°F)	Voltage* V	Resistance kΩ
20 (68)	3.5	2.3 - 2.7
50 (122)	2.2	0.79 - 0.90

*: These data are reference values and are measured between ECM terminal 70 (Fuel tank temperature sensor) and ground.

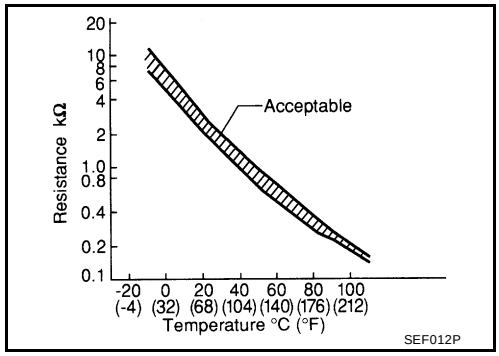

CAUTION:

Do not use ECM ground terminals when measuring input/output voltage. Doing so may lead to ECM's transistor damage. Use ground other than ECM, such as engine ground.

On Board Diagnosis Logic

UBS002SN

DTC No.	Trouble diagnosis name	DTC detecting condition	Possible cause
P0181 0181	Fuel tank temperature sensor circuit range/ performance	Rationally incorrect voltage from the sensor is sent to ECM, compared with the voltage signals from engine coolant temperature sensor and intake air temperature sensor.	● Harness or connectors (The sensor circuit is open or shorted) ● Fuel tank temperature sensor

DTC Confirmation Procedure

UBS002SO

NOTE:

If “DTC Confirmation Procedure” has been previously conducted, always turn ignition switch “OFF” and wait at least 10 seconds before conducting the next test.

WITH CONSULT-II

1. Turn ignition switch “ON”.
2. Select “DATA MONITOR” mode with CONSULT-II.
3. Check “COOLAN TEMP/S” value.
   If “COOLAN TEMP/S” is less than 60°C (140°F), the result will be OK.
   If “COOLAN TEMP/S” is above 60°C (140°F), go to the following step.
4. Cool engine down until “COOLAN TEMP/S” signal is less than 60°C (140°F).
5. Wait at least 10 seconds.
6. If 1st trip DTC is detected, go to EC-233, "Diagnostic Procedure".

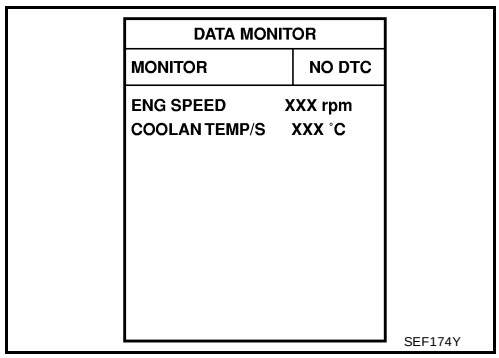

WITH GST

Follow the procedure “WITH CONSULT-II” above.

Diagnostic Procedure

UBS002SP

1. CHECK FUEL TANK TEMPERATURE SENSOR

Refer to EC-233, "Component Inspection" .

OK or NG

OK >> GO TO 2.
NG >> Replace fuel tank temperature sensor.

2. CHECK INTERMITTENT INCIDENT

Perform EC-130, "TROUBLE DIAGNOSIS FOR INTERMITTENT INCIDENT" .
Refer to EC-235, "Wiring Diagram" .

>> **INSPECTION END**

Component Inspection

UBS002SQ

FUEL TANK TEMPERATURE SENSOR

1. Remove fuel level sensor unit.
2. Check resistance between fuel level sensor unit and fuel pump terminals **T** and **E** by heating with hot water or heat gun as shown in the figure.

Temperature °C (°F)	Resistance kΩ
20 (68)	2.3 - 2.7
50 (122)	0.79 - 0.90

If NG, replace fuel level sensor unit.

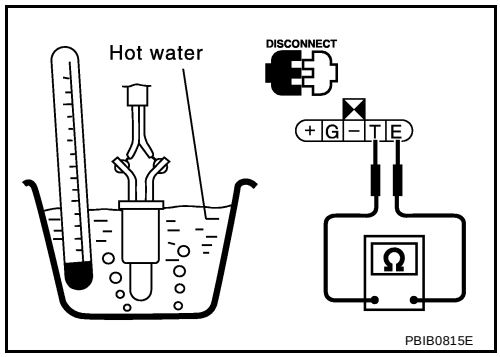

Removal and Installation

UBS002SR

FUEL TANK TEMPERATURE SENSOR

Refer to FL-5, "FUEL LEVEL SENSOR UNIT, FUEL FILTER AND FUEL PUMP ASSEMBLY" .

DTC P0182, P0183 FTT SENSOR

PFP:22630

Component Description

UBS002SS

The fuel tank temperature sensor is used to detect the fuel temperature inside the fuel tank. The sensor modifies a voltage signal from the ECM. The modified signal returns to the ECM as the fuel temperature input. The sensor uses a thermistor which is sensitive to the change in temperature. The electrical resistance of the thermistor decreases as temperature increases.

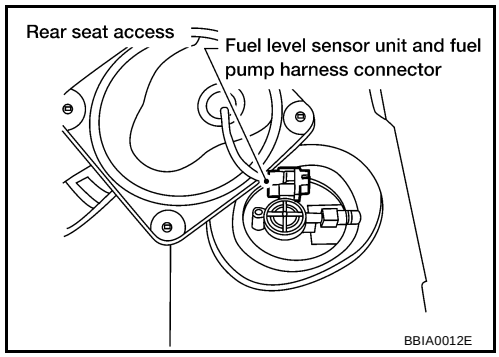

<Reference data>

Fluid temperature °C (°F)	Voltage* V	Resistance kΩ
20 (68)	3.5	2.3 - 2.7
50 (122)	2.2	0.79 - 0.90

*: These data are reference values and are measured between ECM terminal 70 (Fuel tank temperature sensor) and ground.

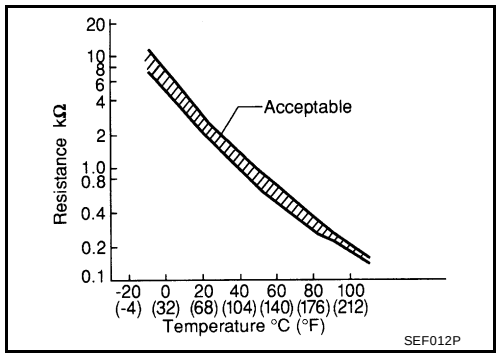

CAUTION:

Do not use ECM ground terminals when measuring input/output voltage. Doing so may lead to ECM's transistor damage. Use ground other than ECM, such as engine ground.

On Board Diagnosis Logic

UBS002ST

DTC No.	Trouble diagnosis name	DTC detecting condition	Possible cause
P0182 0182	Fuel tank temperature sensor circuit low input	An excessively low voltage from the sensor is sent to ECM.	● Harness or connectors (The sensor circuit is open or shorted.) ● Fuel tank temperature sensor
P0183 0183	Fuel tank temperature sensor circuit high input	An excessively high voltage from the sensor is sent to ECM.	

DTC Confirmation Procedure

UBS002SU

NOTE:

If “DTC Confirmation Procedure” has been previously conducted, always turn ignition switch “OFF” and wait at least 10 seconds before conducting the next test.

WITH CONSULT-II

1. Turn ignition switch “ON”.
2. Select “DATA MONITOR” mode with CONSULT-II.
3. Wait at least 5 seconds.
4. If 1st trip DTC is detected, go to EC-236, "Diagnostic Procedure".

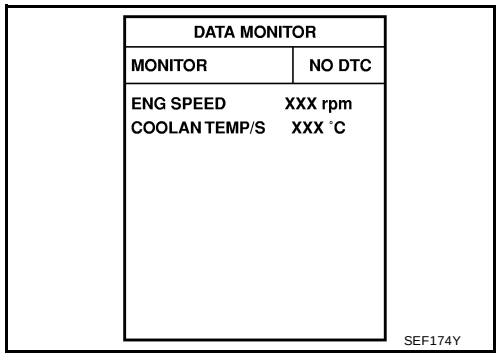

WITH GST

Follow the procedure “WITH CONSULT-II” above.

Wiring Diagram

UBS002SV

EC-FTTS-01

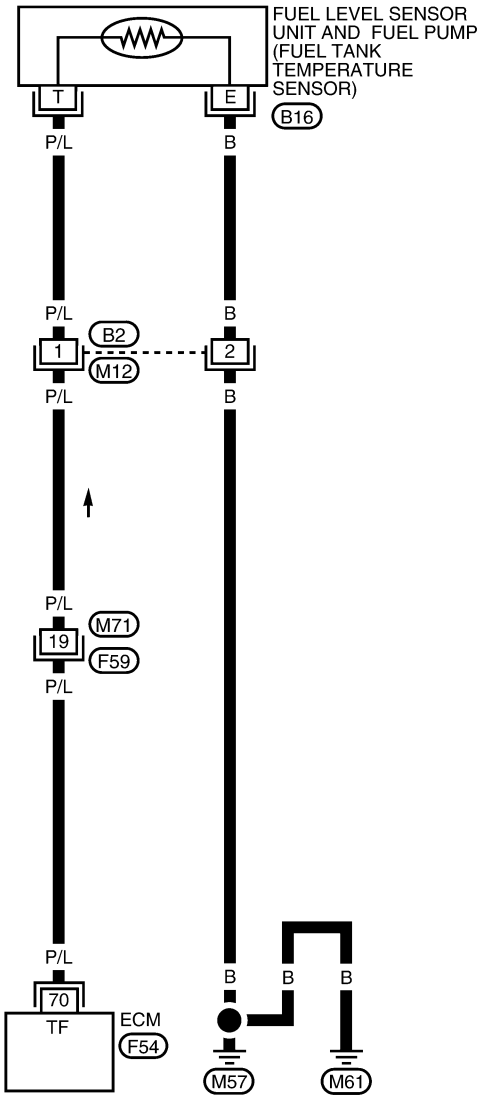

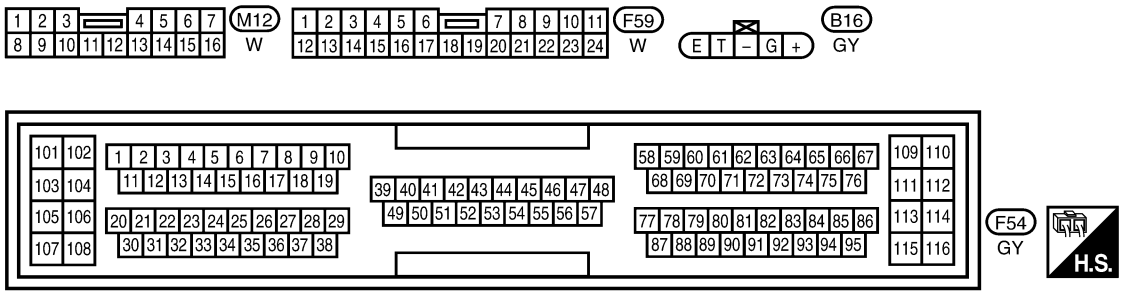

BBWA0014E

Diagnostic Procedure

UBS002SW

1. CHECK POWER SUPPLY

1. Turn ignition switch “OFF”.
2. Disconnect fuel level sensor unit and fuel pump harness connector.
3. Turn ignition switch “ON”.

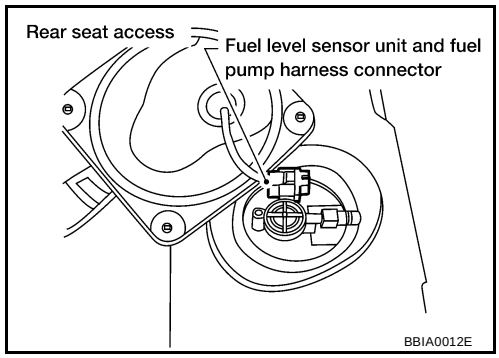

4. Check voltage between fuel level sensor unit and fuel pump terminal **T** and ground with CONSULT-II or tester.

Voltage: Approximately 5V

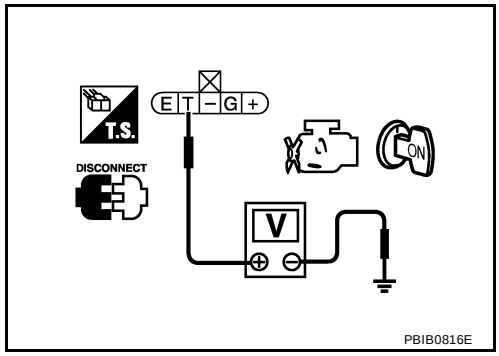

OK or NG

OK >> GO TO 3.
NG >> GO TO 2.

2. DETECT MALFUNCTIONING PART

Check the following.

- Harness connectors B2, M12
- Harness connectors M71, F59
- Harness for open or short between ECM and fuel level sensor unit and fuel pump

>> Repair harness or connector.

3. CHECK GROUND CIRCUIT

1. Turn ignition switch “OFF”.
2. Check harness continuity between fuel level sensor unit and fuel pump terminal **E** and body ground. Refer to Wiring Diagram.

Continuity should exist.

3. Also check harness for short to power.

OK or NG

OK >> GO TO 5.
NG >> GO TO 4.

4. DETECT MALFUNCTIONING PART

Check the following.

- Harness connectors B2, M12
- Harness for open or short between fuel level sensor unit and fuel pump and ground.

>> Repair harness or connector.

5. CHECK FUEL TANK TEMPERATURE SENSOR

Refer to EC-237, "Component Inspection" .

OK or NG

OK >> GO TO 6.
NG >> Replace fuel tank temperature sensor.

6. CHECK INTERMITTENT INCIDENT

Perform EC-130, "TROUBLE DIAGNOSIS FOR INTERMITTENT INCIDENT" .

>> **INSPECTION END**

Component Inspection

UBS002SX

FUEL TANK TEMPERATURE SENSOR

1. Remove fuel level sensor unit.
2. Check resistance between fuel level sensor unit and fuel pump terminals **T** and **E** by heating with hot water or heat gun as shown in the figure.

Temperature °C (°F)	Resistance kΩ
20 (68)	2.3 - 2.7
50 (122)	0.79 - 0.90

If NG, replace fuel level sensor unit.

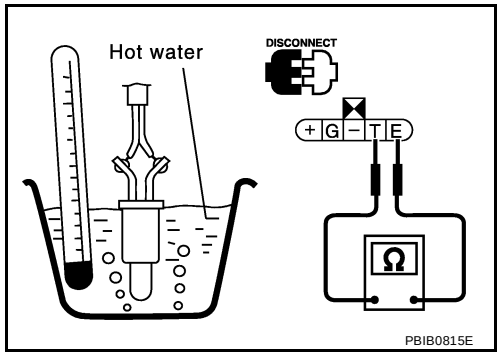

Removal and Installation

UBS002SY

FUEL TANK TEMPERATURE SENSOR

Refer to FL-5, "FUEL LEVEL SENSOR UNIT, FUEL FILTER AND FUEL PUMP ASSEMBLY" .

DTC P0217 COOLANT OVERTEMPERATURE ENRICHMENT PROTECTION

PFP:00019

System Description

UBS002SZ

NOTE:
If DTC P0217 is displayed with DTC U1000 ,U1001, first perform the trouble diagnosis for DTC U1000, U1001. Refer to EC-138, "DTC U1000, U1001 CAN COMMUNICATION LINE" .

COOLING FAN CONTROL

Sensor	Input Signal to ECM	ECM function	Actuator
Vehicle speed sensor	Vehicle speed*	Cooling fan control	Cooling fan relay(s)
Engine coolant temperature sensor	Engine coolant temperature		
Air conditioner switch	Air conditioner “ON” signal*		
Ignition switch	Start signal		
Refrigerant pressure sensor	Refrigerant pressure		

*: These signals are sent to ECM through CAN communication line.

The ECM controls the cooling fan corresponding to the vehicle speed, engine coolant temperature, refrigerant pressure, and air conditioner ON signal. The control system has 3-step control [HIGH/LOW/OFF].
The ECM controls cooling fan relays through CAN communication line.

OPERATION

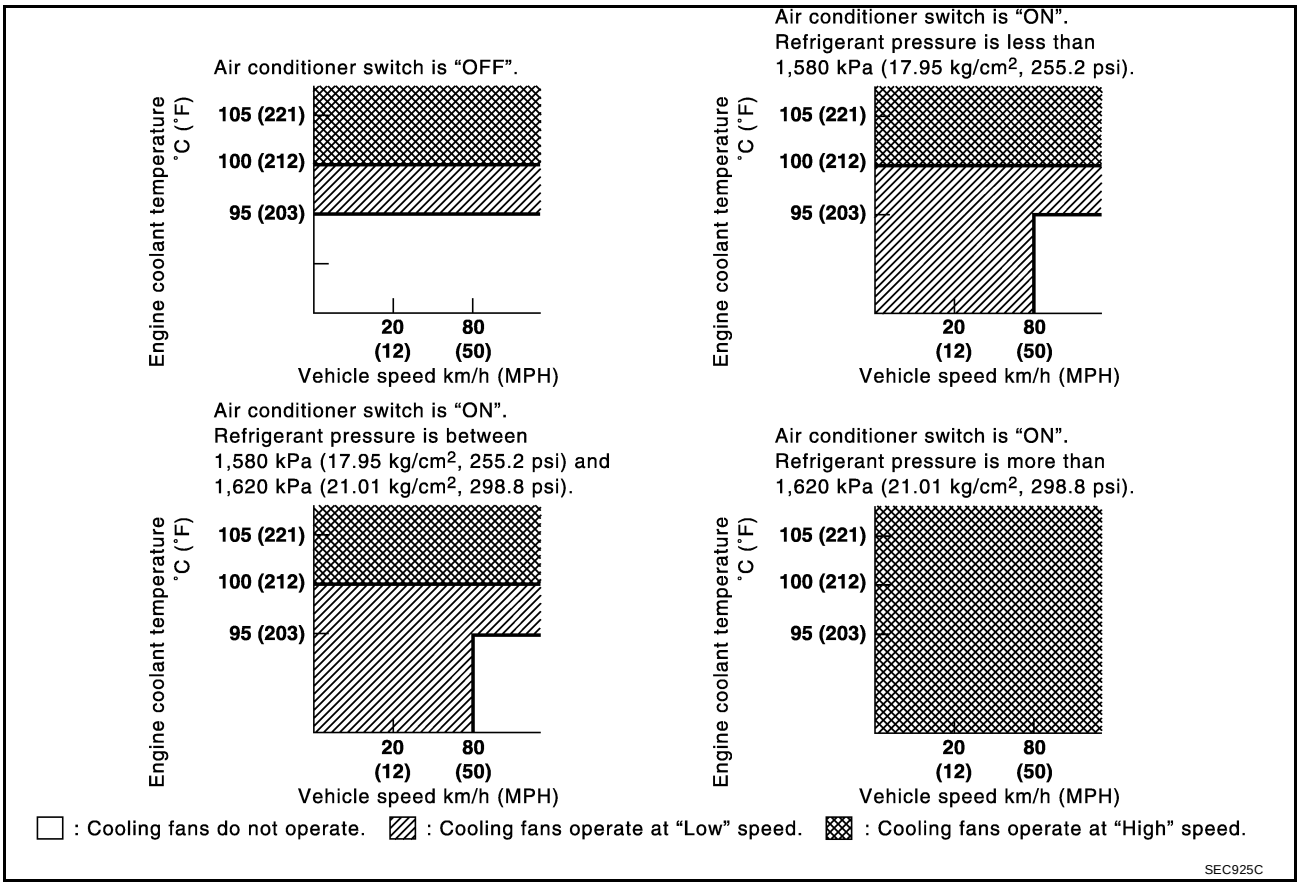

CONSULT-II Reference Value in Data Monitor Mode

UBS002T0

Specification data are reference values.

MONITOR ITEM	CONDITION		SPECIFICATION
AIR COND SIG	● Engine: After warming up, idle the engine	Air conditioner switch: OFF	OFF
		Air conditioner switch: ON (Compressor operates.)	ON

MONITOR ITEM	CONDITION		SPECIFICATION
COOLING FAN	● Engine: After warming up, idle the engine ● Air conditioner switch: OFF	Engine coolant temperature is 94°C (201°F) or less	OFF
		Engine coolant temperature is between 95°C (203°F) and 99°C (210°F)	LOW
		Engine coolant temperature is 100°C (212°F) or more	HIGH

On Board Diagnosis Logic

UBS002T1

This diagnosis checks whether the engine coolant temperature is extraordinary high, even when the load is not heavy.
When malfunction is detected, the malfunction indicator lamp (MIL) will light up even in the first trip.

DTC No.	Trouble diagnosis name	DTC detecting condition	Possible cause
P0217 0217	Engine coolant over temperature condition	Engine coolant temperature is excessively high under normal engine speed.	● Harness or connectors (The cooling fan circuit is open or shorted) ● Cooling fan ● Thermostat ● Improper ignition timing ● Engine coolant temperature sensor ● Blocked radiator ● Blocked front end (Improper fitting of nose mask) ● Crushed vehicle frontal area (Vehicle frontal is collided but not repaired) ● Blocked air passage by improper installation of front fog lamp or fog lamps ● Improper mixture ratio of coolant ● Damaged bumper For more information, refer to EC-248, "Main 12 Causes of Overheating" .

CAUTION:
When a malfunction is indicated, be sure to replace the coolant. Refer to MA-14, "Changing Engine Coolant" . Also, replace the engine oil. Refer to LU-7, "Changing Engine Oil" .

1. **Fill radiator with coolant up to specified level with a filling speed of 2 liters per minute. Be sure to use coolant with the proper mixture ratio. Refer to MA-13, "ANTI-FREEZE COOLANT MIXTURE RATIO" .**
2. **After refilling coolant, run engine to ensure that no water-flow noise is emitted.**

Overall Function Check

UBS002T2

Use this procedure to check the overall function of the coolant overtemperature enrichment protection check, a DTC might not be confirmed.

WARNING:
Never remove the radiator cap when the engine is hot. Serious burns could be caused by high-pressure fluid escaping from the radiator.
Wrap a thick cloth around the cap. Carefully remove the cap by turning it a quarter turn to allow built-up pressure to escape. Then turn the cap all the way off.

WITH CONSULT-II

1. Check the coolant level and mixture ratio (using coolant tester) in the reservoir tank and radiator.
Allow engine to cool before checking coolant level and mixture ratio.
   - If the coolant level in the reservoir and/or radiator is below the proper range, go to EC-243, "Diagnostic Procedure" .
   - If the coolant mixture ratio is out of the range of 45 to 55%, replace the coolant in the following procedure MA-14, "Changing Engine Coolant" .

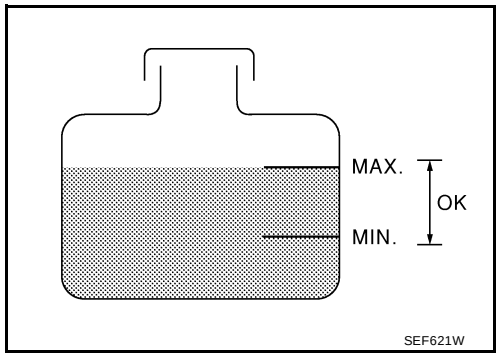

a. Fill radiator with coolant up to specified level with a filling speed of 2 liters per minute like pouring coolant from a kettle. Be sure to use coolant with the proper mixture ratio. Refer to MA-13, "ANTI-FREEZE COOLANT MIXTURE RATIO" .

b. After refilling coolant, run engine to ensure that no water-flow noise is emitted.

c. After checking or replacing coolant, go to step 3 below.

2. Ask the customer if engine coolant has been added. If it has been added, go to EC-243, "Diagnostic Procedure" . After repair, go to the next step.

3. Start engine and let it idle.

4. Make sure that A/C switch is “OFF” and air conditioner is not operating. If NG, check air conditioner circuit. Refer to MTC-28, "TROUBLE DIAGNOSIS" . After repair, go to the next step.

5. Perform “ENG COOLANT TEMP” in “ACTIVE TEST” mode with CONSULT-II at idle.

a. Set “ENG COOLANT TEMP” to 95°C (203°F) and make sure that cooling fan operates at low speed.
If NG, go to EC-243, "Diagnostic Procedure" .

b. Set “ENG COOLANT TEMP” to 100°C (212°F) and make sure that cooling fan operates at high speed. If NG, go to EC-243, "Diagnostic Procedure" . After repair, go to the next step.

6. Check for blocked coolant passage.

a. Warm up engine to normal operating temperature, then grasp radiator upper hose and lower hose and make sure that coolant flows.
If NG, go to EC-243, "Diagnostic Procedure" . After repair, go to the next step.
Be extremely careful not to touch any moving or adjacent parts.

7. Check for blocked radiator air passage.

a. When market fog lamps have been installed, check for damaged fans and clogging in the condenser and radiator.

b. Check the front end for clogging caused by insects or debris.

c. Check for improper fitting of front-end cover, damaged radiator grille or bumper, damaged vehicle front.
If NG, take appropriate action and then go to the next step.

8. Check function of ECT sensor.
Refer to EC-176, "Component Inspection" .
If NG, replace ECT sensor and go to the next step.

9. Check ignition timing. Refer to EC-84, "Basic Inspection" .
Make sure that ignition timing is 15°±5° at idle.
If NG, refer to EC-84, "Basic Inspection" , and then recheck.

WITH GST

1. Check the coolant level and mixture ratio (using coolant tester) in the reservoir tank and radiator.
Allow engine to cool before checking coolant level and mixture ratio.
   - If the coolant level in the reservoir and/or radiator is below the proper range, and go to EC-243, "Diagnostic Procedure" .
   - If the coolant mixture ratio is out of the range of 45 to 55%, replace the coolant in the following procedure MA-14, "Changing Engine Coolant" .

a. Fill radiator with coolant up to specified level with a filling speed of 2 liters per minute like pouring coolant from a kettle. Be sure to use coolant with the proper mixture ratio. Refer to MA-13, "ANTI-FREEZE COOLANT MIXTURE RATIO" .

b. After refilling coolant, run engine to ensure that no water-flow noise is emitted.

c. After checking or replacing coolant, go to step 3 below.

2. Ask the customer if engine coolant has been added. If it has been added, go to EC-243, "Diagnostic Procedure" . After repair, go to the next step.
3. Start engine and let it idle.
4. Make sure that A/C switch is “OFF” and air conditioner is not operating. If NG, check air conditioner circuit. Refer to MTC-28, "TROUBLE DIAGNOSIS" . After repair, go to the next step.
5. Turn ignition switch “OFF”.
6. Disconnect engine coolant temperature sensor harness connector.
7. Connect 150Ω resistor to engine coolant temperature sensor.
8. Start engine and make sure that cooling fan operates.
   Be careful not to overheat engine.
   If NG, go to EC-243, "Diagnostic Procedure" . After repair, go to the next step.
9. Check for blocked coolant passage.

a. Warm up engine to normal operating temperature, then grasp radiator upper hose and lower hose and make sure that coolant flows.
   If NG, go to EC-243, "Diagnostic Procedure" . After repair, go to the next step.
   Be extremely careful not to touch any moving or adjacent parts.

10. Check for blocked radiator air passage.

a. When market fog lamps have been installed, check for damaged fans and clogging in the condenser and radiator.

b. Check the front end for clogging caused by insects or debris.

c. Check for improper fitting of front-end cover, damaged radiator grille or bumper, damaged vehicle front.
   If NG, take appropriate action and then go to the next step.

11. Check function of ECT sensor.
    Refer to EC-176, "Component Inspection" .
    If NG, replace ECT sensor and go to the next step.
12. Check ignition timing. Refer to EC-84, "Basic Inspection" .
    Make sure that ignition timing is 15°±5° at idle.
    If NG, refer to EC-84, "Basic Inspection" , and then recheck.

Wiring Diagram

UBS002T3

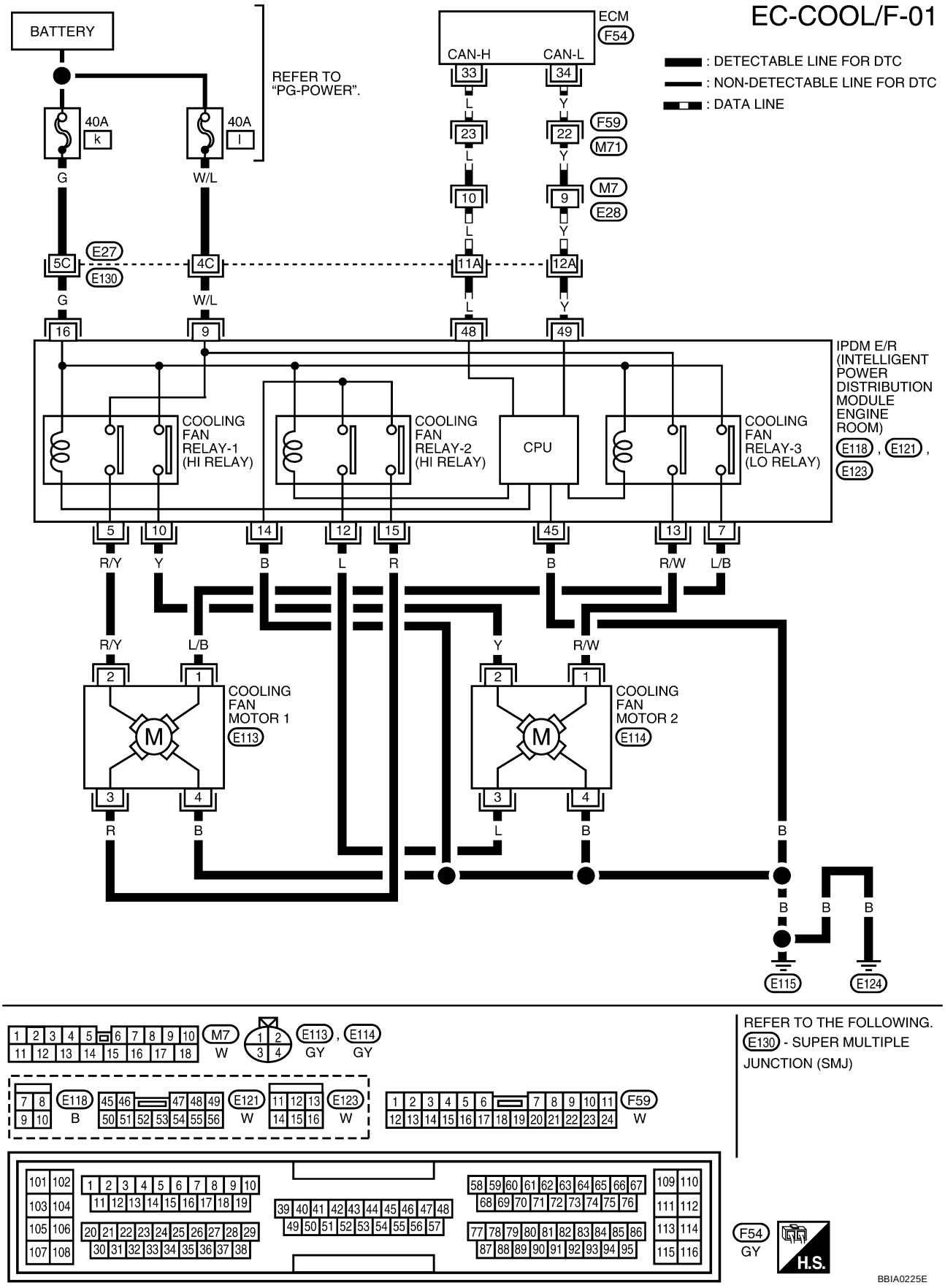

Diagnostic Procedure

UBS002T4

1. INSPECTION START

Do you have CONSULT-II?

Yes or No

Yes >> GO TO 2.
No >> GO TO 4.

2. CHECK COOLING FAN LOW SPEED OPERATION

With CONSULT-II

1. Start engine and let it idle.
2. Select “COOLING FAN” in “ACTIVE TEST” mode with CONSULT-II and touch "LOW" on the CONSULT-II screen.
3. Make sure that cooling fans-1 and -2 operate at low speed.

OK or NG

OK >> GO TO 3.
NG >> Check cooling fan low speed control circuit. (Go to EC-246, "PROCEDURE A" .)

ACTIVE TEST	
COOLING FAN	LOW
MONITOR	
COOLAN TEMP/S	XXX °C

SEF784Z

3. CHECK COOLING FAN HIGH SPEED OPERATION

With CONSULT-II

1. Touch "HIGH" on the CONSULT-II screen.
2. Make sure that cooling fans-1 and -2 operate at higher speed than low speed.

OK or NG

OK >> GO TO 6.
NG >> Check cooling fan high speed control circuit. (Go to EC-248, "PROCEDURE B" .)

ACTIVE TEST	
COOLING FAN	HIGH
MONITOR	
COOLAN TEMP/S	XXX °C

SEF785Z

4. CHECK COOLING FAN LOW SPEED OPERATION

Without CONSULT-II

1. Start engine and let it idle.
2. Turn air conditioner switch “ON”.
3. Turn blower fan switch “ON”.
4. Make sure that cooling fans-1 and -2 operate at low speed.

OK or NG

OK >> GO TO 5.
NG >> Check cooling fan low speed control circuit. (Go to EC-246, "PROCEDURE A" .)

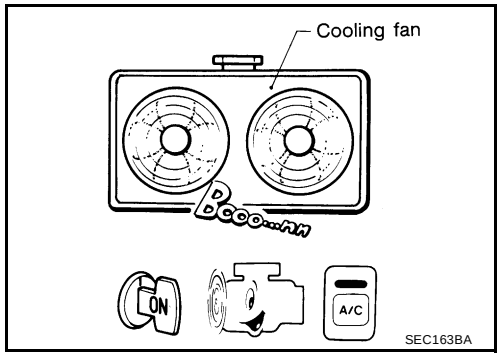

SEC163BA

5. CHECK COOLING FAN HIGH SPEED OPERATION

Without CONSULT-II

1. Turn ignition switch “OFF”.
2. Turn air conditioner switch and blower fan switch “OFF”.
3. Disconnect engine coolant temperature sensor harness connector.
4. Connect 150Ω resistor to engine coolant temperature sensor harness connector.
5. Restart engine and make sure that cooling fans-1 and -2 operate at higher speed than low speed.

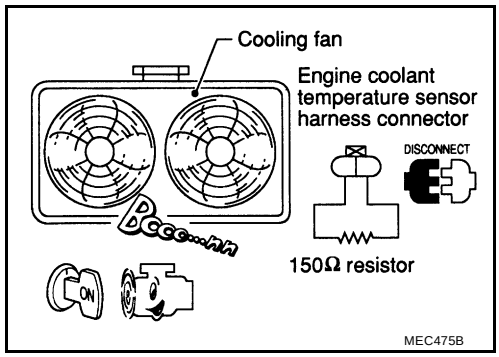

OK or NG

OK >> GO TO 6.
NG >> Check cooling fan high speed control circuit. (Go to EC-248, "PROCEDURE B" .)

6. CHECK COOLING SYSTEM FOR LEAK

Apply pressure to the cooling system with a tester, and check if the pressure drops.

Testing pressure: 157 kPa (1.6 kg/cm^2 , 23 psi)

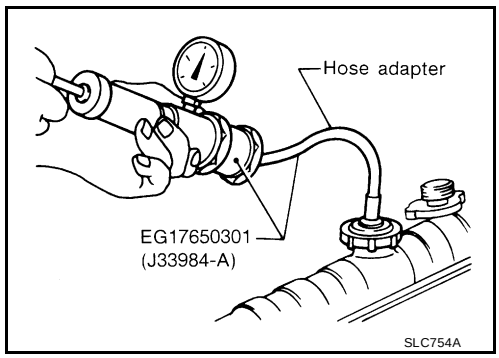

CAUTION:
Higher than the specified pressure may cause radiator damage. Pressure should not drop.

OK or NG

OK >> GO TO 7.
NG >> Check the following for leak.
- Hose
- Radiator
- Water pump
  Refer to CO-18, "WATER PUMP" .

7. CHECK RADIATOR CAP

Apply pressure to cap with a tester.

Radiator cap relief pressure: 59 - 98 kPa (0.6 - 1.0 kg/cm^2 , 9 - 14 psi)

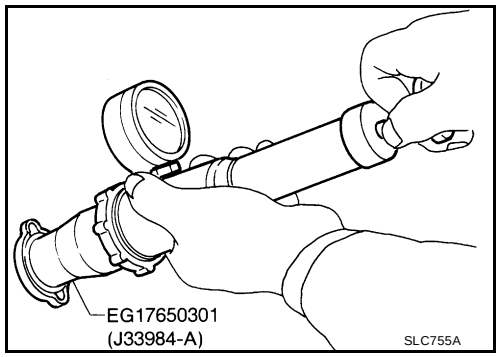

OK or NG

OK >> GO TO 8.
NG >> Replace radiator cap.

8. CHECK THERMOSTAT

1. Check valve seating condition at normal room temperatures.
   It should seat tightly.
2. Check valve opening temperature and valve lift.

   Valve opening temperature: 82°C (180°F) [standard]
   Valve lift: More than 8 mm/95°C (0.31 in/203°F)

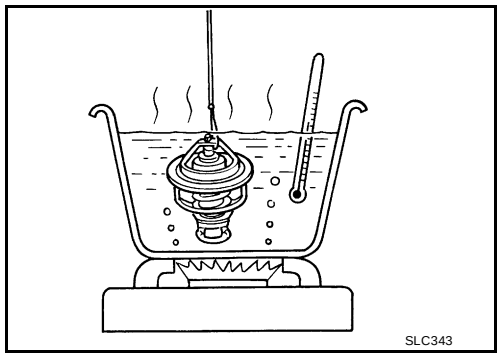

3. Check if valve is closed at 5°C (9°F) below valve opening temperature.

For details, refer to CO-20, "THERMOSTAT AND THERMOSTAT HOUSING" .

OK or NG

OK >> GO TO 9.
NG >> Replace thermostat.

9. CHECK ENGINE COOLANT TEMPERATURE SENSOR

Refer to EC-176, "Component Inspection" .

OK or NG

OK >> GO TO 10.
NG >> Replace engine coolant temperature sensor.

10. CHECK MAIN 12 CAUSES

If the cause cannot be isolated, go to EC-248, "Main 12 Causes of Overheating" .

>> **INSPECTION END**

PROCEDURE A

1. CHECK POWER SUPPLY CIRCUIT

1. Turn ignition switch “OFF”.
2. Disconnect IPDM E/R harness connectors E118 and E123.
3. Check voltage between IPDM E/R terminals 9, 16 and ground with CONSULT-II or tester.

Voltage: Battery voltage

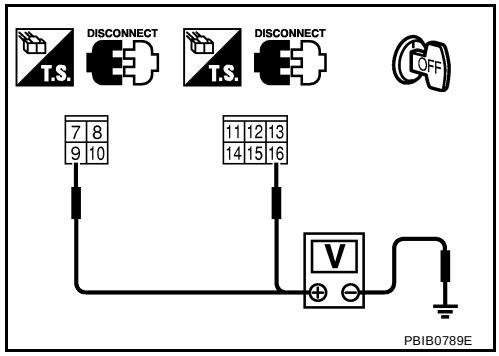

OK or NG

OK >> GO TO 3.
NG >> GO TO 2.

2. DETECT MALFUNCTIONING PART

Check the following.

- 40A fusible links
- Harness connectors E27, E130
- Harness for open or short between IPDM E/R and battery

>> Repair open circuit or short to ground or short to power in harness or connectors.

3. CHECK COOLING FAN MOTORS CIRCUIT

1. Disconnect cooling fan motor-1 harness connector and cooling fan motor-2 harness connector.
2. Check harness continuity between cooling fan motor-1 terminal 1 and IPDM E/R terminal 7, cooling fan motor-1 terminal 4 and body ground.
   Refer to wiring diagram.

Continuity should exist.

3. Also check harness for short to ground and short to power.
4. Check harness continuity between cooling fan motor-2 terminal 1 and IPDM E/R terminal 13, cooling fan motor-2 terminal 4 and body ground.
   Refer to wiring diagram.

Continuity should exist.

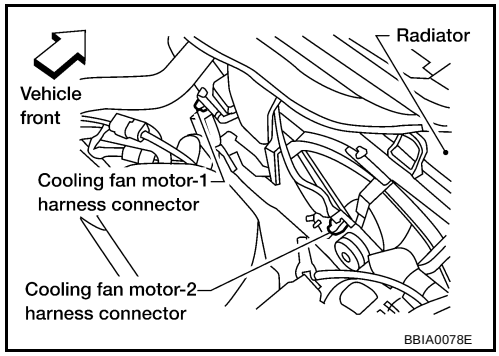

5. Also check harness for short to ground and short to power.

OK or NG

OK >> GO TO 4.
NG >> Repair open circuit or short to ground or short to power in harness or connectors.

4. CHECK COOLING FAN MOTORS

Refer to EC-249, "COOLING FAN MOTORS-1 AND -2" .

OK or NG

OK >> GO TO 5.
NG >> Replace cooling fan motors.

5. CHECK INTERMITTENT INCIDENT

Perform EC-130, "TROUBLE DIAGNOSIS FOR INTERMITTENT INCIDENT" .

OK or NG

OK >> Replace IPDM E/R. Refer to PG-14, "IPDM E/R (INTELLIGENT POWER DISTRIBUTION MODULE ENGINE ROOM)" .

NG >> Repair or replace harness or connector.

PROCEDURE B

1. CHECK COOLING FAN MOTORS CIRCUIT

1. Turn ignition switch “OFF”.
2. Disconnect cooling fan motor-1 harness connector and cooling fan motor-2 harness connector.
3. Check harness continuity between the following;
   cooling fan motor-1 terminal 2 and IPDM E/R terminal 5,
   cooling fan motor-1 terminal 3 and IPDM E/R terminal 15,
   IPDM E/R terminal 14 and body ground.
   Refer to wiring diagram.

   Continuity should exist.

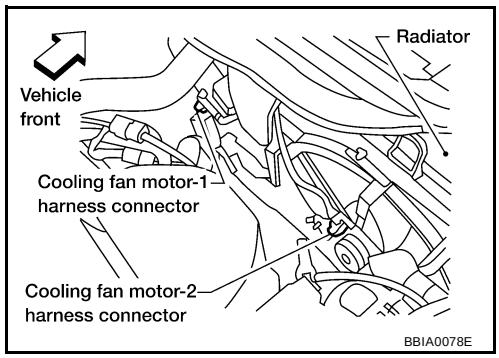

4. Also check harness for short to ground and short to power.
5. Check harness continuity between the following;
   cooling fan motor-2 terminal 2 and IPDM E/R terminal 10,
   cooling fan motor-2 terminal 3 and IPDM E/R terminal 12,
   IPDM E/R terminal 14 and body ground.
   Refer to wiring diagram.

   Continuity should exist.

6. Also check harness for short to ground and short to power.

OK or NG

OK >> GO TO 2.
NG >> Repair open circuit or short to ground or short to power in harness or connectors.

2. CHECK COOLING FAN MOTORS

Refer to EC-249, "Component Inspection" .

OK or NG

OK >> GO TO 3.
NG >> Replace cooling fan motors.

3. CHECK INTERMITTENT INCIDENT

Perform EC-130, "TROUBLE DIAGNOSIS FOR INTERMITTENT INCIDENT" .

OK or NG

OK >> Replace IPDM E/R. Refer to PG-14, "IPDM E/R (INTELLIGENT POWER DISTRIBUTION MODULE ENGINE ROOM)" .
NG >> Repair or replace harness connectors.

Main 12 Causes of Overheating

UBS002T5

Engine	Step	Inspection item	Equipment	Standard	Reference page
OFF	1	● Blocked radiator ● Blocked condenser ● Blocked radiator grille ● Blocked bumper	● Visual	No blocking	—
	2	● Coolant mixture	● Coolant tester	50 - 50% coolant mixture	See MA-13, "ANTI-FREEZE COOLANT MIXTURE RATIO" .
	3	● Coolant level	● Visual	Coolant up to MAX level in reservoir tank and radiator filler neck	See MA-14, "Changing Engine Coolant" .
	4	● Radiator cap	● Pressure tester	59 - 98 kPa (0.6 - 1.0 kg/cm^2 , 9 - 14 psi) (Limit)	See CO-11, "CHECKING RADIATOR CAP" .

Engine	Step	Inspection item	Equipment	Standard	Reference page
ON*2	5	● Coolant leaks	● Visual	No leaks	See CO-10, "CHECKING COOLING SYSTEM FOR LEAKS" .
ON*2	6	● Thermostat	● Touch the upper and lower radiator hoses	Both hoses should be hot	See CO-20, "THERMO-STAT AND THERMO-STAT HOUSING" , and CO-12, "RADIATOR" .
ON*1	7	● Cooling fan	● CONSULT-II	Operating	See trouble diagnosis for DTC P0217 (EC-238).
OFF	8	● Combustion gas leak	● Color checker chemical tester 4 Gas analyzer	Negative	—
ON*3	9	● Coolant temperature gauge	● Visual	Gauge less than 3/4 when driving	—
		● Coolant overflow to reservoir tank	● Visual	No overflow during driving and idling	See MA-14, "Changing Engine Coolant" .
OFF*4	10	● Coolant return from reservoir tank to radia-tor	● Visual	Should be initial level in reservoir tank	See CO-10, "CHECKING RESERVOIR LEVEL" .
OFF	11	● Cylinder head	● Straight gauge feeler gauge	0.1 mm (0.004 in) Maxi-mum distortion (warping)	See EM-53, "CYLINDER HEAD" .
	12	● Cylinder block and pis-tons	● Visual	No scuffing on cylinder walls or piston	See EM-53, "CYLINDER HEAD" .

*1: Turn the ignition switch ON.
*2: Engine running at 3,000 rpm for 10 minutes.
*3: Drive at 90 km/h (55 MPH) for 30 minutes and then let idle for 10 minutes.
*4: After 60 minutes of cool down time.
For more information, refer to CO-7, "OVERHEATING CAUSE ANALYSIS" .

Component Inspection

UBS002T6

COOLING FAN MOTORS-1 AND -2

1. Disconnect cooling fan motor harness connectors.
2. Supply cooling fan motor terminals with battery voltage and check operation.

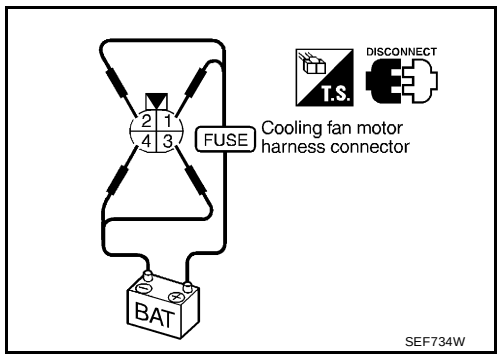

	Speed	Terminals	
		(+)	(–)
Cooling fan motor	Low	1	4
	High	1, 2	3, 4

Cooling fan motor should operate.
If NG, replace cooling fan motor.

DTC P0221 TP SENSOR

PFP:16119

Component Description

UBS002T7

Electric Throttle Control Actuator consists of throttle control motor, throttle position sensor, etc. The throttle position sensor responds to the throttle valve movement.
The throttle position sensor has the two sensors. These sensors are a kind of potentiometers which transform the throttle valve position into output voltage, and emit the voltage signal to the ECM. In addition, these sensors detect the opening and closing speed of the throttle valve and feed the voltage signals to the ECM. The ECM judges the current opening angle of the throttle valve from these signals and the ECM controls the throttle control motor to make the throttle valve opening angle properly in response to driving condition.

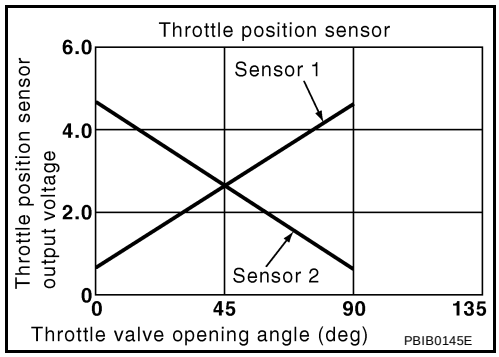

CONSULT-II Reference Value in Data Monitor Mode

UBS002T8

Specification data are reference values.

MONITOR ITEM	CONDITION		SPECIFICATION
THRTL SEN1 THRTL SEN2	● Ignition switch: ON (Engine stopped) ● Shift lever: D (A/T model) 1st (M/T model)	Accelerator pedal: Fully released	More than 0.36V
		Accelerator pedal: Fully depressed	Less than 4.75V

On Board Diagnosis Logic

UBS002T9

This self-diagnosis has the one trip detection logic.

DTC No.	Trouble diagnosis name	DTC detecting condition	Possible cause
P0221 0221	Throttle position sensor circuit range/performance problem	Rationally incorrect voltage is sent to ECM compared with the signals from TP sensor 1 and TP sensor 2.	● Harness or connector (The TP sensor 1 and 2 circuit is open or shorted.) ● Electric throttle control actuator (TP sensor 1 and 2)

FAIL-SAFE MODE

When the malfunction is detected, the ECM enters fail-safe mode and the MIL lights up.

Engine operation condition in fail-safe mode
The ECM controls the electric throttle control actuator in regulating the throttle opening in order for the idle position to be within +10 degrees. The ECM regulates an opening speed of approx. 5 seconds to an opening of 10 degrees. So, the acceleration will be poor.

DTC Confirmation Procedure

UBS002TA

NOTE:
If “DTC Confirmation Procedure” has been previously conducted, always turn ignition switch “OFF” and wait at least 10 seconds before conducting the next test.
TESTING CONDITION:
Before performing the following procedure, confirm that battery voltage is more than 10V at idle.

WITH CONSULT-II

1. Turn ignition switch “ON”.

2. Select "DATA MONITOR" mode with CONSULT-II.
3. Start engine and let it idle for 1 second.
4. If DTC is detected, go to EC-253, "Diagnostic Procedure" .

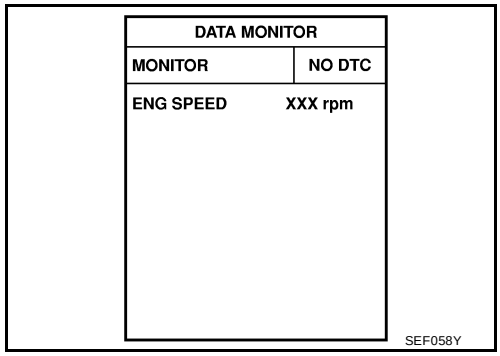

WITH GST

Follow the procedure “WITH CONSULT-II” above.

Wiring Diagram

UBS002TB

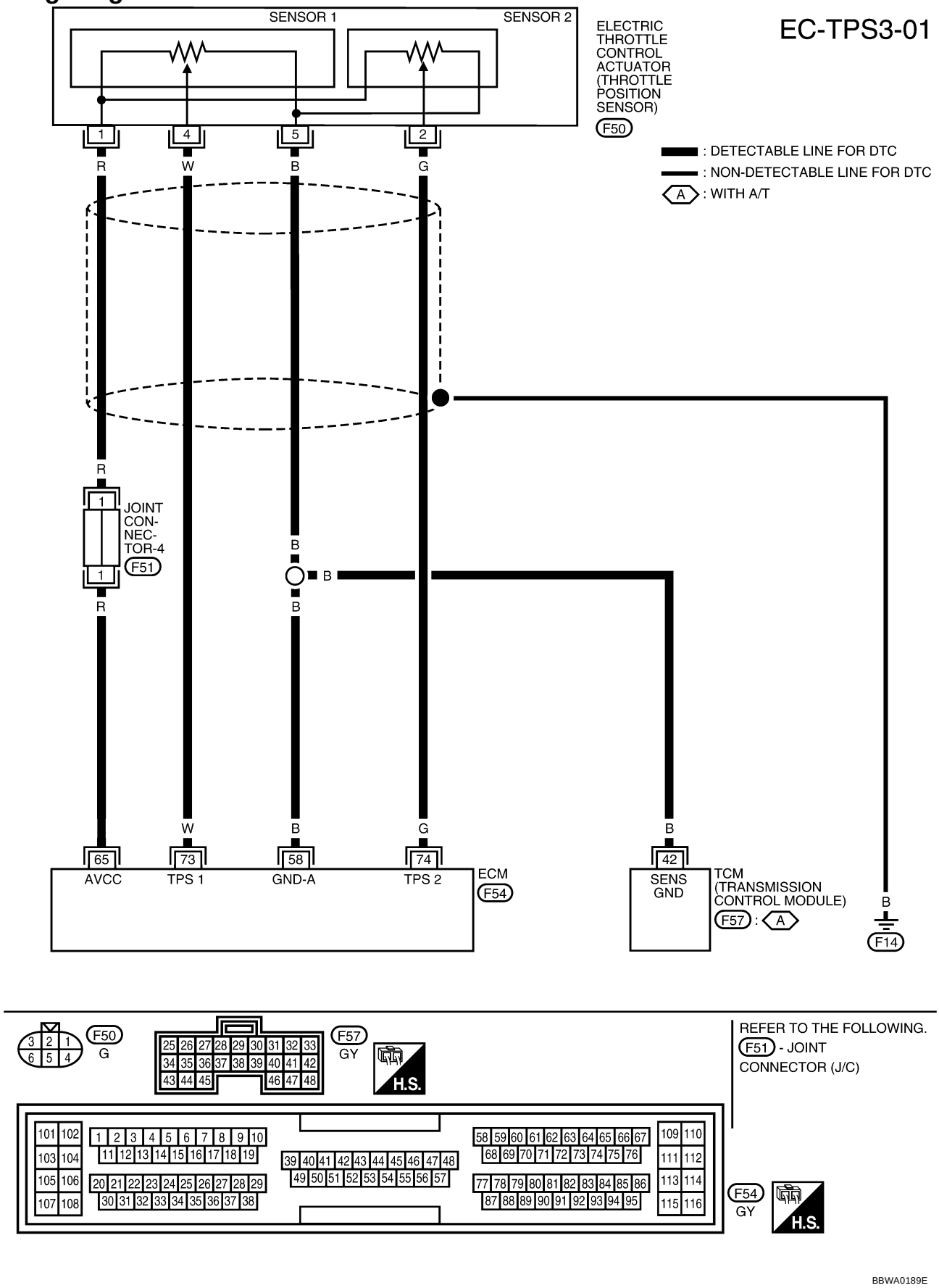

Specification data are reference values and are measured between each terminal and ground.

CAUTION:

Do not use ECM ground terminals when measuring input/output voltage. Doing so may result in damage to the ECM's transistor. Use a ground other than ECM terminals, such as the ground.

TERMINAL NO.	WIRE COLOR	ITEM	CONDITION	DATA (DC Voltage)
58	B	Sensors' ground	**[Engine is running]** ● **Warm-up condition** ● Idle speed	Approximately 0V
65	R	Sensor's power supply	**[Ignition switch "ON"]**	Approximately 5V
73	W	Throttle position sensor 1	**[Ignition switch "ON"]** ● Shift lever position is "D" (A/T model) ● Shift lever position is "1st" (M/T model) ● Accelerator pedal fully released	More than 0.36V
			[Ignition switch "ON"] ● Shift lever position is "D" (A/T model) ● Shift lever position is "1st" (M/T model) ● Accelerator pedal fully depressed	Less than 4.75V
74	G	Throttle position sensor 2	**[Ignition switch "ON"]** ● Shift lever position is "D" (A/T model) ● Shift lever position is "1st" (M/T model) ● Accelerator pedal fully released	Less than 4.75V
			[Ignition switch "ON"] ● Shift lever position is "D" (A/T model) ● Shift lever position is "1st" (M/T model) ● Accelerator pedal fully depressed	More than 0.36V

Diagnostic Procedure

UBS002TC

1. RETIGHTEN GROUND SCREWS

1. Turn ignition switch "OFF".
2. Loosen and retighten engine ground screws.

>> GO TO 2.

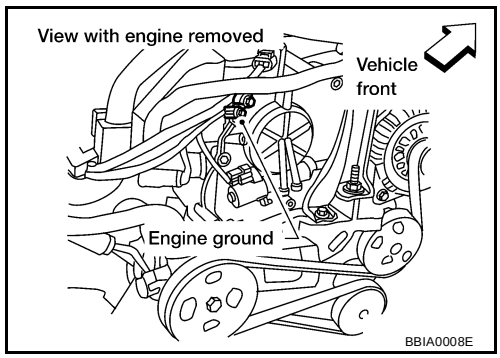

2. CHECK THROTTLE POSITION SENSOR POWER SUPPLY CIRCUIT

1. Disconnect electric throttle control actuator harness connector.
2. Turn ignition switch “ON”.

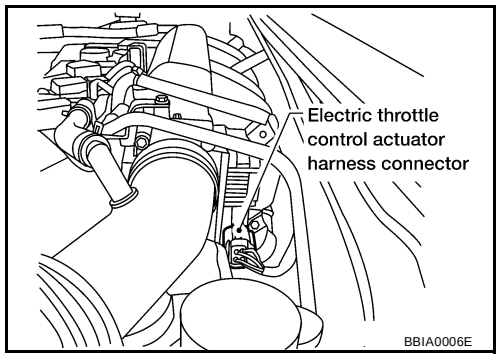

3. Check voltage between electric throttle control actuator terminal 1 and ground with CONSULT-II or tester.

Voltage: Approximately 5V

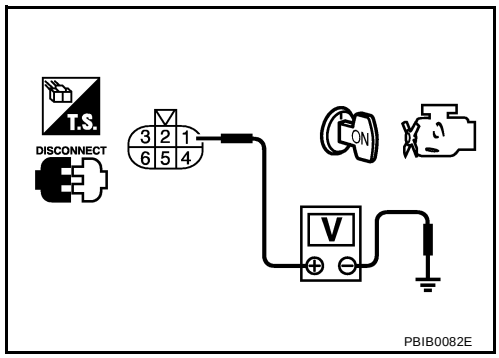

OK or NG

OK >> GO TO 4.
NG >> GO TO 3.

3. DETECT MALFUNCTIONING PART

Check the following.

- Joint connector-4
- Harness for open or short between electric throttle control actuator and ECM

>> Repair open circuit or short to ground or short to power in harness or connectors.

4. CHECK THROTTLE POSITION SENSOR GROUND CIRCUIT FOR OPEN AND SHORT

1. Turn ignition switch “OFF”.
2. Check harness continuity between electric throttle control actuator terminal 5 and engine ground. Refer to Wiring Diagram.

Continuity should exist.

3. Also check harness for short to ground and short to power.

OK or NG

OK >> GO TO 6.
NG >> GO TO 5.

5. DETECT MALFUNCTIONING PART

Check the following.

- Harness for open or short between electric throttle control actuator and ECM
- Harness for open or short between electric throttle control actuator and TCM

>> Repair open circuit or short to ground or short to power in harness or connectors.

6. CHECK THROTTLE POSITION SENSOR INPUT SIGNAL CIRCUIT FOR OPEN AND SHORT

1. Disconnect ECM harness connector.
2. Check harness continuity between ECM terminal 73 and electric throttle control actuator terminal 4, ECM terminal 74 and electric throttle control actuator terminal 2.
   Refer to Wiring Diagram.

   Continuity should exist.

3. Also check harness for short to ground and short to power.

OK or NG

OK >> GO TO 7.
NG >> Repair open circuit or short to ground or short to power in harness or connectors.

7. CHECK THROTTLE POSITION SENSOR

Refer to EC-255, "Component Inspection" .

OK or NG

OK >> GO TO 9.
NG >> GO TO 8.

8. REPLACE ELECTRIC THROTTLE CONTROL ACTUATOR

1. Replace the electric throttle control actuator.
2. Perform EC-49, "Throttle Valve Closed Position Learning" .
3. Perform EC-49, "Idle Air Volume Learning" .

>> **INSPECTION END**

9. CHECK INTERMITTENT INCIDENT

Refer to EC-130, "TROUBLE DIAGNOSIS FOR INTERMITTENT INCIDENT" .

>> **INSPECTION END**

Component Inspection

UBS002TD

THROTTLE POSITION SENSOR

1. Reconnect all harness connectors disconnected.
2. Perform EC-49, "Throttle Valve Closed Position Learning" .
3. Turn ignition switch "ON".
4. Set selector lever to "D" position (A/T models) or "1st" position (M/T models).
5. Check voltage between ECM terminals 73 (TP sensor 1), 74 (TP sensor 2) and engine ground under the following conditions.

Terminal	Accelerator pedal	Voltage
73 (Throttle position sensor 1)	Fully released	More than 0.36V
	Fully depressed	Less than 4.75V
74 (Throttle position sensor 2)	Fully released	Less than 4.75V
	Fully depressed	More than 0.36V

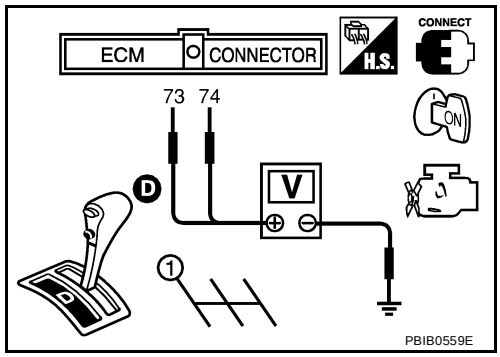

6. If NG, replace electric throttle control actuator and go to the next step.
7. Perform EC-49, "Throttle Valve Closed Position Learning" .
8. Perform EC-49, "Idle Air Volume Learning" .

Remove and Installation

UBS002TE

ELECTRIC THROTTLE CONTROL ACTUATOR

Refer to EM-16, "INTAKE MANIFOLD" .

DTC P0222, P0223 TP SENSOR

PFP:16119

Component Description

UBS002TF

Electric Throttle Control Actuator consists of throttle control motor, throttle position sensor, etc. The throttle position sensor responds to the throttle valve movement.
The throttle position sensor has the two sensors. These sensors are a kind of potentiometers which transform the throttle valve position into output voltage, and emit the voltage signal to the ECM. In addition, these sensors detect the opening and closing speed of the throttle valve and feed the voltage signals to the ECM. The ECM judges the current opening angle of the throttle valve from these signals and the ECM controls the throttle control motor to make the throttle valve opening angle properly in response to driving condition.

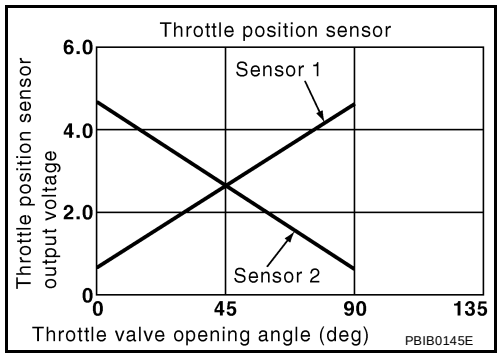

CONSULT-II Reference Value in Data Monitor Mode

UBS002TG

Specification data are reference values.

MONITOR ITEM	CONDITION		SPECIFICATION
THRTL SEN1	● Ignition switch: ON (Engine stopped) ● Shift lever: D (A/T model) 1st (M/T model)	Accelerator pedal: Fully released	More than 0.36V
		Accelerator pedal: Fully depressed	Less than 4.75V

On Board Diagnosis Logic

UBS002TH

These self-diagnoses have the one trip detection logic.

DTC No.	Trouble diagnosis name	DTC detecting condition	Possible cause
P0222 0222	Throttle position sensor 1 circuit low input	An excessively low voltage from the TP sensor 1 is sent to ECM.	● Harness or connectors (The TP sensor 1 circuit is open or shorted.) ● Electric throttle control actuator (TP sensor 1)
P0223 0223	Throttle position sensor 1 circuit high input	An excessively high voltage from the TP sensor 1 is sent to ECM.	

FAIL-SAFE MODE

When the malfunction is detected, the ECM enters in fail-safe mode and the MIL lights up.

Engine operation condition in fail-safe mode
The ECM controls the electric throttle control actuator in regulating the throttle opening in order for the idle position to be within +10 degrees. The ECM regulates an opening speed of approx. 5 seconds to an opening of 10 degrees. So, the acceleration will be poor.

DTC Confirmation Procedure

UBS002TI

NOTE:
If “DTC Confirmation Procedure” has been previously conducted, always turn ignition switch “OFF” and wait at least 10 seconds before conducting the next test.
TESTING CONDITION:
Before performing the following procedure, confirm that battery voltage is more than 10V at idle.

WITH CONSULT-II

1. Turn ignition switch “ON”.

2. Select "DATA MONITOR" mode with CONSULT-II.
3. Start engine and let it idle for 1 second.
4. If DTC is detected, go to EC-260, "Diagnostic Procedure" .

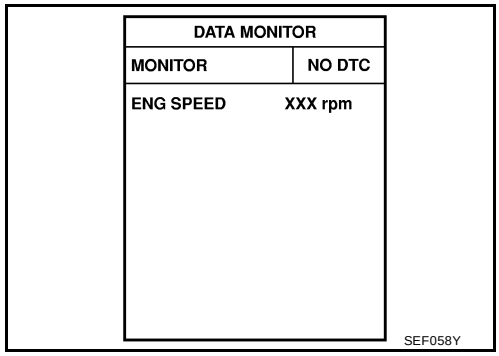

WITH GST

Follow the procedure “WITH CONSULT-II” above.

Wiring Diagram

UBS002TJ

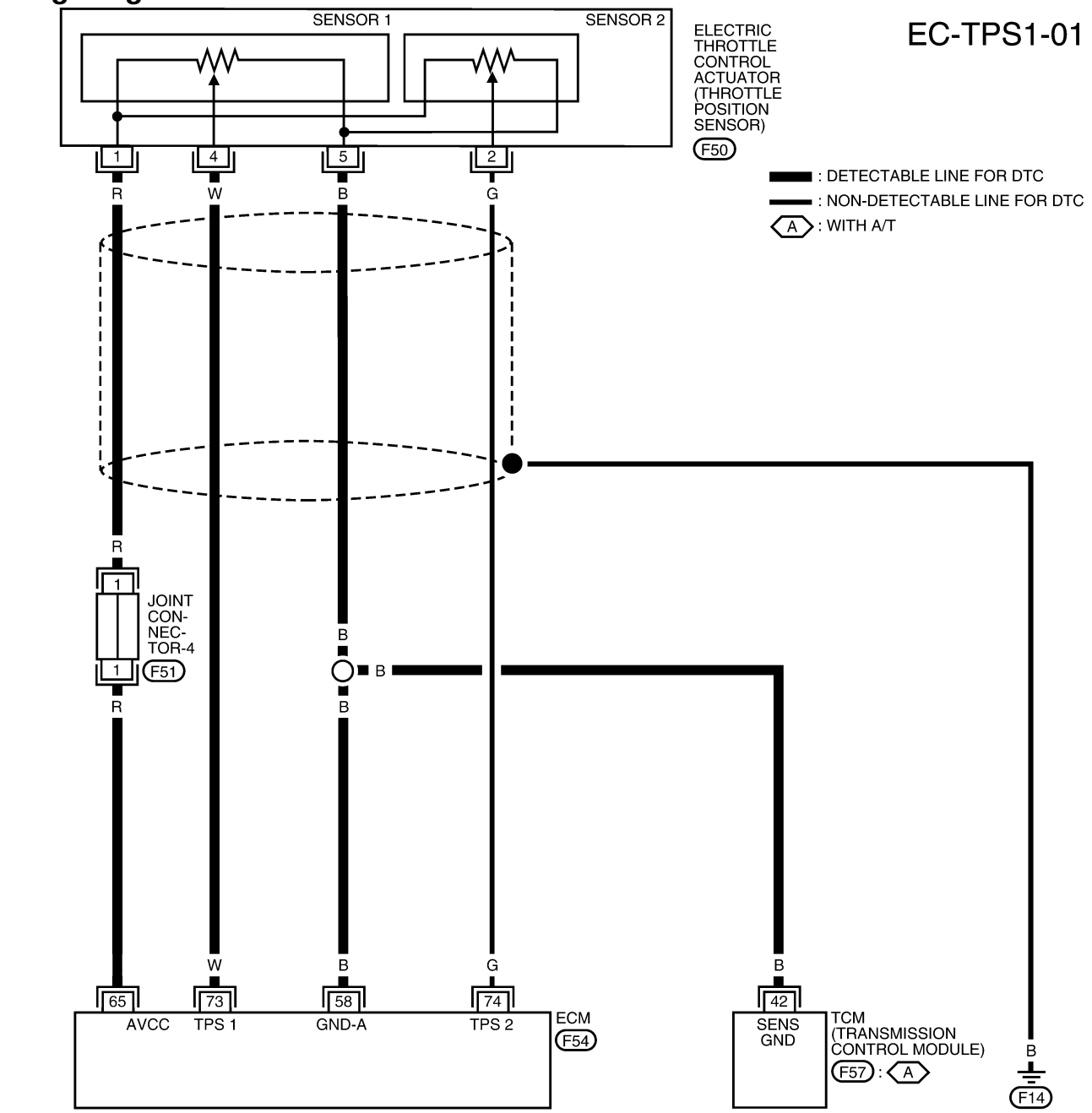

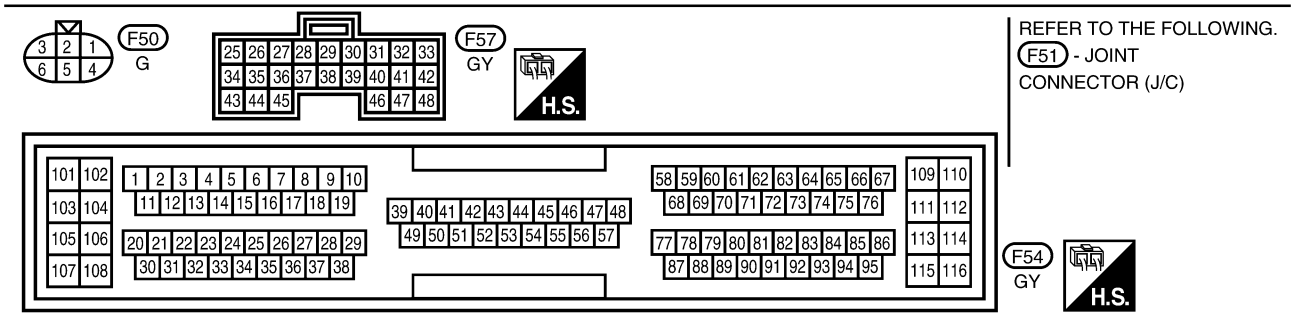

BBWA0024E

Specification data are reference values and are measured between each terminal and ground.

CAUTION:
Do not use ECM ground terminals when measuring input/output voltage. Doing so may result in damage to the ECM's transistor. Use a ground other than ECM terminals, such as the ground.

TERMINAL NO.	WIRE COLOR	ITEM	CONDITION	DATA (DC Voltage)
58	B	Sensors' ground	**[Engine is running]** ● **Warm-up condition** ● Idle speed	Approximately 0V
65	R	Sensor's power supply	**[Ignition switch “ON”]**	Approximately 5V
73	W	Throttle position sensor 1	**[Ignition switch "ON"]** ● Shift lever position is "D" (A/T model) ● Shift lever position is "1st" (M/T model) ● Accelerator pedal fully released	More than 0.36V
			[Ignition switch “ON”] ● Shift lever position is "D" (A/T model) ● Shift lever position is "1st" (M/T model) ● Accelerator pedal fully depressed	Less than 4.75V
74	G	Throttle position sensor 2	**[Ignition switch "ON"]** ● Shift lever position is "D" (A/T model) ● Shift lever position is "1st" (M/T model) ● Accelerator pedal fully released	Less than 4.75V
			[Ignition switch “ON”] ● Shift lever position is "D" (A/T model) ● Shift lever position is "1st" (M/T model) ● Accelerator pedal fully depressed	More than 0.36V

Diagnostic Procedure

UBS002TK

1. RETIGHTEN GROUND SCREWS

1. Turn ignition switch “OFF”.
2. Loosen and retighten engine ground screws.

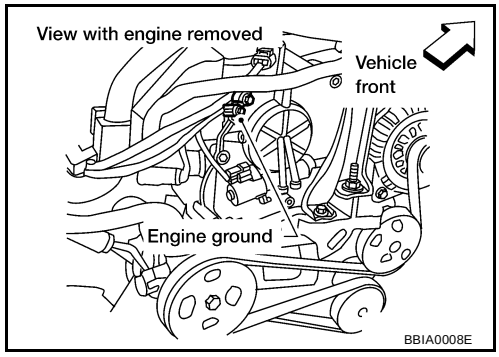

>> GO TO 2.

2. CHECK THROTTLE POSITION SENSOR 1 POWER SUPPLY CIRCUIT

1. Disconnect electric throttle control actuator harness connector.
2. Turn ignition switch “ON”.

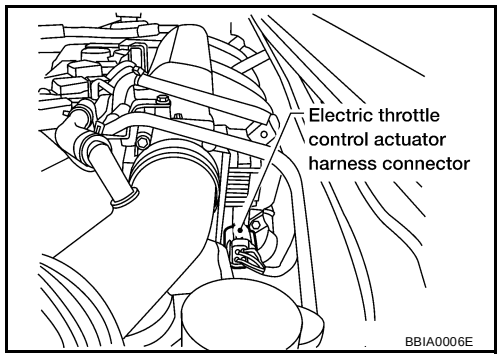

3. Check voltage between electric throttle control actuator terminal 1 and ground with CONSULT-II or tester.

Voltage: Approximately 5V

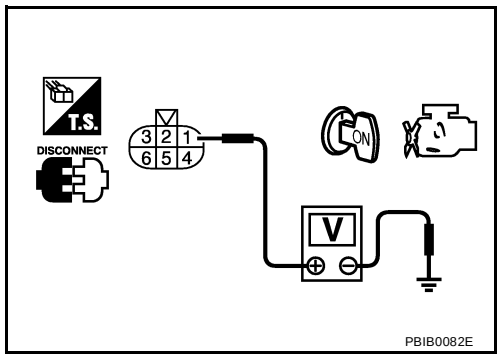

OK or NG

OK >> GO TO 4.
NG >> GO TO 3.

3. DETECT MALFUNCTIONING PART

Check the following.

- Joint connector-4
- Harness for open or short between electric throttle control actuator and ECM

>> Repair open circuit or short to ground or short to power in harness or connectors.

4. CHECK THROTTLE POSITION SENSOR 1 GROUND CIRCUIT FOR OPEN AND SHORT

1. Turn ignition switch “OFF”.
2. Check harness continuity between electric throttle control actuator terminal 5 and engine ground. Refer to Wiring Diagram.

Continuity should exist.

3. Also check harness for short to ground and short to power.

OK or NG

OK >> GO TO 6.
NG >> GO TO 5.

5. DETECT MALFUNCTIONING PART

Check the following.

- Harness for open or short between electric throttle control actuator and ECM
- Harness for open or short between electric throttle control actuator and TCM

>> Repair open circuit or short to ground or short to power in harness or connectors.

6. CHECK THROTTLE POSITION SENSOR 1 INPUT SIGNAL CIRCUIT FOR OPEN AND SHORT

1. Disconnect ECM harness connector.
2. Check harness continuity between ECM terminal 73 and electric throttle control actuator terminal 4. Refer to Wiring Diagram.

   Continuity should exist.

3. Also check harness for short to ground and short to power.

OK or NG

OK >> GO TO 7.
NG >> Repair open circuit or short to ground or short to power in harness or connectors.

7. CHECK THROTTLE POSITION SENSOR

Refer to EC-262, "Component Inspection" .

OK or NG

OK >> GO TO 9.
NG >> GO TO 8.

8. REPLACE ELECTRIC THROTTLE CONTROL ACTUATOR

1. Replace the electric throttle control actuator.
2. Perform EC-49, "Throttle Valve Closed Position Learning" .
3. Perform EC-49, "Idle Air Volume Learning" .

>> **INSPECTION END**

9. CHECK INTERMITTENT INCIDENT

Refer to EC-130, "TROUBLE DIAGNOSIS FOR INTERMITTENT INCIDENT" .

>> **INSPECTION END**

Component Inspection

UBS002TL

THROTTLE POSITION SENSOR

1. Reconnect all harness connectors disconnected.
2. Perform EC-49, "Throttle Valve Closed Position Learning" .
3. Turn ignition switch "ON".
4. Set selector lever to "D" position (A/T models) or "1st" position (M/T models).
5. Check voltage between ECM terminals 73 (TP sensor 1), 74 (TP sensor 2) and engine ground under the following conditions.

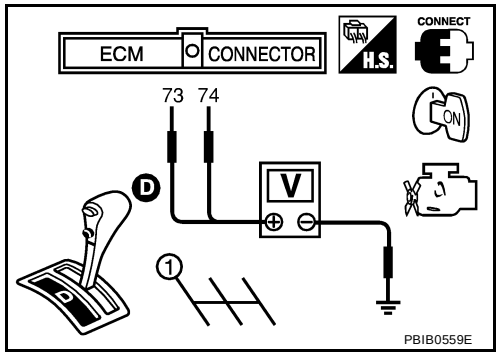

Terminal	Accelerator pedal	Voltage
73 (Throttle position sensor 1)	Fully released	More than 0.36V
	Fully depressed	Less than 4.75V
74 (Throttle position sensor 2)	Fully released	Less than 4.75V
	Fully depressed	More than 0.36V

6. If NG, replace electric throttle control actuator and go to the next step.
7. Perform EC-49, "Throttle Valve Closed Position Learning" .
8. Perform EC-49, "Idle Air Volume Learning" .

Remove and Installation

UBS002TM

ELECTRIC THROTTLE CONTROL ACTUATOR

Refer to EM-16, "INTAKE MANIFOLD" .

DTC P0226 APP SENSOR

PFP:18002

Component Description

UBS002TN

The accelerator pedal position sensor is installed on the upper end of the accelerator pedal assembly. The sensor detects the accelerator position and sends a signal to the ECM.
Accelerator pedal position sensor has two sensors. These sensors are a kind of potentiometers which transform the accelerator pedal position into output voltage, and emit the voltage signal to the ECM. In addition, these sensors detect the opening and closing speed of the accelerator pedal and feed the voltage signals to the ECM. The ECM judges the current opening angle of the accelerator pedal from these signals and controls the throttle control motor based on these signals.

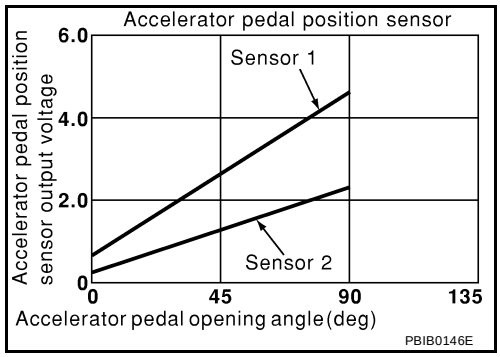

Idle position of the accelerator pedal is determined by the ECM receiving the signal from the accelerator pedal position sensor. The ECM uses this signal for the engine operation such as fuel cut.

CONSULT-II Reference Value in Data Monitor Mode

UBS002TO

Specification data are reference values.

MONITOR ITEM	CONDITION		SPECIFICATION
ACCEL SEN1 ACCEL SEN2	● Ignition switch: ON (engine stopped)	Accelerator pedal: Fully released	0.41 - 0.71V
		Accelerator pedal: Fully depressed	More than 4.2V
CLSD THL POS	● Ignition switch: ON	Accelerator pedal: Fully released	ON
		Accelerator pedal: Slightly depressed	OFF

On Board Diagnosis Logic

UBS002TP

This self-diagnosis has the one trip detection logic.

DTC No.	Trouble diagnosis name	DTC detecting condition	Possible cause
P0226 0226	Accelerator pedal position sensor circuit range/performance problem	Rationally incorrect voltage is sent to ECM compared with the signals from APP sensor 1 and APP sensor 2.	● Harness or connector (The APP sensor 1 and 2 circuit is open or shorted.) ● Accelerator pedal position sensor 1 and 2

FAIL-SAFE MODE

When the malfunction is detected, the ECM enters in fail-safe mode and the MIL lights up.

Engine operating condition in fail-safe mode
The ECM controls the electric throttle control actuator in regulating the throttle opening in order for the idle position to be within +10 degrees. The ECM regulates an opening speed of approx. 5 seconds to an opening of 10 degrees. So, the acceleration will be poor.

DTC Confirmation Procedure

UBS002TQ

NOTE:
If “DTC Confirmation Procedure” has been previously conducted, always turn ignition switch “OFF” and wait at least 10 seconds before conducting the next test.
TESTING CONDITION:
Before performing the following procedure, confirm that battery voltage is more than 10V at idle.

WITH CONSULT-II

1. Turn ignition switch “ON”.

2. Select “DATA MONITOR” mode with CONSULT-II.
3. Start engine and let it idle for 1 second.
4. If DTC is detected, go to EC-266, "Diagnostic Procedure" .

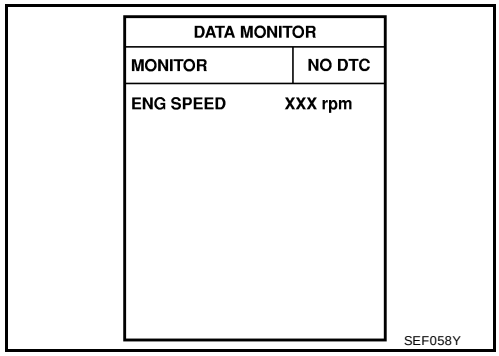

WITH GST

Follow the procedure “WITH CONSULT-II” above.

Wiring Diagram

UBS002TR

EC-APPS3-01

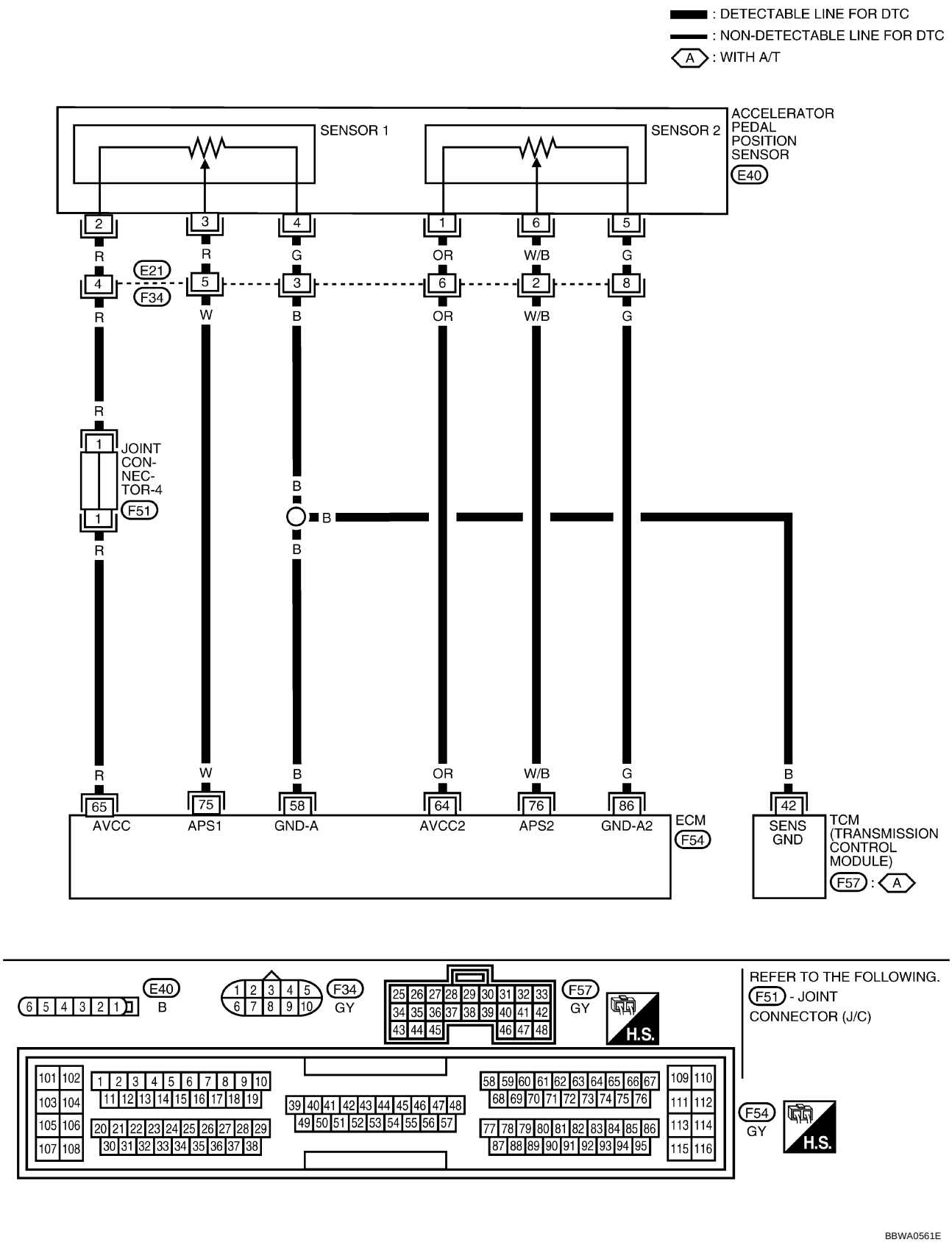

BBWA0561E

Specification data are reference values and are measured between each terminal and ground.

CAUTION:
Do not use ECM ground terminals when measuring input/output voltage. Doing so may result in damage to the ECM's transistor. Use a ground other than ECM terminals, such as the ground.

TERMINAL NO.	WIRE COLOR	ITEM	CONDITION	DATA (DC Voltage)
58	B	Sensors' ground	**[Engine is running]** ● **Warm-up condition** ● Idle speed	Approximately 0V
64	OR	Accelerator pedal position sensor 2 power supply	**[Ignition switch “ON”]**	Approximately 2.5V
65	R	Sensor's power supply	**[Ignition switch “ON”]**	Approximately 5V
75	W	Accelerator pedal position sensor 1	**[Ignition switch "ON"]** ● Accelerator pedal fully released	0.41 - 0.71V
			[Ignition switch "ON"] ● Accelerator pedal fully depressed	More than 4.2V
76	W/B	Accelerator pedal position sensor 2	**[Ignition switch "ON"]** ● Accelerator pedal fully released	0.21 - 0.36V
			[Ignition switch "ON"] ● Accelerator pedal fully depressed	More than 2.1V
86	G	Accelerator pedal position sensor 2 ground	**[Ignition switch “ON”]**	Approximately 0V

Diagnostic Procedure

UBS002TS

1. RETIGHTEN GROUND SCREWS

1. Turn ignition switch “OFF”.
2. Loosen and retighten engine ground screws.

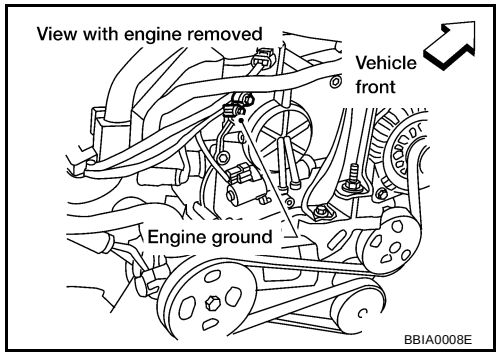

>> GO TO 2.

2. CHECK APP SENSOR POWER SUPPLY CIRCUIT

1. Disconnect accelerator pedal position (APP) sensor harness connector.
2. Turn ignition switch “ON”.

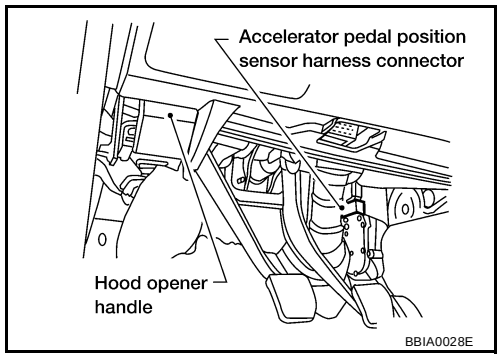

3. Check voltage between APP sensor terminals 1, 2 and ground with CONSULT-II or tester.

APP sensor terminal	Voltage (V)
1	Approximately 2.5
2	Approximately 5

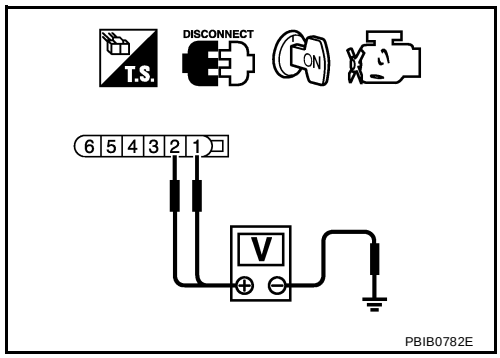

OK or NG

OK >> GO TO 4.
NG >> GO TO 3.

3. DETECT MALFUNCTIONING PART

Check the following.

- Harness connectors E21, F34
- Joint connector-4
- Harness for open or short between ECM and accelerator pedal position sensor

>> Repair open circuit or short to ground or short to power in harness or connectors.

4. CHECK APP SENSOR GROUND CIRCUIT FOR OPEN AND SHORT

1. Turn ignition switch “OFF”.
2. Check harness continuity between APP sensor terminal 4, 5 and engine ground.
   Refer to Wiring Diagram.

   Continuity should exist.

3. Also check harness for short to ground and short to power.

OK or NG

OK >> GO TO 6.
NG >> GO TO 5.

5. DETECT MALFUNCTIONING PART

Check the following.

- Harness connectors E21, F34
- Harness for open or short between ECM and accelerator pedal position sensor
- Harness for open or short between TCM and accelerator pedal position sensor

>> Repair open circuit or short to ground or short to power in harness or connectors.

6. CHECK APP SENSOR INPUT SIGNAL CIRCUIT FOR OPEN AND SHORT

1. Disconnect ECM harness connector.
2. Check harness continuity between ECM terminal 75 and APP sensor terminal 3, ECM terminal 76 and APP sensor terminal 6.
   Refer to Wiring Diagram.

   Continuity should exist.

3. Also check harness for short to ground and short to power.

OK or NG

OK >> GO TO 8.
NG >> GO TO 7.

7. DETECT MALFUNCTIONING PART

Check the following.

- Harness connectors E21, F34
- Harness for open or short between ECM and accelerator pedal position sensor

>> Repair open circuit or short to ground or short to power in harness or connectors.

8. CHECK APP SENSOR

Refer to EC-274, "Component Inspection" .

OK or NG

OK >> GO TO 9.
NG >> Replace accelerator pedal assembly.

9. CHECK INTERMITTENT INCIDENT

Refer to EC-131, "POWER SUPPLY CIRCUIT FOR ECM" .

>> **INSPECTION END**

Component Inspection

UBS002TT

ACCELERATOR PEDAL POSITION SENSOR

1. Reconnect all harness connectors disconnected.
2. Turn ignition switch "ON".
3. Check voltage between ECM terminals 75 (APP sensor 1 signal), 76 (APP sensor 2 signal) and engine ground under the following conditions.

Terminal	Accelerator pedal	Voltage
75 (Accelerator pedal position sensor 1)	Fully released	0.41 - 0.71V
	Fully depressed	More than 4.2V
76 (Accelerator pedal position sensor 2)	Fully released	0.21 - 0.36V
	Fully depressed	More than 2.1V

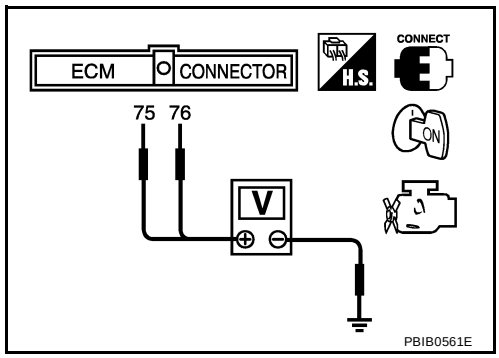

4. If NG, replace accelerator pedal assembly.

Remove and Installation

UBS002TU

ACCELERATOR PEDAL

Refer to ACC-2, "ACCELERATOR CONTROL SYSTEM" .

DTC P0227, P0228 APP SENSOR

PFP:18002

Component Description

UBS002TV

The accelerator pedal position sensor is installed on the upper end of the accelerator pedal assembly. The sensor detects the accelerator position and sends a signal to the ECM.
Accelerator pedal position sensor has two sensors. These sensors are a kind of potentiometers which transform the accelerator pedal position into output voltage, and emit the voltage signal to the ECM. In addition, these sensors detect the opening and closing speed of the accelerator pedal and feed the voltage signals to the ECM. The ECM judges the current opening angle of the accelerator pedal from these signals and controls the throttle control motor based on these signals.

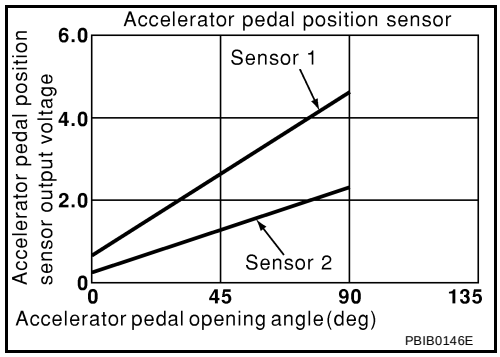

Idle position of the accelerator pedal is determined by the ECM receiving the signal from the accelerator pedal position sensor. The ECM uses this signal for the engine operation such as fuel cut.

CONSULT-II Reference Value in Data Monitor Mode

UBS002TW

Specification data are reference values.

MONITOR ITEM	CONDITION		SPECIFICATION
ACCEL SEN1	● Ignition switch: ON (engine stopped)	Accelerator pedal: Fully released	0.41 - 0.71V
		Accelerator pedal: Fully depressed	More than 4.2V
CLSD THL POS	● Ignition switch: ON	Accelerator pedal: Fully released	ON
		Accelerator pedal: Slightly depressed	OFF

On Board Diagnosis Logic

UBS002TX

These self-diagnoses have the one trip detection logic.

DTC No.	Trouble diagnosis name	DTC detecting condition	Possible cause
P0227 0227	Accelerator pedal position sensor 1 circuit low input	An excessively low voltage from the APP sensor 1 is sent to ECM.	● Harness or connectors (The APP sensor 1 circuit is open or shorted.) ● Accelerator pedal position sensor (Accelerator pedal position sensor 1)
P0228 0228	Accelerator pedal position sensor 1 circuit high input	An excessively high voltage from the APP sensor 1 is sent to ECM.	

FAIL-SAFE MODE

When the malfunction is detected, the ECM enters in fail-safe mode and the MIL lights up.

Engine operating condition in fail-safe mode
The ECM controls the electric throttle control actuator in regulating the throttle opening in order for the idle position to be within +10 degrees. The ECM regulates an opening speed of approx. 5 seconds to an opening of 10 degrees. So, the acceleration will be poor.

DTC Confirmation Procedure

UBS002TY

NOTE:
If “DTC Confirmation Procedure” has been previously conducted, always turn ignition switch “OFF” and wait at least 10 seconds before conducting the next test.
TESTING CONDITION:
Before performing the following procedure, confirm that battery voltage is more than 10V at idle.

WITH CONSULT-II

1. Turn ignition switch “ON”.

2. Select “DATA MONITOR” mode with CONSULT-II.
3. Start engine and let it idle for 1 second.
4. If DTC is detected, go to EC-272, "Diagnostic Procedure" .

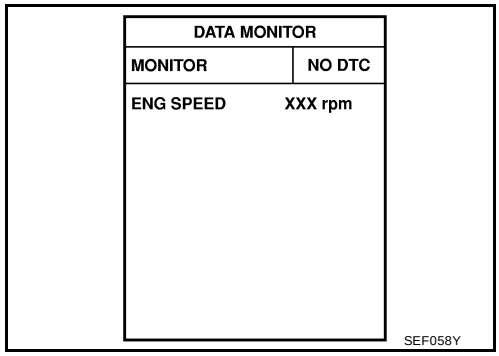

WITH GST

Follow the procedure “WITH CONSULT-II” above.

Wiring Diagram

UBS002TZ

EC-APPS1-01

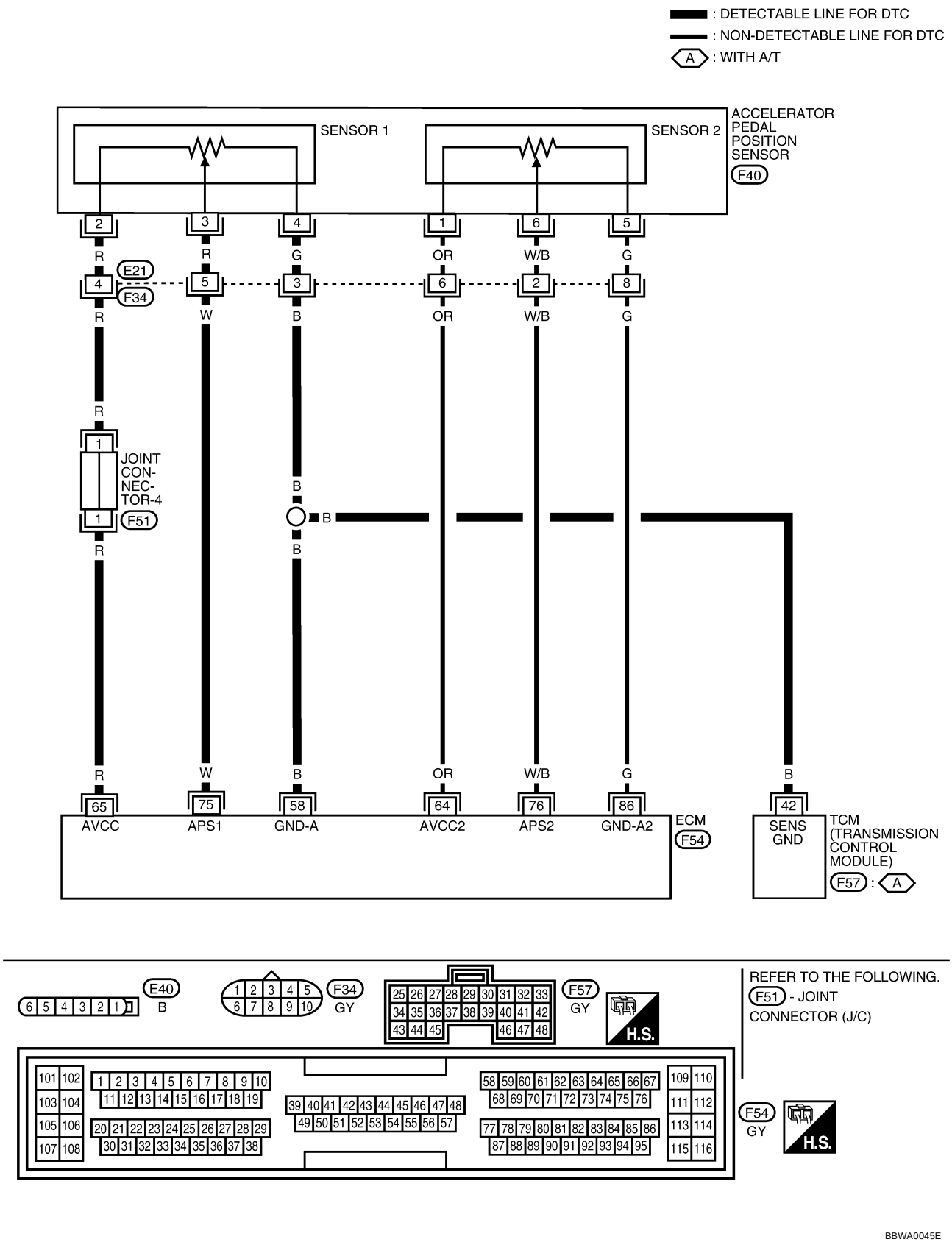

Specification data are reference values and are measured between each terminal and ground.

CAUTION:
Do not use ECM ground terminals when measuring input/output voltage. Doing so may result in damage to the ECM's transistor. Use a ground other than ECM terminals, such as the ground.

TERMINAL NO.	WIRE COLOR	ITEM	CONDITION	DATA (DC Voltage)
58	B	Sensors' ground	**[Engine is running]** ● **Warm-up condition** ● Idle speed	Approximately 0V
64	OR	Accelerator pedal position sensor 2 power supply	**[Ignition switch “ON”]**	Approximately 2.5V
65	R	Sensor's power supply	**[Ignition switch “ON”]**	Approximately 5V
75	W	Accelerator pedal position sensor 1	**[Ignition switch "ON"]** ● Accelerator pedal fully released	0.41 - 0.71V
			[Ignition switch "ON"] ● Accelerator pedal fully depressed	More than 4.2V
76	W/B	Accelerator pedal position sensor 2	**[Ignition switch "ON"]** ● Accelerator pedal fully released	0.21 - 0.36V
			[Ignition switch "ON"] ● Accelerator pedal fully depressed	More than 2.1V
86	G	Accelerator pedal position sensor 2 ground	**[Ignition switch “ON”]**	Approximately 0V

Diagnostic Procedure

UBS002U0

1. RETIGHTEN GROUND SCREWS

1. Turn ignition switch “OFF”.
2. Loosen and retighten engine ground screws.

>> GO TO 2.

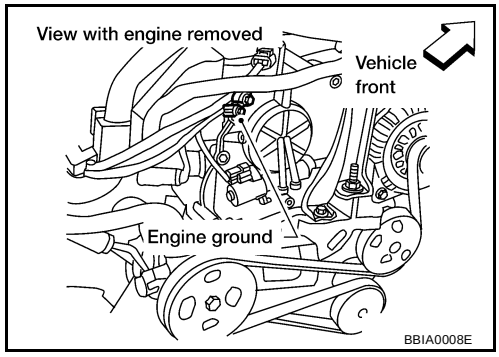

2. CHECK APP SENSOR 1 POWER SUPPLY CIRCUIT

1. Disconnect accelerator pedal position (APP) sensor harness connector.
2. Turn ignition switch “ON”.

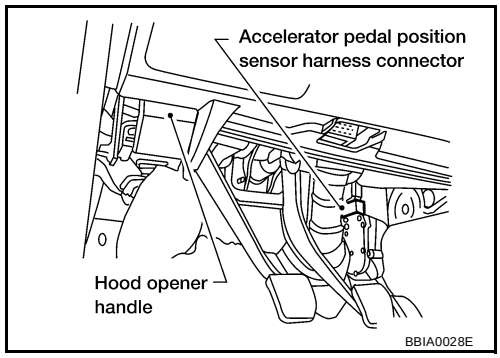

3. Check voltage between APP sensor terminal 2 and ground with CONSULT-II or tester.

Voltage: Approximately 5V

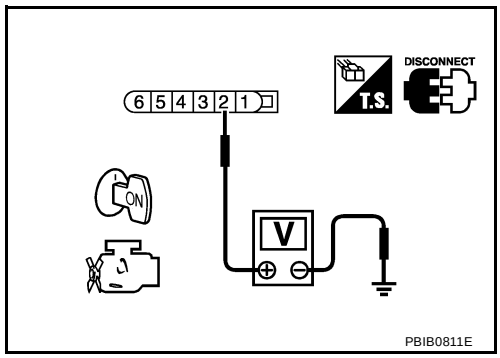

OK or NG

OK >> GO TO 4.
NG >> GO TO 3.

3. DETECT MALFUNCTIONING PART

Check the following.

- Harness connectors E21, F34
- Joint connector-4
- Harness for open or short between ECM and accelerator pedal position sensor

>> Repair open circuit or short to ground or short to power in harness or connectors.

4. CHECK APP SENSOR 1 GROUND CIRCUIT FOR OPEN AND SHORT

1. Turn ignition switch “OFF”.
2. Check harness continuity between APP sensor terminal 4 and engine ground. Refer to Wiring Diagram.

Continuity should exist.

3. Also check harness for short to ground and short to power.

OK or NG

OK >> GO TO 6.
NG >> GO TO 5.

5. DETECT MALFUNCTIONING PART

Check the following.

- Harness connectors E21, F34
- Harness for open or short between ECM and accelerator pedal position sensor
- Harness for open or short between TCM and accelerator pedal position sensor

>> Repair open circuit or short to ground or short to power in harness or connectors.

6. CHECK APP SENSOR 1 INPUT SIGNAL CIRCUIT FOR OPEN AND SHORT

1. Disconnect ECM harness connector.
2. Check harness continuity between ECM terminal 75 and APP sensor terminal 3.
   Refer to Wiring Diagram.

   Continuity should exist.

3. Also check harness for short to ground and short to power.

OK or NG

OK >> GO TO 8.
NG >> GO TO 7.

7. DETECT MALFUNCTIONING PART

Check the following.

- Harness connectors E21, F34
- Harness for open or short between ECM and accelerator pedal position sensor

>> Repair open circuit or short to ground or short to power in harness or connectors.

8. CHECK APP SENSOR

Refer to EC-274, "Component Inspection" .

OK or NG

OK >> GO TO 9.
NG >> Replace accelerator pedal assembly.

9. CHECK INTERMITTENT INCIDENT

Refer to EC-130, "TROUBLE DIAGNOSIS FOR INTERMITTENT INCIDENT" .

>> **INSPECTION END**

Component Inspection

UBS002U1

ACCELERATOR PEDAL POSITION SENSOR

1. Reconnect all harness connectors disconnected.
2. Turn ignition switch "ON".
3. Check voltage between ECM terminals 75 (APP sensor 1 signal), 76 (APP sensor 2 signal) and engine ground under the following conditions.

Terminal	Accelerator pedal	Voltage
75 (Accelerator pedal position sensor 1)	Fully released	0.41 - 0.71V
	Fully depressed	More than 4.2V
76 (Accelerator pedal position sensor 2)	Fully released	0.21 - 0.36V
	Fully depressed	More than 2.1V

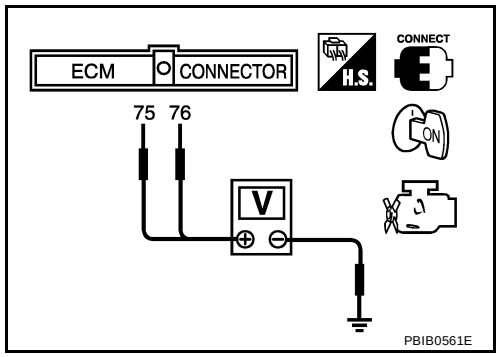

4. If NG, replace accelerator pedal assembly.

Removal and Installation

UBS002U2

ACCELERATOR PEDAL

Refer to ACC-2, "ACCELERATOR CONTROL SYSTEM" .

DTC P0300 - P0304 MULTIPLE CYLINDER MISFIRE, NO. 1 - 4 CYLINDER MISFIRE

PFP:00000

On Board Diagnosis Logic

UBS002U3

When a misfire occurs, engine speed will fluctuate. If the engine speed fluctuates enough to cause the crankshaft position (CKP) sensor (POS) signal to vary, ECM can determine that a misfire is occurring.

Sensor	Input Signal to ECM	ECM function
Crankshaft position sensor (POS)	Engine speed	On board diagnosis of misfire

The misfire detection logic consists of the following two conditions.

1. One Trip Detection Logic (Three Way Catalyst Damage)
   On the first trip that a misfire condition occurs that can damage the three way catalyst (TWC) due to overheating, the MIL will blink.
   When a misfire condition occurs, the ECM monitors the CKP sensor (POS) signal every 200 engine revolutions for a change.
   When the misfire condition decreases to a level that will not damage the TWC, the MIL will turn off.
   If another misfire condition occurs that can damage the TWC on a second trip, the MIL will blink.
   When the misfire condition decreases to a level that will not damage the TWC, the MIL will remain on.
   If another misfire condition occurs that can damage the TWC, the MIL will begin to blink again.
2. Two Trip Detection Logic (Exhaust quality deterioration)
   For misfire conditions that will not damage the TWC (but will affect vehicle emissions), the MIL will only light when the misfire is detected on a second trip. During this condition, the ECM monitors the CKP sensor signal every 1,000 engine revolutions.
   A misfire malfunction can be detected on any one cylinder or on multiple cylinders.

DTC No.	Trouble diagnosis name	DTC detecting condition	Possible cause
P0300 0300	Multiple cylinder misfire detected	Multiple cylinder misfire.	● Improper spark plug ● Insufficient compression ● Incorrect fuel pressure ● The injector circuit is open or shorted ● Fuel injectors ● Intake air leak ● The ignition signal circuit is open or shorted ● Lack of fuel ● Drive plate or flywheel ● Heated oxygen sensor 1
P0301 0301	No.1 cylinder misfire detected	No. 1 cylinder misfires.	
P0302 0302	No. 2 cylinder misfire detected	No. 2 cylinder misfires.	
P0303 0303	No. 3 cylinder misfire detected	No. 3 cylinder misfires.	
P0304 0304	No. 4 cylinder misfire detected	No. 4 cylinder misfires.	

DTC Confirmation Procedure

UBS002U4

CAUTION:
Always drive vehicle at a safe speed.

NOTE:
If “DTC Confirmation Procedure” has been previously conducted, always turn ignition switch “OFF” and wait at least 10 seconds before conducting the next test.

WITH CONSULT-II

1. Turn ignition switch “ON”, and select “DATA MONITOR” mode with CONSULT-II.
2. Start engine and warm it up to normal operating temperature.
3. Turn ignition switch “OFF” and wait at least 10 seconds.

4. Start engine again and drive at 1,500 to 3,000 rpm for at least 3 minutes.
   Hold the accelerator pedal as steady as possible.
   NOTE:
   Refer to the freeze frame data for the test driving conditions.
5. If 1st trip DTC is detected, go to EC-276, "Diagnostic Procedure".

DATA MONITOR	
MONITOR	NO DTC
ENG SPEED	XXX rpm
COOLAN TEMP/S	XXX °C
VHCL SPEED SE	XXX km/h
B/FUEL SCHDL	XXX msec

PBIB0164E

WITH GST

Follow the procedure “WITH CONSULT-II” above.

Diagnostic Procedure

UBS002U5

1. CHECK FOR INTAKE AIR LEAK

1. Start engine and run it at idle speed.
2. Listen for the sound of the intake air leak.

OK or NG

OK >> GO TO 2.
NG >> Discover air leak location and repair.

2. CHECK FOR EXHAUST SYSTEM CLOGGING

Stop engine and visually check exhaust tube, three way catalyst and muffler for dents.

OK or NG

OK >> GO TO 3.
NG >> Repair or replace it.

3. PERFORM POWER BALANCE TEST

With CONSULT-II

1. Perform “POWER BALANCE” in “ACTIVE TEST” mode.
2. Is there any cylinder which does not produce a momentary engine speed drop?

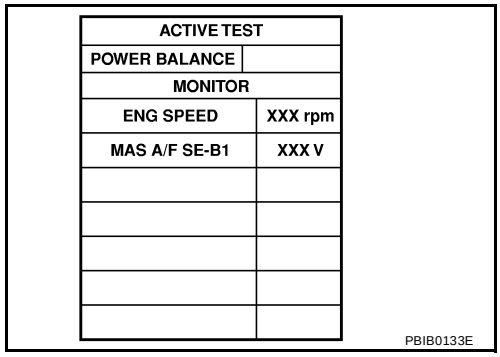

ACTIVE TEST	
POWER BALANCE	
MONITOR	
ENG SPEED	XXX rpm
MAS A/F SE-B1	XXX V

PBIB0133E

Without CONSULT-II

When disconnecting each injector harness connector one at a time, is there any cylinder which does not produce a momentary engine speed drop?

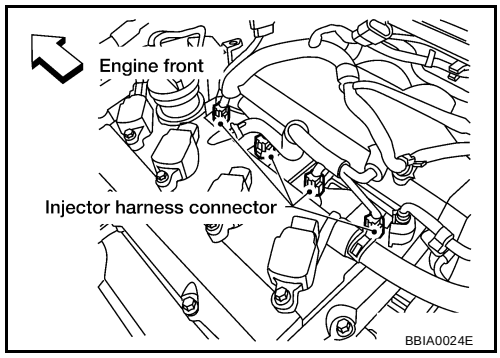

BBIA0024E

Yes or No

Yes >> GO TO 4.
No >> GO TO 7.

4. CHECK INJECTOR

Does each injector make an operating sound at idle?

Yes or No

Yes >> GO TO 5.
No >> Check injector(s) and circuit(s). Refer to EC-574, "INJECTOR CIRCUIT" .

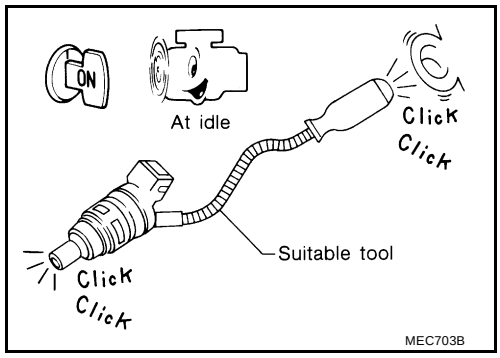

MEC703B

5. CHECK IGNITION SPARK

1. Disconnect ignition coil assembly from rocker cover.
2. Connect a known good spark plug to the ignition coil assembly.
3. Place end of spark plug against a suitable ground and crank engine.
4. Check for spark.

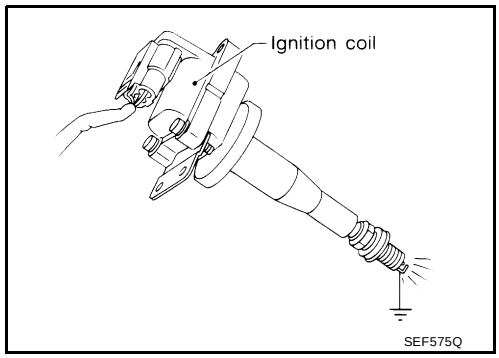

OK or NG

OK >> GO TO 6.
NG >> Check ignition coil, power transistor and their circuits. Refer to EC-554, "IGNITION SIGNAL" .

6. CHECK SPARK PLUGS

Remove the spark plugs and check for fouling, etc.

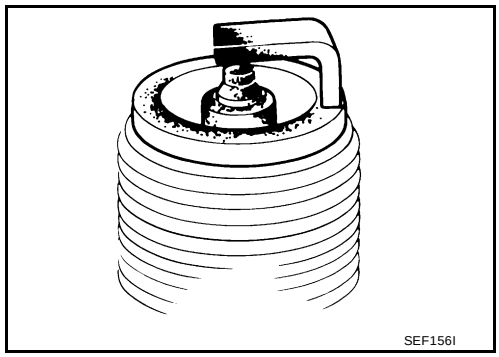

OK or NG

OK >> GO TO 7.
NG >> Repair or replace spark plug(s) with standard type one(s). For spark plug type, refer to MA-19, "Changing Spark Plugs (Platinum - Tipped Type)" .

7. CHECK COMPRESSION PRESSURE

Check compression pressure. Refer to EM-53, "CHECKING COMPRESSION PRESSURE" .

Standard:	**1,190 kPa (12.1 kg/cm^2 , 172 psi)/250 rpm**
Minimum:	**990 kPa (10.1 kg/cm^2 , 144 psi)/250 rpm**
Difference between each cylinder:	**98 kPa (1.0 kg/cm^2 , 14 psi)/250 rpm**

OK or NG

OK >> GO TO 8.
NG >> Check pistons, piston rings, valves, valve seats and cylinder head gaskets.

8. CHECK FUEL PRESSURE

1. Install all removed parts.
2. Release fuel pressure to zero. Refer to EC-51, "FUEL PRESSURE RELEASE" .
3. Install fuel pressure gauge and check fuel pressure. Refer to EC-51, "Fuel Pressure Check" .

At idle: Approx. 350 kPa (3.7 kg/cm^2 , 51 psi)

OK or NG

OK >> GO TO 9.
NG >> Follow the construction of "FUEL PRESSURE CHECK".

9. CHECK IGNITION TIMING

Check the following items. Refer to EC-84, "Basic Inspection" .

Items	Specifications	
Target idle speed	A/T	700 ± 50 rpm (in "P" or "N" position)
	M/T	700 ± 50 rpm
Ignition timing	A/T	15 ± 5° BTDC (in "P" or "N" position)
	M/T	15 ± 5° BTDC

OK or NG

OK >> GO TO 10.
NG >> Follow the “Basic Inspection”.

10. CHECK HEATED OXYGEN SENSOR 1

Refer to EC-189, "Component Inspection" .

OK or NG

OK >> GO TO 12.
NG >> GO TO 11.

11. CHECK MASS AIR FLOW SENSOR

With CONSULT-II
Check mass air flow sensor signal in “DATA MONITOR” mode with CONSULT-II.

1.4 - 4.0 g·m/sec: at idling
4.0 - 10.0 g·m/sec: at 2,500 rpm

With GST
Check mass air flow sensor signal in MODE 1 with GST.

1.4 - 4.0 g·m/sec: at idling
4.0 - 10.0 g·m/sec: at 2,500 rpm

OK or NG

OK >> GO TO 12.
NG >> Check connectors for rusted terminals or loose connections in the mass air flow sensor circuit or engine grounds. Refer to EC-161, "DTC P0102, P0103 MAF SENSOR" .

12. CHECK SYMPTOM MATRIX CHART

Check items on the rough idle symptom in EC-89, "Symptom Matrix Chart" .

OK or NG

OK >> GO TO 13.
NG >> Repair or replace.

13. ERASE THE 1ST TRIP DTC

Some tests may cause a 1st trip DTC to be set.
Erase the 1st trip DTC from the ECM memory after performing the tests. Refer to EC-67, "HOW TO ERASE EMISSION-RELATED DIAGNOSTIC INFORMATION" .

>> GO TO 14.

14. CHECK INTERMITTENT INCIDENT

Refer to EC-130, "TROUBLE DIAGNOSIS FOR INTERMITTENT INCIDENT" .

>> **INSPECTION END**

DTC P0327, P0328 KS

PFP:22060

Component Description

UBS002U6

The knock sensor is attached to the cylinder block. It senses engine knocking using a piezoelectric element. A knocking vibration from the cylinder block is sensed as vibrational pressure. This pressure is converted into a voltage signal and sent to the ECM.

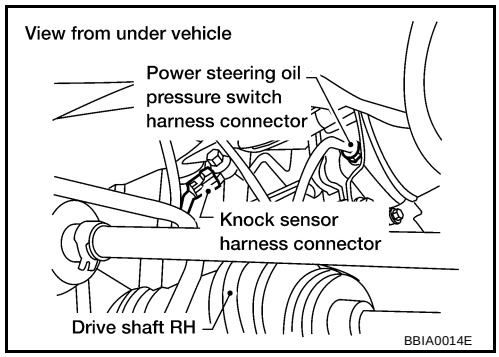

On Board Diagnosis Logic

UBS002U7

The MIL will not light for knock sensor malfunction.

DTC No.	Trouble Diagnosis Name	DTC Detected Condition	Possible Cause
P0327 0327	Knock sensor circuit low input	An excessively low voltage from the sensor is sent to ECM.	● Harness or connectors (The sensor circuit is open or shorted.) ● Knock sensor
P0328 0328	Knock sensor circuit high input	An excessively high voltage from the sensor is sent to ECM.	

DTC Confirmation Procedure

UBS002U8

NOTE:
If “DTC Confirmation Procedure” has been previously conducted, always turn ignition switch “OFF” and wait at least 10 seconds before conducting the next test.
TESTING CONDITION:
Before performing the following procedure, confirm that battery voltage is more than 10V at idle.

WITH CONSULT-II

1. Turn ignition switch “ON” and select “DATA MONITOR” mode with CONSULT-II.
2. Start engine and run it for at least 5 seconds at idle speed.
3. If 1st trip DTC is detected, go to EC-282, "Diagnostic Procedure"
.

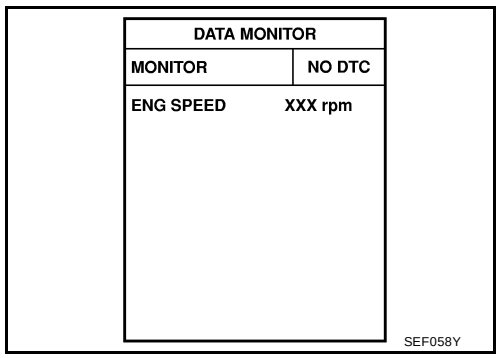

WITH GST

Follow the procedure "WITH CONSULT-II" above.

Wiring Diagram

UBS002U9

EC-KS-01

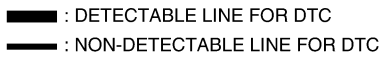

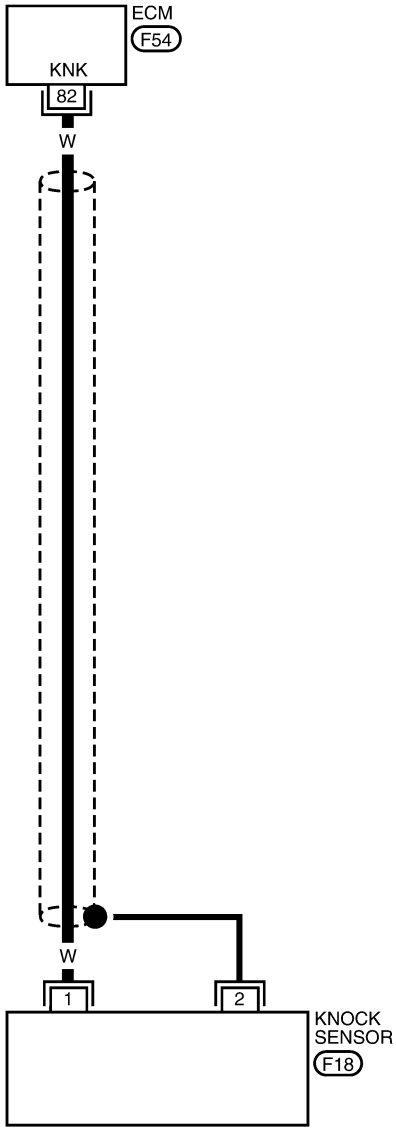

BBWA0016E

Specification data are reference values and are measured between each terminal and ground.

CAUTION:
Do not use ECM ground terminals when measuring input/output voltage. Doing so may result in damage to the ECM's transistor. Use a ground other than ECM terminals, such as the ground.

TERMINAL NO.	WIRE COLOR	ITEM	CONDITION	DATA (DC Voltage)
82	W	Knock sensor	**[Engine is running]** ● Idle speed	Approximately 2.5V

Diagnostic Procedure

UBS002UA

1. CHECK KNOCK SENSOR INPUT SIGNAL CIRCUIT-I

1. Turn ignition switch “OFF”.
2. Disconnect ECM harness connector.
3. Check resistance between ECM terminal 82 and engine ground. Refer to Wiring Diagram.

   NOTE:
   It is necessary to use an ohmmeter which can measure more than 10 MΩ.

   Resistance: Approximately 530 - 590kΩ [at 20°C (68°F)]

4. Also check harness for short to ground and short to power.

OK or NG

OK >> GO TO 4.
NG >> GO TO 2.

2. CHECK KNOCK SENSOR INPUT SIGNAL CIRCUIT-II

1. Disconnect knock sensor harness connector.
2. Check harness continuity between ECM terminal 82 and knock sensor terminal 1.
   Refer to Wiring Diagram.

   Continuity should exist.

3. Also check harness for short to ground and short to power.

OK or NG

OK >> GO TO 3.
NG >> Repair open circuit or short to ground or short to power in harness or connectors.

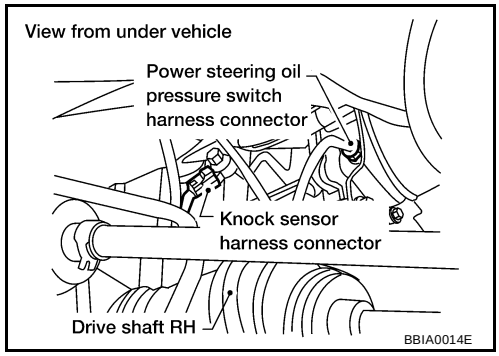

3. CHECK KNOCK SENSOR

Refer to EC-283, "Component Inspection" .

OK or NG

OK >> GO TO 5.
NG >> Replace knock sensor.

4. RETIGHTEN GROUND SCREWS

Loosen and retighten engine ground screws.

>> GO TO 5.

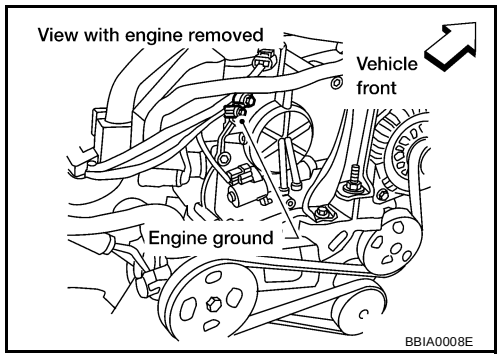

5. CHECK INTERMITTENT INCIDENT

Refer to EC-130, "TROUBLE DIAGNOSIS FOR INTERMITTENT INCIDENT" .

>> **INSPECTION END**

Component Inspection

UBS002UB

KNOCK SENSOR

Check resistance between knock sensor terminal 1 and ground.

NOTE:
It is necessary to use an ohmmeter which can measure more than 10 MΩ.

Resistance: Approximately 530 - 590kΩ [at 20°C (68°F)]

CAUTION:
Do not use any knock sensors that have been dropped or physically damaged. Use only new ones.

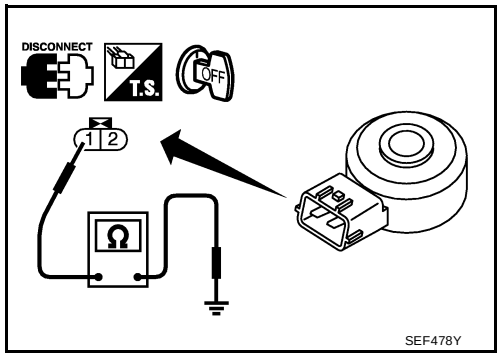

Removal and Installation

UBS002UC

KNOCK SENSOR

Refer to EM-67, "CYLINDER BLOCK" .

DTC P0335 CKP SENSOR (POS)

PFP:23731

Component Description

UBS002UD

The crankshaft position sensor (POS) is located on the cylinder block rear housing facing the gear teeth (cogs) of the signal plate at the end of the crankshaft. It detects the fluctuation of the engine revolution.
The sensor consists of a permanent magnet and Hall IC.
When the engine is running, the high and low parts of the teeth cause the gap with the sensor change.
The changing gap causes the magnetic field near the sensor to change.
Due to the changing magnetic field, the voltage from the sensor changes.
The ECM receives the voltage signal and detects the fluctuation of the engine revolution.

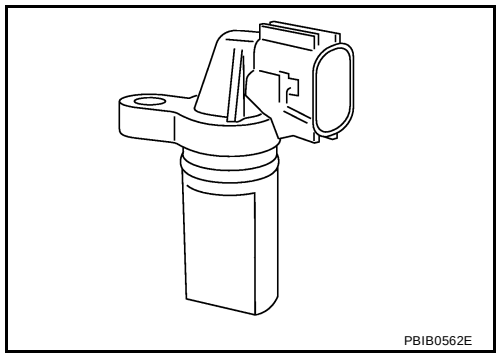

PBIB0562E

CONSULT-II Reference Value in Data Monitor Mode

UBS002UE

Specification data are reference values.

MONITOR ITEM	CONDITION	SPECIFICATION
ENG SPEED·	● Tachometer: Connect ● Run engine and compare tachometer indication with the CONSULT-II value.	Almost the same speed as the CONSULT-II value.

On Board Diagnosis Logic

UBS002UF

DTC No.	Trouble diagnosis name	DTC detecting condition	Possible cause
P0335 0335	Crankshaft position sensor (POS) circuit	● The crankshaft position sensor (POS) signal is not detected by the ECM during the first few seconds of engine cranking. ● The proper pulse signal from the crankshaft position sensor (POS) is not sent to ECM while the engine is running. ● The crankshaft position sensor (POS) signal is not in the normal pattern during engine running.	● Harness or connectors (The sensor circuit is open or shorted) ● Crankshaft position sensor (POS) ● Signal plate

DTC Confirmation Procedure

UBS002UG

NOTE:
If “DTC Confirmation Procedure” has been previously conducted, always turn ignition switch “OFF” and wait at least 10 seconds before conducting the next test.
TESTING CONDITION:
Before performing the following procedure, confirm that battery voltage is more than 10.5V with ignition switch "ON".

WITH CONSULT-II

1. Turn ignition switch “ON” and select “DATA MONITOR” mode with CONSULT-II.
2. Crank engine for at least 2 seconds and run it for at least 5 seconds at idle speed.
3. If 1st trip DTC is detected, go to EC-287, "Diagnostic Procedure".

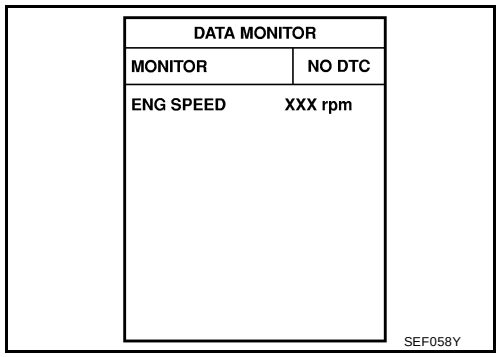

SEF058Y

WITH GST

Follow the procedure “WITH CONSULT-II” above.

Wiring Diagram

UBS002UH

EC-POS-01

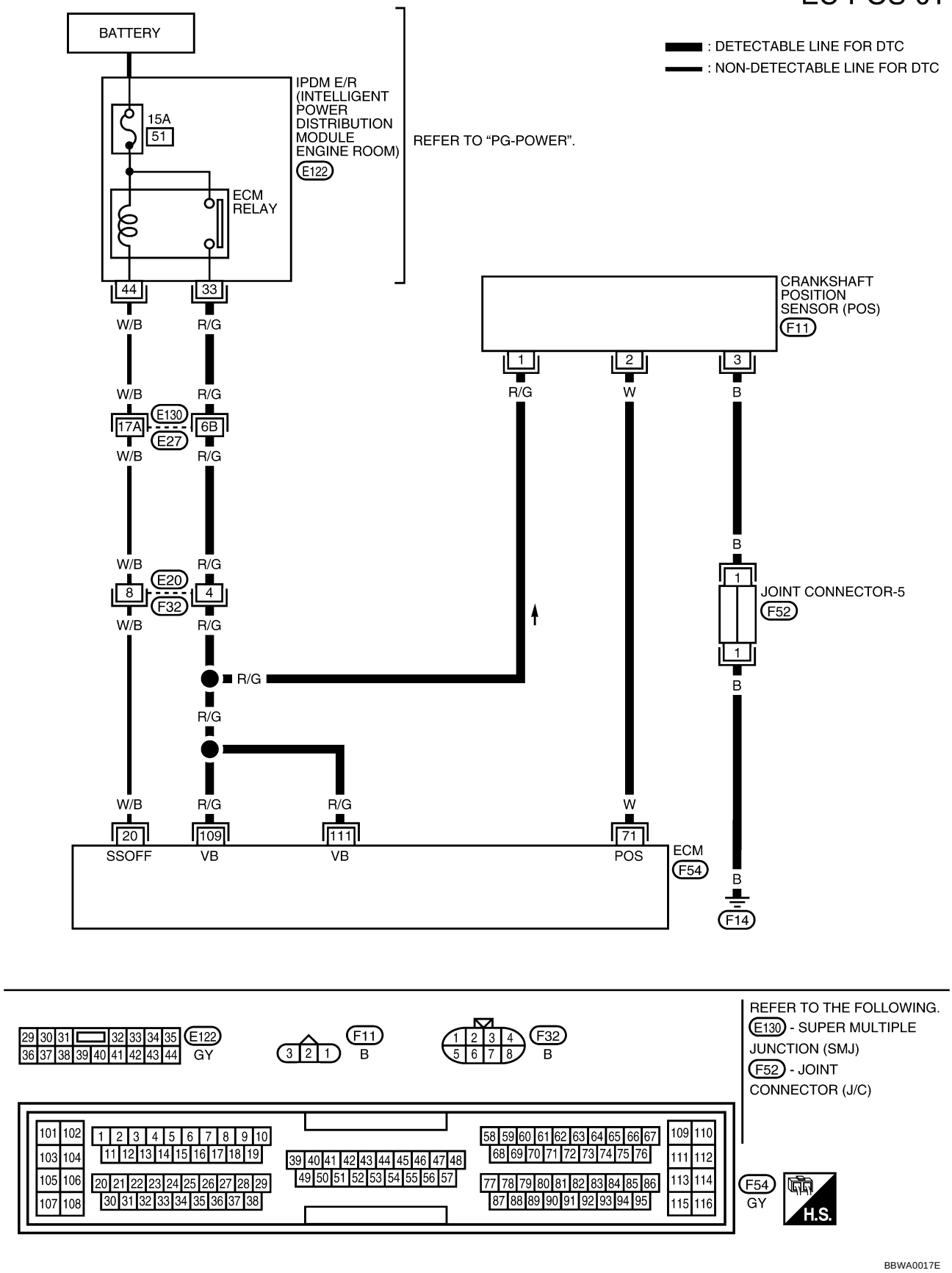

Specification data are reference values and are measured between each terminal and ground.

CAUTION:
Do not use ECM ground terminals when measuring input/output voltage. Doing so may result in damage to the ECM's transistor. Use a ground other than ECM terminals, such as the ground.

TERMINAL NO.	WIRE COLOR	ITEM	CONDITION	DATA (DC Voltage)
71	W	Crankshaft position sensor (POS)	**[Engine is running]** ● **Warm-up condition** ● Idle speed	Approximately 3V★ 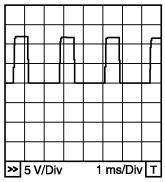 PBIB0527E
			[Engine is running] ● Engine speed is 2,000 rpm	Approximately 3V★ 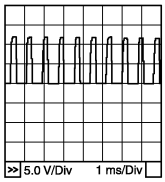 PBIB0528E

★: Average voltage for pulse signal (Actual pulse signal can be confirmed by oscilloscope.)

Diagnostic Procedure

UBS002UI

1. RETIGHTEN GROUND SCREWS

1. Turn ignition switch “OFF”.
2. Loosen and retighten engine ground screws.

>> GO TO 2.

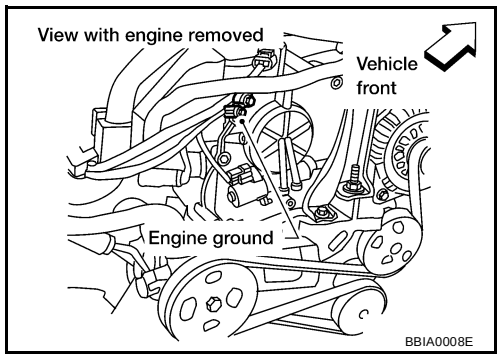

2. CHECK CRANKSHAFT POSITION (CKP) SENSOR (POS) POWER SUPPLY CIRCUIT

1. Disconnect crankshaft position (CKP) sensor (POS) harness connector.
2. Turn ignition switch "ON".

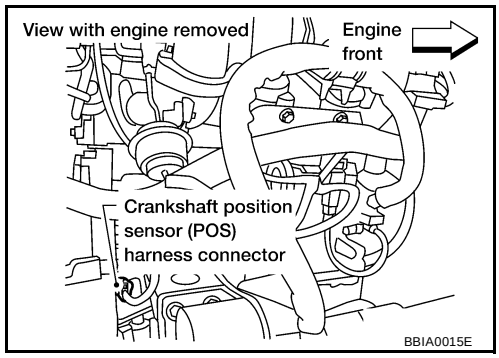

3. Check voltage between CKP sensor (POS) terminal 1 and ground with CONSULT-II or tester.

   Voltage: Battery voltage

4. Also check harness for short to ground and short to power.

OK or NG

OK >> GO TO 4.
NG >> GO TO 3.

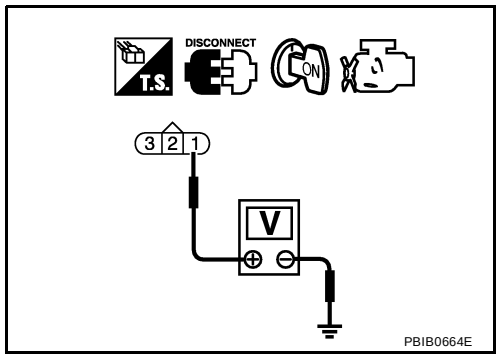

3. DETECT MALFUNCTIONING PART

Check the following.

- Harness connectors E130, E27
- Harness connectors E20, F32
- Harness for open or short between crankshaft position sensor (POS) and ECM
- Harness for open or short between crankshaft position sensor (POS) and IPDM E/R

>> Repair open circuit or short to ground or short to power in harness or connectors.

4. CHECK CKP (POS) GROUND CIRCUIT FOR OPEN AND SHORT

1. Turn ignition switch "OFF".
2. Check harness continuity between CKP sensor (POS) terminal 3 and engine ground.
   Refer to Wiring Diagram.

   Continuity should exist.

3. Also check harness for and short to power.

OK or NG

OK >> GO TO 6.
NG >> GO TO 5.

5. DETECT MALFUNCTIONING PART

Check the following.

- Joint connector-5
- Harness for open or short between crankshaft position sensor (POS) and engine ground

>> Repair open circuit or short to ground or short to power in harness or connectors.

6. CHECK CKP SENSOR (POS) INPUT SIGNAL CIRCUIT FOR OPEN AND SHORT

1. Disconnect ECM harness connector.
2. Check harness continuity between ECM terminal 71 and CKP sensor (POS) terminal 2. Refer to Wiring Diagram.

Continuity should exist.

3. Also check harness for short to ground and short to power.

OK or NG

OK >> GO TO 7.
NG >> Repair open circuit or short to ground or short to power in harness or connectors.

7. CHECK CRANKSHAFT POSITION SENSOR (POS)

Refer to EC-289, "Component Inspection" .

OK or NG

OK >> GO TO 8.
NG >> Replace crankshaft position sensor (POS).

8. CHECK GEAR TOOTH

Visually check for chipping signal plate gear tooth.

OK or NG

OK >> GO TO 9.
NG >> Replace the signal plate.

9. CHECK INTERMITTENT INCIDENT

Refer to EC-130, "TROUBLE DIAGNOSIS FOR INTERMITTENT INCIDENT" .

>> **INSPECTION END**

Component Inspection

UBS002UJ

CRANKSHAFT POSITION SENSOR (POS)

1. Loosen the fixing bolt of the sensor.
2. Disconnect crankshaft position sensor (POS) harness connector.
3. Remove the sensor.
4. Visually check the sensor for chipping.

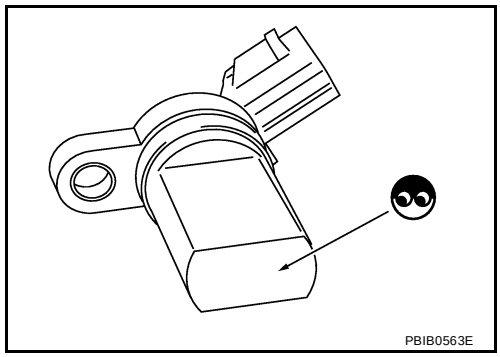

5. Check resistance as shown in the figure.

Terminal No. (Polarity)	Resistance Ω [at 25°C (77°F)]
1 (+) - 2 (-)	Except 0 or ∞
1 (+) - 3 (-)	
2 (+) - 3 (-)	

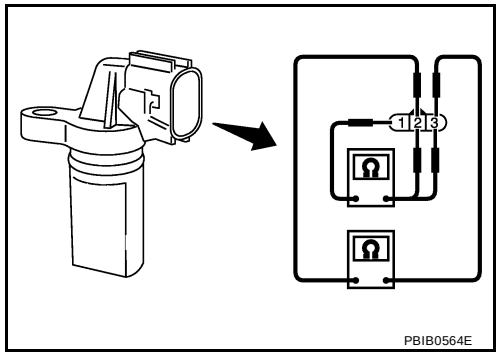

6. If NG, replace crankshaft position sensor (POS).

Removal and Installation

UBS002UK

CRANKSHAFT POSITION SENSOR (POS)

Refer to EM-67, "CYLINDER BLOCK" .

DTC P0340 CMP SENSOR (PHASE)

PFP:23731

Component Description

UBS002UL

The camshaft position sensor (PHASE) senses the retraction with intake valve camshaft to identify a particular cylinder. The camshaft position sensor (PHASE) senses the piston position.
When the crankshaft position sensor (POS) system becomes inoperative, the camshaft position sensor (PHASE) provides various controls of engine parts instead, utilizing timing of cylinder identification signals.
The sensor consists of a permanent magnet and Hall IC.
When engine is running, the high and low parts of the teeth cause the gap with the sensor to change.
The changing gap causes the magnetic field near the sensor to change.
Due to the changing magnetic field, the voltage from the sensor changes.

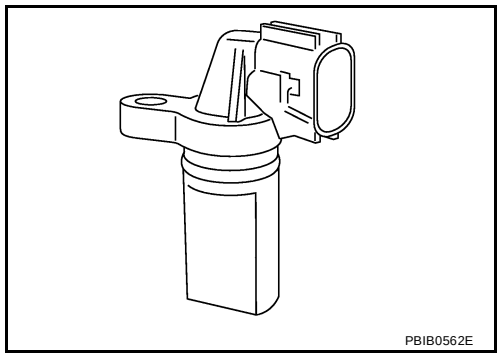
PBIB0562E

On Board Diagnosis Logic

UBS002UM

DTC No.	Trouble diagnosis name	DTC detecting condition	Possible cause
P0340 0340	Camshaft position sensor (PHASE) circuit	● The cylinder No. signal is not sent to ECM for the first few seconds during engine cranking. ● The cylinder No. signal is not set to ECM during engine running. ● The cylinder No. signal is not in the normal pattern during engine running.	● Harness or connectors (The sensor circuit is open or shorted) ● Camshaft position sensor (PHASE) ● Camshaft (Intake) ● Starter motor (Refer to SC-9 .) ● Starting system circuit (Refer to SC-9 .) ● Dead (Weak) battery

DTC Confirmation Procedure

UBS002UN

NOTE:
If “DTC Confirmation Procedure” has been previously conducted, always turn ignition switch OFF and wait at least 10 seconds before conducting the next test.
TESTING CONDITION:
Before performing the following procedure, confirm that battery voltage is more than 10.5V with ignition switch "ON".

WITH CONSULT-II

1. Turn ignition switch “ON”.
2. Select “DATA MONITOR” mode with CONSULT-II.
3. Crank engine for at least 2 seconds and run it for at least 5 seconds at idle speed.
4. If 1st trip DTC is detected, go to EC-293, "Diagnostic Procedure" .
   If 1st trip DTC is not detected, go to next step.
5. Maintaining engine speed at more than 800 rpm for at least 5 seconds.
6. If 1st trip DTC is detected, go to EC-293, "Diagnostic Procedure" .

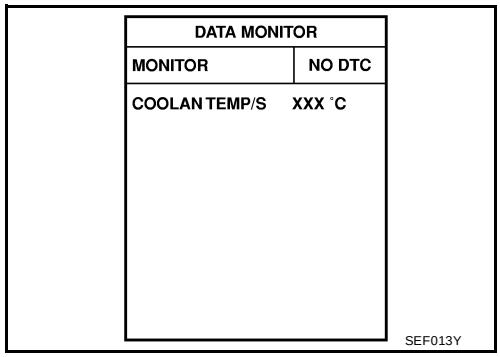

SEF013Y

WITH GST

Follow the procedure “WITH CONSULT-II” above.

Wiring Diagram

UBS002UO

EC-PHASE-01

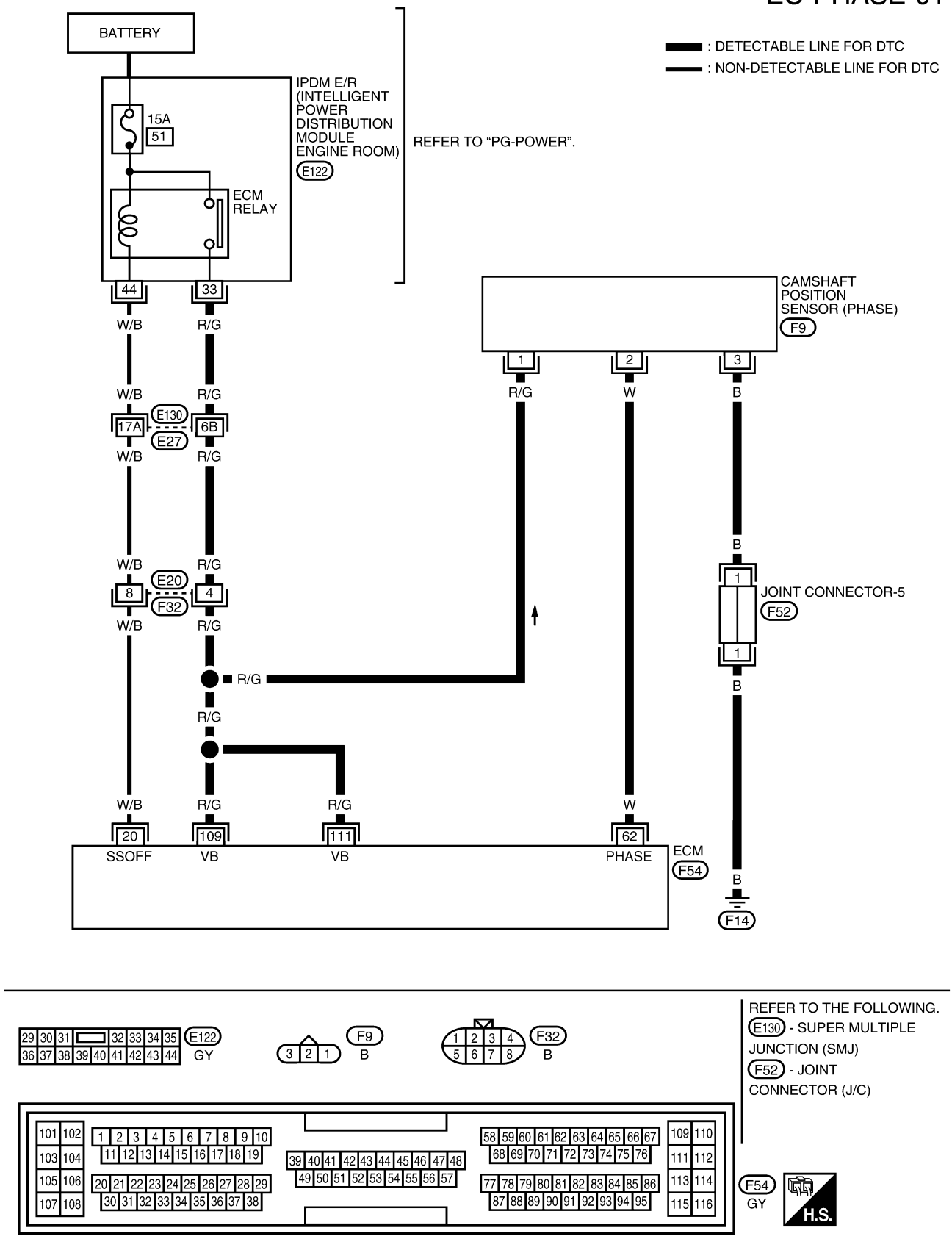

Specification data are reference values and are measured between each terminal and ground.

CAUTION:
Do not use ECM ground terminals when measuring input/output voltage. Doing so may result in damage to the ECM's transistor. Use a ground other than ECM terminals, such as the ground.

TERMINAL NO.	WIRE COLOR	ITEM	CONDITION	DATA (DC Voltage)
62	W	Camshaft position sensor (PHASE)	**[Engine is running]** ● **Warm-up condition** ● Idle speed	1.0 - 4.0V★ 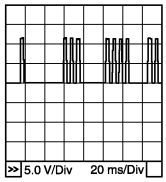 PBIB0525E
			[Engine is running] ● Engine speed is 2,000 rpm.	1.0 - 4.0V★ 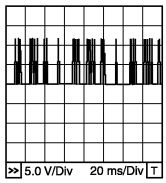 PBIB0526E

★: Average voltage for pulse signal (Actual pulse signal can be confirmed by oscilloscope.)

Diagnostic Procedure

UBS002UP

1. CHECK STARTING SYSTEM

Turn ignition switch to “START” position.

Does the engine turn over?
Does the starter motor operate?

Yes or No

Yes >> GO TO 2.
No >> Check starting system. (Refer to SC-9, "STARTING SYSTEM" .)

2. RETIGHTEN GROUND SCREWS

1. Turn ignition switch OFF.
2. Loosen and retighten engine ground screws.

>> GO TO 3.

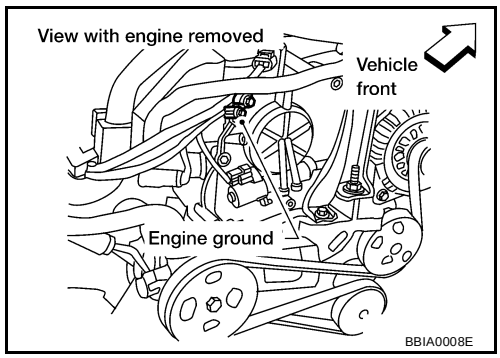

3. CHECK CAMSHAFT POSITION (CMP) SENSOR (PHASE) POWER SUPPLY CIRCUIT

1. Disconnect camshaft position (CMP) sensor (PHASE) harness connector.
2. Turn ignition switch "ON".

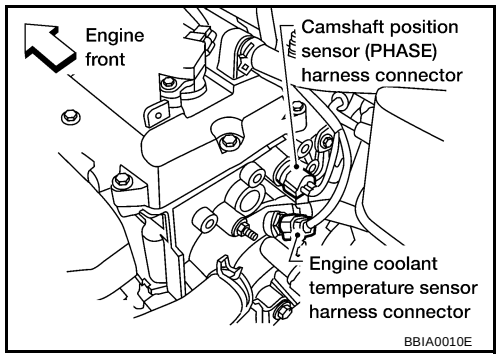

3. Check voltage between CMP sensor (PHASE) terminal 1 and ground with CONSULT-II or tester.

   Voltage: Battery voltage

4. Also check harness for short to ground and short to power.

OK or NG

OK >> GO TO 5.
NG >> GO TO 4.

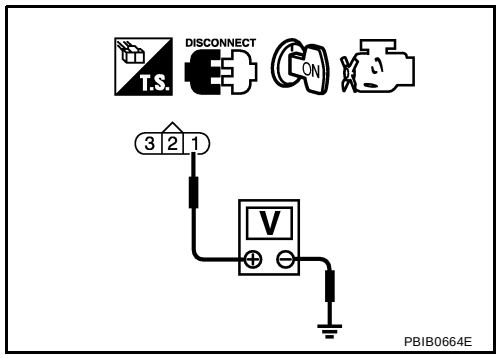

4. DETECT MALFUNCTIONING PART

Check the following.

- Harness connectors E130, E27
- Harness connectors E20, F32
- Harness for open or short between camshaft position sensor (PHASE) and ECM
- Harness for open or short between camshaft position sensor (PHASE) and IPDM E/R

>> Repair open circuit or short to ground or short to power in harness or connectors.

5. CHECK CMP SENSOR (PHASE) GROUND CIRCUIT FOR OPEN AND SHORT

1. Turn ignition switch "OFF".
2. Check harness continuity between CMP sensor (PHASE) terminal 3 and engine ground.

   Continuity should exist.

3. Also check harness for short to power.

OK or NG

OK >> GO TO 7.
NG >> GO TO 6.

6. DETECT MALFUNCTIONING PART

Check the following.

- Joint connector-5
- Harness for open or short between camshaft position sensor (PHASE) and engine ground

>> Repair open circuit or short to power in harness or connectors.

7. CHECK CMP SENSOR (PHASE) INPUT SIGNAL CIRCUIT FOR OPEN AND SHORT

1. Disconnect ECM harness connector.
2. Check harness continuity between ECM terminal 62 and CMP sensor (PHASE) terminal 2. Refer to Wiring Diagram.

Continuity should exist.

3. Also check harness for short to ground or short to power.

OK or NG

OK >> GO TO 8.
NG >> Repair open circuit or short to ground or short to power in harness or connectors.

8. CHECK CAMSHAFT POSITION SENSOR (PHASE)

Refer to EC-295, "Component Inspection" .

OK or NG

OK >> GO TO 9.
NG >> Replace camshaft position sensor (PHASE).

9. CHECK CAMSHAFT (INTAKE)

Check the following.

- Accumulation of debris to the signal plate of camshaft rear end
- Chipping signal plate of camshaft rear end

OK or NG

OK >> GO TO 10.
NG >> Remove debris and clean the signal plate of camshaft rear end or replace camshaft.

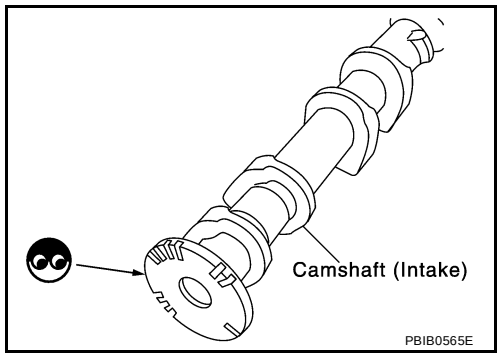

10. CHECK INTERMITTENT INCIDENT

Refer to EC-130, "TROUBLE DIAGNOSIS FOR INTERMITTENT INCIDENT" .

>> **INSPECTION END**

Component Inspection

UBS002UQ

CAMSHAFT POSITION SENSOR (PHASE)

1. Loosen the fixing bolt of the sensor.
2. Disconnect camshaft position sensor (PHASE) harness connector.
3. Remove the sensor.
4. Visually check the sensor for chipping.

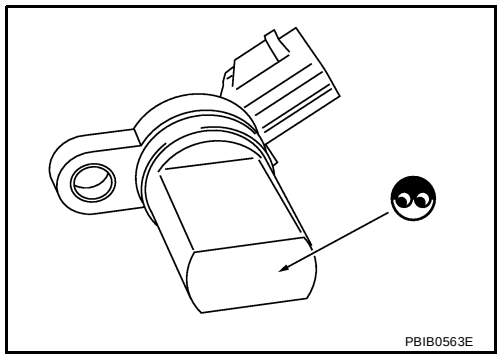

5. Check resistance as shown in the figure.

Terminal No. (Polarity)	Resistance Ω [at 25°C (77°F)]
1 (+) - 2 (-)	Except 0 or ∞
1 (+) - 3 (-)	
2 (+) - 3 (-)	

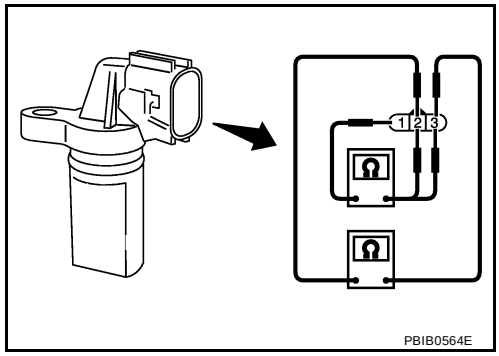

Removal and Installation

UBS002UR

CAMSHAFT POSITION SENSOR (PHASE)

Refer to EM-34, "CAMSHAFT" .

DTC P0420 THREE WAY CATALYST FUNCTION

PFP:20905

On Board Diagnosis Logic

UBS002US

The ECM monitors the switching frequency ratio of heated oxygen sensors 1 and 2.
A three way catalyst (Manifold) with high oxygen storage capacity will indicate a low switching frequency of heated oxygen sensor 2. As oxygen storage capacity decreases, the heated oxygen sensor 2 switching frequency will increase.
When the frequency ratio of heated oxygen sensors 1 and 2 approaches a specified limit value, the three way catalyst (Manifold) malfunction is diagnosed.

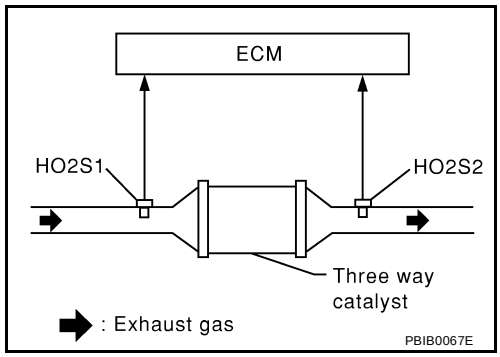

DTC No.	Trouble diagnosis name	DTC detecting condition	Possible cause
P0420 0420	Catalyst system efficiency below threshold	● Three way catalyst (Manifold) does not operate properly. ● Three way catalyst (Manifold) does not have enough oxygen storage capacity.	● Three way catalyst (Manifold) ● Exhaust tube ● Intake air leaks ● Fuel injectors ● Fuel injector leaks ● Spark plug ● Improper ignition timing

DTC Confirmation Procedure

UBS002UT

NOTE:
If “DTC Confirmation Procedure” has been previously conducted, always turn ignition switch “OFF” and wait at least 10 seconds before conducting the next test.

WITH CONSULT-II

TESTING CONDITION:

- **Open engine hood before conducting the following procedure.**
- **Do not hold engine speed for more than the specified minutes below.**

1. Turn ignition switch “ON”.
2. Select “DTC & SRT CONFIRMATION” then “SRT WORK SUPPORT” mode with CONSULT-II.
3. Start engine.
4. Rev engine up to 2,000 to 3,000 rpm and hold it for 3 consecutive minutes then release the accelerator pedal completely.
   If "INCMP" of "CATALYST" changed to "COMPLT", go to step 7
5. Wait 5 seconds at idle.

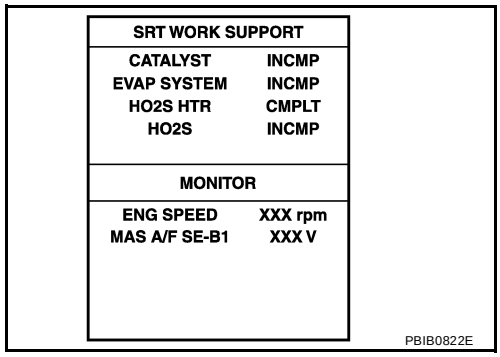

6. Rev engine up to 2,000 to 3,000 rpm and maintain it until “INCMP” of "CATALYST" changes to “CMPLT” (It will take approximately 5 minutes).
   If not “CMPLT”, stop engine and cool it down to less than 70°C (158°F) and then retest from step 1.

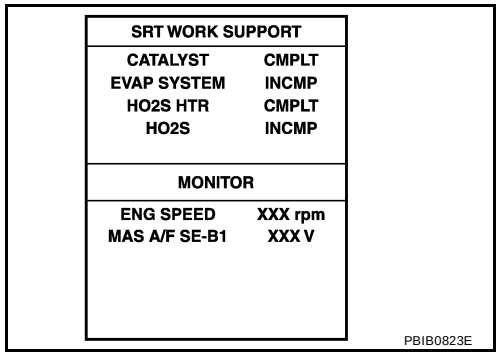

7. Select “SELF-DIAG RESULTS” mode with CONSULT-II.
8. Confirm that the 1st trip DTC is not detected.
   If the 1st trip DTC is detected, go to EC-299, "Diagnostic Procedure" .

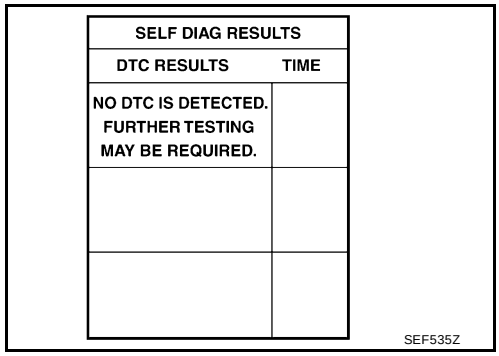

Overall Function Check

UBS002UU

Use this procedure to check the overall function of the three way catalyst (Manifold). During this check, a 1st trip DTC might not be confirmed.

CAUTION:
Always drive vehicle at a safe speed.

WITH GST

1. Start engine and drive vehicle at a speed of more than 70 km/h (43 MPH) for 2 consecutive minutes.
2. Stop vehicle with engine running.
3. Set voltmeters probes between ECM terminal 92 [HO2S1 signal] and engine ground, and ECM terminal 95 [HO2S2 signal] and engine ground.
4. Keep engine speed at 2,000 rpm constant under no load.

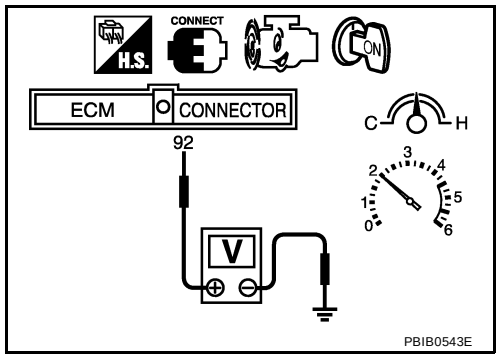

5. Make sure that the voltage switching frequency (high & low) between ECM terminal 95 and engine ground is very less than that of ECM terminal 92 and engine ground.
   Switching frequency ratio = A/B
   A: Heated oxygen sensor 2 voltage switching frequency
   B: Heated oxygen sensor 1 voltage switching frequency
   This ratio should be less than 0.75.
   If the ratio is greater than above, it means three way catalyst does not operate properly. Go to EC-299, "Diagnostic Procedure" .

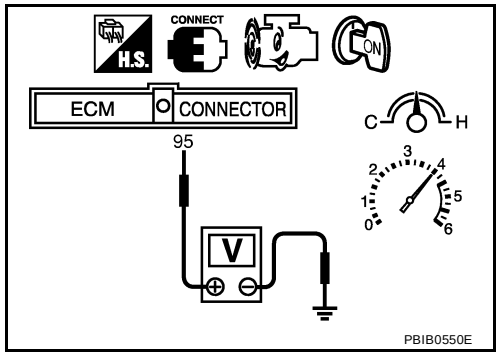

NOTE:
If the voltage at terminal 92 does not switch periodically more than 5 times within 10 seconds at step 5, perform trouble diagnosis for “DTC P0133” first. (See EC-191 .)

Diagnostic Procedure

UBS002UV

1. CHECK EXHAUST SYSTEM

Visually check exhaust tubes and muffler for dent.

OK or NG

OK >> GO TO 2.
NG >> Repair or replace.

2. CHECK EXHAUST AIR LEAK

1. Start engine and run it at idle.
2. Listen for an exhaust air leak before the three way catalyst (Manifold).

OK or NG

OK >> GO TO 3.
NG >> Repair or replace.

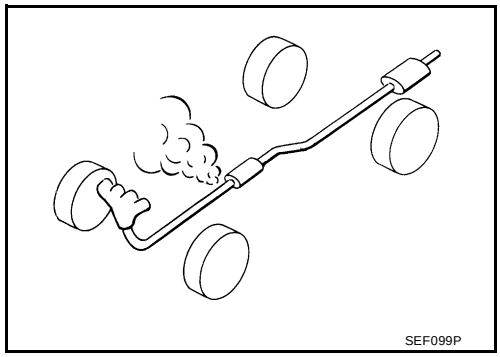

3. CHECK INTAKE AIR LEAK

Listen for an intake air leak after the mass air flow sensor.

OK or NG

OK >> GO TO 4.
NG >> Repair or replace.

4. CHECK IGNITION TIMING

Check the following items. Refer to EC-84, "Basic Inspection" .

Items	Specifications	
Ignition timing	A/T	15° ± 5° BTDC (in “P” or “N” position)
	M/T	15° ± 5° BTDC
Target idle speed	A/T	700 ± 50 rpm (in "P" or "N" position)
	M/T	700 ± 50 rpm

OK or NG

OK >> GO TO 5.
NG >> Follow the “Basic Inspection”.

5. CHECK INJECTORS

1. Refer to Wiring Diagram for Injectors, EC-575 .
2. Stop engine and then turn ignition switch “ON”.
3. Check voltage between ECM terminals 101, 102, 103, 104 and ground with CONSULT-II or tester.

Battery voltage should exist.

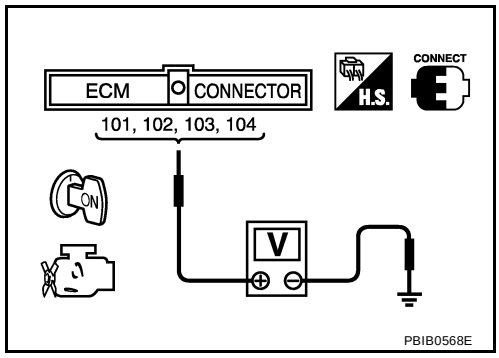

OK or NG

OK >> GO TO 6.
NG >> Perform EC-576, "Diagnostic Procedure" .

6. CHECK IGNITION SPARK

1. Turn ignition switch “OFF”.
2. Disconnect ignition coil assembly from rocker cover.
3. Connect a known good spark plug to the ignition coil assembly.
4. Place end of spark plug against a suitable ground and crank engine.
5. Check for spark.

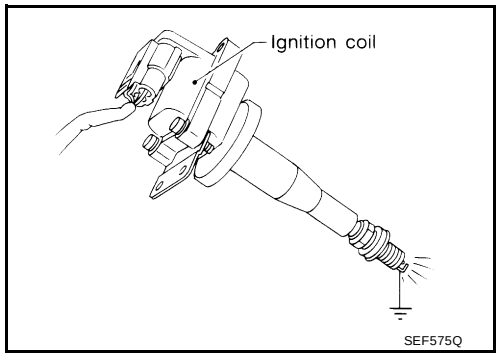

OK or NG

OK >> GO TO 7.
NG >> Check ignition coil with power transistor and their circuit. Refer to EC-554, "IGNITION SIGNAL" .

7. CHECK INJECTOR

1. Turn ignition switch “OFF”.
2. Remove injector assembly.
   Refer to EM-29, "FUEL INJECTOR AND FUEL TUBE" .
   Keep fuel hose and all injectors connected to injector gallery.
3. Disconnect all ignition coil harness connectors.
4. Turn ignition switch “ON”.
   Make sure fuel does not drip from injector.

OK or NG

OK (Does not drip.)>>GO TO 8.
NG (Drips.)>>Replace the injector(s) from which fuel is dripping.

8. CHECK INTERMITTENT INCIDENT

Refer to EC-130, "TROUBLE DIAGNOSIS FOR INTERMITTENT INCIDENT" .

Trouble is fixed.>>**INSPECTION END**
Trouble is not fixed.>>Replace three way catalyst (Manifold).

DTC P0441 EVAP CONTROL SYSTEM

PFP:14950

System Description

UBS002UW

NOTE:
If DTC P0441 is displayed with P0226, P0227, P0228, P1227 or P1228, perform trouble diagnosis for displayed other DTC.

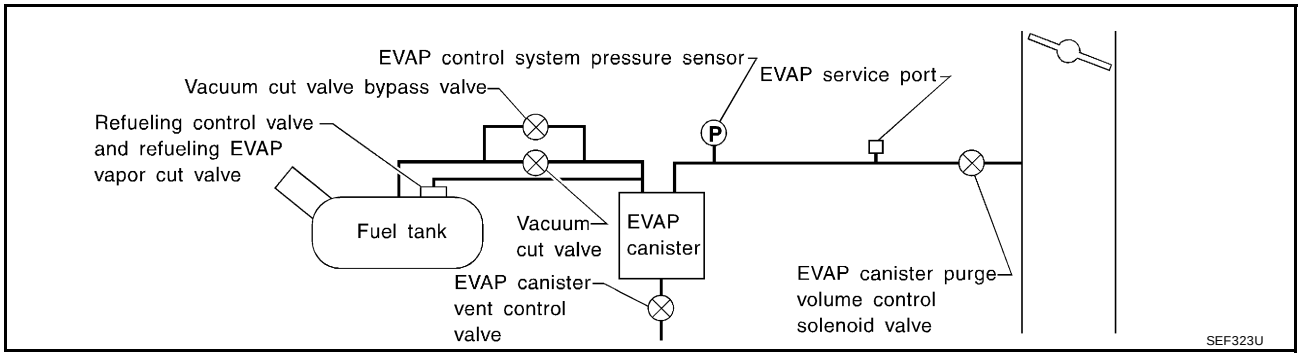

In this evaporative emission (EVAP) control system, purge flow occurs during non-closed throttle conditions. Purge volume is related to air intake volume. Under normal purge conditions (non-closed throttle), the EVAP canister purge volume control solenoid valve is open to admit purge flow. Purge flow exposes the EVAP control system pressure sensor to intake manifold vacuum.

On Board Diagnosis Logic

UBS002UX

Under normal conditions (non-closed throttle), sensor output voltage indicates if pressure drop and purge flow are adequate. If not, a fault is determined.

DTC No.	Trouble diagnosis name	DTC detecting condition	Possible cause
P0441 0441	EVAP control system incorrect purge flow	EVAP control system does not operate properly, EVAP control system has a leak between intake manifold and EVAP control system pressure sensor.	● EVAP canister purge volume control solenoid valve stuck closed ● EVAP control system pressure sensor and the circuit ● Loose, disconnected or improper connection of rubber tube ● Blocked rubber tube ● Cracked EVAP canister ● EVAP canister purge volume control solenoid valve circuit ● Accelerator pedal position sensor ● Blocked purge port ● EVAP canister vent control valve

DTC Confirmation Procedure

UBS002UY

CAUTION:
Always drive vehicle at a safe speed.

NOTE:
If “DTC Confirmation Procedure” has been previously conducted, always turn ignition switch “OFF” and wait at least 10 seconds before conducting the next test.

TESTING CONDITION:

- **Always perform test at a temperature of 0°C (32°F) or more.**
- **Before performing the following procedure, confirm that battery voltage is more than 11V at idle.**

WITH CONSULT-II

1. Start engine and warm it up to normal operating temperature.
2. Turn ignition switch “OFF” and wait at least 10 seconds.
3. Start engine and let it idle for at least 70 seconds.
4. Select “PURG FLOW P0441” of “EVAPORATIVE SYSTEM” in “DTC CONFIRMATION” mode with CONSULT-II.

5. Touch “START”.
   If “COMPLETED” is displayed, go to step 7.
6. When the following conditions are met, “TESTING” will be displayed on the CONSULT-II screen. Maintain the conditions continuously until “TESTING” changes to “COMPLETED”. (It will take at least 35 seconds.)

Selector lever	Suitable position
Vehicle speed	32 - 120 km/h (20 - 75 MPH)
ENG SPEED	500 - 3,800 rpm
B/FUEL SCHDL	1.0 - 10.0 msec
Engine coolant temperature	70 - 100°C (158 - 212°F)

If “TESTING” is not changed for a long time, retry from step 2.

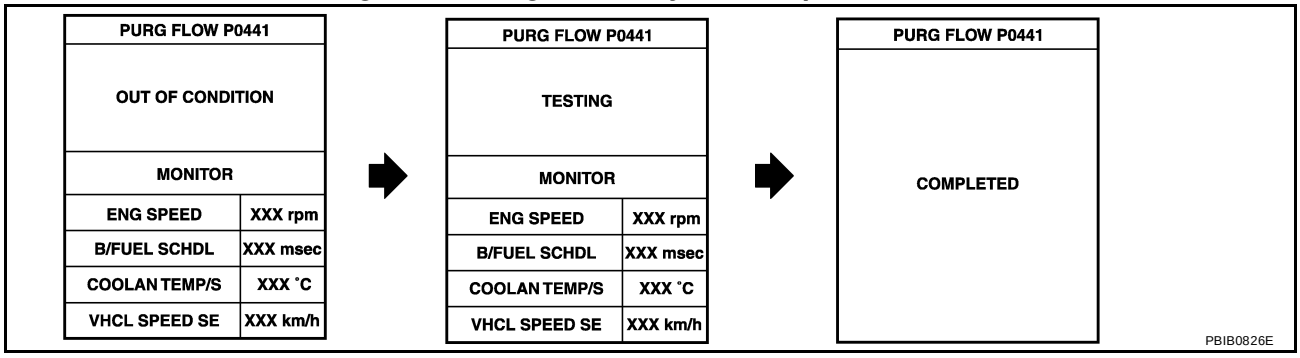

7. Make sure that “OK” is displayed after touching “SELF-DIAG RESULTS”. If “NG” is displayed, refer to EC-303, "Diagnostic Procedure" .

Overall Function Check

UBS002UZ

Use this procedure to check the overall monitoring function of the EVAP control system purge flow monitoring. During this check, a 1st trip DTC might not be confirmed.

WITH GST

1. Lift up drive wheels.
2. Start engine (TCS switch “OFF”) and warm it up to normal operating temperature.
3. Turn ignition switch “OFF”, wait at least 10 seconds.
4. Start engine and wait at least 70 seconds.
5. Set voltmeter probes to ECM terminals 88 (EVAP control system pressure sensor signal) and ground.
6. Check EVAP control system pressure sensor value at idle speed and note it.
7. Establish and maintain the following conditions for at least 1 minute.

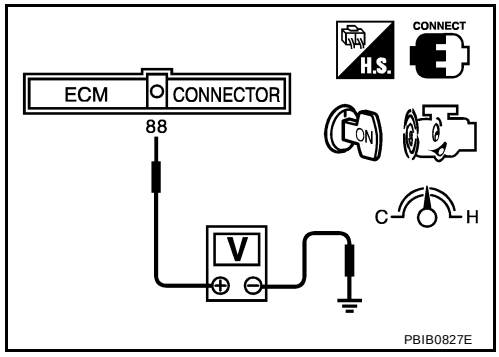

Air conditioner switch	ON
Steering wheel	Fully turned
Headlamp switch	ON
Rear window defogger switch	ON
Engine speed	Approx. 3,000 rpm
Gear position	Any position other than “P”, “N” or “R”

8. Verify that EVAP control system pressure sensor value stays 0.1V less than the value at idle speed (measured at step 6) for at least 1 second.
9. If NG, go to EC-303, "Diagnostic Procedure" .

Diagnostic Procedure

UBS002V0

1. CHECK EVAP CANISTER

1. Turn ignition switch “OFF”.
2. Check EVAP canister for cracks.

OK or NG

OK (With CONSULT-II)>>GO TO 2.
OK (Without CONSULT-II)>>GO TO 3.
NG >> Replace EVAP canister.

2. CHECK PURGE FLOW

With CONSULT-II

1. Disconnect vacuum hose connected to EVAP canister purge volume control solenoid valve at EVAP service port and install vacuum gauge.
2. Start engine and let it idle.

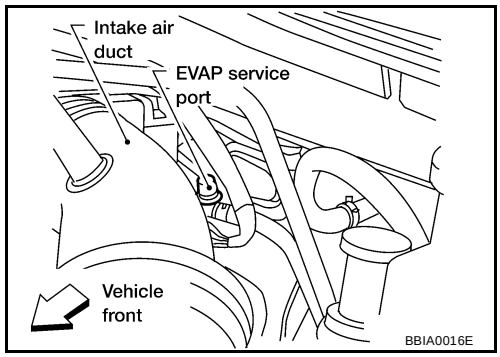

3. Select “PURG VOL CONT/V” in “ACTIVE TEST” mode with CONSULT-II.
4. Rev engine up to 2,000 rpm.
5. Touch “Qd” and “Qu” on CONSULT-II screen to adjust “PURG VOL CONT/V” opening and check vacuum existence.

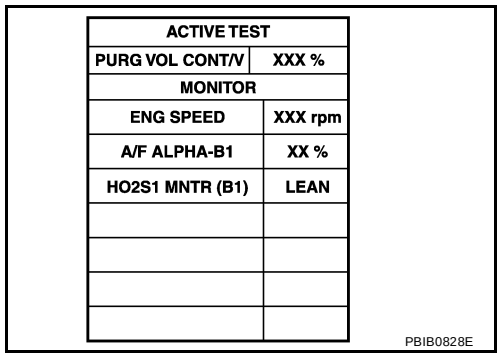

ACTIVE TEST	
PURG VOL CONT/V	XXX %
MONITOR	
ENG SPEED	XXX rpm
A/F ALPHA-B1	XX %
HO2S1 MNTR (B1)	LEAN

PBIB0828E

PURG VOL CONT/V	Vacuum
100.0%	Should exist.
0.0%	Should not exist.

OK or NG

OK >> GO TO 7.
NG >> GO TO 4.

3. CHECK PURGE FLOW

Without CONSULT-II

1. Start engine and warm it up to normal operating temperature.
2. Stop engine.
3. Disconnect vacuum hose connected to EVAP canister purge volume control solenoid valve at EVAP service port and install vacuum gauge.
4. Start engine and let it idle for at least 80 seconds.
5. Check vacuum gauge indication when revving engine up to 2,000 rpm.

   Vacuum should exist.

6. Release the accelerator pedal fully and let idle.

   Vacuum should not exist.

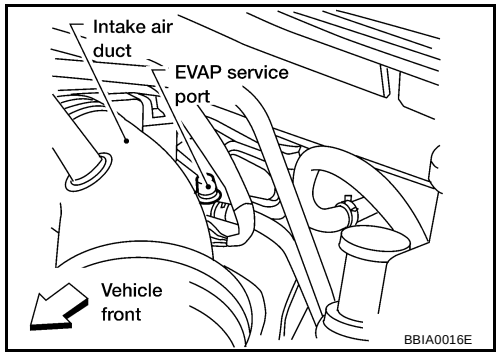

OK or NG

OK >> GO TO 7.
NG >> GO TO 4.

4. CHECK EVAP PURGE LINE

1. Turn ignition switch “OFF”.
2. Check EVAP purge line for improper connection or disconnection.
   Refer to EC-615, "EVAPORATIVE EMISSION LINE DRAWING" .

OK or NG

OK (With CONSULT-II)>>GO TO 5.
OK (Without CONSULT-II)>>GO TO 6.
NG >> Repair it.

5. CHECK EVAP PURGE HOSE AND PURGE PORT

1. Disconnect purge hoses connected to EVAP service port **A** and EVAP canister purge volume control solenoid valve **B** .
2. Blow air into each hose and EVAP purge port **C** .

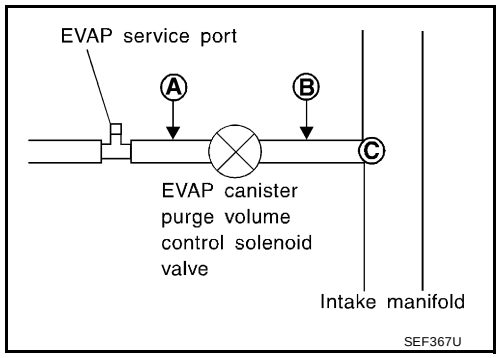

3. Check that air flows freely.

OK or NG

OK >> GO TO 6.
NG >> Repair or clean hoses and/or purge port.

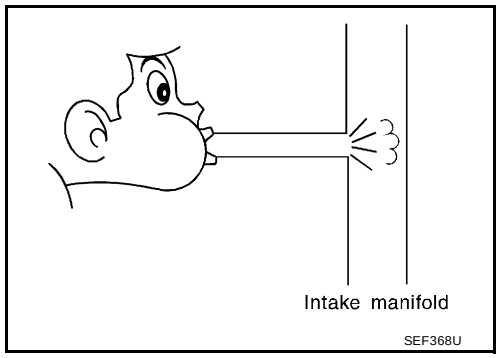

6. CHECK EVAP CANISTER PURGE VOLUME CONTROL SOLENOID VALVE

With CONSULT-II

1. Start engine.
2. Perform “PURG VOL CONT/V” in “ACTIVE TEST” mode with CONSULT-II. Check that engine speed varies according to the valve opening.

ACTIVE TEST	
PURG VOL CONT/V	XXX %
MONITOR	
ENG SPEED	XXX rpm
A/F ALPHA-B1	XX %
HO2S1 MNTR (B1)	LEAN

PBIB0828E

OK or NG

OK >> GO TO 8.
NG >> GO TO 7.

7. CHECK EVAP CANISTER PURGE VOLUME CONTROL SOLENOID VALVE

Refer to EC-320, "Component Inspection" .

OK or NG

OK >> GO TO 8.
NG >> Replace EVAP canister purge volume control solenoid valve.

8. CHECK EVAP CONTROL SYSTEM PRESSURE SENSOR HOSE

1. Turn ignition switch “OFF”.
2. Check disconnection or improper connection of hose connected to EVAP control system pressure sensor.

OK or NG

OK >> GO TO 9.
NG >> Repair it.

9. CHECK EVAP CONTROL SYSTEM PRESSURE SENSOR CONNECTOR

1. Disconnect EVAP control system pressure sensor harness connector.
2. Check connectors for water.

Water should not exist.

OK or NG

OK >> GO TO 10.
NG >> Replace EVAP control system pressure sensor.

10. CHECK EVAP CONTROL SYSTEM PRESSURE SENSOR FUNCTION

Refer to “DTC Confirmation Procedure” for DTC P0452 (EC-328) and P0453 (EC-334).

OK or NG

OK >> GO TO 11.
NG >> Replace EVAP control system pressure sensor.

11. CHECK RUBBER TUBE FOR CLOGGING

1. Disconnect rubber tube connected to EVAP canister vent control valve.
2. Check the rubber tube for clogging.

OK or NG

OK >> GO TO 12.
NG >> Clean the rubber tube using an air blower.

12. CHECK EVAP CANISTER VENT CONTROL VALVE

Refer to EC-326, "Component Inspection" .

OK or NG

OK >> GO TO 13.
NG >> Replace EVAP canister vent control valve.

13. CHECK EVAP PURGE LINE

Inspect EVAP purge line (pipe and rubber tube). Check for evidence of leaks.
Refer to EC-615, "EVAPORATIVE EMISSION LINE DRAWING" .

OK or NG

OK >> GO TO 14.
NG >> Replace it.

14. CLEAN EVAP PURGE LINE

Clean EVAP purge line (pipe and rubber tube) using air blower.

>> GO TO 15.

15. CHECK INTERMITTENT INCIDENT

Refer to EC-130, "TROUBLE DIAGNOSIS FOR INTERMITTENT INCIDENT" .

>> **INSPECTION END**

DTC P0442 EVAP CONTROL SYSTEM

PFP:14950

On Board Diagnosis Logic

UBS002V1

NOTE:
If DTC P0442 is displayed with P1448, perform trouble diagnosis for DTC P1448 first. (See EC-491 .)
This diagnosis detects leaks in the EVAP purge line using engine intake manifold vacuum.
If pressure does not increase, the ECM will check for leaks in the line between the fuel tank and EVAP canister purge volume control solenoid valve, under the following “Vacuum test” conditions.
The vacuum cut valve bypass valve is opened to clear the line between the fuel tank and the EVAP canister purge volume control solenoid valve. The EVAP canister vent control valve will then be closed to shut the EVAP purge line off. The EVAP canister purge volume control solenoid valve is opened to depressurize the EVAP purge line using intake manifold vacuum. After this occurs, the EVAP canister purge volume control solenoid valve will be closed.

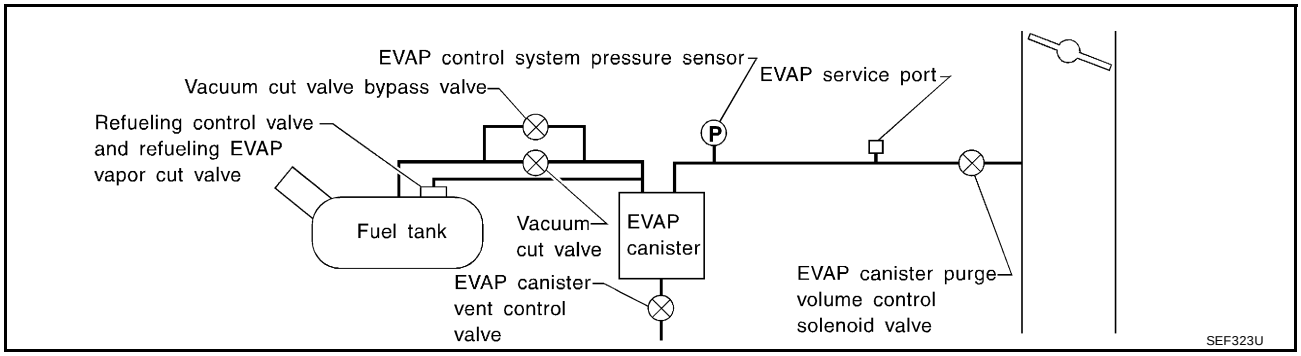

DTC No.	Trouble diagnosis name	DTC detecting condition	Possible cause
P0442 0442	EVAP control system small leak detected (negative pressure)	EVAP control system has a leak, EVAP control system does not operate properly.	● Incorrect fuel tank vacuum relief valve ● Incorrect fuel filler cap used ● Fuel filler cap remains open or fails to close. ● Foreign matter caught in fuel filler cap. ● Leak is in line between intake manifold and EVAP canister purge volume control solenoid valve. ● Foreign matter caught in EVAP canister vent control valve. ● EVAP canister or fuel tank leaks ● EVAP purge line (pipe and rubber tube) leaks ● EVAP purge line rubber tube bent ● Blocked or bent rubber tube to EVAP control system pressure sensor ● Loose or disconnected rubber tube ● EVAP canister vent control valve and the circuit ● EVAP canister purge volume control solenoid valve and the circuit ● Fuel tank temperature sensor ● O-ring of EVAP canister vent control valve is missing or damaged ● Water separator ● EVAP canister is saturated with water ● EVAP control system pressure sensor ● Fuel level sensor and the circuit ● Refueling control valve ● ORVR system leaks

CAUTION:

- **Use only a genuine NISSAN fuel filler cap as a replacement. If an incorrect fuel filler cap is used, the MIL may come on.**
- **If the fuel filler cap is not tightened properly, the MIL may come on.**
- **Use only a genuine NISSAN rubber tube as a replacement.**

DTC Confirmation Procedure

UBS002V2

NOTE:

- **If DTC P0442 is displayed with P1448, perform trouble diagnosis for DTC P1448 first. (See EC-491 .)**
- If "DTC Confirmation Procedure" has been previously conducted, always turn ignition switch "OFF" and wait at least 10 seconds before conducting the next test.

TESTING CONDITION:

- **Perform "DTC WORK SUPPORT" when the fuel level is between 1/4 to 3/4 full and vehicle is placed on flat level surface.**
- **Always perform test at a temperature of 0 to 30°C (32 to 86°F).**

WITH CONSULT-II

1. Turn ignition switch "ON".
2. Turn ignition switch "OFF" and wait at least 10 seconds.
3. Turn ignition switch "ON" and select "DATA MONITOR" mode with CONSULT-II.
4. Make sure that the following conditions are met.
   COOLAN TEMP/S: 0 - 70°C (32 - 158°F)
   INT/A TEMP SE: 0 - 30°C (32 - 86°F)
5. Select "EVAP SML LEAK P0442/P1442" of "EVAPORATIVE SYSTEM" in "DTC WORK SUPPORT" mode with CONSULT-II.
   Follow the instruction displayed.

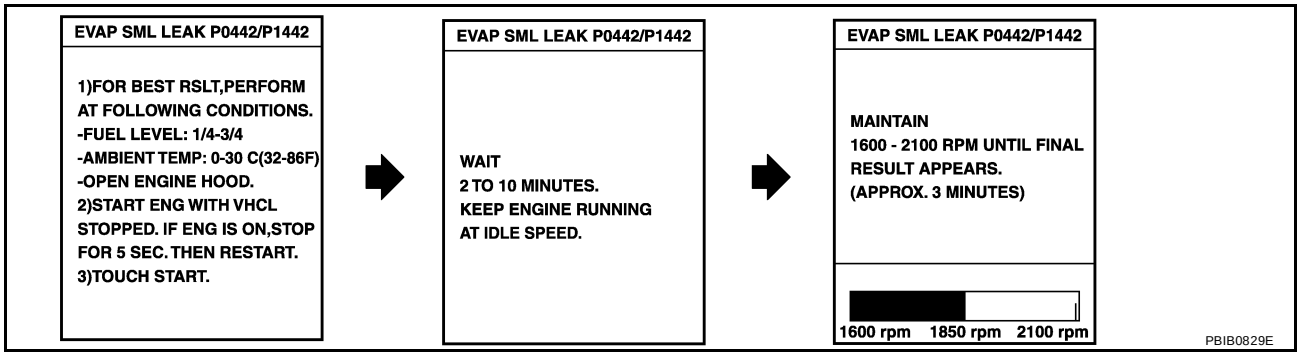

NOTE:
If the engine speed cannot be maintained within the range displayed on the CONSULT-II screen, go to EC-84, "Basic Inspection" .

6. Make sure that "OK" is displayed.
   If "NG" is displayed, refer to EC-309, "Diagnostic Procedure" .

   NOTE:
   Make sure that EVAP hoses are connected to EVAP canister purge volume control solenoid valve properly.

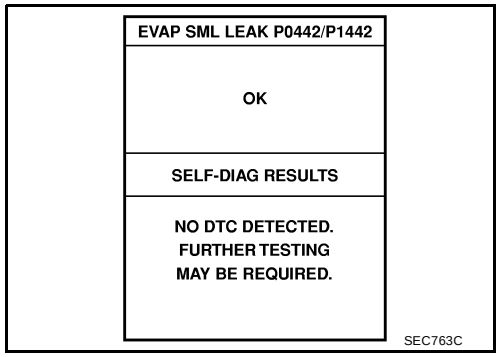

WITH GST

NOTE:
Be sure to read the explanation of "Driving Pattern" on EC-64 before driving vehicle.

1. Start engine.

2. Drive vehicle according to “Driving Pattern”, EC-64 .
3. Stop vehicle.
4. Select “MODE 1” with GST.
   If SRT of EVAP system is not set yet, go to the following step.
   If SRT of EVAP system is set, the result will be OK.
5. Turn ignition switch “OFF” and wait at least 10 seconds.
6. Start engine.
   It is not necessary to cool engine down before driving.
7. Drive vehicle again according to the “Driving Pattern”, EC-64 .
8. Stop vehicle.
9. Select “MODE 3” with GST.
   If P0442 is displayed on the screen, go to EC-309, "Diagnostic Procedure" .
   If P0441 is displayed on the screen, go to “Diagnostic Procedure” for DTC P0441, EC-303 .
   If P0441 and P0442 are not displayed on the screen, go to the following step.
10. Select “MODE 1” with GST.
    If SRT of EVAP system is set, the result will be OK.
    If SRT of EVAP system is not set, go to step 6.

Diagnostic Procedure

UBS002V3

1. CHECK FUEL FILLER CAP DESIGN

1. Turn ignition switch “OFF”.
2. Check for genuine NISSAN fuel filler cap design.

OK or NG

OK >> GO TO 2.
NG >> Replace with genuine NISSAN fuel filler cap.

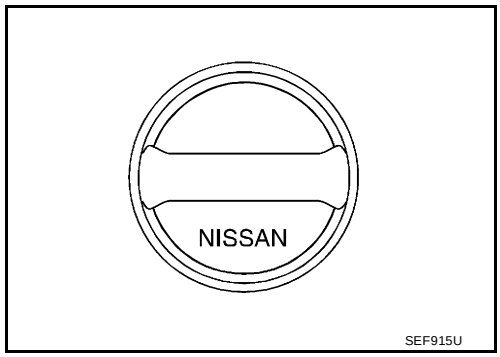

2. CHECK FUEL FILLER CAP INSTALLATION

Check that the cap is tightened properly by rotating the cap clockwise.

OK or NG

OK >> GO TO 3.
NG >> 1. Open fuel filler cap, then clean cap and fuel filler neck threads using air blower.
2. Retighten until ratcheting sound is heard.

3. CHECK FUEL FILLER CAP FUNCTION

Check for air releasing sound while opening the fuel filler cap.

OK or NG

OK >> GO TO 5.
NG >> GO TO 4.

4. CHECK FUEL TANK VACUUM RELIEF VALVE

Refer to EC-617, "FUEL TANK VACUUM RELIEF VALVE (BUILT INTO FUEL FULLER CAP)" .

OK or NG

OK >> GO TO 5.
NG >> Replace fuel filler cap with a genuine one.

5. INSTALL THE PRESSURE PUMP

To locate the EVAP leak, install EVAP service port adapter and pressure pump to EVAP service port securely.

NOTE:
Improper installation of the EVAP service port adapter to the EVAP service port may cause leaking.

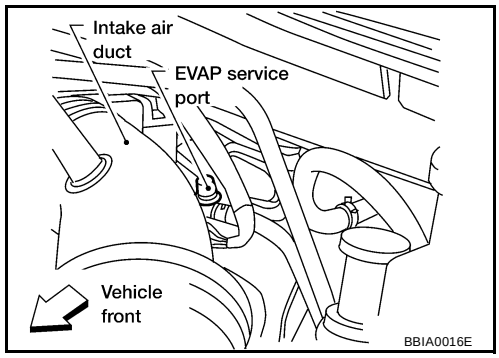

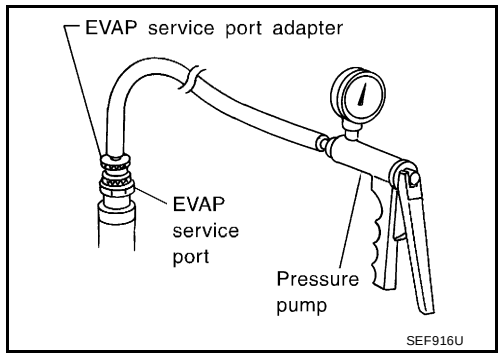

Models with CONSULT-II>>GO TO 6.
Models without CONSULT-II>>GO TO 7.

6. CHECK FOR EVAP LEAK

With CONSULT-II

1. Turn ignition switch “ON”.
2. Select “EVAP SYSTEM CLOSE” of “WORK SUPPORT” mode with CONSULT-II.
3. Touch “START” and apply pressure into the EVAP line until the pressure indicator reaches the middle of the bar graph.

   NOTE:
   - **Never use compressed air or a high pressure pump.**
   - **Do not exceed 4.12 kPa (0.042 kg/cm^2 , 0.6 psi) of pressure in the system.**

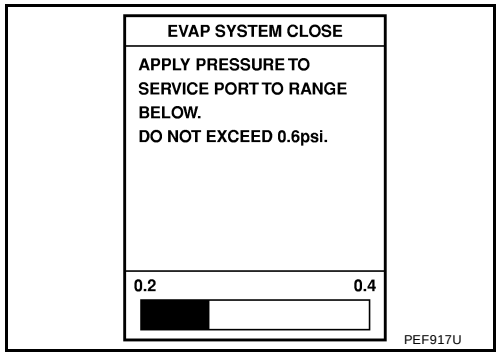

4. Using EVAP leak detector, locate the EVAP leak. For the leak detector, refer to the instruction manual for more details.
   Refer to EC-615, "EVAPORATIVE EMISSION LINE DRAWING"
   .

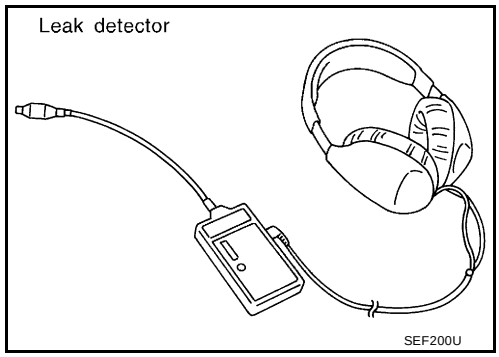

OK or NG

OK >> GO TO 8.
NG >> Repair or replace.

7. CHECK FOR EVAP LEAK

Without CONSULT-II

1. Turn ignition switch “OFF”.
2. Apply 12 volts DC to EVAP canister vent control valve. The valve will close. (Continue to apply 12 volts until the end of test.)
3. Apply 12 volts DC to vacuum cut valve bypass valve. The valve will open. (Continue to apply 12V until the end of test.)

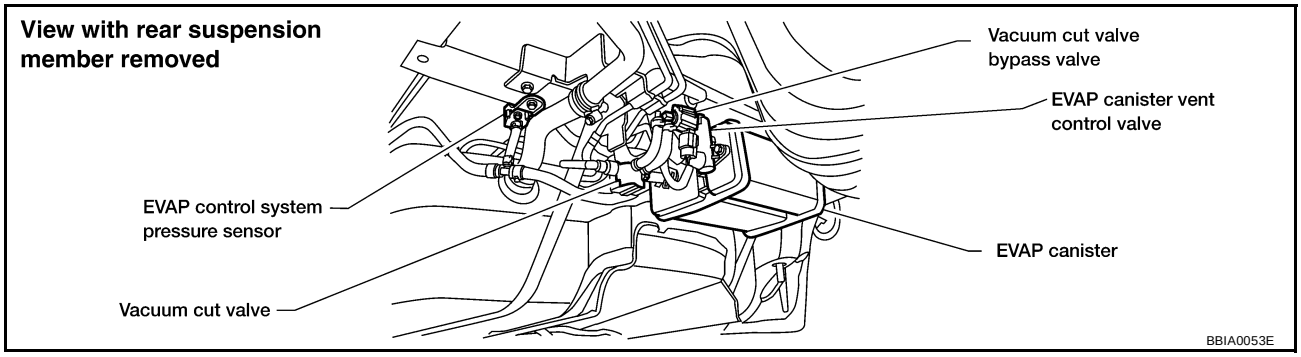

4. Pressurize the EVAP line using pressure pump with 1.3 to 2.7 kPa (10 to 20 mmHg, 0.39 to 0.79 inHg), then remove pump and EVAP service port adapter.

   NOTE:
   - **Never use compressed air or a high pressure pump.**
   - **Do not exceed 4.12 kPa (0.042 kg/cm^2 , 0.6 psi) of pressure in the system.**

5. Using EVAP leak detector, locate the EVAP leak. For the leak detector, refer to the instruction manual for more details. Refer to EC-615, "EVAPORATIVE EMISSION LINE DRAWING" .

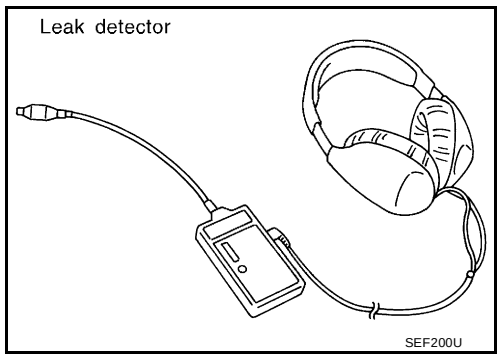

OK or NG

OK >> GO TO 8.
NG >> Repair or replace.

8. CHECK WATER SEPARATOR

Refer to EC-314, "Component Inspection" .

OK or NG

OK >> GO TO 9.
NG >> Replace water separator.

9. CHECK EVAP CANISTER VENT CONTROL VALVE, O-RING AND CIRCUIT

Refer to EC-491, "DTC Confirmation Procedure" .

OK or NG

OK >> GO TO 10.
NG >> Repair or replace EVAP canister vent control valve and O-ring or harness/connector.

10. CHECK IF EVAP CANISTER SATURATED WITH WATER

1. Remove EVAP canister with EVAP canister vent control valve attached.
2. Does water drain from the EVAP canister?

Yes or No

Yes >> GO TO 11.
No (With CONSULT-II)>>GO TO 13.
No (Without CONSULT-II)>>GO TO 14.

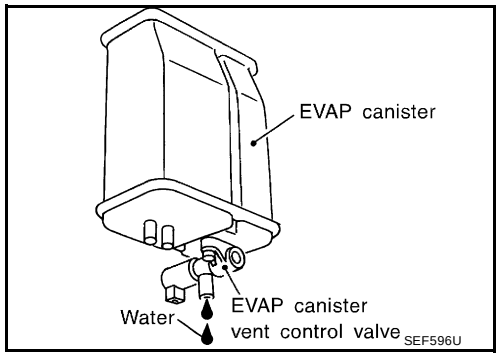

11. CHECK EVAP CANISTER

Weigh the EVAP canister with the EVAP canister vent control valve attached.
The weight should be less than 1.8 kg (4.0 lb).

OK or NG

OK (With CONSULT-II)>>GO TO 13.
OK (Without CONSULT-II)>>GO TO 14.
NG >> GO TO 12.

12. DETECT MALFUNCTIONING PART

Check the following.

- EVAP canister for damage
- EVAP hose between EVAP canister and water separator for clogging or poor connection

>> Repair hose or replace EVAP canister.

13. CHECK EVAP CANISTER PURGE VOLUME CONTROL SOLENOID VALVE OPERATION

With CONSULT-II

1. Disconnect vacuum hose to EVAP canister purge volume control solenoid valve at EVAP service port.
2. Start engine.
3. Perform “PURG VOL CONT/V” in “ACTIVE TEST” mode.
4. Touch “Qu” on CONSULT-II screen to increase “PURG VOL CONT/V” opening to 100.0%.
5. Check vacuum hose for vacuum when revving engine up to 2,000 rpm.

OK or NG

OK >> GO TO 16.
NG >> GO TO 15.

ACTIVE TEST	
PURG VOL CONT/V	XXX %
MONITOR	
ENG SPEED	XXX rpm
A/F ALPHA-B1	XX %
HO2S1 MNTR (B1)	LEAN

PBIB0828E

14. CHECK EVAP CANISTER PURGE VOLUME CONTROL SOLENOID VALVE OPERATION

Without CONSULT-II

1. Start engine and warm it up to normal operating temperature.
2. Stop engine.
3. Disconnect vacuum hose to EVAP canister purge volume control solenoid valve at EVAP service port.
4. Start engine and let it idle for at least 80 seconds.
5. Check vacuum hose for vacuum when revving engine up to 2,000 rpm.

Vacuum should exist.

OK or NG

OK >> GO TO 17.
NG >> GO TO 15.

15. CHECK VACUUM HOSE

Check vacuum hoses for clogging or disconnection. Refer to EC-29, "Vacuum Hose Drawing" .

OK or NG

OK >> GO TO 16.
NG >> Repair or reconnect the hose.

16. CHECK EVAP CANISTER PURGE VOLUME CONTROL SOLENOID VALVE

Refer to EC-320, "Component Inspection" .

OK or NG

OK >> GO TO 17.
NG >> Replace EVAP canister purge volume control solenoid valve.

17. CHECK FUEL TANK TEMPERATURE SENSOR

Refer to EC-233, "Component Inspection" .

OK or NG

OK >> GO TO 18.
NG >> Replace fuel level sensor unit.

18. CHECK EVAP CONTROL SYSTEM PRESSURE SENSOR

Refer to EC-333, "Component Inspection" .

OK or NG

OK >> GO TO 19.
NG >> Replace EVAP control system pressure sensor.

19. CHECK EVAP PURGE LINE

Check EVAP purge line (pipe, rubber tube, fuel tank and EVAP canister) for cracks or improper connection. Refer to EC-615, "EVAPORATIVE EMISSION LINE DRAWING" .

OK or NG

OK >> GO TO 20.
NG >> Repair or reconnect the hose.

20. CLEAN EVAP PURGE LINE

Clean EVAP purge line (pipe and rubber tube) using air blower.

>> GO TO 21.

21. CHECK REFUELING EVAP VAPOR LINE

Check refueling EVAP vapor line between EVAP canister and fuel tank for clogging, kink, looseness and improper connection. For location, refer to EC-620, "ON BOARD REFUELING VAPOR RECOVERY (ORVR)" .

OK or NG

OK >> GO TO 22.
NG >> Repair or replace hoses and tubes.

22. CHECK SIGNAL LINE AND RECIRCULATION LINE

Check signal line and recirculation line between filler neck tube and fuel tank for clogging, kink, cracks, looseness and improper connection.

OK or NG

OK >> GO TO 23.
NG >> Repair or replace hoses, tubes or filler neck tube.

23. CHECK REFUELING CONTROL VALVE

Refer to EC-623, "Component Inspection" .

OK or NG

OK >> GO TO 24.
NG >> Replace refueling control valve with fuel tank.

24. CHECK FUEL LEVEL SENSOR

Refer to DI-21, "FUEL LEVEL SENSOR UNIT CHECK" .

OK or NG

OK >> GO TO 25.
NG >> Replace fuel level sensor unit.

25. CHECK INTERMITTENT INCIDENT

Refer to EC-130, "TROUBLE DIAGNOSIS FOR INTERMITTENT INCIDENT" .

>> **INSPECTION END**

Component Inspection

UBS002V4

WATER SEPARATOR

1. Check visually for insect nests in the water separator air inlet.
2. Check visually for cracks or flaws in the appearance.
3. Check visually for cracks or flaws in the hose.
4. Check that **A** and **C** are not clogged by blowing air into **B** with **A** , and then **C** plugged.
5. In case of NG in items 2 - 4, replace the parts.

   NOTE:
   Do not disassemble water separator.

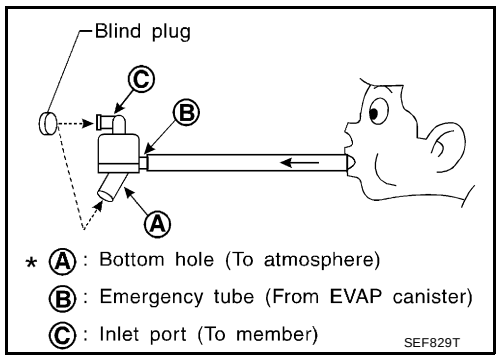

DTC P0444, P0445 EVAP CANISTER PURGE VOLUME CONTROL SOLENOID VALVE

PFP:14920

Description

UBS002V5

SYSTEM DESCRIPTION

Sensor	Input Signal to ECM	ECM function	Actuator
Crankshaft position sensor (POS) Camshaft position sensor (PHASE)	Engine speed	EVAP canister purge flow control	EVAP canister purge volume control solenoid valve
Mass air flow sensor	Amount of intake air		
Engine coolant temperature sensor	Engine coolant temperature		
Ignition switch	Start signal		
Throttle position sensor	Throttle position		
Accelerator pedal position sensor	Closed throttle position		
Heated oxygen sensors 1	Density of oxygen in exhaust gas (Mixture ratio feedback signal)		
Vehicle speed sensor	Vehicle speed		

This system controls flow rate of fuel vapor from the EVAP canister. The opening of the vapor by-pass passage in the EVAP canister purge volume control solenoid valve changes to control the flow rate. The EVAP canister purge volume control solenoid valve repeats ON/OFF operation according to the signal sent from the ECM. The opening of the valve varies for optimum engine control. The optimum value stored in the ECM is determined by considering various engine conditions. When the engine is operating, the flow rate of fuel vapor from the EVAP canister is regulated as the air flow changes.

COMPONENT DESCRIPTION

The EVAP canister purge volume control solenoid valve uses a ON/OFF duty to control the flow rate of fuel vapor from the EVAP canister. The EVAP canister purge volume control solenoid valve is moved by ON/OFF pulses from the ECM. The longer the ON pulse, the greater the amount of fuel vapor that will flow through the valve.

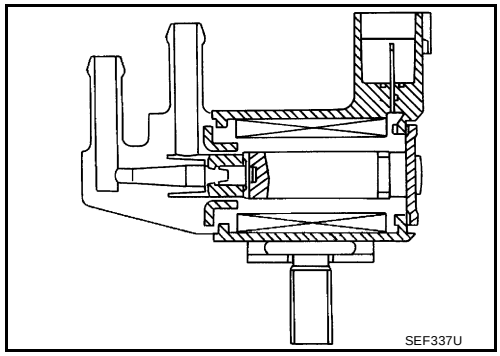

CONSULT-II Reference Value in Data Monitor Mode

UBS002V6

Specification data are reference values.

MONITOR ITEM	CONDITION		SPECIFICATION
PURG VOL C/V	● Engine: After warming up ● Shift lever: N ● Air conditioner switch: OFF ● No-load	Idle	0%
		2,000 rpm	20 - 30%

On Board Diagnosis Logic

UBS002V7

DTC No.	Trouble diagnosis name	DTC detecting condition	Possible cause
P0444 0444	EVAP canister purge volume control solenoid valve circuit open	An excessively low voltage signal is sent to ECM through the valve	● Harness or connectors (The sensor circuit is open or shorted.) ● EVAP canister purge volume control solenoid valve
P0445 0445	EVAP canister purge volume control solenoid valve circuit shorted	An excessively high voltage signal is sent to ECM through the valve	● Harness or connectors (The sensor circuit is shorted.) ● EVAP canister purge volume control solenoid valve

DTC Confirmation Procedure

UBS002V8

NOTE:
If “DTC Confirmation Procedure” has been previously conducted, always turn ignition switch “OFF” and wait at least 10 seconds before conducting the next test.
TESTING CONDITION:
Before performing the following procedure, confirm battery voltage is more than 11V at idle.

WITH CONSULT-II

1. Turn ignition switch “ON”.
2. Select “DATA MONITOR” mode with CONSULT-II.
3. Start engine and let it idle for at least 13 seconds.
4. If 1st trip DTC is detected, go to EC-318, "Diagnostic Procedure"
.

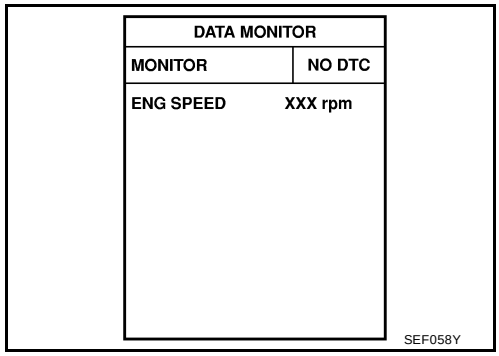

WITH GST

Follow the procedure “WITH CONSULT-II” above.

Wiring Diagram

UBS002V9

EC-PGC/V-01

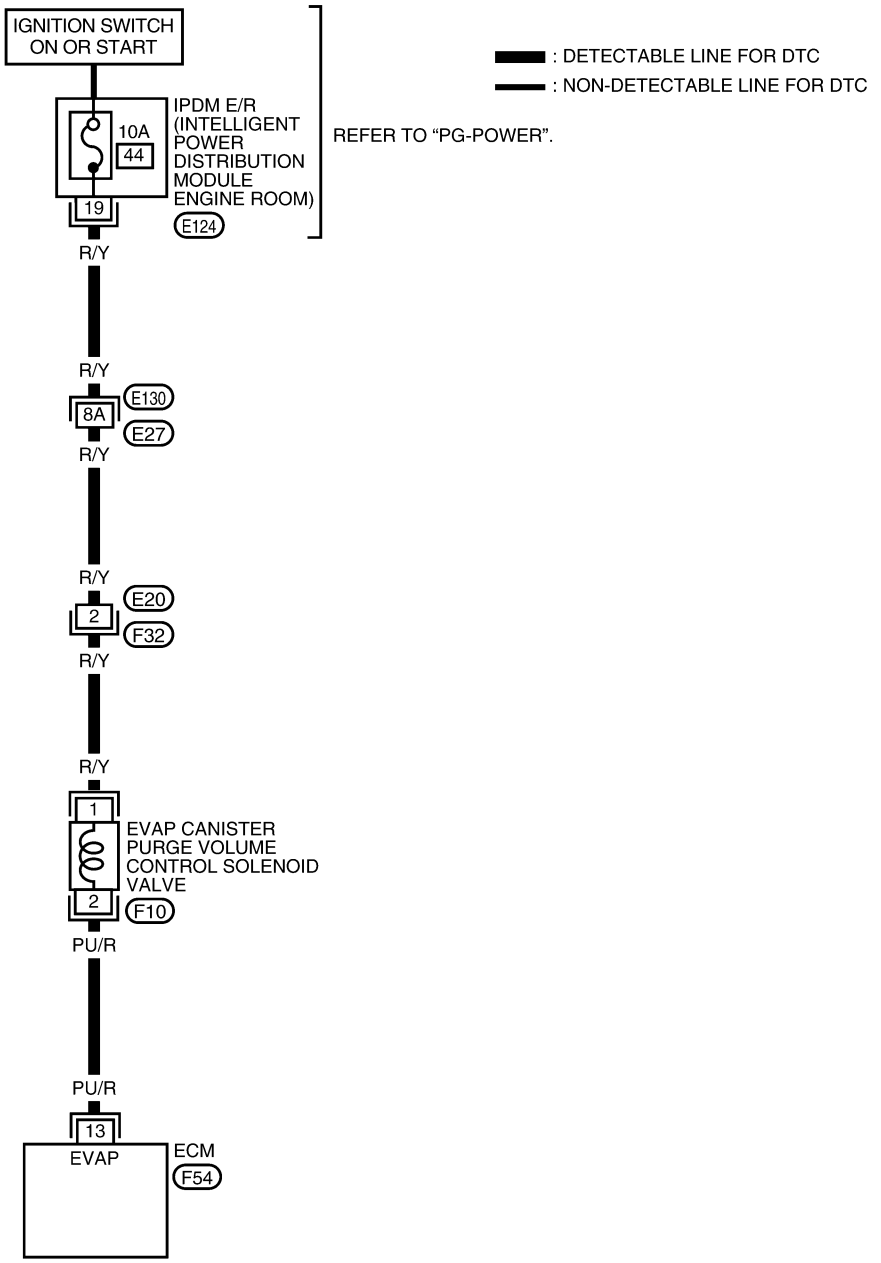

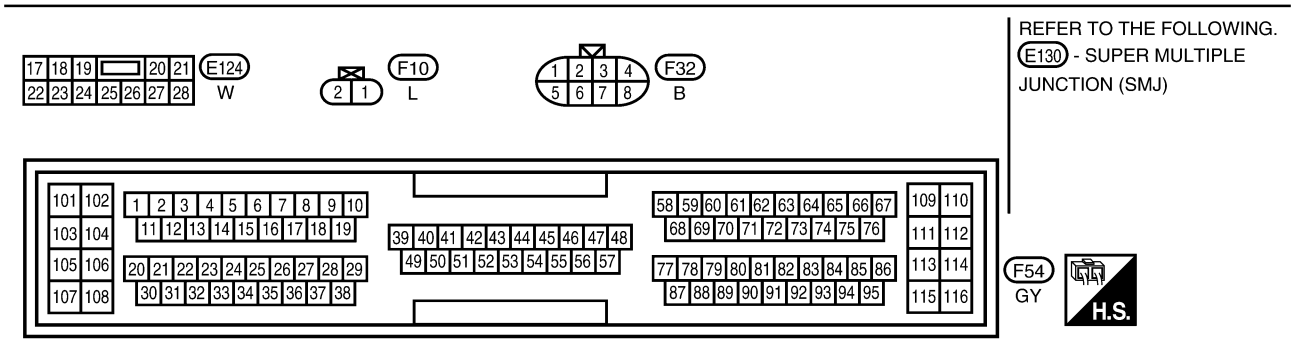

WBWA0001E

Specification data are reference values and are measured between each terminal and ground.

CAUTION:
Do not use ECM ground terminals when measuring input/output voltage. Doing so may result in damage to the ECM's transistor. Use a ground other than ECM terminals, such as the ground.

TERMINAL NO.	WIRE COLOR	ITEM	CONDITION	DATA (DC Voltage)
13	PU/R	EVAP canister purge volume control solenoid valve	**[Engine is running]** ● Idle speed	BATTERY VOLTAGE (11 - 14V)★ 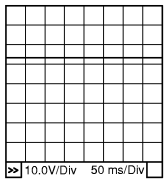 PBIB0050E
			[Engine is running] ● Engine speed is about 2,000 rpm (More than 100 seconds after starting engine)	Approximately 10V★ 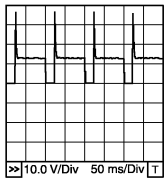 PBIB0520E

★: Average voltage for pulse signal (Actual pulse signal can be confirmed by oscilloscope.)

Diagnostic Procedure

UBS002VA

1. CHECK EVAP CANISTER PURGE VOLUME CONTROL SOLENOID VALVE POWER SUPPLY CIRCUIT

1. Turn ignition switch “OFF”.
2. Disconnect EVAP canister purge volume control solenoid valve harness connector.
3. Turn ignition switch “ON”.

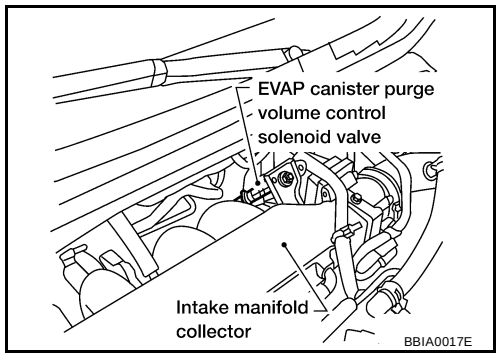

4. Check voltage between EVAP canister purge volume control solenoid valve terminal 1 and ground with CONSULT-II or tester.

Voltage: Battery voltage

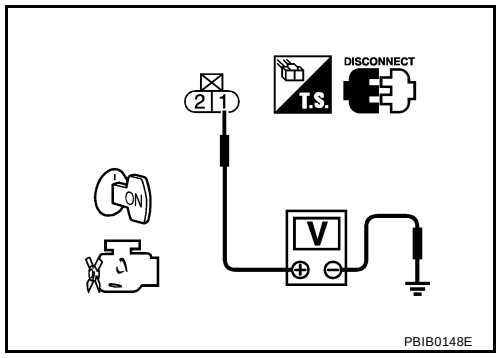

OK or NG

OK >> GO TO 3.
NG >> GO TO 2.

2. DETECT MALFUNCTIONING PART

Check the following.

- Harness connectors E130, E27
- Harness connectors E20, F32
- IPDM E/R connector E124
- 10A fuse
- Harness for open or short between EVAP canister purge volume control solenoid valve and fuse

>> Repair harness or connectors.

3. CHECK EVAP CANISTER PURGE VOLUME CONTROL SOLENOID VALVE OUTPUT SIGNAL CIRCUIT FOR OPEN AND SHORT

1. Turn ignition switch “OFF”.
2. Disconnect ECM harness connector.
3. Check harness continuity between ECM terminal 13 and EVAP canister purge volume control solenoid valve terminal 2.
   Refer to Wiring Diagram.

   Continuity should exist.

4. Also check harness for short to ground and short to power.

OK or NG

OK (With CONSULT-II)>>GO TO 4.
OK (Without CONSULT-II)>>GO TO 5.
NG >> Repair open circuit or short to ground and short to power in harness or connectors.

4. CHECK EVAP CANISTER PURGE VOLUME CONTROL SOLENOID VALVE OPERATION

With CONSULT-II

1. Reconnect all harness connectors disconnected.
2. Start engine.
3. Perform “PURG VOL CONT/V” in “ACTIVE TEST” mode with CONSULT-II. Check that engine speed varies according to the valve opening.

OK or NG

OK >> GO TO 6.
NG >> GO TO 5.

ACTIVE TEST	
PURG VOL CONT/V	XXX %
MONITOR	
ENG SPEED	XXX rpm
A/F ALPHA-B1	XXX %
HO2S1 MNTR (B1)	LEAN

PBIB0569E

5. CHECK EVAP CANISTER PURGE VOLUME CONTROL SOLENOID VALVE

Refer to EC-320, "Component Inspection" .

OK or NG

OK >> GO TO 6.
NG >> Replace EVAP canister purge volume control solenoid valve.

6. CHECK INTERMITTENT INCIDENT

Refer to EC-130, "TROUBLE DIAGNOSIS FOR INTERMITTENT INCIDENT" .

>> **INSPECTION END**

Component Inspection

UBS002VB

EVAP CANISTER PURGE VOLUME CONTROL SOLENOID VALVE

With CONSULT-II

Check air passage continuity of EVAP canister purge volume control solenoid valve under the following conditions.

Condition (PURG VOL CONT/V value)	Air passage continuity between A and B
100.0%	Yes
0.0%	No

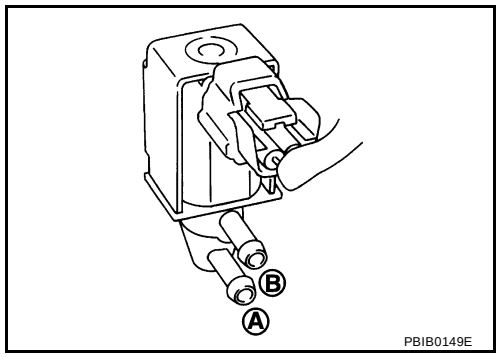

Without CONSULT-II

Check air passage continuity of EVAP canister purge volume control solenoid valve under the following conditions.

Condition	Air passage continuity between A and B
12V direct current supply between terminals 1 and 2	Yes
No supply	No

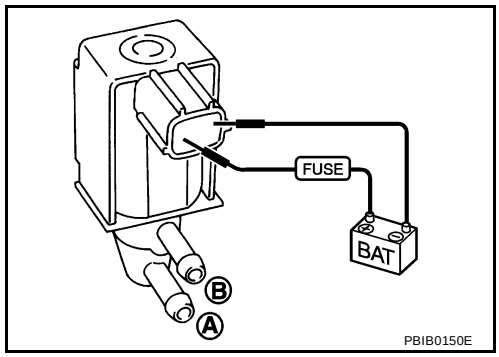

Removal and Installation

UBS002VC

EVAP CANISTER PURGE VOLUME CONTROL SOLENOID VALVE

Refer to EM-16, "INTAKE MANIFOLD" .

DTC P0447 EVAP CANISTER VENT CONTROL VALVE

PFP:14935

Component Description

UBS002VD

The EVAP canister vent control valve is located on the EVAP canister and is used to seal the canister vent.
This solenoid valve responds to signals from the ECM. When the ECM sends an ON signal, the coil in the solenoid valve is energized. A plunger will then move to seal the canister vent. The ability to seal the vent is necessary for the on board diagnosis of other evaporative emission control system components.
This solenoid valve is used only for diagnosis, and usually remains opened.
When the vent is closed, under normal purge conditions, the evaporative emission control system is depressurized and allows “EVAP Control System (Small Leak)” diagnosis.

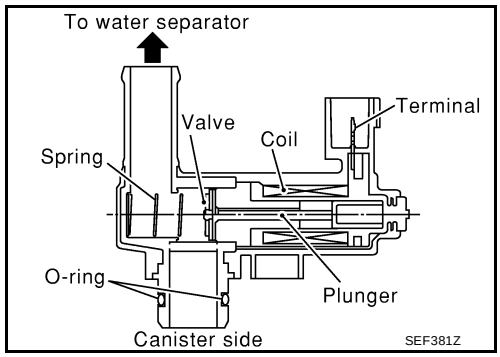

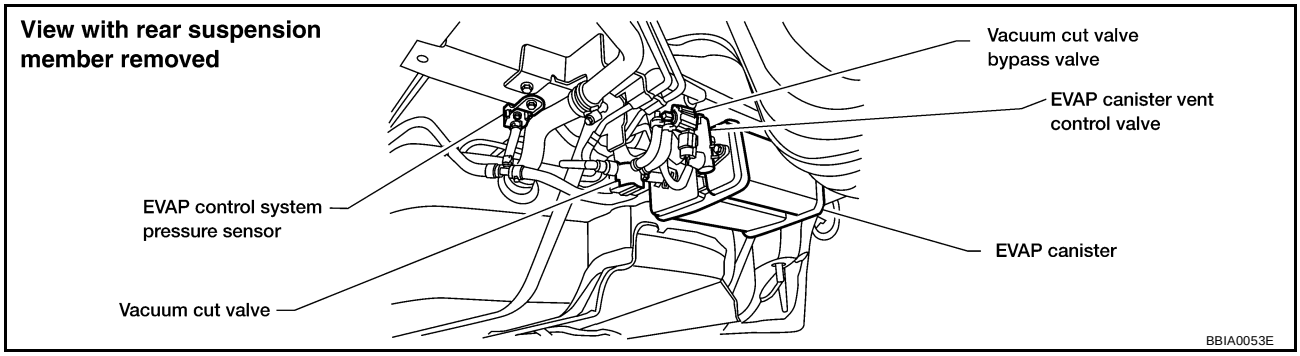

CONSULT-II Reference Value in Data Monitor Mode

UBS002VE

Specification data are reference values.

MONITOR ITEM	CONDITION	SPECIFICATION
VENT CONT/V	● Ignition switch: ON	OFF

On Board Diagnosis Logic

UBS002VF

DTC No.	Trouble diagnosis name	DTC detecting condition	Possible cause
P0447 0447	EVAP canister vent control valve circuit open	An improper voltage signal is sent to ECM through EVAP canister vent control valve.	● Harness or connectors (The valve circuit is open or shorted.) ● EVAP canister vent control valve

DTC Confirmation Procedure

UBS002VG

NOTE:
If “DTC Confirmation Procedure” has been previously conducted, always turn ignition switch “OFF” and wait at least 10 seconds before conducting the next test.
TESTING CONDITION:
Before performing the following procedure, confirm battery voltage is more than 11V at idle.

WITH CONSULT-II

1. Turn ignition switch “ON”.

2. Select “DATA MONITOR” mode with CONSULT-II.
3. Start engine and wait at least 8 seconds.
4. If 1st trip DTC is detected, go to EC-324, "Diagnostic Procedure"
.

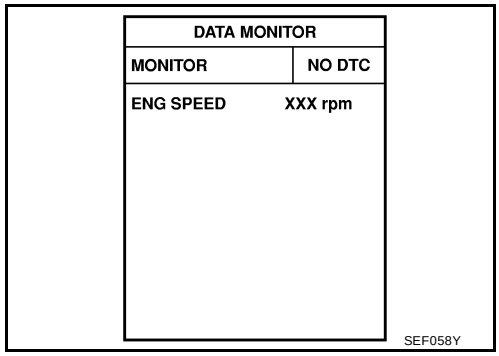

WITH GST

Follow the procedure “WITH CONSULT-II” above.

Wiring Diagram

UBS002VH

EC-VENT/V-01

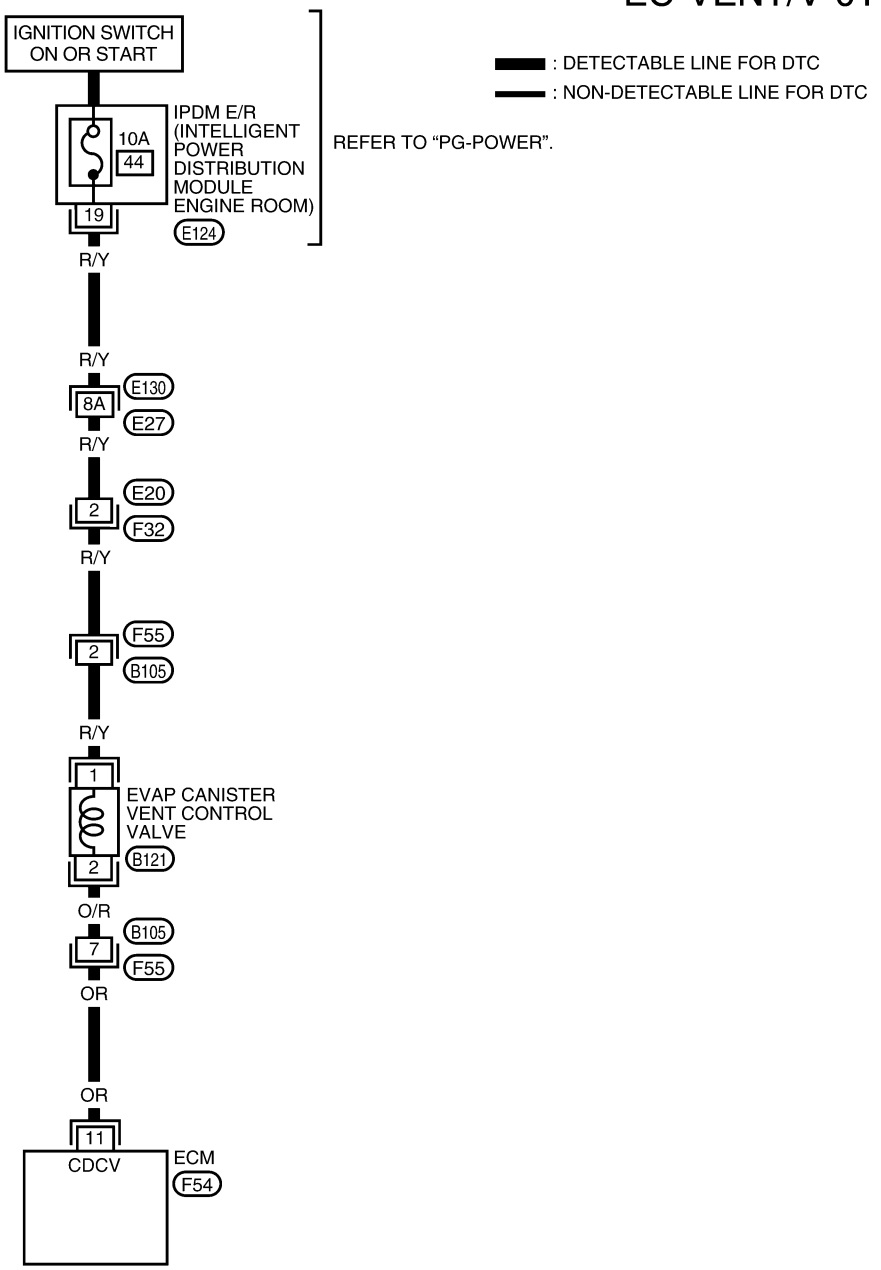

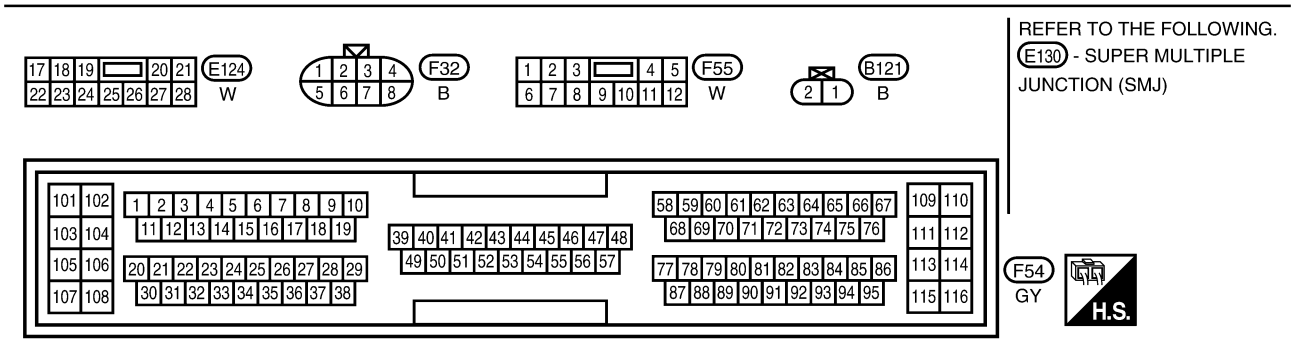

BBWA0020E

Specification data are reference values and are measured between each terminal and ground.

CAUTION:
Do not use ECM ground terminals when measuring input/output voltage. Doing so may result in damage to the ECM's transistor. Use a ground other than ECM terminals, such as the ground.

TERMINAL NO.	WIRE COLOR	ITEM	CONDITION	DATA (DC Voltage)
11	OR	EVAP canister vent control valve	**[Ignition switch "ON"]**	BATTERY VOLTAGE (11 - 14V)

Diagnostic Procedure

UBS002VI

1. INSPECTION START

Do you have CONSULT-II?

Yes or No

Yes >> GO TO 2.
No >> GO TO 3.

2. CHECK EVAP CANISTER VENT CONTROL VALVE CIRCUIT

With CONSULT-II

1. Turn ignition switch "OFF" and then turn "ON".
2. Select "VENT CONTROL/V" in "ACTIVE TEST" mode with CONSULT-II.
3. Touch "ON/OFF" on CONSULT-II screen.
4. Check for operating sound of the valve.
   Clicking noise should be heard.

ACTIVE TEST	
VENT CONTROL/V	OFF
MONITOR	
ENG SPEED	XXX rpm
A/F ALPHA-B1	XXX %
HO2S1 (B1)	XXX V

PBIB0834E

OK or NG

OK >> GO TO 7.
NG >> GO TO 3.

3. CHECK EVAP CANISTER VENT CONTROL VALVE POWER SUPPLY CIRCUIT

1. Turn ignition switch “OFF”.
2. Disconnect EVAP canister vent control valve harness connector.

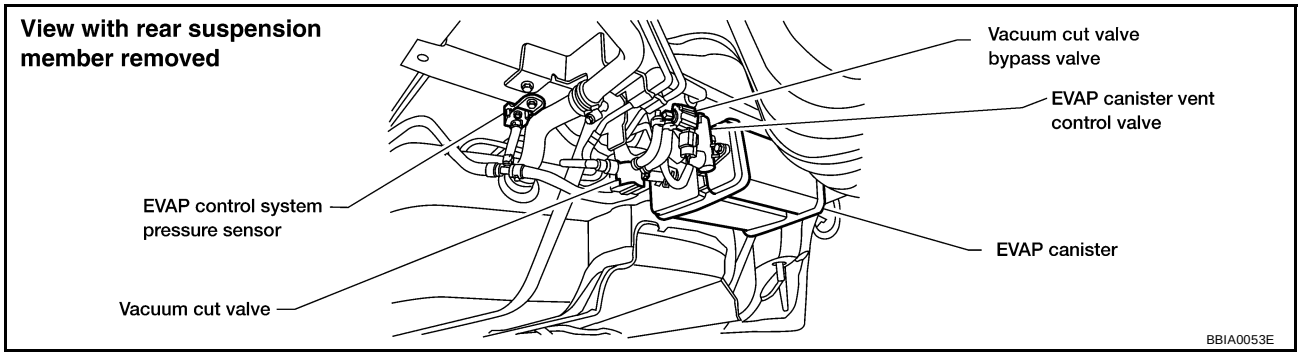

3. Turn ignition switch “ON”.
4. Check voltage between EVAP canister vent control valve terminal 1 and ground with CONSULT-II or tester.

Voltage: Battery voltage

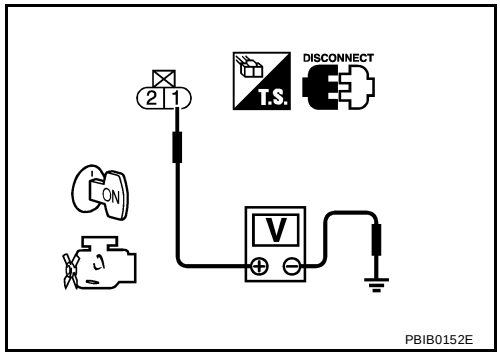

OK or NG

OK >> GO TO 5.
NG >> GO TO 4.

4. DETECT MALFUNCTIONING PART

Check the following.

- Harness connectors B105, F55
- Harness connectors F32, E20
- Harness connectors E27, E130
- IPDM E/R harness connector E124
- 10A fuse
- Harness for open or short between EVAP canister vent control valve and fuse

>> Repair harness or connectors.

5. CHECK EVAP CANISTER VENT CONTROL VALVE OUTPUT SIGNAL CIRCUIT FOR OPEN AND SHORT

1. Turn ignition switch “OFF”.
2. Disconnect ECM harness connector.
3. Check harness continuity between ECM terminal 11 and EVAP canister vent control valve terminal 2. Refer to Wiring Diagram.

Continuity should exist.

4. Also check harness for short to ground and short to power.

OK or NG

OK >> GO TO 7.
NG >> GO TO 6.

6. DETECT MALFUNCTIONING PART

Check the following.

- Harness connectors B105, F55
- Harness for open or short between EVAP canister vent control valve and ECM

>> Repair open circuit or short to ground or short to power in harness or connectors.

7. CHECK RUBBER TUBE FOR CLOGGING

1. Disconnect rubber tube connected to EVAP canister vent control valve.
2. Check the rubber tube for clogging.

OK or NG

OK >> GO TO 8.
NG >> Clean the rubber tube using an air blower.

8. CHECK EVAP CANISTER VENT CONTROL VALVE

Refer to EC-326, "Component Inspection" .

OK or NG

OK >> GO TO 9.
NG >> Replace EVAP canister vent control valve.

9. CHECK INTERMITTENT INCIDENT

Refer to EC-130, "TROUBLE DIAGNOSIS FOR INTERMITTENT INCIDENT" .

>> **INSPECTION END**

Component Inspection

UBS002VJ

EVAP CANISTER VENT CONTROL VALVE

With CONSULT-II

1. Remove EVAP canister vent control valve from EVAP canister.
2. Check portion **B** of EVAP canister vent control valve for being rusted.
3. Reconnect harness connectors disconnected.
4. Turn ignition switch “ON”.

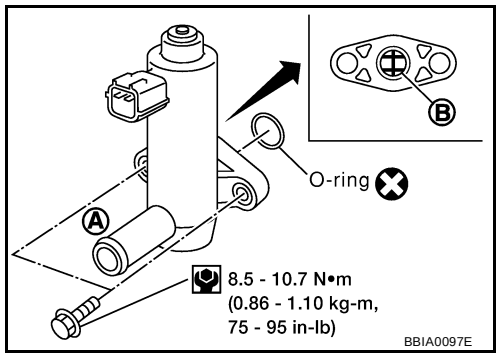

5. Perform “VENT CONTROL/V” in “ACTIVE TEST” mode.
6. Check air passage continuity and operation delay time.

Condition	Air passage continuity between A and B
ON	No
OFF	Yes

Operation takes less than 1 second.
Make sure new O-ring is installed properly.
If NG, go to next step.

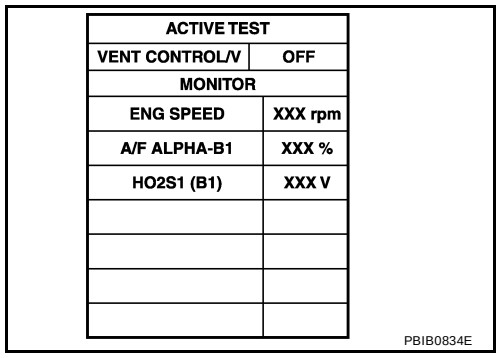

ACTIVE TEST	
VENT CONTROL/V	OFF
MONITOR	
ENG SPEED	XXX rpm
A/F ALPHA-B1	XXX %
HO2S1 (B1)	XXX V

PBIB0834E

7. Clean the air passage (Portion **A** to **B**) of EVAP canister vent control valve using an air blower.

8. Perform inspection again.

Without CONSULT-II

1. Remove EVAP canister vent control valve from EVAP canister.
2. Check portion **B** of EVAP canister vent control valve for being rusted.

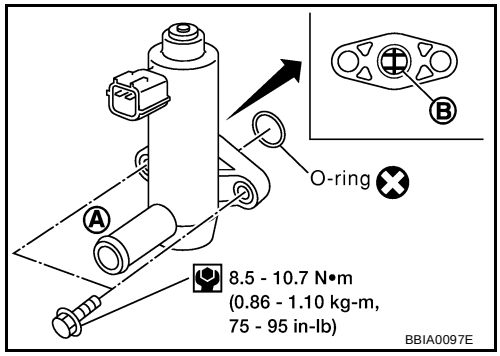

3. Check air passage continuity and operation delay time under the following conditions.

Condition	Air passage continuity between A and B
12V direct current supply between terminals 1 and 2	No
OFF	Yes

Operation takes less than 1 second.
Make sure new O-ring is installed properly.
If NG, go to next step.

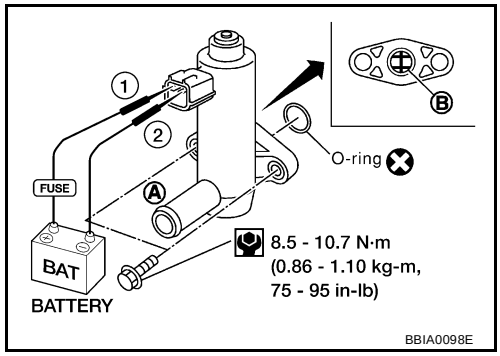

4. Clean the air passage (Portion **A** to **B**) of EVAP canister vent control valve using an air blower.
5. Perform inspection again.

DTC P0452 EVAP CONTROL SYSTEM PRESSURE SENSOR

PFP:25085

Component Description

UBS002VK

The EVAP control system pressure sensor detects pressure in the purge line. The sensor output voltage to the ECM increases as pressure increases. The EVAP control system pressure sensor is not used to control the engine system. It is used only for on board diagnosis.

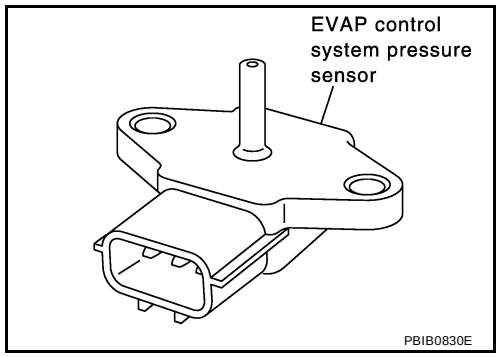

CONSULT-II Reference Value in Data Monitor Mode

UBS002VL

Specification data are reference values.

MONITOR ITEM	CONDITION	SPECIFICATION
EVAP SYS PRES	● Ignition switch: ON	Approx. 3.4V

On Board Diagnosis Logic

UBS002VM

DTC No.	Trouble diagnosis name	DTC detecting condition	Possible cause
P0452 0452	EVAP control system pressure sensor low input	An excessively low voltage from the sensor is sent to ECM.	● Harness or connectors (The sensor circuit is open or shorted.) ● EVAP control system pressure sensor

DTC Confirmation Procedure

UBS002VN

NOTE:
If “DTC Confirmation Procedure” has been previously conducted, always turn ignition switch “OFF” and wait at least 10 seconds before conducting the next test.
TESTING CONDITION:
Always perform test at a temperature of 5°C (41°F) or more.

WITH CONSULT-II

1. Start engine and warm it up to normal operating temperature.
2. Turn ignition switch “OFF” and wait at least 10 seconds.
3. Turn ignition switch “ON”.
4. Select “DATA MONITOR” mode with CONSULT-II.
5. Make sure that “FUEL T/TEMP SE” is more than 0°C (32°F).
6. Start engine and wait at least 20 seconds.
   If 1st trip DTC is detected, go to EC-331, "Diagnostic Procedure"
   .

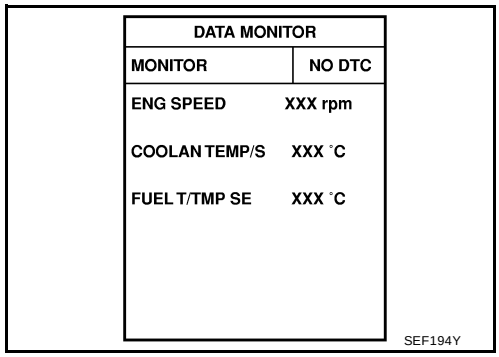

WITH GST

1. Start engine and warm it up to normal operating temperature.

2. Check that voltage between ECM terminal 70 (Fuel tank temperature sensor signal) and ground is less than 4.2V.
3. Turn ignition switch “OFF” and wait at least 10 seconds.
4. Start engine and wait at least 20 seconds.
5. Select “MODE 7” with GST.
   If 1st trip DTC is detected, go to EC-331, "Diagnostic Procedure"
   .

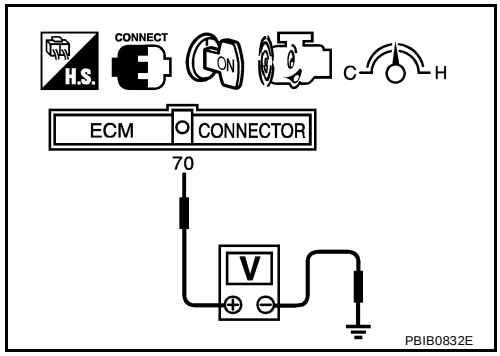

Wiring Diagram

UBS002VO

EC-PRE/SE-01

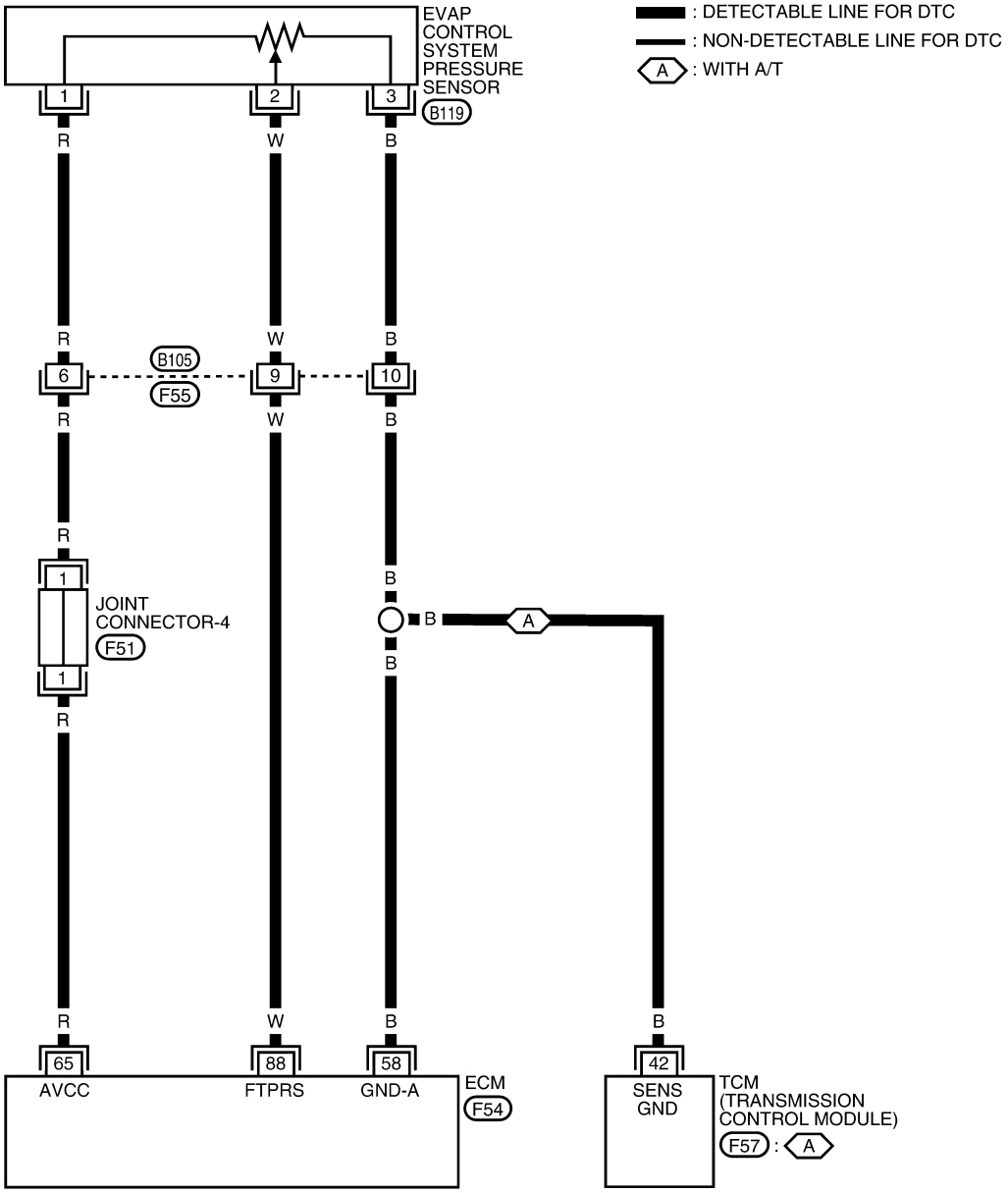

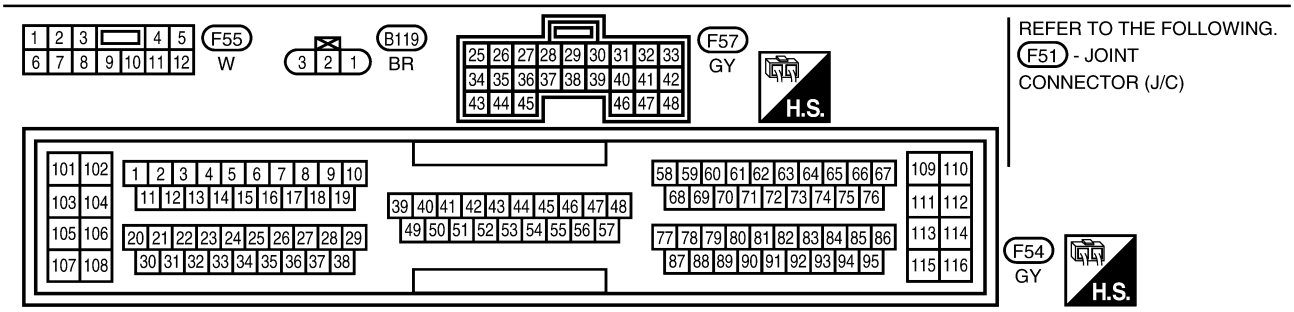

BBWA0021E

Specification data are reference values and are measured between each terminal and ground.

CAUTION:
Do not use ECM ground terminals when measuring input/output voltage. Doing so may result in damage to the ECM's transistor. Use a ground other than ECM terminals, such as the ground.

TERMINAL NO.	WIRE COLOR	ITEM	CONDITION	DATA (DC Voltage)
58	B	Sensors' ground	**[Engine is running]** ● **Warm-up condition** ● Idle speed	Approximately 0V
65	R	Sensor's power supply	**[Ignition switch "ON"]**	Approximately 5V
88	W	EVAP control system pressure sensor	**[Ignition switch "ON"]**	Approximately 1.8 - 4.8V

Diagnostic Procedure

UBS002VP

1. RETIGHTEN GROUND SCREWS

Loosen and retighten engine ground screws.

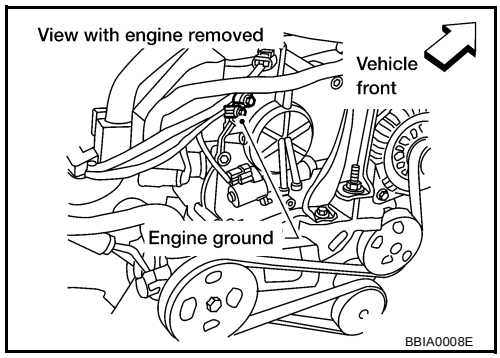

>> GO TO 2.

2. CHECK CONNECTOR

1. Disconnect EVAP control system pressure sensor harness connector.

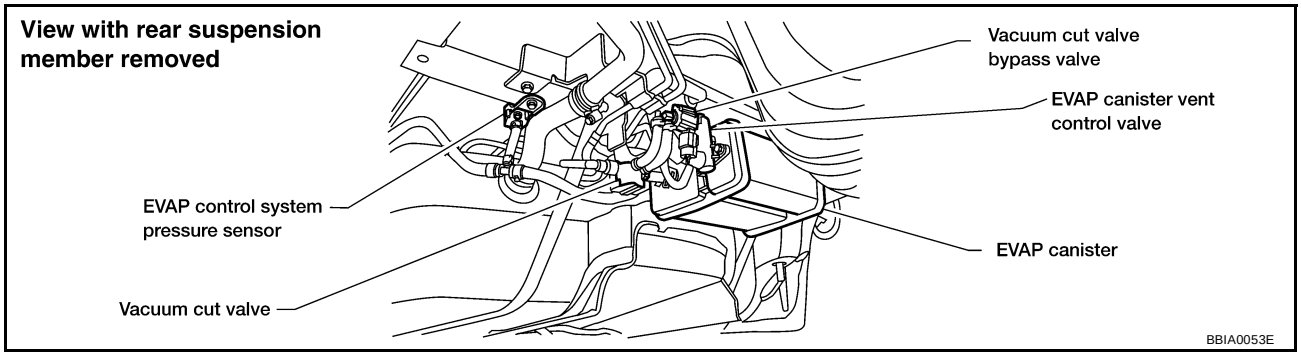

2. Check sensor harness connector for water.

Water should not exist.

OK or NG

OK >> GO TO 3.
NG >> Repair or replace harness connector.

3. CHECK EVAP CONTROL SYSTEM PRESSURE SENSOR POWER SUPPLY CIRCUIT

1. Turn ignition switch “ON”.
2. Check voltage between EVAP control system pressure sensor terminal 1 and ground with CONSULT-II or tester.

   Voltage: Approximately 5V

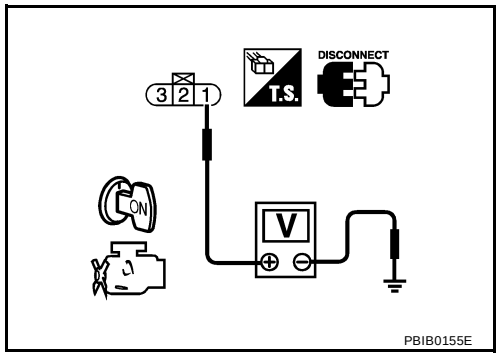

OK or NG

OK >> GO TO 5.
NG >> GO TO 4.

4. DETECT MALFUNCTIONING PART

Check the following.

- Harness connectors B105, F55
- Joint connector-4
- Harness for open or short between EVAP control system pressure sensor and ECM

>> Repair harness or connectors.

5. CHECK EVAP CONTROL SYSTEM PRESSURE SENSOR GROUND CIRCUIT FOR OPEN AND SHORT

1. Turn ignition switch “OFF”.
2. Check harness continuity between EVAP control system pressure sensor terminal 3 and engine ground. Refer to Wiring Diagram.

   Continuity should exist.

3. Also check harness for short to ground and short to power.

OK or NG

OK >> GO TO 7.
NG >> GO TO 6.

6. DETECT MALFUNCTIONING PART

Check the following.

- Harness connectors B105, F55
- Harness for open or short between EVAP control system pressure sensor and ECM
- Harness for open or short between EVAP control system pressure sensor and TCM

>> Repair open circuit or short to ground or short to power in harness or connectors.

7. CHECK EVAP CONTROL SYSTEM PRESSURE SENSOR INPUT SIGNAL CIRCUIT FOR OPEN AND SHORT

1. Disconnect ECM harness connector.
2. Check harness continuity between ECM terminal 88 and EVAP control system pressure sensor terminal 2.
   Refer to Wiring Diagram.

   Continuity should exist.

3. Also check harness for short to ground and short to power.

OK or NG

OK >> GO TO 9.
NG >> GO TO 8.

8. DETECT MALFUNCTIONING PART

Check the following.

- Harness connectors B105, F55
- Harness for open or short between ECM and EVAP control system pressure sensor

>> Repair open circuit or short to ground or short to power in harness or connectors.

9. CHECK EVAP CONTROL SYSTEM PRESSURE SENSOR

Refer to EC-333, "Component Inspection" .

OK or NG

OK >> GO TO 10.
NG >> Replace EVAP control system pressure sensor.

10. CHECK INTERMITTENT INCIDENT

Refer to EC-130, "TROUBLE DIAGNOSIS FOR INTERMITTENT INCIDENT" .

>> **INSPECTION END**

Component Inspection

UBS002VQ

EVAP CONTROL SYSTEM PRESSURE SENSOR

1. Remove EVAP control system pressure sensor with its harness connector connected.
2. Remove hose from EVAP control system pressure sensor.
3. Install a vacuum pump to EVAP control system pressure sensor.
4. Turn ignition switch "ON" and check output voltage between ECM terminal 88 and ground under the following conditions.

Applied vacuum kPa (mmHg, inHg)	Voltage V
Not applied	1.8 - 4.8
-26.7 (-200, -7.87)	2.1 to 2.5V lower than above value

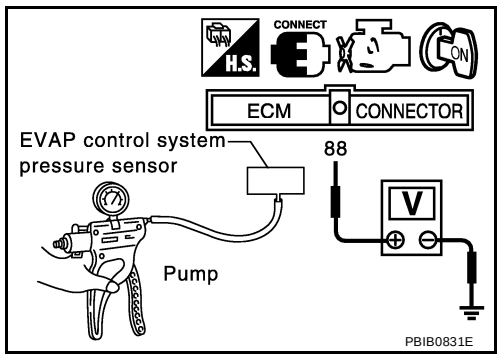

CAUTION:

- **Always calibrate the vacuum pump gauge when using it.**
- **Do not apply vacuum below -93.3 kPa (-700 mmHg, -27.56 inHg) or pressure over 101.3 kPa (760 mmHg, 29.92 inHg).**

5. If NG, replace EVAP control system pressure sensor.

DTC P0453 EVAP CONTROL SYSTEM PRESSURE SENSOR

PFP:25085

Component Description

UBS002VR

The EVAP control system pressure sensor detects pressure in the purge line. The sensor output voltage to the ECM increases as pressure increases. The EVAP control system pressure sensor is not used to control the engine system. It is used only for on board diagnosis.

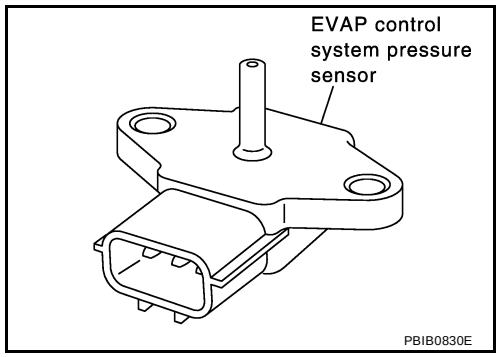

CONSULT-II Reference Value in Data Monitor Mode

UBS002VS

Specification data are reference values.

MONITOR ITEM	CONDITION	SPECIFICATION
EVAP SYS PRES	● Ignition switch: ON	Approx. 1.8 - 4.8V

On Board Diagnosis Logic

UBS002VT

DTC No.	Trouble diagnosis name	DTC detecting condition	Possible cause
P0453 0453	EVAP control system pressure sensor high input	An excessively high voltage from the sensor is sent to ECM.	● Harness or connectors (The sensor circuit is open or shorted.) ● EVAP control system pressure sensor ● EVAP canister vent control valve ● EVAP canister ● Water separator ● Rubber hose from EVAP canister vent control valve to water separator

DTC Confirmation Procedure

UBS002VU

NOTE:
If “DTC Confirmation Procedure” has been previously conducted, always turn ignition switch “OFF” and wait at least 10 seconds before conducting the next test.
TESTING CONDITION:
Always perform test at a temperature of 5°C (41°F) or more.

WITH CONSULT-II

1. Start engine and warm it up to normal operating temperature.
2. Turn ignition switch “OFF” and wait at least 10 seconds.
3. Turn ignition switch “ON”.
4. Select “DATA MONITOR” mode with CONSULT-II.
5. Make sure that “FUEL T/TEMP SE” is more than 0°C (32°F).
6. Wait at least 10 seconds.
7. If 1st trip DTC is detected, go to EC-337, "Diagnostic Procedure"
.

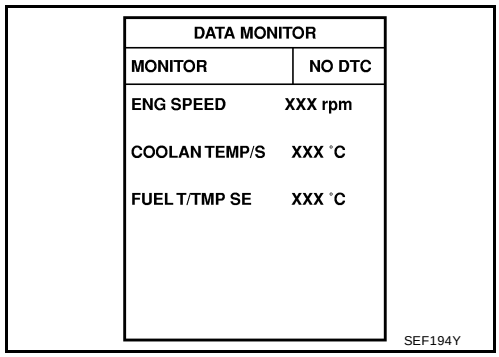

WITH GST

1. Start engine and warm it up to normal operating temperature.

2. Check that voltage between ECM terminal (Fuel tank temperature sensor signal) and ground is less than 4.2V.
3. Turn ignition switch “OFF” and wait at least 10 seconds.
4. Wait at least 10 seconds.
5. Select “MODE 7” with GST.
6. If 1st trip DTC is detected, go to EC-337, "Diagnostic Procedure"
.

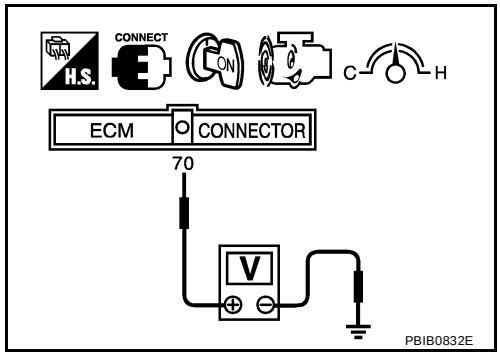

Wiring Diagram

UBS002VV

EC-PRE/SE-01

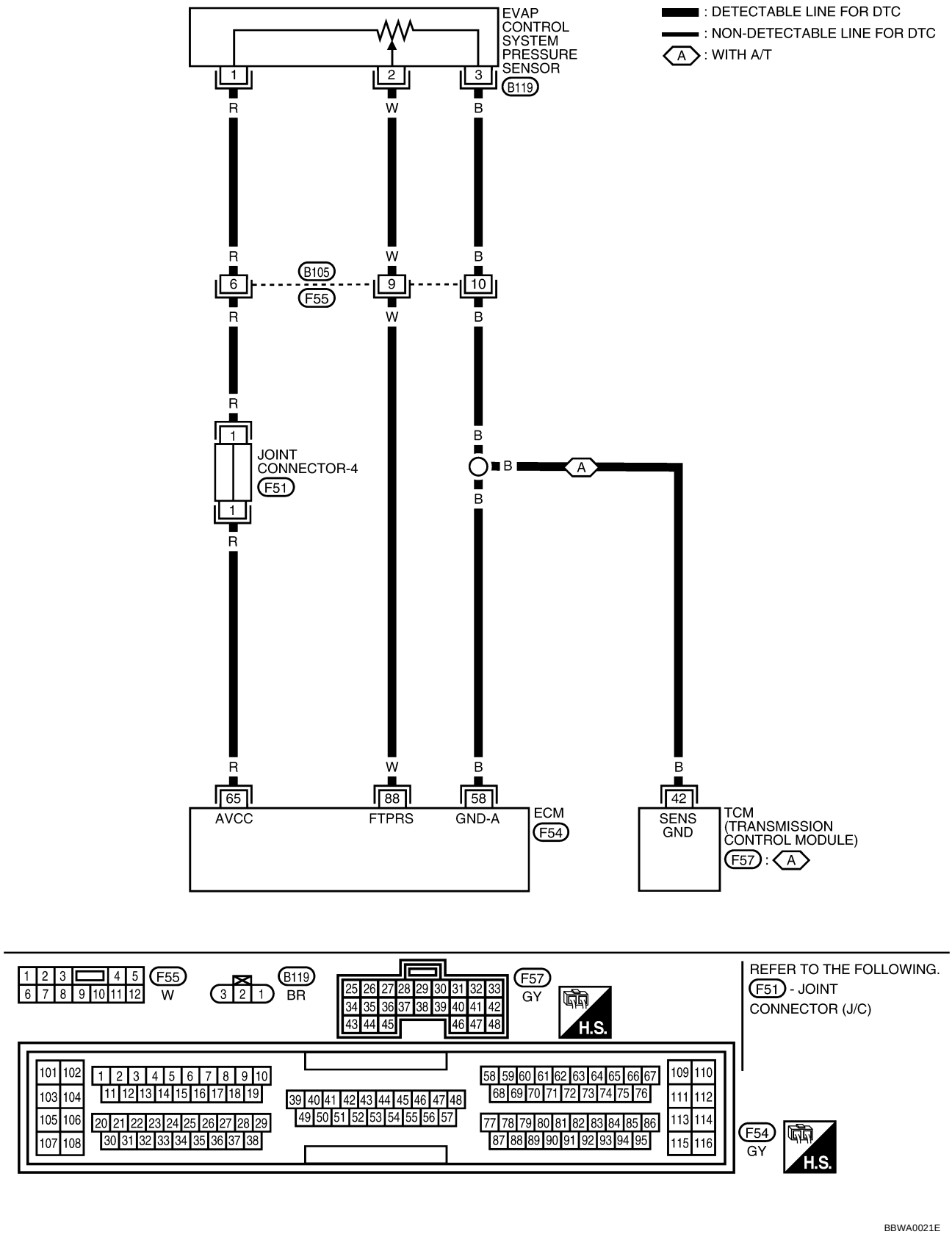

Specification data are reference values and are measured between each terminal and ground.

CAUTION:
Do not use ECM ground terminals when measuring input/output voltage. Doing so may result in damage to the ECM's transistor. Use a ground other than ECM terminals, such as the ground.

TERMINAL NO.	WIRE COLOR	ITEM	CONDITION	DATA (DC Voltage)
58	B	Sensors' ground	**[Engine is running]** ● **Warm-up condition** ● Idle speed	Approximately 0V
65	R	Sensor's power supply	**[Ignition switch "ON"]**	Approximately 5V
88	W	EVAP control system pressure sensor	**[Ignition switch "ON"]**	Approximately 1.8 - 4.8V

Diagnostic Procedure

UBS002VW

1. RETIGHTEN GROUND SCREWS

Loosen and retighten engine ground screws.

>> GO TO 2.

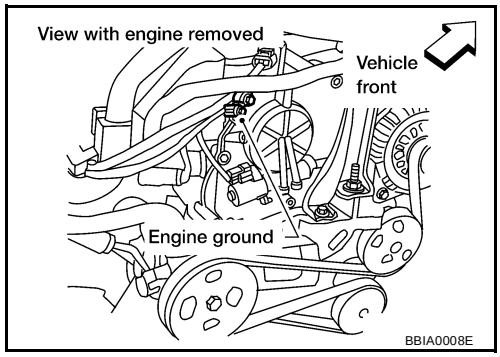

2. CHECK CONNECTOR

1. Disconnect EVAP control system pressure sensor harness connector.

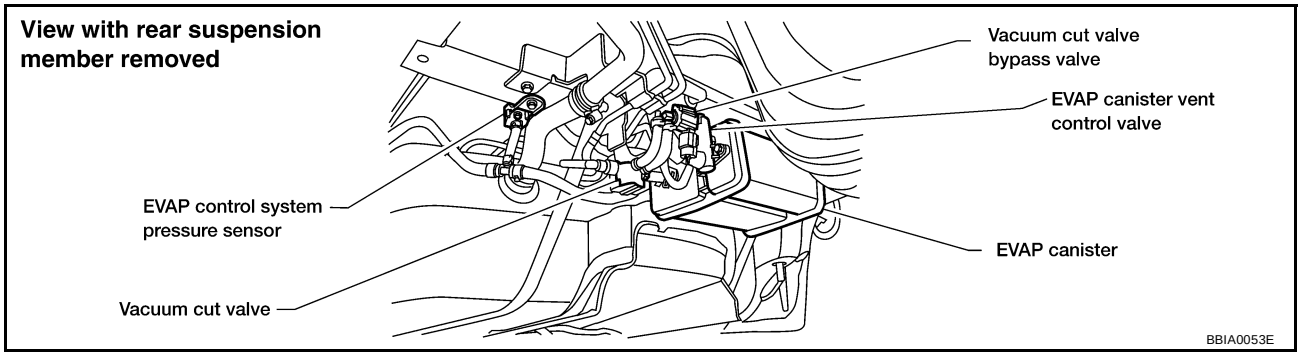

2. Check sensor harness connector for water.

Water should not exist.

OK or NG

OK >> GO TO 3.
NG >> Repair or replace harness connector.

3. CHECK EVAP CONTROL SYSTEM PRESSURE SENSOR POWER SUPPLY CIRCUIT

1. Turn ignition switch “ON”.
2. Check voltage between EVAP control system pressure sensor terminal 1 and ground with CONSULT-II or tester.

   Voltage: Battery voltage

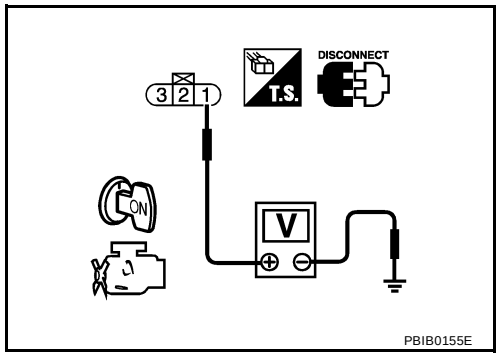

OK or NG

OK >> GO TO 5.
NG >> GO TO 4.

4. DETECT MALFUNCTIONING PART

Check the following.

- Harness connectors B105, F55
- Joint connector-4
- Harness for open or short between EVAP control system pressure sensor and ECM

>> Repair harness or connectors.

5. CHECK EVAP CONTROL SYSTEM PRESSURE SENSOR GROUND CIRCUIT FOR OPEN AND SHORT

1. Turn ignition switch “OFF”.
2. Check harness continuity between EVAP control system pressure sensor terminal 3 and engine ground. Refer to Wiring Diagram.

   Continuity should exist.

3. Also check harness for short to ground and short to power.

OK or NG

OK >> GO TO 7.
NG >> GO TO 6.

6. DETECT MALFUNCTIONING PART

Check the following.

- Harness connectors B105, F55
- Harness for open or short between EVAP control system pressure sensor and ECM
- Harness for open or short between EVAP control system pressure sensor and TCM

>> Repair open circuit or short to ground or short to power in harness or connectors.

7. CHECK EVAP CONTROL SYSTEM PRESSURE SENSOR INPUT SIGNAL CIRCUIT FOR OPEN AND SHORT

1. Disconnect ECM harness connector.
2. Check harness continuity between ECM terminal 88 and EVAP control system pressure sensor terminal 2.
   Refer to Wiring Diagram.

   Continuity should exist.

3. Also check harness for short to ground and short to power.

OK or NG

OK >> GO TO 9.
NG >> GO TO 8.

8. DETECT MALFUNCTIONING PART

Check the following.

- Harness connectors B105, F55
- Harness for open or short between ECM and EVAP control system pressure sensor

>> Repair open circuit or short to ground or short to power in harness or connectors.

9. CHECK RUBBER TUBE FOR CLOGGING

1. Disconnect rubber tube connected to EVAP canister vent control valve.
2. Check the rubber tube for clogging.

OK or NG

OK >> GO TO 10.
NG >> Clean the rubber tube using an air blower.

10. CHECK EVAP CANISTER VENT CONTROL VALVE

Refer to EC-326, "Component Inspection" .

OK or NG

OK >> GO TO 11.
NG >> Replace EVAP canister vent control valve.

11. CHECK EVAP CONTROL SYSTEM PRESSURE SENSOR

Refer to EC-340, "Component Inspection" .

OK or NG

OK >> GO TO 12.
NG >> Replace EVAP control system pressure sensor.

12. CHECK RUBBER TUBE

Check obstructed rubber tube connected to EVAP canister vent control valve.

OK or NG

OK >> GO TO 13.
NG >> Clean rubber tube using an air blower, repair or replace rubber tube.

13. CHECK WATER SEPARATOR

Refer to EC-314, "Component Inspection" .

OK or NG

OK >> GO TO 14.
NG >> Replace water separator.

14. CHECK IF EVAP CANISTER SATURATED WITH WATER

1. Remove EVAP canister with EVAP canister vent control valve attached.
2. Check if water will drain from the EVAP canister.

Yes or No

Yes >> GO TO 15.
No >> GO TO 17.

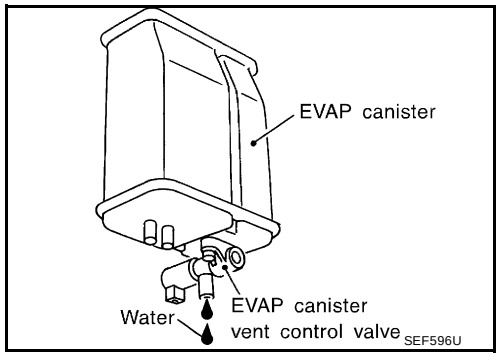

15. CHECK EVAP CANISTER

Weigh the EVAP canister with the EVAP canister vent control valve attached.
The weight should be less than 1.8 kg (4.0 lb).

OK or NG

OK >> GO TO 17.
NG >> GO TO 16.

16. DETECT MALFUNCTIONING PART

Check the following.

- EVAP canister for damage
- EVAP hose between EVAP canister and water separator for clogging or poor connection

>> Repair hose or replace EVAP canister.

17. CHECK INTERMITTENT INCIDENT

Refer to EC-130, "TROUBLE DIAGNOSIS FOR INTERMITTENT INCIDENT" .

>> **INSPECTION END**

Component Inspection

UBS002VX

EVAP CONTROL SYSTEM PRESSURE SENSOR

1. Remove EVAP control system pressure sensor with its harness connector connected.
2. Remove hose from EVAP control system pressure sensor.
3. Install a vacuum pump to EVAP control system pressure sensor.
4. Turn ignition switch "ON" and check output voltage between ECM terminal 88 and ground under the following conditions.

Applied vacuum kPa (mmHg, inHg)	Voltage V
Not applied	1.8 - 4.8
-26.7 (-200, -7.87)	2.1 to 2.5V lower than above value

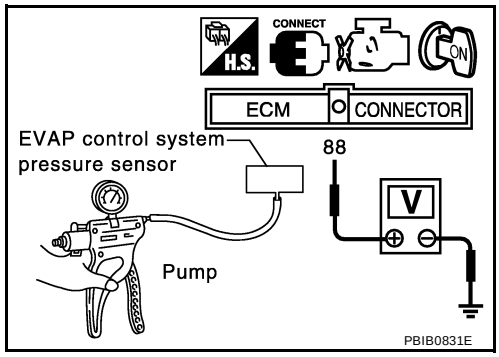

CAUTION:

- **Always calibrate the vacuum pump gauge when using it.**
- **Do not apply vacuum below -93.3 kPa (-700 mmHg, -27.56 inHg) or pressure over 101.3 kPa (760 mmHg, 29.92 inHg).**

5. If NG, replace EVAP control system pressure sensor.

DTC P0455 EVAP CONTROL SYSTEM

PFP:14950

On Board Diagnosis Logic

UBS002VY

NOTE:
If DTC P0455 is displayed with P1448, perform trouble diagnosis for DTC P1448 first. (EC-491 .)
This diagnosis detects a very large leak (fuel filler cap fell off etc.) in EVAP system between the fuel tank and EVAP canister purge volume control solenoid valve.

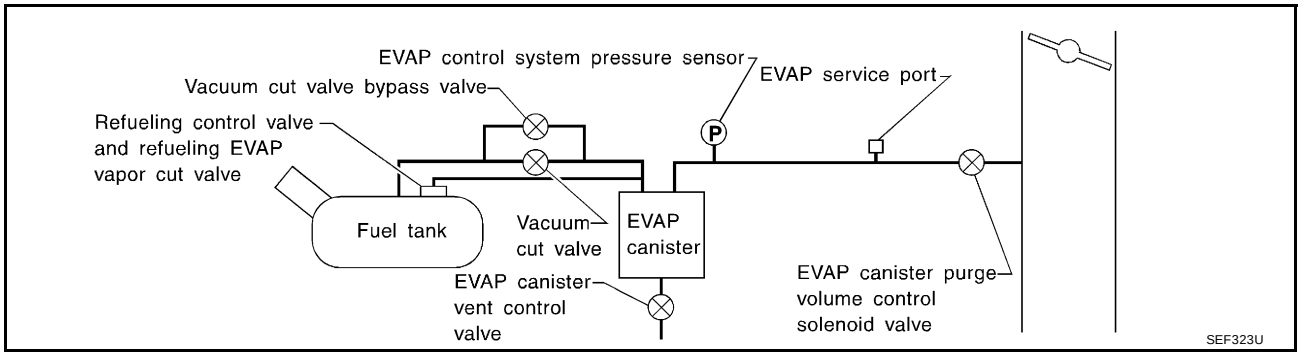

DTC No.	Trouble diagnosis name	DTC detecting condition	Possible cause
P0455 0455	EVAP control system gross leak detected	EVAP control system has a very large leak such as fuel filler cap fell off, EVAP control system does not operate properly.	● Fuel filler cap remains open or fails to close. ● Incorrect fuel tank vacuum relief valve ● Incorrect fuel filler cap used ● Foreign matter caught in fuel filler cap. ● Leak is in line between intake manifold and EVAP canister purge volume control solenoid valve. ● Foreign matter caught in EVAP canister vent control valve. ● EVAP canister or fuel tank leaks ● EVAP purge line (pipe and rubber tube) leaks ● EVAP purge line rubber tube bent. ● Blocked or bent rubber tube to EVAP control system pressure sensor ● Loose or disconnected rubber tube ● EVAP canister vent control valve and the circuit ● EVAP canister purge volume control solenoid valve and the circuit ● Fuel tank temperature sensor ● O-ring of EVAP canister vent control valve is missing or damaged. ● EVAP control system pressure sensor ● Refueling control valve ● ORVR system leaks

CAUTION:
- **Use only a genuine NISSAN fuel filler cap as a replacement. If an incorrect fuel filler cap is used, the MIL may come on.**
- **If the fuel filler cap is not tightened properly, the MIL may come on.**
- **Use only a genuine NISSAN rubber tube as a replacement.**

DTC Confirmation Procedure

UBS002VZ

CAUTION:
Never remove fuel filler cap during the DTC Confirmation Procedure.

NOTE:

- **If DTC P0455 is displayed with P1448, perform trouble diagnosis for DTC P1448 first. (EC-491 .)**
- **Make sure that EVAP hoses are connected to EVAP canister purge volume control solenoid valve properly.**
- If “DTC Confirmation Procedure” has been previously conducted, always turn ignition switch “OFF” and wait at least 10 seconds before conducting the next test.

TESTING CONDITION:

- **Perform “DTC WORK SUPPORT” when the fuel level is between 1/4 to 3/4 full and vehicle is placed on flat level surface.**
- **Open engine hood before conducting the following procedures.**

WITH CONSULT-II

1. Tighten fuel filler cap securely until ratcheting sound is heard.
2. Turn ignition switch “ON”.
3. Turn ignition switch “OFF” and wait at least 10 seconds.
4. Turn ignition switch “ON” and select “DATA MONITOR” mode with CONSULT-II.
5. Make sure that the following conditions are met.
   COOLAN TEMP/S: 0 - 70°C (32 - 158°F)
   INT/A TEMP SE: 0 - 60°C (32 - 140°F)
6. Select “EVAP SML LEAK P0442/P1442” of “EVAPORATIVE SYSTEM” in “DTC WORK SUPPORT” mode with CONSULT-II.
   Follow the instruction displayed.

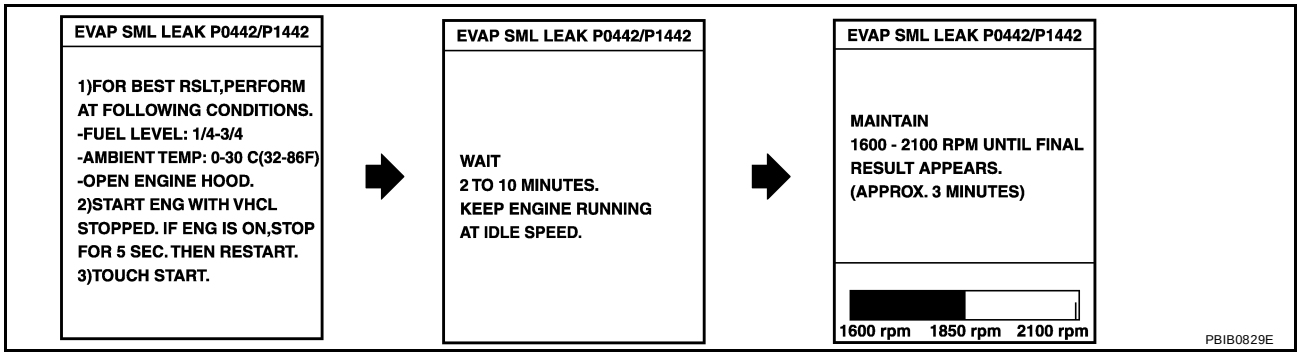

NOTE:
If the engine speed cannot be maintained within the range displayed on the CONSULT-II screen, go to EC-84, "Basic Inspection" .

7. Make sure that “OK” is displayed.
   If “NG” is displayed, select “SELF-DIAG RESULTS” mode and make sure that “EVAP GROSS LEAK [P0455]” is displayed. If it is displayed, refer to EC-343, "Diagnostic Procedure" .
   If P0442 is displayed, perform “Diagnostic Procedure” for DTC P0442, EC-309 .

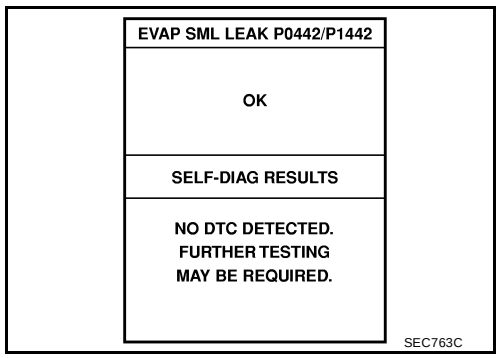

WITH GST

NOTE:
Be sure to read the explanation of “Driving Pattern” on EC-64 before driving vehicle.

1. Start engine.
2. Drive vehicle according to “Driving Pattern”, EC-64 .
3. Stop vehicle.
4. Select “MODE 1” with GST.
   - If SRT of EVAP system is not set yet, go to the following step.

- If SRT of EVAP system is set, the result will be OK.

5. Turn ignition switch “OFF” and wait at least 10 seconds.
6. Start engine.
   It is not necessary to cool engine down before driving.
7. Drive vehicle again according to the “Driving Pattern”, EC-64 .
8. Stop vehicle.
9. Select “MODE 3” with GST.
   - If P0455 is displayed on the screen, go to EC-343, "Diagnostic Procedure" .
   - If P0442 or P1442 is displayed on the screen, go to “Diagnostic Procedure”, for DTC P0442, EC-309 .
   - If P0441 is displayed on the screen, go to “Diagnostic Procedure” for DTC P0441, EC-303 .
   - If P0455, P0441, P0442 and P1442 are not displayed on the screen, go to the following step.
10. Select “MODE 1” with GST.
    - If SRT of EVAP system is set, the result will be OK.
    - If SRT of EVAP system is not set, go to step 6.

Diagnostic Procedure

UBS002W0

1. CHECK FUEL FILLER CAP DESIGN

1. Turn ignition switch “OFF”.
2. Check for genuine NISSAN fuel filler cap design.

OK or NG

OK >> GO TO 2.
NG >> Replace with genuine NISSAN fuel filler cap.

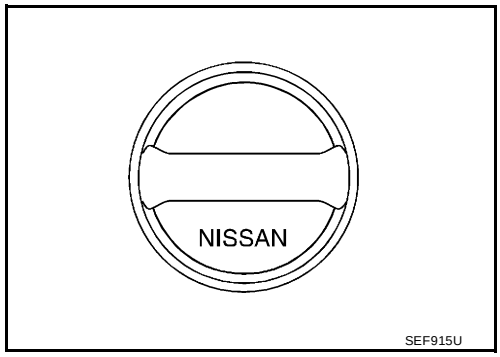

2. CHECK FUEL FILLER CAP INSTALLATION

Check that the cap is tightened properly by rotating the cap clockwise.

OK or NG

OK >> GO TO 3.
NG >> 1. Open fuel filler cap, then clean cap and fuel filler neck threads using air blower.
2. Retighten until ratcheting sound is heard.

3. CHECK FUEL FILLER CAP FUNCTION

Check for air releasing sound while opening the fuel filler cap.

OK or NG

OK >> GO TO 5.
NG >> GO TO 4.

4. CHECK FUEL TANK VACUUM RELIEF VALVE

Refer to EC-617, "FUEL TANK VACUUM RELIEF VALVE (BUILT INTO FUEL FULLER CAP)" .

OK or NG

OK >> GO TO 5.
NG >> Replace fuel filler cap with a genuine one.

5. CHECK EVAP PURGE LINE

Check EVAP purge line (pipe, rubber tube, fuel tank and EVAP canister) for cracks, improper connection or disconnection.
Refer to EC-615, "EVAPORATIVE EMISSION LINE DRAWING" .

OK or NG

OK >> GO TO 6.
NG >> Repair or reconnect the hose.

6. CLEAN EVAP PURGE LINE

Clean EVAP purge line (pipe and rubber tube) using air blower.

>> GO TO 7.

7. CHECK EVAP CANISTER VENT CONTROL VALVE, O-RING AND CIRCUIT

Refer to EC-491, "DTC Confirmation Procedure" .

OK or NG

OK >> GO TO 8.
NG >> Repair or replace EVAP canister vent control valve and O-ring or harness/connector.

8. INSTALL THE PRESSURE PUMP

To locate the EVAP leak, install EVAP service port adapter and pressure pump to EVAP service port securely.

NOTE:
Improper installation of the EVAP service port adapter to the EVAP service port may cause leaking.

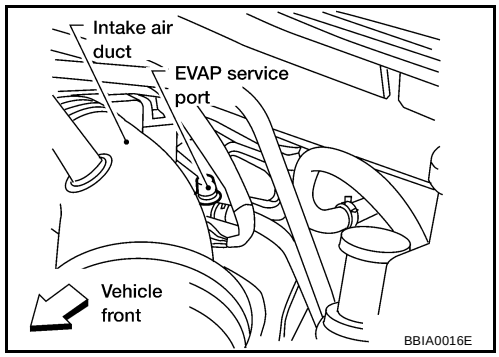

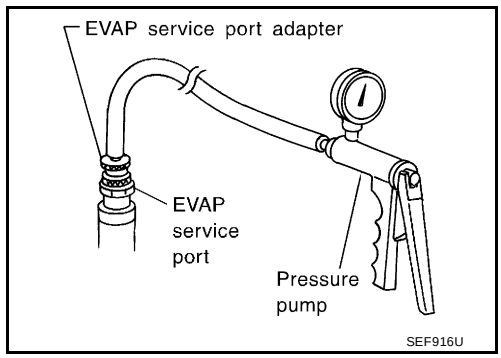

Models with CONSULT-II>>GO TO 9.
Models without CONSULT-II>>GO TO 10.

9. CHECK FOR EVAP LEAK

With CONSULT-II

1. Turn ignition switch “ON”.
2. Select “EVAP SYSTEM CLOSE” of “WORK SUPPORT” mode with CONSULT-II.
3. Touch “START” and apply pressure into the EVAP line until the pressure indicator reaches the middle of the bar graph.

   NOTE:
   - **Never use compressed air or a high pressure pump.**
   - **Do not exceed 4.12 kPa (0.042 kg/cm^2 , 0.6 psi) of pressure in the system.**

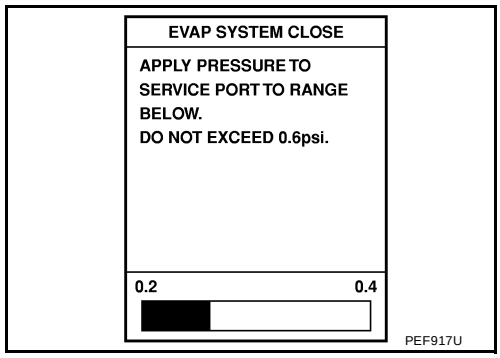

4. Using EVAP leak detector, locate the EVAP leak. For the leak detector, refer to the instruction manual for more details.
   Refer to EC-615, "EVAPORATIVE EMISSION LINE DRAWING"
   .

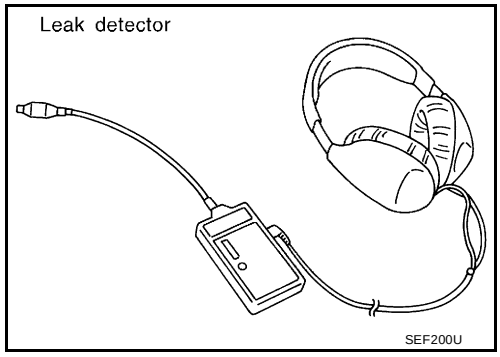

OK or NG

OK >> GO TO 11.
NG >> Repair or replace.

10. CHECK FOR EVAP LEAK

Without CONSULT-II

1. Turn ignition switch “OFF”.
2. Apply 12 volts DC to EVAP canister vent control valve. The valve will close. (Continue to apply 12 volts until the end of test.)
3. Apply 12 volts DC to vacuum cut valve bypass valve. The valve will open. (Continue to apply 12V until the end of test.)

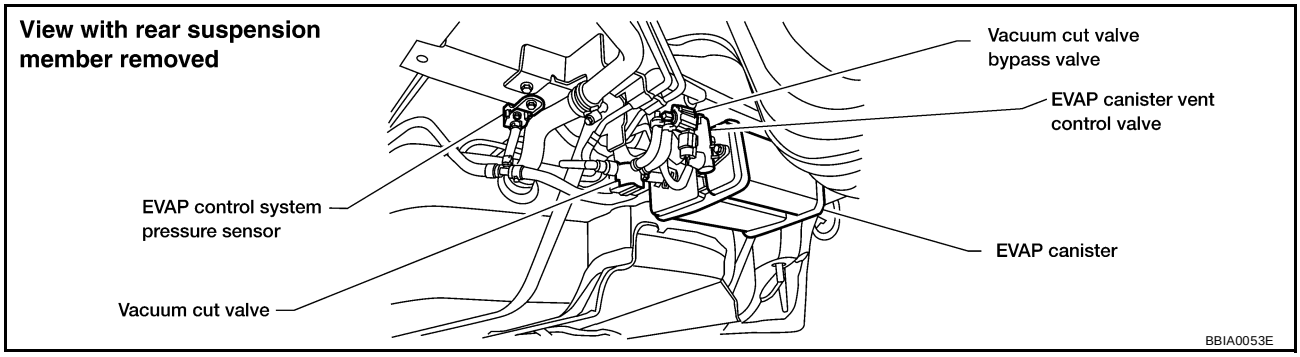

4. Pressurize the EVAP line using pressure pump with 1.3 to 2.7 kPa (10 to 20 mmHg, 0.39 to 0.79 inHg), then remove pump and EVAP service port adapter.

   NOTE:
   - **Never use compressed air or a high pressure pump.**
   - **Do not exceed 4.12 kPa (0.042 kg/cm^2 , 0.6 psi) of pressure in the system.**

5. Using EVAP leak detector, locate the EVAP leak. For the leak detector, refer to the instruction manual for more details. Refer to EC-615, "EVAPORATIVE EMISSION LINE DRAWING" .

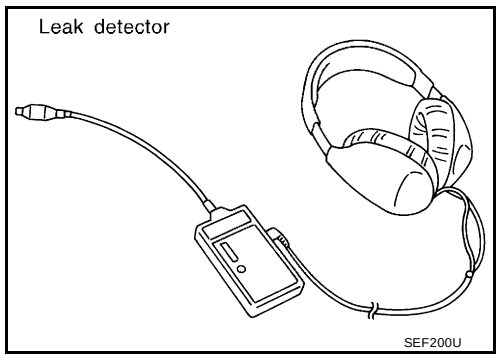

OK or NG

OK >> GO TO 12.
NG >> Repair or replace.

11. CHECK EVAP CANISTER PURGE VOLUME CONTROL SOLENOID VALVE OPERATION

With CONSULT-II

1. Disconnect vacuum hose to EVAP canister purge volume control solenoid valve at EVAP service port.
2. Start engine.
3. Perform “PURG VOL CONT/V” in “ACTIVE TEST” mode.
4. Touch “Qu” on CONSULT-II screen to increase “PURG VOL CONT/V” opening to 100.0%.
5. Check vacuum hose for vacuum when revving engine up to 2,000 rpm.

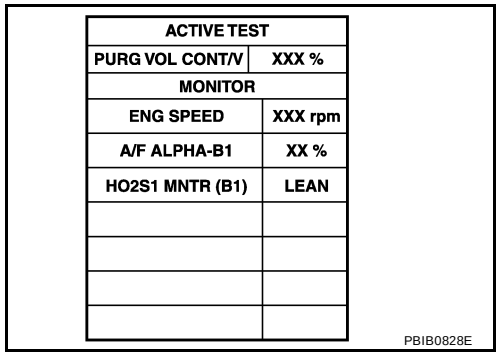

ACTIVE TEST	
PURG VOL CONT/V	XXX %
MONITOR	
ENG SPEED	XXX rpm
A/F ALPHA-B1	XX %
HO2S1 MNTR (B1)	LEAN

PBIB0828E

OK or NG

OK >> GO TO 14.
NG >> GO TO 13.

12. CHECK EVAP CANISTER PURGE VOLUME CONTROL SOLENOID VALVE OPERATION

Without CONSULT-II

1. Start engine and warm it up to normal operating temperature.
2. Stop engine.
3. Disconnect vacuum hose to EVAP canister purge volume control solenoid valve at EVAP service port.
4. Start engine and let it idle for at least 80 seconds.
5. Check vacuum hose for vacuum when revving engine up to 2,000 rpm.

Vacuum should exist.

OK or NG

OK >> GO TO 15.
NG >> GO TO 13.

13. CHECK VACUUM HOSE

Check vacuum hoses for clogging or disconnection. Refer to EC-29, "Vacuum Hose Drawing" .

OK or NG

OK (With CONSULT-II)>>GO TO 14.
OK (Without CONSULT-II)>>GO TO 15.
NG >> Repair or reconnect the hose.

14. CHECK EVAP CANISTER PURGE VOLUME CONTROL SOLENOID VALVE

With CONSULT-II

1. Start engine.
2. Perform “PURG VOL CONT/V” in “ACTIVE TEST” mode with CONSULT-II. Check that engine speed varies according to the valve opening.

OK or NG

OK >> GO TO 16.
NG >> GO TO 15.

ACTIVE TEST	
PURG VOL CONT/V	XXX %
MONITOR	
ENG SPEED	XXX rpm
A/F ALPHA-B1	XX %
HO2S1 MNTR (B1)	LEAN

PBIB0828E

15. CHECK EVAP CANISTER PURGE VOLUME CONTROL SOLENOID VALVE

Refer to EC-320, "Component Inspection" .

OK or NG

OK >> GO TO 16.
NG >> Replace EVAP canister purge volume control solenoid valve.

16. CHECK FUEL TANK TEMPERATURE SENSOR

Refer to EC-233, "Component Inspection" .

OK or NG

OK >> GO TO 17.
NG >> Replace fuel level sensor unit.

17. CHECK EVAP CONTROL SYSTEM PRESSURE SENSOR

Refer to EC-333, "Component Inspection" .

OK or NG

OK >> GO TO 18.
NG >> Replace EVAP control system pressure sensor.

18. CHECK REFUELING EVAP VAPOR LINE

Check refueling EVAP vapor line between EVAP canister and fuel tank for clogging, kink, looseness and improper connection. For location, refer to EC-620, "ON BOARD REFUELING VAPOR RECOVERY (ORVR)" .

OK or NG

OK >> GO TO 19.
NG >> Repair or replace hoses and tubes.

19. CHECK SIGNAL LINE AND RECIRCULATION LINE

Check signal line and recirculation line between filler neck tube and fuel tank for clogging, kink, cracks, looseness and improper connection.

OK or NG

OK >> GO TO 20.
NG >> Repair or replace hoses, tubes or filler neck tube.

20. CHECK REFUELING CONTROL VALVE

Refer to EC-623, "Component Inspection" .

OK or NG

OK >> GO TO 21.
NG >> Replace refueling control valve with fuel tank.

21. CHECK INTERMITTENT INCIDENT

Refer to EC-130, "TROUBLE DIAGNOSIS FOR INTERMITTENT INCIDENT" .

>> **INSPECTION END**

DTC P0456 EVAP CONTROL SYSTEM

PFP:14950

On Board Diagnosis Logic

UBS002W1

This diagnosis detects leaks in the EVAP purge line using engine intake manifold vacuum.
If pressure does not increase, the ECM will check for leaks in the line between the fuel tank and EVAP canister purge volume control solenoid valve, under the following "Vacuum test" conditions.
The vacuum cut valve bypass valve is opened to clear the line between the fuel tank and the EVAP canister purge volume control solenoid valve. The EVAP canister vent control valve will then be closed to shut the EVAP purge line off. The EVAP canister purge volume control solenoid valve is opened to depressurize the EVAP purge line using intake manifold vacuum. After this occurs, the EVAP canister purge volume control solenoid valve will be closed.
If ECM judges a leak which corresponds to a very small leak, the very small leak P0456 will be detected.
If ECM judges a leak equivalent to a small leak, EVAP small leak P0442 will be detected.
If ECM judges there are no leaks, the diagnosis will be OK.

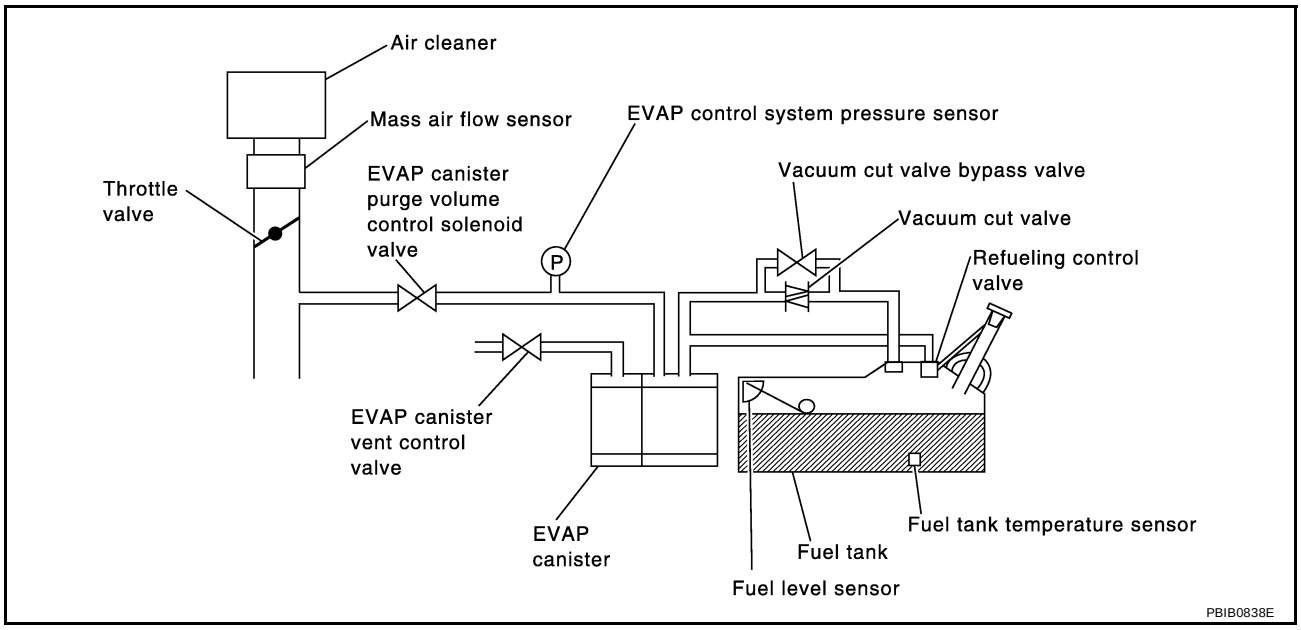

DTC No.	Trouble diagnosis name	DTC detecting condition	Possible cause
P0456 0456	Evaporative emission control system very small leak (negative pressure check)	● EVAP system has a very small leak. ● EVAP system does not operate properly.	● Incorrect fuel tank vacuum relief valve ● Incorrect fuel filler cap used ● Fuel filler cap remains open or fails to close. ● Foreign matter caught in fuel filler cap. ● Leak is in line between intake manifold and EVAP canister purge volume control solenoid valve. ● Foreign matter caught in EVAP canister vent control valve. ● EVAP canister or fuel tank leaks ● EVAP purge line (pipe and rubber tube) leaks ● EVAP purge line rubber tube bent ● Blocked or bent rubber tube to EVAP control system pressure sensor ● Loose or disconnected rubber tube ● EVAP canister vent control valve and the circuit ● EVAP canister purge volume control solenoid valve and the circuit ● Fuel tank temperature sensor ● O-ring of EVAP canister vent control valve is missing or damaged ● Water separator ● EVAP canister is saturated with water ● EVAP control system pressure sensor ● Refueling control valve ● ORVR system leaks ● Fuel level sensor and the circuit ● Foreign matter caught in EVAP canister purge volume control solenoid valve

CAUTION:

- **Use only a genuine NISSAN fuel filler cap as a replacement. If an incorrect fuel filler cap is used, the MIL may come on.**
- **If the fuel filler cap is not tightened properly, the MIL may come on.**
- **Use only a genuine NISSAN rubber tube as a replacement.**

DTC Confirmation Procedure

UBS002W2

NOTE:

- **If DTC P0456 is displayed with P0442, perform TROUBLE DIAGNOSIS FOR DTC P0456 first.**
- **After repair, make sure that the hoses and clips are installed properly.**
- If “DTC Confirmation Procedure” has been previously conducted, always turn ignition switch “OFF” and wait at least 10 seconds before conducting the next test.

TESTING CONDITION:

- **Open engine hood before conducting following procedure.**
- **If any of following conditions are met just before the DTC confirmation procedure, leave the vehicle for more than 1 hour.**
  - **Fuel filler cap is removed.**
  - **Refilled or drained the fuel.**
  - **EVAP component parts is/are removed.**
- **Before performing the following procedure, confirm that battery voltage is more than 11V at idle.**

WITH CONSULT-II

1. Turn ignition switch “ON” and select “DATA MONITOR” mode with CONSULT-II.
2. Make sure the following conditions are met.

FUEL LEVEL SE: 0.25 - 1.15V
COOLAN TEMP/S: 0 - 32°C (32 - 90°F)
FUEL T/TMP SE: 0 - 35°C (32 - 95°F)
INT A/TEMP SE: More than 0°C (32°F)
If NG, turn ignition switch “OFF” and leave the vehicle in a cool place (soak the vehicle) or refilling/draining fuel until the output voltage condition of the “FUEL LEVEL SE” meets within the range above and leave the vehicle for more than 1 hour. Then start from step 1).

3. Turn ignition switch “OFF” and wait at least 10 seconds.
4. Turn ignition switch “ON”.
5. Select “EVAP V/S LEAK P0456/P1456” of “EVAPORATIVE SYSTEM” in “DTC WORK SUPPORT” mode with CONSULT-II.
   Follow the instruction displayed.

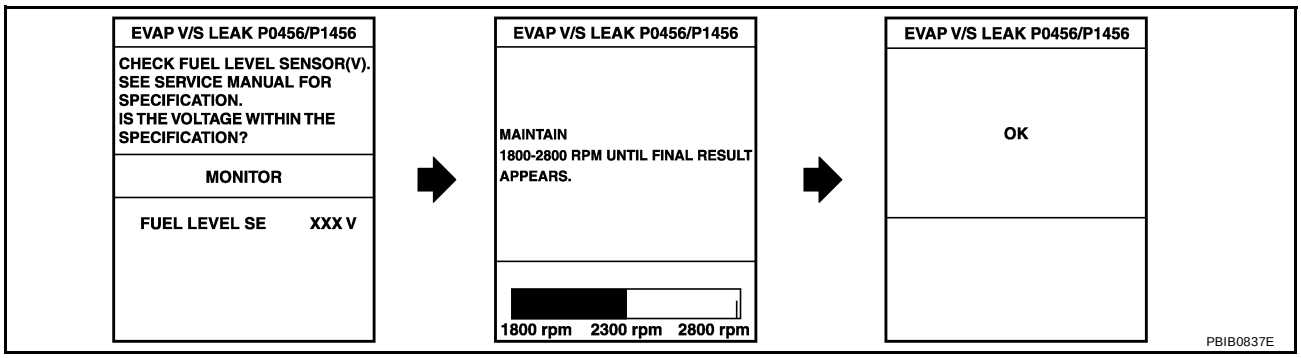

6. Make sure that “OK” is displayed.
   If “NG” is displayed, refer to EC-352, "Diagnostic Procedure" .

   NOTE:
   - **If the engine speed cannot be maintained within the range displayed on CONSULT-II screen, go to EC-84, "Basic Inspection" .**
   - **Make sure that EVAP hoses are connected to EVAP canister purge volume control solenoid valve properly.**

Overall Function Check

UBS002W3

WITH GST

Use this procedure to check the overall function of the EVAP very small leak function. During this check, a 1st trip DTC might not be confirmed.

CAUTION:
- **Never use compressed air, doing so may damage the EVAP system.**
- **Do not start engine.**
- **Do not exceeded 4.12 kPa (0.042 kg/cm^2 , 0.6 psi).**

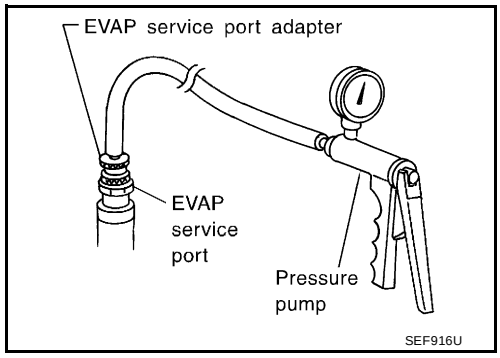

1. Attach the EVAP service port adapter securely to the EVAP service port.
2. Set the pressure pump and a hose.
3. Also set a vacuum gauge via 3-way connector and a hose.
4. Turn ignition switch “ON”.
5. Connect GST and select MODE 8.
6. Using MODE 8 control the EVAP canister vent control valve (close) and vacuum cut valve bypass valve (open).
7. Apply pressure and make sure the following conditions are satisfied.
   Pressure to be applied: 2.7 kPa (20 mmHg, 0.79 inHg)
   Time to be waited after the pressure drawn in to the EVAP system and the pressure to be dropped: 60 seconds and the pressure should not be dropped more than 0.4 kPa (3 mmHg, 0.12 inHg).
   If NG, go to EC-352, "Diagnostic Procedure" .
   If OK, go to next step.
8. Disconnect GST.
9. Start engine and warm it up to normal operating temperature.

10. Turn ignition switch “OFF” and wait at least 10 seconds.
11. Restart engine and let it idle for 90 seconds.
12. Keep engine speed at 2,000 rpm for 30 seconds.
13. Turn ignition switch “OFF”.

NOTE:
For more information, refer to GST instruction manual.

Diagnostic Procedure

UBS002W4

1. CHECK FUEL FILLER CAP DESIGN

1. Turn ignition switch “OFF”.
2. Check for genuine NISSAN fuel filler cap design.

OK or NG

OK >> GO TO 2.
NG >> Replace with genuine NISSAN fuel filler cap.

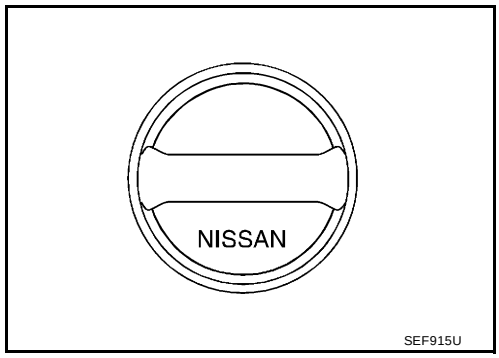

2. CHECK FUEL FILLER CAP INSTALLATION

Check that the cap is tightened properly by rotating the cap clockwise.

OK or NG

OK >> GO TO 3.
NG >> 1. Open fuel filler cap, then clean cap and fuel filler neck threads using air blower.
2. Retighten until ratcheting sound is heard.

3. CHECK FUEL FILLER CAP FUNCTION

Check for air releasing sound while opening the fuel filler cap.

OK or NG

OK >> GO TO 5.
NG >> GO TO 4.

4. CHECK FUEL TANK VACUUM RELIEF VALVE

Refer to EC-617, "Component Inspection" .

OK or NG

OK >> GO TO 5.
NG >> Replace fuel filler cap with a genuine one.

5. INSTALL THE PRESSURE PUMP

To locate the EVAP leak, install EVAP service port adapter and pressure pump to EVAP service port securely.

NOTE:
Improper installation of the EVAP service port adapter to the EVAP service port may cause leaking.

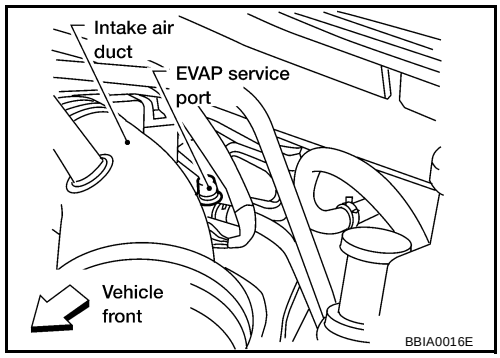

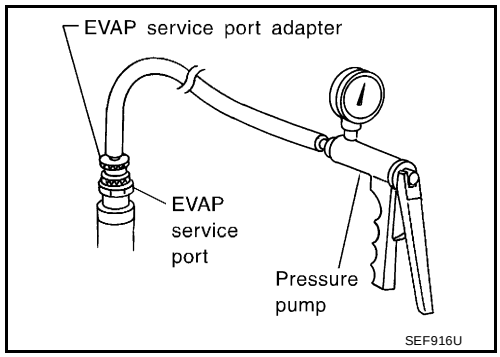

Models with CONSULT-II>>GO TO 6.
Models without CONSULT-II>>GO TO 7.

6. CHECK FOR EVAP LEAK

With CONSULT-II

1. Turn ignition switch “ON”.
2. Select “EVAP SYSTEM CLOSE” of “WORK SUPPORT” mode with CONSULT-II.
3. Touch “START” and apply pressure into the EVAP line until the pressure indicator reaches the middle of the bar graph.

   NOTE:
   - **Never use compressed air or a high pressure pump.**
   - **Do not exceed 4.12 kPa (0.042 kg/cm^2 , 0.6 psi) of pressure in the system.**

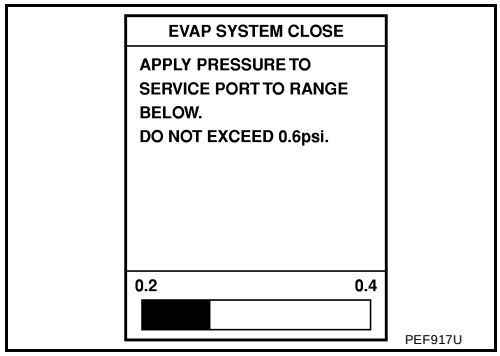

4. Using EVAP leak detector, locate the EVAP leak. For the leak detector, refer to the instruction manual for more details.
   Refer to EC-615, "EVAPORATIVE EMISSION LINE DRAWING"
   .

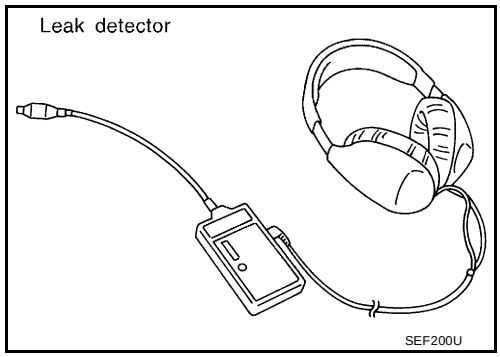

OK or NG

OK >> GO TO 8.
NG >> Repair or replace.

7. CHECK FOR EVAP LEAK

Without CONSULT-II

1. Turn ignition switch “OFF”.
2. Apply 12 volts DC to EVAP canister vent control valve. The valve will close. (Continue to apply 12 volts until the end of test.)
3. Apply 12 volts DC to vacuum cut valve bypass valve. The valve will open. (Continue to apply 12V until the end of test.)

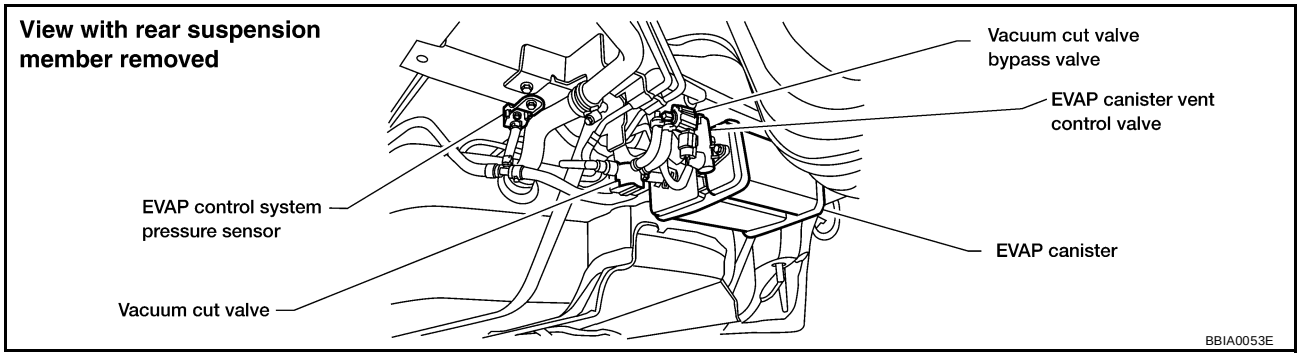

4. Pressurize the EVAP line using pressure pump with 1.3 to 2.7 kPa (10 to 20 mmHg, 0.39 to 0.79 inHg), then remove pump and EVAP service port adapter.

   NOTE:
   - **Never use compressed air or a high pressure pump.**
   - **Do not exceed 4.12 kPa (0.042 kg/cm^2 , 0.6 psi) of pressure in the system.**

5. Using EVAP leak detector, locate the EVAP leak. For the leak detector, refer to the instruction manual for more details. Refer to EC-615, "EVAPORATIVE EMISSION LINE DRAWING" .

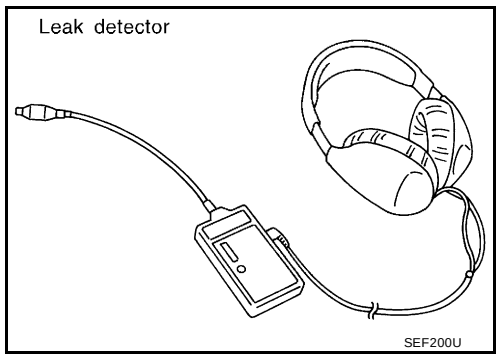

OK or NG

OK >> GO TO 8.
NG >> Repair or replace.

8. CHECK WATER SEPARATOR

Refer to EC-314, "Component Inspection" .

OK or NG

OK >> GO TO 9.
NG >> Replace water separator.

9. CHECK EVAP CANISTER VENT CONTROL VALVE, O-RING AND CIRCUIT

Refer to EC-497, "Component Inspection" .

OK or NG

OK >> GO TO 10.
NG >> Repair or replace EVAP canister vent control valve and O-ring or harness/connector.

10. CHECK IF EVAP CANISTER SATURATED WITH WATER

1. Remove EVAP canister with EVAP canister vent control valve attached.
2. Does water drain from the EVAP canister?

Yes or No

Yes >> GO TO 11.
No (With CONSULT-II)>>GO TO 13.
No (Without CONSULT-II)>>GO TO 14.

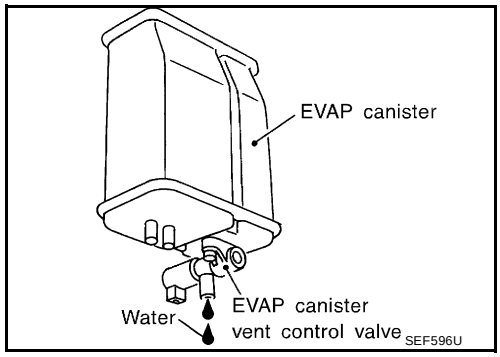

11. CHECK EVAP CANISTER

Weigh the EVAP canister with the EVAP canister vent control valve attached.
The weight should be less than 1.8 kg (4.0 lb).

OK or NG

OK (With CONSULT-II)>>GO TO 13.
OK (Without CONSULT-II)>>GO TO 14.
NG >> GO TO 12.

12. DETECT MALFUNCTIONING PART

Check the following.

- EVAP canister for damage
- EVAP hose between EVAP canister and water separator for clogging or poor connection

>> Repair hose or replace EVAP canister.

13. CHECK EVAP CANISTER PURGE VOLUME CONTROL SOLENOID VALVE OPERATION

With CONSULT-II

1. Disconnect vacuum hose to EVAP canister purge volume control solenoid valve at EVAP service port.
2. Start engine.
3. Perform “PURG VOL CONT/V” in “ACTIVE TEST” mode.
4. Touch “Qu” on CONSULT-II screen to increase “PURG VOL CONT/V” opening to 100.0%.
5. Check vacuum hose for vacuum when revving engine up to 2,000 rpm.

OK or NG

OK >> GO TO 16.
NG >> GO TO 15.

ACTIVE TEST	
PURG VOL CONT/V	XXX %
MONITOR	
ENG SPEED	XXX rpm
A/F ALPHA-B1	XX %
HO2S1 MNTR (B1)	LEAN

PBIB0828E

14. CHECK EVAP CANISTER PURGE VOLUME CONTROL SOLENOID VALVE OPERATION

Without CONSULT-II

1. Start engine and warm it up to normal operating temperature.
2. Stop engine.
3. Disconnect vacuum hose to EVAP canister purge volume control solenoid valve at EVAP service port.
4. Start engine and let it idle for at least 80 seconds.
5. Check vacuum hose for vacuum when revving engine up to 2,000 rpm.

Vacuum should exist.

OK or NG

OK >> GO TO 17.
NG >> GO TO 15.

15. CHECK VACUUM HOSE

Check vacuum hoses for clogging or disconnection. Refer to EC-29, "Vacuum Hose Drawing" .

OK or NG

OK >> GO TO 16.
NG >> Repair or reconnect the hose.

16. CHECK EVAP CANISTER PURGE VOLUME CONTROL SOLENOID VALVE

Refer to EC-320, "Component Inspection" .

OK or NG

OK >> GO TO 17.
NG >> Replace EVAP canister purge volume control solenoid valve.

17. CHECK FUEL TANK TEMPERATURE SENSOR

Refer to EC-233, "FUEL TANK TEMPERATURE SENSOR" .

OK or NG

OK >> GO TO 18.
NG >> Replace fuel level sensor unit.

18. CHECK EVAP CONTROL SYSTEM PRESSURE SENSOR

Refer to EC-333, "Component Inspection" .

OK or NG

OK >> GO TO 19.
NG >> Replace EVAP control system pressure sensor.

19. CHECK EVAP PURGE LINE

Check EVAP purge line (pipe, rubber tube, fuel tank and EVAP canister) for cracks or improper connection.
Refer to EC-615, "EVAPORATIVE EMISSION LINE DRAWING" .

OK or NG

OK >> GO TO 20.
NG >> Repair or reconnect the hose.

20. CLEAN EVAP PURGE LINE

Clean EVAP purge line (pipe and rubber tube) using air blower.

>> GO TO 21.

21. CHECK REFUELING EVAP VAPOR LINE

Check refueling EVAP vapor line between EVAP canister and fuel tank for clogging, kink, looseness and improper connection. For location, refer to EC-620, "ON BOARD REFUELING VAPOR RECOVERY (ORVR)" .

OK or NG

OK >> GO TO 22.
NG >> Repair or replace hoses and tubes.

22. CHECK SIGNAL LINE AND RECIRCULATION LINE

Check signal line and recirculation line between filler neck tube and fuel tank for clogging, kink, cracks, looseness and improper connection.

OK or NG

OK >> GO TO 23.
NG >> Repair or replace hoses, tubes or filler neck tube.

23. CHECK REFUELING CONTROL VALVE

Refer to EC-623, "Component Inspection" .

OK or NG

OK >> GO TO 24.
NG >> Replace refueling control valve with fuel tank.

24. CHECK FUEL LEVEL SENSOR

Refer to DI-21, "FUEL LEVEL SENSOR UNIT CHECK" .

OK or NG

OK >> GO TO 25.
NG >> Replace fuel level sensor unit.

25. CHECK INTERMITTENT INCIDENT

Refer to EC-130, "TROUBLE DIAGNOSIS FOR INTERMITTENT INCIDENT" .

>> **INSPECTION END**

Component Inspection

UBS002W5

WATER SEPARATOR

1. Check visually for insect nests in the water separator air inlet.
2. Check visually for cracks or flaws in the appearance.
3. Check visually for cracks or flaws in the hose.
4. Check that **A** and **C** are not clogged by blowing air into **B** with **A** , and then **C** plugged.
5. In case of NG in items 2 - 4, replace the parts.

NOTE:
- Do not disassemble water separator.

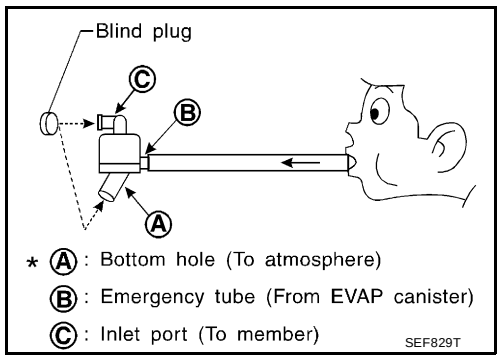

DTC P0460 FUEL LEVEL SENSOR

PFP:25060

Component Description

UBS002W6

The fuel level sensor is mounted in the fuel level sensor unit. The sensor detects a fuel level in the fuel tank and transmits a signal to the ECM.
It consists of two parts, one is mechanical float and the other side is variable resistor. Fuel level sensor output voltage changes depending on the movement of the fuel mechanical float.

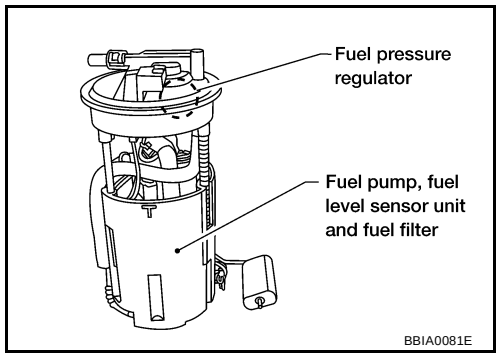

On Board Diagnosis Logic

UBS002W7

When the vehicle is parked, naturally the fuel level in the fuel tank is stable. It means that output signal of the fuel level sensor does not change. If ECM senses sloshing signal from the sensor, fuel level sensor malfunction is detected.

DTC No.	Trouble diagnosis name	DTC detecting condition	Possible cause
P0460 0460	Fuel level sensor circuit noise	Even though the vehicle is parked, a signal being varied is sent from the fuel level sensor to ECM.	● Harness or connectors (The sensor circuit is open or shorted) ● Fuel level sensor

DTC Confirmation Procedure

UBS002W8

NOTE:
If “DTC Confirmation Procedure” has been previously conducted, always turn ignition switch “OFF” and wait at least 10 seconds before conducting the next test.

WITH CONSULT-II

1. Turn ignition switch “ON”.
2. Select “DATA MONITOR” mode with CONSULT-II.
3. Start engine and wait maximum of 2 consecutive minutes.
4. If 1st trip DTC is detected, go to EC-360, "Diagnostic Procedure"
.

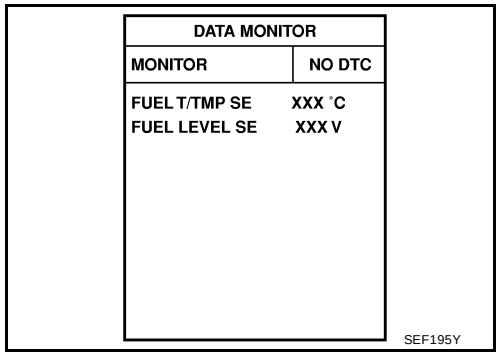

WITH GST

Follow the procedure “WITH CONSULT-II” above.

Wiring Diagram

UBS002W9

EC-FLS1-01

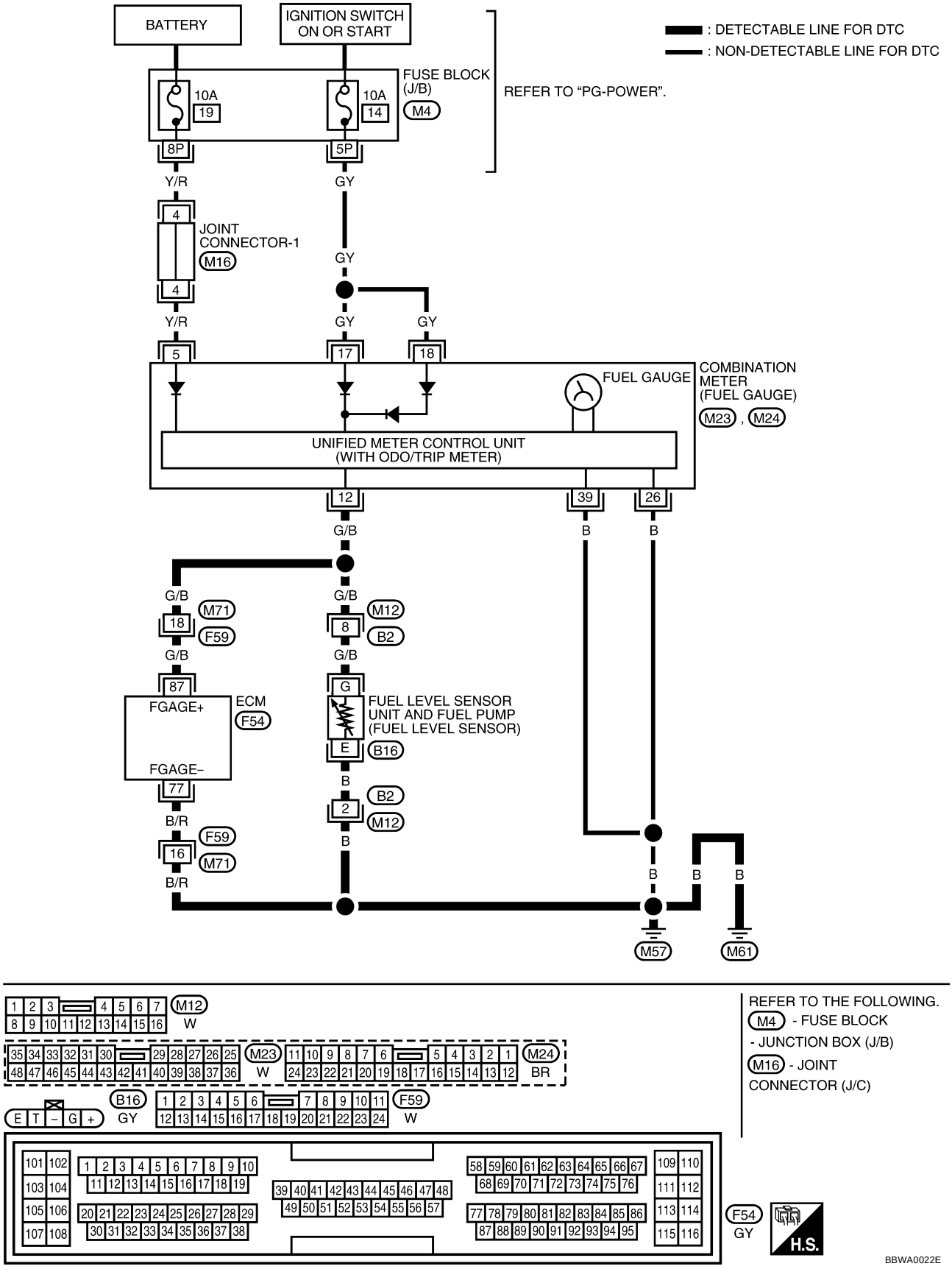

Specification data are reference values and are measured between each terminal and ground.

CAUTION:
Do not use ECM ground terminals when measuring input/output voltage. Doing so may result in damage to the ECM's transistor. Use a ground other than ECM terminals, such as the ground.

TERMINAL NO.	WIRE COLOR	ITEM	CONDITION	DATA (DC Voltage)
77	B/R	Fuel level sensor ground	**[Engine is running]** ● Idle speed	Approximately 0V
87	G/B	Fuel level sensor	**[Ignition switch "ON"]**	Approximately 0 - 4.8V Output voltage varies with fuel level.

Diagnostic Procedure

UBS002WA

1. CHECK FUEL LEVEL SENSOR POWER SUPPLY CIRCUIT

1. Turn ignition switch "OFF".
2. Disconnect fuel level sensor unit and fuel pump harness connector.
3. Turn ignition switch "ON".

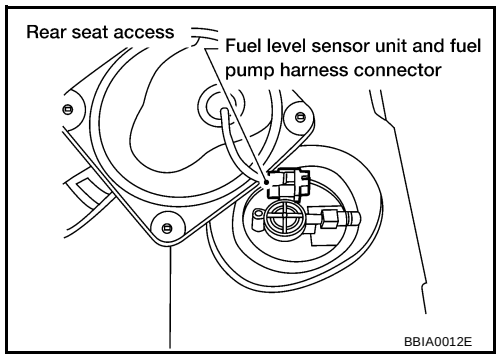

4. Check voltage between fuel level sensor unit and fuel pump terminal **G** and ground with CONSULT-II or tester.

   Voltage: Battery voltage

OK or NG

OK >> GO TO 3.
NG >> GO TO 2.

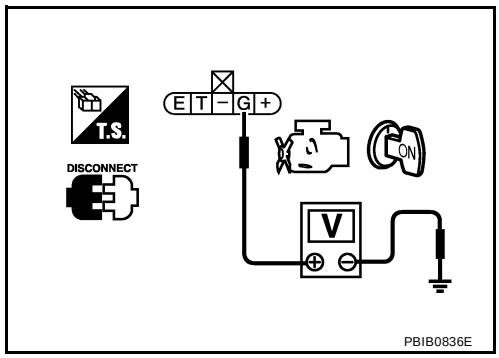

2. DETECT MALFUNCTIONING PART

Check the following.

- Harness connectors M12, B2
- Harness for open or short between combination meter and fuel level sensor until and fuel pump

>> Repair open circuit or short to ground or short to power in harness or connectors.

3. CHECK FUEL LEVEL SENSOR GROUND CIRCUIT FOR OPEN AND SHORT

1. Turn ignition switch “OFF”.
2. Check harness continuity between fuel level sensor unit and fuel pump terminal **E** and body ground. Refer to Wiring Diagram.

   Continuity should exist.

3. Also check harness for short to power.

OK or NG

OK >> GO TO 5.
NG >> GO TO 4.

4. DETECT MALFUNCTIONING PART

Check the following.

- Harness connectors M12, B2
- Harness for open or short between fuel level sensor unit and fuel pump and body ground

>> Repair open circuit or short to power in harness or connectors.

5. CHECK FUEL LEVEL SENSOR INPUT SIGNAL CIRCUIT FOR OPEN AND SHORT

1. Disconnect ECM harness connector.
2. Check harness continuity between ECM terminal 87 and fuel level sensor unit and fuel pump terminal **G** , ECM terminal 77 and fuel level sensor unit and fuel pump terminal **E** . Refer to Wiring Diagram.

   Continuity should exist.

3. Also check harness for short to ground or short to power.

OK or NG

OK >> GO TO 7.
NG >> GO TO 6.

6. DETECT MALFUNCTIONING PART

Check the following.

- Harness connectors M12, B2
- Harness connectors M71, F59
- Harness for open or short between ECM and fuel level sensor unit and fuel pump

>> Repair open circuit or short to ground or short to power in harness or connectors.

7. CHECK FUEL LEVEL SENSOR

Refer to DI-21, "FUEL LEVEL SENSOR UNIT CHECK" .

OK or NG

OK >> GO TO 8.
NG >> Replace fuel level sensor unit.

8. CHECK INTERMITTENT INCIDENT

Refer to EC-130, "TROUBLE DIAGNOSIS FOR INTERMITTENT INCIDENT" .

>> **INSPECTION END**

Removal and Installation

UBS002WB

FUEL LEVEL SENSOR

Refer to FL-5, "FUEL LEVEL SENSOR UNIT, FUEL FILTER AND FUEL PUMP ASSEMBLY" .

DTC P0461 FUEL LEVEL SENSOR

PFP:25060

Component Description

UBS002WC

The fuel level sensor is mounted in the fuel level sensor unit. The sensor detects a fuel level in the fuel tank and transmits a signal to the ECM.
It consists of two parts, one is mechanical float and the other side is variable resistor. Fuel level sensor output voltage changes depending on the movement of the fuel mechanical float.

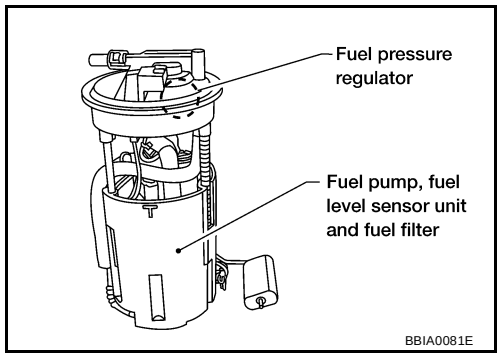

On Board Diagnosis Logic

UBS002WD

Driving long distances naturally affect fuel gauge level.
This diagnosis detects the fuel gauge malfunction of the gauge not moving even after a long distance has been driven.

DTC No.	Trouble diagnosis name	DTC detecting condition	Possible cause
P0461 0461	Fuel level sensor circuit range/performance	The output signal of the fuel level sensor does not change within the specified range even though the vehicle has been driven a long distance.	● Harness or connectors (The sensor circuit is open or shorted) ● Fuel level sensor

Overall Function Check

UBS002WE

Use this procedure to check the overall function of the fuel level sensor function. During this check, a 1st trip DTC might not be confirmed.

WARNING:
When performing following procedure, be sure to observe the handling of the fuel. Refer to FL-8, "FUEL TANK" .
TESTING CONDITION:
Before starting overall function check, preparation of draining fuel and refilling fuel is required.

WITH CONSULT-II

NOTE:
Start from step 11, if it is possible to confirm that the fuel cannot be drained by 30 ℓ (7-7/8 US gal, 6-5/8 Imp gal) in advance.

1. Prepare a fuel container and a spare hose.
2. Release fuel pressure from fuel line, refer to EC-51, "FUEL PRESSURE RELEASE" .
3. Remove the fuel feed hose on the fuel level sensor unit.
4. Connect a spare fuel hose where the fuel feed hose was removed.
5. Turn ignition switch “OFF” and wait at least 10 seconds then turn “ON”.
6. Select “FUEL LEVEL SE” in “DATA MONITOR” mode with CONSULT-II.
7. Check “FUEL LEVEL SE” output voltage and note it.
8. Select “FUEL PUMP” in “ACTIVE TEST” mode with CONSULT-II.
9. Touch “ON” and drain fuel approximately 30 ℓ (7-7/8 US gal, 6-5/8 Imp gal) and stop it.
10. Fill fuel into the fuel tank for 30 ℓ (7-7/8 US gal, 6-5/8 Imp gal).
11. Check “FUEL LEVEL SE” output voltage and note it.
12. Check “FUEL LEVEL SE” output voltage and confirm whether the voltage changes more than 0.03V during step 7 to 11.
    If NG, check the fuel level sensor, refer to DI-21, "FUEL LEVEL SENSOR UNIT CHECK" .

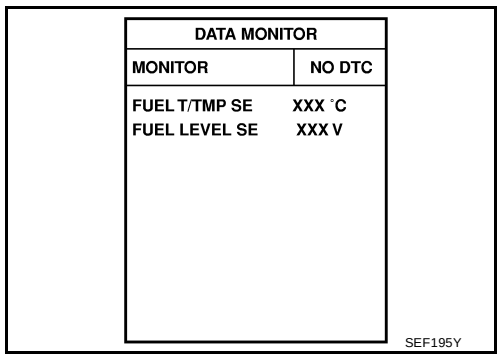

WITH GST

NOTE:

Start from step 11, if it is possible to confirm that the fuel cannot be drained by 30 ℓ (7-7/8 US gal, 6-5/8 Imp gal) in advance.

1. Prepare a fuel container and a spare hose.
2. Release fuel pressure from fuel line, refer to EC-51, "FUEL PRESSURE RELEASE" .
3. Remove the fuel feed hose on the fuel level sensor unit.
4. Connect a spare fuel hose where the fuel feed hose was removed.
5. Turn ignition switch “OFF”.
6. Set voltmeters probe between ECM terminal 87 (fuel level sensor signal) and ground.
7. Turn ignition switch “ON”.
8. Check voltage between ECM terminal 87 and ground and note it.
9. Drain fuel by 30 ℓ (7-7/8 US gal, 6-5/8 Imp gal) from the fuel tank using proper equipment.
10. Fill fuel into the fuel tank for 30 ℓ (7-7/8 US gal, 6-5/8 Imp gal).
11. Confirm that the voltage between ECM terminal 69 and ground changes more than 0.03V during step 8 - 10.
    If NG, check component of fuel level sensor, refer to DI-21, "FUEL LEVEL SENSOR UNIT CHECK" .

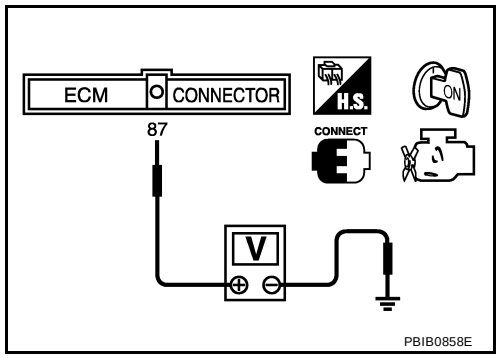

DTC P0462, P0463 FUEL LEVEL SENSOR

PFP:25060

Component Description

UBS002WF

The fuel level sensor is mounted in the fuel level sensor unit. The sensor detects a fuel level in the fuel tank and transmits a signal to the ECM.
It consists of two parts, one is mechanical float and the other side is variable resistor. Fuel level sensor output voltage changes depending on the movement of the fuel mechanical float.

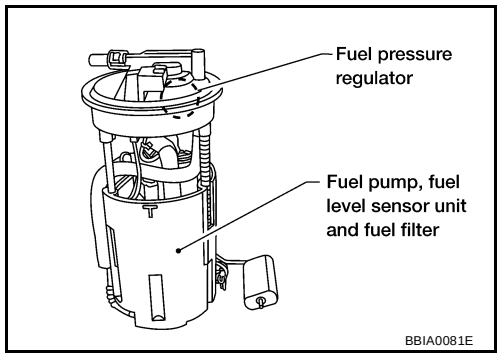

On Board Diagnosis Logic

UBS002WG

ECM receives two signals from the fuel level sensor circuit.
One is fuel level sensor power supply circuit, and the other is fuel level sensor ground circuit.
This diagnosis indicates the former, to detect open or short circuit malfunction.

DTC No.	Trouble diagnosis name	DTC detecting condition	Possible cause
P0462 0462	Fuel level sensor circuit low input	An excessively low voltage is sent from the sensor is sent to ECM.	● Harness or connectors (The sensor circuit is open or shorted) ● Fuel level sensor
P0463 0463	Fuel level sensor circuit high input	An excessively high voltage is sent from the sensor is sent to ECM.	

DTC Confirmation Procedure

UBS002WH

NOTE:
If “DTC Confirmation Procedure” has been previously conducted, always turn ignition switch “OFF” and wait at least 10 seconds before conducting the next test.
TESTING CONDITION:
Before performing the following procedure, confirm that battery voltage is more than 11V at ignition switch “ON”.

WITH CONSULT-II

1. Turn ignition switch “ON”.
2. Select “DATA MONITOR” mode with CONSULT-II.
3. Wait at least 5 seconds.
4. If 1st trip DTC is detected, go to EC-367, "Diagnostic Procedure"
.

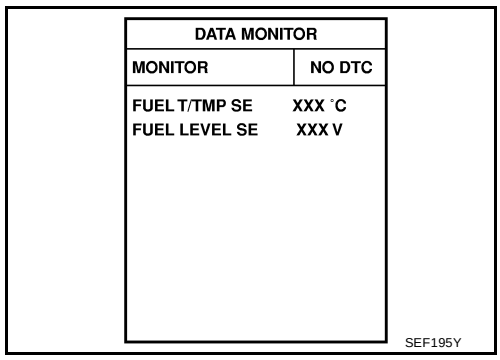

DATA MONITOR	
MONITOR	NO DTC
FUEL T/TMP SE	XXX °C
FUEL LEVEL SE	XXX V

SEF195Y

WITH GST

Follow the procedure “WITH CONSULT-II” above.

Wiring Diagram

UBS002WI

EC-FLS2-01

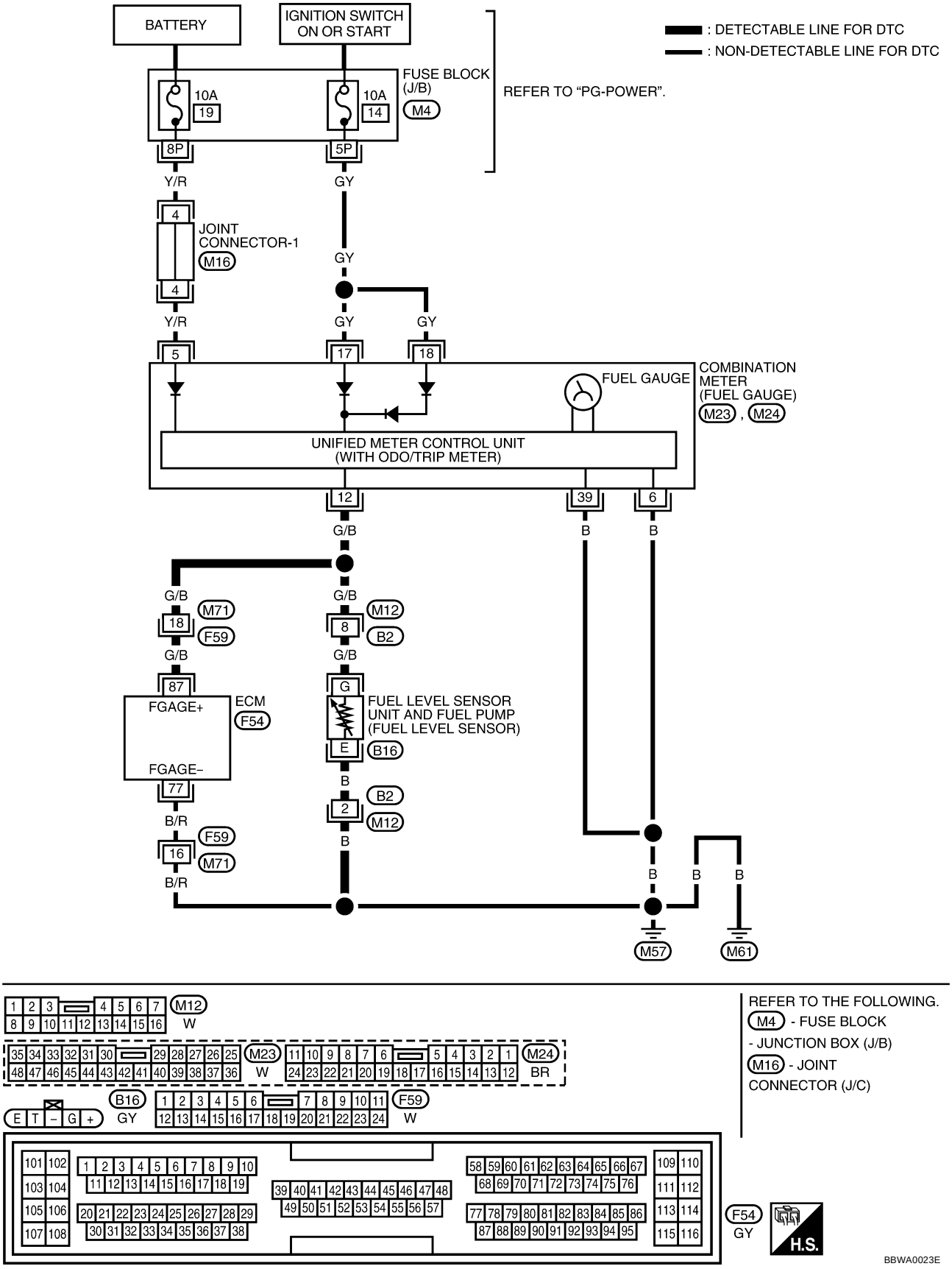

Specification data are reference values and are measured between each terminal and ground.

CAUTION:
Do not use ECM ground terminals when measuring input/output voltage. Doing so may result in damage to the ECM's transistor. Use a ground other than ECM terminals, such as the ground.

TERMINAL NO.	WIRE COLOR	ITEM	CONDITION	DATA (DC Voltage)
77	B/R	Fuel level sensor ground	**[Engine is running]** ● Idle speed	Approximately 0V
87	G/B	Fuel level sensor	**[Ignition switch "ON"]**	Approximately 0 - 4.8V Output voltage varies with fuel level.

Diagnostic Procedure

UBS002WJ

1. CHECK FUEL LEVEL SENSOR POWER SUPPLY CIRCUIT

1. Turn ignition switch "OFF".
2. Disconnect fuel level sensor unit and fuel pump harness connector.
3. Turn ignition switch "ON".

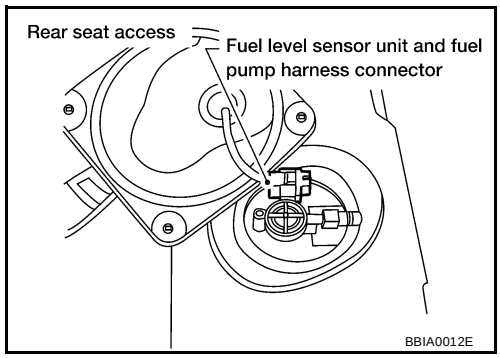

4. Check voltage between fuel level sensor unit and fuel pump terminal **G** and ground with CONSULT-II or tester.

   Voltage: Battery voltage

OK or NG

OK >> GO TO 3.
NG >> GO TO 2.

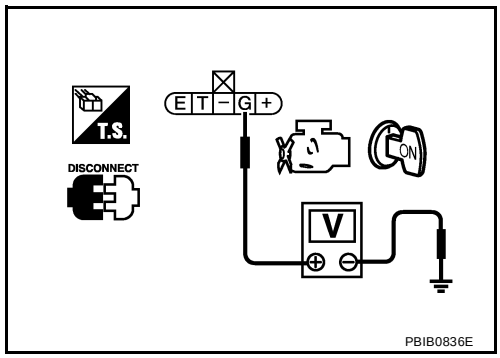

2. DETECT MALFUNCTIONING PART

Check the following.

- Harness connectors M12, B2
- Harness for open or short between combination meter and fuel level sensor unit and fuel pump

>> Repair open circuit or short to ground or short to power in harness or connectors.

3. CHECK FUEL LEVEL SENSOR GROUND CIRCUIT FOR OPEN AND SHORT

1. Turn ignition switch “OFF”.
2. Check harness continuity between fuel level sensor unit and fuel pump terminal **E** and body ground. Refer to Wiring Diagram.

   Continuity should exist.

3. Also check harness for short to power.

OK or NG

OK >> GO TO 5.
NG >> GO TO 4.

4. DETECT MALFUNCTIONING PART

Check the following.

- Harness connectors M12, B2
- Harness for open or short between fuel level sensor unit and fuel pump and body ground

>> Repair open circuit or short to power in harness or connectors.

5. CHECK FUEL LEVEL SENSOR INPUT SIGNAL CIRCUIT FOR OPEN AND SHORT

1. Disconnect ECM harness connector.
2. Check harness continuity between ECM terminal 87 and fuel level sensor unit and fuel pump terminal **G** . Refer to Wiring Diagram.

   Continuity should exist.

3. Also check harness for short to ground or short to power.

OK or NG

OK >> GO TO 7.
NG >> GO TO 6.

6. DETECT MALFUNCTIONING PART

Check the following.

- Harness connectors M12, B2
- Harness connectors M71, F59
- Harness for open or short between ECM and fuel level sensor unit and fuel pump

>> Repair open circuit or short to ground or short to power in harness or connectors.

7. CHECK FUEL LEVEL SENSOR

Refer to DI-21, "FUEL LEVEL SENSOR UNIT CHECK" .

OK or NG

OK >> GO TO 8.
NG >> Replace fuel level sensor.

8. CHECK INTERMITTENT INCIDENT

Refer to EC-130, "TROUBLE DIAGNOSIS FOR INTERMITTENT INCIDENT" .

>> **INSPECTION END**

Removal and Installation

UBS002WK

FUEL LEVEL SENSOR

Refer to FL-5, "FUEL LEVEL SENSOR UNIT, FUEL FILTER AND FUEL PUMP ASSEMBLY" .

DTC P0500 VSS

PFP:32702

Description

UBS002WL

NOTE:
If DTC P0500 is displayed with DTC U1000 or U1001, first perform the trouble diagnosis for DTC U1000, U1001. Refer to EC-138, "DTC U1000, U1001 CAN COMMUNICATION LINE" .
The vehicle speed sensor is installed in the transaxle. It contains a pulse generator which provides a vehicle speed signal to the combination meter. The combination meter then sends a signal to the ECM through CAN communication line.

On Board Diagnosis Logic

UBS002WM

DTC No.	Trouble diagnosis name	DTC detecting condition	Possible cause
P0500 0500	Vehicle speed sensor	The almost 0 km/h (0 MPH) signal from vehicle speed sensor is sent to ECM even when vehicle is being driven.	● Harness or connectors (The CAN communication line is open or shorted) ● Harness or connectors (The vehicle speed sensor circuit is open or shorted) ● Vehicle speed sensor ● Combination meter

DTC Confirmation Procedure

UBS002WN

CAUTION:
Always drive vehicle at a safe speed.

NOTE:
If “DTC Confirmation Procedure” has been previously conducted, always turn ignition switch “OFF” and wait at least 10 seconds before conducting the next test.

TESTING CONDITION:
Steps 1 and 2 may be conducted with the drive wheels lifted in the shop or by driving the vehicle. If a road test is expected to be easier, it is unnecessary to lift the vehicle.

WITH CONSULT-II

1. Start engine.
2. Read “VHCL SPEED SE” in “DATA MONITOR” mode with CONSULT-II. The vehicle speed on CONSULT-II should exceed 10 km/h (6 MPH) when rotating wheels with suitable gear position.
   If NG, go to EC-371, "Diagnostic Procedure" .
   If OK, go to following step.
3. Select “DATA MONITOR” mode with CONSULT-II.
4. Warm engine up to normal operating temperature.
5. Maintain the following conditions for at least 60 consecutive seconds.

ENG SPEED	1,200 - 6,000 rpm
COOLAN TEMP/S	More than 70°C (158°F)
B/FUEL SCHDL	6.0 - 31.8 msec
Selector lever	Suitable position
PW/ST SIGNAL	OFF

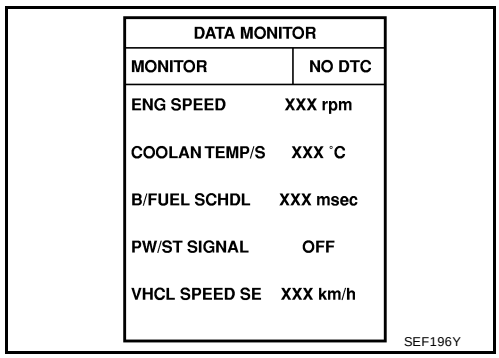

6. If 1st trip DTC is detected, go to EC-371, "Diagnostic Procedure" .

Overall Function Check

UBS002WO

Use this procedure to check the overall function of the vehicle speed sensor circuit. During this check, a 1st trip DTC might not be confirmed.

WITH GST

1. Lift up drive wheels.

2. Start engine.
3. Read vehicle speed sensor signal in “MODE 1” with GST.
   The vehicle speed sensor on GST should be able to exceed 10 km/h (6 MPH) when rotating wheels with suitable gear position.
4. If NG, go to EC-371, "Diagnostic Procedure" .

Diagnostic Procedure

UBS002WP

1. CHECK VEHICLE SPEED SENSOR CIRCUIT

Refer to DI-19, "Vehicle Speed System" .

OK or NG

OK >> GO TO 2.
NG >> Repair or replace.

2. CHECK COMBINATION METER

Check combination meter function.
Refer to DI-4, "COMBINATION METERS" .

>> **INSPECTION END**

DTC P0506 ISC SYSTEM

PFP:23781

Description

UBS002WQ

NOTE:

If DTC P0506 is displayed with other DTC, first perform the trouble diagnosis for the other DTC displayed.

The ECM controls the engine idle speed to a specified level through the fine adjustment of the air, which is let into the intake manifold, by operating the electric throttle control actuator. The operating of the throttle valve is varied to allow for optimum control of the engine idling speed. The crankshaft position sensor (POS) detects the actual engine speed and sends a signal to the ECM.

The ECM controls the electric throttle control actuator so that the engine speed coincides with the target value memorized in the ECM. The target engine speed is the lowest speed at which the engine can operate steadily. The optimum value stored in the ECM is determined by taking into consideration various engine conditions, such as during warming up, deceleration, and engine load (air conditioner, power steering and cooling fan operation, etc.).

On Board Diagnosis Logic

UBS002WR

DTC No.	Trouble diagnosis name	DTC detecting condition	Possible cause
P0506 0506	Idle speed control system RPM lower than expected	The idle speed is less than the target idle speed by 100 rpm or more.	● Electric throttle control actuator ● Intake air leak

DTC Confirmation Procedure

UBS002WS

NOTE:

- If “DTC Confirmation Procedure” has been previously conducted, always turn ignition switch “OFF” and wait at least 10 seconds before conducting the next test.
- **If the target idle speed is out of the specified value, perform EC-49, "Idle Air Volume Learning" , before conducting “DTC Confirmation Procedure”. For the target idle speed, refer to the EC-630, "SERVICE DATA AND SPECIFICATIONS (SDS)" .**

TESTING CONDITION:

- **Before performing the following procedure, confirm that battery voltage is more than 11V at idle.**
- **Always perform the test at a temperature above –10°C (14°F).**

WITH CONSULT-II

1. Open engine hood.
2. Start engine and warm it up to normal operating temperature.
3. Turn ignition switch “OFF” and wait at least 10 seconds.
4. Turn ignition switch “ON” again and select “DATA MONITOR” mode with CONSULT-II.
5. Start engine and run it for at least 1 minute at idle speed.
6. If 1st trip DTC is detected, go to EC-373, "Diagnostic Procedure" .

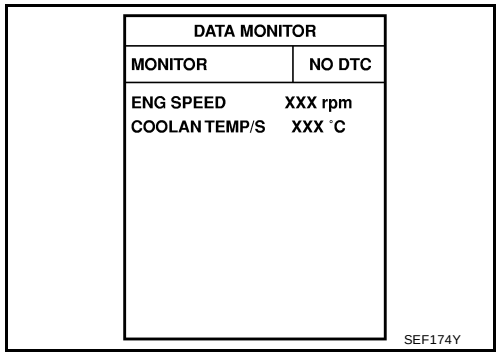

WITH GST

Follow the procedure “WITH CONSULT-II” above.

Diagnostic Procedure

UBS002WT

1. CHECK INTAKE AIR LEAK

1. Start engine and let it idle.
2. Listen for an intake air leak after the mass air flow sensor.

OK or NG

OK >> GO TO 2.
NG >> Discover air leak location and repair.

2. REPLACE ECM

1. Stop engine.
2. Replace ECM.
3. Perform initialization of NVIS (NATS) system and registration of all NVIS (NATS) ignition key IDs. Refer to EC-68, "VIS (Nissan Vehicle Immobilizer System — NATS)" .
4. Perform EC-49, "Accelerator Pedal Released Position Learning" .
5. Perform EC-49, "Throttle Valve Closed Position Learning" .
6. Perform EC-49, "Idle Air Volume Learning" .

>> **INSPECTION END**

DTC P0507 ISC SYSTEM

PFP:23781

Description

UBS002WU

NOTE:

If DTC P0507 is displayed with other DTC, first perform the trouble diagnosis for the other DTC displayed.

The ECM controls the engine idle speed to a specified level through the fine adjustment of the air, which is let into the intake manifold, by operating the electric throttle control actuator. The operating of the throttle valve is varied to allow for optimum control of the engine idling speed. The crankshaft position sensor (POS) detects the actual engine speed and sends a signal to the ECM.

The ECM controls the electric throttle control actuator so that the engine speed coincides with the target value memorized in the ECM. The target engine speed is the lowest speed at which the engine can operate steadily. The optimum value stored in the ECM is determined by taking into consideration various engine conditions, such as during warming up, deceleration, and engine load (air conditioner, power steering and cooling fan operation, etc.).

On Board Diagnosis Logic

UBS002WV

DTC No.	Trouble diagnosis name	DTC detecting condition	Possible cause
P0507 0507	Idle speed control system RPM higher than expected	The idle speed is more than the target idle speed by 200 rpm or more.	● Electric throttle control actuator ● Intake air leak ● PCV system

DTC Confirmation Procedure

UBS002WW

NOTE:

- If “DTC Confirmation Procedure” has been previously conducted, always turn ignition switch “OFF” and wait at least 10 seconds before conducting the next test.
- **If the target idle speed is out of the specified value, perform EC-49, "Idle Air Volume Learning" , before conducting “DTC Confirmation Procedure”. For the target idle speed, refer to the EC-630, "SERVICE DATA AND SPECIFICATIONS (SDS)" .**

TESTING CONDITION:

- **Before performing the following procedure, confirm that battery voltage is more than 11V at idle.**
- **Always perform the test at a temperature above –10°C (14°F).**

WITH CONSULT-II

1. Open engine hood.
2. Start engine and warm it up to normal operating temperature.
3. Turn ignition switch “OFF” and wait at least 10 seconds.
4. Turn ignition switch “ON” again and select “DATA MONITOR” mode with CONSULT-II.
5. Start engine and run it for at least 1 minute at idle speed.
6. If 1st trip DTC is detected, go to EC-375, "Diagnostic Procedure" .

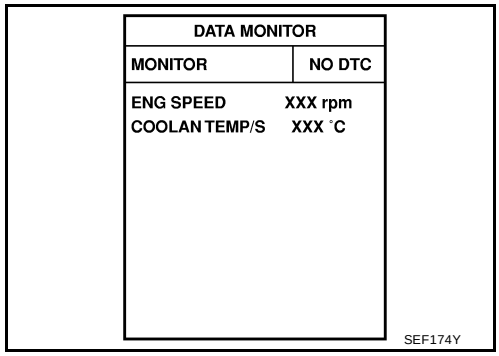

WITH GST

Follow the procedure “WITH CONSULT-II” above.

Diagnostic Procedure

UBS002WX

1. CHECK PCV HOSE CONNECTION

Confirm that PCV hose is connected correctly.

OK or NG

OK >> GO TO 2.
NG >> Repair or replace.

2. CHECK INTAKE AIR LEAK

1. Start engine and let it idle.
2. Listen for an intake air leak after the mass air flow sensor.

OK or NG

OK >> GO TO 3.
NG >> Discover air leak location and repair.

3. REPLACE ECM

1. Stop engine.
2. Replace ECM.
3. Perform initialization of NVIS (NATS) system and registration of all NVIS (NATS) ignition key IDs. Refer to EC-68, "VIS (Nissan Vehicle Immobilizer System — NATS)" .
4. Perform EC-49, "Accelerator Pedal Released Position Learning" .
5. Perform EC-49, "Throttle Valve Closed Position Learning" .
6. Perform EC-49, "Idle Air Volume Learning" .

>> **INSPECTION END**

DTC P0605 ECM

PFP:23710

Component Description

UBS002WY

The ECM consists of a microcomputer and connectors for signal input and output and for power supply. The ECM controls the engine.

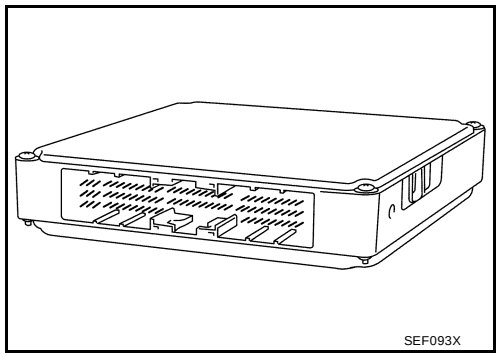

On Board Diagnosis Logic

UBS002WZ

DTC No.	Trouble diagnosis name	DTC detecting condition		Possible cause
P0605 0605	Engine control module	A)	ECM calculation function is malfunctioning.	● ECM
		B)	ECM EEP-ROM system is malfunctioning.	
		C)	ECM self shut-off function is malfunctioning.	

FAIL-SAFE MODE

ECM enters fail-safe mode when malfunction A is detected.

Detected items	Engine operation condition in fail-safe mode
Malfunction A	ECM stops the electric throttle control actuator control, throttle valve is maintained at a fixed opening (approx. 5 degrees) by the return spring.

DTC Confirmation Procedure

UBS002X0

Perform "PROCEDURE FOR MALFUNCTION A" first. If the 1st trip DTC cannot be confirmed, perform "PROCEDURE FOR MALFUNCTION B". If there is no problem on "PROCEDURE FOR MALFUNCTION B", perform "PROCEDURE FOR MALFUNCTION C".

NOTE:

If “DTC Confirmation Procedure” has been previously conducted, always turn ignition switch “OFF” and wait at least 10 seconds before conducting the next test.

PROCEDURE FOR MALFUNCTION A

With CONSULT-II

1. Turn ignition switch “ON”.
2. Select “DATA MONITOR” mode with CONSULT-II.
3. If 1st trip DTC is detected, go to EC-377, "Diagnostic Procedure"
.

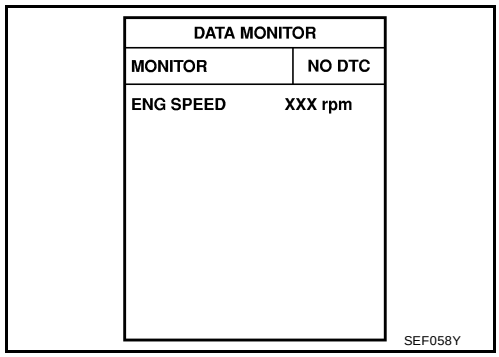

With GST

Follow the procedure “With CONSULT-II” above.

PROCEDURE FOR MALFUNCTION B

With CONSULT-II

1. Turn ignition switch “ON” and wait at least 1 second.

2. Select “DATA MONITOR” mode with CONSULT-II.
3. Turn ignition switch "OFF", wait at least 10 seconds, and then turn "ON".
4. If 1st trip DTC is detected, go to EC-377, "Diagnostic Procedure" .

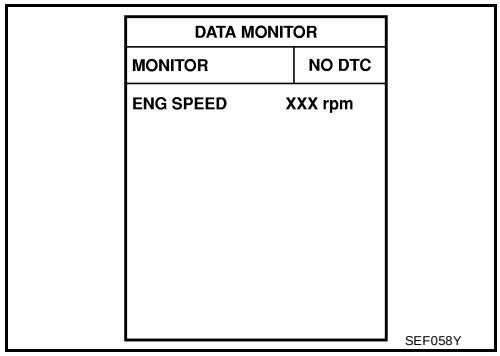

With GST

Follow the procedure “With CONSULT-II” above.

PROCEDURE FOR MALFUNCTION C

With CONSULT-II

1. Turn ignition switch “ON” and wait at least 1 second.
2. Select “DATA MONITOR” mode with CONSULT-II.
3. Turn ignition switch "OFF", wait at least 10 seconds, and then turn "ON".
4. Repeat step 3 procedure, 32 times.
5. If 1st trip DTC is detected, go to EC-377, "Diagnostic Procedure" .

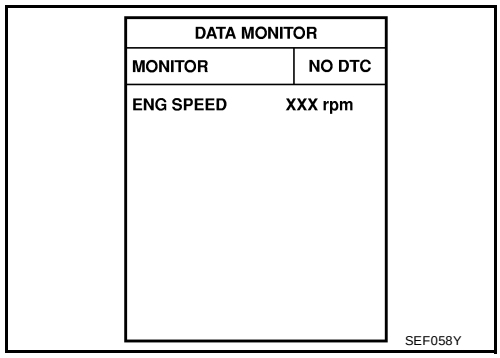

With GST

Follow the procedure “With CONSULT-II” above.

Diagnostic Procedure

UBS002X1

1. INSPECTION START

With CONSULT-II

1. Turn ignition switch “ON”.
2. Select “SELF DIAG RESULTS” mode with CONSULT-II.
3. Touch “ERASE”.
4. **Perform “DTC Confirmation Procedure”.**
   See EC-376 .
5. Is the 1st trip DTC P0605 displayed again?

With GST

1. Turn ignition switch “ON”.
2. Select MODE 4 with GST.
3. Touch “ERASE”.
4. **Perform “DTC Confirmation Procedure”.**
   See EC-376 .
5. Is the 1st trip DTC P0605 displayed again?

Yes or No

Yes >> GO TO 2.
No >> **INSPECTION END**

2. REPLACE ECM

1. Replace ECM.
2. Perform initialization of NVIS (NATS) system and registration of all NVIS (NATS) ignition key IDs. Refer to EC-68, "VIS (Nissan Vehicle Immobilizer System — NATS)" .
3. Perform EC-49, "Accelerator Pedal Released Position Learning" .
4. Perform EC-49, "Throttle Valve Closed Position Learning" .
5. Perform EC-49, "Idle Air Volume Learning" .

>> **INSPECTION END**

DTC P0650 MIL

PFP:24810

Component Description

UBS002X2

Malfunction Indicator Lamp (MIL) is located on the instrument panel. When the ignition switch is turned ON without engine running, MIL will light up. This is a bulb check. When the engine is started, MIL should go off. If MIL remains on, the on board diagnostic system has detected an engine system malfunction.

On Board Diagnosis Logic

UBS002X3

DTC No.	Trouble diagnosis name	DTC detecting condition	Possible cause
P0650 0650	Malfunction indicator (MIL) control circuit	● An excessively high voltage is sent to ECM through the MIL circuit under the condition that calls for MIL light up. ● An excessively low voltage is sent to ECM through the MIL circuit under the condition that calls for MIL not to light up.	● Harness or connectors (MIL circuit is open or shorted.) ● MIL

FAIL-SAFE MODE

ECM enters in fail-safe mode when both DTC P0650 and another DTC, which calls for MIL to light up, are detected at the same time.

Detected items	Engine operating condition in fail-safe mode
MIL circuit	Engine speed will not rise more than 2,500 rpm due to the fuel cut

DTC Confirmation Procedure

UBS002X4

NOTE:
If "DTC Confirmation Procedure" has been previously conducted, always turn ignition switch "OFF" and wait at least 10 seconds before conducting the next test.

WITH CONSULT-II

1. Turn ignition switch "ON" and wait at least 1 second.
2. Select "DATA MONITOR" mode with CONSULT-II.
3. Start engine and let it idle for 1 second.
4. If DTC is detected, go to EC-381, "Diagnostic Procedure" .

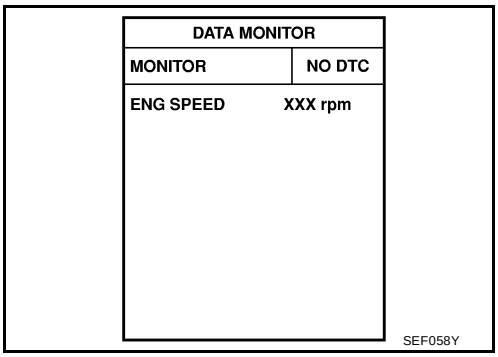

WITH GST

Follow the procedure "WITH CONSULT-II" above.

Wiring Diagram

UBS002X5

EC-MIL-01

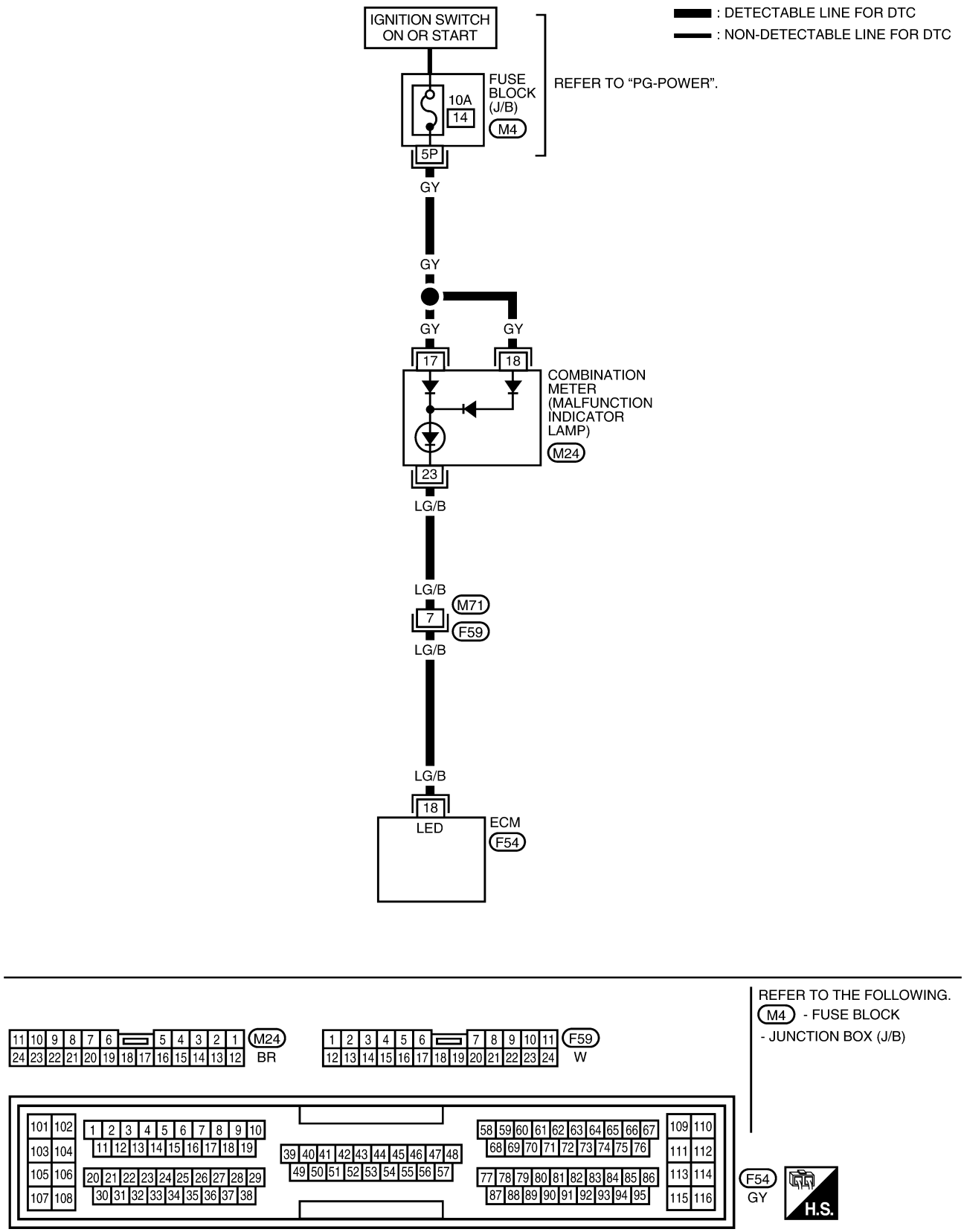

Specification data are reference values and are measured between each terminal and ground.

CAUTION:
Do not use ECM ground terminals when measuring input/output voltage. Doing so may result in damage to the ECM's transistor. Use a ground other than ECM terminals, such as the ground.

TERMINAL NO.	WIRE COLOR	ITEM	CONDITION	DATA (DC Voltage)
18	LG/B	MIL	**[Ignition switch "ON"]**	0 - 1.0V
			[Engine is running] ● Idle speed	BATTERY VOLTAGE (11 - 14V)

Diagnostic Procedure

UBS002X6

1. CHECK MIL POWER SUPPLY

1. Turn ignition switch "OFF".
2. Disconnect combination meter harness connector.
3. Turn ignition switch "ON".
4. Check voltage between combination meter terminal 17, 18 and ground with CONSULT-II or tester

Voltage: Battery voltage

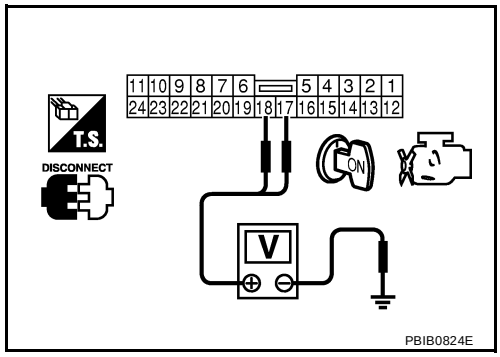

OK or NG

OK >> GO TO 3.
NG >> GO TO 2.

2. DETECT MALFUNCTIONING PART

Check the following.

- Fuse block (J/B) connector M4
- 10A fuse
- Harness for open or short between fuse block (J/B) and combination meter

>> Repair harness or connectors.

3. CHECK MIL OUTPUT SIGNAL CIRCUIT FOR OPEN AND SHORT

1. Turn ignition switch "OFF".
2. Disconnect ECM harness connector.
3. Check harness continuity between ECM terminal 18 and combination meter terminal 23.
   Refer to Wiring Diagram.

Continuity should exist.

4. Also check harness for short to ground and short to power.

OK or NG

OK >> GO TO 5.
NG >> GO TO 4.

4. DETECT MALFUNCTIONING PART

Check the following.

- Harness connectors M71, F59
- Harness for open or short between ECM and combination meter

>> Repair open circuit or short to ground or short to power in harness or connectors.

5. CHECK COMBINATION METER

1. Turn ignition switch "OFF".
2. Disconnect combination meter harness connector.
3. Check continuity under the following conditions.

CONDITION	Combination meter terminal No. (Polarity)	Continuity
1	23 (+) - 17 (–)	Should exist.
	23 (+) - 18 (–)	
2	17 (+) - 23 (–)	Should not exist.
	18 (+) - 23 (–)	

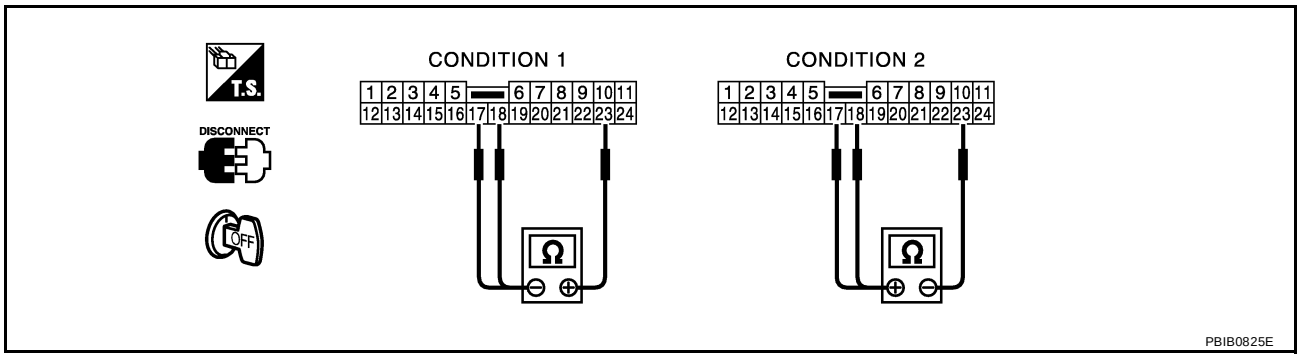

OK or NG

OK >> GO TO 6.

NG >> Replace combination meter. Refer to DI-4, "COMBINATION METERS" .

6. CHECK INTERMITTENT INCIDENT

Refer to EC-130, "TROUBLE DIAGNOSIS FOR INTERMITTENT INCIDENT" .

>> **INSPECTION END**

DTC P1065 ECM POWER SUPPLY

PFP:23710

Component Description

UBS002X7

Battery voltage is supplied to the ECM even when the ignition switch is turned OFF for the ECM memory function of the DTC memory, the air fuel ratio feedback compensation value memory, the idle air volume learning value memory, etc.

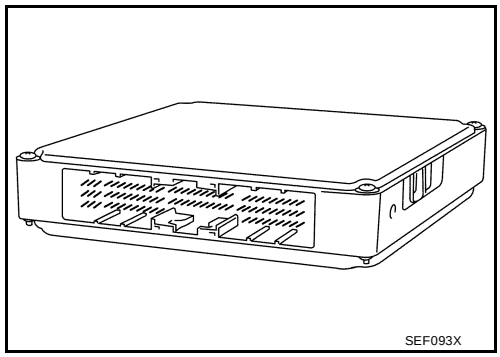

On Board Diagnosis Logic

UBS002X8

DTC No.	Trouble diagnosis name	DTC detecting condition	Possible cause
P1065 1065	ECM power supply circuit	ECM back up RAM system does not function properly.	● Harness or connectors [ECM power supply (back-up) circuit is open or shorted.] ● ECM

DTC Confirmation Procedure

UBS002X9

NOTE:
If “DTC Confirmation Procedure” has been previously conducted, always turn ignition switch “OFF” and wait at least 10 seconds before conducting the next test.

WITH CONSULT-II

1. Turn ignition switch “ON” and wait at least 1 second.
2. Select “DATA MONITOR” mode with CONSULT-II.
3. Start engine and let it idle for 1 second.
4. Turn ignition switch "OFF", wait at least 10 seconds, and then turn "ON".
5. Repeat steps 3 and 4 four times.
6. If 1st trip DTC is detected, go to EC-385, "Diagnostic Procedure".

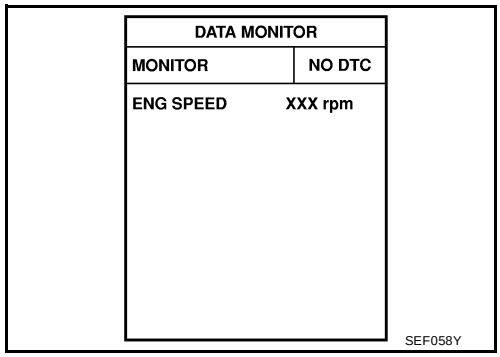

WITH GST

Follow the procedure “WITH CONSULT-II” above.

Wiring Diagram

UBS002XA

EC-ECM/PW-01

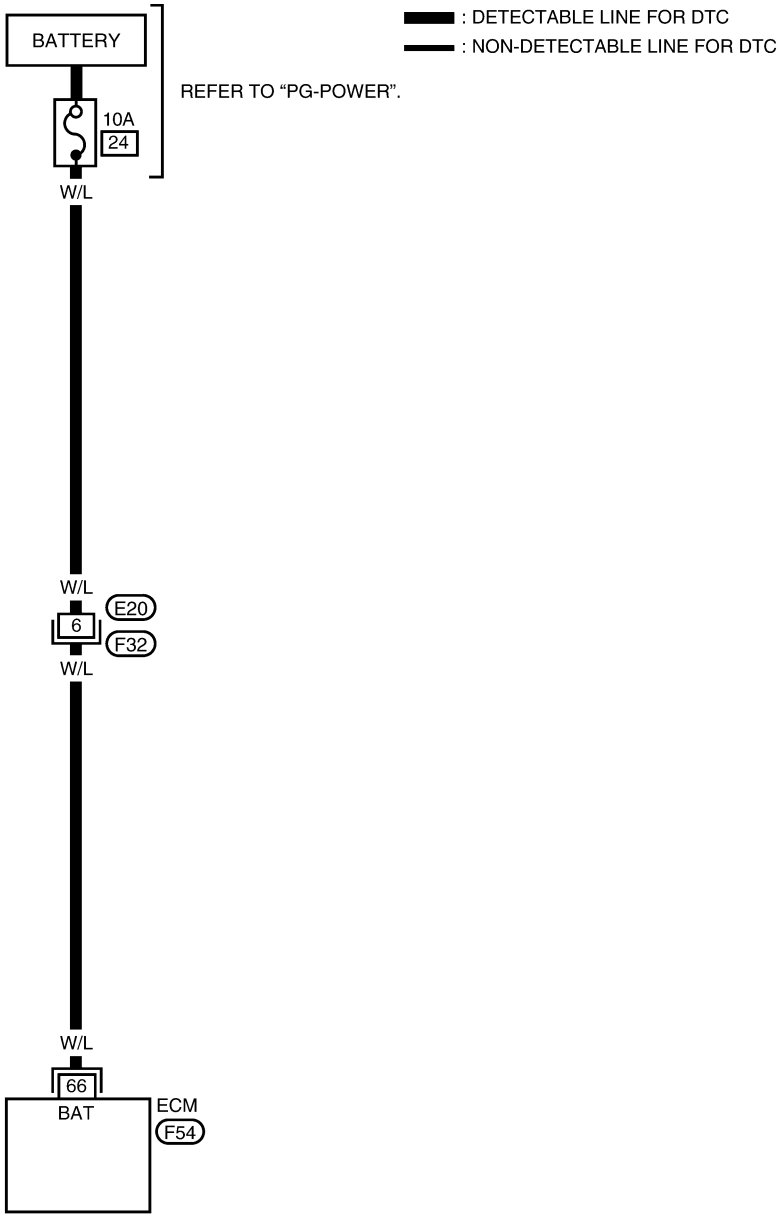

BBWA0026E

Specification data are reference values and are measured between each terminal and ground.

CAUTION:
Do not use ECM ground terminals when measuring input/output voltage. Doing so may result in damage to the ECM's transistor. Use a ground other than ECM terminals, such as the ground.

TERMINAL NO.	WIRE COLOR	ITEM	CONDITION	DATA (DC Voltage)
66	W/L	Power supply for ECM (Buck-up)	**[Ignition switch "OFF"]**	BATTERY VOLTAGE (11 - 14V)

Diagnostic Procedure

UBS002XB

1. CHECK ECM POWER SUPPLY

1. Turn ignition switch "OFF".
2. Disconnect ECM harness connector.
3. Check voltage between ECM terminal 66 and ground with CONSULT-II or tester.

Voltage: Battery voltage

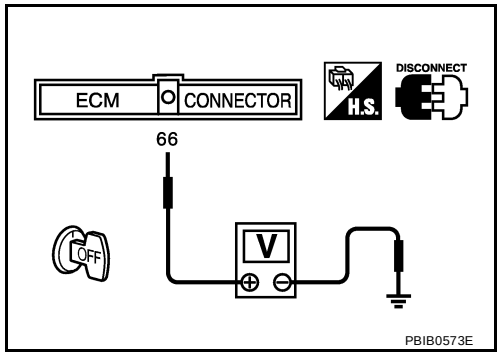

OK or NG

OK >> GO TO 3.
NG >> GO TO 2.

2. DETECT MALFUNCTIONING PART

Check the following.

- Harness connectors E20, F32
- 10A fuse
- Harness for open or short between ECM and battery

>> Repair or replace harness or connectors.

3. CHECK INTERMITTENT INCIDENT

Refer to EC-130, "TROUBLE DIAGNOSIS FOR INTERMITTENT INCIDENT" .

OK or NG

OK >> GO TO 4.
NG >> Repair or replace harness or connectors.

4. PERFORM DTC CONFIRMATION PROCEDURE

With CONSULT-II

1. Turn ignition switch “ON”.
2. Select “SELF DIAG RESULTS” mode with CONSULT-II.
3. Touch “ERASE”.
4. **Perform “DTC Confirmation Procedure”.**
   See EC-383 .
5. Is the 1st trip DTC P1065 displayed again?

With GST

1. Turn ignition switch “ON”.
2. Select MODE 4 with GST.
3. Touch “ERASE”.
4. **Perform “DTC Confirmation Procedure”.**
   See EC-383 .
5. Is the 1st trip DTC P1065 displayed again?

Yes or No

Yes >> GO TO 5.
No >> **INSPECTION END**

5. REPLACE ECM

1. Replace ECM.
2. Perform initialization of NVIS (NATS) system and registration of all NVIS (NATS) ignition key IDs. Refer to EC-68, "VIS (Nissan Vehicle Immobilizer System — NATS)" .
3. Perform EC-49, "Accelerator Pedal Released Position Learning" .
4. Perform EC-49, "Throttle Valve Closed Position Learning" .
5. Perform EC-49, "Idle Air Volume Learning" .

>> **INSPECTION END**

DTC P1102 MAF SENSOR

PFP:22680

Component Description

UBS002XC

The mass air flow sensor is placed in the stream of intake air. It measures the intake flow rate by measuring a part of the entire intake flow. It consists of a hot film that is supplied with electric current from the ECM. The temperature of the hot film is controlled by the ECM a certain amount. The heat generated by the hot film is reduced as the intake air flows around it. The more air, the greater the heat loss.
Therefore, the ECM must supply more electric current to maintain the temperature of the hot film as air flow increases. The ECM detects the air flow by means of this current change.

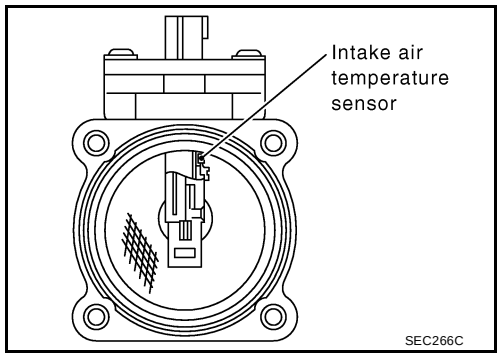

CONSULT-II Reference Value in Data Monitor Mode

UBS002XD

Specification data are reference values.

CAUTION:

Do not use ECM ground terminals when measuring input/output voltage. Doing so may result in damage to the ECM's transistor. Use a ground other than ECM terminals, such as the ground.

MONITOR ITEM	CONDITION		SPECIFICATION
MAS A/F SE-B1	● Engine: After warming up ● Air conditioner switch: OFF ● Shift lever: N ● No-load	Idle	Approx. 1.1 - 1.5V
		2,500 rpm	Approx. 1.6 - 2.0V
CAL/LD VALUE	● Engine: After warming up ● Shift lever: N ● Air conditioner switch: OFF ● No-load	Idle	10% - 35%
		2,500 rpm	10% - 35%
MASS AIRFLOW	● Engine: After warming up ● Shift lever: N ● Air conditioner switch: OFF ● No-load	Idle	1.0 - 4.0 g·m/s
		2,500 rpm	4.0 - 10.0 g·m/s

On Board Diagnosis Logic

UBS002XE

This self-diagnosis has the one trip detection logic.

DTC No.	Trouble diagnosis name	DTC detecting condition	Possible cause
P1102 1102	Mass air flow sensor circuit range/performance problem	A voltage from the sensor is constantly approx.1.0V when engine is running.	● Harness or connectors (The sensor circuit is open or shorted.) ● Mass air flow sensor

FAIL-SAFE MODE

When the malfunction is detected, the ECM enters fail-safe mode and the MIL lights up.

Detected items	Engine operating condition in fail-safe mode
Mass air flow sensor circuit	Engine speed will not rise more than 2,400 rpm due to the fuel cut.

DTC Confirmation Procedure

UBS002XF

NOTE:

If “DTC Confirmation Procedure” has been previously conducted, always turn ignition switch “OFF” and wait at least 10 seconds before conducting the next test.

WITH CONSULT-II

1. Turn ignition switch “ON”.

2. Select “DATA MONITOR” mode with CONSULT-II.
3. Start engine and wait 5 seconds at most.
4. If DTC is detected, go to EC-390, "Diagnostic Procedure" .

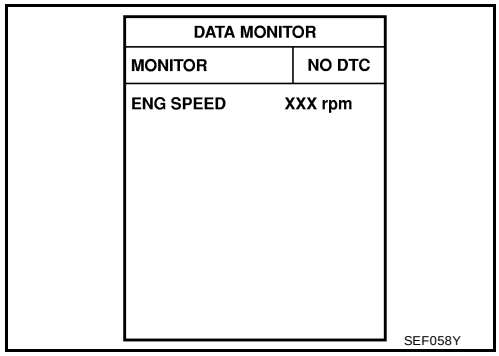

WITH GST

Follow the procedure “With CONSULT-II” above.

Wiring Diagram

UBS002XG

EC-MAFS-01

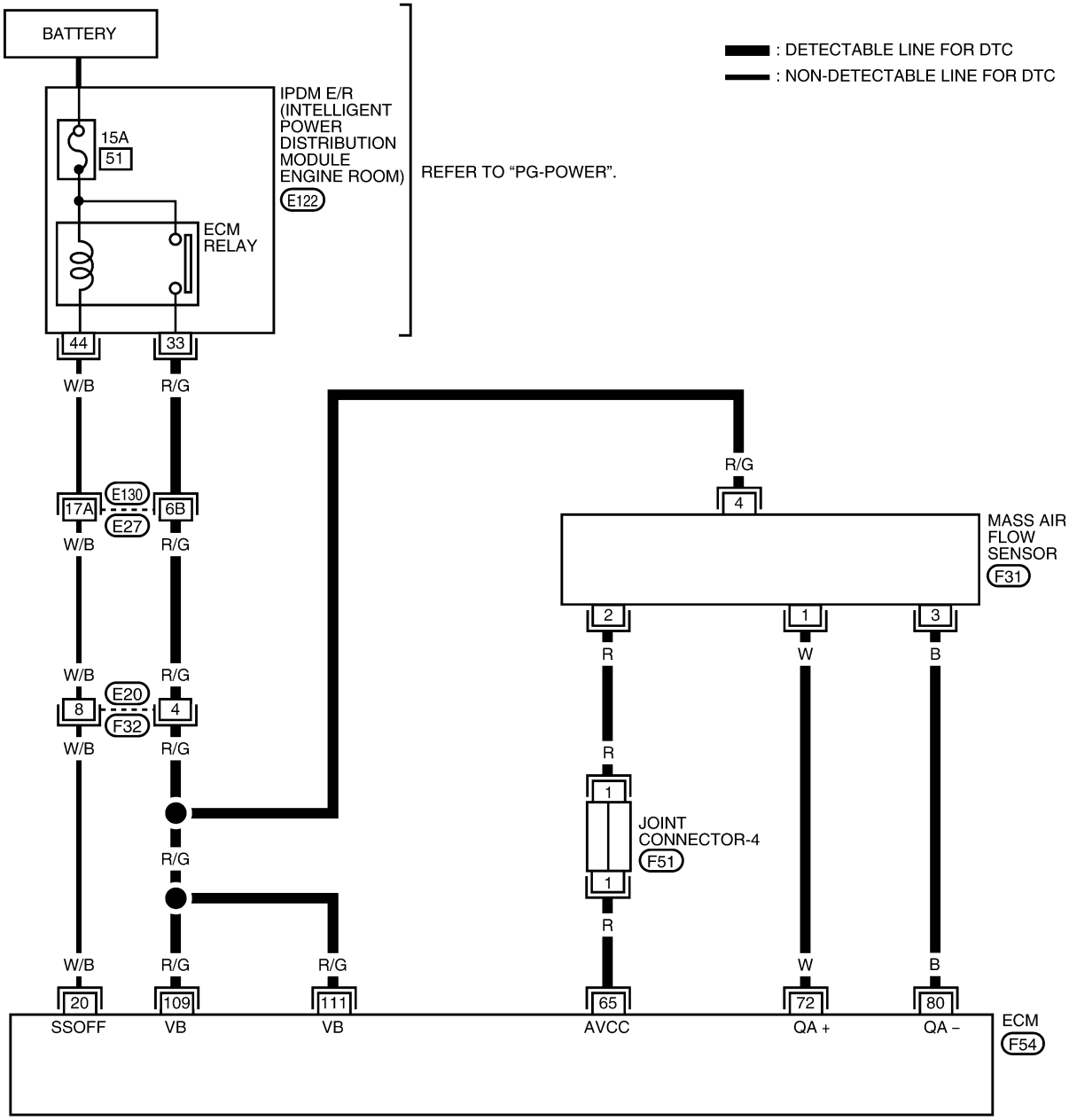

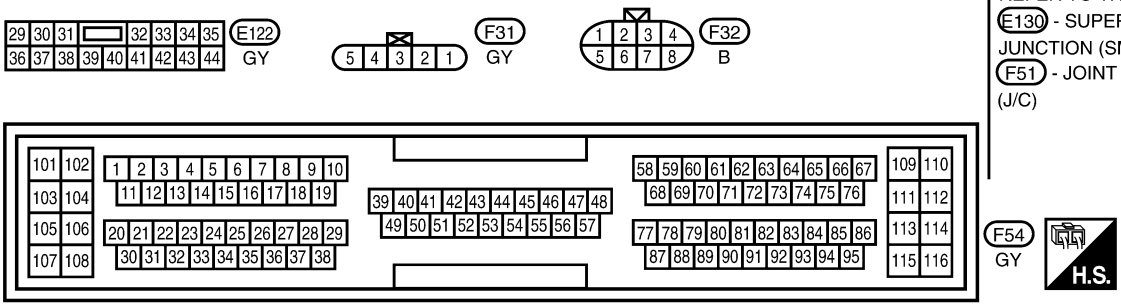

REFER TO THE FOLLOWING.
E130 - SUPER MULTIPLE JUNCTION (SMJ)
F51 - JOINT CONNECTOR (J/C)

BBWA0006E

Specification data are reference values and are measured between each terminal and ground.

CAUTION:
Do not use ECM ground terminals when measuring input/output voltage. Doing so may result in damage to the ECM's transistor. Use a ground other than ECM terminals, such as the ground.

TERMINAL NO.	WIRE COLOR	ITEM	CONDITION	DATA (DC Voltage)
65	R	Sensor's power supply	**[Ignition switch "ON"]**	Approximately 5V
72	W	Mass air flow sensor	**[Engine is running]** ● **Warm-up condition** ● Idle speed	1.1 - 1.5V
			[Engine is running] ● **Warm-up condition** ● Engine speed is 2,500 rpm.	1.6 - 2.0V
80	B	Mass air flow sensor ground	**[Engine is running]** ● **Warm-up condition** ● Idle speed	Approximately 0V

Diagnostic Procedure

UBS002XH

1. RETIGHTEN GROUND SCREWS

1. Turn ignition switch "OFF".
2. Loosen and retighten engine ground screws.

>> GO TO 2.

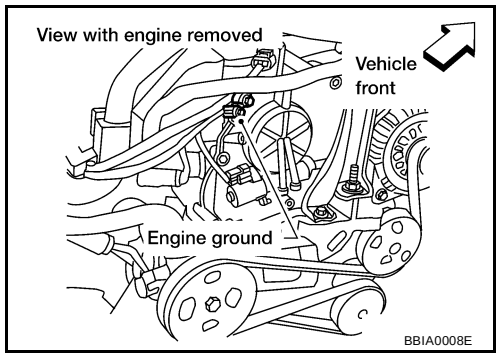

2. CHECK MAF SENSOR POWER SUPPLY CIRCUIT

1. Disconnect MAF sensor harness connector.
2. Turn ignition switch “ON”.

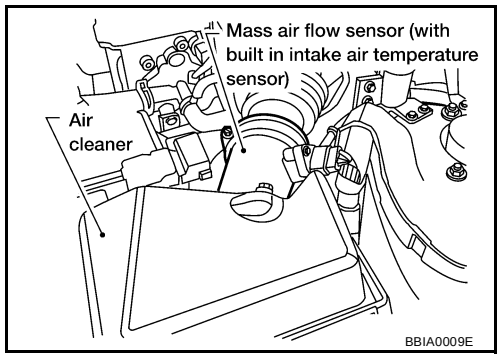

3. Check voltage between MAF sensor terminals 2, 4 and ground with CONSULT-II or tester.

Terminal	Voltage
2	Approximately 5V
4	Battery voltage

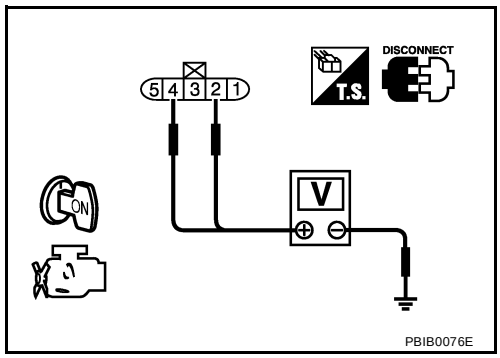

OK or NG

OK >> GO TO 4.
NG >> GO TO 3.

3. DETECT MALFUNCTIONING PART

Check the following.

- Harness connectors E130, E27
- Harness connectors E20, F32
- Joint connector-4
- Harness for open or short between mass air flow sensor and IPDM E/R
- Harness for open or short between mass air flow sensor and ECM

>> Repair harness or connectors.

4. CHECK MAF SENSOR GROUND CIRCUIT FOR OPEN AND SHORT

1. Turn ignition switch “OFF”.
2. Disconnect ECM harness connector.
3. Check harness continuity between MAF sensor terminal 3 and ECM terminal 80. Refer to Wiring Diagram.

Continuity should exist.

4. Also check harness for short to ground and short to power.

OK or NG

OK >> GO TO 5.
NG >> Repair open circuit or short to ground or short to power in harness or connectors.

5. CHECK MAF SENSOR INPUT SIGNAL CIRCUIT FOR OPEN AND SHORT

1. Check harness continuity between MAF sensor terminal 1 and ECM terminal 72.
   Refer to Wiring Diagram.

   Continuity should exist.

2. Also check harness for short to ground and short to power.

OK or NG

OK >> GO TO 6.
NG >> Repair open circuit or short to ground or short to power in harness or connectors.

6. CHECK MASS AIR FLOW SENSOR

Refer to EC-392, "Component Inspection" .

OK or NG

OK >> GO TO 7.
NG >> Replace mass air flow sensor.

7. CHECK INTERMITTENT INCIDENT

Refer to EC-130, "TROUBLE DIAGNOSIS FOR INTERMITTENT INCIDENT" .

>> **INSPECTION END**

Component Inspection

UBS002XI

MASS AIR FLOW SENSOR

1. Reconnect harness connectors disconnected.
2. Start engine and warm it up to normal operating temperature.
3. Check voltage between ECM terminal 72 (Mass air flow sensor signal) and ground.

Condition	Voltage V
Ignition switch "ON" (Engine stopped.)	Approx. 1.0
Idle (Engine is warmed-up to normal operating temperature.)	1.1 - 1.5
2,500 rpm (Engine is warmed-up to normal operating temperature.)	1.6 - 2.0
Idle to about 4,000 rpm*	1.5 - 2.0 to Approx. 4.0

*: Check for liner voltage rise in response to engine being increased to about 4,000 rpm.

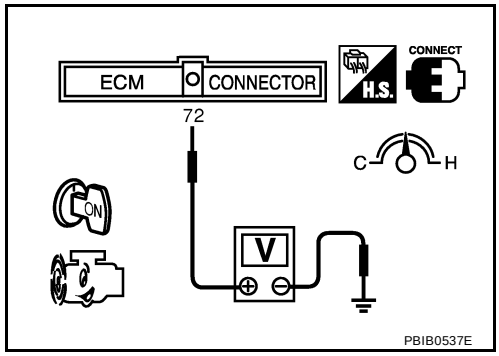

4. If the voltage is out of specification, proceed the following.

a. Turn ignition switch "OFF".
b. Disconnect mass air flow sensor harness connector and reconnect it again.
c. Perform steps 2 and 3 again.

5. If NG, remove mass air flow sensor from air duct. Check hot film for damage or dust.
6. If NG, clean or replace mass air flow sensor.

Removal and Installation

UBS002XJ

MASS AIR FLOW SENSOR

Refer to EM-14, "AIR CLEANER AND AIR DUCT" .

DTC P1111 IVT CONTROL SOLENOID VALVE

PFP:23796

Component Description

UBS002XK

Intake valve timing control solenoid valve is activated by ON/OFF pulse duty (ratio) signals from the ECM.
The intake valve timing control solenoid valve changes the oil amount and direction of flow through intake valve timing control unit or stops oil flow.
The longer pulse width advances valve angle.
The shorter pulse width retards valve angle.
When ON and OFF pulse widths become equal, the solenoid valve stops oil pressure flow to fix the intake valve angle at the control position.

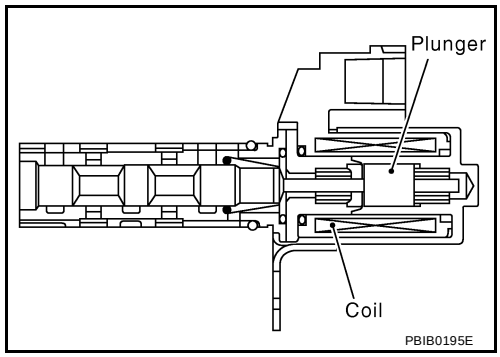

CONSULT-II Reference Value in Data Monitor Mode

UBS002XL

Specification data are reference values.

MONITOR ITEM	CONDITION		SPECIFICATION
INT/V SOL (B1)	● Engine: After warming up ● Shift lever: N ● Air conditioner switch: OFF ● No-load	Idle	0% - 2%
		2,000 rpm	Approx. 25% - 60%

On Board Diagnosis Logic

UBS002XM

DTC No.	Trouble diagnosis name	DTC detecting condition	Possible cause
P1111 1111	Intake valve timing control solenoid valve circuit	An improper voltage is sent to the ECM through intake valve timing control solenoid valve.	● Harness or connectors (Intake valve timing control solenoid valve circuit is open or shorted.) ● Intake valve timing control solenoid valve

DTC Confirmation Procedure

UBS002XN

NOTE:
If "DTC Confirmation Procedure" has been previously conducted, always turn ignition switch "OFF" and wait at least 10 seconds before conducting the next test.

WITH CONSULT-II

1. Turn ignition switch "ON".
2. Select "DATA MONITOR" mode with CONSULT-II.
3. Start engine and let it idle for 5 seconds.
4. If 1st trip DTC is detected, go to EC-395, "Diagnostic Procedure"
.

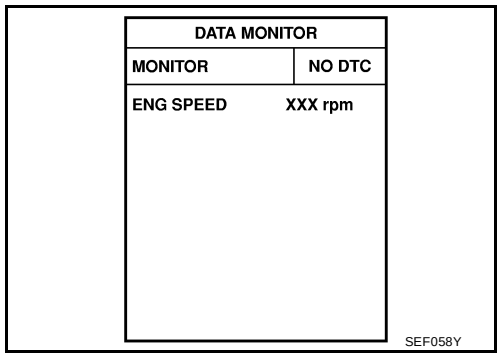

WITH GST

Following the procedure "WITH CONSULT-II" above.

Wiring Diagram

UBS002XO

EC-IVC-01

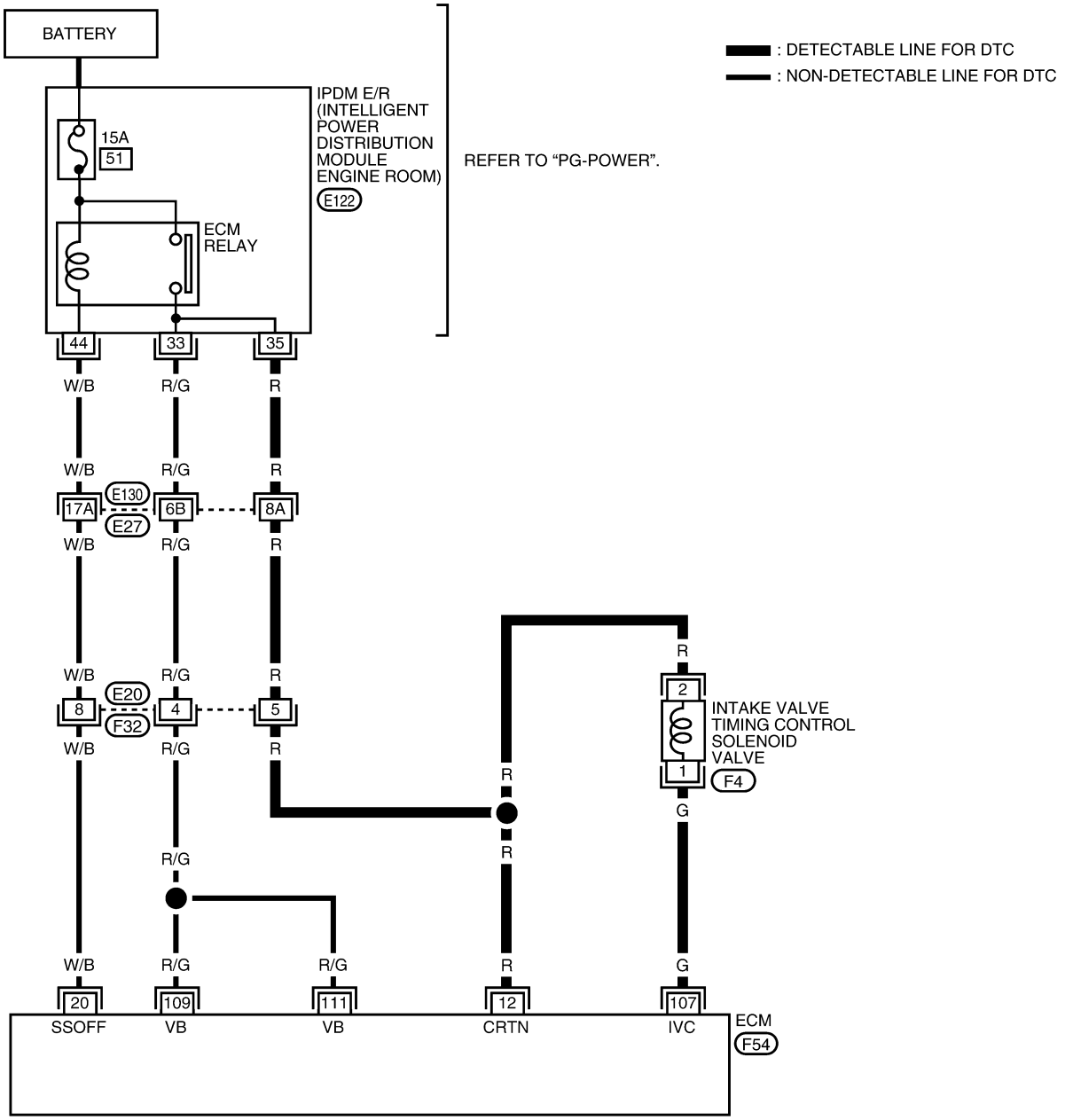

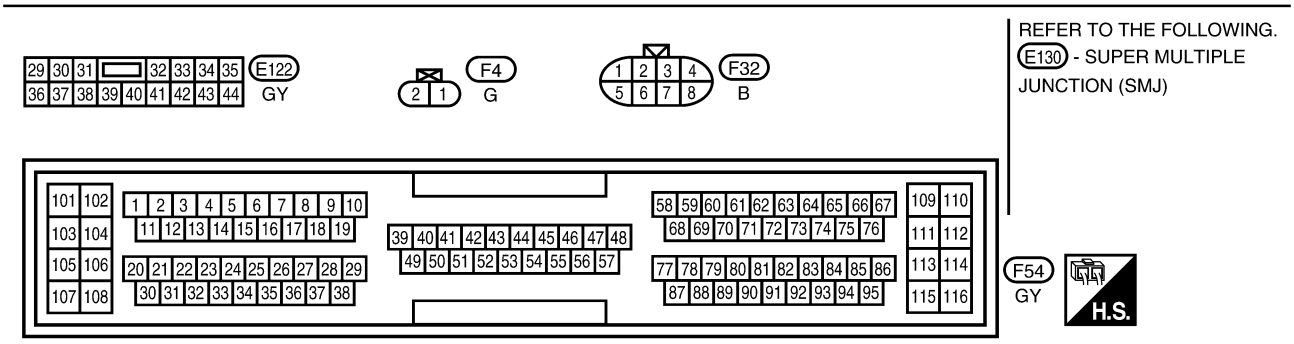

BBWA0027E

Specification data are reference values and are measured between each terminal and ground.

CAUTION:
Do not use ECM ground terminals when measuring input/output voltage. Doing so may result in damage to the ECM's transistor. Use a ground other than ECM terminals, such as the ground.

TERMINAL NO.	WIRE COLOR	ITEM	CONDITION	DATA (DC Voltage)
107	G	Intake valve timing control solenoid valve	**[Engine is running]** ● **Warm-up condition** ● Idle speed	BATTERY VOLTAGE (11 - 14V)
			[Engine is running] ● **Warm-up condition** ● Engine speed is 2,000 rpm	Approximately 9V★ 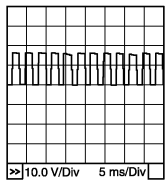 PBIB0532E

★: Average voltage for pulse signal (Actual pulse signal can be confirmed by oscilloscope.)

Diagnostic Procedure

UBS002XP

1. CHECK POWER SUPPLY CIRCUIT

1. Turn ignition switch "OFF".
2. Disconnect intake valve timing control solenoid valve harness connector.
3. Turn ignition switch "ON".

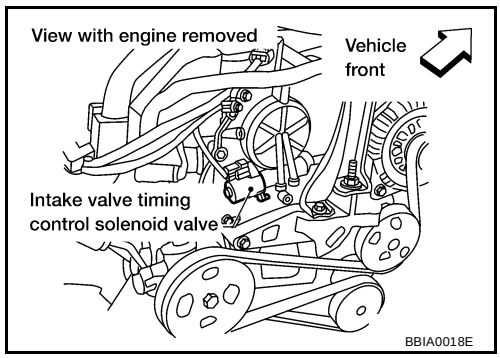

4. Check voltage between intake valve timing control solenoid valve terminal 2 and ground with CONSULT-II or tester.

Voltage: Battery voltage

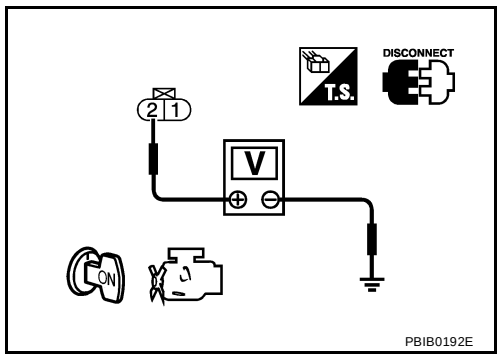

OK or NG

OK >> GO TO 3.
NG >> GO TO 2.

2. DETECT MALFUNCTION PART

Check the following.

- Harness connectors E130, E27
- Harness connectors E20, F32
- Harness for open or short between intake valve timing control solenoid valve and IPDM E/R
- Harness for open or short between intake valve timing control solenoid valve and ECM

>> Repair or replace harness or connectors.

3. CHECK INTAKE VALVE TIMING CONTROL SOLENOID VALVE OUTPUT SIGNAL CIRCUIT FOR OPEN AND SHORT

1. Turn ignition switch "OFF".
2. Disconnect ECM harness connector.
3. Check harness continuity between ECM terminal 107 and intake valve timing control solenoid valve terminal 1. Refer to Wiring Diagram.

   Continuity should exist.

4. Also check harness for short to ground and short to power.

OK or NG

OK >> GO TO 4.
NG >> Repair open circuit or short to ground or short to power in harness or connectors.

4. CHECK INTAKE VALVE TIMING CONTROL SOLENOID VALVE

Refer to EC-396, "Component Inspection" .

OK or NG

OK >> GO TO 5.
NG >> Replace intake valve timing control solenoid valve.

5. CHECK INTERMITTENT INCIDENT

Refer to EC-130, "TROUBLE DIAGNOSIS FOR INTERMITTENT INCIDENT" .

>> **INSPECTION END**

Component Inspection

UBS002XQ

INTAKE VALVE TIMING CONTROL SOLENOID VALVE

1. Disconnect intake valve timing control solenoid valve harness connector.
2. Check resistance between intake valve timing control solenoid valve terminals 1 and 2.

Terminals	Resistance
1 and 2	Approximately 8Ω at 20°C (68°F)
1 or 2 and ground	∞Ω (Continuity should not exist)

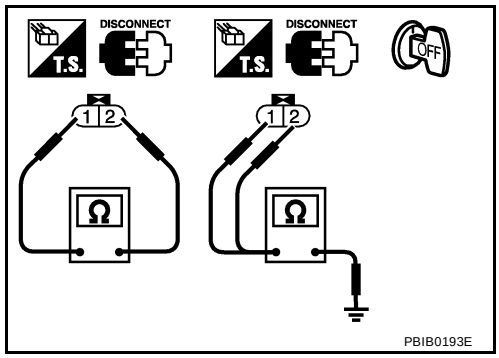

Removal and Installation

UBS002XR

INTAKE VALVE TIMING CONTROL SOLENOID VALVE

Refer to EM-45, "TIMING CHAIN" .

DTC P1121 ELECTRIC THROTTLE CONTROL ACTUATOR

PFP:16119

Component Description

UBS002XS

Electric Throttle Control Actuator consists of throttle control motor, throttle position sensor, etc.
The throttle control motor is operated by the ECM and it opens and closes the throttle valve.
The throttle position sensor detects the throttle valve position, and the opening and closing speed of the throttle valve and feeds the voltage signals to the ECM. The ECM judges the current opening angle of the throttle valve from these signals and the ECM controls the throttle control motor to make the throttle valve opening angle properly in response to driving condition.

On Board Diagnosis Logic

UBS002XT

DTC No.	Trouble diagnosis name	DTC detecting condition		Possible cause
P1121 1121	Electric throttle control actuator	A)	Electric throttle control actuator does not function properly due to the return spring malfunction.	● Electric throttle control actuator
		B)	Throttle valve opening angle in fail-safe mode is not in specified range.	
		C)	ECM detect the throttle valve is stuck open. **This self-diagnosis has the one trip detection logic.**	

FAIL-SAFE MODE

When the malfunction A or B is detected, the ECM enters in fail-safe mode.
When the malfunction C is detected, the ECM enters in fail-safe mode and the MIL lights up.

Detected items	Engine operating condition in fail-safe mode
Malfunction A	The ECM controls the electric throttle actuator by regulating the throttle opening around the idle position. The engine speed will not rise more than 2,000 rpm.
Malfunction B	ECM controls the electric throttle control actuator by regulating the throttle opening to 20 degrees or less.
Malfunction C	While the vehicle is driving, it slows down gradually by fuel cut. After the vehicle stops, the engine stalls. The engine can restart in "N" or "P" position, and engine speed will not exceed 1,000 rpm or more.

DTC Confirmation Procedure

UBS002XU

NOTE:

- **Perform “PROCEDURE FOR MALFUNCTION A AND B” first. If the 1st trip DTC cannot be confirmed, perform “PROCEDURE FOR MALFUNCTION C".**
  If there is no problem on “PROCEDURE FOR MALFUNCTION A AND B”, perform “PROCEDURE FOR MALFUNCTION C”.
- If “DTC Confirmation Procedure” has been previously conducted, always turn ignition switch “OFF” and wait at least 10 seconds before conducting the next test.

PROCEDURE FOR MALFUNCTION A AND B

With CONSULT-II

1. Turn ignition witch "ON" and wait at least 1 second.
2. Select "DATA MONITOR" mode with CONSULT-II.
3. Shift selector lever to "D" position (A/T), "1st" position (M/T) and wait at least 2 seconds.
4. Turn ignition switch "OFF", wait at least 10 seconds, and then turn "ON".
5. If 1st trip DTC is detected, go to EC-401, "Diagnostic Procedure".

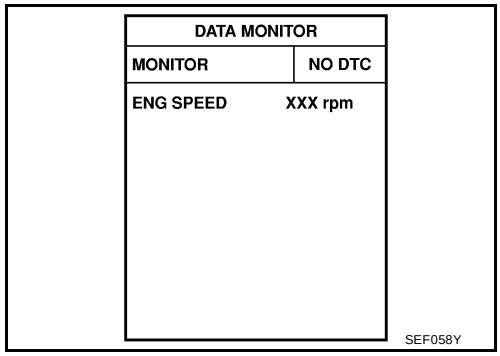

With GST

Follow the procedure "With CONSULT-II" above.

PROCEDURE FOR MALFUNCTION C

With CONSULT-II

1. Turn ignition switch "ON" and wait at least 1 second.
2. Select "DATA MONITOR" mode with CONSULT-II.
3. Shift selector lever to "D" position (A/T), "1st" position (M/T) and wait at least 2 seconds.
4. Shift selector lever to "N" or "P" position.
5. Start engine and let it idle for 3 seconds.
6. If DTC is detected, go to EC-401, "Diagnostic Procedure" .

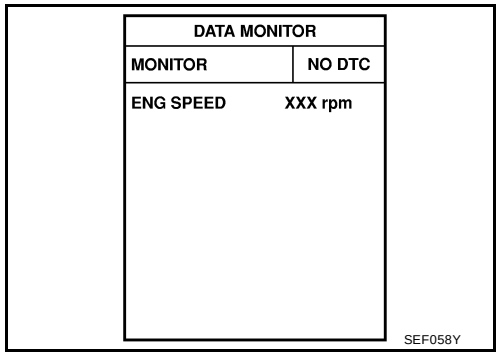

With GST

Follow the procedure "With CONSULT-II" above.

Diagnostic Procedure

UBS002XV

1. CHECK ELECTRIC THROTTLE CONTROL ACTUATOR VISUALLY

1. Remove the intake air duct.
2. Check if a foreign matter is caught between the throttle valve and the housing.

OK or NG

OK >> GO TO 2.
NG >> Remove the foreign matter and clean the electric throttle control actuator inside.

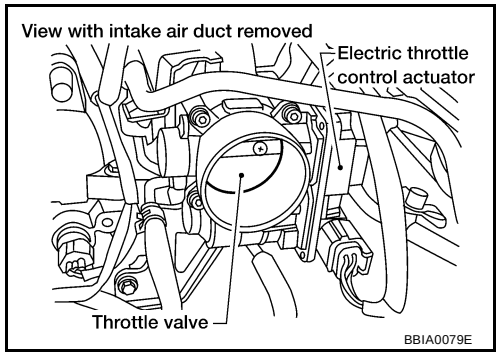

2. REPLACE ELECTRIC THROTTLE CONTROL ACTUATOR

1. Replace the electric throttle control actuator.
2. Perform EC-49, "Throttle Valve Closed Position Learning" .
3. Perform EC-49, "Idle Air Volume Learning" .

>> **INSPECTION END**

DTC P1122 ELECTRIC THROTTLE CONTROL FUNCTION

PFP:16119

Description

UBS002XW

NOTE:
If DTC P1122 is displayed with DTC P1121 or 1126, first perform the trouble diagnosis for DTC P1121 or P1126. Refer to EC-397 or EC-406 .

Electric Throttle Control Actuator consists of throttle control motor, throttle position sensor, etc.
The throttle control motor is operated by the ECM and it opens and closes the throttle valve.
The current opening angle of the throttle valve is detected by the throttle position sensor and it provides feedback to the ECM to control the throttle control motor to make the throttle valve opening angle properly in response to driving condition.

On Board Diagnosis Logic

UBS002XX

This self-diagnosis has the one trip detection logic.

DTC No.	Trouble diagnosis name	DTC detecting condition	Possible cause
P1122 1122	Electric throttle control performance problem	Electric throttle control function does not operate properly.	● Harness or connectors (Throttle control motor circuit is open or shorted) ● Electric throttle control actuator

FAIL-SAFE MODE

When the malfunction is detected, the ECM enters fail-safe mode and the MIL lights up.

Engine operating condition in fail-safe mode
ECM stops the electric throttle control actuator control, throttle valve is maintained at a fixed opening (approx. 5 degrees) by the return spring.

DTC Confirmation Procedure

UBS002XY

NOTE:
If “DTC Confirmation Procedure” has been previously conducted, always turn ignition switch “OFF” and wait at least 10 seconds before conducting the next test.

WITH CONSULT-II

1. Turn ignition switch “ON” and wait at least 2 seconds.
2. Select "DATA MONITOR" mode with CONSULT-II.
3. Start engine and let it idle for 5 seconds.
4. If DTC is detected, go to EC-401, "Diagnostic Procedure" .

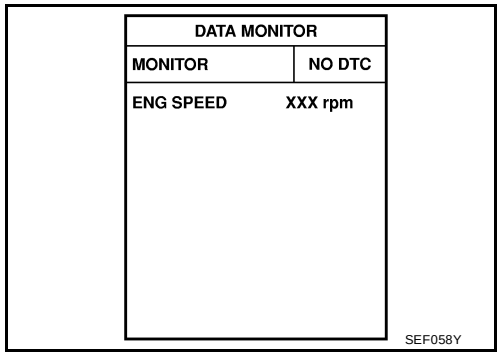

WITH GST

Follow the procedure “WITH CONSULT-II” above.

Wiring Diagram

UBS002XZ

EC-ETC1-01

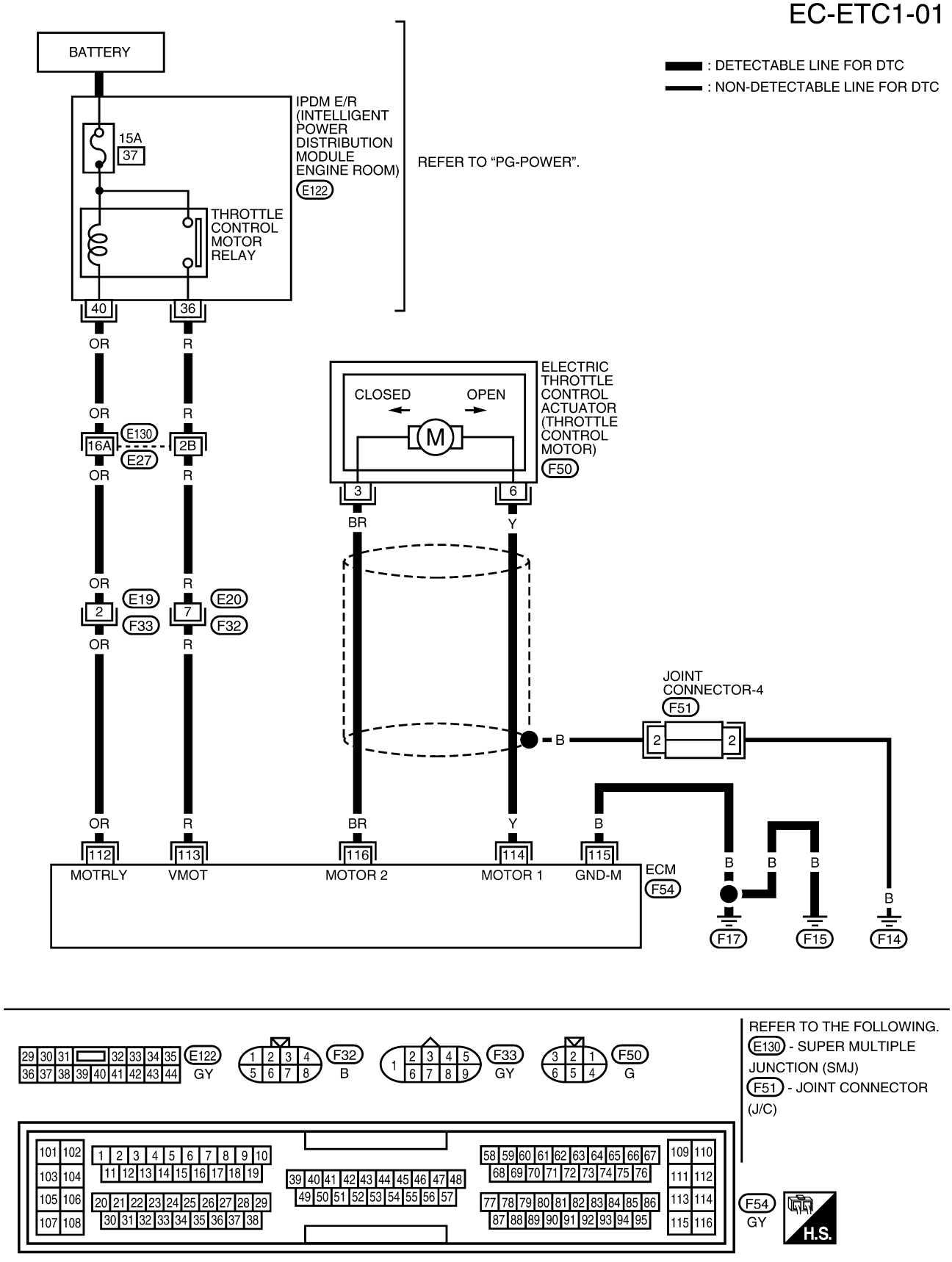

Specification data are reference values and are measured between each terminal and ground.

CAUTION:
Do not use ECM ground terminals when measuring input/output voltage. Doing so may result in damage to the ECM's transistor. Use a ground other than ECM terminals, such as the ground.

TERMINAL NO.	WIRE COLOR	ITEM	CONDITION	DATA (DC Voltage)
112	OR	Throttle control motor relay	**[Ignition switch "OFF"]**	BATTERY VOLTAGE (11 - 14V)
			[Ignition switch "ON"]	0 - 1.0V
113	R	Throttle control motor relay power supply	**[Ignition switch "ON"]**	BATTERY VOLTAGE (11 - 14V)
114	Y	Throttle control motor (Open)	**[Ignition switch "ON"]** ● Shift lever position is "D" (A/T model) ● Shift lever position is "1st" (M/T model) ● Accelerator pedal is depressing	0 - 14V★ 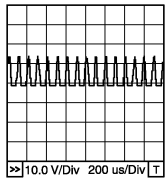 PBIB0533E
115	B	Throttle control motor ground	**[Engine is running]** ● Idle speed	Approximately 0V
116	BR	Throttle control motor (Close)	**[Ignition switch "ON"]** ● Shift lever position is "D" (A/T model) ● Shift lever position is "1st" (M/T model) ● Accelerator pedal is releasing	0 - 14V★ 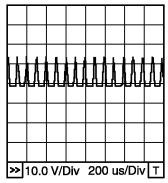 PBIB0534E

★: Average voltage for pulse signal (Actual pulse signal can be confirmed by oscilloscope.)

Diagnostic Procedure

UBS002Y0

1. RETIGHTEN GROUND SCREWS

1. Turn ignition switch "OFF".
2. Loosen and retighten engine ground screws.

>> GO TO 2.

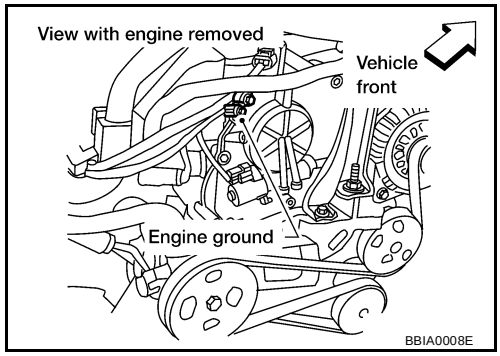

2. CHECK THROTTLE CONTROL MOTOR GROUND CIRCUIT FOR OPEN AND SHORT

1. Disconnect ECM harness connector.
2. Check harness continuity between ECM terminal 115 and engine ground.
   Refer to Wiring Diagram.

   Continuity should exist.

3. Also check harness for short to power.

OK or NG

OK >> GO TO 3.
NG >> Repair open circuit or short to power in harness or connectors.

3. CHECK THROTTLE CONTROL MOTOR RELAY INPUT SIGNAL CIRCUIT-I

1. Reconnect harness connectors disconnected.
2. Check voltage between ECM terminal 113 and ground following conditions with CONSULT-II or tester.

Ignition switch	Voltage
OFF	Approximately 0V
ON	Battery voltage (11 - 14V)

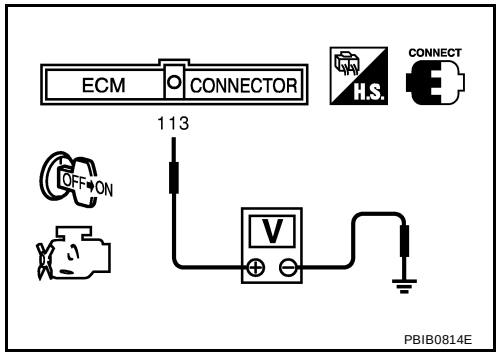

OK or NG

OK >> GO TO 11.
NG >> GO TO 4.

4. CHECK THROTTLE CONTROL MOTOR RELAY INPUT SIGNAL CIRCUIT-II

1. Disconnect ECM harness connector.
2. Disconnect IPDM E/R harness connector E122.
3. Check continuity between ECM terminal 113 and IPDM E/R terminal 36.
   Refer to Wiring Diagram.

   Continuity should exist.

4. Also check harness for short to ground and short to power.

OK or NG

OK >> GO TO 6.
NG >> GO TO 5.

5. DETECT MALFUNCTIONING PART

Check the following.

- Harness connectors E130, E27
- Harness connectors E20, F32
- Harness for open or short between ECM and IPDM E/R

>> Repair or replace harness or connectors.

6. CHECK THROTTLE CONTROL MOTOR RELAY POWER SUPPLY CIRCUIT-I

1. Reconnect all harness connectors disconnected.
2. Turn ignition switch “OFF”.
3. Check voltage between ECM terminal 112 and ground with CONSULT-II or tester.

Voltage: Battery voltage

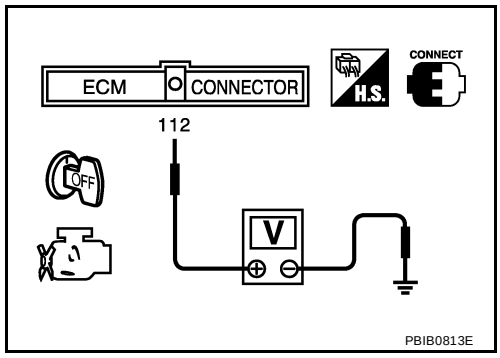

OK or NG

OK >> GO TO 10.
NG >> GO TO 7.

7. CHECK THROTTLE CONTROL MOTOR RELAY POWER SUPPLY CIRCUIT-II

1. Disconnect ECM harness connector.
2. Disconnect IPDM E/R harness connector E122.
3. Check continuity between ECM terminal 112 and IPDM E/R terminal 40.
   Refer to Wiring Diagram.

Continuity should exist.

4. Also check harness for short to ground and short to power.

OK or NG

OK >> GO TO 9.
NG >> GO TO 8.

8. DETECT MALFUNCTIONING PART

Check the following.

- Harness connectors E130, E27
- Harness connectors E19, F33
- Harness for open or short between ECM and IPDM E/R

>> Repair or replace harness or connectors.

9. CHECK FUSE

Check 15A fuse.

OK or NG

OK >> GO TO 10.
NG >> Replace 15A fuse.

10. CHECK INTERMITTENT INCIDENT

Refer to EC-130, "TROUBLE DIAGNOSIS FOR INTERMITTENT INCIDENT" .

OK or NG

OK >> Replace IPDM E/R. Refer to PG-PG-14, "IPDM E/R (INTELLIGENT POWER DISTRIBUTION MODULE ENGINE ROOM)" .
NG >> Repair or replace harness or connectors.

11. CHECK THROTTLE CONTROL MOTOR OUTPUT SIGNAL CIRCUIT FOR OPEN OR SHORT

1. Turn ignition switch “OFF”.
2. Disconnect electric throttle control actuator harness connector.
3. Disconnect ECM harness connector.
4. Check harness continuity between the following terminals. Refer to Wiring Diagram.

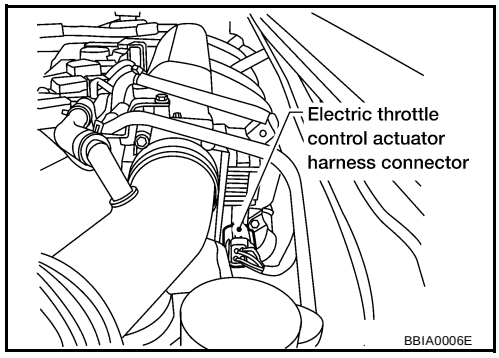

Electric throttle control actuator terminal	ECM terminal	Continuity
3	114	Should not exist
	116	Should exist
6	114	Should exist
	116	Should not exist

5. Also check harness for short to ground and short to power.

OK or NG

OK >> GO TO 12.
NG >> Repair or replace.

12. CHECK ELECTRIC THROTTLE CONTROL ACTUATOR VISUALLY

1. Remove the intake air duct.
2. Check if foreign matter is caught between the throttle valve and the housing.

OK or NG

OK >> GO TO 13.
NG >> Remove the foreign matter and clean the electric throttle control actuator inside.

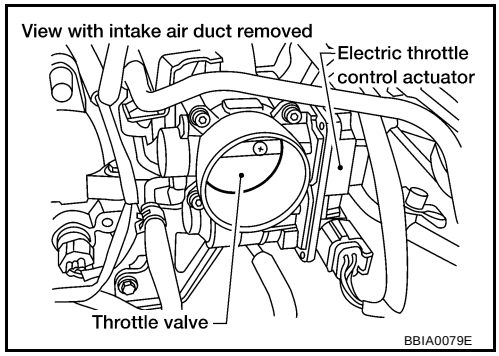

13. CHECK THROTTLE CONTROL MOTOR

Refer to EC-405, "Component Inspection" .

OK or NG

OK >> GO TO 14.
NG >> GO TO 15.

14. CHECK SHIELD CIRCUIT

1. Disconnect joint connector-4
2. Check the following.

– Continuity between joint connector-4 terminal 2 and ground.
– Joint connector-4
(Refer to PG-37, "Harness Layout" .)

Continuity should exist.

3. Also check harness for short to power.
4. Then reconnect joint connector-4.

OK or NG

OK >> GO TO 15.
NG >> Repair open circuit or short to power in harness or connectors.

15. CHECK INTERMITTENT INCIDENT

Refer to EC-130, "TROUBLE DIAGNOSIS FOR INTERMITTENT INCIDENT" .

OK or NG

OK >> GO TO 16.
NG >> Repair or replace harness or connectors.

16. REPLACE ELECTRIC THROTTLE CONTROL ACTUATOR

1. Replace the electric throttle control actuator.
2. Perform EC-49, "Throttle Valve Closed Position Learning" .
3. Perform EC-49, "Idle Air Volume Learning" .

>> **INSPECTION END**

Component Inspection

UBS002Y1

THROTTLE CONTROL MOTOR

1. Disconnect electric throttle control actuator harness connector.
2. Check resistance between terminals 3 and 6.

Resistance: Approximately 1 - 15 Ω [at 25 °C (77°F)]

3. If NG, replace electric throttle control actuator and go to next step.
4. Perform EC-49, "Throttle Valve Closed Position Learning" .
5. Perform EC-49, "Idle Air Volume Learning" .

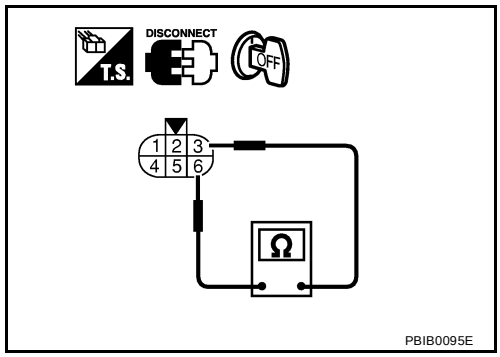

Remove and Installation

UBS002Y2

ELECTRIC THROTTLE CONTROL ACTUATOR

Refer to EM-16, "INTAKE MANIFOLD" .

DTC P1124, P1126 THROTTLE CONTROL MOTOR RELAY

PFP:16119

Component Description

UBS002Y3

Power supply for the Throttle Control motor is provided to the ECM via throttle control motor relay. The throttle control motor relay is ON/OFF controlled by the ECM. When the ignition switch is turned ON, the ECM sends an ON signal to throttle control motor relay and battery voltage is provided to the ECM. When the ignition switch is turned OFF, the ECM sends an OFF signal to throttle control motor relay and battery voltage is not provided to the ECM.

CONSULT-II Reference Value in Data Monitor Mode

UBS002Y4

Specification data are reference values.

MONITOR ITEM	CONDITION	SPECIFICATION
THRTL RELAY	● Ignition switch: ON	ON

On Board Diagnosis Logic

UBS002Y5

DTC No.	Trouble diagnosis name	DTC detecting condition	Possible cause
P1124 1124	Throttle control motor relay circuit short	ECM detect the throttle control motor relay is stuck ON.	● Harness or connectors (Throttle control motor relay circuit is shorted) ● Throttle control motor relay
P1126 1126	Throttle control motor relay circuit open	ECM detects a voltage of power source for throttle control motor is excessively low. **This self-diagnosis has the one trip detection logic.**	● Harness or connectors (Throttle control motor relay circuit is open) ● Throttle control motor relay

FAIL-SAFE MODE

When the malfunction is detected, the ECM enters fail-safe mode (for DTC P1124).
When the malfunction is detected, the ECM enters fail-safe mode and the MIL lights up (for DTC P1126).

Engine operating condition in fail-safe mode
ECM stops the electric throttle control actuator control, throttle valve is maintained at a fixed opening (approx. 5 degrees) by the return spring.

DTC Confirmation Procedure

UBS002Y6

NOTE:
If “DTC Confirmation Procedure” has been previously conducted, always turn ignition switch “OFF” and wait at least 10 seconds before conducting the next test.

PROCEDURE FOR DTC P1124

TESTING CONDITION:
Before performing the following procedure, confirm that battery voltage is more than 10V at idle.

With CONSULT-II

1. Turn ignition switch “ON” and wait at least 1 second.
2. Select “DATA MONITOR” mode with CONSULT-II.
3. If 1st trip DTC is detected, go to EC-409, "Diagnostic Procedure"
.

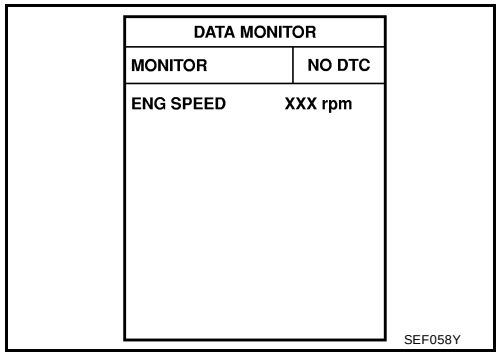

With GST

Follow the procedure “With CONSULT-II” above.

PROCEDURE FOR DTC P1126

With CONSULT-II

1. Turn ignition switch “ON” and wait at least 2 seconds.
2. Select "DATA MONITOR" mode with CONSULT-II.
3. Start engine and let it idle for 5 seconds.
4. If DTC is detected, go to EC-409, "Diagnostic Procedure" .

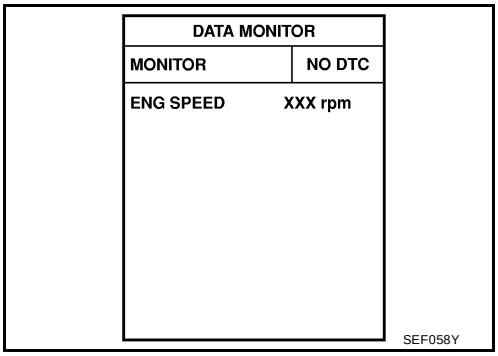

With GST

Follow the procedure “With CONSULT-II” above.

Wiring Diagram

UBS002Y7

EC-ETC2-01

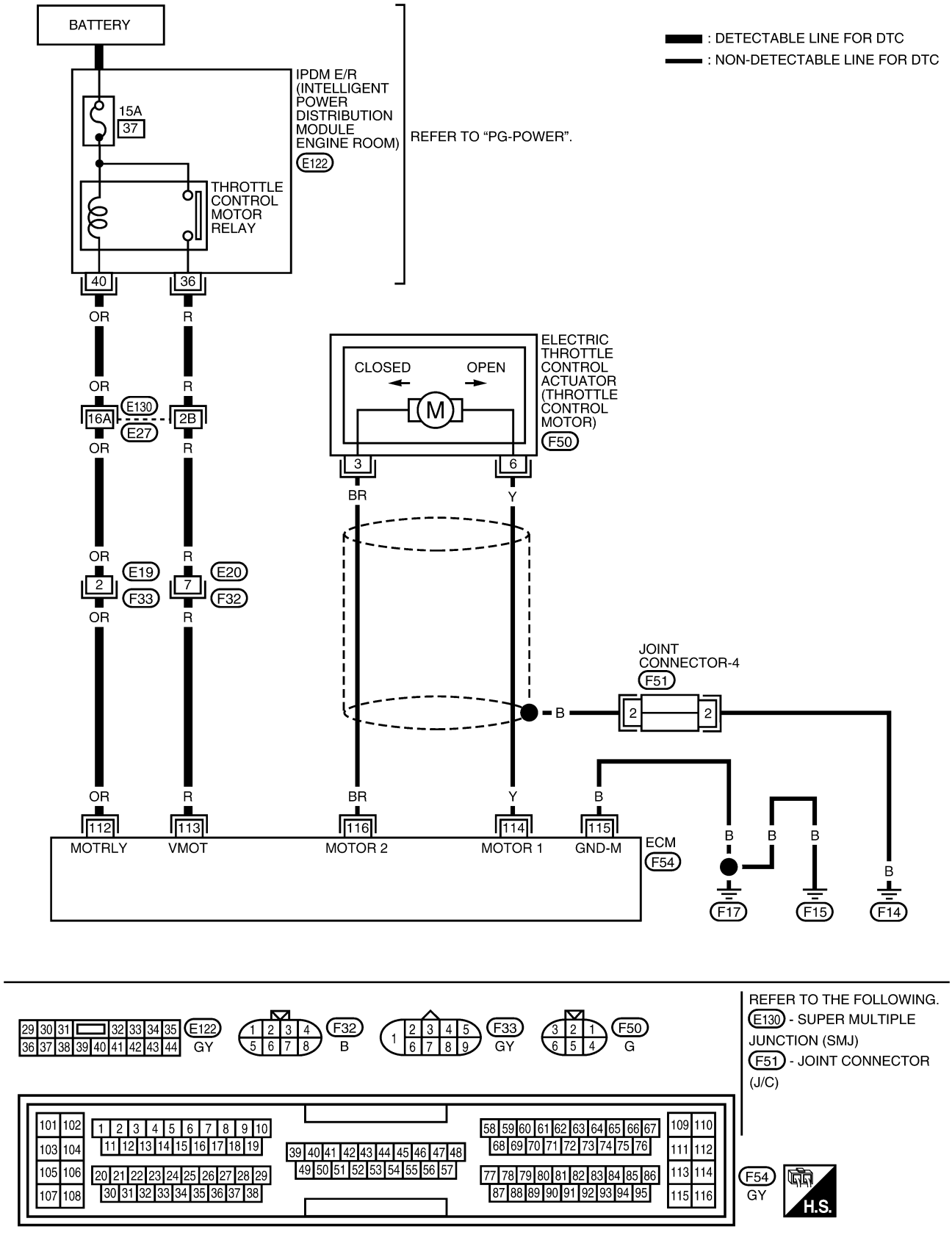

Specification data are reference values and are measured between each terminal and ground.

CAUTION:
Do not use ECM ground terminals when measuring input/output voltage. Doing so may result in damage to the ECM's transistor. Use a ground other than ECM terminals, such as the ground.

TERMINAL NO.	WIRE COLOR	ITEM	CONDITION	DATA (DC Voltage)
112	OR	Throttle control motor relay	**[Ignition switch "OFF"]**	BATTERY VOLTAGE (11 - 14V)
			[Ignition switch "ON"]	0 - 1.0V
113	R	Throttle control motor relay power supply	**[Ignition switch "ON"]**	BATTERY VOLTAGE (11 - 14V)

Diagnostic Procedure

UBS002Y8

1. CHECK THROTTLE CONTROL MOTOR RELAY POWER SUPPLY CIRCUIT-I

1. Turn ignition switch “OFF”.
2. Check voltage between ECM terminal 112 and ground with CONSULT-II or tester.

Voltage: Battery voltage

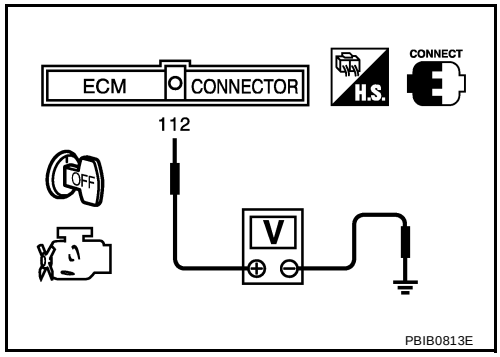

OK or NG

OK >> GO TO 5.
NG >> GO TO 2.

2. CHECK THROTTLE CONTROL MOTOR RELAY POWER SUPPLY CIRCUIT-II

1. Disconnect ECM harness connector.
2. Disconnect IPDM E/R harness connector E122.
3. Check continuity between ECM terminal 112 and IPDM E/R terminal 40.
   Refer to Wiring Diagram.

Continuity should exist.

4. Also check harness for short to ground and short to power.

OK or NG

OK >> GO TO 4.
NG >> GO TO 3.

3. DETECT MALFUNCTIONING PART

Check the following.

- Harness connectors E130, E27
- Harness connectors E19, F33
- Harness for open or short between ECM and IPDM E/R

>> Repair or replace harness or connectors.

4. CHECK FUSE

Check 15A fuse.

OK or NG

OK >> GO TO 8.
NG >> Replace 15A fuse.

5. CHECK THROTTLE CONTROL MOTOR RELAY INPUT SIGNAL CIRCUIT-I

1. Reconnect all harness connectors disconnected.
2. Check voltage between ECM terminal 113 and ground following conditions with CONSULT-II or tester.

Ignition switch	Voltage
OFF	Approximately 0V
ON	Battery voltage (11 - 14V)

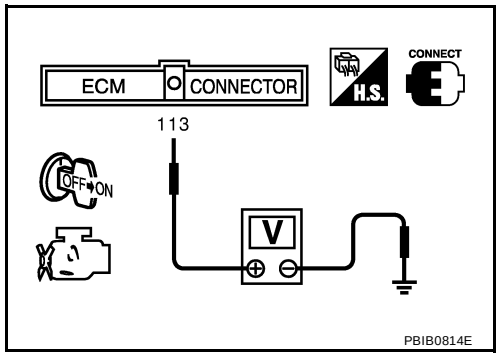

OK or NG

OK >> GO TO 8.
NG >> GO TO 6.

6. CHECK THROTTLE CONTROL MOTOR RELAY INPUT SIGNAL CIRCUIT-II

1. Disconnect ECM harness connector.
2. Disconnect IPDM E/R harness connector E122.
3. Check continuity between ECM terminal 113 and IPDM E/R terminal 36. Refer to Wiring Diagram.

Continuity should exist.

4. Also check harness for short to ground and short to power.

OK or NG

OK >> GO TO 8.
NG >> GO TO 7.

7. DETECT MALFUNCTIONING PART

Check the following.

- Harness connectors E130, E27
- Harness connectors E20, F32
- Harness for open or short between ECM and IPDM E/R

>> Repair or replace harness or connectors.

8. CHECK INTERMITTENT INCIDENT

Refer to EC-130, "TROUBLE DIAGNOSIS FOR INTERMITTENT INCIDENT" .

OK or NG

OK >> Replace IPDM E/R. Refer to PG-14, "IPDM E/R (INTELLIGENT POWER DISTRIBUTION MODULE ENGINE ROOM)" .
NG >> Repair or replace harness or connectors.

DTC P1128 THROTTLE CONTROL MOTOR

PFP:16119

Component Description

UBS002Y9

The throttle control motor is operated by the ECM and it opens and closes the throttle valve.
The current opening angle of the throttle valve is detected by the throttle position sensor and it provides feedback to the ECM to control the throttle control motor to make the throttle valve opening angle properly in response to driving condition.

On Board Diagnosis Logic

UBS002YA

This self-diagnosis has the one trip detection logic.

DTC No.	Trouble diagnosis name	DTC detecting condition	Possible cause
P1128 1128	Throttle control motor circuit short	ECM detects short both circuits between ECM and throttle control motor.	● Harness or connectors (Throttle control motor circuit is shorted.) ● Electric throttle control actuator (Throttle control motor)

DTC Confirmation Procedure

UBS002YB

NOTE:
If “DTC Confirmation Procedure” has been previously conducted, always turn ignition switch “OFF” and wait at least 10 seconds before conducting the next test.

WITH CONSULT-II

1. Turn ignition switch “ON” and wait at least 2 seconds.
2. Select "DATA MONITOR" mode with CONSULT-II.
3. Start engine and let it idle for 5 seconds.
4. If DTC is detected, go to EC-413, "Diagnostic Procedure" .

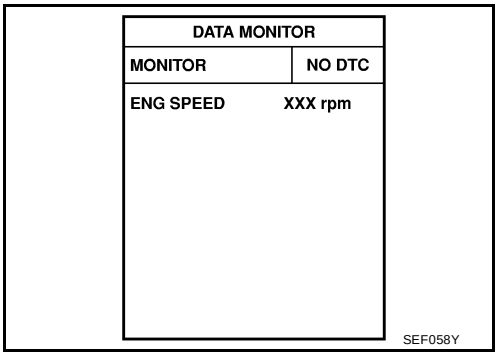

WITH GST

Follow the procedure “WITH CONSULT-II” above.

Wiring Diagram

UBS002YC

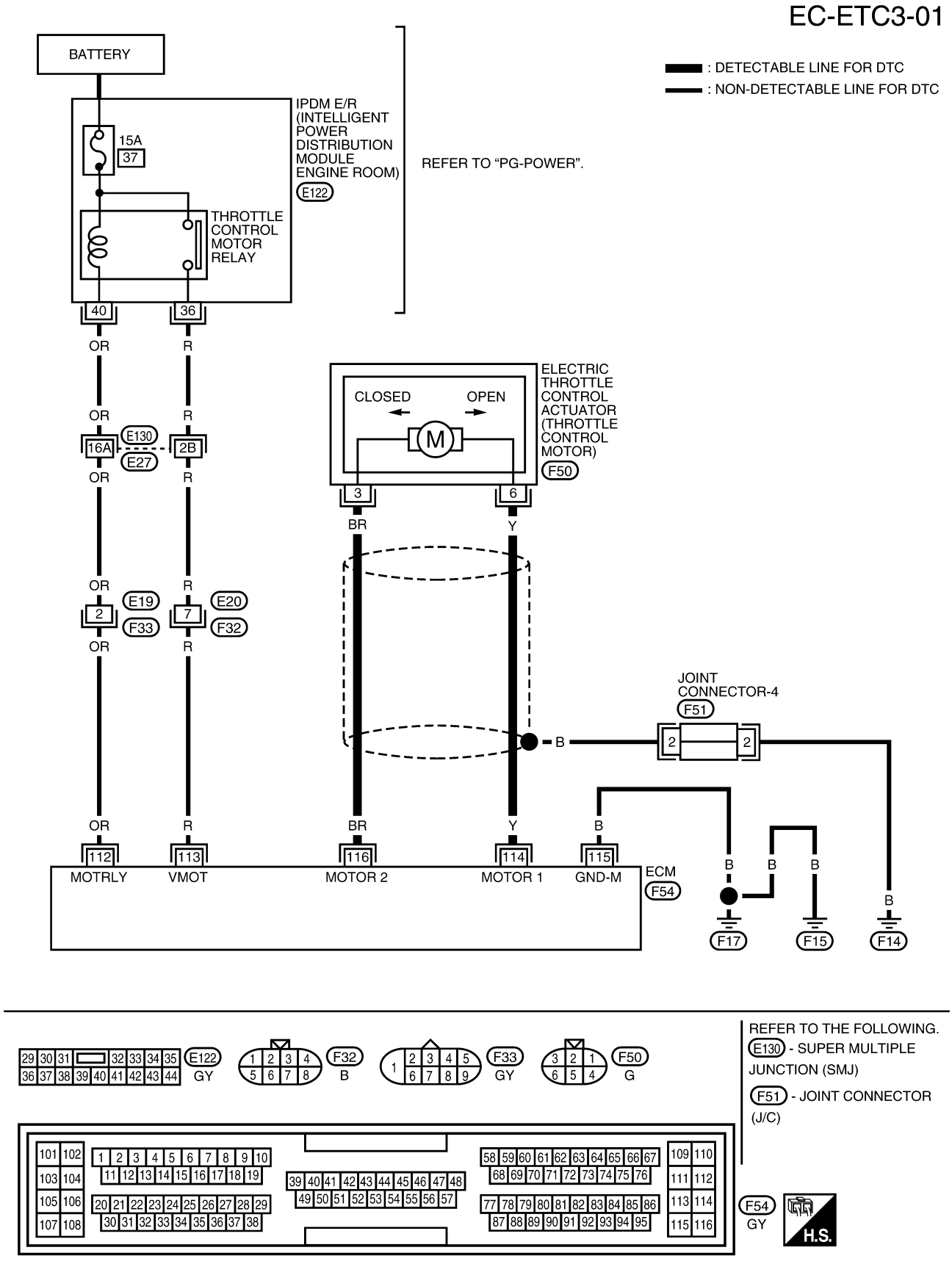

Specification data are reference values and are measured between each terminal and ground.

CAUTION:
Do not use ECM ground terminals when measuring input/output voltage. Doing so may result in damage to the ECM's transistor. Use a ground other than ECM terminals, such as the ground.

TERMINAL NO.	WIRE COLOR	ITEM	CONDITION	DATA (DC Voltage)
114	Y	Throttle control motor (Open)	**[Ignition switch "ON"]** ● Shift lever position is "D" (A/T model) ● Shift lever position is "1st" (M/T model) ● Accelerator pedal is depressing	0 - 14V★ 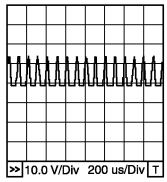 PBIB0533E
116	BR	Throttle control motor (Close)	**[Ignition switch "ON"]** ● Shift lever position is "D" (A/T model) ● Shift lever position is "1st" (M/T model) ● Accelerator pedal is releasing	0 - 14V★ 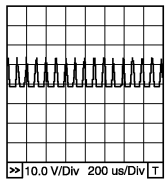 PBIB0534E

★: Average voltage for pulse signal (Actual pulse signal can be confirmed by oscilloscope.)

Diagnostic Procedure

UBS002YD

1. RETIGHTEN GROUND SCREWS

1. Turn ignition switch "OFF".
2. Loosen and retighten engine ground screws.

>> GO TO 2.

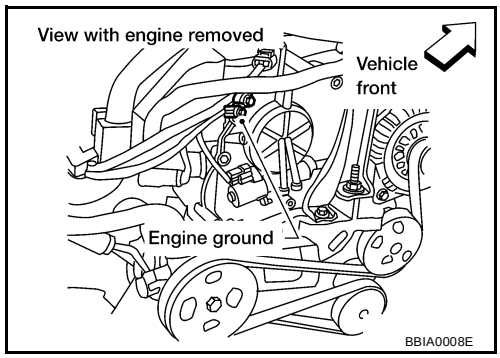

2. CHECK THROTTLE CONTROL MOTOR OUTPUT SIGNAL CIRCUIT FOR OPEN OR SHORT

1. Turn ignition switch “OFF”.
2. Disconnect electric throttle control actuator harness connector.
3. Disconnect ECM harness connector.
4. Check harness continuity between the following terminals. Refer to Wiring Diagram.

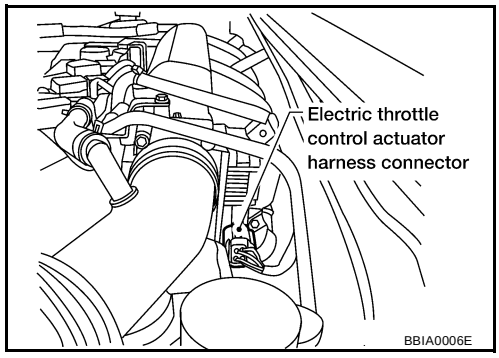

Electric throttle control actuator terminal	ECM terminal	Continuity
3	114	Should not exist
	116	Should exist
6	114	Should exist
	116	Should not exist

5. Also check harness for short to ground and short to power.

OK or NG

OK >> GO TO 3.
NG >> Repair or replace.

3. CHECK THROTTLE CONTROL MOTOR

Refer to EC-415, "Component Inspection" .

OK or NG

OK >> GO TO 4.
NG >> GO TO 6.

4. CHECK SHIELD CIRCUIT

1. Disconnect joint connector-4
2. Check the following.

- Continuity between joint connector-4 terminal 2 and ground.
- Joint connector-4
  (Refer to PG-37, "Harness Layout" .)

Continuity should exist.

3. Also check harness for short to power.
4. Then reconnect joint connector-4.

OK or NG

OK >> GO TO 5.
NG >> Repair open circuit or short to power in harness or connectors.

5. CHECK INTERMITTENT INCIDENT

Refer to EC-130, "TROUBLE DIAGNOSIS FOR INTERMITTENT INCIDENT" .

OK or NG

OK >> GO TO 6.
NG >> Repair or replace harness or connectors.

6. REPLACE ELECTRIC THROTTLE CONTROL ACTUATOR

1. Replace the electric throttle control actuator.
2. Perform EC-49, "Throttle Valve Closed Position Learning" .
3. Perform EC-49, "Idle Air Volume Learning" .

>> **INSPECTION END**

Component Inspection

UBS002YE

THROTTLE CONTROL MOTOR

1. Disconnect electric throttle control actuator harness connector.
2. Check resistance between terminals 3 and 6.

Resistance: Approximately 1 - 15 Ω [at 25 °C (77°F)]

3. If NG, replace electric throttle control actuator and go to next step.
4. Perform EC-49, "Throttle Valve Closed Position Learning" .
5. Perform EC-49, "Idle Air Volume Learning" .

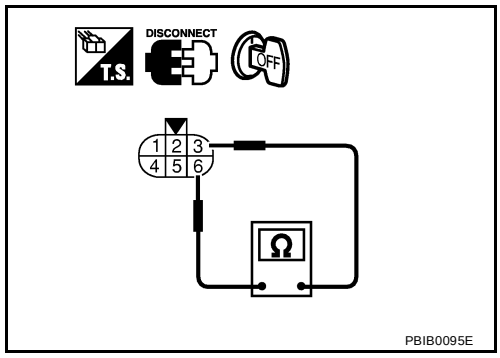

Removal and Installation

UBS002YF

ELECTRIC THROTTLE CONTROL ACTUATOR

Refer to EM-16, "INTAKE MANIFOLD" .

DTC P1143 HO2S1

PFP:22690

Component Description

UBS002YG

The heated oxygen sensor 1 is placed into the front tube. It detects the amount of oxygen in the exhaust gas compared to the outside air. The heated oxygen sensor 1 has a closed-end tube made of ceramic zirconia. The zirconia generates voltage from approximately 1V in richer conditions to 0V in leaner conditions. The heated oxygen sensor 1 signal is sent to the ECM. The ECM adjusts the injection pulse duration to achieve the ideal air-fuel ratio. The ideal air-fuel ratio occurs near the radical change from 1V to 0V.

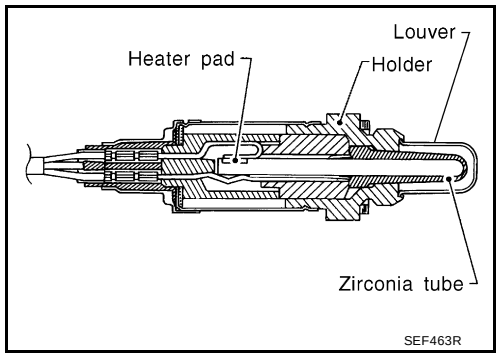

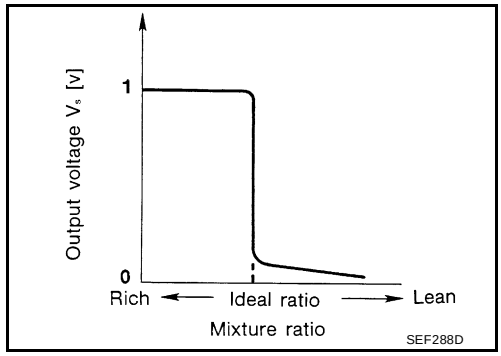

CONSULT-II Reference Value in Data Monitor Mode

UBS002YH

Specification data are reference values.

MONITOR ITEM	CONDITION		SPECIFICATION
HO2S1 (B1)	● Engine: After warming up	Maintaining engine speed at 2,000 rpm	0 - 0.3V ←→ Approx. 0.6 - 1.0V
HO2S1 MNTR (B1)	● Engine: After warming up	Maintaining engine speed at 2,000 rpm	LEAN ←→ RICH Changes more than 5 times during 10 seconds.

On Board Diagnosis Logic

UBS002YI

To judge the malfunction, the output from the heated oxygen sensor 1 is monitored to determine whether the “rich” output is sufficiently high and whether the “lean” output is sufficiently low. When both the outputs are shifting to the lean side, the malfunction will be detected.

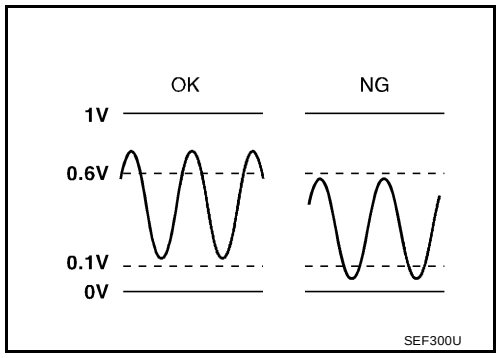

DTC No.	Trouble diagnosis name	DTC detecting condition	Possible cause
P1143 1143	Heated oxygen sensor 1 lean shift monitoring	The maximum and minimum voltage from the sensor are not reached to the specified voltages.	● Heated oxygen sensor 1 ● Heated oxygen sensor 1 heater ● Fuel pressure ● Injectors ● Intake air leaks

DTC Confirmation Procedure

UBS002YJ

CAUTION:

Always drive vehicle at a safe speed.

NOTE:

If "DTC Confirmation Procedure" has been previously conducted, always turn ignition switch "OFF" and wait at least 10 seconds before conducting the next test.

TESTING CONDITION:

- **Always perform at a temperature above –10°C (14°F).**
- **Before performing following procedure, confirm that battery voltage is more than 11V at idle.**

WITH CONSULT-II

1. Start engine and warm it up to normal operating temperature.
2. Stop engine and wait at least 10 seconds.
3. Turn ignition switch "ON" and select "HO2S1 (B1) P1143" of "HO2S1" in "DTC WORK SUPPORT" mode with CONSULT-II.
4. Touch "START".
5. Start engine and let it idle for at least 3 minutes.

   NOTE:
   Never raise engine speed above 3,600 rpm after this step. If the engine speed limit is exceeded, return to step 5.

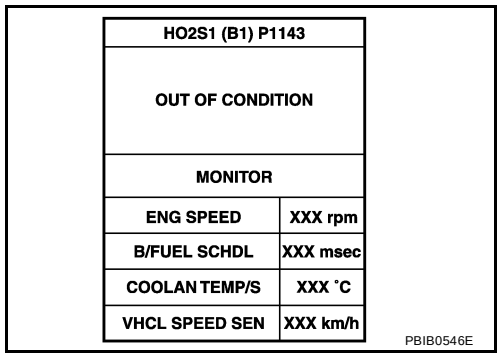

6. When the following conditions are met, "TESTING" will be displayed on the CONSULT-II screen. Maintain the conditions continuously until "TESTING" changes to "COMPLETED". (It will take approximately 50 seconds or more.)

ENG SPEED	1,200 - 3,200 rpm
Vehicle speed	Less than 100 km/h (62 MPH)
B/FUEL SCHDL	1.9 - 13.0 msec
Selector lever	Suitable position

   If "TESTING" is not displayed after 5 minutes, retry from step 2.

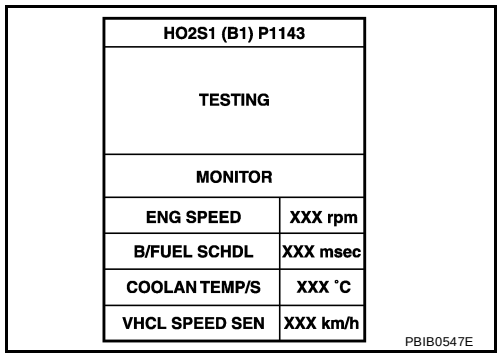

7. Make sure that "OK" is displayed after touching "SELF-DIAG RESULTS". If "NG" is displayed, refer to EC-418, "Diagnostic Procedure" .

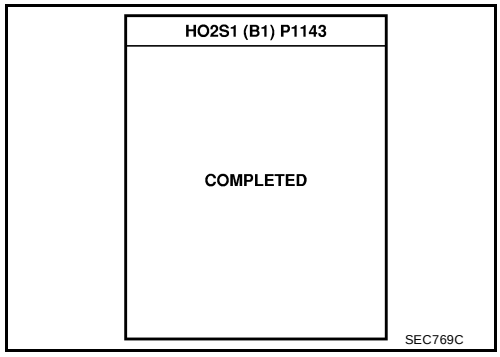

Overall Function Check

UBS002YK

Use this procedure to check the overall function of the heated oxygen sensor 1 circuit. During this check, a 1st trip DTC might not be confirmed.

WITH GST

1. Start engine and warm it up to normal operating temperature.

2. Set voltmeter probes between ECM terminal 92 [HO2S1(B1) signal] and engine ground.
3. Check one of the following with engine speed held at 2,000 rpm constant under no load.
- The maximum voltage is over 0.6V at least one time.
- The minimum voltage is over 0.1V at least one time.
4. If NG, go to EC-418, "Diagnostic Procedure" .

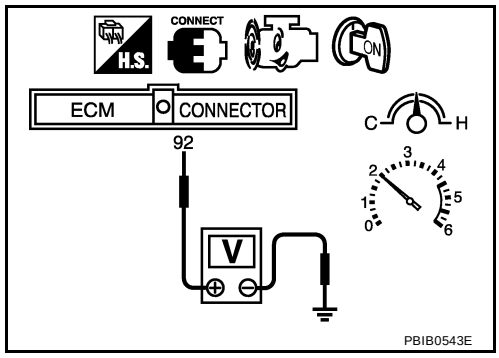

Diagnostic Procedure

UBS002YL

1. RETIGHTEN GROUND SCREWS

1. Turn ignition switch “OFF”.
2. Loosen and retighten engine ground screws.

>> GO TO 2.

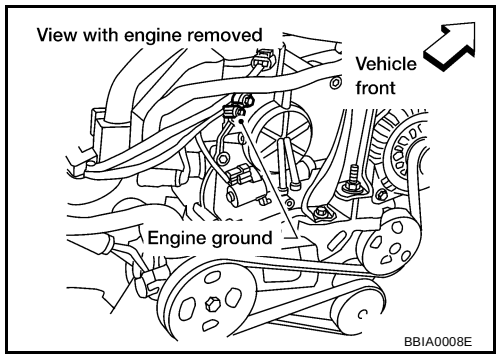

2. RETIGHTEN HEATED OXYGEN SENSOR 1

Loosen and retighten heated oxygen sensor 1.

Tightening torque: 40 - 50 N·m (4.1 - 5.1 kg-m, 30 - 37 ft-lb)

>> GO TO 3.

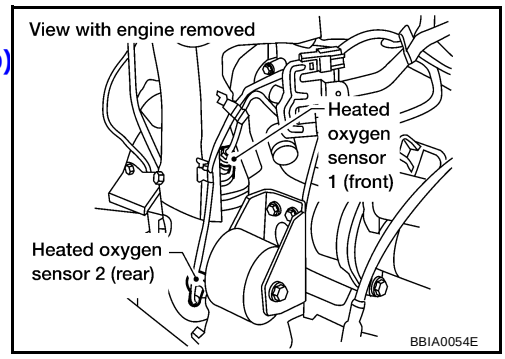

3. CLEAR THE SELF-LEARNING DATA

With CONSULT-II

1. Start engine and warm it up to normal operating temperature.
2. Select “SELF-LEARNING CONT” in “WORK SUPPORT” mode with CONSULT-II.
3. Clear the self-learning control coefficient by touching “CLEAR”.
4. Run engine for at least 10 minutes at idle speed.
   Is the 1st trip DTC P0171 detected?
   Is it difficult to start engine?

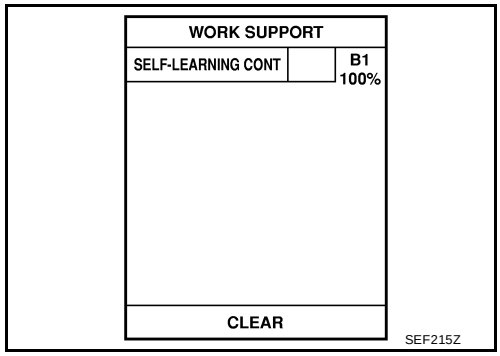

Without CONSULT-II

1. Start engine and warm it up to normal operating temperature.
2. Turn ignition switch “OFF”.
3. Disconnect mass air flow sensor harness connector, and restart and run engine for at least 5 seconds at idle speed.
4. Stop engine and reconnect mass air flow sensor harness connector.
5. Make sure DTC P0102 is displayed.
6. Erase the DTC memory. Refer to EC-67, "HOW TO ERASE EMISSION-RELATED DIAGNOSTIC INFORMATION" .
7. Make sure DTC P0000 is displayed.
8. Run engine for at least 10 minutes at idle speed.
   Is the 1st trip DTC P0171 detected?
   Is it difficult to start engine?

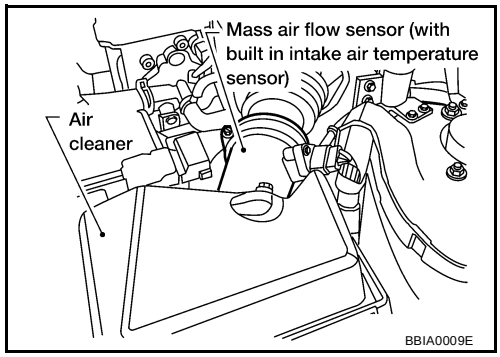

Yes or No

Yes >> Perform trouble diagnosis for DTC P0171. Refer to EC-220 .
No >> GO TO 4.

4. CHECK HEATED OXYGEN SENSOR 1 HEATER

Refer to EC-148, "Component Inspection" .

OK or NG

OK >> GO TO 5.
NG >> Replace heated oxygen sensor 1.

5. CHECK HEATED OXYGEN SENSOR 1

Refer to EC-420, "Component Inspection" .

OK or NG

OK >> GO TO 6.
NG >> Replace heated oxygen sensor 1.

6. CHECK INTERMITTENT INCIDENT

Refer to EC-130, "TROUBLE DIAGNOSIS FOR INTERMITTENT INCIDENT" .
For circuit, refer to EC-187, "Wiring Diagram" .

>> **INSPECTION END**

Component Inspection

UBS002YM

HEATED OXYGEN SENSOR 1

With CONSULT-II

1. Start engine and warm it up to normal operating temperature.
2. Select “MANU TRIG” and adjust “TRIGGER POINT” to 100% in “DATA MONITOR” mode with CONSULT-II.
3. Select “HO2S1 (B1)” and “HO2S1 MNTR (B1)”.
4. Hold engine speed at 2,000 rpm under no load during the following steps.
5. Touch “RECORD” on CONSULT-II screen.

DATA MONITOR	
MONITOR	NO DTC
ENG SPEED	XXX rpm
MAS A/F SE-B1	XXX V
COOLAN TEMP/S	XXX ˚C
HO2S1 (B1)	XXX V
HO2S1 MNTR (B1)	LEAN

SEF646Y

6. Check the following.
   - “HO2S1 MNTR (B1)” in “DATA MONITOR” mode changes from “RICH” to “LEAN” to “RICH” 5 times in 10 seconds.
     5 times (cycles) are counted as shown at right.
   - “HO2S1 (B1)” voltage goes above 0.6V at least once.
   - “HO2S1 (B1)” voltage goes below 0.3V at least once.
   - “HO2S1 (B1)” voltage never exceeds 1.0V.

cycle	1	2	3	4	5
HO2S1 MNTR (B1)	R-L-R-L-R-L-R-L-R-L-R				

R means HO2S1 MNTR (B1) indicates RICH
L means HO2S1 MNTR (B1) indicates LEAN

SEF217YA

Trigger	ENG SPEED	HO2S1 (B1)
	rpm	V
XXX	XXX	XXX
XXX	XXX	XXX
XXX	XXX	XXX
XXX	XXX	XXX
XXX	XXX	XXX
XXX	XXX	XXX
XXX	XXX	XXX
XXX	XXX	XXX
XXX	XXX	XXX
XXX	XXX	XXX
XXX	XXX	XXX
XXX	XXX	XXX

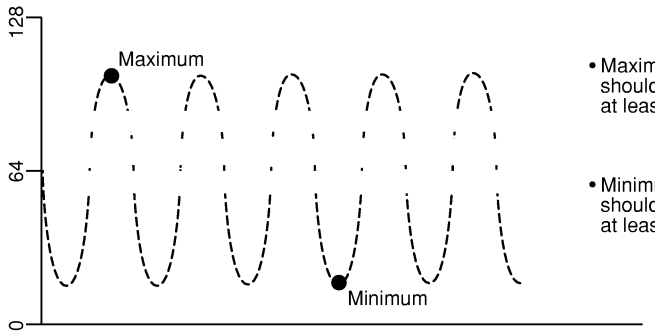

- Maximum voltage should be over 0.6V at least one time.
- Minimum voltage should be below 0.30V at least one time.

SEF648Y

CAUTION:

- **Discard any heated oxygen sensor which has been dropped from a height of more than 0.5 m (19.7 in) onto a hard surface such as a concrete floor; use a new one.**
- **Before installing new oxygen sensor, clean exhaust system threads using Oxygen Sensor Thread Cleaner tool J-43897-18 or J-43897-12 and approved anti-seize lubricant.**

Without CONSULT-II

1. Start engine and warm it up to normal operating temperature.
2. Set voltmeter probes between ECM terminal 92 [HO2S1 (B1) signal] and engine ground.

3. Check the following with engine speed held at 2,000 rpm constant under no load.
   - The voltage fluctuates between 0 to 0.3V and 0.6 to 1.0V more than 5 times within 10 seconds.
   - The maximum voltage is over 0.6V at least one time.
   - The minimum voltage is below 0.3V at least one time.
   - The voltage never exceeds 1.0V.

   1 time: 0 - 0.3V → 0.6 - 1.0V → 0 - 0.3V
   2 times: 0 - 0.3V → 0.6 - 1.0V → 0 - 0.3V → 0.6 - 1.0V

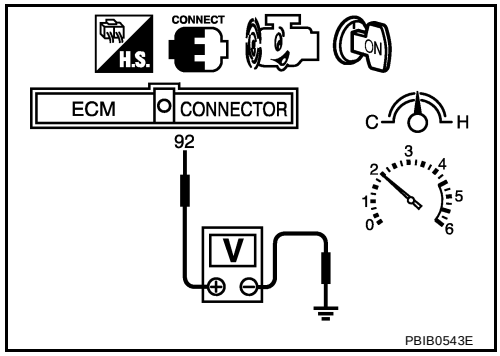

CAUTION:
- **Discard any heated oxygen sensor which has been dropped from a height of more than 0.5 m (19.7 in) onto a hard surface such as a concrete floor; use a new one.**
- **Before installing new oxygen sensor, clean exhaust system threads using Oxygen Sensor Thread Cleaner tool J-43897-18 or J-43897-12 and approved anti-seize lubricant.**

Removal and Installation

UBS002YN

HEATED OXYGEN SENSOR 1

Refer to EM-21, "EXHAUST MANIFOLD AND THREE WAY CATALYST" .

DTC P1144 HO2S1

PFP:22690

Component Description

UBS002YO

The heated oxygen sensor 1 is placed into the front tube. It detects the amount of oxygen in the exhaust gas compared to the outside air. The heated oxygen sensor 1 has a closed-end tube made of ceramic zirconia. The zirconia generates voltage from approximately 1V in richer conditions to 0V in leaner conditions. The heated oxygen sensor 1 signal is sent to the ECM. The ECM adjusts the injection pulse duration to achieve the ideal air-fuel ratio. The ideal air-fuel ratio occurs near the radical change from 1V to 0V.

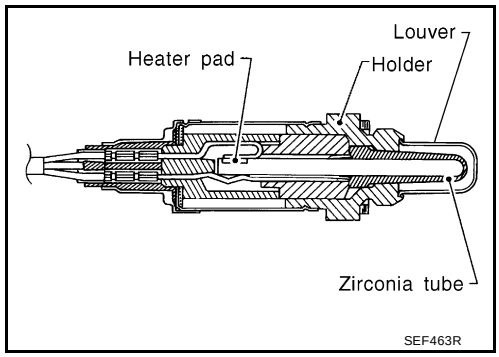

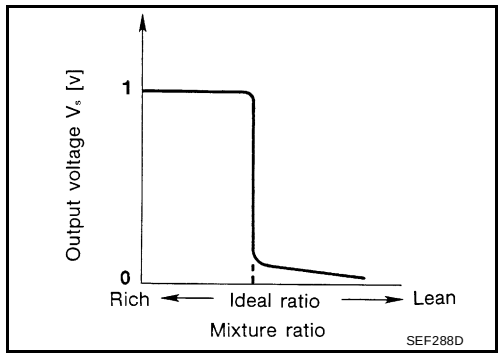

CONSULT-II Reference Value in Data Monitor Mode

UBS002YP

Specification data are reference values.

MONITOR ITEM	CONDITION		SPECIFICATION
HO2S1 (B1)	● Engine: After warming up	Maintaining engine speed at 2,000 rpm	0 - 0.3V ←→ Approx. 0.6 - 1.0V
HO2S1 MNTR (B1)	● Engine: After warming up	Maintaining engine speed at 2,000 rpm	LEAN ←→ RICH Changes more than 5 times during 10 seconds.

On Board Diagnosis Logic

UBS002YQ

To judge the malfunction, the output from the heated oxygen sensor 1 is monitored to determine whether the “rich” output is sufficiently high. The “lean” output is sufficiently low. When both the outputs are shifting to the rich side, the malfunction will be detected.

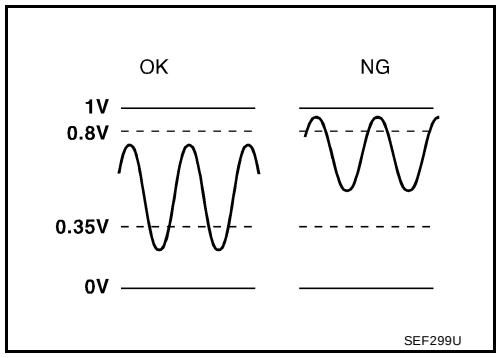

DTC No.	Trouble diagnosis name	DTC detecting condition	Possible cause
P1144 1144	Heated oxygen sensor 1 rich shift monitoring	The maximum and minimum voltages from the sensor are beyond the specified voltages.	● Heated oxygen sensor 1 ● Heated oxygen sensor 1 heater ● Fuel pressure ● Injectors

DTC Confirmation Procedure

UBS002YR

CAUTION:

Always drive vehicle at a safe speed.

NOTE:

If "DTC Confirmation Procedure" has been previously conducted, always turn ignition switch "OFF" and wait at least 10 seconds before conducting the next test.

TESTING CONDITION:

- **Always perform at a temperature above –10°C (14°F).**
- **Before performing the following procedure, confirm that battery voltage is more than 11V at idle.**

WITH CONSULT-II

1. Start engine and warm it up to normal operating temperature.
2. Stop engine and wait at least 5 seconds.
3. Turn ignition switch "ON" and select "HO2S1 (B1) P1144" of "HO2S1" in "DTC WORK SUPPORT" mode with CONSULT-II.
4. Touch "START".
5. Start engine and let it idle for at least 3 minutes.

   NOTE:
   Never raise engine speed above 3,600 rpm after this step. If the engine speed limit is exceeded, return to step 5.

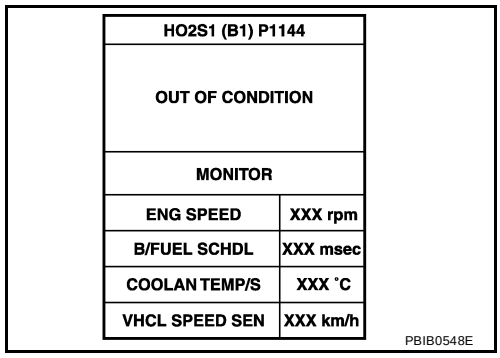

6. When the following conditions are met, "TESTING" will be displayed on the CONSULT-II screen. Maintain the conditions continuously until "TESTING" changes to "COMPLETED". (It will take approximately 50 seconds or more.)

ENG SPEED	1,200 - 3,200 rpm
Vehicle speed	Less than 100 km/h (62 MPH)
B/FUEL SCHDL	1.9 - 13.0 msec
Selector lever	Suitable position

   If "TESTING" is not displayed after 5 minutes, retry from step 2.

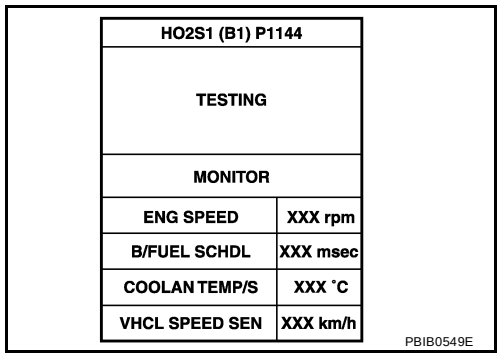

7. Make sure that "OK" is displayed after touching "SELF-DIAG RESULTS". If "NG" is displayed, refer to EC-424, "Diagnostic Procedure" .

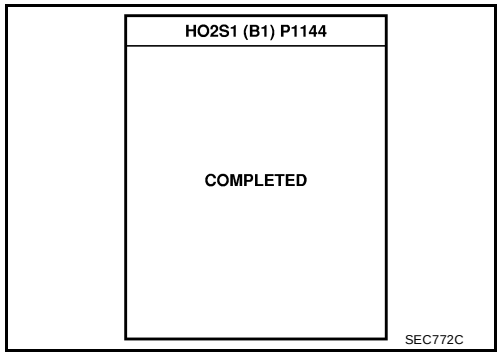

Overall Function Check

UBS002YS

Use this procedure to check the overall function of the heated oxygen sensor 1 circuit. During this check, a 1st trip DTC might not be confirmed.

WITH GST

1. Start engine and warm it up to normal operating temperature.

2. Set voltmeter probes between ECM terminal 92 [HO2S1(B1) signal] and engine ground.
3. Check one of the following with engine speed held at 2,000 rpm constant under no load.
- The maximum voltage is below 0.8V at least one time.
- The minimum voltage is below 0.35V at least one time.
4. If NG, go to EC-424, "Diagnostic Procedure" .

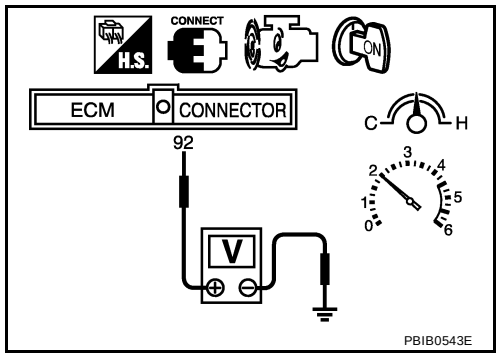

Diagnostic Procedure

UBS002YT

1. RETIGHTEN GROUND SCREWS

1. Turn ignition switch “OFF”.
2. Loosen and retighten engine ground screws.

>> GO TO 2.

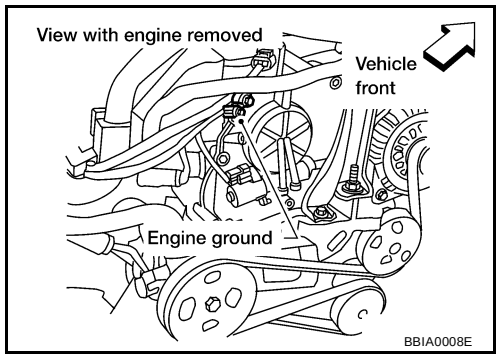

2. RETIGHTEN HEATED OXYGEN SENSOR 1

Loosen and retighten heated oxygen sensor 1.

Tightening torque: 40 - 50 N·m (4.1 - 5.1 kg-m, 30 - 37 ft-lb)

>> GO TO 3.

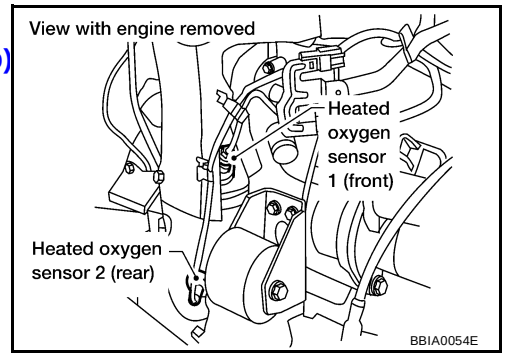

3. CLEAR THE SELF-LEARNING DATA

With CONSULT-II

1. Start engine and warm it up to normal operating temperature.
2. Select “SELF-LEARNING CONT” in “WORK SUPPORT” mode with CONSULT-II.
3. Clear the self-learning control coefficient by touching “CLEAR”.
4. Run engine for at least 10 minutes at idle speed.
   Is the 1st trip DTC P0172 detected?
   Is it difficult to start engine?

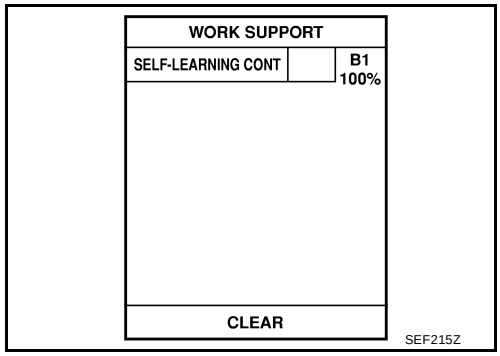

Without CONSULT-II

1. Start engine and warm it up to normal operating temperature.
2. Turn ignition switch “OFF”.
3. Disconnect mass air flow sensor harness connector, and restart and run engine for at least 5 seconds at idle speed.
4. Stop engine and reconnect mass air flow sensor harness connector.
5. Make sure DTC P0102 is displayed.
6. Erase the DTC memory. Refer to EC-67, "HOW TO ERASE EMISSION-RELATED DIAGNOSTIC INFORMATION" .
7. Make sure DTC P0000 is displayed.
8. Run engine for at least 10 minutes at idle speed.
   Is the 1st trip DTC P0172 detected?
   Is it difficult to start engine?

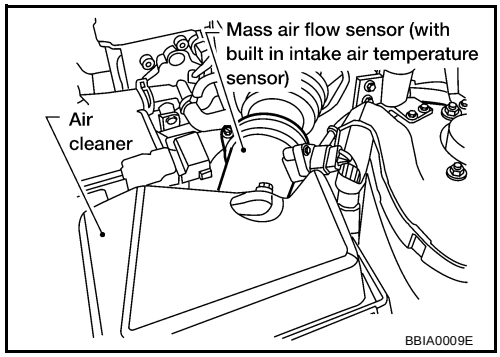

Yes or No

Yes >> Perform trouble diagnosis for DTC P0172. Refer to EC-226 .
No >> GO TO 4.

4. CHECK HO2S1 CONNECTOR FOR WATER

1. Turn ignition switch “OFF”.
2. Disconnect heated oxygen sensor 1 harness connector.
3. Check connectors for water.

Water should not exist.

OK or NG

OK >> GO TO 5.
NG >> Repair or replace harness or connectors.

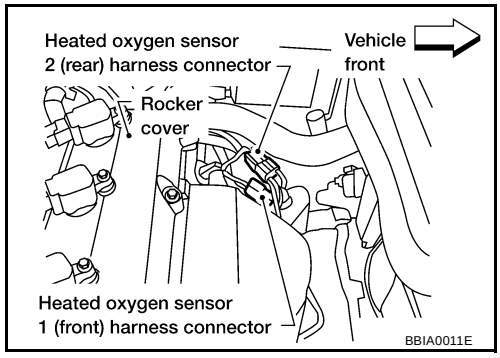

5. CHECK HEATED OXYGEN SENSOR 1 HEATER

Refer to EC-148, "Component Inspection" .

OK or NG

OK >> GO TO 6.
NG >> Replace heated oxygen sensor 1.

6. CHECK HEATED OXYGEN SENSOR 1

Refer to EC-426, "Component Inspection" .

OK or NG

OK >> GO TO 7.
NG >> Replace heated oxygen sensor 1.

7. CHECK INTERMITTENT INCIDENT

Refer to EC-130, "TROUBLE DIAGNOSIS FOR INTERMITTENT INCIDENT" .
For circuit, refer to EC-187, "Wiring Diagram" .

>> **INSPECTION END**

Component Inspection

UBS002YU

HEATED OXYGEN SENSOR 1

With CONSULT-II

1. Start engine and warm it up to normal operating temperature.
2. Select “MANU TRIG” and adjust “TRIGGER POINT” to 100% in “DATA MONITOR” mode with CONSULT-II.
3. Select “HO2S1 (B1)” and “HO2S1 MNTR (B1)”.
4. Hold engine speed at 2,000 rpm under no load during the following steps.
5. Touch “RECORD” on CONSULT-II screen.

DATA MONITOR	
MONITOR	NO DTC
ENG SPEED	XXX rpm
MAS A/F SE-B1	XXX V
COOLAN TEMP/S	XXX °C
HO2S1 (B1)	XXX V
HO2S1 MNTR (B1)	LEAN

SEF646Y

6. Check the following.
   - “HO2S1 MNTR (B1)” in “DATA MONITOR” mode changes from “RICH” to “LEAN” to “RICH” 5 times in 10 seconds.
     5 times (cycles) are counted as shown at right.
   - “HO2S1 (B1)” voltage goes above 0.6V at least once.
   - “HO2S1 (B1)” voltage goes below 0.3V at least once.
   - “HO2S1 (B1)” voltage never exceeds 1.0V.

cycle	1	2	3	4	5
HO2S1 MNTR (B1)	R-L-R-L-R-L-R-L-R-L-R				

R means HO2S1 MNTR (B1) indicates RICH
L means HO2S1 MNTR (B1) indicates LEAN

SEF217YA

Trigger	ENG SPEED	HO2S1 (B1)
	rpm	V
XXX	XXX	XXX
XXX	XXX	XXX
XXX	XXX	XXX
XXX	XXX	XXX
XXX	XXX	XXX
XXX	XXX	XXX
XXX	XXX	XXX
XXX	XXX	XXX
XXX	XXX	XXX
XXX	XXX	XXX
XXX	XXX	XXX
XXX	XXX	XXX
XXX	XXX	XXX

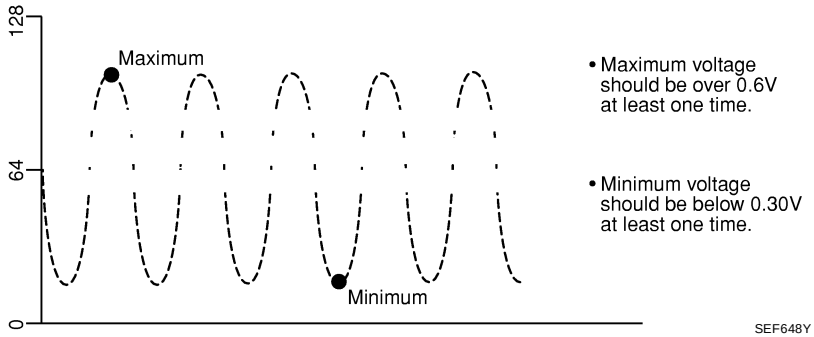

CAUTION:

- **Discard any heated oxygen sensor which has been dropped from a height of more than 0.5 m (19.7 in) onto a hard surface such as a concrete floor; use a new one.**

- **Before installing new oxygen sensor, clean exhaust system threads using Oxygen Sensor Thread Cleaner tool J-43897-18 or J-43897-12 and approved anti-seize lubricant.**

Without CONSULT-II

1. Start engine and warm it up to normal operating temperature.
2. Set voltmeter probes between ECM terminal 92 [HO2S1 (B1) signal] and engine ground.
3. Check the following with engine speed held at 2,000 rpm constant under no load.
   - The voltage fluctuates between 0 to 0.3V and 0.6 to 1.0V more than 5 times within 10 seconds.
   - The maximum voltage is over 0.6V at least one time.
   - The minimum voltage is below 0.3V at least one time.
   - The voltage never exceeds 1.0V.

   1 time: 0 - 0.3V → 0.6 - 1.0V → 0 - 0.3V
   2 times: 0 - 0.3V → 0.6 - 1.0V → 0 - 0.3V → 0.6 - 1.0V

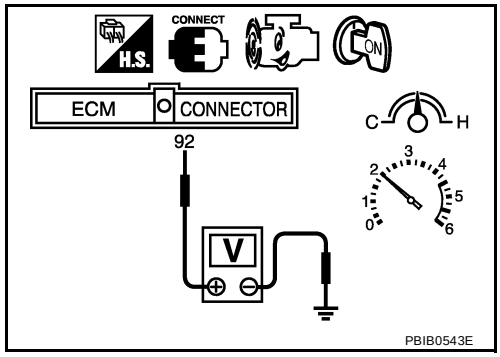

CAUTION:

- **Discard any heated oxygen sensor which has been dropped from a height of more than 0.5 m (19.7 in) onto a hard surface such as a concrete floor; use a new one.**
- **Before installing new oxygen sensor, clean exhaust system threads using Oxygen Sensor Thread Cleaner tool J-43897-18 or J-43897-12 and approved anti-seize lubricant.**

Removal and Installation

UBS002YV

HEATED OXYGEN SENSOR 1

Refer to EM-21, "EXHAUST MANIFOLD AND THREE WAY CATALYST" .

DTC P1146 HO2S2

PFP:226A0

Component Description

UBS002YW

The heated oxygen sensor 2, after three way catalyst, monitors the oxygen level in the exhaust gas on each bank.
Even if switching characteristics of the heated oxygen sensor 1 are shifted, the air fuel ratio is controlled to stoichiometric, by the signal from the heated oxygen sensor 2.
This sensor is made of ceramic zirconia. The zirconia generates voltage from approximately 1V in richer conditions to 0V in leaner conditions.
Under normal conditions the heated oxygen sensor 2 is not used for engine control operation.

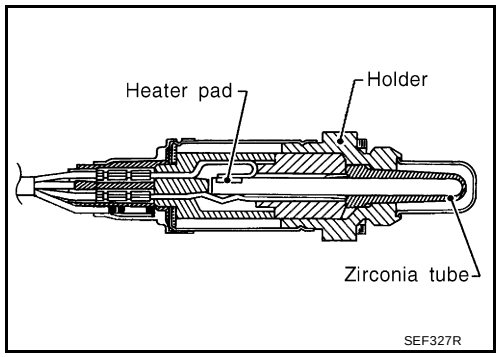

CONSULT-II Reference Value in Data Monitor Mode

UBS002YX

Specification data are reference values.

MONITOR ITEM	CONDITION		SPECIFICATION
HO2S2 (B1)	● Engine: After warming up	Revving engine from idle to 3,000 rpm quickly.	0 - 0.3V ←→ Approx. 0.6 - 1.0V
HO2S2 MNTR (B1)	● Engine: After warming up	Revving engine from idle to 3,000 rpm quickly.	LEAN ←→ RICH

On Board Diagnosis Logic

UBS002YY

The heated oxygen sensor 2 has a much longer switching time between rich and lean than the heated oxygen sensor 1. The oxygen storage capacity before the three way catalyst causes the longer switching time. To judge the malfunctions of heated oxygen sensor 2, ECM monitors whether the minimum voltage of sensor is sufficiently low during the various driving condition such as fuel-cut.

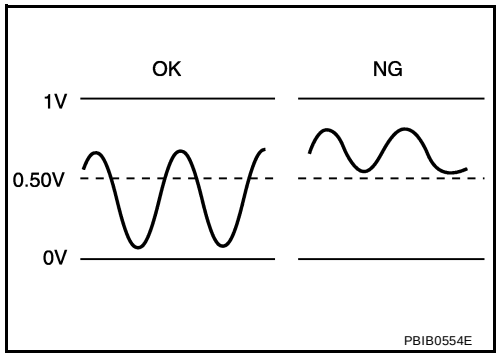

DTC No.	Trouble diagnosis name	DTC detecting condition	Possible cause
P1146 1146	Heated oxygen sensor 2 minimum voltage monitoring	The minimum voltage from the sensor is not reached to the specified voltage.	● Harness or connectors (The sensor circuit is open or shorted) ● Heated oxygen sensor 2 ● Fuel pressure ● Injectors

DTC Confirmation Procedure

UBS002YZ

NOTE:
If “DTC Confirmation Procedure” has been previously conducted, always turn ignition switch “OFF” and wait at least 10 seconds before conducting the next test.
TESTING CONDITION:
Open engine hood before conducting following procedure.

WITH CONSULT-II

1. Start engine and warm it up to normal operating temperature.
2. Turn ignition switch “OFF” and wait at least 10 seconds.
3. Turn ignition switch "ON".
4. Select "DATA MONITOR" mode with CONSULT-II.
5. Make sure that "COOLAN TEMP/S" indicates more than 70°C (158°F).

6. Select “HO2S2 (B1) P1146” of “HO2S2” in “DTC WORK SUPPORT” mode with CONSULT-II.
7. Start engine and following the instruction of CONSULT-II.

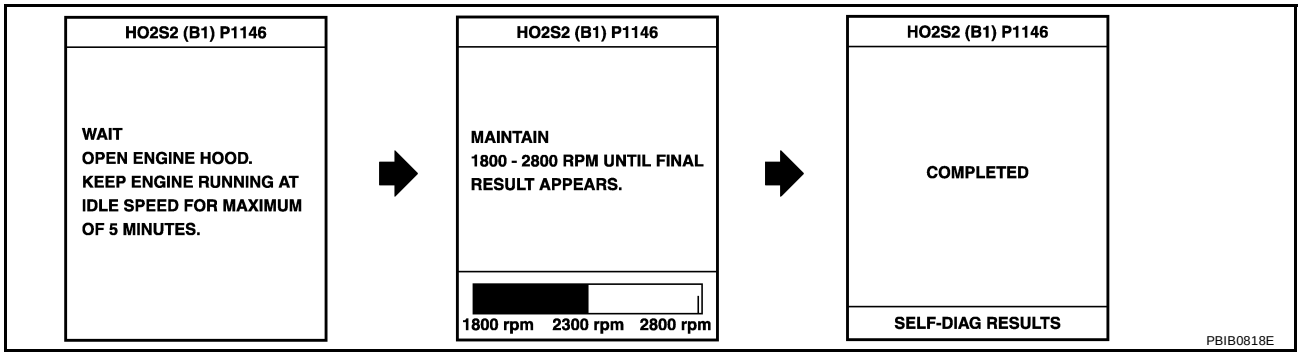

8. Make sure that “OK” is displayed after touching “SELF-DIAG RESULTS”.
   If "NG" is displayed, go to EC-431, "Diagnostic Procedure" .
   If "CAN NOT BE DIAGNOSED" is displayed, perform the following.

a. Stop engine and cool down until "COOLAN TEMP/S" indicates less than 70°C (158°F).
b. Turn ignition switch "ON".
c. Select "DATA MONITOR" mode with CONSULT-II.
d. Start engine.
e. Return to step 6 again when the "COOLAN TEMP/S" reaches to 70°C (158°F).

Overall Function Check

UBS002Z0

Use this procedure to check the overall function of the heated oxygen sensor 2 circuit. During this check, a 1st trip DTC might not be confirmed.

CAUTION:
Always drive vehicle at a safe speed.

WITH GST

1. Start engine and drive vehicle at a speed of more than 70 km/h (43 MPH) for 2 consecutive minutes.
2. Stop vehicle with engine running.
3. Set voltmeter probes between ECM terminal 95 [HO2S2 (B1) signal] and engine ground.
4. Check the voltage when revving up to 4,000 rpm under no load at least 10 times.
   (Depress and release accelerator pedal as soon as possible.)
   The voltage should be below 0.50V at least once during this procedure.
   If the voltage can be confirmed in step 4, step 5 is not necessary.

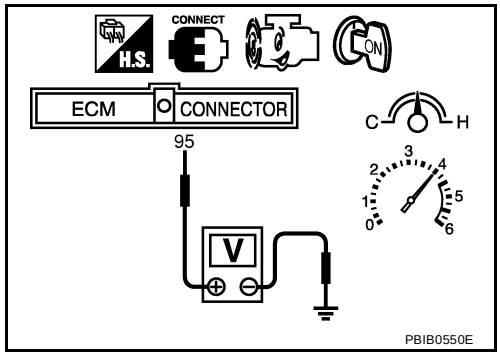

5. Keep vehicle at idling for 10 minutes, then check the voltage. Or check the voltage when coasting from 80 km/h (50 MPH) in “D” position with “OD” OFF (A/T), 3rd gear position (M/T).
   The voltage should be below 0.50V at least once during this procedure.
6. If NG, go to EC-431, "Diagnostic Procedure" .

Wiring Diagram

UBS002Z1

EC-HO2S2-01

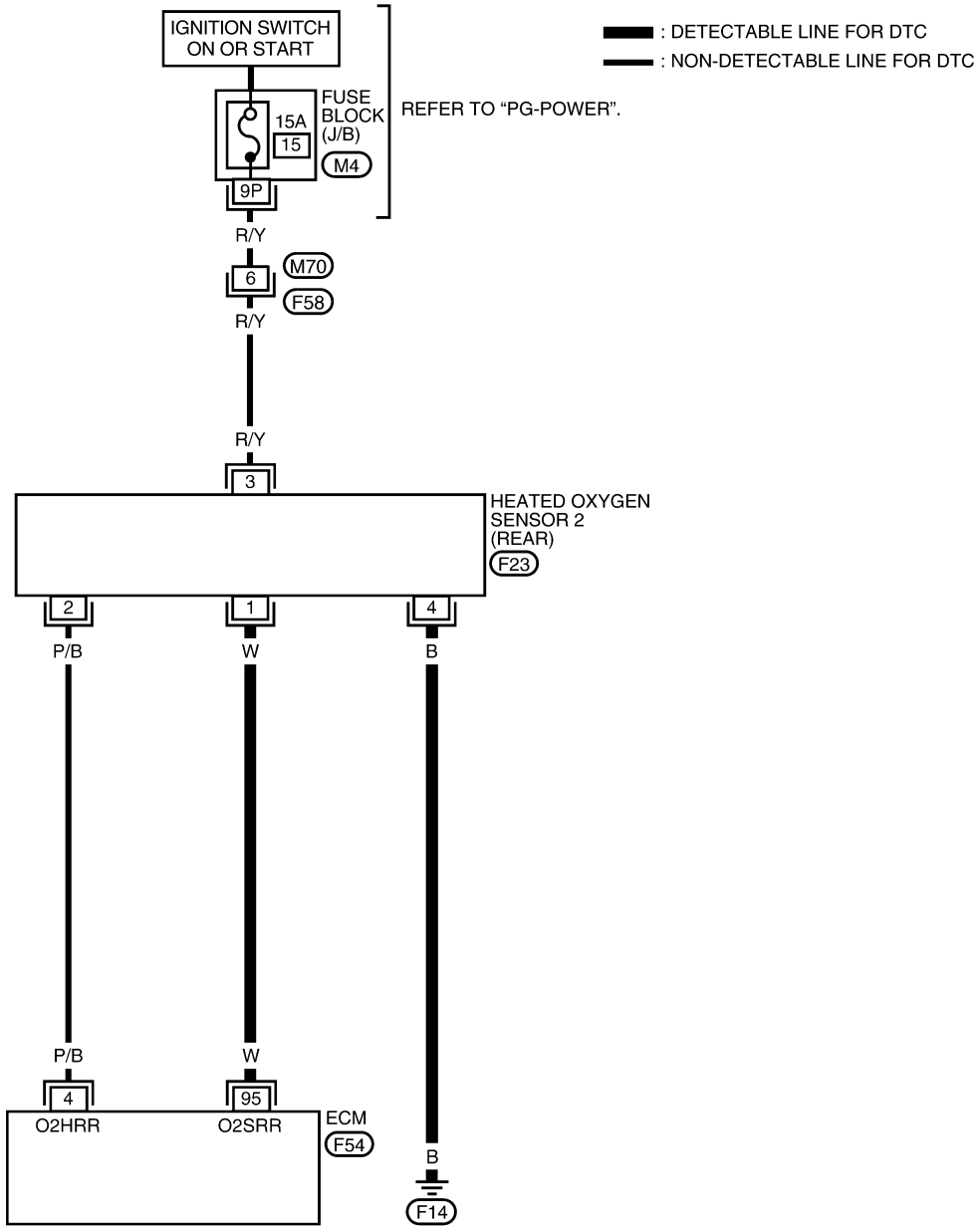

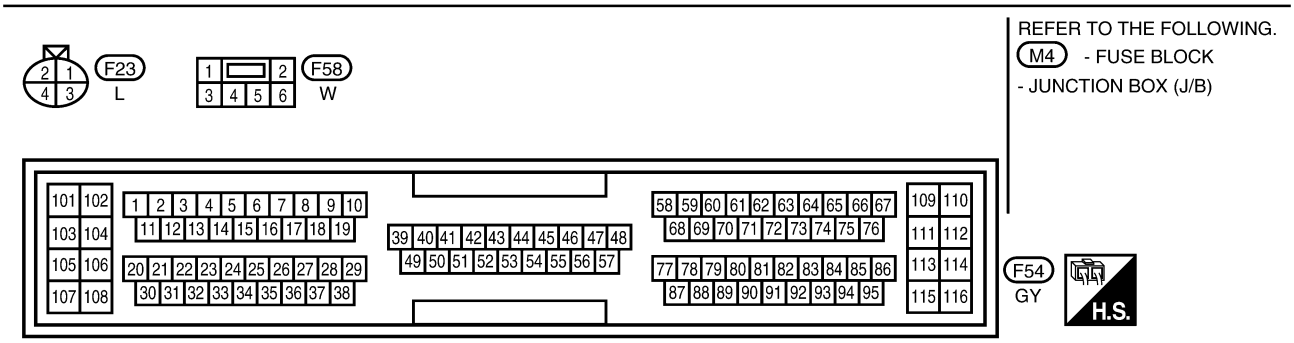

BBWA0011E

Specification data are reference values and are measured between each terminal and ground.

CAUTION:
Do not use ECM ground terminals when measuring input/output voltage. Doing so may result in damage to the ECM's transistor. Use a ground other than ECM terminals, such as the ground.

TERMINAL NO.	WIRE COLOR	ITEM	CONDITION	DATA (DC Voltage)
95	W	Heated oxygen sensor 2	**[Engine is running]** ● **Warm-up condition** ● Engine speed is 2,000 rpm.	0 - Approximately 1.0V

Diagnostic Procedure

UBS002Z2

1. RETIGHTEN GROUND SCREWS

1. Turn ignition switch “OFF”.
2. Loosen and retighten engine ground screws.

>> GO TO 2.

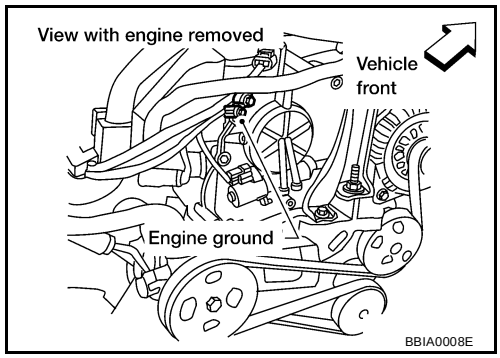

2. CLEAR THE SELF-LEARNING DATA

With CONSULT-II

1. Start engine and warm it up to normal operating temperature.
2. Select “SELF-LEARNING CONT” in “WORK SUPPORT” mode with CONSULT-II.
3. Clear the self-learning control coefficient by touching “CLEAR”.
4. Run engine for at least 10 minutes at idle speed.
   Is the 1st trip DTC P0172 detected?
   Is it difficult to start engine?

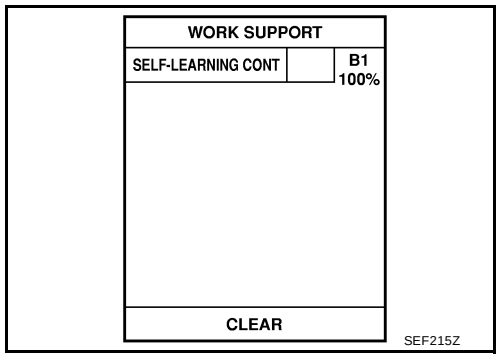

Without CONSULT-II

1. Start engine and warm it up to normal operating temperature.
2. Turn ignition switch “OFF”.
3. Disconnect mass air flow sensor harness connector, and restart and run engine for at least 5 seconds at idle speed.
4. Stop engine and reconnect mass air flow sensor harness connector.
5. Make sure DTC P0102 is displayed.
6. Erase the DTC memory. Refer to EC-67, "HOW TO ERASE EMISSION-RELATED DIAGNOSTIC INFORMATION" .
7. Make sure DTC P0000 is displayed.
8. Run engine for at least 10 minutes at idle speed.
   Is the 1st trip DTC P0172 detected?
   Is it difficult to start engine?

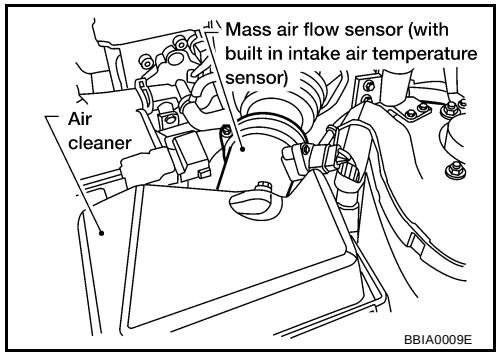

Yes or No

Yes >> Perform trouble diagnosis for DTC P0172. Refer to EC-226 .
No >> GO TO 3.

3. CHECK HO2S2 GROUND CIRCUIT FOR OPEN AND SHORT

1. Turn ignition switch “OFF”.
2. Disconnect heated oxygen sensor 2 harness connector.
3. Check harness continuity between HO2S2 terminal 4 and engine ground.
   Refer to Wiring Diagram.

   Continuity should exist.

4. Also check harness for short to power.

OK or NG

OK >> GO TO 4.
NG >> Repair open circuit or short to power in harness or connetors.

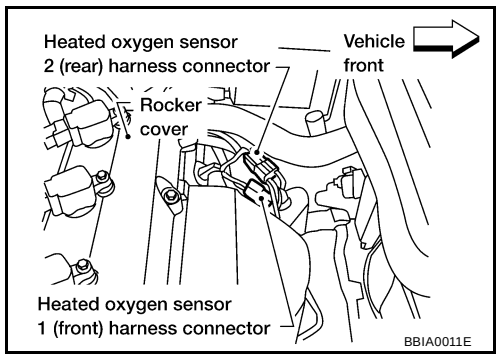

4. CHECK HO2S2 INPUT SIGNAL CIRCUIT FOR OPEN AND SHORT

1. Disconnect ECM harness connector.
2. Check harness continuity between ECM terminal 95 and HO2S2 terminal 1.
   Refer to Wiring Diagram.

   Continuity should exist.

3. Check harness continuity between ECM terminal 95 or HO2S2 terminal 1 and ground.
   Refer to Wiring Diagram.

   Continuity should not exist.

4. Also check harness for short to ground or short to power.

OK or NG

OK >> GO TO 5.
NG >> Repair open circuit or short to ground or short to power in harness or connectors.

5. CHECK HEATED OXYGEN SENSOR 2

Refer to EC-433, "Component Inspection" .

OK or NG

OK >> GO TO 6.
NG >> Replace heated oxygen sensor 2.

6. CHECK INTERMITTENT INCIDENT

Refer to EC-130, "TROUBLE DIAGNOSIS FOR INTERMITTENT INCIDENT" .

>> **INSPECTION END**

Component Inspection

UBS002Z3

HEATED OXYGEN SENSOR 2

With CONSULT-II

1. Start engine and drive vehicle at a speed of more than 70 km/h (43 MPH) for 2 consecutive minutes.
2. Stop vehicle with engine running.
3. Select “FUEL INJECTION” in “ACTIVE TEST” mode, and select “HO2S2 (B1)” as the monitor item with CONSULT-II.

ACTIVE TEST	
FUEL INJECTION	25 %
MONITOR	
ENG SPEED	XXX rpm
HO2S1 (B1)	XXX V
HO2S2 (B1)	XXX V
HO2S1 MNTR (B1)	RICH
HO2S2 MNTR (B1)	RICH

SEF662Y

4. Check “HO2S2 (B1)” at idle speed when adjusting “FUEL INJECTION” to ±25%.

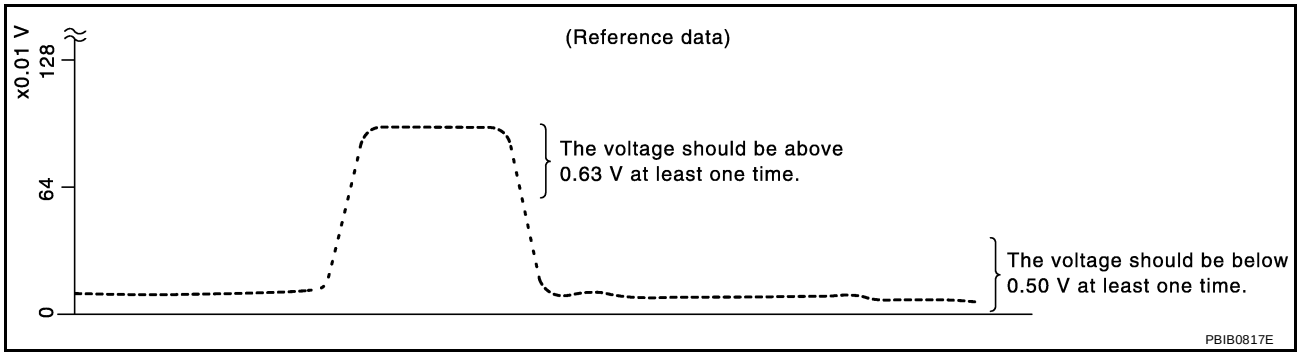

“HO2S2 (B1)” should be above 0.63V at least once when the “FUEL INJECTION” is +25%.
“HO2S2 (B1)” should be below 0.50V at least once when the “FUEL INJECTION” is –25%.

CAUTION:

- **Discard any heated oxygen sensor which has been dropped from a height of more than 0.5 m (19.7 in) onto a hard surface such as a concrete floor; use a new one.**
- **Before installing new oxygen sensor, clean exhaust system threads using Oxygen Sensor Thread Cleaner tool J-43897-18 or J-43897-12 and approved anti-seize lubricant.**

Without CONSULT-II

1. Start engine and drive vehicle at a speed of more than 70 km/h (43 MPH) for 2 consecutive minutes.
2. Stop vehicle with engine running.
3. Set voltmeter probes between ECM terminal 95 [HO2S2 (B1) signal] and engine ground.
4. Check the voltage when revving up to 4,000 rpm under no load at least 10 times.
   (Depress and release accelerator pedal as soon as possible.)
   The voltage should be above 0.63V at least once during this procedure.
   If the voltage is above 0.63V at step 4, step 5 is not necessary.

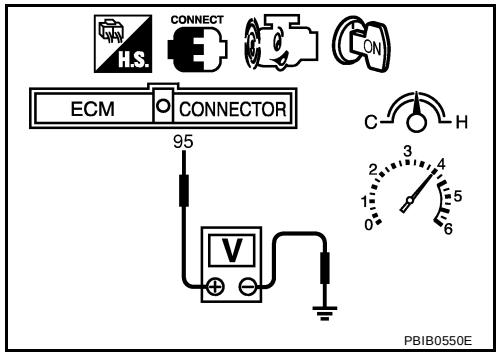

5. Keep vehicle idling for 10 minutes, then check voltage. Or check the voltage when coasting from 80 km/h (50 MPH) in “D” position with “OD” OFF (A/T), 3rd gear position (M/T).
   The voltage should be below 0.50V at least once during this procedure.
6. If NG, replace heated oxygen sensor 2.

CAUTION:

- **Discard any heated oxygen sensor which has been dropped from a height of more than 0.5 m (19.7 in) onto a hard surface such as a concrete floor; use a new one.**
- **Before installing new oxygen sensor, clean exhaust system threads using Oxygen Sensor Thread Cleaner tool J-43897-18 or J-43897-12 and approved anti-seize lubricant.**

Removal and Installation

UBS002Z4

HEATED OXYGEN SENSOR 2

Refer to EX-3, "EXHAUST SYSTEM (QR25DE)" .

DTC P1147 HO2S2

PFP:226A0

Component Description

UBS002Z5

The heated oxygen sensor 2, after three way catalyst, monitors the oxygen level in the exhaust gas on each bank.
Even if switching characteristics of the heated oxygen sensor 1 are shifted, the air fuel ratio is controlled to stoichiometric, by the signal from the heated oxygen sensor 2.
This sensor is made of ceramic zirconia. The zirconia generates voltage from approximately 1V in richer conditions to 0V in leaner conditions.
Under normal conditions the heated oxygen sensor 2 is not used for engine control operation.

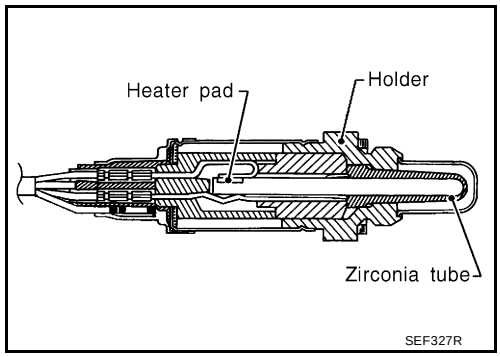

CONSULT-II Reference Value in Data Monitor Mode

UBS002Z6

Specification data are reference values.

MONITOR ITEM	CONDITION		SPECIFICATION
HO2S2 (B1)	● Engine: After warming up	Revving engine from idle to 3,000 rpm quickly.	0 - 0.3V ←→ Approx. 0.6 - 1.0V
HO2S2 MNTR (B1)	● Engine: After warming up	Revving engine from idle to 3,000 rpm quickly.	LEAN ←→ RICH

On Board Diagnosis Logic

UBS002Z7

The heated oxygen sensor 2 has a much longer switching time between rich and lean than the heated oxygen sensor 1. The oxygen storage capacity before the three way catalyst causes the longer switching time. To judge the malfunctions of heated oxygen sensor 2, ECM monitors whether the maximum voltage of the sensor is sufficiently high during the various driving condition such as fuel-cut.

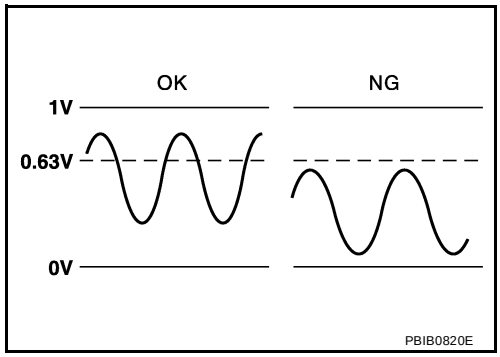

DTC No.	Trouble diagnosis name	DTC detecting condition	Possible cause
P1147 1147	Heated oxygen sensor 2 maximum voltage monitoring	The maximum voltage from the sensor is not reached to the specified voltage.	● Harness or connectors (The sensor circuit is open or shorted) ● Heated oxygen sensor 2 ● Fuel pressure ● Injectors ● Intake air leaks

DTC Confirmation Procedure

UBS002Z8

NOTE:
If “DTC Confirmation Procedure” has been previously conducted, always turn ignition switch “OFF” and wait at least 10 seconds before conducting the next test.
TESTING CONDITION:
Open engine hood before conducting following procedure.

WITH CONSULT-II

1. Start engine and warm it up to normal operating temperature.
2. Turn ignition switch “OFF” and wait at least 10 seconds.
3. Turn ignition switch "ON".
4. Select "DATA MONITOR" mode with CONSULT-II.

5. Make sure that "COOLAN TEMP/S" indicates more than 70°C (158°F).
6. Select “HO2S2 (B1) P1147” of “HO2S2” in “DTC WORK SUPPORT” mode with CONSULT-II.
7. Start engine and following the instruction of CONSULT-II.

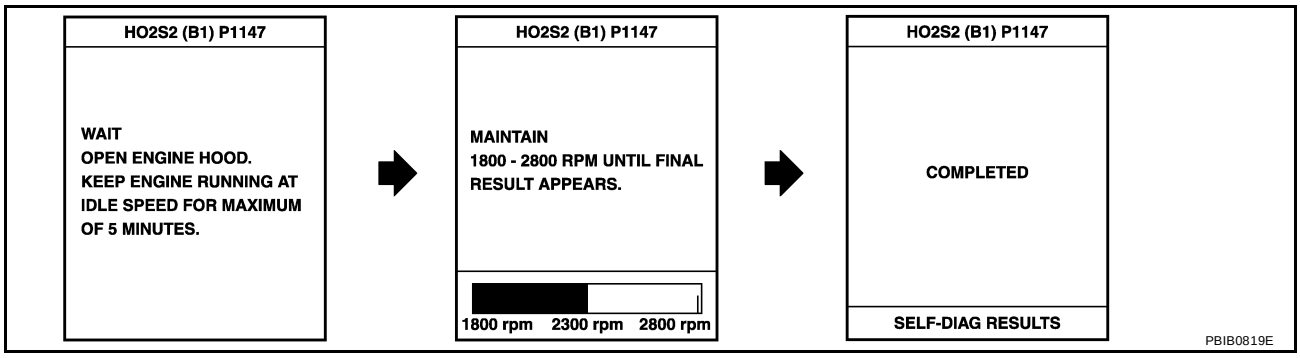

8. Make sure that “OK” is displayed after touching “SELF-DIAG RESULTS”.
   If "NG" is displayed, go to EC-438, "Diagnostic Procedure" .
   If "CAN NOT BE DIAGNOSED" is displayed, perform the following.

a. Stop engine and cool down until "COOLAN TEMP/S" indicates less than 70°C (158°F).
b. Turn ignition switch "ON".
c. Select "DATA MONITOR" mode with CONSULT-II.
d. Start engine.
e. Return to step 6 again when the "COOLAN TEMP/S" reaches to 70°C (158°F).

Overall Function Check

UBS002Z9

Use this procedure to check the overall function of the heated oxygen sensor 2 circuit. During this check, a 1st trip DTC might not be confirmed.

CAUTION:
Always drive vehicle at a safe speed.

WITH GST

1. Start engine and drive vehicle at a speed of more than 70 km/h (43 MPH) for 2 consecutive minutes.
2. Stop vehicle with engine running.
3. Set voltmeter probes between ECM terminal 95 [HO2S2 (B1) signal] and engine ground.
4. Check the voltage when revving up to 4,000 rpm under no load at least 10 times.
   (Depress and release accelerator pedal as soon as possible.)
   The voltage should be above 0.63V at least once during this procedure.
   If the voltage can be confirmed in step 4, step 5 is not necessary.

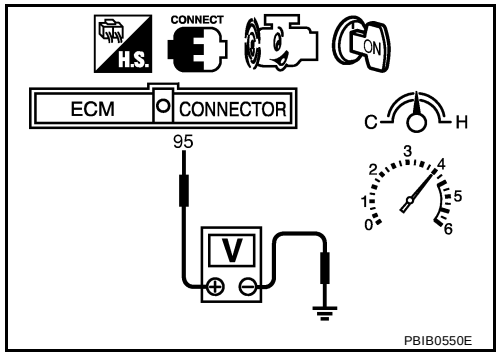

5. Keep vehicle idling for 10 minutes, then check the voltage. Or check the voltage when coasting from 80 km/h (50 MPH) in “D” position with “OD” OFF (A/T), 3rd gear position (M/T).
   The voltage should be above 0.63V at least once during this procedure.
6. If NG, go to EC-438, "Diagnostic Procedure" .

Wiring Diagram

UBS002ZA

EC-HO2S2-01

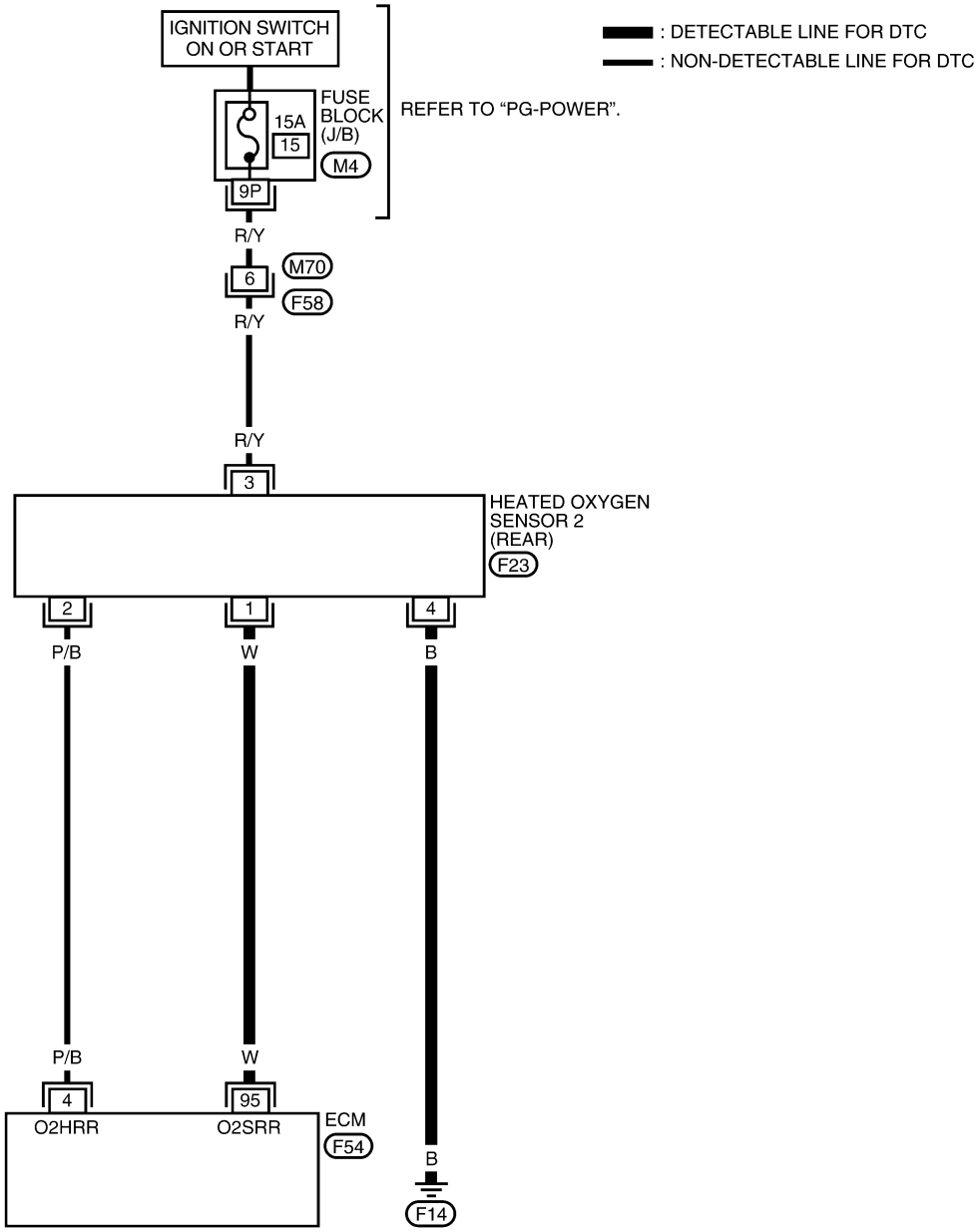

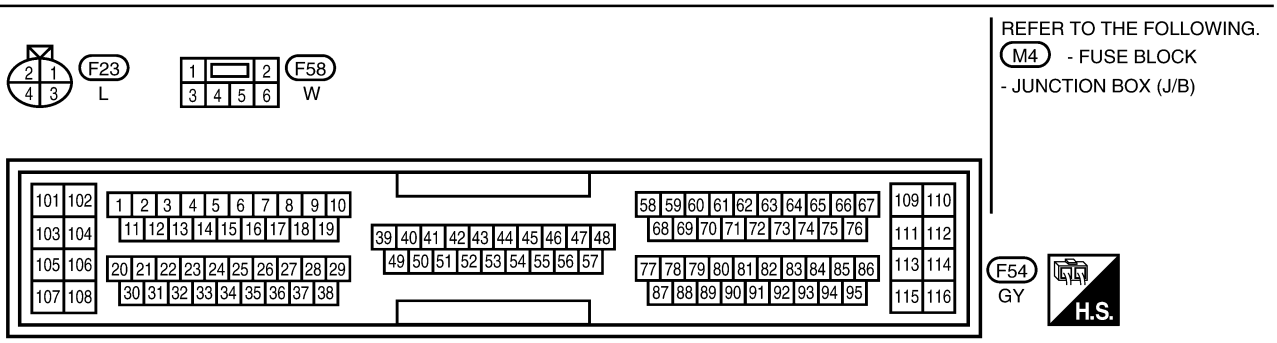

BBWA0011E

Specification data are reference values and are measured between each terminal and ground.

CAUTION:
Do not use ECM ground terminals when measuring input/output voltage. Doing so may result in damage to the ECM's transistor. Use a ground other than ECM terminals, such as the ground.

TERMINAL NO.	WIRE COLOR	ITEM	CONDITION	DATA (DC Voltage)
95	W	Heated oxygen sensor 2	**[Engine is running]** ● **Warm-up condition** ● Engine speed is 2,000 rpm.	0 - Approximately 1.0V

Diagnostic Procedure

UBS002ZB

1. RETIGHTEN GROUND SCREWS

1. Turn ignition switch “OFF”.
2. Loosen and retighten engine ground screws.

>> GO TO 2.

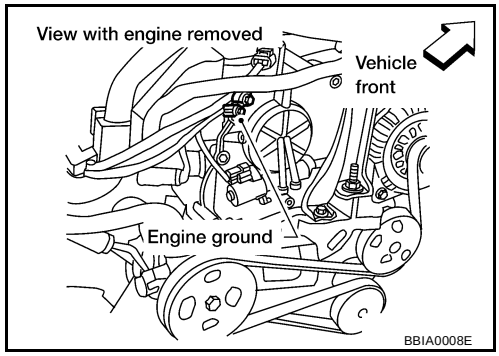

2. CLEAR THE SELF-LEARNING DATA

With CONSULT-II

1. Start engine and warm it up to normal operating temperature.
2. Select “SELF-LEARNING CONT” in “WORK SUPPORT” mode with CONSULT-II.
3. Clear the self-learning control coefficient by touching “CLEAR”.
4. Run engine for at least 10 minutes at idle speed.
   Is the 1st trip DTC P0171 detected?
   Is it difficult to start engine?

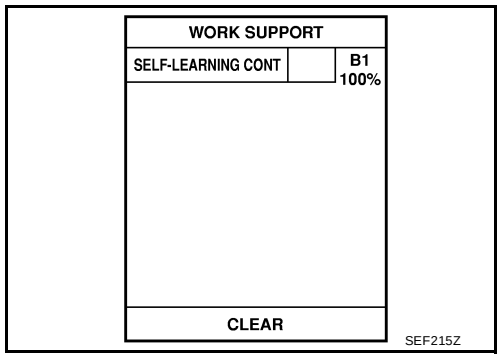

Without CONSULT-II

1. Start engine and warm it up to normal operating temperature.
2. Turn ignition switch “OFF”.
3. Disconnect mass air flow sensor harness connector, and restart and run engine for at least 5 seconds at idle speed.
4. Stop engine and reconnect mass air flow sensor harness connector.
5. Make sure DTC P0102 is displayed.
6. Erase the DTC memory. Refer to EC-67, "HOW TO ERASE EMISSION-RELATED DIAGNOSTIC INFORMATION" .
7. Make sure DTC P0000 is displayed.
8. Run engine for at least 10 minutes at idle speed.
   Is the 1st trip DTC P0171 detected?
   Is it difficult to start engine?

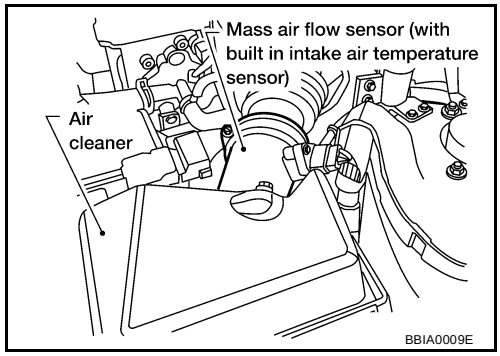

Yes or No

Yes >> Perform trouble diagnosis for DTC P0171. Refer to EC-220 .
No >> GO TO 3.

3. CHECK HO2S2 GROUND CIRCUIT FOR OPEN AND SHORT

1. Turn ignition switch “OFF”.
2. Disconnect heated oxygen sensor 2 harness connector.
3. Check harness continuity between HO2S2 terminal 4 and engine ground.
   Refer to Wiring Diagram.

   Continuity should exist.

4. Also check harness for short to power.

OK or NG

OK >> GO TO 4.
NG >> Repair open circuit or short to power in harness or connectors.

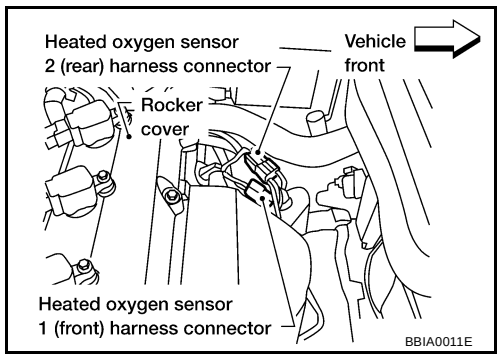

4. CHECK HO2S2 INPUT SIGNAL CIRCUIT FOR OPEN AND SHORT

1. Disconnect ECM harness connector.
2. Check harness continuity between ECM terminal 95 and HO2S2 terminal 1.
   Refer to Wiring Diagram.

   Continuity should exist.

3. Check harness continuity between ECM terminal 95 or HO2S2 terminal 1 and ground.
   Refer to Wiring Diagram.

   Continuity should not exist.

4. Also check harness for short to ground or short to power.

OK or NG

OK >> GO TO 5.
NG >> Repair open circuit or short to ground or short to power in harness or connectors.

5. CHECK HEATED OXYGEN SENSOR 2

Refer to EC-440, "Component Inspection" .

OK or NG

OK >> GO TO 6.
NG >> Replace heated oxygen sensor 2.

6. CHECK INTERMITTENT INCIDENT

Refer to EC-130, "TROUBLE DIAGNOSIS FOR INTERMITTENT INCIDENT" .

>> **INSPECTION END**

Component Inspection

UBS002ZC

HEATED OXYGEN SENSOR 2

With CONSULT-II

1. Start engine and drive vehicle at a speed of more than 70 km/h (43 MPH) for 2 consecutive minutes.
2. Stop vehicle with engine running.
3. Select “FUEL INJECTION” in “ACTIVE TEST” mode, and select “HO2S2 (B1)” as the monitor item with CONSULT-II.

ACTIVE TEST	
FUEL INJECTION	25 %
MONITOR	
ENG SPEED	XXX rpm
HO2S1 (B1)	XXX V
HO2S2 (B1)	XXX V
HO2S1 MNTR (B1)	RICH
HO2S2 MNTR (B1)	RICH

SEF662Y

4. Check “HO2S2 (B1)” at idle speed when adjusting “FUEL INJECTION” to ±25%.

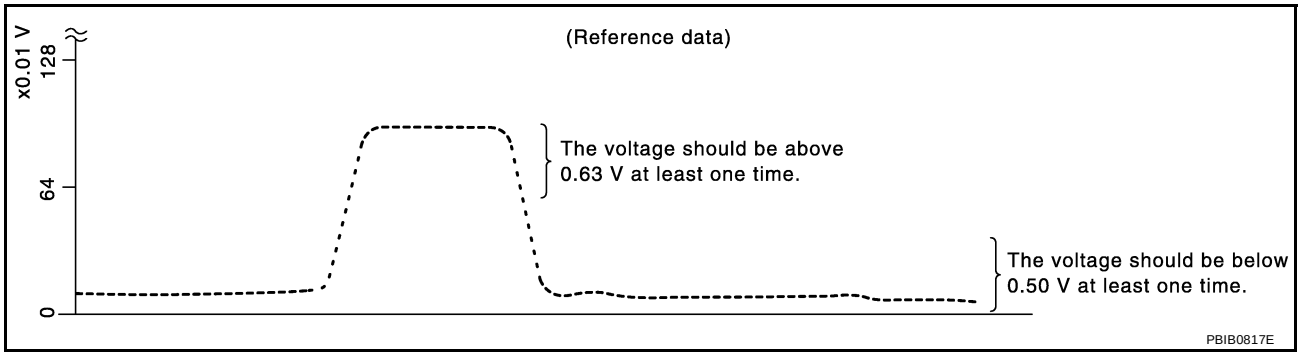

“HO2S2 (B1)” should be above 0.63V at least once when the “FUEL INJECTION” is +25%.
“HO2S2 (B1)” should be below 0.50V at least once when the “FUEL INJECTION” is –25%.

CAUTION:

- **Discard any heated oxygen sensor which has been dropped from a height of more than 0.5 m (19.7 in) onto a hard surface such as a concrete floor; use a new one.**
- **Before installing new oxygen sensor, clean exhaust system threads using Oxygen Sensor Thread Cleaner tool J-43897-18 or J-43897-12 and approved anti-seize lubricant.**

Without CONSULT-II

1. Start engine and drive vehicle at a speed of more than 70 km/h (43 MPH) for 2 consecutive minutes.
2. Stop vehicle with engine running.
3. Set voltmeter probes between ECM terminal 95 [HO2S2 (B1) signal] and engine ground.
4. Check the voltage when revving up to 4,000 rpm under no load at least 10 times.
   (Depress and release accelerator pedal as soon as possible.)
   The voltage should be above 0.63V at least once during this procedure.
   If the voltage is above 0.63V at step 4, step 5 is not necessary.

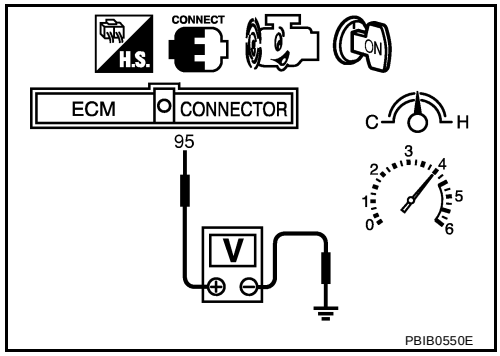

5. Keep vehicle idling for 10 minutes, then check voltage. Or check the voltage when coasting from 80 km/h (50 MPH) in “D” position with “OD” OFF (A/T), 3rd gear position (M/T).
   The voltage should be below 0.50V at least once during this procedure.
6. If NG, replace heated oxygen sensor 2.

CAUTION:

- **Discard any heated oxygen sensor which has been dropped from a height of more than 0.5 m (19.7 in) onto a hard surface such as a concrete floor; use a new one.**
- **Before installing new oxygen sensor, clean exhaust system threads using Oxygen Sensor Thread Cleaner tool J-43897-18 or J-43897-12 and approved anti-seize lubricant.**

Removal and Installation

UBS002ZD

HEATED OXYGEN SENSOR 2

Refer to EX-3, "EXHAUST SYSTEM (QR25DE)" .

DTC P1148 CLOSED LOOP CONTROL

PFP:22690

On Board Diagnosis Logic

UBS002ZE

This self-diagnosis has the one trip detection logic.

DTC No.	Trouble diagnosis name	DTC detecting condition	Possible cause
P1148 1148	Closed loop control function	The closed loop control function does not operate even when vehicle is driving in the specified condition.	● The heated oxygen sensor 1 circuit is open or shorted. ● Heated oxygen sensor 1 ● Heated oxygen sensor heater

DTC Confirmation Procedure

UBS002ZF

CAUTION:

Always drive vehicle at a safe speed.

NOTE:

If “DTC Confirmation Procedure” has been previously conducted, always turn ignition switch “OFF” and wait at least 10 seconds before conducting the next test.

TESTING CONDITION:

- **Never raise engine speed above 3,600 rpm during the “DTC Confirmation Procedure”. If the engine speed limit is exceeded, retry the procedure from step 2.**
- **Before performing the following procedure, confirm that battery voltage is more than 11V at idle.**

WITH CONSULT-II

1. Start engine and warm it up to normal operating temperature.
2. Select “DATA MONITOR” mode with CONSULT-II.
3. Hold engine speed at 2,000 rpm and check one of the following.
   - “HO2S1 (B1)” voltage should go above 0.70V at least once.
   - “HO2S1 (B1)” voltage should go below 0.21V at least once.

   If the check result is NG, perform EC-443, "Diagnostic Procedure" .

   If the check result is OK, perform the following step.
4. Let engine idle at least 5 minutes.
5. Maintain the following condition at least 50 consecutive seconds.

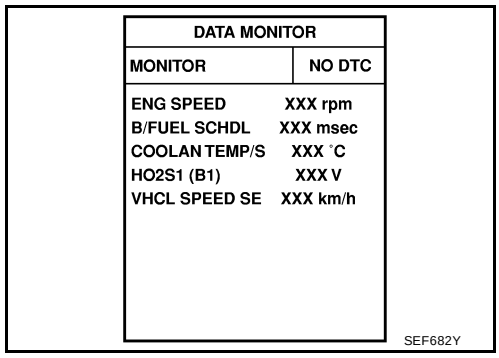

B/FUEL SCHDL	2.8 msec or more
ENG SPEED	More than 1,600 rpm
Selector lever	Suitable position
VHCL SPEED SE	More than 70 km/h (43 MPH)

   During this test, P0134 may be displayed on CONSULT-II screen.

6. If DTC is detected, go to EC-443, "Diagnostic Procedure" .

Overall Function Check

UBS002ZG

Use this procedure to check the overall function of the closed loop control. During this check, a DTC might not be confirmed.

WITH GST

1. Start engine and warm it up to normal operating temperature.

2. Set voltmeter probes between ECM terminal 92 [HO2S1 (B1) signal] and engine ground.
3. Check the following with engine speed held at 2,000 rpm constant under no-load.
   - The voltage should go above 0.70V at least once.
   - The voltage should go below 0.21V at least once.
4. If NG, go to EC-443, "Diagnostic Procedure" .

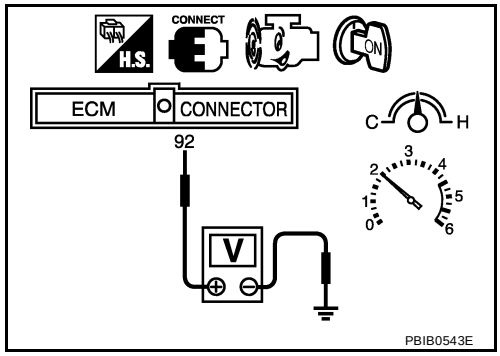

Diagnostic Procedure

UBS002ZH

Perform trouble diagnosis for “DTC P0133", EC-195 .

DTC P1217 ENGINE OVER TEMPERATURE

PFP:00000

System Description

UBS002ZI

NOTE:
If DTC P1217 is displayed with DTC U1000, U1001, first perform the trouble diagnosis for DTC U1000, U1001. Refer to EC-138, "DTC U1000, U1001 CAN COMMUNICATION LINE" .

COOLING FAN CONTROL

Sensor	Input Signal to ECM	ECM function	Actuator
Vehicle speed sensor	Vehicle speed*	Cooling fan control	Cooling fan relay(s)
Engine coolant temperature sensor	Engine coolant temperature		
Air conditioner switch	Air conditioner “ON” signal*		
Ignition switch	Start signal		
Refrigerant pressure sensor	Refrigerant pressure		

*: These signals are sent to ECM through CAN communication line.

The ECM controls the cooling fan corresponding to the vehicle speed, engine coolant temperature, refrigerant pressure, and air conditioner ON signal. The control system has 3-step control [HIGH/LOW/OFF].
The ECM controls cooling fan relays through CAN communication line.

OPERATION

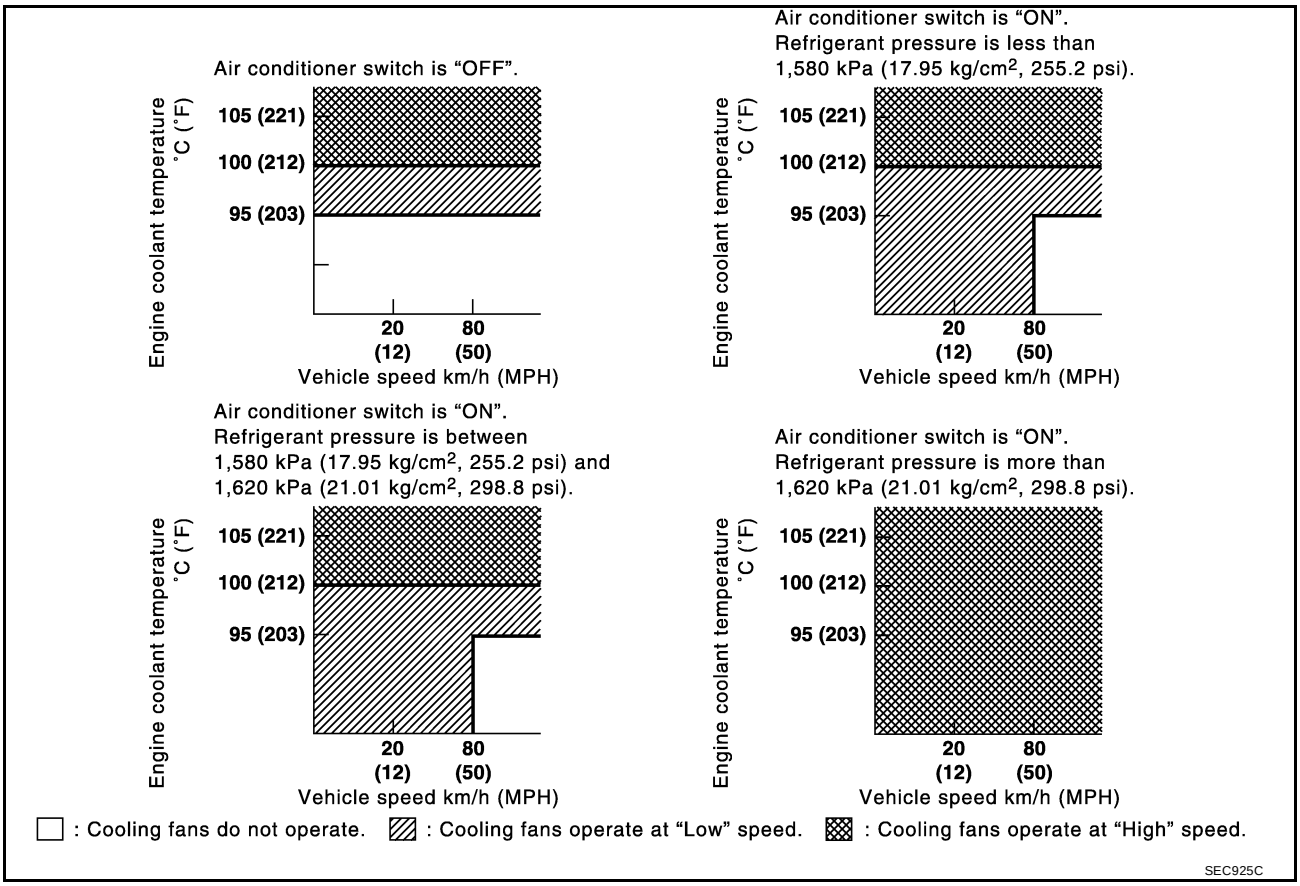

CONSULT-II Reference Value in Data Monitor Mode

UBS002ZJ

Specification data are reference values.

MONITOR ITEM	CONDITION		SPECIFICATION
AIR COND SIG	● Engine: After warming up, idle the engine	Air conditioner switch: OFF	OFF
		Air conditioner switch: ON (Compressor operates.)	ON

MONITOR ITEM	CONDITION		SPECIFICATION
COOLING FAN	● Engine: After warming up, idle the engine ● Air conditioner switch: OFF	Engine coolant temperature is 94°C (201°F) or less	OFF
		Engine coolant temperature is between 95°C (203°F) and 99°C (210°F)	LOW
		Engine coolant temperature is 100°C (212°F) or more	HIGH

On Board Diagnosis Logic

UBS002ZK

If the cooling fan or another component in the cooling system malfunctions, engine coolant temperature will rise. When the engine coolant temperature reaches an abnormally high temperature condition, a malfunction is indicated.

DTC No.	Trouble diagnosis name	DTC detecting condition	Possible cause
P1217 1217	Engine over temperature (Overheat)	● Cooling fan does not operate properly (Overheat). ● Cooling fan system does not operate properly (Overheat). ● Engine coolant was not added to the system using the proper filling method.	● Harness or connectors (The cooling fan circuit is open or shorted.) ● Cooling fan ● Radiator hose ● Radiator ● Radiator cap ● Water pump ● Thermostat For more information, refer to EC-453, "Main 12 Causes of Overheating" .

CAUTION:

When a malfunction is indicated, be sure to replace the coolant. Refer to MA-14, "Changing Engine Coolant" . Also, replace the engine oil. Refer to LU-7, "Changing Engine Oil" .

1. **Fill radiator with coolant up to specified level with a filling speed of 2 liters per minute. Be sure to use coolant with the proper mixture ratio. Refer to MA-13, "ANTI-FREEZE COOLANT MIXTURE RATIO" .**
2. **After refilling coolant, run engine to ensure that no water-flow noise is emitted.**

Overall Function Check

UBS002ZL

Use this procedure to check the overall function of the cooling fan. During this check, a DTC might not be confirmed.

WARNING:

Never remove the radiator cap when the engine is hot. Serious burns could be caused by high pressure fluid escaping from the radiator.
Wrap a thick cloth around cap. Carefully remove the cap by turning it a quarter turn to allow built-up pressure to escape. Then turn the cap all the way off.

WITH CONSULT-II

1. Check the coolant level in the reservoir tank and radiator.
   Allow engine to cool before checking coolant level.
   If the coolant level in the reservoir tank and/or radiator is below the proper range, skip the following steps and go to EC-448, "Diagnostic Procedure" .
2. Confirm whether customer filled the coolant or not. If customer filled the coolant, skip the following steps and go to EC-448, "Diagnostic Procedure" .
3. Turn ignition switch “ON”.

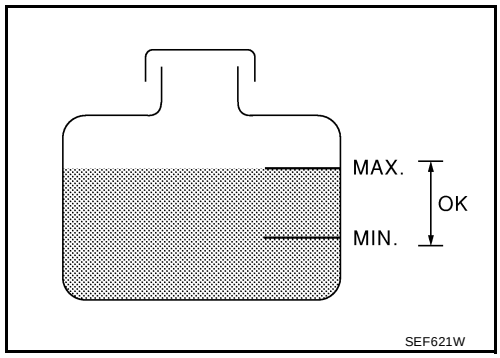

4. Perform “COOLING FAN” in “ACTIVE TEST” mode with CONSULT-II.
5. If the results are NG, go to EC-448, "Diagnostic Procedure" .

ACTIVE TEST	
COOLING FAN	OFF
MONITOR	
COOLAN TEMP/S	XXX °C

SEF646X

WITH GST

1. Check the coolant level in the reservoir tank and radiator.
   Allow engine to cool before checking coolant level.
   If the coolant level in the reservoir tank and/or radiator is below the proper range, skip the following steps and go to EC-448, "Diagnostic Procedure" .
2. Confirm whether customer filled the coolant or not. If customer filled the coolant, skip the following steps and go to EC-448, "Diagnostic Procedure" .
3. Start engine.
   Be careful not to overheat engine.
4. Turn air conditioner switch “ON”.
5. Turn blower fan switch “ON”.
6. Make sure that cooling fan operates at low speed.
   If NG, go to EC-448, "Diagnostic Procedure" .
   If OK, go to the following step.
7. Turn ignition switch “OFF”.
8. Turn air conditioner switch and blower fan switch “OFF”.
9. Disconnect engine coolant temperature sensor harness connector.
10. Connect 150Ω resistor to engine coolant temperature sensor harness connector.

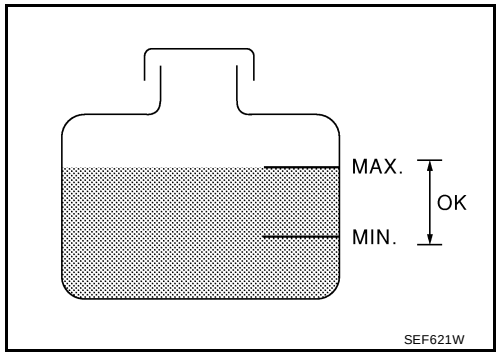

SEF621W

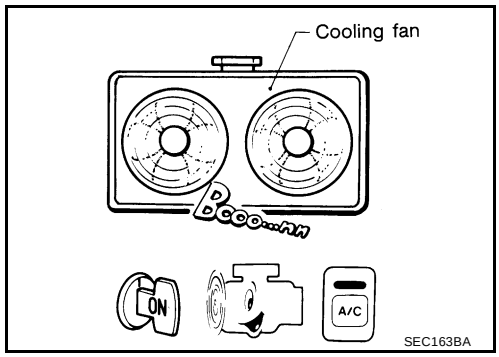

SEC163BA

11. Restart engine and make sure that cooling fan operates at higher speed than low speed.
    Be careful not to overheat engine.
12. If NG, go to EC-448, "Diagnostic Procedure" .

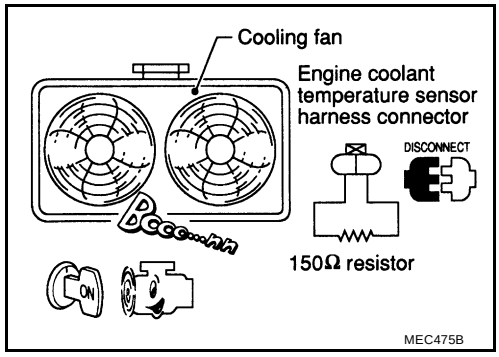

MEC475B

Wiring Diagram

UBS002ZM

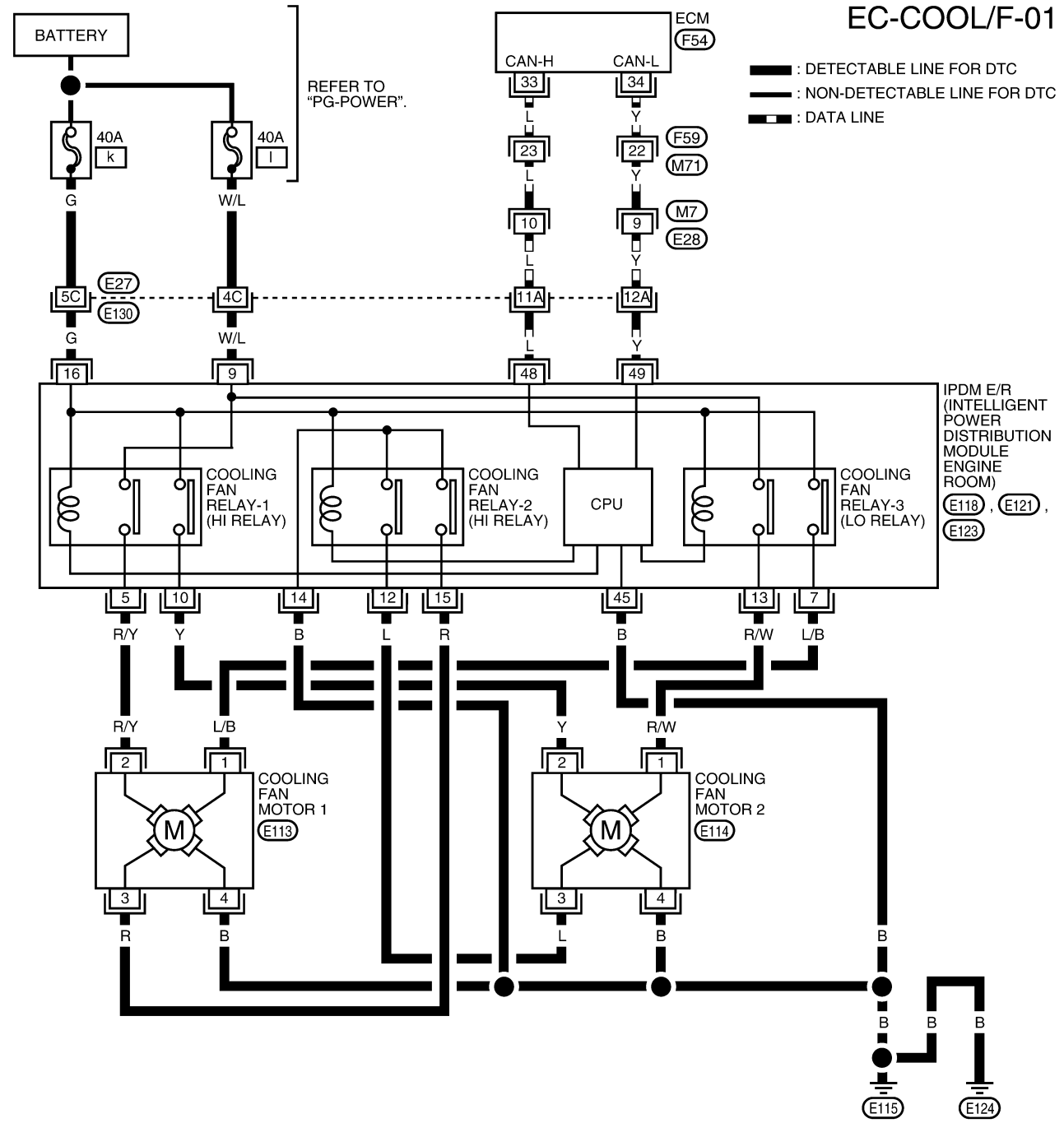

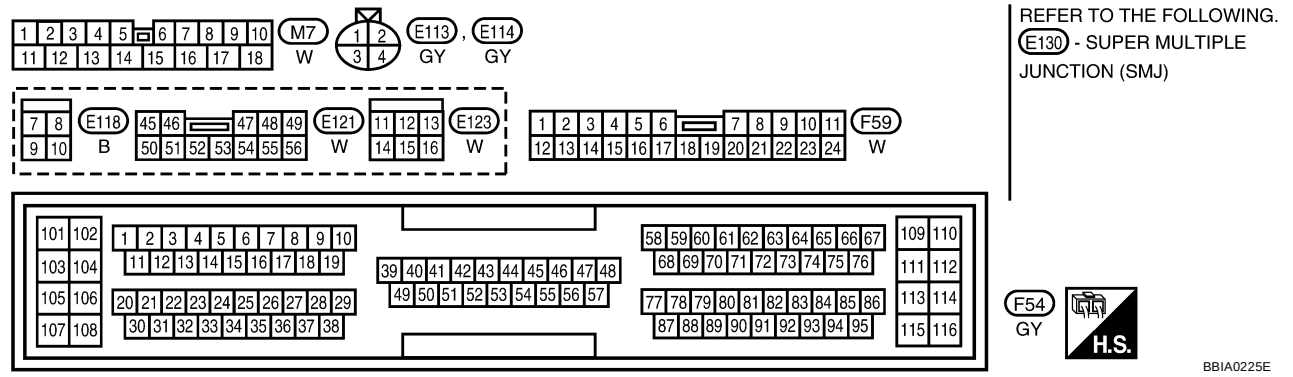

REFER TO THE FOLLOWING.
E130 - SUPER MULTIPLE JUNCTION (SMJ)

Diagnostic Procedure

UBS002ZN

1. INSPECTION START

Do you have CONSULT-II?

Yes or No

Yes >> GO TO 2.
No >> GO TO 4.

2. CHECK COOLING FAN LOW SPEED OPERATION

With CONSULT-II

1. Start engine and let it idle.
2. Select “COOLING FAN” in “ACTIVE TEST” mode with CONSULT-II and touch "LOW" on the CONSULT-II screen.
3. Make sure that cooling fans-1 and -2 operate at low speed.

OK or NG

OK >> GO TO 3.
NG >> Check cooling fan low speed control circuit. (Go to EC-451, "PROCEDURE A" .)

ACTIVE TEST	
COOLING FAN	LOW
MONITOR	
COOLAN TEMP/S	XXX °C

SEF784Z

3. CHECK COOLING FAN HIGH SPEED OPERATION

With CONSULT-II

1. Touch "HIGH" on the CONSULT-II screen.
2. Make sure that cooling fans-1 and -2 operate at higher speed than low speed.

OK or NG

OK >> GO TO 6.
NG >> Check cooling fan high speed control circuit. (Go to EC-453, "PROCEDURE B" .)

ACTIVE TEST	
COOLING FAN	HIGH
MONITOR	
COOLAN TEMP/S	XXX °C

SEF785Z

4. CHECK COOLING FAN LOW SPEED OPERATION

Without CONSULT-II

1. Start engine and let it idle.
2. Turn air conditioner switch “ON”.
3. Turn blower fan switch “ON”.
4. Make sure that cooling fans-1 and -2 operate at low speed.

OK or NG

OK >> GO TO 5.
NG >> Check cooling fan low speed control circuit. (Go to EC-451, "PROCEDURE A" .)

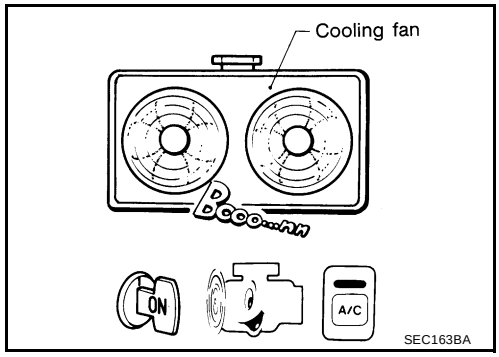

SEC163BA

5. CHECK COOLING FAN HIGH SPEED OPERATION

Without CONSULT-II

1. Turn ignition switch “OFF”.
2. Turn air conditioner switch and blower fan switch “OFF”.
3. Disconnect engine coolant temperature sensor harness connector.
4. Connect 150Ω resistor to engine coolant temperature sensor harness connector.
5. Restart engine and make sure that cooling fans-1 and -2 operate at higher speed than low speed.

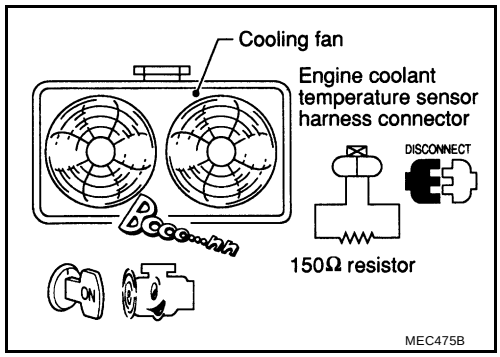

OK or NG

OK >> GO TO 6.
NG >> Check cooling fan high speed control circuit. (Go to EC-453, "PROCEDURE B" .)

6. CHECK COOLING SYSTEM FOR LEAK

Apply pressure to the cooling system with a tester, and check if the pressure drops.

Testing pressure: 157 kPa (1.6 kg/cm^2 , 23 psi)

CAUTION:
Higher than the specified pressure may cause radiator damage. Pressure should not drop.

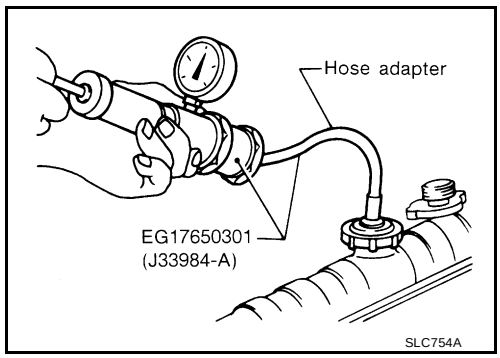

OK or NG

OK >> GO TO 7.
NG >> Check the following for leak
- Hose
- Radiator
- Water pump
  Refer to CO-18, "WATER PUMP" .

7. CHECK RADIATOR CAP

Apply pressure to cap with a tester.

Radiator cap relief pressure: 59 - 98 kPa (0.6 - 1.0 kg/cm^2 , 9 - 14 psi)

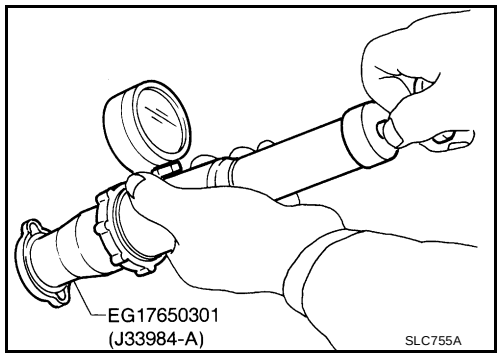

OK or NG

OK >> GO TO 8.
NG >> Replace radiator cap.

8. CHECK THERMOSTAT

1. Check valve seating condition at normal room temperatures.
   It should seat tightly.
2. Check valve opening temperature and valve lift.

   Valve opening temperature: 82°C (180°F) [standard]
   Valve lift: More than 8 mm/95°C (0.31 in/203°F)

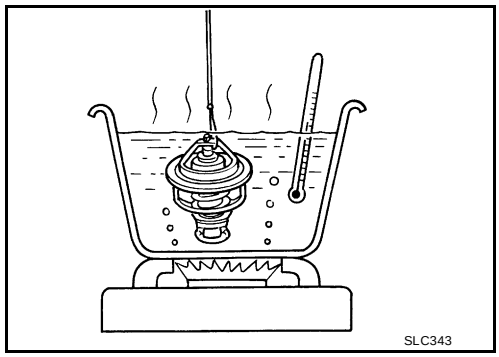

3. Check if valve is closed at 5°C (9°F) below valve opening temperature.

For details, refer to CO-20, "THERMOSTAT AND THERMOSTAT HOUSING" .

OK or NG

OK >> GO TO 9.
NG >> Replace thermostat

9. CHECK ENGINE COOLANT TEMPERATURE SENSOR

Refer to EC-176, "Component Inspection" .

OK or NG

OK >> GO TO 10.
NG >> Replace engine coolant temperature sensor.

10. CHECK MAIN 12 CAUSES

If the cause cannot be isolated, go to EC-453, "Main 12 Causes of Overheating" .

>> **INSPECTION END**

PROCEDURE A

1. CHECK POWER SUPPLY CIRCUIT

1. Turn ignition switch “OFF”.
2. Disconnect IPDM E/R harness connectors E118 and E123.
3. Check voltage between IPDM E/R terminals 9, 16 and ground with CONSULT-II or tester.

Voltage: Battery voltage

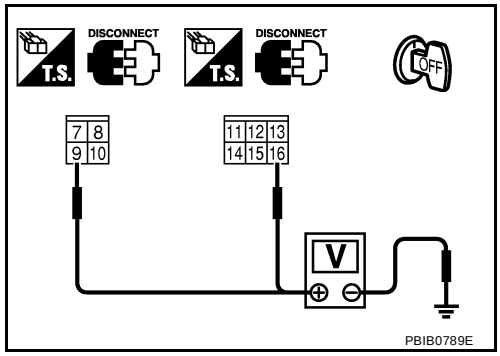

OK or NG

OK >> GO TO 3.
NG >> GO TO 2.

2. DETECT MALFUNCTIONING PART

Check the following.

- 40A fusible links
- Harness connectors E27, E130
- Harness for open or short between IPDM E/R and battery

>> Repair open circuit or short to ground or short to power in harness or connectors.

3. CHECK COOLING FAN MOTORS CIRCUIT

1. Disconnect cooling fan motor-1 harness connector and cooling fan motor-2 harness connector.
2. Check harness continuity between cooling fan motor-1 terminal 1 and IPDM E/R terminal 7, cooling fan motor-1 terminal 4 and body ground.
   Refer to wiring diagram.

Continuity should exist.

3. Also check harness for short to ground and short to power.
4. Check harness continuity between cooling fan motor-2 terminal 1 and IPDM E/R terminal 13, cooling fan motor-2 terminal 4 and body ground.
   Refer to wiring diagram.

Continuity should exist.

5. Also check harness for short to ground and short to power.

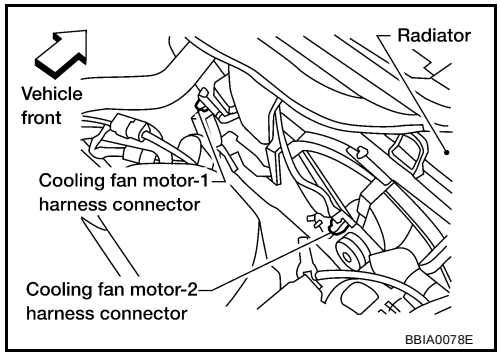

OK or NG

OK >> GO TO 4.
NG >> Repair open circuit or short to ground or short to power in harness or connectors.

4. CHECK COOLING FAN MOTORS

Refer to EC-454, "Component Inspection" .

OK or NG

OK >> GO TO 5.
NG >> Replace cooling fan motors.

5. CHECK INTERMITTENT INCIDENT

Perform EC-130, "TROUBLE DIAGNOSIS FOR INTERMITTENT INCIDENT" .

OK or NG

OK >> Replace IPDM E/R. Refer to PG-14, "IPDM E/R (INTELLIGENT POWER DISTRIBUTION MODULE ENGINE ROOM)" .

NG >> Repair or replace harness or connector.

PROCEDURE B

1. CHECK COOLING FAN MOTORS CIRCUIT

1. Turn ignition switch “OFF”.
2. Disconnect cooling fan motor-1 harness connector and cooling fan motor-2 harness connector.
3. Check harness continuity between the following;
   cooling fan motor-1 terminal 2 and IPDM E/R terminal 5,
   cooling fan motor-1 terminal 3 and IPDM E/R terminal 15,
   IPDM E/R terminal 14 and body ground.
   Refer to wiring diagram.

   Continuity should exist.

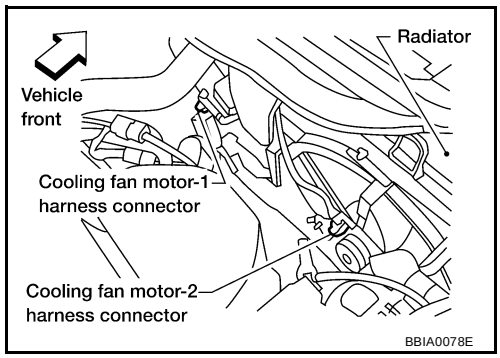

4. Also check harness for short to ground and short to power.
5. Check harness continuity between the following;
   cooling fan motor-2 terminal 2 and IPDM E/R terminal 10,
   cooling fan motor-2 terminal 3 and IPDM E/R terminal 12,
   IPDM E/R terminal 14 and body ground.
   Refer to wiring diagram.

   Continuity should exist.

6. Also check harness for short to ground and short to power.

OK or NG

OK >> GO TO 2.
NG >> Repair open circuit or short to ground or short to power in harness or connectors.

2. CHECK COOLING FAN MOTORS

Refer to EC-454, "Component Inspection" .

OK or NG

OK >> GO TO 3.
NG >> Replace cooling fan motors.

3. CHECK INTERMITTENT INCIDENT

Perform EC-130, "TROUBLE DIAGNOSIS FOR INTERMITTENT INCIDENT" .

OK or NG

OK >> Replace IPDM E/R. Refer to PG-14, "IPDM E/R (INTELLIGENT POWER DISTRIBUTION MODULE ENGINE ROOM)" .
NG >> Repair or replace harness connectors.

Main 12 Causes of Overheating

UBS002ZO

Engine	Step	Inspection item	Equipment	Standard	Reference page
OFF	1	● Blocked radiator ● Blocked condenser ● Blocked radiator grille ● Blocked bumper	● Visual	No blocking	—
	2	● Coolant mixture	● Coolant tester	50 - 50% coolant mixture	See MA-13, "ANTI-FREEZE COOLANT MIXTURE RATIO" .
	3	● Coolant level	● Visual	Coolant up to MAX level in reservoir tank and radiator filler neck	See MA-14, "Changing Engine Coolant" .
	4	● Radiator cap	● Pressure tester	59 - 98 kPa (0.6 - 1.0 kg/cm^2 , 9 - 14 psi) (Limit)	See CO-11, "CHECKING RADIATOR CAP" .

Engine	Step	Inspection item	Equipment	Standard	Reference page
ON*2	5	● Coolant leaks	● Visual	No leaks	See CO-10, "CHECKING COOLING SYSTEM FOR LEAKS" .
ON*2	6	● Thermostat	● Touch the upper and lower radiator hoses	Both hoses should be hot	See CO-20, "THERMO-STAT AND THERMO-STAT HOUSING" , and CO-12, "RADIATOR" .
ON*1	7	● Cooling fan	● CONSULT-II	Operating	See trouble diagnosis for DTC P1217 (EC-444).
OFF	8	● Combustion gas leak	● Color checker chemical tester 4 Gas analyzer	Negative	—
ON*3	9	● Coolant temperature gauge	● Visual	Gauge less than 3/4 when driving	—
		● Coolant overflow to reservoir tank	● Visual	No overflow during driving and idling	See MA-14, "Changing Engine Coolant" .
OFF*4	10	● Coolant return from reservoir tank to radia-tor	● Visual	Should be initial level in reservoir tank	See CO-10, "CHECKING RESERVOIR LEVEL" .
OFF	11	● Cylinder head	● Straight gauge feeler gauge	0.1 mm (0.004 in) Maxi-mum distortion (warping)	See EM-53, "CYLINDER HEAD" .
	12	● Cylinder block and pis-tons	● Visual	No scuffing on cylinder walls or piston	See EM-53, "CYLINDER HEAD" .

*1: Turn the ignition switch ON.
*2: Engine running at 3,000 rpm for 10 minutes.
*3: Drive at 90 km/h (55 MPH) for 30 minutes and then let idle for 10 minutes.
*4: After 60 minutes of cool down time.
For more information, refer to CO-7, "OVERHEATING CAUSE ANALYSIS" .

Component Inspection

UBS002ZP

COOLING FAN MOTORS-1 AND -2

1. Disconnect cooling fan motor harness connectors.
2. Supply cooling fan motor terminals with battery voltage and check operation.

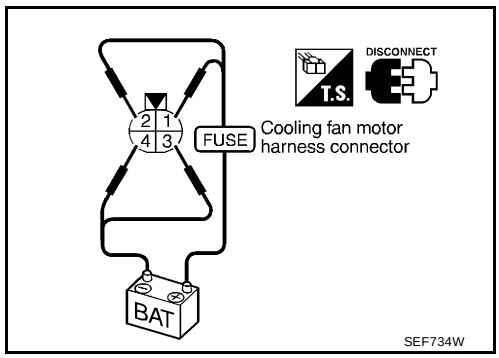

	Speed	Terminals	
		(+)	(–)
Cooling fan motor	Low	1	4
	High	1, 2	3, 4

Cooling fan motor should operate.
If NG, replace cooling fan motor.

DTC P1223, P1224 TP SENSOR

PFP:16119

Component Description

UBS002ZQ

Electric Throttle Control Actuator consists of throttle control motor, throttle position sensor, etc. The throttle position sensor responds to the throttle valve movement.
The throttle position sensor has the two sensors. These sensors are a kind of potentiometers which transform the throttle valve position into output voltage, and emit the voltage signal to the ECM. In addition, these sensors detect the opening and closing speed of the throttle valve and feed the voltage signals to the ECM. The ECM judges the current opening angle of the throttle valve from these signals and the ECM controls the throttle control motor to make the throttle valve opening angle properly in response to driving condition.

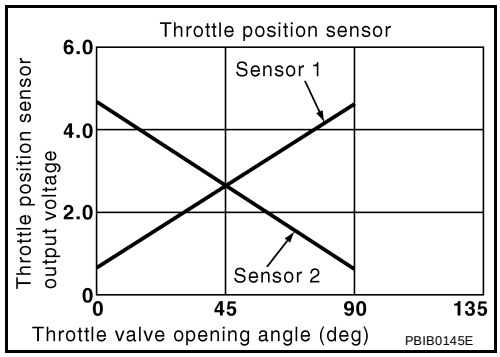

CONSULT-II Reference Value in Data Monitor Mode

UBS002ZR

Specification data are reference values.

MONITOR ITEM	CONDITION		SPECIFICATION
THRTL SEN2	● Ignition switch: ON (Engine stopped) ● Shift lever: D (A/T model) 1st (M/T model)	Accelerator pedal: Fully released	More than 0.36V
		Accelerator pedal: Fully depressed	Less than 4.75V

On Board Diagnosis Logic

UBS002ZS

These self-diagnoses have the one trip detection logic.

DTC No.	Trouble diagnosis name	DTC detecting condition	Possible cause
P1223 1223	Throttle position sensor 2 circuit low input	An excessively low voltage from the TP sensor 2 is sent to ECM.	● Harness or connectors (The TP sensor 2 circuit is open or shorted.) ● Electric throttle control actuator (TP sensor 2)
P1224 1224	Throttle position sensor 2 circuit high input	An excessively high voltage from the TP sensor 2 is sent to ECM.	

FAIL-SAFE MODE

When the malfunction is detected, the ECM enters in fail-safe mode and the MIL lights up.

Engine operation condition in fail-safe mode
The ECM controls the electric throttle control actuator in regulating the throttle opening in order for the idle position to be within +10 degrees. The ECM regulates an opening speed of approx. 5 seconds to an opening of 10 degrees. So, the acceleration will be poor.

DTC Confirmation Procedure

UBS002ZT

NOTE:
If “DTC Confirmation Procedure” has been previously conducted, always turn ignition switch “OFF” and wait at least 10 seconds before conducting the next test.
TESTING CONDITION:
Before performing the following procedure, confirm that battery voltage is more than 10V at idle.

WITH CONSULT-II

1. Turn ignition switch “ON”.

2. Select "DATA MONITOR" mode with CONSULT-II.
3. Start engine and let it idle for 1 second.
4. If DTC is detected, go to EC-458, "Diagnostic Procedure" .

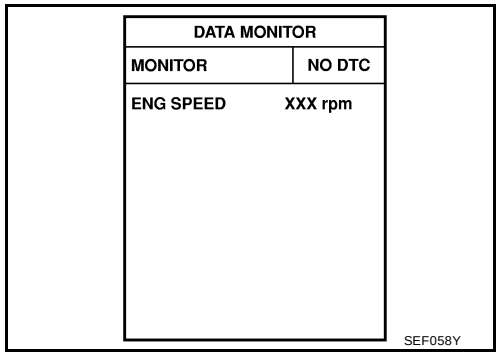

WITH GST

Follow the procedure “WITH CONSULT-II” above.

Wiring Diagram

UBS002ZU

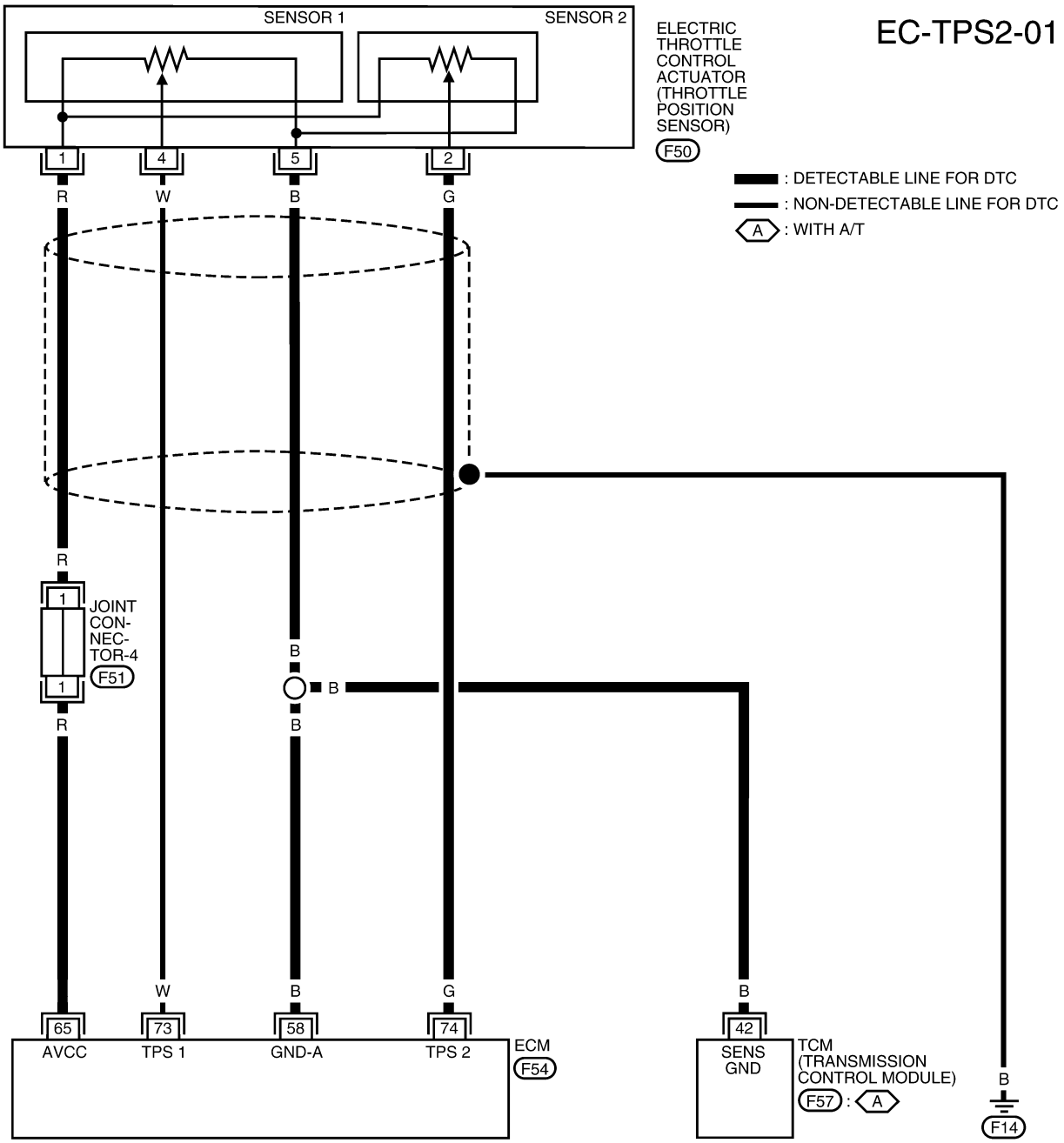

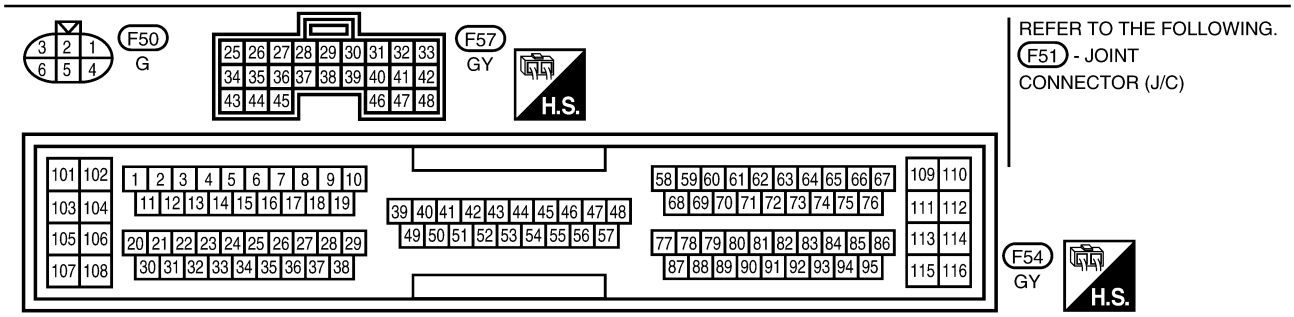

WBWA0002E

Specification data are reference values and are measured between each terminal and ground.

CAUTION:
Do not use ECM ground terminals when measuring input/output voltage. Doing so may result in damage to the ECM's transistor. Use a ground other than ECM terminals, such as the ground.

TERMINAL NO.	WIRE COLOR	ITEM	CONDITION	DATA (DC Voltage)
58	B	Sensors' ground	**[Engine is running]** ● **Warm-up condition** ● Idle speed	Approximately 0V
65	R	Sensor's power supply	**[Ignition switch “ON”]**	Approximately 5V
73	W	Throttle position sensor 1	**[Ignition switch "ON"]** ● Shift lever position is "D" (A/T model) ● Shift lever position is "1st" (M/T model) ● Accelerator pedal fully released	More than 0.36V
			[Ignition switch “ON”] ● Shift lever position is "D" (A/T model) ● Shift lever position is "1st" (M/T model) ● Accelerator pedal fully depressed	Less than 4.75V
74	G	Throttle position sensor 2	**[Ignition switch "ON"]** ● Shift lever position is "D" (A/T model) ● Shift lever position is "1st" (M/T model) ● Accelerator pedal fully released	Less than 4.75V
			[Ignition switch “ON”] ● Shift lever position is "D" (A/T model) ● Shift lever position is "1st" (M/T model) ● Accelerator pedal fully depressed	More than 0.36V

Diagnostic Procedure

UBS002ZV

1. RETIGHTEN GROUND SCREWS

1. Turn ignition switch “OFF”.
2. Loosen and retighten engine ground screws.

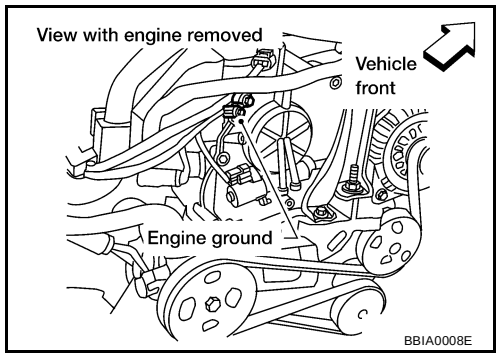

>> GO TO 2.

2. CHECK THROTTLE POSITION SENSOR 2 POWER SUPPLY CIRCUIT

1. Disconnect electric throttle control actuator harness connector.
2. Turn ignition switch “ON”.

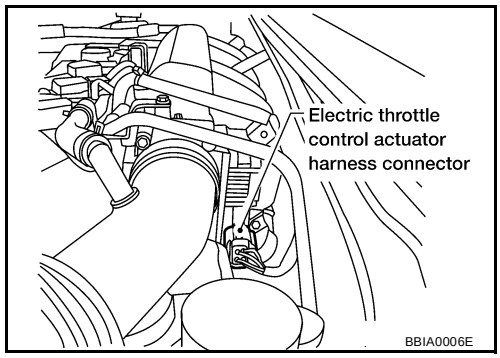

3. Check voltage between electric throttle control actuator terminal 1 and ground with CONSULT-II or tester.

Voltage: Approximately 5V

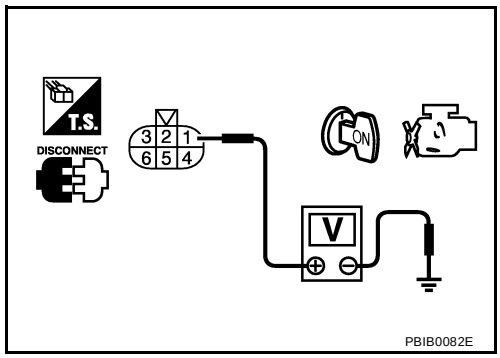

OK or NG

OK >> GO TO 4.
NG >> GO TO 3.

3. DETECT MALFUNCTIONING PART

Check the following.

- Joint connector-4
- Harness for open or short between electric throttle control actuator and ECM

>> Repair open circuit or short to ground or short to power in harness or connectors.

4. CHECK THROTTLE POSITION SENSOR 2 GROUND CIRCUIT FOR OPEN AND SHORT

1. Turn ignition switch “OFF”.
2. Check harness continuity between electric throttle control actuator terminal 5 and engine ground. Refer to Wiring Diagram.

Continuity should exist.

3. Also check harness for short to ground and short to power.

OK or NG

OK >> GO TO 6.
NG >> GO TO 5.

5. DETECT MALFUNCTIONING PART

Check the following.

- Harness for open or short between electric throttle control actuator and ECM
- Harness for open or short between electric throttle control actuator and TCM

>> Repair open circuit or short to ground or short to power in harness or connectors.

6. CHECK THROTTLE POSITION SENSOR 2 INPUT SIGNAL CIRCUIT FOR OPEN AND SHORT

1. Disconnect ECM harness connector.
2. Check harness continuity between ECM terminal 74 and electric throttle control actuator terminal 2. Refer to Wiring Diagram.

Continuity should exist.

3. Also check harness for short to ground and short to power.

OK or NG

OK >> GO TO 7.
NG >> Repair open circuit or short to ground or short to power in harness or connectors.

7. CHECK THROTTLE POSITION SENSOR

Refer to EC-460, "Component Inspection" .

OK or NG

OK >> GO TO 9.
NG >> GO TO 8.

8. REPLACE ELECTRIC THROTTLE CONTROL ACTUATOR

1. Replace the electric throttle control actuator.
2. Perform EC-49, "Throttle Valve Closed Position Learning" .
3. Perform EC-49, "Idle Air Volume Learning" .

>> **INSPECTION END**

9. CHECK INTERMITTENT INCIDENT

Refer to EC-130, "TROUBLE DIAGNOSIS FOR INTERMITTENT INCIDENT" .

>> **INSPECTION END**

Component Inspection

UBS002ZW

THROTTLE POSITION SENSOR

1. Reconnect all harness connectors disconnected.
2. Perform EC-49, "Throttle Valve Closed Position Learning" .
3. Turn ignition switch "ON".
4. Set selector lever to "D" position (A/T models) or "1st" position (M/T models).
5. Check voltage between ECM terminals 73 (TP sensor 1), 74 (TP sensor 2) and engine ground under the following conditions.

Terminal	Accelerator pedal	Voltage
73 (Throttle position sensor 1)	Fully released	More than 0.36V
	Fully depressed	Less than 4.75V
74 (Throttle position sensor 2)	Fully released	Less than 4.75V
	Fully depressed	More than 0.36V

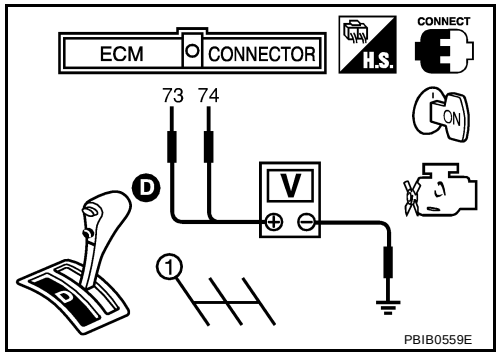

6. If NG, replace electric throttle control actuator and go to the next step.
7. Perform EC-49, "Throttle Valve Closed Position Learning" .
8. Perform EC-49, "Idle Air Volume Learning" .

Remove and Installation

UBS002ZX

ELECTRIC THROTTLE CONTROL ACTUATOR

Refer to EM-16, "INTAKE MANIFOLD" .

DTC P1225 TP SENSOR

PFP:16119

Component Description

UBS002ZY

Electric Throttle Control Actuator consists of throttle control motor, throttle position sensor, etc. The throttle position sensor responds to the throttle valve movement.
The throttle position sensor has the two sensors. These sensors are a kind of potentiometers which transform the throttle valve position into output voltage, and emit the voltage signal to the ECM. In addition, these sensors detect the opening and closing speed of the throttle valve and feed the voltage signals to the ECM. The ECM judges the current opening angle of the throttle valve from these signals and the ECM controls the throttle control motor to make the throttle valve opening angle properly in response to driving condition.

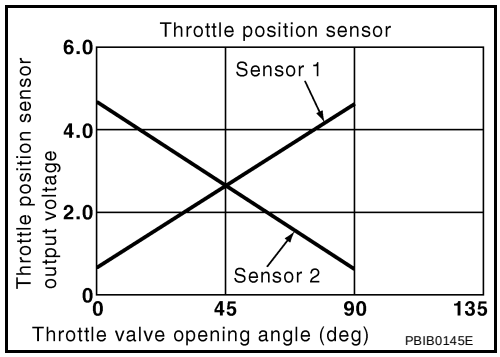

On Board Diagnosis Logic

UBS002ZZ

DTC No.	Trouble diagnosis name	DTC detecting condition	Possible cause
P1225 1225	Closed throttle position learning performance problem	Closed throttle position learning value is excessively low.	● Electric throttle control actuator (TP sensor 1 and 2)

DTC Confirmation Procedure

UBS00300

NOTE:
If “DTC Confirmation Procedure” has been previously conducted, always turn ignition switch “OFF” and wait at least 10 seconds before conducting the next test.
TESTING CONDITION:
Before performing the following procedure, confirm that battery voltage is more than 10V at idle.

WITH CONSULT-II

1. Turn ignition switch “ON”.
2. Select “DATA MONITOR” mode with CONSULT-II.
3. Turn ignition switch "OFF", wait at least 10 seconds.
4. Turn ignition switch "ON".
5. If 1st trip DTC is detected, go to EC-462, "Diagnostic Procedure"
.

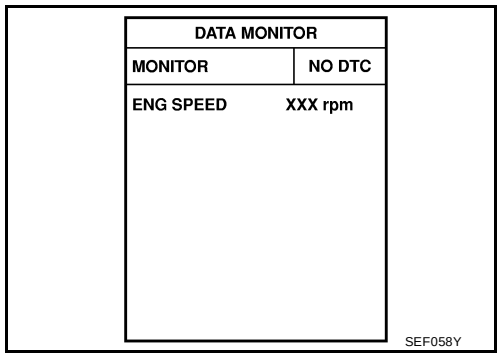

WITH GST

Follow the procedure “With CONSULT-II” above.

Diagnostic Procedure

UBS00301

1. CHECK ELECTRIC THROTTLE CONTROL ACTUATOR VISUALLY

1. Turn ignition switch “OFF”.
2. Remove the intake air duct.
3. Check if foreign matter is caught between the throttle valve and the housing.

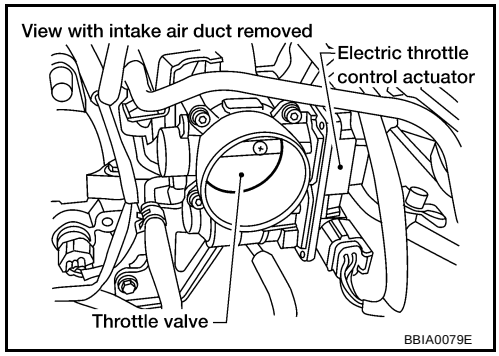

OK or NG

OK >> GO TO 2.
NG >> Remove the foreign matter and clean the electric throttle control actuator inside.

2. REPLACE ELECTRIC THROTTLE CONTROL ACTUATOR

1. Replace the electric throttle control actuator.
2. Perform EC-49, "Throttle Valve Closed Position Learning" .
3. Perform EC-49, "Idle Air Volume Learning" .

>> **INSPECTION END**

Remove and Installation

UBS00302

ELECTRIC THROTTLE CONTROL ACTUATOR

Refer to EM-16, "INTAKE MANIFOLD" .

DTC P1226 TP SENSOR

PFP:16119

Component Description

UBS00303

Electric Throttle Control Actuator consists of throttle control motor, throttle position sensor, etc. The throttle position sensor responds to the throttle valve movement.
The throttle position sensor has the two sensors. These sensors are a kind of potentiometers which transform the throttle valve position into output voltage, and emit the voltage signal to the ECM. In addition, these sensors detect the opening and closing speed of the throttle valve and feed the voltage signals to the ECM. The ECM judges the current opening angle of the throttle valve from these signals and the ECM controls the throttle control motor to make the throttle valve opening angle properly in response to driving condition.

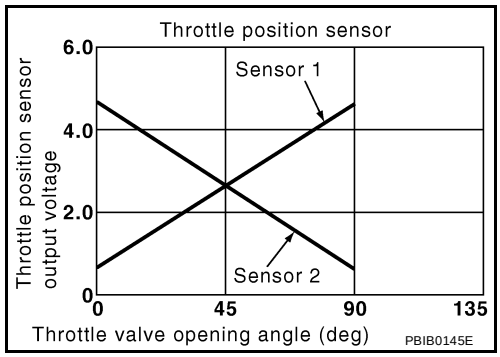

On Board Diagnosis Logic

UBS00304

DTC No.	Trouble diagnosis name	DTC detecting condition	Possible cause
P1226 1226	Closed throttle position learning performance problem	Closed throttle position learning is not performed successfully, repeatedly.	● Electric throttle control actuator (TP sensor 1 and 2)

DTC Confirmation Procedure

UBS00305

NOTE:
If “DTC Confirmation Procedure” has been previously conducted, always turn ignition switch “OFF” and wait at least 10 seconds before conducting the next test.
TESTING CONDITION:
Before performing the following procedure, confirm that battery voltage is more than 10V at idle.

WITH CONSULT-II

1. Turn ignition switch "ON".
2. Select "DATA MONITOR" mode with CONSULT-II.
3. Turn ignition switch “OFF”, wait at least 10 seconds.
4. Turn ignition switch "ON".
5. Repeat steps 3 and 4, 32 times.
6. If 1st trip DTC is detected, go to EC-464, "Diagnostic Procedure"
.

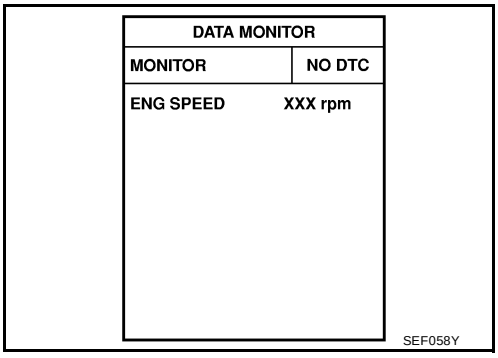

WITH GST

Follow the procedure “With CONSULT-II” above.

Diagnostic Procedure

UBS00306

1. CHECK ELECTRIC THROTTLE CONTROL ACTUATOR VISUALLY

1. Turn ignition switch “OFF”.
2. Remove the intake air duct.
3. Check if foreign matter is caught between the throttle valve and the housing.

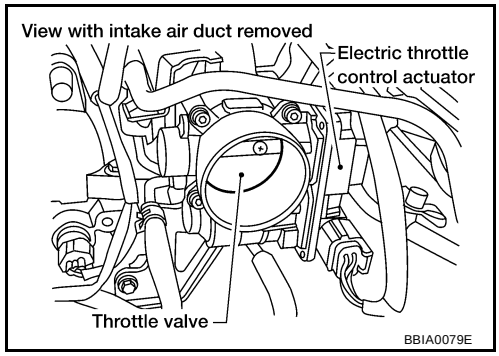

OK or NG

OK >> GO TO 2.
NG >> Remove the foreign matter and clean the electric throttle control actuator inside.

2. REPLACE ELECTRIC THROTTLE CONTROL ACTUATOR

1. Replace the electric throttle control actuator.
2. Perform EC-49, "Throttle Valve Closed Position Learning" .
3. Perform EC-49, "Idle Air Volume Learning" .

>> **INSPECTION END**

Remove and Installation

UBS00307

ELECTRIC THROTTLE CONTROL ACTUATOR

Refer to EM-16, "INTAKE MANIFOLD" .

DTC P1227, P1228 APP SENSOR

PFP:18002

Component Description

UBS00308

The accelerator pedal position sensor is installed on the upper end of the accelerator pedal assembly. The sensor detects the accelerator position and sends a signal to the ECM.
Accelerator pedal position sensor has two sensors. These sensors are a kind of potentiometers which transform the accelerator pedal position into output voltage, and emit the voltage signal to the ECM. In addition, these sensors detect the opening and closing speed of the accelerator pedal and feed the voltage signals to the ECM. The ECM judges the current opening angle of the accelerator pedal from these signals and controls the throttle control motor based on these signals.

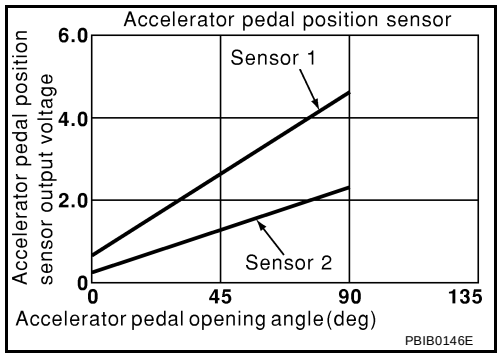

Idle position of the accelerator pedal is determined by the ECM receiving the signal from the accelerator pedal position sensor. The ECM uses this signal for the engine operation such as fuel cut.

CONSULT-II Reference Value in Data Monitor Mode

UBS00309

Specification data are reference values.

MONITOR ITEM	CONDITION		SPECIFICATION
ACCEL SEN2	● Ignition switch: ON (engine stopped)	Accelerator pedal: Fully released	0.41 - 0.71V
		Accelerator pedal: Fully depressed	More than 4.2V
CLSD THL POS	● Ignition switch: ON	Accelerator pedal: Fully released	ON
		Accelerator pedal: Slightly depressed	OFF

On Board Diagnosis Logic

UBS0030A

These half-diagnoses have the one trip detection logic.

DTC No.	Trouble diagnosis name	DTC detecting condition	Possible cause
P1227 1227	Accelerator pedal position sensor 2 circuit low input	An excessively low voltage from the APP sensor 2 is sent to ECM.	● Harness or connectors (The APP sensor 2 circuit is open or shorted.) ● Accelerator pedal position sensor (Accelerator pedal position sensor 2)
P1228 1228	Accelerator pedal position sensor 2 circuit high input	An excessively high voltage from the APP sensor 2 is sent to ECM.	

FAIL-SAFE MODE

When the malfunction is detected, the ECM enters in fail-safe mode and the MIL lights up.

Engine operating condition in fail-safe mode
The ECM controls the electric throttle control actuator in regulating the throttle opening in order for the idle position to be within +10 degrees. The ECM regulates an opening speed of approx. 5 seconds to an opening of 10 degrees. So, the acceleration will be poor.

DTC Confirmation Procedure

UBS0030B

NOTE:
If “DTC Confirmation Procedure” has been previously conducted, always turn ignition switch “OFF” and wait at least 10 seconds before conducting the next test.
TESTING CONDITION:
Before performing the following procedure, confirm that battery voltage is more than 10V at idle.

WITH CONSULT-II

1. Turn ignition switch “ON”.

2. Select “DATA MONITOR” mode with CONSULT-II.
3. Start engine and let it idle for 1 second.
4. If DTC is detected, go to EC-468, "Diagnostic Procedure" .

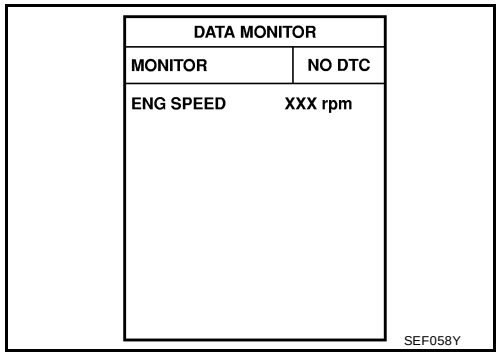

WITH GST

Follow the procedure “WITH CONSULT-II” above.

Wiring Diagram

UBS0030C

EC-APPS2-01

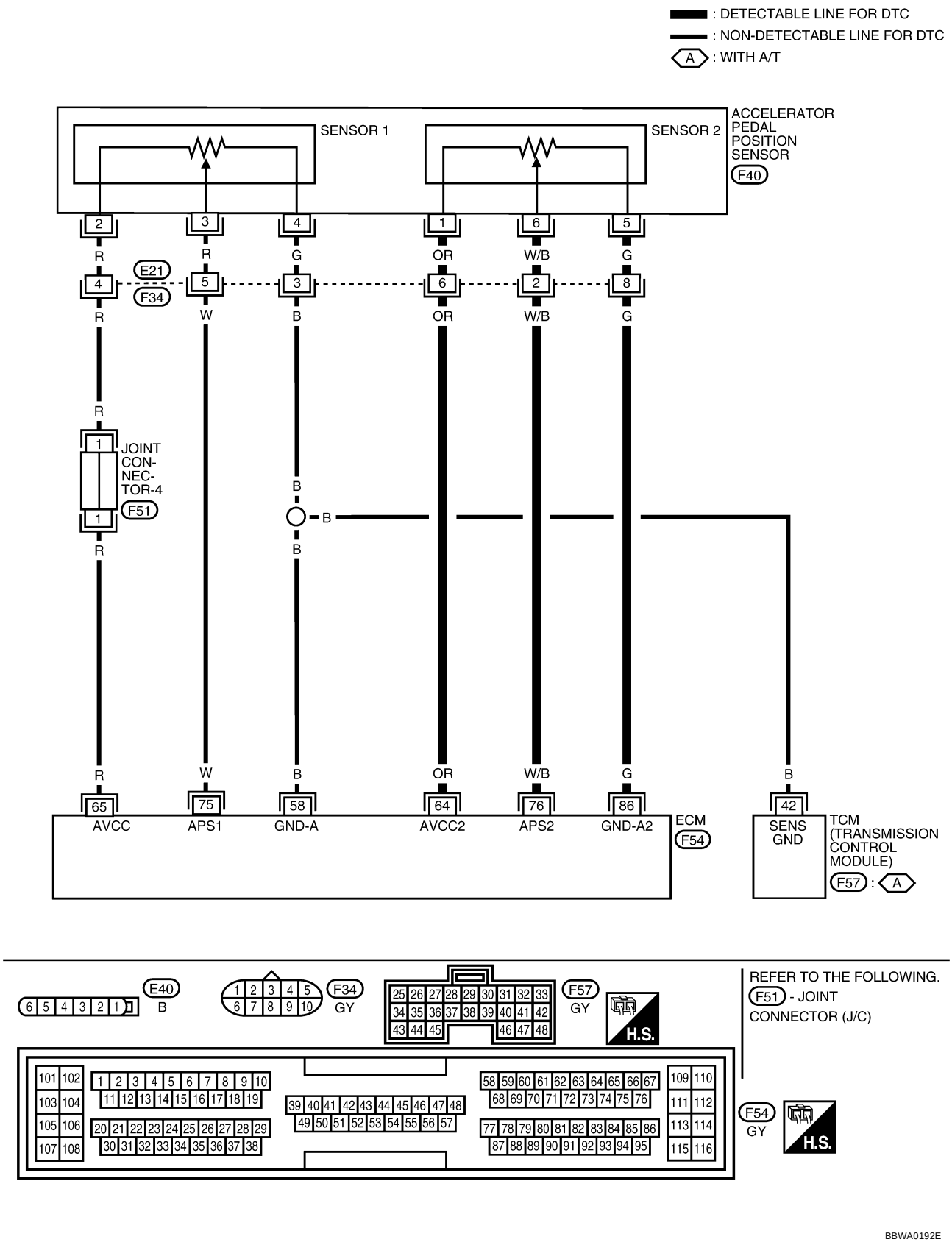

Specification data are reference values and are measured between each terminal and ground.

CAUTION:
Do not use ECM ground terminals when measuring input/output voltage. Doing so may result in damage to the ECM's transistor. Use a ground other than ECM terminals, such as the ground.

TERMINAL NO.	WIRE COLOR	ITEM	CONDITION	DATA (DC Voltage)
58	B	Sensors' ground	**[Engine is running]** ● **Warm-up condition** ● Idle speed	Approximately 0V
64	OR	Accelerator pedal position sensor 2 power supply	**[Ignition switch “ON”]**	Approximately 2.5V
65	R	Sensor's power supply	**[Ignition switch “ON”]**	Approximately 5V
75	W	Accelerator pedal position sensor 1	**[Ignition switch "ON"]** ● Accelerator pedal fully released	0.41 - 0.71V
			[Ignition switch "ON"] ● Accelerator pedal fully depressed	More than 4.2V
76	W/B	Accelerator pedal position sensor 2	**[Ignition switch "ON"]** ● Accelerator pedal fully released	0.21 - 0.36V
			[Ignition switch "ON"] ● Accelerator pedal fully depressed	More than 2.1V
86	G	Accelerator pedal position sensor 2 ground	**[Ignition switch “ON”]**	Approximately 0V

Diagnostic Procedure

UBS0030D

1. RETIGHTEN GROUND SCREWS

1. Turn ignition switch “OFF”.
2. Loosen and retighten engine ground screws.

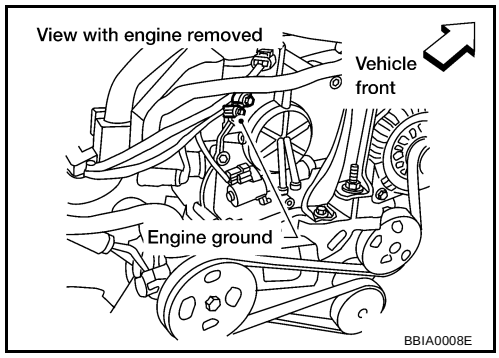

>> GO TO 2.

2. CHECK APP SENSOR 2 POWER SUPPLY CIRCUIT

1. Disconnect accelerator pedal position (APP) sensor harness connector.
2. Turn ignition switch “ON”.

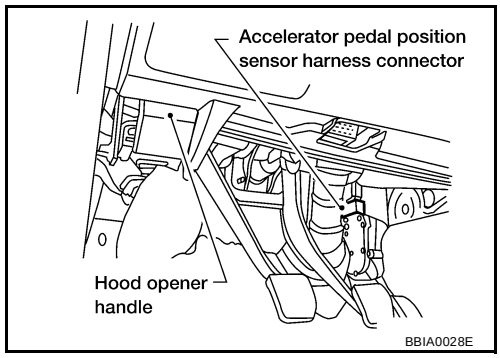

3. Check voltage between APP sensor terminal 1 and ground with CONSULT-II or tester.

Voltage: Approximately 2.5V

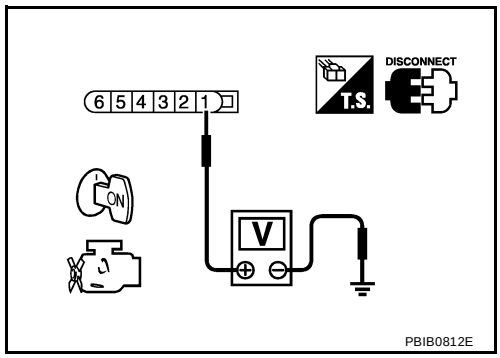

OK or NG

OK >> GO TO 4.
NG >> GO TO 3.

3. DETECT MALFUNCTIONING PART

Check the following.

- Harness connectors E21, F34
- Harness for open or short between ECM and accelerator pedal position sensor

>> Repair open circuit or short to ground or short to power in harness or connectors.

4. CHECK APP SENSOR 2 GROUND CIRCUIT FOR OPEN AND SHORT

1. Turn ignition switch “OFF”.
2. Check harness continuity between APP sensor terminal 5 and engine ground. Refer to Wiring Diagram.

Continuity should exist.

3. Also check harness for short to ground and short to power.

OK or NG

OK >> GO TO 6.
NG >> GO TO 5.

5. DETECT MALFUNCTIONING PART

Check the following.

- Harness connectors E21, F34
- Harness for open or short between ECM and accelerator pedal position sensor

>> Repair open circuit or short to ground or short to power in harness or connectors.

6. CHECK APP SENSOR 2 INPUT SIGNAL CIRCUIT FOR OPEN AND SHORT

1. Disconnect ECM harness connector.
2. Check harness continuity between ECM terminal 76 and APP sensor terminal 6.
   Refer to Wiring Diagram.

   Continuity should exist.

3. Also check harness for short to ground and short to power.

OK or NG

OK >> GO TO 8.
NG >> GO TO 7.

7. DETECT MALFUNCTIONING PART

Check the following.

- Harness connectors E21, F34
- Harness for open or short between ECM and accelerator pedal position sensor

>> Repair open circuit or short to ground or short to power in harness or connectors.

8. CHECK APP SENSOR

Refer to EC-470, "Component Inspection" .

OK or NG

OK >> GO TO 9.
NG >> Replace accelerator pedal assembly.

9. CHECK INTERMITTENT INCIDENT

Refer to EC-130, "TROUBLE DIAGNOSIS FOR INTERMITTENT INCIDENT" .

>> **INSPECTION END**

Component Inspection

UBS0030E

ACCELERATOR PEDAL POSITION SENSOR

1. Reconnect all harness connectors disconnected.
2. Turn ignition switch "ON".
3. Check voltage between ECM terminals 75 (APP sensor 1 signal), 76 (APP sensor 2 signal) and engine ground under the following conditions.

Terminal	Accelerator pedal	Voltage
75 (Accelerator pedal position sensor 1)	Fully released	0.41 - 0.71V
	Fully depressed	More than 4.2V
76 (Accelerator pedal position sensor 2)	Fully released	0.21 - 0.36V
	Fully depressed	More than 2.1V

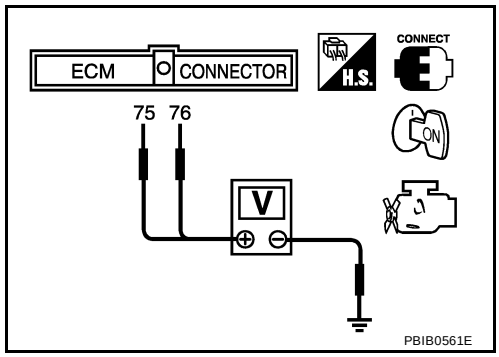

4. If NG, replace accelerator pedal assembly.

Remove and Installation

UBS0030F

ACCELERATOR PEDAL

Refer to ACC-2, "ACCELERATOR CONTROL SYSTEM" .

DTC P1229 SENSOR POWER SUPPLY

PFP:16119

On Board Diagnosis Logic

UBS0030G

This self-diagnosis has the one trip detection logic.

DTC No.	Trouble diagnosis name	DTC detecting condition	Possible cause
P1229 1229	Sensor power supply circuit short	ECM detects a voltage of power source for sensor is excessively low or high.	● Harness or connectors (The TP sensor 1 and 2 circuit is shorted.) (APP sensor 1 circuit is shorted.) (MAF sensor circuit is shorted.) (EVAP control system pressure sensor circuit is shorted.) (Refrigerant pressure sensor circuit is shorted.) ● Electric throttle control actuator (TP sensor 1 and 2) ● Accelerator pedal position sensor (APP sensor 1) ● MAF sensor ● EVAP control system pressure sensor ● Refrigerant pressures sensor ● ECM pin terminal

FAIL-SAFE MODE

When the malfunction is detected, the ECM enters in fail-safe mode and the MIL lights up.

Engine operation condition in fail-safe mode
ECM stops the electric throttle control actuator control, throttle valve is maintained at a fixed opening (approx. 5 degrees) by the return spring.

DTC Confirmation Procedure

UBS0030H

NOTE:
If “DTC Confirmation Procedure” has been previously conducted, always turn ignition switch “OFF” and wait at least 10 seconds before conducting the next test.
TESTING CONDITION:
Before performing the following procedure, confirm that battery voltage is more than 10V at idle.

WITH CONSULT-II

1. Turn ignition switch “ON”.
2. Select "DATA MONITOR" mode with CONSULT-II.
3. Start engine and let it idle for 1 second.
4. If DTC is detected, go to EC-473, "Diagnostic Procedure" .

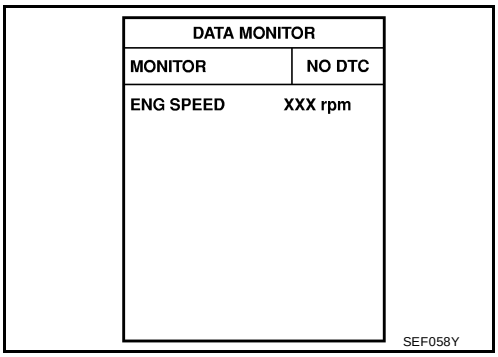

WITH GST

Follow the procedure “WITH CONSULT-II” above.

Wiring Diagram

UBS0030I

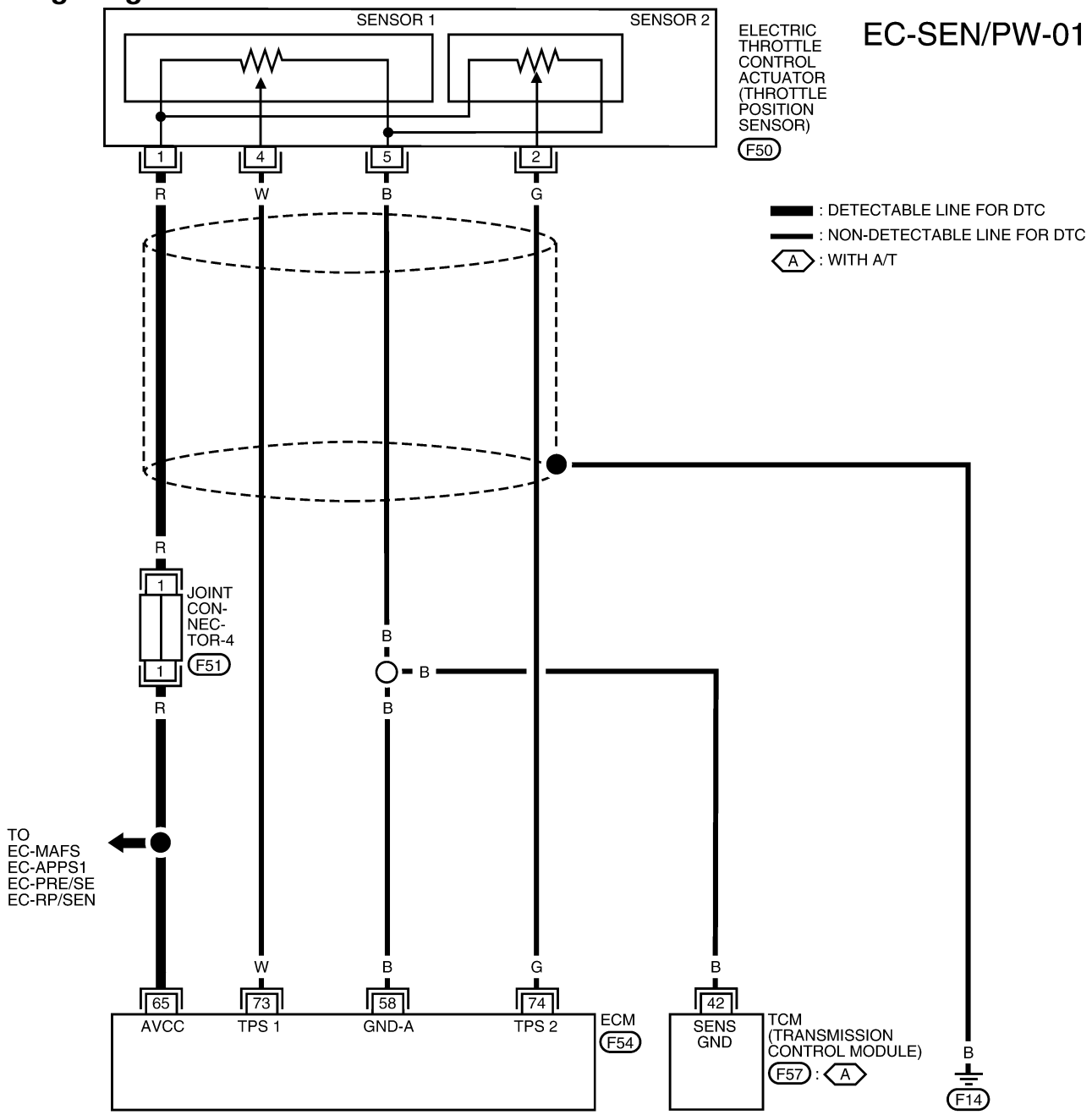

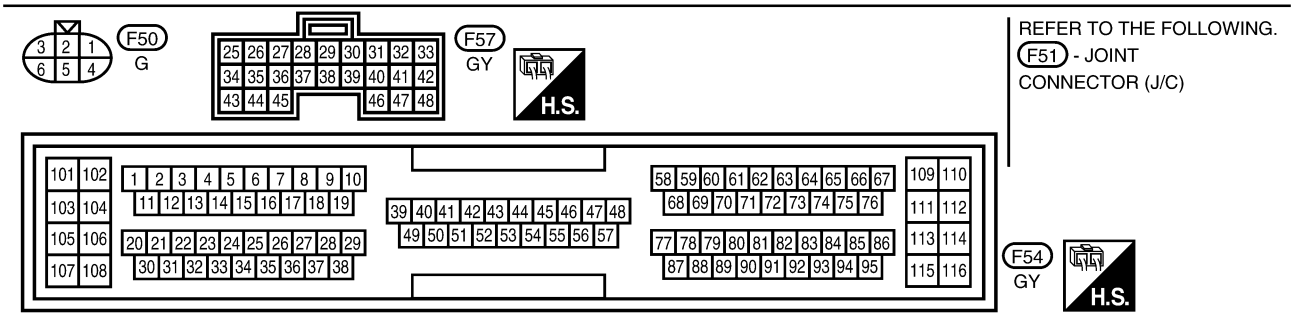

WBWA0003E

Specification data are reference values and are measured between each terminal and ground.

CAUTION:
Do not use ECM ground terminals when measuring input/output voltage. Doing so may result in damage to the ECM's transistor. Use a ground other than ECM terminals, such as the ground.

TERMINAL NO.	WIRE COLOR	ITEM	CONDITION	DATA (DC Voltage)
65	R	Sensor's power supply	**[Ignition switch "ON"]**	Approximately 5V

Diagnostic Procedure

UBS0030J

1. RETIGHTEN GROUND SCREWS

1. Turn ignition switch "OFF".
2. Loosen and retighten engine ground screws.

>> GO TO 2.

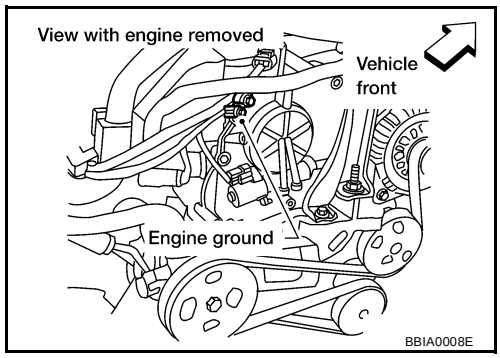

2. CHECK THROTTLE POSITION SENSOR POWER SUPPLY CIRCUIT

1. Disconnect electric throttle control actuator harness connector.
2. Turn ignition switch "ON".

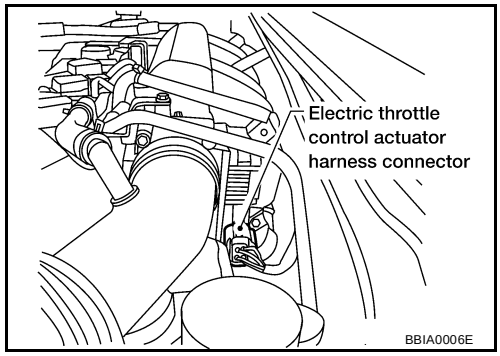

3. Check voltage between electric throttle control actuator terminal 1 and ground with CONSULT-II or tester.

Voltage: Approximately 5V

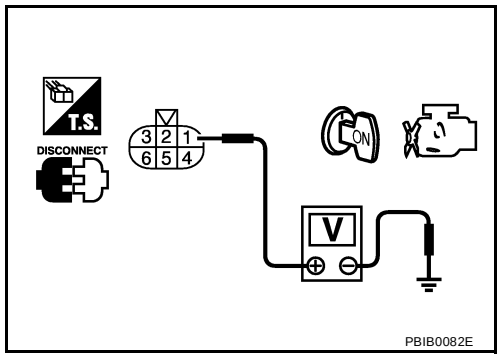

OK or NG

OK >> GO TO 5.
NG >> GO TO 3.

3. CHECK SENSOR POWER SUPPLY CIRCUITS FOR SHORT

Check the following.

- Harness for short to power and short to ground, between the following terminals.

ECM terminal	Sensor terminals	Reference Wiring Diagram
65	Electric throttle control actuator terminal 1	EC-252
	APP sensor terminal 2	EC-265
	MAF sensor terminal 2	EC-157
	EVAP control system pressure sensor terminal 1	EC-330
	Refrigerant pressure sensor terminal 1	EC-597

- Joint connector-4
- ECM pin terminal.

OK or NG

OK >> GO TO 4.
NG >> Repair short to ground or short to power in harness or connectors.

4. CHECK COMPONENTS

Check the following.

- Accelerator pedal position sensor (Refer to EC-268, "Component Inspection" .)
- Mass air flow sensor (Refer to EC-160, "Component Inspection" .)
- EVAP control system pressure sensor (Refer to EC-333, "Component Inspection" .)
- Refrigerant pressure sensor (Refer to EC-596, "REFRIGERANT PRESSURE SENSOR" .)

OK or NG

OK >> GO TO 7.
NG >> Replace malfunctioning component.

5. CHECK THROTTLE POSITION SENSOR

Refer to EC-255, "Component Inspection" .

OK or NG

OK >> GO TO 7.
NG >> GO TO 6.

6. REPLACE ELECTRIC THROTTLE CONTROL ACTUATOR

1. Replace electric throttle control actuator.
2. Perform EC-49, "Throttle Valve Closed Position Learning" .
3. Perform EC-49, "Idle Air Volume Learning" .

>> **INSPECTION END**

7. CHECK INTERMITTENT INCIDENT

Refer to EC-130, "TROUBLE DIAGNOSIS FOR INTERMITTENT INCIDENT" .

>> **INSPECTION END**

DTC P1442 EVAP CONTROL SYSTEM

PFP:14950

On Board Diagnosis Logic

UBS0030K

NOTE:
If DTC P1442 is displayed with P1448, perform trouble diagnosis for DTC P1448 first. (See EC-491 .)
This diagnosis detects leaks in the EVAP purge line using of vapor pressure in the fuel tank.
The EVAP canister vent control valve is closed to shut the EVAP purge line. The vacuum cut valve bypass valve will then be opened to clear the line between the fuel tank and the EVAP canister purge volume control solenoid valve. The EVAP control system pressure sensor can now monitor the pressure inside the fuel tank. If pressure increases, the ECM will check for leaks in the line between the vacuum cut valve and EVAP canister purge volume control solenoid valve.

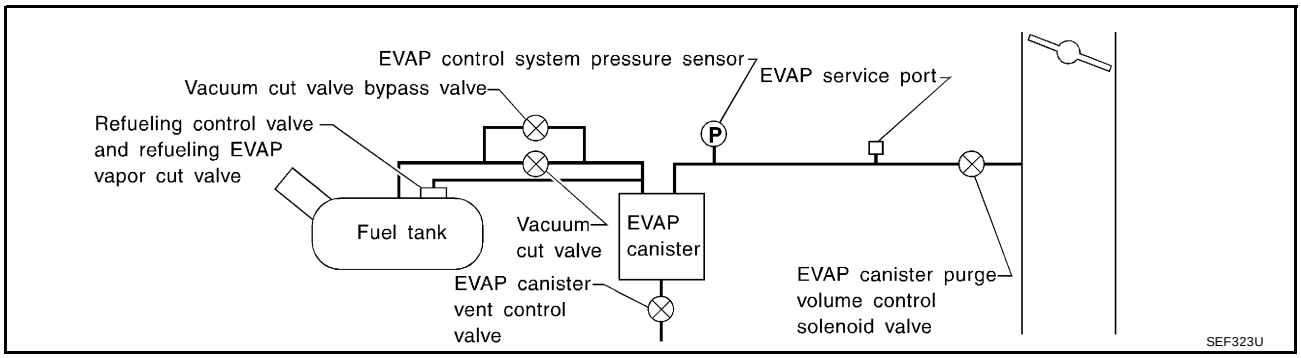

DTC No.	Trouble diagnosis name	DTC detecting condition	Possible cause
P1442 1442	EVAP control system small leak detected (positive pressure)	EVAP control system has a leak, EVAP control system does not operate properly.	● Incorrect fuel tank vacuum relief valve ● Incorrect fuel filler cap used ● Fuel filler cap remains open or fails to close. ● Foreign matter caught in fuel filler cap. ● Leak is in line between intake manifold and EVAP canister purge volume control solenoid valve. ● Foreign matter caught in EVAP canister vent control valve. ● EVAP canister or fuel tank leaks ● EVAP purge line (pipe and rubber tube) leaks ● EVAP purge line rubber tube bent ● Blocked or bent rubber tube to EVAP control system pressure sensor ● Loose or disconnected rubber tube ● EVAP canister vent control valve and the circuit ● EVAP canister purge volume control solenoid valve and the circuit ● Fuel tank temperature sensor ● O-ring of EVAP canister vent control valve is missing or damaged ● Water separator ● EVAP canister is saturated with water ● EVAP control system pressure sensor ● Fuel level sensor and the circuit ● Refueling control valve ● ORVR system leaks ● Foreign matter caught in EVAP canister purge volume control solenoid valve

CAUTION:

- **Use only a genuine NISSAN fuel filler cap as a replacement. If an incorrect fuel filler cap is used, the MIL may come on.**
- **If the fuel filler cap is not tightened properly, the MIL may come on.**
- **Use only a genuine NISSAN rubber tube as a replacement.**

DTC Confirmation Procedure

UBS0030L

Refer to "DTC P0442 EVAP CONTROL SYSTEM", EC-308 .

Diagnostic Procedure

UBS0030M

Refer to "DTC P0442 EVAP CONTROL SYSTEM", EC-309 .

DTC P1444 EVAP CANISTER PURGE VOLUME CONTROL SOLENOID VALVE

PFP:14920

Description

UBS0030N

SYSTEM DESCRIPTION

Sensor	Input Signal to ECM	ECM function	Actuator
Camshaft position sensor (PHASE) Crankshaft position sensor (POS)	Engine speed	EVAP canister purge flow control	EVAP canister purge volume control solenoid valve
Mass air flow sensor	Amount of intake air		
Engine coolant temperature sensor	Engine coolant temperature		
Ignition switch	Start signal		
Throttle position sensor	Throttle position		
Accelerator pedal position switch	Accelerator pedal position		
Heated oxygen sensors 1	Density of oxygen in exhaust gas (Mixture ratio feedback signal)		
Fuel tank temperature sensor	Fuel temperature in fuel tank		
Vehicle speed sensor (CAN communication line)	Vehicle speed		

This system controls flow rate of fuel vapor from the EVAP canister. The opening of the vapor by-pass passage in the EVAP canister purge volume control solenoid valve changes to control the flow rate. The EVAP canister purge volume control solenoid valve repeats ON/OFF operation according to the signal sent from the ECM. The opening of the valve varies for optimum engine control. The optimum value stored in the ECM is determined by considering various engine conditions. When the engine is operating, the flow rate of fuel vapor from the EVAP canister is regulated as the air flow changes.

COMPONENT DESCRIPTION

The EVAP canister purge volume control solenoid valve uses a ON/OFF duty to control the flow rate of fuel vapor from the EVAP canister. The EVAP canister purge volume control solenoid valve is moved by ON/OFF pulses from the ECM. The longer the ON pulse, the greater the amount of fuel vapor that will flow through the valve.

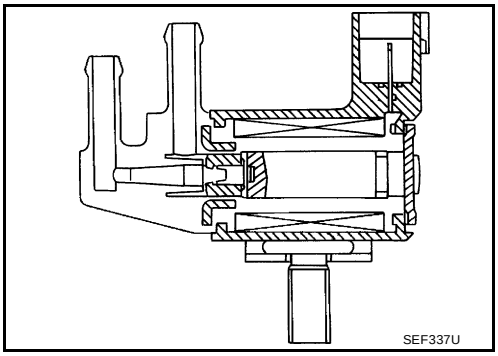

CONSULT-II Reference Value in Data Monitor Mode

UBS0030O

Specification data are reference values.

MONITOR ITEM	CONDITION		SPECIFICATION
PURG VOL C/V	● Engine: After warming up ● Shift lever: N ● Air conditioner switch: OFF ● No-load	Idle	0%
		2,000 rpm	20 - 30%

On Board Diagnosis Logic

UBS0030P

DTC No.	Trouble diagnosis name	DTC detecting condition	Possible cause
P1444 1444	EVAP canister purge volume control solenoid valve	The canister purge flow is detected during the specified driving conditions, even when EVAP canister purge volume control solenoid valve is completely closed.	● EVAP control system pressure sensor ● EVAP canister purge volume control solenoid valve (The valve is stuck open.) ● EVAP canister vent control valve ● EVAP canister ● Hoses (Hoses are connected incorrectly or clogged.)

DTC Confirmation Procedure

UBS0030Q

NOTE:
If “DTC Confirmation Procedure” has been previously conducted, always turn ignition switch “OFF” and wait at least 10 seconds before conducting the next test.
TESTING CONDITION:
Always perform test at a temperature of 5°C (41°F) or more.

WITH CONSULT-II

1. Start engine and warm it up to normal operating temperature.
2. Turn ignition switch “OFF” and wait at least 10 seconds.
3. Turn ignition switch “ON”.
4. Select “PURG VOL CN/V P1444” of “EVAPORATIVE SYSTEM” in “DTC WORK SUPPORT” mode with CONSULT-II.
5. Touch “START”.
6. Start engine and let it idle until “TESTING” on CONSULT-II changes to “COMPLETED”. (It will take approximately 10 seconds.)
   If “TESTING” is not displayed after 5 minutes, retry from step 2.

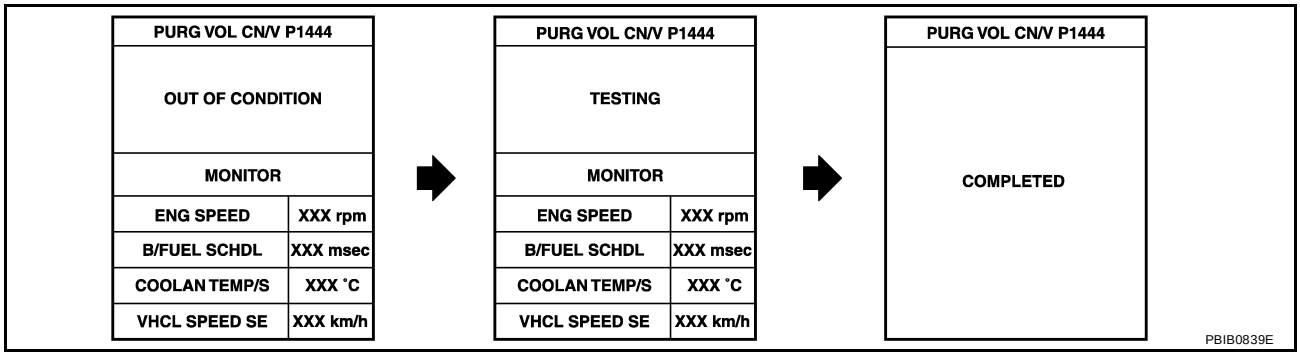

7. Make sure that “OK” is displayed after touching “SELF-DIAG RESULTS”. If “NG” is displayed, refer to EC-480, "Diagnostic Procedure" .

WITH GST

1. Start engine and warm it up to normal operating temperature.
2. Turn ignition switch “OFF” and wait at least 10 seconds.
3. Start engine and let it idle for at least 20 seconds.
4. Select “MODE 7” with GST.
5. If 1st trip DTC is detected, go to EC-480, "Diagnostic Procedure" .

Wiring Diagram

UBS0030R

EC-PGC/V-01

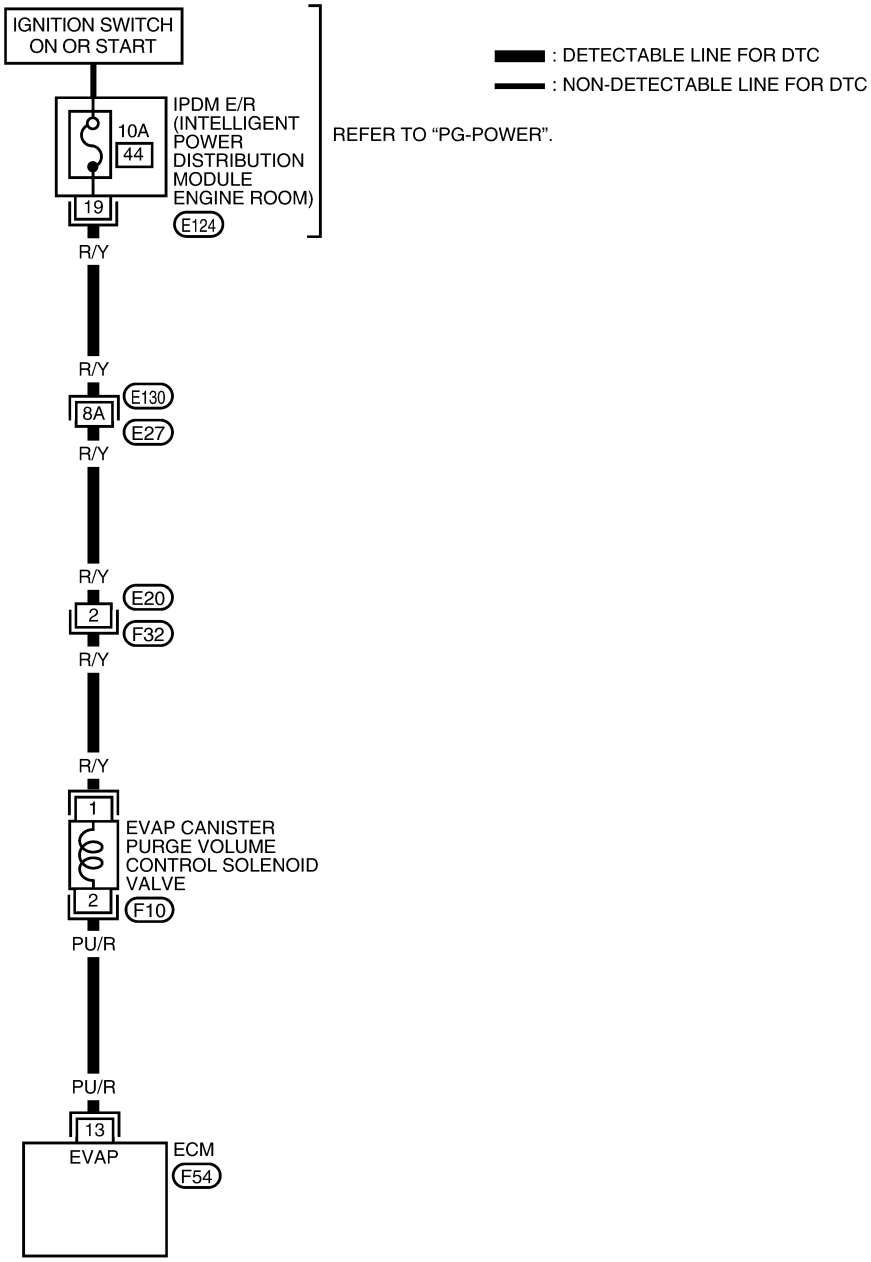

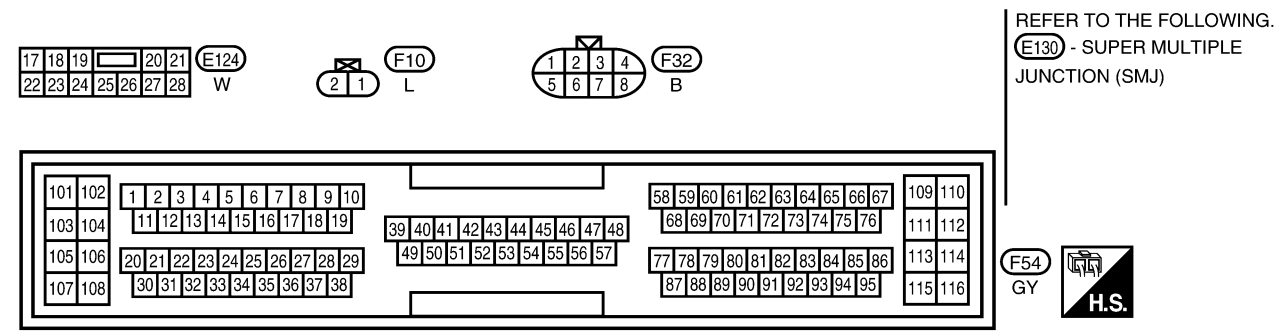

BBIA0226E

Specification data are reference values and are measured between each terminal and ground.

CAUTION:
Do not use ECM ground terminals when measuring input/output voltage. Doing so may result in damage to the ECM's transistor. Use a ground other than ECM terminals, such as the ground.

TERMINAL NO.	WIRE COLOR	ITEM	CONDITION	DATA (DC Voltage)
13	PU/R	EVAP canister purge volume control solenoid valve	**[Engine is running]** ● Idle speed	BATTERY VOLTAGE (11 - 14V)★ 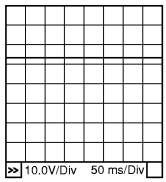 PBIB0050E
			[Engine is running] ● Engine speed is about 2,000 rpm (More than 100 seconds after starting engine)	Approximately 10V★ 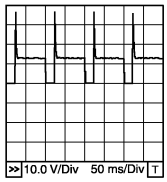 PBIB0520E

★: Average voltage for pulse signal (Actual pulse signal can be confirmed by oscilloscope.)

Diagnostic Procedure

UBS0030S

1. CHECK EVAP CANISTER PURGE VOLUME CONTROL SOLENOID VALVE POWER SUPPLY CIRCUIT

1. Turn ignition switch “OFF”.
2. Disconnect EVAP canister purge volume control solenoid valve harness connector.
3. Turn ignition switch “ON”.

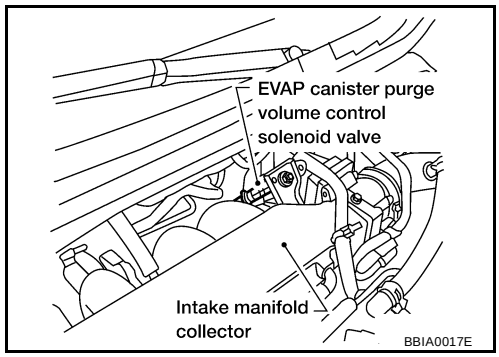

4. Check voltage between EVAP canister purge volume control solenoid valve terminal 1 and engine ground with CONSULT-II or tester.

Voltage: Battery voltage

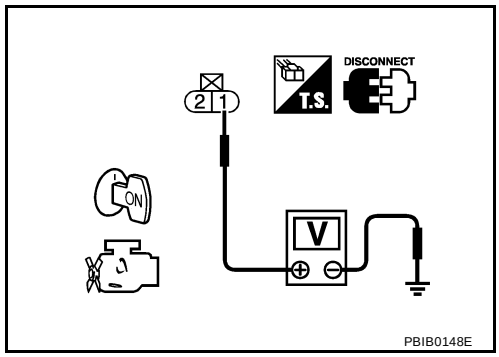

OK or NG

OK >> GO TO 3.
NG >> GO TO 2.

2. DETECT MALFUNCTIONING PART

Check the following.

- Harness connectors E130, E27
- Harness connectors E20, F32
- IPDM E/R harness connector E124
- Harness for open or short between EVAP canister purge volume control solenoid valve and IPDM E/R

>> Repair harness or connectors.

3. CHECK EVAP CANISTER PURGE VOLUME CONTROL SOLENOID VALVE OUTPUT SIGNAL CIRCUIT FOR OPEN AND SHORT

1. Turn ignition switch “OFF”.
2. Disconnect ECM harness connector.
3. Check harness continuity between ECM terminal 13 and EVAP canister purge volume control solenoid valve terminal 2. Refer to Wiring Diagram.

Continuity should exist.

4. Also check harness for short to ground and short to power.

OK or NG

OK >> GO TO 4.
NG >> Repair open circuit or short to ground or short to power in harness or connectors.

4. CHECK EVAP CONTROL SYSTEM PRESSURE SENSOR HOSE

Check disconnection or improper connection of hose connected to EVAP control system pressure sensor.

OK or NG

OK >> GO TO 5.
NG >> Repair it.

5. CHECK EVAP CONTROL SYSTEM PRESSURE SENSOR CONNECTOR

1. Disconnect EVAP control system pressure sensor harness connector.

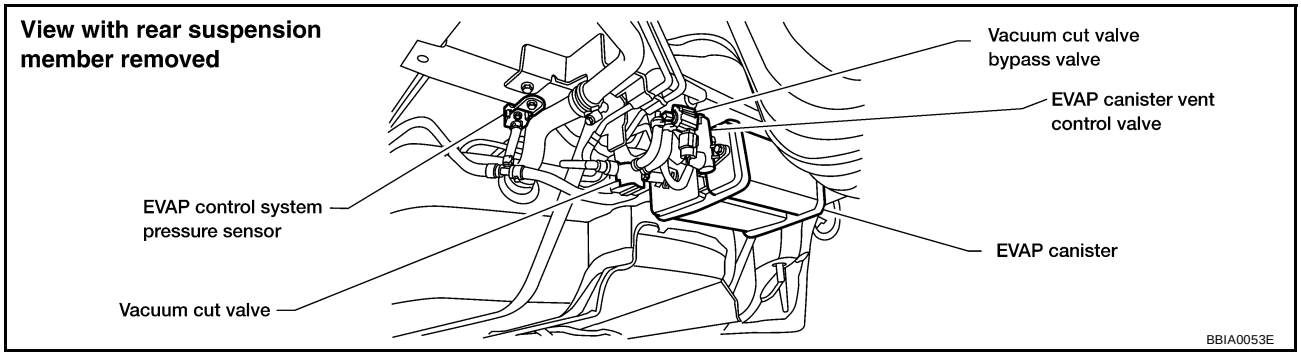

2. Check connectors for water.

Water should not exist.

OK or NG

OK >> GO TO 6.
NG >> Replace EVAP control system pressure sensor.

6. CHECK EVAP CONTROL SYSTEM PRESSURE SENSOR

Refer to EC-333, "Component Inspection" .

OK or NG

OK (With CONSULT-II)>>GO TO 7.
OK (Without CONSULT-II)>>GO TO 8.
NG >> Replace EVAP control system pressure sensor.

7. CHECK EVAP CANISTER PURGE VOLUME CONTROL SOLENOID VALVE

With CONSULT-II

1. Turn ignition switch “OFF”.
2. Reconnect harness connectors disconnected.
3. Start engine.
4. Perform “PURG VOL CONT/V” in “ACTIVE TEST” mode with CONSULT-II. Check that engine speed varies according to the valve opening.

ACTIVE TEST	
PURG VOL CONT/V	XXX %
MONITOR	
ENG SPEED	XXX rpm
A/F ALPHA-B1	XX %
HO2S1 MNTR (B1)	LEAN

PBIB0828E

OK or NG

OK >> GO TO 9.
NG >> GO TO 8.

8. CHECK EVAP CANISTER PURGE VOLUME CONTROL SOLENOID VALVE

Refer to EC-320, "Component Inspection" .

OK or NG

OK >> GO TO 9.
NG >> Replace EVAP canister purge volume control solenoid valve.

9. CHECK RUBBER TUBE FOR CLOGGING

1. Disconnect rubber tube connected to EVAP canister vent control valve.
2. Check the rubber tube for clogging.

OK or NG

OK >> GO TO 10.
NG >> Clean the rubber tube using an air blower.

10. CHECK EVAP CANISTER VENT CONTROL VALVE

Refer to EC-326, "Component Inspection" .

OK or NG

OK >> GO TO 11.
NG >> Replace EVAP canister vent control valve.

11. CHECK IF EVAP CANISTER SATURATED WITH WATER

1. Remove EVAP canister with EVAP canister vent control valve attached.
2. Check if water will drain from the EVAP canister.

Yes or No

Yes >> GO TO 12.
No >> GO TO 15.

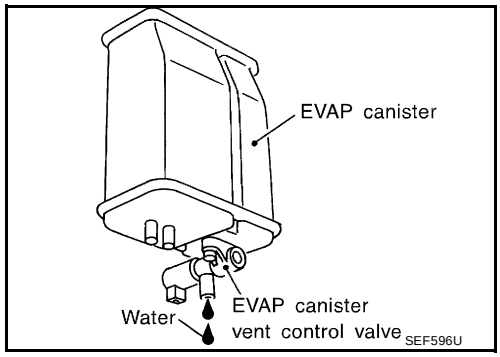

12. CHECK EVAP CANISTER

Weigh the EVAP canister with the EVAP canister vent control valve attached.
The weight should be less than 1.8 kg (4.0 lb).

OK or NG

OK >> GO TO 14.
NG >> GO TO 13.

13. DETECT MALFUNCTIONING PART

Check the following.

- EVAP canister for damage
- EVAP hose between EVAP canister and water separator for clogging or poor connection

>> Repair hose or replace EVAP canister.

14. CHECK WATER SEPARATOR

Refer to EC-314, "Component Inspection" .

OK or NG

OK >> GO TO 15.
NG >> Clean or replace water separator.

15. CHECK INTERMITTENT INCIDENT

Refer to EC-130, "TROUBLE DIAGNOSIS FOR INTERMITTENT INCIDENT" .

>> **INSPECTION END**

Component Inspection

UBS0030T

EVAP CANISTER PURGE VOLUME CONTROL SOLENOID VALVE

With CONSULT-II

Check air passage continuity of EVAP canister purge volume control solenoid valve under the following conditions.

Condition (PURG VOL CONT/V value)	Air passage continuity between A and B
100.0%	Yes
0.0%	No

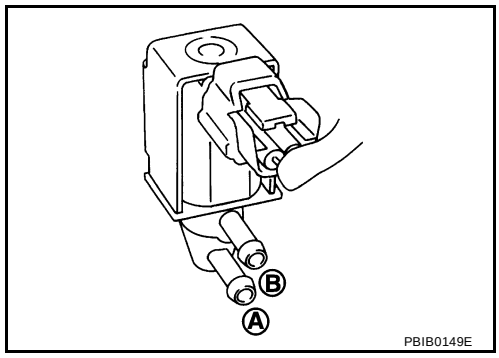

Without CONSULT-II

Check air passage continuity of EVAP canister purge volume control solenoid valve under the following conditions.

Condition	Air passage continuity between A and B
12V direct current supply between terminals 1 and 2	Yes
No supply	No

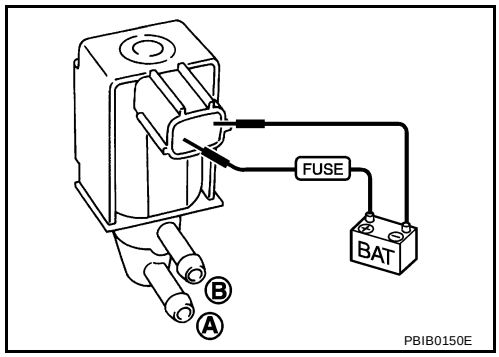

Removal and Installation

UBS0030U

EVAP CANISTER PURGE VOLUME CONTROL SOLENOID VALVE

Refer to EM-16, "INTAKE MANIFOLD" .

DTC P1446 EVAP CANISTER VENT CONTROL VALVE

PFP:14935

Component Description

UBS0030V

The EVAP canister vent control valve is located on the EVAP canister and is used to seal the canister vent.
This solenoid valve responds to signals from the ECM. When the ECM sends an ON signal, the coil in the solenoid valve is energized. A plunger will then move to seal the canister vent. The ability to seal the vent is necessary for the on board diagnosis of other evaporative emission control system components.
This solenoid valve is used only for diagnosis, and usually remains opened.
When the vent is closed, under normal purge conditions, the evaporative emission control system is depressurized and allows “EVAP Control System (Small Leak)” diagnosis.

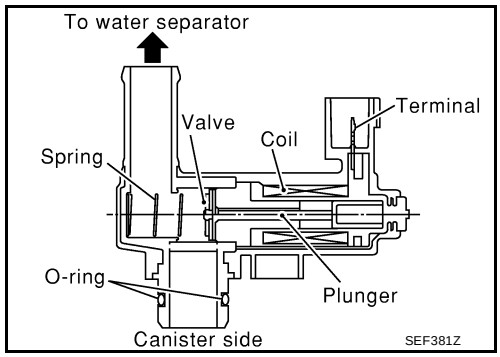

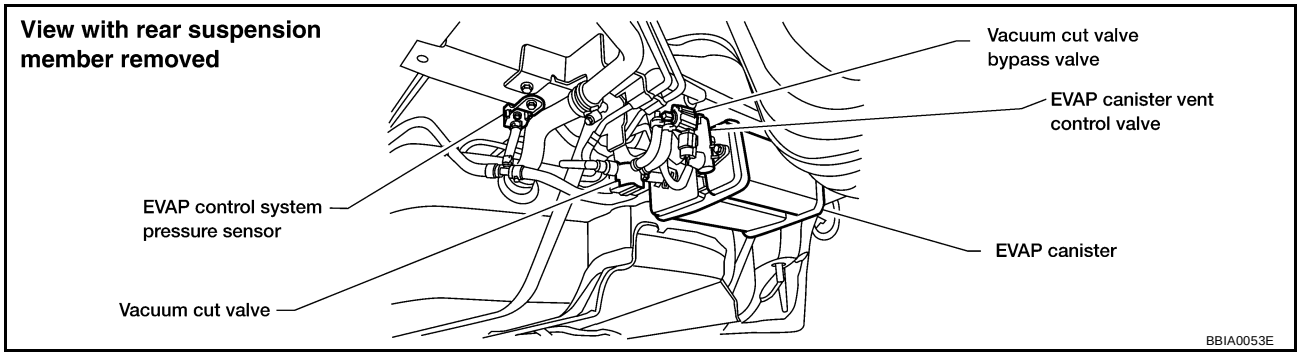

CONSULT-II Reference Value in Data Monitor Mode

UBS0030W

Specification data are reference values.

MONITOR ITEM	CONDITION	SPECIFICATION
VENT CONT/V	● Ignition switch: ON	OFF

On Board Diagnosis Logic

UBS0030X

DTC No.	Trouble diagnosis name	DTC detecting condition	Possible cause
P1446 1446	EVAP canister vent control valve close	EVAP canister vent control valve remains closed under specified driving conditions.	● EVAP canister vent control valve ● EVAP control system pressure sensor and the circuit ● Blocked rubber tube to EVAP canister vent control valve ● Water separator ● EVAP canister is saturated with water

DTC Confirmation Procedure

UBS0030Y

CAUTION:
Always drive vehicle at a safe speed.

NOTE:
If “DTC Confirmation Procedure” has been previously conducted, always turn ignition switch “OFF” and wait at least 10 seconds before conducting the next test.

WITH CONSULT-II

1. Turn ignition switch “ON”.

2. Select “DATA MONITOR” mode with CONSULT-II.
3. Start engine.
4. Drive vehicle at a speed of approximately 80 km/h (50 MPH) for a maximum of 15 minutes.

   NOTE:
   If a malfunction exists, NG result may be displayed quicker.
5. If 1st trip DTC is detected, go to EC-488, "Diagnostic Procedure"
   .

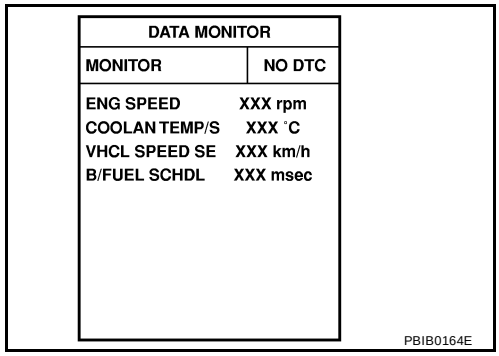

WITH GST

Follow the procedure “WITH CONSULT-II” above.

Wiring Diagram

UBS0030Z

EC-VENT/V-01

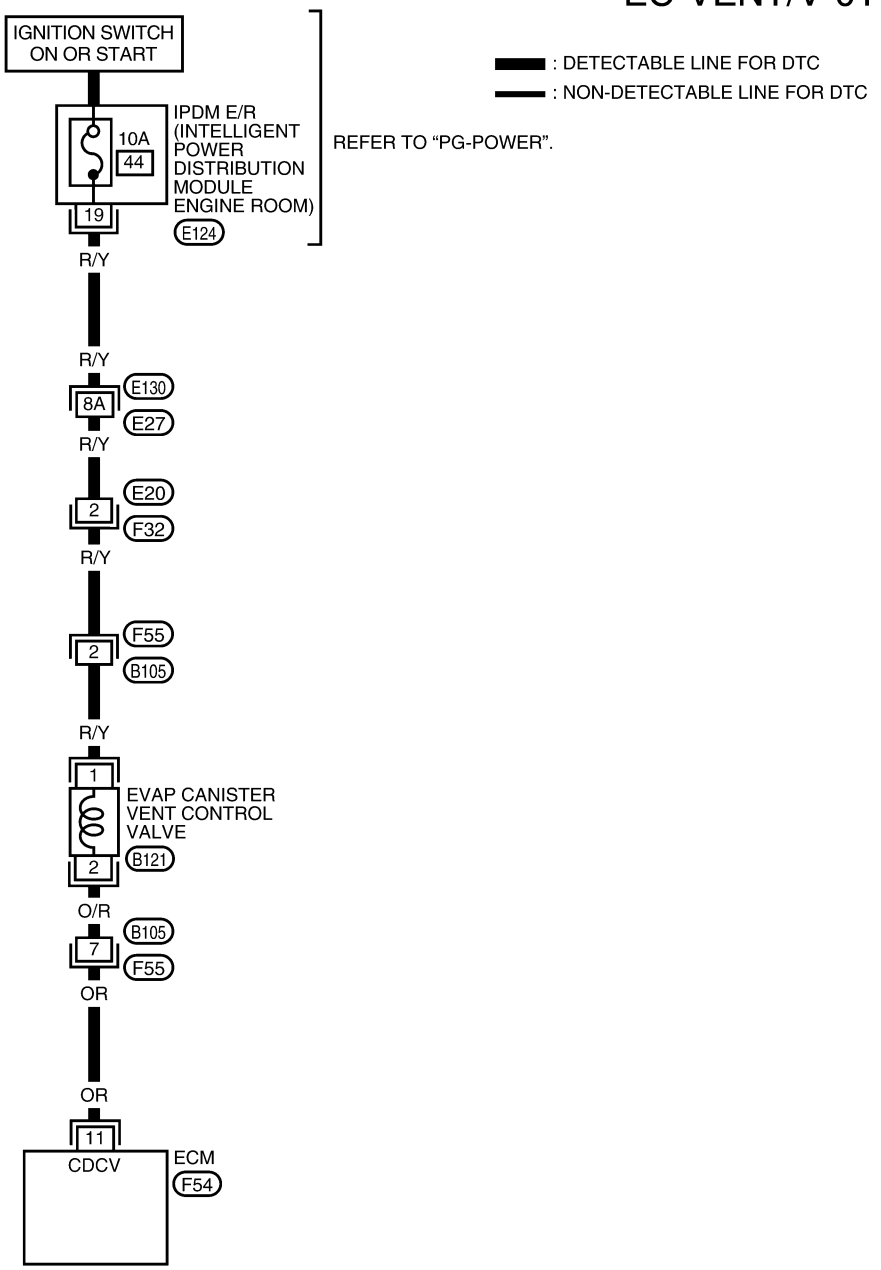

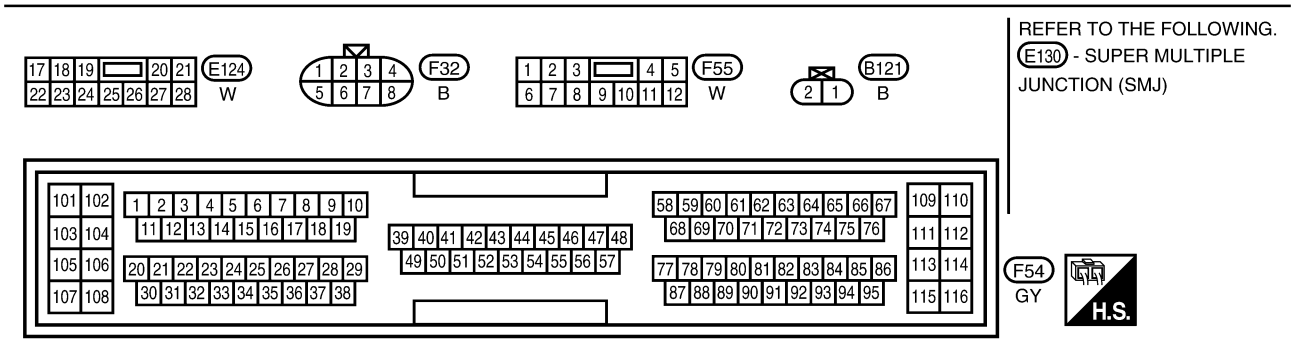

BBWA0020E

Specification data are reference values and are measured between each terminal and ground.

CAUTION:
Do not use ECM ground terminals when measuring input/output voltage. Doing so may result in damage to the ECM's transistor. Use a ground other than ECM terminals, such as the ground.

TERMINAL NO.	WIRE COLOR	ITEM	CONDITION	DATA (DC Voltage)
11	OR	EVAP canister vent control valve	**[Ignition switch "ON"]**	BATTERY VOLTAGE (11 - 14V)

Diagnostic Procedure

UBS00310

1. CHECK RUBBER TUBE

1. Turn ignition switch "OFF".
2. Disconnect rubber tube connected to EVAP canister vent control valve.

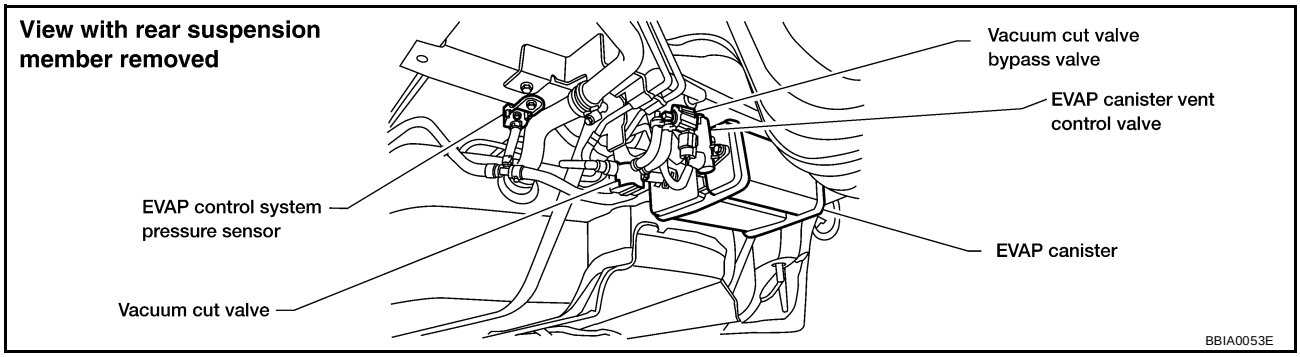

3. Check the rubber tube for clogging.

OK or NG

OK >> GO TO 2.
NG >> Clean rubber tube using an air blower.

2. CHECK WATER SEPARATOR

Refer to EC-314, "Component Inspection" .

OK or NG

OK >> GO TO 3.
NG >> Clean or replace water separator.

3. CHECK EVAP CANISTER VENT CONTROL VALVE

Refer to EC-490, "Component Inspection" .

OK or NG

OK >> GO TO 4.
NG >> Replace EVAP canister vent control valve.

4. CHECK IF EVAP CANISTER SATURATED WITH WATER

1. Remove EVAP canister with EVAP canister vent control valve attached.
2. Check if water will drain from the EVAP canister.

Yes or No

Yes >> GO TO 5.
No >> GO TO 7.

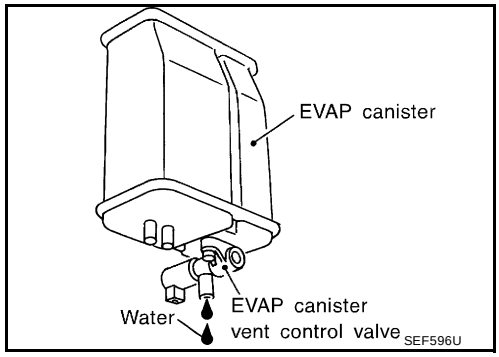

5. CHECK EVAP CANISTER

Weigh the EVAP canister with the EVAP canister vent control valve attached.
The weight should be less than 1.8 kg (4.0 lb).

OK or NG

OK >> GO TO 7.
NG >> GO TO 6.

6. DETECT MALFUNCTIONING PART

Check the following.

- EVAP canister for damage
- EVAP hose between EVAP canister and water separator for clogging or poor connection

>> Repair hose or replace EVAP canister.

7. CHECK EVAP CONTROL SYSTEM PRESSURE SENSOR HOSE

Check disconnection or improper connection of hose connected to EVAP control system pressure sensor.

OK or NG

OK >> GO TO 8.
NG >> Repair it.

8. CHECK EVAP CONTROL SYSTEM PRESSURE SENSOR CONNECTOR

1. Disconnect EVAP control system pressure sensor harness connector.

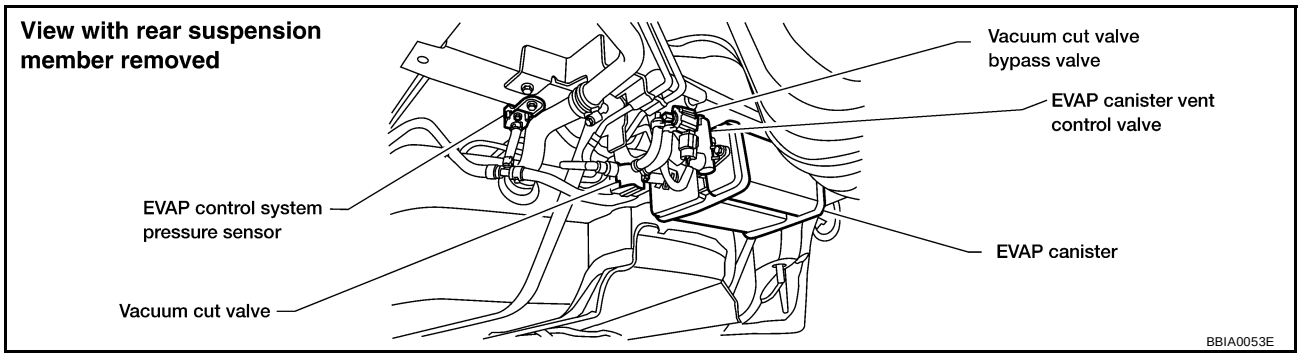

2. Check connectors for water.

Water should not exist.

OK or NG

OK >> GO TO 9.
NG >> Replace EVAP control system pressure sensor.

9. CHECK EVAP CONTROL SYSTEM PRESSURE SENSOR

Refer to EC-333, "Component Inspection" .

OK or NG

OK >> GO TO 10.
NG >> Replace EVAP control system pressure sensor.

10. CHECK INTERMITTENT INCIDENT

Refer to EC-130, "TROUBLE DIAGNOSIS FOR INTERMITTENT INCIDENT" .

>> **INSPECTION END**

Component Inspection

UBS00311

EVAP CANISTER VENT CONTROL VALVE

With CONSULT-II

1. Remove EVAP canister vent control valve from EVAP canister.
2. Check portion **B** of EVAP canister vent control valve for being rusted.
3. Reconnect harness connectors disconnected.
4. Turn ignition switch “ON”.

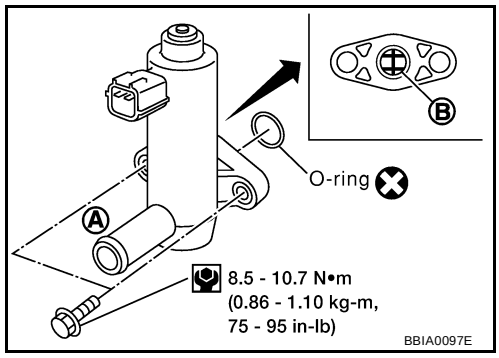

5. Perform “VENT CONTROL/V” in “ACTIVE TEST” mode.
6. Check air passage continuity and operation delay time.

Condition	Air passage continuity between A and B
ON	No
OFF	Yes

Operation takes less than 1 second.
Make sure new O-ring is installed properly.
If NG, go to next step.

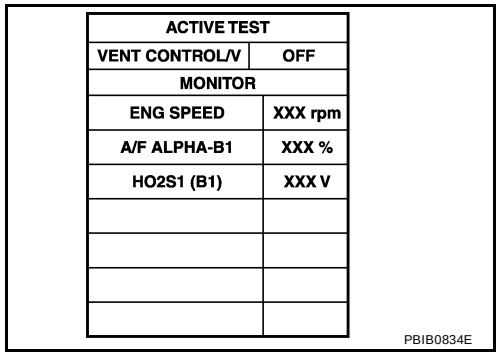

ACTIVE TEST	
VENT CONTROL/V	OFF
MONITOR	
ENG SPEED	XXX rpm
A/F ALPHA-B1	XXX %
HO2S1 (B1)	XXX V

PBIB0834E

7. Clean the air passage (Portion **A** to **B**) of EVAP canister vent control valve using an air blower.
8. Perform inspection again.

Without CONSULT-II

1. Remove EVAP canister vent control valve from EVAP canister.
2. Check portion **B** of EVAP canister vent control valve for being rusted.

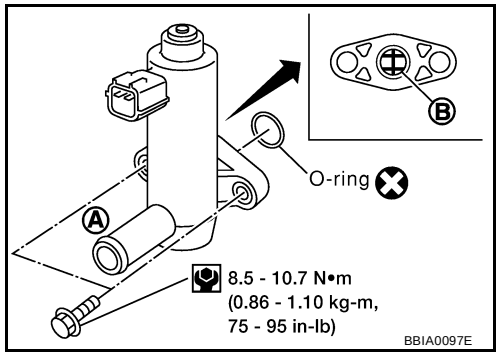

3. Check air passage continuity and operation delay time under the following conditions.

Condition	Air passage continuity between A and B
12V direct current supply between terminals 1 and 2	No
OFF	Yes

Operation takes less than 1 second.
Make sure new O-ring is installed properly.
If NG, go to next step.

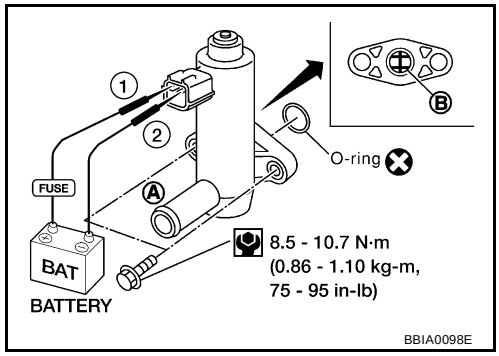

4. Clean the air passage (Portion **A** to **B**) of EVAP canister vent control valve using an air blower.
5. Perform inspection again.

DTC P1448 EVAP CANISTER VENT CONTROL VALVE

PFP:14935

Component Description

UBS00312

NOTE:
If DTC P1448 is displayed with P0442, perform trouble diagnosis for DTC P1448 first.

The EVAP canister vent control valve is located on the EVAP canister and is used to seal the canister vent.
This solenoid valve responds to signals from the ECM. When the ECM sends an ON signal, the coil in the solenoid valve is energized. A plunger will then move to seal the canister vent. The ability to seal the vent is necessary for the on board diagnosis of other evaporative emission control system components.
This solenoid valve is used only for diagnosis, and usually remains opened.
When the vent is closed, under normal purge conditions, the evaporative emission control system is depressurized and allows "EVAP Control System (Small Leak)" diagnosis.

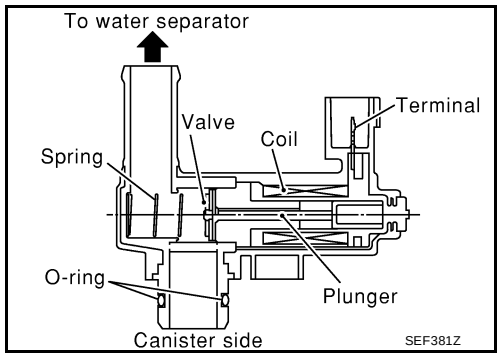

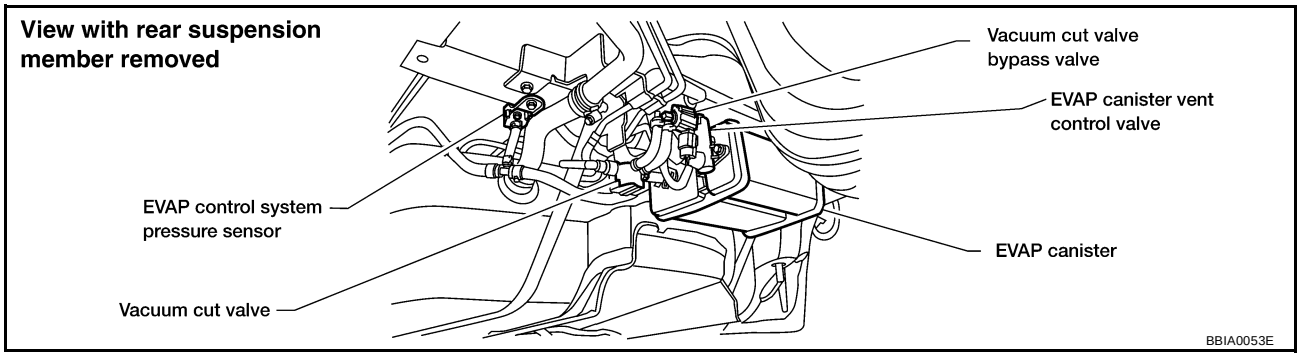

CONSULT-II Reference Value in Data Monitor Mode

UBS00313

Specification data are reference values.

MONITOR ITEM	CONDITION	SPECIFICATION
VENT CONT/V	● Ignition switch: ON	OFF

On Board Diagnosis Logic

UBS00314

DTC No.	Trouble diagnosis name	DTC detecting condition	Possible cause
P1448 1448	EVAP canister vent control valve open	EVAP canister vent control valve remains opened under specified driving conditions.	● EVAP canister vent control valve ● EVAP control system pressure sensor and the circuit ● Blocked rubber tube to EVAP canister vent control valve ● Water separator ● EVAP canister is saturated with water ● Vacuum cut valve

DTC Confirmation Procedure

UBS00315

NOTE:
- **If DTC P1448 is displayed with P0442, perform trouble diagnosis for DTC P1448 first.**
- If "DTC Confirmation Procedure" has been previously conducted, always turn ignition switch "OFF" and wait at least 10 seconds before conducting the next test.

WITH CONSULT-II

TESTING CONDITION:
- **Perform "DTC WORK SUPPORT" when the fuel level is between 1/4 to 3/4 full and vehicle is placed on flat level surface.**

- **Always perform test at a temperature of 0 to 30°C (32 to 86°F).**

1. Turn ignition switch “ON”.
2. Turn ignition switch “OFF” and wait at least 10 seconds.
3. Turn ignition switch “ON” and select “DATA MONITOR” mode with CONSULT-II.
4. Make sure that the following conditions are met.

COOLAN TEMP/S	0 - 70°C (32 - 158°F)
INT/A TEMP SE	0 - 30°C (32 - 86°F)

5. Select “EVAP SML LEAK P0442/P1442” of “EVAPORATIVE SYSTEM” in “DTC WORK SUPPORT” mode with CONSULT-II.
   Follow the instruction displayed.

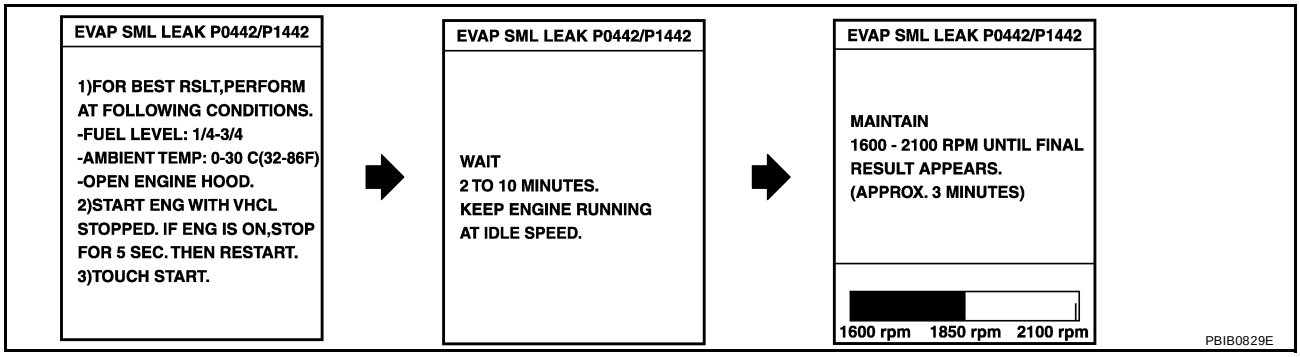

   If the engine speed cannot be maintained within the range displayed on the CONSULT-II screen, go to EC-84, "Basic Inspection" .

6. Make sure that “OK” is displayed.
   If “NG” is displayed, go to the following step.

   NOTE:
   Make sure that EVAP hoses are connected to EVAP canister purge volume control solenoid valve properly.

7. Stop engine and wait at least 10 seconds, then turn “ON”.
8. Disconnect hose from water separator.

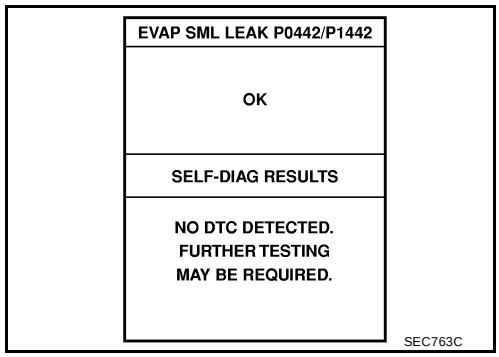

9. Select “VENT CONTROL/V” of “ACTIVE TEST” mode with CONSULT-II.
10. Touch “ON” and “OFF” alternately.

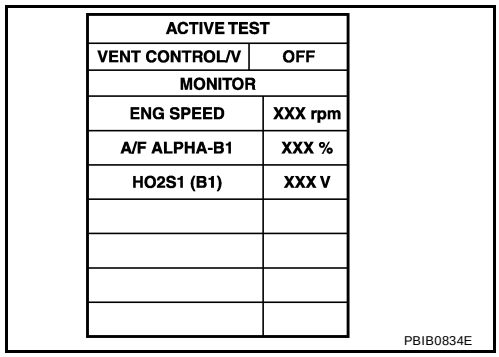

11. Make sure the following.

Condition VENT CONTROL/V	Air passage continuity between **A** and **B**
ON	No
OFF	Yes

If the result is NG, go to EC-495, "Diagnostic Procedure" .
If the result is OK, go to “Diagnostic Procedure” for DTC P0442, EC-309 .

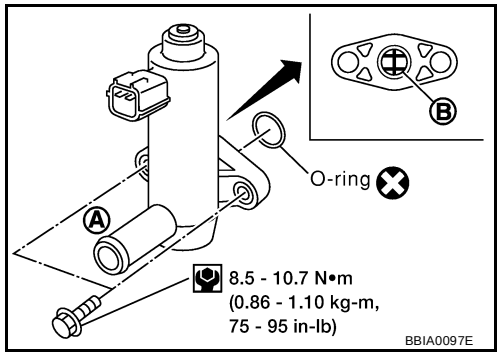

Overall Function Check

UBS00316

Use this procedure to check the overall function of the EVAP canister vent control valve circuit. During this check, a DTC might not be confirmed.

WITH GST

1. Disconnect hose from water separator.
2. Disconnect EVAP canister vent control valve harness connector.
3. Verify the following.

Condition	Air passage continuity
12V direct current supply between terminals 1 and 2	No
No supply	Yes

If the result is NG, go to EC-495, "Diagnostic Procedure" .
If the result is OK, go to “Diagnostic Procedure” for DTC P0442, EC-309 .

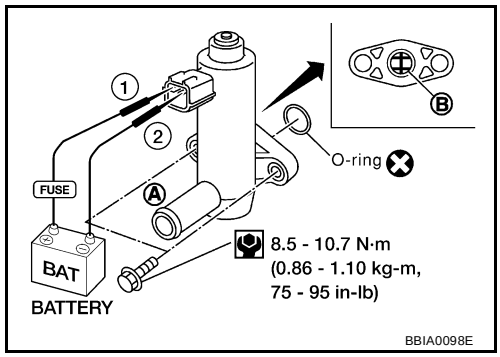

Wiring Diagram

UBS00317

EC-VENT/V-01

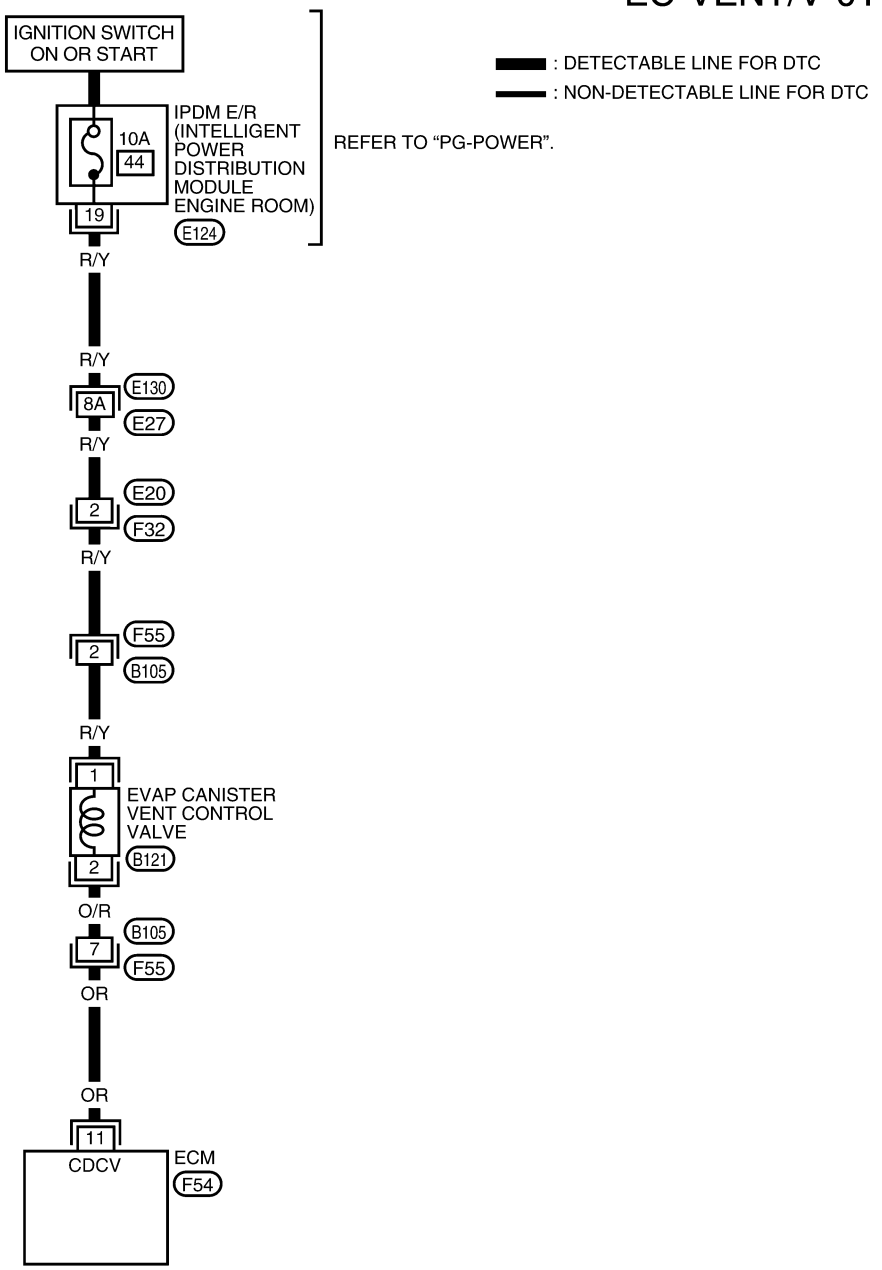

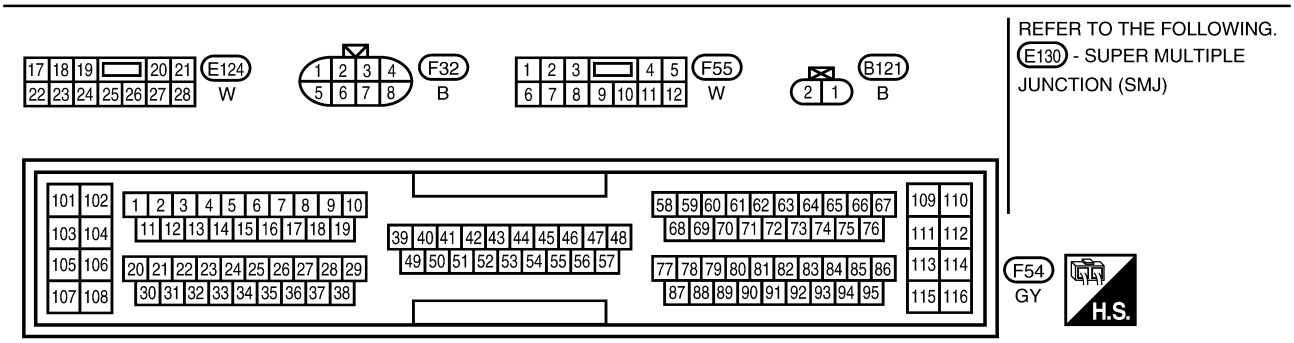

BBWA0020E

Specification data are reference values and are measured between each terminal and ground.

CAUTION:
Do not use ECM ground terminals when measuring input/output voltage. Doing so may result in damage to the ECM's transistor. Use a ground other than ECM terminals, such as the ground.

TERMINAL NO.	WIRE COLOR	ITEM	CONDITION	DATA (DC Voltage)
11	OR	EVAP canister vent control valve	**[Ignition switch "ON"]**	BATTERY VOLTAGE (11 - 14V)

Diagnostic Procedure

UBS00318

1. CHECK RUBBER TUBE

1. Turn ignition switch "OFF".
2. Disconnect rubber tube connected to EVAP canister vent control valve.

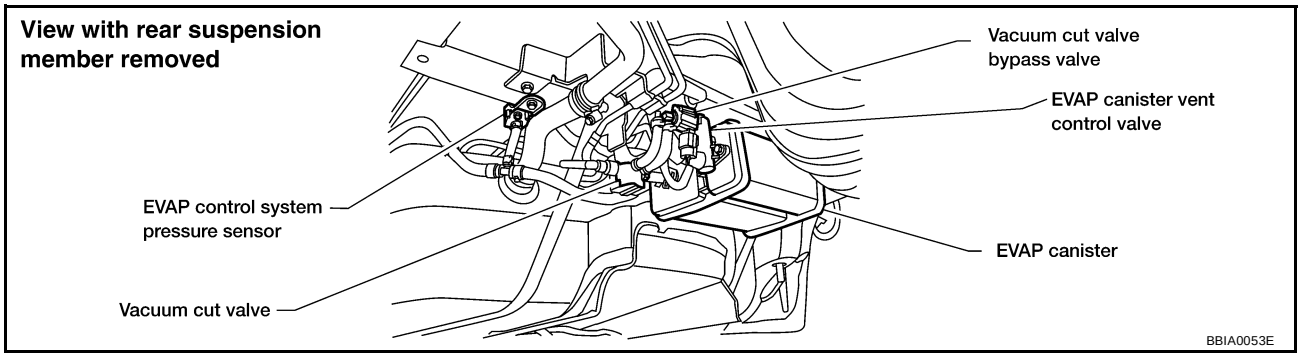

3. Check the rubber tube for clogging.

OK or NG

OK >> GO TO 2.
NG >> Clean rubber tube using an air blower.

2. CHECK EVAP CANISTER VENT CONTROL VALVE

Refer to EC-497, "Component Inspection" .

OK or NG

OK >> GO TO 3.
NG >> Replace EVAP canister vent control valve.

3. CHECK VACUUM CUT VALVE

Refer to EC-524, "Component Inspection" .

OK or NG

OK >> GO TO 4.
NG >> Replace vacuum cut valve.

4. CHECK IF EVAP CANISTER SATURATED WITH WATER

1. Remove EVAP canister with EVAP canister vent control valve attached.
2. Check if water will drain from the EVAP canister.

Yes or No

Yes >> GO TO 5.
No >> GO TO 7.

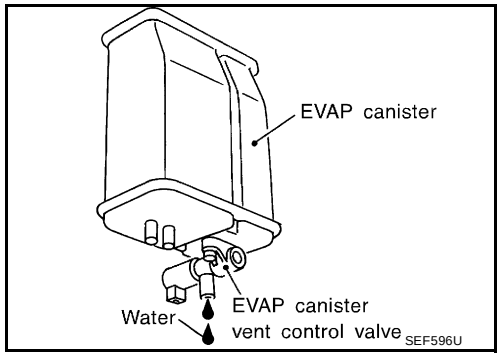

5. CHECK EVAP CANISTER

Weigh the EVAP canister with the EVAP canister vent control valve attached.
The weight should be less than 1.8 kg (4.0 lb).

OK or NG

OK >> GO TO 7.
NG >> GO TO 6.

6. DETECT MALFUNCTIONING PART

Check the following.

- EVAP canister for damage
- EVAP hose between EVAP canister and water separator for clogging or poor connection

>> Repair hose or replace EVAP canister.

7. CHECK EVAP CONTROL SYSTEM PRESSURE SENSOR HOSE

Check disconnection or improper connection of hose connected to EVAP control system pressure sensor.

OK or NG

OK >> GO TO 8.
NG >> Repair it.

8. CHECK EVAP CONTROL SYSTEM PRESSURE SENSOR CONNECTOR

1. Disconnect EVAP control system pressure sensor harness connector.

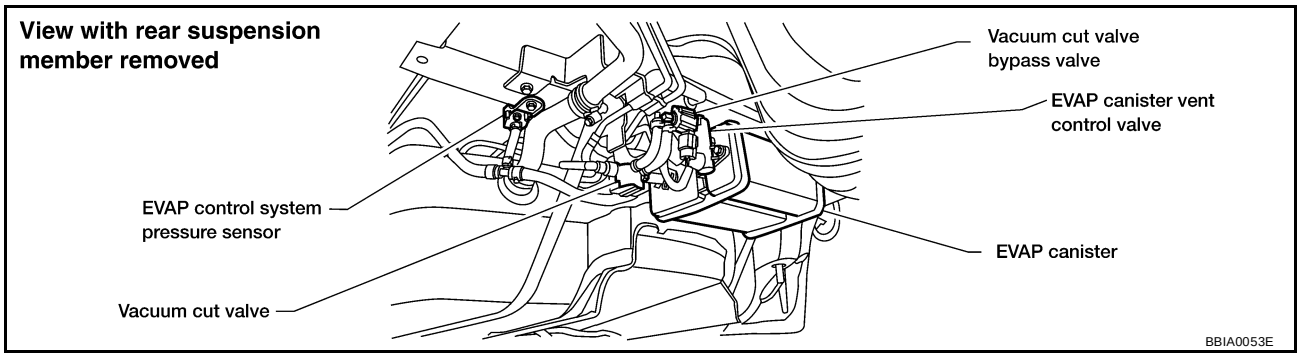

2. Check connectors for water.

Water should not exist.

OK or NG

OK >> GO TO 9.
NG >> Replace EVAP control system pressure sensor.

9. CHECK EVAP CONTROL SYSTEM PRESSURE SENSOR

Refer to EC-333, "Component Inspection" .

OK or NG

OK >> GO TO 10.
NG >> Replace EVAP control system pressure sensor.

10. CHECK INTERMITTENT INCIDENT

Refer to EC-130, "TROUBLE DIAGNOSIS FOR INTERMITTENT INCIDENT" .

>> **INSPECTION END**

Component Inspection

UBS00319

EVAP CANISTER VENT CONTROL VALVE

With CONSULT-II

1. Remove EVAP canister vent control valve from EVAP canister.
2. Check portion **B** of EVAP canister vent control valve for being rusted.
3. Reconnect harness connectors disconnected.
4. Turn ignition switch “ON”.

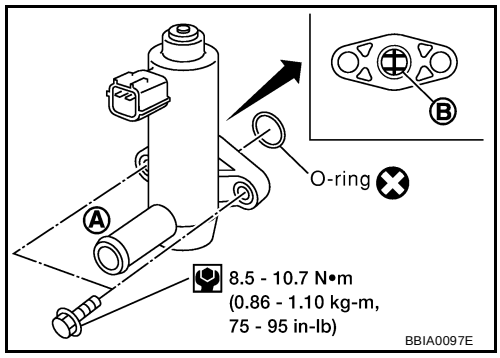

5. Perform “VENT CONTROL/V” in “ACTIVE TEST” mode.
6. Check air passage continuity and operation delay time.

Condition	Air passage continuity between A and B
ON	No
OFF	Yes

Operation takes less than 1 second.
Make sure new O-ring is installed properly.
If NG, go to next step.

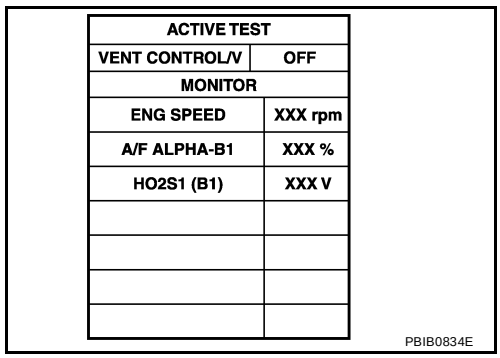

ACTIVE TEST	
VENT CONTROL/V	OFF
MONITOR	
ENG SPEED	XXX rpm
A/F ALPHA-B1	XXX %
HO2S1 (B1)	XXX V

PBIB0834E

7. Clean the air passage (Portion **A** to **B**) of EVAP canister vent control valve using an air blower.
8. Perform inspection again.

Without CONSULT-II

1. Remove EVAP canister vent control valve from EVAP canister.
2. Check portion **B** of EVAP canister vent control valve for being rusted.

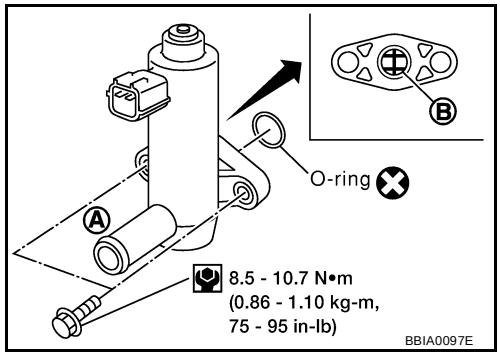

3. Check air passage continuity and operation delay time under the following conditions.

Condition	Air passage continuity between A and B
12V direct current supply between terminals 1 and 2	No
OFF	Yes

Operation takes less than 1 second.
Make sure new O-ring is installed properly.
If NG, go to next step.

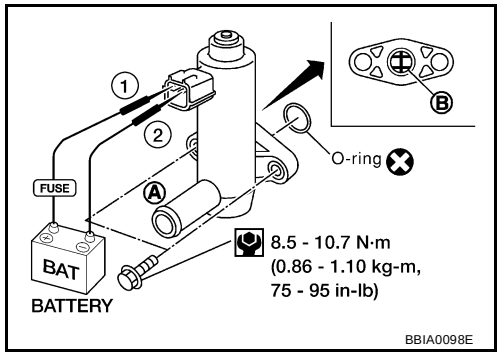

4. Clean the air passage (Portion **A** to **B**) of EVAP canister vent control valve using an air blower.
5. Perform inspection again.

DTC P1456 EVAP CONTROL SYSTEM

PFP:14710

On Board Diagnosis Logic

UBS0031A

This diagnosis detects very small leaks in the EVAP line between fuel tank and EVAP canister purge volume control solenoid valve, using of vapor pressure in the fuel tank.
The EVAP canister vent control valve is closed to shut the EVAP purge line. The vacuum cut valve bypass valve will then be opened to clear the line between the fuel tank and the EVAP canister purge volume control solenoid valve. The EVAP control system pressure sensor can now monitor the pressure inside the fuel tank. If pressure increases, the ECM will check for leaks in the line between the vacuum cut valve and EVAP canister purge volume control solenoid valve.
If ECM judges a leak which corresponds to a very small leak, the very small leak P1456 will be detected.
If ECM judges a leak equivalent to a small leak, EVAP small leak P1442 will be detected.
If ECM judges there are no leaks, the diagnosis will be OK.

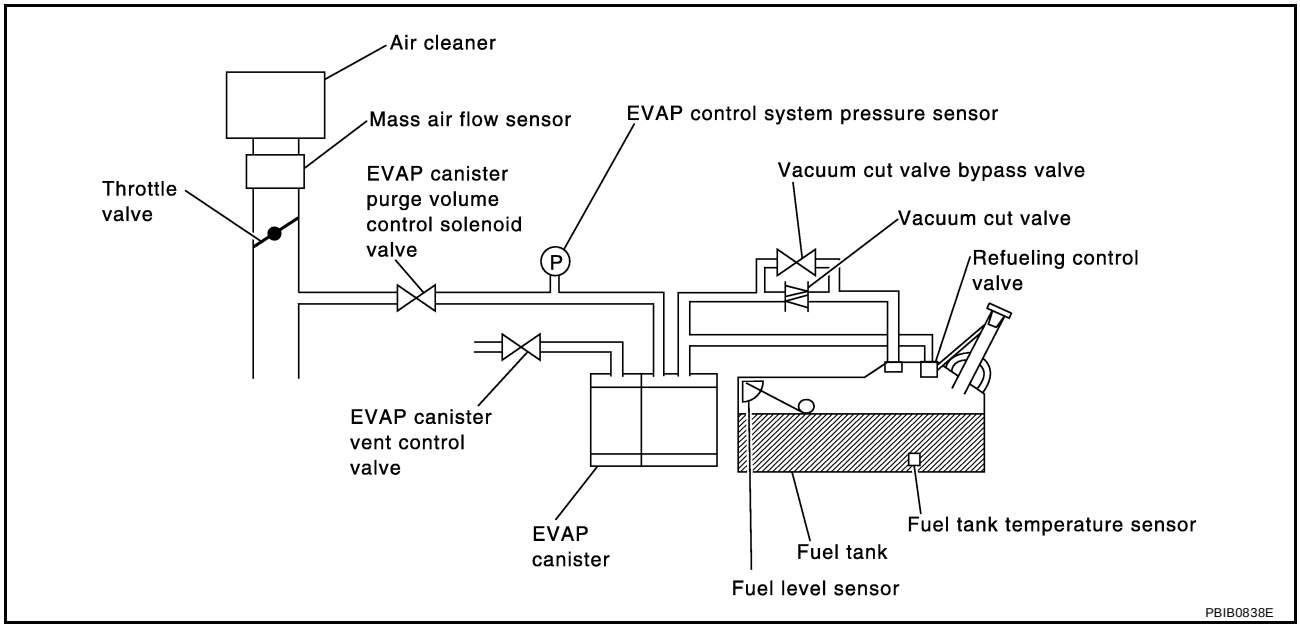

DTC No.	Trouble diagnosis name	DTC detecting condition	Possible cause
P1456 1456	Evaporative emission control system very small leak (positive pressure check)	● EVAP system has a very small leak. ● EVAP system does not operate properly.	● Incorrect fuel tank vacuum relief valve ● Incorrect fuel filler cap used ● Fuel filler cap remains open or fails to close. ● Foreign matter caught in fuel filler cap. ● Leak is in line between intake manifold and EVAP canister purge volume control solenoid valve. ● Foreign matter caught in EVAP canister vent control valve. ● EVAP canister or fuel tank leaks ● EVAP purge line (pipe and rubber tube) leaks ● EVAP purge line rubber tube bent ● Blocked or bent rubber tube to EVAP control system pressure sensor ● Loose or disconnected rubber tube ● EVAP canister vent control valve and the circuit ● EVAP canister purge volume control solenoid valve and the circuit ● Fuel tank temperature sensor ● O-ring of EVAP canister vent control valve is missing or damaged ● Water separator ● EVAP canister is saturated with water ● EVAP control system pressure sensor ● Refueling control valve ● ORVR system leaks ● Fuel level sensor and the circuit ● Foreign matter caught in EVAP canister purge volume control solenoid valve

CAUTION:

- **Use only a genuine NISSAN fuel filler cap as a replacement. If an incorrect fuel filler cap is used, the MIL may come on.**
- **If the fuel filler cap is not tightened properly, the MIL may come on.**
- **Use only a genuine NISSAN rubber tube as a replacement.**

DTC Confirmation Procedure

UBS0031B

NOTE:

- **If DTC P1456 is displayed with P1442, perform TROUBLE DIAGNOSIS FOR DTC P1456 first.**
- **After repair, make sure that the hoses and clips are installed properly.**
- If “DTC Confirmation Procedure” has been previously conducted, always turn ignition switch “OFF” and wait at least 10 seconds before conducting the next test.

TESTING CONDITION:

- **Open engine hood before conducting following procedure.**
- **If any of following conditions are met just before the DTC confirmation procedure, leave the vehicle for more than 1 hour.**
  - **Fuel filler cap is removed.**
  - **Refilled or drained the fuel.**
  - **EVAP component parts is/are removed.**
- **Before performing the following procedure, confirm that battery voltage is more than 11V at idle.**

WITH CONSULT-II

1. Turn ignition switch “ON” and select “DATA MONITOR” mode with CONSULT-II.
2. Make sure the following conditions are met.

FUEL LEVEL SE: 0.25 - 1.15V
COOLAN TEMP/S: 0 - 32°C (32 - 90°F)
FUEL T/TMP SE: 0 - 35°C (32 - 95°F)
INT A/TEMP SE: More than 0°C (32°F)
If NG, turn ignition switch “OFF” and leave the vehicle in a cool place (soak the vehicle) or refilling/draining fuel until the output voltage condition of the “FUEL LEVEL SE” meets within the range above and leave the vehicle for more than 1 hour. Then start from step 1).

3. Turn ignition switch “OFF” and wait at least 10 seconds.
4. Turn ignition switch “ON”.
5. Select “EVAP V/S LEAK P0456/P1456” of “EVAPORATIVE SYSTEM” in “DTC WORK SUPPORT” mode with CONSULT-II.
   Follow the instruction displayed.

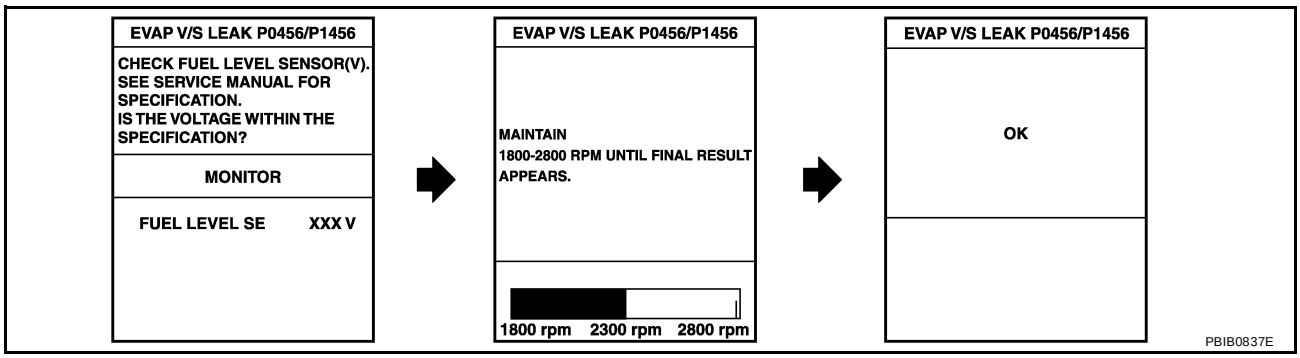

6. Make sure that “OK” is displayed.
   If “NG” is displayed, refer to EC-501, "Diagnostic Procedure" .

   NOTE:
   - **If the engine speed cannot be maintained within the range displayed on CONSULT-II screen, go to EC-84, "Basic Inspection" .**
   - **Make sure that EVAP hoses are connected to EVAP canister purge volume control solenoid valve properly.**

Overall Function Check

UBS0031C

WITH GST

Use this procedure to check the overall function of the EVAP very small leak function. During this check, a 1st trip DTC might not be confirmed.

CAUTION:
- **Never use compressed air, doing so may damage the EVAP system.**
- **Do not start engine.**
- **Do not exceeded 4.12 kPa (0.042 kg/cm^2 , 0.6 psi).**

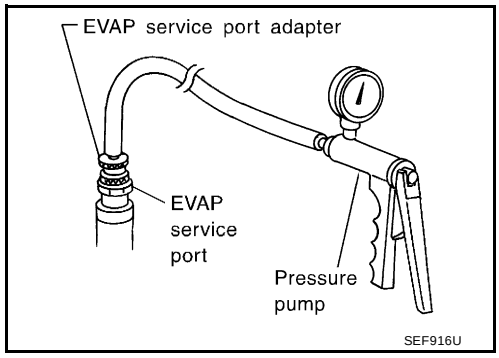

1. Attach the EVAP service port adapter securely to the EVAP service port.
2. Set the pressure pump and a hose.
3. Also set a vacuum gauge via 3-way connector and a hose.
4. Turn ignition switch “ON”.
5. Connect GST and select MODE 8.
6. Using MODE 8 control the EVAP canister vent control valve (close) and vacuum cut valve bypass valve (open).
7. Apply pressure and make sure the following conditions are satisfied.
   Pressure to be applied: 2.7 kPa (20 mmHg, 0.79 inHg)
   Time to be waited after the pressure drawn in to the EVAP system and the pressure to be dropped: 60 seconds and the pressure should not be dropped more than 0.4 kPa (3 mmHg, 0.12 inHg).
   If NG, go to EC-501, "Diagnostic Procedure" .
   If OK, go to next step.
8. Disconnect GST.
9. Start engine and warm it up to normal operating temperature.

10. Turn ignition switch “OFF” and wait at least 10 seconds.
11. Restart engine and let it idle for 90 seconds.
12. Keep engine speed at 2,000 rpm for 30 seconds.
13. Turn ignition switch “OFF”.

NOTE:
For more information, refer to GST instruction manual.

Diagnostic Procedure

UBS0031D

1. CHECK FUEL FILLER CAP DESIGN

1. Turn ignition switch “OFF”.
2. Check for genuine NISSAN fuel filler cap design.

OK or NG

OK >> GO TO 2.
NG >> Replace with genuine NISSAN fuel filler cap.

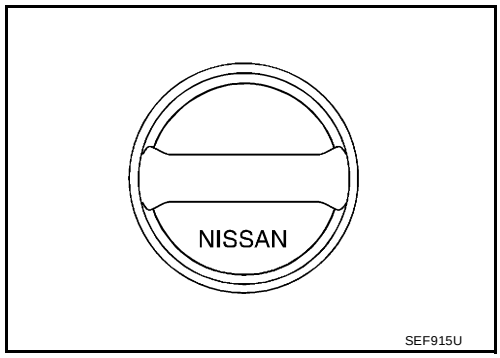

2. CHECK FUEL FILLER CAP INSTALLATION

Check that the cap is tightened properly by rotating the cap clockwise.

OK or NG

OK >> GO TO 3.
NG >> 1. Open fuel filler cap, then clean cap and fuel filler neck threads using air blower.
2. Retighten until ratcheting sound is heard.

3. CHECK FUEL FILLER CAP FUNCTION

Check for air releasing sound while opening the fuel filler cap.

OK or NG

OK >> GO TO 5.
NG >> GO TO 4.

4. CHECK FUEL TANK VACUUM RELIEF VALVE

Refer to EC-617, "FUEL TANK VACUUM RELIEF VALVE (BUILT INTO FUEL FULLER CAP)" .

OK or NG

OK >> GO TO 5.
NG >> Replace fuel filler cap with a genuine one.

5. INSTALL THE PRESSURE PUMP

To locate the EVAP leak, install EVAP service port adapter and pressure pump to EVAP service port securely.

NOTE:
Improper installation of the EVAP service port adapter to the EVAP service port may cause leaking.

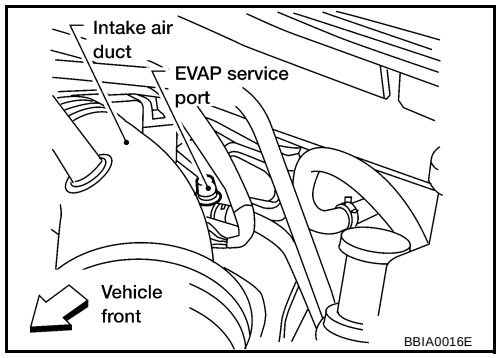

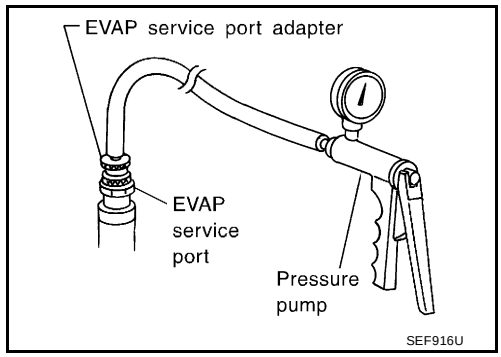

Models with CONSULT-II>>GO TO 6.
Models without CONSULT-II>>GO TO 7.

6. CHECK FOR EVAP LEAK

With CONSULT-II

1. Turn ignition switch “ON”.
2. Select “EVAP SYSTEM CLOSE” of “WORK SUPPORT” mode with CONSULT-II.
3. Touch “START” and apply pressure into the EVAP line until the pressure indicator reaches the middle of the bar graph.

   NOTE:
   - **Never use compressed air or a high pressure pump.**
   - **Do not exceed 4.12 kPa (0.042 kg/cm^2 , 0.6 psi) of pressure in the system.**

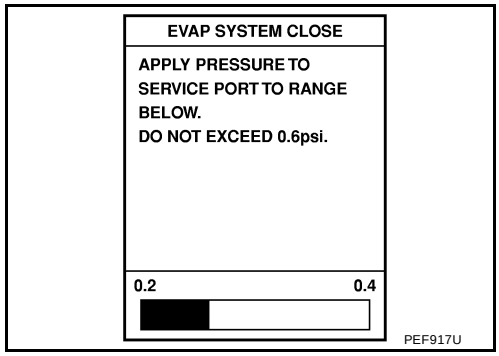

4. Using EVAP leak detector, locate the EVAP leak. For the leak detector, refer to the instruction manual for more details.
   Refer to EC-615, "EVAPORATIVE EMISSION LINE DRAWING"
   .

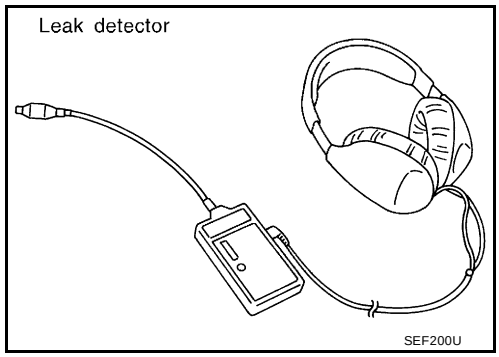

OK or NG

OK >> GO TO 8.
NG >> Repair or replace.

7. CHECK FOR EVAP LEAK

Without CONSULT-II

1. Turn ignition switch “OFF”.
2. Apply 12 volts DC to EVAP canister vent control valve. The valve will close. (Continue to apply 12 volts until the end of test.)
3. Apply 12 volts DC to vacuum cut valve bypass valve. The valve will open. (Continue to apply 12V until the end of test.)

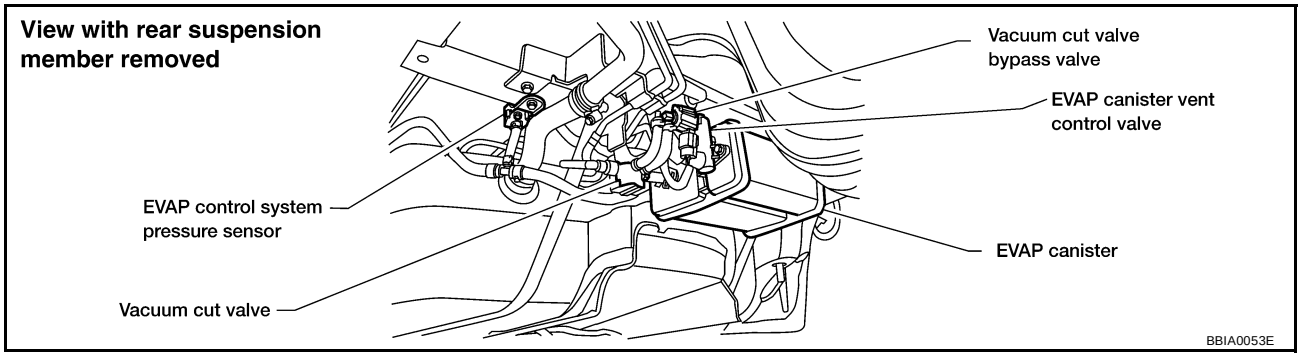

4. Pressurize the EVAP line using pressure pump with 1.3 to 2.7 kPa (10 to 20 mmHg, 0.39 to 0.79 inHg), then remove pump and EVAP service port adapter.

   NOTE:
   - **Never use compressed air or a high pressure pump.**
   - **Do not exceed 4.12 kPa (0.042 kg/cm^2 , 0.6 psi) of pressure in the system.**

5. Using EVAP leak detector, locate the EVAP leak. For the leak detector, refer to the instruction manual for more details. Refer to EC-615, "EVAPORATIVE EMISSION LINE DRAWING" .

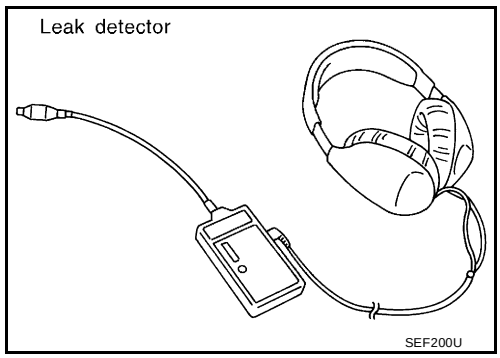

OK or NG

OK >> GO TO 8.
NG >> Repair or replace.

8. CHECK WATER SEPARATOR

Refer to EC-506, "Component Inspection" .

OK or NG

OK >> GO TO 9.
NG >> Replace water separator.

9. CHECK EVAP CANISTER VENT CONTROL VALVE, O-RING AND CIRCUIT

Refer to “DTC Confirmation Procedure”, EC-491 .

OK or NG

OK >> GO TO 10.
NG >> Repair or replace EVAP canister vent control valve and O-ring or harness/connector.

10. CHECK IF EVAP CANISTER SATURATED WITH WATER

1. Remove EVAP canister with EVAP canister vent control valve attached.
2. Does water drain from the EVAP canister?

Yes or No

Yes >> GO TO 11.
No (With CONSULT-II)>>GO TO 13.
No (Without CONSULT-II)>>GO TO 14.

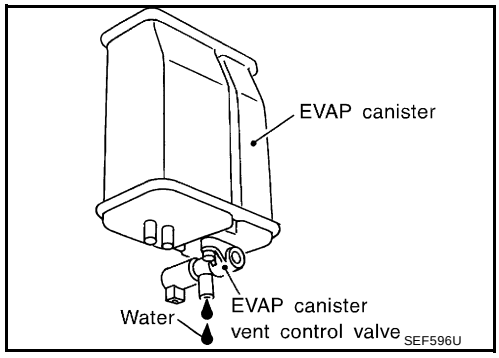

11. CHECK EVAP CANISTER

Weigh the EVAP canister with the EVAP canister vent control valve attached.
The weight should be less than 1.8 kg (4.0 lb).

OK or NG

OK (With CONSULT-II)>>GO TO 13.
OK (Without CONSULT-II)>>GO TO 14.
NG >> GO TO 12.

12. DETECT MALFUNCTIONING PART

Check the following.

- EVAP canister for damage
- EVAP hose between EVAP canister and water separator for clogging or poor connection

>> Repair hose or replace EVAP canister.

13. CHECK EVAP CANISTER PURGE VOLUME CONTROL SOLENOID VALVE OPERATION

With CONSULT-II

1. Disconnect vacuum hose to EVAP canister purge volume control solenoid valve at EVAP service port.
2. Start engine.
3. Perform “PURG VOL CONT/V” in “ACTIVE TEST” mode.
4. Touch “Qu” on CONSULT-II screen to increase “PURG VOL CONT/V” opening to 100.0%.
5. Check vacuum hose for vacuum when revving engine up to 2,000 rpm.

OK or NG

OK >> GO TO 16.
NG >> GO TO 15.

ACTIVE TEST	
PURG VOL CONT/V	XXX %
MONITOR	
ENG SPEED	XXX rpm
A/F ALPHA-B1	XX %
HO2S1 MNTR (B1)	LEAN

PBIB0828E

14. CHECK EVAP CANISTER PURGE VOLUME CONTROL SOLENOID VALVE OPERATION

Without CONSULT-II

1. Start engine and warm it up to normal operating temperature.
2. Stop engine.
3. Disconnect vacuum hose to EVAP canister purge volume control solenoid valve at EVAP service port.
4. Start engine and let it idle for at least 80 seconds.
5. Check vacuum hose for vacuum when revving engine up to 2,000 rpm.

Vacuum should exist.

OK or NG

OK >> GO TO 17.
NG >> GO TO 15.

15. CHECK VACUUM HOSE

Check vacuum hoses for clogging or disconnection. Refer to EC-29, "Vacuum Hose Drawing" .

OK or NG

OK >> GO TO 16.
NG >> Repair or reconnect the hose.

16. CHECK EVAP CANISTER PURGE VOLUME CONTROL SOLENOID VALVE

Refer to EC-320, "Component Inspection" .

OK or NG

OK >> GO TO 17.
NG >> Replace EVAP canister purge volume control solenoid valve.

17. CHECK FUEL TANK TEMPERATURE SENSOR

Refer to EC-233, "Component Inspection" .

OK or NG

OK >> GO TO 18.
NG >> Replace fuel level sensor unit.

18. CHECK EVAP CONTROL SYSTEM PRESSURE SENSOR

Refer to EC-333, "Component Inspection" .

OK or NG

OK >> GO TO 19.
NG >> Replace EVAP control system pressure sensor.

19. CHECK EVAP PURGE LINE

Check EVAP purge line (pipe, rubber tube, fuel tank and EVAP canister) for cracks or improper connection. Refer to EC-615, "EVAPORATIVE EMISSION LINE DRAWING" .

OK or NG

OK >> GO TO 20.
NG >> Repair or reconnect the hose.

20. CLEAN EVAP PURGE LINE

Clean EVAP purge line (pipe and rubber tube) using air blower.

>> GO TO 21.

21. CHECK REFUELING EVAP VAPOR LINE

Check refueling EVAP vapor line between EVAP canister and fuel tank for clogging, kink, looseness and improper connection. For location, refer to EC-620, "ON BOARD REFUELING VAPOR RECOVERY (ORVR)" .

OK or NG

OK >> GO TO 22.
NG >> Repair or replace hoses and tubes.

22. CHECK SIGNAL LINE AND RECIRCULATION LINE

Check signal line and recirculation line between filler neck tube and fuel tank for clogging, kink, cracks, looseness and improper connection.

OK or NG

OK >> GO TO 23.
NG >> Repair or replace hoses, tubes or filler neck tube.

23. CHECK REFUELING CONTROL VALVE

Refer to EC-623, "Component Inspection" .

OK or NG

OK >> GO TO 24.
NG >> Replace refueling control valve with fuel tank.

24. CHECK FUEL LEVEL SENSOR

Refer to DI-21, "FUEL LEVEL SENSOR UNIT CHECK" .

OK or NG

OK >> GO TO 25.
NG >> Replace fuel level sensor unit.

25. CHECK INTERMITTENT INCIDENT

Refer to EC-130, "TROUBLE DIAGNOSIS FOR INTERMITTENT INCIDENT" .

>> **INSPECTION END**

Component Inspection

UBS0031E

WATER SEPARATOR

1. Check visually for insect nests in the water separator air inlet.
2. Check visually for cracks or flaws in the appearance.
3. Check visually for cracks or flaws in the hose.
4. Check that **A** and **C** are not clogged by blowing air into **B** with **A** , and then **C** plugged.
5. In case of NG in items 2 - 4, replace the parts.

   NOTE:
   Do not disassemble water separator.

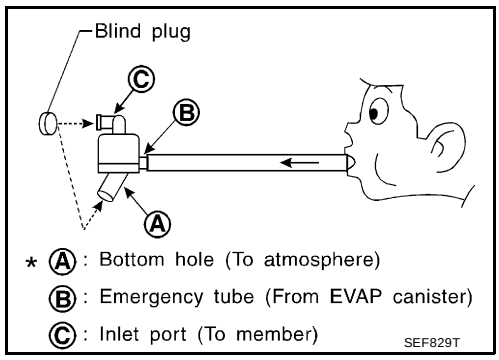

DTC P1464 FUEL LEVEL SENSOR

PFP:25060

Component Description

UBS0031F

The fuel level sensor is mounted in the fuel level sensor unit. The sensor detects a fuel level in the fuel tank and transmits a signal to the ECM.
It consists of two parts, one is mechanical float and the other side is variable resistor. Fuel level sensor output voltage changes depending on the movement of the fuel mechanical float.

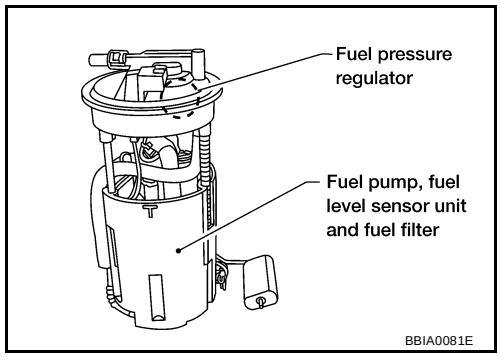

On Board Diagnosis Logic

UBS0031G

ECM receives two signals from the fuel level sensor.
One is fuel level sensor power supply circuit, and the other is fuel level sensor ground circuit.
This diagnosis indicates the latter to detect open circuit malfunction.

DTC No.	Trouble diagnosis name	DTC detecting condition	Possible cause
P1464 1464	Fuel level sensor circuit ground signal	A high voltage from the sensor is sent to ECM.	● Harness or connectors (The sensor circuit is open or shorted)

DTC Confirmation Procedure

UBS0031H

NOTE:
If “DTC Confirmation Procedure” has been previously conducted, always turn ignition switch “OFF” and wait at least 10 seconds before conducting the next test.

WITH CONSULT-II

1. Turn ignition switch “ON”.
2. Select “DATA MONITOR” mode with CONSULT-II.
3. Wait at least 5 seconds.
4. If 1st trip DTC is detected, go to EC-509, "Diagnostic Procedure"
.

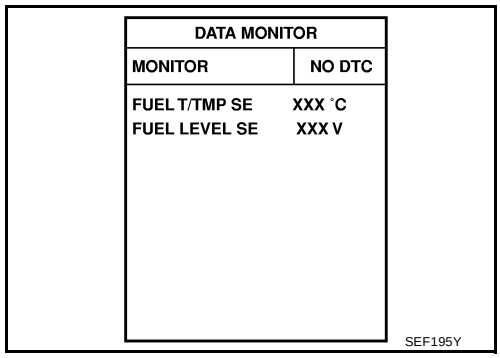

WITH GST

Follow the procedure “WITH CONSULT-II” above.

Wiring Diagram

UBS0031I

EC-FLS3-01

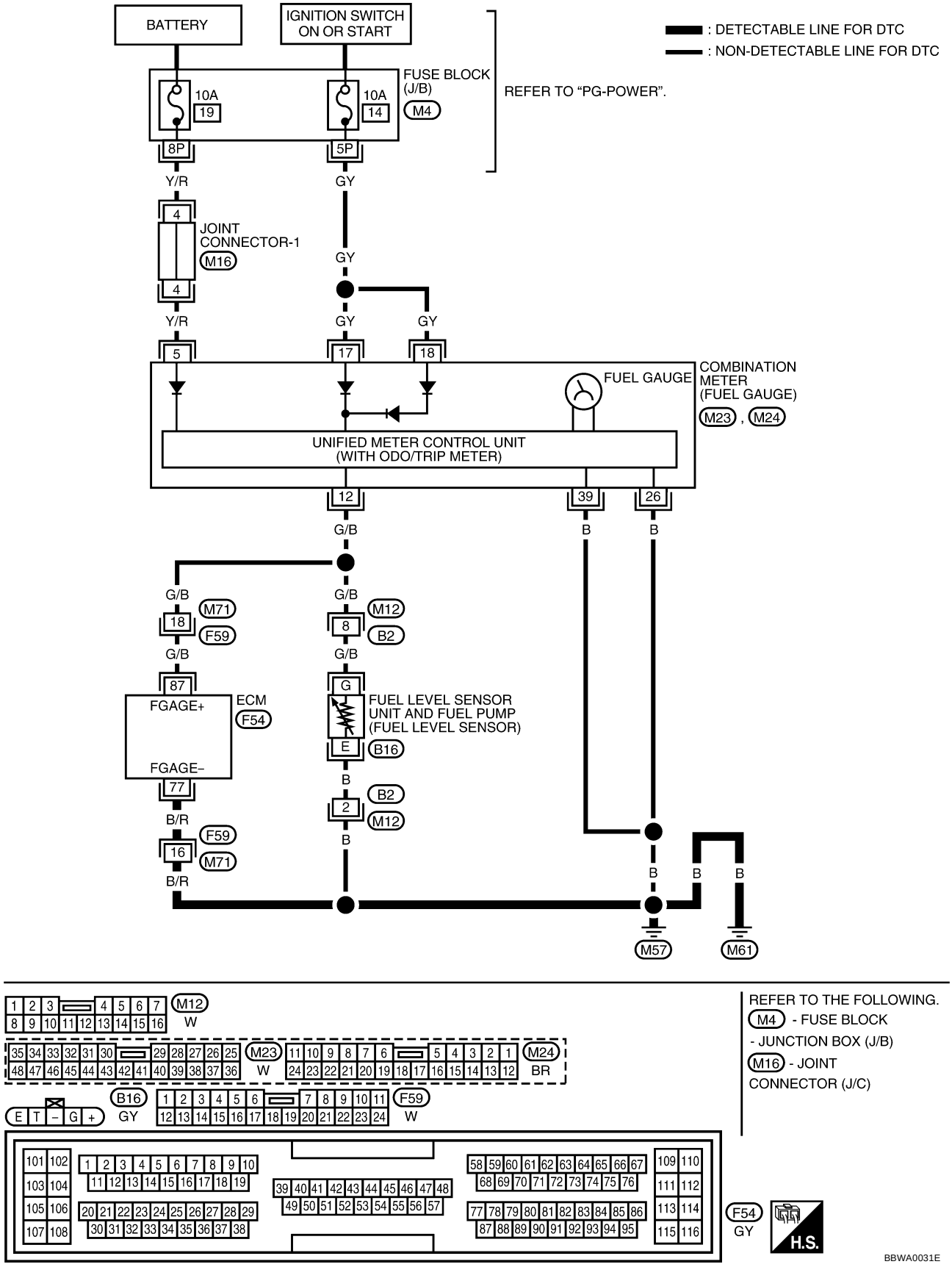

Specification data are reference values and are measured between each terminal and ground.

CAUTION:
Do not use ECM ground terminals when measuring input/output voltage. Doing so may result in damage to the ECM's transistor. Use a ground other than ECM terminals, such as the ground.

TERMINAL NO.	WIRE COLOR	ITEM	CONDITION	DATA (DC Voltage)
77	B/R	Fuel level sensor ground	**[Engine is running]** ● Idle speed	Approximately 0V
87	G/B	Fuel level sensor	**[Ignition switch "ON"]**	Approximately 0 - 4.8V Output voltage varies with fuel level.

Diagnostic Procedure

UBS0031J

1. CHECK FUEL LEVEL SENSOR GROUND CIRCUIT FOR OPEN AND SHORT

1. Turn ignition switch "OFF".
2. Disconnect ECM harness connector.
3. Check harness continuity between ECM terminal 77 and body ground.
   Refer to Wiring Diagram.

   Continuity should exist.

4. Also check harness for short to power.

OK or NG

OK >> GO TO 3.
NG >> GO TO 2.

2. DETECT MALFUNCTIONING PART

Check the following.

- Harness connectors F59, M71
- Harness for open and short between ECM and body ground

>> Replace open circuit or short to power in harness or connectors.

3. CHECK FUEL LEVEL SENSOR

Refer to DI-21, "FUEL LEVEL SENSOR UNIT CHECK" .

OK or NG

OK >> GO TO 4.
NG >> Replace fuel level sensor unit.

4. CHECK INTERMITTENT INCIDENT

Refer to EC-130, "TROUBLE DIAGNOSIS FOR INTERMITTENT INCIDENT" .

>> **INSPECTION END**

Removal and Installation

UBS0031K

FUEL LEVEL SENSOR

Refer to FL-5, "FUEL LEVEL SENSOR UNIT, FUEL FILTER AND FUEL PUMP ASSEMBLY" .

DTC P1490 VACUUM CUT VALVE BYPASS VALVE

PFP:17372

Description

UBS0031L

COMPONENT DESCRIPTION

The vacuum cut valve and vacuum cut valve bypass valve are installed in parallel on the EVAP purge line between the fuel tank and the EVAP canister.
The vacuum cut valve prevents the intake manifold vacuum from being applied to the fuel tank.
The vacuum cut valve bypass valve is a solenoid type valve and generally remains closed. It opens only for on board diagnosis.
The vacuum cut valve bypass valve responds to signals from the ECM. When the ECM sends an ON (ground) signal, the valve is opened. The vacuum cut valve is then bypassed to apply intake manifold vacuum to the fuel tank.

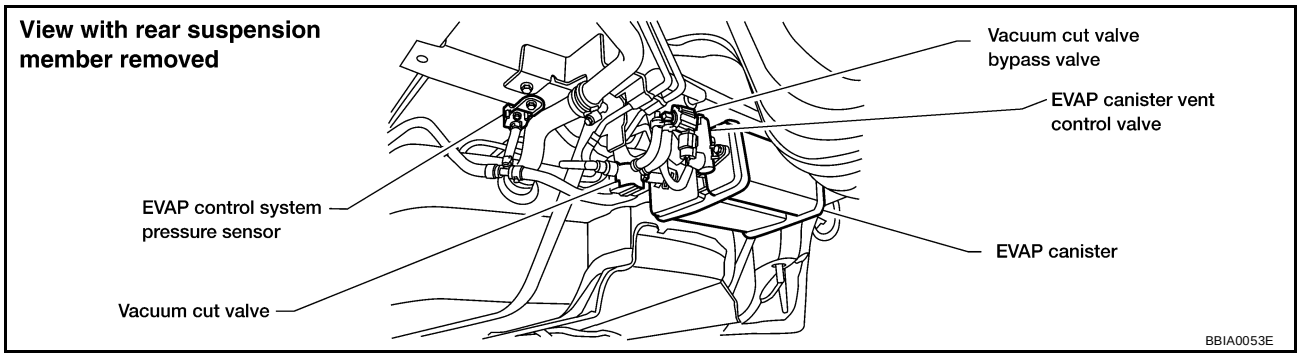

EVAPORATIVE EMISSION SYSTEM DIAGRAM

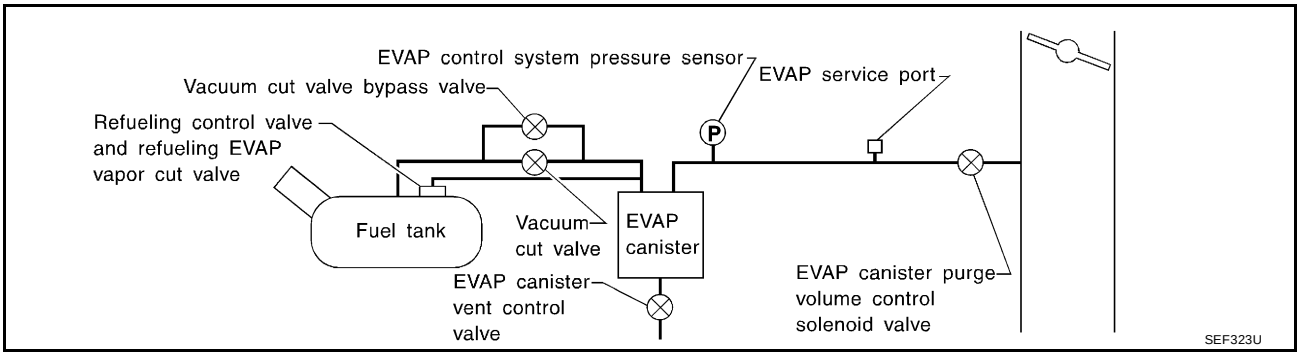

CONSULT-II Reference Value in Data Monitor Mode

UBS0031M

Specification data are reference values.

MONITOR ITEM	CONDITION	SPECIFICATION
VC/V BYPAS S/V	● Ignition switch: ON	OFF

On Board Diagnosis Logic

UBS0031N

DTC No.	Trouble diagnosis name	DTC detecting condition	Possible cause
P1490 1490	Vacuum cut valve bypass valve circuit	An improper voltage signal is sent to ECM through vacuum cut valve bypass valve.	● Harness or connectors (The vacuum cut valve bypass valve circuit is open or shorted) ● Vacuum cut valve bypass valve

DTC Confirmation Procedure

UBS0031O

NOTE:
If “DTC Confirmation Procedure” has been previously conducted, always turn ignition switch “OFF” and wait at least 10 seconds before conducting the next test.
TESTING CONDITION:
Before performing the following procedure, confirm that battery voltage is more than 11V at idle speed.

WITH CONSULT-II

1. Turn ignition switch “ON”.
2. Select “DATA MONITOR” mode with CONSULT-II.
3. Start engine and wait at least 5 seconds.
4. If 1st trip DTC is detected, go to EC-513, "Diagnostic Procedure"
.

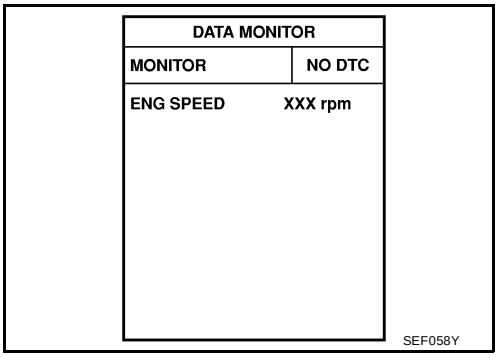

WITH GST

Follow the procedure “WITH CONSULT-II” above.

Wiring Diagram

UBS0031P

EC-BYPS/V-01

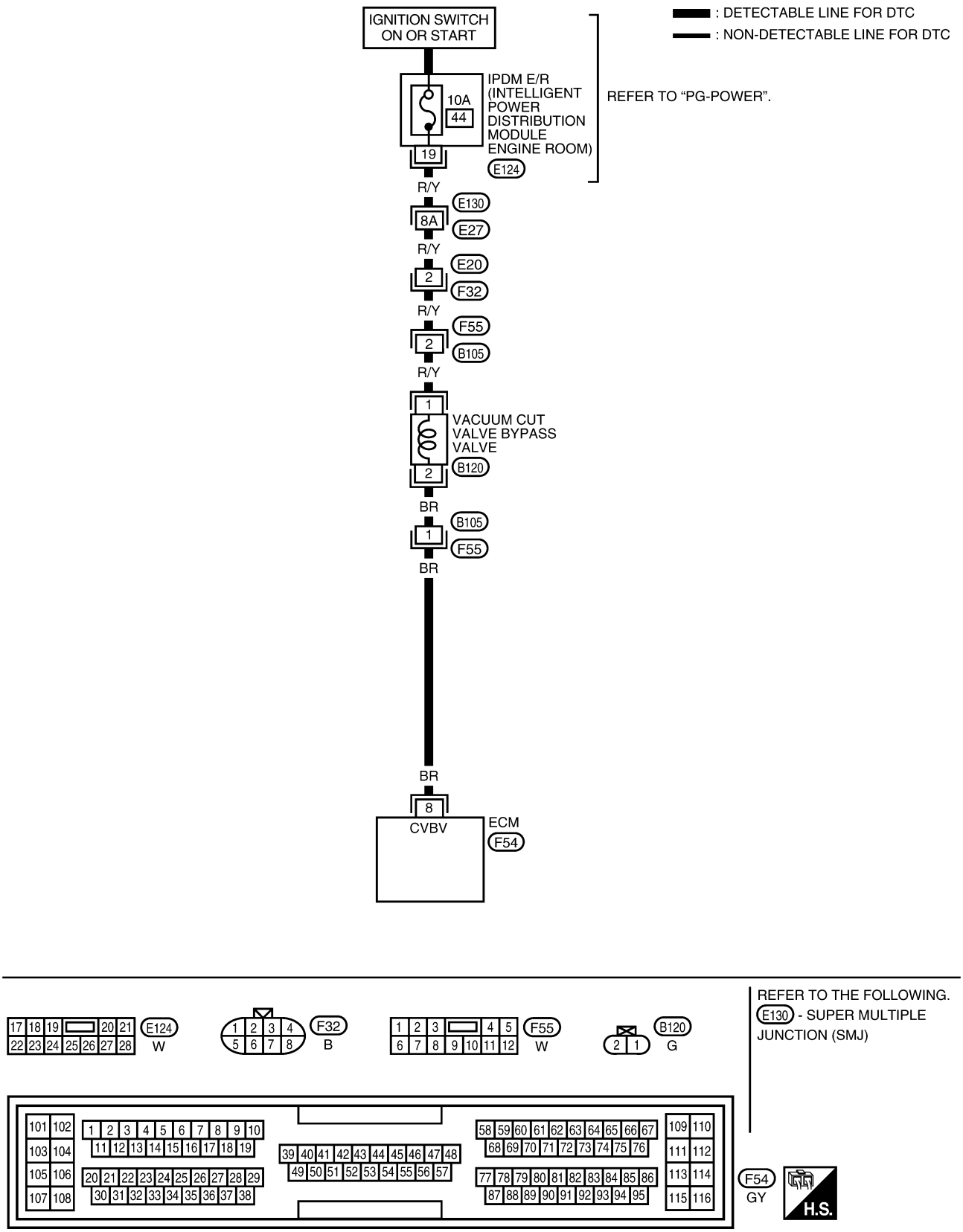

Specification data are reference values and are measured between each terminal and ground.

CAUTION:
Do not use ECM ground terminals when measuring input/output voltage. Doing so may result in damage to the ECM's transistor. Use a ground other than ECM terminals, such as the ground.

TERMINAL NO.	WIRE COLOR	ITEM	CONDITION	DATA (DC Voltage)
8	BR	Vacuum cut valve bypass valve	**[Ignition switch "ON"]**	BATTERY VOLTAGE (11 - 14V)

Diagnostic Procedure

UBS0031Q

1. INSPECTION START

Do you have CONSULT-II?

Yes or No

Yes >> GO TO 2.
No >> GO TO 3.

2. CHECK VACUUM CUT VALVE BYPASS VALVE CIRCUIT

With CONSULT-II

1. Turn ignition switch "OFF" and then "ON".
2. Select "VC/V BYPASS/V" in "ACTIVE TEST" mode with CONSULT-II.
3. Touch "ON/OFF" on CONSULT-II screen.
4. Make sure that clicking sound is heard from the vacuum cut valve bypass valve.

OK or NG

OK >> GO TO 7.
NG >> GO TO 3.

ACTIVE TEST	
VC/V BYPASS/V	OFF
MONITOR	
ENG SPEED	XXX rpm
A/F ALPHA-B1	XXX %
HO2S1 MNTR (B1)	LEAN

PBIB0840E

3. CHECK VACUUM CUT VALVE BYPASS VALUE POWER SUPPLY CIRCUIT

1. Turn ignition switch “OFF”.
2. Disconnect vacuum cut valve bypass valve harness connector.

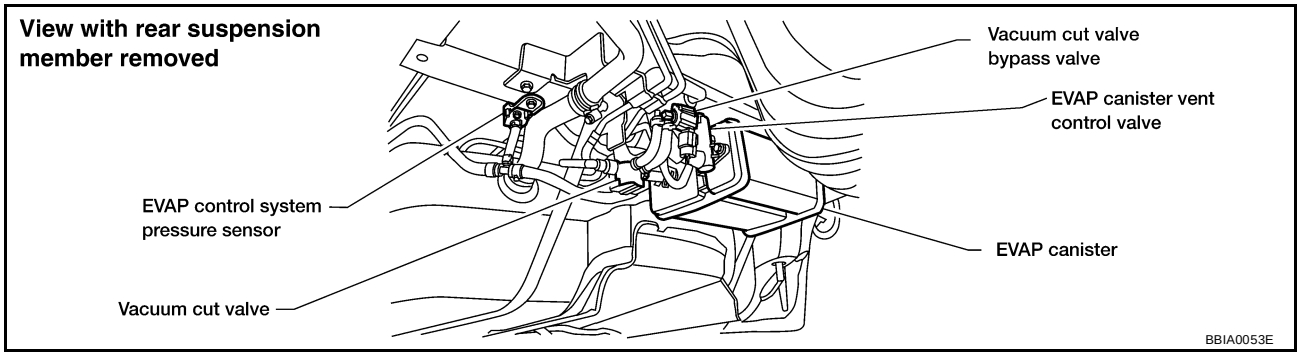

3. Turn ignition switch “ON”.
4. Check voltage between vacuum cut valve bypass valve terminal 1 and ground with CONSULT-II or tester.

Voltage: Battery voltage

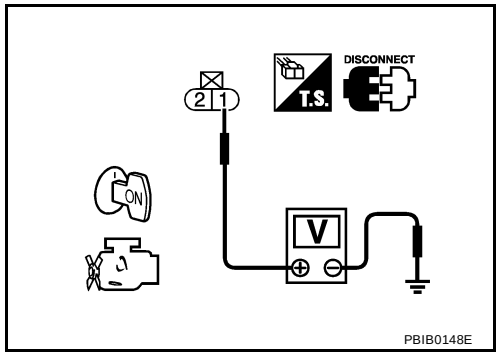

OK or NG

OK >> GO TO 5.
NG >> GO TO 4.

4. DETECT MALFUNCTIONING PART

Check the following.

- Harness connectors E130, E27
- Harness connectors E20, F32
- Harness connectors F55, B105
- IPDM E/R connector E124
- 10A fuse
- Harness for open or short between vacuum cut valve bypass valve and fuse

>> Repair harness or connectors.

5. CHECK VACUUM CUT VALVE BYPASS VALVE OUTPUT SIGNAL CIRCUIT FOR OPEN AND SHORT

1. Turn ignition switch “OFF”.
2. Disconnect ECM harness connector.
3. Check harness continuity between ECM terminal 8 and vacuum cut valve bypass valve terminal 2. Refer to Wiring Diagram.

Continuity should exist.

4. Also check harness for short to ground and short to power.

OK or NG

OK >> GO TO 7.
NG >> GO TO 6.

6. DETECT MALFUNCTIONING PART

Check the following.

- Harness connectors B105, F55
- Harness for open or short between vacuum cut valve bypass valve and ECM

>> Repair open circuit or short to ground or short to power in harness or connectors.

7. CHECK VACUUM CUT VALVE BYPASS VALVE

Refer to EC-515, "Component Inspection" .

OK or NG

OK >> GO TO 8.
NG >> Replace vacuum cut valve bypass valve.

8. CHECK INTERMITTENT INCIDENT

Refer to EC-130, "TROUBLE DIAGNOSIS FOR INTERMITTENT INCIDENT" .

>> **INSPECTION END**

Component Inspection

UBS0031R

VACUUM CUT VALVE BYPASS VALVE

With CONSULT-II

1. Reconnect harness disconnected connectors.
2. Turn ignition switch ON.
3. Perform “VC/V BYPASS/V” in “ACTIVE TEST” mode.

ACTIVE TEST	
VC/V BYPASS/V	OFF
MONITOR	
ENG SPEED	XXX rpm
A/F ALPHA-B1	XXX %
HO2S1 MNTR (B1)	LEAN

PBIB0840E

4. Check air passage continuity and operation delay time under the following conditions.

Condition VC/V BYPASS/V	Air passage continuity between A and B
ON	Yes
OFF	No

Operation takes less than 1 second.
If NG, replace vacuum cut valve bypass valve.

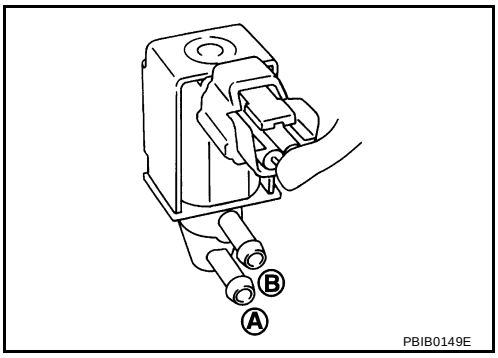

PBIB0149E

Without CONSULT-II

Check air passage continuity and operation delay time under the following conditions.

Condition	Air passage continuity between A and B
12V direct current supply between terminals 1 and 2	Yes
No supply	No

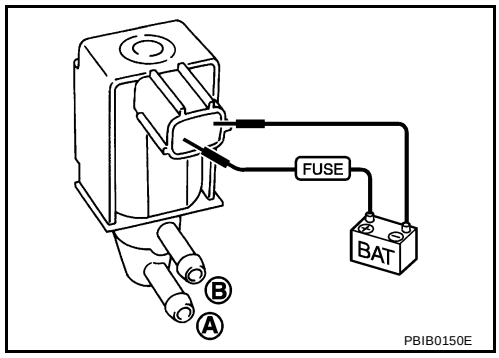

Operation takes less than 1 second.
If NG, replace vacuum cut valve bypass valve.

DTC P1491 VACUUM CUT VALVE BYPASS VALVE

PFP:17372

Description

UBS0031S

COMPONENT DESCRIPTION

The vacuum cut valve and vacuum cut valve bypass valve are installed in parallel on the EVAP purge line between the fuel tank and the EVAP canister.
The vacuum cut valve prevents the intake manifold vacuum from being applied to the fuel tank.
The vacuum cut valve bypass valve is a solenoid type valve and generally remains closed. It opens only for on board diagnosis.
The vacuum cut valve bypass valve responds to signals from the ECM. When the ECM sends an ON (ground) signal, the valve is opened. The vacuum cut valve is then bypassed to apply intake manifold vacuum to the fuel tank.

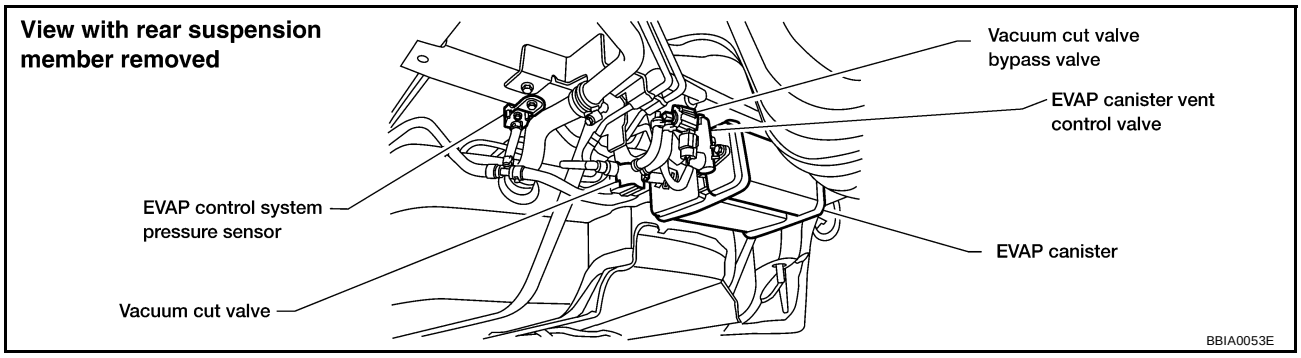

EVAPORATIVE EMISSION SYSTEM DIAGRAM

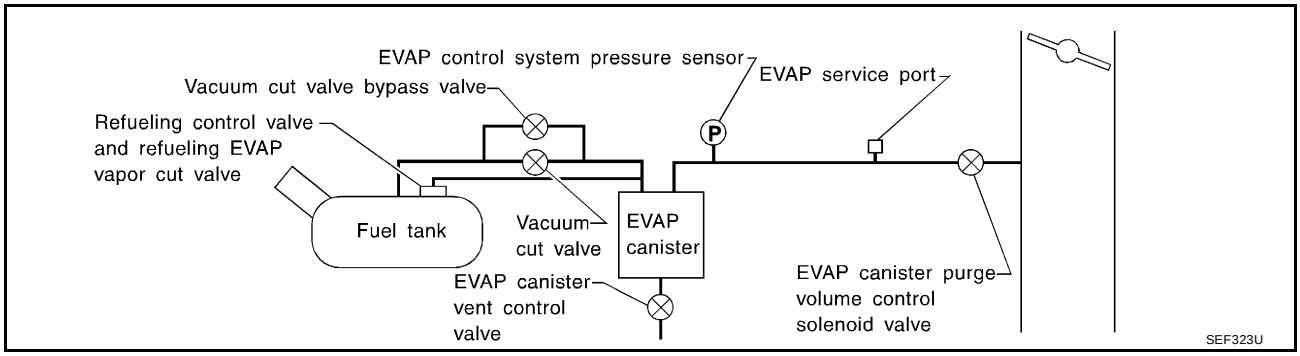

CONSULT-II Reference Value in Data Monitor Mode

UBS0031T

Specification data are reference values.

MONITOR ITEM	CONDITION	SPECIFICATION
VC/V BYPAS S/V	● Ignition switch: ON	OFF

On Board Diagnosis Logic

UBS0031U

DTC No.	Trouble diagnosis name	DTC detecting condition	Possible cause
P1491 1491	Vacuum cut valve bypass valve	Vacuum cut valve bypass valve does not operate properly.	● Vacuum cut valve bypass valve ● Vacuum cut valve ● Bypass hoses for clogging ● EVAP control system pressure sensor and circuit ● EVAP canister vent control valve ● Hose between fuel tank and vacuum cut valve clogged ● Hose between vacuum cut valve and EVAP canister clogged ● EVAP canister ● EVAP purge port of fuel tank for clogging

DTC Confirmation Procedure

UBS0031V

CAUTION:
Always drive vehicle at a safe speed.

NOTE:
If “DTC Confirmation Procedure” has been previously conducted, always turn ignition switch “OFF” and wait at least 10 seconds before conducting the next test.

TESTING CONDITION:
Always perform test at a temperature of 5 to 30°C (41 to 86°F).

WITH CONSULT-II

1. Turn ignition switch “ON”.
2. Start engine and warm it up to normal operating temperature.
3. Turn ignition switch “OFF” and wait at least 10 seconds.
4. Start engine and let it idle for at least 70 seconds.
5. Select “VC CUT/V BP/V P1491” of “EVAPORATIVE SYSTEM” in “DTC WORK SUPPORT” mode with CONSULT-II.
6. Touch “START”.
7. When the following conditions are met, “TESTING” will be displayed on the CONSULT-II screen. Maintain the conditions continuously until “TESTING” changes to “COMPLETED”. (It will take at least 30 seconds.)

ENG SPEED	1,000 - 3,800 rpm
Selector lever	Suitable position
Vehicle speed	36 - 120 km/h (22 - 75 MPH)
B/FUEL SCHDL	1.0 - 7.2 msec

If “TESTING” is not displayed after 5 minutes, retry from step 3.

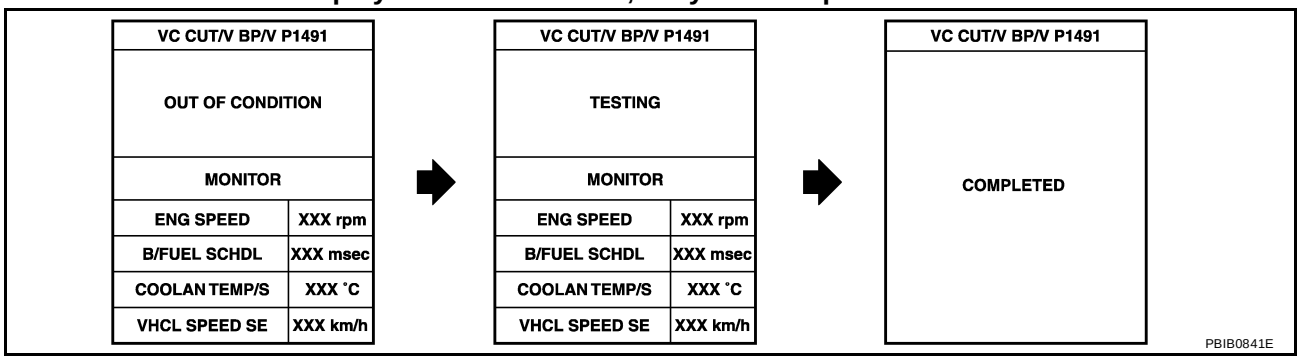

8. Make sure that “OK” is displayed after touching “SELF-DIAG RESULTS”. If “NG” is displayed, refer to EC-521, "Diagnostic Procedure" .

Overall Function Check

UBS0031W

Use this procedure to check the overall function of vacuum cut valve bypass valve. During this check, the 1st trip DTC might not be confirmed.

WITH GST

1. Remove vacuum cut valve and vacuum cut valve bypass valve as an assembly.

2. Apply vacuum to port **A** and check that there is no suction from port **B** .
3. Apply vacuum to port **B** and check that there is suction from port **A** .
4. Blow air in port **B** and check that there is a resistance to flow out of port **A** .
5. Supply battery voltage to the terminal.
6. Blow air in port **A** and check that air flows freely out of port **B** .
7. Blow air in port **B** and check that air flows freely out of port **A** .
8. If NG, go to EC-521, "Diagnostic Procedure" .

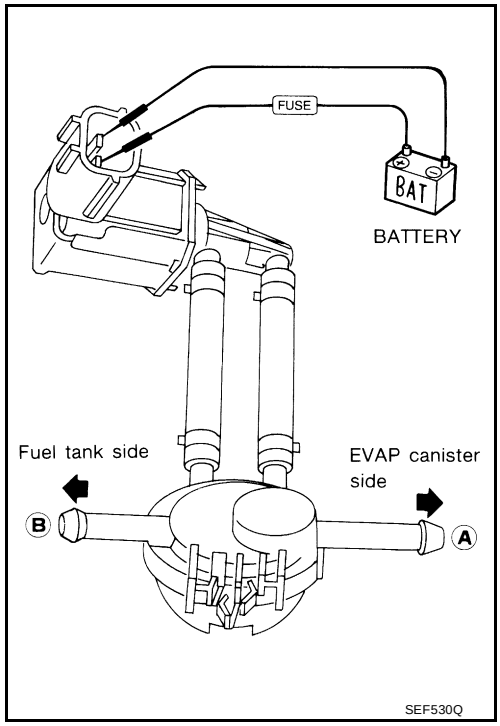

Wiring Diagram

UBS0031X

EC-BYPS/V-01

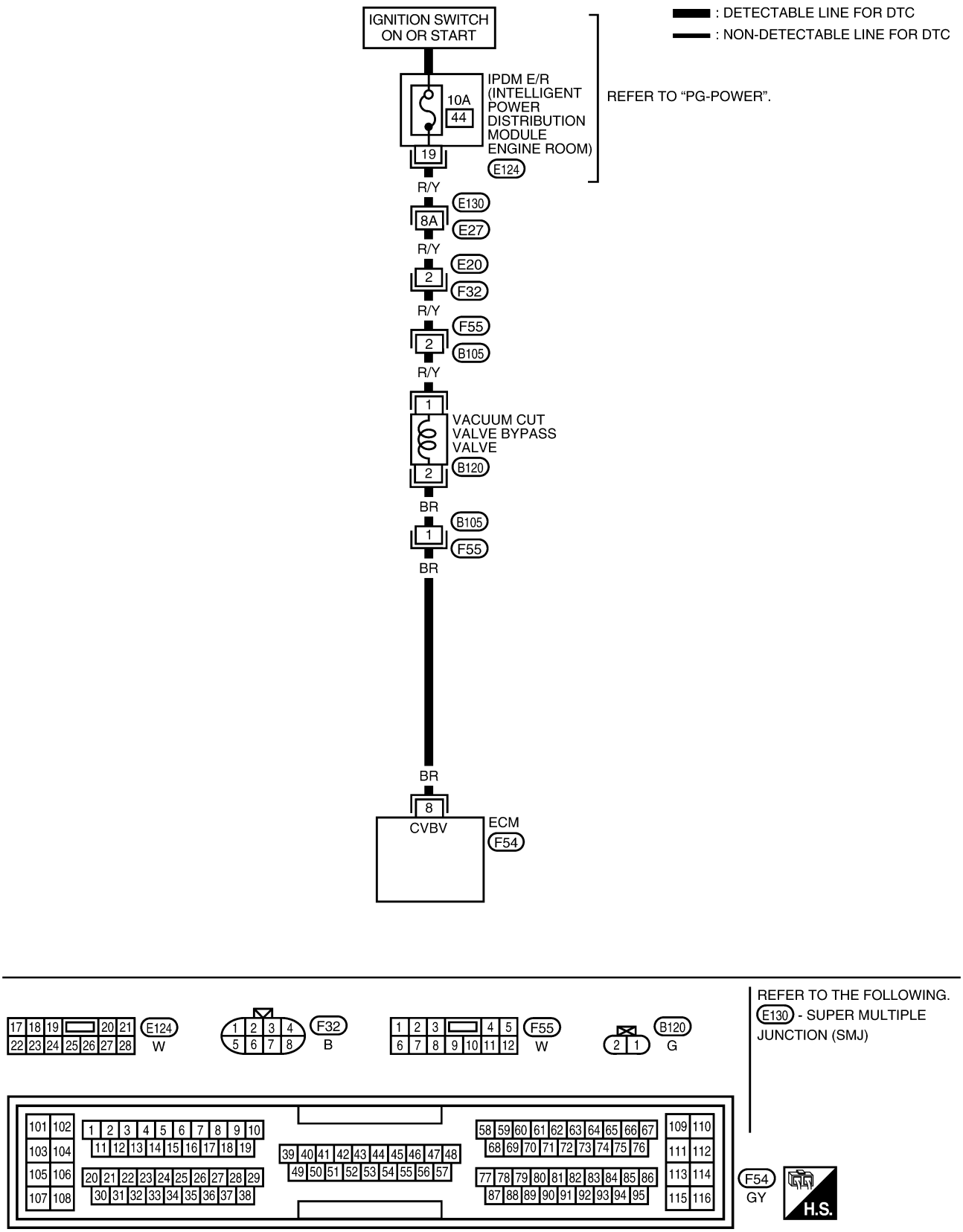

Specification data are reference values and are measured between each terminal and ground.

CAUTION:
Do not use ECM ground terminals when measuring input/output voltage. Doing so may result in damage to the ECM's transistor. Use a ground other than ECM terminals, such as the ground.

TERMINAL NO.	WIRE COLOR	ITEM	CONDITION	DATA (DC Voltage)
8	BR	Vacuum cut valve bypass valve	**[Ignition switch "ON"]**	BATTERY VOLTAGE (11 - 14V)

Diagnostic Procedure

UBS0031Y

1. INSPECTION START

Do you have CONSULT-II?

Yes or No

Yes >> GO TO 2.
No >> GO TO 3.

2. CHECK VACUUM CUT VALVE BYPASS VALVE OPERATION

With CONSULT-II

1. Turn ignition switch "OFF".
2. Remove vacuum cut valve and vacuum cut valve bypass valve as an assembly.
3. Apply vacuum to port **A** and check that there is no suction from port **B** .
4. Apply vacuum to port **B** and check that there is suction from port **A** .
5. Blow air in port **B** and check that there is a resistance to flow out of port **A** .
6. Turn ignition switch "ON".
7. Select "VC/V BYPASS/V" in "ACTIVE TEST" mode with CONSULT-II and touch "ON".
8. Blow air in port **A** and check that air flows freely out of port **B** .
9. Blow air in port **B** and check that air flows freely out of port **A** .

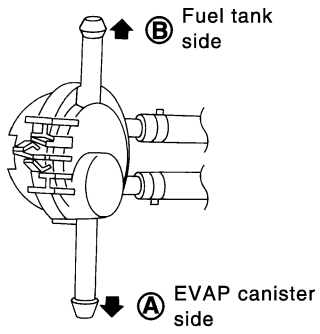

ACTIVE TEST	
VC/V BYPASS/V	OFF
MONITOR	
ENG SPEED	XXX rpm
A/F ALPHA-B1	XXX %
HO2S1 MNTR (B1)	LEAN

PBIB0842E

OK or NG

OK >> GO TO 4.
NG >> GO TO 5.

3. CHECK VACUUM CUT VALVE BYPASS VALVE OPERATION

Without CONSULT-II

1. Turn ignition switch “OFF”.
2. Remove vacuum cut valve and vacuum cut valve bypass valve as an assembly.
3. Apply vacuum to port **A** and check that there is no suction from port **B** .
4. Apply vacuum to port **B** and check that there is suction from port **A** .
5. Blow air in port **B** and check that there is a resistance to flow out of port **A** .
6. Disconnect vacuum cut valve bypass valve harness connector.
7. Supply battery voltage to the terminal.
8. Blow air in port **A** and check that air flows freely out of port **B** .
9. Blow air in port **B** and check that air flows freely out of port **A** .

OK or NG

OK >> GO TO 4.
NG >> GO TO 7.

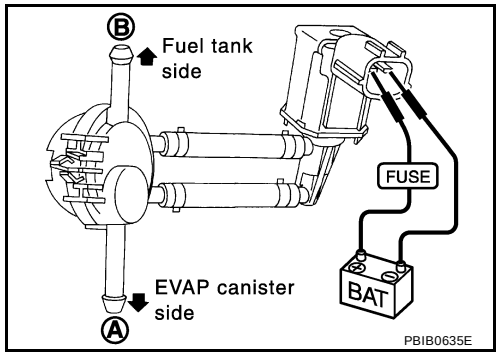

4. CHECK EVAP PURGE LINE

Check EVAP purge line between EVAP canister and fuel tank for clogging or disconnection.

OK or NG

OK >> GO TO 5.
NG >> Repair it.

5. CHECK EVAP PURGE PORT

Check EVAP purge port of fuel tank for clogging.

OK or NG

OK >> GO TO 6.
NG >> Clean EVAP purge port.

6. CHECK EVAP CANISTER

1. Pinch the fresh air hose.
2. Blow air into port **A** and check that it flows freely out of port **B** .

OK or NG

OK >> GO TO 12.
NG >> Replace EVAP canister.

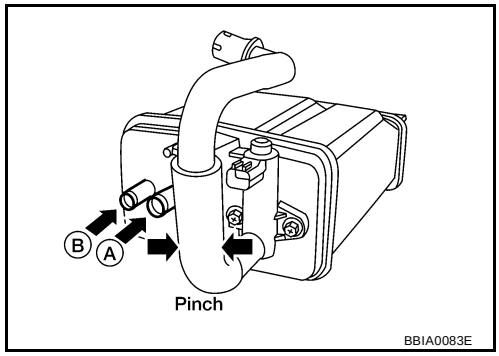

7. CHECK BYPASS HOSE

Check bypass hoses for clogging.

OK or NG

OK >> GO TO 8.
NG >> Repair or replace hoses.

8. CHECK VACUUM CUT VALVE BYPASS VALVE

Refer to EC-524, "Component Inspection" .

OK or NG

OK >> GO TO 9.
NG >> Replace vacuum cut valve bypass valve.

9. CHECK VACUUM CUT VALVE

Refer to EC-524, "Component Inspection" .

OK or NG

OK >> GO TO 10.
NG >> Replace vacuum cut valve.

10. CHECK EVAP CONTROL SYSTEM PRESSURE SENSOR HOSE

1. Turn ignition switch “OFF”.
2. Check disconnection or improper connection of hose connected to EVAP control system pressure sensor.

OK or NG

OK >> GO TO 11.
NG >> Repair or replace.

11. CHECK EVAP CONTROL SYSTEM PRESSURE SENSOR CONNECTOR

1. Disconnect EVAP control system pressure sensor harness connector.
2. Check connectors for water.

Water should not exist.

OK or NG

OK >> GO TO 12.
NG >> Replace EVAP control system pressure sensor.

12. CHECK EVAP CONTROL SYSTEM PRESSURE SENSOR

Refer to EC-333, "Component Inspection" .

OK or NG

OK >> GO TO 13.
NG >> Replace EVAP control system pressure sensor.

13. CHECK RUBBER TUBE FOR CLOGGING

1. Disconnect rubber tube connected to EVAP canister vent control valve.
2. Check the rubber tube for clogging.

OK or NG

OK >> GO TO 14.
NG >> Clean the rubber tube using an air blower.

14. CHECK EVAP CANISTER VENT CONTROL VALVE

Refer to EC-326, "Component Inspection" .

OK or NG

OK >> GO TO 15.
NG >> Replace EVAP canister vent control valve.

15. CHECK INTERMITTENT INCIDENT

Refer to EC-130, "TROUBLE DIAGNOSIS FOR INTERMITTENT INCIDENT" .

>> **INSPECTION END**

Component Inspection

UBS0031Z

VACUUM CUT VALVE BYPASS VALVE

With CONSULT-II

1. Reconnect harness disconnected connectors.
2. Turn ignition switch ON.
3. Perform “VC/V BYPASS/V” in “ACTIVE TEST” mode.

ACTIVE TEST	
VC/V BYPASS/V	OFF
MONITOR	
ENG SPEED	XXX rpm
A/F ALPHA-B1	XXX %
HO2S1 MNTR (B1)	LEAN

PBIB0840E

4. Check air passage continuity and operation delay time under the following conditions.

Condition VC/V BYPASS/V	Air passage continuity between A and B
ON	Yes
OFF	No

Operation takes less than 1 second.
If NG, replace vacuum cut valve bypass valve.

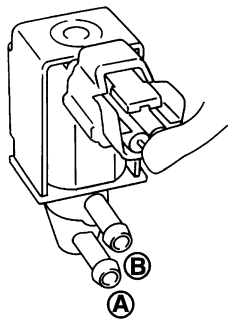

PBIB0149E

Without CONSULT-II

Check air passage continuity and operation delay time under the following conditions.

Condition	Air passage continuity between A and B
12V direct current supply between terminals 1 and 2	Yes
No supply	No

Operation takes less than 1 second.
If NG, replace vacuum cut valve bypass valve.

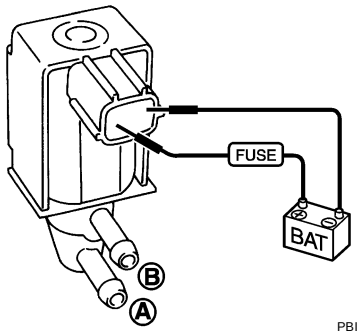

PBIB0150E

VACUUM CUT VALVE

Check vacuum cut valve as follows:

1. Plug port **C** and **D** with fingers.
2. Apply vacuum to port **A** and check that there is no suction from port **B** .
3. Apply vacuum to port **B** and check that there is suction from port **A** .
4. Blow air in port **B** and check that there is a resistance to flow out of port **A** .
5. Open port **C** and **D** .
6. Blow air in port **A** check that air flows freely out of port **C** .
7. Blow air in port **B** check that air flows freely out of port **D** .
8. If NG, replace vacuum cut valve.

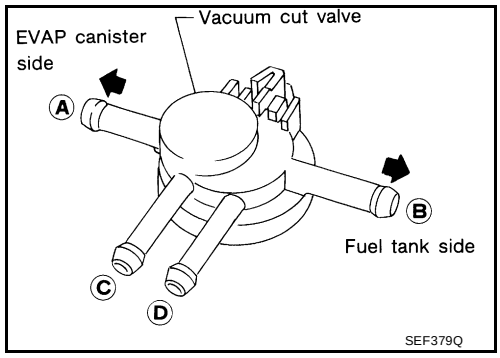

DTC P1564 ASCD STEERING SWITCH

PFP:25551

Component Description

UBS00320

ASCD steering switch has variant values of electrical resistance for each button. ECM reads voltage variation of switch, and determines which button is operated.
Refer to EC-628, "AUTOMATIC SPEED CONTROL DEVICE (ASCD)" for the ASCD function.

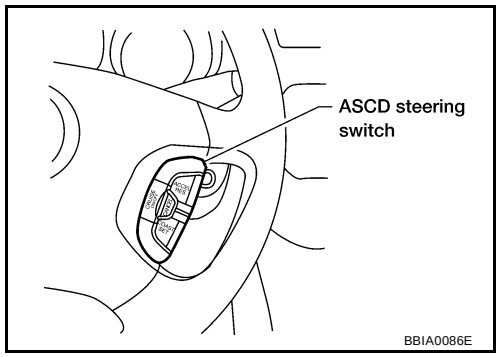

CONSULT-II Reference Value in Data Monitor Mode

UBS00321

Specification data are reference values.

MONITOR ITEM	CONDITION		SPECIFICATION
MAIN SW	● Ignition switch: ON	● CRUISE switch pressed	ON
		● CRUISE switch released	OFF
CANCEL	● Ignition switch: ON	● CANCEL switch pressed	ON
		● CANCEL switch released	OFF
RESUME/ACC SW	● Ignition switch: ON	● ACCEL RES switch pressed	ON
		● ACCEL RES switch released	OFF
SET SW	● Ignition switch: ON	● COAST/SET switch pressed	ON
		● COAST/SET switch released	OFF

On Board Diagnosis Logic

UBS00322

NOTE:
If DTC P1564 is displayed with DTC P0605, first perform the trouble diagnosis for DTC P0605. Refer to EC-376 .

DTC No.	Trouble Diagnosis Name	DTC Detecting Condition	Possible Cause
P1564 1564	ASCD steering switch	● An excessively high voltage signal from the ASCD steering switch is sent to ECM. ● ECM detects that input signal from the ASCD steering switch is out of the specified range. ● ECM detects that the ASCD steering switch is stuck ON.	● Harness or connectors (The switch circuit is open or shorted.) ● ASCD steering switch ● ECM

DTC Confirmation Procedure

UBS00323

NOTE:
If "DTC Confirmation Procedure" has been previously conducted, always turn ignition switch "OFF" and wait at least 10 seconds before conducting the next test.

WITH CONSULT-II

1. Turn ignition switch "ON".

2. Select "DATA MONITOR" mode with CONSULT-II.
3. Wait at least 10 seconds.
4. Press "CRUISE" switch for at least 10 seconds, then release it and wait at least 10 seconds.
5. Press "ACCEL/RES" switch for at least 10 seconds, then release it and wait at least 10 seconds.
6. Press "COAST/SET" switch for at least 10 seconds, then release it and wait at least 10 seconds.
7. Press "CANCEL" switch for at least 10 seconds, then release it and wait at least 10 seconds.
8. If 1st trip DTC is detected, go to EC-530, "Diagnostic Procedure".

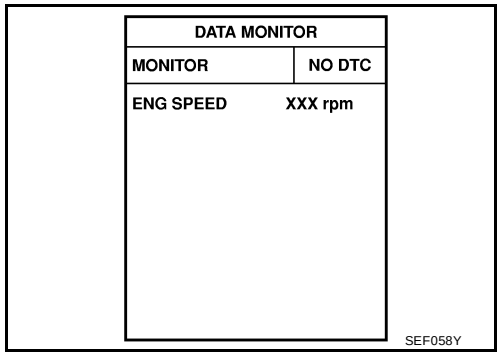

WITH GST

Follow the procedure “WITH CONSULT-II” above.

Wiring Diagram

UBS00324

EC-ASC/SW-01

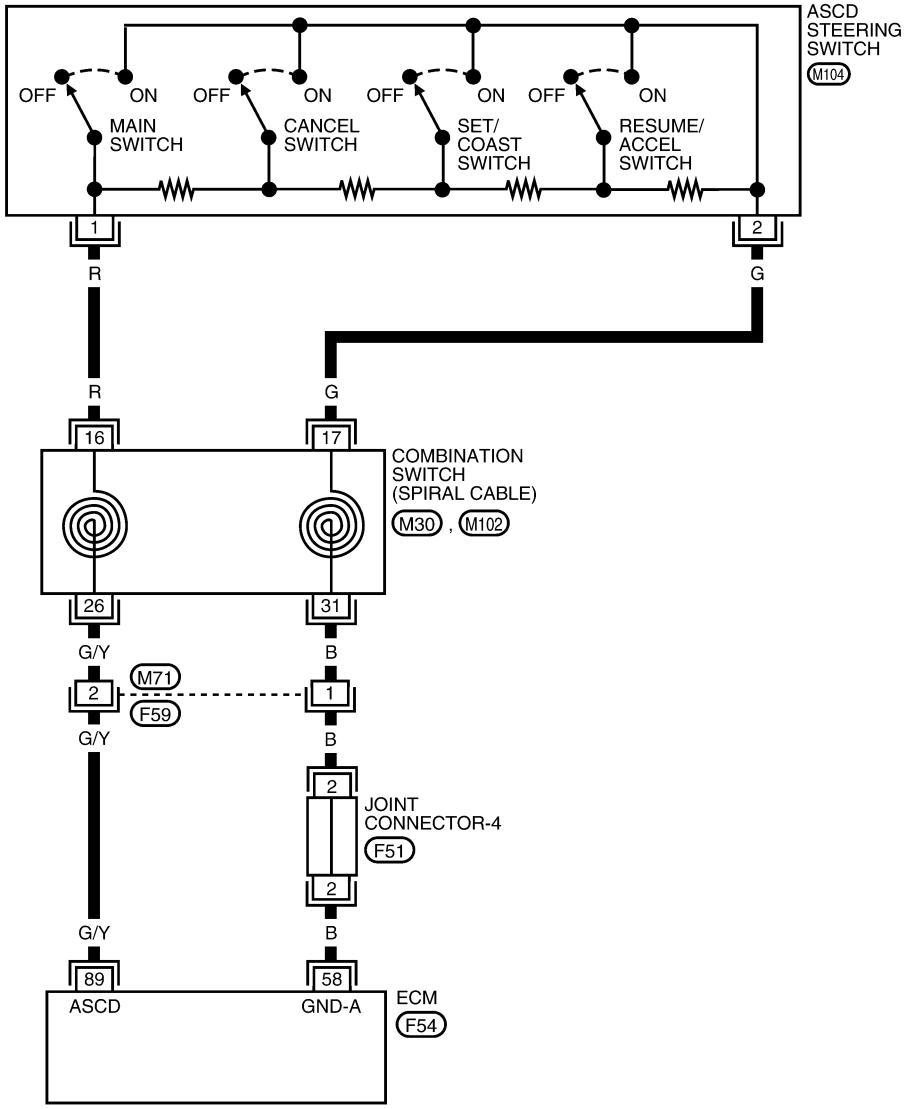

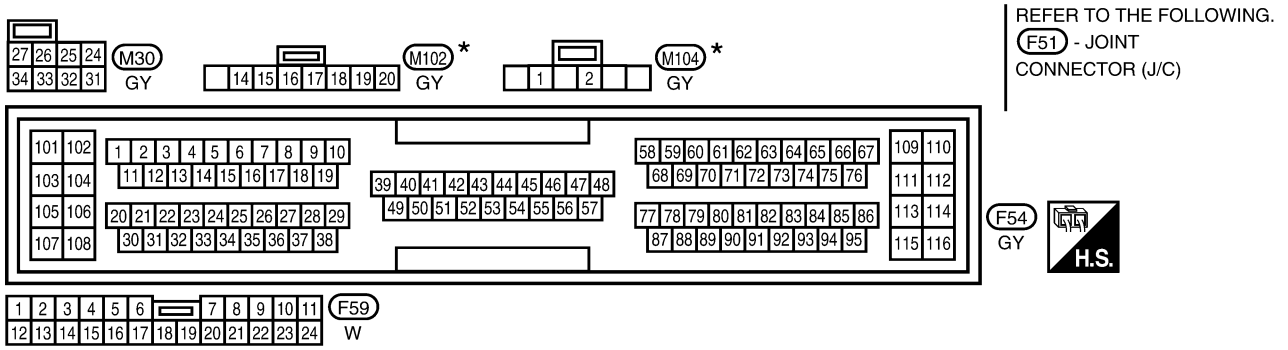

*: This connector is not shown in "HARNESS LAYOUT" of PG section.

BBWA0101E

Specification data are reference values and are measured between each terminal and ground.

CAUTION:

Do not use ECM ground terminals when measuring input/output voltage. Doing so may result in damage to the ECM's transistor. Use a ground other than ECM terminals, such as the ground.

TERMINAL NO.	WIRE COLOR	ITEM	CONDITION	DATA (DC Voltage)
58	B	Sensors' ground	**[Engine is running]** ● **Warm-up condition** ● Idle speed	Approximately 0V
89	G/Y	ASCD steering switch	**[Ignition switch "ON"]** ● ASCD steering switch is "OFF".	Approximately 4V
			[Ignition switch "ON"] ● CRUISE switch is "ON".	Approximately 0V
			[Ignition switch "ON"] ● CANCEL switch is "ON".	Approximately 1V
			[Ignition switch "ON"] ● SET/COAST switch is "ON".	Approximately 2V
			[Ignition switch "ON"] ● RESUME/ACCEL switch is "ON".	Approximately 3V

Diagnostic Procedure

UBS00325

1. CHECK ASCD STEERING SWITCH CIRCUIT

With CONSULT-II

1. Turn ignition switch "ON".
2. Select "MAIN SW", "RESUME/ACC SW", "SET SW" and "CANCEL SW" in "DATA MONITOR" mode with CONSULT-II.
3. Check each item indication under the following conditions.

Switch	Monitor item	Condition	Indication
CUISE	MAIN SW	Pressed	ON
		Released	OFF
COAST/SET	SET SW	Pressed	ON
		Released	OFF
ACCEL/RES	RESUME/ACC SW	Pressed	ON
		Released	OFF
CANCEL	CANCEL SW	Pressed	ON
		Released	OFF

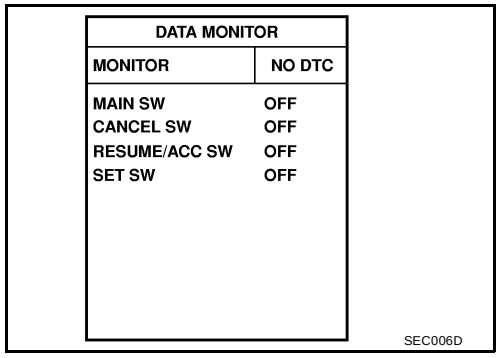

Without CONSULT-II

1. Turn ignition switch "ON".
2. Check voltage between ECM terminal 89 and ground with pressing each button.

Switch	Condition	Voltage [V]
CRUISE	Pressed	Approx. 0.5
	Released	Approx. 5.0
COAST/SET	Pressed	Approx. 2.0
	Released	Approx. 5.0
ACCEL RES	Pressed	Approx. 3.0
	Released	Approx. 5.0
CANCEL	Pressed	Approx. 1.0
	Released	Approx. 5.0

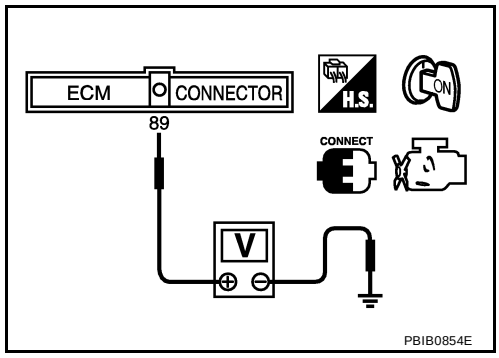

OK or NG

OK >> GO TO 7.
NG >> GO TO 2.

2. CHECK ASCD STEERING SWITCH GROUND CIRCUIT FOR OPEN AND SHORT

1. Turn ignition switch "OFF".
2. Disconnect ASCD steering switch harness connector and ECM harness connector.
3. Check harness continuity between ASCD steering switch terminal 2 and ECM terminal 58. Refer to Wiring Diagram.

   Continuity should exist.

4. Also check harness for short to ground and short to power.

OK or NG

OK >> GO TO 4.
NG >> GO TO 3.

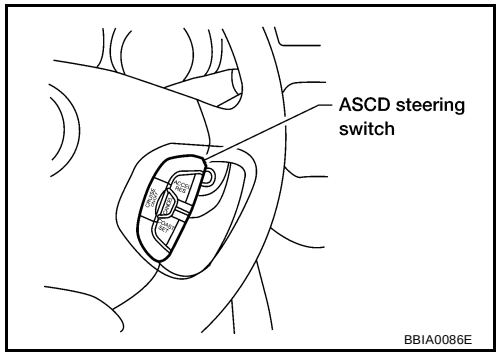

3. DETECT MALFUNCTIONING PART

Check the following.

- Harness connectors M71, F59
- Joint connector-4
- Combination switch (spiral cable)
- Harness for open and short between ECM and ASCD steering switch

>> Repair open circuit or short to ground or short to power in harness or connectors.

4. CHECK ASCD STEERING SWITCH INPUT SIGNAL CIRCUIT FOR OPEN AND SHORT

1. Check harness continuity between ECM terminal 89 and ASCD steering switch terminal 1.
   Refer to Wiring Diagram.

   Continuity should exist.

2. Also check harness for short to ground and short to power.

OK or NG

OK >> GO TO 6.
NG >> GO TO 5.

5. DETECT MALFUNCTIONING PART

Check the following.

- Harness connectors M71, F59
- Combination switch (spiral cable)
- Harness for open and short between ECM and ASCD steering switch

>> Repair open circuit or short to ground or short to power in harness or connectors.

6. CHECK ASCD STEERING SWITCH

Refer to EC-531, "Component Inspection" .

OK or NG

OK >> GO TO 7.
NG >> Replace ASCD steering switch.

7. CHECK INTERMITTENT INCIDENT

Refer to EC-130, "TROUBLE DIAGNOSIS FOR INTERMITTENT INCIDENT" .

>> **INSPECTION END**

Component Inspection

UBS00326

ASCD STEERING SWITCH

1. Disconnect ASCD steering switch.

2. Check continuity between ASCD steering switch terminals 1 and 2 with pushing each switch.

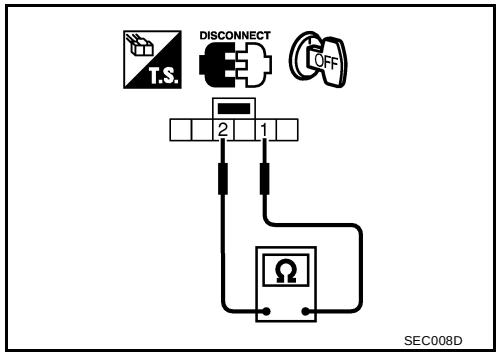

Switch	Condition	Resistance [Ω]
CRUISE SW	Pressed	Approx. 0
	Released	Approx. 4,000
COAST/SET SW	Pressed	Approx. 660
	Released	Approx. 4,000
ACCEL RES SW	Pressed	Approx. 1,480
	Released	Approx. 4,000
CANCEL SW	Pressed	Approx. 250
	Released	Approx. 4,000

If NG, replace ASCD steering switch.

DTC P1572 ASCD BRAKE SWITCH

PFP:25320

Component Description

UBS00327

When the brake pedal is depressed, ASCD brake switch is turned OFF and stop lamp switch is turned ON. ECM detects the state of the brake pedal by this input of two kinds (ON/OFF signal).
Refer to EC-628, "AUTOMATIC SPEED CONTROL DEVICE (ASCD)" for the ASCD function.

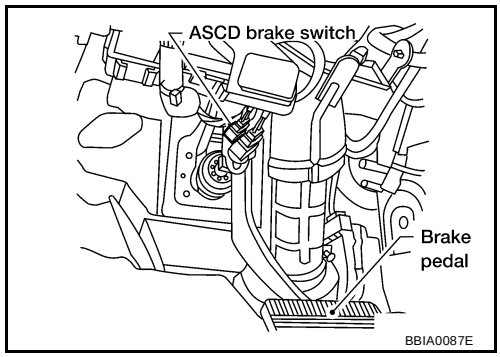

CONSULT-II Reference Value in Data Monitor Mode

UBS00328

Specification data are reference values.

MONITOR ITEM	CONDITION		SPECIFICATION
BRAKE SW1 (ASCD brake switch)	● Ignition switch: ON	● Brake pedal fully released	ON
		● Brake pedal depressed	OFF
BRAKE SW2 (stop lamp switch)	● Ignition switch: ON	● Brake pedal fully released	OFF
		● Brake pedal depressed	ON

On Board Diagnosis Logic

UBS00329

NOTE:
If DTC P1572 is displayed with DTC P0605, first perform the trouble diagnosis for DTC P0605. Refer to EC-376 .

DTC No.	Trouble Diagnosis Name	DTC Detecting Condition	Possible Cause
P1572 1572	ASCD brake switch	ON signals from the stop lamp switch and the ASCD brake switch are sent to ECM at the same time.	● Harness or connectors (The stop lamp switch circuit is open or shorted.) ● Harness or connectors (The ASCD brake switch circuit is open or shorted.) ● Harness or connectors (The ASCD clutch switch circuit is open or shorted.) ● Stop lamp switch ● ASCD brake switch ● ASCD clutch switch ● Incorrect stop lamp switch installation ● Incorrect ASCD brake switch installation ● Incorrect ASCD clutch switch installation ● ECM

DTC Confirmation Procedure

UBS0032A

CAUTION:
Always drive vehicle at a safe speed.

NOTE:
If "DTC Confirmation Procedure" has been previously conducted, always turn ignition switch "OFF" and wait at least 10 seconds before conducting the next test.

TESTING CONDITION:
Steps 3 and 4 may be conducted with the drive wheels lifted in the shop or by driving the vehicle. If a road test is expected to be easier, it is unnecessary to lift the vehicle.

WITH CONSULT-II

1. Start engine.
2. Select "DATA MONITOR" mode with CONSULT-II.
3. Drive the vehicle for at least 5 consecutive seconds under the following condition.

VHCL SPEED SE	More than 30 km/h (19 MPH)
Selector lever	Suitable position

If 1st trip DTC is detected, go to EC-536, "Diagnostic Procedure" .
If 1st trip DTC is not detected, go to the following step.

4. Drive the vehicle for at least 5 consecutive seconds under the following condition.

VHCL SPEED SE	More than 30 km/h (19 MPH)
Selector lever	Suitable position
Driving location	Depress the brake pedal for more than five seconds so as not to come off from the above-mentioned condition.

5. If 1st trip DTC is detected, go to EC-536, "Diagnostic Procedure" .

WITH GST

Follow the procedure “WITH CONSULT-II” above.

Wiring Diagram

UBS0032B

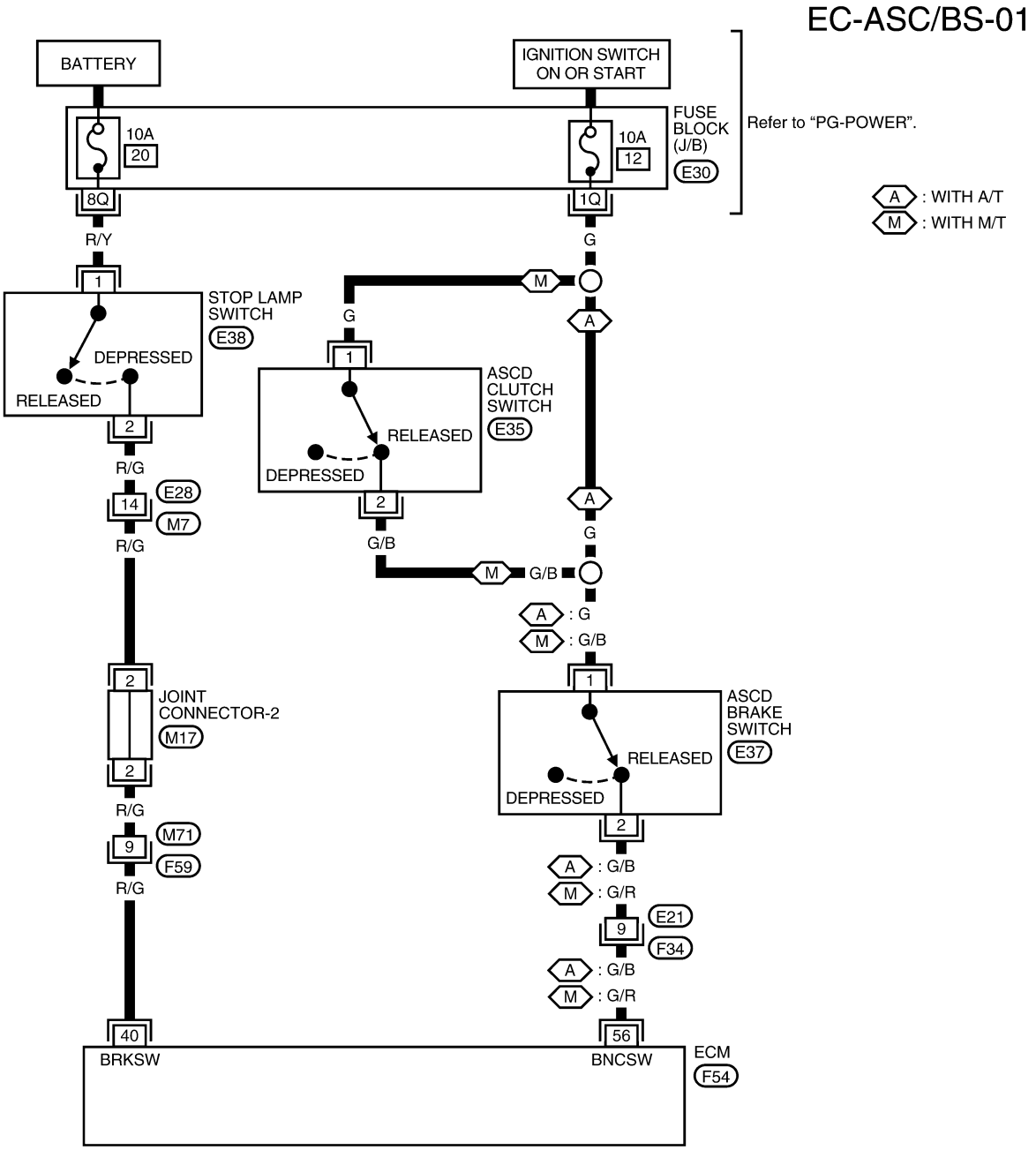

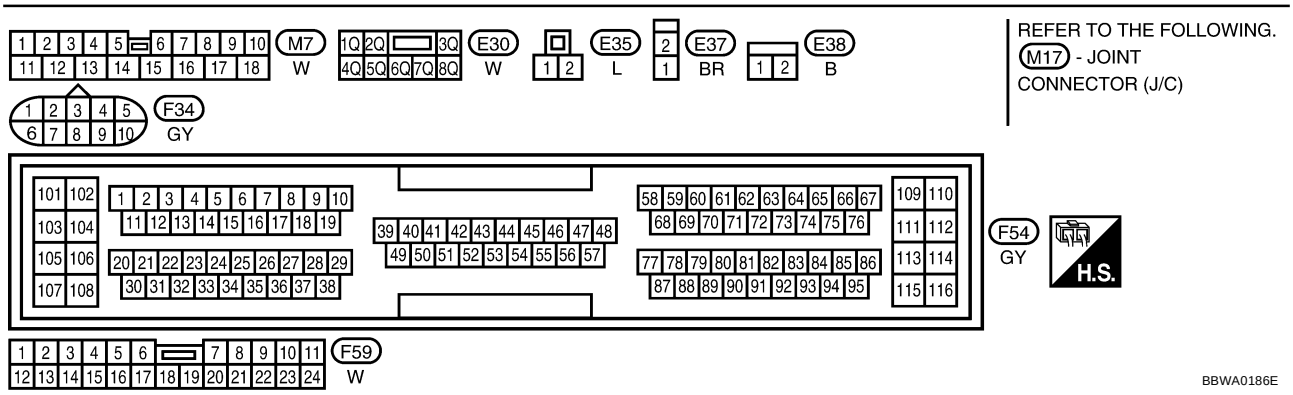

Specification data are reference values and are measured between each terminal and ground.

CAUTION:
Do not use ECM ground terminals when measuring input/output voltage. Doing so may result in damage to the ECM's transistor. Use a ground other than ECM terminals, such as the ground.

TERMINAL NO.	WIRE COLOR	ITEM	CONDITION	DATA (DC Voltage)
40	R/G	Stop lamp switch	**[Engine is running]** ● Brake pedal fully released	Approximately 0V
			[Engine is running] ● Brake pedal depressed	BATTERY VOLTAGE (11 - 14V)
56	G/B (A/T) G/R (M/T)	ASCD brake switch	**[Ignition switch "ON"]** ● Brake pedal is depressed ● Clutch pedal is depressed (M/T models)	Approximately 0V
			[Ignition switch "ON"] ● Brake pedal is fully released ● Clutch pedal is fully released (M/T models)	BATTERY VOLTAGE (11 - 14V)

Diagnostic Procedure

UBS0032C

1. CHECK OVERALL FUNCTION-I

With CONSULT-II

1. Turn ignition switch "ON".
2. Select "BRAKE SW1" in "DATA MONITOR" mode with CONSULT-II.
3. Check "BRAKE SW1" indication under the following conditions.

M/T models

CONDITION	INDICATION
When clutch pedal or brake pedal is depressed	OFF
When clutch pedal and brake pedal are fully released	ON

A/T models

CONDITION	INDICATION
When brake pedal is depress	OFF
When brake pedal is fully released	ON

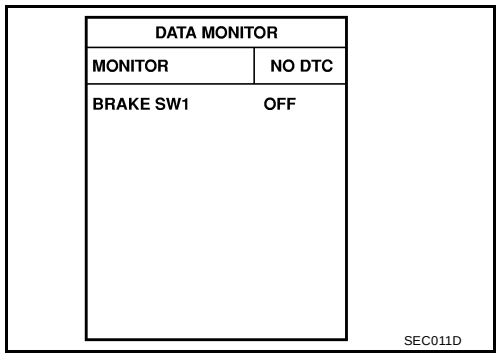

Without CONSULT-II

1. Turn ignition switch "ON".
2. Check voltage between ECM terminal 56 and ground under the following conditions.

A/T models

CONDITION	VOLTAGE
When brake pedal is depress	Approximately 0V
When brake pedal is fully released	Battery voltage

M/T models

CONDITION	VOLTAGE
When clutch pedal or brake pedal is depressed	Approximately 0V
When clutch pedal and brake pedal are fully released	Battery voltage

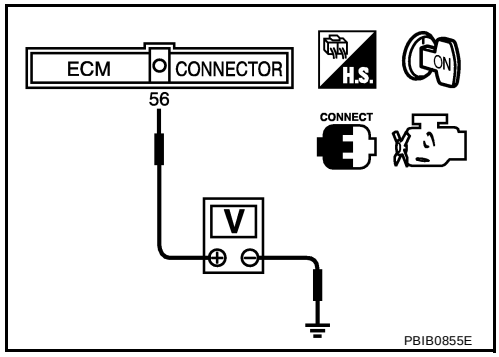

OK or NG

OK >> GO TO 2.
NG (M/T models) >>GO TO 3.
NG (A/T models) >>GO TO 8.

2. CHECK OVERALL FUNCTION-II

With CONSULT-II

Check "BRAKE SW2" indication in "DATA MONITOR" mode.

CONDITION	INDICATION
When brake pedal is released	OFF
When brake pedal is depressed	ON

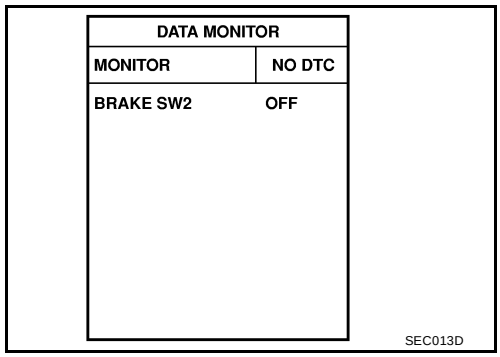

Without CONSULT-II

Check voltage between ECM terminal 40 and ground under the following conditions.

CONDITION	VOLTAGE
When brake pedal is released	Approximately 0V
When brake pedal is depressed	Battery voltage

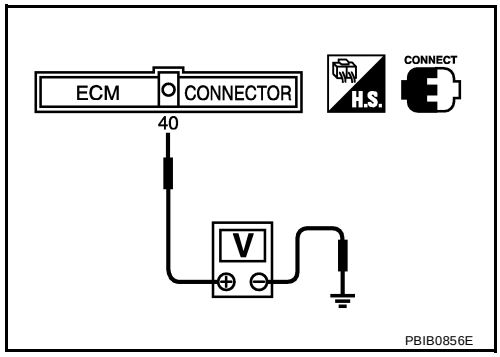

OK or NG

OK >> GO TO 18.
NG >> GO TO 13.

3. CHECK ASCD CLUTCH SWITCH CIRCUIT

1. Turn ignition switch "OFF".
2. Disconnect ASCD brake switch harness connector.
3. Turn ignition switch "ON".

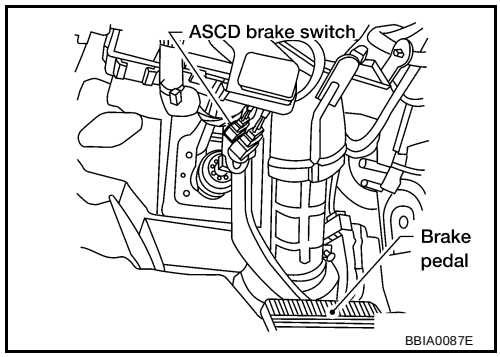

4. Check voltage between ASCD brake switch terminal 1 and ground under the following conditions with CONSULT-II or tester.

CONDITION	VOLTAGE
When clutch pedal is released	Battery voltage
When clutch pedal is depressed	Approx. 0V

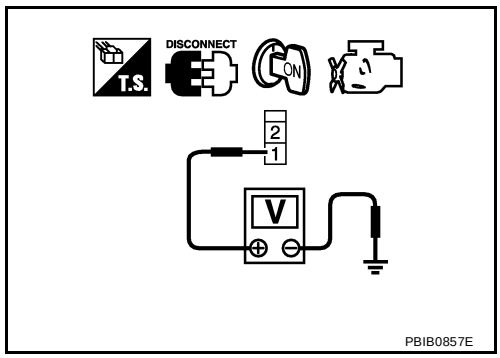

OK or NG

OK >> GO TO 10.
NG >> GO TO 4.

4. CHECK ASCD CLUTCH SWITCH POWER SUPPLY CIRCUIT

1. Turn ignition switch "OFF".
2. Disconnect ASCD clutch switch harness connector.
3. Turn ignition switch "ON".

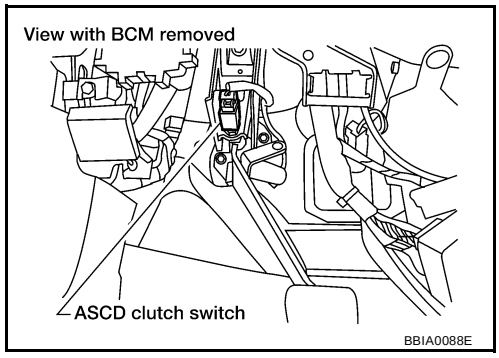

4. Check voltage between ASCD clutch switch terminal 1 and ground with CONSULT-II or tester.

Voltage: Battery voltage

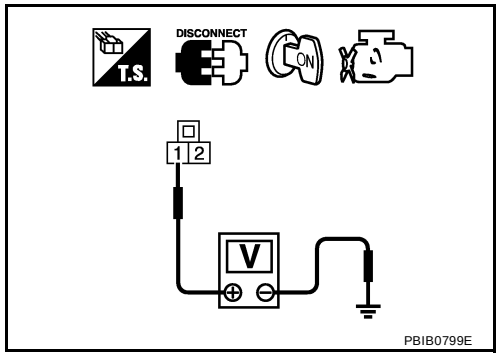

OK or NG

OK >> GO TO 6.
NG >> GO TO 5.

5. DETECT MALFUNCTIONING PART

Check the following.

- Fuse block (J/B) connector E30
- 10A fuse
- Harness for open or short between ASCD clutch switch and fuse

>> Repair open circuit or short to ground or short to power in harness or connectors.

6. CHECK ASCD CLUTCH SWITCH INPUT SIGNAL CIRCUIT FOR OPEN AND SHORT

1. Turn ignition switch "OFF".
2. Check harness continuity between ASCD clutch switch terminal 2 and ASCD brake switch terminal 1. Refer to Wiring Diagram.

Continuity should exist.

3. Also check harness for short to ground and short to power.

OK or NG

OK >> GO TO 7.
NG >> Repair open circuit or short to ground or short to power in harness or connectors.

7. CHECK ASCD CLUTCH SWITCH

Refer to EC-541, "Component Inspection"

OK or NG

OK >> GO TO 18.
NG >> Replace ASCD clutch switch.

8. CHECK ASCD BRAKE SWITCH POWER SUPPLY CIRCUIT

1. Turn ignition switch "OFF".
2. Disconnect ASCD brake switch harness connector.
3. Turn ignition switch "ON".

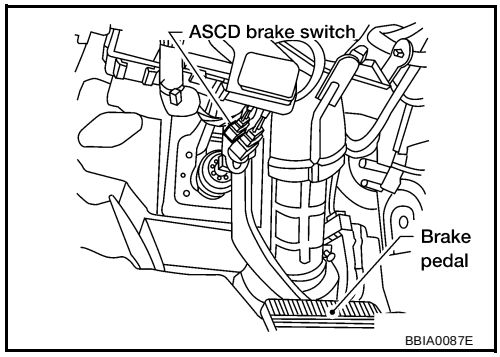

4. Check voltage between ASCD brake switch terminal 1 and ground with CONSULT-II or tester.

Voltage: Battery voltage

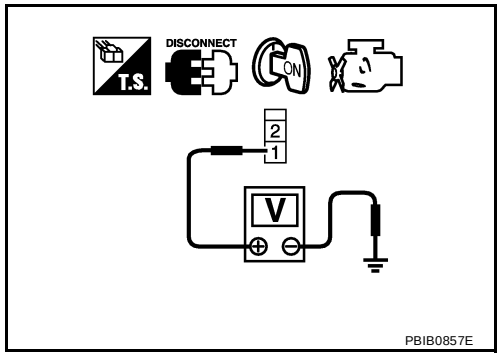

OK or NG

OK >> GO TO 10.
NG >> GO TO 9.

9. DETECT MALFUNCTIONING PART

Check the following.

- Fuse block (J/B) connector E30
- 10A fuse
- Harness for open or short between ASCD brake switch and fuse

>> Repair open circuit or short to ground or short to power in harness or connectors.

10. CHECK ASCD BRAKE SWITCH INPUT SIGNAL CIRCUIT FOR OPEN AND SHORT

1. Turn ignition switch "OFF".
2. Disconnect ECM harness connector.
3. Check harness continuity between ECM terminal 56 and ASCD brake switch terminal 2. Refer to Wiring Diagram.

Continuity should exist.

4. Also check harness for short to ground or short to power.

OK or NG

OK >> GO TO 12.
NG >> GO TO 11.

11. DETECT MALFUNCTIONING PART

Check the following.

- Harness connectors E21, F34
- Harness for open or short between ECM and ASCD brake switch

>> Repair open circuit or short to ground or short to power in harness or connectors.

12. CHECK ASCD BRAKE SWITCH

Refer to EC-541, "Component Inspection"

OK or NG

OK >> GO TO 18.
NG >> Replace ASCD brake switch.

13. CHECK STOP LAMP SWITCH POWER SUPPLY CIRCUIT

1. Turn ignition switch "OFF".
2. Disconnect stop lamp switch harness connector.

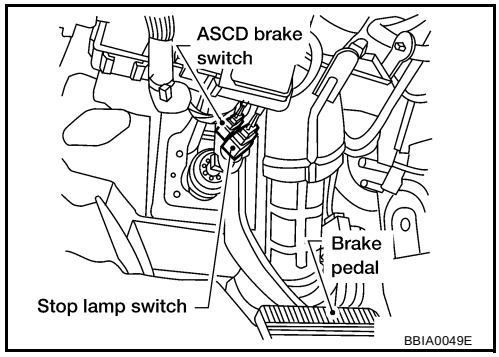

3. Check voltage between stop lamp switch terminal 1 and ground with CONSULT -II or tester.

Voltage: Battery voltage

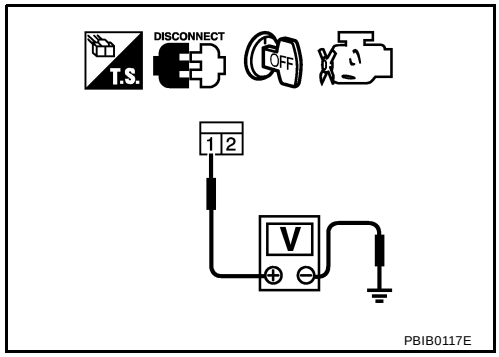

OK or NG

OK >> GO TO 15.
NG >> GO TO 14.

14. DETECT MALFUNCTIONING PART

Check the following.

- Fuse block (J/B) connector E30
- 10A fuse
- Harness for open or short between stop lamp switch and fuse

>> Repair open circuit or short to ground or short to power in harness or connectors.

15. CHECK STOP LAMP SWITCH INPUT SIGNAL CIRCUIT FOR OPEN AND SHORT

1. Disconnect ECM harness connector.
2. Check harness continuity between ECM terminal 40 and stop lamp switch terminal 2. Refer to Wiring Diagram.

Continuity should exist.

3. Also check harness for short to ground and short to power.

OK or NG

OK >> GO TO 17.
NG >> GO TO 16.

16. DETECT MALFUNCTIONING PART

Check the following.

- Harness connectors E28, M7
- Harness connectors M71, F59
- Joint connector-2
- Harness for open or short between ECM and stop lamp switch

>> Repair open circuit or short to ground or short to power in harness or connectors.

17. CHECK STOP LAMP SWITCH

Refer to EC-541, "Component Inspection"

OK or NG

OK >> GO TO 18.
NG >> Replace stop lamp switch.

18. CHECK INTERMITTENT INCIDENT

Refer to EC-130, "TROUBLE DIAGNOSIS FOR INTERMITTENT INCIDENT" .

>> **INSPECTION END**

Component Inspection

UBS0032D

ASCD BRAKE SWITCH

1. Turn ignition switch "OFF".
2. Disconnect ASCD brake switch harness connector.
3. Check continuity between ASCD brake switch terminals 1 and 2 under the following conditions.

Condition	Continuity
When brake pedal is fully released.	Should exist.
When brake pedal is depressed.	Should not exist.

If NG, adjust ASCD brake switch installation, refer to BR-6, "BRAKE PEDAL" , and perform step 3 again.

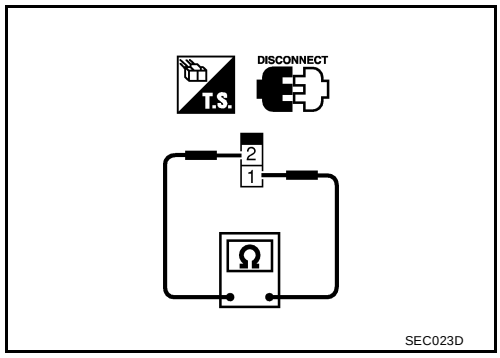

ASCD CLUTCH SWITCH (FOR M/T MODELS)

1. Turn ignition switch "OFF".
2. Disconnect ASCD clutch switch harness connector.
3. Check continuity between ASCD clutch switch terminals 1 and 2 under the following conditions.

Condition	Continuity
When clutch pedal is fully released.	Should exist.
When clutch pedal is depressed.	Should not exist.

If NG, adjust ASCD clutch switch installation, refer to CL-5, "CLUTCH PEDAL" , and perform step 3 again.

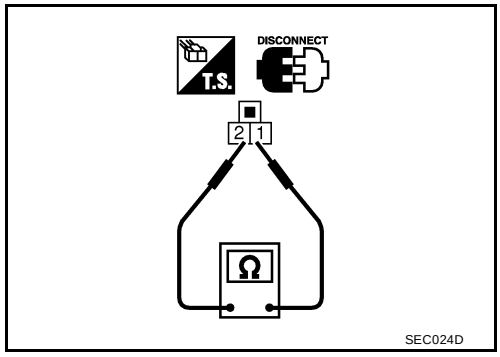

STOP LAMP SWITCH

1. Turn ignition switch "OFF".
2. Disconnect stop lamp switch harness connector.

3. Check continuity between stop lamp switch terminals 1 and 2 under the following conditions.

Condition	Continuity
When brake pedal is fully released.	Should not exist.
When brake pedal is depressed.	Should exist.

If NG, adjust stop lamp switch installation, refer to BR-6, "BRAKE PEDAL" , and perform step 3 again.

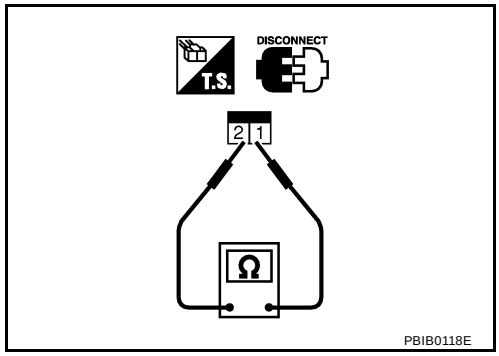

DTC P1574 ASCD VEHICLE SPEED SENSOR

PFP:31036

Component Description

UBS0032E

The ECM receives two vehicle speed sensor signals via CAN communication line. One is sent from combination meter, and the other is from TCM (Transmission control module). The ECM uses these signals for ASCD control. Refer to EC-628, "AUTOMATIC SPEED CONTROL DEVICE (ASCD)" for ASCD functions.

On Board Diagnosis Logic

UBS0032F

NOTE:

- **If DTC P1574 is displayed with DTC U1000, U1001, first perform the trouble diagnosis for DTC U1000, U1001. Refer to EC-138, "DTC U1000, U1001 CAN COMMUNICATION LINE" .**
- **If DTC P1574 is displayed with DTC P0500, first perform the trouble diagnosis for DTC P0500. Refer to EC-370, "DTC P0500 VSS"**

DTC No.	Trouble Diagnosis Name	DTC Detecting Condition	Possible Cause
P1574 1574	ASCD vehicle speed sensor	ECM detects a difference between two vehicle speed signals is out of the specified range.	● Harness or connectors (The CAN communication line is open or shorted.) ● Harness or connectors (The combination meter circuit is open or shorted.) ● TCM ● Combination meter ● Vehicle speed sensor ● ECM

DTC Confirmation Procedure

UBS0032G

CAUTION:

Always drive vehicle at a safe speed.

NOTE:

If "DTC Confirmation Procedure" has been previously conducted, always turn ignition switch "OFF" and wait at least 10 seconds before conducting the next test.

TESTING CONDITION:

Step 3 may be conducted with the drive wheels lifted in the shop or by driving the vehicle. If a road test is expected to be easier, it is unnecessary to lift the vehicle.

WITH CONSULT-II

1. Start engine.
2. Select "DATA MONITOR" mode with CONSULT-II.
3. Drive the vehicle at more than 40 km/h (25MPH).
4. If 1st trip DTC is detected, go to EC-544, "Diagnostic Procedure" .

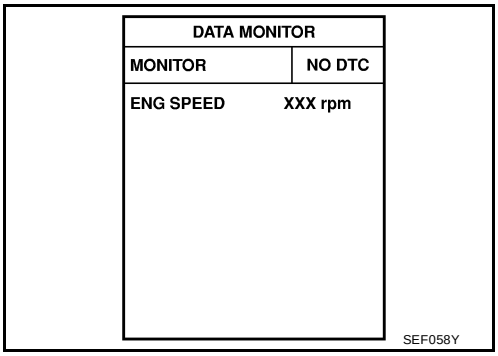

WITH GST

Follow the procedure “WITH CONSULT-II” above.

Diagnostic Procedure

UBS0032H

1. CHECK DTC WITH TCM

Check DTC with TCM. Refer to AT-36, "ON BOARD DIAGNOSTIC SYSTEM DESCRIPTION" .

OK or NG

OK >> GO TO 2.
NG >> Perform trouble shooting relevant to DTC indicated.

2. CHECK VEHICLE SPEED SENSOR CIRCUIT

Refer to DI-19, "Vehicle Speed System" .

OK or NG

OK >> GO TO 3.
NG >> Repair or replace.

3. CHECK COMBINATION METER

Check combination meter function.
Refer to DI-4, "COMBINATION METERS" .

>> **INSPECTION END**

DTC P1706 PNP SWITCH

PFP:32006

Component Description

UBS0032I

When the shift lever position is “P” (A/T models only) or “N”, park/neutral position (PNP) switch is “ON”. ECM detects the position because the continuity of the line (the “ON” signal) exists.

CONSULT-II Reference Value in Data Monitor Mode

UBS0032J

Specification data are reference values.

MONITOR ITEM	CONDITION		SPECIFICATION
P/N POSI SW	● Ignition switch: ON	Shift lever: P or N (A/T model) Neutral (M/T model)	ON
		Shift lever: Except above	OFF

On Board Diagnosis Logic

UBS0032K

DTC No.	Trouble diagnosis name	DTC detecting condition	Possible cause
P1706 1706	Park/neutral position switch	The signal of the park/neutral position (PNP) switch is not changed in the process of engine starting and driving.	● Harness or connectors [The park/neutral position (PNP) switch circuit is open or shorted.] ● Park/neutral position (PNP) switch

DTC Confirmation Procedure

UBS0032L

CAUTION:
Always drive vehicle at a safe speed.

NOTE:
If “DTC Confirmation Procedure” has been previously conducted, always turn ignition switch “OFF” and wait at least 10 seconds before conducting the next test.

WITH CONSULT-II

1. Turn ignition switch “ON”.
2. Select “P/N POSI SW” in “DATA MONITOR” mode with CONSULT-II. Then check the “P/N POSI SW” signal under the following conditions.

Position (Selector lever)	Known-good signal
“N” and “P” position	ON
Except the above position	OFF

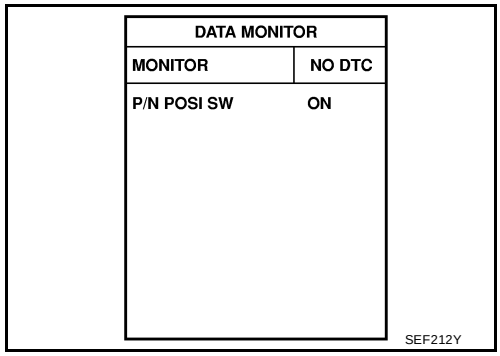

If NG, go to EC-548, "Diagnostic Procedure" .
If OK, go to following step.

3. Select “DATA MONITOR” mode with CONSULT-II.
4. Start engine and warm it up to normal operating temperature.
5. Maintain the following conditions for at least 60 consecutive seconds.

ENG SPEED	1,500 - 3,000 rpm
COOLAN TEMP/S	More than 70°C (158°F)
B/FUEL SCHDL	3.0 - 31.8 msec
VHCL SPEED SE	More than 64 km/h (40 MPH)
Selector lever	Suitable position

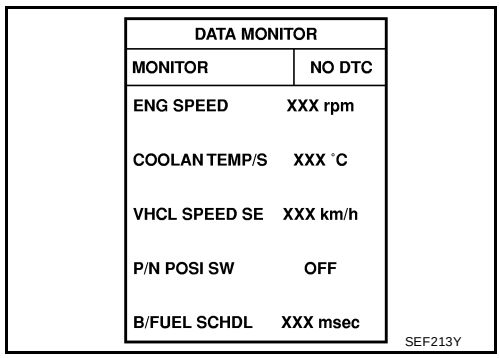

6. If 1st trip DTC is detected, go to EC-548, "Diagnostic Procedure" .

Overall Function Check

UBS0032M

Use this procedure to check the overall function of the park/neutral position (PNP) switch circuit. During this check, a 1st trip DTC might not be confirmed.

WITH GST

1. Turn ignition switch “ON”.
2. Check voltage between ECM terminal 43 (PNP switch signal) and body ground under the following conditions.

Condition (Gear position)	Voltage V (Known good data)
“P” (A/T models only) and “N” position	Approx. 0
Except the above position	A/T models: Battery voltage M/T: Approximately 5V

3. If NG, go to EC-548, "Diagnostic Procedure" .

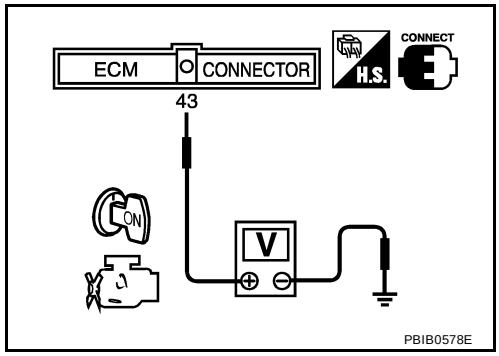

Wiring Diagram

UBS0032N

EC-PNP/SW-01

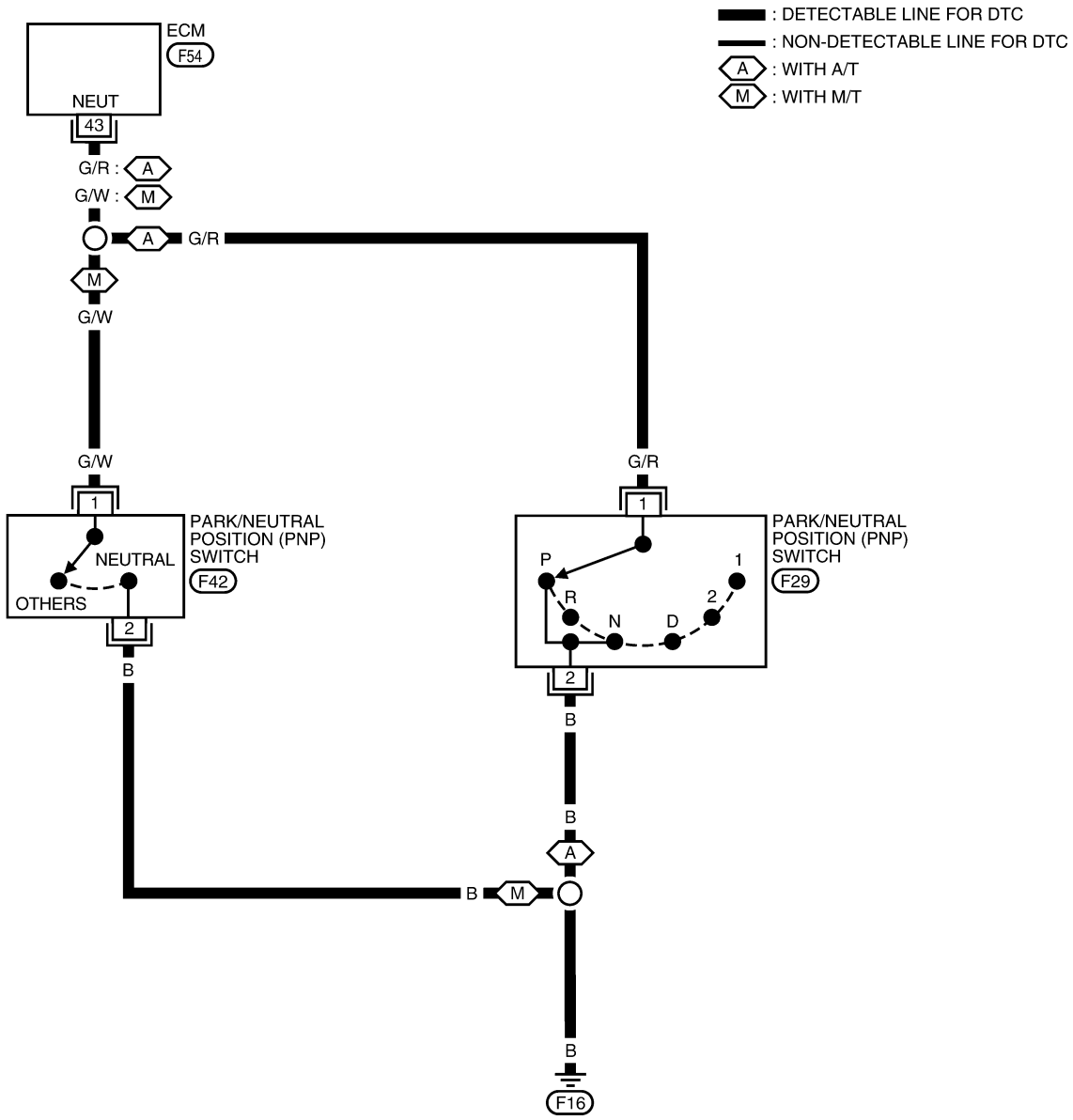

BBWA0033E

Specification data are reference values and are measured between each terminal and ground.

CAUTION:
Do not use ECM ground terminals when measuring input/output voltage. Doing so may result in damage to the ECM's transistor. Use a ground other than ECM terminals, such as the ground.

TERMINAL NO.	WIRE COLOR	ITEM	CONDITION	DATA (DC Voltage)
43	G/R (A/T) G/W (M/T)	PNP switch	**[Ignition switch "ON"]** ● Shift lever position is "P" or "N" (A/T models), "Neutral" (M/T models).	Approximately 0V
			[Ignition switch "ON"] ● Except the above gear position	**A/T models** BATTERY VOLTAGE (11 - 14V) **M/T models** Approximately 5V

Diagnostic Procedure

UBS0032O

1. CHECK GROUND CIRCUIT

1. Turn ignition switch "OFF".
2. Disconnect PNP switch harness connector.
3. Check harness continuity between PNP switch terminal 2 and body ground.
   Refer to Wiring Diagram.

   Continuity should exist.

4. Also check harness for short to power.

OK or NG

OK >> GO TO 2.
NG >> Repair open circuit or short to power in harness or connectors.

2. CHECK INPUT SIGNAL CIRCUIT

1. Disconnect ECM harness connector.
2. Check harness continuity between ECM terminal 43 and PNP switch terminal 1.
   Refer to Wiring Diagram.

   Continuity should exist.

3. Also check harness for short to ground and short to power.

OK or NG

OK >> GO TO 3.
NG >> Repair open circuit or short to power in harness or connectors.

3. CHECK PNP SWITCH

Refer to AT-103, "DTC P0705 PARK/NEUTRAL POSITION SWITCH" (A/T models) or MT-12, "POSITION SWITCH" (M/T models).

OK or NG

OK >> GO TO 4.
NG >> Replace PNP switch.

4. CHECK INTERMITTENT INCIDENT

Refer to EC-130, "TROUBLE DIAGNOSIS FOR INTERMITTENT INCIDENT" .

>> **INSPECTION END**

DTC P1805 BRAKE SWITCH

PFP:25320

Description

UBS0032P

Brake switch signal is applied to the ECM through the stop lamp switch when the brake pedal is depressed. This signal is used mainly to decrease the engine speed when the vehicle is driving.

CONSULT-II Reference Value in Data Monitor Mode

UBS0032Q

Specification data are reference values.

MONITOR ITEM	CONDITION		SPECIFICATION
BRAKE SW	● Ignition switch: ON	Brake pedal: Fully released	OFF
		Brake pedal: Slightly depressed	ON

On Board Diagnosis Logic

UBS0032R

DTC No.	Trouble diagnosis name	DTC detecting condition	Possible cause
P1805 1805	Brake switch	A brake switch signal is not sent to ECM for an extremely long time while the vehicle is driving.	● Harness or connectors (Stop lamp switch circuit is open or shorted.) ● Stop lamp switch

DTC Confirmation Procedure

UBS0032S

WITH CONSULT-II

1. Turn ignition switch "ON".
2. Fully depress the brake pedal for at least 5 seconds.
3. Erase the DTC with CONSULT-II.
4. Select "DATA MONITOR" mode with CONSULT-II.
5. If 1st trip DTC is detected, go to EC-551, "Diagnostic Procedure".

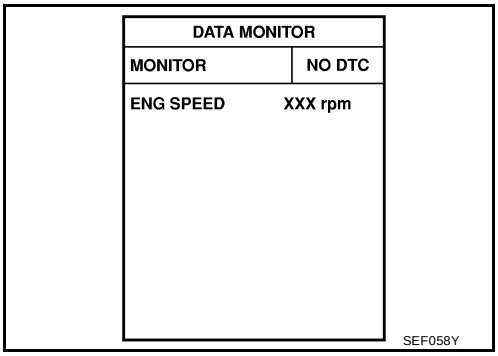

WITH GST

Follow the procedure "WITH CONSULT-II" above.

Wiring Diagram

UBS0032T

EC-BRK/SW-01

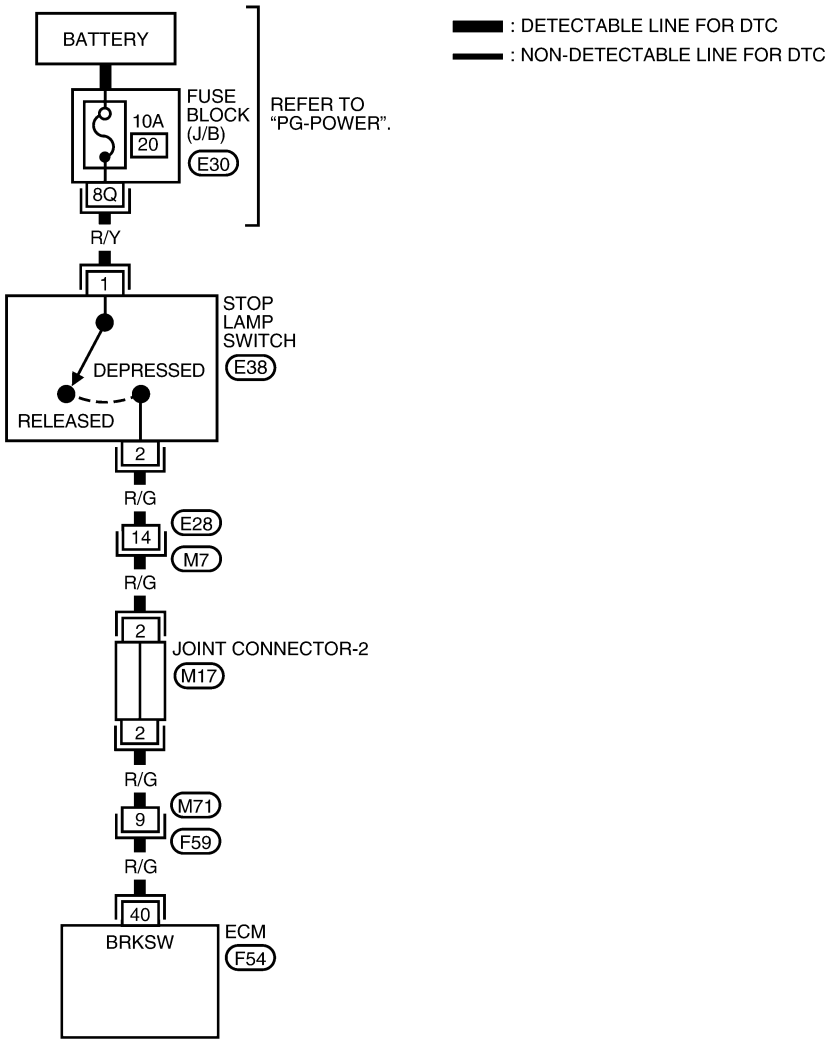

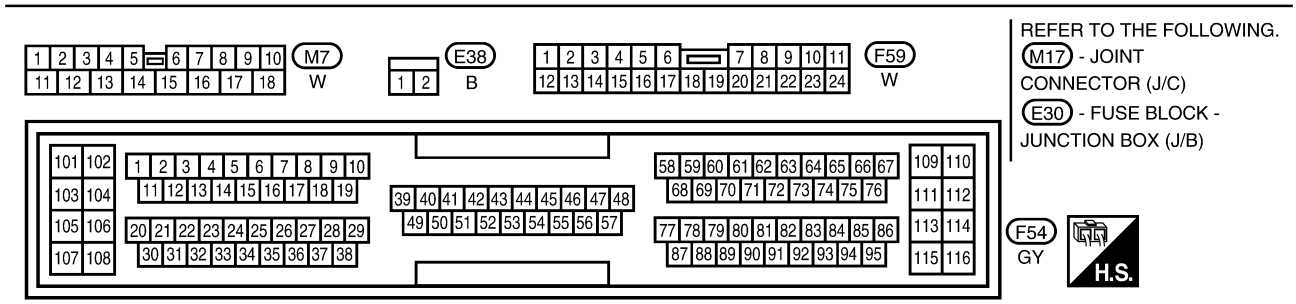

BBWA0207E

Specification data are reference values and are measured between each terminal and ground.

CAUTION:
Do not use ECM ground terminals when measuring input/output voltage. Doing so may result in damage to the ECM's transistor. Use a ground other than ECM terminals, such as the ground.

TERMINAL NO.	WIRE COLOR	ITEM	CONDITION	DATA (DC Voltage)
40	R/G	Stop lamp switch	**[Engine is running]** ● Brake pedal fully released	Approximately 0V
			[Engine is running] ● Brake pedal depressed	BATTERY VOLTAGE (11 - 14V)

Diagnostic Procedure

UBS0032U

1. CHECK STOP LAMP SWITCH CIRCUIT

1. Turn ignition switch "OFF".
2. Check the stop lamp when depressing and releasing the brake pedal.

Brake pedal	Stop lamp
Fully released	Not illuminated
Depressed	Illuminated

OK or NG

OK >> GO TO 4.
NG >> GO TO 2.

2. CHECK STOP LAMP SWITCH POWER SUPPLY CIRCUIT

1. Disconnect stop lamp switch harness connector.

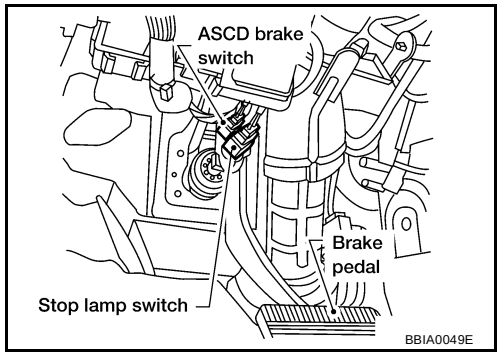

2. Check voltage between stop lamp switch terminal 1 and ground with CONSULT-II or tester.

Voltage: Battery voltage

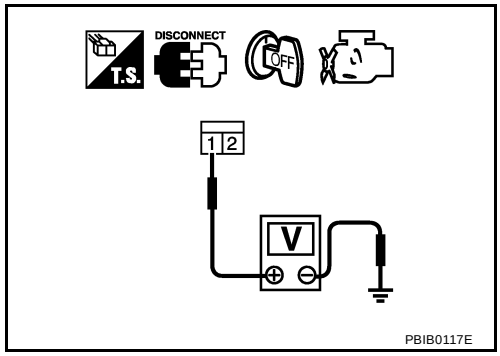

OK or NG

OK >> GO TO 4.
NG >> GO TO 3.

3. DETECT MALFUNCTIONING PART

Check the following.

- 10A fuse
- Fuse block (J/B) connector E30
- Harness for open and short between stop lamp switch and battery

>> Repair open circuit or short to ground or short to power in harness or connectors.

4. CHECK STOP LAMP SWITCH INPUT SIGNAL CIRCUIT FOR OPEN AND SHORT

1. Turn ignition switch "OFF".
2. Disconnect ECM harness connector.
3. Disconnect stop lamp switch harness connector.
4. Check harness continuity between ECM terminal 40 and stop lamp switch terminal 2.
   Refer to Wiring Diagram.

   Continuity should exist.

5. Also check harness for short to ground and short to power.

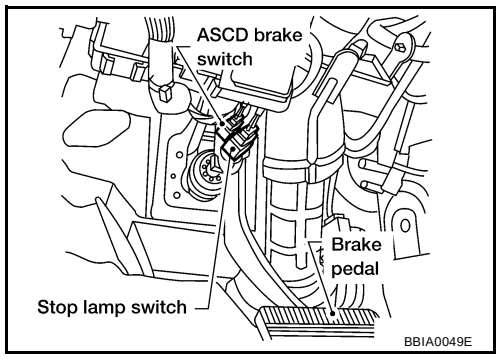

OK or NG

OK >> GO TO 6.
NG >> GO TO 5.

5. DETECT MALFUNCTIONING PART

Check the following.

- Harness connectors E28, M7
- Harness connectors M71, F59
- Joint connector-2
- Harness for open or short between ECM and stop lamp switch

>> Repair open circuit or short to ground or short to power in harness or connectors.

6. CHECK STOP LAMP SWITCH

Refer to EC-553, "Component Inspection" .

OK or NG

OK >> GO TO 7.
NG >> Replace stop lamp switch.

7. CHECK INTERMITTENT INCIDENT

Refer to EC-130, "TROUBLE DIAGNOSIS FOR INTERMITTENT INCIDENT" .

>> **INSPECTION END**

Component Inspection

UBS0032V

STOP LAMP SWITCH

1. Disconnect stop lamp switch harness connector.

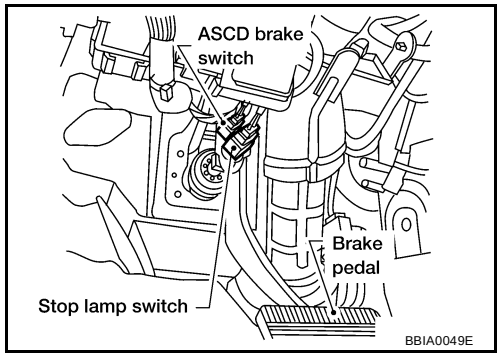

2. Check continuity between stop lamp switch terminals 1 and 2 under the following conditions.

Conditions	Continuity
Brake pedal fully released	Should not exist.
Brake pedal depressed	Should exist.

If NG, adjust brake pedal installation, refer to BR-6, "BRAKE PEDAL" , and perform step 2 again.

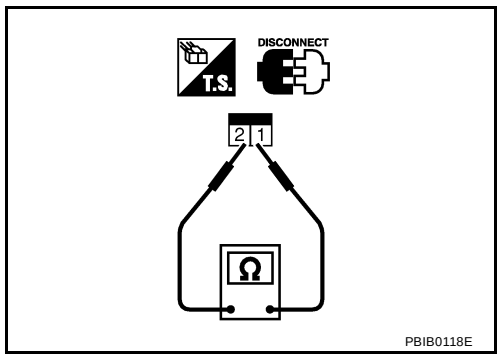

IGNITION SIGNAL

PFP:22448

Component Description

UBS0032W

IGNITION COIL & POWER TRANSISTOR

The ignition signal from the ECM is sent to and amplified by the power transistor. The power transistor turns on and off the ignition coil primary circuit. This on-off operation induces the proper high voltage in the coil secondary circuit.

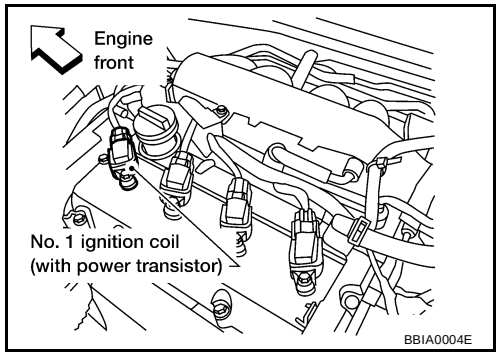

Wiring Diagram

UBS0032X

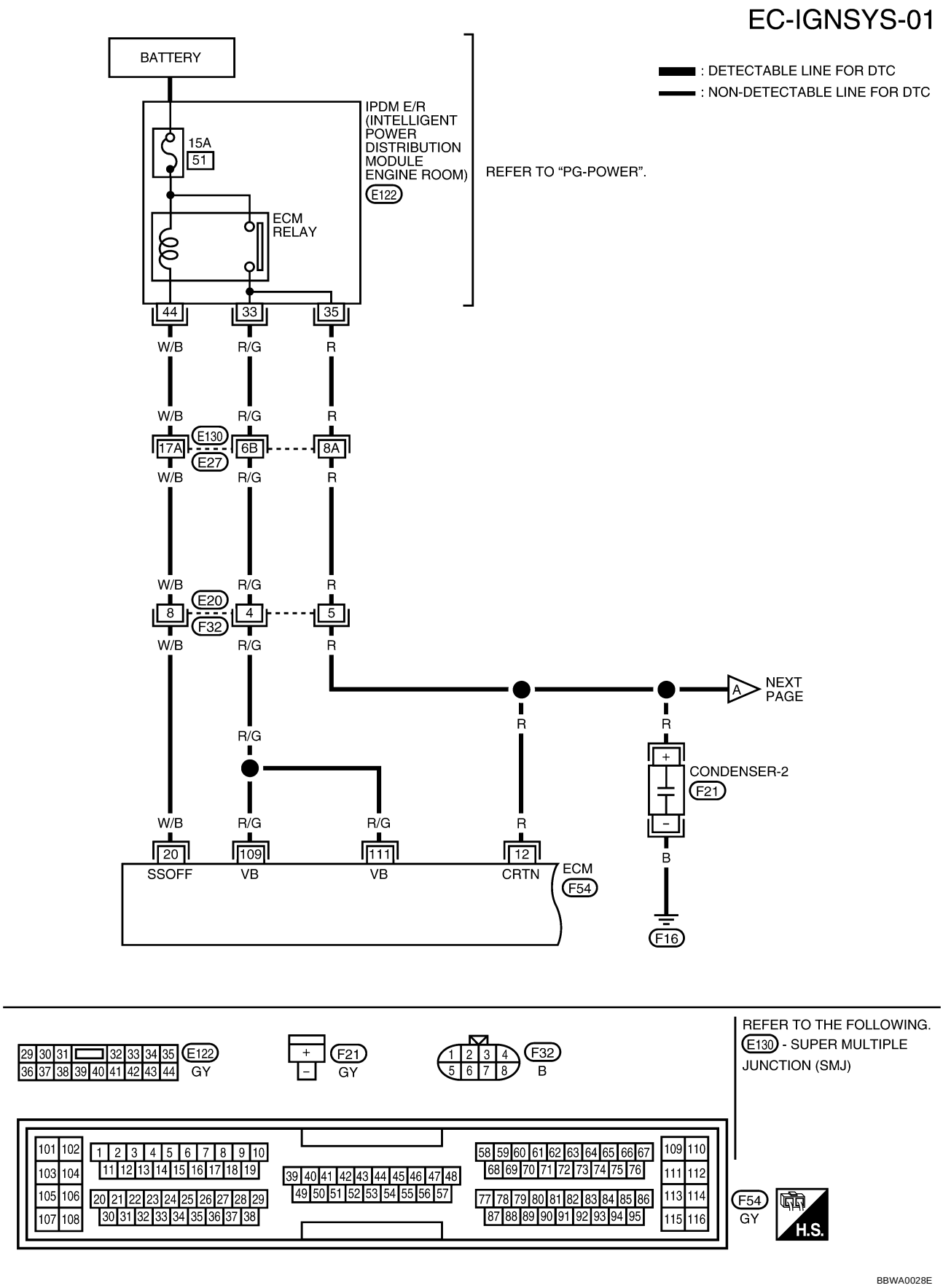

Specification data are reference values and are measured between each terminal and ground.

CAUTION:

Do not use ECM ground terminals when measuring input/output voltage. Doing so may result in damage to the ECM's transistor. Use a ground other than ECM terminals, such as the ground.

TERMINAL NO.	WIRE COLOR	ITEM	CONDITION	DATA (DC Voltage)
12	R	Counter current return	**[Ignition switch "ON"]**	BATTERY VOLTAGE (11 - 14V)
20	W/B	ECM relay (Self shut-off)	**[Engine is running]** **[Ignition switch “OFF”]** ● For 3 seconds after turning ignition switch “OFF”	0 - 1.0V
			[Ignition switch “OFF”] ● 3 seconds passed after turning ignition switch “OFF”	BATTERY VOLTAGE (11 - 14V)
109 111	R/G R/G	Power supply for ECM	**[Ignition switch “ON”]**	BATTERY VOLTAGE (11 - 14V)

EC-IGNSYS-02

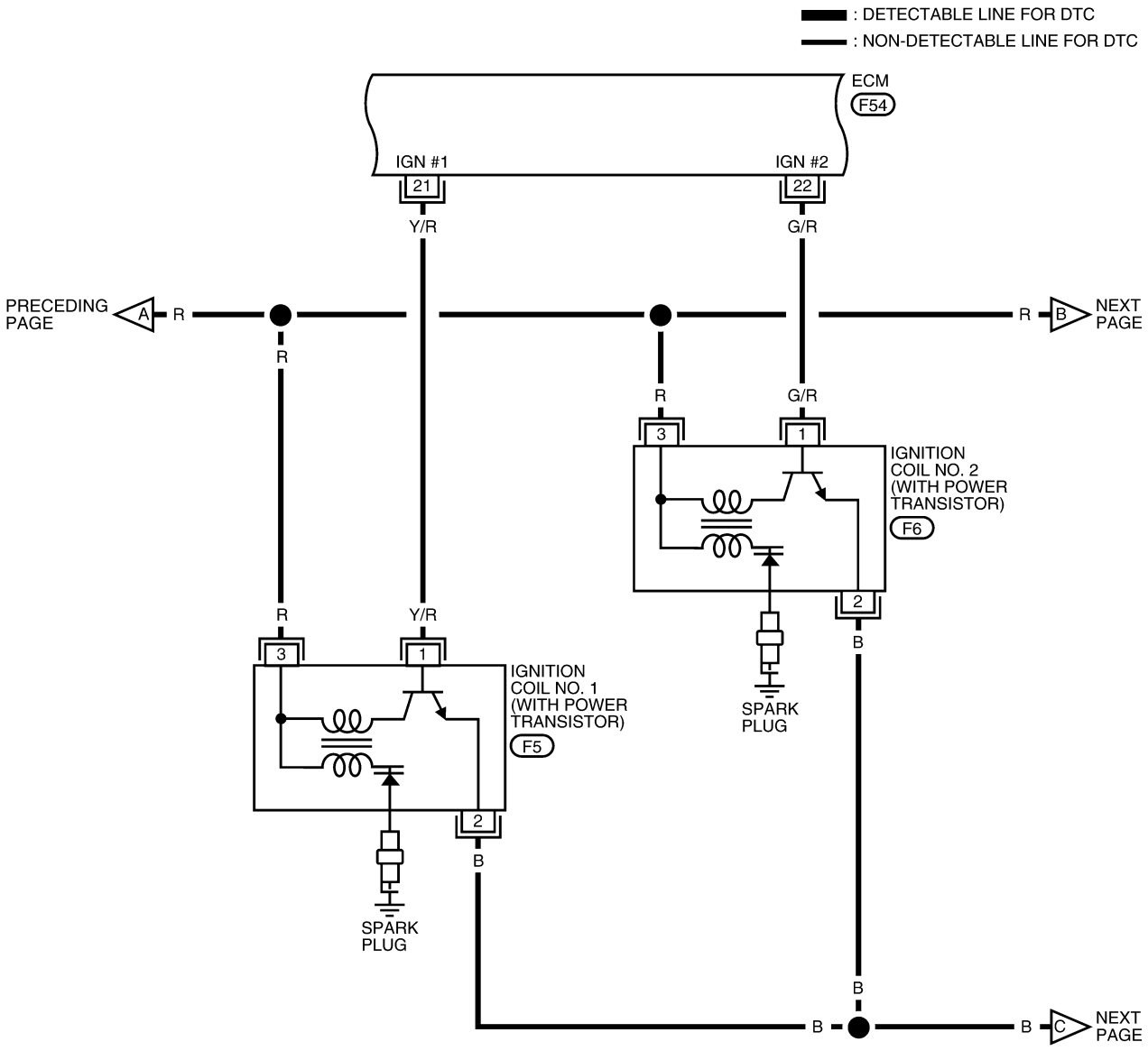

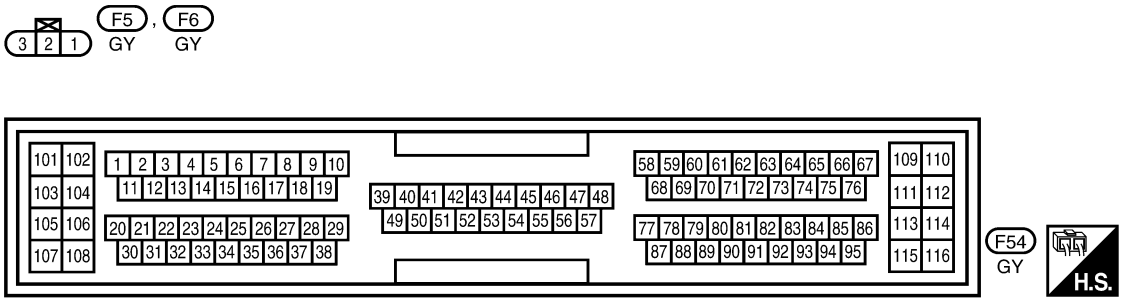

BBWA0029E

Specification data are reference values and are measured between each terminal and ground.

CAUTION:

Do not use ECM ground terminals when measuring input/output voltage. Doing so may result in damage to the ECM's transistor. Use a ground other than ECM terminals, such as the ground.

TERMINAL NO.	WIRE COLOR	ITEM	CONDITION	DATA (DC Voltage)
21 22	Y/R G/R	Ignition signal No. 1 Ignition signal No. 2	**[Engine is running]** ● **Warm-up condition** ● Idle speed	0 - 0.1V★ 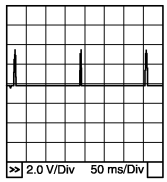 PBIB0521E
			[Engine is running] ● **Warm-up condition** ● Engine speed is 2,000 rpm.	0 - 0.2V★ 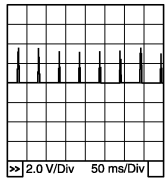 PBIB0522E

★: Average voltage for pulse signal (Actual pulse signal can be confirmed by oscilloscope.)

EC-IGNSYS-03

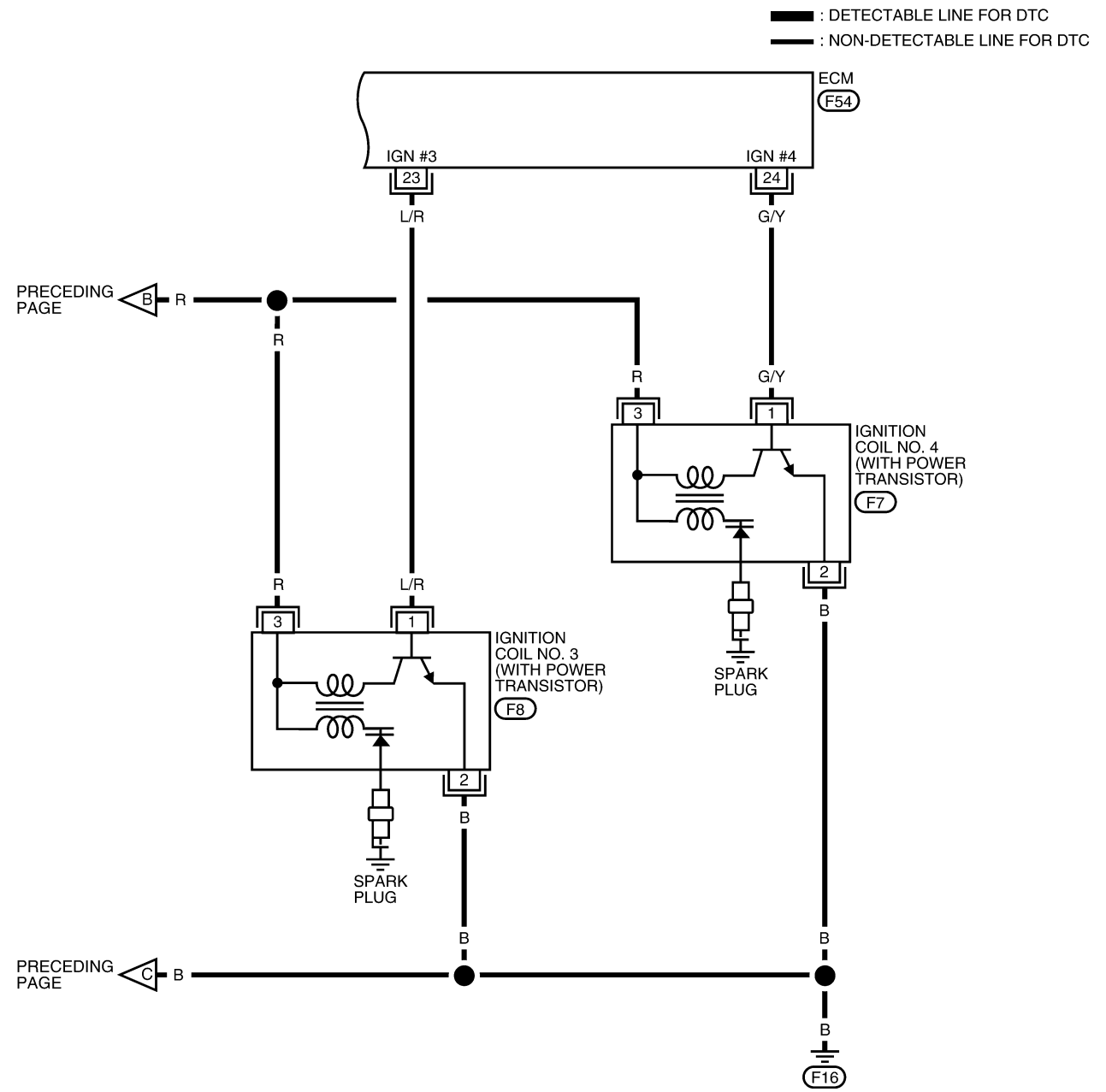

BBWA0030E

Specification data are reference values and are measured between each terminal and ground.

CAUTION:
Do not use ECM ground terminals when measuring input/output voltage. Doing so may result in damage to the ECM's transistor. Use a ground other than ECM terminals, such as the ground.

TERMINAL NO.	WIRE COLOR	ITEM	CONDITION	DATA (DC Voltage)
23 24	L/R G/Y	Ignition signal No. 3 Ignition signal No. 4	**[Engine is running]** ● **Warm-up condition** ● Idle speed	0 - 0.1V★ 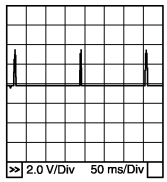 PBIB0521E
			[Engine is running] ● **Warm-up condition** ● Engine speed is 2,000 rpm.	0 - 0.2V★ 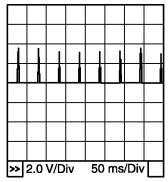 PBIB0522E

★: Average voltage for pulse signal (Actual pulse signal can be confirmed by oscilloscope.)

Diagnostic Procedure

UBS0032Y

1. CHECK ENGINE START

Turn ignition switch “OFF”, and restart engine.
Is engine running?

Yes or No

Yes (With CONSULT-II)>>GO TO 2.
Yes (Without CONSULT-II)>>GO TO 3.
No >> GO TO 4.

2. CHECK OVERALL FUNCTION

With CONSULT-II

1. Perform “POWER BALANCE” in “ACTIVE TEST” mode with CONSULT-II.
2. Make sure that all circuits do not produce a momentary engine speed drop.

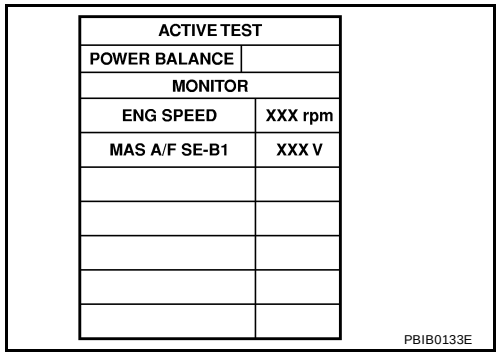

ACTIVE TEST	
POWER BALANCE	
MONITOR	
ENG SPEED	XXX rpm
MAS A/F SE-B1	XXX V

PBIB0133E

OK or NG

OK >> **INSPECTION END**
NG >> GO TO 8.

3. CHECK OVERALL FUNCTION

Without CONSULT-II

1. Let engine idle.
2. Read the voltage signal between ECM terminals 21, 22, 23, 24 and ground with an oscilloscope.
3. Verify that the oscilloscope screen shows the signal wave as shown below.

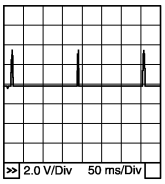

PBIB0521E

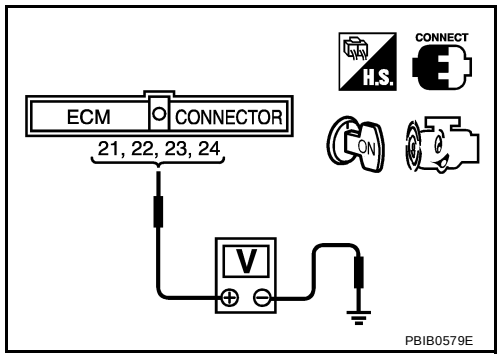

PBIB0579E

OK or NG

OK >> **INSPECTION END**
NG >> GO TO 8.

4. CHECK IGNITION COIL POWER SUPPLY CIRCUIT-I

1. Turn ignition switch ON.
2. Check voltage between ECM terminals 109, 111 and ground with CONSULT-II or tester.

Voltage: Battery voltage

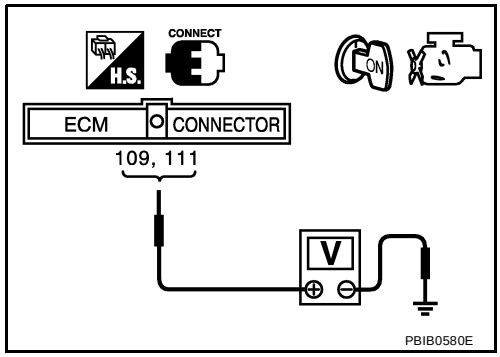

PBIB0580E

OK or NG

OK >> GO TO 5.
NG >> Go to EC-131, "POWER SUPPLY CIRCUIT FOR ECM"
.

5. CHECK IGNITION COIL POWER SUPPLY CIRCUIT-II

Check voltage between ECM terminal 12 and ground with CONSULT-II or tester.

Voltage: Battery voltage

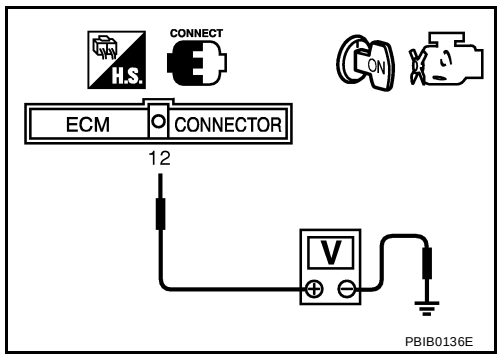

PBIB0136E

OK or NG

OK >> GO TO 6.
NG >> Go to EC-131, "POWER SUPPLY CIRCUIT FOR ECM"
.

6. CHECK CONDENSER CIRCUIT FOR OPEN AND SHORT

1. Turn ignition switch OFF.
2. Disconnect condenser harness connector.
3. Check harness continuity between ECM terminal 12 and condenser terminal **+** , condenser terminal **–** and engine ground. Refer to Wiring Diagram.

   Continuity should exist.

4. Also check harness for short to ground and short to power.

OK or NG

OK >> GO TO 7.
NG >> Repair open circuit or short to ground or short to power in harness or connectors.

7. CHECK CONDENSER

Refer to EC-563, "Component Inspection" .

OK or NG

OK >> GO TO 8.
NG >> Replace condenser.

8. CHECK IGNITION COIL POWER SUPPLY CIRCUIT-V

1. Turn ignition switch OFF.
2. Reconnect all harness connectors disconnected.
3. Disconnect ignition coil harness connector.
4. Turn ignition switch ON.

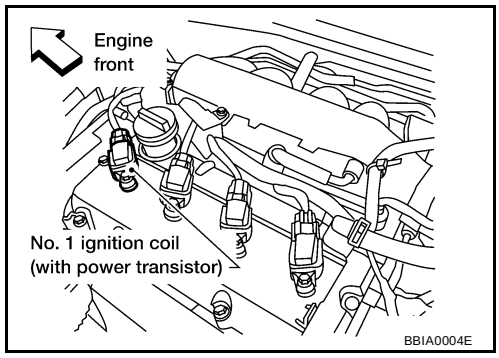

5. Check voltage between ignition coil terminal 3 and ground with CONSULT-II or tester.

   Voltage: Battery voltage

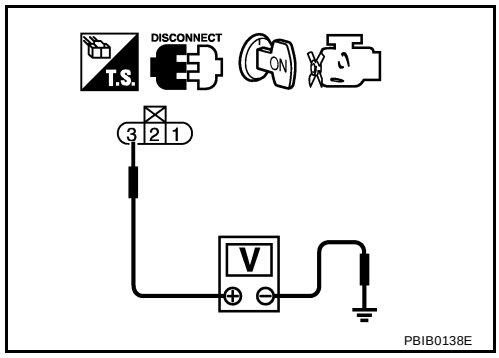

OK or NG

OK >> GO TO 10.
NG >> GO TO 9.

9. DETECT MALFUNCTIONING PART

Check the following.

- Harness for open or short between ignition coil and IPDM E/R
- Harness for open or short between ignition coil and ECM

>> Repair or replace harness or connectors.

10. CHECK IGNITION COIL GROUND CIRCUIT FOR OPEN AND SHORT

1. Turn ignition switch OFF.
2. Check harness continuity between ignition coil terminal 2 and engine ground.
   Refer to Wiring Diagram.

   Continuity should exist.

3. Also check harness for short to power.

OK or NG

OK >> GO TO 11.
NG >> Repair open circuit or short to power in harness or connectors.

11. CHECK IGNITION COIL OUTPUT SIGNAL CIRCUIT FOR OPEN AND SHORT

1. Disconnect ECM harness connector.
2. Check harness continuity between ECM terminals 21, 22, 23, 24 and ignition coil terminal 1.
   Refer to Wiring Diagram.

   Continuity should exist.

3. Also check harness for short to ground and short to power.

OK or NG

OK >> GO TO 12.
NG >> Repair open circuit or short to ground or short to power in harness or connectors.

12. CHECK IGNITION COIL WITH POWER TRANSISTOR

Refer to EC-563, "Component Inspection" .

OK or NG

OK >> GO TO 13.
NG >> Replace ignition coil with power transistor.

13. CHECK INTERMITTENT INCIDENT

Refer to EC-130, "TROUBLE DIAGNOSIS FOR INTERMITTENT INCIDENT" .

>> **INSPECTION END**

Component Inspection

UBS0032Z

IGNITION COIL WITH POWER TRANSISTOR

1. Turn ignition switch "OFF".
2. Disconnect ignition coil harness connector.
3. Check resistance between ignition coil terminals as follows.

Terminal No.	Resistance Ω [at 25°C (77°F)]
1 and 2	Except 0 or ∞
1 and 3	Except 0
2 and 3	

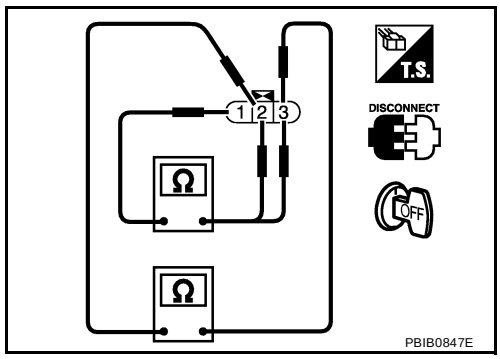

CONDENSER

1. Turn ignition switch "OFF".
2. Disconnect condenser harness connector.

3. Check resistance between condenser terminals as **+** and **–** .

Resistance: Above 1 MΩ at 25°C (77°F)

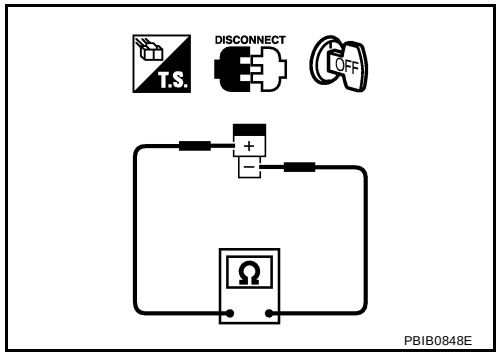

Removal and Installation

UBS00330

IGNITION COIL WITH POWER TRANSISTOR

Refer to EM-26, "IGNITION COIL" .

VIAS

PFP:14956

Description

UBS00331

SYSTEM DESCRIPTION

Sensor	Input Signal to ECM	ECM function	Actuator
Mass air flow sensor	Amount of intake air	VIAS control	VIAS control solenoid valve
Throttle position sensor	Throttle position		
Accelerator pedal position sensor	Closed throttle position		
Ignition switch	Start signal		
Crankshaft position sensor (POS) Camshaft position sensor (PHASE)	Engine speed		
Engine coolant temperature sensor	Engine coolant temperature		

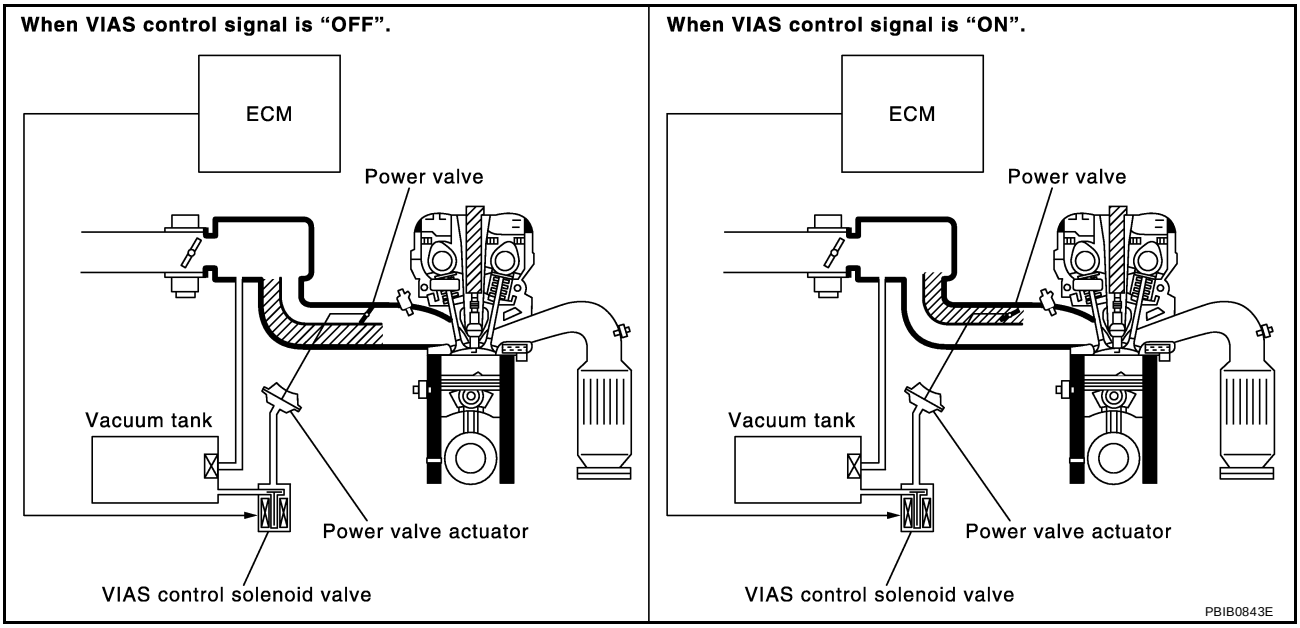

When the engine is running at low or medium speed, the power valve is fully closed. Under this condition, the effective suction port length is equivalent to the total length of the intake manifold collector's suction port including the intake valve. This long suction port provides increased air intake which results in improved suction efficiency and higher torque generation.

The surge tank and one-way valve are provided. When engine is running at high speed, the ECM sends the signal to the VIAS control solenoid valve. This signal introduces the intake manifold vacuum into the power valve actuator and therefore opens the power valve to two suction passages together in the collector.

Under this condition, the effective port length is equivalent to the length of the suction port provided independently for each cylinder. This shortened port length results in enhanced engine output with reduced suction resistance under high speeds.

COMPONENT DESCRIPTION

Power Valve

The power valve is installed in intake manifold collector and used to control the suction passage of the variable induction air control system. It is set in the fully closed or fully opened position by the power valve actuator operated by the vacuum stored in the surge tank. The vacuum in the surge tank is controlled by the VIAS control solenoid valve.

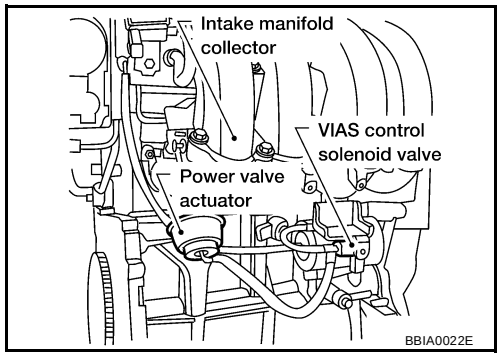

VIAS Control Solenoid Valve

The VIAS control solenoid valve cuts the intake manifold vacuum signal for power valve control. It responds to ON/OFF signals from the ECM. When the solenoid is off, the vacuum signal from the intake manifold is cut. When the ECM sends an ON signal the coil pulls the plunger downward and feeds the vacuum signal to the power valve actuator.

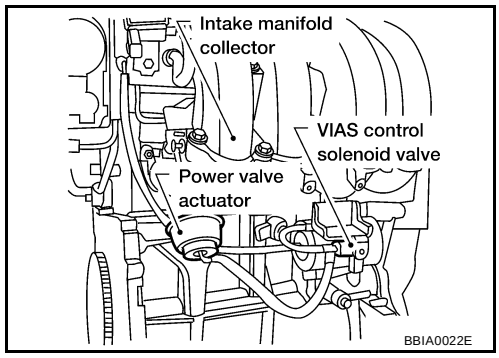

CONSULT-II Reference Value in Data Monitor Mode

UBS00332

MONITOR ITEM	CONDITION		SPECIFICATION
VIAS S/V	● Engine: After warming up	Idle	OFF
		More than 5,000 rpm	ON

Wiring Diagram

UBS00333

EC-VIAS-01

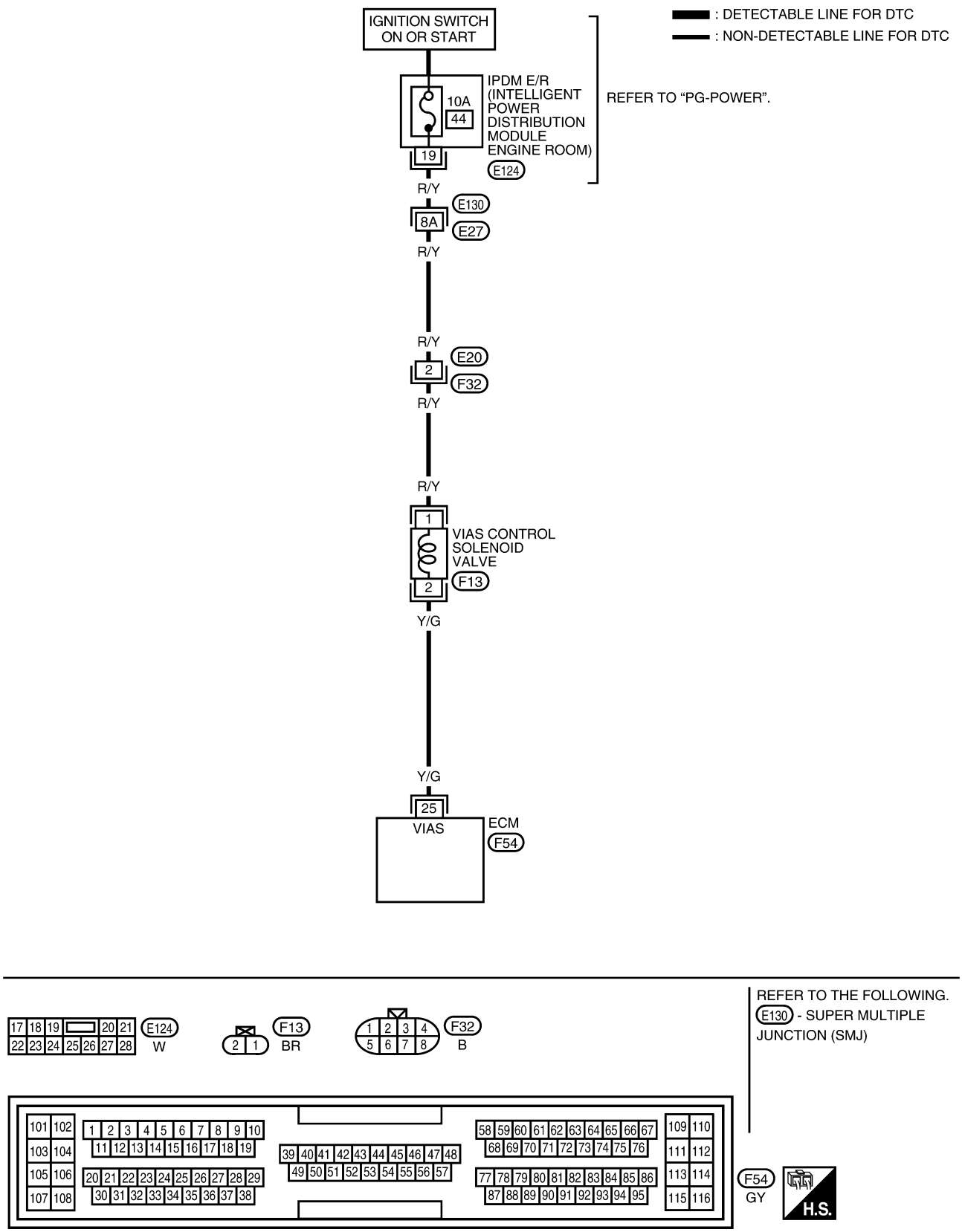

Specification data are reference values and are measured between each terminal and body ground.

CAUTION:

Do not use ECM ground terminals when measuring input/output voltage. Doing so may result in damage to the ECM's transistor. Use a ground other than ECM terminals, such as the ground.

TERMINAL NO.	WIRE COLOR	ITEM	CONDITION	DATA (DC Voltage)
25	Y/G	VIAS control solenoid valve	**[Engine is running]** ● Idle speed	BATTERY VOLTAGE (11 - 14V)
			[Engine is running] ● Engine speed is above 5,000 rpm	0 - 1.0V

Diagnostic Procedure

UBS00334

1. CHECK OVERALL FUNCTION

With CONSULT-II

1. Start engine and warm it up to normal operating temperature.
2. Perform “VIAS SOL VALVE” in “ACTIVE TEST” mode with CONSULT-II.

ACTIVE TEST	
VIAS SOL VALVE	OFF
MONITOR	
ENG SPEED	XXX rpm

PBIB0844E

3. Turn VIAS control solenoid valve “ON” and “OFF”, and make sure that power valve actuator rod moves.

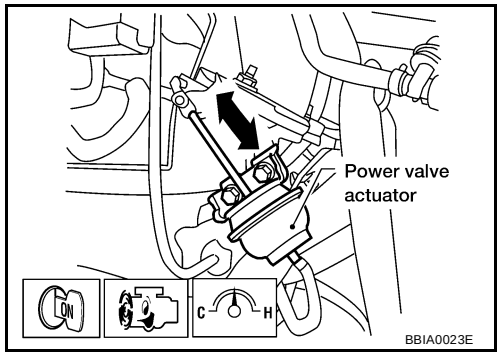

BBIA0023E

Without CONSULT-II

1. Start engine and warm it up to normal operating temperature.
2. Rev engine quickly up to above 5,000 rpm and make sure that power valve actuator rod moves.

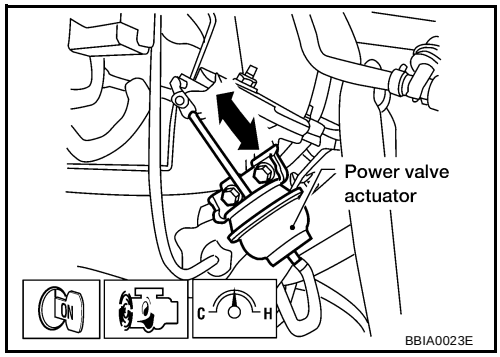

BBIA0023E

OK or NG

OK >> **INSPECTION END**
NG (With CONSULT-II) >>GO TO 2.
NG (Without CONSULT-II) >>GO TO 3.

2. CHECK VACUUM EXISTENCE

With CONSULT-II

1. Stop engine and disconnect vacuum hose connected to power valve actuator.
2. Start engine and let it idle.
3. Perform “VIAS SOL VALVE” in “ACTIVE TEST” mode with CONSULT-II.
4. Turn VIAS control solenoid valve “ON” and “OFF”, and check vacuum existence under the following conditions.

VIAS SOL VALVE	Vacuum
ON	Should exist.
OFF	Should not exist.

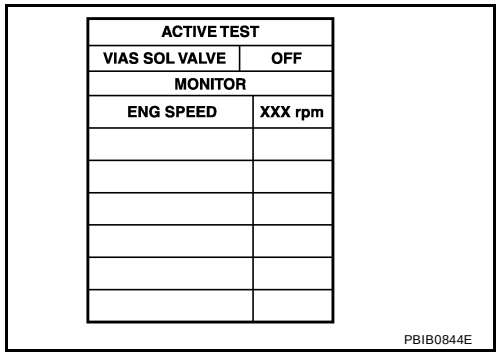

OK or NG

OK >> Repair or replace power valve actuator.
NG >> GO TO 4.

3. CHECK VACUUM EXISTENCE

Without CONSULT-II

1. Stop engine and disconnect vacuum hose connected to power valve actuator.
2. Disconnect VIAS control solenoid valve harness connector.
3. Start engine and let it idle.
4. Apply 12V of direct current between VIAS control solenoid valve terminals 1 and 2.
5. Check vacuum existence under the following conditions.

Condition	Vacuum
12V direct current supply	Should exist.
No supply	Should not exist.

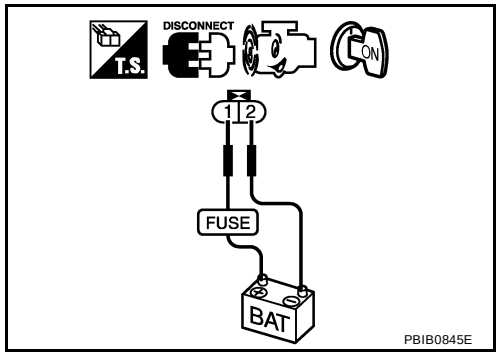

OK or NG

OK >> Repair or replace power valve actuator.
NG >> GO TO 4.

4. CHECK VACUUM HOSE

1. Stop engine.
2. Check hoses and tubes between intake manifold and power valve actuator for crack, clogging, improper connection or disconnection. Refer to EC-29, "Vacuum Hose Drawing" .

OK or NG

OK >> GO TO 5.
NG >> Repair hoses or tubes.

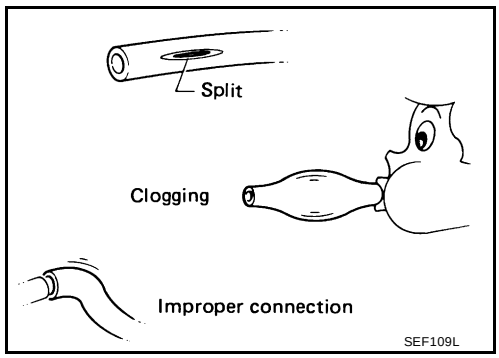

5. CHECK VACUUM TANK

Refer to EC-572, "Component Inspection" .

OK or NG

OK >> GO TO 6.
NG >> Replace vacuum tank.

6. CHECK VIAS CONTROL SOLENOID VALVE POWER SUPPLY CIRCUIT

1. Turn ignition switch "ON".
2. Disconnect VIAS control solenoid valve harness connector.
3. Turn ignition switch “ON”.

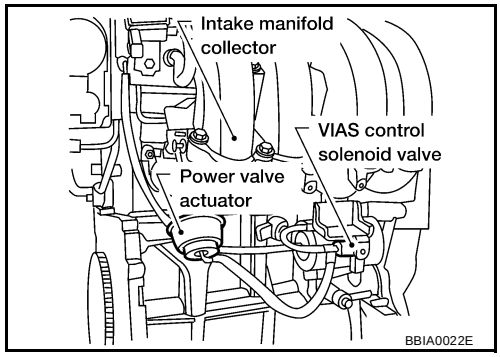

4. Check voltage between terminal 1 and ground with CONSULT-II or tester.

Voltage: Battery voltage

OK or NG

OK >> GO TO 8.
NG >> GO TO 7.

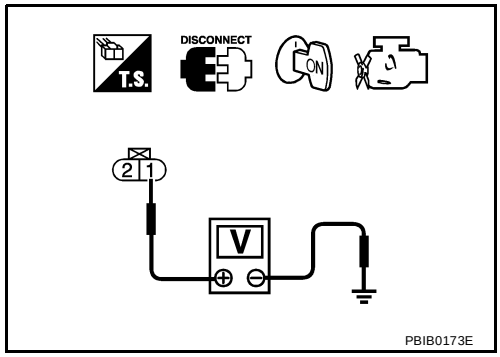

7. DETECT MALFUNCTIONING PART

Check the following.

- Harness connectors E130, E27
- Harness connectors E20, F32
- IPDM E/R connector E124
- 10A fuse
- Harness continuity between fuse and VIAS control solenoid valve

>> Repair harness or connectors.

8. CHECK VIAS CONTROL SOLENOID VALVE OUTPUT SIGNAL CIRCUIT FOR OPEN AND SHORT

1. Turn ignition switch “OFF”.
2. Disconnect ECM harness connector.
3. Check harness continuity between ECM terminal 25 and terminal 2. Refer to Wiring Diagram.

Continuity should exist.

4. Also check harness for short to ground and short to power.

OK or NG

OK >> GO TO 9.
NG >> Repair open circuit or short to ground or short to power in harness or connectors.

9. CHECK VIAS CONTROL SOLENOID VALVE

Refer to EC-572, "Component Inspection" .

OK or NG

OK >> GO TO 10.
NG >> Replace VIAS control solenoid valve.

10. CHECK INTERMITTENT INCIDENT

Refer to EC-130, "TROUBLE DIAGNOSIS FOR INTERMITTENT INCIDENT" .

>> **INSPECTION END**

Component Inspection

UBS00335

VIAS CONTROL SOLENOID VALVE

With CONSULT-II

1. Reconnect harness connectors disconnected.
2. Turn ignition switch ON.
3. Perform “VIAS SOL VALVE” in “ACTIVE TEST” mode.
4. Check air passage continuity and operation delay time under the following conditions.

Condition VIAS SOL VALVE	Air passage continuity between A and B	Air passage continuity between A and C
ON	Yes	No
OFF	No	Yes

Operation takes less than 1 second.

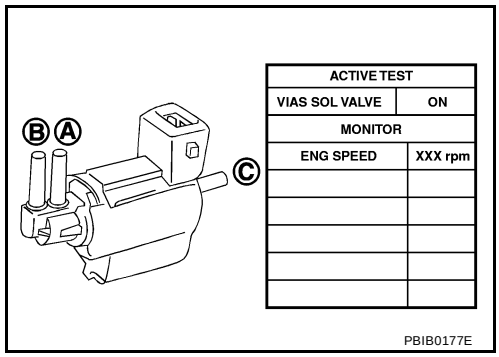

With GST

Check air passage continuity and operation delay time under the following conditions.

Condition	Air passage continuity between A and B	Air passage continuity between A and C
12V direct current supply between terminals 1 and 2	Yes	No
No supply	No	Yes

Operation takes less than 1 second.

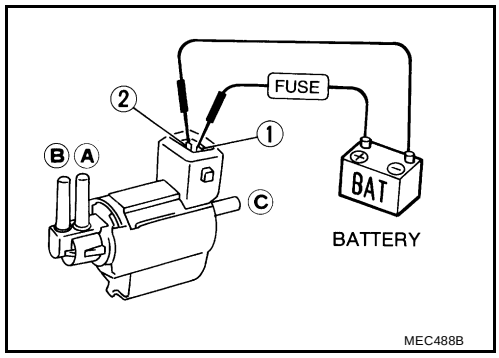

VACUUM TANK

1. Disconnect vacuum hose connected to vacuum tank.
2. Connect a vacuum pump to the port **A** of vacuum pump.
3. Apply vacuum and make sure that vacuum exists at the port **B** .

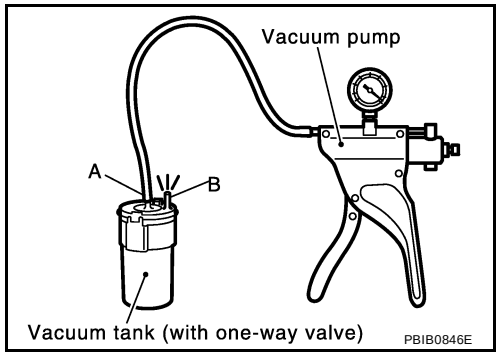

Removal and Installation

UBS00336

VIAS CONTROL SOLENOID VALVE

Refer to EM-16, "INTAKE MANIFOLD" .

INJECTOR CIRCUIT

PFP:16600

Component Description

UBS00337

The fuel injector is a small, precise solenoid valve. When the ECM supplies a ground to the injector circuit, the coil in the injector is energized. The energized coil pulls the needle valve back and allows fuel to flow through the injector into the intake manifold. The amount of fuel injected depends upon the injection pulse duration. Pulse duration is the length of time the injector remains open. The ECM controls the injection pulse duration based on engine fuel needs.

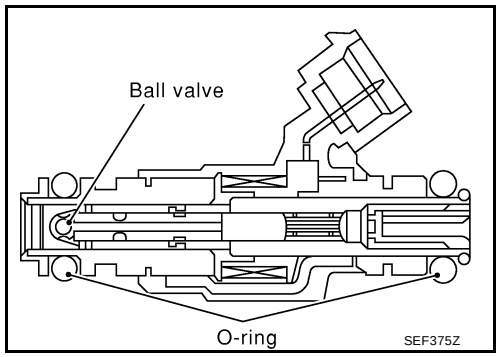

CONSULT-II Reference Value in Data Monitor Mode

UBS00338

Specification data are reference values.

MONITOR ITEM	CONDITION		SPECIFICATION
B/FUEL SCHDL	● Engine: After warming up ● Shift lever: N ● Air conditioner switch: OFF ● No-load	Idle	2.5 - 3.5 msec
		2,000 rpm	2.5 - 3.5 msec
INJ PULSE-B1	● Engine: After warming up ● Shift lever: N ● Air conditioner switch: OFF ● No-load	Idle	2.0 - 3.0 msec
		2,000 rpm	1.9 - 2.9 msec

Wiring Diagram

UBS00339

EC-INJECT-01

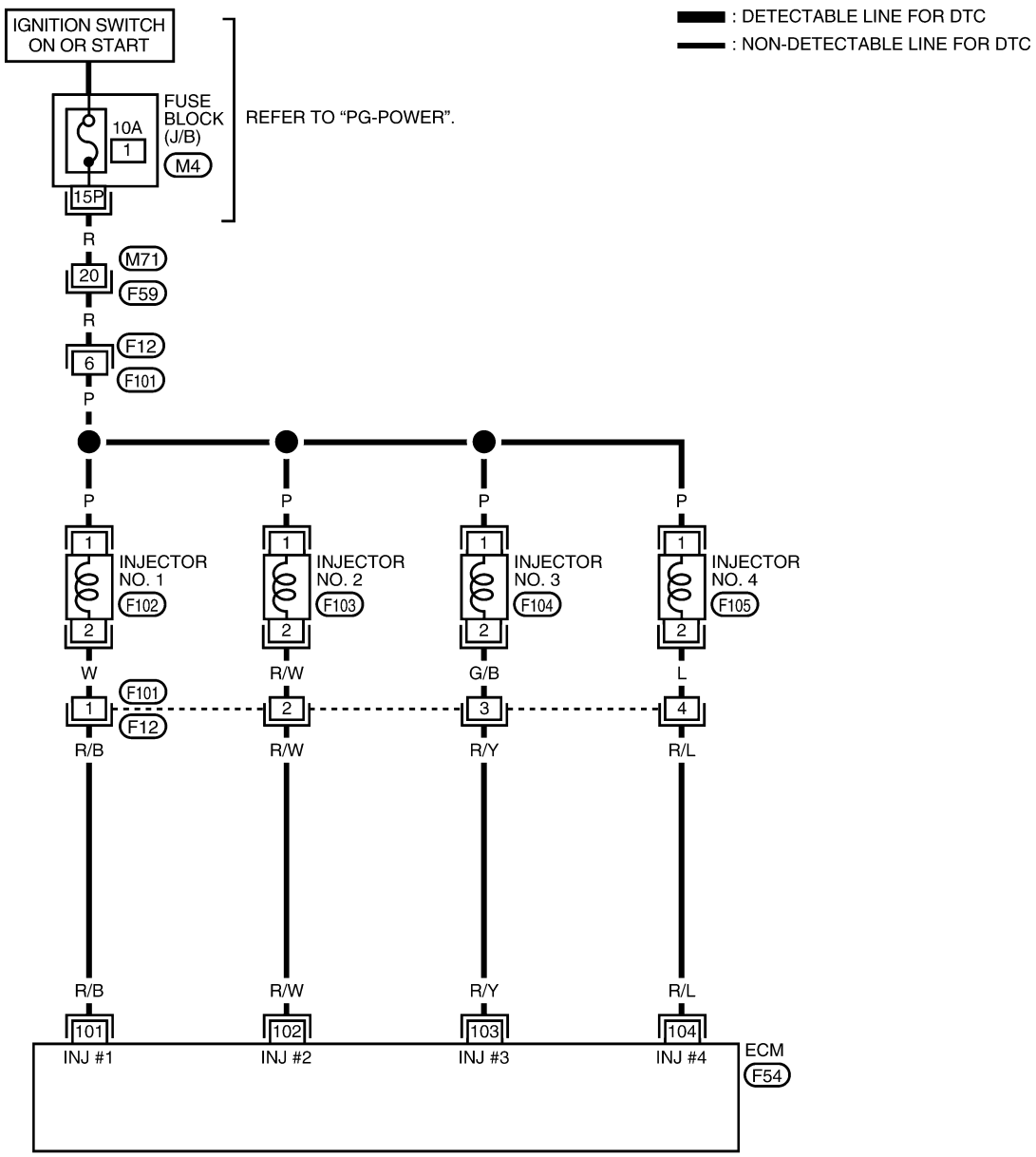

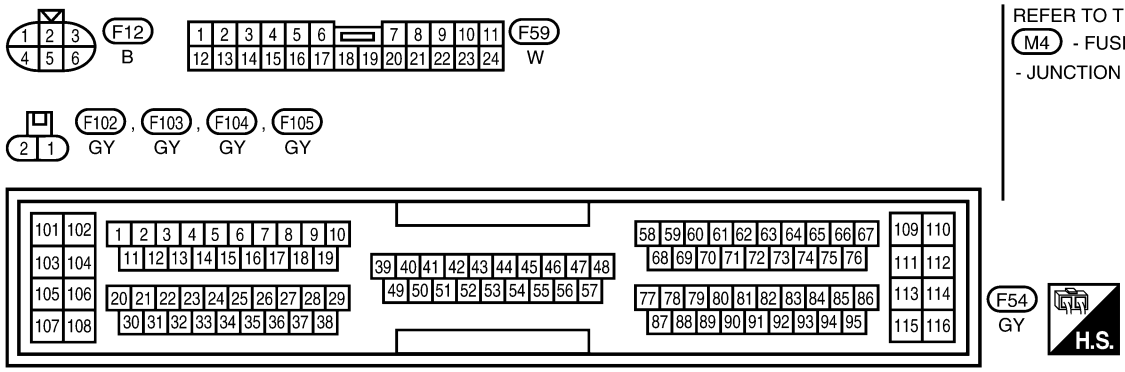

REFER TO THE FOLLOWING.
M4 - FUSE BLOCK
- JUNCTION BOX (J/B)

BBWA0035E

Specification data are reference values and are measured between each terminal and ground.

CAUTION:

Do not use ECM ground terminals when measuring input/output voltage. Doing so may result in damage to the ECM's transistor. Use a ground other than ECM terminals, such as the ground.

TERMINAL NO.	WIRE COLOR	ITEM	CONDITION	DATA (DC Voltage)
101 102 103 104	R/B R/W R/Y R/L	Injector No. 1 Injector No. 2 Injector No. 3 Injector No. 4	**[Engine is running]** ● **Warm-up condition** ● Idle speed	BATTERY VOLTAGE (11 - 14V)★ 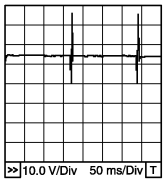 PBIB0529E
			[Engine is running] ● **Warm-up condition** ● Engine speed is 2,000 rpm	BATTERY VOLTAGE (11 - 14V)★ 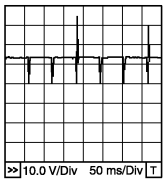 PBIB0530E

★: Average voltage for pulse signal (Actual pulse signal can be confirmed by oscilloscope.)

Diagnostic Procedure

UBS0033A

1. INSPECTION START

Turn ignition switch to “START”.

Is any cylinder ignited?

Yes or No

Yes >> GO TO 2.

No >> GO TO 3.

2. CHECK OVERALL FUNCTION

With CONSULT-II

1. Start engine.
2. Perform “POWER BALANCE” in “ACTIVE TEST” mode with CONSULT-II.
3. Make sure that each circuit produces a momentary engine speed drop.

ACTIVE TEST	
POWER BALANCE	
MONITOR	
ENG SPEED	XXX rpm
MAS A/F SE-B1	XXX V

PBIB0133E

Without CONSULT-II

1. Start engine.
2. Listen to each injector operating sound.
   Clicking noise should be heard.

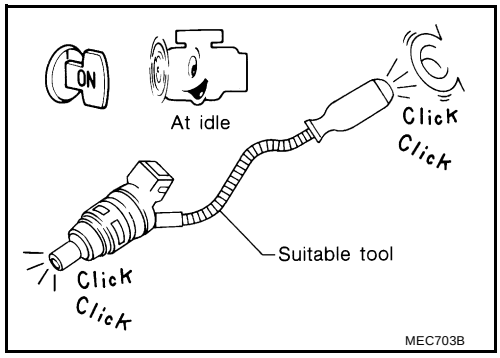

MEC703B

OK or NG

OK >> **INSPECTION END**
NG >> GO TO 3.

3. CHECK INJECTOR POWER SUPPLY CIRCUIT

1. Turn ignition switch “OFF”.
2. Disconnect injector harness connector.
3. Turn ignition switch “ON”.

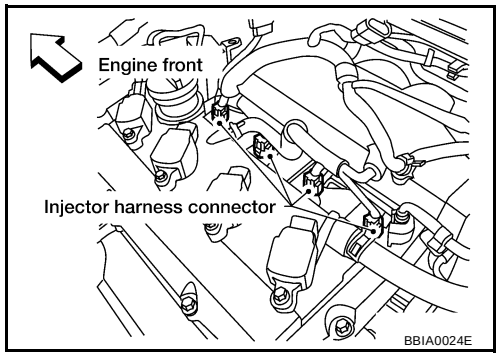

4. Check voltage between injector terminal 1 and ground with CONSULT-II or tester.

Voltage: Battery voltage

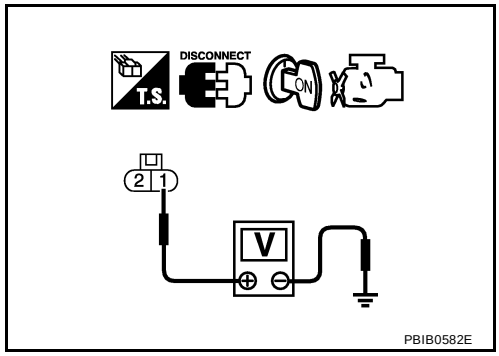

OK or NG

OK >> GO TO 5.
NG >> GO TO 4.

4. DETECT MALFUNCTIONING PART

Check the following.

- Harness connectors M71, F59
- Harness connectors F12, F101
- Fuse block (J/B) connector M4
- 10A fuse
- Harness for open or short between injector and fuse

>> Repair harness or connectors.

5. CHECK INJECTOR OUTPUT SIGNAL CIRCUIT FOR OPEN AND SHORT

1. Turn ignition switch “OFF”.
2. Disconnect ECM harness connector.
3. Check harness continuity between injector terminal 2 and ECM terminals 101, 102, 103, 104. Refer to Wiring Diagram.

Continuity should exist.

4. Also check harness for short to ground and short to power.

OK or NG

OK >> GO TO 7.
NG >> GO TO 6.

6. DETECT MALFUNCTIONING PART

Check the following.

- Harness connectors F12, F101
- Harness for open or short between injector and ECM

>> Repair open circuit or short to ground or short to power in harness or connectors.

7. CHECK INJECTOR

Refer to EC-579, "Component Inspection" .

OK or NG

OK >> GO TO 8.
NG >> Replace injector.

8. CHECK INTERMITTENT INCIDENT

Refer to EC-130, "TROUBLE DIAGNOSIS FOR INTERMITTENT INCIDENT" .

>> **INSPECTION END**

Component Inspection

UBS0033B

INJECTOR

1. Disconnect injector harness connector.
2. Check resistance between terminals as shown in the figure.

Resistance: 12.1 - 12.9Ω [at 20°C (68°F)]

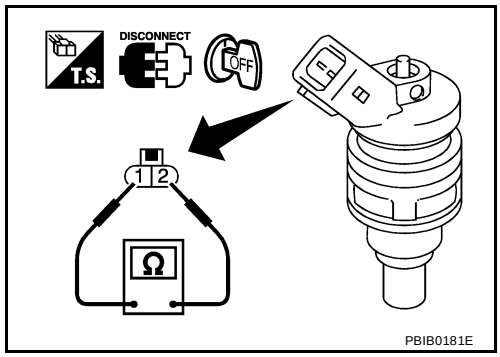

Removal and Installation

UBS0033C

INJECTOR

Refer to EM-29, "FUEL INJECTOR AND FUEL TUBE" .

START SIGNAL

PFP:48750

CONSULT-II Reference Value in Data Monitor Mode

UBS0033D

Specification data are reference values.

MONITOR ITEM	CONDITION	SPECIFICATION
START SIGNAL	● Ignition switch: ON → START → ON	OFF → ON → OFF

Wiring Diagram

UBS0033E

EC-S/SIG-01

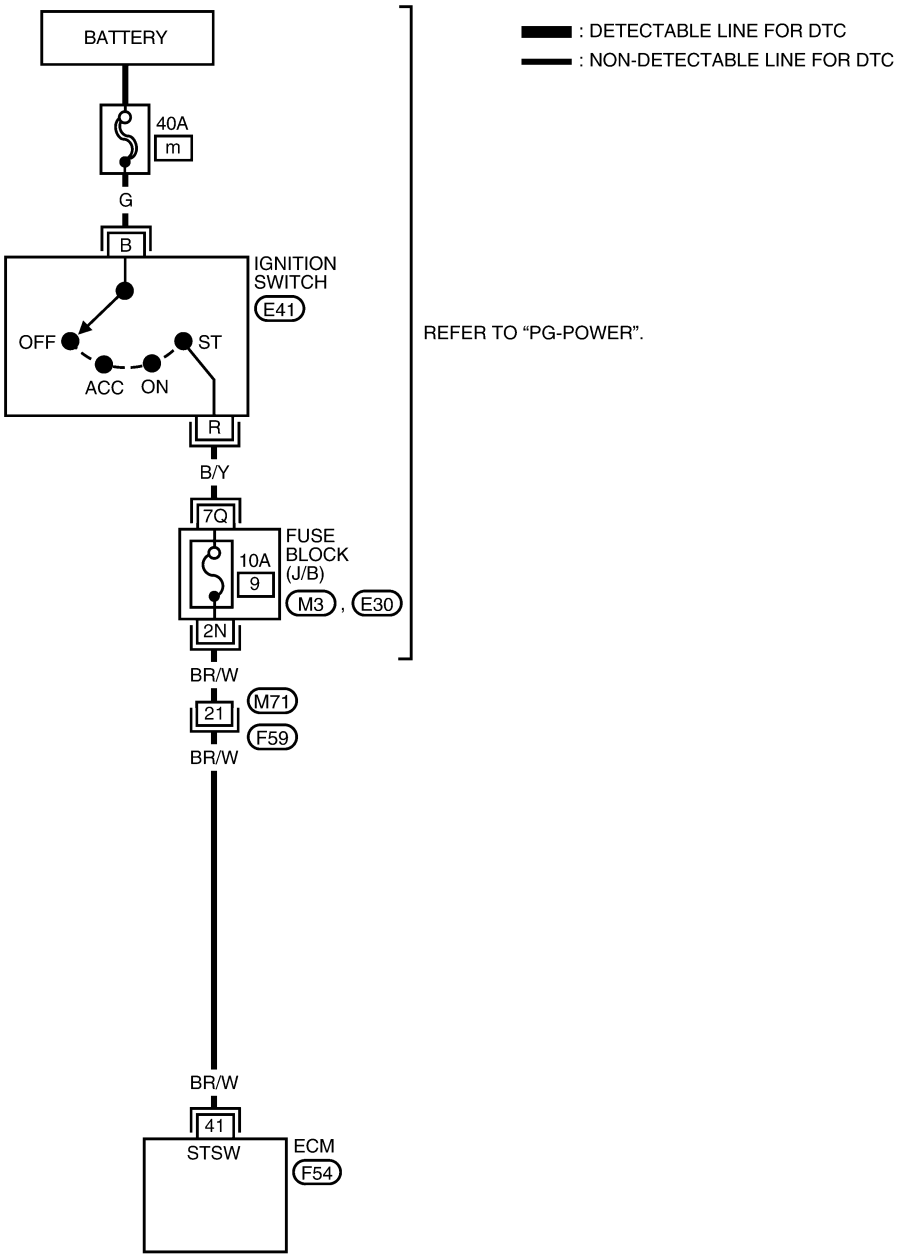

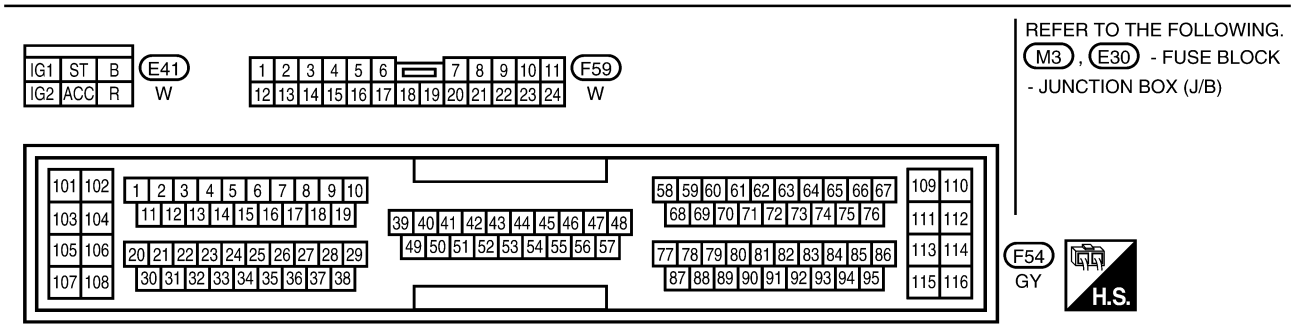

BBWA0036E

Specification data are reference values and are measured between each terminal and ground.

CAUTION:
Do not use ECM ground terminals when measuring input/output voltage. Doing so may result in damage to the ECM's transistor. Use a ground other than ECM terminals, such as the ground.

TERMINAL NO.	WIRE COLOR	ITEM	CONDITION	DATA (DC Voltage)
41	BR/W	Start signal	**[Ignition switch "ON"]**	Approximately 0V
			[Ignition switch "START"]	9 - 14V

★: Average voltage for pulse signal (Actual pulse signal can be confirmed by oscilloscope.)

Diagnostic Procedure

UBS0033F

1. INSPECTION START

Do you have CONSULT-II?

Yes or No

Yes >> GO TO 2.
No >> GO TO 3.

2. CHECK OVERALL FUNCTION

With CONSULT-II

1. Turn ignition switch "ON".
2. Check "START SIGNAL" in "DATA MONITOR" mode with CONSULT-II under the following conditions.

Condition	START SIGNAL
Ignition switch "ON"	OFF
Ignition switch "START"	ON

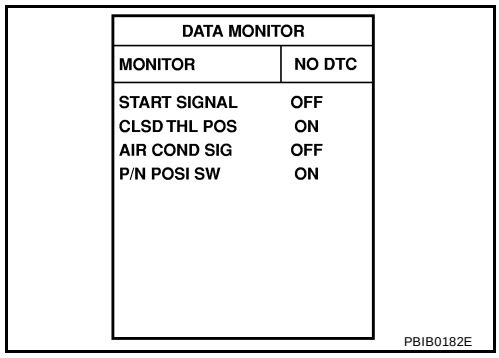

OK or NG

OK >> **INSPECTION END**
NG >> GO TO 4.

3. CHECK OVERALL FUNCTION

Without CONSULT-II

Check voltage between ECM terminal 41 and ground under the following conditions.

Condition	Voltage
Ignition switch "START"	Battery voltage
Other positions	Approximately 0V

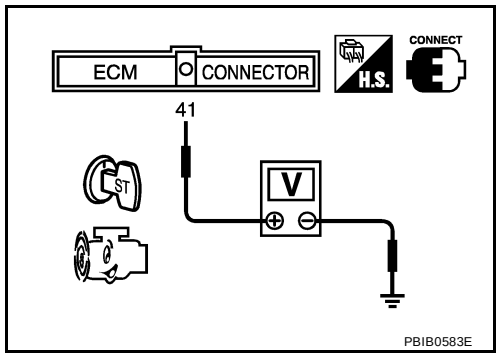

OK or NG

OK >> **INSPECTION END**
NG >> GO TO 4.

4. CHECK STARTING SYSTEM

Turn ignition switch "OFF", then turn it to "START".
Does starter motor operate?

Yes or No

Yes >> GO TO 5.
No >> Refer to SC-9, "STARTING SYSTEM" .

5. CHECK FUSE

1. Turn ignition switch “OFF”.
2. Disconnect 10A fuse.
3. Check if 10A fuse is OK.

OK or NG

OK >> GO TO 6.
NG >> Replace 10A fuse.

6. CHECK START SIGNAL INPUT SIGNAL CIRCUIT FOR OPEN AND SHORT

1. Disconnect ECM harness connector.
2. Disconnect ignition switch harness connector.
3. Check harness continuity between ECM terminal 41 and fuse block (J/B), ignition switch and fuse block (J/B). Refer to Wiring Diagram.

Continuity should exist.

4. Also check harness for short to ground and short to power.

OK or NG

OK >> GO TO 8.
NG >> GO TO 7.

7. DETECT MALFUNCTIONING PART

Check the following.

- Harness connectors
- Fuse block (J/B) connectors M3, E30
- Harness for open or short between ignition switch and fuse block (J/B)
- Harness for open or short between ECM and fuse block (J/B)

>> Repair open circuit or short to ground or short to power in harness or connectors.

8. CHECK INTERMITTENT INCIDENT

Refer to EC-130, "TROUBLE DIAGNOSIS FOR INTERMITTENT INCIDENT" .

>> **INSPECTION END**

FUEL PUMP CIRCUIT

PFP:17042

Description

UBS0033G

SYSTEM DESCRIPTION

Sensor	Input Signal to ECM	ECM Function	Actuator
Crankshaft position sensor (POS) Camshaft position sensor (PHASE)	Engine speed	Fuel pump control	Fuel pump relay
Ignition switch	Start signal		

The ECM activates the fuel pump for several seconds after the ignition switch is turned on to improve engine startability. If the ECM receives a engine speed signal from the crankshaft position sensor (POS) and camshaft position sensor (PHASE), it knows that the engine is rotating, and causes the pump to operate. If the engine speed signal is not received when the ignition switch is ON, the engine stalls. The ECM stops pump operation and prevents battery discharging, thereby improving safety. The ECM does not directly drive the fuel pump. It controls the ON/OFF fuel pump relay, which in turn controls the fuel pump.

Condition	Fuel pump operation
Ignition switch is turned to ON.	Operates for 1 second.
Engine running and cranking	Operates.
When engine is stopped	Stops in 1.5 seconds.
Except as shown above	Stops.

COMPONENT DESCRIPTION

A turbine type design fuel pump is used in the fuel tank.

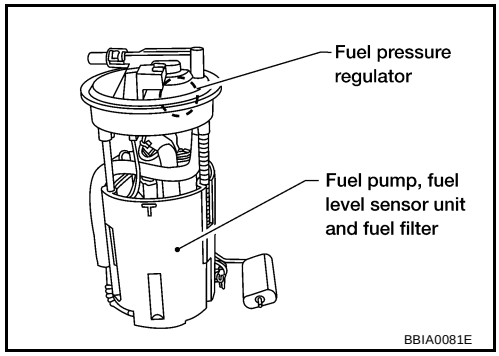

CONSULT-II Reference Value in Data Monitor Mode

UBS0033H

Specification data are reference values.

MONITOR ITEM	CONDITION	SPECIFICATION
FUEL PUMP RLY	● For 1 seconds after turning ignition switch ON ● Engine running or cranking	ON
	● Except above conditions	OFF

Wiring Diagram

UBS0033I

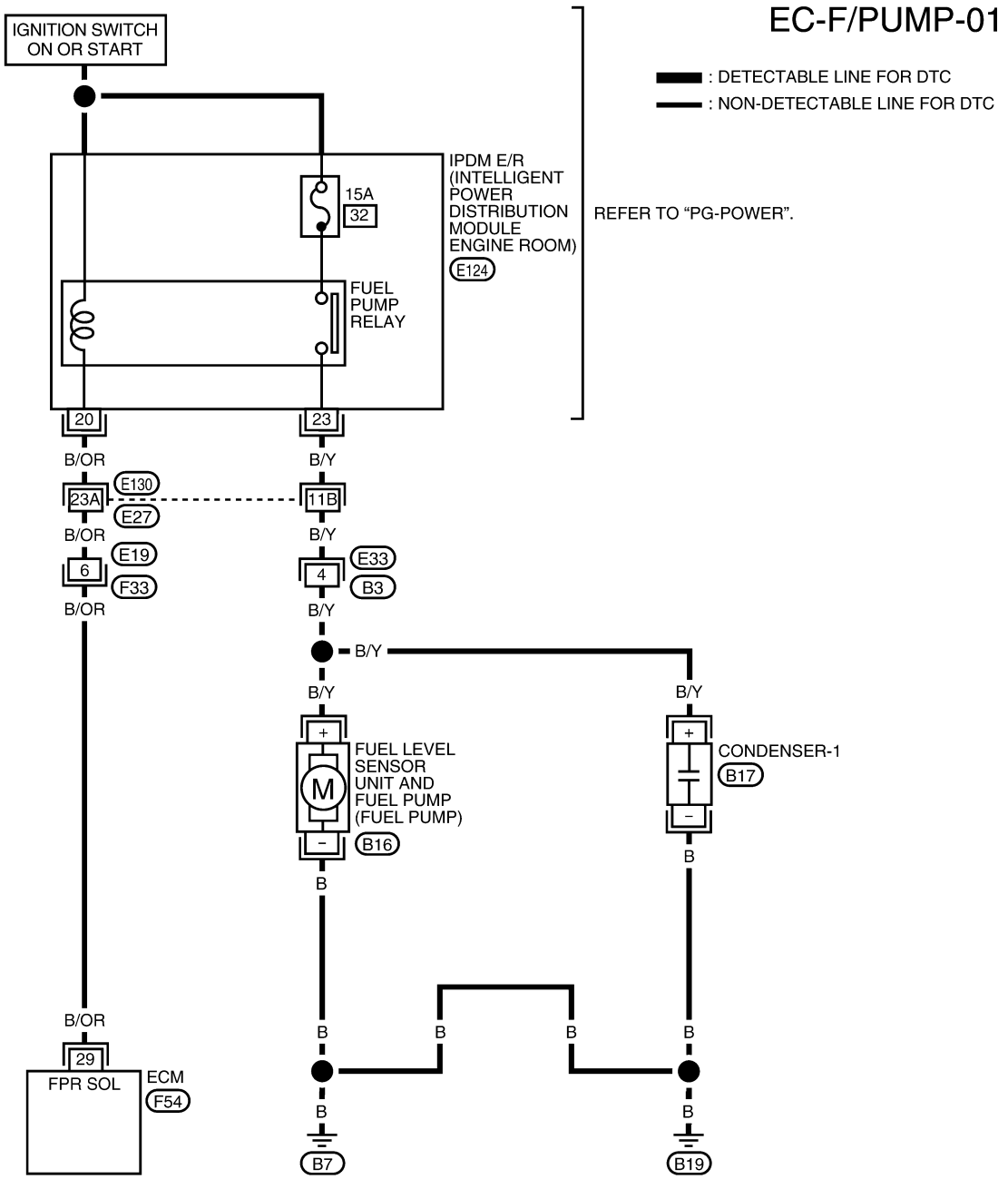

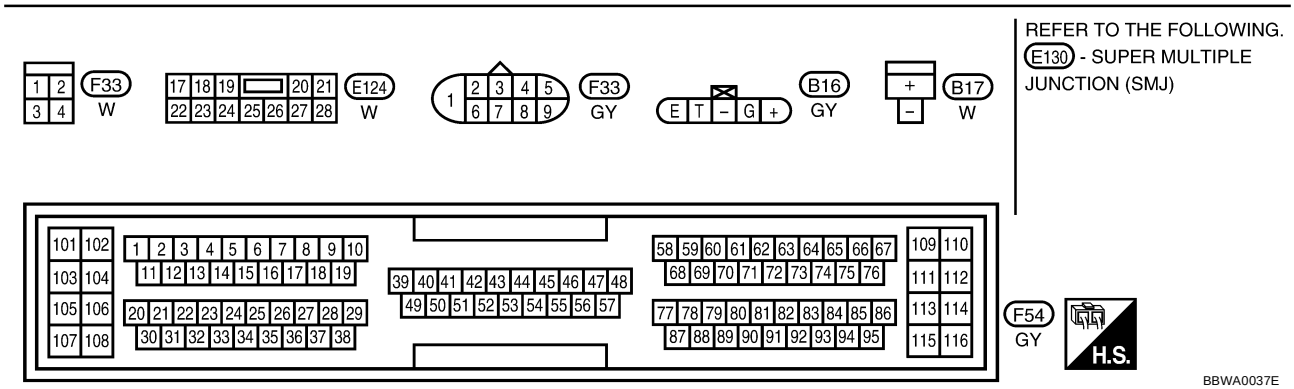

Specification data are reference values and are measured between each terminal and ground.

CAUTION:
Do not use ECM ground terminals when measuring input/output voltage. Doing so may result in damage to the ECM's transistor. Use a ground other than ECM terminals, such as the ground.

TERMINAL NO.	WIRE COLOR	ITEM	CONDITION	DATA (DC Voltage)
29	B/OR	Fuel pump relay	**[Ignition switch "ON"]** ● For 1 seconds after turning ignition switch "ON" **[Engine is running]**	0 - 1.0V
			[Ignition switch "ON"] ● More than 1 seconds after turning ignition switch "ON".	BATTERY VOLTAGE (11 - 14V)

Diagnostic Procedure

UBS0033J

1. CHECK OVERALL FUNCTION

1. Turn ignition switch "ON".
2. Pinch fuel feed hose with two fingers.
   Fuel pressure pulsation should be felt on the fuel hose for 1 second after ignition switch is turned "ON".

OK or NG

OK >> **INSPECTION END**
NG >> GO TO 2.

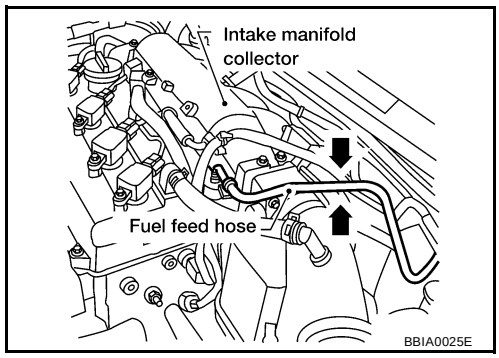

2. CHECK FUEL PUMP POWER SUPPLY CIRCUIT-I

1. Turn ignition switch "OFF".
2. Disconnect ECM harness connector.
3. Turn ignition switch "ON".

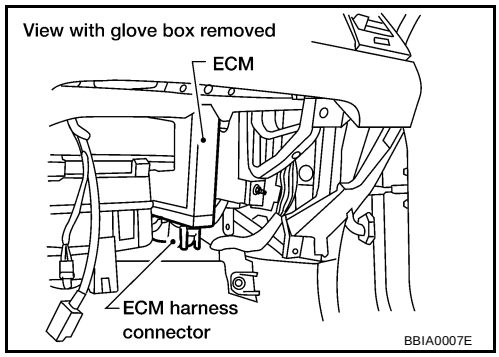

4. Check voltage between ECM terminal 29 and ground with CONSULT-II or tester.

   Voltage: Battery voltage

OK or NG

OK >> GO TO 5.
NG >> GO TO 3.

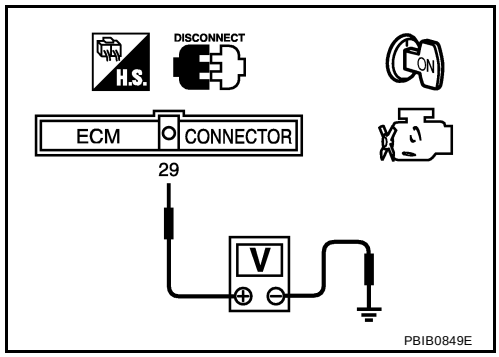

3. CHECK FUEL PUMP POWER SUPPLY CIRCUIT-II

1. Turn ignition switch “OFF”.
2. Disconnect IPDM E/R harness connector E124.
3. Turn ignition switch “ON”.
4. Check voltage between IPDM E/R terminal 20 and ground with CONSULT-II or tester.

Voltage: Battery voltage

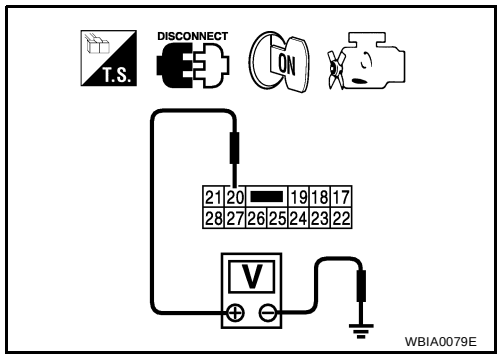

OK or NG

OK >> GO TO 4.
NG >> GO TO 13.

4. DETECT MALFUNCTIONING PART

Check the following.

- Harness connectors E130, E27
- Harness or connectors E19, F33
- Harness for open or short between IPDM E/R and ECM

>> Repair harness or connectors.

5. CHECK CONDENSER POWER SUPPLY CIRCUIT-I

1. Turn ignition switch “OFF”.
2. Reconnect all harness connectors disconnected.
3. Disconnect condenser harness connector.
4. Turn ignition switch “ON”.

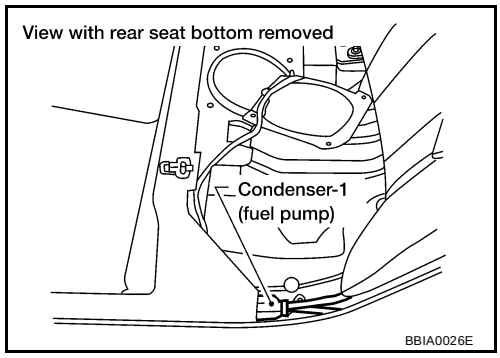

5. Check voltage between condenser terminal **+** and ground with CONSULT-II or tester.

Voltage: Battery voltage should exist for 1 second after ignition switch is turned "ON".

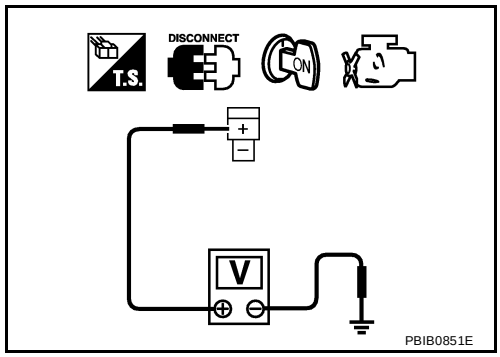

OK or NG

OK >> GO TO 9.
NG >> GO TO 6.

6. CHECK 15A FUSE

1. Turn ignition switch "OFF".
2. Disconnect 15A fuse.
3. Check 15A fuse.

OK or NG

OK >> GO TO 7.
NG >> Replace fuse.

7. CHECK CONDENSER POWER SUPPLY CIRCUIT-II

1. Disconnect IPDM E/R harness connector E124.
2. Check harness continuity between IPDM E/R terminal 23 and condenser terminal **+** .
   Refer to Wiring Diagram.

   Continuity should exist.

3. Also check harness for short to ground and short to power.

OK or NG

OK >> GO TO 13.
NG >> GO TO 8.

8. DETECT MALFUNCTIONING PART

Check the following.

- Harness connectors E130, E27
- Harness or connectors E33, B3
- Harness for open or short between IPDM E/R and condenser

>> Repair harness or connectors.

9. CHECK CONDENSER GROUND CIRCUIT

1. Check harness continuity between condenser terminal **-** and body ground.
   Refer to Wiring Diagram.

   Continuity should exist.

2. Also check harness for short to power.

OK or NG

OK >> GO TO 10.
NG >> Repair or replace harness or connectors.

10. CHECK CONDENSER

Refer to EC-589, "Component Inspection" .

OK or NG

OK >> GO TO 11.
NG >> Replace condenser.

11. CHECK FUEL PUMP POWER SUPPLY AND GROUND CIRCUIT FOR OPEN AND SHORT

1. Turn ignition switch “OFF”.
2. Disconnect fuel level sensor unit and fuel pump harness connector.
3. Check harness continuity between
   fuel pump terminal **+** and harness connector B3 terminal 4,
   fuel pump terminal **-** and body ground.
   Refer to Wiring Diagram.

   Continuity should exist.

4. Also check harness for short to ground and short to power.

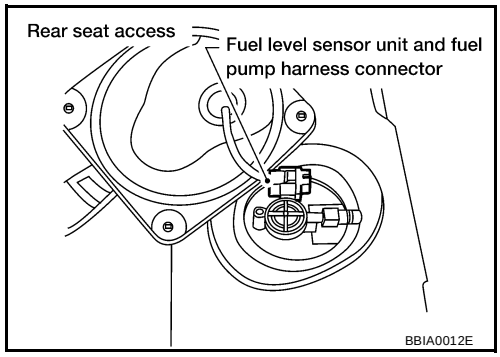

OK or NG

OK >> GO TO 12.
NG >> Repair or replace harness or connectors.

12. CHECK FUEL PUMP

Refer to EC-589, "Component Inspection" .

OK or NG

OK >> GO TO 13.
NG >> Replace fuel pump.

13. CHECK INTERMITTENT INCIDENT

Refer to EC-130, "TROUBLE DIAGNOSIS FOR INTERMITTENT INCIDENT" .

OK or NG

OK >> Replace IPDM E/R.
NG >> Repair or replace harness or connectors.

Component Inspection

UBS0033K

FUEL PUMP

1. Disconnect fuel level sensor unit and fuel pump harness connector.

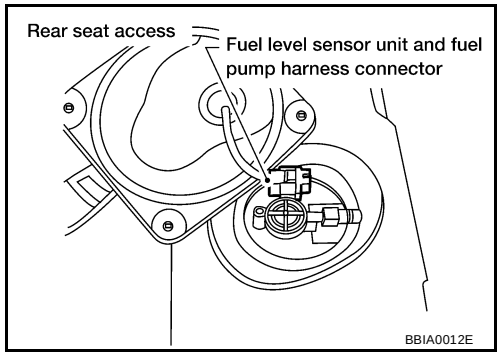

2. Check resistance between fuel level sensor unit and fuel pump terminals **+** and **-** .

   Resistance: Approximately 1.0Ω [at 25°C (77°F)]

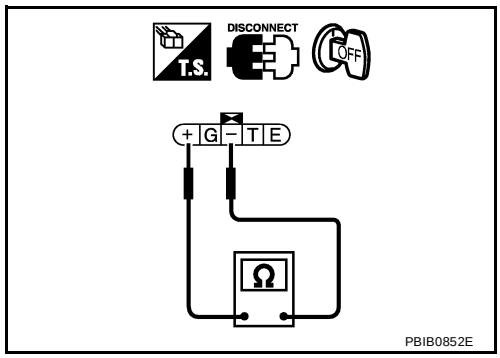

CONDENSER

1. Turn ignition switch "OFF".

2. Disconnect condenser harness connector.
3. Check resistance between condenser terminals **+** and **–** .

Resistance: Above 1MΩ [at 25°C (77°F)]

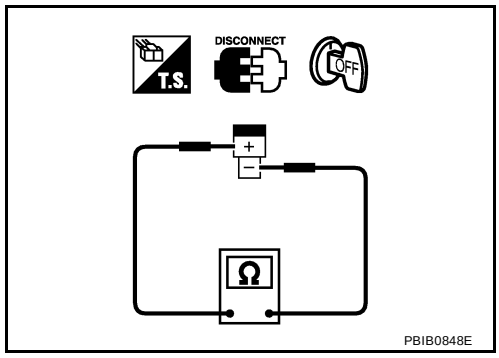

Removal and Installation

UBS0033L

FUEL PUMP

Refer to FL-5, "FUEL LEVEL SENSOR UNIT, FUEL FILTER AND FUEL PUMP ASSEMBLY" .

POWER STEERING OIL PRESSURE SWITCH

PFP:49761

Component Description

UBS0033M

The power steering oil pressure switch is attached to the power steering high-pressure tube and detects a power steering load. When a power steering load is detected, it signals the ECM. The ECM controls the electric throttle control actuator and adjusts the throttle valve opening angle to increase the engine speed and adjusts the idle speed for the increased load.

CONSULT-II Reference Value in Data Monitor Mode

UBS0033N

Specification data are reference values.

MONITOR ITEM	CONDITION		SPECIFICATION
PW/ST SIGNAL	● Engine: After warming up, idle the engine	Steering wheel in neutral position (forward direction)	OFF
		The steering wheel is fully turned	ON

Wiring Diagram

UBS0033O

EC-PST/SW-01

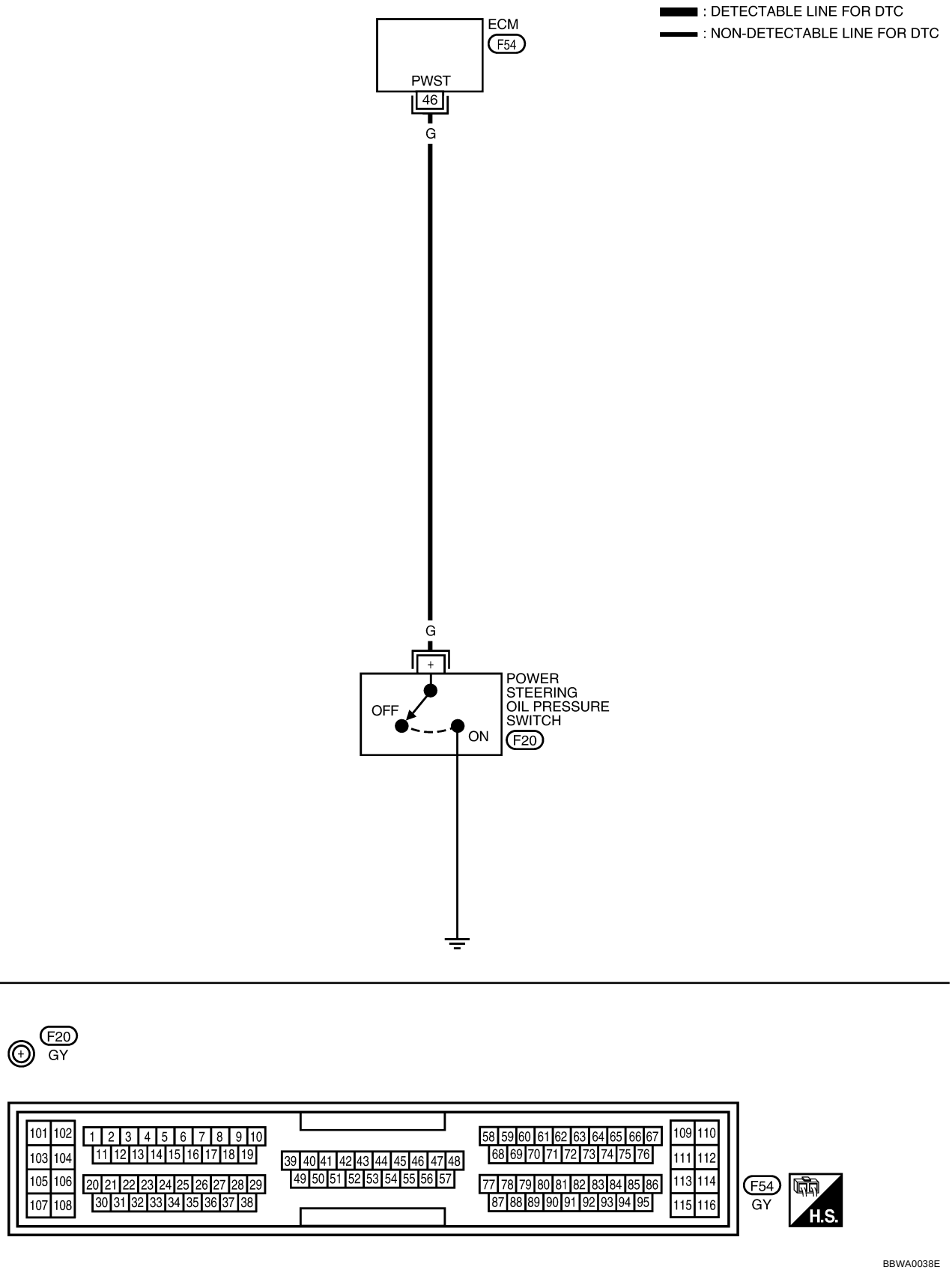

Specification data are reference values and are measured between each terminal and ground.

CAUTION:
Do not use ECM ground terminals when measuring input/output voltage. Doing so may result in damage to the ECM's transistor. Use a ground other than ECM terminals, such as the ground.

TERMINAL NO.	WIRE COLOR	ITEM	CONDITION	DATA (DC Voltage)
46	G	Power steering oil pressure switch	**[Engine is running]** ● Steering wheel is being turned	Approximately 0V
			[Engine is running] ● Steering wheel is not being turned	BATTERY VOLTAGE (11 - 14V)

Diagnostic Procedure

UBS0033P

1. INSPECTION START

Do you have CONSULT-II?

Yes or No

Yes >> GO TO 2.
No >> GO TO 3.

2. CHECK OVERALL FUNCTION

With CONSULT-II

1. Start engine.
2. Check “PW/ST SIGNAL” in “DATA MONITOR” mode with CONSULT-II under the following conditions.

Steering in neutral position	OFF
Steering is turned	ON

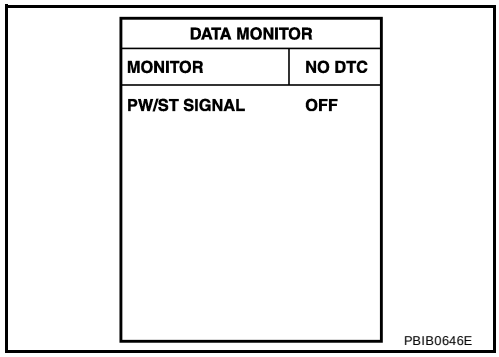

OK or NG

OK >> **INSPECTION END**
NG >> GO TO 4.

3. CHECK OVERALL FUNCTION

Without CONSULT-II

1. Start engine.
2. Check voltage between ECM terminal 46 and ground under the following conditions.

Condition	Voltage
When steering wheel is turned quickly	Approximately 0V
Except above	Approximately 5V

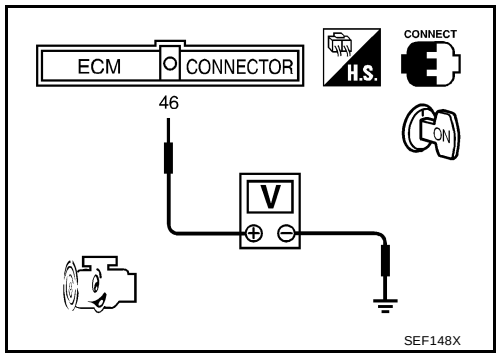

OK or NG

OK >> **INSPECTION END**
NG >> GO TO 4.

4. CHECK INPUT SIGNAL CIRCUIT

1. Disconnect ECM harness connector.
2. Check harness continuity between ECM terminal 46 and power steering oil pressure switch terminal **+** . Refer to Wiring Diagram.

Continuity should exist.

3. Also check harness for short to ground and short to power.

OK or NG

OK >> GO TO 6.
NG >> GO TO 5.

5. DETECT MALFUNCTIONING PART

Check the harness for open or short between ECM and power steering oil pressure switch.

>> Repair open circuit or short to ground or short to power in harness or connectors.

6. CHECK POWER STEERING OIL PRESSURE SWITCH

Refer to EC-595, "Component Inspection" .

OK or NG

OK >> GO TO 7.
NG >> Replace power steering oil pressure switch.

7. CHECK INTERMITTENT INCIDENT

Perform EC-130, "TROUBLE DIAGNOSIS FOR INTERMITTENT INCIDENT" .

>> **INSPECTION END**

Component Inspection

UBS0033Q

POWER STEERING OIL PRESSURE SWITCH

1. Turn ignition switch “OFF”.
2. Disconnect power steering oil pressure switch harness connector.
3. Start engine.
4. Check continuity between power steering oil pressure switch terminal **+** and body ground.

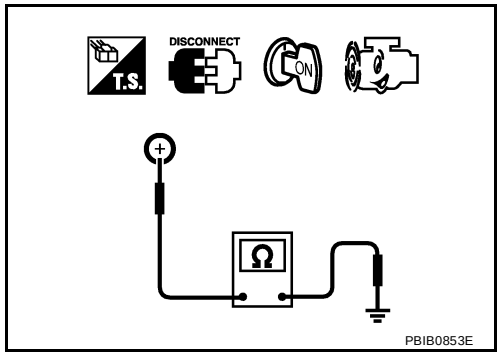

Conditions	Continuity
Steering wheel is being turned	Yes
Steering wheel is not being turned	No

If NG, replace power steering oil pressure switch.

Removal and Installation

UBS0033R

POWER STEERING OIL PRESSURE SWITCH

Refer to PS-20, "POWER STEERING OIL PUMP" .

REFRIGERANT PRESSURE SENSOR

PFP:92136

Component Description

UBS0033S

The refrigerant pressure sensor is installed at the liquid tank of the air conditioner system. The sensor uses an electrostatic volume pressure transducer to convert refrigerant pressure to voltage. The voltage signal is sent to ECM, and ECM controls cooling fan system.

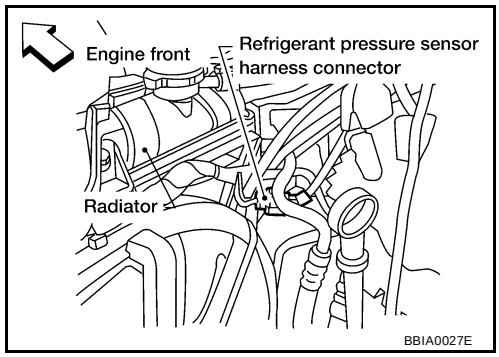

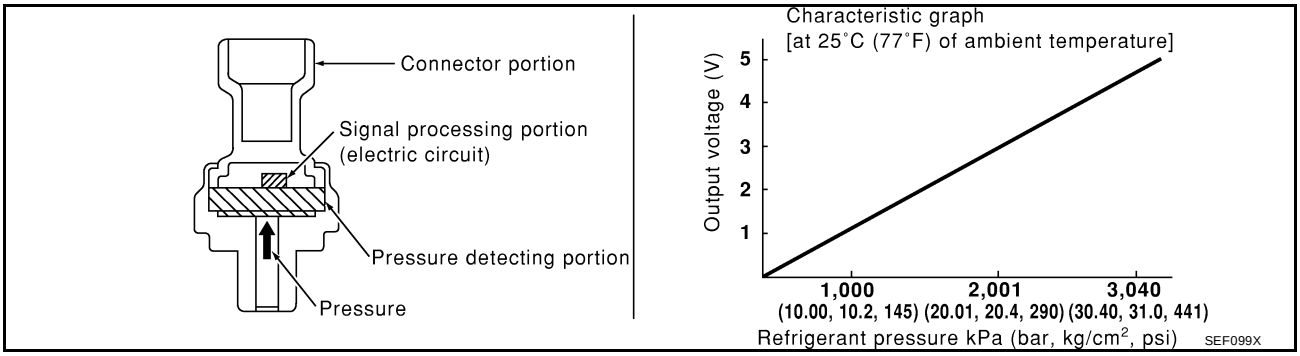

Wiring Diagram

UBS0033T

EC-RP/SEN-01

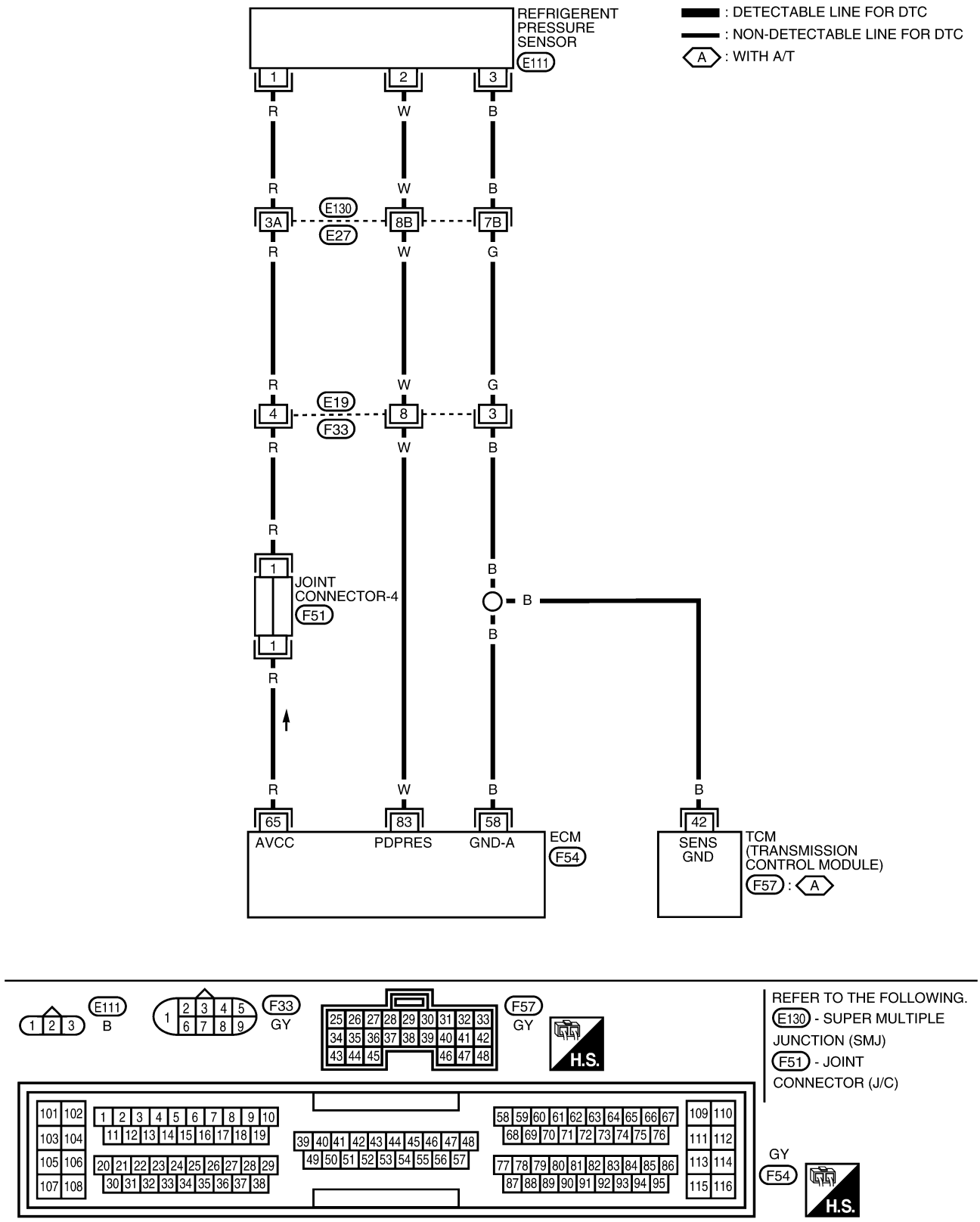

Specification data are reference values and are measured between each terminal and ground.

CAUTION:
Do not use ECM ground terminals when measuring input/output voltage. Doing so may result in damage to the ECM's transistor. Use a ground other than ECM terminals, such as the ground.

TERMINAL NO.	WIRE COLOR	ITEM	CONDITION	DATA (DC Voltage)
58	B	Sensors' ground	**[Engine is running]** ● **Warm-up condition** ● Idle speed	Approximately 0V
65	R	Sensor's power supply	**[Ignition switch "ON"]**	Approximately 5V
83	W	Refrigerant pressure sensor	**[Engine is running]** ● **Warm-up condition** ● Both A/C switch and blower switch are "ON". (Compressor operates.)	1.0 - 4.0V

Diagnostic Procedure

UBS0033U

1. CHECK REFRIGERANT PRESSURE SENSOR OVERALL FUNCTION

1. Start engine and warm it up to normal operating temperature.
2. Turn A/C switch and blower switch "ON".
3. Check voltage between ECM terminal 83 and ground with CONSULT-II or tester.

Voltage: 1.0 - 4.0V

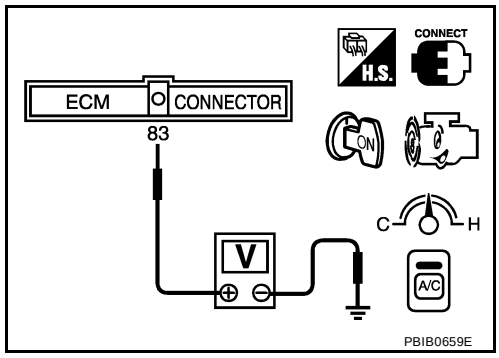

OK or NG

OK >> **INSPECTION END**
NG >> GO TO 2.

2. CHECK REFRIGERANT PRESSURE SENSOR POWER SUPPLY CIRCUIT

1. Turn A/C switch and blower switch “OFF”.
2. Stop engine.
3. Disconnect refrigerant pressure sensor harness connector.
4. Turn ignition switch “ON”.

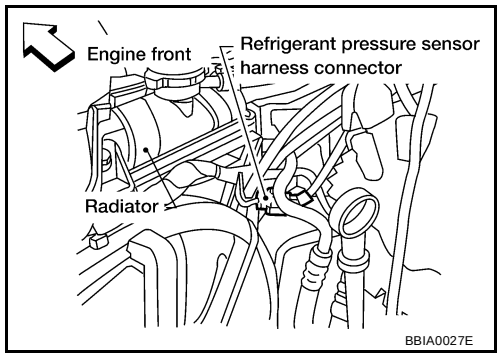

5. Check voltage between refrigerant pressure sensor terminal 1 and ground with CONSULT-II or tester.

Voltage: Approximately 5V

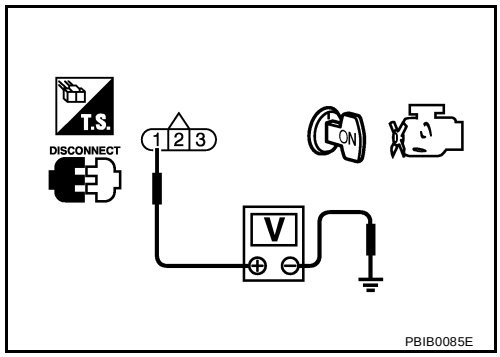

OK or NG

OK >> GO TO 4.
NG >> GO TO 3.

3. DETECT MALFUNCTIONING PART

Check the following.

- Harness connectors E19, F33
- Harness connectors E130, E27
- Joint connector-4
- Harness for open or short between ECM and refrigerant pressure sensor

>> Repair harness or connectors.

4. CHECK REFRIGERANT PRESSURE SENSOR GROUND CIRCUIT FOR OPEN AND SHORT

1. Turn ignition switch “OFF”.
2. Check harness continuity between refrigerant pressure sensor terminal 3 and engine ground. Refer to Wiring Diagram.

Continuity should exist.

3. Also check harness for short to ground and short to power.

OK or NG

OK >> GO TO 6.
NG >> GO TO 5.

5. DETECT MALFUNCTIONING PART

Check the following.

- Harness connectors E19, F33
- Harness connectors E130, E27
- Harness for open or short between ECM and refrigerant pressure sensor
- Harness for open or short between TCM and refrigerant pressure sensor

>> Repair open circuit or short to ground or short to power in harness or connectors.

6. CHECK REFRIGERANT PRESSURE SENSOR INPUT SIGNAL CIRCUIT FOR OPEN AND SHORT

1. Disconnect ECM harness connector.
2. Check harness continuity between ECM terminal 83 and refrigerant pressure sensor terminal 2.
   Refer to Wiring Diagram.

   Continuity should exist.

3. Also check harness for short to ground and short to power.

OK or NG

OK >> GO TO 8.
NG >> GO TO 7.

7. DETECT MALFUNCTIONING PART

Check the following.

- Harness connectors E19, F33
- Harness connectors E130, E27
- Harness for open or short between ECM and refrigerant pressure sensor

>> Repair open circuit or short to ground or short to power in harness or connectors.

8. CHECK INTERMITTENT INCIDENT

Refer to EC-130, "TROUBLE DIAGNOSIS FOR INTERMITTENT INCIDENT" .

OK or NG

OK >> Replace refrigerant pressure sensor.
NG >> Repair or replace.

Removal and Installation

UBS0033V

REFRIGERANT PRESSURE SENSOR

Refer to MTC-88, "Removal and Installation for Refrigerant Pressure Sensor" .

ELECTRICAL LOAD SIGNAL

PFP:25350

Description

UBS0033W

The electrical load signal (Headlamp switch signal, rear window defogger switch signal, etc.) is transferred through the CAN communication line from BCM to ECM via IPDM E/R.

Diagnostic Procedure

UBS0033X

1. CHECK LOAD SIGNAL CIRCUIT OVERALL FUNCTION-I

1. Turn ignition switch “ON”.
2. Connect CONSULT-II or GST and select "DATA MONITOR" mode.
3. Select "LOAD SIGNAL" and check indication under the following conditions.

Condition	Indication
Rear window defogger switch "ON"	ON
Rear window defogger switch "OFF"	OFF

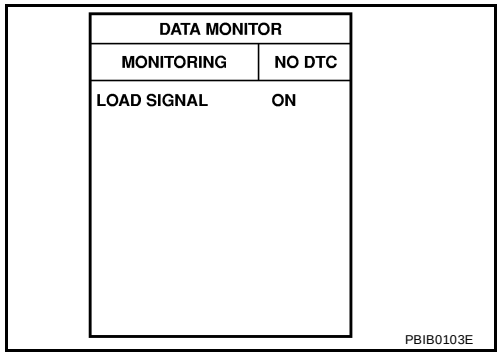

OK or NG

OK >> GO TO 2.
NG >> GO TO 3.

2. CHECK LOAD SIGNAL CIRCUIT OVERALL FUNCTION-II

Check "LOAD SIGNAL" indication under the following conditions.

Condition	Indication
Lighting switch "ON" at 2nd position	ON
Lighting switch "OFF"	OFF

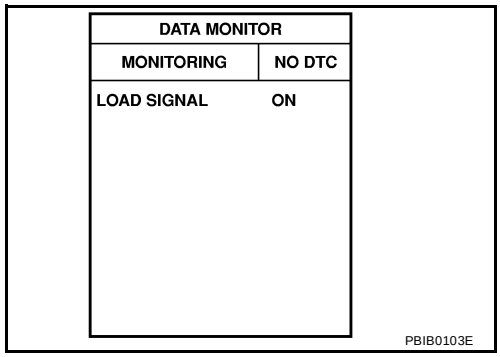

OK or NG

OK >> **INSPECTION END**
NG >> GO TO 4.

3. CHECK REAR WINDOW DEFOGGER SYSTEM

Refer to GW-41, "REAR WINDOW DEFOGGER" .

>> **INSPECTION END**

4. CHECK HEADLAMP SYSTEM

Refer to LT-5, "HEADLAMP (FOR USA)" or LT-28, "HEADLAMP (FOR CANADA) - DAYTIME LIGHT SYSTEM -" .

>> **INSPECTION END**

ASCD BRAKE SWITCH

PFP:25320

Component Description

UBS0033Y

When depress on the brake pedal, ASCD brake switch is turned OFF and stop lamp switch is turned ON. ECM detects the state of the brake pedal by this input of two kinds (ON/OFF signal)
Refer to EC-628, "AUTOMATIC SPEED CONTROL DEVICE (ASCD)" for the ASCD function.

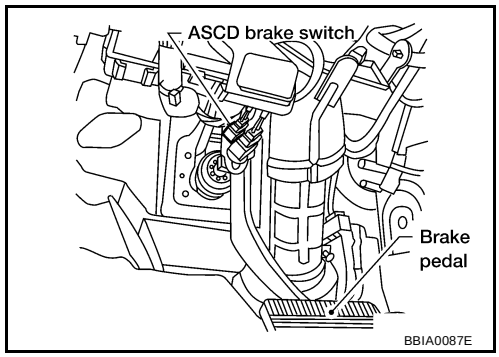

CONSULT-II Reference Value in Data Monitor Mode

UBS0033Z

Specification data are reference values.

MONITOR ITEM	CONDITION		SPECIFICATION
BRAKE SW1 (ASCD brake switch)	● Ignition switch: ON	● Brake pedal fully released	ON
		● Brake pedal depressed	OFF
BRAKE SW2 (stop lamp switch)	● Ignition switch: ON	● Brake pedal fully released	OFF
		● Brake pedal depressed	ON

Wiring Diagram

UBS00340

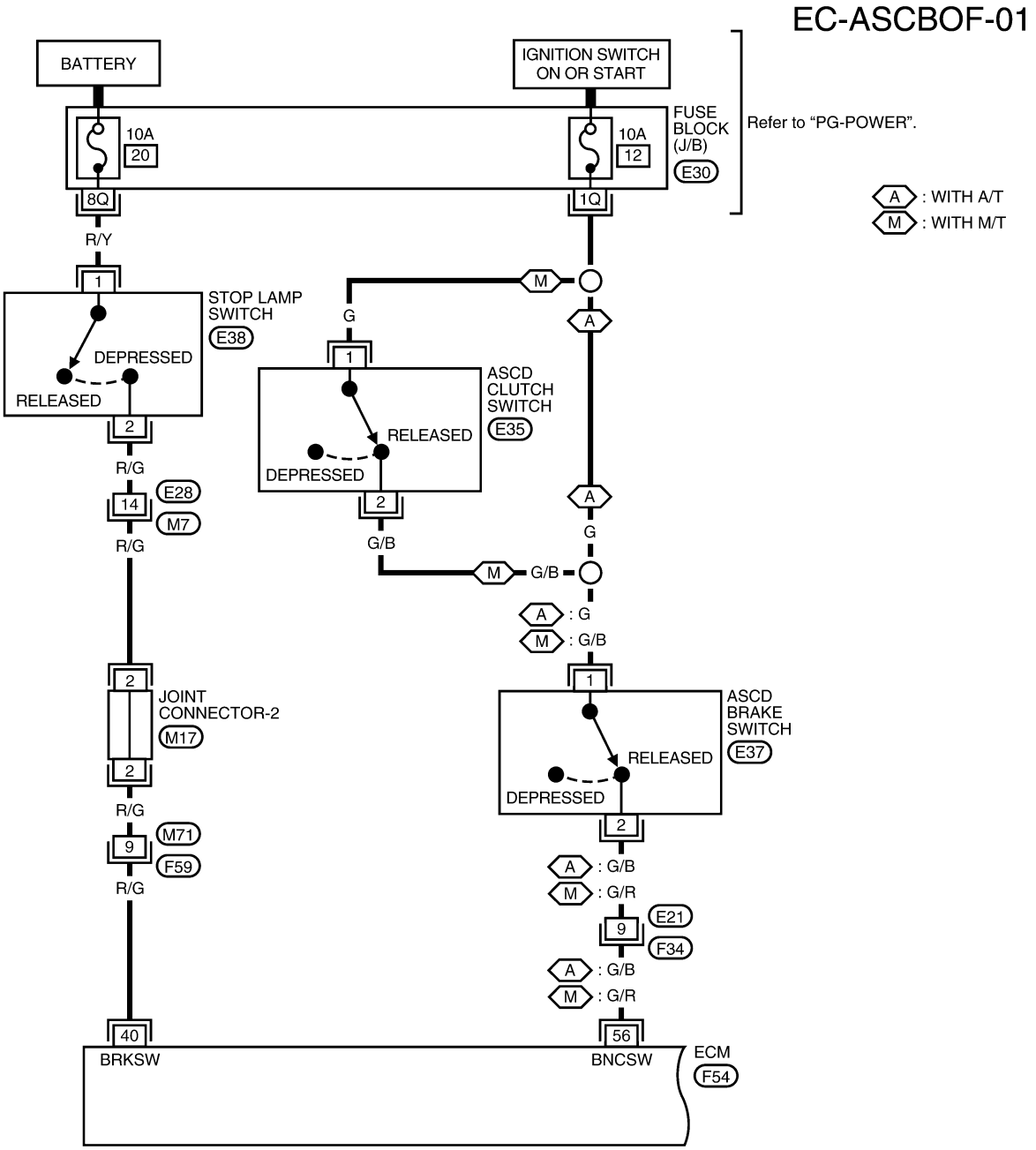

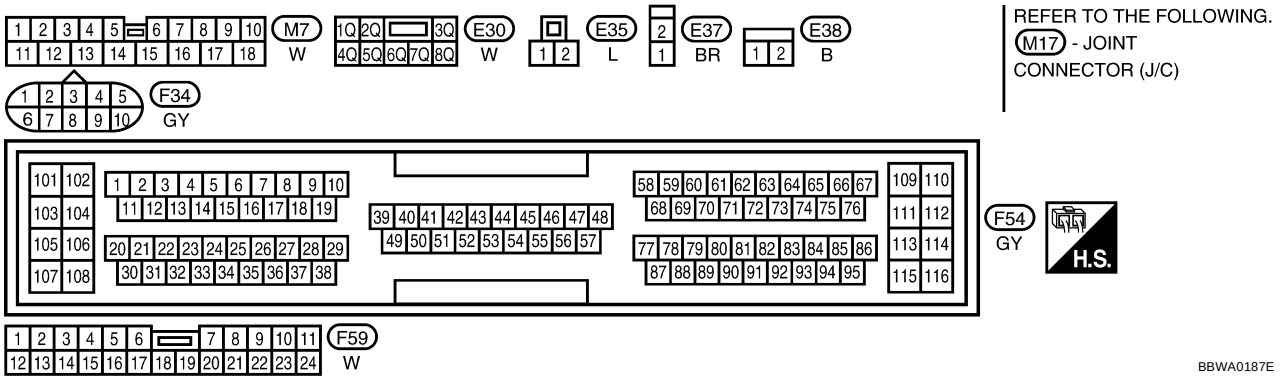

Specification data are reference values and are measured between each terminal and ground.

CAUTION:

Do not use ECM ground terminals when measuring input/output voltage. Doing so may result in damage to the ECM's transistor. Use a ground other than ECM terminals, such as the ground.

TERMINAL NO.	WIRE COLOR	ITEM	CONDITION	DATA (DC Voltage)
40	R/G	Stop lamp switch	**[Engine is running]** ● Brake pedal fully released	Approximately 0V
			[Engine is running] ● Brake pedal depressed	BATTERY VOLTAGE (11 - 14V)
56	G/B (A/T) G/R (M/T)	ASCD brake switch	**[Ignition switch "ON"]** ● Brake pedal is depressed ● Clutch pedal is depressed (M/T models)	Approximately 0V
			[Ignition switch "ON"] ● Brake pedal is fully released ● Clutch pedal is fully released (M/T models)	BATTERY VOLTAGE (11 - 14V)

Diagnostic Procedure

UBS00341

1. CHECK OVERALL FUNCTION-I

With CONSULT-II

1. Turn ignition switch "ON".
2. Select "BRAKE SW1" in "DATA MONITOR" mode with CONSULT-II.
3. Check "BRAKE SW1" indication under the following conditions.

M/T models

CONDITION	INDICATION
When clutch pedal or brake pedal is depressed	OFF
When clutch pedal and brake pedal are fully released	ON

A/T models

CONDITION	INDICATION
When brake pedal is depress	OFF
When brake pedal is fully released	ON

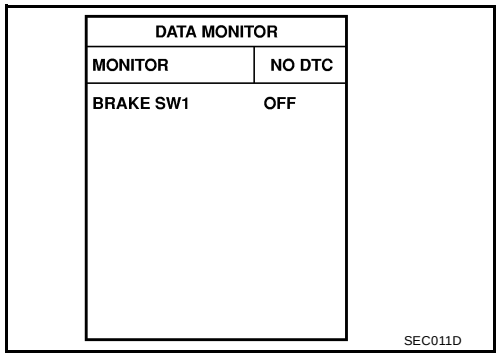

Without CONSULT-II

1. Turn ignition switch "ON".
2. Check voltage between ECM terminal 56 and ground under the following conditions.

A/T models

CONDITION	VOLTAGE
When brake pedal is depress	Approximately 0V
When brake pedal is fully released	Battery voltage

M/T models

CONDITION	VOLTAGE
When clutch pedal or brake pedal is depressed	Approximately 0V
When clutch pedal and brake pedal are fully released	Battery voltage

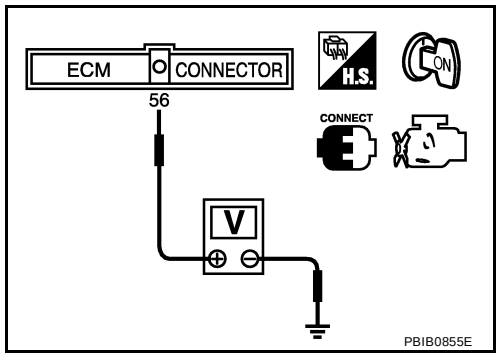

OK or NG

OK >> GO TO 2.
NG (M/T models) >>GO TO 3.
NG (A/T models) >>GO TO 8.

2. CHECK OVERALL FUNCTION-II

With CONSULT-II

Check "BRAKE SW2" indication in "DATA MONITOR" mode.

CONDITION	INDICATION
When brake pedal is released	OFF
When brake pedal is depressed	ON

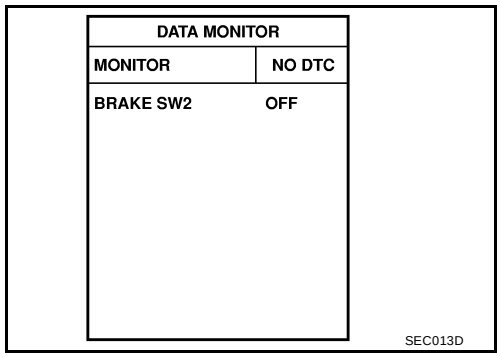

Without CONSULT-II

Check voltage between ECM terminal 40 and ground under the following conditions.

CONDITION	VOLTAGE
When brake pedal is released	Approximately 0V
When brake pedal is depressed	Battery voltage

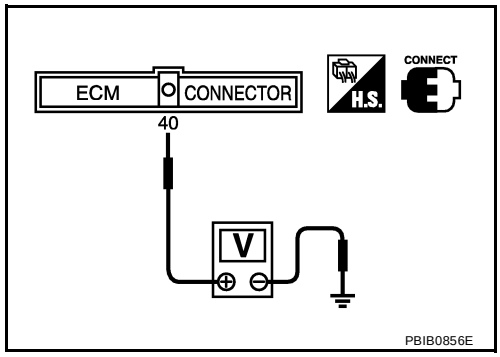

OK or NG

OK >> **INSPECTION END**

NG >> GO TO 13.

3. CHECK ASCD CLUTCH SWITCH CIRCUIT

1. Turn ignition switch "OFF".
2. Disconnect ASCD brake switch harness connector.
3. Turn ignition switch "ON".

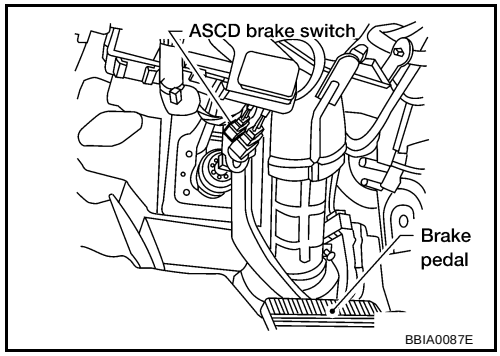

4. Check voltage between ASCD brake switch terminal 1 and ground under the following conditions with CONSULT-II or tester.

CONDITION	VOLTAGE
When clutch pedal is released	Battery voltage
When clutch pedal is depressed	Approx. 0V

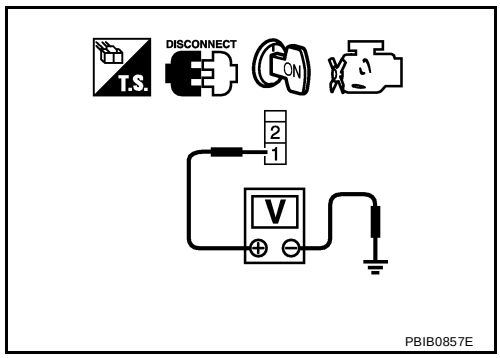

OK or NG

OK >> GO TO 10.

NG >> GO TO 4.

4. CHECK ASCD CLUTCH SWITCH POWER SUPPLY CIRCUIT

1. Turn ignition switch "OFF".
2. Disconnect ASCD clutch switch harness connector.
3. Turn ignition switch "ON".

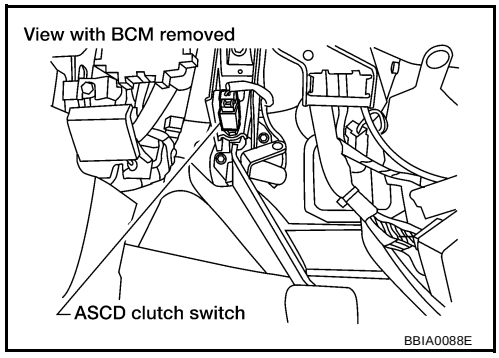

4. Check voltage between ASCD clutch switch terminal 1 and ground with CONSULT-II or tester.

Voltage: Battery voltage

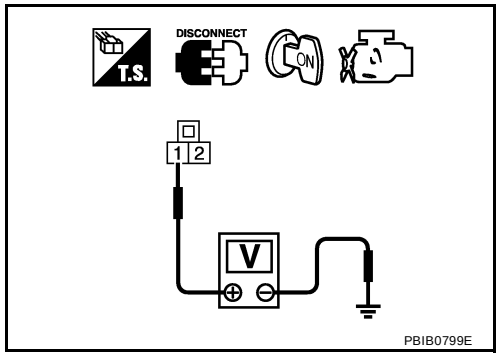

OK or NG

OK >> GO TO 6.
NG >> GO TO 5.

5. DETECT MALFUNCTIONING PART

Check the following.

- Fuse block (J/B) connector E30
- 10A fuse
- Harness for open or short between ASCD clutch switch and fuse

>> Repair open circuit or short to ground or short to power in harness or connectors.

6. CHECK ASCD CLUTCH SWITCH INPUT SIGNAL CIRCUIT FOR OPEN AND SHORT

1. Turn ignition switch "OFF".
2. Check harness continuity between ASCD clutch switch terminal 2 and ASCD brake switch terminal 1. Refer to Wiring Diagram.

Continuity should exist.

3. Also check harness for short to ground and short to power.

OK or NG

OK >> GO TO 7.
NG >> Repair open circuit or short to ground or short to power in harness or connectors.

7. CHECK ASCD CLUTCH SWITCH

Refer to EC-541, "Component Inspection"

OK or NG

OK >> GO TO 18.
NG >> Replace ASCD clutch switch.

8. CHECK ASCD BRAKE SWITCH POWER SUPPLY CIRCUIT

1. Turn ignition switch "OFF".
2. Disconnect ASCD brake switch harness connector.
3. Turn ignition switch "ON".

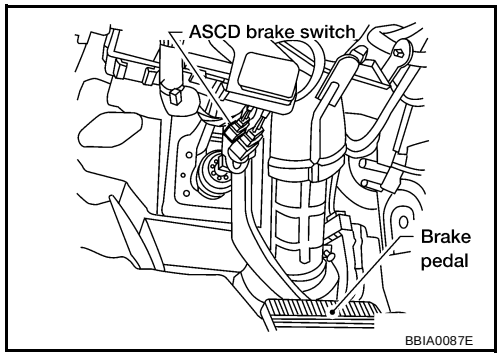

4. Check voltage between ASCD brake switch terminal 1 and ground with CONSULT-II or tester.

Voltage: Battery voltage

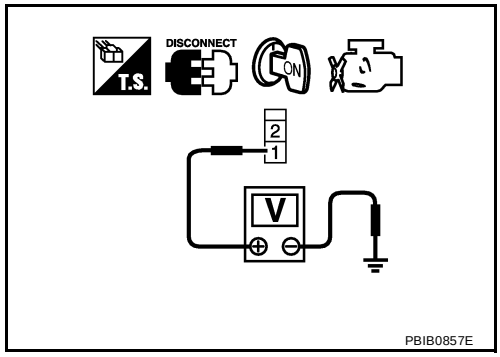

OK or NG

OK >> GO TO 10.
NG >> GO TO 9.

9. DETECT MALFUNCTIONING PART

Check the following.

- Fuse block (J/B) connector E30
- 10A fuse
- Harness for open or short between ASCD brake switch and fuse

>> Repair open circuit or short to ground or short to power in harness or connectors.

10. CHECK ASCD BRAKE SWITCH INPUT SIGNAL CIRCUIT FOR OPEN AND SHORT

1. Turn ignition switch "OFF".
2. Disconnect ECM harness connector.
3. Check harness continuity between ECM terminal 56 and ASCD brake switch terminal 2. Refer to Wiring Diagram.

Continuity should exist.

4. Also check harness for short to ground or short to power.

OK or NG

OK >> GO TO 12.
NG >> GO TO 11.

11. DETECT MALFUNCTIONING PART

Check the following.

- Harness connectors E21, F34
- Harness for open or short between ECM and ASCD brake switch

>> Repair open circuit or short to ground or short to power in harness or connectors.

12. CHECK ASCD BRAKE SWITCH

Refer to EC-541, "Component Inspection"

OK or NG

OK >> GO TO 18.
NG >> Replace ASCD brake switch.

13. CHECK STOP LAMP SWITCH POWER SUPPLY CIRCUIT

1. Turn ignition switch "OFF".
2. Disconnect stop lamp switch harness connector.

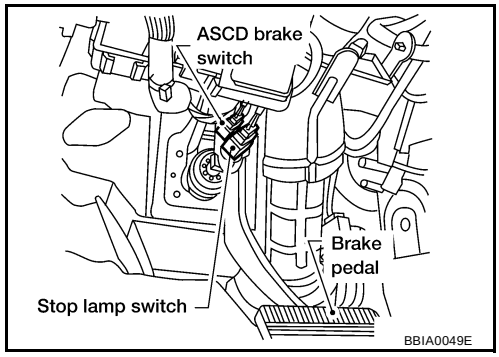

3. Check voltage between stop lamp switch terminal 1 and ground with CONSULT -II or tester.

Voltage: Battery voltage

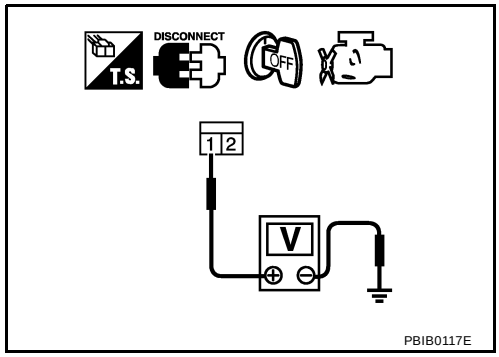

OK or NG

OK >> GO TO 15.
NG >> GO TO 14.

14. DETECT MALFUNCTIONING PART

Check the following.

- Fuse block (J/B) connector E30
- 10A fuse
- Harness for open or short between stop lamp switch and fuse

>> Repair open circuit or short to ground or short to power in harness or connectors.

15. CHECK STOP LAMP SWITCH INPUT SIGNAL CIRCUIT FOR OPEN AND SHORT

1. Disconnect ECM harness connector.
2. Check harness continuity between ECM terminal 40 and stop lamp switch terminal 2. Refer to Wiring Diagram.

Continuity should exist.

3. Also check harness for short to ground and short to power.

OK or NG

OK >> GO TO 17.
NG >> GO TO 16.

16. DETECT MALFUNCTIONING PART

Check the following.

- Harness connectors E28, M7
- Harness connectors M71, F59
- Joint connector-2
- Harness for open or short between ECM and stop lamp switch

>> Repair open circuit or short to ground or short to power in harness or connectors.

17. CHECK STOP LAMP SWITCH

Refer to EC-541, "Component Inspection"

OK or NG

OK >> GO TO 18.
NG >> Replace stop lamp switch.

18. CHECK INTERMITTENT INCIDENT

Refer to EC-130, "TROUBLE DIAGNOSIS FOR INTERMITTENT INCIDENT" .

>> **INSPECTION END**

ASCD INDICATOR

PFP:24814

Component Description

UBS00342

ASCD indicator lamp illuminates to indicate ASCD operation status. Lamp has two indicators, CRUISE and SET, and is integrated in combination meter.
CRUISE indicator illuminates when CRUISE switch on ASCD steering switch is turned ON to indicated that ASCD system is ready for operation.
SET indicator illuminates when following conditions are met.

- CRUISE indicator is illuminated.
- SET switch on ASCD steering switch is turned ON while vehicle speed is within the range of ASCD setting.

SET indicator remains lit during ASCD control.
Refer to EC-628, "AUTOMATIC SPEED CONTROL DEVICE (ASCD)" for the ASCD function.

CONSULT-II Reference Value in Data Monitor Mode

UBS00343

Specification data are reference value.

MONITOR ITEM	CONDITION		SPECIFICATION
CRUISE LAMP	● Ignition switch: ON	● CRUISE switch pressed	ON
		● CRUISE switch released	OFF
SET LAMP	● CRUISE switch: ON ● When vehicle speed is between 40 km/h (25 MPH) and 144 km/h (89 MPH)	● SET switch pressed	ON
		● SET switch released	OFF

Wiring Diagram

UBS00344

EC-ASCIND-01

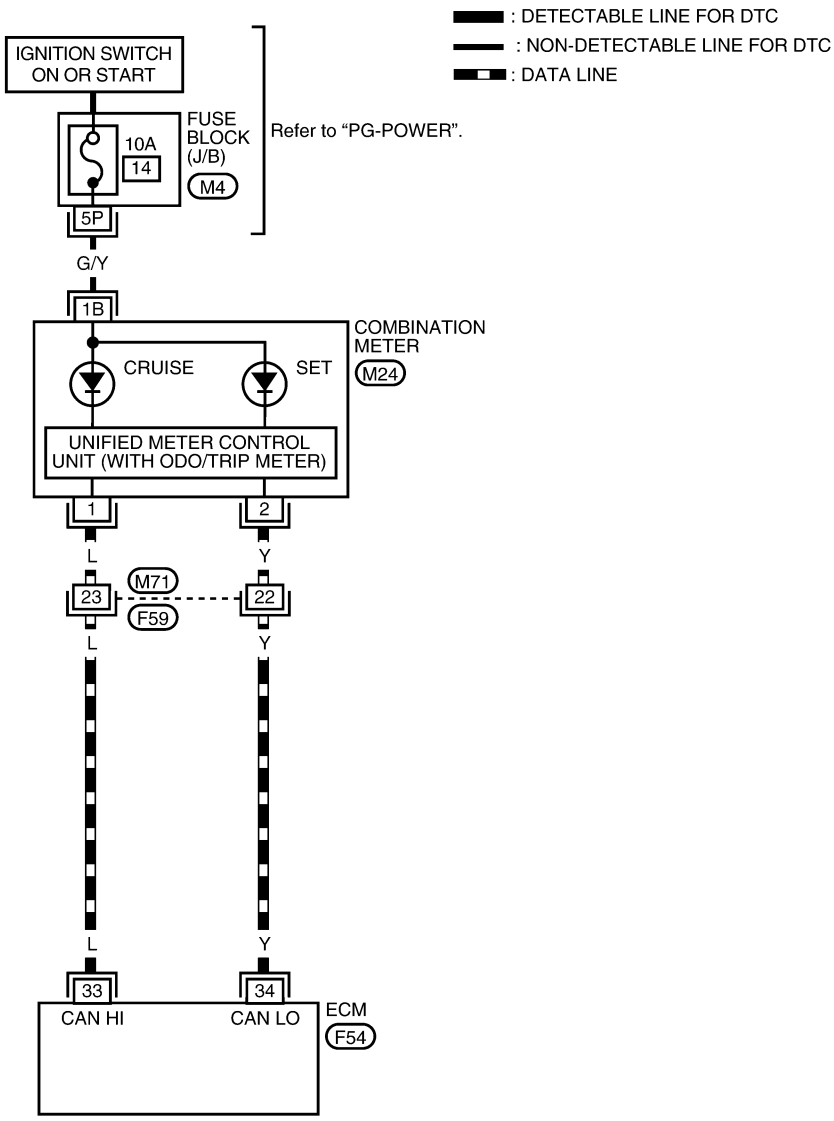

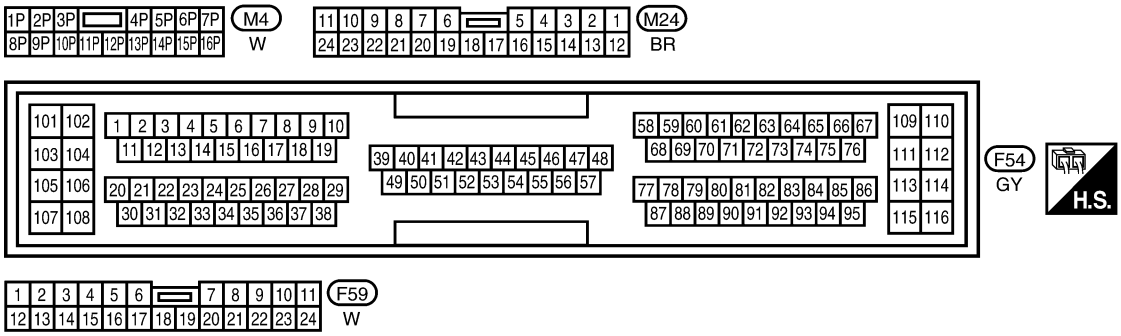

WBWA0004E

Diagnostic Procedure

UBS00345

1. CHECK OVERALL FUNCTION

Check ASCD indicator under the following conditions.

ASCD INDICATOR	CONDITION		SPECIFICATION
CRUISE LAMP	● Ignition switch: ON	● CRUISE switch pressed	ON
		● CRUISE switch released	OFF
SET LAMP	● CRUISE switch: ON ● When vehicle speed is between 40 km/h (25 MPH) and 144 km/h (89 MPH)	● SET switch pressed	ON
		● SET switch released	OFF

OK or NG

OK >> **INSPECTION END**
NG >> GO TO 2.

2. CHECK DTC

Check that DTC U1000 or U1001is not displayed.

Yes or No

Yes >> Perform trouble diagnoses for DTC U1000, U1001, refer to EC-138, "DTC U1000, U1001 CAN COMMUNICATION LINE" .
No >> GO TO 3.

3. CHECK COMBINATION METER OPERATION

Does combination meter operate normally?

Yes or No

Yes >> GO TO 4.
No >> Check combination meter circuit. Refer to DI-4, "COMBINATION METERS" .

4. CHECK INTERMITTENT INCIDENT

Refer to EC-130, "TROUBLE DIAGNOSIS FOR INTERMITTENT INCIDENT" .

>> **INSPECTION END**

DATA LINK CONNECTOR

PFP:24814

Wiring Diagram

UBS00346

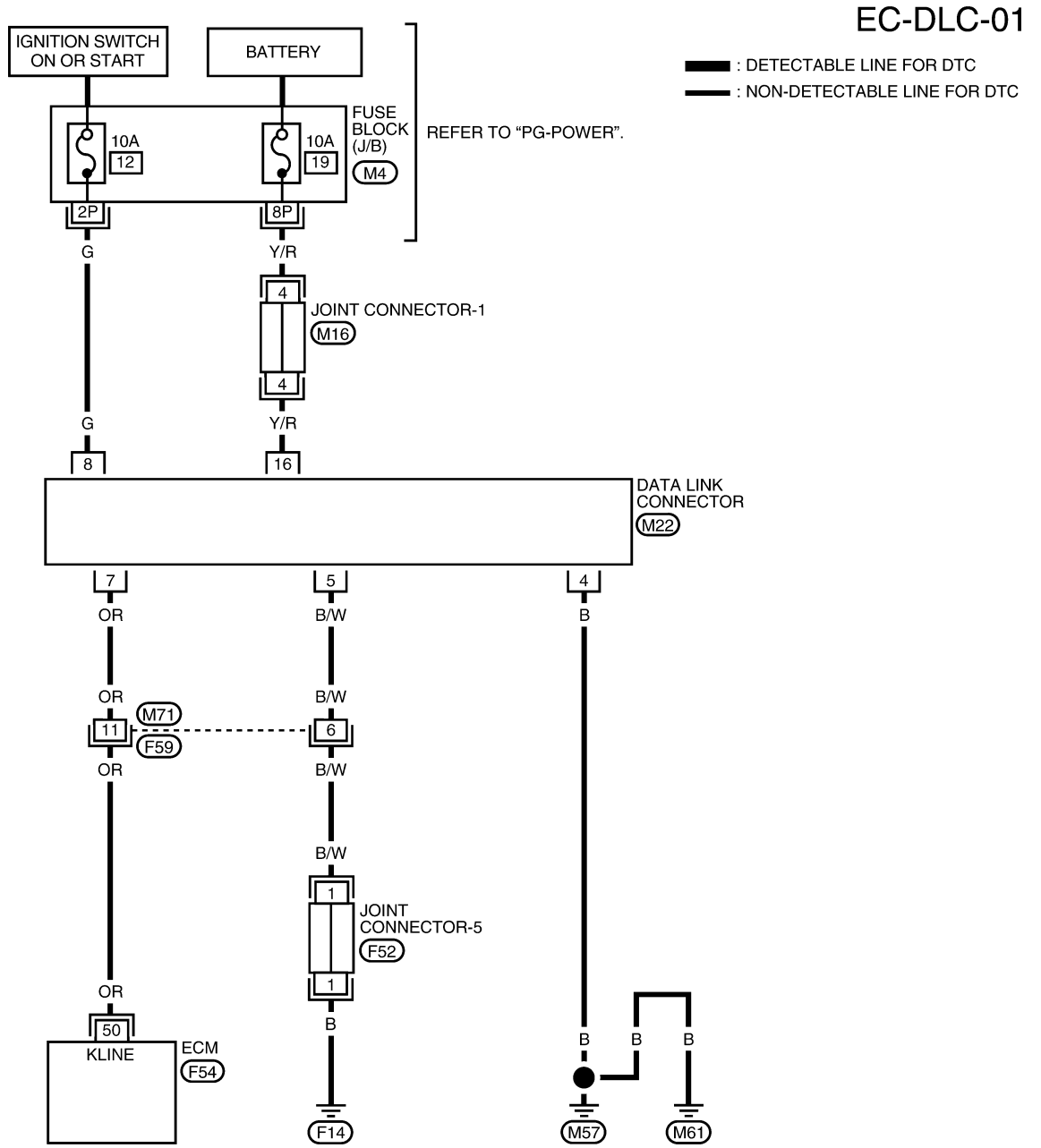

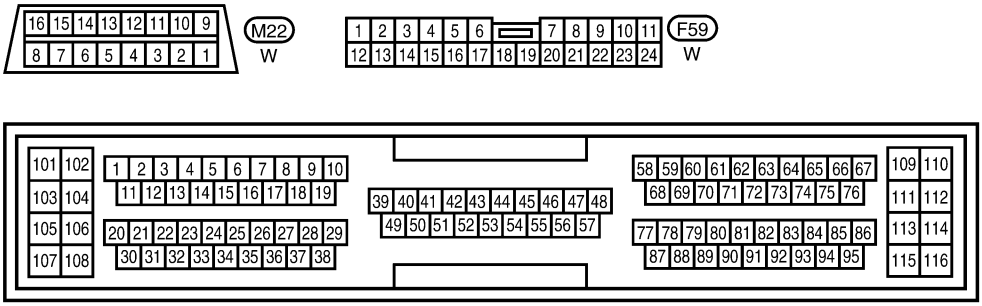

REFER TO THE FOLLOWING.
M4 - FUSE BLOCK
- JUNCTION BOX (J/B)
M16, F52 - JOINT CONNECTOR (J/C)

BBWA0046E

EVAPORATIVE EMISSION SYSTEM

PFP:14950

Description

UBS00347

SYSTEM DESCRIPTION

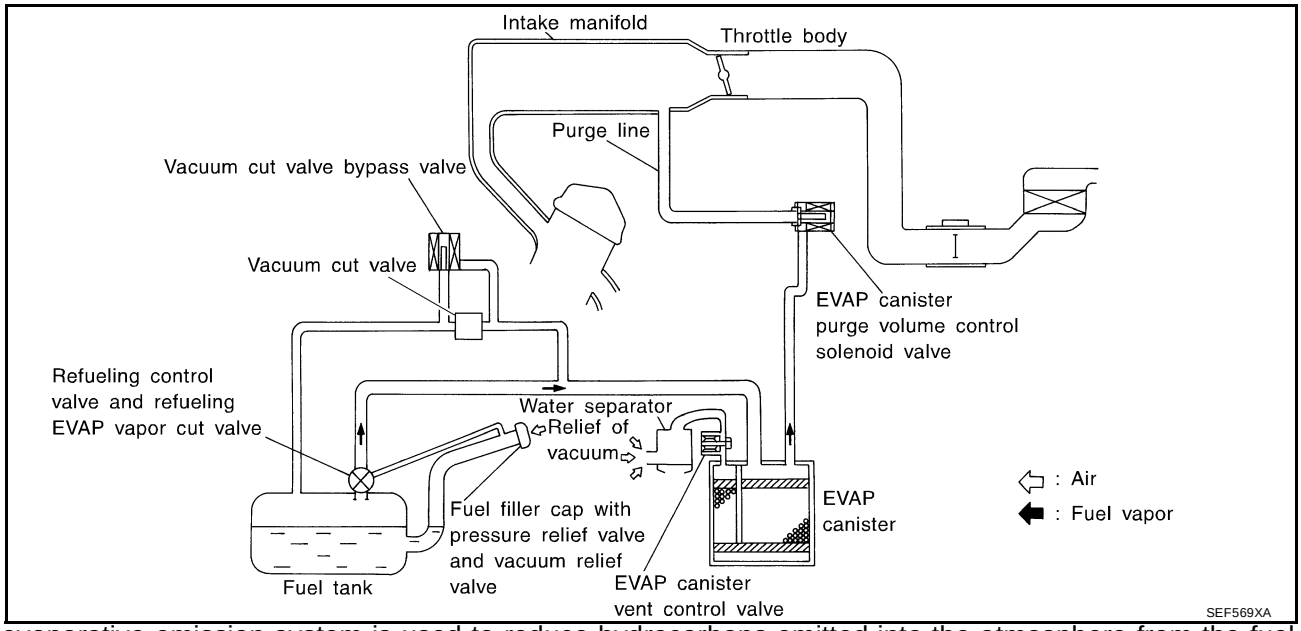

The evaporative emission system is used to reduce hydrocarbons emitted into the atmosphere from the fuel system. This reduction of hydrocarbons is accomplished by activated charcoals in the EVAP canister.

The fuel vapor in the sealed fuel tank is led into the EVAP canister which contains activated carbon and the vapor is stored there when the engine is not operating or when refueling to the fuel tank.

The vapor in the EVAP canister is purged by the air through the purge line to the intake manifold when the engine is operating. EVAP canister purge volume control solenoid valve is controlled by ECM. When the engine operates, the flow rate of vapor controlled by EVAP canister purge volume control solenoid valve is proportionally regulated as the air flow increases.

EVAP canister purge volume control solenoid valve also shuts off the vapor purge line during decelerating and idling.

EVAPORATIVE EMISSION LINE DRAWING

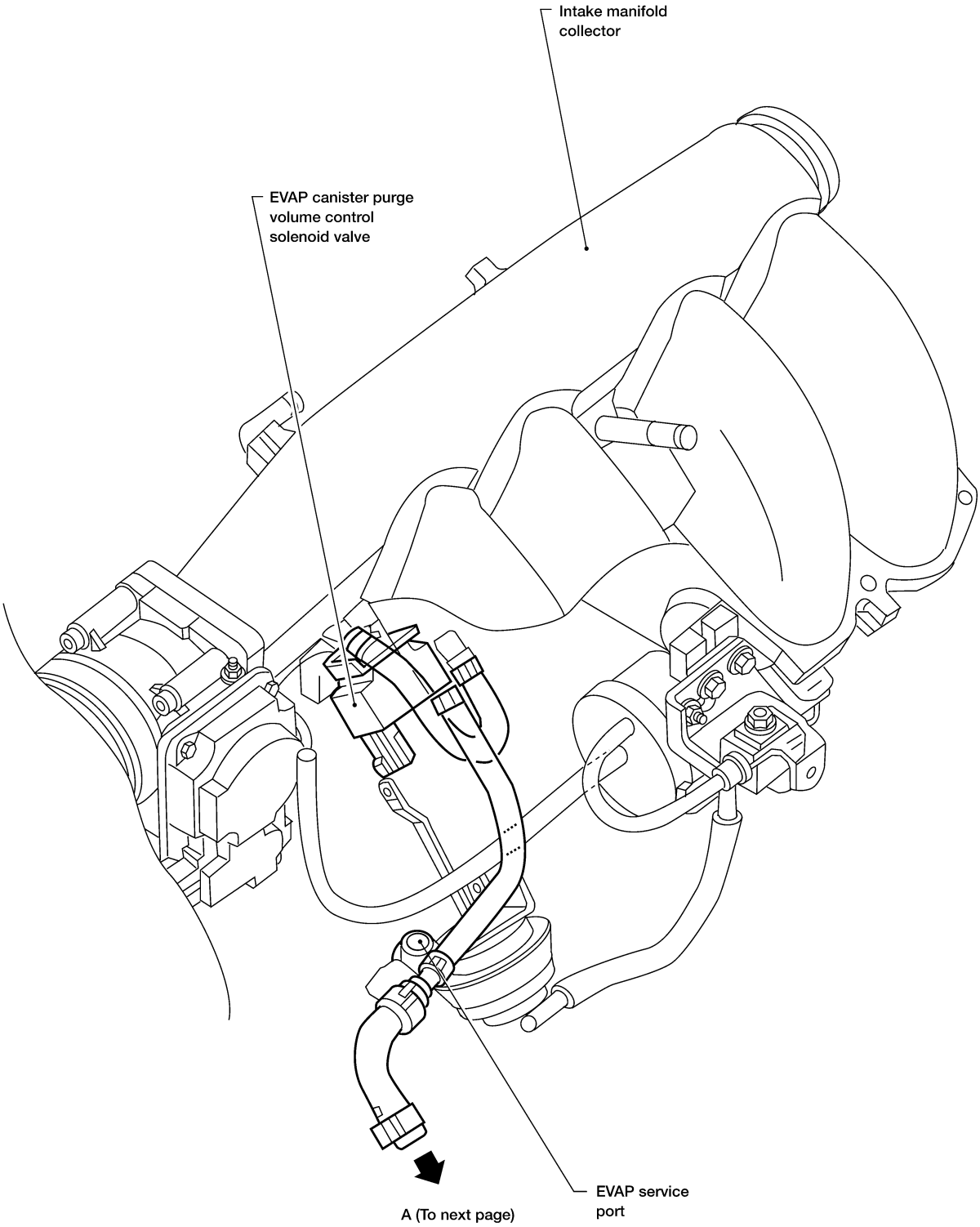

BBIA0051E

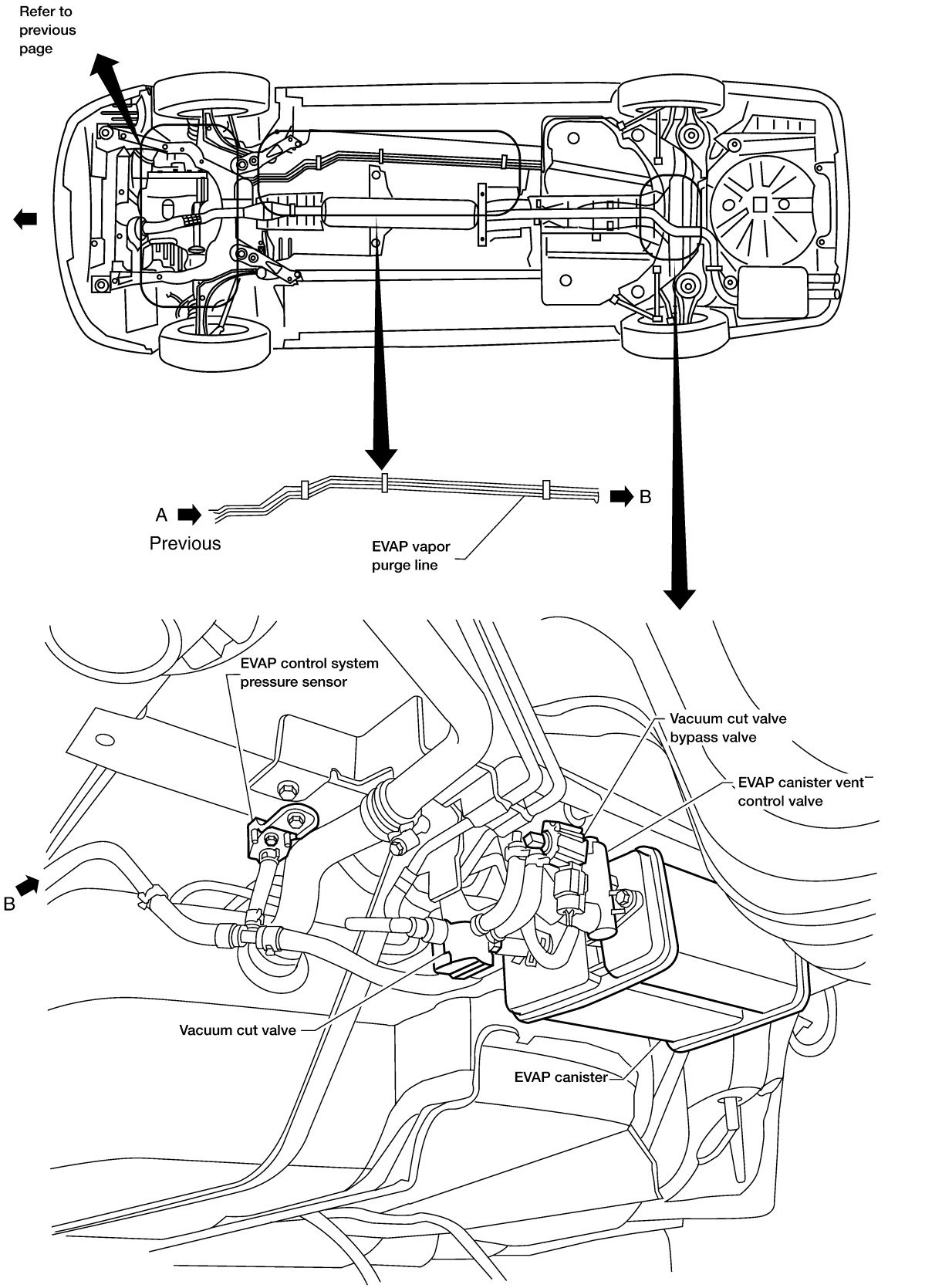
Refer to previous page
A
Previous
B
EVAP vapor purge line
EVAP control system pressure sensor
Vacuum cut valve bypass valve
EVAP canister vent control valve
B
Vacuum cut valve
EVAP canister
BBIA0052E

Component Inspection

UBS00348

EVAP CANISTER

Check EVAP canister as follows:

1. Pinch the fresh air hose.
2. Blow air into port **A** and check that it flows freely out of port **B** .

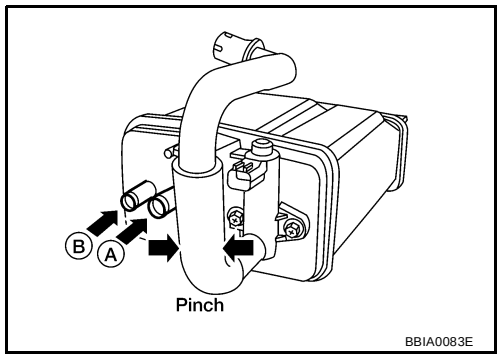

Tightening Torque

Tighten EVAP canister as shown in the figure.
Make sure new O-ring is installed properly between EVAP canister and EVAP canister vent control valve.

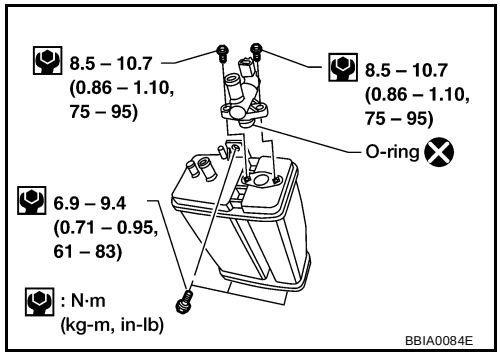

FUEL TANK VACUUM RELIEF VALVE (BUILT INTO FUEL FULLER CAP)

1. Wipe clean valve housing.

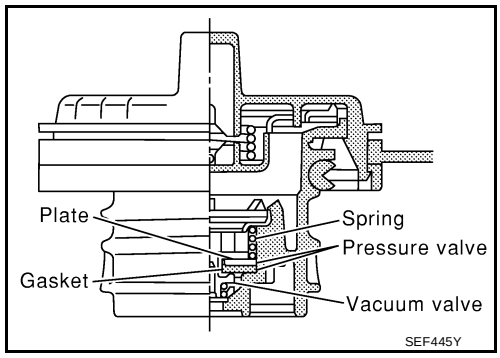

2. Check valve opening pressure and vacuum.

Pressure: **15.3 - 20.0 kPa**
(0.156 - 0.204 kg/cm^2 , 2.22 - 2.90 psi)
Vacuum: **–6.0 to –3.4 kPa**
(–0.061 to –0.035 kg/cm^2 , –0.87 to –0.48 psi)

3. If out of specification, replace fuel filler cap as an assembly.

CAUTION:
Use only a genuine fuel filler cap as a replacement. If an incorrect fuel filler cap is used, the MIL may come on.

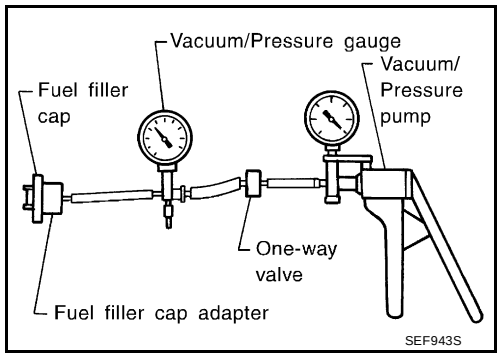

VACUUM CUT VALVE AND VACUUM CUT VALVE BYPASS VALVE

Refer to EC-515 .

EVAP CANISTER PURGE VOLUME CONTROL SOLENOID VALVE

Refer to EC-320 .

FUEL TANK TEMPERATURE SENSOR

Refer to EC-233 .

EVAP SERVICE PORT

Positive pressure is delivered to the EVAP system through the EVAP service port. If fuel vapor leakage in the EVAP system occurs, use a leak detector to locate the leak.

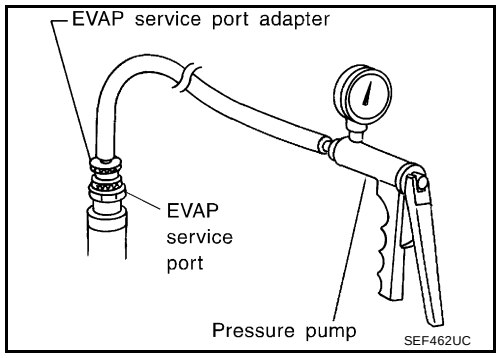

How to Detect Fuel Vapor Leakage

UBS00349

CAUTION:

- **Never use compressed air or a high pressure pump.**
- **Do not exceed 4.12 kPa (0.042 kg/cm^2 , 0.6 psi) of pressure in EVAP system.**

NOTE:

- Do not start engine.
- Improper installation of EVAP service port adapter to the EVAP service port may cause a leak.

WITH CONSULT-II

1. Attach the EVAP service port adapter securely to the EVAP service port.
2. Also attach the pressure pump and hose to the EVAP service port adapter.
3. Turn ignition switch “ON”.
4. Select the “EVAP SYSTEM CLOSE” of “WORK SUPPORT MODE” with CONSULT-II.
5. Touch “START”. A bar graph (Pressure indicating display) will appear on the screen.

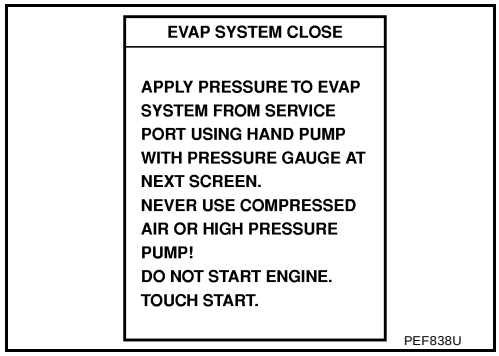

6. Apply positive pressure to the EVAP system until the pressure indicator reaches the middle of the bar graph.
7. Remove EVAP service port adapter and hose with pressure pump.

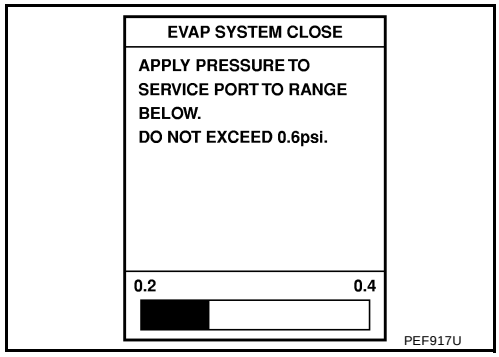

8. Locate the leak using a leak detector. Refer to EC-615, "EVAPORATIVE EMISSION LINE DRAWING" .

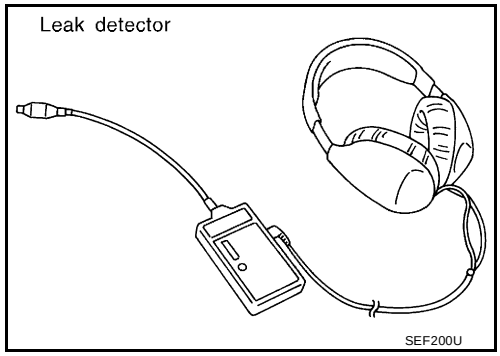

WITHOUT CONSULT-II

1. Attach the EVAP service port adapter securely to the EVAP service port.
2. Also attach the pressure pump with pressure gauge to the EVAP service port adapter.

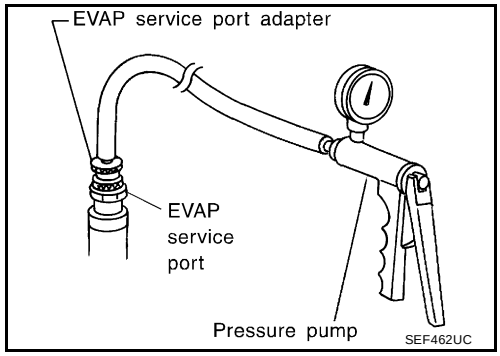

3. Apply battery voltage to between the terminals of both EVAP canister vent control valve and vacuum cut valve bypass valve to make a closed EVAP system.

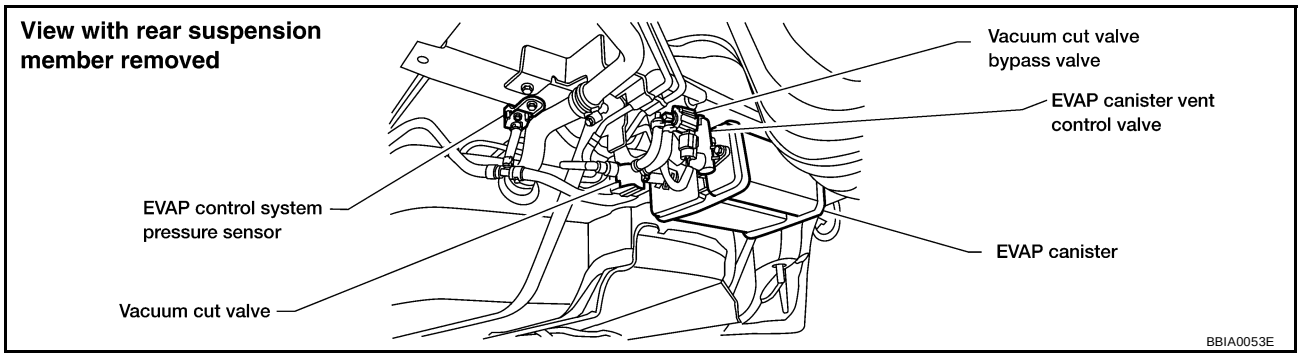

4. To locate the leak, deliver positive pressure to the EVAP system until pressure gauge points reach 1.38 to 2.76 kPa (0.014 to 0.028 kg/cm^2 , 0.2 to 0.4 psi).
5. Remove EVAP service port adapter and hose with pressure pump.
6. Locate the leak using a leak detector. Refer to EC-615, "EVAPORATIVE EMISSION LINE DRAWING" .

ON BOARD REFUELING VAPOR RECOVERY (ORVR)

PFP:00032

System Description

UBS0034A

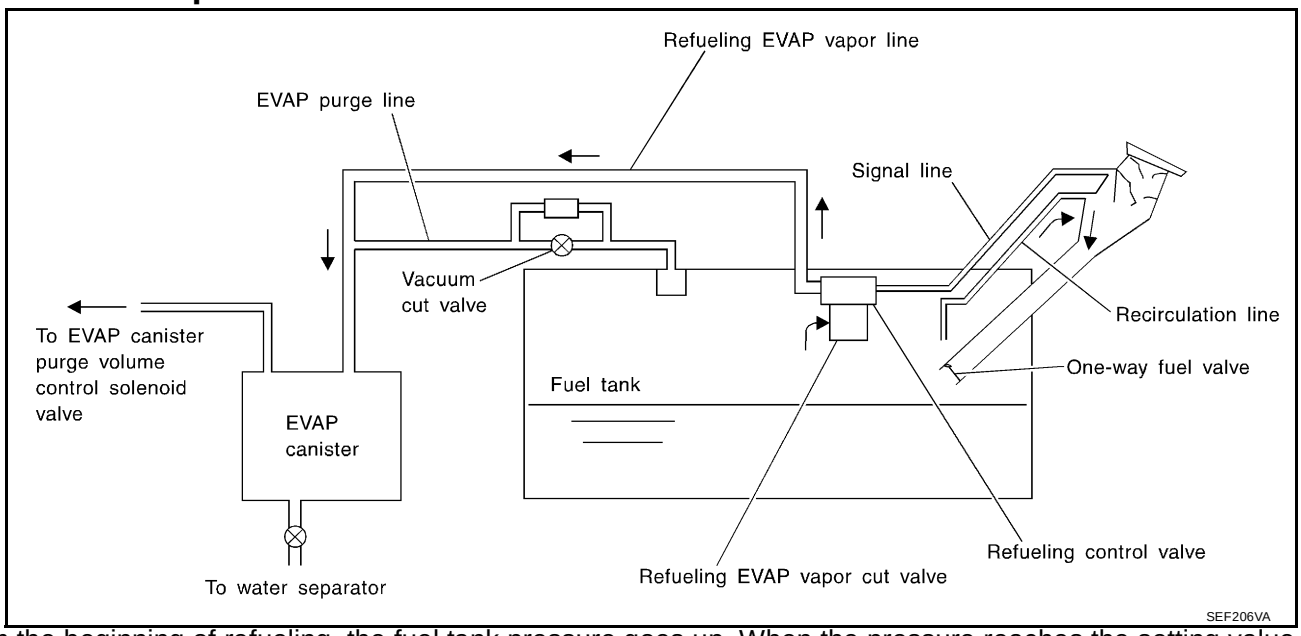

From the beginning of refueling, the fuel tank pressure goes up. When the pressure reaches the setting value of the refueling control valve (RCV) opening pressure, the RCV is opened. After RCV opens, the air and vapor inside the fuel tank go through refueling EVAP vapor cut valve, RCV and refueling vapor line to the EVAP canister. The vapor is absorbed by the EVAP canister and the air is released to the atmosphere.
When the refueling has reached the full level of the fuel tank, the refueling EVAP vapor cut valve is closed and refueling is stopped because of auto shut-off. The vapor which was absorbed by the EVAP canister is purged during driving.
The RCV is always closed during driving and the evaporative emission control system is operated the same as conventional system.

WARNING:

When conducting inspections below, be sure to observe the following:

- **Put a “CAUTION: INFLAMMABLE” sign in workshop.**
- **Do not smoke while servicing fuel system. Keep open flames and sparks away from work area.**
- **Be sure to furnish the workshop with a CO_2 fire extinguisher.**

CAUTION:

- **Before removing fuel line parts, carry out the following procedures:**
  - **Put drained fuel in an explosion-proof container and put lid on securely.**
  - **Release fuel pressure from fuel line. Refer to EC-51, "FUEL PRESSURE RELEASE" .**
  - **Disconnect battery ground cable.**
- **Always replace O-ring when the fuel gauge retainer is removed.**
- **Do not kink or twist hose and tube when they are installed.**
- **Do not tighten hose and clamps excessively to avoid damaging hoses.**
- **After installation, run engine and check for fuel leaks at connection.**
- **Do not attempt to top off the fuel tank after the fuel pump nozzle shuts off automatically. Continued refueling may cause fuel overflow, resulting in fuel spray and possibly a fire.**

Diagnostic Procedure

UBS0034B

SYMPTOM: FUEL ODOR FROM EVAP CANISTER IS STRONG.

1. CHECK EVAP CANISTER

1. Remove EVAP canister with EVAP canister vent control valve attached.
2. Weigh the EVAP canister with EVAP canister vent control valve attached.
   The weight should be less than 1.8 kg (4.0 lb).

OK or NG

OK >> GO TO 2.
NG >> GO TO 3.

2. CHECK IF EVAP CANISTER SATURATED WITH WATER

Does water drain from the EVAP canister?

Yes or No

Yes >> GO TO 3.
No >> GO TO 6.

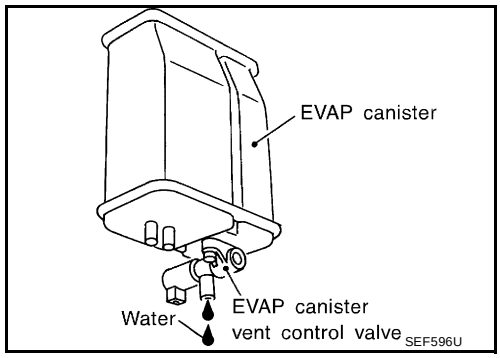

3. REPLACE EVAP CANISTER

Replace EVAP canister with a new one.

>> GO TO 4.

4. CHECK WATER SEPARATOR

Refer to EC-623, "Component Inspection" .

OK or NG

OK >> GO TO 5.
NG >> Replace water separator.

5. DETECT MALFUNCTIONING PART

Check the EVAP hose between EVAP canister and water separator for clogging or poor connection.

>> Repair or replace EVAP hose.

6. CHECK REFUELING EVAP VAPOR CUT VALVE

Refer to EC-623, "Component Inspection" .

OK or NG

OK >> GO TO 7.
NG >> Replace refueling EVAP vapor cut valve with fuel tank.

7. CHECK REFUELING CONTROL VALVE

Refer to EC-623, "Component Inspection" .

OK or NG

OK >> **INSPECTION END**
NG >> Replace refueling control valve with fuel tank.

SYMPTOM: CANNOT REFUEL/FUEL ODOR FROM THE FUEL FILLER OPENING IS STRONG WHILE REFUELING.

1. CHECK EVAP CANISTER

1. Remove EVAP canister with EVAP canister vent control valve attached.
2. Weigh the EVAP canister with EVAP canister vent control valve attached.
   The weight should be less than 1.8 kg (4.0 lb).

OK or NG

OK >> GO TO 2.
NG >> GO TO 3.

2. CHECK IF EVAP CANISTER SATURATED WITH WATER

Does water drain from the EVAP canister?

Yes or No

Yes >> GO TO 3.
No >> GO TO 6.

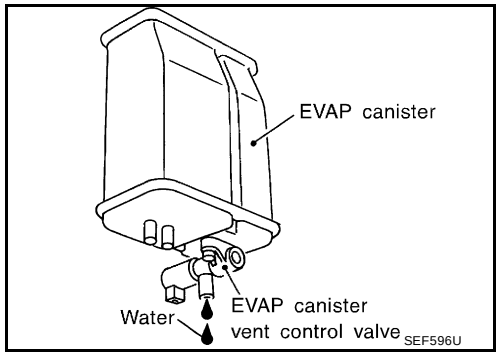

3. REPLACE EVAP CANISTER

Replace EVAP canister with a new one.

>> GO TO 4.

4. CHECK WATER SEPARATOR

Refer to EC-623, "Component Inspection" .

OK or NG

OK >> GO TO 5.
NG >> Replace water separator.

5. DETECT MALFUNCTIONING PART

Check the EVAP hose between EVAP canister and water separator for clogging or poor connection.

>> Repair or replace EVAP hose.

6. CHECK VENT HOSES AND VENT TUBES

Check hoses and tubes between EVAP canister and refueling control valve for clogging, kink, looseness and improper connection.

OK or NG

OK >> GO TO 7.
NG >> Repair or replace hoses and tubes.

7. CHECK FILLER NECK TUBE

Check signal line and recirculation line for clogging, dents and cracks.

OK or NG

OK >> GO TO 8.
NG >> Replace filler neck tube.

8. CHECK REFUELING CONTROL VALVE

Refer to EC-623, "Component Inspection" .

OK or NG

OK >> GO TO 9.
NG >> Replace refueling control valve with fuel tank.

9. CHECK REFUELING EVAP VAPOR CUT VALVE

Refer to EC-623, "Component Inspection" .

OK or NG

OK >> GO TO 10.
NG >> Replace refueling EVAP vapor cut valve with fuel tank.

10. CHECK FUEL FILLER TUBE

Check filler neck tube and hose connected to the fuel tank for clogging, dents and cracks.

OK or NG

OK >> GO TO 11.
NG >> Replace fuel filler tube.

11. CHECK ONE-WAY FUEL VALVE-I

Check one-way valve for clogging.

OK or NG

OK >> GO TO 12.
NG >> Repair or replace one-way fuel valve with fuel tank.

12. CHECK ONE-WAY FUEL VALVE-II

1. Make sure that fuel is drained from the tank.
2. Remove fuel filler tube and hose.
3. Check one-way fuel valve for operation as follows.
   When a stick is inserted, the valve should open, when removing stick it should close.
   Do not drop any material into the tank.

OK or NG

OK >> **INSPECTION END**
NG >> Replace fuel filler tube or replace one-way fuel valve with fuel tank.

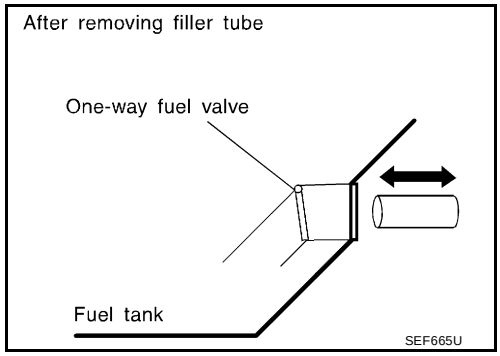

UBS0034C

Component Inspection

WATER SEPARATOR

1. Check visually for insect nests in the water separator air inlet.
2. Check visually for cracks or flaws in the appearance.
3. Check visually for cracks or flaws in the hose.

4. Check that **A** and **C** are not clogged by blowing air into **B** with **A** , and then **C** plugged.
5. In case of NG in items 2 - 4, replace the parts.

   NOTE:
   - Do not disassemble water separator.

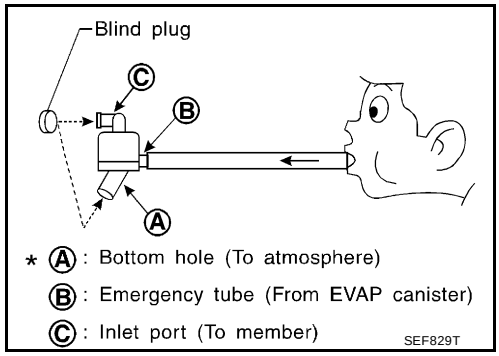

REFUELING EVAP VAPOR CUT VALVE

With CONSULT-II

1. Remove fuel tank. Refer to FL-8, "FUEL TANK" .
2. Drain fuel from the tank as follows:

a. Remove fuel feed hose located on the fuel gauge retainer.

b. Connect a spare fuel hose, one side to fuel gauge retainer where the hose was removed and the other side to a fuel container.

c. Drain fuel using “FUEL PUMP RELAY” in “ACTIVE TEST” mode with CONSULT-II.

3. Check refueling EVAP vapor cut valve for being stuck to close as follows.
   Blow air into the refueling EVAP vapor cut valve (from hose end B), and check that the air flows freely into the tank.
4. Check EVAP vapor cut valve for being stuck to open as follows.

a. Connect vacuum pump to hose ends A and B using a suitable 3-way connector.

b. Remove fuel gauge retainer with fuel gauge unit.
   Always replace O-ring with new one.

c. Put fuel tank upside down.

d. Apply vacuum pressure to both hose ends A and B [–13.3 kPa (–100 mmHg, –3.94 inHg)] with fuel gauge retainer remaining open and check that the pressure is applicable.

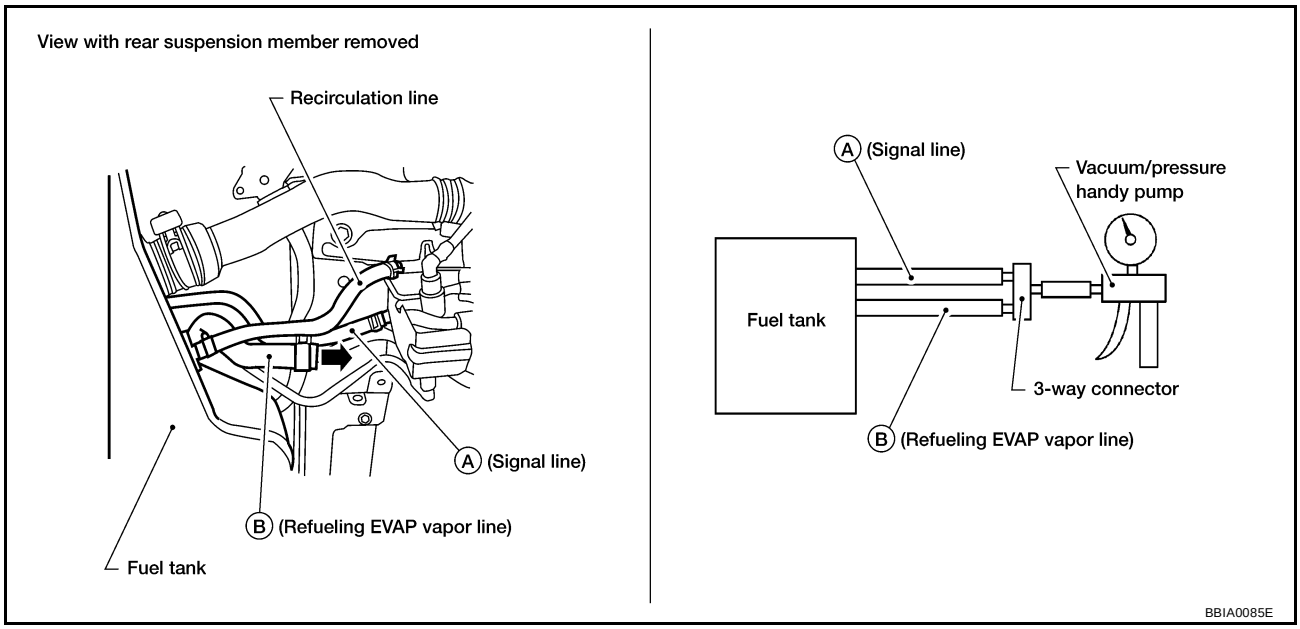

With GST

1. Remove fuel tank. Refer to FL-8, "FUEL TANK" .
2. Drain fuel from the tank as follows:

a. Remove fuel gauge retainer.

b. Drain fuel from the tank using a hand pump into a fuel container.

3. Check refueling EVAP vapor cut valve for being stuck to close as follows.

Blow air into the refueling EVAP vapor cut valve (from hose end B), and check that the air flows freely into the tank.

4. Check EVAP vapor cut valve for being stuck to open as follows.

a. Connect vacuum pump to hose ends A and B using a suitable 3-way connector.

b. Remove fuel gauge retainer with fuel gauge unit.
Always replace O-ring with new one.

c. Put fuel tank upside down.

d. Apply vacuum pressure to both hose ends A and B [–13.3 kPa (–100 mmHg, –3.94 inHg)] with fuel gauge retainer remaining open and check that the pressure is applicable.

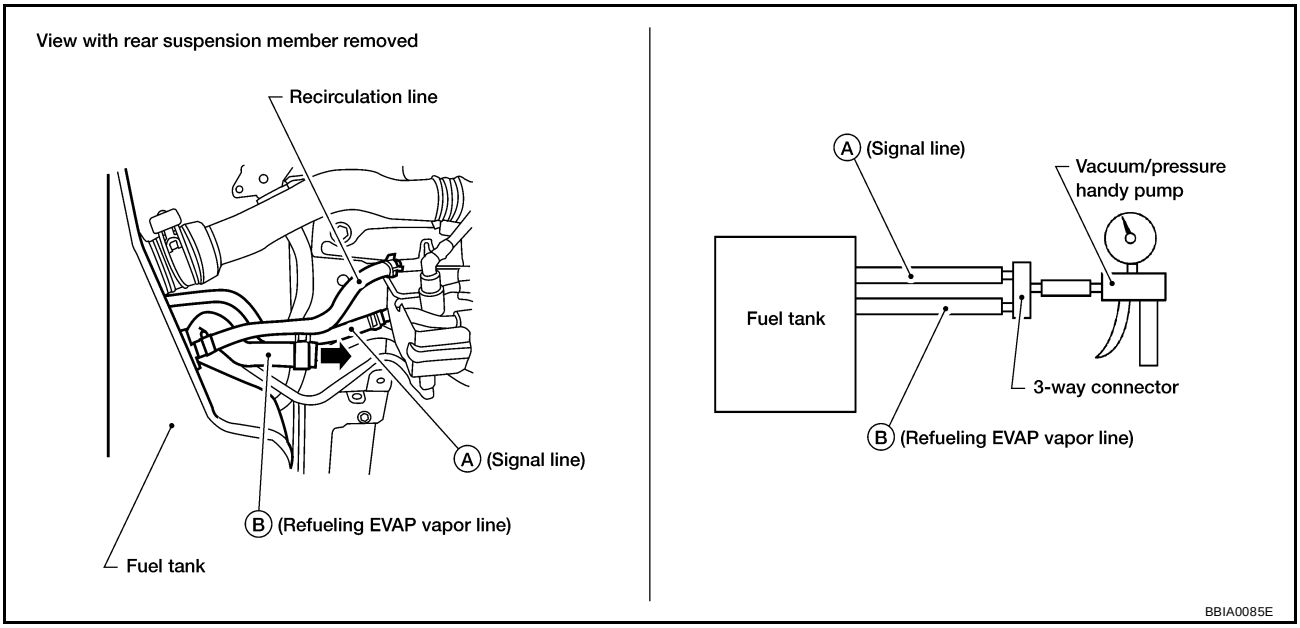

REFUELING CONTROL VALVE

1. Remove fuel filler cap.
2. Check air continuity between hose ends A and B.
Blow air into the hose end B. Air should flow freely into the fuel tank.
3. Blow air into hose end A and check there is no leakage.
4. Apply pressure to both hose ends A and B [20 kPa (150 mmHg, 5.91 inHg)] using a pressure pump and a suitable 3-way connector. Check that there is no leakage.

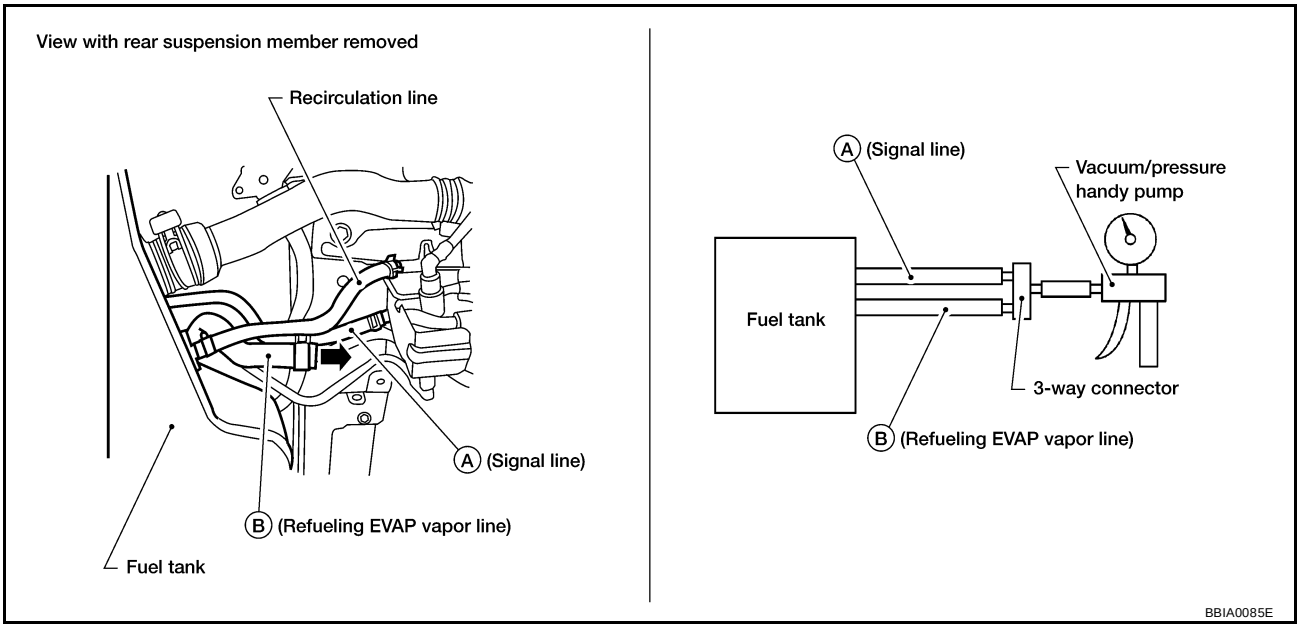

POSITIVE CRANKCASE VENTILATION

PFP:11810

Description

UBS0034D

SYSTEM DESCRIPTION

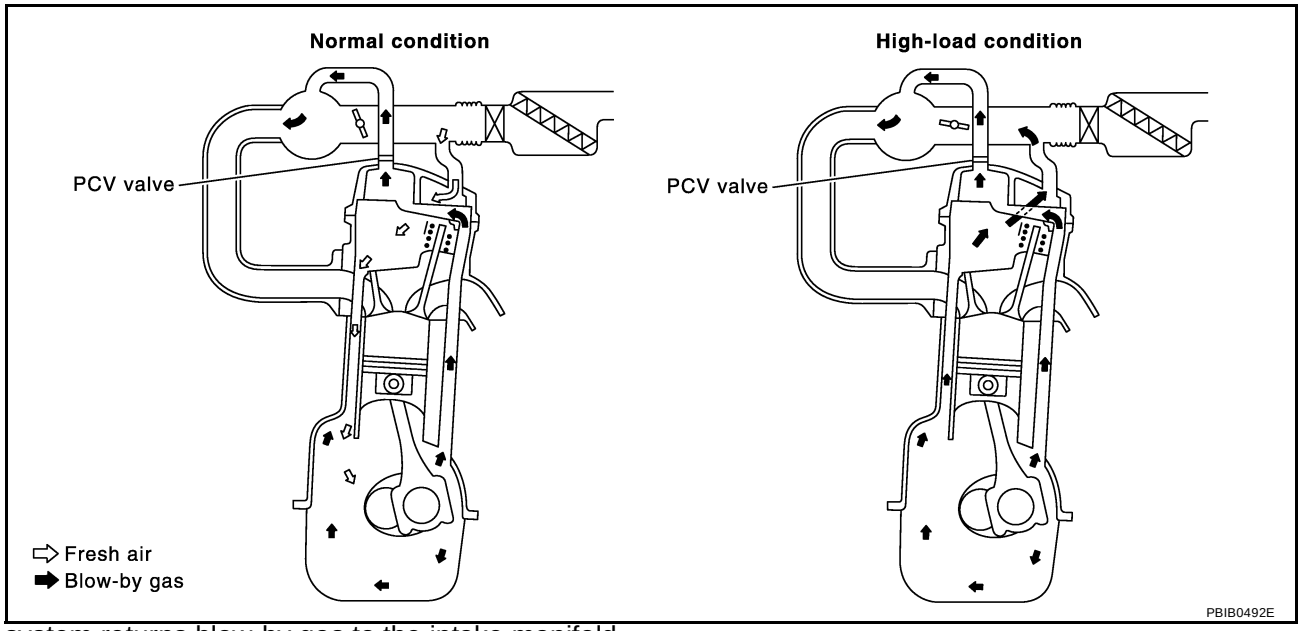

This system returns blow-by gas to the intake manifold.

The positive crankcase ventilation (PCV) valve is provided to conduct crankcase blow-by gas to the intake manifold. During partial throttle operation of the engine, the intake manifold sucks the blow-by gas through the PCV valve. Normally, the capacity of the valve is sufficient to handle any blow-by and a small amount of ventilating air. The ventilating air is then drawn from the air inlet tubes into the crankcase. In this process the air passes through the hose connecting air inlet tubes to rocker cover. Under full-throttle condition, the manifold vacuum is insufficient to draw the blow-by flow through the valve. The flow goes through the hose connection in the reverse direction.

On vehicles with an excessively high blow-by, the valve does not meet the requirement. This is because some of the flow will go through the hose connection to the air inlet tubes under all conditions.

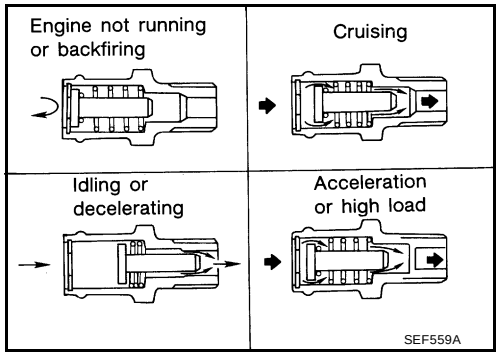

Component Inspection

UBS0034E

PCV (POSITIVE CRANKCASE VENTILATION) VALVE

With engine running at idle, remove PCV valve from rocker cover. A properly working valve makes a hissing noise as air passes through it. A strong vacuum should be felt immediately when a finger is placed over valve inlet.

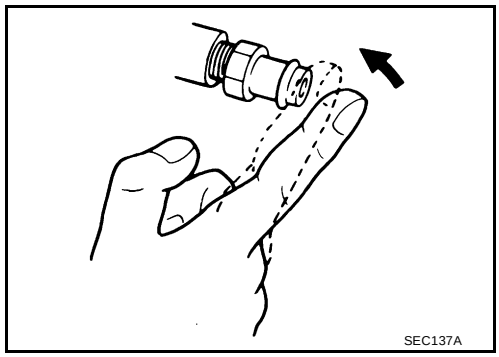

PCV VALVE VENTILATION HOSE

1. Check hoses and hose connections for leaks.
2. Disconnect all hoses and clean with compressed air. If any hose cannot be freed of obstructions, replace.

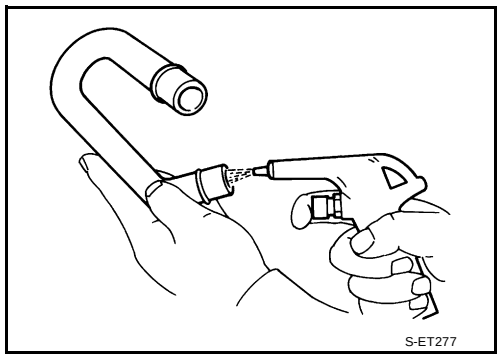

AUTOMATIC SPEED CONTROL DEVICE (ASCD)

PFP:18930

System Description

UBS0034F

INPUT/OUTPUT SIGNAL CHART

Sensor	Input signal to ECM	ECM function	Actuator
ASCD brake switch	Brake pedal operation	ASCD vehicle speed control	Electric throttle control actuator
Stop lamp switch	Brake pedal operation		
ASCD clutch switch (M/T models)	Clutch pedal operation		
ASCD steering switch	ASCD steering switch operation		
Park/Neutral position (PNP) switch (A/T models)	Gear position		
Combination meter	Vehicle speed		
TCM	Powertrain revolution		

BASIC ASCD SYSTEM

Refer to Owner's Manual for ASCD operating instructions.
Automatic Speed Control Device (ASCD) allows a driver to keep vehicle at predetermined constant speed without depressing accelerator pedal. Driver can set vehicle speed in advance between approximately 40 km/h (25 MPH) and 144 km/h (89 MPH).
ECM controls throttle angle of electric throttle control actuator to regulate engine speed.
Operation status of ASCD is indicated by CRUISE indicator and SET indicator in combination meter. If any malfunction occurs in ASCD system, it automatically deactivates control.

SET OPERATION

Press ASCD CRUISE switch (Main switch). (The CRUISE indicator in combination meter illuminates.)
When vehicle speed reaches a desired speed between approximately 40 km/h (25 MPH) and 144 km/h (89 MPH), press SET switch. (Then SET indicator in combination meter illuminates.)

ACCEL OPERATION

If the RESUME/ACCEL switch is depressed during cruise control driving, increase the vehicle speed until the switch is released or vehicle speed reaches maximum speed controlled by the system.
And then ASCD will keep the new set speed.

CANCEL OPERATION

When any of following conditions exist, cruise operation will be canceled.

- CANCEL switch is depressed
- Brake pedal is depressed
- Clutch pedal is depressed (M/T models)
- A/T selector lever is shifted to P or N position (A/T models)

If MAIN switch is turned to OFF during ASCD is activated, all of ASCD operations will be canceled and vehicle speed memory will be erased.

COAST OPERATION

When the SET/COAST switch is depressed during cruise control driving, decrease vehicle set speed until the switch is released. And then ASCD will keep the new set speed.

RESUME OPERATION

When the RESUME/ACCEL switch is depressed after cancel operation other than depressing MAIN switch is performed, vehicle speed will return to last set speed. To resume vehicle set speed, vehicle condition must meet following conditions.

- Brake pedal is released.
- Clutch pedal is released (M/T models)
- A/T selector lever is in other than P and N position (A/T models)
- Vehicle speed is greater than 40 km/h (25 MPH) and less than 144 km/h (89 MPH)

Component Description

UBS0034G

ASCD STEERING SWITCH

Refer to EC-526 .

ASCD BRAKE SWITCH

Refer to EC-533 .

ASCD CLUTCH SWITCH

Refer to EC-533 .

STOP LAMP SWITCH

Refer to EC-533 .

ELECTRIC THROTTLE CONTROL ACTUATOR

Refer to EC-397 .

ASCD INDICATOR

Refer to EC-610 .

SERVICE DATA AND SPECIFICATIONS (SDS)

PFP:00030

Fuel Pressure

UBS0034H

Fuel pressure at idle	Approximately 350 kPa (3.7kg/cm^2 , 51psi)

Idle Speed and Ignition Timing

UBS0034I

Target idle speed	No-load*1 (in “P” or N” position)	700±50 rpm
Air conditioner: ON	In “P” or N” position	800 rpm or more
Ignition timing	In “P” or N” position	15°±5° BTDC

*1: Under the following conditions:

- Air conditioner switch: OFF
- Electric load: OFF (Lights, heater fan & rear window defogger)
- Steering wheel: Kept in straight-ahead position

Calculated Load Value

UBS0034J

	Calculated load value % (Using CONSULT-II or GST)
At idle	10 - 35
At 2,500 rpm	10 - 35

Mass Air Flow Sensor

UBS0034K

Supply voltage	Battery voltage (11 - 14V)
Output voltage at idle	1.0 - 1.5*V
Mass air flow (Using CONSULT-II or GST)	1.4 - 4.0 g·m/sec at idle* 4.0 - 10.0 g·m/sec at 2,500 rpm*

*: Engine is warmed up to normal operating temperature and running under no-load.

Intake Air Temperature Sensor

UBS0034L

Temperature °C (°F)	Resistance kΩ
25 (77)	1.9 - 2.1
80 (176)	0.31 - 0.37

Engine Coolant Temperature Sensor

UBS0034M

Temperature °C (°F)	Resistance kΩ
20 (68)	2.1 - 2.9
50 (122)	0.68 - 1.00
90 (194)	0.236 - 0.260

Heated Oxygen Sensor 1 Heater

UBS0034N

Resistance [at 25°C (77°F)]	2.3 - 4.3Ω

Heated Oxygen sensor 2 Heater

UBS0034O

Resistance [at 25°C (77°F)]	2.3 - 4.3Ω

Crankshaft Position Sensor (POS)

UBS0034P

Refer to EC-289, "Component Inspection" .

Camshaft Position Sensor (PHASE)

UBS0034Q

Refer to EC-295, "Component Inspection" .

Throttle Control Motor

UBS0034R

Resistance [at 25°C (77°F)]	Approximately 1 - 15Ω

Injector

UBS0034S

Resistance [at 20°C (68°F)]	12.1 - 12.9Ω

Fuel Pump

UBS0034T

Resistance [at 25°C (77°F)]	Approximately 1.0Ω

INDEX FOR DTC

PFP:00024

Alphabetical Index

UBS0034U

NOTE:
If DTC U1000 or U1001 is displayed with other DTC, first perform the trouble diagnosis for DTC U1000, U1001. Refer to EC-763, "DTC U1000, U1001 CAN COMMUNICATION LINE" .

Items (CONSULT-II screen terms)	DTC*1		Reference page
	CONSULT-II GST*2	ECM*3	
Unable to access ECM	—	—	EC-703
A/T 1ST GR FNCTN	P0731	0731	AT-124
A/T 2ND GR FNCTN	P0732	0732	AT-129
A/T 3RD GR FNCTN	P0733	0733	AT-134
A/T 4TH GR FNCTN	P0734	0734	AT-139
A/T TCC S/V FNCTN	P0744	0744	AT-151
ABSL PRES SEN/CIRC	P0107	0107	EC-804
ABSL PRES SEN/CIRC	P0108	0108	EC-804
APP SEN 1/CIRC*5	P0227	0227	EC-922
APP SEN 1/CIRC*5	P0228	0228	EC-934
APP SEN 2/CIRC*5	P1227	1227	EC-1125
APP SEN 2/CIRC*5	P1228	1228	EC-1125
APP SENSOR*5	P0226	0226	EC-915
ASCD BRAKE SW	P1572	1572	EC-1181
ASCD SW	P1564	1564	EC-1174
ASCD VHL SPD SEN	P1574	1574	EC-1192
ATF TEMP SEN/CIRC	P0710	0710	AT-109
BRAKE SW/CIRCUIT	P1805	1805	EC-1205
CAN COMM CIRCUIT	U1000	1000*6	EC-763
CAN COMM CIRCUIT	U1001	1001*6	EC-763
CKP SEN/CIRCUIT	P0335	0335	EC-938
CLOSED LOOP-B1	P1148	1148	EC-1099
CLOSED LOOP-B2	P1168	1168	EC-1099
CMP SEN/CIRC-B1	P0340	0340	EC-945
CMP SEN/CIRC-B2	P0345	0345	EC-945
CTP LEARNING	P1225	1225	EC-1121
CTP LEARNING	P1226	1226	EC-1123
CYL 1 MISFIRE	P0301	0301	EC-928
CYL 2 MISFIRE	P0302	0302	EC-928
CYL 3 MISFIRE	P0303	0303	EC-928
CYL 4 MISFIRE	P0304	0304	EC-928
CYL 5 MISFIRE	P0305	0305	EC-928
CYL 6 MISFIRE	P0306	0306	EC-928
ECM	P0605	0605	EC-1030
ECM BACK UP/CIRC	P1065	1065	EC-1037
ECT SEN/CIRCUIT*5	P0117	0117	EC-811

Items (CONSULT-II screen terms)	DTC*1		Reference page
	CONSULT-II GST*2	ECM*3	
ECT SEN/CIRCUIT*5	P0118	0118	EC-811
ECT SENSOR	P0125	0125	EC-816
ENG OVER TEMP	P1217	1217	EC-1103
ENGINE SPEED SIG	P0725	0725	AT-120
ETC ACTR*5	P1121	1121	EC-1047
ETC FUNCTION/CIRC*5	P1122	1122	EC-1049
ETC MOT*5	P1128	1128	EC-1061
ETC MOT PWR	P1124	1124	EC-1056
ETC MOT PWR*5	P1126	1126	EC-1056
EVAP PURG FLOW/MON	P0441	0441	EC-957
EVAP SMALL LEAK	P0442	0442	EC-963
EVAP SYS PRES SEN	P0452	0452	EC-985
EVAP SYS PRES SEN	P0453	0453	EC-991
EVAP VERY SML LEAK	P0456	0456	EC-998
FTT SEN/CIRCUIT	P0182	0182	EC-897
FTT SEN/CIRCUIT	P0183	0183	EC-897
FTT SENSOR	P0181	0181	EC-892
FUEL LEV SEN SLOSH	P0460	0460	EC-1007
FUEL LEVEL SEN/CIRC	P1464	1464	EC-1157
FUEL LEVEL SENSOR	P0461	0461	EC-1012
FUEL LEVL SEN/CIRC	P0462	0462	EC-1014
FUEL LEVL SEN/CIRC	P0463	0463	EC-1014
FUEL SYS-LEAN-B1	P0171	0171	EC-877
FUEL SYS-LEAN-B2	P0174	0174	EC-877
FUEL SYS-RICH-B1	P0172	0172	EC-885
FUEL SYS-RICH-B2	P0175	0175	EC-885
HO2S1 (B1)	P0132	0132	EC-827
HO2S1 (B1)	P0133	0133	EC-836
HO2S1 (B1)	P0134	0134	EC-847
HO2S1 (B1)	P1143	1143	EC-1066
HO2S1 (B1)	P1144	1144	EC-1072
HO2S1 (B2)	P0152	0152	EC-827
HO2S1 (B2)	P0153	0153	EC-836
HO2S1 (B2)	P0154	0154	EC-847
HO2S1 (B2)	P1163	1163	EC-1066
HO2S1 (B2)	P1164	1164	EC-1072
HO2S1 HTR (B1)	P0031	0031	EC-774
HO2S1 HTR (B1)	P0032	0032	EC-774
HO2S1 HTR (B2)	P0051	0051	EC-774
HO2S1 HTR (B2)	P0052	0052	EC-774
HO2S2 HTR (B2)	P0057	0057	EC-782
HO2S2 HTR (B2)	P0058	0058	EC-782

Items (CONSULT-II screen terms)	DTC*1		Reference page
	CONSULT-II GST*2	ECM*3	
HO2S2 (B1)	P0138	0138	EC-857
HO2S2 (B1)	P0139	0139	EC-867
HO2S2 (B1)	P1146	1146	EC-1079
HO2S2 (B1)	P1147	1147	EC-1089
HO2S2 (B2)	P0158	0158	EC-857
HO2S2 (B2)	P0159	0159	EC-867
HO2S2 (B2)	P1166	1166	EC-1079
HO2S2 (B2)	P1167	1167	EC-1089
HO2S2 HTR (B1)	P0037	0037	EC-782
HO2S2 HTR (B1)	P0038	0038	EC-782
IAT SEN/CIRCUIT	P0112	0112	EC-806
IAT SEN/CIRCUIT	P0113	0113	EC-806
IAT SENSOR	P0127	0127	EC-820
INT/V TIM CONT-B1	P0011	0011	EC-766
INT/V TIM CONT-B2	P0021	0021	EC-766
ISC SYSTEM	P0506	0506	EC-1021
ISC SYSTEM	P0507	0507	EC-1023
KNOCK SEN/CIRC-B1	P0327	0327	EC-934
KNOCK SEN/CIRC-B1	P0328	0328	EC-934
L/PRESS SOL/CIRC	P0745	0745	AT-159
MAF SEN/CIRCUIT	P0101	0101	EC-790
MAF SEN/CIRCUIT*5	P0102	0102	EC-798
MAF SEN/CIRCUIT*5	P0103	0103	EC-798
MAF SENSOR*5	P1102	1102	EC-1041
MIL/CIRC	P0650	0650	EC-1033
MULTI CYL MISFIRE	P0300	0300	EC-928
NATS MALFUNCTION	P1610 - P1615	1610 - 1615	EC-689
NO DTC IS DETECTED. FURTHER TESTING MAY BE REQUIRED.	No DTC	Flashing*4	EC-690
NO DTC IS DETECTED. FURTHER TESTING MAY BE REQUIRED.	**P0000**	**0000**	**—**
O/R CLTCH SOL/CIRC	P1760	1760	AT-180
P-N POS SW/CIRCUIT	P1706	1706	EC-1194
PNP SW/CIRC	P0705	0705	AT-103
PURG VOLUME CONT/V	P0444	0444	EC-972
PURG VOLUME CONT/V	P0445	0445	EC-972
PURG VOLUME CONT/V	P1444	1444	EC-1135
PW ST P SEN/CIRC	P0550	0550	EC-1025
SENSOR POWER/CIRC*5	P1229	1229	EC-1131
SFT SOL A/CIRC	P0750	0750	AT-165
SFT SOL B/CIRC	P0755	0755	AT-170

Items (CONSULT-II screen terms)	DTC*1		Reference page
	CONSULT-II GST*2	ECM*3	
TCC SOLENOID/CIRC	P0740	0740	AT-146
TCS C/U FUNCTN	P1211	1211	EC-1101
TCS/CIRC	P1212	1212	EC-1102
THERMSTAT FNCTN	P0128	0128	EC-825
TP SEN 1/CIRC*5	P0222	0222	EC-908
TP SEN 1/CIRC*5	P0223	0223	EC-908
TP SEN 2/CIRC*5	P1223	1223	EC-1114
TP SEN 2/CIRC*5	P1224	1224	EC-1114
TP SENSOR*5	P0221	0221	EC-901
TPV SEN/CIRC A/T	P1705	1705	AT-175
TW CATALYST SYS-B1	P0420	0420	EC-953
TW CATALYST SYS-B2	P0430	0430	EC-953
VC CUT/V BYPASS/V	P1491	1491	EC-1166
VC/V BYPASS/V	P1490	1490	EC-1160
VEH SPD SEN/CIR AT*7	P0720	0720	AT-115
VEH SPEED SEN/CIRC*7	P0500	0500	EC-1019
VENT CONTROL VALVE	P0447	0447	EC-978
VENT CONTROL VALVE	P1446	1446	EC-1143
VENT CONTROL VALVE	P1448	1448	EC-1149
VIAS S/V CIRC	P1800	1800	EC-1199

*1: 1st trip DTC No. is the same as DTC No.
*2: These numbers are prescribed by SAE J2012.
*3: In Diagnostic Test Mode II (Self-diagnostic results), these numbers are controlled by NISSAN.
*4: When engine is running.
*5: When the fail-safe operation occurs, the MIL illuminates.
*6: The troubleshooting for this DTC needs CONSULT-II.
*7: When the fail-safe operations for both self-diagnoses occur, the MIL illuminates.

NOTE:
Regarding L31 models, "B1" indicates bank 1, "B2" indicates bank 2.

DTC No. Index

UBS0034V

NOTE:
If DTC U1000 or U1001 is displayed with other DTC, first perform the trouble diagnosis for DTC U1000, U1001. Refer to EC-763, "DTC U1000, U1001 CAN COMMUNICATION LINE" .

DTC*1		Items (CONSULT-II screen terms)	Reference page
CONSULT-II GST*2	ECM*3		
—	—	Unable to access ECM	EC-703
No DTC	Flashing*4	NO DTC IS DETECTED. FURTHER TESTING MAY BE REQUIRED.	EC-690
U1000	1000*6	CAN COMM CIRCUIT	EC-763
U1001	1001*6	CAN COMM CIRCUIT	EC-763

DTC*1		Items (CONSULT-II screen terms)	Reference page
CONSULT-II GST*2	ECM*3		
P0000	**0000**	**NO DTC IS DETECTED. FURTHER TESTING MAY BE REQUIRED.**	**—**
P0011	0011	INT/V TIM CONT-B1	EC-766
P0021	0021	INT/V TIM CONT-B2	EC-766
P0031	0031	HO2S1 HTR (B1)	EC-774
P0032	0032	HO2S1 HTR (B1)	EC-774
P0037	0037	HO2S2 HTR (B1)	EC-782
P0038	0038	HO2S2 HTR (B1)	EC-782
P0051	0051	HO2S1 HTR (B2)	EC-774
P0052	0052	HO2S1 HTR (B2)	EC-774
P0057	0057	HO2S2 HTR (B2)	EC-782
P0058	0058	HO2S2 HTR (B2)	EC-782
P0101	0101	MAF SEN/CIRCUIT	EC-790
P0102	0102	MAF SEN/CIRCUIT*5	EC-798
P0103	0103	MAF SEN/CIRCUIT*5	EC-798
P0107	0107	ABSL PRES SEN/CIRC	EC-804
P0108	0108	ABSL PRES SEN/CIRC	EC-804
P0112	0112	IAT SEN/CIRCUIT	EC-806
P0113	0113	IAT SEN/CIRCUIT	EC-806
P0117	0117	ECT SEN/CIRCUIT*5	EC-811
P0118	0118	ECT SEN/CIRCUIT*5	EC-811
P0125	0125	ECT SENSOR	EC-816
P0127	0127	IAT SENSOR	EC-820
P0128	0128	THERMSTAT FNCTN	EC-825
P0132	0132	HO2S1 (B1)	EC-827
P0133	0133	HO2S1 (B1)	EC-836
P0134	0134	HO2S1 (B1)	EC-847
P0138	0138	HO2S2 (B1)	EC-857
P0139	0139	HO2S2 (B1)	EC-867
P0152	0152	HO2S1 (B2)	EC-827
P0153	0153	HO2S1 (B2)	EC-836
P0154	0154	HO2S1 (B2)	EC-847
P0158	0158	HO2S2 (B2)	EC-857
P0159	0159	HO2S2 (B2)	EC-867
P0171	0171	FUEL SYS-LEAN-B1	EC-877
P0172	0172	FUEL SYS-RICH-B1	EC-885
P0174	0174	FUEL SYS-LEAN-B2	EC-877
P0175	0175	FUEL SYS-RICH-B2	EC-885
P0181	0181	FTT SENSOR	EC-892
P0182	0182	FTT SEN/CIRCUIT	EC-897
P0183	0183	FTT SEN/CIRCUIT	EC-897

DTC*1		Items (CONSULT-II screen terms)	Reference page
CONSULT-II GST*2	ECM*3		
P0221	0221	TP SENSOR*5	EC-901
P0222	0222	TP SEN 1/CIRC*5	EC-908
P0223	0223	TP SEN 1/CIRC*5	EC-908
P0226	0226	APP SENSOR*5	EC-915
P0227	0227	APP SEN 1/CIRC*5	EC-922
P0228	0228	APP SEN 1/CIRC*5	EC-922
P0300	0300	MULTI CYL MISFIRE	EC-928
P0301	0301	CYL 1 MISFIRE	EC-928
P0302	0302	CYL 2 MISFIRE	EC-928
P0303	0303	CYL 3 MISFIRE	EC-928
P0304	0304	CYL 4 MISFIRE	EC-928
P0305	0305	CYL 5 MISFIRE	EC-928
P0306	0306	CYL 6 MISFIRE	EC-928
P0327	0327	KNOCK SEN/CIRC-B1	EC-934
P0328	0328	KNOCK SEN/CIRC-B1	EC-934
P0335	0335	CKP SEN/CIRCUIT	EC-938
P0340	0340	CMP SEN/CIRC-B1	EC-945
P0345	0345	CMP SEN/CIRC-B2	EC-945
P0420	0420	TW CATALYST SYS-B1	EC-953
P0430	0430	TW CATALYST SYS-B2	EC-953
P0441	0441	EVAP PURG FLOW/MON	EC-957
P0442	0442	EVAP SMALL LEAK	EC-963
P0444	0444	PURG VOLUME CONT/V	EC-972
P0445	0445	PURG VOLUME CONT/V	EC-972
P0447	0447	VENT CONTROL VALVE	EC-978
P0452	0452	EVAP SYS PRES SEN	EC-985
P0453	0453	EVAP SYS PRES SEN	EC-991
P0456	0456	EVAP VERY SML LEAK	EC-998
P0460	0460	FUEL LEV SEN SLOSH	EC-1007
P0461	0461	FUEL LEVEL SENSOR	EC-1012
P0462	0462	FUEL LEVL SEN/CIRC	EC-1014
P0463	0463	FUEL LEVL SEN/CIRC	EC-1014
P0500	0500	VEH SPEED SEN/CIRC*7	EC-1019
P0506	0506	ISC SYSTEM	EC-1021
P0507	0507	ISC SYSTEM	EC-1023
P0550	0550	PW ST P SEN/CIRC	EC-1025
P0605	0605	ECM	EC-1030
P0650	0650	MIL/CIRC	EC-1033
P0705	0705	PNP SW/CIRC	AT-103
P0710	0710	ATF TEMP SEN/CIRC	AT-109
P0720	0720	VEH SPD SEN/CIR AT*7	AT-115

DTC*1		Items (CONSULT-II screen terms)	Reference page
CONSULT-II GST*2	ECM*3		
P0725	0725	ENGINE SPEED SIG	AT-120
P0731	0731	A/T 1ST GR FNCTN	AT-124
P0732	0732	A/T 2ND GR FNCTN	AT-129
P0733	0733	A/T 3RD GR FNCTN	AT-134
P0734	0734	A/T 4TH GR FNCTN	AT-139
P0740	0740	TCC SOLENOID/CIRC	AT-146
P0744	0744	A/T TCC S/V FNCTN	AT-151
P0745	0745	L/PRESS SOL/CIRC	AT-159
P0750	0750	SFT SOL A/CIRC	AT-165
P0755	0755	SFT SOL B/CIRC	AT-170
P1065	1065	ECM BACK UP/CIRC	EC-1037
P1102	1102	MAF SENSOR*5	EC-1041
P1121	1121	ETC ACTR*5	EC-1047
P1122	1122	ETC FUNCTION/CIRC*5	EC-1049
P1124	1124	ETC MOT PWR	EC-1056
P1126	1126	ETC MOT PWR*5	EC-1056
P1128	1128	ETC MOT*5	EC-1061
P1143	1143	HO2S1 (B1)	EC-1066
P1144	1144	HO2S1 (B1)	EC-1072
P1146	1146	HO2S2 (B1)	EC-1079
P1147	1147	HO2S2 (B1)	EC-1089
P1148	1148	CLOSED LOOP-B1	EC-1099
P1163	1163	HO2S1 (B2)	EC-1066
P1164	1164	HO2S1 (B2)	EC-1072
P1166	1166	HO2S2 (B2)	EC-1079
P1167	1167	HO2S2 (B2)	EC-1089
P1168	1168	CLOSED LOOP-B2	EC-1099
P1211	1211	TCS C/U FUNCTN	EC-1101
P1212	1212	TCS/CIRC	EC-1102
P1217	1217	ENG OVER TEMP	EC-1103
P1223	1223	TP SEN 2/CIRC*5	EC-1114
P1224	1224	TP SEN 2/CIRC*5	EC-1114
P1225	1225	CTP LEARNING	EC-1121
P1226	1226	CTP LEARNING	EC-1123
P1227	1227	APP SEN 2/CIRC*5	EC-1125
P1228	1228	APP SEN 2/CIRC*5	EC-1125
P1229	1229	SENSOR POWER/CIRC*5	EC-1131
P1444	1444	PURG VOLUME CONT/V	EC-1135
P1446	1446	VENT CONTROL VALVE	EC-1143
P1448	1448	VENT CONTROL VALVE	EC-1149
P1464	1464	FUEL LEVEL SEN/CIRC	EC-1157

DTC*1		Items (CONSULT-II screen terms)	Reference page
CONSULT-II GST*2	ECM*3		
P1490	1490	VC/V BYPASS/V	EC-1160
P1491	1491	VC CUT/V BYPASS/V	EC-1166
P1564	1564	ASCD SW	EC-1174
P1572	1572	ASCD BRAKE SW	EC-1181
P1574	1574	ASCD VHL SPD SEN	EC-1192
P1610 - P1615	1610 - 1615	NATS MALFUNCTION	EC-689
P1705	1705	TPV SEN/CIRC A/T	AT-175
P1706	1706	P-N POS SW/CIRCUIT	EC-1194
P1760	1760	O/R CLTCH SOL/CIRC	AT-180
P1800	1800	VIAS S/V CIRC	EC-1199
P1805	1805	BRAKE SW/CIRCUIT	EC-1205

*1: 1st trip DTC No. is the same as DTC No.
*2: These numbers are prescribed by SAE J2012.
*3: In Diagnostic Test Mode II (Self-diagnostic results), these numbers are controlled by NISSAN.
*4: When engine is running.
*5: When the fail-safe operation occurs, the MIL illuminates.
*6: The troubleshooting for this DTC needs CONSULT-II.
*7: When the fail-safe operations for both self-diagnoses occur, the MIL illuminates.

NOTE:
Regarding L31 models, "B1" indicates bank 1, "B2" indicates bank 2.

PRECAUTIONS

PFP:00001

Precautions for Supplemental Restraint System (SRS) “AIR BAG” and “SEAT BELT PRE-TENSIONER”

UBS0034W

The Supplemental Restraint System such as “AIR BAG” and “SEAT BELT PRE-TENSIONER”, used along with a front seat belt, helps to reduce the risk or severity of injury to the driver and front passenger for certain types of collision. Information necessary to service the system safely is included in the SRS and SB section of this Service Manual.

WARNING:

- **To avoid rendering the SRS inoperative, which could increase the risk of personal injury or death in the event of a collision which would result in air bag inflation, all maintenance must be performed by an authorized NISSAN/INFINITI dealer.**
- **Improper maintenance, including incorrect removal and installation of the SRS, can lead to personal injury caused by unintentional activation of the system. For removal of Spiral Cable and Air Bag Module, see the SRS section.**
- **Do not use electrical test equipment on any circuit related to the SRS unless instructed to in this Service Manual. SRS wiring harnesses can be identified by yellow and/or orange harness connectors.**

On Board Diagnostic (OBD) System of Engine and A/T

UBS0034X

The ECM has an on board diagnostic system. It will light up the malfunction indicator lamp (MIL) to warn the driver of a malfunction causing emission deterioration.

CAUTION:

- **Be sure to turn the ignition switch OFF and disconnect the negative battery terminal before any repair or inspection work. The open/short circuit of related switches, sensors, solenoid valves, etc. will cause the MIL to light up.**
- **Be sure to connect and lock the connectors securely after work. A loose (unlocked) connector will cause the MIL to light up due to the open circuit. (Be sure the connector is free from water, grease, dirt, bent terminals, etc.)**
- **Certain systems and components, especially those related to OBD, may use a new style slide-locking type harness connector. For description and how to disconnect, refer to PG-64, "HARNESS CONNECTOR" .**
- **Be sure to route and secure the harnesses properly after work. The interference of the harness with a bracket, etc. may cause the MIL to light up due to the short circuit.**
- **Be sure to connect rubber tubes properly after work. A misconnected or disconnected rubber tube may cause the MIL to light up due to the malfunction of the EVAP system or fuel injection system, etc.**
- **Be sure to erase the unnecessary malfunction information (repairs completed) from the ECM and TCM (Transmission control module) before returning the vehicle to the customer.**

Precaution

UBS0034Y

- **Always use a 12 volt battery as power source.**
- **Do not attempt to disconnect battery cables while engine is running.**
- **Before connecting or disconnecting the ECM harness connector, turn ignition switch OFF and disconnect negative battery terminal. Failure to do so may damage the ECM because battery voltage is applied to ECM even if ignition switch is turned off.**
- **Before removing parts, turn ignition switch OFF and then disconnect battery ground cable.**

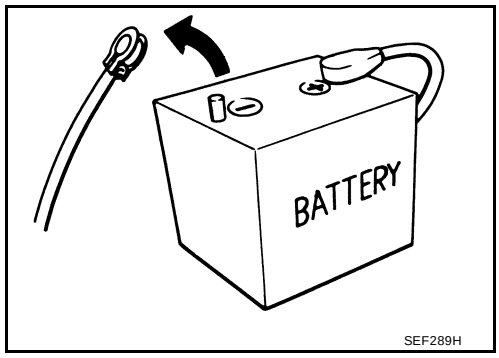

SEF289H

- Do not disassemble ECM.
- If a battery terminal is disconnected, the memory will return to the ECM value.
  The ECM will now start to self-control at its initial value. Engine operation can vary slightly when the terminal is disconnected. However, this is not an indication of a problem. Do not replace parts because of a slight variation.

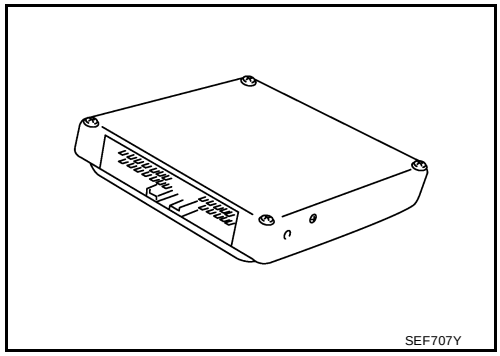

- When connecting ECM harness connector, fasten it securely with a lever as far as it will go as shown at right.

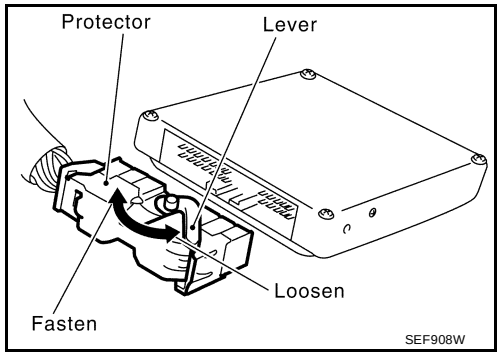

- When connecting or disconnecting pin connectors into or from ECM, take care not to damage pin terminals (bend or break).
  Make sure that there are not any bends or breaks on ECM pin terminal, when connecting pin connectors.
- Securely connect ECM harness connectors.
  A poor connection can cause an extremely high (surge) voltage to develop in coil and condenser, thus resulting in damage to ICs.
- Keep engine control system harness at least 10 cm (4 in) away from adjacent harness, to prevent engine control system malfunctions due to receiving external noise, degraded operation of ICs, etc.

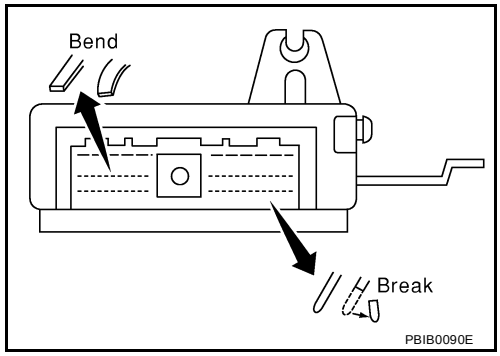

- Keep engine control system parts and harness dry.
- Before replacing ECM, perform “ECM Terminals and Reference Value” inspection and make sure ECM functions properly. Refer to EC-722 .
- Handle mass air flow sensor carefully to avoid damage.
- Do not disassemble mass air flow sensor.
- Do not clean mass air flow sensor with any type of detergent.
- Do not disassemble electric throttle control actuator.
- Even a slight leak in the air intake system can cause serious problems.
- Do not shock or jar the camshaft position sensor (PHASE), crankshaft position sensor (POS).

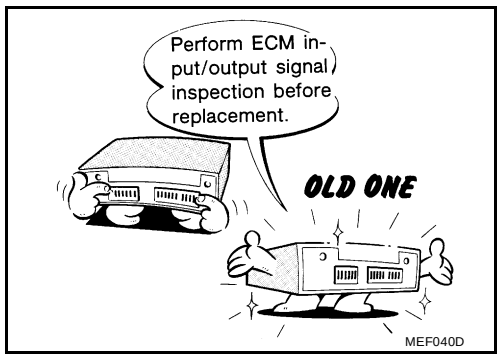

- **After performing each TROUBLE DIAGNOSIS, perform "DTC Confirmation Procedure" or "Overall Function Check".**
  The DTC should not be displayed in the "DTC Confirmation Procedure" if the repair is completed. The "Overall Function Check" should be a good result if the repair is completed.

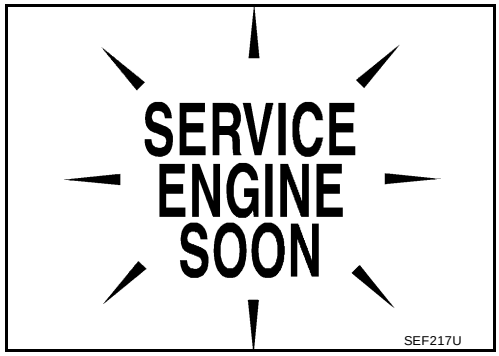

- **When measuring ECM signals with a circuit tester, never allow the two tester probes to contact.**
  Accidental contact of probes will cause a short circuit and damage the ECM power transistor.
- **Do not use ECM ground terminals when measuring input/output voltage. Doing so may result in damage to the ECM's transistor. Use a ground other than ECM terminals, such as the ground.**

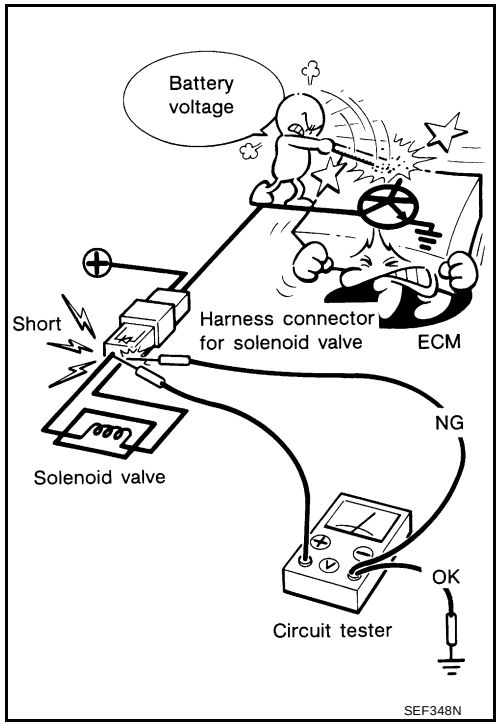

- **Regarding model L31, "B1" indicates the bank 1, "B2" indicates the bank 2 as shown in the figure.**

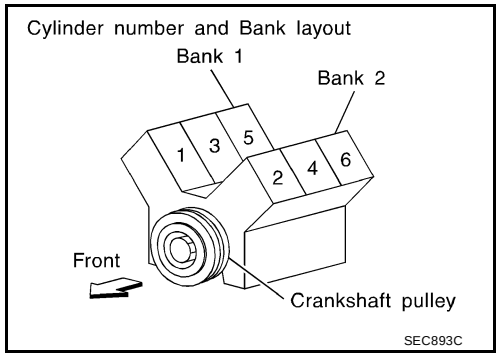

- **Do not operate fuel pump when there is no fuel in lines.**
- **Tighten fuel hose clamps to the specified torque.**

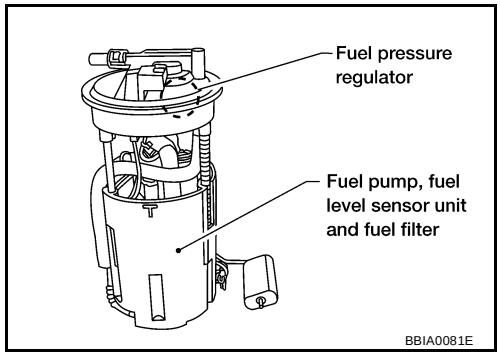

- **Do not depress accelerator pedal when starting.**
- **Immediately after starting, do not rev up engine unnecessarily.**
- **Do not rev up engine just prior to shutdown.**

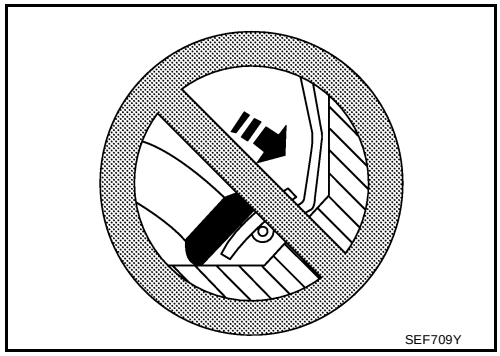

- **When installing C.B. ham radio or a mobile phone, be sure to observe the following as it may adversely affect electronic control systems depending on installation location.**
  - **Keep the antenna as far as possible from the electronic control units.**
  - **Keep the antenna feeder line more than 20 cm (8 in) away from the harness of electronic controls.**
    Do not let them run parallel for a long distance.
  - **Adjust the antenna and feeder line so that the standing-wave radio can be kept smaller.**
  - **Be sure to ground the radio to vehicle body.**

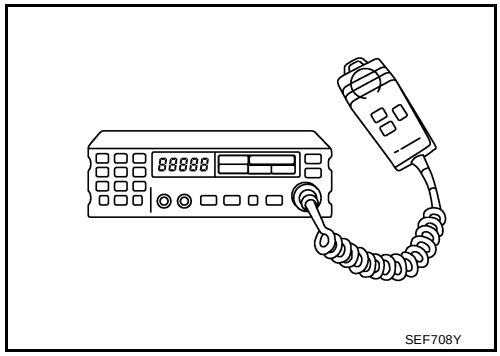

Wiring Diagrams and Trouble Diagnosis

UBS0034Z

When you read wiring diagrams, refer to the following:

- GI-12, "How to Read Wiring Diagrams"
- PG-3, "POWER SUPPLY ROUTING CIRCUIT" for power distribution circuit

When you perform trouble diagnosis, refer to the following:

- ***GI-10, "HOW TO FOLLOW TEST GROUPS IN TROUBLE DIAGNOSES"***
- ***GI-25, "How to Perform Efficient Diagnosis for an Electrical Incident"***

PREPARATION

PFP:00002

Special Service Tools

UBS00350

The actual shapes of Kent-Moore tools may differ from those of special service tools illustrated here.

Tool number Tool name	Description	
KV10117100 Heated oxygen sensor wrench	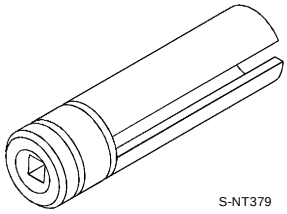 S-NT379	Loosening or tightening heated oxygen sensors with 22 mm (0.87 in) hexagon nut
KV10114400 Heated oxygen sensor wrench	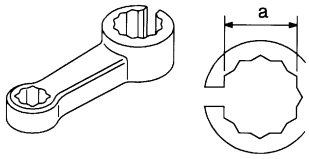 S-NT636	Loosening or tightening heated oxygen sensors **a: 22 mm (0.87 in)**
Fuel pressure gauge kit (J44321)	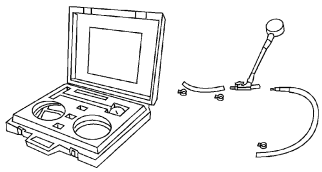 LEC642	Checking fuel pressure
Fuel filler cap adapter (J45356)	 S-NT815	Checking fuel tank vacuum relief valve opening pressure

Commercial Service Tools

UBS00351

Tool name (Kent-Moore No.)	Description	
Quick connector release	 PBIC0198E	Removing fuel tube quick connectors in engine room (Available in SEC. 164 of PARTS CATALOG: Part No. 16441 6N210)
Leak detector i.e.: (J41416)	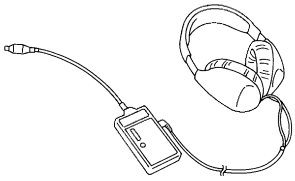 S-NT703	Locating the EVAP leak

Tool name (Kent-Moore No.)	Description	
EVAP service port adapter i.e.: (J41413-OBD)	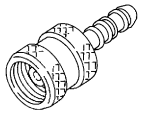 S-NT704	Applying positive pressure through EVAP service port
Socket wrench	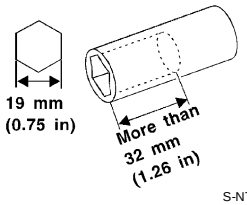 S-NT705	Removing and installing engine coolant temperature sensor
Oxygen sensor thread cleaner	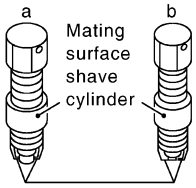 S-NT778	Reconditioning the exhaust system threads before installing a new oxygen sensor. Use with anti-seize lubricant shown below. **a: 18 mm diameter with pitch 1.5 mm for Zirconia Oxygen Sensor** **b: 12 mm diameter with pitch 1.25 mm for Titania Oxygen Sensor**
Anti-seize lubricant i.e.: (Permatex™ 133AR or equivalent meeting MIL specification MIL-A-907)	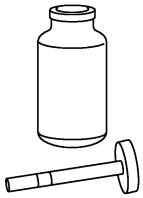 S-NT779	Lubricating oxygen sensor thread cleaning tool when reconditioning exhaust system threads.

ENGINE CONTROL SYSTEM

PFP:23710

System Diagram

UBS00352

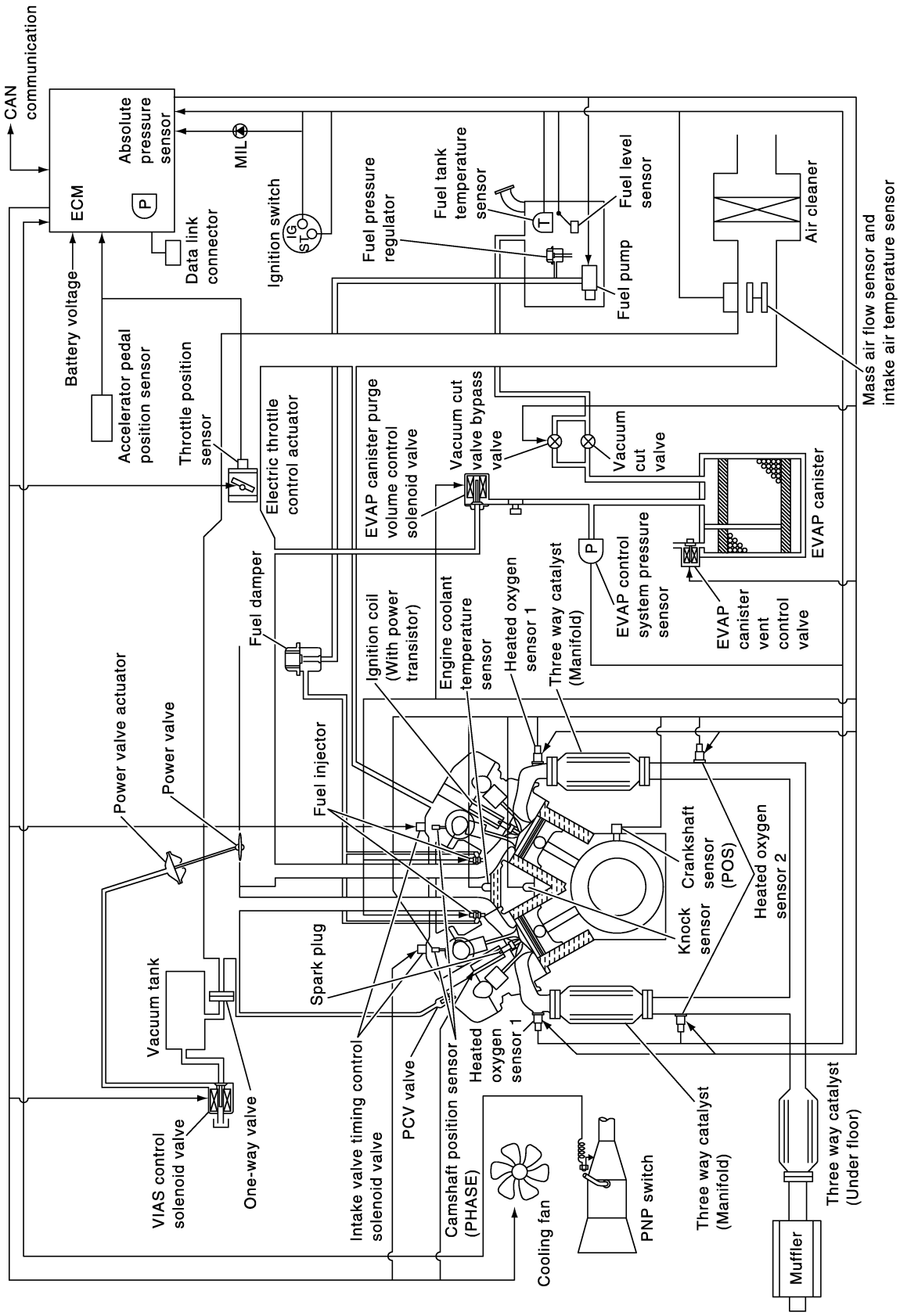

SEC894C

Vacuum Hose Drawing

UBS00353

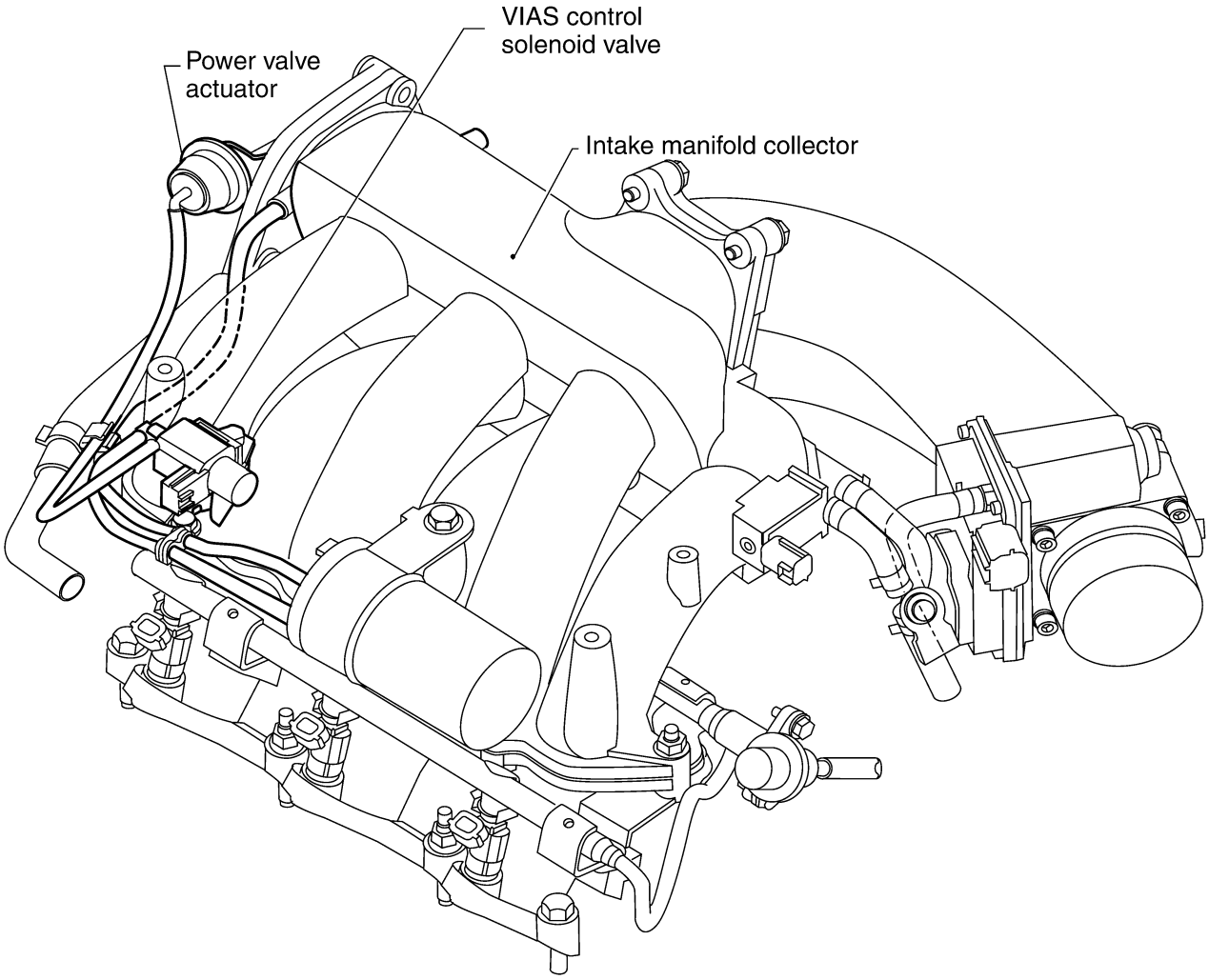

BBIA0055E

Refer to EC-646, "System Diagram" for Vacuum Control System.

System Chart

UBS00354

Input (Sensor)	ECM Function	Output (Actuator)
● Camshaft position sensor (PHASE) ● Crankshaft position sensor (POS) ● Mass air flow sensor ● Engine coolant temperature sensor ● Heated oxygen sensor 1 ● Throttle position sensor ● Accelerator pedal position sensor ● Park/neutral position (PNP) switch ● Intake air temperature sensor ● Absolute pressure sensor ● Power steering pressure sensor ● Ignition switch ● Battery voltage ● Knock sensor ● Refrigerant pressure sensor ● Stop lamp switch ● ASCD steering switch ● ASCD brake switch ● ASCD clutch switch ● Fuel level sensor*1 ● EVAP control system pressure sensor*1 ● Fuel tank temperature sensor*1 ● Heated oxygen sensor 2 *2 ● TCM (Transmission control module) *3 ● ABS actuator and electric unit (control unit) *3 ● Air conditioner switch*3 ● Vehicle speed sensor*3 ● Electrical load signal*3	Fuel injection & mixture ratio control	Fuel injectors
	Electronic ignition system	Power transistor
	Fuel pump control	Fuel pump relay*4
	ASCD vehicle speed control	Electric throttle control actuator
	On board diagnostic system	MIL (On the instrument panel)
	Power valve control	VIAS control solenoid valve
	Heated oxygen sensor 1 heater control	Heated oxygen sensor 1 heater
	Heated oxygen sensor 2 heater control	Heated oxygen sensor 2 heater
	EVAP canister purge flow control	EVAP canister purge volume control solenoid valve
	Air conditioning cut control	Air conditioner relay*4
	Cooling fan control	Cooling fan relays*4
	ON BOARD DIAGNOSIS for EVAP system	● EVAP canister vent control valve ● Vacuum cut valve bypass valve

*1: These sensors are not used to control the engine system. They are used only for the on board diagnosis.
*2: This sensor is not used to control the engine system under normal conditions.
*3: The signals are sent to the ECM through CAN communication line.
*4: These relays are built into IPDM E/R.

Multiport Fuel Injection (MFI) System

UBS00355

INPUT/OUTPUT SIGNAL CHART

Sensor	Input Signal to ECM	ECM function	Actuator
Crankshaft position sensor (POS)	Engine speed Piston position	Fuel injection & mixture ratio control	Fuel injectors
Camshaft position sensor (PHASE)			
Mass air flow sensor	Amount of intake air		
Engine coolant temperature sensor	Engine coolant temperature		
Heated oxygen sensor 1	Density of oxygen in exhaust gas		
Throttle position sensor	Throttle position		
Accelerator pedal position sensor	Accelerator pedal position		
Park/neutral position (PNP) switch	Gear position		
Ignition switch	Start signal		
Knock sensor	Engine knocking condition		
Battery	Battery voltage		
Power steering pressure sensor	Power steering operation		
Heated oxygen sensor 2 *1	Density of oxygen in exhaust gas		
ABS actuator and electric unit (control unit) *2	ABS/TCS operation command		
Air conditioner switch*2	Air conditioner operation		
Vehicle speed sensor*2	Vehicle speed		

*1: Under normal conditions, this sensor is not for engine control operation.
*2: Signals are sent to the ECM through CAN communication line.

SYSTEM DESCRIPTION

The amount of fuel injected from the fuel injector is determined by the ECM. The ECM controls the length of time the valve remains open (injection pulse duration). The amount of fuel injected is a program value in the ECM memory. The program value is preset by engine operating conditions. These conditions are determined by input signals (for engine speed and intake air) from both the crankshaft position sensor and the mass air flow sensor.

VARIOUS FUEL INJECTION INCREASE/DECREASE COMPENSATION

In addition, the amount of fuel injected is compensated to improve engine performance under various operating conditions as listed below.

<Fuel increase>

- During warm-up
- When starting the engine
- During acceleration
- Hot-engine operation
- When selector lever is changed from “N” to “D”
- High-load, high-speed operation

<Fuel decrease>

- During deceleration
- During high engine speed operation

MIXTURE RATIO FEEDBACK CONTROL (CLOSED LOOP CONTROL)

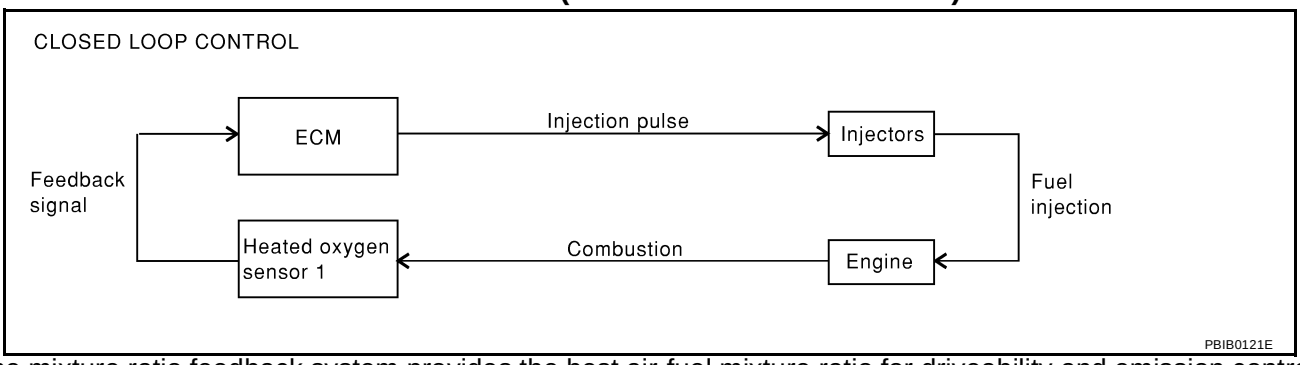

The mixture ratio feedback system provides the best air-fuel mixture ratio for driveability and emission control. The three way catalyst (manifold) can then better reduce CO, HC and NOx emissions. This system uses heated oxygen sensor 1 in the exhaust manifold to monitor if the engine operation is rich or lean. The ECM adjusts the injection pulse width according to the sensor voltage signal. For more information about heated oxygen sensor 1, refer to EC-827 . This maintains the mixture ratio within the range of stoichiometric (ideal air-fuel mixture).
This stage is referred to as the closed loop control condition.
Heated oxygen sensor 2 is located downstream of the three way catalyst (manifold). Even if the switching characteristics of heated oxygen sensor 1 shift, the air-fuel ratio is controlled to stoichiometric by the signal from heated oxygen sensor 2.

Open Loop Control

The open loop system condition refers to when the ECM detects any of the following conditions. Feedback control stops in order to maintain stabilized fuel combustion.

- Deceleration and acceleration
- High-load, high-speed operation
- Malfunction of heated oxygen sensor 1 or its circuit
- Insufficient activation of heated oxygen sensor 1 at low engine coolant temperature
- High engine coolant temperature
- During warm-up
- After shifting from “N” to “D”
- When starting the engine

MIXTURE RATIO SELF-LEARNING CONTROL

The mixture ratio feedback control system monitors the mixture ratio signal transmitted from heated oxygen sensor 1. This feedback signal is then sent to the ECM. The ECM controls the basic mixture ratio as close to the theoretical mixture ratio as possible. However, the basic mixture ratio is not necessarily controlled as originally designed. Both manufacturing differences (i.e., mass air flow sensor hot film) and characteristic changes during operation (i.e., injector clogging) directly affect mixture ratio.
Accordingly, the difference between the basic and theoretical mixture ratios is monitored in this system. This is then computed in terms of “injection pulse duration” to automatically compensate for the difference between the two ratios.
“Fuel trim” refers to the feedback compensation value compared against the basic injection duration. Fuel trim includes short term fuel trim and long term fuel trim.
“Short term fuel trim” is the short-term fuel compensation used to maintain the mixture ratio at its theoretical value. The signal from heated oxygen sensor 1 indicates whether the mixture ratio is RICH or LEAN compared to the theoretical value. The signal then triggers a reduction in fuel volume if the mixture ratio is rich, and an increase in fuel volume if it is lean.
“Long term fuel trim” is overall fuel compensation carried out long-term to compensate for continual deviation of the short term fuel trim from the central value. Such deviation will occur due to individual engine differences, wear over time and changes in the usage environment.

FUEL INJECTION TIMING

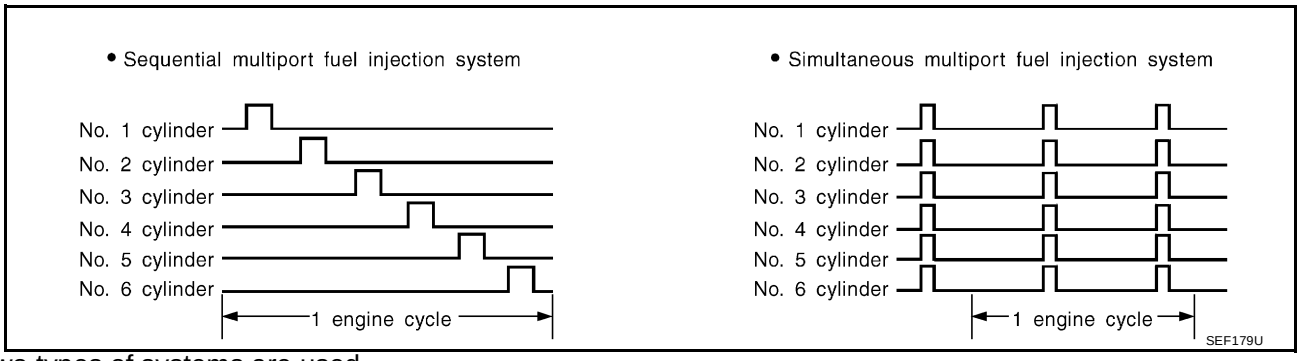

Two types of systems are used.

Sequential Multiport Fuel Injection System

Fuel is injected into each cylinder during each engine cycle according to the firing order. This system is used when the engine is running.

Simultaneous Multiport Fuel Injection System

Fuel is injected simultaneously into all six cylinders twice each engine cycle. In other words, pulse signals of the same width are simultaneously transmitted from the ECM.
The six injectors will then receive the signals two times for each engine cycle.
This system is used when the engine is being started and/or if the fail-safe system (CPU) is operating.

FUEL SHUT-OFF

Fuel to each cylinder is cut off during deceleration or operation of the engine at excessively high speeds.

Electronic Ignition (EI) System

UBS00356

INPUT/OUTPUT SIGNAL CHART

Sensor	Input Signal to ECM	ECM function	Actuator
Crankshaft position sensor (POS)	Engine speed Piston position	Ignition timing control	Power transistor
Camshaft position sensor (PHASE)			
Mass air flow sensor	Amount of intake air		
Engine coolant temperature sensor	Engine coolant temperature		
Throttle position sensor	Throttle position		
Accelerator pedal position sensor	Accelerator pedal position		
Ignition switch	Start signal		
Knock sensor	Engine knocking		
Park/neutral position (PNP) switch	Gear position		
Battery	Battery voltage		
Vehicle speed sensor*1	Vehicle speed		

*1: Signal is sent to the ECM through CAN communication line.

SYSTEM DESCRIPTION

The ignition timing is controlled by the ECM to maintain the best air-fuel ratio for every running condition of the engine. The ignition timing data is stored in the ECM. This data forms the map shown.
The ECM receives information such as the injection pulse width and camshaft position sensor signal. Computing this information, ignition signals are transmitted to the power transistor.
e.g., N: 1,800 rpm, Tp: 1.50 msec
A °BTDC
During the following conditions, the ignition timing is revised by the ECM according to the other data stored in the ECM.

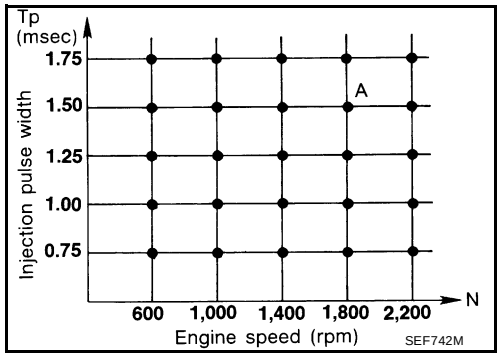

- At starting
- During warm-up

- At idle
- At low battery voltage
- During acceleration

The knock sensor retard system is designed only for emergencies. The basic ignition timing is programmed within the anti-knocking zone, if recommended fuel is used under dry conditions. The retard system does not operate under normal driving conditions. If engine knocking occurs, the knock sensor monitors the condition. The signal is transmitted to the ECM. The ECM retards the ignition timing to eliminate the knocking condition.

Air Conditioning Cut Control

UBS00357

INPUT/OUTPUT SIGNAL CHART

Sensor	Input Signal to ECM	ECM function	Actuator
Air conditioner switch*1	Air conditioner “ON” signal	Air conditioner cut control	Air conditioner relay
Throttle position sensor	Throttle position		
Accelerator pedal position sensor	Accelerator pedal position		
Crankshaft position sensor (POS) Camshaft position sensor (PHASE)	Engine speed		
Engine coolant temperature sensor	Engine coolant temperature		
Ignition switch	Start signal		
Refrigerant pressure sensor	Refrigerant pressure		
Power steering pressure sensor	Power steering operation		
Vehicle speed sensor*1	Vehicle speed		

*1: Signal is sent to the ECM through CAN communication line.

SYSTEM DESCRIPTION

This system improves engine operation when the air conditioner is used.
Under the following conditions, the air conditioner is turned off.

- When the accelerator pedal is fully depressed.
- When cranking the engine.
- At high engine speeds.
- When the engine coolant temperature becomes excessively high.
- When operating power steering during low engine speed or low vehicle speed.
- When engine speed is excessively low.
- When refrigerant pressure is excessively low or high.

Fuel Cut Control (at No Load and High Engine Speed)

UBS00358

INPUT/OUTPUT SIGNAL CHART

Sensor	Input Signal to ECM	ECM function	Actuator
Park/neutral position (PNP) switch	Neutral position	Fuel cut control	Fuel injectors
Throttle position sensor	Throttle position		
Accelerator pedal position sensor	Accelerator pedal position		
Engine coolant temperature sensor	Engine coolant temperature		
Crankshaft position sensor (POS) Camshaft position sensor (PHASE)	Engine speed		
Vehicle speed sensor*1	Vehicle speed		

*1: Signal is sent to the ECM through CAN communication line.

SYSTEM DESCRIPTION

If the engine speed is above 1,800 rpm with no load (for example, in neutral and engine speed over 1,800 rpm) fuel will be cut off after some time. The exact time when the fuel is cut off varies based on engine speed. Fuel cut will operate until the engine speed reaches 1,500 rpm, then fuel cut is cancelled.

NOTE:
This function is different from deceleration control listed under “Multiport Fuel Injection (MFI) System”, EC-649
.

CAN communication

UBS00359

SYSTEM DESCRIPTION

CAN (Controller Area Network) is a serial communication line for real time application. It is an on-vehicle multiplex communication line with high data communication speed and excellent error detection ability. Many electronic control units are equipped onto a vehicle, and each control unit shares information and links with other control units during operation (not independent). In CAN communication, control units are connected with 2 communication lines (CAN H line, CAN L line) allowing a high rate of information transmission with less wiring. Each control unit transmits/receives data but selectively reads required data only.

FOR MODELS WITH TCS

System diagram

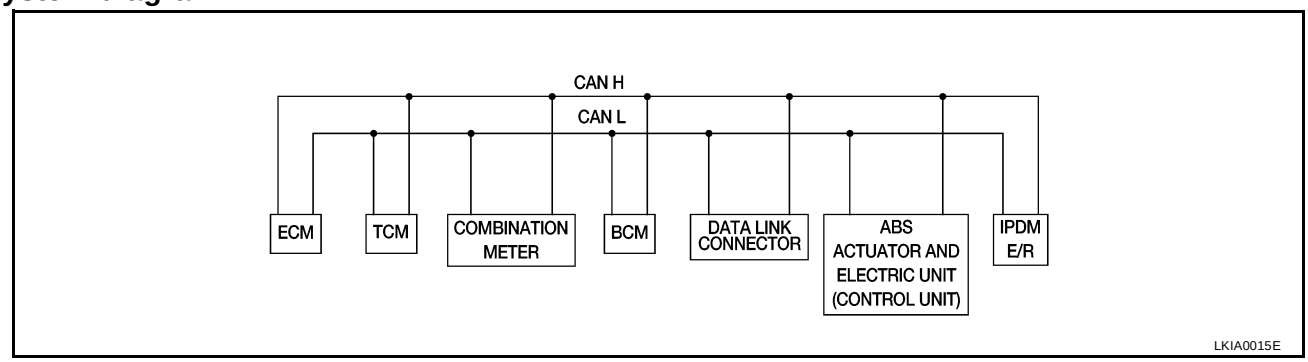

Input/output signal chart

T: Transmit R: Receive

Signals	ECM	TCM	COMBINATION METER	BCM	ABS/TCS control unit	IPDM E/R
Engine speed signal	T	R	R			R
Engine coolant temperature signal	T	R	R			
Accelerator pedal position signal	T	R				
Fuel consumption monitor signal	T		R			
A/T warning lamp signal		T	R			
A/T position indicator signal	R	T	R	R(R range only)	R	
ABS operation signal	R				T	
TCS operation signal	R				T	
Air conditioner switch signal	R			T		
Air conditioner compressor signal	R					T
A/C compressor request signal	T					R
Cooling fan motor operation signal	R					T
Cooling Fan Speed Request signal	T					R
Position Lights Request			R	T		R
Position Lights Status				R		T
Low Beam Request				T		R
Low Beam Status	R			R		T
High Beam Request			R	T		R
High Beam Status	R			R		T
Front Fog Lights Request				T		R
Front Fog Light Status				R		T
OD cancel switch signal		R	T			R

Signals	ECM	TCM	COMBINA-TION METER	BCM	ABS/TCS control unit	IPDM E/R
Brake switch signal		R	T			
Vehicle speed signal	R		T			
	R		T	R		
Oil Pressure Switch			R			T
Sleep Request1			R	T		
Sleep Request2				T		R
N range switch signal		R	T			
P range switch signal		R	T			
Seat belt buckle switch signal			T	R		
Door switch signal			R	T		R
Tail lamp request			R	T		R
Turn indicator signal			R	T		
Buzzer output signal			R	T		
Trunk switch signal			R	T		
ASCD main switch signal	T		R			
ASCD cruise signal	T		R			
Wiper operation				R		T
Wiper stop position signal				R		T
Rear window defogger switch signal				T		R
Rear window defogger control signal	R					T

FOR A/T MODELS WITHOUT TCS

System diagram

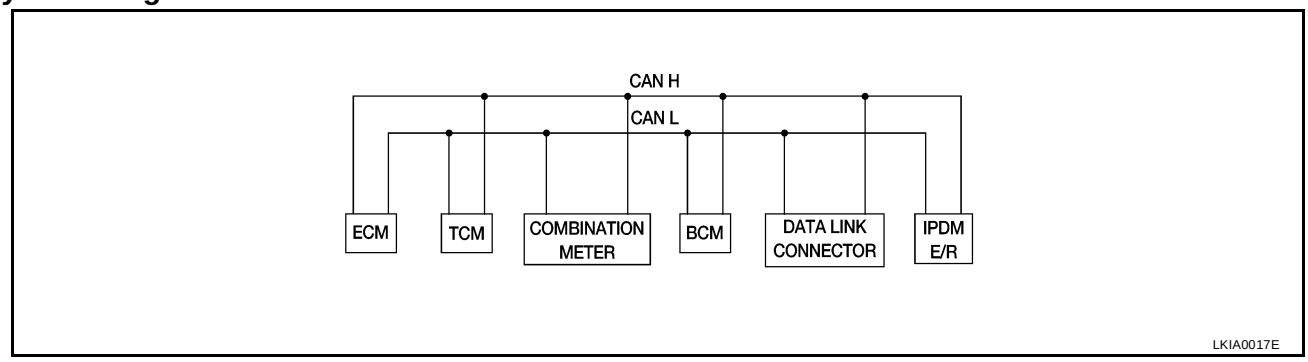

Input/output signal chart

T: Transmit R: Receive

Signals	ECM	TCM	COMBINATION METER	BCM	IPDM E/R
Engine speed signal	T	R	R		R
Engine coolant temperature signal	T	R	R		
Accelerator pedal position signal	T	R			R
Fuel consumption monitor signal	T		R		
A/T warning lamp signal		T	R		
A/T position indicator signal	R	T	R	R(R range only)	
Air conditioner switch signal	R			T	
Air conditioner compressor signal	R				T

Signals	ECM	TCM	COMBINATION METER	BCM	IPDM E/R
A/C compressor request signal	T				R
Blower fan switch signal	R(QR25DE)			T	
Cooling fan motor operation signal	R			T	
Cooling Fan Speed Request signal	T				R
Position Lights Request			R	T	R
Position Lights Status				R	T
Low Beam Request				T	R
Low Beam Status	R			R	T
High Beam Request			R	T	R
High Beam Status	R			R	T
Front Fog Lights Request				T	R
Front Fog Light Status				R	T
OD cancel switch signal		R	T		R
Brake switch signal		R	T		
Vehicle speed signal	R		T		
	R		T	R	
Oil Pressure Switch			R		T
Sleep Request1			R	T	
Sleep Request2				T	R
N range switch signal		R	T		
P range switch signal		R	T		
Seat belt buckle switch signal			T	R	
Door switch signal			R	T	R
Tail lamp request			R	T	R
Turn indicator signal			R	T	
Buzzer output signal			R	T	
Trunk switch signal			R	T	
ASCD main switch signal	T		R		
ASCD cruise signal	T		R		
Wiper operation				R	T
Wiper stop position signal				R	T
Rear window defogger switch signal				T	R
Rear window defogger control signal	R				T

FOR M/T MODELS WITHOUT TCS

System diagram

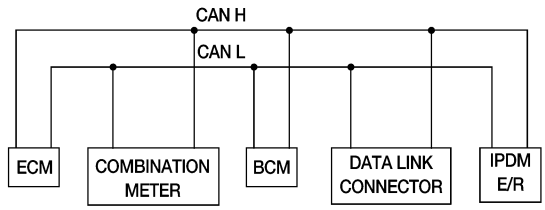

LKIA0018E

Input/output signal chart

T: Transmit R: Receive

Signals	ECM	COMBINATION METER	BCM	IPDM E/R
Engine speed signal	T	R		R
Engine coolant temperature signal	T	R		
Fuel consumption monitor signal	T	R		
Air conditioner switch signal	R		T	
Air conditioner compressor signal	R			T
A/C compressor request signal	T			R
Blower fan switch signal	R(QR25DE)		T	
Cooling fan motor operation signal	R			T
Cooling Fan Speed Request signal	T			R
Position Lights Request		R	T	R
Position Lights Status			R	T
Low Beam Request			T	R
Low Beam Status	R		R	T
High Beam Request		R	T	R
High Beam Status	R		R	T
Front Fog Lights Request			T	R
Front Fog Light Status			R	T
Vehicle speed signal	R	T		
Oil Pressure Switch		R		T
Sleep Request1		R	T	
Sleep Request2			T	R
Seat belt buckle switch signal		T	R	
Door switch signal		R	T	R
Tail lamp request		R	T	R
Turn indicator signal		R	T	
Buzzer output signal		R	T	
Trunk switch signal		R	T	
ASCD main switch signal	T	R		
ASCD cruise signal	T	R		
Wiper operation			R	T
Wiper stop position signal			R	T
Rear window defogger switch signal			T	R
Rear window defogger control signal	R			T

BASIC SERVICE PROCEDURE

PFP:00018

Idle Speed and Ignition Timing Check

UBS0035A

IDLE SPEED

- **Using CONSULT-II**
  Check idle speed in “DATA MONITOR” mode with CONSULT-II.

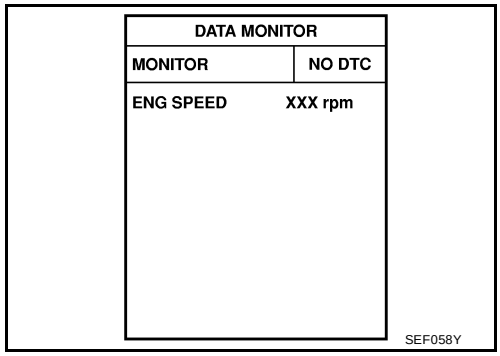

IGNITION TIMING

Any of following two methods may be used.

Method A

1. Remove the engine cover (if equipped)
2. Slide the harness protector of ignition coil No. 1 to access the wires.
3. Attach timing light to the wires.
4. Check ignition timing.

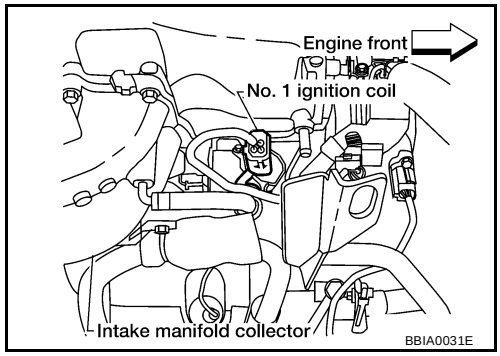

Method B

1. Remove No. 1 ignition coil.

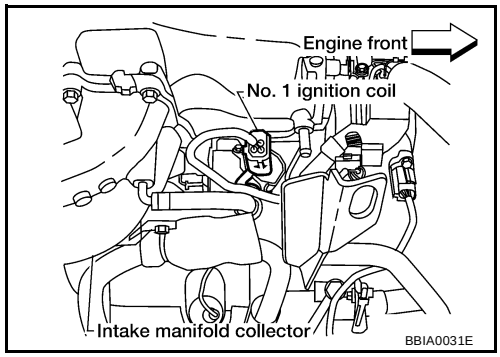

2. Connect No. 1 ignition coil and No. 1 spark plug with suitable high-tension wire as shown, and attach timing light clamp to this wire.

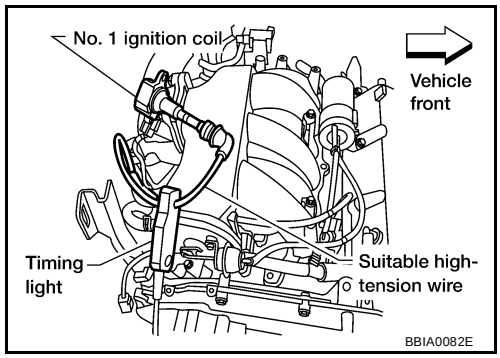

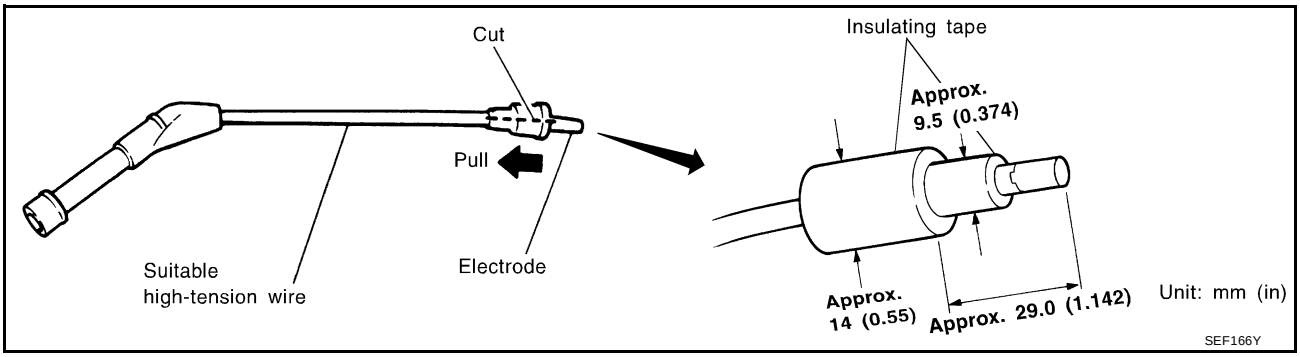

3. Check ignition timing.

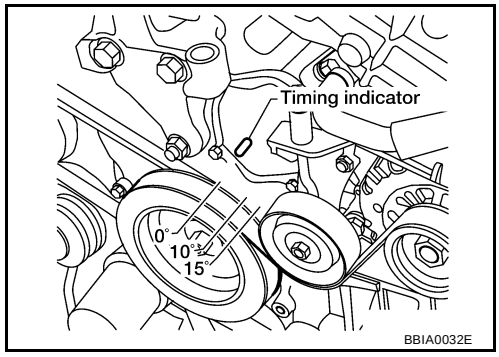

Idle Speed/Ignition Timing/Idle Mixture Ratio Adjustment

UBS0035B

PREPARATION

1. Make sure that the following parts are in good order.
- Battery
- Ignition system
- Engine oil and coolant levels
- Fuses
- ECM harness connector
- Vacuum hoses
- Air intake system
  (Oil filler cap, oil level gauge, etc.)
- Fuel pressure
- Engine compression
- Throttle valve
- Evaporative emission system
2. On air conditioner equipped models, checks should be carried out while the air conditioner is “OFF”.
3. On automatic transmission equipped models, when checking idle rpm, ignition timing and mixture ratio, checks should be carried out while shift lever is in “N” position.
4. When measuring “CO” percentage, insert probe more than 40 cm (15.7 in) into tail pipe.
5. Turn off headlamp, heater blower, rear window defogger.
6. Keep front wheels pointed straight ahead.

OVERALL INSPECTION SEQUENCE

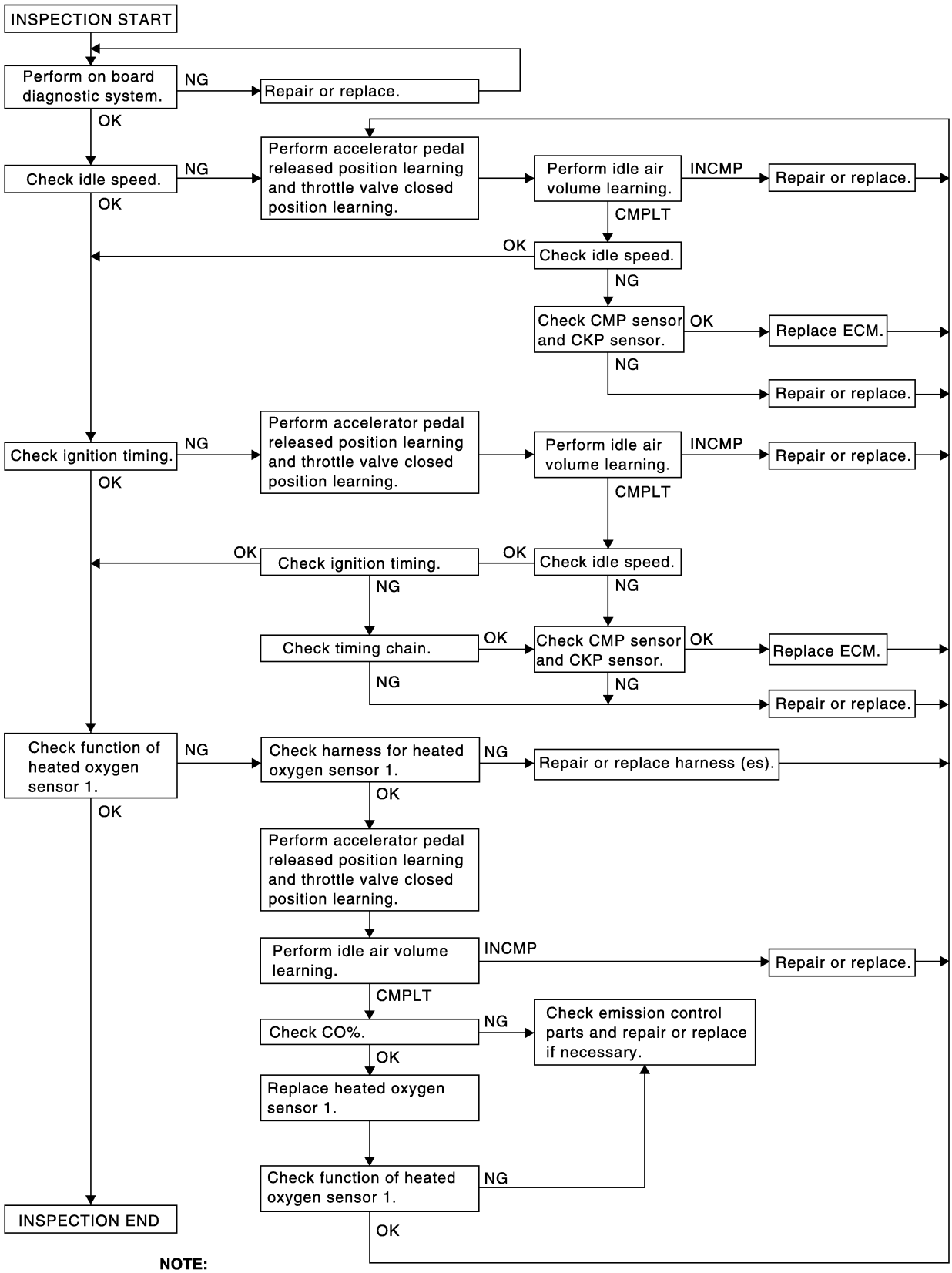

NOTE:
If a vehicle contains a part which is operating outside of design specifications with no MIL illumination, the part shall not be replaced prior to emission testing unless it is determined that the part has been tampered with or abused in such a way that the diagnostic system cannot reasonably be expected to detect the resulting malfunction.

SEC154D

INSPECTION PROCEDURE

1. INSPECTION START

1. Check service records for any recent repairs that may indicate a related problem, or a current need for scheduled maintenance.
2. Open engine hood and check the following:
- Harness connectors for improper connections
- Wiring harness for improper connections, pinches and cut
- Vacuum hoses for splits, kinks and improper connections
- Hoses and ducts for leaks
- Air cleaner clogging
- Gasket
3. Confirm that electrical or mechanical loads are not applied.
- Headlamp switch is OFF.
- Air conditioner switch is OFF.
- Rear window defogger switch is OFF.
- Steering wheel is in the straight-ahead position, etc.

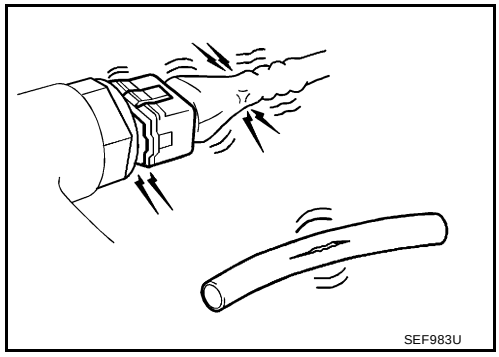

4. Start engine and warm it up until engine coolant temperature indicator points the middle of gauge.
   Ensure engine stays below 1,000 rpm.

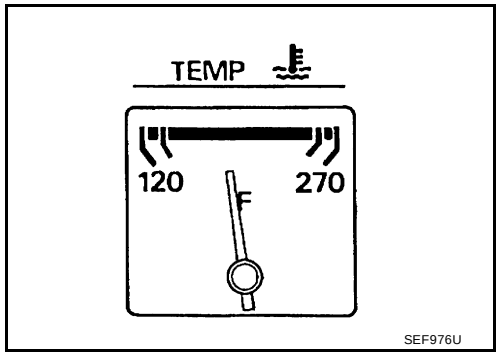

5. Run engine at about 2,000 rpm for about 2 minutes under no-load.
6. Make sure that no DTC is displayed with CONSULT-II or GST.

OK or NG

OK >> GO TO 3.
NG >> GO TO 2.

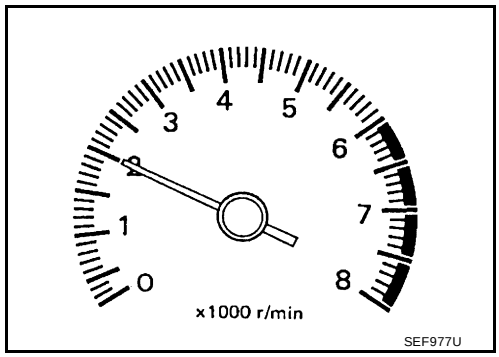

2. REPAIR OR REPLACE

Repair or replace components as necessary according to corresponding “Diagnostic Procedure”.

>> GO TO 3

3. CHECK TARGET IDLE SPEED

With CONSULT-II

1. Run engine at about 2,000 rpm for about 2 minutes under no-load.
2. Rev engine (2,000 to 3,000 rpm) two or three times under no-load, then run engine at idle speed for about 1 minute.

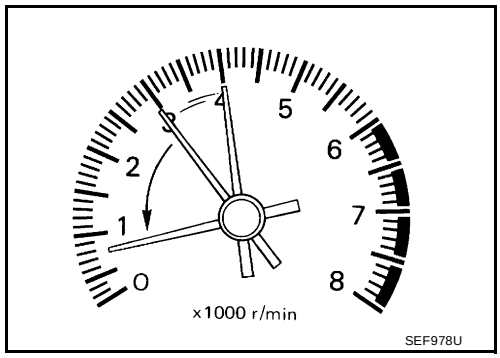

3. Read idle speed in “DATA MONITOR” mode with CONSULT-II.

   M/T: 700 ± 50 rpm

   A/T: 700 ± 50 rpm (in "P" or "N" position)

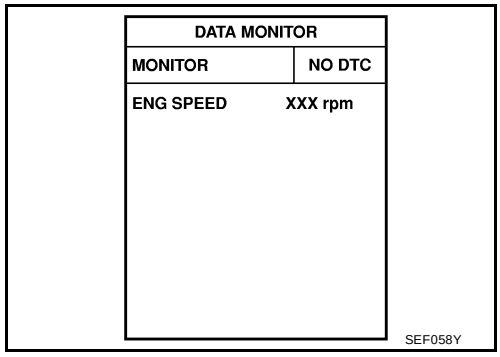

Without CONSULT-II

1. Run engine at about 2,000 rpm for about 2 minutes under no-load.
2. Rev engine (2,000 to 3,000 rpm) two or three times under no-load, then run engine at idle speed for about 1 minute.
3. Check idle speed.

   M/T: 700 ± 50 rpm

   A/T: 700 ± 50 rpm (in "P" or "N" position)

OK or NG

OK >> GO TO 10.
NG >> GO TO 4.

4. PERFORM ACCELERATOR PEDAL RELEASED POSITION LEARNING

1. Stop engine.
2. Perform EC-668, "Accelerator Pedal Released Position Learning" .

>> GO TO 5.

5. PERFORM THROTTLE VALVE CLOSED POSITION LEARNING

Perform EC-669, "Throttle Valve Closed Position Learning" .

>> GO TO 6.

6. PERFORM IDLE AIR VOLUME LEARNING

Perform EC-669, "Idle Air Volume Learning" .
Which is the result CMPLT or INCMP?

CMPLT or INCMP

CMPLT >> GO TO 7.
INCMP >> 1. Follow the construction of “Idle Air Volume Learning”.
2. GO TO 4.

7. CHECK TARGET IDLE SPEED AGAIN

With CONSULT-II

1. Start engine and warm it up to normal operating temperature.
2. Read idle speed in “DATA MONITOR” mode with CONSULT-II.

M/T: 700 ± 50 rpm
A/T: 700 ± 50 rpm (in "P" or "N" position)

Without CONSULT-II

1. Start engine and warm it up to normal operating temperature.
2. Check idle speed.

M/T: 700 ± 50 rpm
A/T: 700 ± 50 rpm (in "P" or "N" position)

OK or NG

OK >> GO TO 10.
NG >> GO TO 8.

8. DETECT MALFUNCTIONING PART

Check the Following.

- Check camshaft position sensor (PHASE) and circuit. Refer to EC-945 .
- Check crankshaft position sensor (POS) and circuit. Refer to EC-938 .

OK or NG

OK >> GO TO 9.
NG >> 1. Repair or replace.
2. GO TO 4.

9. CHECK ECM FUNCTION

1. Substitute another known-good ECM to check ECM function. (ECM may be the cause of a problem, but this is the rarely the case.)
2. Perform initialization of NVIS (NATS) system and registration of NVIS (NATS) ignition key IDs. Refer to EC-689, "NVIS (Nissan Vehicle Immobilizer System — NATS)" .

>> GO TO 4.

10. CHECK IGNITION TIMING

1. Run engine at idle.
2. Check ignition timing with a timing light.

M/T: 15 ± 5° BTDC

A/T: 15 ± 5° BTDC (in "P" or "N" position)

OK or NG

OK (With CONSULT-II)>>GO TO 19.
OK (Without CONSULT-II)>>GO TO 20.
NG >> GO TO 11.

11. PERFORM ACCELERATOR PEDAL RELEASED POSITION LEARNING

1. Stop engine.
2. Perform EC-668, "Accelerator Pedal Released Position Learning" .

>> GO TO 12.

12. PERFORM THROTTLE VALVE CLOSED POSITION LEARNING

Perform EC-669, "Throttle Valve Closed Position Learning" .

>> GO TO 13.

13. PERFORM IDLE AIR VOLUME LEARNING

Perform EC-669, "Idle Air Volume Learning" .

Which is the result CMPLT or INCMP?

CMPLT or INCMP

CMPLT >> GO TO 14.
INCMP >> 1. Follow the construction of “Idle Air Volume Learning”.
2. GO TO 4.

14. CHECK TARGET IDLE SPEED AGAIN

With CONSULT-II

1. Start engine and warm it up to normal operating temperature.
2. Read idle speed in “DATA MONITOR” mode with CONSULT-II.

M/T: 700 ± 50 rpm

A/T: 700 ± 50 rpm (in "P" or "N" position)

Without CONSULT-II

1. Start engine and warm it up to normal operating temperature.
2. Check idle speed.

M/T: 700 ± 50 rpm

A/T: 700 ± 50 rpm (in "P" or "N" position)

OK or NG

OK >> GO TO 15.
NG >> GO TO 17.

15. CHECK IGNITION TIMING AGAIN

1. Run engine at idle.
2. Check ignition timing with a timing light.

M/T: 15 ± 5° BTDC

A/T: 15 ± 5° BTDC (in "P" or "N" position)

OK or NG

OK (With CONSULT-II)>>GO TO 19.
OK (Without CONSULT-II)>>GO TO 20.
NG >> GO TO 16.

16. CHECK TIMING CHAIN INSTALLATION

Check timing chain installation. Refer to EM-146, "TIMING CHAIN" .

OK or NG

OK >> GO TO 17.
NG >> 1. Repair the timing chain installation.
2. GO TO 4.

17. DETECT MALFUNCTIONING PART

Check the following.

- Check camshaft position sensor (PHASE) and circuit. Refer to EC-945 .
- Check crankshaft position sensor (POS) and circuit. Refer to EC-938 .

OK or NG

OK >> GO TO 18.
NG >> 1. Repair or replace.
2. GO TO 4.

18. CHECK ECM FUNCTION

1. Substitute another known-good ECM to check ECM function. (ECM may be the cause of a problem, but this is the rarely the case.)
2. Perform initialization of NVIS (NATS) system and registration of NVIS (NATS) ignition key IDs. Refer to EC-689, "NVIS (Nissan Vehicle Immobilizer System — NATS)" .

>> GO TO 4.

19. CHECK HEATED OXYGEN SENSOR 1 (BANK 1) SIGNAL

With CONSULT-II

1. Run engine at about 2,000 rpm for about 2 minutes under no-load.
2. See “HO2S1 MNTR (B1)” in “DATA MONITOR” mode.
3. Running engine at 2,000 rpm under no-load (The engine is warmed up to normal operating temperature.), check that the monitor fluctuates between LEAN and RICH more than 5 times during 10 seconds.

1 time: RICH → LEAN → RICH

2 times: RICH → LEAN → RICH → LEAN → RICH

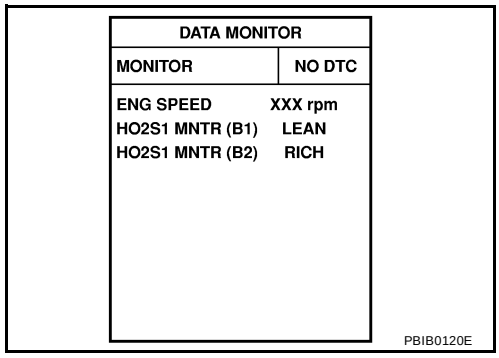

DATA MONITOR	
MONITOR	NO DTC
ENG SPEED	XXX rpm
HO2S1 MNTR (B1)	LEAN
HO2S1 MNTR (B2)	RICH

PBIB0120E

OK or NG

OK >> GO TO 21.
NG (Monitor does not fluctuate.)>>GO TO 23.
NG (Monitor fluctuates less than 5 times.)>>GO TO 31.

20. CHECK HEATED OXYGEN SENSOR 1 (BANK 1) SIGNAL

Without CONSULT-II

1. Stop engine and set ECM to Self-diagnostic mode II (Heated oxygen sensor 1 monitor). Refer to EC-690, "HOW TO SWITCH DIAGNOSTIC TEST MODE" .
2. Start engine and run it at about 2,000 rpm for about 2 minutes under no-load.
3. Running engine at 2,000 rpm under no-load (The engine is warmed up to normal operating temperature.), check that the MIL comes on more than 5 times during 10 seconds.

OK or NG

OK >> GO TO 22.
NG (MIL does not come on)>>GO TO 23.
NG (MIL comes on less than 5 times)>>GO TO 31.

21. CHECK HEATED OXYGEN SENSOR 1 (BANK 2) SIGNAL

With CONSULT-II

1. See “HO2S1 MNTR (B2)” in “DATA MONITOR” mode.
2. Running engine at 2,000 rpm under no-load (The engine is warmed up to normal operating temperature.), check that the monitor fluctuates between LEAN and RICH more than 5 times during 10 seconds.

   1 time: RICH → LEAN → RICH

   2 times: RICH → LEAN → RICH → LEAN → RICH

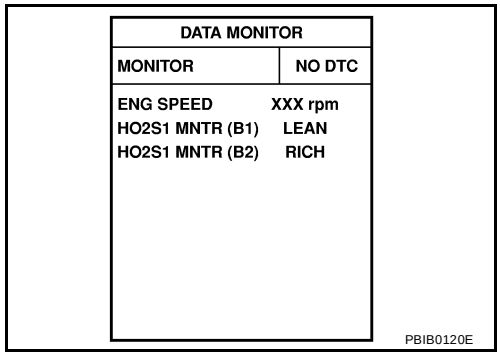

DATA MONITOR	
MONITOR	NO DTC
ENG SPEED	XXX rpm
HO2S1 MNTR (B1)	LEAN
HO2S1 MNTR (B2)	RICH

PBIB0120E

OK or NG

OK >> **INSPECTION END**
NG (Monitor does not fluctuate.)>>GO TO 24.
NG (Monitor fluctuates less than 5 times.)>>GO TO 31.

22. CHECK HEATED OXYGEN SENSOR 1 (BANK 2) SIGNAL

Without CONSULT-II

1. Switch the monitored sensor from bank 1 to bank 2. Refer to EC-691, "How to Switch Monitored Sensor From Bank 1 to Bank 2 or Vice Versa" .
2. Running engine at 2,000 rpm under no-load (The engine is warmed up to normal operating temperature.), check that the MIL comes on more than 5 times during 10 seconds.

OK or NG

OK >> **INSPECTION END**
NG (MIL does not come on)>>GO TO 24.
NG (MIL comes on less than 5 times)>>GO TO 31.

23. CHECK HEATED OXYGEN SENSOR 1 (BANK 1) HARNESS

1. Turn ignition switch "OFF" and disconnect battery ground cable.
2. Disconnect ECM harness connector.
3. Disconnect heated oxygen sensor 1 (bank 1) harness connector.
4. Check harness continuity between ECM terminal 91 and heated oxygen sensor 1 (bank 1) terminal 2. Refer to Wiring Diagram, EC-829, "BANK 1" .

   Continuity should exist.

5. Also check harness for short to ground and short to power.

OK or NG

OK >> GO TO 25.
NG >> 1. Repair or replace harness between ECM and heated oxygen sensor 1 (bank 1).
2. GO TO 4.

24. CHECK HEATED OXYGEN SENSOR 1 (BANK 2) HARNESS

1. Turn ignition switch "OFF" and disconnect battery ground cable.
2. Disconnect ECM harness connector.
3. Disconnect heated oxygen sensor 1 (bank 2) harness connector.
4. Check harness continuity between ECM terminal 92 and heated oxygen sensor 1 (bank 2) terminal 2. Refer to Wiring Diagram, EC-831, "BANK 2" .

Continuity should exist.

5. Also check harness for short to ground and short to power.

OK or NG

OK >> GO TO 25.
NG >> 1. Repair or replace harness between ECM and heated oxygen sensor 1 (bank 2).
2. GO TO 4.

25. PERFORM ACCELERATOR PEDAL RELEASED POSITION LEARNING

1. Reconnect ECM harness connector.
2. Perform EC-668, "Accelerator Pedal Released Position Learning" .

>> GO TO 26.

26. PERFORM THROTTLE VALVE CLOSED POSITION LEARNING

Perform EC-669, "Throttle Valve Closed Position Learning" .

>> GO TO 27.

27. PERFORM IDLE AIR VOLUME LEARNING

Refer to EC-669, "Idle Air Volume Learning" .

Which is the result CMPLT or INCMP?

CMPLT or INCMP

CMPLT (With CONSULT-II)>>GO TO 28.
CMPLT (Without CONSULT-II)>>GO TO 29.
INCMP >> 1. Follow the construction of "Idle Air Volume Learning".
2. GO TO 4.

28. CHECK "CO" %

With CONSULT-II

1. Start engine and warm it up until engine coolant temperature indicator points the middle of gauge.
2. Turn ignition switch "OFF", wait at least 10 seconds and then turn "ON".
3. Select "ENG COOLANT TEMP" in "ACTIVE TEST" mode.
4. Set "ENG COOLANT TEMP" to 5°C (41°F) by touching "DWN" and "Qd".
5. Start engine and rev it (2,000 to 3,000 rpm) two or three times under no-load, then run engine at idle speed.
6. Check "CO"%.

Idle CO: 0.7 – 9.9 % and engine runs smoothly.

OK or NG

OK >> GO TO 31.
NG >> GO TO 30.

ACTIVE TEST	
ENG COOLANT TEMP	XXX °C
MONITOR	
ENG SPEED	XXX rpm
INJ PULSE-B1	XXX msec
IGN TIMING	XXX BTDC

SEF172Y

29. CHECK "CO" %

Without CONSULT-II

1. Start engine and warm it up until engine coolant temperature indicator points to the middle of gauge.
2. Turn ignition switch "OFF".
3. Disconnect engine coolant temperature sensor harness connector.
4. Connect a resistor (4.4 kΩ) between terminals of engine coolant temperature sensor harness connector.
5. Start engine and rev it (2,000 to 3,000 rpm) two or three times under no-load, then run engine at idle speed.
6. Check "CO" %.

   Idle CO: 0.7 – 9.9 % and engine runs smoothly.

7. After checking "CO" %, turn ignition switch "OFF", disconnect the resistor from the terminals of engine coolant temperature sensor harness connector, and then connect engine coolant temperature sensor harness connector to engine coolant temperature sensor.

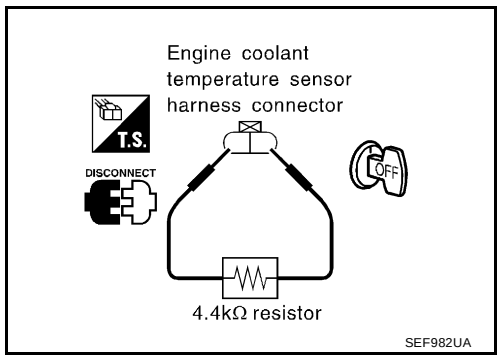

OK or NG

OK >> GO TO 31.
NG >> GO TO 30.

30. RECONNECT HEATED OXYGEN SENSOR 1 HARNESS CONNECTOR

1. Turn ignition switch "OFF".
2. Reconnect heated oxygen sensor 1 harness connector.

>> GO TO 34.

31. REPLACE HEATED OXYGEN SENSOR 1

1. Stop engine.
2. Replace heated oxygen sensor 1 on the malfunctioning bank.

With CONSULT-II>>GO TO 32.
Without CONSULT-II>>GO TO 33.

32. CHECK HEATED OXYGEN SENSOR 1 (BANK 1)/(BANK 2) SIGNAL

With CONSULT-II

1. Start engine and warm it up until engine coolant temperature indicator points the middle of gauge.
2. See "HO2S1 MNTR (B1)/(B2)" in "DATA MONITOR" mode.
3. Running engine at 2,000 rpm under no-load (The engine is warmed up to normal operating temperature.), check that the monitor fluctuates between LEAN and RICH more than 5 times during 10 seconds.

   1 time: RICH → LEAN → RICH
   2 times: RICH → LEAN → RICH → LEAN → RICH

OK or NG

OK >> GO TO 4.
NG >> GO TO 34.

33. CHECK HEATED OXYGEN SENSOR 1 (BANK 1)/(BANK 2) SIGNAL

Without CONSULT-II

1. Set ECM to Self-diagnostic mode II (Heated oxygen sensor 1 monitor). Refer to EC-690, "HOW TO SWITCH DIAGNOSTIC TEST MODE" .
2. Switch the monitored sensor to the malfunctioning bank. Refer to EC-691, "How to Switch Monitored Sensor From Bank 1 to Bank 2 or Vice Versa" .
3. Running engine at 2,000 rpm under no-load (The engine is warmed up to normal operating temperature.), check that the MIL comes on more than 5 times during 10 seconds.

OK or NG

OK >> GO TO 4.
NG >> GO TO 34.

34. DETECT MALFUNCTIONING PART

Check the following.

- Check fuel pressure regulator and repair or replace if necessary. Refer to EC-671, "Fuel Pressure Check" .
- Check mass air flow sensor and its circuit, and repair or replace if necessary. Refer to EC-790 , EC-798 and EC-1041 .
- Check injector and its circuit, and repair or replace if necessary. Refer to EC-1230 .
- Check engine coolant temperature sensor and its circuit, and repair or replace if necessary. Refer to EC-811 and EC-816 .

OK or NG

OK >> GO TO 36.
NG >> 1. Repair or replace.
2. GO TO 35.

35. ERASE UNNECESSARY DTC

After this inspection, unnecessary DTC might be displayed.
Erase the stored memory in ECM and TCM. Refer to EC-687, "HOW TO ERASE EMISSION-RELATED DIAGNOSTIC INFORMATION" and AT-38, "HOW TO ERASE DTC" .

>> GO TO 4.

36. CHECK ECM FUNCTION

1. Substitute another known-good ECM to check ECM function. (ECM may be the cause of a problem, but this is the rarely the case.)
2. Perform initialization of NVIS (NATS) system and registration of NVIS (NATS) ignition key IDs. Refer to EC-689, "NVIS (Nissan Vehicle Immobilizer System — NATS)" .

>> GO TO 4.

Accelerator Pedal Released Position Learning

UBS0035C

DESCRIPTION

“Accelerator Pedal Released Position Learning” is an operation to learn the fully released position of the accelerator pedal by monitoring the accelerator pedal position sensor output signal. It must be performed each time harness connector of accelerator pedal position sensor or ECM is disconnected.

OPERATION PROCEDURE

1. Make sure that accelerator pedal is fully released.
2. Turn ignition switch “ON” and wait at least 2 seconds.
3. Turn ignition switch “OFF” wait at least 10 seconds.
4. Turn ignition switch “ON” and wait at least 2 seconds.

5. Turn ignition switch “OFF” wait at least 10 seconds.

Throttle Valve Closed Position Learning

UBS0035D

DESCRIPTION

“Throttle Valve Closed Position Learning” is an operation to learn the fully closed position of the throttle valve by monitoring the throttle position sensor output signal. It must be performed each time harness connector of electric throttle control actuator or ECM is disconnected.

OPERATION PROCEDURE

1. Make sure that accelerator pedal is fully released.
2. Turn ignition switch “ON”.
3. Turn ignition switch “OFF” wait at least 10 seconds.
   Make sure that throttle valve moves during above 10 seconds by confirming the operating sound.

Idle Air Volume Learning

UBS0035E

DESCRIPTION

“Idle Air Volume Learning” is an operation to learn the idle air volume that keeps each engine within the specific range. It must be performed under any of the following conditions:

- Each time electric throttle control actuator or ECM is replaced.
- Idle speed or ignition timing is out of specification.

PREPARATION

Before performing “Idle Air Volume Learning”, make sure that all of the following conditions are satisfied. Learning will be cancelled if any of the following conditions are missed for even a moment.

- Battery voltage: More than 12.9V (At idle)
- Engine coolant temperature: 70 - 100°C (158 - 212°F)
- PNP switch: ON
- Electric load switch: OFF
  (Air conditioner, headlamp, rear window defogger)
  On vehicles equipped with daytime light systems, set lighting switch to the 1st position to light only small lamps.
- Steering wheel: Neutral (Straight-ahead position)
- Vehicle speed: Stopped
- Transmission: Warmed-up
  For A/T models with CONSULT-II, drive vehicle until “FLUID TEMP SE” in “DATA MONITOR” mode of “A/T” system indicates less than 0.9V.
  For A/T models without CONSULT-II and M/T models, drive vehicle for 10 minutes.

OPERATION PROCEDURE

With CONSULT-II

1. Perform EC-668, "Accelerator Pedal Released Position Learning" .
2. Perform EC-669, "Throttle Valve Closed Position Learning" .
3. Start engine and warm it up to normal operating temperature.
4. Check that all items listed under the topic “PRE-CONDITIONING” (previously mentioned) are in good order.
5. Select “IDLE AIR VOL LEARN” in “WORK SUPPORT” mode.

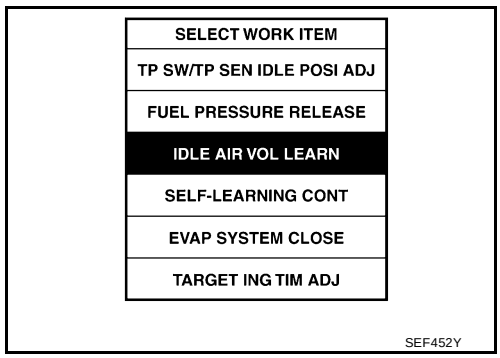

6. Touch “START” and wait 20 seconds.

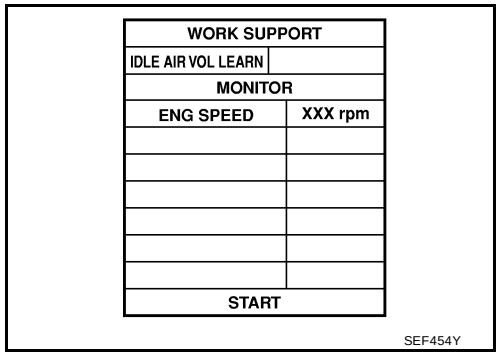

7. Make sure that “CMPLT” is displayed on CONSULT-II screen. If “INCMP” is displayed, “Idle Air Volume Learning” will not be carried out successfully. In this case, find the cause of the problem by referring to the “Diagnostic Procedure” below.
8. Rev up the engine two or three times and make sure that idle speed and ignition timing are within the specifications.

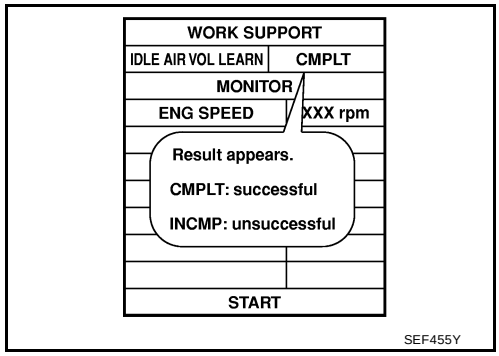

ITEM	SPECIFICATION
Idle speed	M/T: 700±50 rpm A/T: 700±50 rpm (in “P” or “N” position)
Ignition timing	M/T: 15±5° BTDC A/T: 15±5° BTDC (in “P” or “N” position)

Without CONSULT-II

NOTE:

- **It is better to count the time accurately with a clock.**
- **It is impossible to switch the diagnostic mode when an accelerator pedal position sensor circuit has a malfunction.**

1. Perform EC-668, "Accelerator Pedal Released Position Learning" .
2. Perform EC-669, "Throttle Valve Closed Position Learning" .
3. Start engine and warm it up to normal operating temperature.
4. Check that all items listed under the topic “PRE-CONDITIONING” (previously mentioned) are in good order.
5. Turn ignition switch “OFF” and wait at least 10 seconds.
6. Confirm that accelerator pedal is fully released, turn ignition switch “ON” and wait 3 seconds.
7. Repeat the following procedure quickly five times within 5 seconds.

a. Fully depress the accelerator pedal.
b. Fully release the accelerator pedal.

8. Wait 7 seconds, fully depress the accelerator pedal and keep it for approx. 20 seconds until the MIL stops blinking and turned ON.
9. Fully release the accelerator pedal within 3 seconds after the MIL goes off.
10. Start engine and let it idle.

11. Wait 20 seconds.

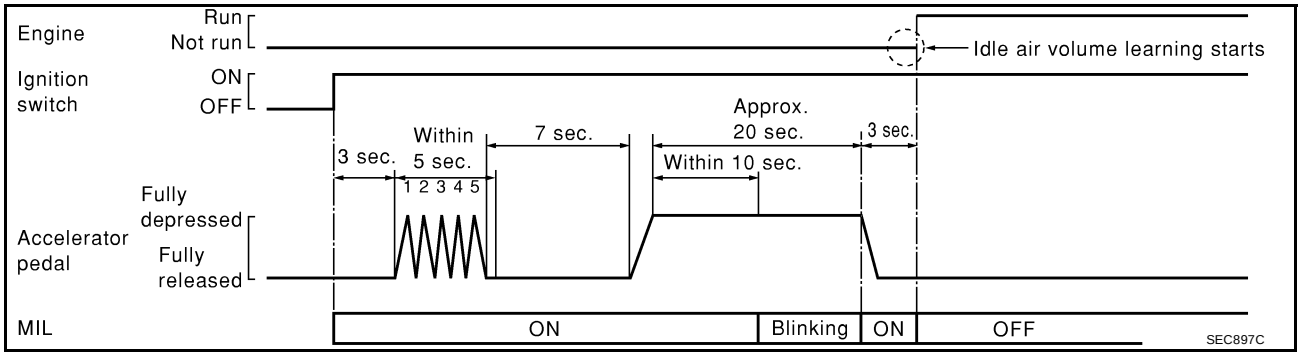

12. Rev up the engine two or three times and make sure that idle speed and ignition timing are within the specifications.

ITEM	SPECIFICATION
Idle speed	M/T: 700±50 rpm A/T: 700±50 rpm (in “P” or “N” position)
Ignition timing	M/T: 15±5° BTDC A/T: 15±5° BTDC (in “P” or “N” position)

13. If idle speed and ignition timing are not within the specification, the result will be incomplete. In this case, find the cause of the problem by referring to the “DIAGNOSTIC PROCEDURE” below.

DIAGNOSTIC PROCEDURE

If idle air volume learning cannot be performed successfully, proceed as follows:

1. **Check that throttle valve is fully closed.**
2. **Check PCV valve operation.**
3. **Check that downstream of throttle valve is free from air leakage.**
4. **When the above three items check out OK, engine component parts and their installation condition are questionable. Check and eliminate the cause of the problem.**
   It is useful to perform **EC-752, "TROUBLE DIAGNOSIS - SPECIFICATION VALUE"** **.**
5. **If any of the following conditions occur after the engine has started, eliminate the cause of the problem and perform “Idle air volume learning” all over again:**

- **Engine stalls.**
- **Erroneous idle.**

Fuel Pressure Check

UBS0035F

FUEL PRESSURE RELEASE

Before disconnecting fuel line, release fuel pressure from fuel line to eliminate danger.

With CONSULT-II

1. Turn ignition switch “ON”.
2. Perform “FUEL PRESSURE RELEASE” in “WORK SUPPORT” mode with CONSULT-II.
3. Start engine.
4. After engine stalls, crank it two or three times to release all fuel pressure.
5. Turn ignition switch “OFF”.

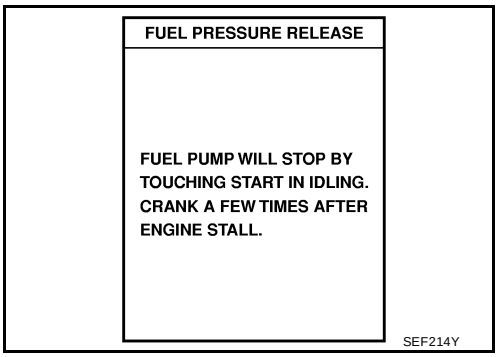

Without CONSULT-II

1. Remove fuel pump fuse located in fuse box.
2. Start engine.
3. After engine stalls, crank it two or three times to release all fuel pressure.
4. Turn ignition switch “OFF”.
5. Reinstall fuel pump fuse after servicing fuel system.

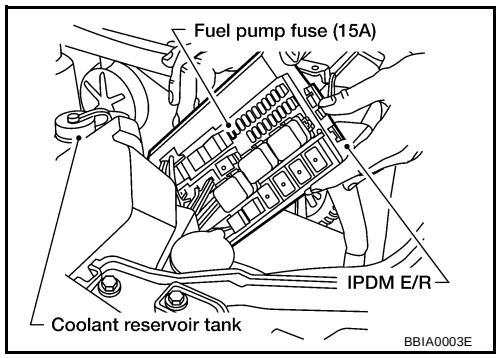

FUEL PRESSURE CHECK

NOTE:

- **Use Fuel Pressure Gauge Kit (J-44321) to check fuel pressure.**
- **Do not perform fuel pressure check with electrical system operating (i.e. lights, rear defogger, A/C, etc.). Fuel pressure gauge may indicate false readings due to varying engine loads and changes in manifold vacuum.**

1. Release fuel pressure to zero. Refer to EC-671, "FUEL PRESSURE RELEASE" .
2. Install the inline fuel quick disconnect fitting between the connection of the fuel feed hose (from tank) and the fuel hose (to engine).
3. Connect the fuel pressure test gauge (quick connect adapter hose) to the quick disconnect fitting.
4. Turn ignition switch ON and check for fuel leakage.
5. Start engine and check for fuel leakage.
6. Read the indication of fuel pressure gauge.

   At idling: Approximately 350 kPa (3.7 kg/cm^2 , 51 psi)

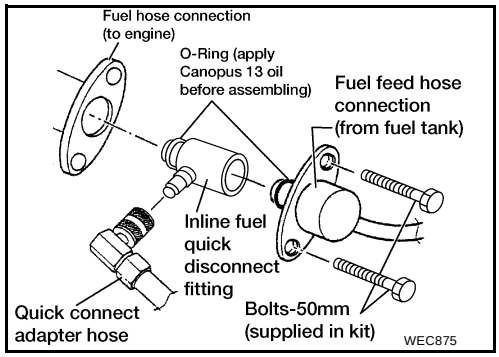

7. If result is unsatisfactory, go to next step.
8. Check the following.
   - Fuel hoses and fuel tubes for clogging
   - Fuel filter for clogging
   - Fuel pump
   - Fuel pressure regulator for clogging

   If OK, replace fuel pressure regulator.
   If NG, repair or replace.

ON BOARD DIAGNOSTIC (OBD) SYSTEM

PFP:00028

Introduction

UBS0035G

The ECM has an on board diagnostic system, which detects malfunctions related to engine sensors or actuators. The ECM also records various emission-related diagnostic information including:

Emission-related diagnostic information	SAE Mode
Diagnostic Trouble Code (DTC)	Mode 3 of SAE J1979
Freeze Frame data	Mode 2 of SAE J1979
System Readiness Test (SRT) code	Mode 1 of SAE J1979
1st Trip Diagnostic Trouble Code (1st Trip DTC)	Mode 7 of SAE J1979
1st Trip Freeze Frame data	
Test values and Test limits	Mode 6 of SAE J1979
Calibration ID	Mode 9 of SAE J1979

The above information can be checked using procedures listed in the table below.

×: Applicable —: Not applicable

	DTC	1st trip DTC	Freeze Frame data	1st trip Freeze Frame data	SRT code	Test value
CONSULT-II	×	×	×	×	×	—
GST	×	×*1	×	—	×	×
ECM	×	×*2	—	—	—	—

*1: 1st trip DTCs for self-diagnoses concerning SRT items cannot be shown on the GST display.
*2: When DTC and 1st trip DTC simultaneously appear on the display, they cannot be clearly distinguished from each other.

The malfunction indicator lamp (MIL) on the instrument panel lights up when the same malfunction is detected in two consecutive trips (Two trip detection logic), or when the ECM enters fail-safe mode. (Refer to EC-703 .)

Two Trip Detection Logic

UBS0035H

When a malfunction is detected for the first time, 1st trip DTC and 1st trip Freeze Frame data are stored in the ECM memory. The MIL will not light up at this stage. <1st trip>
If the same malfunction is detected again during the next drive, the DTC and Freeze Frame data are stored in the ECM memory, and the MIL lights up. The MIL lights up at the same time when the DTC is stored. <2nd trip> The “trip” in the “Two Trip Detection Logic” means a driving mode in which self-diagnosis is performed during vehicle operation. Specific on board diagnostic items will cause the ECM to light up or blink the MIL, and store DTC and Freeze Frame data, even in the 1st trip, as shown below.

×: Applicable —: Not applicable

Items	MIL				DTC		1st trip DTC	
	1st trip		2nd trip		1st trip displaying	2nd trip displaying	1st trip displaying	2nd trip displaying
	Blinking	Lighting up	Blinking	Lighting up				
Misfire (Possible three way catalyst damage) — DTC: P0300 - P0306 is being detected	×	—	—	—	—	—	×	—
Misfire (Possible three way catalyst damage) — DTC: P0300 - P0306 is being detected	—	—	×	—	—	×	—	—
Throttle control motor — DTC P1128	—	×	—	—	×	—	—	—
Closed loop control — DTC: P1148, P1168	—	×	—	—	×	—	—	—
Fail-safe items (Refer to EC-703 .)	—	×	—	—	×*1	—	×*1	—
Except above	—	—	—	×	—	×	×	—

*1: Except “ECM”

Emission-related Diagnostic Information

UBS0035I

EMISSION-RELATED DIAGNOSTIC INFORMATION ITEMS

Items (CONSULT-II screen terms)	DTC*1 *2		SRT code	Test value/ Test limit (GST only)	1st trip DTC	Reference page
	CONSULT-II GST	ECM				
CAN COMM CIRCUIT	U1000	1000*6	—	—	×	EC-763
CAN COMM CIRCUIT	U1001	1001*6	—	—	×	EC-763
NO DTC IS DETECTED. FURTHER TESTING MAY BE REQUIRED.	**P0000**	**0000**	—	—	—	—
INT/V TIM CONT-B1	P0011	0011	—	—	×	EC-766
INT/V TIM CONT-B2	P0021	0021	—	—	×	EC-766
HO2S1 HTR (B1)	P0031	0031	×	×	×*5	EC-774
HO2S1 HTR (B1)	P0032	0032	×	×	×*5	EC-774
HO2S2 HTR (B1)	P0037	0037	×	×	×*5	EC-782
HO2S2 HTR (B1)	P0038	0038	×	×	×*5	EC-782
HO2S1 HTR (B2)	P0051	0051	×	×	×*5	EC-774
HO2S1 HTR (B2)	P0052	0052	×	×	×*5	EC-774
HO2S2 HTR (B2)	P0057	0057	×	×	×*5	EC-782
HO2S2 HTR (B2)	P0058	0058	×	×	×*5	EC-782
MAF SEN/CIRCUIT	P0101	0101	—	—	×	EC-790
MAF SEN/CIRCUIT*3	P0102	0102	—	—	—	EC-798
MAF SEN/CIRCUIT*3	P0103	0103	—	—	—	EC-798
ABSL PRES SEN/CIRC	P0107	0107	—	—	×	EC-804
ABSL PRES SEN/CIRC	P0108	0108	—	—	×	EC-804
IAT SEN/CIRCUIT	P0112	0112	—	—	×	EC-806
IAT SEN/CIRCUIT	P0113	0113	—	—	×	EC-806
ECT SEN/CIRCUIT*3	P0117	0117	—	—	—	EC-811
ECT SEN/CIRCUIT*3	P0118	0118	—	—	—	EC-811
ECT SENSOR	P0125	0125	—	—	×	EC-816
IAT SENSOR	P0127	0127	—	—	×	EC-820
THERMSTAT FNCTN	P0128	0128	—	—	×	EC-825
HO2S1 (B1)	P0132	0132	×	×	×*5	EC-827
HO2S1 (B1)	P0133	0133	×	×	×*5	EC-836
HO2S1 (B1)	P0134	0134	×	×	×*5	EC-847
HO2S2 (B1)	P0138	0138	×	×	×*5	EC-857
HO2S2 (B1)	P0139	0139	×	×	×*5	EC-867
HO2S1 (B2)	P0152	0152	×	×	×*5	EC-827
HO2S1 (B2)	P0153	0153	×	×	×*5	EC-836
HO2S1 (B2)	P0154	0154	×	×	×*5	EC-847
HO2S2 (B2)	P0158	0158	×	×	×*5	EC-857
HO2S2 (B2)	P0159	0159	×	×	×*5	EC-867
FUEL SYS-LEAN-B1	P0171	0171	—	—	×	EC-877

Items (CONSULT-II screen terms)	DTC*1 *2		SRT code	Test value/ Test limit (GST only)	1st trip DTC	Reference page
	CONSULT-II GST	ECM				
FUEL SYS-RICH-B1	P0172	0172	—	—	×	EC-885
FUEL SYS-LEAN-B2	P0174	0174	—	—	×	EC-877
FUEL SYS-RICH-B2	P0175	0175	—	—	×	EC-885
FTT SENSOR	P0181	0181	—	—	×	EC-892
FTT SEN/CIRCUIT	P0182	0182	—	—	×	EC-897
FTT SEN/CIRCUIT	P0183	0183	—	—	×	EC-897
TP SENSOR*3	P0221	0221	—	—	—	EC-901
TP SEN 1/CIRC*3	P0222	0222	—	—	—	EC-908
TP SEN 1/CIRC*3	P0223	0223	—	—	—	EC-908
APP SENSOR*3	P0226	0226	—	—	—	EC-915
APP SEN 1/CIRC*3	P0227	0227	—	—	—	EC-922
APP SEN 1/CIRC*3	P0228	0228	—	—	—	EC-922
MULTI CYL MISFIRE	P0300	0300	—	—	×	EC-928
CYL 1 MISFIRE	P0301	0301	—	—	×	EC-928
CYL 2 MISFIRE	P0302	0302	—	—	×	EC-928
CYL 3 MISFIRE	P0303	0303	—	—	×	EC-928
CYL 4 MISFIRE	P0304	0304	—	—	×	EC-928
CYL 5 MISFIRE	P0305	0305	—	—	×	EC-928
CYL 6 MISFIRE	P0306	0306	—	—	×	EC-928
KNOCK SEN/CIRC-B1	P0327	0327	—	—	×	EC-934
KNOCK SEN/CIRC-B1	P0328	0328	—	—	×	EC-934
CKP SEN/CIRCUIT	P0335	0335	—	—	×	EC-938
CMP SEN/CIRC-B1	P0340	0340	—	—	×	EC-945
CMP SEN/CIRC-B2	P0345	0345	—	—	×	EC-945
TW CATALYST SYS-B1	P0420	0420	×	×	×*5	EC-953
TW CATALYST SYS-B2	P0430	0430	×	×	×*5	EC-953
EVAP PURG FLOW/MON	P0441	0441	×	×	×*5	EC-957
EVAP SMALL LEAK	P0442	0442	×	×	×*5	EC-963
PURG VOLUME CONT/V	P0444	0444	—	—	×	EC-972
PURG VOLUME CONT/V	P0445	0445	—	—	×	EC-972
VENT CONTROL VALVE	P0447	0447	—	—	×	EC-978
EVAP SYS PRES SEN	P0452	0452	—	—	×	EC-985
EVAP SYS PRES SEN	P0453	0453	—	—	×	EC-991
EVAP VERY SML LEAK	P0456	0456	×*4	×	×*5	EC-998
FUEL LEV SEN SLOSH	P0460	0460	—	—	×	EC-1007
FUEL LEVEL SENSOR	P0461	0461	—	—	×	EC-1012
FUEL LEVL SEN/CIRC	P0462	0462	—	—	×	EC-1014
FUEL LEVL SEN/CIRC	P0463	0463	—	—	×	EC-1014
VEH SPEED SEN/CIRC*6	P0500	0500	—	—	×	EC-1019
ISC SYSTEM	P0506	0506	—	—	×	EC-1021
ISC SYSTEM	P0507	0507	—	—	×	EC-1023

Items (CONSULT-II screen terms)	DTC*1 *2		SRT code	Test value/ Test limit (GST only)	1st trip DTC	Reference page
	CONSULT-II GST	ECM				
PW ST P SEN/CIRC	P0550	0550	—	—	×	EC-1025
ECM	P0605	0605	—	—	×	EC-1030
MIL/CIRC	P0650	0650	—	—	×	EC-1033
PNP SW/CIRC	P0705	0705	—	—	×	AT-103
ATF TEMP SEN/CIRC	P0710	0710	—	—	×	AT-109
VEH SPD SEN/CIR AT*6	P0720	0720	—	—	×	AT-115
ENGINE SPEED SIG	P0725	0725	—	—	×	AT-120
A/T 1ST GR FNCTN	P0731	0731	—	—	×	AT-124
A/T 2ND GR FNCTN	P0732	0732	—	—	×	AT-129
A/T 3RD GR FNCTN	P0733	0733	—	—	×	AT-134
A/T 4TH GR FNCTN	P0734	0734	—	—	×	AT-139
TCC SOLENOID/CIRC	P0740	0740	—	—	×	AT-146
A/T TCC S/V FNCTN	P0744	0744	—	—	×	AT-151
L/PRESS SOL/CIRC	P0745	0745	—	—	×	AT-159
SFT SOL A/CIRC	P0750	0750	—	—	×	AT-165
SFT SOL B/CIRC	P0755	0755	—	—	×	AT-170
ECM BACK UP/CIRC	P1065	1065	—	—	×	EC-1037
MAF SENSOR	P1102	1102	—	—	×	EC-1041
ETC ACTR*3	P1121	1121	—	—	—	EC-1047
ETC FUNCTION/CIRC*3	P1122	1122	—	—	—	EC-1049
ETC MOT PWR	P1124	1124	—	—	×	EC-1056
ETC MOT PWR*3	P1126	1126	—	—	—	EC-1056
ETC MOT	P1128	1128	—	—	—	EC-1061
HO2S1 (B1)	P1143	1143	×	×	×*5	EC-1066
HO2S1 (B1)	P1144	1144	×	×	×*5	EC-1072
HO2S2 (B1)	P1146	1146	×	×	×*5	EC-1079
HO2S2 (B1)	P1147	1147	×	×	×*5	EC-1089
CLOSED LOOP-B1	P1148	1148	—	—	—	EC-1099
HO2S1 (B2)	P1163	1163	×	×	×*5	EC-1066
HO2S1 (B2)	P1164	1164	×	×	×*5	EC-1072
HO2S2 (B2)	P1166	1166	×	×	×*5	EC-1079
HO2S2 (B2)	P1167	1167	×	×	×*5	EC-1089
CLOSED LOOP-B2	P1168	1168	—	—	—	EC-1099
TCS C/U FUNCTN	P1211	1211	—	—	×	EC-1101
TCS/CIRC	P1212	1212	—	—	×	EC-1102
ENG OVER TEMP	P1217	1217	—	—	×	EC-1103
TP SEN 2/CIRC*3	P1223	1223	—	—	—	EC-1114
TP SEN 2/CIRC*3	P1224	1224	—	—	—	EC-1114
CTP LEARNING	P1225	1225	—	—	×	EC-1121
CTP LEARNING	P1226	1226	—	—	×	EC-1123

Items (CONSULT-II screen terms)	DTC*1 *2		SRT code	Test value/ Test limit (GST only)	1st trip DTC	Reference page
	CONSULT-II GST	ECM				
APP SEN 2/CIRC*3	P1227	1227	—	—	—	EC-1125
APP SEN 2/CIRC+3	P1228	1228	—	—	—	EC-1125
SENSOR POWER/CIRC*3	P1229	1229	—	—	—	EC-1131
PURG VOLUME CONT/V	P1444	1444	—	—	×	EC-1135
VENT CONTROL VALVE	P1446	1446	—	—	×	EC-1143
VENT CONTROL VALVE	P1448	1448	—	—	×	EC-1149
FUEL LEVEL SEN/CIRC	P1464	1464	—	—	×	EC-1157
VC/V BYPASS/V	P1490	1490	—	—	×	EC-1160
VC CUT/V BYPASS/V	P1491	1491	—	—	×	EC-1166
ASCD SW	P1564	1564	—	—	×	EC-1174
ASCD BRAKE SW	P1572	1572	—	—	×	EC-1181
ASCD VHL SPD SEN	P1574	1574	—	—	×	EC-1192
TPV SEN/CIRC A/T	P1705	1705	—	—	×	AT-175
P-N POS SW/CIRCUIT	P1706	1706	—	—	×	EC-1194
O/R CLTCH SOL/CIRC	P1760	1760	—	—	×	AT-180
VIAS S/V CIRC	P1800	1800	—	—	×	EC-1199
BRAKE SW/CIRCUIT	P1805	1805	—	—	×	EC-1205

*1: 1st trip DTC No. is the same as DTC No.
*2: These numbers are prescribed by SAE J2012.
*3: When the fail-safe operation occurs, the MIL illuminates.
*4: SRT code will not be set if the self-diagnostic result is NG.
*5: These are not displayed with GST.
*6: When the fail-safe operations for both self-diagnoses occur at the same time, the MIL illuminates.

NOTE:
Regarding L31 models, "B1" indicates bank 1, "B2" indicates bank 2.

DTC AND 1ST TRIP DTC

The 1st trip DTC (whose number is the same as the DTC number) is displayed for the latest self-diagnostic result obtained. If the ECM memory was cleared previously, and the 1st trip DTC did not reoccur, the 1st trip DTC will not be displayed.
If a malfunction is detected during the 1st trip, the 1st trip DTC is stored in the ECM memory. The MIL will not light up (two trip detection logic). If the same malfunction is not detected in the 2nd trip (meeting the required driving pattern), the 1st trip DTC is cleared from the ECM memory. If the same malfunction is detected in the 2nd trip, both the 1st trip DTC and DTC are stored in the ECM memory and the MIL lights up. In other words, the DTC is stored in the ECM memory and the MIL lights up when the same malfunction occurs in two consecutive trips. If a 1st trip DTC is stored and a non-diagnostic operation is performed between the 1st and 2nd trips, only the 1st trip DTC will continue to be stored. For malfunctions that blink or light up the MIL during the 1st trip, the DTC and 1st trip DTC are stored in the ECM memory.
Procedures for clearing the DTC and the 1st trip DTC from the ECM memory are described in EC-687, "HOW TO ERASE EMISSION-RELATED DIAGNOSTIC INFORMATION" .
For malfunctions in which 1st trip DTCs are displayed, refer to EC-674, "EMISSION-RELATED DIAGNOSTIC INFORMATION ITEMS" . These items are required by legal regulations to continuously monitor the system/component. In addition, the items monitored non-continuously are also displayed on CONSULT-II.
1st trip DTC is specified in Mode 7 of SAE J1979. 1st trip DTC detection occurs without lighting up the MIL and therefore does not warn the driver of a problem. However, 1st trip DTC detection will not prevent the vehicle from being tested, for example during Inspection/Maintenance (I/M) tests.
When a 1st trip DTC is detected, check, print out or write down and erase (1st trip) DTC and Freeze Frame data as specified in “Work Flow” procedure Step II, refer to EC-699, "WORK FLOW" . Then perform “DTC Confirmation Procedure” or “Overall Function Check” to try to duplicate the problem. If the malfunction is duplicated, the item requires repair.

How to Read DTC and 1st Trip DTC

DTC and 1st trip DTC can be read by the following methods.

With CONSULT-II

With GST

CONSULT-II or GST (Generic Scan Tool) Examples: P0340, P1148, P1706, etc.
These DTCs are prescribed by SAE J2012.
(CONSULT-II also displays the malfunctioning component or system.)

No Tools

The number of blinks of the MIL in the Diagnostic Test Mode II (Self-Diagnostic Results) indicates the DTC. Example: 0340, 1148, 1706, etc.
These DTCs are controlled by NISSAN.

- **1st trip DTC No. is the same as DTC No.**
- **Output of a DTC indicates a malfunction. However, GST or the Diagnostic Test Mode II do not indicate whether the malfunction is still occurring or has occurred in the past and has returned to normal. CONSULT-II can identify malfunction status as shown below. Therefore, using CONSULT-II (if available) is recommended.**

A sample of CONSULT-II display for DTC and 1st trip DTC is shown below. DTC or 1st trip DTC of a malfunction is displayed in SELF-DIAGNOSTIC RESULTS mode of CONSULT-II. Time data indicates how many times the vehicle was driven after the last detection of a DTC.
If the DTC is being detected currently, the time data will be “0”.
If a 1st trip DTC is stored in the ECM, the time data will be “[1t]”.

DTC display

SELF DIAG RESULTS	
DTC RESULTS	TIME
MAF SEN/CIRCUIT [P0101]	0

1st trip DTC display

SELF DIAG RESULTS	
DTC RESULTS	TIME
MAF SEN/CIRCUIT [P0101]	1t

SEC745C

FREEZE FRAME DATA AND 1ST TRIP FREEZE FRAME DATA

The ECM records the driving conditions such as fuel system status, calculated load value, engine coolant temperature, short term fuel trim, long term fuel trim, engine speed, vehicle speed, base fuel schedule and intake air temperature at the moment a malfunction is detected.
Data which are stored in the ECM memory, along with the 1st trip DTC, are called 1st trip freeze frame data. The data, stored together with the DTC data, are called freeze frame data and displayed on CONSULT-II or GST. The 1st trip freeze frame data can only be displayed on the CONSULT-II screen, not on the GST. For details, see EC-734, "Freeze Frame Data and 1st Trip Freeze Frame Data" .
Only one set of freeze frame data (either 1st trip freeze frame data or freeze frame data) can be stored in the ECM. 1st trip freeze frame data is stored in the ECM memory along with the 1st trip DTC. There is no priority for 1st trip freeze frame data and it is updated each time a different 1st trip DTC is detected. However, once freeze frame data (2nd trip detection/MIL on) is stored in the ECM memory, 1st trip freeze frame data is no longer stored. Remember, only one set of freeze frame data can be stored in the ECM. The ECM has the following priorities to update the data.

Priority	Items	
1	Freeze frame data	Misfire — DTC: P0300 - P0306 Fuel Injection System Function — DTC: P0171, P0172, P0174, P0175
2		Except the above items (Includes A/T related items)
3	1st trip freeze frame data	

For example, the EGR malfunction (Priority: 2) was detected and the freeze frame data was stored in the 2nd trip. After that when the misfire (Priority: 1) is detected in another trip, the freeze frame data will be updated from the EGR malfunction to the misfire. The 1st trip freeze frame data is updated each time a different malfunction is detected. There is no priority for 1st trip freeze frame data. However, once freeze frame data is stored in the ECM memory, 1st trip freeze data is no longer stored (because only one freeze frame data or 1st

trip freeze frame data can be stored in the ECM). If freeze frame data is stored in the ECM memory and freeze frame data with the same priority occurs later, the first (original) freeze frame data remains unchanged in the ECM memory.
Both 1st trip freeze frame data and freeze frame data (along with the DTCs) are cleared when the ECM memory is erased. Procedures for clearing the ECM memory are described in EC-674, "EMISSION-RELATED DIAGNOSTIC INFORMATION ITEMS" .

SYSTEM READINESS TEST (SRT) CODE

System Readiness Test (SRT) code is specified in Mode 1 of SAE J1979.
As part of an enhanced emissions test for Inspection & Maintenance (I/M), certain states require the status of SRT be used to indicate whether the ECM has completed self-diagnosis of major emission systems and components. Completion must be verified in order for the emissions inspection to proceed.
If a vehicle is rejected for a State emissions inspection due to one or more SRT items indicating “INCMP”, use the information in this Service Manual to set the SRT to “CMPLT”.
In most cases the ECM will automatically complete its self-diagnosis cycle during normal usage, and the SRT status will indicate “CMPLT” for each application system. Once set as “CMPLT”, the SRT status remains “CMPLT” until the self-diagnosis memory is erased.
Occasionally, certain portions of the self-diagnostic test may not be completed as a result of the customer's normal driving pattern; the SRT will indicate “INCMP” for these items.

NOTE:
The SRT will also indicate “INCMP” if the self-diagnosis memory is erased for any reason or if the ECM memory power supply is interrupted for several hours.
If, during the state emissions inspection, the SRT indicates “CMPLT” for all test items, the inspector will continue with the emissions test. However, if the SRT indicates “INCMP” for one or more of the SRT items the vehicle is returned to the customer untested.

NOTE:
If MIL is “ON” during the state emissions inspection, the vehicle is also returned to the customer untested even though the SRT indicates “CMPLT” for all test items. Therefore, it is important to check SRT (“CMPLT”) and DTC (No DTCs) before the inspection.

SRT Item

The table below shows required self-diagnostic items to set the SRT to “CMPLT”.

SRT item (CONSULT-II indication)	Performance Priority*1	Required self-diagnostic items to set the SRT to “CMPLT”	Corresponding DTC No.
CATALYST	2	Three way catalyst function	P0420, P0430
EVAP SYSTEM	1	EVAP control system	P0442
	2	EVAP control system	P0456
	2	EVAP control system purge flow monitoring	P0441
HO2S	2	Heated oxygen sensor 1	P0132, P0152
		Heated oxygen sensor 1	P0133, P0153
		Heated oxygen sensor 1	P0134, P0154
		Heated oxygen sensor 1	P1143, P1163
		Heated oxygen sensor 1	P1144, P1164
		Heated oxygen sensor 2	P0138, P0158
		Heated oxygen sensor 2	P0139, P0159
		Heated oxygen sensor 2	P1146, P1166
		Heated oxygen sensor 2	P1147, P1167
HO2S HTR	2	Heated oxygen sensor 1 heater	P0031, P0032, P0051, P0052
		Heated oxygen sensor 2 heater	P0037, P0038, P0057, P0058

*1: If completion of several SRTs is required, perform driving patterns (DTC confirmation procedure), one by one based on the priority for models with CONSULT-II.

SRT Set Timing

SRT is set as “CMPLT” after self-diagnosis has been performed one or more times. Completion of SRT is done regardless of whether the result is OK or NG. The set timing is different between OK and NG results and is shown in the table below.

Self-diagnosis result		Example				
		Diagnosis	Ignition cycle ← ON → OFF	← ON → OFF	← ON → OFF	← ON →
All OK	Case 1	P0400	OK (1)	— (1)	OK (2)	— (2)
		P0402	OK (1)	— (1)	— (1)	OK (2)
		P1402	OK (1)	OK (2)	— (2)	— (2)
		SRT of EGR	“CMPLT”	“CMPLT”	“CMPLT”	“CMPLT”
	Case 2	P0400	OK (1)	— (1)	— (1)	— (1)
		P0402	— (0)	— (0)	OK (1)	— (1)
		P1402	OK (1)	OK (2)	— (2)	— (2)
		SRT of EGR	“INCMP”	“INCMP”	“CMPLT”	“CMPLT”
NG exists	Case 3	P0400	OK	OK	—	—
		P0402	—	—	—	—
		P1402	NG	—	NG	NG (Consecutive NG)
		(1st trip) DTC	1st trip DTC	—	1st trip DTC	DTC (= MIL “ON”)
		SRT of EGR	“INCMP”	“INCMP”	“INCMP”	“CMPLT”

OK: Self-diagnosis is carried out and the result is OK.
NG: Self-diagnosis is carried out and the result is NG.

—: Self-diagnosis is not carried out.

When all SRT related self-diagnoses showed OK results in a single cycle (Ignition OFF-ON-OFF), the SRT will indicate “CMPLT”. → Case 1 above
When all SRT related self-diagnoses showed OK results through several different cycles, the SRT will indicate “CMPLT” at the time the respective self-diagnoses have at least one OK result. → Case 2 above
If one or more SRT related self-diagnoses showed NG results in 2 consecutive cycles, the SRT will also indicate “CMPLT”. → Case 3 above
The table above shows that the minimum number of cycles for setting SRT as “INCMP” is one (1) for each self-diagnosis (Case 1 & 2) or two (2) for one of self-diagnoses (Case 3). However, in preparation for the state emissions inspection, it is unnecessary for each self-diagnosis to be executed twice (Case 3) for the following reasons:

- The SRT will indicate “CMPLT” at the time the respective self-diagnoses have one (1) OK result.
- The emissions inspection requires “CMPLT” of the SRT only with OK self-diagnosis results.
- When, during SRT driving pattern, 1st trip DTC (NG) is detected prior to “CMPLT” of SRT, the self-diagnosis memory must be erased from ECM after repair.
- If the 1st trip DTC is erased, all the SRT will indicate “INCMP”.

  NOTE:
  SRT can be set as “CMPLT” together with the DTC(s). Therefore, DTC check must always be carried out prior to the state emission inspection even though the SRT indicates “CMPLT”.

SRT Service Procedure

If a vehicle has failed the state emissions inspection due to one or more SRT items indicating “INCMP”, review the flowchart diagnostic sequence on the next page.

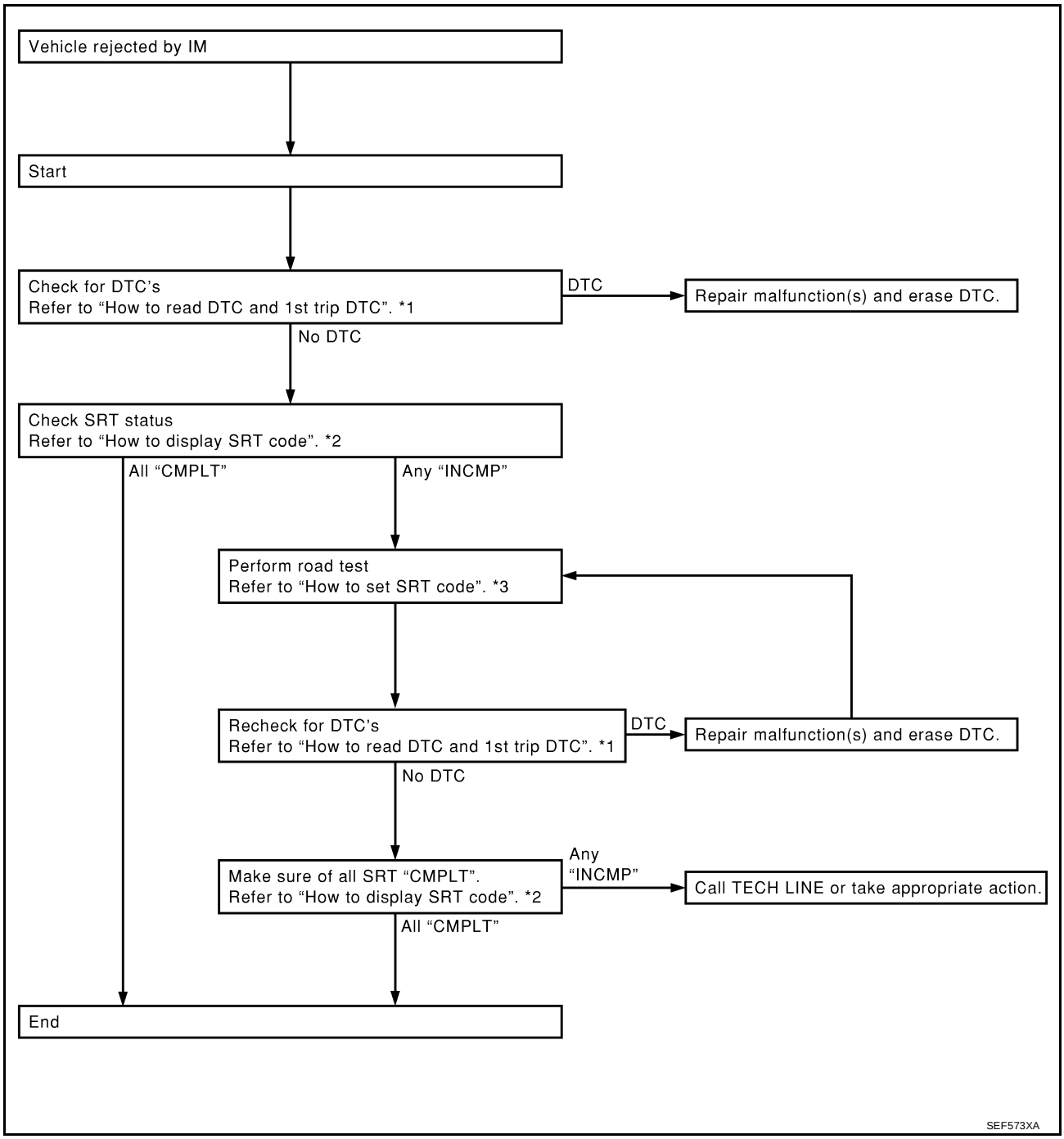

*1 EC-678 *2 EC-682 *3 EC-683

How to Display SRT Code

WITH CONSULT-II

Selecting "SRT STATUS" in "DTC CONFIRMATION" mode with CONSULT-II.

For items whose SRT codes are set, a "CMPLT" is displayed on the CONSULT-II screen; for items whose SRT codes are not set, "INCMP" is displayed.

A sample of CONSULT-II display for SRT code is shown at right.

"INCMP" means the self-diagnosis is incomplete and SRT is not set.

"CMPLT" means the self-diagnosis is complete and SRT is set.

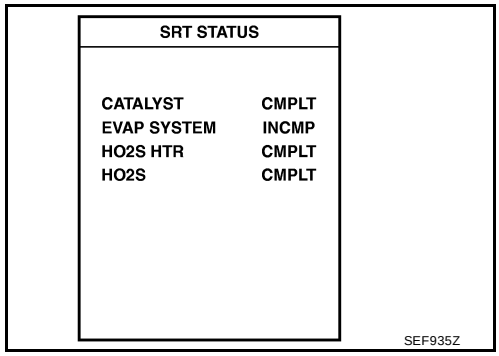

WITH GST

Selecting Mode 1 with GST (Generic Scan Tool)

How to Set SRT Code

To set all SRT codes, self-diagnosis for the items indicated above must be performed one or more times. Each diagnosis may require a long period of actual driving under various conditions.

WITH CONSULT-II

Perform corresponding DTC Confirmation Procedure one by one based on “Performance Priority” in the table on EC-680, "SRT Item" .

WITHOUT CONSULT-II

The most efficient driving pattern in which SRT codes can be properly set is explained on the next page. The driving pattern should be performed one or more times to set all SRT codes.

Driving Pattern

Driving pattern

Note: Always drive vehicle in safe manner according to traffic conditions and obey all traffic laws.
Refer to next page for more information and explanation of chart.

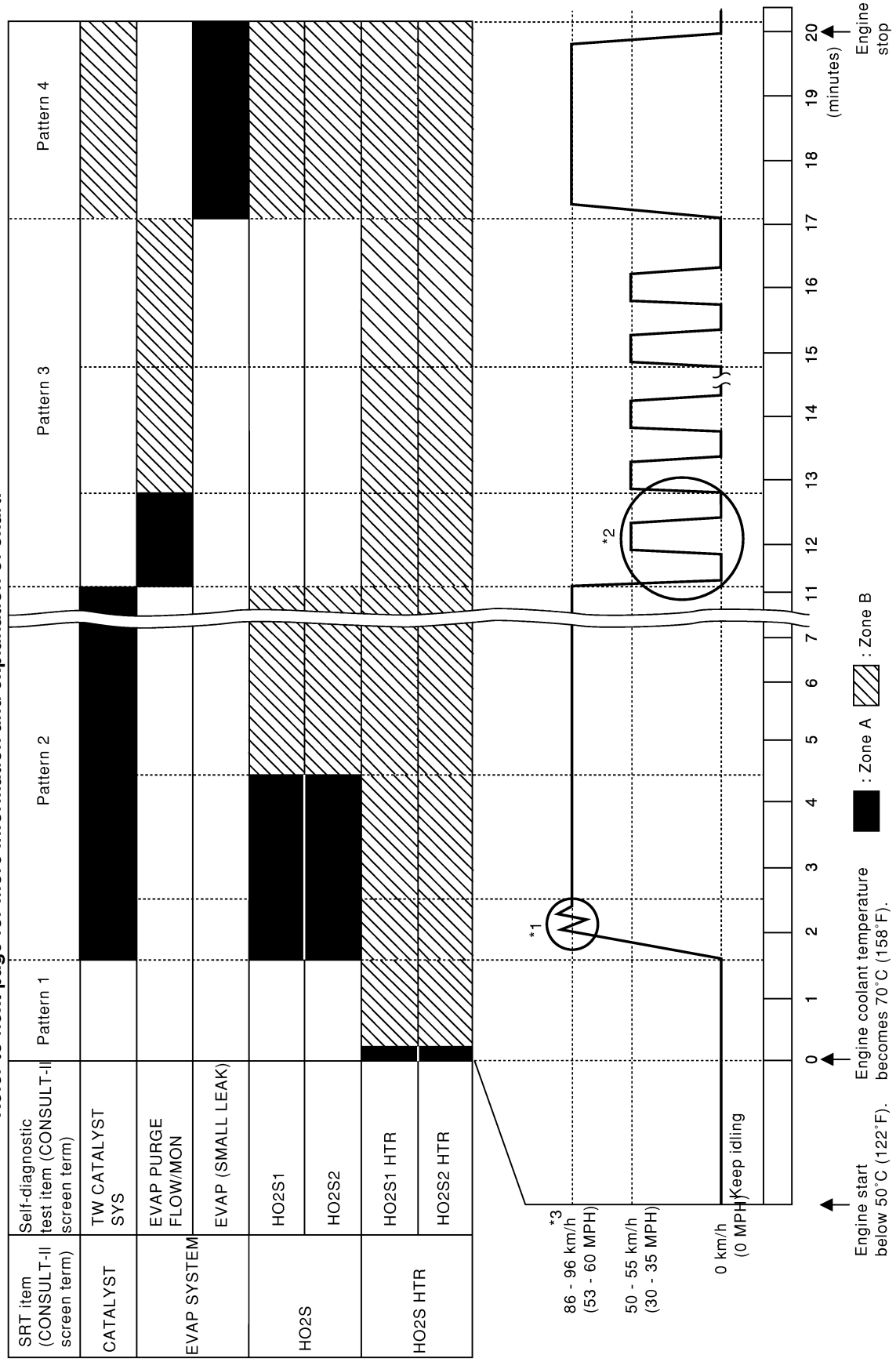

PBIB0123E

- The time required for each diagnosis varies with road surface conditions, weather, altitude, individual driving habits, etc.
  Zone A refers to the range where the time, required for the diagnosis under normal conditions*, is the shortest.
  Zone B refers to the range where the diagnosis can still be performed if the diagnosis is not completed within zone A.

*: Normal conditions refer to the following:

- Sea level
- Flat road
- Ambient air temperature: 20 - 30°C (68 - 86°F)
- Diagnosis is performed as quickly as possible under normal conditions.
  Under different conditions [For example: ambient air temperature other than 20 - 30°C (68 - 86°F)], diagnosis may also be performed.

Pattern 1:

- **The engine is started at the engine coolant temperature of –10 to 35°C (14 to 95°F) (where the voltage between the ECM terminal 93 and ground is 3.0 - 4.3V).**
- **The engine must be operated at idle speed until the engine coolant temperature is greater than 70°C (158°F) (where the voltage between the ECM terminal 93 and ground is lower than 1.4V).**
- **The engine is started at the fuel tank temperature of warmer than 0°C (32°F) (where the voltage between the ECM terminal 75 and ground is less than 4.1V).**

Pattern 2:

- When steady-state driving is performed again even after it is interrupted, each diagnosis can be conducted. In this case, the time required for diagnosis may be extended.

Pattern 3:

- The driving pattern outlined in *2 must be repeated at least 3 times.

Pattern 4:

- Tests are performed after the engine has been operated for at least 17 minutes.
- The accelerator pedal must be held very steady during steady-state driving.
- If the accelerator pedal is moved, the test must be conducted all over again.

*1: Depress the accelerator pedal until vehicle speed is 90 km/h (56 MPH), then release the accelerator pedal and keep it released for more than 10 seconds. Depress the accelerator pedal until vehicle speed is 90 km/h (56 MPH) again.

*2: Operate the vehicle in the following driving pattern.

1. Decelerate vehicle to 0 km/h (0 MPH) and let engine idle.
2. Repeat driving pattern shown at right at least 10 times.

– **During acceleration, hold the accelerator pedal as steady as possible.**

*3: Checking the vehicle speed with GST is advised.

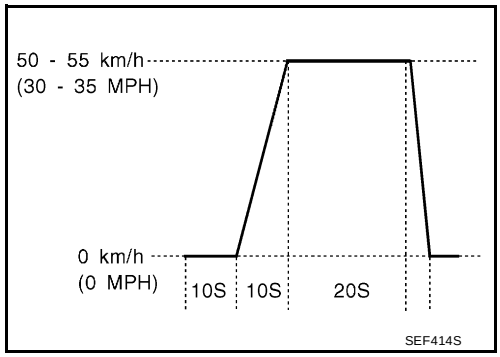

Suggested Transmission Gear Position for A/T Models

Set the selector lever in the “D” position with the overdrive switch turned ON.

Suggested Upshift Speeds for M/T Models

Shown below are suggested vehicle speeds for shifting into a higher gear. These suggestions relate to fuel economy and vehicle performance. Actual upshift speeds will vary according to road conditions, the weather and individual driving habits.

	For normal acceleration in low altitude areas [less than 1,219 m (4,000 ft)]:		For quick acceleration in low altitude areas and high altitude areas [over 1,219 m (4,000 ft)]:
Gear change	ACCEL shift point km/h (MPH)	CRUISE shift point km/h (MPH)	km/h (MPH)
1st to 2nd	21 (13)	21 (13)	24 (15)
2nd to 3rd	37 (23)	26 (16)	40 (25)
3rd to 4th	53 (33)	44 (27)	64 (40)
4th to 5th	63 (39)	58 (36)	72 (45)

Suggested Maximum Speed in Each Gear

Downshift to a lower gear if the engine is not running smoothly, or if you need to accelerate.

Do not exceed the maximum suggested speed (shown below) in any gear. For level road driving, use the highest gear suggested for that speed. Always observe posted sped limits and drive according to the road conditions to ensure sage operation. Do not over-rev the engine when shifting to a lower gear as it may cause engine damage or los of vehicle control.

Gear	km/h (MPH)
1st	65 (40)
2nd	105 (65)
3rd	—
4th	—
5th	—

TEST VALUE AND TEST LIMIT (GST ONLY — NOT APPLICABLE TO CONSULT-II)

The following is the information specified in Mode 6 of SAE J1979.

The test value is a parameter used to determine whether a system/circuit diagnostic test is “OK” or “NG” while being monitored by the ECM during self-diagnosis. The test limit is a reference value which is specified as the maximum or minimum value and is compared with the test value being monitored.

Items for which these data (test value and test limit) are displayed are the same as SRT code items (30 test items).

These data (test value and test limit) are specified by Test ID (TID) and Component ID (CID) and can be displayed on the GST screen.

×: Applicable —: Not applicable

SRT item	Self-diagnostic test item	Test value (GST display)		Test limit	Application
		TID	CID		
CATALYST	Three way catalyst function (Bank1)	01H	01H	Max.	×
		02H	81H	Min.	×
	Three way catalyst function (Bank2)	03H	02H	Max.	×
		04H	82H	Min.	×
EVAP SYSTEM	EVAP control system (Small leak)	05H	03H	Max.	×
	EVAP control system purge flow monitoring	06H	83H	Min.	×
	EVAP control system (Very small leak)	07H	03H	Max.	×

SRT item	Self-diagnostic test item	Test value (GST display)		Test limit	Application
		TID	CID		
HO2S	Heated oxygen sensor 1 (Bank 1)	09H	04H	Max.	×
		0AH	84H	Min.	×
		0BH	04H	Max.	×
		0CH	04H	Max.	×
		0DH	04H	Max.	×
	Heated oxygen sensor 1 (Bank 2)	11H	05H	Max.	×
		12H	85H	Min.	×
		13H	05H	Max.	×
		14H	05H	Max.	×
		15H	05H	Max.	×
	Heated oxygen sensor 2 (Bank 1)	19H	86H	Min.	×
		1AH	86H	Min.	×
		1BH	06H	Max.	×
		1CH	06H	Max.	×
	Heated oxygen sensor 2 (Bank 2)	21H	87H	Min.	×
		22H	87H	Min.	×
		23H	07H	Max.	×
		24H	07H	Max.	×
HO2S HTR	Heated oxygen sensor 1 heater (Bank 1)	29H	08H	Max.	×
		2AH	88H	Min.	×
	Heated oxygen sensor 1 heater (Bank 2)	2BH	09H	Max.	×
		2CH	89H	Min.	×
	Heated oxygen sensor 2 heater (Bank 1)	2DH	0AH	Max.	×
		2EH	8AH	Min.	×
	Heated oxygen sensor 2 heater (Bank 2)	2FH	0BH	Max.	×
		30H	8BH	Min.	×

HOW TO ERASE EMISSION-RELATED DIAGNOSTIC INFORMATION

How to Erase DTC (With CONSULT-II)

The emission related diagnostic information in the ECM can be erased by selecting “ERASE” in the “SELF-DIAG RESULTS” mode with CONSULT-II.
If DTCs are displayed for both ECM and TCM (Transmission control module), they need to be erased individually from the ECM and TCM (Transmission control module).

NOTE:
If the DTC is not for A/T related items (see EC-632), skip steps 2 through 4.

1. If the ignition switch stays “ON” after repair work, be sure to turn ignition switch “OFF” once. Wait at least 10 seconds and then turn it “ON” (engine stopped) again.
2. Turn CONSULT-II “ON” and touch “A/T”.
3. Touch “SELF-DIAG RESULTS”.
4. Touch “ERASE”. [The DTC in the TCM (Transmission control module) will be erased.] Then touch “BACK” twice.
5. Touch “ENGINE”.
6. Touch “SELF-DIAG RESULTS”.

7. Touch “ERASE”. (The DTC in the ECM will be erased.)

How to erase DTC (With CONSULT-II)

1. If the ignition switch stays “ON” after repair work, be sure to turn ignition switch “OFF” once. Wait at least 10 seconds and then turn it “ON” (engine stopped) again.

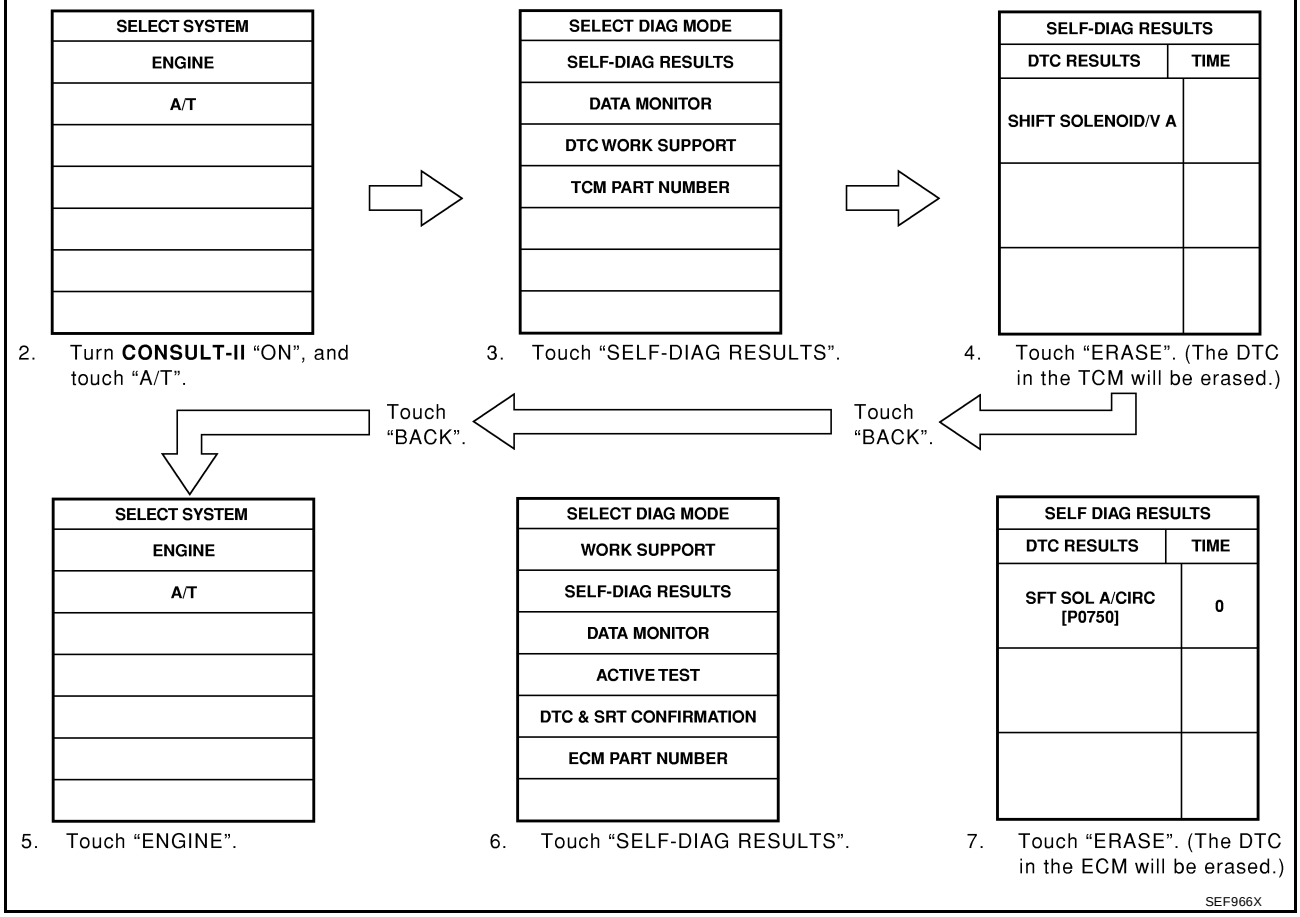

How to Erase DTC (With GST)

The emission related diagnostic information in the ECM can be erased by selecting Mode 4 with GST.

NOTE:
If the DTC is not for A/T related items (see EC-632), skip step 2.

1. If the ignition switch stays “ON” after repair work, be sure to turn ignition switch “OFF” once. Wait at least 10 seconds and then turn it “ON” (engine stopped) again.
2. Perform “SELF-DIAGNOSTIC PROCEDURE (Without CONSULT-II)” in AT section titled “TROUBLE DIAGNOSIS”, “Self-diagnosis”. (The engine warm-up step can be skipped when performing the diagnosis only to erase the DTC.)
3. Select Mode 4 with GST (Generic Scan Tool).

How to Erase DTC (No Tools)

1. If the ignition switch stays "ON" after repair work, be sure to turn ignition switch "OFF" once.
2. Wait at least 10 seconds and then turn it "ON" (engine stopped) again.
3. Change the diagnostic test mode from Mode II to Mode I by depressing the accelerator pedal. Refer to EC-690, "HOW TO SWITCH DIAGNOSTIC TEST MODE" .

- **If the battery is disconnected, the emission-related diagnostic information will be lost after approx. 24 hours.**
- **The following data are cleared when the ECM memory is erased.**

1. Diagnostic trouble codes
2. 1st trip diagnostic trouble codes
3. Freeze frame data
4. 1st trip freeze frame data

5. System readiness test (SRT) codes
6. Test values
7. Others

Actual work procedures are explained using a DTC as an example. Be careful so that not only the DTC, but all of the data listed above, are cleared from the ECM memory during work procedures.

NVIS (Nissan Vehicle Immobilizer System — NATS)

UBS0035J

- **If the security indicator lights up with the ignition switch in the "ON" position or "NATS MALFUNCTION" is displayed on "SELF-DIAG RESULTS" screen, perform self-diagnostic results mode with CONSULT-II using NATS program card. Refer to BL-116, "NVIS(NISSAN Vehicle Immobilizer System-NATS)" .**
- **Confirm no self-diagnostic results of NVIS (NATS) is displayed before touching "ERASE" in "SELF-DIAG RESULTS" mode with CONSULT-II.**
- **When replacing ECM, initialization of NVIS (NATS) system and registration of all NVIS (NATS) ignition key IDs must be carried out with CONSULT-II using NATS program card.**
  Therefore, be sure to receive all keys from vehicle owner. Regarding the procedures of NVIS (NATS) initialization and NVIS (NATS) ignition key ID registration, refer to CONSULT-II operation manual, IVIS/NVIS.

SELF DIAG RESULTS	
DTC RESULTS	TIME
NATS MALFUNCTION [P1610]	0

SEF543X

Malfunction Indicator Lamp (MIL)

UBS0035K

DESCRIPTION

The MIL is located on the instrument panel.

1. The MIL will light up when the ignition switch is turned ON without the engine running. This is a bulb check.
   If the MIL does not light up, refer to DI-22, "WARNING LAMPS" , or see EC-1033 .
2. When the engine is started, the MIL should go off.
   If the MIL remains on, the on board diagnostic system has detected an engine system malfunction.

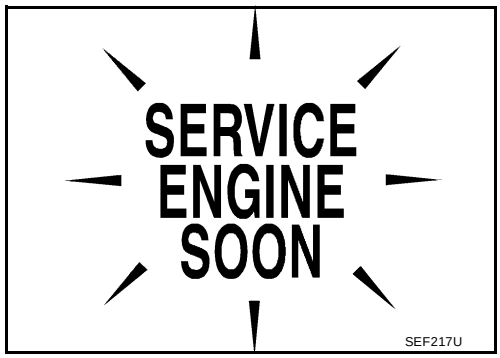

SEF217U

ON BOARD DIAGNOSTIC SYSTEM FUNCTION

The on board diagnostic system has the following four functions.

Diagnostic Test Mode	KEY and ENG. Status	Function	Explanation of Function
Mode I	Ignition switch in “ON” position Engine stopped	BULB CHECK	This function checks the MIL bulb for damage (blown, open circuit, etc.). If the MIL does not come on, check MIL circuit.
	Engine running	MALFUNCTION WARNING	This is a usual driving condition. When a malfunction is detected twice in two consecutive driving cycles (two trip detection logic), the MIL will light up to inform the driver that a malfunction has been detected. The following malfunctions will light up or blink the MIL in the 1st trip. ● “Misfire (Possible three way catalyst damage)” ● “Throttle control motor” ● “Closed loop control” ● Fail-safe mode
Mode II	Ignition switch in “ON” position Engine stopped	SELF-DIAGNOSTIC RESULTS	This function allows DTCs and 1st trip DTCs to be read.
	Engine running	HEATED OXYGEN SENSOR 1 MONITOR	This function allows the fuel mixture condition (lean or rich), monitored by heated oxygen sensor 1, to be read.

MIL Flashing Without DTC

If the ECM is in Diagnostic Test Mode II, MIL may flash when engine is running. In this case, check ECM diagnostic test mode. EC-690, "HOW TO SWITCH DIAGNOSTIC TEST MODE" .
How to switch the diagnostic test (function) modes, and details of the above functions are described later. EC-690, "HOW TO SWITCH DIAGNOSTIC TEST MODE" .
The following emission-related diagnostic information is cleared when the ECM memory is erased.

1. Diagnostic trouble codes
2. 1st trip diagnostic trouble codes
3. Freeze frame data
4. 1st trip freeze frame data
5. System readiness test (SRT) codes
6. Test values
7. Others

HOW TO SWITCH DIAGNOSTIC TEST MODE

NOTE:

- **It is better to count the time accurately with a clock.**
- **It is impossible to switch the diagnostic mode when an accelerator pedal position sensor circuit has a malfunction.**
- **Always ECM returns to Diagnostic Test Mode I after ignition switch is turned “OFF”.**

How to Set Diagnostic Test Mode II (Self-diagnostic Results)

1. Confirm that accelerator pedal is fully released, turn ignition switch “ON” and wait 3 seconds.
2. Repeat the following procedure quickly five times within 5 seconds.

a. Fully depress the accelerator pedal.
b. Fully release the accelerator pedal.

3. Wait 7 seconds, fully depress the accelerator pedal and keep it for approx. 10 seconds until the MIL starts blinking.
4. Fully release the accelerator pedal.
   ECM has entered to Diagnostic Test Mode II (Self-diagnostic results).

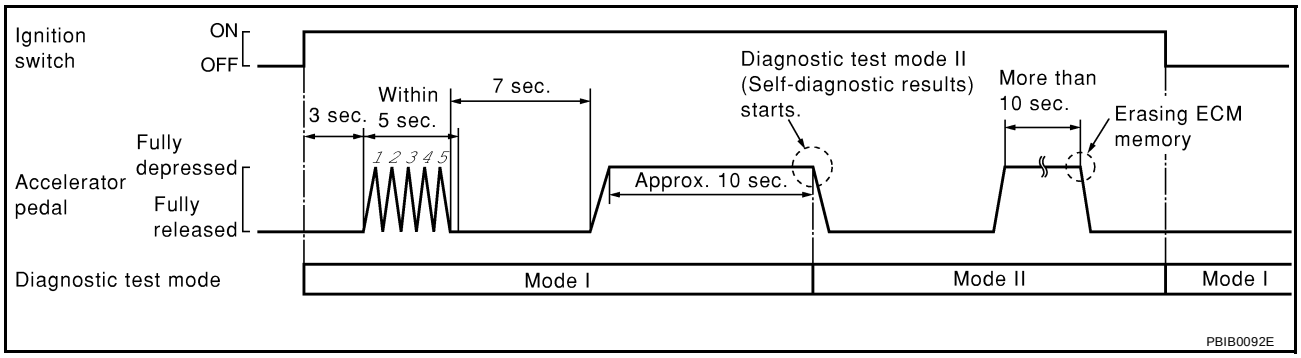

How to Set Diagnostic Test Mode II (Heated Oxygen Sensor 1 Monitor)

1. Set the ECM in Diagnostic Test Mode II (Self-diagnostic results). Refer to EC-691, "How to Set Diagnostic Test Mode II (Self-diagnostic Results)" .
2. Start Engine.
   ECM has entered to Diagnostic Test Mode II (Heated oxygen sensor 1 monitor).
   ECM will start heated oxygen sensor 1 monitoring from the bank 1 sensor.

How to Switch Monitored Sensor From Bank 1 to Bank 2 or Vice Versa

1. Fully depress the accelerator pedal quickly and then release it immediately.
2. Make sure that monitoring sensor has changed by MIL blinking as follows.

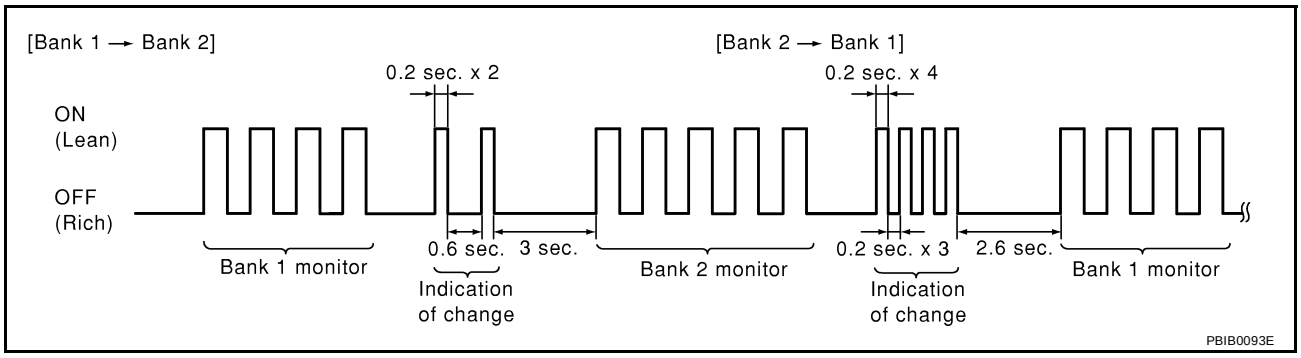

How to Erase Diagnostic Test Mode II (Self-diagnostic Results)

1. Set ECM in Diagnostic Test Mode II (Self-diagnostic results). Refer to EC-691, "How to Set Diagnostic Test Mode II (Self-diagnostic Results)" .
2. Fully depress the accelerator pedal and keep it for more than 10 seconds.
   The emission-related diagnostic information has been erased from the backup memory in the ECM.
3. Fully release the accelerator pedal, and confirm the DTC 0000 is displayed.

DIAGNOSTIC TEST MODE I — BULB CHECK

In this mode, the MIL on the instrument panel should stay ON. If it remains OFF, check the bulb. Refer to DI-22, "WARNING LAMPS" or see EC-1033 .

DIAGNOSTIC TEST MODE I — MALFUNCTION WARNING

MIL	Condition
ON	When the malfunction is detected or the ECM's CPU is malfunctioning.
OFF	No malfunction.

These DTC numbers are clarified in Diagnostic Test Mode II (SELF-DIAGNOSTIC RESULTS)

DIAGNOSTIC TEST MODE II — SELF-DIAGNOSTIC RESULTS

In this mode, the DTC and 1st trip DTC are indicated by the number of blinks of the MIL as shown below.
The DTC and 1st trip DTC are displayed at the same time. If the MIL does not illuminate in diagnostic test mode I (Malfunction warning), all displayed items are 1st trip DTCs. If only one code is displayed when the MIL illuminates in diagnostic test mode II (SELF-DIAGNOSTIC RESULTS), it is a DTC; if two or more codes are displayed, they may be either DTCs or 1st trip DTCs. DTC No. is same as that of 1st trip DTC. These unidentified codes can be identified by using the CONSULT-II or GST. A DTC will be used as an example for how to read a code.

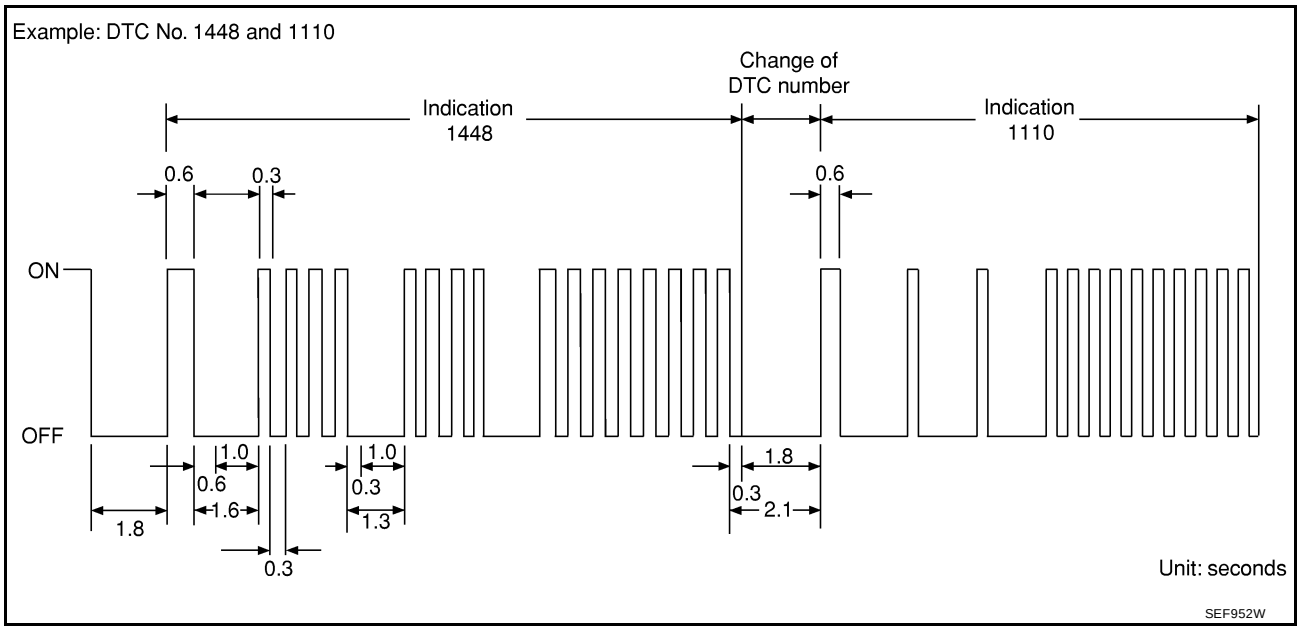

A particular trouble code can be identified by the number of four-digit numeral flashes. The “zero” is indicated by the number of ten flashes. The length of time the 1,000th-digit numeral flashes on and off is 1.2 seconds consisting of an ON (0.6-second) - OFF (0.6-second) cycle.
The 100th-digit numeral and lower digit numerals consist of a 0.3-second ON and 0.3-second OFF cycle.
A change from one digit numeral to another occurs at an interval of 1.0-second OFF. In other words, the later numeral appears on the display 1.3 seconds after the former numeral has disappeared.
A change from one trouble code to another occurs at an interval of 1.8-second OFF.
In this way, all the detected malfunctions are classified by their DTC numbers. The DTC “0000” refers to no malfunction. (See EC-632, "INDEX FOR DTC")

How to Erase Diagnostic Test Mode II (Self-diagnostic Results)

The DTC can be erased from the back up memory in the ECM by depressing accelerator pedal. Refer to EC-691, "How to Erase Diagnostic Test Mode II (Self-diagnostic Results)" .

- **If the battery is disconnected, the DTC will be lost from the backup memory after approx 24 hours.**
- **Be careful not to erase the stored memory before starting trouble diagnoses.**

DIAGNOSTIC TEST MODE II — HEATED OXYGEN SENSOR 1 MONITOR

In this mode, the MIL displays the condition of the fuel mixture (lean or rich) which is monitored by the heated oxygen sensor 1.

MIL	Fuel mixture condition in the exhaust gas	Air fuel ratio feedback control condition
ON	Lean	Closed loop system
OFF	Rich	
*Remains ON or OFF	Any condition	Open loop system

*: Maintains conditions just before switching to open loop.

To check the heated oxygen sensor 1 function, start engine in the Diagnostic Test Mode II and warm it up until engine coolant temperature indicator points to the middle of the gauge.
Next run engine at about 2,000 rpm for about 2 minutes under no-load conditions. Then make sure that the MIL comes ON more than 5 times within 10 seconds with engine running at 2,000 rpm under no-load.

OBD System Operation Chart

UBS0035L

RELATIONSHIP BETWEEN MIL, 1ST TRIP DTC, DTC, AND DETECTABLE ITEMS

- When a malfunction is detected for the first time, the 1st trip DTC and the 1st trip freeze frame data are stored in the ECM memory.
- When the same malfunction is detected in two consecutive trips, the DTC and the freeze frame data are stored in the ECM memory, and the MIL will come on. For details, refer to EC-673, "Two Trip Detection Logic" .
- The MIL will go off after the vehicle is driven 3 times with no malfunction. The drive is counted only when the recorded driving pattern is met (as stored in the ECM). If another malfunction occurs while counting, the counter will reset.
- The DTC and the freeze frame data will be stored until the vehicle is driven 40 times (driving pattern A) without the same malfunction recurring (except for Misfire and Fuel Injection System). For Misfire and Fuel Injection System, the DTC and freeze frame data will be stored until the vehicle is driven 80 times (driving pattern C) without the same malfunction recurring. The “TIME” in “SELF-DIAGNOSTIC RESULTS” mode of CONSULT-II will count the number of times the vehicle is driven.
- The 1st trip DTC is not displayed when the self-diagnosis results in “OK” for the 2nd trip.

SUMMARY CHART

Items	Fuel Injection System	Misfire	Other
MIL (goes off)	3 (pattern B)	3 (pattern B)	3 (pattern B)
DTC, Freeze Frame Data (no display)	80 (pattern C)	80 (pattern C)	40 (pattern A)
1st Trip DTC (clear)	1 (pattern C), *1	1 (pattern C), *1	1 (pattern B)
1st Trip Freeze Frame Data (clear)	*1, *2	*1, *2	1 (pattern B)

For details about patterns “B” and “C” under “Fuel Injection System” and “Misfire”, see EC-695 .
For details about patterns “A” and “B” under “Other”, see EC-697 .
*1: Clear timing is at the moment OK is detected.
*2: Clear timing is when the same malfunction is detected in the 2nd trip.

RELATIONSHIP BETWEEN MIL, DTC, 1ST TRIP DTC AND DRIVING PATTERNS FOR “MISFIRE ” <EXHAUST QUALITY DETERIORATION>, “FUEL INJECTION SYSTEM”

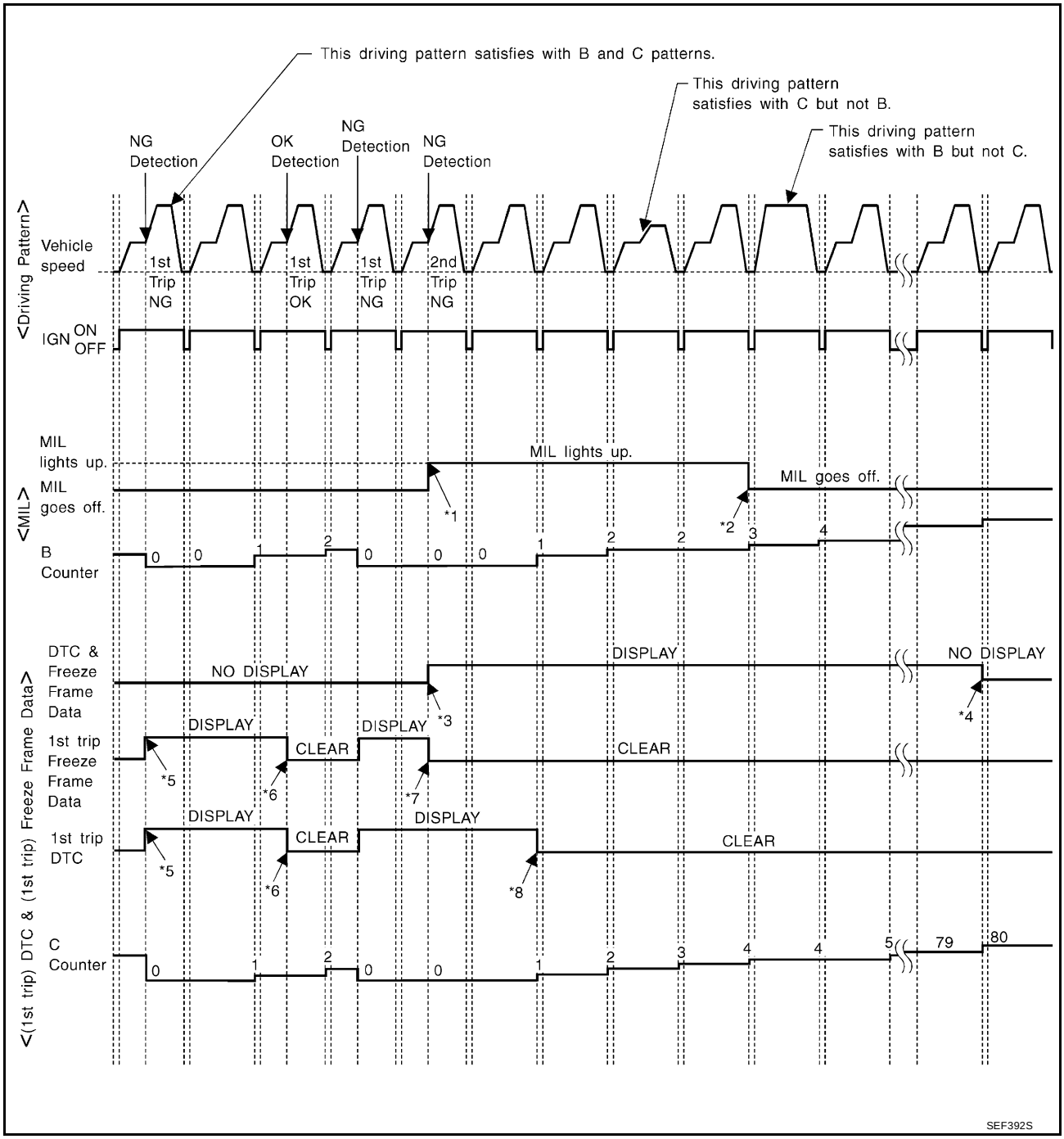

*1: When the same malfunction is detected in two consecutive trips, MIL will light up.

*2: MIL will go off after vehicle is driven 3 times (pattern B) without any malfunctions.

*3: When the same malfunction is detected in two consecutive trips, the DTC and the freeze frame data will be stored in ECM.

*4: The DTC and the freeze frame data will not be displayed any longer after vehicle is driven 80 times (pattern C) without the same malfunction. (The DTC and the freeze frame data still remain in ECM.)

*5: When a malfunction is detected for the first time, the 1st trip DTC and the 1st trip freeze frame data will be stored in ECM.

*6: The 1st trip DTC and the 1st trip freeze frame data will be cleared at the moment OK is detected.

*7: When the same malfunction is detected in the 2nd trip, the 1st trip freeze frame data will be cleared.

*8: 1st trip DTC will be cleared when vehicle is driven once (pattern C) without the same malfunction after DTC is stored in ECM.

EXPLANATION FOR DRIVING PATTERNS FOR “MISFIRE <EXHAUST QUALITY DETERIORATION>”, “FUEL INJECTION SYSTEM”

<Driving Pattern B>

Driving pattern B means the vehicle operation as follows:
All components and systems should be monitored at least once by the OBD system.

- The B counter will be cleared when the malfunction is detected once regardless of the driving pattern.
- The B counter will be counted up when driving pattern B is satisfied without any malfunction.
- The MIL will go off when the B counter reaches 3. (*2 in “OBD SYSTEM OPERATION CHART”)

<Driving Pattern C>

Driving pattern C means the vehicle operation as follows:
The following conditions should be satisfied at the same time:
Engine speed: (Engine speed in the freeze frame data) ±375 rpm
Calculated load value: (Calculated load value in the freeze frame data) x (1±0.1) [%]
Engine coolant temperature (T) condition:

- When the freeze frame data shows lower than 70°C (158°F), “T” should be lower than 70°C (158°F).
- When the freeze frame data shows higher than or equal to 70°C (158°F), “T” should be higher than or equal to 70°C (158°F).

Example:
If the stored freeze frame data is as follows:
Engine speed: 850 rpm, Calculated load value: 30%, Engine coolant temperature: 80°C (176°F)
To be satisfied with driving pattern C, the vehicle should run under the following conditions:
Engine speed: 475 - 1,225 rpm, Calculated load value: 27 - 33%, Engine coolant temperature: more than 70°C (158°F)

- The C counter will be cleared when the malfunction is detected regardless of (1).
- The C counter will be counted up when (1) is satisfied without the same malfunction.
- The DTC will not be displayed after C counter reaches 80.
- The 1st trip DTC will be cleared when C counter is counted once without the same malfunction after DTC is stored in ECM.

RELATIONSHIP BETWEEN MIL, DTC, 1ST TRIP DTC AND DRIVING PATTERNS EXCEPT FOR "MISFIRE <EXHAUST QUALITY DETERIORATION>", "FUEL INJECTION SYSTEM"

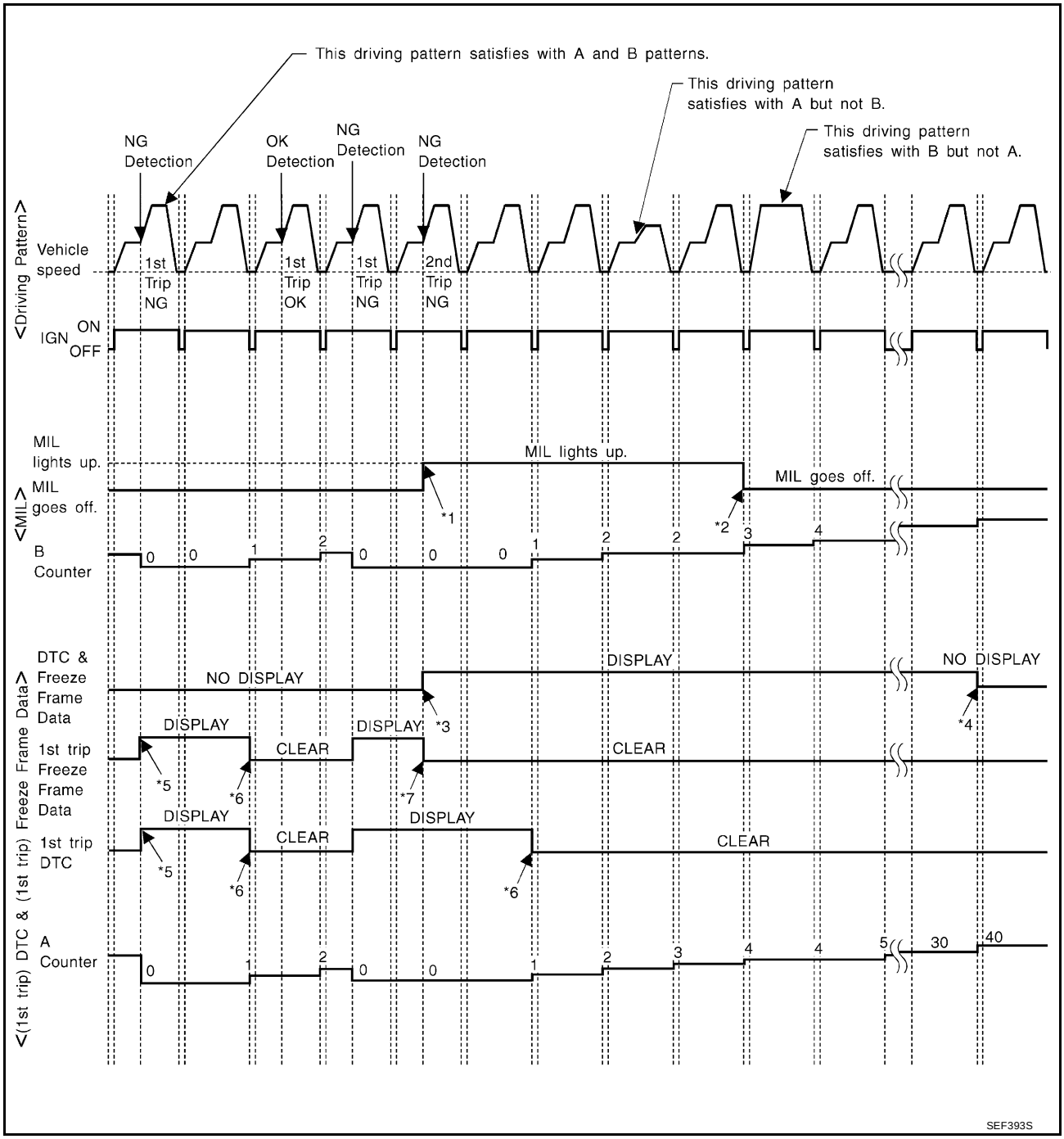

*1: When the same malfunction is detected in two consecutive trips, MIL will light up.

*2: MIL will go off after vehicle is driven 3 times (pattern B) without any malfunctions.

*3: When the same malfunction is detected in two consecutive trips, the DTC and the freeze frame data will be stored in ECM.

*4: The DTC and the freeze frame data will not be displayed any longer after vehicle is driven 40 times (pattern A) without the same malfunction. (The DTC and the freeze frame data still remain in ECM.)

*5: When a malfunction is detected for the first time, the 1st trip DTC and the 1st trip freeze frame data will be stored in ECM.

*6: 1st trip DTC will be cleared after vehicle is driven once (pattern B) without the same malfunction.

*7: When the same malfunction is detected in the 2nd trip, the 1st trip freeze frame data will be cleared.

EXPLANATION FOR DRIVING PATTERNS EXCEPT FOR “MISFIRE <EXHAUST QUALITY DETERIORATION>”, “FUEL INJECTION SYSTEM”

<Driving Pattern A>

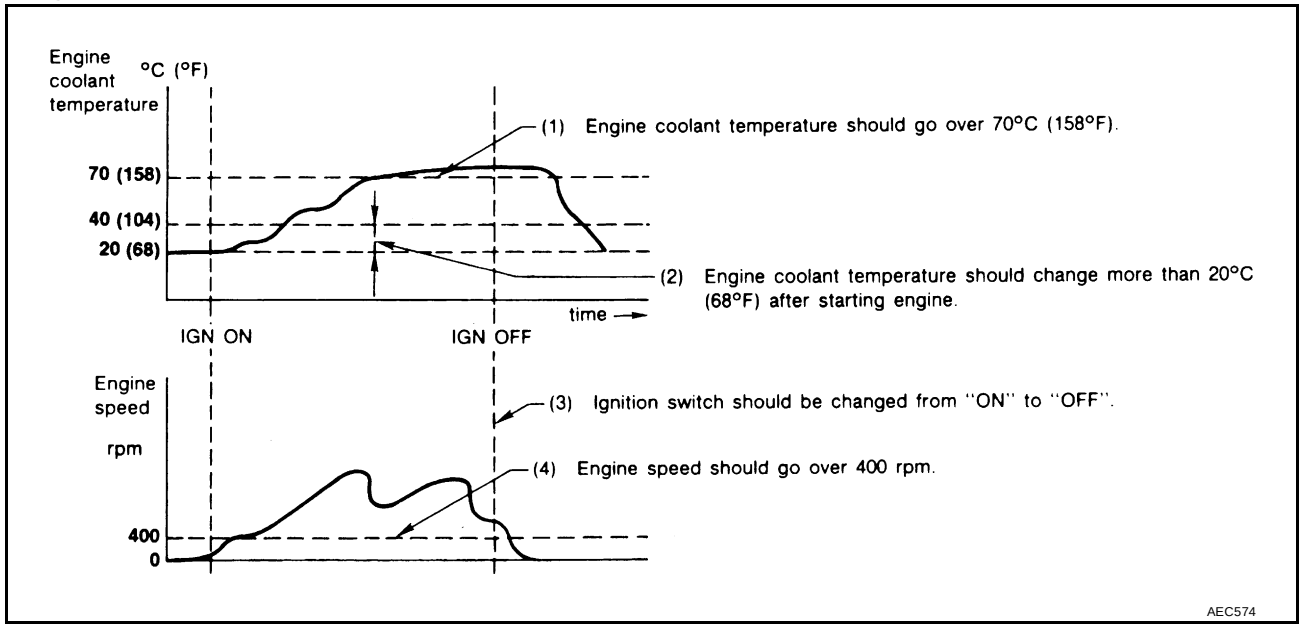

- The A counter will be cleared when the malfunction is detected regardless of (1) - (4).
- The A counter will be counted up when (1) - (4) are satisfied without the same malfunction.
- The DTC will not be displayed after the A counter reaches 40.

<Driving Pattern B>

Driving pattern B means the vehicle operation as follows:
All components and systems should be monitored at least once by the OBD system.

- The B counter will be cleared when the malfunction is detected once regardless of the driving pattern.
- The B counter will be counted up when driving pattern B is satisfied without any malfunctions.
- The MIL will go off when the B counter reaches 3 (*2 in “OBD SYSTEM OPERATION CHART”).

TROUBLE DIAGNOSIS

PFP:00004

Trouble Diagnosis Introduction

UBS0035M

INTRODUCTION

The engine has an ECM to control major systems such as fuel control, ignition control, idle air control system, etc. The ECM accepts input signals from sensors and instantly drives actuators. It is essential that both input and output signals are proper and stable. At the same time, it is important that there are no problems such as vacuum leaks, fouled spark plugs, or other problems with the engine.

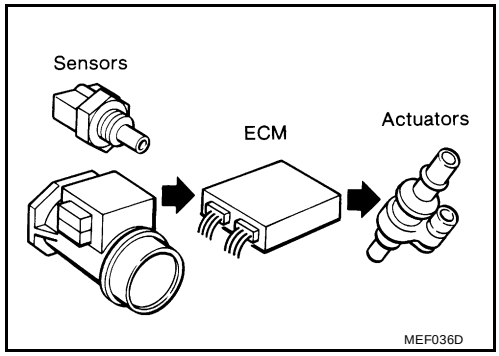

It is much more difficult to diagnose a problem that occurs intermittently rather than continuously. Most intermittent problems are caused by poor electric connections or improper wiring. In this case, careful checking of suspected circuits may help prevent the replacement of good parts.

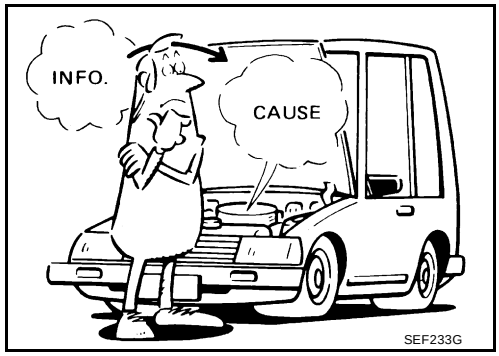

A visual check only may not find the cause of the problems. A road test with CONSULT-II (or GST) or a circuit tester connected should be performed. Follow the “Work Flow” on EC-699 .

Before undertaking actual checks, take a few minutes to talk with a customer who approaches with a driveability complaint. The customer can supply good information about such problems, especially intermittent ones. Find out what symptoms are present and under what conditions they occur. A “Diagnostic Worksheet” like the example on EC-701 should be used.

Start your diagnosis by looking for “conventional” problems first. This will help troubleshoot driveability problems on an electronically controlled engine vehicle.

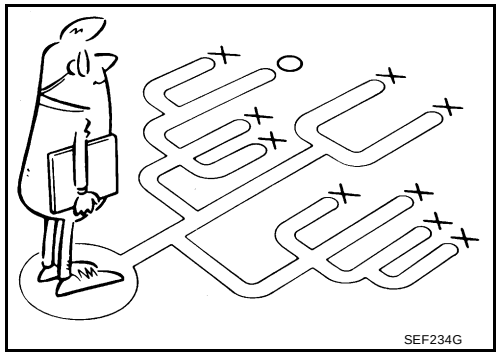

WORK FLOW

Flow Chart

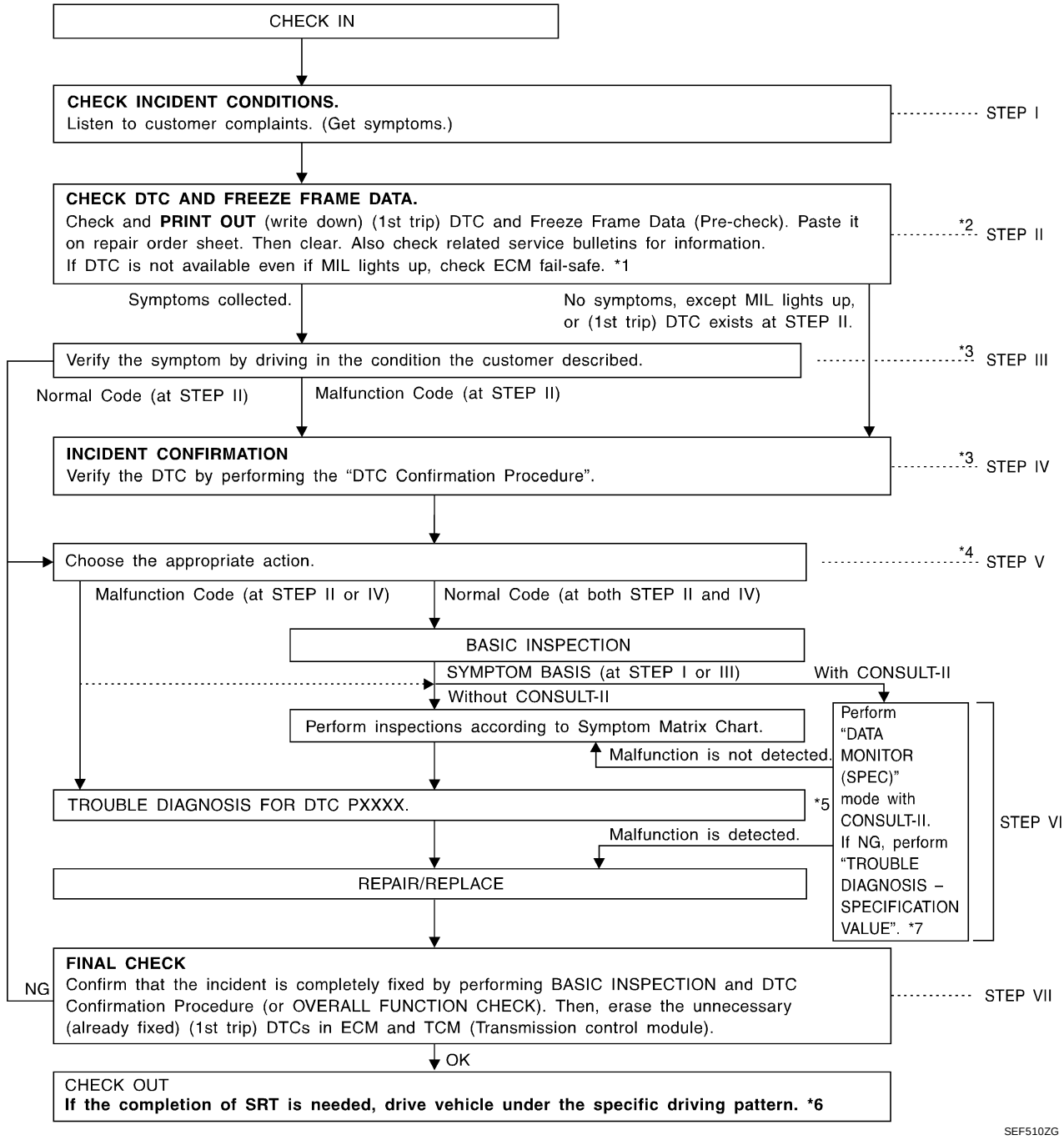

*1 EC-703

*2 If time data of "SELF-DIAG RESULTS" is other than "0" or "[1t]", perform EC-756, "TROUBLE DIAGNOSIS FOR INTERMITTENT INCIDENT" .

*3 If the incident cannot be verified, perform EC-756, "TROUBLE DIAGNOSIS FOR INTERMITTENT INCIDENT" .

*4 If the on board diagnostic system cannot be performed, check main power supply and ground circuit. Refer to EC-757, "POWER SUPPLY CIRCUIT FOR ECM" .

*5 If malfunctioning part cannot be detected, perform EC-756, "TROUBLE DIAGNOSIS FOR INTERMITTENT INCIDENT" .

*6 EC-684

*7 EC-752

Description for Work Flow

STEP	DESCRIPTION
STEP I	Get detailed information about the conditions and the environment when the incident/symptom occurred using the "DIAGNOSTIC WORK SHEET", EC-700 .
STEP II	Before confirming the concern, check and write down (print out using CONSULT-II or GST) the (1st trip) DTC and the (1st trip) freeze frame data, then erase the DTC and the data. (Refer to EC-687 .) The (1st trip) DTC and the (1st trip) freeze frame data can be used when duplicating the incident at STEP III & IV. If the incident cannot be verified, perform EC-756, "TROUBLE DIAGNOSIS FOR INTERMITTENT INCIDENT" . Study the relationship between the cause, specified by (1st trip) DTC, and the symptom described by the customer. (The "Symptom Matrix Chart" will be useful. See EC-710 .) Also check related service bulletins for information.
STEP III	Try to confirm the symptom and under what conditions the incident occurs. The "DIAGNOSTIC WORK SHEET" and the freeze frame data are useful to verify the incident. Connect CONSULT-II to the vehicle in DATA MONITOR (AUTO TRIG) mode and check real time diagnosis results. If the incident cannot be verified, perform EC-756, "TROUBLE DIAGNOSIS FOR INTERMITTENT INCIDENT" . If the malfunction code is detected, skip STEP IV and perform STEP V.
STEP IV	Try to detect the (1st trip) DTC by driving in (or performing) the "DTC Confirmation Procedure". Check and read the (1st trip) DTC and (1st trip) freeze frame data by using CONSULT-II or GST. During the (1st trip) DTC verification, be sure to connect CONSULT-II to the vehicle in DATA MONITOR (AUTO TRIG) mode and check real time diagnosis results. If the incident cannot be verified, perform EC-756, "TROUBLE DIAGNOSIS FOR INTERMITTENT INCIDENT" . In case the "DTC Confirmation Procedure" is not available, perform the "Overall Function Check" instead. The (1st trip) DTC cannot be displayed by this check, however, this simplified "check" is an effective alternative. The "NG" result of the "Overall Function Check" is the same as the (1st trip) DTC detection.
STEP V	Take the appropriate action based on the results of STEP I through IV. If the malfunction code is indicated, proceed to TROUBLE DIAGNOSIS FOR DTC PXXXX. If the normal code is indicated, proceed to the BASIC INSPECTION. (Refer to EC-705 .) Then perform inspections according to the Symptom Matrix Chart. (Refer to EC-710 .)
STEP VI	Identify where to begin diagnosis based on the relationship study between symptom and possible causes. Inspect the system for mechanical binding, loose connectors or wiring damage using (tracing) "Harness Layouts". Gently shake the related connectors, components or wiring harness with CONSULT-II set in "DATA MONITOR (AUTO TRIG)" mode. Check the voltage of the related ECM terminals or monitor the output data from the related sensors with CONSULT-II. Refer to EC-722 , EC-746 . The "Diagnostic Procedure" in EC section contains a description based on open circuit inspection. A short circuit inspection is also required for the circuit check in the Diagnostic Procedure. For details, refer to "Circuit Inspection" in GI-25, "How to Perform Efficient Diagnosis for an Electrical Incident" . Repair or replace the malfunction parts. If malfunctioning part cannot be detected, perform EC-756, "TROUBLE DIAGNOSIS FOR INTERMITTENT INCIDENT" .
STEP VII	Once you have repaired the circuit or replaced a component, you need to run the engine in the same conditions and circumstances which resulted in the customer's initial complaint. Perform the "DTC Confirmation Procedure" and confirm the normal code [DTC No. P0000] is detected. If the incident is still detected in the final check, perform STEP VI by using a method different from the previous one. Before returning the vehicle to the customer, be sure to erase the unnecessary (already fixed) (1st trip) DTC in ECM and TCM (Transmission control module). (Refer to EC-687, "HOW TO ERASE EMISSION-RELATED DIAGNOSTIC INFORMATION" andAT-38, "HOW TO ERASE DTC" .)

DIAGNOSTIC WORKSHEET

Description

There are many operating conditions that lead to the malfunction of engine components. A good grasp of such conditions can make troubleshooting faster and more accurate.

In general, each customer feels differently about a problem. It is important to fully understand the symptoms or conditions for a customer complaint.

Utilize a diagnostic worksheet like the one on the next page in order to organize all the information for troubleshooting.

Some conditions may cause the MIL to come on steady or blink and DTC to be detected. Examples:

- Vehicle ran out of fuel, which caused the engine to misfire.

KEY POINTS

WHAT ..... Vehicle & engine model
WHEN ..... Date, Frequencies
WHERE..... Road conditions
HOW ..... Operating conditions, Weather conditions, Symptoms

SEF907L

- Fuel filler cap was left off or incorrectly screwed on, allowing fuel to evaporate into the atmosphere.

Worksheet Sample

Customer name MR/MS		Model & Year	VIN
Engine #		Trans.	Mileage
Incident Date		Manuf. Date	In Service Date
Fuel and fuel filler cap		☐ Vehicle ran out of fuel causing misfire ☐ Fuel filler cap was left off or incorrectly screwed on.	
Symptoms	☐ Startability	☐ Impossible to start ☐ No combustion ☐ Partial combustion ☐ Partial combustion affected by throttle position ☐ Partial combustion NOT affected by throttle position ☐ Possible but hard to start ☐ Others [ ]	
	☐ Idling	☐ No fast idle ☐ Unstable ☐ High idle ☐ Low idle ☐ Others [ ]	
	☐ Driveability	☐ Stumble ☐ Surge ☐ Knock ☐ Lack of power ☐ Intake backfire ☐ Exhaust backfire ☐ Others [ ]	
	☐ Engine stall	☐ At the time of start ☐ While idling ☐ While accelerating ☐ While decelerating ☐ Just after stopping ☐ While loading	
Incident occurrence		☐ Just after delivery ☐ Recently ☐ In the morning ☐ At night ☐ In the daytime	
Frequency		☐ All the time ☐ Under certain conditions ☐ Sometimes	
Weather conditions		☐ Not affected	
	Weather	☐ Fine ☐ Raining ☐ Snowing ☐ Others [ ]	
	Temperature	☐ Hot ☐ Warm ☐ Cool ☐ Cold ☐ Humid ˚F	
Engine conditions		☐ Cold ☐ During warm-up ☐ After warm-up Engine speed 0 2,000 4,000 6,000 8,000 rpm	
Road conditions		☐ In town ☐ In suburbs ☐ Highway ☐ Off road (up/down)	
Driving conditions		☐ Not affected ☐ At starting ☐ While idling ☐ At racing ☐ While accelerating ☐ While cruising ☐ While decelerating ☐ While turning (RH/LH) Vehicle speed 0 10 20 30 40 50 60 MPH	
Malfunction indicator lamp		☐ Turned on ☐ Not turned on	

MTBL0017

DTC Inspection Priority Chart

UBS0035N

If some DTCs are displayed at the same time, perform inspections one by one based on the following priority chart.

NOTE:
If DTC U1000 and/or U1001 is displayed with other DTC, first perform the trouble diagnosis for DTC U1000 and U1001. Refer to EC-763 .

Priority	Detected items (DTC)
1	● U1000 U1001 CAN communication line ● P0101 P0102 P0103 P1102 Mass air flow sensor ● P0112 P0113 P0127 Intake air temperature sensor ● P0117 P0118 P0125 Engine coolant temperature sensor ● P0128 Thermoatat function ● P0221 P0222 P0223 P1223 P1224 P1225 P1226 P1229 Throttle position sensor ● P0226 P0227 P0228 P1227 P1228 Accelerator pedal position sensor ● P0181 P0182 P0183 Fuel tank temperature sensor ● P0327 P0328 Knock sensor ● P0335 Crankshaft position sensor (POS) ● P0340 P0345 Camshaft position sensor (PHASE) ● P0460 P0461 P0462 P0463 P1464 Fuel level sensor ● P0500 Vehicle speed sensor ● P0605 ECM ● P0705 Park/Neutral position (PNP) switch ● P1706 Park/Neutral position (PNP) switch
2	● P0031P0032 P0051 P0052 Heated oxygen sensor 1 heater ● P0037 P0038 P0057 P0058 Heated oxygen sensor 2 heater ● P0107 P0108 Absolute pressure sensor ● P0132-P0134, P0152-P0154 P1143 P1144 P1163 P1164 Heated oxygen sensor 1 ● P0138 P0139 P0158 P0159 P1146 P1147 P1166 P1167 Heated oxygen sensor 2 ● P0441 EVAP control system purge flow monitoring ● P0444 P0445 P1444 EVAP canister purge volume control solenoid valve ● P0447 P1446 P1448 EVAP canister vent control valve ● P0452 P0453 EVAP control system pressure sensor ● P0550 Power steering pressure sensor ● P0650 MIL ● P0710-0725 P0740 P0745-P0755 P1705 P1760 A/T related sensors, solenoid valves and switches ● P1065 ECM power supply ● P1122 Electric throttle control function ● P1217 Engine over temperature (OVERHEAT) ● P1490 P1491 Vacuum cut valve bypass valve ● P1800 VIAS control solenoid valve ● P1805 Brake switch
3	● P0011 P0021 Intake valve timing control ● P0171 P0172 P0174 P0175 Fuel injection system function ● P0300 - P0306 Misfire ● P0420 P0430 Three way catalyst function ● P0442 P0456 EVAP control system ● P0506 P0507 Idle speed control system ● P0731-P0734 P0744 A/T function ● P1121 Electric throttle control actuator ● P1124 P1126 P1128 Electric throttle control actuator ● P1148 P1168 Closed loop control ● P1211 ABS/TCS control unit ● P1212 ABS/TCS communication line ● P1564 ASCD steering switch ● P1572 ASCD brake switch ● P1574 ASCD vehicle speed sensor

Fail-safe Chart

UBS0035O

The ECM enters fail-safe mode, if any of the following malfunctions is detected.
When the ECM enters the fail-safe mode, the MIL illuminates.

DTC No.	Detected items	Engine operating condition in fail-safe mode
P0102 P0103 P1102	Mass air flow sensor circuit	Engine speed will not rise more than 2,400 rpm due to the fuel cut.
P0117 P0118	Engine coolant temperature sensor circuit	Engine coolant temperature will be determined by ECM based on the time after turning ignition switch “ON” or “START”. CONSULT-II displays the engine coolant temperature decided by ECM.
		Condition: Just as ignition switch is turned ON or Start — Engine coolant temperature decided (CONSULT-II display): 40°C (104°F)
		Condition: More than approx. 4 minutes after ignition ON or Start — Engine coolant temperature decided (CONSULT-II display): 80°C (176°F)
		Condition: Except as shown above — Engine coolant temperature decided (CONSULT-II display): 40 - 80°C (104 - 176°F) (Depends on the time)
		When the fail-safe system for engine coolant temperature sensor is activated, the cooling fan operates while engine is running.
P0221 P0222 P0223 P1223 P1224	Throttle position sensor	The ECM controls the electric throttle control actuator in regulating the throttle opening in order for the idle position to be within +10 degrees. The ECM regulates an opening speed of approx. 5 seconds to an opening of 10 degrees. So, the acceleration will be poor.
P0226 P0227 P0228 P1227 P1228	Accelerator pedal position sensor	The ECM controls the electric throttle control actuator in regulating the throttle opening in order for the idle position to be within +10 degrees. The ECM regulates an opening speed of approx. 5 seconds to an opening of 10 degrees. So, the acceleration will be poor.
P1121	Electric throttle control actuator (ECM detect the throttle valve is stuck open.)	While the vehicle is driving, it slows down gradually by fuel cut. After the vehicle stops, the engine stalls. The engine can restart in "N" or "P" position, and engine speed will not exceed 1,000 rpm or more.
P1122	Electric throttle control function	ECM stops the electric throttle control actuator control, throttle valve is maintained at a fixed opening (approx. 5 degrees) by the return spring.
P1126	Throttle control relay	ECM stops the electric throttle control actuator control, throttle valve is maintained at a fixed opening (approx. 5 degrees) by the return spring.
P1229	Sensor power supply	ECM stops the electric throttle control actuator control, throttle valve is maintained at a fixed opening (approx. 5 degrees) by the return spring.

DTC No.	Detected items	Engine operating condition in fail-safe mode	
Unable to access ECM	ECM	**ECM fail-safe activating condition** The computing function of the ECM was judged to be malfunctioning. When the fail-safe system activates (i.e., if the ECM detects a malfunction condition in the CPU of ECM), the MIL on the instrument panel lights to warn the driver. However it is not possible to access ECM and DTC cannot be confirmed. **Engine control with fail-safe** When ECM fail-safe is operating, fuel injection, ignition timing, fuel pump operation and cooling fan operation are controlled under certain limitations.	
			ECM fail-safe operation
		Engine speed	**Engine speed will not rise more than 3,000 rpm**
		Fuel injection	Simultaneous multiport fuel injection system
		Ignition timing	Ignition timing is fixed at the preset valve
		Fuel pump	Fuel pump relay is “ON” when engine is running and “OFF” when engine stalls
		Cooling fan	Cooling fan relays are “ON” (High speed condition) when engine is running and “OFF” when engine stalls
		Replace ECM, if ECM fail-safe condition is confirmed.	

Basic Inspection

UBS0035P

1. INSPECTION START

1. Check service records for any recent repairs that may indicate a related problem, or a current need for scheduled maintenance.
2. Open engine hood and check the following:
- Harness connectors for improper connections
- Wiring harness for improper connections, pinches and cut
- Vacuum hoses for splits, kinks and improper connections
- Hoses and ducts for leaks
- Air cleaner clogging
- Gasket

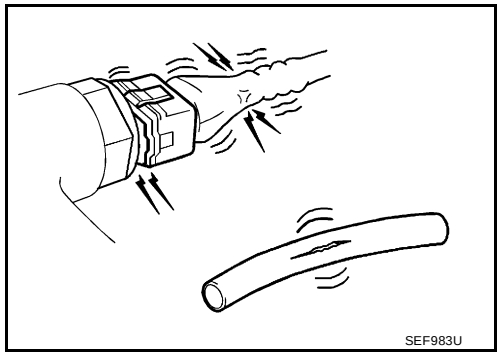

3. Confirm that electrical or mechanical loads are not applied.
- Headlamp switch is OFF.
- Air conditioner switch is OFF.
- Rear window defogger switch is OFF.
- Steering wheel is in the straight-ahead position, etc.
4. Start engine and warm it up until engine coolant temperature indicator points the middle of gauge.
   Ensure engine stays below 1,000 rpm.

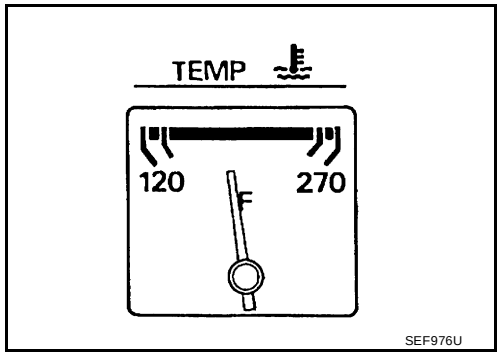

5. Run engine at about 2,000 rpm for about 2 minutes under no-load.
6. Make sure that no DTC is displayed with CONSULT-II or GST.

OK or NG

OK >> GO TO 3.
NG >> GO TO 2.

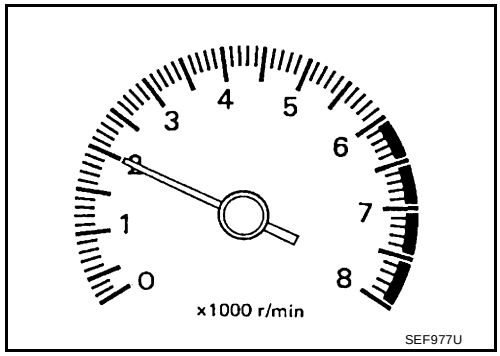

2. REPAIR OR REPLACE

Repair or replace components as necessary according to corresponding “Diagnostic Procedure”.

>> GO TO 3.

3. CHECK TARGET IDLE SPEED

With CONSULT-II

1. Run engine at about 2,000 rpm for about 2 minutes under no-load.
2. Rev engine (2,000 to 3,000 rpm) two or three times under no-load, then run engine at idle speed for about 1 minute.

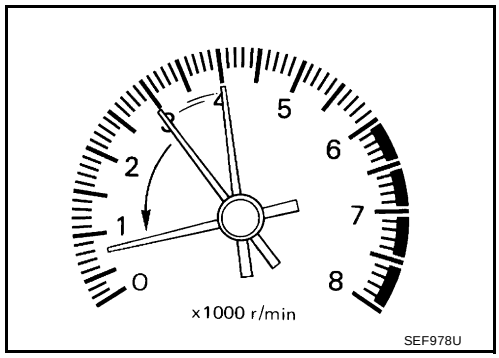

3. Read idle speed in “DATA MONITOR” mode with CONSULT-II.

   M/T: 700 ± 50 rpm

   A/T: 700 ± 50 rpm (in "P" or "N" position)

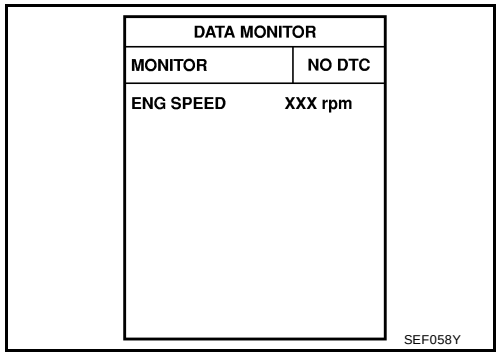

Without CONSULT-II

1. Run engine at about 2,000 rpm for about 2 minutes under no-load.
2. Rev engine (2,000 to 3,000 rpm) two or three times under no-load, then run engine at idle speed for about 1 minute.
3. Check idle speed.

   M/T: 700 ± 50 rpm

   A/T: 700 ± 50 rpm (in "P" or "N" position)

OK or NG

OK >> GO TO 9.
NG >> GO TO 4.

4. PERFORM ACCELERATOR PEDAL RELEASED POSITION LEARNING

1. Stop engine.
2. Perform EC-668, "Accelerator Pedal Released Position Learning" .

>> GO TO 5.

5. PERFORM THROTTLE VALVE CLOSED POSITION LEARNING

Perform EC-669, "Throttle Valve Closed Position Learning" .

>> GO TO 6.

6. PERFORM IDLE AIR VOLUME LEARNING

Refer to EC-669, "Idle Air Volume Learning" .

Which is the result CMPLT or INCMP

CMPLT or INCMP

CMPLT >> GO TO 7.
INCMP >> 1. Follow the construction of “Idle Air Volume Learning”.
2. GO TO 4.

7. CHECK TARGET IDLE SPEED AGAIN

With CONSULT-II

1. Start engine and warm it up to normal operating temperature.
2. Read idle speed in “DATA MONITOR” mode with CONSULT-II.

M/T: 700 ± 50 rpm

A/T: 700 ± 50 rpm (in "P" or "N" position)

Without CONSULT-II

1. Start engine and warm it up to normal operating temperature.
2. Check idle speed.

M/T: 700 ± 50 rpm

A/T: 700 ± 50 rpm (in "P" or "N" position)

OK or NG

OK >> GO TO 10.
NG >> GO TO 8.

8. DETECT MALFUNCTIONING PART

Check the Following.

- Check camshaft position sensor (PHASE) and circuit. Refer to EC-945 .
- Check crankshaft position sensor (POS) and circuit. Refer to EC-938 .

OK or NG

OK >> GO TO 9.
NG >> 1. Repair or replace.
2. GO TO 4.

9. CHECK ECM FUNCTION

1. Substitute another known-good ECM to check ECM function. (ECM may be the cause of a problem, but this is the rarely the case.)
2. Perform initialization of NVIS (NATS) system and registration of NVIS (NATS) ignition key IDs. Refer to EC-689, "NVIS (Nissan Vehicle Immobilizer System — NATS)" .

>> GO TO 4.

10. CHECK IGNITION TIMING

1. Run engine at idle.
2. Check ignition timing with a timing light.

M/T: 15 ± 5° BTDC

A/T: 15 ± 5° BTDC (in "P" or "N" position)

OK or NG

OK >> **INSPECTION END**
NG >> GO TO 11.

11. PERFORM ACCELERATOR PEDAL RELEASED POSITION LEARNING

1. Stop engine.
2. Perform EC-668, "Accelerator Pedal Released Position Learning" .

>> GO TO 12.

12. PERFORM THROTTLE VALVE CLOSED POSITION LEARNING

Perform EC-669, "Throttle Valve Closed Position Learning" .

>> GO TO 13.

13. PERFORM IDLE AIR VOLUME LEARNING

Refer to EC-669, "Idle Air Volume Learning" .

Which is the result CMPLT or INCMP

CMPLT or INCMP

CMPLT >> GO TO 14.
INCMP >> 1. Follow the construction of “Idle Air Volume Learning”.
2. GO TO 4.

14. CHECK TARGET IDLE SPEED AGAIN

With CONSULT-II

1. Start engine and warm it up to normal operating temperature.
2. Read idle speed in “DATA MONITOR” mode with CONSULT-II.

M/T: 700 ± 50 rpm

A/T: 700 ± 50 rpm (in "P" or "N" position)

Without CONSULT-II

1. Start engine and warm it up to normal operating temperature.
2. Check idle speed.

M/T: 700 ± 50 rpm

A/T: 700 ± 50 rpm (in "P" or "N" position)

OK or NG

OK >> GO TO 15.
NG >> GO TO 17.

15. CHECK IGNITION TIMING AGAIN

1. Run engine at idle.
2. Check ignition timing with a timing light.

M/T: 15 ± 5° BTDC

A/T: 15 ± 5° BTDC (in "P" or "N" position)

OK or NG

OK >> **INSPECTION END**
NG >> GO TO 16.

16. CHECK TIMING CHAIN INSTALLATION

Check timing chain installation. Refer to EM-146, "TIMING CHAIN" .

OK or NG

OK >> GO TO 17.
NG >> 1. Repair the timing chain installation.
2. GO TO 4.

17. DETECT MALFUNCTIONING PART

Check the following.

- Check camshaft position sensor (PHASE) and circuit. Refer to EC-945 .
- Check crankshaft position sensor (POS) and circuit. Refer to EC-938 .

OK or NG

OK >> GO TO 18.
NG >> 1. Repair or replace.
2. GO TO 4.

18. CHECK ECM FUNCTION

1. Substitute another known-good ECM to check ECM function. (ECM may be the cause of a problem, but this is the rarely the case.)
2. Perform initialization of NVIS (NATS) system and registration of NVIS (NATS) ignition key IDs. Refer to EC-689, "NVIS (Nissan Vehicle Immobilizer System — NATS)" .

>> GO TO 4.

Symptom Matrix Chart

UBS0035Q

SYSTEM — BASIC ENGINE CONTROL SYSTEM

		SYMPTOM													Reference page
		HARD/NO START/RESTART (EXCP. HA)	ENGINE STALL	HESITATION/SURGING/FLAT SPOT	SPARK KNOCK/DETONATION	LACK OF POWER/POOR ACCELERATION	HIGH IDLE/LOW IDLE	ROUGH IDLE/HUNTING	IDLING VIBRATION	SLOW/NO RETURN TO IDLE	OVERHEATS/WATER TEMPERATURE HIGH	EXCESSIVE FUEL CONSUMPTION	EXCESSIVE OIL CONSUMPTION	BATTERY DEAD (UNDER CHARGE)	
Warranty symptom code		AA	AB	AC	AD	AE	AF	AG	AH	AJ	AK	AL	AM	HA	
Fuel	Fuel pump circuit	1	1	2	3	2		2	2			3		2	EC-1240
	Fuel pressure regulator system	3	3	4	4	4	4	4	4	4		4			EC-671
	Injector circuit	1	1	2	3	2		2	2			2			EC-1230
	Evaporative emission system	3	3	4	4	4	4	4	4	4		4			EC-1272
Air	Positive crankcase ventilation system	3	3	4	4	4	4	4	4	4		4	1		EC-1284
	Incorrect idle speed adjustment						1	1	1	1		1			EC-658
	Electric throttle control actuator	1	1	2	3	3	2	2	2	2		2		2	EC-1047, EC-1049
Ignition	Incorrect ignition timing adjustment	3	3	1	1	1		1	1			1			EC-658
	Ignition circuit	1	1	2	2	2		2	2			2			EC-1210
Main power supply and ground circuit		2	2	3	3	3		3	3		2	3			EC-757
Mass air flow sensor circuit		1	1	2	2	2		2	2			2			EC-798, EC-1041
Engine coolant temperature sensor circuit					3		3			3					EC-811
Heated oxygen sensor 1 circuit															EC-827, EC-836 , EC-847 , EC-1066 , EC-1072
Throttle position sensor circuit							2			2					EC-901
Accelerator pedal position sensor circuit				3	2	1									EC-915
Knock sensor circuit				2								3			EC-934
Crankshaft position sensor (POS) circuit		2	2												EC-938
Camshaft position sensor (PHASE) circuit		3	2												EC-945
Vehicle speed signal circuit			2	3		3						3			EC-1019
Power steering pressure sensor circuit			2					3	3						EC-1025
ECM		2	2	3	3	3	3	3	3	3	3	3			EC-1030, EC-1037
Intake valve timing control solenoid valve circuit			3	2		1	3	2	2	3		3			EC-766
PNP switch circuit				3		3		3	3			3			EC-1194
Start signal circuit		2													EC-1236

	SYMPTOM													Reference page
	HARD/NO START/RESTART (EXCP. HA)	ENGINE STALL	HESITATION/SURGING/FLAT SPOT	SPARK KNOCK/DETONATION	LACK OF POWER/POOR ACCELERATION	HIGH IDLE/LOW IDLE	ROUGH IDLE/HUNTING	IDLING VIBRATION	SLOW/NO RETURN TO IDLE	OVERHEATS/WATER TEMPERATURE HIGH	EXCESSIVE FUEL CONSUMPTION	EXCESSIVE OIL CONSUMPTION	BATTERY DEAD (UNDER CHARGE)	
Warranty symptom code	AA	AB	AC	AD	AE	AF	AG	AH	AJ	AK	AL	AM	HA	
Refrigerant pressure sensor circuit		2				3			3		4			EC-1252
Electrical load signal circuit							3							EC-1257
Air conditioner circuit	2	2	3	3	3	3	3	3	3		3		2	MTC-28 (with manual A/C) or ATC-31 (with auto A/C)
ABS actuator and electric unit (control unit)			4											

1 - 6: The numbers refer to the order of inspection.
(continued on next page)

SYSTEM — ENGINE MECHANICAL & OTHER

		SYMPTOM													Reference page
		HARD/NO START/RESTART (EXCP. HA)	ENGINE STALL	HESITATION/SURGING/FLAT SPOT	SPARK KNOCK/DETONATION	LACK OF POWER/POOR ACCELERATION	HIGH IDLE/LOW IDLE	ROUGH IDLE/HUNTING	IDLING VIBRATION	SLOW/NO RETURN TO IDLE	OVERHEATS/WATER TEMPERATURE HIGH	EXCESSIVE FUEL CONSUMPTION	EXCESSIVE OIL CONSUMPTION	BATTERY DEAD (UNDER CHARGE)	
Warranty symptom code		AA	AB	AC	AD	AE	AF	AG	AH	AJ	AK	AL	AM	HA	
Fuel	Fuel tank	5	5												FL-8
	Fuel piping			5	5	5		5	5			5			EC-1116
	Vapor lock														—
	Valve deposit	5		5	5	5		5	5			5			—
	Poor fuel (Heavy weight gasoline, Low octane)														—

		SYMPTOM													Reference page
		HARD/NO START/RESTART (EXCP. HA)	ENGINE STALL	HESITATION/SURGING/FLAT SPOT	SPARK KNOCK/DETONATION	LACK OF POWER/POOR ACCELERATION	HIGH IDLE/LOW IDLE	ROUGH IDLE/HUNTING	IDLING VIBRATION	SLOW/NO RETURN TO IDLE	OVERHEATS/WATER TEMPERATURE HIGH	EXCESSIVE FUEL CONSUMPTION	EXCESSIVE OIL CONSUMPTION	BATTERY DEAD (UNDER CHARGE)	
Warranty symptom code		AA	AB	AC	AD	AE	AF	AG	AH	AJ	AK	AL	AM	HA	
Air	Air duct		5	5		5		5	5			5			EM-110
	Air cleaner														EM-110
	Air leakage from air duct (Mass air flow sensor — electric throttle control actuator)	5			5		5			5					EM-110
	Electric throttle control actuator														EM-112
	Air leakage from intake manifold/ Collector/Gasket														EM-112
Cranking	Battery	1	1	1		1		1	1			1		1	SC-4
	Generator circuit														SC-25
	Starter circuit	3													SC-9
	Signal plate	6													EM-186
	PNP switch	4													MT-12 (M/T) or AT-103 (A/T)
Engine	Cylinder head	5	5	5	5	5		5	5			5			EM-164
	Cylinder head gasket										4		3		
	Cylinder block	6	6	6	6	6		6	6			6	4		EM-186
	Piston														
	Piston ring														
	Connecting rod														
	Bearing														
	Crankshaft														
Valve mecha-nism	Timing chain	5	5	5	5	5		5	5			5			EM-146
	Camshaft														EM-134
	C-VTC														
	Intake valve												3		EM-164
	Exhaust valve														
Exhaust	Exhaust manifold/Tube/Muffler/ Gasket	5	5	5	5	5		5	5			5			EX-6
	Three way catalyst														

		SYMPTOM													Reference page
		HARD/NO START/RESTART (EXCP. HA)	ENGINE STALL	HESITATION/SURGING/FLAT SPOT	SPARK KNOCK/DETONATION	LACK OF POWER/POOR ACCELERATION	HIGH IDLE/LOW IDLE	ROUGH IDLE/HUNTING	IDLING VIBRATION	SLOW/NO RETURN TO IDLE	OVERHEATS/WATER TEMPERATURE HIGH	EXCESSIVE FUEL CONSUMPTION	EXCESSIVE OIL CONSUMPTION	BATTERY DEAD (UNDER CHARGE)	
Warranty symptom code		AA	AB	AC	AD	AE	AF	AG	AH	AJ	AK	AL	AM	HA	
Lubrication	Oil pan/Oil strainer/Oil pump/Oil filter/Oil gallery/Oil cooler	5	5	5	5	5		5	5			5			EM-120, LU-19 , LU-20 , LU-23 , LU-23
	Oil level (Low)/Filthy oil														LU-17
Cooling	Radiator/Hose/Radiator filler cap	5	5	5	5	5		5	5		4	5			CO-34
	Thermostat									5					CO-45
	Water pump														CO-41
	Water gallery														CO-31
	Coolant level (Low)/Contaminated coolant									5					CO-34
	Coolant level (low)/Contaminated coolant														CO-32
NVIS (NISSAN Vehicle Immobilizer System — NATS)		1	1												EC-689 or BL-116

1 - 6: The numbers refer to the order of inspection.

Engine Control Component Parts Location

UBS0035R

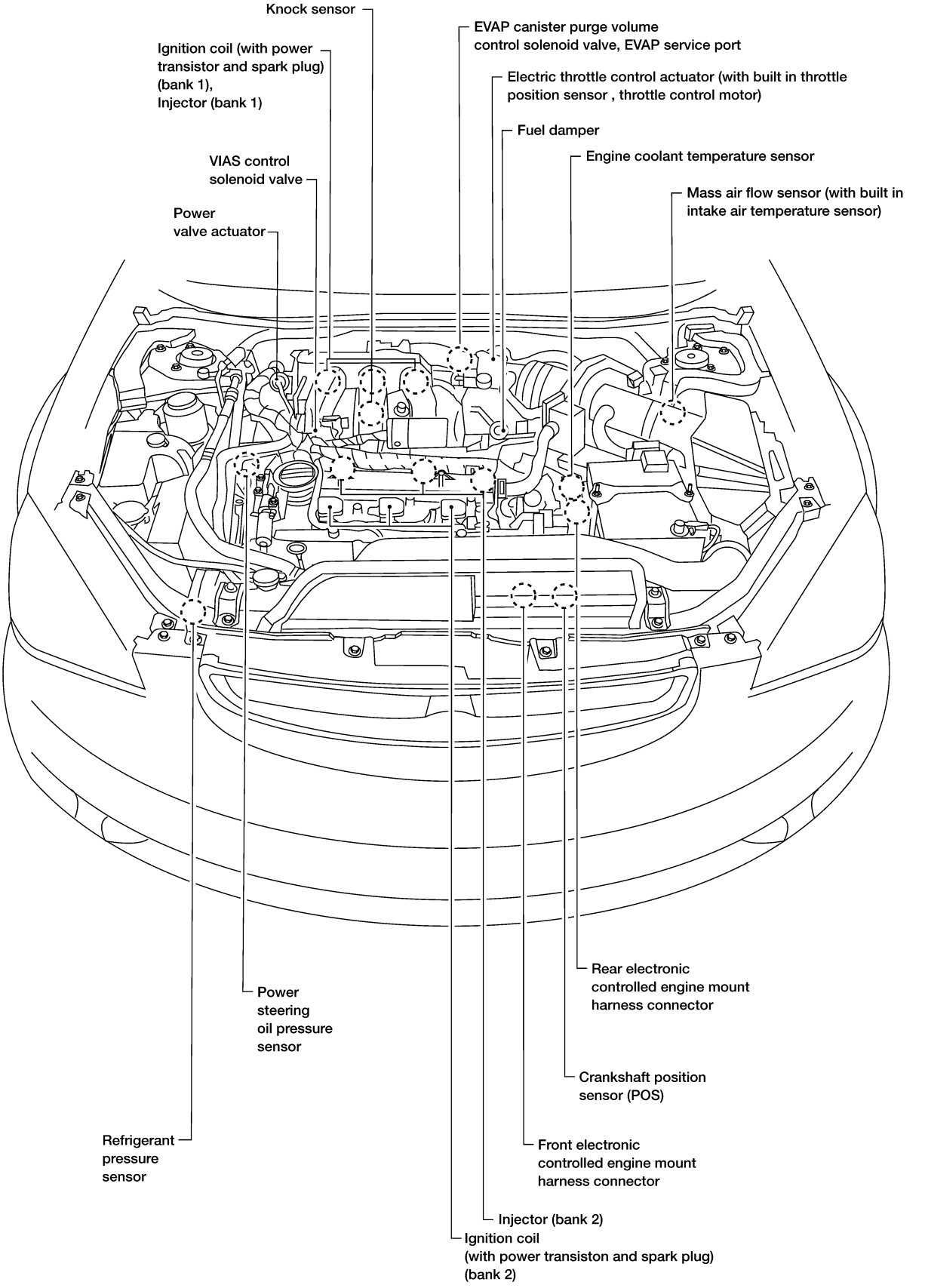

BBIA0029E

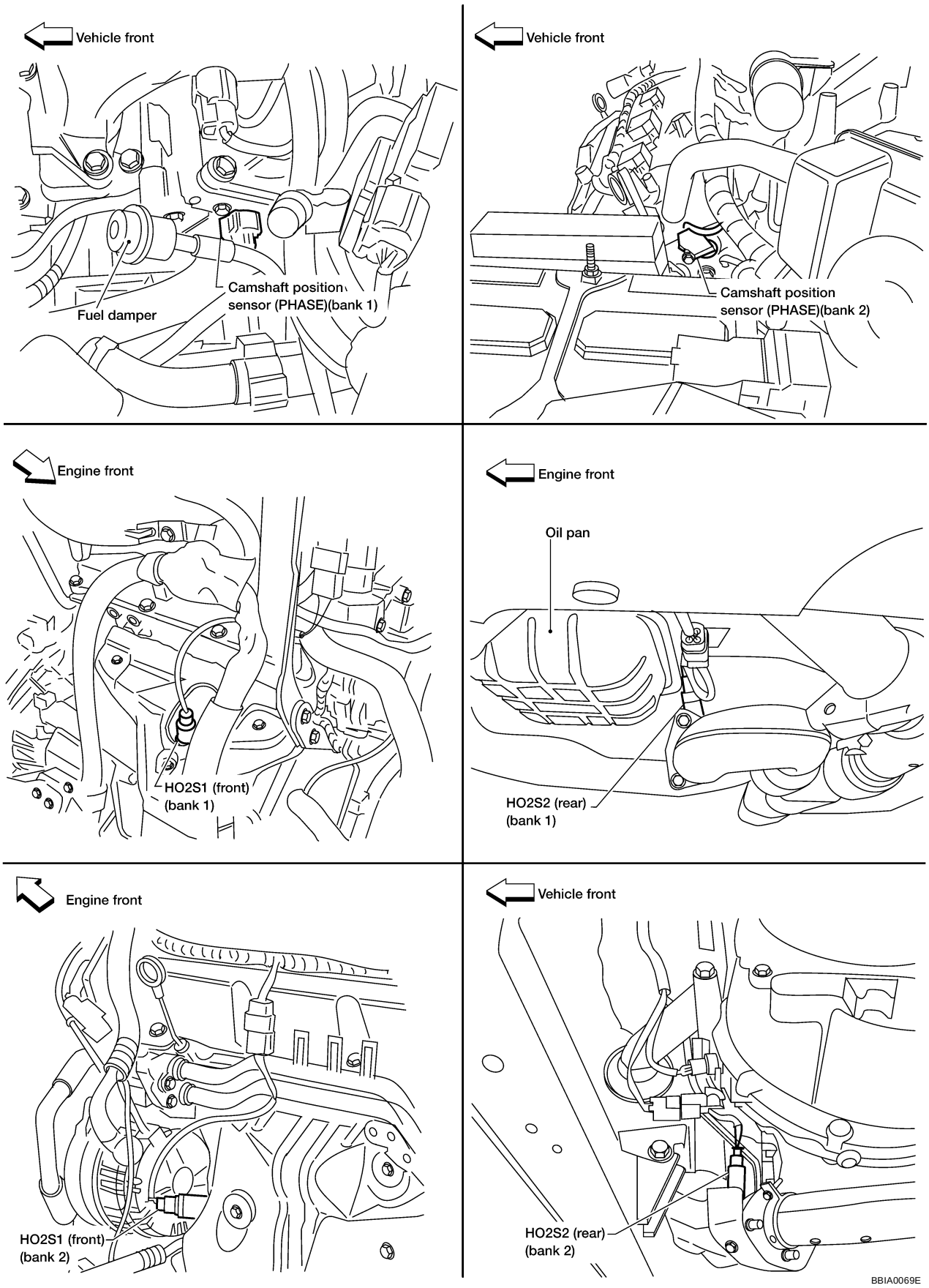
Vehicle front
Fuel damper
Camshaft position sensor (PHASE)(bank 1)
Vehicle front
Camshaft position sensor (PHASE)(bank 2)
Engine front
HO2S1 (front) (bank 1)
Engine front
Oil pan
HO2S2 (rear) (bank 1)
Engine front
HO2S1 (front) (bank 2)
Vehicle front
HO2S2 (rear) (bank 2)
BBIA0069E

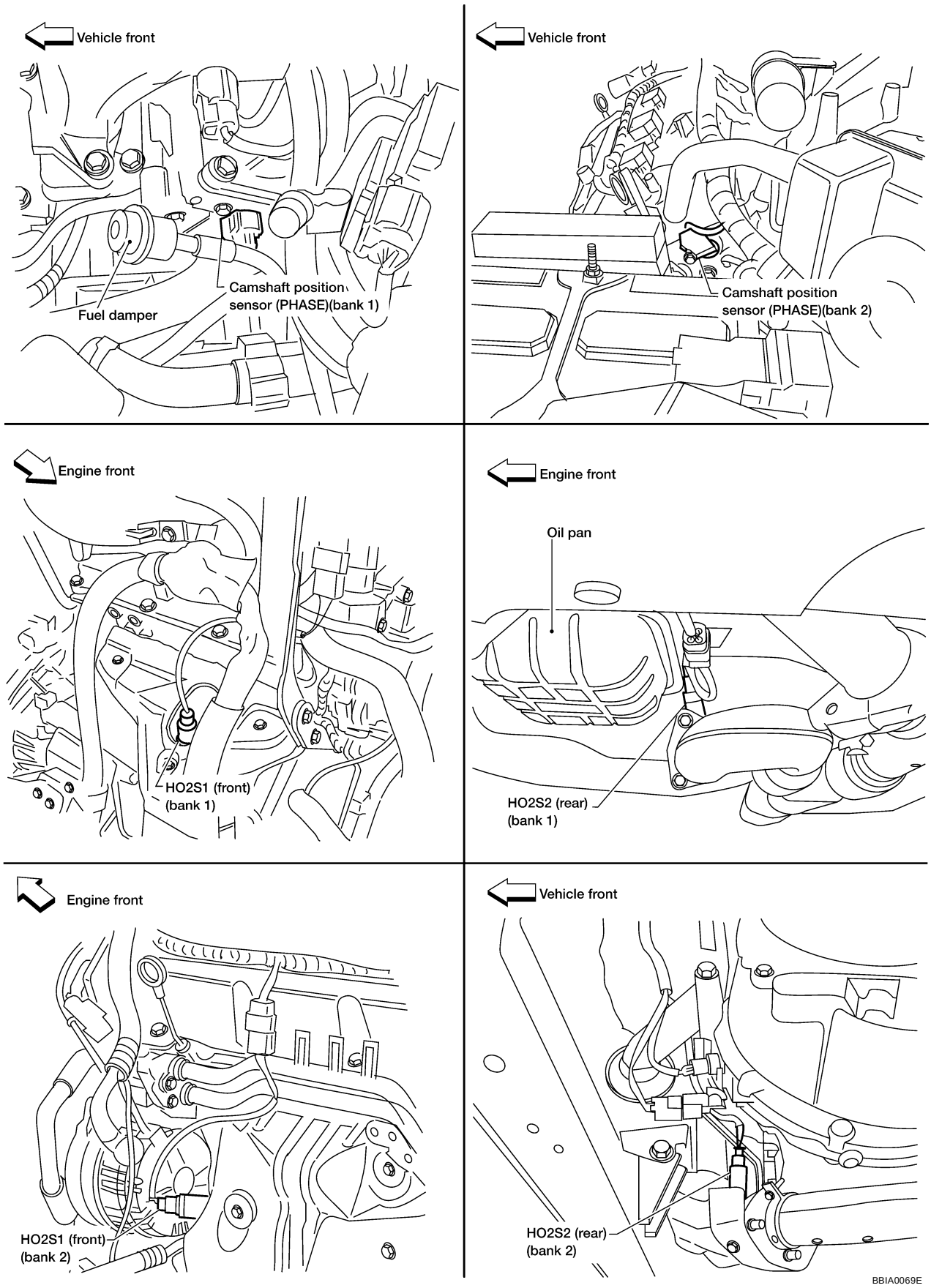
Vehicle front
Fuel damper
Camshaft position sensor (PHASE)(bank 1)
Vehicle front
Camshaft position sensor (PHASE)(bank 2)
Engine front
HO2S1 (front) (bank 1)
Engine front
Oil pan
HO2S2 (rear) (bank 1)
Engine front
HO2S1 (front) (bank 2)
Vehicle front
HO2S2 (rear) (bank 2)
BBIA0069E

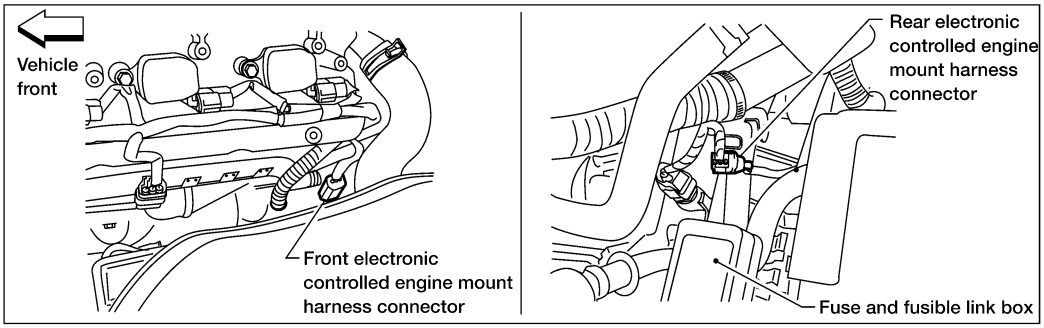
Vehicle front
Front electronic controlled engine mount harness connector
Rear electronic controlled engine mount harness connector
Fuse and fusible link box

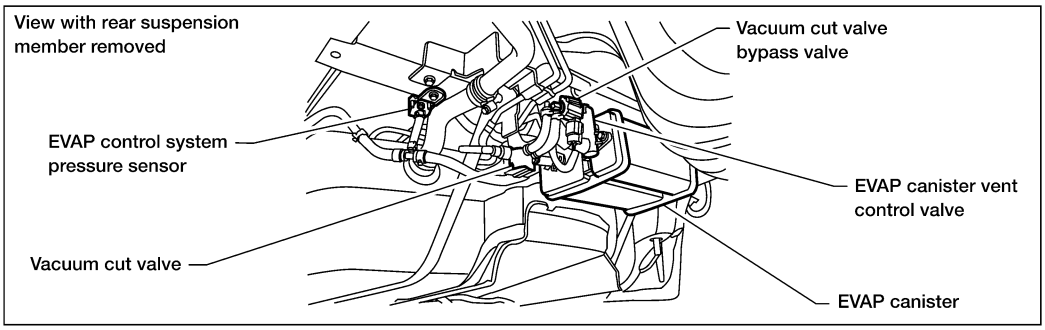
View with rear suspension member removed
Vacuum cut valve bypass valve
EVAP control system pressure sensor
EVAP canister vent control valve
Vacuum cut valve
EVAP canister

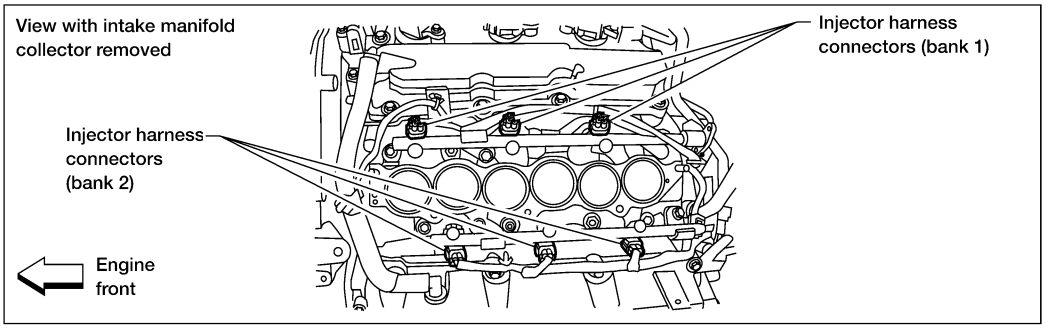
View with intake manifold collector removed
Injector harness connectors (bank 1)
Injector harness connectors (bank 2)
Engine front

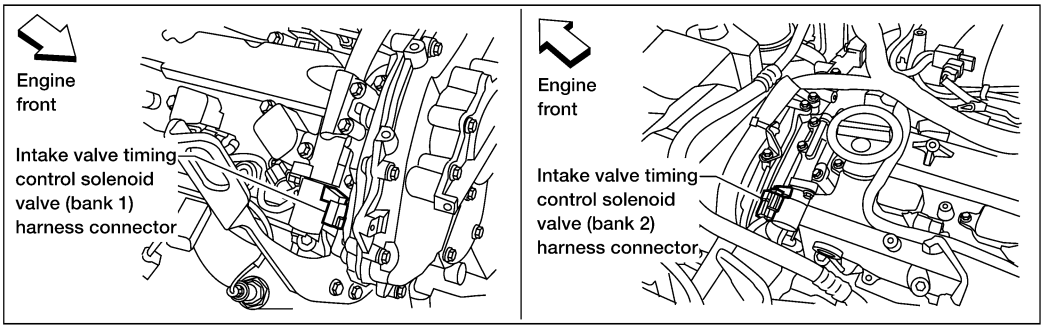
Engine front
Intake valve timing control solenoid valve (bank 1) harness connector
Engine front
Intake valve timing control solenoid valve (bank 2) harness connector

BBIA0094E

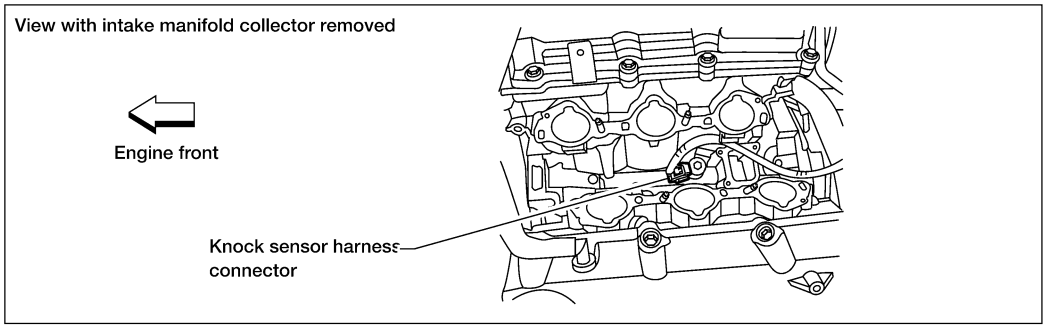
View with intake manifold collector removed
Engine front
Knock sensor harness connector

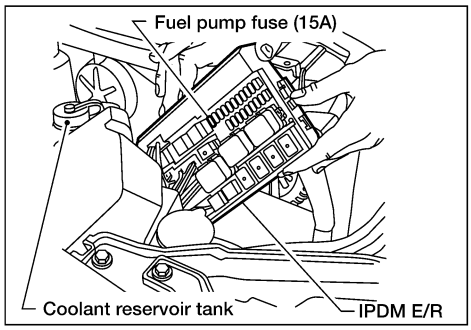
Fuel pump fuse (15A)
Coolant reservoir tank
IPDM E/R

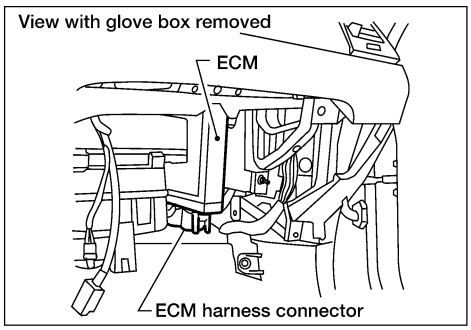
View with glove box removed
ECM
ECM harness connector

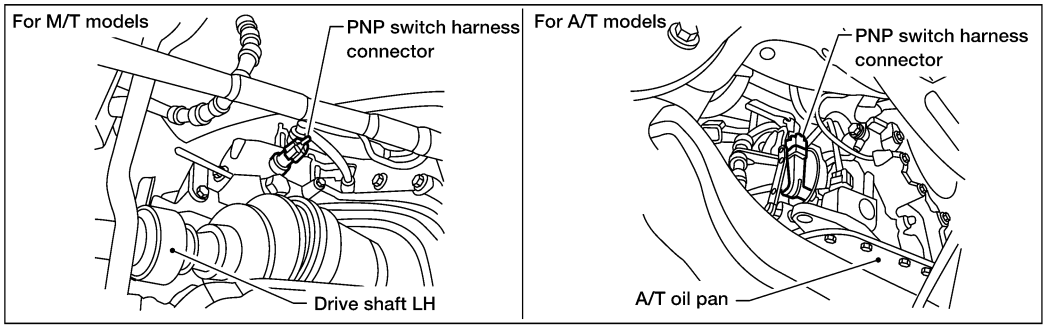
For M/T models
PNP switch harness connector
Drive shaft LH
For A/T models
PNP switch harness connector
A/T oil pan

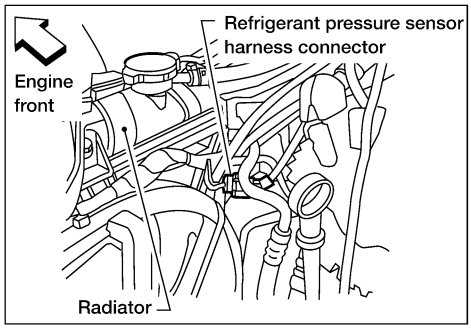
Engine front
Refrigerant pressure sensor harness connector
Radiator

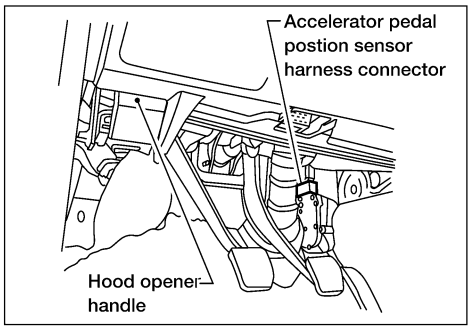
Accelerator pedal postion sensor harness connector
Hood opener handle

BBIA0095E

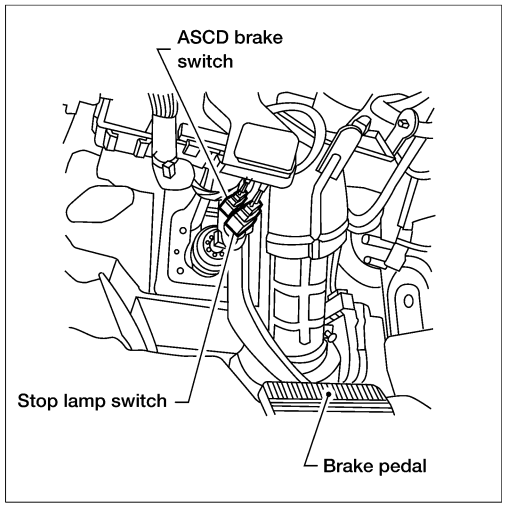
ASCD brake switch
Stop lamp switch
Brake pedal

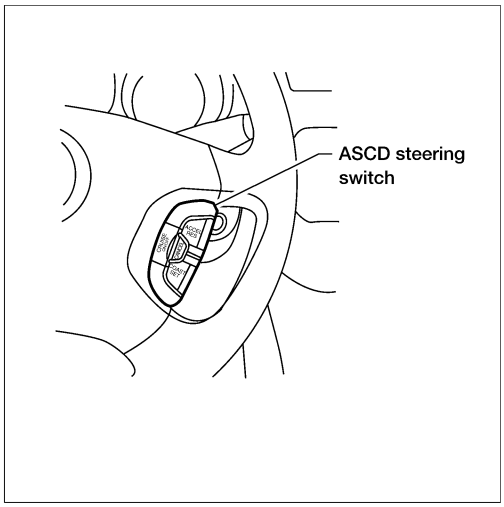
ASCD steering switch

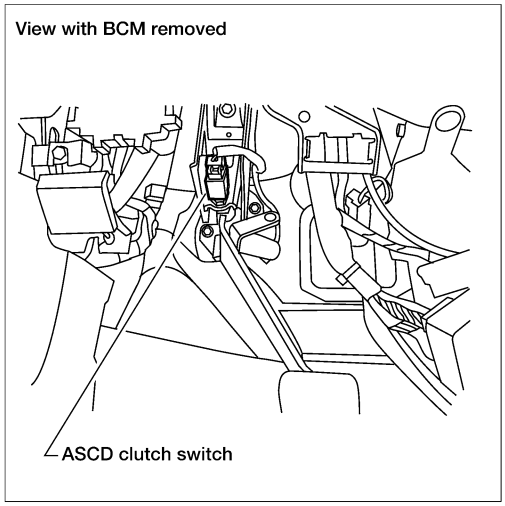
View with BCM removed
ASCD clutch switch

BBIA0096E

Circuit Diagram

UBS0035S

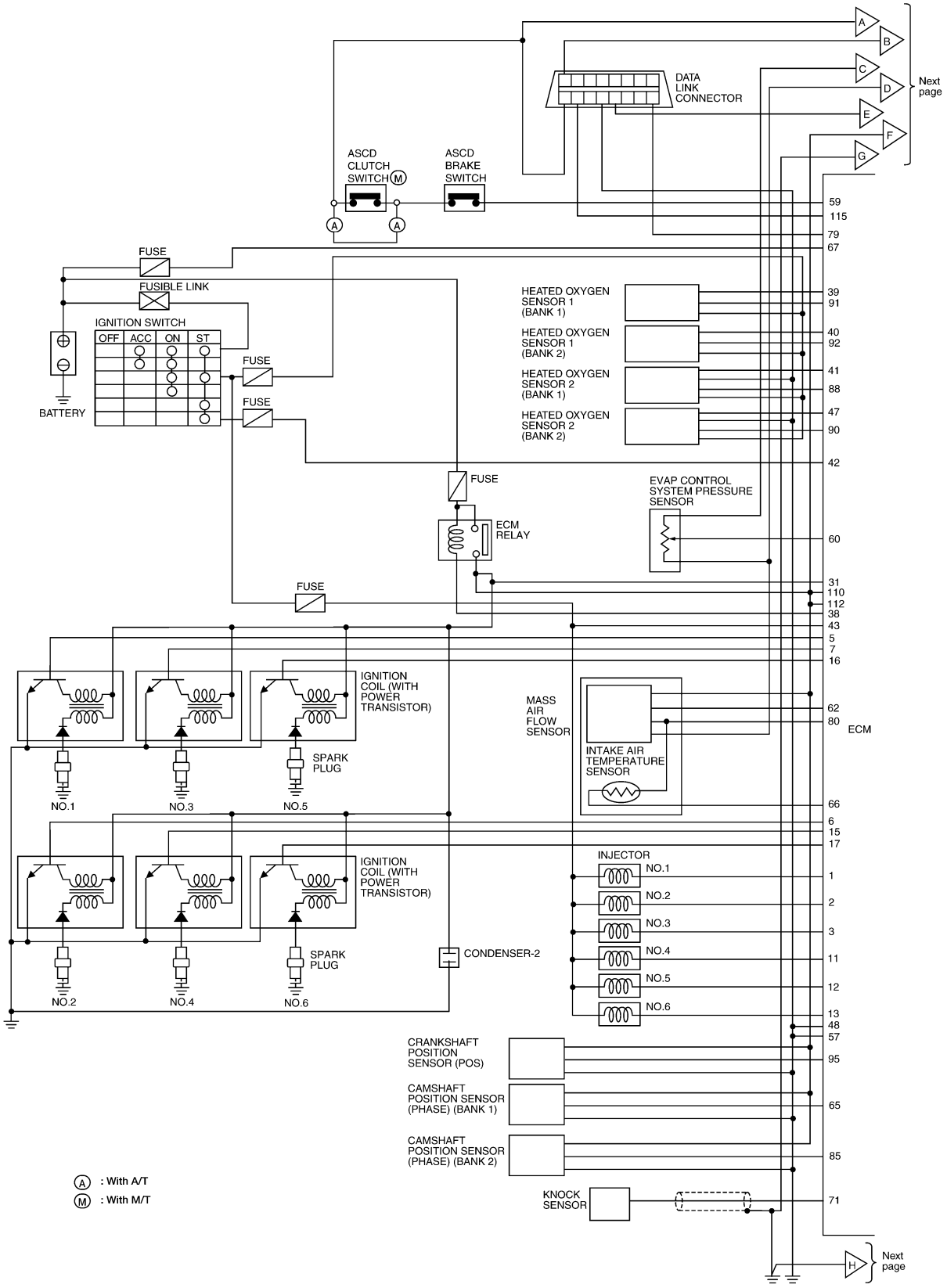

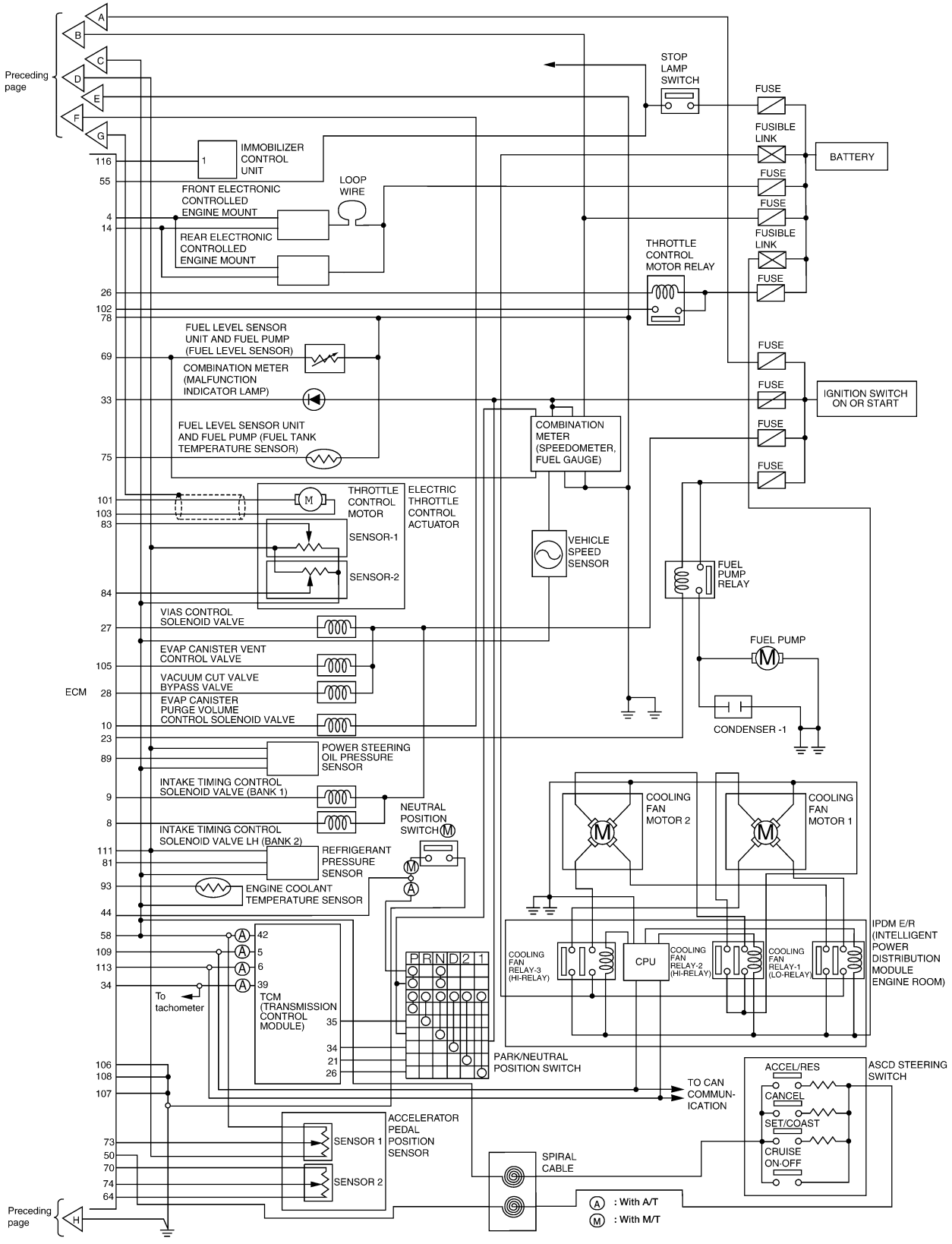
Preceding page
A
B
C
D
E
F
G
STOP LAMP SWITCH
FUSE
FUSIBLE LINK
BATTERY
IMMOBILIZER CONTROL UNIT
116
55
FRONT ELECTRONIC CONTROLLED ENGINE MOUNT
LOOP WIRE
4
14
REAR ELECTRONIC CONTROLLED ENGINE MOUNT
THROTTLE CONTROL MOTOR RELAY
26
102
78
FUEL LEVEL SENSOR UNIT AND FUEL PUMP (FUEL LEVEL SENSOR)
69
COMBINATION METER (MALFUNCTION INDICATOR LAMP)
33
IGNITION SWITCH ON OR START
FUEL LEVEL SENSOR UNIT AND FUEL PUMP (FUEL TANK TEMPERATURE SENSOR)
75
COMBINATION METER (SPEEDOMETER, FUEL GAUGE)
101
103
83
THROTTLE CONTROL MOTOR
ELECTRIC THROTTLE CONTROL ACTUATOR
SENSOR-1
SENSOR-2
84
VEHICLE SPEED SENSOR
FUEL PUMP RELAY
VIAS CONTROL SOLENOID VALVE
27
FUEL PUMP
EVAP CANISTER VENT CONTROL VALVE
105
VACUUM CUT VALVE BYPASS VALVE
ECM
28
EVAP CANISTER PURGE VOLUME CONTROL SOLENOID VALVE
10
CONDENSER -1
23
POWER STEERING OIL PRESSURE SENSOR
89
INTAKE TIMING CONTROL SOLENOID VALVE (BANK 1)
9
NEUTRAL POSITION SWITCH
8
INTAKE TIMING CONTROL SOLENOID VALVE LH (BANK 2)
COOLING FAN MOTOR 2
COOLING FAN MOTOR 1
111
81
REFRIGERANT PRESSURE SENSOR
93
ENGINE COOLANT TEMPERATURE SENSOR
44
58
109
113
34
42
5
6
39
To tachometer
TCM (TRANSMISSION CONTROL MODULE)
35
34
21
26
P R N D 2 1
PARK/NEUTRAL POSITION SWITCH
COOLING FAN RELAY-3 (HI-RELAY)
CPU
COOLING FAN RELAY-2 (HI-RELAY)
COOLING FAN RELAY-1 (LO-RELAY)
IPDM E/R (INTELLIGENT POWER DISTRIBUTION MODULE ENGINE ROOM)
106
108
107
TO CAN COMMUN-ICATION
ACCEL/RES
CANCEL
SET/COAST
CRUISE ON-OFF
ASCD STEERING SWITCH
ACCELERATOR PEDAL POSITION SENSOR
73
50
70
74
64
SENSOR 1
SENSOR 2
SPIRAL CABLE
Preceding page
H
A : With A/T
M : With M/T

BBWA0048E

ECM Harness Connector Terminal Layout

UBS0035T

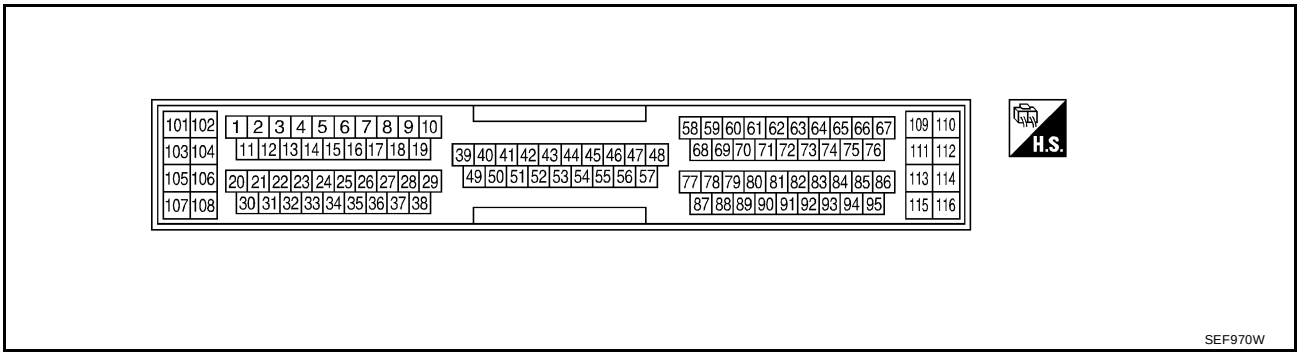

ECM Terminals and Reference Value

UBS0035U

PREPARATION

1. ECM is located behind the glove box. For this inspection, remove glove box.
2. Remove ECM harness protector.

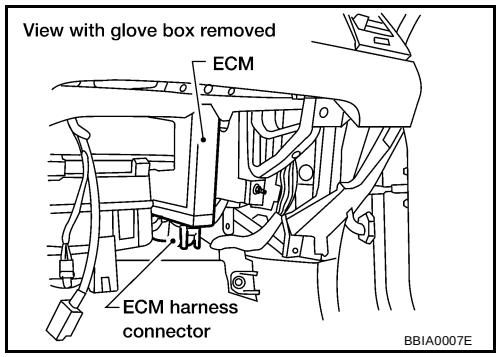

3. Perform all voltage measurements with the connector connected. Extend tester probe as shown to perform tests easily.
   - Open harness securing clip to make testing easier.
   - Use extreme care not to touch 2 pins at one time.
   - Data is for comparison and may not be exact.

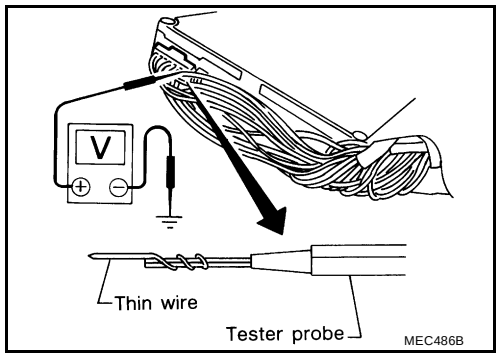

ECM INSPECTION TABLE

Specification data are reference values and are measured between each terminal and ground.

CAUTION:

Do not use ECM ground terminals when measuring input/output voltage. Doing so may result in damage to the ECMs transistor. Use a ground other than ECM terminals, such as the ground.

TER-MINAL NO.	WIRE COLOR	ITEM	CONDITION	DATA (DC Voltage)
1 2 3 11 12 13	R/B R/W R/Y R/L L/W PU/R	Injector No. 1 Injector No. 2 Injector No. 3 Injector No. 4 Injector No. 5 Injector No. 6	**[Engine is running]** ● **Warm-up condition** ● Idle speed	BATTERY VOLTAGE (11 - 14V)★ 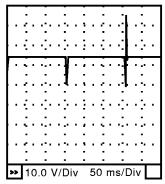 SEC984C
			[Engine is running] ● **Warm-up condition** ● Engine speed is 2,000 rpm	BATTERY VOLTAGE (11 - 14V)★ 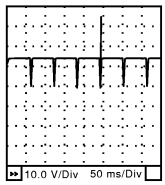 SEC985C
4	W	Electronic controlled engine mount-1	**[Engine is running]** ● Idle speed	0 - 1.0V
			[Engine is running] ● Except the above condition	BATTERY VOLTAGE (11 - 14V)
5 6 7 15 16 17	Y/R G/R L/R GY PU/W GY/R	Ignition signal No. 1 Ignition signal No. 2 Ignition signal No. 3 Ignition signal No. 4 Ignition signal No. 5 Ignition signal No. 6	**[Engine is running]** ● **Warm-up condition** ● Idle speed	0 - 0.2V★ 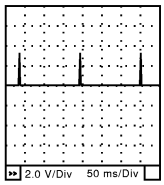 SEC986C
			[Engine is running] ● **Warm-up condition** ● Engine speed is 2,500 rpm.	0.1 - 0.3V★ 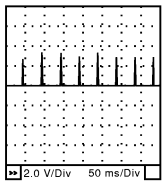 SEC987C

TER-MINAL NO.	WIRE COLOR	ITEM	CONDITION	DATA (DC Voltage)
8	Y	Intake valve timing control solenoid valve (bank 2)	**[Engine is running]** ● **Warm-up condition** ● Idle speed	BATTERY VOLTAGE (11 - 14V)★ 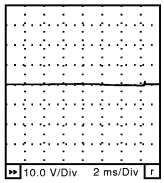 SEC988C
			[Engine is running] ● **Warm-up condition** ● Engine speed is 2,500 rpm	7 - 12V★ 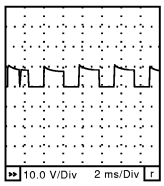 SEC989C
9	R/L	Intake valve timing control solenoid valve (bank 1)	**[Engine is running]** ● **Warm-up condition** ● Idle speed	BATTERY VOLTAGE (11 - 14V)★ 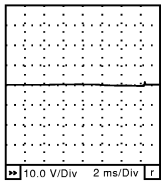 SEC988C
			[Engine is running] ● **Warm-up condition** ● Engine speed is 2,500 rpm	7 - 12V★ 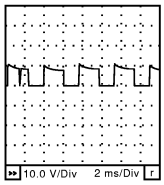 SEC989C
10	PU/R	EVAP canister purge volume control solenoid valve	**[Engine is running]** ● Idle speed	BATTERY VOLTAGE (11 - 14V)★ 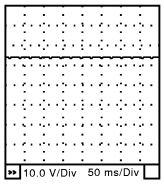 SEC990C
			[Engine is running] ● Engine speed is about 2,000 rpm (More than 100 seconds after starting engine).	BATTERY VOLTAGE (11 - 14V)★ 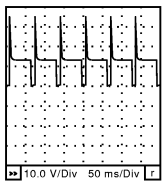 SEC991C

TER-MINAL NO.	WIRE COLOR	ITEM	CONDITION	DATA (DC Voltage)
14	W/R	Electronic controlled engine mount-2	**[Engine is running]** ● Idle speed	BATTERY VOLTAGE (11 - 14V)
			[Engine is running] ● Except the above condition	0 - 1.0V
23	B/OR	Fuel pump relay	**[Ignition switch “ON”]** ● For 1 second after turning ignition switch “ON” **[Engine is running]**	0 - 1.5V
			[Ignition switch “ON”] ● More than 1 second after turning ignition switch “ON”.	BATTERY VOLTAGE (11 - 14V)
26	OR	Throttle control motor relay	**[Ignition switch "OFF"]**	BATTERY VOLTAGE (11 - 14V)
			[Ignition switch "ON"]	0 - 1.0V
27	Y/G	VIAS control solenoid valve	**[Engine is running]** ● Engine speed is 1,800 - 3,600 rpm	0 - 1.0V
			[Engine is running] ● Except the above condition	BATTERY VOLTAGE (11 - 14V)
28	BR	Vacuum cut valve bypass valve	**[Ignition switch “ON”]**	BATTERY VOLTAGE (11 - 14V)
31	R	Counter current return	**[Ignition switch "ON"]**	BATTERY VOLTAGE (11 - 14V)
33	LG/B	MIL	**[Ignition switch “ON”]**	0 - 1.0V
			[Engine is running] ● Idle speed	BATTERY VOLTAGE (11 - 14V)
38	W/B	ECM relay (Self shut-off)	**[Engine is running]** **[Ignition switch “OFF”]** ● For a few seconds after turning ignition switch “OFF”	0 - 1.5V
			[Ignition switch “OFF”] ● A few seconds passed after turning ignition switch “OFF”	BATTERY VOLTAGE (11 - 14V)
39	OR	Heated oxygen sensor 1 heater (bank 1)	**[Engine is running]** ● Engine speed is below 3,600 rpm.	0 - 1.0V
			[Engine is running] ● Engine speed is above 3,600 rpm.	BATTERY VOLTAGE (11 - 14V)
40	R/L	Heated oxygen sensor 1 heater (bank 2)	**[Engine is running]** ● Engine speed is below 3,600 rpm.	0 - 1.0V
			[Engine is running] ● Engine speed is above 3,600 rpm.	BATTERY VOLTAGE (11 - 14V)
41	P/B	Heated oxygen sensor 2 heater (bank 1)	**[Engine is running]** ● Engine speed is below 3,600 rpm. ● After driving for 2 minutes at a speed of 70 km/h (43 MPH) or more.	0 - 1.0V
			[Ignition switch “ON”] ● Engine stopped **[Engine is running]** ● Engine speed is above 3,600 rpm.	BATTERY VOLTAGE (11 - 14V)

TER-MINAL NO.	WIRE COLOR	ITEM	CONDITION	DATA (DC Voltage)
42	BR/W	Start signal	**[Ignition switch "ON"]**	Approximately 0V
			[Ignition switch "START"]	9 - 12V
43	R	Ignition switch	**[Ignition switch "OFF"]**	0V
			[Ignition switch "ON"]	BATTERY VOLTAGE (11 - 14V)
44	G/R (A/T) G/W (M/T)	PNP switch	**[Ignition switch "ON"]** ● Gear position is "P" or "N".	Approximately 0V
			[Ignition switch "ON"] ● Except the above gear position	BATTERY VOLTAGE (11 - 14V)
47	R/L	Heated oxygen sensor 2 heater (bank 2)	**[Engine is running]** ● Engine speed is below 3,600 rpm. ● After driving for 2 minutes at a speed of 70 km/h (43 MPH) or more.	0 - 1.0V
			[Ignition switch "ON"] ● Engine stopped **[Engine is running]** ● Engine speed is above 3,600 rpm.	BATTERY VOLTAGE (11 - 14V)
48 57	B B	ECM ground	**[Engine is running]** ● Idle speed	Engine ground
50	G/Y	ASCD steering switch	**[Ignition switch "ON"]** ● ASCD steering switch is "OFF".	Approximately 4.0V
			[Ignition switch "ON"] ● CRUISE switch is "ON".	Approximately 0V
			[Ignition switch "ON"] ● CANCEL switch is "ON".	Approximately 1V
			[Ignition switch "ON"] ● COAST/SET switch is "ON".	Approximately 2V
			[Ignition switch "ON"] ● ACCEL/RESUME switch is "ON".	Approximately 3V
55	R/G	Stop lamp switch	**[Ignition switch "ON"]** ● Brake pedal is fully released	Approximately 0V
			[Ignition switch "ON"] ● Brake pedal is depressed	BATTERY VOLTAGE (11 - 14V)
58	B	Sensors' ground	**[Engine is running]** ● **Warm-up condition** ● Idle speed	Approximately 0V
59	G/B (A/T) G/R (M/T)	ASCD brake switch	**[Ignition switch "ON"]** ● Brake pedal is depressed ● Clutch pedal is depressed (M/T models)	Approximately 0V
			[Ignition switch "ON"] ● Brake pedal is fully released ● Clutch pedal is fully released (M/T models)	BATTERY VOLTAGE (11 - 14V)
60	W	EVAP control system pres-sure sensor	**[Ignition switch "ON"]**	Approximately 1.8 - 4.8V

TER-MINAL NO.	WIRE COLOR	ITEM	CONDITION	DATA (DC Voltage)
62	W	Mass air flow sensor	**[Engine is running]** ● **Warm-up condition** ● Idle speed	1.1 - 1.5V
			[Engine is running] ● **Warm-up condition** ● Engine speed is 2,500 rpm.	1.7 - 2.4V
64	OR	Accelerator pedal position sensor 2 power supply	**[Ignition switch “ON”]**	Approximately 2.5V
65	Y	Camshaft position sensor (PHASE) (bank 1)	**[Engine is running]** ● **Warm-up condition** ● Idle speed	1.0 - 4.0V★ 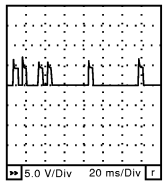 SEC033D
			[Engine is running] ● Engine speed is 2,000 rpm.	1.0 - 4.0V★ 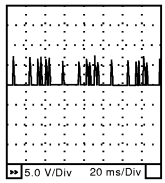 SEC034D
66	Y/G	Intake air temperature sensor	**[Engine is running]**	Approximately 0 - 4.8V Output voltage varies with intake air temperature.
67	W/L	Power supply for ECM (Buck-up)	**[Ignition switch “OFF”]**	BATTERY VOLTAGE (11 - 14V)
69	G/B	Fuel level sensor	**[Ignition switch “ON”]**	Approximately 0 - 4.8V Output voltage varies with fuel level.
70	G	Accelerator pedal position sensor 2 ground	**[Ignition switch “ON”]**	Approximately 0V
71	W	Knock sensor	**[Engine is running]** ● Idle speed	Approximately 2.5V
73	W	Accelerator pedal position sensor 1	**[Ignition switch "ON"]** ● Accelerator pedal fully released	0.41 - 0.71V
			[Ignition switch "ON"] ● Accelerator pedal fully depressed	More than 4.2V
74	W/B	Accelerator pedal position sensor 2	**[Ignition switch "ON"]** ● Accelerator pedal fully released	0.21 - 0.36V
			[Ignition switch "ON"] ● Accelerator pedal fully depressed	More than 2.1V
75	P/L	Fuel tank temperature sensor	**[Engine is running]**	Approximately 0 - 4.8V Output voltage varies with fuel tank temperature.
78	B/R	Fuel level sensor ground	**[Engine is running]** ● Idle speed	Approximately 0V

TER-MINAL NO.	WIRE COLOR	ITEM	CONDITION	DATA (DC Voltage)
80	B	Mass air flow sensor ground	**[Engine is running]** ● **Warm-up condition** ● Idle speed	Approximately 0V
81	W	Refrigerant pressure sensor	**[Engine is running]** ● **Warm-up condition** ● Both A/C switch and blower switch are “ON”. (Compressor operates.)	1.0 - 4.0V
83	W	Throttle position sensor 1	**[Ignition switch "ON"]** ● Gear position: "D" (A/T models) ● Gear position: "1st" (M/T models) ● Accelerator pedal fully released	More than 0.36V
			[Ignition switch “ON”] ● Gear position: "D" (A/T models) ● Gear position: "1st" (M/T models) ● Accelerator pedal fully depressed	Less than 4.75V
84	L	Throttle position sensor 2	**[Ignition switch "ON"]** ● Gear position: "D" (A/T models) ● Gear position: "1st" (M/T models) ● Accelerator pedal fully released	Less than 4.75V
			[Ignition switch “ON”] ● Gear position: "D" (A/T models) ● Gear position: "1st" (M/T models) ● Accelerator pedal fully depressed	More than 0.36V
85	G	Camshaft position sensor (PHASE) (bank 2)	**[Engine is running]** ● **Warm-up condition** ● Idle speed	1.0 - 4.0V★ 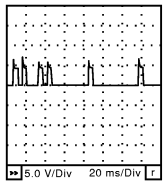 SEC033D
			[Engine is running] ● Engine speed is 2,000 rpm.	1.0 - 4.0V★ 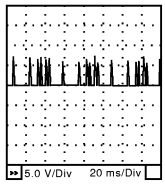 SEC034D
88	W	Heated oxygen sensor 2 (bank 1)	**[Engine is running]** ● **Warm-up condition** ● Engine speed is 2,000 rpm.	0 - Approximately 1.0V
89	W	Power steering pressure sensor	**[Engine is running]** ● Steering wheel is being turned.	0.5 - 4.0V
			[Engine is running] ● Steering wheel is not being turned.	0.4 - 0.8V
90	W	Heated oxygen sensor 2 (bank 2)	**[Engine is running]** ● **Warm-up condition** ● Engine speed is 2,000 rpm.	0 - Approximately 1.0V

TER-MINAL NO.	WIRE COLOR	ITEM	CONDITION	DATA (DC Voltage)
91	W	Heated oxygen sensor 1 (bank 1)	**[Engine is running]** ● **Warm-up condition** ● Engine speed is 2,000 rpm.	0 - Approximately 1.0V (Periodically change)
92	W	Heated oxygen sensor 1 (bank 2)	**[Engine is running]** ● **Warm-up condition** ● Engine speed is 2,000 rpm.	0 - Approximately 1.0V (Periodically change)
93	Y	Engine coolant temperature sensor	**[Engine is running]**	Approximately 0 - 4.8V Output voltage varies with engine coolant temperature.
95	W	Crankshaft position sensor (POS)	**[Engine is running]** ● **Warm-up condition** ● Idle speed	Approximately 2.4V★ 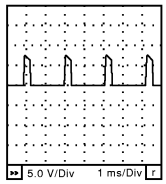 SEC035D
			[Engine is running] ● Engine speed is 2,000 rpm.	Approximately 2.3V★ 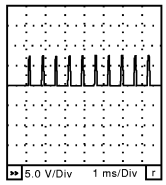 SEC036D
101	Y	Throttle control motor (Open)	**[Ignition switch "ON"]** ● Shift lever: "D" (A/T models) ● Shift lever: "1st" (M/T models) ● Accelerator pedal is depressing	0 - 14V★ 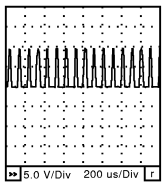 SEC037D
102	R	Throttle control motor relay power supply	**[Ignition switch "ON"]**	BATTERY VOLTAGE (11 - 14V)
103	BR	Throttle control motor (Close)	**[Ignition switch "ON"]** ● Shift lever: "D" (A/T models) ● Shift lever: "1st" (M/T models) ● Accelerator pedal is releasing	0 - 14V★ 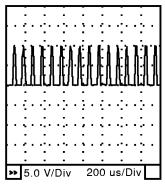 SEC038D
105	OR	EVAP canister vent control valve	**[Ignition switch “ON”]**	BATTERY VOLTAGE (11 - 14V)
106 108	B B	ECM ground	**[Engine is running]** ● Idle speed	Engine ground
107	B	Throttle control motor ground	**[Ignition switch “ON”]**	Approximately 0V
109	L	CAN communication line	**[Ignition switch “ON”]**	Approximately 2.6 - 3.2V Output voltage varies with the communication status.

TER-MINAL NO.	WIRE COLOR	ITEM	CONDITION	DATA (DC Voltage)
110 112	R/G R/G	Power supply for ECM	**[Ignition switch "ON"]**	BATTERY VOLTAGE (11 - 14V)
111	R	Sensors' power supply	**[Ignition switch "ON"]**	Approximately 5V
113	Y	CAN communication line	**[Ignition switch "ON"]**	Approximately 1.7 - 2.3V Output voltage varies with the communication status.
115	OR	Data link connector	**[Ignition switch "ON"]** ● CONSULT-II or GST is disconnected.	BATTERY VOLTAGE (11 - 14V)

★: Average voltage for pulse signal (Actual pulse signal can be confirmed by oscilloscope.)

CONSULT-II Function

UBS0035V

FUNCTION

Diagnostic test mode	Function
Work support	This mode enables a technician to adjust some devices faster and more accurately by following the indications on the CONSULT-II unit.
Self-diagnostic results	Self-diagnostic results such as 1st trip DTC, DTCs and 1st trip freeze frame data or freeze frame data can be read and erased quickly.*1
Data monitor	Input/Output data in the ECM can be read.
Data monitor (SPEC)	Input/Output of the specification for Basic fuel schedule, AFM, A/F feedback control value and the other data monitor items can be read.
Active test	Diagnostic Test Mode in which CONSULT-II drives some actuators apart from the ECMs and also shifts some parameters in a specified range.
DTC & SRT confirmation	The status of system monitoring tests and the self-diagnosis status/result can be confirmed.
Function test	This mode is used to inform customers when their vehicle condition requires periodic maintenance.
ECM part number	ECM part number can be read.

*1 The following emission-related diagnostic information is cleared when the ECM memory is erased.

1. Diagnostic trouble codes
2. 1st trip diagnostic trouble codes
3. Freeze frame data
4. 1st trip freeze frame data
5. System readiness test (SRT) codes
6. Test values
7. Others

ENGINE CONTROL COMPONENT PARTS/CONTROL SYSTEMS APPLICATION

Item			DIAGNOSTIC TEST MODE							
			WORK SUP-PORT	SELF-DIAGNOSTIC RESULTS		DATA MONI-TOR	DATA MONI-TOR (SPEC)	ACTIVE TEST	DTC & SRT CONFIRMATION	
				DTC*1	FREEZE FRAME DATA*2				SRT STATUS	DTC WORK SUP-PORT
ENGINE CONTROL COMPONENT PARTS	INPUT	Crankshaft position sensor (POS)		×	×	×	×			
		Camshaft position sensor (PHASE)		×		×	×			
		Mass air flow sensor		×		×	×			
		Engine coolant temperature sensor		×	×	×	×	×		
		Heated oxygen sensor 1		×		×	×		×	×
		Heated oxygen sensor 2		×		×	×		×	×
		Vehicle speed sensor		×	×	×	×			
		Accelerator pedal position sensor		×		×	×			
		Throttle position sensor		×		×	×			
		Fuel tank temperature sensor		×		×	×	×		
		EVAP control system pressure sensor		×		×	×			
		Absolute pressure sensor		×		×	×			
		Intake air temperature sensor		×		×	×			
		Knock sensor		×						
		Refrigerant pressure sensor				×	×			
		Ignition switch (start signal)				×	×			
		Closed throttle position switch (accelerator pedal position sensor signal)				×	×			
		Air conditioner switch				×	×			
		Park/neutral position (PNP) switch		×		×	×			
		Stop lamp switch		×		×	×			
		Power steering pressure sensor		×		×	×			
		Battery voltage				×	×			
		Load signal				×	×			
		Fuel level sensor		×		×	×			
		ASCD steering switch		×		×	×			
		ASCD brake switch		×		×	×			

Item			DIAGNOSTIC TEST MODE							
			WORK SUP-PORT	SELF-DIAGNOSTIC RESULTS		DATA MONI-TOR	DATA MONI-TOR (SPEC)	ACTIVE TEST	DTC & SRT CONFIRMATION	
				DTC*1	FREEZE FRAME DATA*2				SRT STATUS	DTC WORK SUP-PORT
ENGINE CONTROL COMPONENT PARTS	OUTPUT	Injectors				×	×	×		
		Power transistor (Ignition timing)				×	×	×		
		Throttle control motor relay		×		×	×			
		Throttle control motor		×						
		EVAP canister purge volume control solenoid valve		×		×	×	×		×
		Air conditioner relay				×	×			
		Fuel pump relay	×			×	×	×		
		Cooling fan relay		×		×	×	×		
		Heated oxygen sensor 1 heater		×		×	×		×	
		Heated oxygen sensor 2 heater		×		×	×		×	
		EVAP canister vent control valve		×		×	×	×		
		Vacuum cut valve bypass valve		×		×	×	×		×
		Intake valve timing control solenoid valve		×		×	×	×		
		VIAS control solenoid valve		×		×	×	×		
		Electronic controlled engine mount				×	×	×		
		Calculated load value			×	×	×			

X: Applicable

*1: This item includes 1st trip DTCs.

*2: This mode includes 1st trip freeze frame data or freeze frame data. The items appear on CONSULT-II screen in freeze frame data mode only if a 1st trip DTC or DTC is detected. For details, refer toEC-678 .

CONSULT-II INSPECTION PROCEDURE

1. Turn ignition switch OFF.
2. Connect “CONSULT-II” to data link connector, which is located under LH dash panel near the fuse box cover.
3. Turn ignition switch ON.

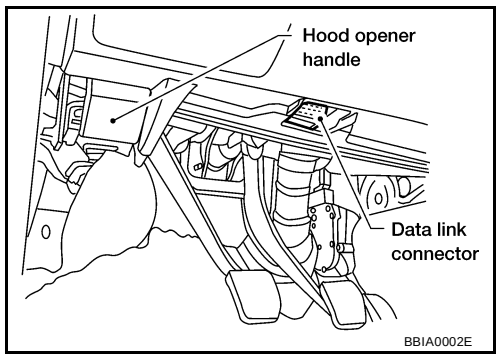

4. Touch “START”.

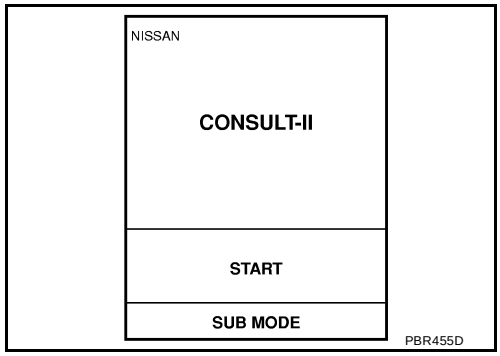

5. Touch “ENGINE”.

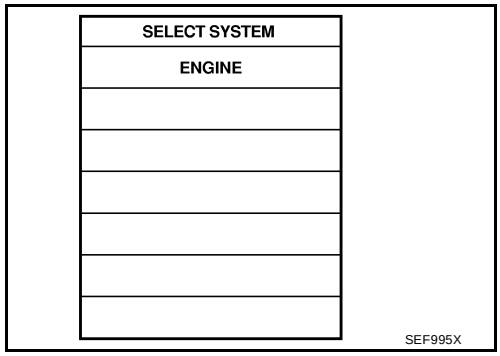

6. Perform each diagnostic test mode according to each service procedure.

For further information, see the CONSULT-II Operation Manual.

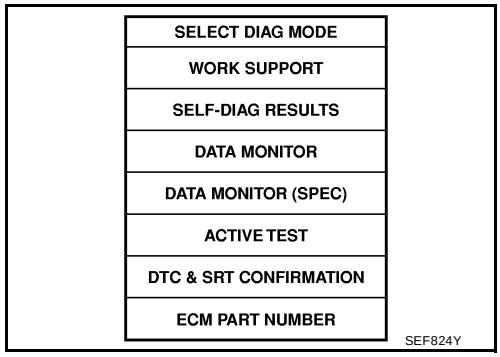

WORK SUPPORT MODE

Work Item

WORK ITEM	CONDITION	USAGE
FUEL PRESSURE RELEASE	● FUEL PUMP WILL STOP BY TOUCHING “START” DURING IDLING. CRANK A FEW TIMES AFTER ENGINE STALLS.	When releasing fuel pressure from fuel line
IDLE AIR VOL LEARN	● THE IDLE AIR VOLUME THAT KEEPS THE ENGINE WITHIN THE SPECIFIED RANGE IS MEMORIZED IN ECM.	When learning the idle air volume
SELF-LEARNING CONT	● THE COEFFICIENT OF SELF-LEARNING CONTROL MIXTURE RATIO RETURNS TO THE ORIGINAL COEFFICIENT.	When releasing fuel pressure from fuel line

WORK ITEM	CONDITION	USAGE
EVAP SYSTEM CLOSE	OPEN THE VACUUM CUT VALVE BYPASS VALVE AND CLOSE THE EVAP CANISTER VENT CONTROL VALVE IN ORDER TO MAKE EVAP SYSTEM CLOSE UNDER THE FOLLOWING CONDITIONS. ● IGN SW “ON” ● ENGINE NOT RUNNING ● AMBIENT TEMPERATURE IS ABOVE 0°C (32°F). ● NO VACUUM AND NO HIGH PRESSURE IN EVAP SYSTEM ● FUEL TANK TEMP. IS MORE THAN 0°C (32°F). ● WITHIN 10 MINUTES AFTER STARTING “EVAP SYSTEM CLOSE” ● WHEN TRYING TO EXECUTE “EVAP SYSTEM CLOSE” UNDER THE CONDITION EXCEPT ABOVE, CONSULT-II WILL DISCONTINUE IT AND DISPLAY APPROPRIATE INSTRUCTION. **NOTE:** **WHEN STARTING ENGINE, CONSULT-II MAY DISPLAY “BATTERY VOLTAGE IS LOW. CHARGE BATTERY”, EVEN IN USING CHARGED BATTERY.**	When detecting EVAP vapor leak point of EVAP system
TARGET IDLE RPM ADJ*	● IDLE CONDITION	When setting target idle speed
TARGET IGN TIM ADJ*	● IDLE CONDITION	When adjusting target ignition timing After adjustment, confirm target ignition timing with a timing light.

*: This function is not necessary in the usual service procedure.

SELF-DIAG RESULTS MODE

Self Diagnostic Item

Regarding items of “DTC and 1st trip DTC”, refer to EC-632, "INDEX FOR DTC" .)

Freeze Frame Data and 1st Trip Freeze Frame Data

Freeze frame data item*1	Description
DIAG TROUBLE CODE [PXXXX]	● The engine control component part/control system has a trouble code, it is displayed as “PXXXX”. (Refer to EC-632, "INDEX FOR DTC" .)
FUEL SYS-B1*2	● “Fuel injection system status” at the moment a malfunction is detected is displayed.
FUEL SYS-B2*2	● One mode in the following is displayed. “MODE 2”: Open loop due to detected system malfunction “MODE 3”: Open loop due to driving conditions (power enrichment, deceleration enrichment) “MODE 4”: Closed loop - using oxygen sensor(s) as feedback for fuel control “MODE 5”: Open loop - has not yet satisfied condition to go to closed loop
CAL/LD VALUE [%]	● The calculated load value at the moment a malfunction is detected is displayed.
COOLANT TEMP [°C] or [°F]	● The engine coolant temperature at the moment a malfunction is detected is displayed.
S-FUEL TRIM-B1 [%]	● “Short-term fuel trim” at the moment a malfunction is detected is displayed.
S-FUEL TRIM-B2 [%]	● The short-term fuel trim indicates dynamic or instantaneous feedback compensation to the base fuel schedule.
L-FUEL TRIM-B1 [%]	● “Long-term fuel trim” at the moment a malfunction is detected is displayed.
L-FUEL TRIM-B2 [%]	● The long-term fuel trim indicates much more gradual feedback compensation to the base fuel schedule than short-term fuel trim.
ENGINE SPEED [rpm]	● The engine speed at the moment a malfunction is detected is displayed.
VHCL SPEED [km/h] or [mph]	● The vehicle speed at the moment a malfunction is detected is displayed.

Freeze frame data item*1	Description
B/FUEL SCHDL [msec]	● The base fuel schedule at the moment a malfunction is detected is displayed.
INT/A TEMP SE [°C] or [°F]	● The intake air temperature at the moment a malfunction is detected is displayed.

*1: The items are the same as those of 1st trip freeze frame data.
*2: Regarding L31 model, “B1” indicates bank 1 and “B2” indicates bank 2.

DATA MONITOR MODE

Monitored Item

×: Applicable

Monitored item [Unit]	ECM INPUT SIG-NALS	MAIN SIG-NALS	CAN DIAG SUP-PORT MNTR	Description	Remarks
ENG SPEED [rpm]	×	×		● Indicates the engine speed computed from the signal of the crankshaft position sensor (POS) and CMPS (PHASE).	● Accuracy becomes poor if engine speed drops below the idle rpm. ● If the signal is interrupted while the engine is running, an abnormal value may be indicated.
MAS A/F SE-B1 [V]	×	×		● The signal voltage of the mass air flow sensor is displayed.	● When the engine is stopped, a certain value is indicated.
COOLAN TEMP/S [°C] or [°F]	×	×		● The engine coolant temperature (determined by the signal voltage of the engine coolant temperature sensor) is displayed.	● When the engine coolant temperature sensor is open or short-circuited, ECM enters fail-safe mode. The engine coolant temperature determined by the ECM is displayed.
HO2S1 (B1) [V]	×	×		● The signal voltage of the heated oxygen sensor 1 is displayed.	
HO2S1 (B2) [V]	×				
HO2S2 (B1) [V]	×			● The signal voltage of the heated oxygen sensor 2 is displayed.	
HO2S2 (B2) [V]	×				
HO2S1 MNTR (B1) [RICH/LEAN]	×	×		● Display of heated oxygen sensor 1 signal during air-fuel ratio feedback control: RICH ... means the mixture became “rich”, and control is being affected toward a leaner mixture. LEAN ... means the mixture became “lean”, and control is being affected toward a rich mixture.	● After turning ON the ignition switch, “RICH” is displayed until air-fuel mixture ratio feedback control begins. ● When the air-fuel ratio feedback is clamped, the value just before the clamping is displayed continuously.
HO2S1 MNTR (B2) [RICH/LEAN]	×				
HO2S2 MNTR (B1) [RICH/LEAN]	×			● Display of heated oxygen sensor 2 signal: RICH ... means the amount of oxygen after three way catalyst is relatively small. LEAN ... means the amount of oxygen after three way catalyst is relatively large.	● When the engine is stopped, a certain value is indicated.
HO2S2 MNTR (B2) [RICH/LEAN]	×				
VHCL SPEED SE [km/h] or [mph]	×	×		● The vehicle speed computed from the vehicle speed signal sent from combination meter is displayed.	
BATTERY VOLT [V]	×	×		● The power supply voltage of ECM is displayed.	
ACCEL SEN 1 [V]	×	×		● The accelerator pedal position sensor signal voltage is displayed.	
ACCEL SEN 2 [V]	×				

Monitored item [Unit]	ECM INPUT SIG-NALS	MAIN SIG-NALS	CAN DIAG SUP-PORT MNTR	Description	Remarks
THRTL SEN 1 [V]	×	×		● The throttle position sensor signal voltage is displayed.	
THRTL SEN 2 [V]	×				
FUEL T/TEMP SE [°C] or [°F]	×			● The fuel temperature (determined by the signal voltage of the fuel tank temperature sensor) is displayed.	
INT/A TEMP SE [°C] or [°F]	×	×		● The intake air temperature (determined by the signal voltage of the intake air temperature sensor) is indicated.	
EVAP SYS PRES [V]	×			● The signal voltage of EVAP control system pressure sensor is displayed.	
ABSOL PRES/SE [V]	×			● The signal of the absolute pressure sensor is displayed.	
FUEL LEVEL SE [V]	×			● The signal voltage of the fuel level sensor is displayed.	
START SIGNAL [ON/OFF]	×	×		● Indicates [ON/OFF] condition from the starter signal.	● After starting the engine, [OFF] is displayed regardless of the starter signal.
CLSD THL POS [ON/OFF]	×	×		● Indicates idle position [ON/OFF] computed by ECM according to the accelerator pedal position sensor signal.	
AIR COND SIG [ON/OFF]	×	×		● Indicates [ON/OFF] condition of the air conditioner switch as determined by the air conditioner signal.	
P/N POSI SW [ON/OFF]	×	×		● Indicates [ON/OFF] condition from the park/neutral position (PNP) switch signal.	
PW/ST SIGNAL [ON/OFF]	×	×		● [ON/OFF] condition of the power steering system (determined by the signal voltage of the power steering pressure sensor signal) is indicated.	
LOAD SIGNAL [ON/OFF]	×	×		● Indicates [ON/OFF] condition from the electrical load signal. ON ... Rear window defogger switch is ON and/or lighting switch is in 2nd position. OFF ... Both rear window defogger switch and lighting switch are OFF.	
IGNITION SW [ON/OFF]	×	×		● Indicates [ON/OFF] condition from ignition switch signal.	
BRAKE SW [ON/OFF]				● Indicates [ON/OFF] condition from the stop lamp switch signal.	
INJ PULSE-B1 [msec]		×		● Indicates the actual fuel injection pulse width compensated by ECM according to the input signals.	● When the engine is stopped, a certain computed value is indicated.
INJ PULSE-B2 [msec]					
B/FUEL SCHDL [msec]		×		● “Base fuel schedule” indicates the fuel injection pulse width programmed into ECM, prior to any learned on board correction.	
IGN TIMING [BTDC]		×		● Indicates the ignition timing computed by ECM according to the input signals.	● When the engine is stopped, a certain value is indicated.

Monitored item [Unit]	ECM INPUT SIG-NALS	MAIN SIG-NALS	CAN DIAG SUP-PORT MNTR	Description	Remarks
A/F ALPHA-B1 [%]		×		● The mean value of the air-fuel ratio feedback correction factor per cycle is indicated.	● When the engine is stopped, a certain value is indicated. ● This data also includes the data for the air-fuel ratio learning control.
A/F ALPHA-B2 [%]		×			
CAL/LD VALUE [%]				● “Calculated load value” indicates the value of the current airflow divided by peak airflow.	
MASS AIRFLOW [g·m/s]				● Indicates the mass airflow computed by ECM according to the signal voltage of the mass air flow sensor.	
PURG VOL C/V [%]				● Indicates the EVAP canister purge volume control solenoid valve control value computed by the ECM according to the input signals. ● The opening becomes larger as the value increases.	
INT/V TIM (B1) [°CA]				● Indicates [°CA] of intake camshaft advanced angle.	
INT/V TIM (B2) [°CA]					
INT/V SOL (B1) [%]				● The control condition of the intake valve timing control solenoid valve (determined by ECM according to the input signals) is indicated. ON ... intake valve timing control is operating. OFF ... Intake valve timing control is not operating.	
INT/V SOL (B2) [%]					
VIAS S/V [ON/OFF]				● The control condition of the VIAS control solenoid valve (determined by ECM according to the input signals) is indicated. ON ... VIAS control solenoid valve is operating. OFF ... VIAS control solenoid valve is not operating.	
AIR COND RLY [ON/OFF]			×	● The air conditioner relay control condition (determined by ECM according to the input signals) is indicated.	
ENGINE MOUNT [IDLE/TRVL]				● The control condition of the electronic controlled engine mount (determined by ECM according to the input signals) is indicated. IDLE ... Idle condition ON ... Driving condition	
FUEL PUMP RLY [ON/OFF]			×	● Indicates the fuel pump relay control condition determined by ECM according to the input signals.	
VC/V BYPASS/V [ON/OFF]				● The control condition of the vacuum cut valve bypass valve (determined by ECM according to the input signals) is indicated. ON ... Open OFF ... Closed	

Monitored item [Unit]	ECM INPUT SIG-NALS	MAIN SIG-NALS	CAN DIAG SUP-PORT MNTR	Description	Remarks
VENT CONT/V [ON/OFF]				● The control condition of the EVAP canister vent control valve (determined by ECM according to the input signals) is indicated. ON ... Closed OFF ... Open	
THRTL RELAY [ON/OFF]				● Indicates the throttle control motor relay control condition determined by the ECM according to the input signals.	
COOLING FAN [HI/LOW/OFF]				● The control condition of the cooling fan (determined by ECM according to the input signals) is indicated. HI ... High speed operation LOW ... Low speed operation OFF ... Stop	
HO2S1 HTR (B1) [ON/OFF]				● Indicates [ON/OFF] condition of heated oxygen sensor 1 heater determined by ECM according to the input signals.	
HO2S1 HTR (B2) [ON/OFF]					
HO2S2 HTR (B1) [ON/OFF]				● Indicates [ON/OFF] condition of heated oxygen sensor 2 heater determined by ECM according to the input signals.	
HO2S2 HTR (B2) [ON/OFF]					
IDL A/V LEARN [YET/CMPLT/ INCMP]				● Display the condition of idle air volume learning YET ... Idle air volume learning has not been performed yet. CMPLT ... Idle air volume learning has already been performed successfully. INCMP ... Idle air volume learning has not been performed successfully.	
TRVL AFTER MIL [km] or [mile]				● Distance traveled while MIL is activated.	
AC PRESS SEN [V]				● The signal voltage from the refrigerant pressure sensor is displayed.	
VHCL SPEED SE [km/h] or [mph]				● The vehicle speed computed from the vehicle speed signal sent from TCM is displayed.	
SET VHCL SPD [km/h] or [mph]				● The preset vehicle speed is displayed.	
MAIN SW [ON/OFF]				● Indicates [ON/OFF] condition from CRUISE switch signal.	
CANCEL SW [ON/OFF]				● Indicates [ON/OFF] condition from CANCEL switch signal.	
RESUME/ACC SW [ON/OFF]				● Indicates [ON/OFF] condition from ACCEL/RES switch signal.	
SET SW [ON/OFF]				● Indicates [ON/OFF] condition from COAST/SET switch signal.	
BRAKE SW1 SW [ON/OFF]				● Indicates [ON/OFF] condition from ASCD brake switch signal, and ASCD clutch switch signal (M/T models).	
BRAKE SW2 SW [ON/OFF]				● Indicates [ON/OFF] condition of stop lamp switch signal.	

Monitored item [Unit]	ECM INPUT SIG-NALS	MAIN SIG-NALS	CAN DIAG SUP-PORT MNTR	Description	Remarks
VHCL SPD CUT [NON/CUT]				● Indicates the vehicle cruise condition. NON ... Vehicle speed is maintained at the ASCD set speed. CUT ...Vehicle speed increased to excessively high compared with the ASCD set speed, and ASCD operation is cut off.	
LO SPEED CUT [NON/CUT]				● Indicates the vehicle cruise condition. NON ... Vehicle speed is maintained at the ASCD set speed. CUT ...Vehicle speed decreased to excessively low compared with the ASCD set speed, and ASCD operation is cut off.	
AT OD MONITOR [ON/OFF]				● Indicates [ON/OFF] condition of A/T O/D according to the input signal from the TCM.	
AT OD CANCEL [ON/OFF]				● Indicates [ON/OFF] condition of A/T O/D cancel signal sent from the TCM.	
CRUISE LAMP [ON/OFF]				● Indicates [ON/OFF] condition of CRUISE lamp determined by the ECM according to the input signals.	
SET LAMP [ON/OFF]				● Indicates [ON/OFF] condition of SET lamp determined by the ECM according to the input signals.	
Voltage [V]				● Voltage, frequency, duty cycle or pulse width measured by the probe.	● Only “#” is displayed if item is unable to be measured. ● Figures with “#”s are temporary ones. They are the same figures as an actual piece of data which was just previously measured.
Frequency [msec], [Hz] or [%]					
DUTY-HI					
DUTY-LOW					
PLS WIDTH-HI					
PLS WIDTH-LOW					
CAN COMM [OK/NG]			×	● Indicates the communication condition of CAN communication line.	
CAN CIRC 1 [OK/UNKWN]			×		
CAN CIRC 2 [OK/UNKWN]			×		
CAN CIRC 3 [OK/UNKWN]			×		
CAN CIRC 4 [OK/UNKWN]			×		
CAN CIRC 5 [OK/UNKWN]			×		
CAN CIRC 6 [OK/UNKWN]			×		
CAN CIRC 7 [OK/UNKWN]			×		

NOTE:
- Any monitored item that does not match the vehicle being diagnosed is deleted from the display automatically.
- Regarding L31 model, “B1” indicates bank 1 and “B2” indicates bank 2.

DATA MONITOR (SPEC) MODE

Monitored Item

Monitored item [Unit]	ECM input signals	Main signals	Description	Remarks
ENG SPEED [rpm]	×		● Indicates the engine speed computed from the signal of the crankshaft position sensor (POS).	
MAS A/F SE-B1 [V]	×	×	● The signal voltage of the mass air flow sensor specification is displayed.	● When engine is running specification range is indicated.
B/FUEL SCHDL [msec]			● “Base fuel schedule” indicates the fuel injection pulse width programmed into ECM, prior to any learned on board correction.	● When engine is running specification range is indicated.
A/F ALPHA-B1 [%] A/F ALPHA-B2 [%]		×	● The mean value of the air-fuel ratio feedback correction factor per cycle is indicated.	● When engine is running specification range is indicated. ● This data also includes the data for the air-fuel ratio learning control.

NOTE:
Any monitored item that does not match the vehicle being diagnosed is deleted from the display automatically.

ACTIVE TEST MODE

Test Item

TEST ITEM	CONDITION	JUDGEMENT	CHECK ITEM (REMEDY)
FUEL INJECTION	● Engine: Return to the original trouble condition ● Change the amount of fuel injection using CONSULT-II.	If trouble symptom disappears, see CHECK ITEM.	● Harness and connectors ● Fuel injectors ● Heated oxygen sensor 1
IGNITION TIMING	● Engine: Return to the original trouble condition ● Timing light: Set ● Retard the ignition timing using CONSULT-II.	If trouble symptom disappears, see CHECK ITEM.	● Perform “Idle Air Volume Learning”.
POWER BALANCE	● Engine: After warming up, idle the engine. ● A/C switch “OFF” ● Shift lever “N” ● Cut off each injector signal one at a time using CONSULT-II.	Engine runs rough or dies.	● Harness and connectors ● Compression ● Fuel injectors ● Power transistor ● Spark plugs ● Ignition coils
COOLING FAN	● Ignition switch: ON ● Turn the cooling fan “HI”, "LOW" and “OFF” using CONSULT-II.	Cooling fan moves and stops.	● Harness and connectors ● Cooling fan motor ● Cooling fan relay
ENG COOLANT TEMP	● Engine: Return to the original trouble condition ● Change the engine coolant temperature using CONSULT-II.	If trouble symptom disappears, see CHECK ITEM.	● Harness and connectors ● Engine coolant temperature sensor ● Fuel injectors
FUEL PUMP RELAY	● Ignition switch: ON (Engine stopped) ● Turn the fuel pump relay “ON” and “OFF” using CONSULT-II and listen to operating sound.	Fuel pump relay makes the operating sound.	● Harness and connectors ● Fuel pump relay
VIAS SOL VALVE	● Ignition switch: ON ● Turn solenoid valve “ON” and “OFF” with CONSULT-II and listen for operating sound.	Solenoid valve makes an operating sound.	● Harness and connectors ● Solenoid valve

TEST ITEM	CONDITION	JUDGEMENT	CHECK ITEM (REMEDY)
ENGINE MOUNTING	● Engine: After warming up, run engine at idle speed. ● Gear position: "D" range (Vehicle stopped) ● Turn electronic controlled engine mount "IDLE" and "TRVL" with the CONSULT-II.	Body vibration changes according to the electronic controlled engine mount condition.	● Harness and connectors ● Electronic controlled engine mount
PURG VOL CONT/V	● Engine: After warming up, run engine at 1,500 rpm. ● Change the EVAP canister purge volume control solenoid valve opening percent using CONSULT-II.	Engine speed changes according to the opening percent.	● Harness and connectors ● Solenoid valve
FUEL/T TEMP SEN	● Change the fuel tank temperature using CONSULT-II.		
VENT CONTROL/V	● Ignition switch: ON (Engine stopped) ● Turn solenoid valve “ON” and “OFF” with the CONSULT-II and listen to operating sound.	Solenoid valve makes an operating sound.	● Harness and connectors ● Solenoid valve
VC/V BYPASS/V	● Ignition switch: ON (Engine stopped) ● Turn solenoid valve “ON” and “OFF” with the CONSULT-II and listen to operating sound.	Solenoid valve makes an operating sound.	● Harness and connectors ● Solenoid valve
V/T ASSIGN ANGLE	● Engine: Return to the original trouble condition ● Change intake valve timing using CONSULT-II.	If trouble symptom disappears, see CHECK ITEM.	● Harness and connectors ● Intake valve timing control solenoid valve

DTC & SRT CONFIRMATION MODE

SRT STATUS Mode

For details, refer toEC-679, "SYSTEM READINESS TEST (SRT) CODE" .

SRT Work Support Mode

This mode enables a technician to drive a vehicle to set the SRT while monitoring the SRT status.

DTC Work Support Mode

Test mode	Test item	Condition	Reference page
EVAP SYSTEM	PURGE FLOW P0441		EC-957
	EVAP SML LEAK P0442/P1442	Refer to corresponding trouble diagnosis for DTC.	EC-963
	EVAP V/S SML LEAK P0456/P1456		EC-998
	PURG VOL CN/V P1444		EC-1135
	VC CUT/V BP/V P1491		EC-1166
HO2S1	HO2S1 (B1) P0133		EC-836
	HO2S1 (B1) P0134		EC-847
	HO2S1 (B1) P1143		EC-1066
	HO2S1 (B1) P1144		EC-1072
	HO2S1 (B2) P0153		EC-836
	HO2S1 (B2) P0154		EC-847
	HO2S1 (B2) P1163		EC-1066
	HO2S1 (B2) P1164		EC-1072
H02S2	HO2S2 (B1) P0139		EC-867
	HO2S2 (B1) P1146		EC-1079
	HO2S2 (B1) P1147		EC-1089
	HO2S2 (B2) P0159		EC-867
	HO2S2 (B2) P1166		EC-1079
	HO2S2 (B2) P1167		EC-1089

REAL TIME DIAGNOSIS IN DATA MONITOR MODE (RECORDING VEHICLE DATA)

Description

CONSULT-II has two kinds of triggers and they can be selected by touching “SETTING” in “DATA MONITOR” mode.

1. “AUTO TRIG” (Automatic trigger):

- The malfunction will be identified on the CONSULT-II screen in real time.
  In other words, DTC/1st trip DTC and malfunction item will be displayed if the malfunction is detected by ECM.
  At the moment a malfunction is detected by ECM, “MONITOR” in “DATA MONITOR” screen is changed to “Recording Data ... xx%” as shown at right, and the data after the malfunction detection is recorded. Then when the percentage reached 100%, “REAL-TIME DIAG” screen is displayed. If “STOP” is touched on the screen during “Recording Data ... xx%”, “REAL-TIME DIAG” screen is also displayed.
  The recording time after the malfunction detection and the recording speed can be changed by “TRIGGER POINT” and “Recording Speed”. Refer to CONSULT-II OPERATION MANUAL.

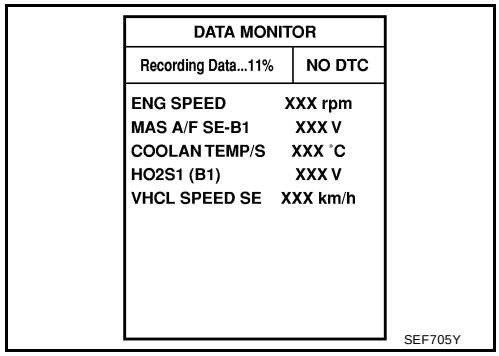

2. “MANU TRIG” (Manual trigger):

- DTC/1st trip DTC and malfunction item will not be displayed automatically on CONSULT-II screen even though a malfunction is detected by ECM.
  DATA MONITOR can be performed continuously even though a malfunction is detected.

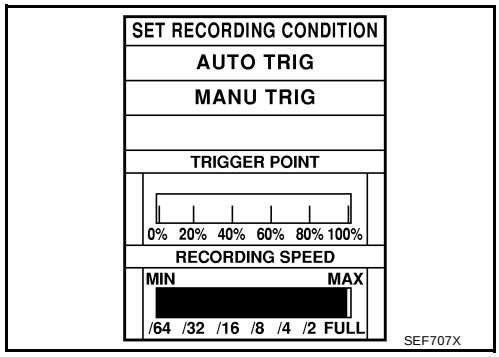

Operation

1. “AUTO TRIG”

- While trying to detect the DTC/1st trip DTC by performing the “DTC Confirmation Procedure”, be sure to select to “DATA MONITOR (AUTO TRIG)” mode. You can confirm the malfunction at the moment it is detected.
- While narrowing down the possible causes, CONSULT-II should be set in “DATA MONITOR (AUTO TRIG)” mode, especially in case the incident is intermittent.
  When you are inspecting the circuit by gently shaking (or twisting) the suspicious connectors, components and harness in the “DTC Confirmation Procedure”, the moment a malfunction is found the DTC/1st trip DTC will be displayed. (Refer to "Incident Simulation Tests" in GI-25, "How to Perform Efficient Diagnosis for an Electrical Incident" .)

2. “MANU TRIG”

- If the malfunction is displayed as soon as “DATA MONITOR” is selected, reset CONSULT-II to “MANU TRIG”. By selecting “MANU TRIG” you can monitor and store the data. The data can be utilized for further diagnosis, such as a comparison with the value for the normal operating condition.

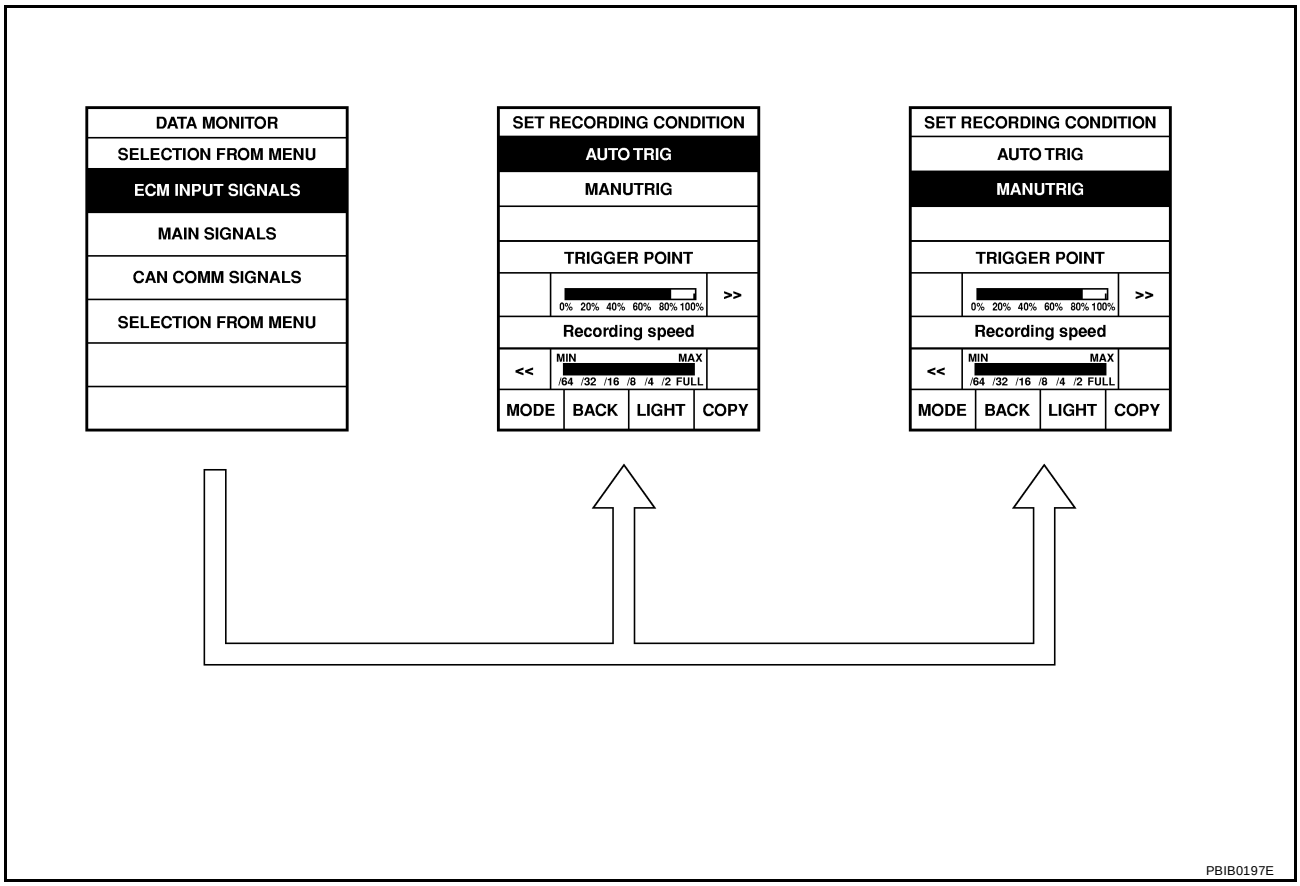

Generic Scan Tool (GST) Function

UBS0035W

DESCRIPTION

Generic Scan Tool (OBDII scan tool) complying with SAE J1978 has 8 different functions explained below.
ISO9141 is used as the protocol.
The name “GST” or “Generic Scan Tool” is used in this service manual.

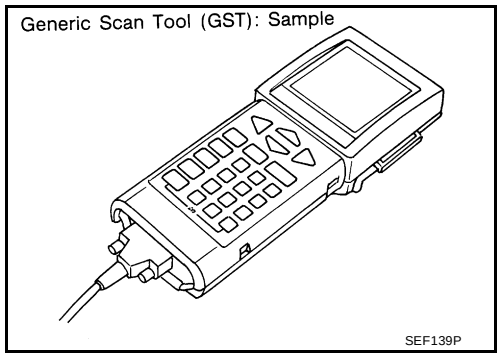

FUNCTION

Diagnostic test mode		Function
MODE 1	READINESS TESTS	This mode gains access to current emission-related data values, including analog inputs and outputs, digital inputs and outputs, and system status information.
MODE 2	(FREEZE DATA)	This mode gains access to emission-related data value which were stored by ECM during the freeze frame. For details, refer toEC-678, "FREEZE FRAME DATA AND 1ST TRIP FREEZE FRAME DATA" .
MODE 3	DTCs	This mode gains access to emission-related power train trouble codes which were stored by ECM.
MODE 4	CLEAR DIAG INFO	This mode can clear all emission-related diagnostic information. This includes: ● Clear number of diagnostic trouble codes (MODE 1) ● Clear diagnostic trouble codes (MODE 3) ● Clear trouble code for freeze frame data (MODE 1) ● Clear freeze frame data (MODE 2) ● Reset status of system monitoring test (MODE 1) ● Clear on board monitoring test results (MODE 6 and 7)
MODE 6	(ON BOARD TESTS)	This mode accesses the results of on board diagnostic monitoring tests of specific components/systems that are not continuously monitored.
MODE 7	(ON BOARD TESTS)	This mode enables the off board test drive to obtain test results for emission-related powertrain components/systems that are continuously monitored during normal driving conditions.
MODE 8	—	This mode can close EVAP system in ignition switch “ON” position (Engine stopped). When this mode is performed, the following parts can be opened or closed. ● EVAP canister vent control valve open ● Vacuum cut valve bypass valve closed In the following conditions, this mode cannot function. ● Low ambient temperature ● Low battery voltage ● Engine running ● Ignition switch “OFF” ● Low fuel temperature ● Too much pressure is applied to EVAP system
MODE 9	(CALIBRATION ID)	This mode enables the off-board test device to request specific vehicle information such as Vehicle Identification Number (VIN) and Calibration IDs.

GST INSPECTION PROCEDURE

1. Turn ignition switch OFF.
2. Connect “GST” to data link connector, which is located under LH dash panel near the fuse box cover.

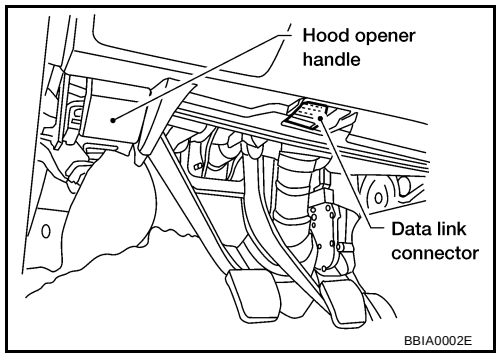

3. Turn ignition switch ON.
4. Enter the program according to instruction on the screen or in the operation manual.
   (*: Regarding GST screens in this section, sample screens are shown.)

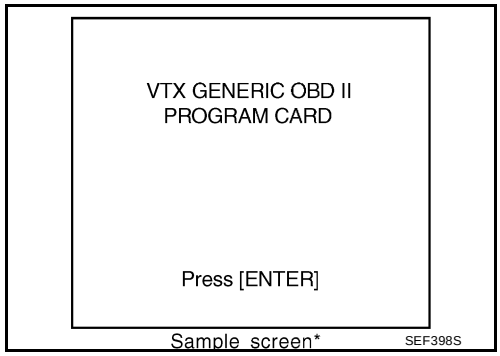

5. Perform each diagnostic mode according to each service procedure.
   For further information, see the GST Operation Manual of the tool maker.

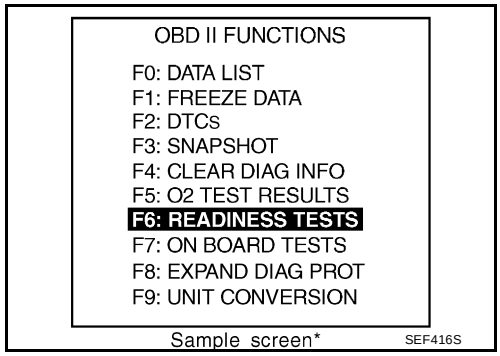

CONSULT-II Reference Value in Data Monitor

UBS0035X

Remarks:
- Specification data are reference values.
- Specification data are output/input values which are detected or supplied by the ECM at the connector.
  * Specification data may not be directly related to their components signals/values/operations.
  i.e. Adjust ignition timing with a timing light before monitoring IGN TIMING, because the monitor may show the specification data in spite of the ignition timing not being adjusted to the specification data. This IGN TIMING monitors the data calculated by the ECM according to the signals input from the camshaft position sensor and other ignition timing related sensors.

MONITOR ITEM	CONDITION		SPECIFICATION
ENG SPEED	● Tachometer: Connect ● Run engine and compare tachometer indication with the CONSULT-II value.		Almost the same speed as the CONSULT-II value.
MAS A/F SE-B1	● Engine: After warming up ● Air conditioner switch: OFF ● Shift lever: N ● No-load	Idle	Approx. 1.1 - 1.5V
		2,500 rpm	Approx. 1.7 - 2.4V
COOLAN TEMP/S	● Engine: After warming up		More than 70°C (158°F)
HO2S1 (B1) HO2S1 (B2)	● Engine: After warming up	Maintaining engine speed at 2,000 rpm	0 - 0.3V ←→ Approx. 0.6 - 1.0V
HO2S2 (B1) HO2S2 (B2)	● Engine: After warming up	Revving engine from idle to 3,000 rpm quickly.	0 - 0.3V ←→ Approx. 0.6 - 1.0V
HO2S1 MNTR (B1) HO2S1 MNTR (B2)	● Engine: After warming up	Maintaining engine speed at 2,000 rpm	LEAN ←→ RICH Changes more than 5 times during 10 seconds.
HO2S2 MNTR (B1) HO2S2 MNTR (B2)	● Engine: After warming up	Revving engine from idle to 3,000 rpm quickly.	LEAN ←→ RICH
VEH SPEED SE	● Turn drive wheels and compare speedometer indication with the CONSULT-II value.		Almost the same speed as the CONSULT-II value
BATTERY VOLT	● Ignition switch: ON (Engine stopped)		11 - 14V
ACCEL SEN1 ACCEL SEN2	● Ignition switch: ON (engine stopped)	Accelerator pedal: Fully released	0.41 - 0.71V
		Accelerator pedal: Fully depressed	More than 4.2V
THRTL SEN1 THRTL SEN2	● Ignition switch: ON (Engine stopped) ● Shift lever: D (A/T model) 1st (M/T model)	Accelerator pedal: Fully released	More than 0.36V
		Accelerator pedal: Fully depressed	Less than 4.75V
EVAP SYS PRES	● Ignition switch: ON		Approx. 1.8 - 4.8V
ABSOL PRES/SE	● Ignition switch: ON		Approx. 4.4V
START SIGNAL	● Ignition switch: ON → START → ON		OFF → ON → OFF
CLSD THL POS	● Ignition switch: ON	Accelerator pedal: Fully released	ON
		Accelerator pedal: Slightly depressed	OFF
AIR COND SIG	● Engine: After warming up, idle the engine	Air conditioner switch: OFF	OFF
		Air conditioner switch: ON (Compressor operates.)	ON
P/N POSI SW	● Ignition switch: ON	Shift lever: P or N	ON
		Shift lever: Except above	OFF
PW/ST SIGNAL	● Engine: After warming up, idle the engine	Steering wheel is in neutral position. (Forward direction)	OFF
		Steering wheel is turned.	ON
LOAD SIGNAL	● Ignition switch: ON	Rear window defogger switch is ON and/or lighting switch is in 2nd.	ON
		Rear window defogger switch is OFF and lighting switch is OFF.	OFF
IGNITION SW	● Ignition switch: ON → OFF → ON		ON → OFF → ON

MONITOR ITEM	CONDITION		SPECIFICATION
HEATER FAN SW	● Engine: After warming up, idle the engine	Heater fan is operating.	ON
		Heater fan is not operating	OFF
BRAKE SW	● Ignition switch: ON	Brake pedal: Fully released	OFF
		Brake pedal: Slightly depressed	ON
INJ PULSE-B1 INJ PULSE-B2	● Engine: After warming up ● Shift lever: N ● Air conditioner switch: OFF ● No-load	Idle	2.0 - 3.0 msec
		2,000 rpm	1.9 - 2.9 msec
B/FUEL SCHDL	● Engine: After warming up ● Shift lever: N ● Air conditioner switch: OFF ● No-load	Idle	2.3 - 2.9 msec
		2,000 rpm	2.3 - 2.9 msec
IGN TIMING	● Engine: After warming up ● Shift lever: N ● Air conditioner switch: OFF ● No-load	Idle	13° - 18° BTDC
		2,000 rpm	25° - 45° BTDC
A/F ALPHA-B1 A/F ALPHA-B2	● Engine: After warming up	Maintaining engine speed at 2,000 rpm	54% - 155%
CAL/LD VALUE	● Engine: After warming up ● Shift lever: N ● Air conditioner switch: OFF ● No-load	Idle	10% - 35%
		2,500 rpm	10% - 35%
MASS AIRFLOW	● Engine: After warming up ● Shift lever: N ● Air conditioner switch: OFF ● No-load	Idle	2.0 - 6.0 g·m/s
		2,500 rpm	7.0 - 20.0 g·m/s
PURG VOL C/V	● Engine: After warming up ● Shift lever: N ● Air conditioner switch: OFF ● No-load	Idle	0%
		2,000 rpm	—
INT/V TIM (B1) INT/V TIM (B2)	● Engine: After warming up ● Shift lever: N ● Air conditioner switch: OFF ● No-load	Idle	–5° - 5°CA
		2,000 rpm	Approx. 0° - 30°CA
INT/V SOL (B1) INT/V SOL (B2)	● Engine: After warming up ● Shift lever: N ● Air conditioner switch: OFF ● No-load	Idle	0% - 2%
		2,000 rpm	Approx. 25% - 50%
VIAS S/V	● Engine: After warming up	1,800 - 3,600 rpm	ON
		Except above conditions	OFF
AIR COND RLY	● Engine: After warming up, idle the engine	Air conditioner switch: OFF	OFF
		Air conditioner switch: ON (Compressor operates)	ON
ENGINE MOUNT	● Engine: Running	Idle	IDLE
		2,000 rpm	TRVL
FUEL PUMP RLY	● For 1 second after turning ignition switch ON ● Engine running or cranking		ON
	● Except above conditions		OFF

MONITOR ITEM	CONDITION		SPECIFICATION
VC/V BYPAS S/V	● Ignition switch: ON		OFF
VENT CONT/V	● Ignition switch: ON		OFF
THRTL RELAY	● Ignition switch: ON		ON
COOLING FAN	● Engine: After warming up, idle the engine ● Air conditioner switch: OFF	Engine coolant temperature is 94°C (201°F) or less	OFF
		Engine coolant temperature is between 95°C (203°F) and 99°C (210°F)	LOW
		Engine coolant temperature is 100°C (212°F) or more	HIGH
HO2S1 HTR (B1) HO2S1 HTR (B2)	● Engine speed: Below 3,600 rpm		ON
	● Engine speed: Above 3,600 rpm		OFF
HO2S2 HTR (B1) HO2S2 HTR (B2)	● Engine speed: Below 3,600 rpm [After driving for 2 minutes at a speed of 70 km/h (43 MPH) or more]		ON
	● Engine speed: Above 3,600 rpm		OFF
TRVL AFTER MIL	● Ignition switch: ON	Vehicle has traveled after MIL has turned ON.	0 - 65,535 km (0 - 40,723 mile)
AC PRESS SEN	● Ignition switch: ON (Engine stopped)		Approx. 0V
	● Engine: Idle ● Air conditioner switch: OFF		1.0 - 4.0V
VEH SPEED SE	● Turn drive wheels and compare speedometer indication with the CONSULT-II value.		Almost the same speed as the CONSULT-II value
SET VHCL SPD	● Engine: Running	ASCD: Operating.	The preset vehicle speed is displayed.
MAIN SW	● Ignition switch: ON	CRUISE switch: Depressed	ON
		CRUISE switch: Released	OFF
CANCEL SW	● Ignition switch: ON	CANCEL switch: Depressed	ON
		CANCEL switch: Released	OFF
RESUME/ACC SW	● Ignition switch: ON	ACCEL/RES switch: Depressed	ON
		ACCEL/RES switch: Released	OFF
SET SW	● Ignition switch: ON	COAST/SET switch: Depressed	ON
		COAST/SET switch: Released	OFF
BRAKE SW1	● Ignition switch: ON	Brake pedal: Fully released	OFF
		Brake pedal: Slightly depressed	ON
BRAKE SW2	● Ignition switch: ON	Brake pedal: Fully released	OFF
		Brake pedal: Slightly depressed	ON
CRUISE LAMP	● Ignition switch: ON	CRUISE lamp: Illuminated	ON
		CRUISE lamp: Not illuminated	OFF
SET LAMP	● Ignition switch: ON	SET lamp: Illuminated	ON
		SET lamp: Not illuminated	OFF

MONITOR ITEM	CONDITION	SPECIFICATION
CAN COMM	● Ignition switch: ON	OK
CAN CIRC 1		OK
CAN CIRC 2		OK (Models with TCS) UNKWN (Models without TCS)
CAN CIRC 3		OK (A/T models) UNKWN (M/T models)
CAN CIRC 4		OK
CAN CIRC 5		UNKWN
CAN CIRC 6		OK
CAN CIRC 7		OK

Major Sensor Reference Graph in Data Monitor Mode

UBS0035Y

The following are the major sensor reference graphs in “DATA MONITOR” mode.

CLSD THL POS, ACCEL SEN 1, THRTL SEN 1

Below is the data for “CLSD THL POS”, “ACCEL SEN 1” and “THRTL SEN 1” when depressing the accelerator pedal with the ignition switch “ON” and with selector lever in "D" position (A/T models) or with shift lever in "1st" position (M/T models).
The signal of “ACCEL SEN 1” and “THRTL SEN 1” should rise gradually without any intermittent drop or rise after “CLSD THL POS” is changed from “ON” to “OFF”.

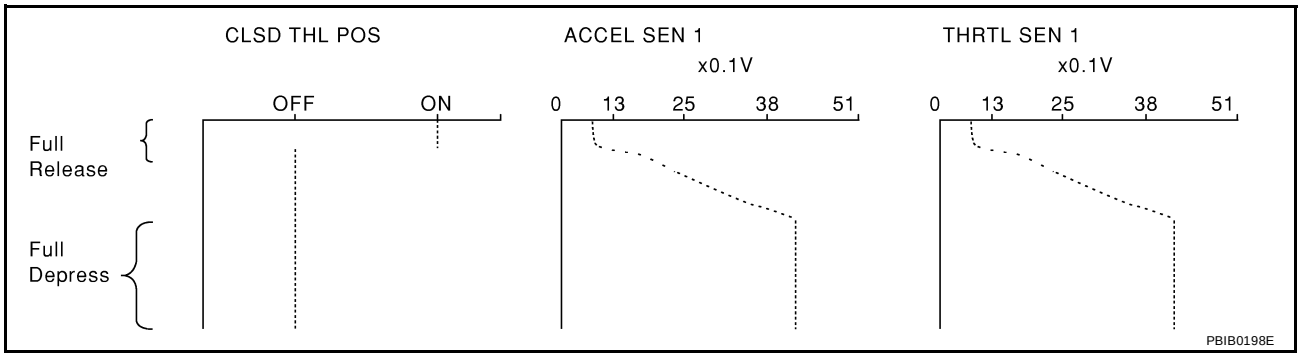

ENG SPEED, MAS A/F SE-B1, THRTL SEN 1, HO2S2 (B1), HO2S1 (B1), INJ PULSE-B1

Below is the data for “ENG SPEED”, “MAS A/F SE-B1”, “THRTL SEN 1”, “HO2S2 (B1)”, “HO2S1 (B1)” and “INJ PULSE-B1” when revving engine quickly up to 4,800 rpm under no load after warming up engine sufficiently.

Each value is for reference, the exact value may vary.

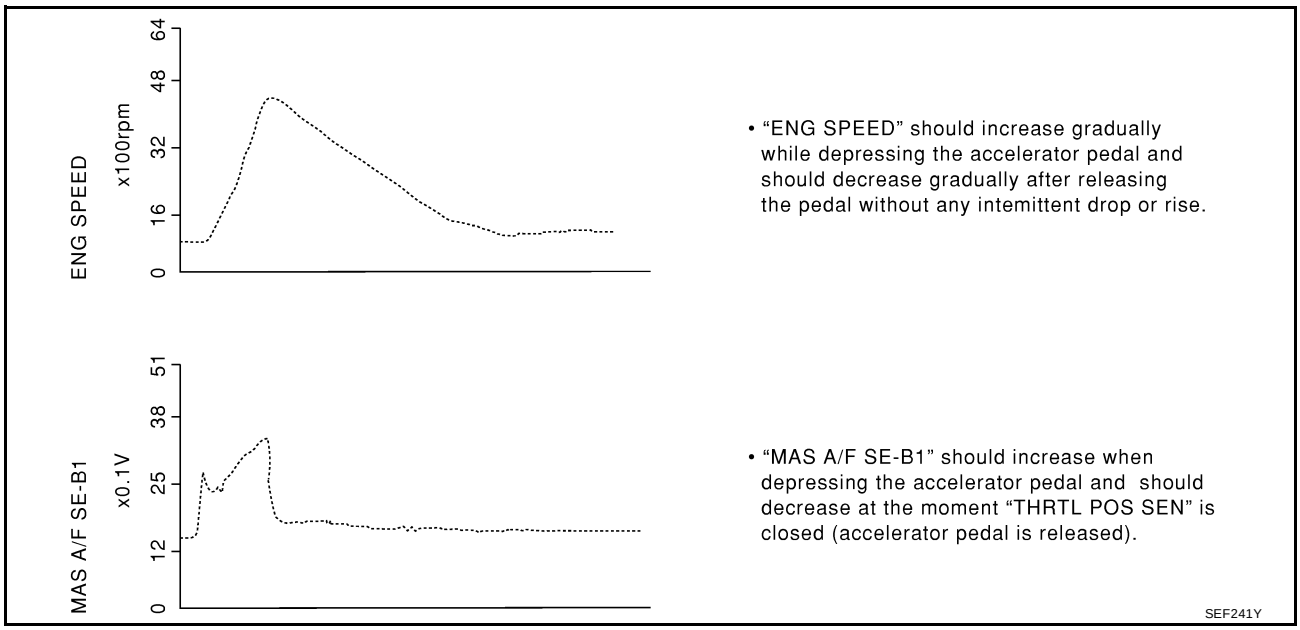

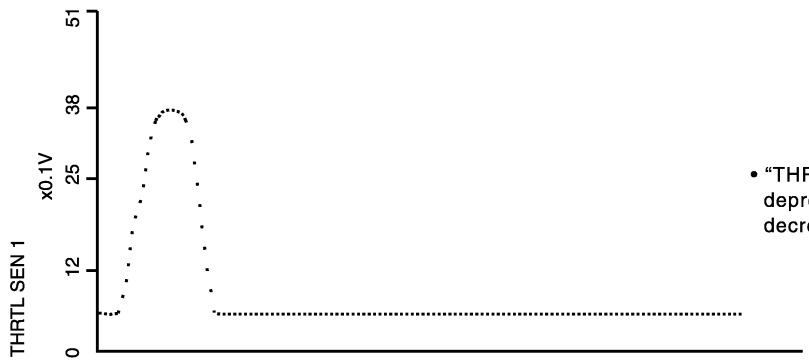

• “THRTL SEN 1” should increase while depressing the accelerator pedal and should decrease while releasing it.

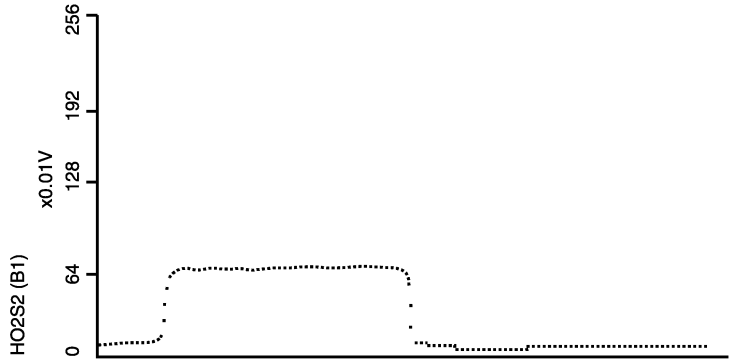

• “HO2S2 (B1)” may increase immediately after depressing the accelerator pedal and may decrease after releasing the pedal.

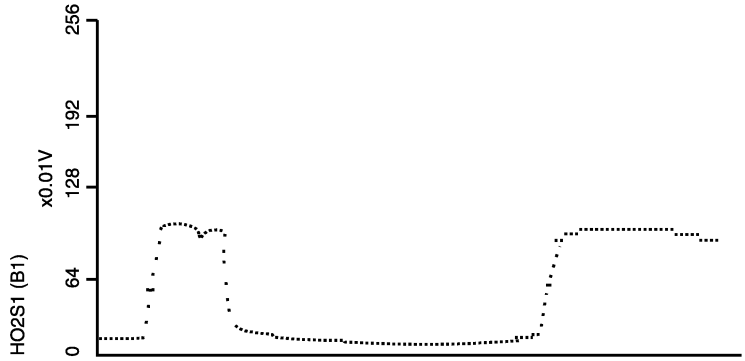

• “HO2S1 (B1)” may increase immediately after depressing the accelerator pedal and may decrease after releasing the pedal.

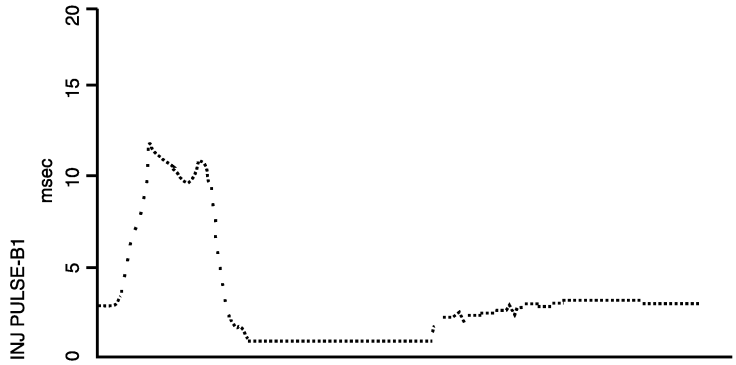

• “INJ PULSE-B1” should increase when depressing the accelerator pedal and should decrease when the pedal is released.

PBIB0668E

TROUBLE DIAGNOSIS - SPECIFICATION VALUE

PFP:00031

Description

UBS0035Z

The specification (SP) value indicates the tolerance of the value that is displayed in “DATA MONITOR (SPEC)” mode of CONSULT-II during normal operation of the Engine Control System. When the value in “DATA MONITOR (SPEC)” mode is within the SP value, the Engine Control System is confirmed OK. When the value in “DATA MONITOR (SPEC)” mode is NOT within the SP value, the Engine Control System may have one or more malfunctions.
The SP value is used to detect malfunctions that may affect the Engine Control System, but will not light the MIL.
The SP value will be displayed for the following three items:

- B/FUEL SCHDL (The fuel injection pulse width programmed into ECM prior to any learned on board correction)
- A/F ALPHA-B1/B2 (The mean value of air-fuel ratio feedback correction factor per cycle)
- MAS A/F SE-B1 (The signal voltage of the mass air flow sensor)

Testing Condition

UBS00360

- Vehicle driven distance: More than 5,000 km (3,017 miles)
- Barometric pressure: 98.3 - 104.3 kPa (1.003 - 1.064 kg/cm^2 , 14.25 - 15.12 psi)
- Atmospheric temperature: 20 - 30°C (68 - 86°F)
- Engine coolant temperature: 75 - 95°C (167 - 203°F)
- Transmission: Warmed-up*1
- Electrical load: Not applied*2
- Engine speed: Idle

*1: For A/T models with CONSULT-II, after the engine is warmed up to normal operating temperature, drive vehicle until “FLUID TEMP SE” (A/T fluid temperature sensor signal) indicates more than 60°C (140°F).
For A/T models without CONSUT-II and M/T models, after the engine is warmed up to normal operating temperature, drive vehicle for 5 minutes.
*2: Rear window defogger switch, air conditioner switch, lighting switch are “OFF”. Steering wheel is straight ahead.

Inspection Procedure

UBS00361

NOTE:
Perform “DATA MONITOR (SPEC)” mode in maximum scale display.

1. PerformEC-705, "Basic Inspection" .
2. Confirm that the testing conditions indicated above are met.
3. Select “B/FUEL SCHDL”, “A/F ALPHA-B1”, “A/F ALPHA-B2” and “MAS A/F SE-B1” in “DATA MONITOR (SPEC)” mode with CONSULT-II.
4. Make sure that monitor items are within the SP value.
5. If NG, go to EC-753, "Diagnostic Procedure" .

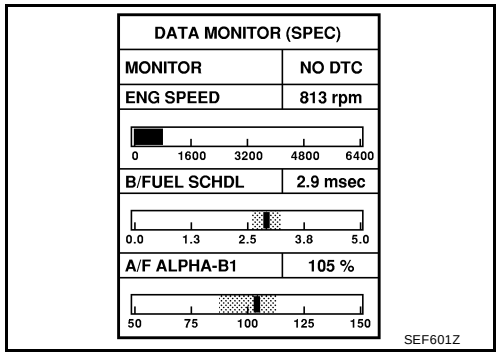

Diagnostic Procedure

UBS00362

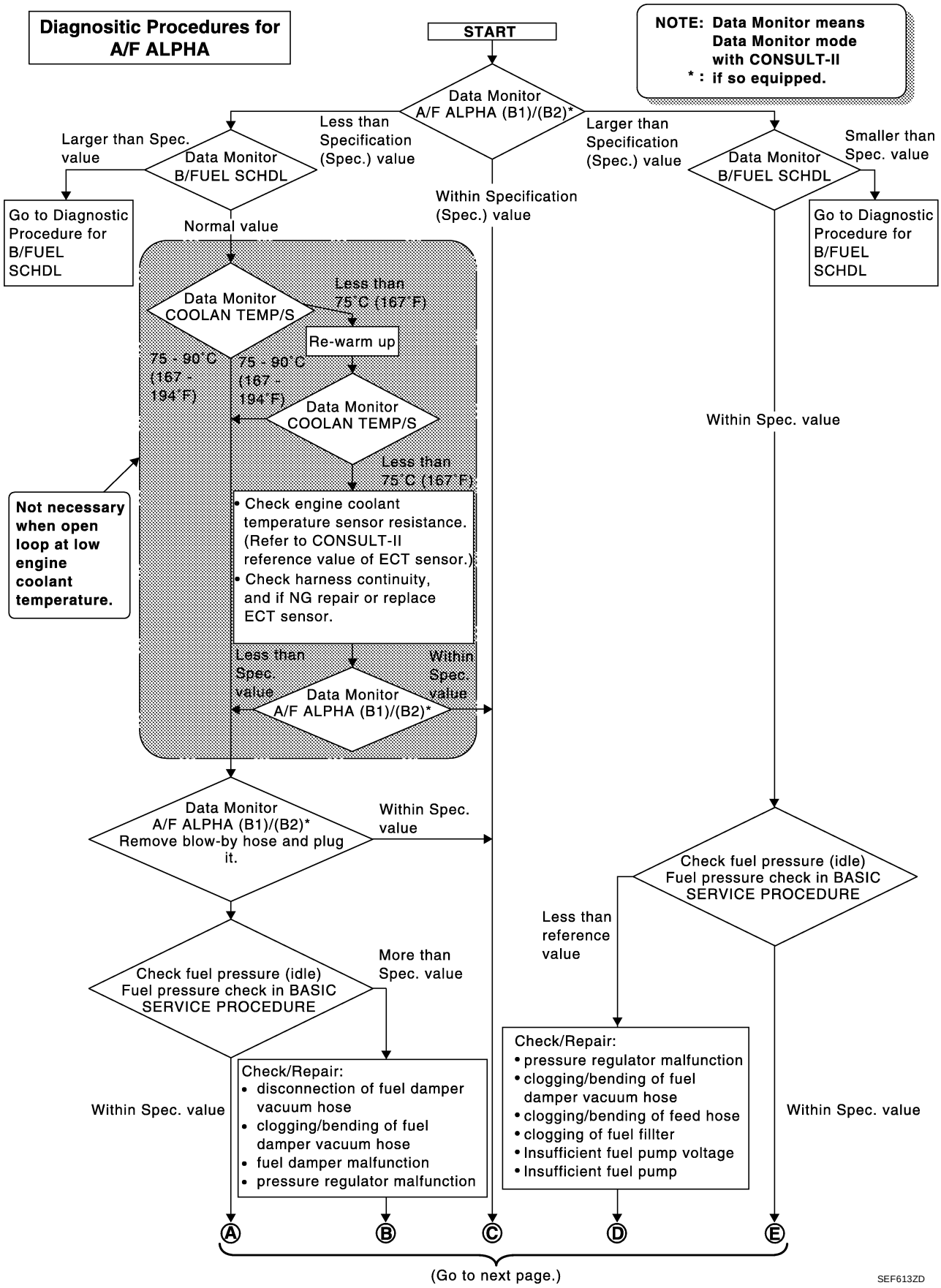

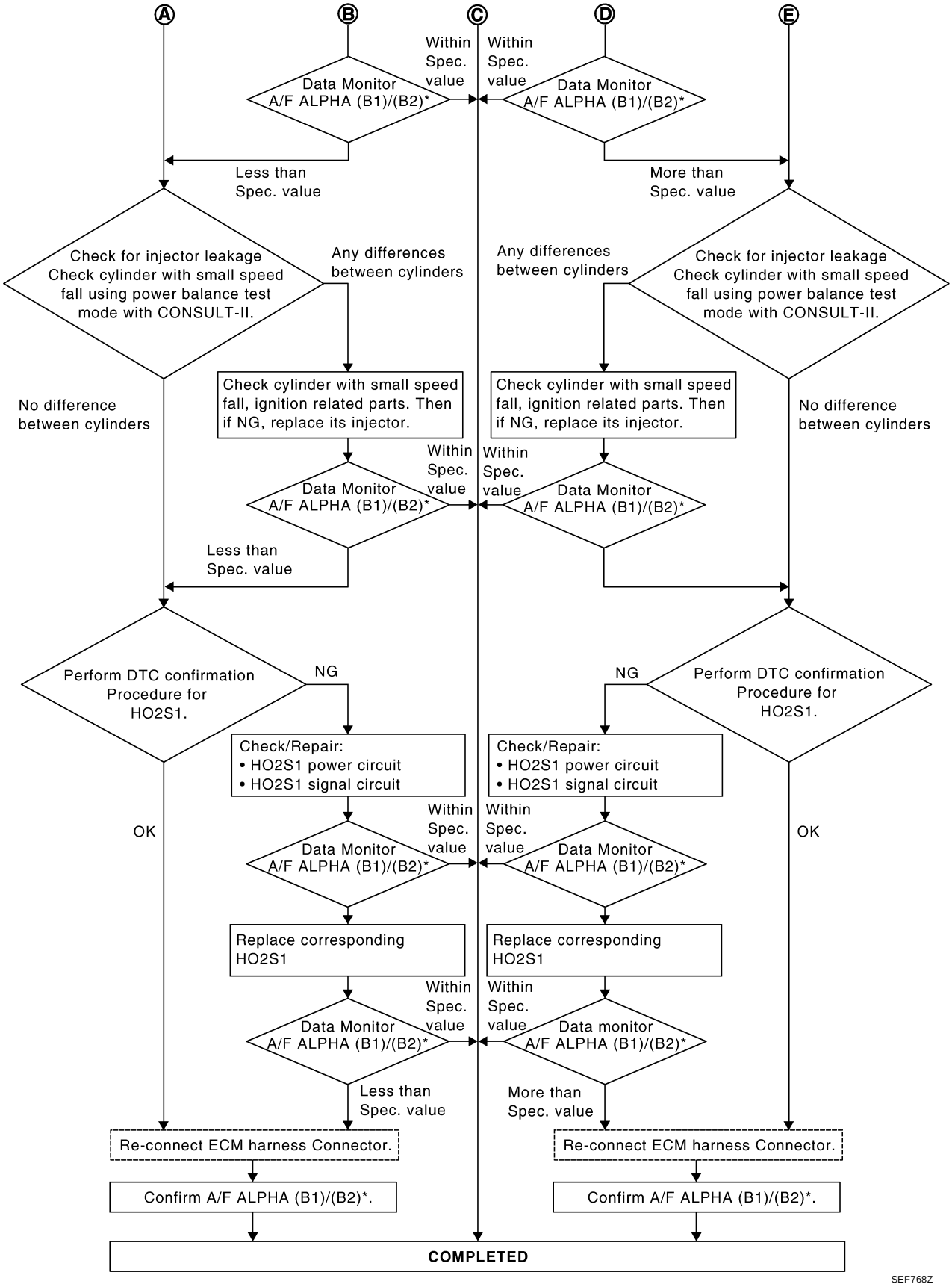
A
B
C
D
E
Within Spec. value
Within Spec. value
Data Monitor A/F ALPHA (B1)/(B2)*
Data Monitor A/F ALPHA (B1)/(B2)*
Less than Spec. value
More than Spec. value
Check for injector leakage Check cylinder with small speed fall using power balance test mode with CONSULT-II.
Any differences between cylinders
Any differences between cylinders
Check for injector leakage Check cylinder with small speed fall using power balance test mode with CONSULT-II.
No difference between cylinders
Check cylinder with small speed fall, ignition related parts. Then if NG, replace its injector.
Check cylinder with small speed fall, ignition related parts. Then if NG, replace its injector.
No difference between cylinders
Within Spec. value
Within Spec. value
Data Monitor A/F ALPHA (B1)/(B2)*
Data Monitor A/F ALPHA (B1)/(B2)*
Less than Spec. value
Perform DTC confirmation Procedure for HO2S1.
NG
NG
Perform DTC confirmation Procedure for HO2S1.
Check/Repair:
• HO2S1 power circuit
• HO2S1 signal circuit
Check/Repair:
• HO2S1 power circuit
• HO2S1 signal circuit
OK
Within Spec. value
Within Spec. value
OK
Data Monitor A/F ALPHA (B1)/(B2)*
Data Monitor A/F ALPHA (B1)/(B2)*
Replace corresponding HO2S1
Replace corresponding HO2S1
Within Spec. value
Within Spec. value
Data Monitor A/F ALPHA (B1)/(B2)*
Data monitor A/F ALPHA (B1)/(B2)*
Less than Spec. value
More than Spec. value
Re-connect ECM harness Connector.
Re-connect ECM harness Connector.
Confirm A/F ALPHA (B1)/(B2)*.
Confirm A/F ALPHA (B1)/(B2)*.
COMPLETED
SEF768Z

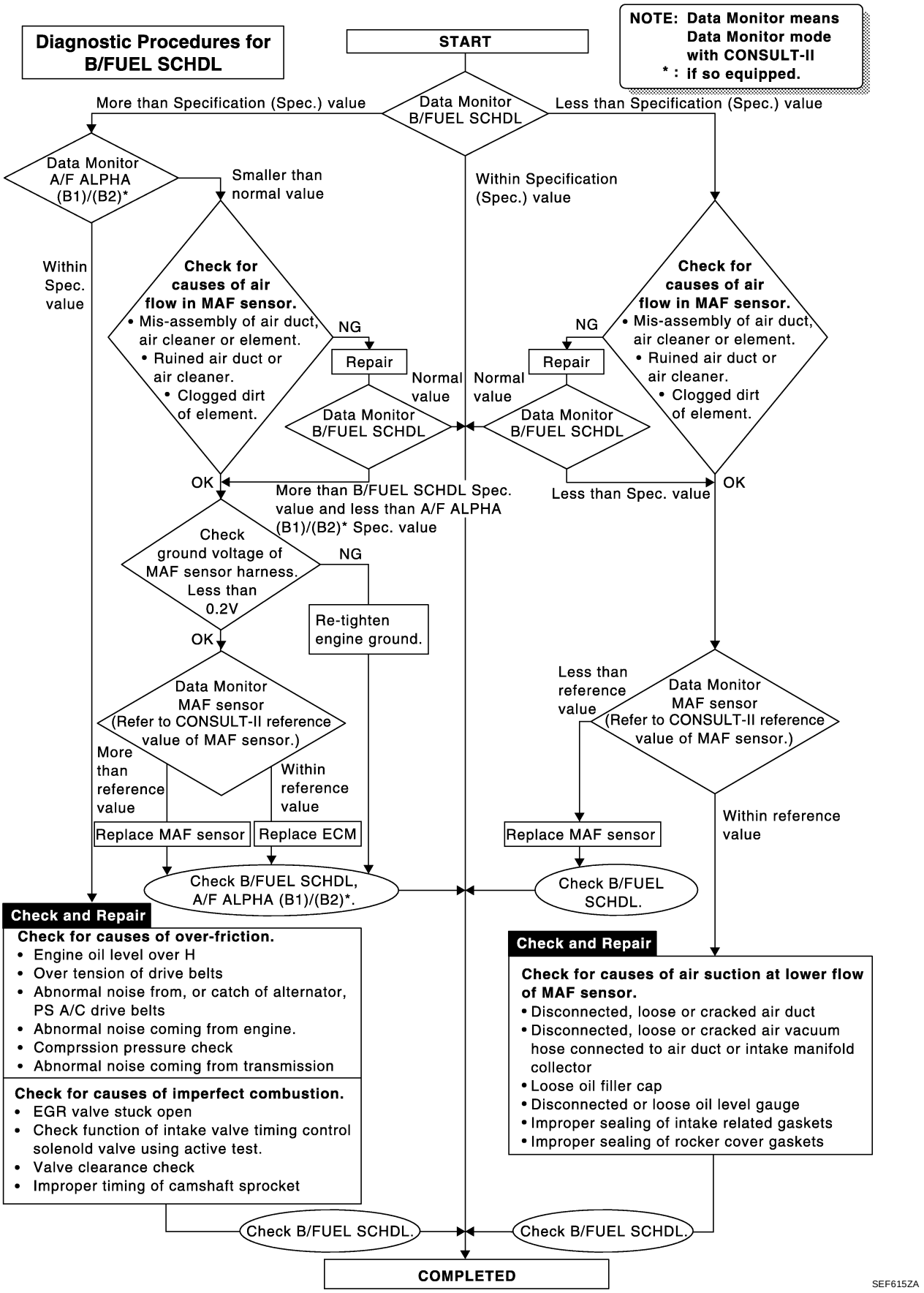
Diagnostic Procedures for B/FUEL SCHDL
START
NOTE: Data Monitor means Data Monitor mode with CONSULT-II
* : if so equipped.
Data Monitor B/FUEL SCHDL
More than Specification (Spec.) value
Less than Specification (Spec.) value
Within Specification (Spec.) value
Data Monitor A/F ALPHA (B1)/(B2)*
Smaller than normal value
Within Spec. value
Check for causes of air flow in MAF sensor.
• Mis-assembly of air duct, air cleaner or element.
• Ruined air duct or air cleaner.
• Clogged dirt of element.
NG
Repair
Normal value
Data Monitor B/FUEL SCHDL
OK
More than B/FUEL SCHDL Spec. value and less than A/F ALPHA (B1)/(B2)* Spec. value
Less than Spec. value
Check ground voltage of MAF sensor harness. Less than 0.2V
Re-tighten engine ground.
Data Monitor MAF sensor (Refer to CONSULT-II reference value of MAF sensor.)
More than reference value
Within reference value
Less than reference value
Replace MAF sensor
Replace ECM
Check B/FUEL SCHDL, A/F ALPHA (B1)/(B2)*.
Check B/FUEL SCHDL.
Check and Repair
Check for causes of over-friction.
• Engine oil level over H
• Over tension of drive belts
• Abnormal noise from, or catch of alternator, PS A/C drive belts
• Abnormal noise coming from engine.
• Comprssion pressure check
• Abnormal noise coming from transmission
Check for causes of imperfect combustion.
• EGR valve stuck open
• Check function of intake valve timing control solenold valve using active test.
• Valve clearance check
• Improper timing of camshaft sprocket
Check for causes of air suction at lower flow of MAF sensor.
• Disconnected, loose or cracked air duct
• Disconnected, loose or cracked air vacuum hose connected to air duct or intake manifold collector
• Loose oil filler cap
• Disconnected or loose oil level gauge
• Improper sealing of intake related gaskets
• Improper sealing of rocker cover gaskets
COMPLETED
SEF615ZA

TROUBLE DIAGNOSIS FOR INTERMITTENT INCIDENT

PFP:00006

Description

UBS00363

Intermittent incidents (I/I) may occur. In many cases, the problem resolves itself (the part or circuit function returns to normal without intervention). It is important to realize that the symptoms described in the customer's complaint often do not recur on (1st trip) DTC visits. Realize also that the most frequent cause of I/I occurrences is poor electrical connections. Because of this, the conditions under which the incident occurred may not be clear. Therefore, circuit checks made as part of the standard diagnostic procedure may not indicate the specific problem area.

Common I/I Report Situations

STEP in Work Flow	Situation
II	The CONSULT-II is used. The SELF-DIAG RESULTS screen shows time data other than “0” or “[1t]”.
III	The symptom described by the customer does not recur.
IV	(1st trip) DTC does not appear during the DTC Confirmation Procedure.
VI	The Diagnostic Procedure for PXXXX does not indicate the problem area.

Diagnostic Procedure

UBS00364

1. INSPECTION START

Erase (1st trip) DTCs. Refer to EC-687, "HOW TO ERASE EMISSION-RELATED DIAGNOSTIC INFORMATION" .

>> GO TO 2.

2. CHECK GROUND TERMINALS

Check ground terminals for corroding or loose connection.
Refer to GI-25, "How to Perform Efficient Diagnosis for an Electrical Incident" , "CIRCUIT INSPECTION", "Ground Inspection".

OK or NG

OK >> GO TO 3.
NG >> Repair or replace.

3. SEARCH FOR ELECTRICAL INCIDENT

Perform GI-25, "How to Perform Efficient Diagnosis for an Electrical Incident" , "INCIDENT SIMULATION TESTS".

OK or NG

OK >> GO TO 4.
NG >> Repair or replace.

4. CHECK CONNECTOR TERMINALS

Refer to GI-22, "How to Check Terminal" , "HOW TO PROBE CONNECTORS", “How to Check Enlarged Contact Spring of Terminal”.

OK or NG

OK >> **INSPECTION END**
NG >> Repair or replace connector.

POWER SUPPLY CIRCUIT FOR ECM

PFP:24110

Wiring Diagram

UBS00365

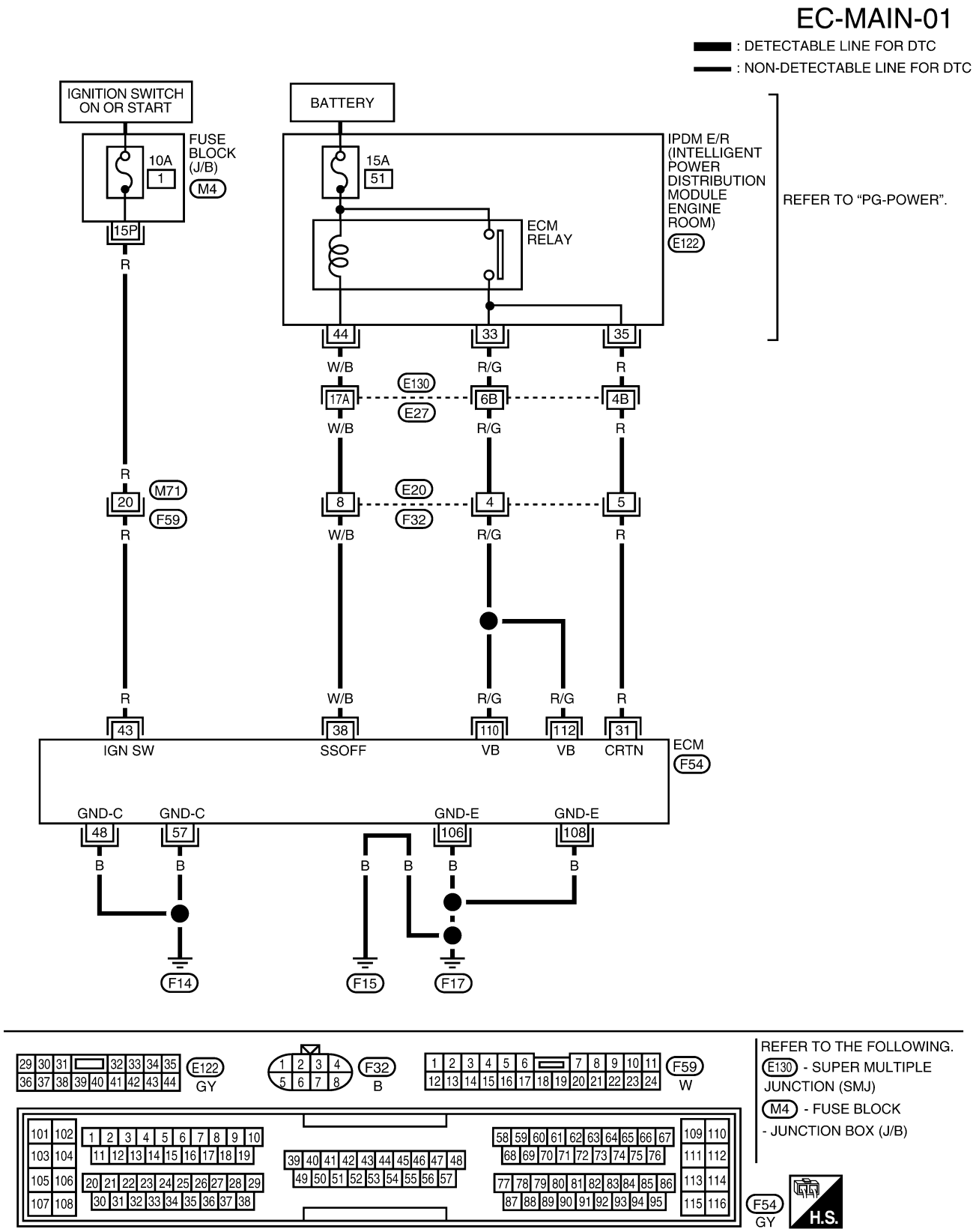

BBWA0049E

Specification data are reference values and are measured between each terminal and ground.

CAUTION:

Do not use ECM ground terminals when measuring input/output voltage. Doing so may result in damage to the ECM's transistor. Use a ground other than ECM terminals, such as the ground.

TERMINAL NO.	WIRE COLOR	ITEM	CONDITION	DATA (DC Voltage)
31	R	Counter current return	**[Ignition switch "ON"]**	BATTERY VOLTAGE (11 - 14V)
38	W/B	ECM relay (Self shut-off)	**[Engine is running]** **[Ignition switch "OFF"]** ● For a few seconds after turning ignition switch "OFF"	0 - 1.5V
			[Ignition switch "OFF"] ● A few seconds passed after turning ignition switch "OFF"	BATTERY VOLTAGE (11 - 14V)
43	R	Ignition switch	**[Ignition switch "OFF"]**	0V
			[Ignition switch "ON"]	BATTERY VOLTAGE (11 - 14V)
48 57 106 108	B B B B	ECM ground	**[Engine is running]** ● Idle speed	Engine ground
110 112	R/G R/G	Power supply for ECM	**[Ignition switch "ON"]**	BATTERY VOLTAGE (11 - 14V)

Diagnostic Procedure

UBS00366

1. INSPECTION START

Start engine.

Is engine running?

Yes or No

Yes >> GO TO 6.

No >> GO TO 2.

2. CHECK ECM POWER SUPPLY CIRCUIT-I

1. Turn ignition switch "OFF" and then "ON".
2. Check voltage between ECM terminal 43 and ground with CONSULT-II or tester.

Voltage: Battery voltage

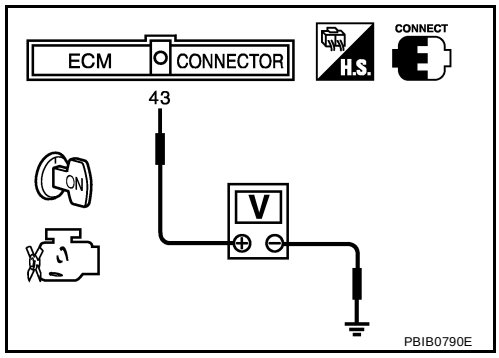

OK or NG

OK >> GO TO 4.

NG >> GO TO 3.

3. DETECT MALFUNCTIONING PART

Check the following.

- Harness connectors M71, F59
- Fuse block (J/B) connector M4
- 10A fuse
- Harness for open or short between ECM and fuse

>> Repair harness or connectors.

4. CHECK ECM GROUND CIRCUIT FOR OPEN AND SHORT-I

1. Turn ignition switch “OFF”.
2. Disconnect ECM harness connector.
3. Check harness continuity between ECM terminals 48, 57, 106, 108 and engine ground. Refer to Wiring Diagram.

Continuity should exist.

4. Also check harness for short to power.

OK or NG

OK >> GO TO 5.
NG >> Repair open circuit or short to power in harness or connectors.

5. CHECK ECM POWER SUPPLY CIRCUIT-II

1. Reconnect ECM harness connector.
2. Turn ignition switch "ON".
3. Check voltage between ECM terminal 31 and ground with CONSULT-II or tester.

Voltage: Battery voltage

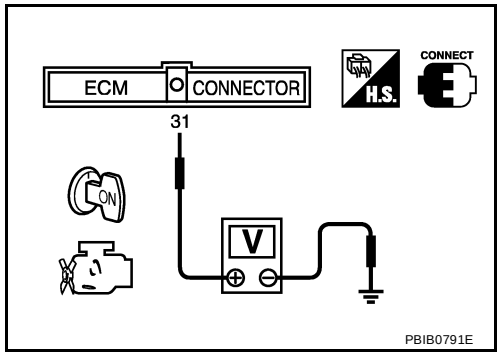

OK or NG

OK >> Go to EC-1210, "IGNITION SIGNAL" .
NG >> GO TO 6.

6. CHECK ECM POWER SUPPLY CIRCUIT-III

1. Turn ignition switch “ON” and then “OFF”.
2. Check voltage between ECM terminals 110, 112 and ground with CONSULT-II or tester.

Voltage: After turning ignition switch "OFF", battery voltage will exist for a few seconds, then drop approximately 0V.

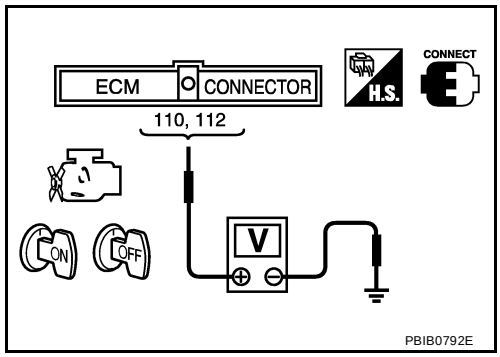

OK or NG

OK >> GO TO 7.
NG (Battery voltage does not exist.)>>GO TO 9.
NG (Battery voltage exists for more than a few seconds.)>>GO TO 16.

7. CHECK ECM POWER SUPPLY CIRCUIT-IV

1. Disconnect ECM harness connector.
2. Disconnect IPDM E/R harness connector.
3. Check harness continuity between ECM terminal 31 and IPDM E/R terminal 35. Refer to Wiring Diagram.

Continuity should exist.

4. Also check harness for short to ground and short to power.

OK or NG

OK >> GO TO 16.
NG >> GO TO 8.

8. DETECT MALFUNCTIONING PART

Check the following.

- Harness or connectors E130, E27
- Harness or connectors E20, F32
- Harness for open or short between ECM and IPDM E/R

>> Repair open circuit or short to ground or short to power in harness or connectors.

9. CHECK ECM POWER SUPPLY CIRCUIT-V

1. Turn ignition switch “OFF”.
2. Check voltage between ECM terminal 38 and ground with CONSULT-II or tester.

Voltage: Battery voltage

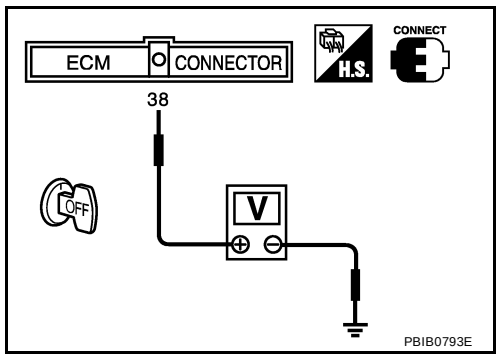

OK or NG

OK >> GO TO 10.
NG >> GO TO 12.

10. CHECK ECM POWER SUPPLY CIRCUIT-VI

1. Disconnect ECM harness connector.
2. Disconnect IPDM E/R harness connector.
3. Check harness continuity between ECM terminals 110, 112 and IPDM E/R terminal 33. Refer to Wiring Diagram.

Continuity should exist.

4. Also check harness for short to ground and short to power.

OK or NG

OK >> GO TO 15.
NG >> GO TO 11.

11. DETECT MALFUNCTIONING PART

Check the following.

- Harness or connectors E130, E27
- Harness or connectors E20, F32
- Harness for open or short between ECM and IPDM E/R

>> Repair open circuit or short to ground or short to power in harness or connectors.

12. CHECK ECM POWER SUPPLY CIRCUIT-VII

1. Disconnect ECM harness connector.
2. Disconnect IPDM E/R harness connector.
3. Check harness continuity between ECM terminal 38 and IPDM E/R terminal 44.
   Refer to Wiring Diagram.

   Continuity should exist.

4. Also check harness for short to ground and short to power.

OK or NG

OK >> GO TO 14.
NG >> GO TO 13.

13. DETECT MALFUNCTIONING PART

Check the following.

- Harness or connectors E130, E27
- Harness or connectors E20, F32
- Harness for open or short between ECM and IPDM E/R

>> Repair open circuit or short to ground or short to power in harness or connectors.

14. CHECK 15A FUSE

1. Disconnect 15A fuse from IPDM E/R.
2. Check 15A fuse.

OK or NG

OK >> GO TO 16.
NG >> Replace 15A fuse.

15. CHECK ECM GROUND CIRCUIT FOR OPEN AND SHORT-II

1. Turn ignition switch “OFF”.
2. Disconnect ECM harness connector.
3. Check harness continuity between ECM terminals 59, 60, 106, 108 and engine ground.
   Refer to Wiring Diagram.

   Continuity should exist.

4. Also check harness for short to power.

OK or NG

OK >> GO TO 16.
NG >> Repair open circuit or short to power in harness or connectors.

16. CHECK INTERMITTENT INCIDENT

Refer to EC-756, "TROUBLE DIAGNOSIS FOR INTERMITTENT INCIDENT" .

OK or NG

OK >> Replace IPDM E/R.
NG >> Repair open circuit or short to power in harness or connectors.

DTC U1000, U1001 CAN COMMUNICATION LINE

PFP:23710

Description

UBS00367

CAN (Controller Area Network) is a serial communication line for real time application. It is an on-vehicle multiplex communication line with high data communication speed and excellent error detection ability. Many electronic control units are equipped onto a vehicle, and each control unit shares information and links with other control units during operation (not independent). In CAN communication, control units are connected with 2 communication lines (CAN H line, CAN L line) allowing a high rate of information transmission with less wiring. Each control unit transmits/receives data but selectively reads required data only.

On Board Diagnosis Logic

UBS00368

DTC No.	Trouble diagnosis name	DTC detecting condition	Possible cause
U1000 1000	CAN communication line	● ECM cannot communicate to other control unit. ● ECM cannot communicate for more than the specified time.	● Harness or connectors (CAN communication line is open or shorted)
U1001 1001			

DTC Confirmation Procedure

UBS00369

1. Turn ignition switch “ON” and wait at least 3 seconds.
2. Select “DATA MONITOR” mode with CONSULT-II.
3. If 1st trip DTC is detected, go to EC-765, "Diagnostic Procedure" .

Wiring Diagram

UBS0036A

EC-CAN-01

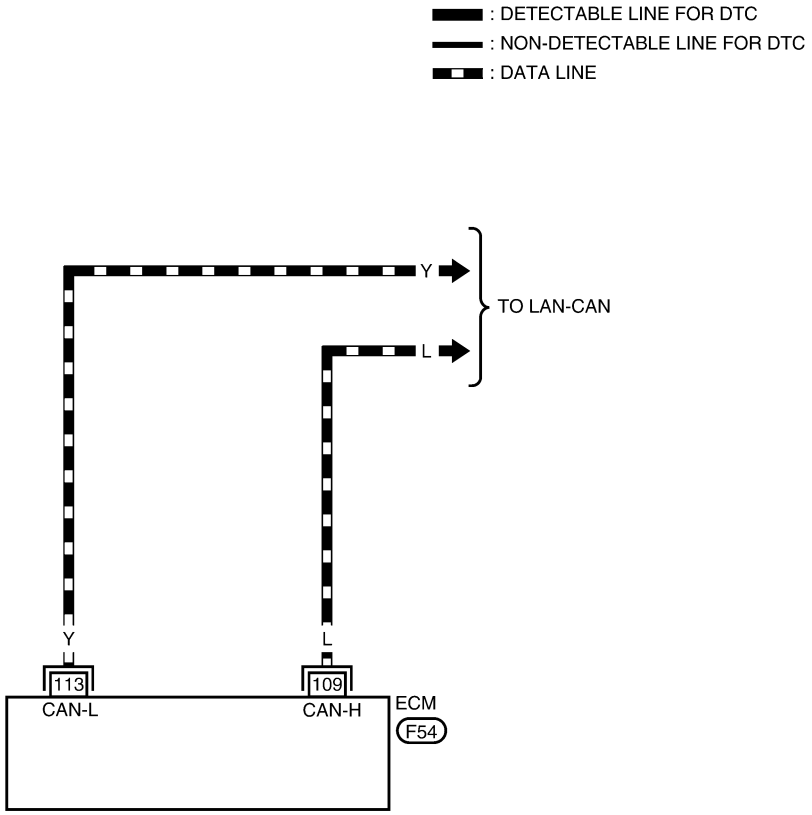

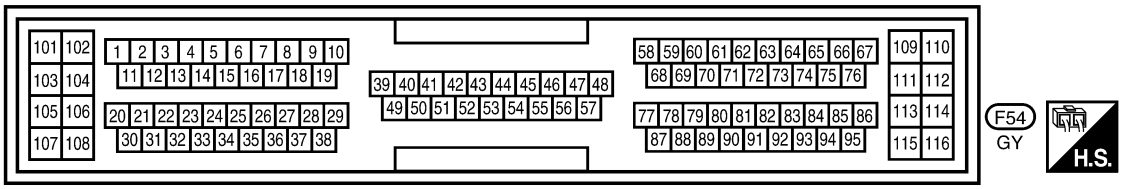

BBWA0200E

Diagnostic Procedure

UBS0036B

1. INSPECTION START

1. Turn ignition switch ON.
2. Select “CAN DIAG SUPPORT MNTR” in “DATA MONITOR” mode with CONSULT-II.
3. Print out the CONSULT-II screen.

Models with TCS

OK data

DATA MONITOR	
MONITOR	NO DTC
CAN COMM	OK
CAN CIRC 1	OK
CAN CIRC 2	OK
CAN CIRC 3	OK
CAN CIRC 4	OK
CAN CIRC 5	UNKWN
CAN CIRC 6	OK
CAN CIRC 7	OK

NG data

DATA MONITOR	
MONITOR	NO DTC
CAN COMM	OK
CAN CIRC 1	UNKWN
CAN CIRC 2	UNKWN
CAN CIRC 3	UNKWN
CAN CIRC 4	UNKWN
CAN CIRC 5	UNKWN
CAN CIRC 6	UNKWN
CAN CIRC 7	UNKWN

PBIB0891E

A/T models without TCS

OK data

DATA MONITOR	
MONITOR	NO DTC
CAN COMM	OK
CAN CIRC 1	OK
CAN CIRC 2	OK
CAN CIRC 3	UNKWN
CAN CIRC 4	OK
CAN CIRC 5	UNKWN
CAN CIRC 6	OK
CAN CIRC 7	OK

NG data

DATA MONITOR	
MONITOR	NO DTC
CAN COMM	OK
CAN CIRC 1	UNKWN
CAN CIRC 2	UNKWN
CAN CIRC 3	UNKWN
CAN CIRC 4	UNKWN
CAN CIRC 5	UNKWN
CAN CIRC 6	UNKWN
CAN CIRC 7	UNKWN

PBIB0892E

M/T models without TCS

OK data

DATA MONITOR	
MONITOR	NO DTC
CAN COMM	OK
CAN CIRC 1	OK
CAN CIRC 2	UNKWN
CAN CIRC 3	UNKWN
CAN CIRC 4	OK
CAN CIRC 5	UNKWN
CAN CIRC 6	OK
CAN CIRC 7	OK

NG data

DATA MONITOR	
MONITOR	NO DTC
CAN COMM	OK
CAN CIRC 1	UNKWN
CAN CIRC 2	UNKWN
CAN CIRC 3	UNKWN
CAN CIRC 4	UNKWN
CAN CIRC 5	UNKWN
CAN CIRC 6	UNKWN
CAN CIRC 7	UNKWN

PBIB0893E

>> Go to LAN-8, "CAN SYSTEM (FOR TCS MODELS)" , LAN-27, "CAN SYSTEM (FOR A/T MODELS)" or LAN-43, "CAN SYSTEM (FOR M/T MODELS)" .

DTC P0011, P0021 IVT CONTROL

PFP:23796

Description

UBS0036C

SYSTEM DESCRIPTION

Sensor	Input signal to ECM	ECM function	Actuator
Crankshaft position sensor (POS)	Engine speed	Intake valve timing control	Intake valve timing control solenoid valve
Camshaft position sensor (PHASE)	Engine speed and piston position		
Engine coolant temperature sensor	Engine coolant temperature		
Vehicle speed sensor	Vehicle speed		

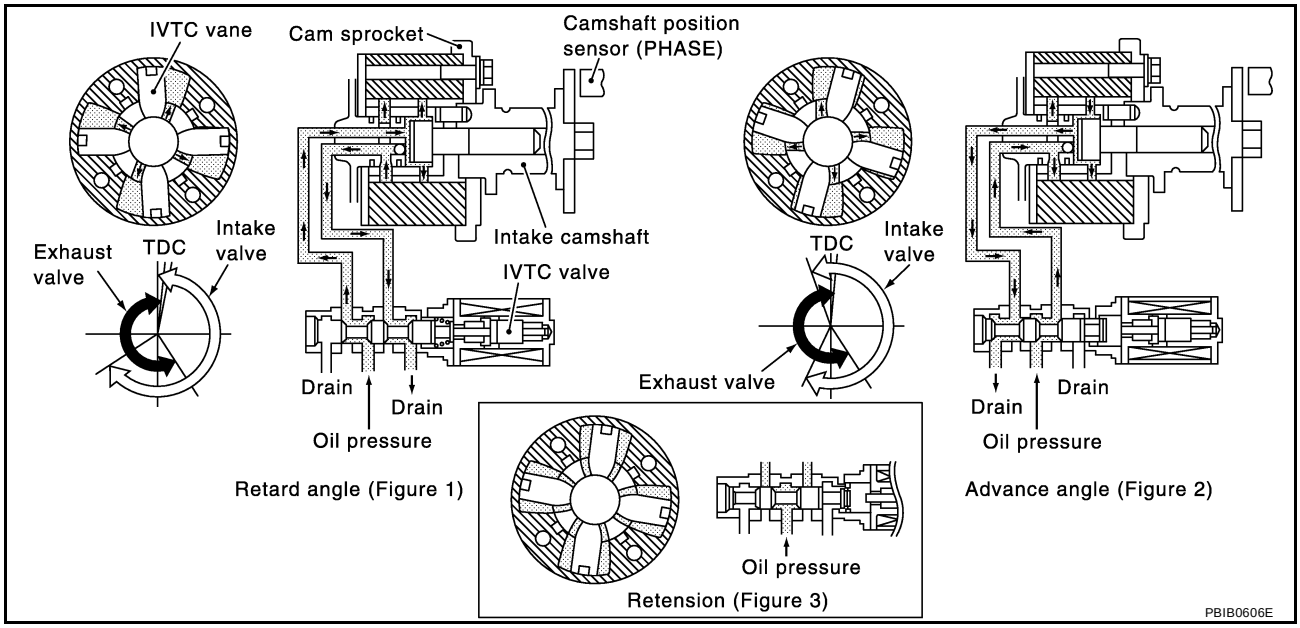

This mechanism hydraulically controls cam phases continuously with the fixed operating angle of the intake valve.

The ECM receives signals such as crankshaft position, camshaft position, engine speed, and engine coolant temperature. Then, the ECM sends ON/OFF pulse duty signals to the intake valve timing control solenoid valve depending on driving status. This makes it possible to control the shut/open timing of the intake valve to increase engine torque in low/mid speed range and output in high-speed range.

COMPONENT DESCRIPTION

Intake valve timing control solenoid valve is activated by ON/OFF pulse duty (ratio) signals from the ECM.

The intake valve timing control solenoid valve changes the oil amount and direction of flow through intake valve timing control unit or stops oil flow.

The longer pulse width advances valve angle.

The shorter pulse width retards valve angle.

When ON and OFF pulse widths become equal, the solenoid valve stops oil pressure flow to fix the intake valve angle at the control position.

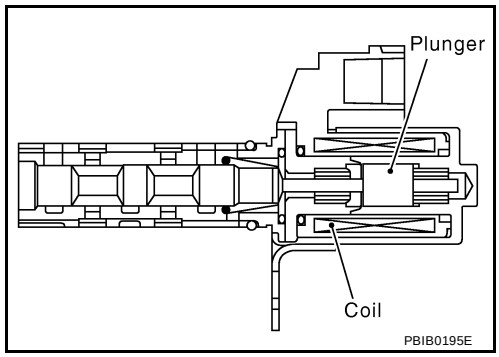

CONSULT-II Reference Value in Data Monitor Mode

UBS0036D

Specification data are reference values.

MONITOR ITEM	CONDITION		SPECIFICATION
INT/V TIM (B1) INT/V TIM (B2)	● Engine: After warming up ● Shift lever: N ● Air conditioner switch: OFF ● No-load	Idle	–5° - 5°CA
		When revving engine up to 2,000 rpm quickly	Approx. 0° - 30°CA

MONITOR ITEM	CONDITION		SPECIFICATION
INT/V SOL (B1) INT/V SOL (B2)	● Engine: After warming up ● Shift lever: N ● Air conditioner switch: OFF ● No-load	Idle	0% - 2%
		When revving engine up to 2,000 rpm quickly	Approx. 25% - 50%

On Board Diagnosis Logic

UBS0036E

These self-diagnoses have the one trip detection logic.

DTC No.	Trouble diagnosis name	Detecting condition	Possible cause
P0011 0011 (Bank 1)	Intake valve timing control performance	There is a gap between angle of target and phase-control angle degree.	● Harness or connectors (Intake valve timing control solenoid valve circuit is open or shorted.) ● Intake valve timing control solenoid valve ● Crankshaft position sensor (POS) ● Camshaft position sensor (PHASE) ● Accumulation of debris to the signal pick-up portion of the camshaft
P0021 0021 (Bank 2)			

FAIL-SAFE MODE

When the malfunction is detected, the ECM enters fail-safe mode.

Detected items	Engine operating condition in fail-safe mode
Intake valve timing control	The signal is not energized to the solenoid valve and the valve control does not function

DTC Confirmation Procedure

UBS0036F

CAUTION:
Always drive at a safe speed.

NOTE:
If "DTC Confirmation Procedure" has been previously conducted, always turn ignition switch "OFF" and wait at least 10 seconds before conducting the next test.

TESTING CONDITION:
Before performing the following procedure, confirm that battery voltage is between 10V and 16V at idle.

WITH CONSULT-II

1. Turn ignition switch "ON".
2. Select "DATA MONITOR" mode with CONSULT-II.
3. Maintain the following conditions for at least 20 consecutive seconds.

ENG SPEED	1,700 - 3,175 rpm (A constant rotation is maintained.)
COOLANT TEMPS	70 - 105°C (176 - 194°F)
Selector lever	1st or 2nd position
Driving location uphill	Driving vehicle uphill (Increased engine load will help maintain the driving conditions required for this test.)

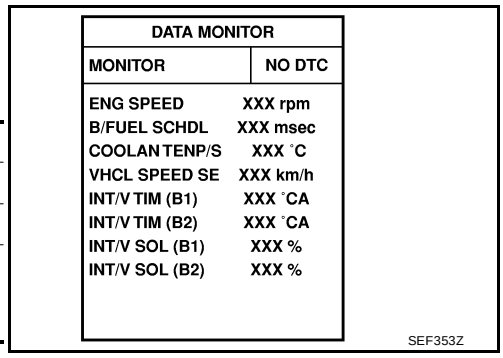

4. If the DTC is detected, go to EC-771, "Diagnostic Procedure" .

WITH GST

Follow the procedure "WITH CONSULT-II" above.

Wiring Diagram
BANK 1

UBS0036G

EC-IVCB1-01

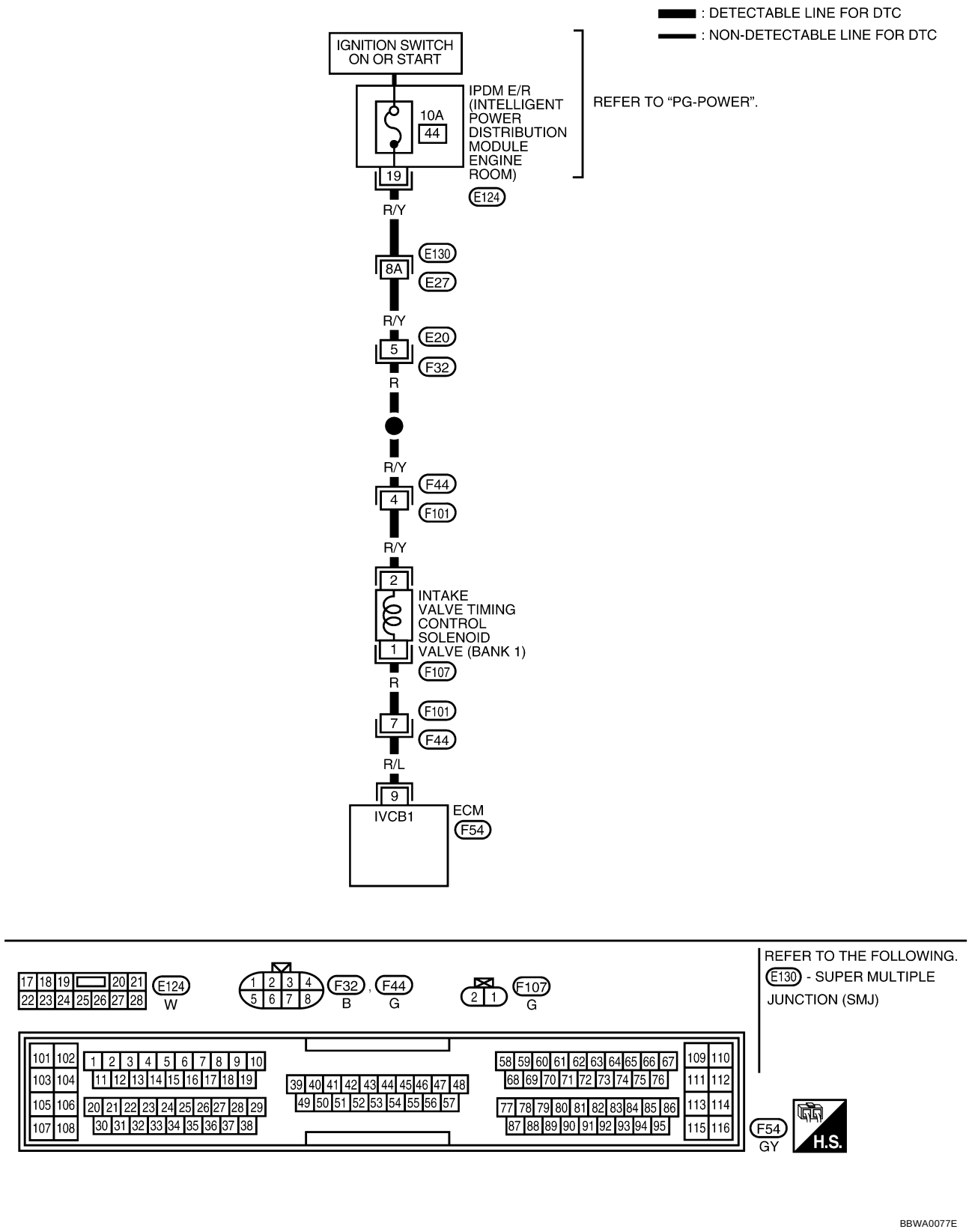

Specification data are reference values and are measured between each terminal and ground.

CAUTION:

Do not use ECM ground terminals when measuring input/output voltage. Doing so may result in damage to the ECM's transistor. Use a ground other than ECM terminals, such as the ground.

TERMINAL NO.	WIRE COLOR	ITEM	CONDITION	DATA (DC Voltage)
9	R/L	Intake valve timing control solenoid valve (bank 1)	**[Engine is running]** ● **Warm-up condition** ● Idle speed	BATTERY VOLTAGE (11 - 14V)★ 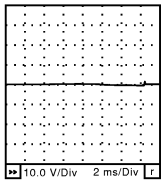 SEC988C
			[Engine is running] ● **Warm-up condition** ● Engine speed is 2,500 rpm	7 - 12V★ 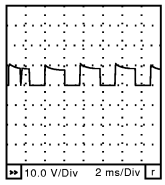 SEC989C

★: Average voltage for pulse signal (Actual pulse signal can be confirmed by oscilloscope.)

BANK 2

EC-IVCB2-01

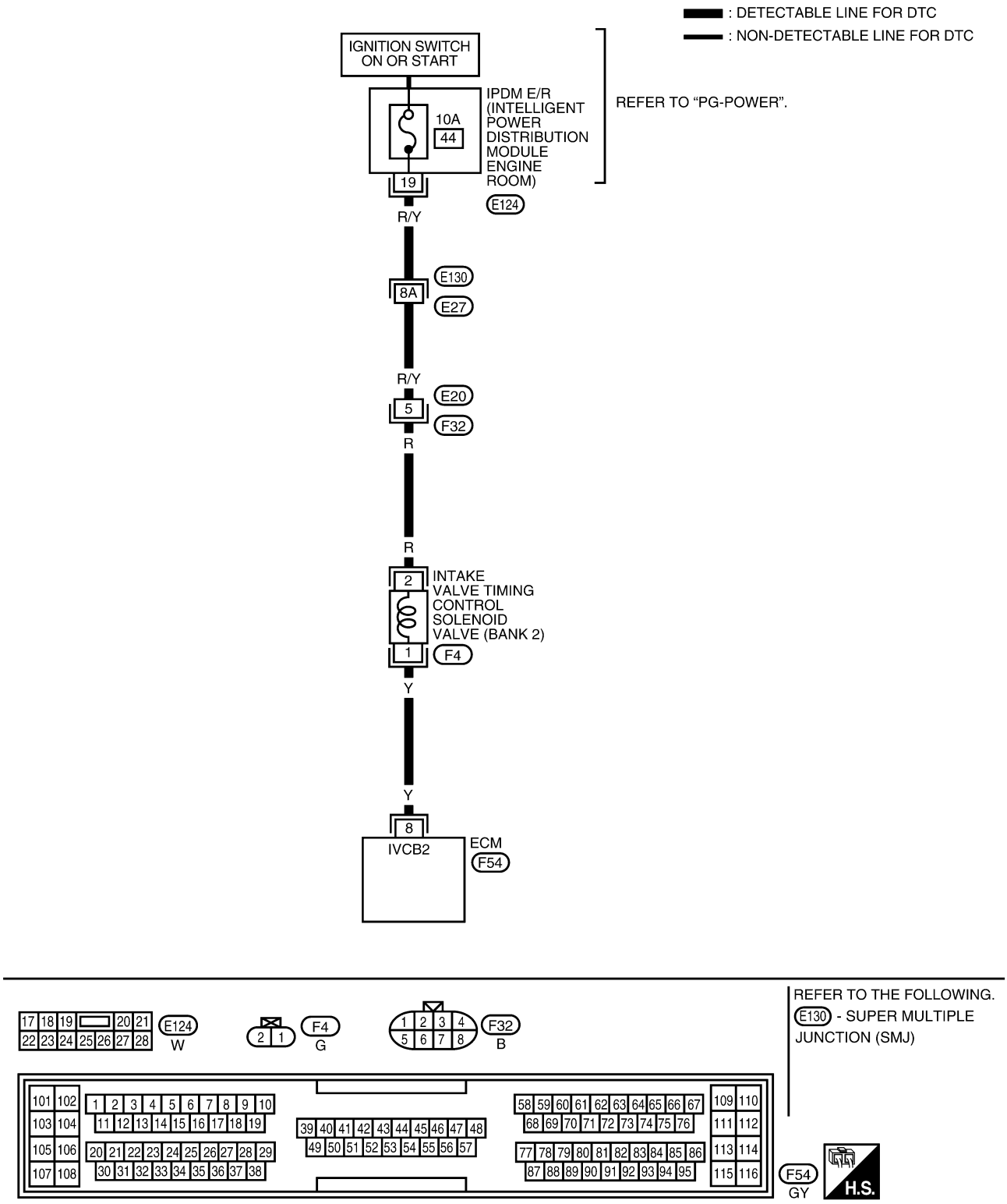

Specification data are reference values and are measured between each terminal and ground.

CAUTION:
Do not use ECM ground terminals when measuring input/output voltage. Doing so may result in damage to the ECM's transistor. Use a ground other than ECM terminals, such as the ground.

TERMINAL NO.	WIRE COLOR	ITEM	CONDITION	DATA (DC Voltage)
8	Y	Intake valve timing control solenoid valve (bank 2)	**[Engine is running]** ● **Warm-up condition** ● Idle speed	BATTERY VOLTAGE (11 - 14V)★ 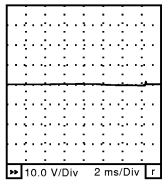 SEC988C
			[Engine is running] ● **Warm-up condition** ● Engine speed is 2,500 rpm	7 - 12V★ 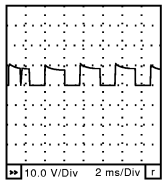 SEC989C

★: Average voltage for pulse signal (Actual pulse signal can be confirmed by oscilloscope.)

Diagnostic Procedure

UBS0036H

1. CHECK INTAKE VALVE TIMING CONTROL SOLENOID VALVE POWER SUPPLY CIRCUIT

1. Turn ignition switch "OFF".
2. Disconnect intake valve timing control solenoid valve harness connector.

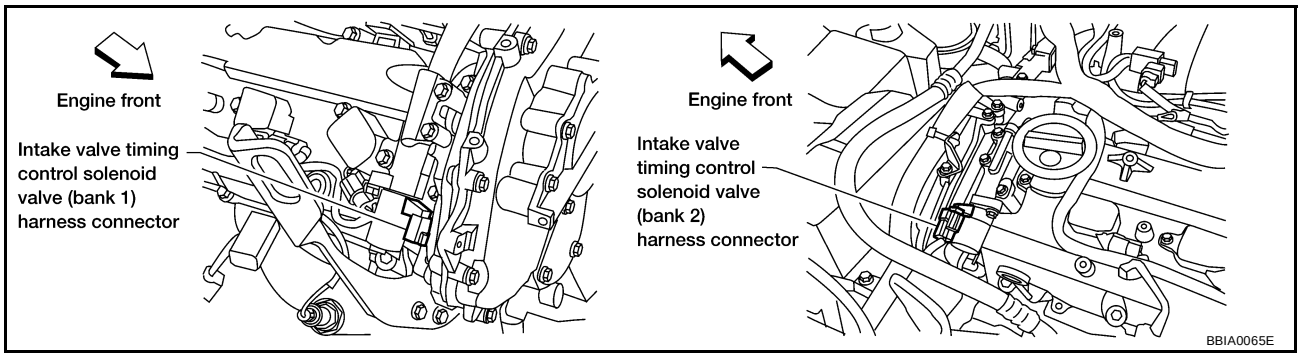

3. Turn ignition switch "ON".
4. Check voltage between intake valve timing control solenoid valve terminal 2 and ground with CONSULT-II or tester.

Voltage: Battery voltage

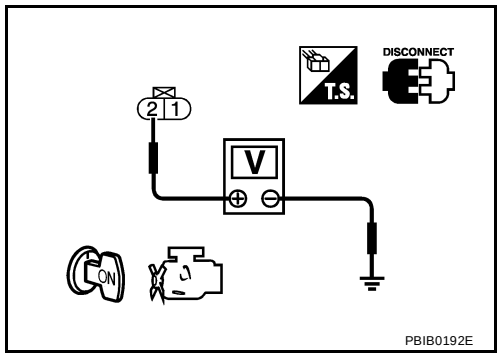

OK or NG

OK >> GO TO 3.
NG >> GO TO 2.

2. DETECT MALFUNCTIONING PART

Check the following.

- Harness connectors E130, E27
- Harness connectors E20, F32
- Harness connectors F44, F101
- IPDM E/R harness connector E124
- 10A fuse
- Harness for open or short between intake valve timing control solenoid valve and fuse

>> Repair harness or connectors.

3. CHECK INTAKE VALVE TIMING CONTROL SOLENOID VALVE OUTPUT SIGNAL CIRCUIT FOR OPEN AND SHORT

1. Turn ignition switch "OFF".
2. Disconnect ECM harness connector.
3. Check harness continuity between ECM terminal 9 (bank 1) or 8 (bank 2) and intake valve timing control solenoid valve terminal 1. Refer to Wiring Diagram.

Continuity should exist.

4. Also check harness for short to ground and short to power.

OK or NG

OK >> GO TO 5.
NG >> GO TO 4.

4. DETECT MALFUNCTIONING PART

Check the following.

- Harness connectors F44, F101
- Harness for open and short between ECM and intake valve timing control solenoid valve and fuse

>> Repair open circuit or short to ground or short to power in harness or connectors.

5. CHECK INTAKE VALVE TIMING CONTROL SOLENOID VALVE

Refer to EC-773, "Component Inspection" .

OK or NG

OK >> GO TO 6.
NG >> Replace intake valve timing control solenoid valve.

6. CHECK CRANKSHAFT POSITION SENSOR (POS)

Refer to EC-943, "Component Inspection" .

OK or NG

OK >> GO TO 7.
NG >> Replace crankshaft position sensor (POS).

7. CHECK CAMSHAFT POSITION SENSOR (PHASE)

Refer to EC-951, "Component Inspection" .

OK or NG

OK >> GO TO 8.
NG >> Replace camshaft position sensor (PHASE).

8. CHECK CAMSHAFT

Check accumulation of debris to the signal pick-up portion of the camshaft. Refer to EM-134, "CAMSHAFT" .

OK or NG

OK >> GO TO 9.
NG >> Remove debris and clean the signal pick-up cutout of camshaft.

9. CHECK INTERMITTENT INCIDENT

Refer to EC-756, "TROUBLE DIAGNOSIS FOR INTERMITTENT INCIDENT" .
For wiring diagram, refer to EC-940 for CKP sensor (POS), and EC-946 for CMP sensor (PHASE).

>> **INSPECTION END**

Component Inspection

UBS0036I

INTAKE VALVE TIMING CONTROL SOLENOID VALVE

1. Disconnect intake valve timing control solenoid valve harness connector.
2. Check resistance between intake valve timing control solenoid valve terminals as follows.

Terminals	Resistance
1 and 2	7.0 - 7.5Ω at 20°C (68°F)
1 or 2 and ground	∞Ω (Continuity should not exist)

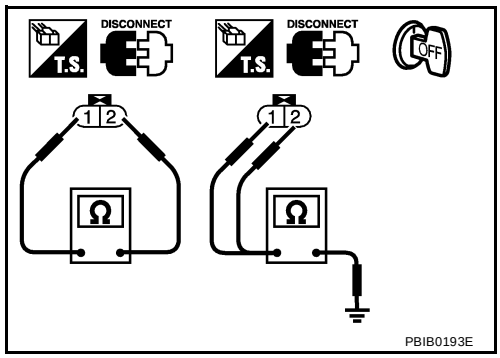

Removal and Installation

UBS0036J

INTAKE VALVE TIMING CONTROL SOLENOID VALVE

Refer to EM-146, "TIMING CHAIN" .

DTC P0031, P0032, P0051, P0052 HO2S1 HEATER

PFP:22690

Description

UBS0036K

SYSTEM DESCRIPTION

Sensor	Input Signal to ECM	ECM function	Actuator
Camshaft position sensor (PHASE) Crankshaft position sensor (POS)	Engine speed	Heated oxygen sensor 1 heater control	Heated oxygen sensor 1 heater

The ECM performs ON/OFF control of the heated oxygen sensor 1 heater corresponding to the engine speed.

OPERATION

Engine speed rpm	Heated oxygen sensor 1 heater
Above 3,600	OFF
Below 3,600	ON

CONSULT-II Reference Value in Data Monitor Mode

UBS0036L

Specification data are reference values.

MONITOR ITEM	CONDITION	SPECIFICATION
HO2S1 HTR (B1) HO2S1 HTR (B2)	● Engine speed: Below 3,600 rpm	ON
	● Engine speed: Above 3,600 rpm	OFF

On Board Diagnosis Logic

UBS0036M

DTC No.	Trouble diagnosis name	DTC detecting condition	Possible cause
P0031 0031 (Bank 1)	Heated oxygen sensor 1 heater control circuit low	The current amperage in the heated oxygen sensor 1 heater circuit is out of the normal range. (An excessively low voltage signal is sent to ECM through the heated oxygen sensor 1 heater.)	● Harness or connectors (The heated oxygen sensor 1 heater circuit is open or shorted.) ● Heater oxygen sensor 1 heater
P0051 0051 (Bank 2)			
P0032 0032 (Bank 1)	Heated oxygen sensor 1 heater control circuit high	The current amperage in the heated oxygen sensor 1 heater circuit is out of the normal range. (An excessively high voltage signal is sent to ECM through the heated oxygen sensor 1 heater.)	● Harness or connectors (The heated oxygen sensor 1 heater circuit is shorted.) ● Heater oxygen sensor 1 heater
P0052 0052 (Bank 2)			

DTC Confirmation Procedure

UBS0036N

NOTE:
If “DTC Confirmation Procedure” has been previously conducted, always turn ignition switch “OFF” and wait at least 10 seconds before conducting the next test.

TESTING CONDITION:
Before performing the following procedure, confirm that battery voltage is between 10.5V and 16V at idle.

WITH CONSULT-II

1. Start engine and warm it up to normal operating temperature.
2. Turn ignition switch "OFF" and wait at least 10 seconds.

3. Turn ignition switch “ON” and select “DATA MONITOR” mode with CONSULT-II.
4. Start engine and run it for at least 6 seconds at idle speed.
5. f 1st trip DTC is detected, go to EC-779, "Diagnostic Procedure" .

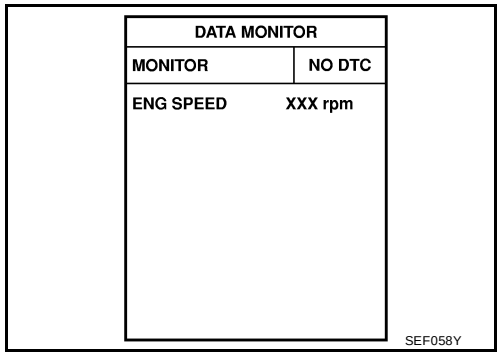

WITH GST

1. Start engine and warm it up to normal operating temperature.
2. Turn ignition switch "OFF" and wait at least 10 seconds.
3. Start engine and run it for at least 6 seconds at idle speed.
4. Turn ignition switch “OFF” and wait at least 10 seconds.
5. Start engine and run it for at least 6 seconds at idle speed.
6. Select “MODE 3” with GST.
7. If DTC is detected, go to EC-779, "Diagnostic Procedure" .

- **When using GST, “DTC Confirmation Procedure” should be performed twice as much as when using CONSULT-II because GST cannot display MODE 7 (1st trip DTC) concerning this diagnosis. Therefore, using CONSULT-II is recommended.**

Wiring Diagram
BANK 1

UBS0036O

EC-O2H1B1-01

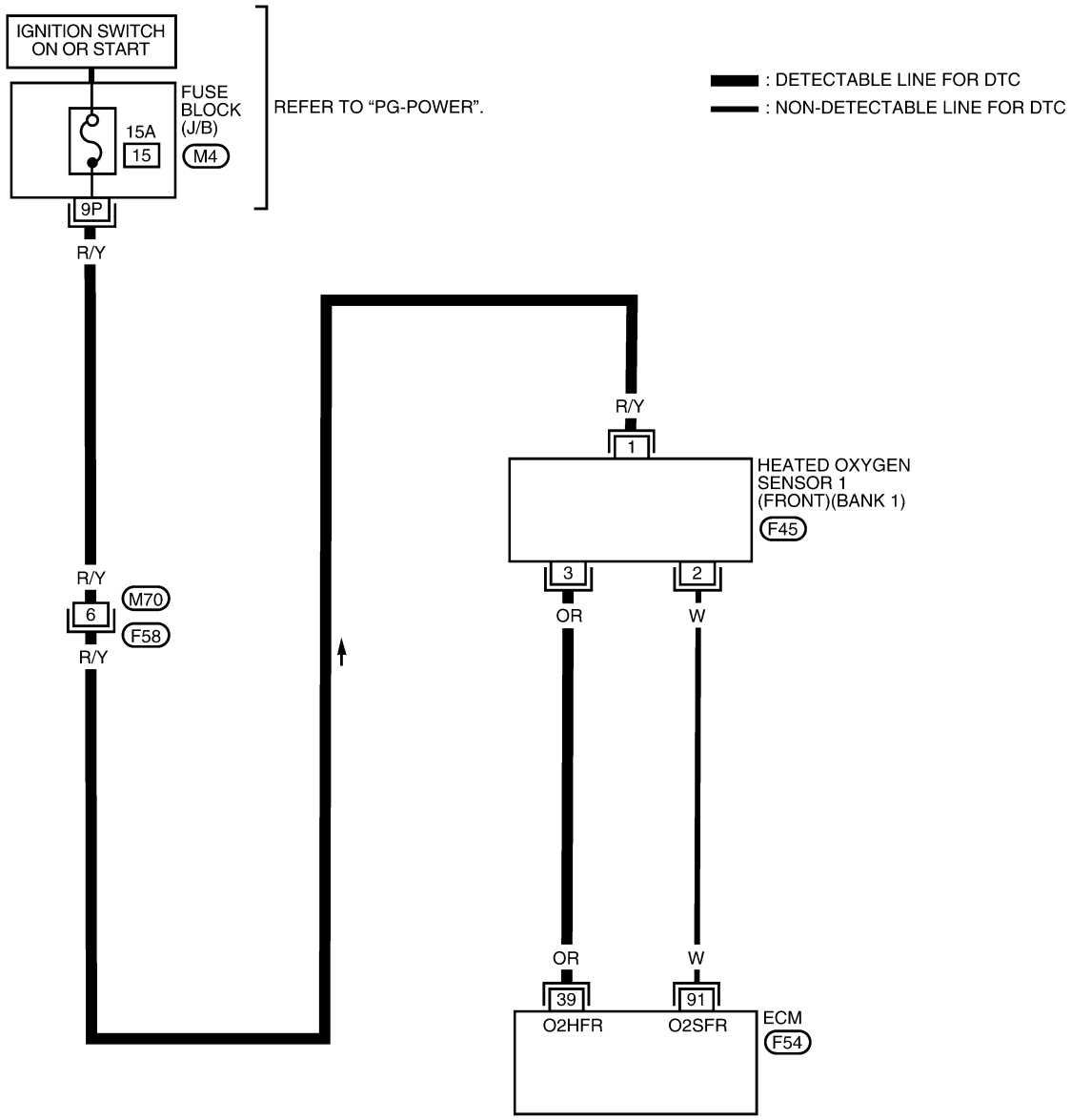

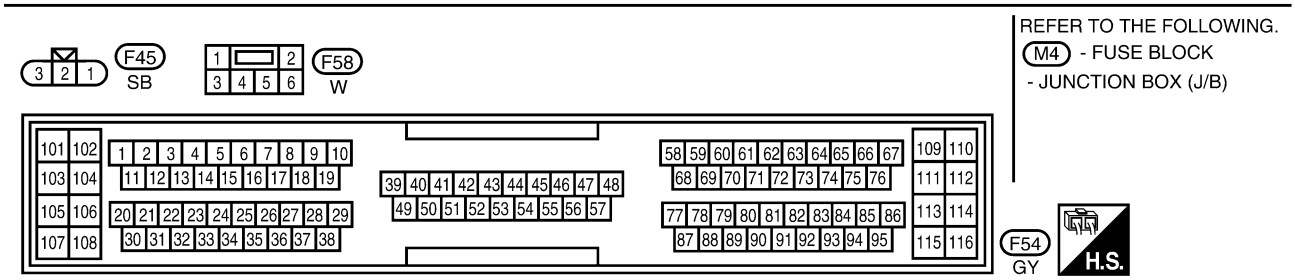

BBWA0056E

Specification data are reference values and are measured between each terminal and ground.

CAUTION:

Do not use ECM ground terminals when measuring input/output voltage. Doing so may result in damage to the ECM's transistor. Use a ground other than ECM terminals, such as the ground.

TERMINAL NO.	WIRE COLOR	ITEM	CONDITION	DATA (DC Voltage)
39	OR	Heated oxygen sensor 1 heater (bank 1)	**[Engine is running]** ● Engine speed is below 3,600 rpm.	0 - 1.0V
			[Engine is running] ● Engine speed is above 3,600 rpm.	BATTERY VOLTAGE (11 - 14V)

BANK 2

EC-O2H1B2-01

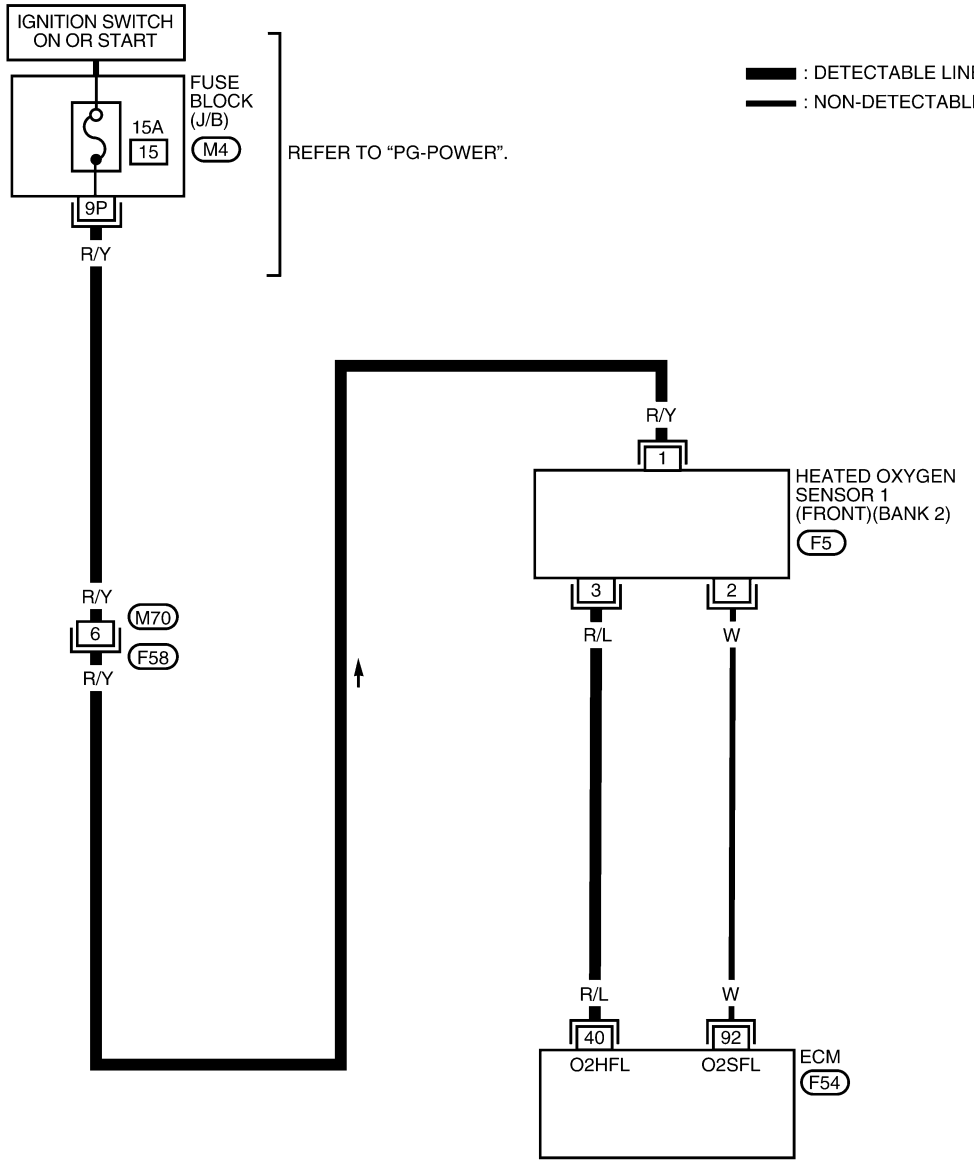

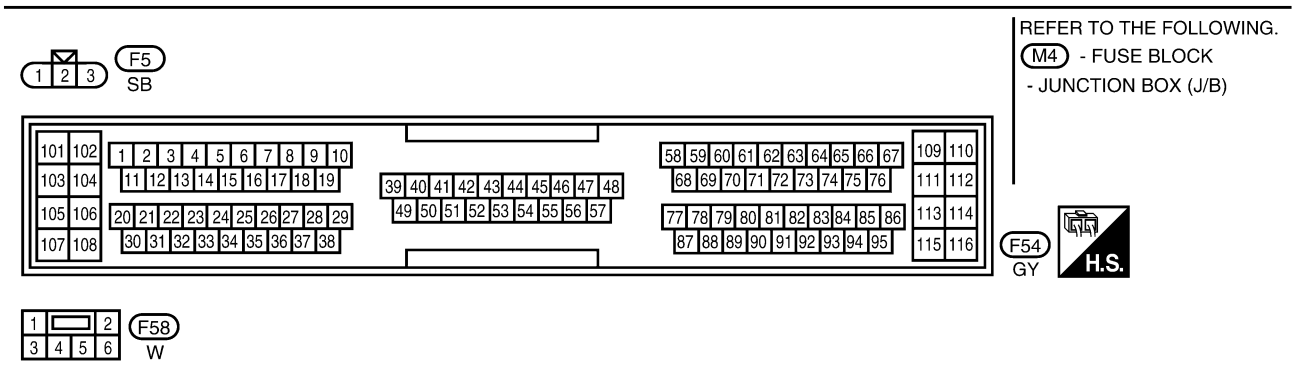

Specification data are reference values and are measured between each terminal and ground.

CAUTION:
Do not use ECM ground terminals when measuring input/output voltage. Doing so may result in damage to the ECM's transistor. Use a ground other than ECM terminals, such as the ground.

TERMINAL NO.	WIRE COLOR	ITEM	CONDITION	DATA (DC Voltage)
40	R/L	Heated oxygen sensor 1 heater (bank 2)	**[Engine is running]** ● Engine speed is below 3,600 rpm.	0 - 1.0V
			[Engine is running] ● Engine speed is above 3,600 rpm.	BATTERY VOLTAGE (11 - 14V)

Diagnostic Procedure

UBS0036P

1. CHECK HO2S1 POWER SUPPLY CIRCUIT

1. Turn ignition switch “OFF”.
2. Disconnect heated oxygen sensor 1 harness connector.
   Bank 1

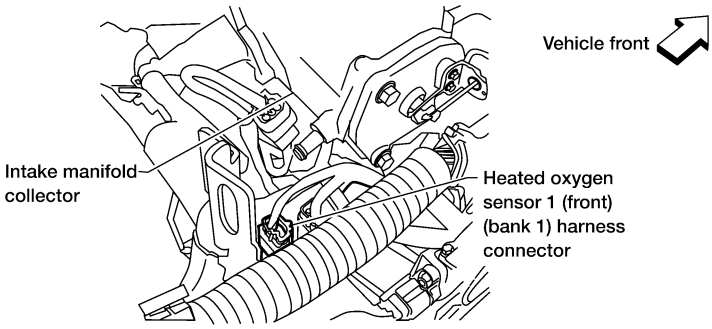

   Bank 2

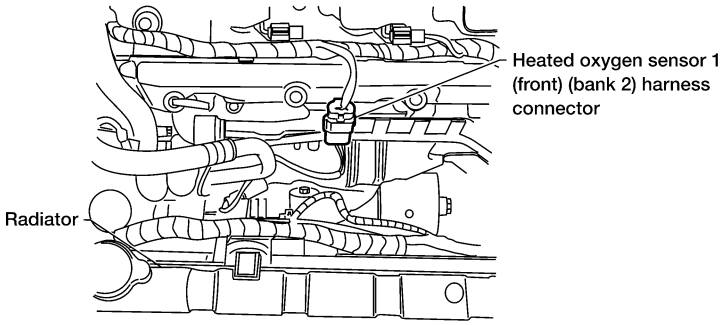

3. Turn ignition switch “ON”.
4. Check voltage between HO2S1 terminal 1 and ground with CONSULT-II or tester.

   Voltage: Battery voltage

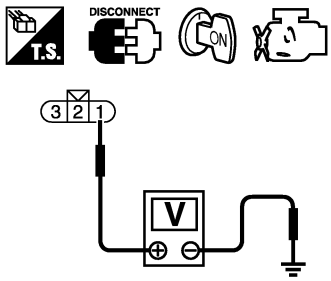

OK or NG

OK >> GO TO 3.
NG >> GO TO 2.

2. DETECT MALFUNCTIONING PART

Check the following.

- Harness connectors M70, F58
- Fuse block (J/B) connector M4
- 15A fuse
- Harness for open or short between heated oxygen sensor 1 and fuse

>> Repair harness or connectors.

3. CHECK HO2S1 OUTPUT SIGNAL CIRCUIT FOR OPEN AND SHORT

1. Turn ignition switch “OFF”.
2. Disconnect ECM harness connector.
3. Check harness continuity between ECM terminal and HO2S1 terminal as follows.
   Refer to Wiring Diagram.

DTC	Terminals		Bank
	ECM	Sensor	
P0031, P0032	39	3	1
P0051, P0052	40	3	2

Continuity should exist.

4. Also check harness for short to ground and short to power.

OK or NG

OK >> GO TO 4.
NG >> Repair open circuit or short to ground or short to power in harness or connectors.

4. CHECK HEATED OXYGEN SENSOR 1 HEATER

Refer to EC-780, "Component Inspection" .

OK or NG

OK >> GO TO 5.
NG >> Replace malfunctioning heated oxygen sensor 1.

5. CHECK INTERMITTENT INCIDENT

Refer to EC-756, "TROUBLE DIAGNOSIS FOR INTERMITTENT INCIDENT" .

>> **INSPECTION END**

Component Inspection

UBS0036Q

HEATED OXYGEN SENSOR 1 HEATER

1. Check resistance between HO2S1 terminals as follows.

Terminal No.	Resistance
1 and 3	2.3 - 4.3 Ω at 25°C (77°F)
2 and 1, 3	∞ Ω (Continuity should not exist)

2. If NG, replace heated oxygen sensor 1.

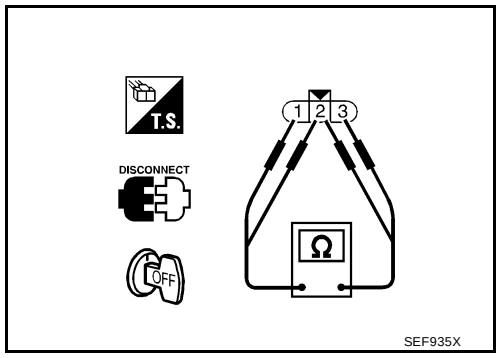

CAUTION:

- **Discard any heated oxygen sensor which has been dropped from a height of more than 0.5 m (19.7 in) onto a hard surface such as a concrete floor; use a new one.**

- **Before installing new oxygen sensor, clean exhaust system threads using Oxygen Sensor Thread Cleaner tool J-43897-18 or J-43897-12 and approved anti-seize lubricant.**

Removal and Installation

UBS0036R

HEATED OXYGEN SENSOR 1

Refer to EM-116, "EXHAUST MANIFOLD AND THREE WAY CATALYST" .

DTC P0037, P0038, P0057, P0058 HO2S2 HEATER

PFP:226A0

Description

UBS0036S

SYSTEM DESCRIPTION

Sensor	Input Signal to ECM	ECM function	Actuator
Camshaft position sensor (PHASE)	Engine speed	Heated oxygen sensor 2 heater control	Heated oxygen sensor 2 heater
Crankshaft position sensor (POS)			

The ECM performs ON/OFF control of the heated oxygen sensor 2 heater corresponding to the engine speed.

OPERATION

Engine speed rpm	Heated oxygen sensor 2 heater
Above 3,600	OFF
Below 3,600	ON

CONSULT-II Reference Value in Data Monitor Mode

UBS0036T

Specification data are reference values.

MONITOR ITEM	CONDITION	SPECIFICATION
HO2S2 HTR (B1) HO2S2 HTR (B2)	● Engine speed: Below 3,800 rpm [After driving for 2 minutes at a speed of 70 km/h (43 MPH) or more]	ON
	● Engine speed: Above 3,600 rpm	OFF

On Board Diagnosis Logic

UBS0036U

DTC No.	Trouble diagnosis name	DTC detecting condition	Possible cause
P0037 0037 (Bank 1)	Heated oxygen sensor 2 heater control circuit low	The current amperage in the heated oxygen sensor 2 heater circuit is out of the normal range. (An excessively low voltage signal is sent to ECM through the heated oxygen sensor 1 heater.)	● Harness or connectors (The heated oxygen sensor 1 heater circuit is open or shorted.) ● Heater oxygen sensor 1 heater
P0057 0057 (Bank 2)			
P0038 0038 (Bank 1)	Heated oxygen sensor 2 heater control circuit high	The current amperage in the heated oxygen sensor 2 heater circuit is out of the normal range. (An excessively high voltage signal is sent to ECM through the heated oxygen sensor 1 heater.)	● Harness or connectors (The heated oxygen sensor 1 heater circuit is shorted.) ● Heater oxygen sensor 1 heater
P0058 0058 (Bank 2)			

DTC Confirmation Procedure

UBS0036V

NOTE:
If “DTC Confirmation Procedure” has been previously conducted, always turn ignition switch “OFF” and wait at least 10 seconds before conducting the next test.

TESTING CONDITION:
Before performing the following procedure, confirm that battery voltage is between 10.5V and 16V at idle.

WITH CONSULT-II

1. Turn ignition switch “ON” and select “DATA MONITOR” mode with CONSULT-II.
2. Start engine.
3. Drive vehicle at a speed of more than 70 km/h (43 MPH) for 2 consecutive minutes.

4. Stop vehicle and let engine idle for at least 6 seconds.
5. If 1st trip DTC is detected, go to EC-787, "Diagnostic Procedure" .

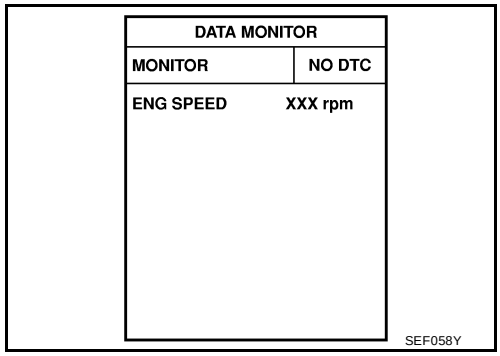

WITH GST

1. Start engine.
2. Drive vehicle at a speed of more than 70 km/h (43 MPH) for 2 consecutive minutes.
3. Stop vehicle and let engine idle for at least 6 seconds.
4. Turn ignition switch “OFF” and wait at least 10 seconds.
5. Start engine.
6. Drive vehicle at a speed of more than 70 km/h (43 MPH) for 2 consecutive minutes.
7. Stop vehicle and let engine idle for at least 6 seconds.
8. Select “MODE 3” with GST.
9. If DTC is detected, go to EC-787, "Diagnostic Procedure" .

- **When using GST, “DTC Confirmation Procedure” should be performed twice as much as when using CONSULT-II because GST cannot display MODE 7 (1st trip DTC) concerning this diagnosis. Therefore, using CONSULT-II is recommended.**

Wiring Diagram
BANK 1

UBS0036W

EC-O2H2B1-01

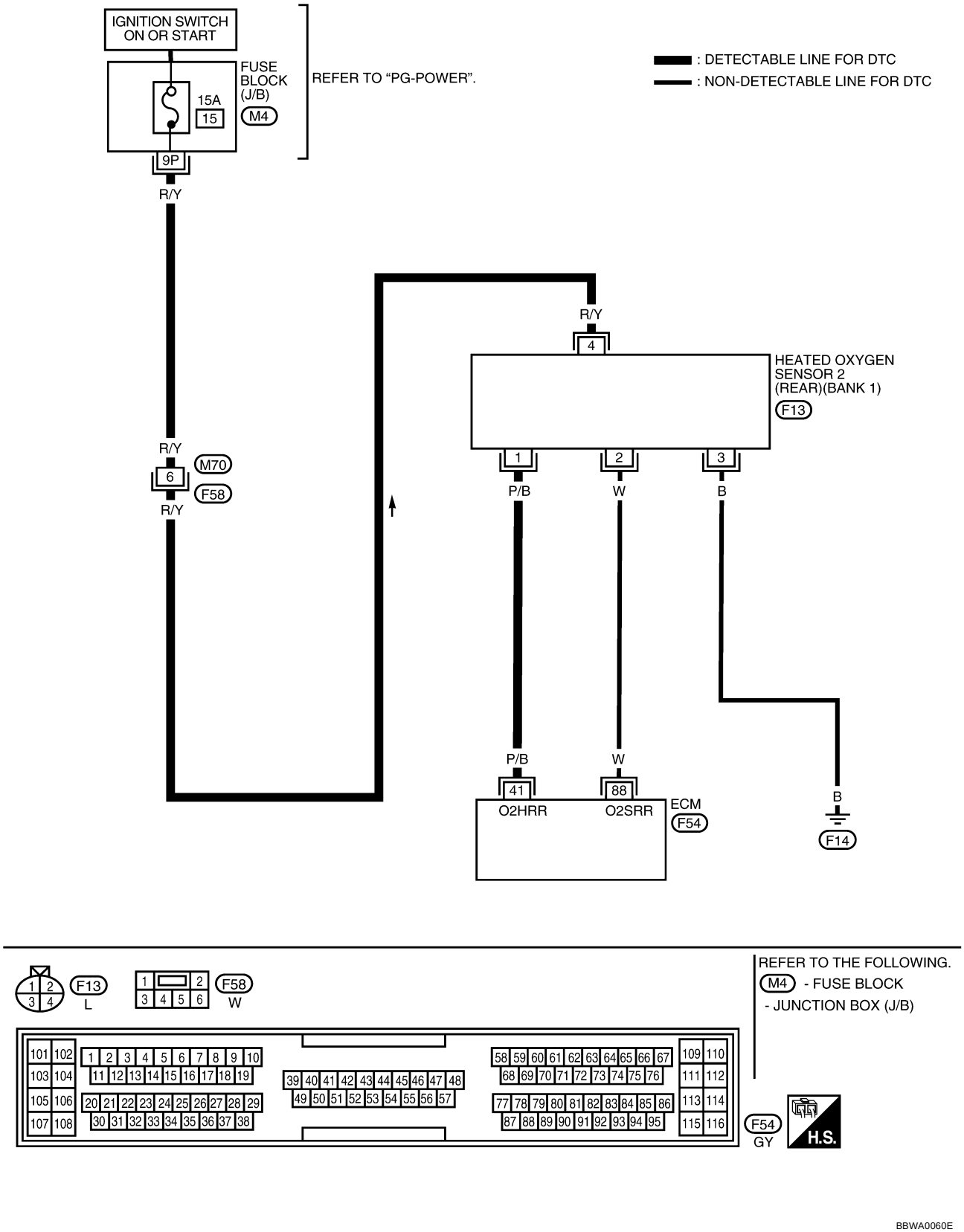

BBWA0060E

Specification data are reference values and are measured between each terminal and ground.

CAUTION:

Do not use ECM ground terminals when measuring input/output voltage. Doing so may result in damage to the ECM's transistor. Use a ground other than ECM terminals, such as the ground.

TERMINAL NO.	WIRE COLOR	ITEM	CONDITION	DATA (DC Voltage)
41	P/B	Heated oxygen sensor 2 heater (bank 1)	**[Engine is running]** ● Engine speed is below 3,600 rpm. ● After driving for 2 minutes at a speed of 70 km/h (43 MPH) or more.	0 - 1.0V
			[Ignition switch "ON"] ● Engine stopped **[Engine is running]** ● Engine speed is above 3,600 rpm.	BATTERY VOLTAGE (11 - 14V)

BANK 2

EC-O2H2B2-01

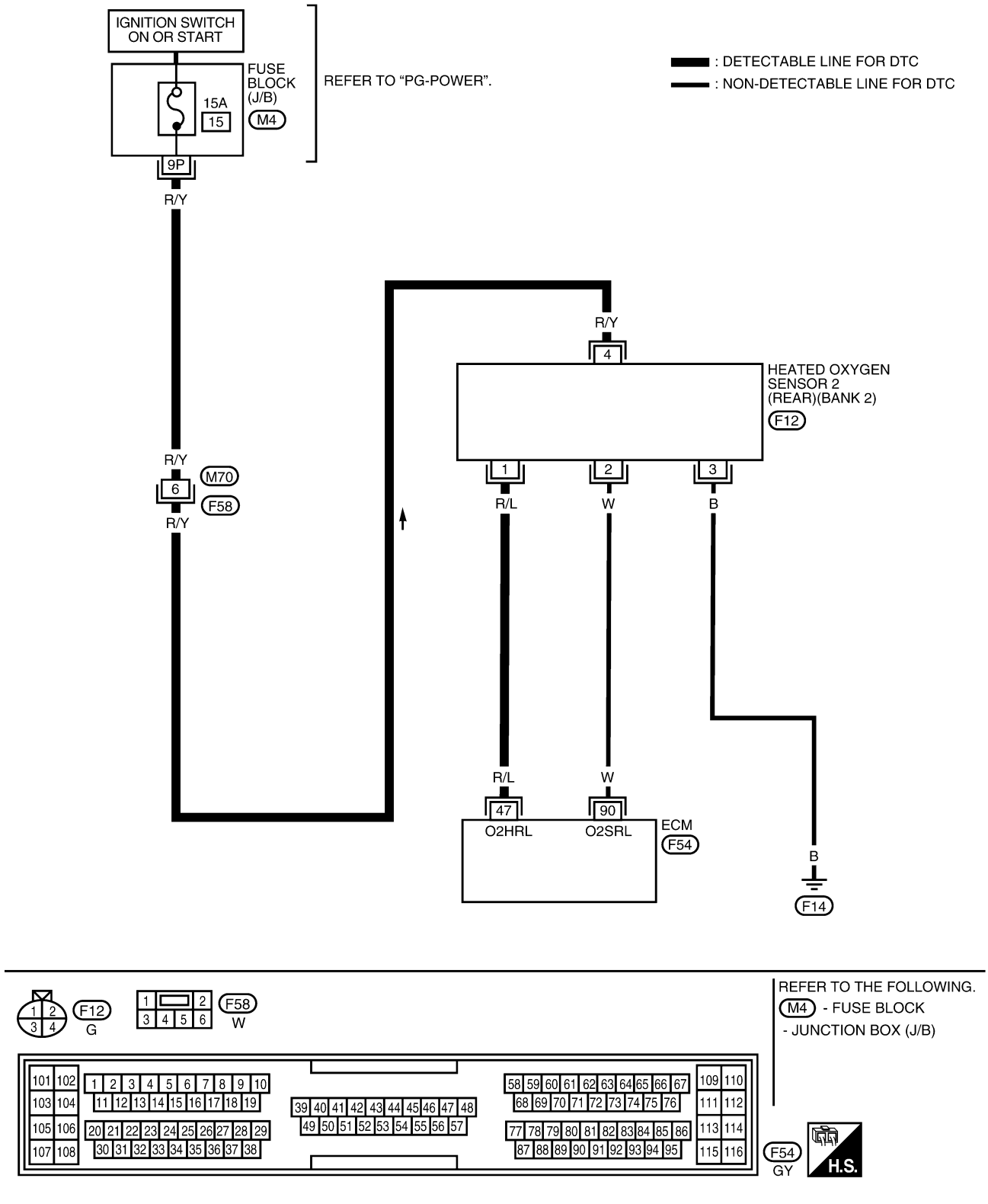

Specification data are reference values and are measured between each terminal and ground.

CAUTION:
Do not use ECM ground terminals when measuring input/output voltage. Doing so may result in damage to the ECM's transistor. Use a ground other than ECM terminals, such as the ground.

TERMINAL NO.	WIRE COLOR	ITEM	CONDITION	DATA (DC Voltage)
47	R/L	Heated oxygen sensor 2 heater (bank 2)	**[Engine is running]** ● Engine speed is below 3,600 rpm. ● After driving for 2 minutes at a speed of 70 km/h (43 MPH) or more.	0 - 1.0V
			[Ignition switch "ON"] ● Engine stopped **[Engine is running]** ● Engine speed is above 3,600 rpm.	BATTERY VOLTAGE (11 - 14V)

Diagnostic Procedure

UBS0036X

1. CHECK HO2S2 POWER SUPPLY CIRCUIT

1. Turn ignition switch “OFF”.
2. Disconnect heated oxygen sensor 2 harness connector.
   Bank 1

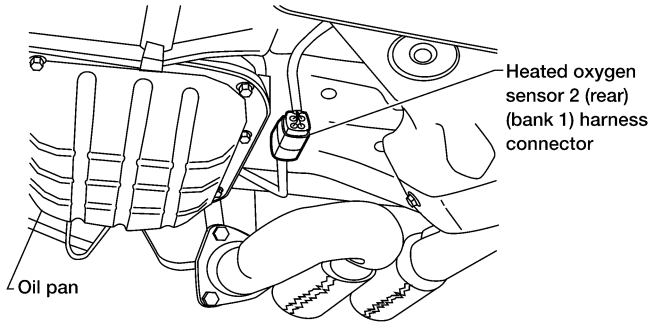

BBIA0039E

Bank 2

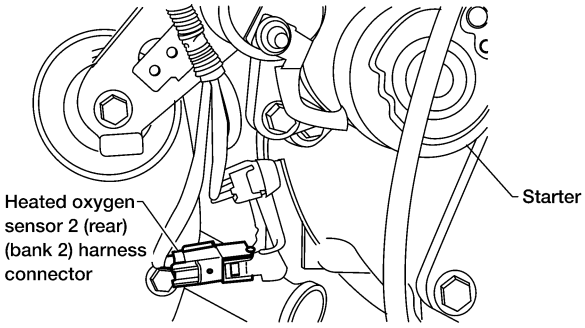

BBIA0040E

3. Turn ignition switch “ON”.
4. Check voltage between HO2S2 terminal 4 and ground with CONSULT-II or tester.

   Voltage: Battery voltage

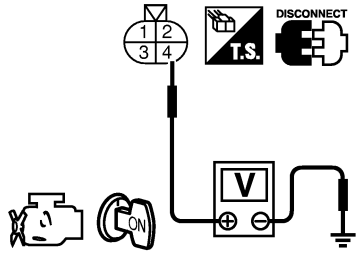

PBIB0541E

OK or NG

OK >> GO TO 3.
NG >> GO TO 2.

2. DETECT MALFUNCTIONING PART

Check the following.

- Harness connectors M70, F58
- Fuse block (J/B) connector M4
- 15A fuse
- Harness for open or short between heated oxygen sensor 2 and fuse

>> Repair harness or connectors.

3. CHECK HO2S2 OUTPUT SIGNAL CIRCUIT FOR OPEN AND SHORT

1. Turn ignition switch “OFF”.
2. Disconnect ECM harness connector.
3. Check harness continuity between ECM terminal and HO2S2 terminal as follows.
   Refer to Wiring Diagram.

DTC	Terminals		Bank
	ECM	Sensor	
P0037, P0038	41	1	1
P0057, P0058	47	1	2

Continuity should exist.

4. Also check harness for short to ground and short to power.

OK or NG

OK >> GO TO 4.
NG >> Repair open circuit or short to ground or short to power in harness or connectors.

4. CHECK HEATED OXYGEN SENSOR 2 HEATER

Refer to EC-789, "Component Inspection" .

OK or NG

OK >> GO TO 5.
NG >> Replace malfunctioning heated oxygen sensor 2.

5. CHECK INTERMITTENT INCIDENT

Refer to EC-756, "TROUBLE DIAGNOSIS FOR INTERMITTENT INCIDENT" .

>> **INSPECTION END**

Component Inspection

UBS0036Y

HEATED OXYGEN SENSOR 2 HEATER

1. Check resistance between HO2S2 terminals as follows.

Terminal No.	Resistance
1 and 4	2.3 - 4.3 Ω at 25°C (77°F)
2 and 1, 3, 4	∞ Ω (Continuity should not exist)
3 and 1, 2, 4	

2. If NG, replace heated oxygen sensor 2.

CAUTION:

- **Discard any heated oxygen sensor which has been dropped from a height of more than 0.5 m (19.7 in) onto a hard surface such as a concrete floor; use a new one.**
- **Before installing new oxygen sensor, clean exhaust system threads using Oxygen Sensor Thread Cleaner tool J-43897-18 or J-43897-12 and approved anti-seize lubricant.**

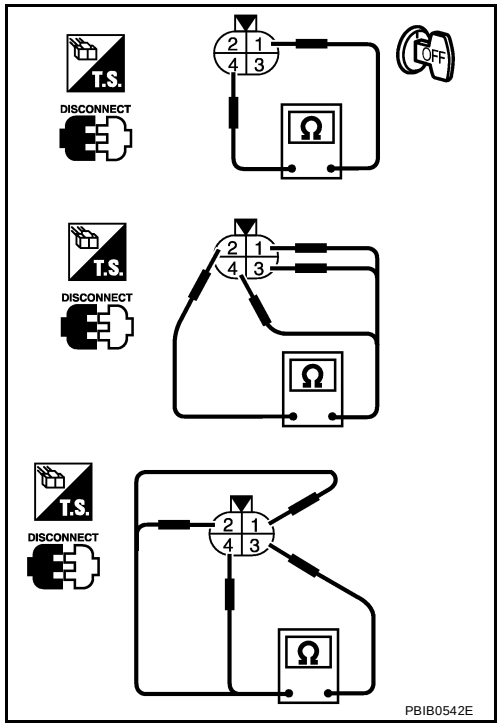

Removal and Installation

UBS0036Z

HEATED OXYGEN SENSOR 2

Refer to EX-6, "EXHAUST SYSTEM (VQ35DE)" .

DTC P0101 MAF SENSOR

PFP:22680

Component Description

UBS00370

The mass air flow sensor is placed in the stream of intake air. It measures the intake flow rate by measuring a part of the entire intake flow. It consists of a hot film that is supplied with electric current from the ECM. The temperature of the hot film is controlled by the ECM a certain amount. The heat generated by the hot film is reduced as the intake air flows around it. The more air, the greater the heat loss.
Therefore, the ECM must supply more electric current to maintain the temperature of the hot film as air flow increases. The ECM detects the air flow by means of this current change.

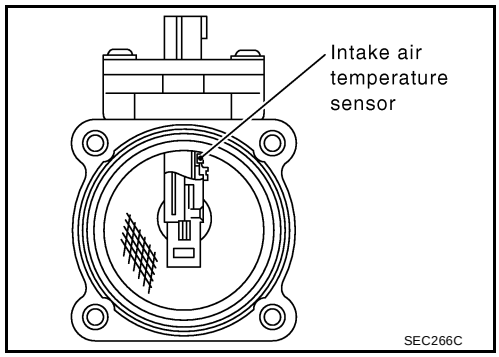

CONSULT-II Reference Value in Data Monitor Mode

UBS00371

Specification data are reference values.

MONITOR ITEM	CONDITION		SPECIFICATION
MAS A/F SE-B1	● Engine: After warming up ● Air conditioner switch: “OFF” ● Shift lever: “N” ● No-load	Idle	1.1 - 1.5V
		2,500 rpm	1.7 - 2.4V
CAL/LD VALUE	ditto	Idle	10.0 - 35.0%
		2,500 rpm	10.0 - 35.0%
MASS AIRFLOW	ditto	Idle	2.0 - 6.0 g·m/s
		2,500 rpm	7.0 - 20.0 g·m/s

On Board Diagnosis Logic

UBS00372

DTC No.	Trouble diagnosis name	DTC detecting condition		Possible cause
P0101 0101	Mass air flow sensor circuit range/performance problem	A)	A high voltage from the sensor is sent to ECM under light load driving condition.	● Harness or connectors (The sensor circuit is open or shorted.) ● Mass air flow sensor
		B)	A low voltage from the sensor is sent to ECM under heavy load driving condition.	● Harness or connectors (The sensor circuit is open or shorted.) ● Intake air leaks ● Mass air flow sensor

DTC Confirmation Procedure

UBS00373

Perform "PROCEDURE FOR MALFUNCTION A" first.
If the 1st trip DTC cannot be confirmed, perform "PROCEDURE FOR MALFUNCTION B".

NOTE:
If “DTC Confirmation Procedure” has been previously conducted, always turn ignition switch “OFF” and wait at least 10 seconds before conducting the next test.

PROCEDURE FOR MALFUNCTION A

NOTE:
If engine will not start or stops soon, wait at least 10 seconds with engine stopped (Ignition switch "ON") instead of running engine at idle speed.

With CONSULT-II

1. Turn ignition switch “ON”.

2. Select “DATA MONITOR” mode with CONSULT-II.
3. Start engine and warm it up to normal operating temperature.
4. Run engine for at least 10 seconds at idle speed.
5. If 1st trip DTC is detected, go to EC-794, "Diagnostic Procedure" .

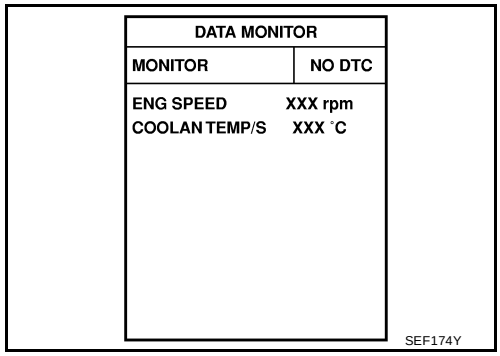

With GST

Follow the procedure “With CONSULT-II” above.

PROCEDURE FOR MALFUNCTION B

CAUTION:

Always drive vehicle at a safe speed.

With CONSULT-II

1. Turn ignition switch “ON”.
2. Start engine and warm it up to normal operating temperature.
   If engine cannot be started, go to EC-794, "Diagnostic Procedure" .
3. Select "DATA MONITOR" mode with CONSULT-II.
4. Check the voltage of "MAS A/F SE-B1" with "DATA MONITOR".
5. Increases engine speed to about 4,000 rpm.
6. Monitor the linear voltage rise in response to engine speed increases.
   If NG, go to EC-794, "Diagnostic Procedure" .
   If OK, go to following step.

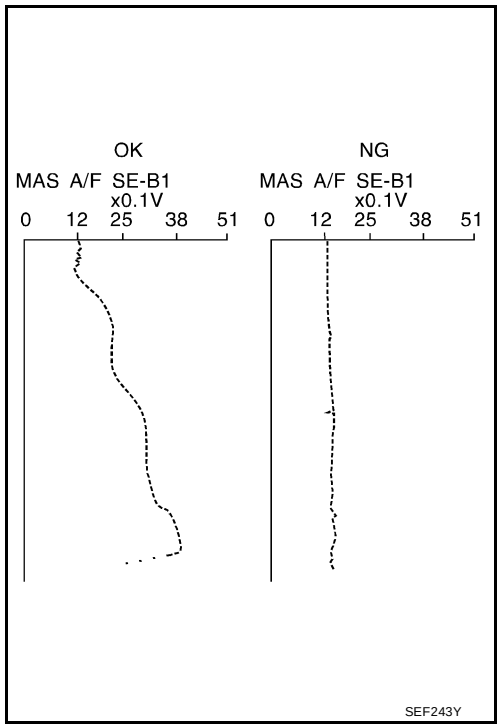

7. Maintain the following conditions for at least 10 consecutive seconds.

ENG SPEED	More than 2,000 rpm
THRTL SEN 1	More than 3V
THRTL SEN 2	More than 3V
Selector lever	Suitable position
Driving location	Driving vehicle uphill (Increased engine load) will help maintain the driving conditions required for this test.

8. If 1st trip DTC is detected, go to EC-794, "Diagnostic Procedure" .

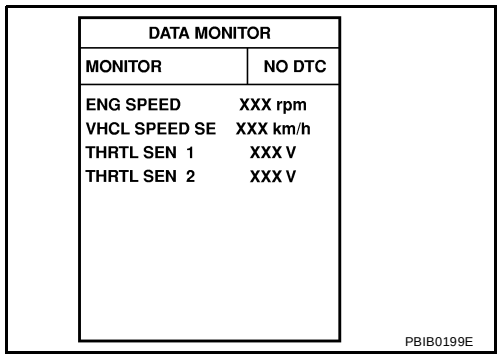

Overall Function Check

UBS00374

PROCEDURE FOR MALFUNCTION B

Use this procedure to check the overall function of the mass air flow sensor circuit. During this check, a 1st trip DTC might not be confirmed.

With GST

1. Start engine and warm it up to normal operating temperature.
2. Select “MODE 1” with GST.
3. Check the mass air flow sensor signal with “MODE 1”.
4. Check for linear mass air flow sensor signal value rise in response to increases to about 4,000 rpm in engine speed.
5. If NG, go to EC-794, "Diagnostic Procedure" .

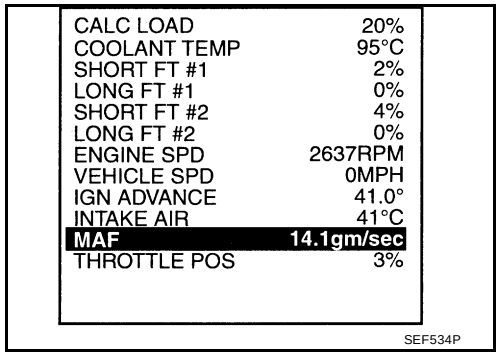

Wiring Diagram

UBS00375

EC-MAFS-01

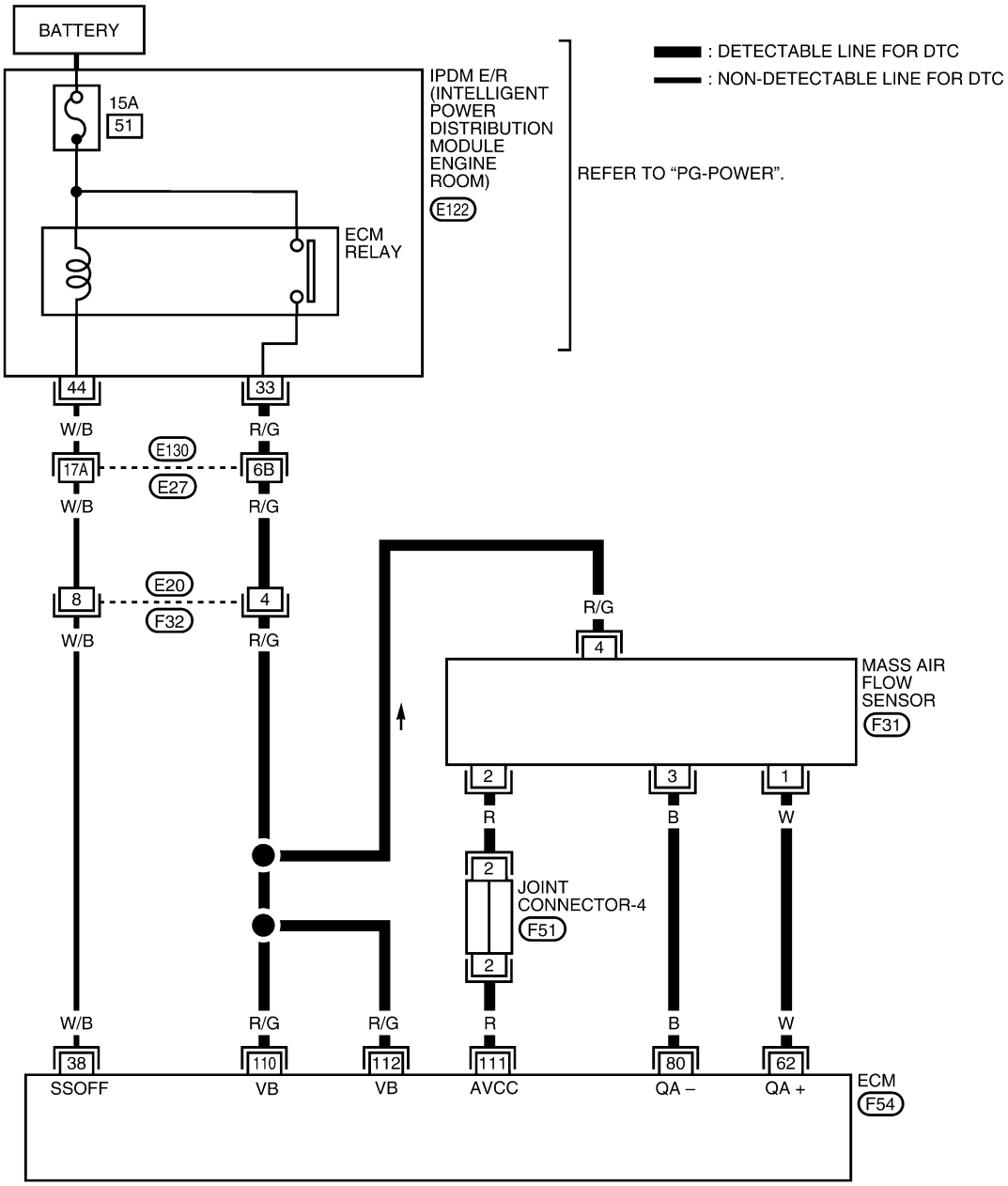

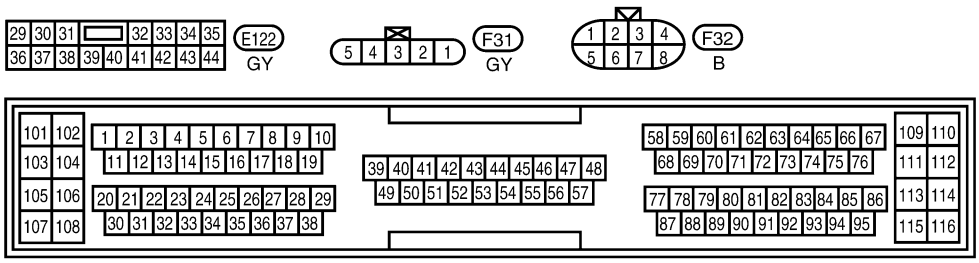

REFER TO THE FOLLOWING.
E130 - SUPER MULTIPLE JUNCTION (SMJ)
F51 - JOINT CONNECTOR (J/C)

H.S.

BBWA0050E

Specification data are reference values and are measured between each terminal and ground.

CAUTION:
Do not use ECM ground terminals when measuring input/output voltage. Doing so may result in damage to the ECM's transistor. Use a ground other than ECM terminals, such as the ground.

TERMINAL NO.	WIRE COLOR	ITEM	CONDITION	DATA (DC Voltage)
38	W/B	ECM relay (Self shut-off)	**[Engine is running]** **[Ignition switch "OFF"]** ● For a few seconds after turning ignition switch "OFF"	0 - 1.5V
			[Ignition switch "OFF"] ● A few seconds passed after turning ignition switch "OFF"	BATTERY VOLTAGE (11 - 14V)
62	W	Mass air flow sensor	**[Engine is running]** ● **Warm-up condition** ● Idle speed	1.1 - 1.5V
			[Engine is running] ● **Warm-up condition** ● Engine speed is 2,500 rpm.	1.7 - 2.4V
80	B	Mass air flow sensor ground	**[Engine is running]** ● **Warm-up condition** ● Idle speed	Approximately 0V
111	R	Sensors' power supply	**[Ignition switch "ON"]**	Approximately 5V
110 112	R/G R/G	Power supply for ECM	**[Ignition switch "ON"]**	BATTERY VOLTAGE (11 - 14V)

Diagnostic Procedure

UBS00376

1. INSPECTION START

Which malfunction (A or B) is duplicated?

A or B

A >> GO TO 3.
B >> GO TO 2.

2. CHECK INTAKE SYSTEM

Check the following for connection.

- Air duct
- Vacuum hoses
- Intake air passage between air duct to intake manifold

OK or NG

OK >> GO TO 3.
NG >> Reconnect the parts.

3. RETIGHTEN GROUND SCREWS

1. Turn ignition switch “OFF”.
2. Loosen and retighten engine ground screws.

>> GO TO 4.

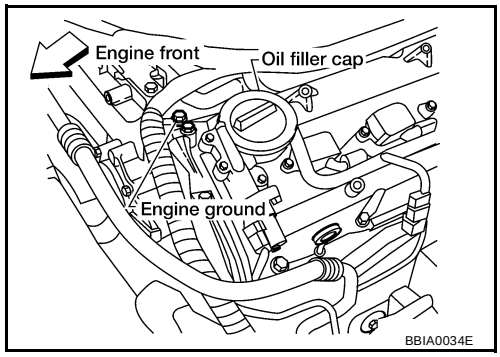

4. CHECK MAF SENSOR POWER SUPPLY CIRCUIT

1. Disconnect mass air flow (MAF) sensor harness connector.
2. Turn ignition switch “ON”.

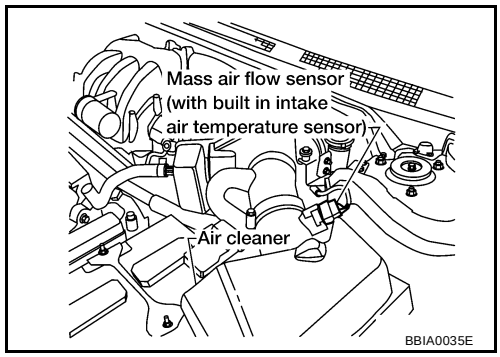

3. Check voltage between MAF sensor terminals 2, 4 and ground with CONSULT-II or tester.

Terminal	Voltage
2	Approximately 5V
4	Battery voltage

OK or NG

OK >> GO TO 6.
NG >> GO TO 5.

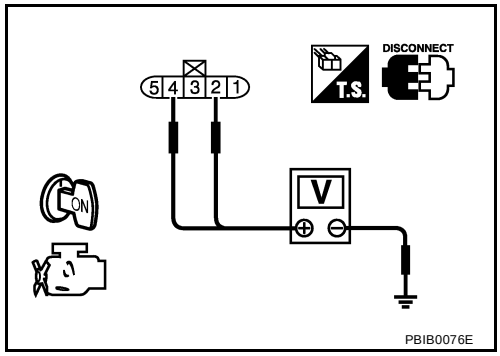

5. DETECT MALFUNCTIONING PART

Check the following.

- Harness connector E130, E27
- Harness connectors E20, F32
- Joint connector-4
- Harness for open or short between IPDM E/R and mass air flow sensor
- Harness for open or short between mass air flow sensor and ECM

>> Repair harness or connectors.

6. CHECK MAF SENSOR GROUND CIRCUIT FOR OPEN AND SHORT

1. Turn ignition switch “OFF”.
2. Disconnect ECM harness connector.
3. Check harness continuity between MAF sensor terminal 3 and ECM terminal 80.
   Refer to Wiring Diagram.

   Continuity should exist.

4. Also check harness for short to ground and short to power.

OK or NG

OK >> GO TO 7.
NG >> Repair open circuit or short to ground or short to power in harness or connectors.

7. CHECK MAF SENSOR INPUT SIGNAL CIRCUIT FOR OPEN AND SHORT

1. Check harness continuity between MAF sensor terminal 1 and ECM terminal 62.
   Refer to Wiring Diagram.

   Continuity should exist.

2. Also check harness for short to ground and short to power.

OK or NG

OK >> GO TO 8.
NG >> Repair open circuit or short to ground or short to power in harness or connectors.

8. CHECK MASS AIR FLOW SENSOR

Refer to EC-796, "Component Inspection" .

OK or NG

OK >> GO TO 9.
NG >> Replace mass air flow sensor.

9. CHECK INTERMITTENT INCIDENT

Refer to EC-756, "TROUBLE DIAGNOSIS FOR INTERMITTENT INCIDENT" .

>> **INSPECTION END**

Component Inspection

UBS00377

MASS AIR FLOW SENSOR

1. Reconnect all harness connectors disconnected.
2. Start engine and warm it up to normal operating temperature.
3. Check voltage between ECM terminal 62 (Mass air flow sensor signal) and ground.

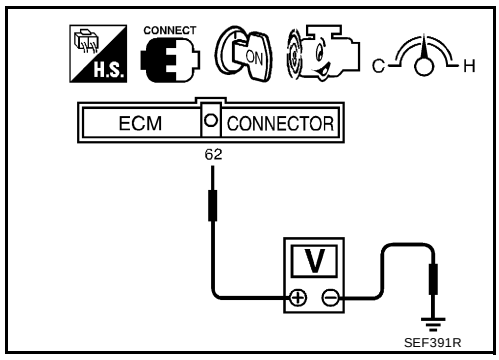

Condition	Voltage V
Ignition switch "ON" (Engine stopped.)	Approx. 1.0
Idle (Engine is warmed-up to normal operating temperature.)	1.1 - 1.5
2,500 rpm (Engine is warmed-up to normal operating temperature.)	1.7 - 2.4
Idle to about 4,000 rpm*	1.1 - 1.5 to Approx. 4.0

*: Check for linear voltage rise in response to engine being increased to about 4,000 rpm.

4. If the voltage is out of specification, proceed the following.
   - Turn ignition switch "OFF".
   - Disconnect mass air flow sensor harness connector and reconnect it again.

- Perform steps 2 and 3 again.

5. If NG, remove mass air flow sensor from air duct. Check hot film for damage or dust.
6. If NG, clean or replace mass air flow sensor.

Removal and Installation

UBS00378

MASS AIR FLOW SENSOR

Refer to EM-110, "AIR CLEANER AND AIR DUCT" .

DTC P0102, P0103 MAF SENSOR

PFP:22680

Component Description

UBS00379

The mass air flow sensor is placed in the stream of intake air. It measures the intake flow rate by measuring a part of the entire intake flow. It consists of a hot film that is supplied with electric current from the ECM. The temperature of the hot film is controlled by the ECM a certain amount. The heat generated by the hot film is reduced as the intake air flows around it. The more air, the greater the heat loss.
Therefore, the ECM must supply more electric current to maintain the temperature of the hot film as air flow increases. The ECM detects the air flow by means of this current change.

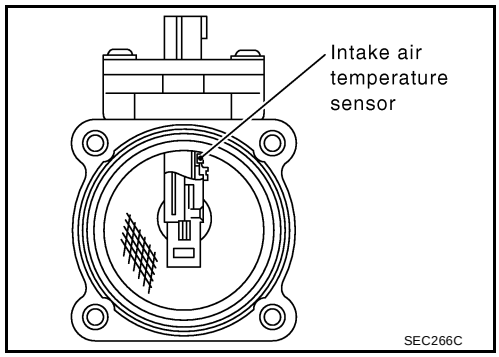

CONSULT-II Reference Value in Data Monitor Mode

UBS0037A

Specification data are reference values.

MONITOR ITEM	CONDITION		SPECIFICATION
MAS A/F SE-B1	● Engine: After warming up ● Air conditioner switch: OFF ● Shift lever: "N" ● No-load	Idle	Approx. 1.1 - 1.5V
		2,500 rpm	Approx. 1.7 - 2.4V
CAL/LD VALUE	● Engine: After warming up ● Shift lever: "N" ● Air conditioner switch: OFF ● No-load	Idle	10% - 35%
		2,500 rpm	10% - 35%
MASS AIRFLOW	● Engine: After warming up ● Shift lever: "N" ● Air conditioner switch: OFF ● No-load	Idle	2.0 - 6.0 g·m/s
		2,500 rpm	7.0 - 20.0 g·m/s

On Board Diagnosis Logic

UBS0037B

These self-diagnoses have the one trip detection logic.

DTC No.	Trouble diagnosis name	DTC detecting condition	Possible cause
P0102 0102	Mass air flow sensor circuit low input	An excessively low voltage from the sensor is sent to ECM.	● Harness or connectors (The sensor circuit is open or shorted.) ● Intake air leaks ● Mass air flow sensor
P0103 0103	Mass air flow sensor circuit high input	An excessively high voltage from the sensor is sent to ECM.	● Harness or connectors (The sensor circuit is open or shorted.) ● Mass air flow sensor

FAIL-SAFE MODE

When the malfunction is detected, the ECM enters in fail-safe mode and the MIL lights up.

Detected items	Engine operating condition in fail-safe mode
Mass air flow sensor circuit	Engine speed will not rise more than 2,400 rpm due to the fuel cut.

DTC Confirmation Procedure

UBS0037C

NOTE:
If “DTC Confirmation Procedure” has been previously conducted, always turn ignition switch “OFF” and wait at least 10 seconds before conducting the next test.

PROCEDURE FOR DTC P0102

With CONSULT-II

1. Turn ignition switch “ON”.
2. Select “DATA MONITOR” mode with CONSULT-II.
3. Start engine and wait 5 seconds at most.
4. If DTC is detected, go toEC-801, "Diagnostic Procedure" .

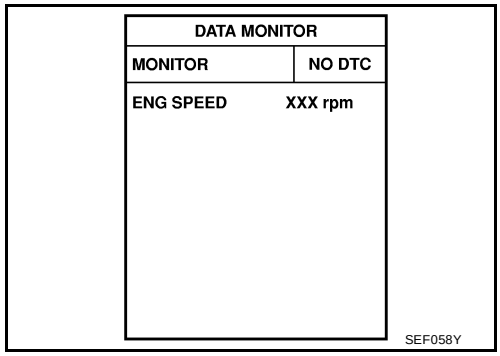

With GST

Follow the procedure “With CONSULT-II” above.

PROCEDURE FOR DTC P0103

With CONSULT-II

1. Turn ignition switch “ON”.
2. Select “DATA MONITOR” mode with CONSULT-II.
3. Wait at least 5 seconds.
4. If 1st trip DTC is detected, go to EC-801, "Diagnostic Procedure"
   .
   If 1st trip DTC is not detected, go to next step.
5. Start engine and wait at least 5 seconds.
6. If DTC is detected, go to EC-801, "Diagnostic Procedure" .

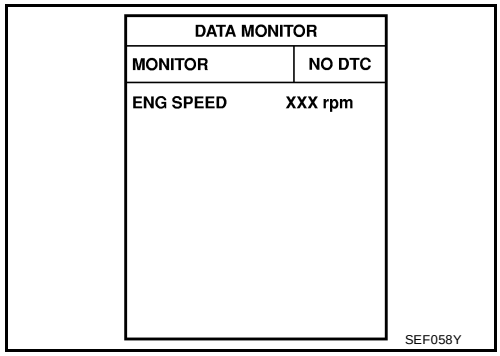

With GST

Follow the procedure “With CONSULT-II” above.

Wiring Diagram

UBS0037D

EC-MAFS-01

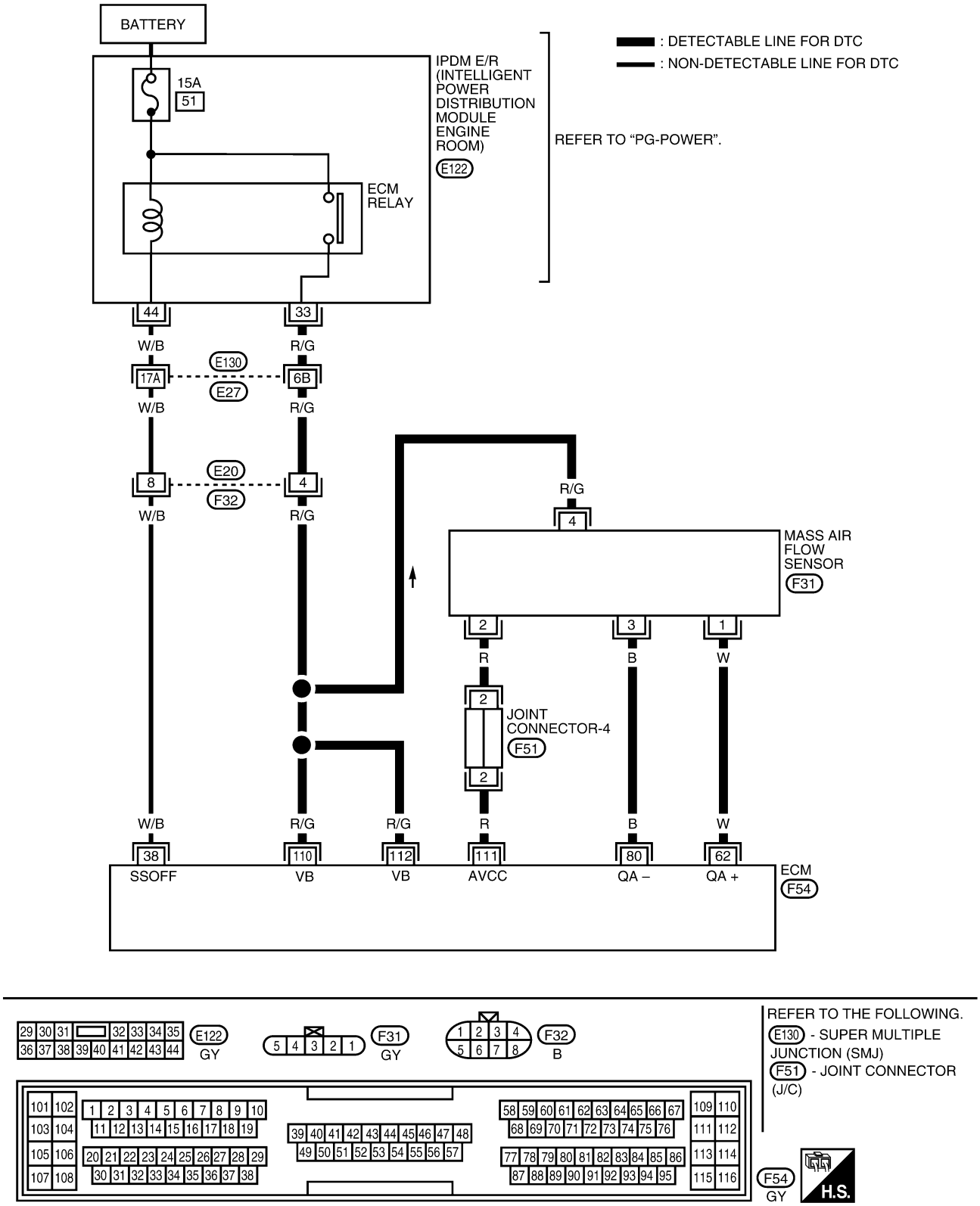

BBWA0050E

Specification data are reference values and are measured between each terminal and ground.

CAUTION:
Do not use ECM ground terminals when measuring input/output voltage. Doing so may result in damage to the ECM's transistor. Use a ground other than ECM terminals, such as the ground.

TERMINAL NO.	WIRE COLOR	ITEM	CONDITION	DATA (DC Voltage)
62	W	Mass air flow sensor	**[Engine is running]** ● **Warm-up condition** ● Idle speed	1.1 - 1.5V
			[Engine is running] ● **Warm-up condition** ● Engine speed is 2,500 rpm.	1.7 - 2.4V
80	B	Mass air flow sensor ground	**[Engine is running]** ● **Warm-up condition** ● Idle speed	Approximately 0V

Diagnostic Procedure

UBS0037E

1. INSPECTION START

Which malfunction (P0102 or P0103) is duplicated?

P0102 or P0103

P0102 >> GO TO 2.
P0103 >> GO TO 3.

2. CHECK INTAKE SYSTEM

Check the following for connection.

- Air duct
- Vacuum hoses
- Intake air passage between air duct to intake manifold

OK or NG

OK >> GO TO 3.
NG >> Reconnect the parts.

3. RETIGHTEN GROUND SCREWS

1. Turn ignition switch “OFF”.
2. Loosen and retighten engine ground screws.

>> GO TO 4.

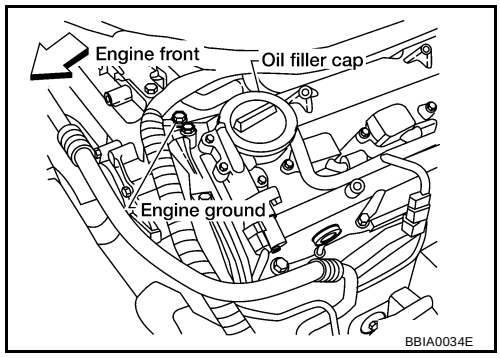

4. CHECK MAF SENSOR POWER SUPPLY CIRCUIT

1. Disconnect MAF sensor harness connector.
2. Turn ignition switch “ON”.

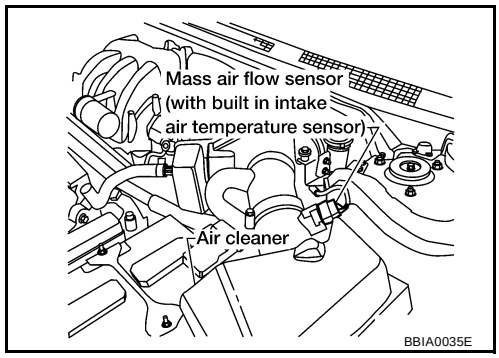

3. Check voltage between MAF sensor terminals 2, 4 and ground with CONSULT-II or tester.

Terminal	Voltage
2	Approximately 5V
4	Battery voltage

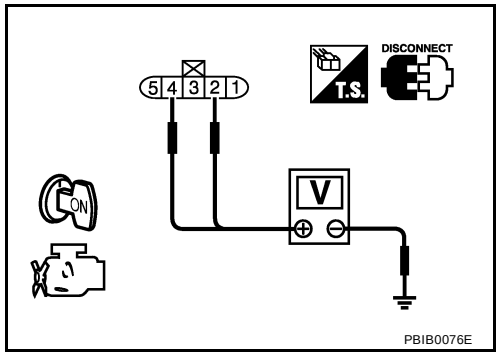

OK or NG

OK >> GO TO 6.
NG >> GO TO 5.

5. DETECT MALFUNCTIONING PART

Check the following.

- Harness connectors E130, E27
- Harness connectors E20, F32
- Joint connector-4
- Harness for open or short between IPDM E/R relay and mass air flow sensor
- Harness for open or short between mass air flow sensor and ECM

>> Repair harness or connectors.

6. CHECK MAF SENSOR GROUND CIRCUIT FOR OPEN AND SHORT

1. Turn ignition switch “OFF”.
2. Disconnect ECM harness connector.
3. Check harness continuity between MAF sensor terminal 3 and ECM terminal 80.
   Refer to Wiring Diagram.

   Continuity should exist.

4. Also check harness for short to ground and short to power.

OK or NG

OK >> GO TO 7.
NG >> Repair open circuit or short to ground or short to power in harness or connectors.

7. CHECK MAF SENSOR INPUT SIGNAL CIRCUIT FOR OPEN AND SHORT

1. Check harness continuity between MAF sensor terminal 1 and ECM terminal 62.
   Refer to Wiring Diagram.

   Continuity should exist.

2. Also check harness for short to ground and short to power.

OK or NG

OK >> GO TO 8.
NG >> Repair open circuit or short to ground or short to power in harness or connectors.

8. CHECK MASS AIR FLOW SENSOR

Refer to EC-803, "Component Inspection" .

OK or NG

OK >> GO TO 9.
NG >> Replace mass air flow sensor.

9. CHECK INTERMITTENT INCIDENT

Refer to EC-756, "TROUBLE DIAGNOSIS FOR INTERMITTENT INCIDENT" .

>> **INSPECTION END**

Component Inspection

UBS0037F

MASS AIR FLOW SENSOR

1. Reconnect harness connectors disconnected.
2. Start engine and warm it up to normal operating temperature.
3. Check voltage between ECM terminal 62 (Mass air flow sensor signal) and ground.

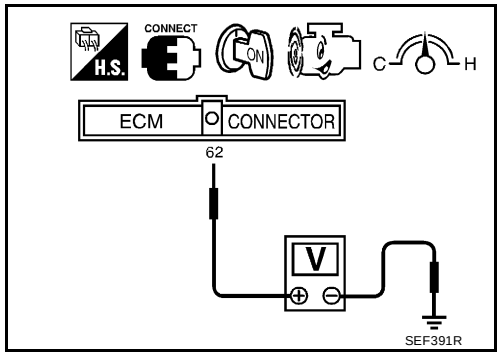

Condition	Voltage V
Ignition switch "ON" (Engine stopped.)	Approx. 1.0
Idle (Engine is warmed-up to normal operating temperature.)	1.1 - 1.5
2,500 rpm (Engine is warmed-up to normal operating temperature.)	1.7 - 2.4
Idle to about 4,000 rpm*	1.1 - 1.5 to Approx. 4.0

*: Check for linear voltage rise in response to engine being increased to about 4,000 rpm.

4. If the voltage is out of specification, proceed the following.
   - Turn ignition switch "OFF".
   - Disconnect mass air flow sensor harness connector and reconnect it again.
   - Perform steps 2 and 3 again.
5. If NG, remove mass air flow sensor from air duct. Check hot film for damage or dust.
6. If NG, clean or replace mass air flow sensor.

Removal and Installation

UBS0037G

MASS AIR FLOW SENSOR

Refer to EM-110, "AIR CLEANER AND AIR DUCT" .

DTC P0107, P0108 ABSOLUTE PRESSURE SENSOR

PFP:22365

Component Description

UBS0037H

The absolute pressure sensor is built into ECM. The sensor detects ambient barometric pressure and sends the voltage signal to the microcomputer.

On Board Diagnosis Logic

UBS0037I

DTC No.	Trouble Diagnosis Name	DTC Detecting Condition	Possible Cause
P0107 0107	Absolute pressure sensor circuit low input	An excessively low voltage from the sensor is sent to ECM.	● Harness or connectors (The sensor circuit is open or shorted.) ● Engine coolant temperature sensor
P0108 0108	Absolute pressure sensor circuit high input	An excessively high voltage from the sensor is sent to ECM.	

DTC Confirmation Procedure

UBS0037J

NOTE:
If “DTC Confirmation Procedure” has been previously conducted, always turn ignition switch “OFF” and wait at least 10 seconds before conducting the next test.

WITH CONSULT-II

1. Turn ignition switch “ON”.
2. Select “DATA MONITOR” mode with CONSULT-II.
3. Wait at least 10 seconds.
4. If 1st trip DTC is detected, go to EC-805, "Diagnostic Procedure"
.

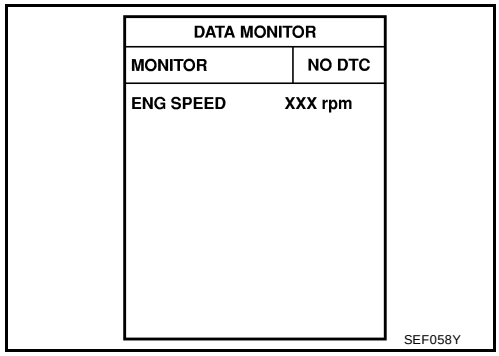

WITH GST

Follow the procedure “WITH CONSULT-II” above.

Diagnostic Procedure

UBS0037K

1. INSPECTION START

With CONSULT-II

1. Turn ignition switch “ON”.
2. Select “SELF DIAG RESULTS” mode with CONSULT-II.
3. Touch “ERASE”.
4. **Perform “DTC Confirmation Procedure”.**
   See EC-804 .
5. Is the 1st trip DTC P0107 or P0108 displayed again?

With GST

1. Turn ignition switch “ON”.
2. Select MODE 4 with GST.
3. Touch “ERASE”.
4. **Perform “DTC Confirmation Procedure”.**
   SeeEC-804 .
5. Is the 1st trip DTC P0107 or P0108 displayed again?

Yes or No

Yes >> GO TO 2.
No >> **INSPECTION END**

2. REPLACE ECM

1. Replace ECM.
2. Perform initialization of NATS system and registration of all NATS ignition key IDs. Refer to EC-689, "NVIS (Nissan Vehicle Immobilizer System — NATS)" .
3. Perform EC-668, "Accelerator Pedal Released Position Learning" .
4. Perform EC-669, "Throttle Valve Closed Position Learning" .
5. Perform EC-669, "Idle Air Volume Learning" .

>> **INSPECTION END**

DTC P0112, P0113 IAT SENSOR

PFP:22630

Component Description

UBS0037L

The intake air temperature sensor is built-into mass air flow sensor. The sensor detects intake air temperature and transmits a signal to the ECM.
The temperature sensing unit uses a thermistor which is sensitive to the change in temperature. Electrical resistance of the thermistor decreases in response to the temperature rise.

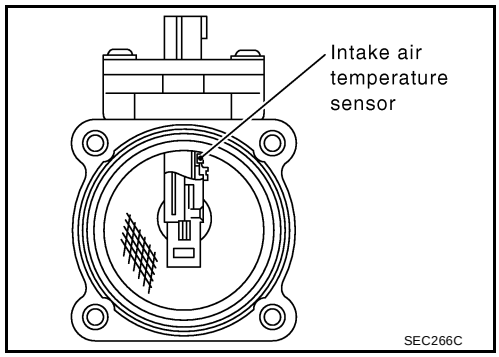

<Reference data>

Intake air temperature °C (°F)	Voltage* V	Resistance kΩ
25 (77)	3.32	1.9 - 2.1
80 (176)	1.23	0.31 - 0.37

*: These data are reference values and are measured between ECM terminal 66 (Intake air temperature sensor) and ground.

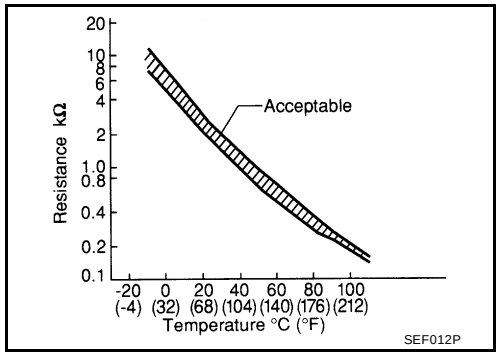

CAUTION:
Do not use ECM ground terminals when measuring input/output voltage. Doing so may result in damage to the ECM's transistor. Use a ground other than ECM terminals, such as the ground.

On Board Diagnosis Logic

UBS0037M

DTC No.	Trouble diagnosis name	DTC detecting condition	Possible cause
P0112 0112	Intake air temperature sensor circuit low input	An excessively low voltage from the sensor is sent to ECM.	● Harness or connectors (The sensor circuit is open or shorted.) ● Intake air temperature sensor
P0113 0113	Intake air temperature sensor circuit high input	An excessively high voltage from the sensor is sent to ECM.	

DTC Confirmation Procedure

UBS0037N

NOTE:
If “DTC Confirmation Procedure” has been previously conducted, always turn ignition switch “OFF” and wait at least 10 seconds before conducting the next test.

WITH CONSULT-II

1. Turn ignition switch “ON”.
2. Select “DATA MONITOR” mode with CONSULT-II.
3. Wait at least 5 seconds.
4. If 1st trip DTC is detected, go to EC-809, "Diagnostic Procedure".

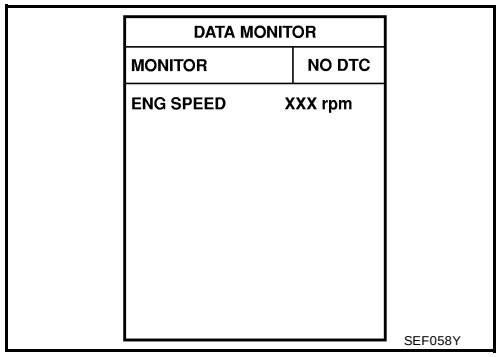

WITH GST

Follow the procedure “With CONSULT-II” above.

Wiring Diagram

UBS0037O

EC-IATS-01

: DETECTABLE LINE FOR DTC
: NON-DETECTABLE LINE FOR DTC

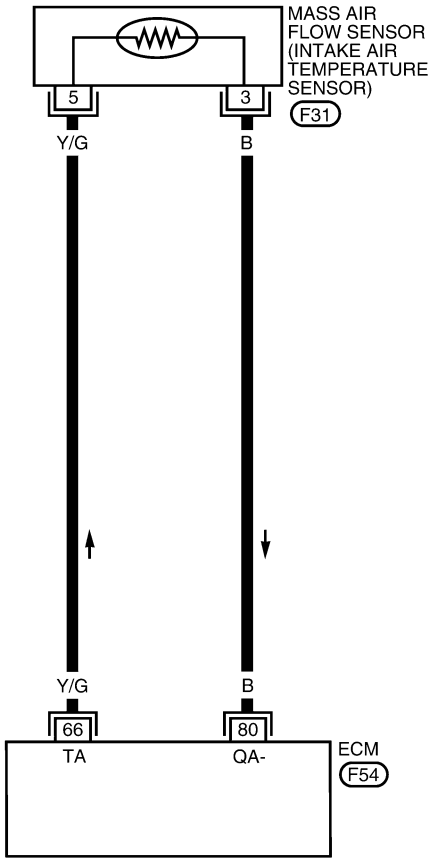

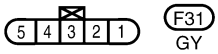

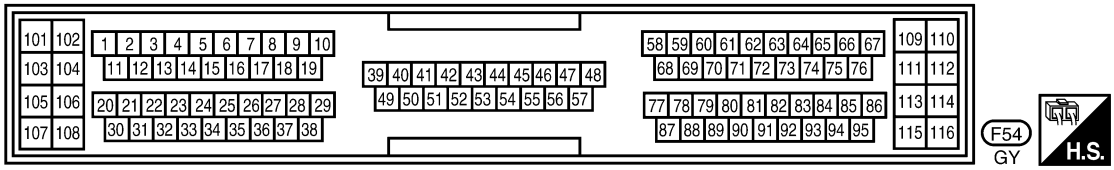

BBWA0051E

Diagnostic Procedure

UBS0037P

1. CHECK INTAKE AIR TEMPERATURE SENSOR POWER SUPPLY CIRCUIT

1. Turn ignition switch “OFF”.
2. Disconnect mass air flow sensor (intake air temperature sensor is built-into) harness connector.
3. Turn ignition switch “ON”.

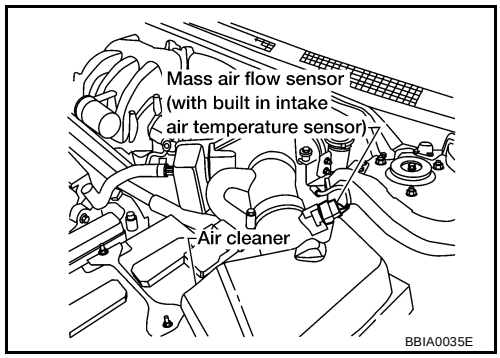

4. Check voltage between mass air flow sensor terminal 5 and ground.

Voltage: Approximately 5V

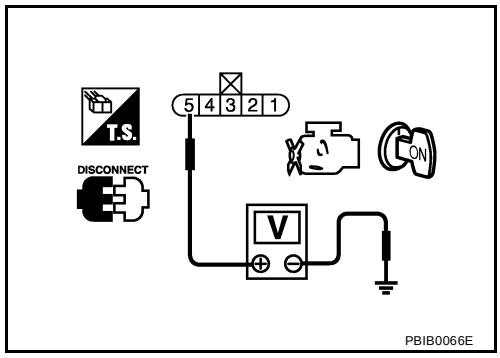

OK or NG

OK >> GO TO 2.
NG >> Repair harness or connectors.

2. CHECK INTAKE AIR TEMPERATURE SENSOR GROUND CIRCUIT FOR OPEN AND SHORT

1. Turn ignition switch “OFF”.
2. Disconnect ECM.
3. Check harness continuity between mass air flow sensor terminal 3 and ECM 80.
   Refer to Wiring Diagram.

Continuity should exist.

4. Also check harness for short to ground and short to power.

OK or NG

OK >> GO TO 3.
NG >> Repair open circuit or short to ground or short to power in harness or connectors.

3. CHECK INTAKE AIR TEMPERATURE SENSOR

Refer to EC-810, "Component Inspection" .

OK or NG

OK >> GO TO 4.
NG >> Replace mass air flow sensor (with intake air temperature sensor).

4. CHECK INTERMITTENT INCIDENT

Refer to EC-756, "TROUBLE DIAGNOSIS FOR INTERMITTENT INCIDENT" .

>> **INSPECTION END**

Component Inspection

UBS0037Q

INTAKE AIR TEMPERATURE SENSOR

1. Check resistance between intake air temperature sensor terminals 3 and 5 under the following conditions.

Intake air temperature °C (°F)	Resistance kΩ
25 (77)	1.9 - 2.1

2. If NG, replace mass air flow sensor (with intake air temperature sensor).

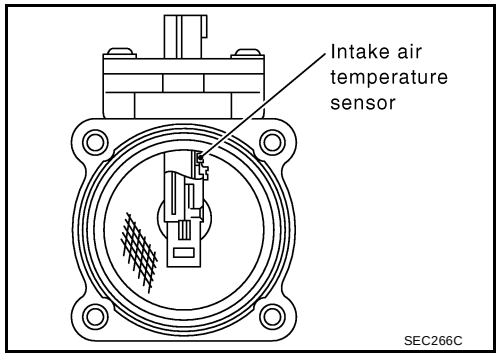

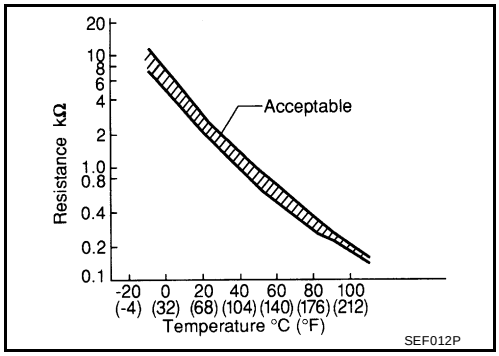

Removal and Installation

UBS0037R

MASS AIR FLOW SENSOR

Refer to EM-110, "AIR CLEANER AND AIR DUCT" .

DTC P0117, P0118 ECT SENSOR

PFP:22630

Component Description

UBS0037S

The engine coolant temperature sensor is used to detect the engine coolant temperature. The sensor modifies a voltage signal from the ECM. The modified signal returns to the ECM as the engine coolant temperature input. The sensor uses a thermistor which is sensitive to the change in temperature. The electrical resistance of the thermistor decreases as temperature increases.

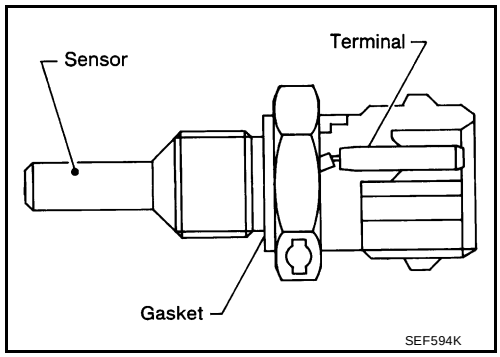

<Reference data>

Engine coolant temperature °C (°F)	Voltage* V	Resistance kΩ
–10 (14)	4.4	7.0 - 11.4
20 (68)	3.5	2.1 - 2.9
50 (122)	2.2	0.68 - 1.00
90 (194)	0.9	0.236 - 0.260

*: These data are reference values and are measured between ECM terminal 93 (Engine coolant temperature sensor) and ground.

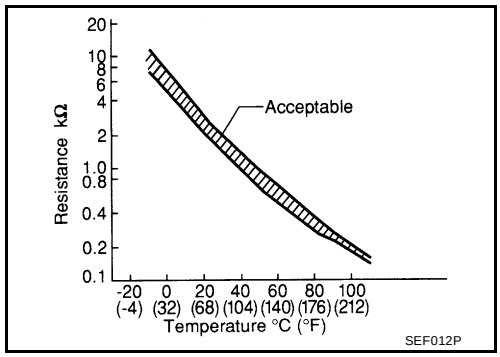

CAUTION:

Do not use ECM ground terminals when measuring input/output voltage. Doing so may result in damage to the ECM's transistor. Use a ground other than ECM terminals, such as the ground.

On Board Diagnosis Logic

UBS0037T

These self-diagnoses have the one trip detection logic.

DTC No.	Trouble Diagnosis Name	DTC Detecting Condition	Possible Cause
P0117 0117	Engine coolant temperature sensor circuit low input	An excessively low voltage from the sensor is sent to ECM.	● Harness or connectors (The sensor circuit is open or shorted.) ● Engine coolant temperature sensor
P0118 0118	Engine coolant temperature sensor circuit high input	An excessively high voltage from the sensor is sent to ECM.	

FAIL-SAFE MODE

When the malfunction is detected, the ECM enters in fail-safe mode and the MIL lights up.

Detected items	Engine operating condition in fail-safe mode	
Engine coolant temperature sensor circuit	Engine coolant temperature will be determined by ECM based on the time after turning ignition switch “ON” or “START”. CONSULT-II displays the engine coolant temperature decided by ECM.	
	Condition	Engine coolant temperature decided (CONSULT-II display)
	Just as ignition switch is turned ON or Start	40°C (104°F)
	More than approx. 4 minutes after ignition ON or Start	80°C (176°F)
	Except as shown above	40 - 80°C (104 - 176°F) (Depends on the time)
	When the fail-safe system for engine coolant temperature sensor is activated, the cooling fan operates while engine is running.	

DTC Confirmation Procedure

UBS0037U

NOTE:
If “DTC Confirmation Procedure” has been previously conducted, always turn ignition switch “OFF” and wait at least 10 seconds before conducting the next test.

WITH CONSULT-II

1. Turn ignition switch “ON”.
2. Select “DATA MONITOR” mode with CONSULT-II.
3. Wait at least 5 seconds.
4. If DTC is detected, go to EC-814, "Diagnostic Procedure" .

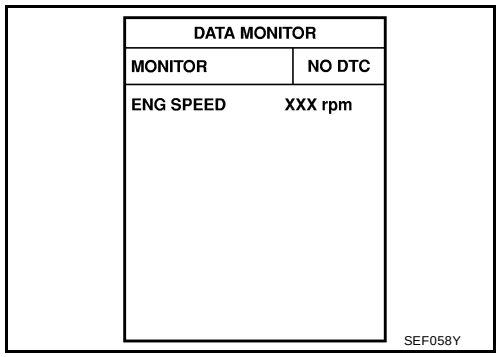

WITH GST

Follow the procedure “WITH CONSULT-II” above.

Wiring Diagram

UBS0037V

EC-ECTS-01

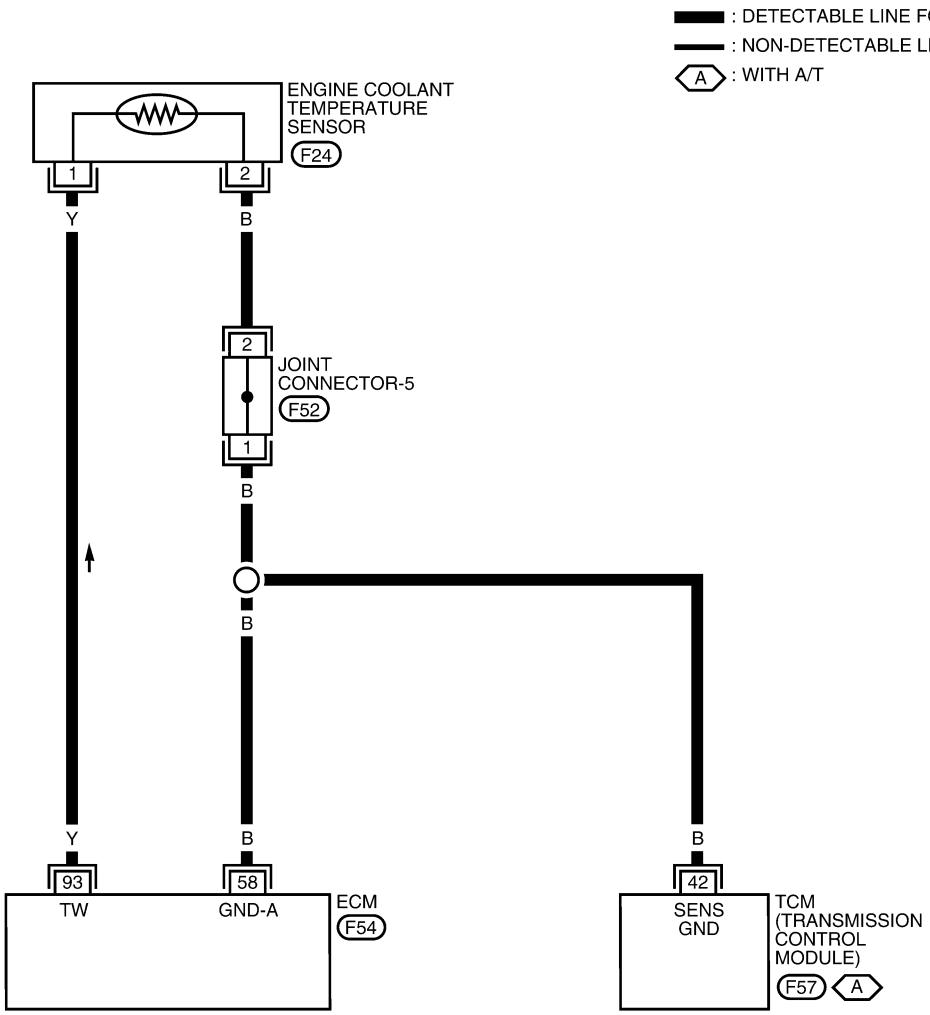

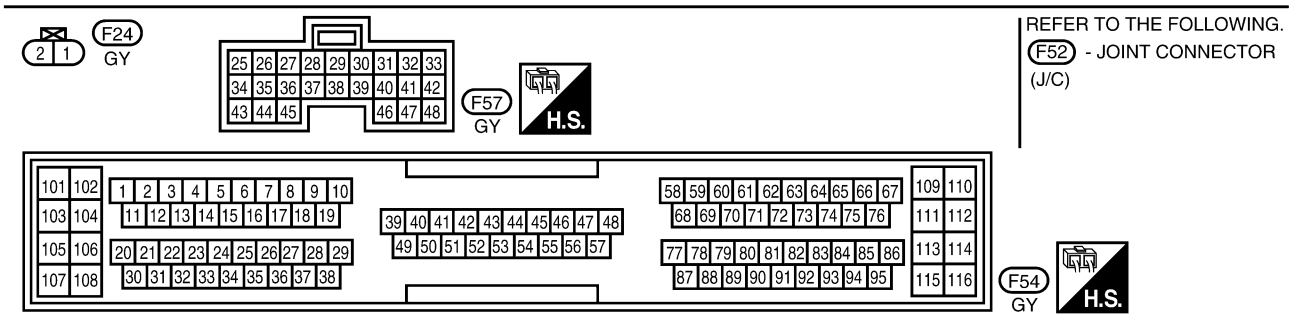

BBWA0052E

Diagnostic Procedure

UBS0037W

1. CHECK ECT SENSOR POWER SUPPLY CIRCUIT

1. Turn ignition switch “OFF”.
2. Disconnect engine coolant temperature (ECT) sensor harness connector.
3. Turn ignition switch “ON”.

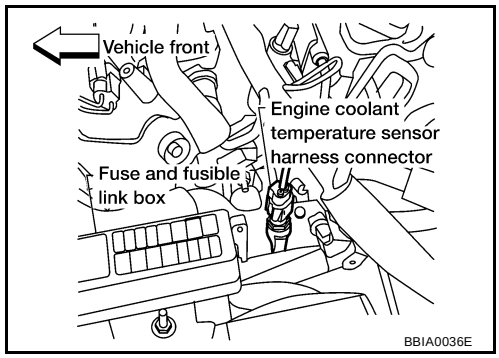

4. Check voltage between ECT sensor terminal 1 and ground with CONSULT-II or tester.

Voltage: Approximately 5V

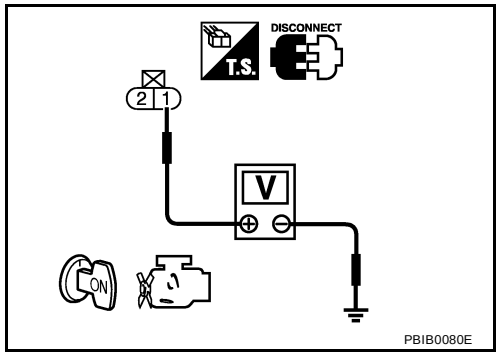

OK or NG

OK >> GO TO 2.
NG >> Repair open circuit or short to ground or short to power in harness or connectors.

2. CHECK ECT SENSOR GROUND CIRCUIT FOR OPEN AND SHORT

1. Turn ignition switch “OFF”.
2. Check harness continuity between ECT sensor terminal 2 and engine ground. Refer to Wiring Diagram.

Continuity should exist.

3. Also check harness for short to power.

OK or NG

OK >> GO TO 4.
NG >> GO TO 3.

3. DETECT MALFUNCTIONING PART

Check the following.

- Joint connector-5
- Harness for open and short between ECT sensor and ECM
- Harness for open and short between ECT sensor and TCM

>> Repair open circuit or short to power in harness or connectors.

4. CHECK ENGINE COOLANT TEMPERATURE SENSOR

Refer to EC-815, "Component Inspection" .

OK or NG

OK >> GO TO 5.
NG >> Replace engine coolant temperature sensor.

5. CHECK INTERMITTENT INCIDENT

Refer to EC-756, "TROUBLE DIAGNOSIS FOR INTERMITTENT INCIDENT" .

>> **INSPECTION END**

Component Inspection

UBS0037X

ENGINE COOLANT TEMPERATURE SENSOR

1. Check resistance between engine coolant temperature sensor terminals 1 and 2 as shown in the figure.

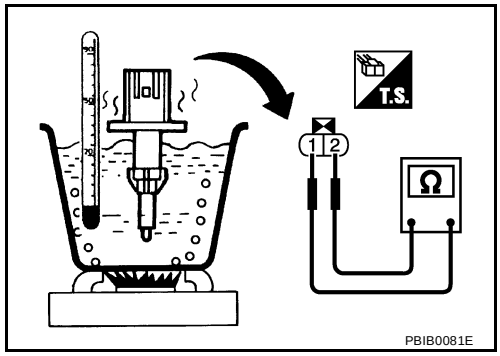

<Reference data>

Engine coolant temperature °C (°F)	Voltage* V	Resistance kΩ
–10 (14)	4.4	7.0 - 11.4
20 (68)	3.5	2.1 - 2.9
50 (122)	2.2	0.68 - 1.00
90 (194)	0.9	0.236 - 0.260

*: These data are reference values and are measured between ECM terminal 93 (Engine coolant temperature sensor) and ground.

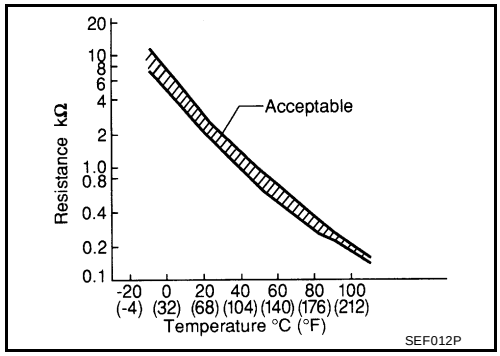

2. If NG, replace engine coolant temperature sensor.

Removal and Installation

UBS0037Y

ENGINE COOLANT TEMPERATURE SENSOR

Refer to CO-45, "THERMOSTAT AND THERMOSTAT HOUSING" .

DTC P0125 ECT SENSOR

PFP:22630

Component Description

UBS0037Z

NOTE:

If DTC P0125 is displayed with P0117 or P0118, first perform the trouble diagnosis for DTC P0117 or P0118. Refer to EC-811 .

The engine coolant temperature sensor is used to detect the engine coolant temperature. The sensor modifies a voltage signal from the ECM. The modified signal returns to the ECM as the engine coolant temperature input. The sensor uses a thermistor which is sensitive to the change in temperature. The electrical resistance of the thermistor decreases as temperature increases.

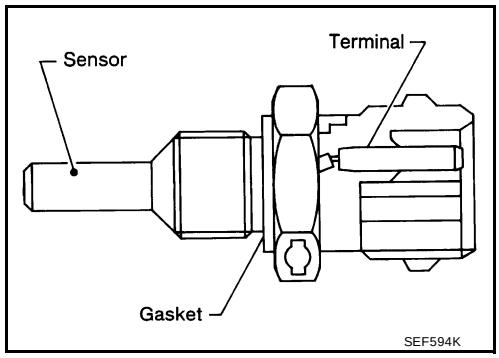

<Reference data>

Engine coolant temperature °C (°F)	Voltage* V	Resistance kΩ
–10 (14)	4.4	7.0 - 11.4
20 (68)	3.5	2.1 - 2.9
50 (122)	2.2	0.68 - 1.00
90 (194)	0.9	0.236 - 0.260

*: These data are reference values and are measured between ECM terminal 93 (Engine coolant temperature sensor) and ground.

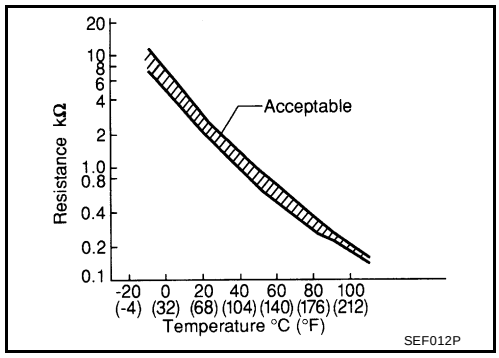

CAUTION:

Do not use ECM ground terminals when measuring input/output voltage. Doing so may result in damage to the ECM's transistor. Use a ground other than ECM terminals, such as the ground.

On Board Diagnosis Logic

UBS00380

DTC No.	Trouble diagnosis name	DTC detecting condition	Possible cause
P0125 0125	Insufficient engine coolant temperature for closed loop fuel control	● Voltage sent to ECM from the sensor is not practical, even when some time has passed after starting the engine. ● Engine coolant temperature is insufficient for closed loop fuel control.	● Harness or connectors (High resistance in the circuit) ● Engine coolant temperature sensor ● Thermostat

DTC Confirmation Procedure

UBS00381

CAUTION:

Be careful not to overheat engine.

NOTE:

If “DTC Confirmation Procedure” has been previously conducted, always turn ignition switch “OFF” and wait at least 10 seconds before conducting the next test.

WITH CONSULT-II

1. Turn ignition switch “ON”.
2. Select “DATA MONITOR” mode with CONSULT-II.
3. Check that “COOLAN TEMP/S” is above 10°C (50°F).
   If it is above 10°C (50°F), the test result will be OK.
   If it is below 10°C (50°F), go to following step.

4. Start engine and run it for 65 minutes at idle speed.
   If "COOLAN TEMP/S" increases to more than 10°C (50°F) within 65 minutes, stop engine because the test result will be OK.
5. If 1st trip DTC is detected, go to EC-819, "Diagnostic Procedure"
   .

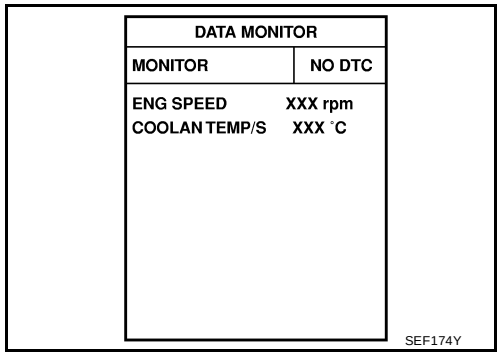

WITH GST

Follow the procedure "WITH CONSULT-II" above.

Wiring Diagram

UBS00382

EC-ECTS-01

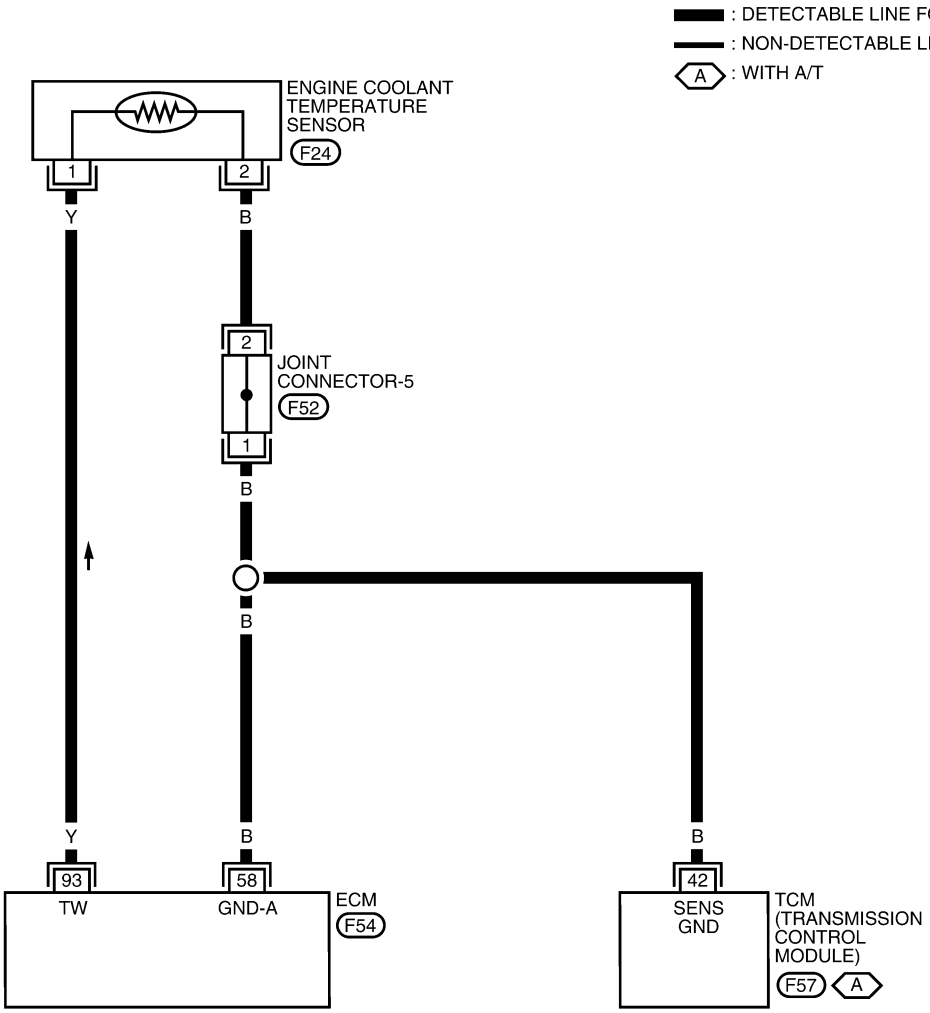

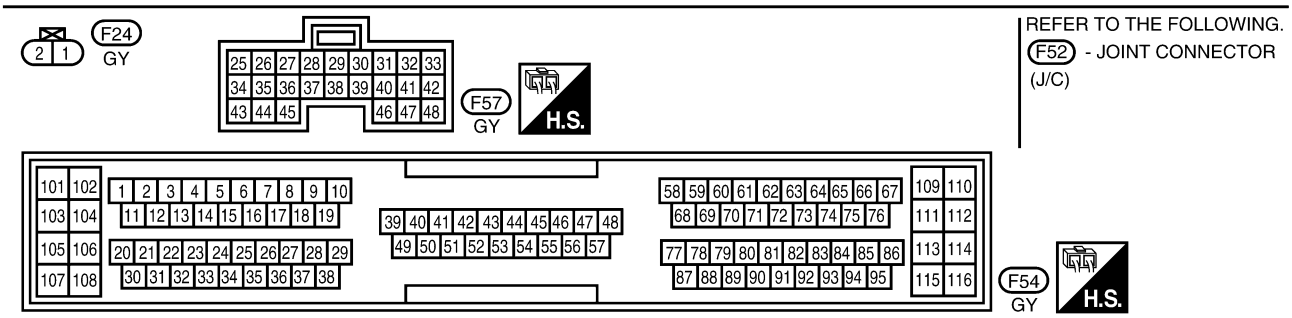

BBWA0052E

Diagnostic Procedure

UBS00383

1. CHECK ENGINE COOLANT TEMPERATURE SENSOR

Refer to EC-819, "Component Inspection" .

OK or NG

OK >> GO TO 2.
NG >> Replace engine coolant temperature sensor.

2. CHECK THERMOSTAT OPERATION

When the engine is cold [lower than 70°C (158°F)] condition, grasp lower radiator hose and confirm the engine coolant does not flow.

OK or NG

OK >> GO TO 3.
NG >> Repair or replace thermostat. Refer to CO-45, "THERMOSTAT AND THERMOSTAT HOUSING" .

3. CHECK INTERMITTENT INCIDENT

Refer to EC-756, "TROUBLE DIAGNOSIS FOR INTERMITTENT INCIDENT" .

>> **INSPECTION END**

Component Inspection

UBS00384

ENGINE COOLANT TEMPERATURE SENSOR

1. Check resistance between engine coolant temperature sensor terminals 1 and 2 as shown in the figure.

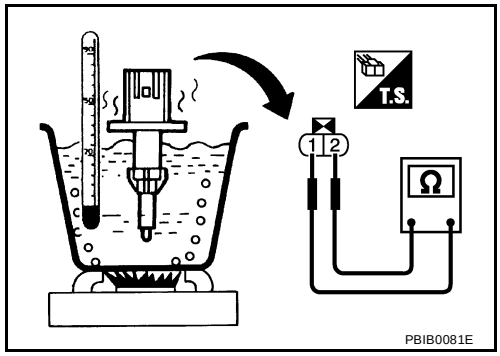

<Reference data>

Engine coolant temperature °C (°F)	Voltage* V	Resistance kΩ
–10 (14)	4.4	7.0 - 11.4
20 (68)	3.5	2.1 - 2.9
50 (122)	2.2	0.68 - 1.00
90 (194)	0.9	0.236 - 0.260

*: These data are reference values and are measured between ECM terminal 93 (Engine coolant temperature sensor) and ground.

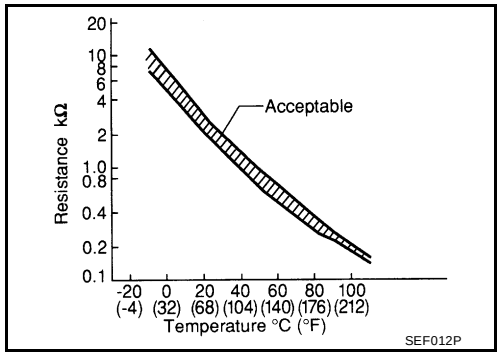

2. If NG, replace engine coolant temperature sensor.

Removal and Installation

UBS00385

ENGINE COOLANT TEMPERATURE SENSOR

Refer to EM-164, "CYLINDER HEAD" .

DTC P0127 IAT SENSOR

PFP:22630

Component Description

UBS00386

The intake air temperature sensor is built into mass air flow sensor. The sensor detects intake air temperature and transmits a signal to the ECM.
The temperature sensing unit uses a thermistor which is sensitive to the change in temperature. Electrical resistance of the thermistor decreases in response to the temperature rise.

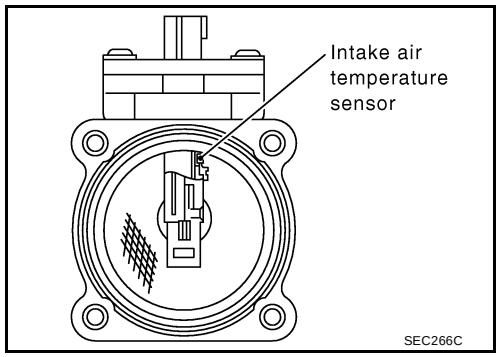

<Reference data>

Intake air temperature °C (°F)	Voltage* V	Resistance kΩ
–10 (14)	4.43	7.9 - 9.3
25 (77)	3.32	1.9 - 2.1
80 (176)	1.23	0.31 - 0.37

*: These data are reference values and are measured between ECM terminal 66 (Intake air temperature sensor) and ground.

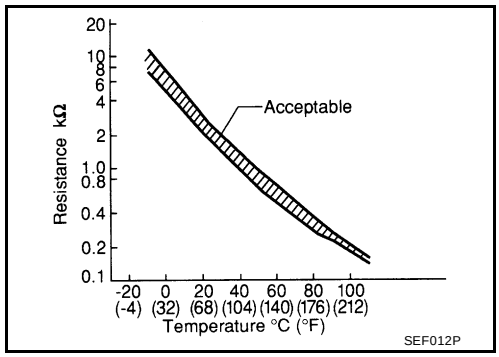

CAUTION:
Do not use ECM ground terminals when measuring input/output voltage. Doing so may result in damage to the ECM's transistor. Use a ground other than ECM terminals, such as the ground.

On Board Diagnosis Logic

UBS00387

DTC No.	Trouble diagnosis name	DTC detecting condition	Possible cause
P0127 0127	Intake air temperature too high	Rationally incorrect voltage from the sensor is sent to ECM, compared with the voltage signal from engine coolant temperature sensor.	● Harness or connectors (The sensor circuit is open or shorted) ● Intake air temperature sensor

DTC Confirmation Procedure

UBS00388

NOTE:
If “DTC Confirmation Procedure” has been previously conducted, always turn ignition switch “OFF” and wait at least 10 seconds before conducting the next test.

CAUTION:
Always drive vehicle at a safe speed.
TESTING CONDITION:
This test may be conducted with the drive wheels lifted in the shop or by driving the vehicle. If a road test is expected to be easier, it is unnecessary to lift the vehicle.

WITH CONSULT-II

1. Wait until engine coolant temperature is less than 90°C (194°F)

a. Turn ignition switch “ON”.

b. Select “DATA MONITOR” mode with CONSULT-II.
c. Check the engine coolant temperature.
d. If the engine coolant temperature is not less than 90°C (194°F), turn ignition switch "OFF" and cool down engine.
   - Perform the following steps before engine coolant temperature is above 90°C (194°F).
2. Turn ignition switch "ON".
3. Select "DATA MONITOR" mode with CONSULT-II.
4. Start engine.
5. Hold vehicle speed at more than 70 km/h (43 MPH) for 100 consecutive seconds.
6. If 1st trip DTC is detected, go to EC-823, "Diagnostic Procedure" .

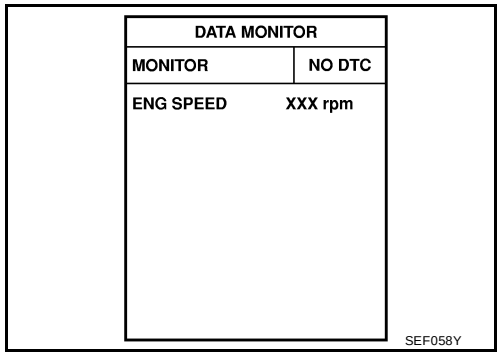

WITH GST

Follow the procedure “WITH CONSULT-II” above.

Wiring Diagram

UBS00389

EC-IATS-01

: DETECTABLE LINE FOR DTC
: NON-DETECTABLE LINE FOR DTC

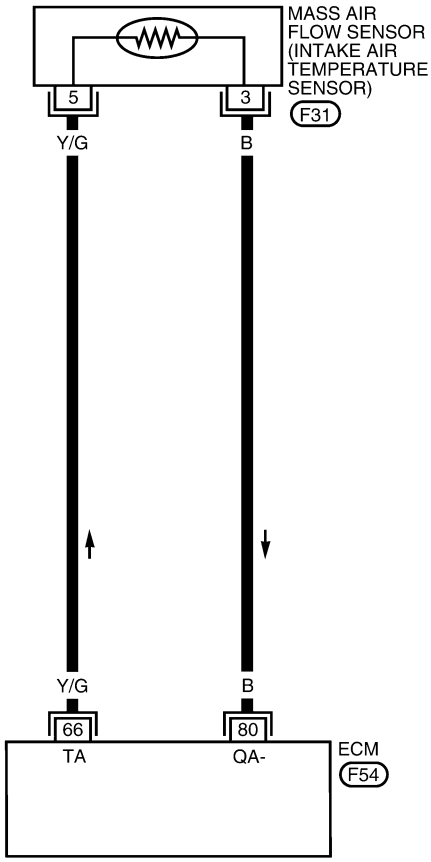

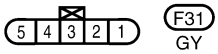

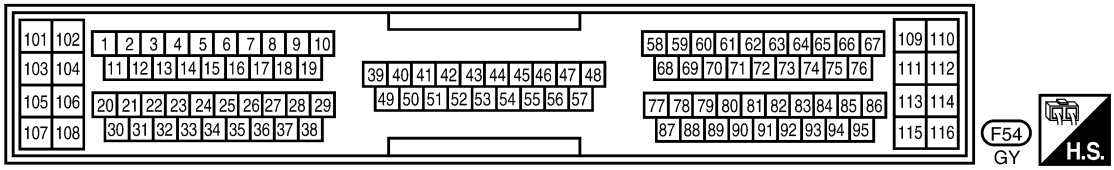

BBWA0051E

Diagnostic Procedure

UBS0038A

1. CHECK INTAKE AIR TEMPERATURE SENSOR POWER SUPPLY CIRCUIT

1. Turn ignition switch “OFF”.
2. Disconnect mass air flow sensor (intake air temperature sensor is built-into) harness connector.
3. Turn ignition switch “ON”.

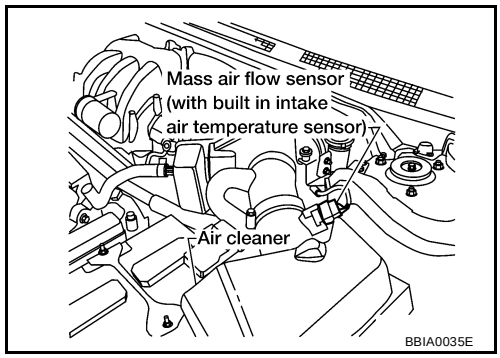

4. Check voltage between mass air flow sensor terminal 5 and ground.

Voltage: Approximately 5 V

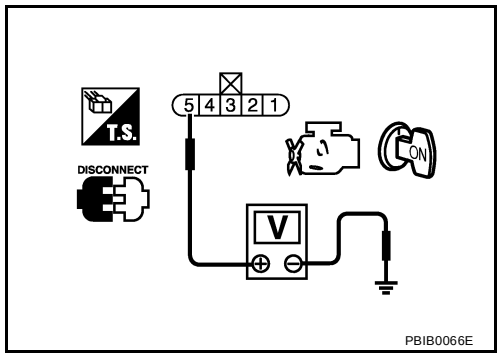

OK or NG

OK >> GO TO 2.
NG >> Repair harness or connectors.

2. CHECK INTAKE AIR TEMPERATURE SENSOR GROUND CIRCUIT FOR OPEN AND SHORT

1. Turn ignition switch “OFF”.
2. Disconnect ECM.
3. Check harness continuity between mass air flow sensor terminal 3 and ECM 80.
   Refer to Wiring Diagram.

Continuity should exist.

4. Also check harness for short to ground and short to power.

OK or NG

OK >> GO TO 3.
NG >> Repair open circuit or short to ground or short to power in harness or connectors.

3. CHECK INTAKE AIR TEMPERATURE SENSOR

Refer to EC-824, "Component Inspection" .

OK or NG

OK >> GO TO 4.
NG >> Replace mass air flow sensor (with intake air temperature sensor).

4. CHECK INTERMITTENT INCIDENT

Refer to EC-756, "TROUBLE DIAGNOSIS FOR INTERMITTENT INCIDENT" .

>> **INSPECTION END**

Component Inspection

UBS0038B

INTAKE AIR TEMPERATURE SENSOR

1. Check resistance between intake air temperature sensor terminals 3 and 5 under the following conditions.

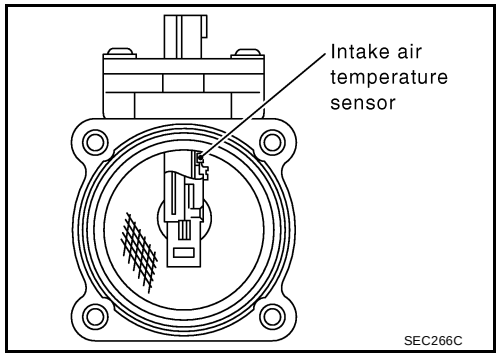

Intake air temperature °C (°F)	Resistance kΩ
25 (77)	1.9 - 2.1

2. If NG, replace mass air flow sensor (with intake air temperature sensor).

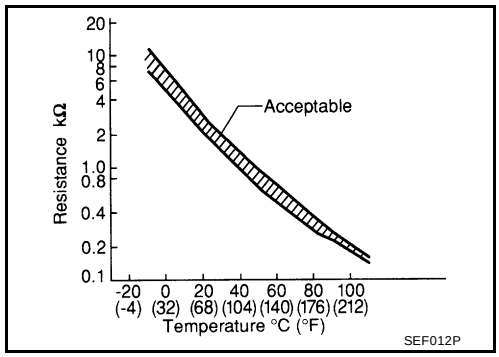

Removal and Installation

UBS0038C

INTAKE AIR TEMPERATURE SENSOR

Refer to EM-110, "AIR CLEANER AND AIR DUCT" .

DTC P0128 THERMOSTAT FUNCTION

PFP:21200

On Board Diagnosis Logic

UBS0038D

Engine coolant temperature has not risen enough to open the thermostat even though the engine has run long enough.
This is due to a leak in the seal or the thermostat stuck open.

DTC No.	Trouble diagnosis name	DTC detecting condition	Possible cause
P0128 0128	Thermostat function	The engine coolant temperature does not reach to specified temperature even though the engine has run long enough.	● Thermostat function ● Leakage from sealing portion of thermostat ● Engine coolant temperature sensor

DTC Confirmation Procedure

UBS0038E

NOTE:
If "DTC Confirmation Procedure" has been previously conducted, always turn ignition switch "OFF" and wait at least 10 seconds before conducting the next test.
TESTING CONDITION:

- **For best results, perform at ambient temperature of –10°C (14°F) or higher.**
- **For best results, perform at engine coolant temperature of –10°C (14°F) to 60°C (140°F).**

WITH CONSULT-II

1. Replace thermostat with new one. Refer to EC-1089, "Component Description" . Use only a genuine NISSAN thermostat as a replacement. If an incorrect thermostat is used, the MIL may come on.
2. Turn ignition switch "ON".
3. Select "COOLAN TEMP/S" in "DATA MONITOR" mode with CONSULT-II.
4. Check that the "COOLAN TEMP/S" is above 60°C (140°F).
   If it is below 60°C (140°F), go to following step.
   If it is above 60°C (140°F), stop engine and cool down the engine to less than 60°C (140°F), then retry from step 1.
5. Drive vehicle for 10 consecutive minutes under the following conditions.

VHCL SPEED SE	80 - 120 km/h (50 - 75 MPH)

If 1st trip DTC is detected, go to EC-825, "Diagnostic Procedure" .

WITH GST

1. Follow the procedure "WITH CONSULT-II" above.

Diagnostic Procedure

UBS0038F

1. CHECK ENGINE COOLANT TEMPERATURE SENSOR

Refer to EC-826, "Component Inspection" .

OK or NG

OK >> **INSPECTION END**
NG >> Replace engine coolant temperature sensor.

Component Inspection

UBS0038G

ENGINE COOLANT TEMPERATURE SENSOR

Check resistance as shown in the figure.

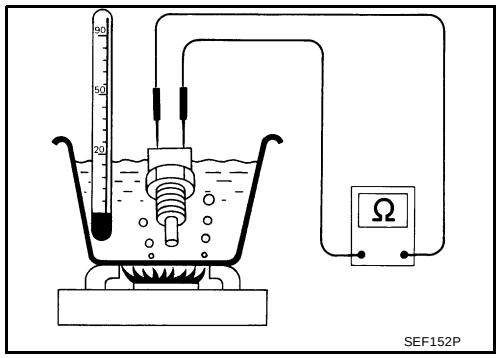

<Reference data>

Temperature °C (°F)	Resistance kΩ
20 (68)	2.1 - 2.9
50 (122)	0.68 - 1.0
90 (194)	0.236 - 0.260

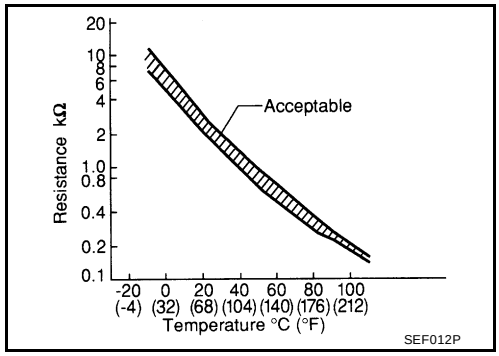

If NG, replace engine coolant temperature sensor.

Removal and Installation

UBS0038H

ENGINE COOLANT TEMPERATURE SENSOR

Refer to CO-45, "THERMOSTAT AND THERMOSTAT HOUSING" .

DTC P0132, P0152 HO2S1

PFP:22690

Component Description

UBS0038I

The heated oxygen sensor 1 is placed into the front tube. It detects the amount of oxygen in the exhaust gas compared to the outside air. The heated oxygen sensor 1 has a closed-end tube made of ceramic zirconia. The zirconia generates voltage from approximately 1V in richer conditions to 0V in leaner conditions. The heated oxygen sensor 1 signal is sent to the ECM. The ECM adjusts the injection pulse duration to achieve the ideal air-fuel ratio. The ideal air-fuel ratio occurs near the radical change from 1V to 0V.

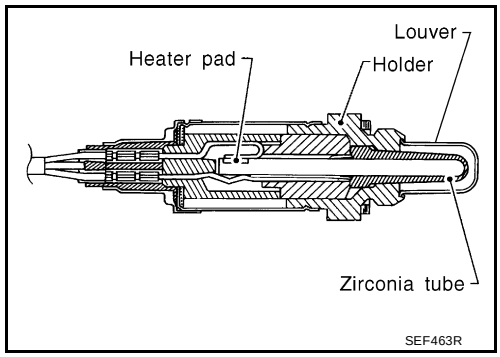

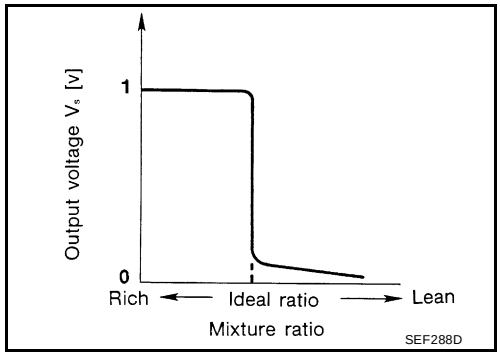

CONSULT-II Reference Value in Data Monitor Mode

UBS0038J

Specification data are reference values.

MONITOR ITEM	CONDITION		SPECIFICATION
HO2S1 (B1) HO2S1 (B2)	● Engine: After warming up	Maintaining engine speed at 2,000 rpm	0 - 0.3V ←→ Approx. 0.6 - 1.0V
HO2S1 MNTR (B1) HO2S1 MNTR (B2)	● Engine: After warming up	Maintaining engine speed at 2,000 rpm	LEAN ←→ RICH Changes more than 5 times during 10 seconds.

On Board Diagnosis Logic

UBS0038K

To judge the malfunction, the diagnosis checks that the heated oxygen sensor 1 output is not inordinately high.

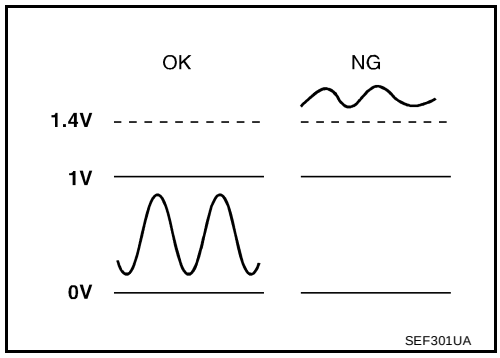

DTC No.	Trouble diagnosis name	DTC detecting condition	Possible cause
P0132 0132 (Bank 1)	Heated oxygen sensor 1 circuit high voltage	An excessively high voltage from the sensor is sent to ECM.	● Harness or connectors (The sensor circuit is open or shorted) ● Heated oxygen sensor 1
P0152 0152 (Bank 2)			

DTC Confirmation Procedure

UBS0038L

NOTE:
If “DTC Confirmation Procedure” has been previously conducted, always turn ignition switch “OFF” and wait at least 10 seconds before conducting the next test.

WITH CONSULT-II

1. Start engine and warm it up to normal operating temperature.
2. Turn ignition switch “OFF” and wait at least 10 seconds.
3. Turn ignition switch “ON”.
4. Select “DATA MONITOR” mode with CONSULT-II.
5. Restart engine and let it idle for 2 minutes.
6. If 1st trip DTC is detected, go to EC-832, "Diagnostic Procedure" .

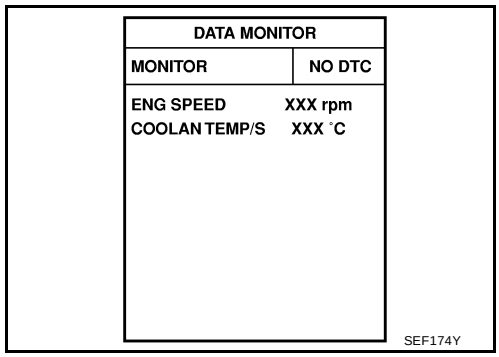

WITH GST

1. Start engine and warm it up to normal operating temperature.
2. Turn ignition switch “OFF” and wait at least 10 seconds.
3. Restart engine and let it idle for 2 minutes.
4. Turn ignition switch “OFF” and wait at least 10 seconds.
5. Restart engine and let it idle for 2 minutes.
6. Select “MODE 3” with GST.
7. If DTC is detected, go to EC-832, "Diagnostic Procedure" .

- **When using GST, “DTC Confirmation Procedure” should be performed twice as much as when using CONSULT-II because GST cannot display MODE 7 (1st trip DTC) concerning this diagnosis. Therefore, using CONSULT-II is recommended.**

Wiring Diagram
BANK 1

UBS0038M

EC-O2S1B1-01

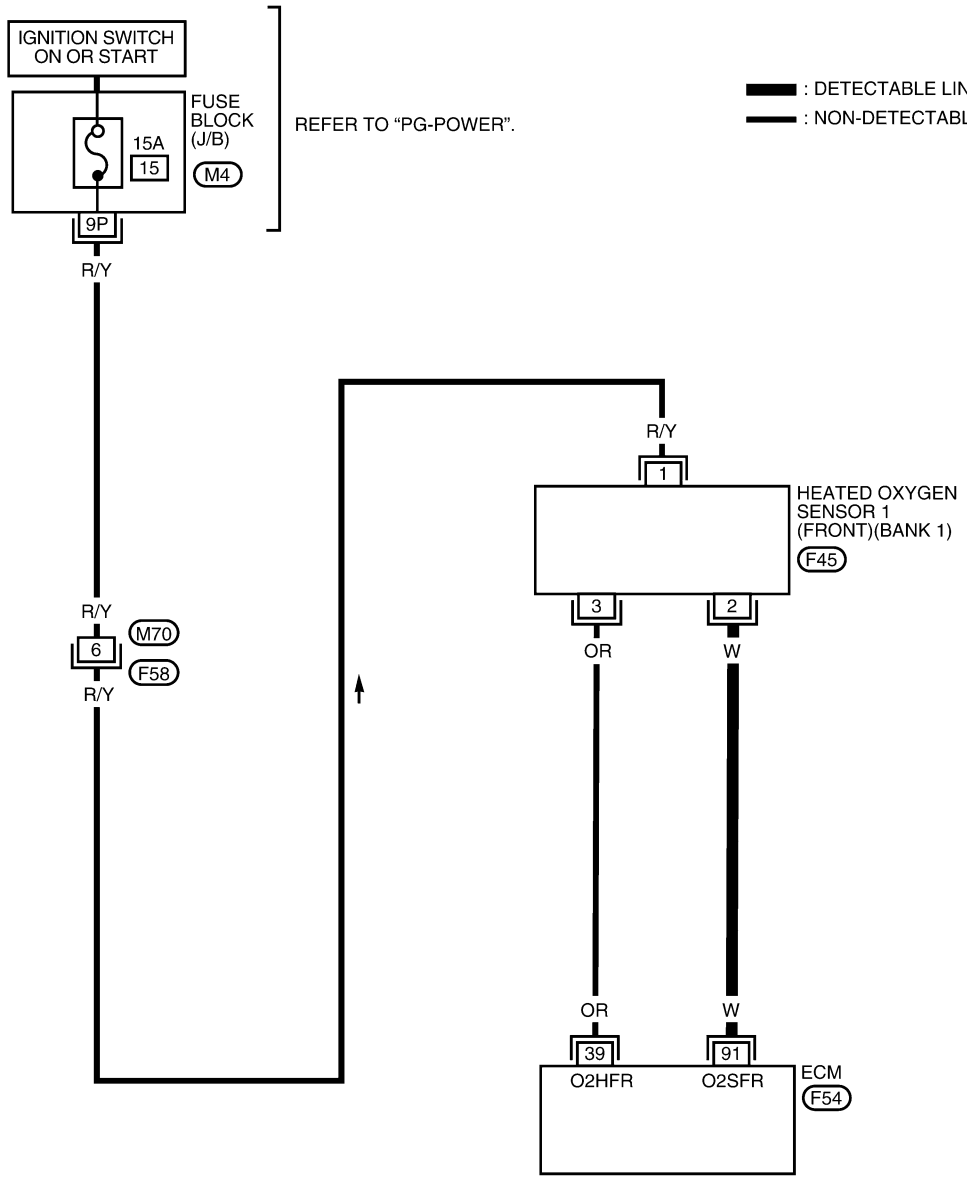

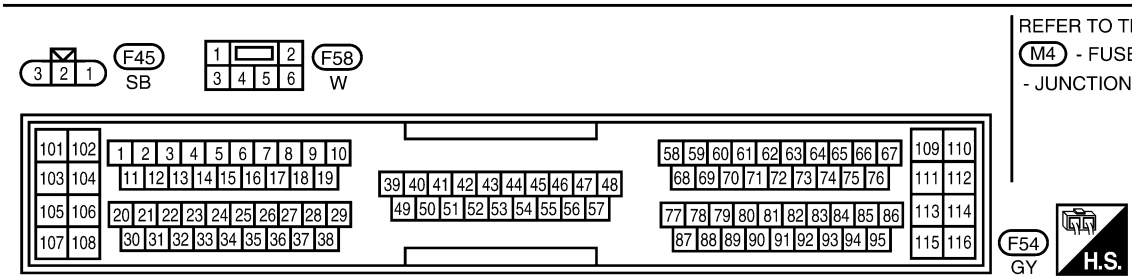

REFER TO THE FOLLOWING.
M4 - FUSE BLOCK
- JUNCTION BOX (J/B)

BBWA0054E

Specification data are reference values and are measured between each terminal and ground.

CAUTION:

Do not use ECM ground terminals when measuring input/output voltage. Doing so may result in damage to the ECM's transistor. Use a ground other than ECM terminals, such as the ground.

TERMINAL NO.	WIRE COLOR	ITEM	CONDITION	DATA (DC Voltage)
91	W	Heated oxygen sensor 1 (bank 1)	**[Engine is running]** ● **Warm-up condition** ● Engine speed is below 3,600 rpm.	0 - Approximately 1.0V (Periodically change)

BANK 2

EC-O2S1B2-01

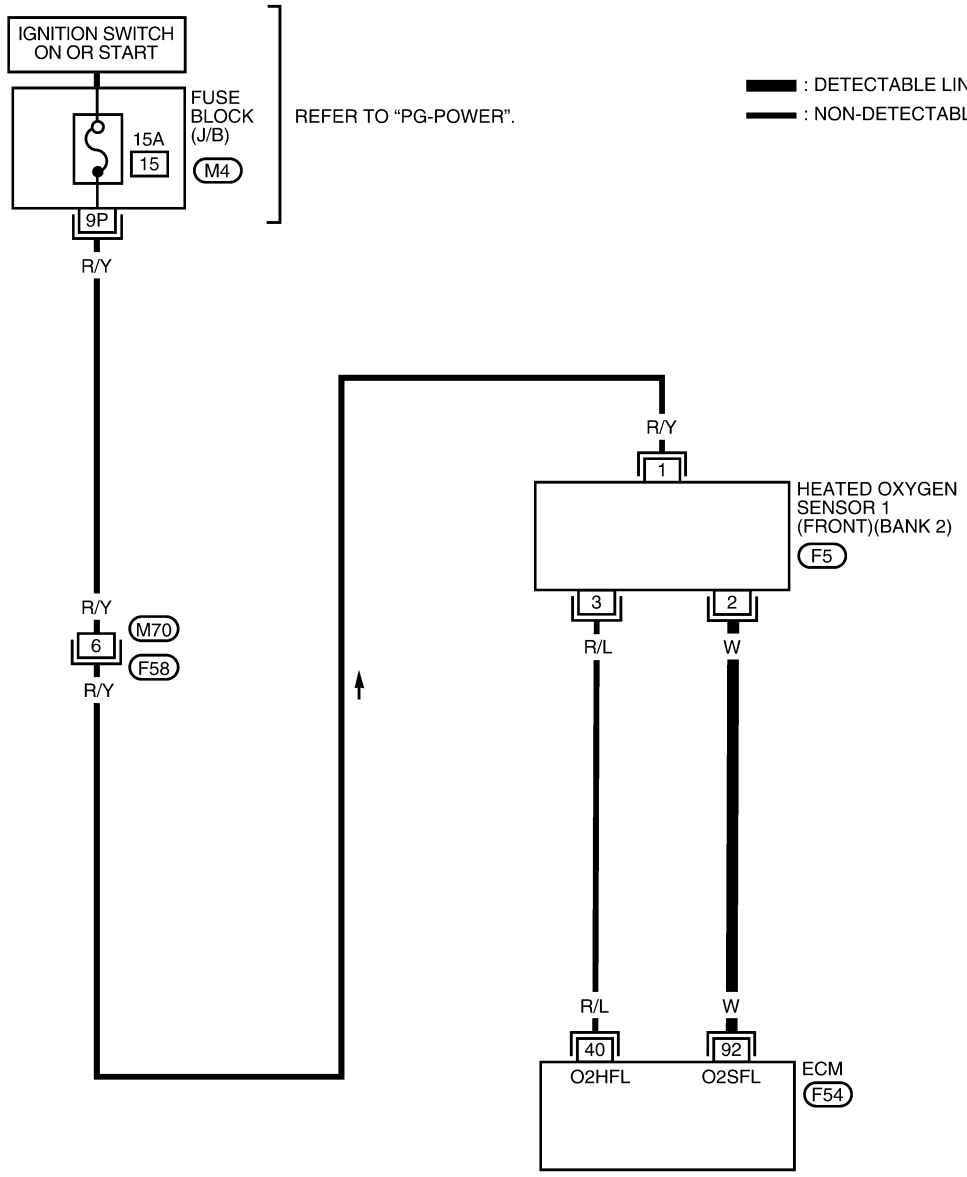

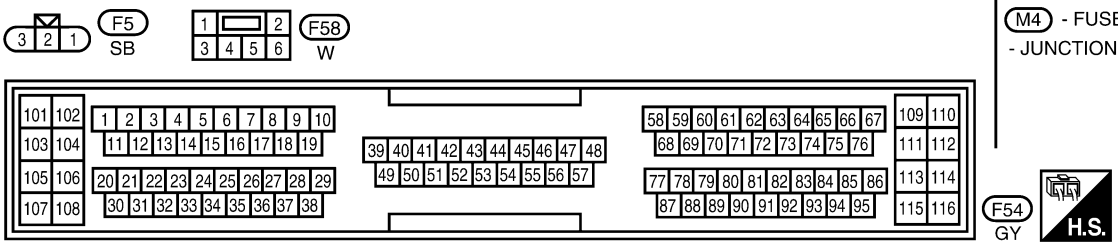

BBWA0055E

Specification data are reference values and are measured between each terminal and ground.

CAUTION:

Do not use ECM ground terminals when measuring input/output voltage. Doing so may result in damage to the ECM's transistor. Use a ground other than ECM terminals, such as the ground.

TERMINAL NO.	WIRE COLOR	ITEM	CONDITION	DATA (DC Voltage)
92	W	Heated oxygen sensor 1 (bank 2)	**[Engine is running]** ● **Warm-up condition** ● Engine speed is below 3,600 rpm.	0 - Approximately 1.0V (Periodically change)

Diagnostic Procedure

UBS0038N

1. RETIGHTEN HEATED OXYGEN SENSOR 1

1. Turn ignition switch "OFF".
2. Loosen and retighten corresponding heated oxygen sensor 1.

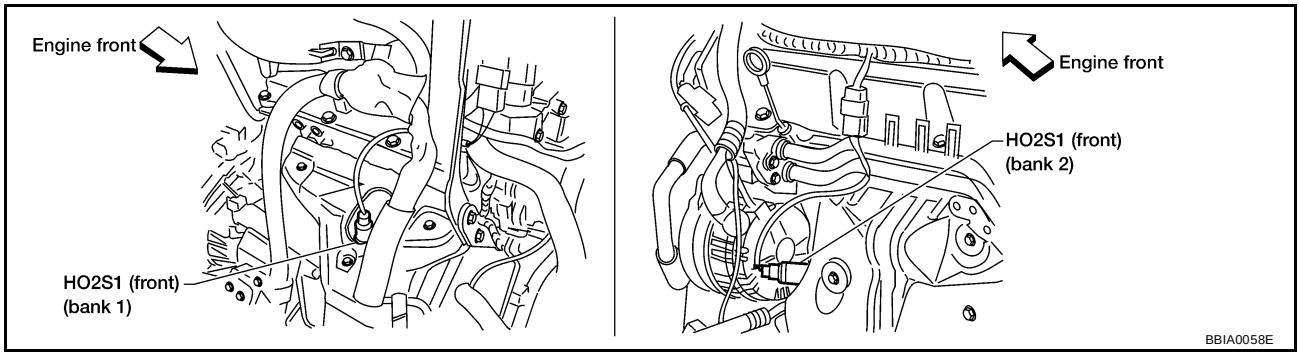

Tightening torque: 40 - 60 N·m (4.1 - 6.2 kg-m, 30 - 44 ft-lb)

>> GO TO 2.

2. CHECK HO2S1 INPUT SIGNAL CIRCUIT FOR OPEN AND SHORT

1. Disconnect heated oxygen sensor 1 harness connector.
   Bank 1

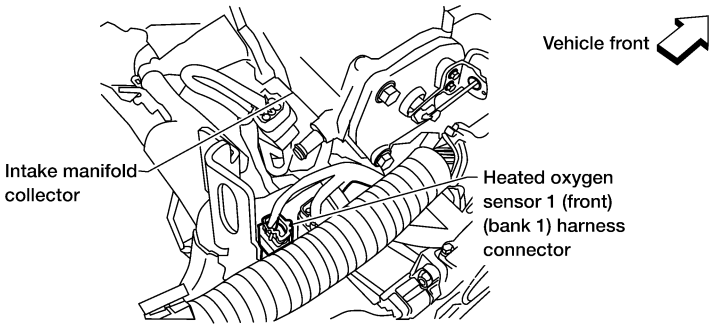

   Bank 2

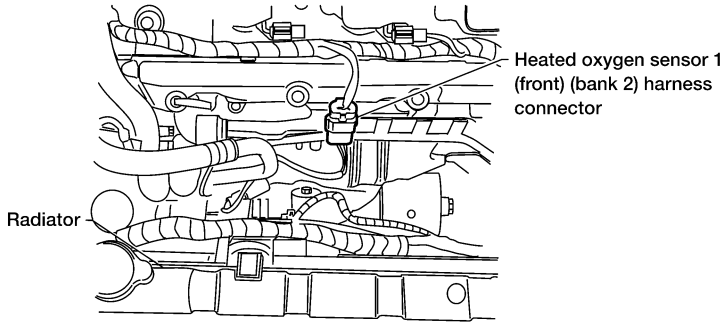

2. Disconnect ECM harness connector.
3. Check harness continuity between ECM terminal and HO2S1 terminal as follows.
   Refer to Wiring Diagram.

DTC	Terminals		Bank
	ECM	Sensor	
P0132	91	2	1
P0152	92	2	2

Continuity should exist.

4. Check harness continuity between the following terminals and ground.
   Refer to Wiring Diagram.

DTC	Terminals		Bank
	ECM	Sensor	
P0132	91	2	1
P0152	92	2	2

Continuity should not exist.

5. Also check harness for short to power.

OK or NG

OK >> GO TO 3.
NG >> Repair open circuit or short to ground or short to power in harness or connectors.

3. CHECK HO2S1 CONNECTOR FOR WATER

1. Turn ignition switch “OFF”.
2. Disconnect heated oxygen sensor 1 harness connector.
3. Check connectors for water.

Water should not exist.

OK or NG

OK >> GO TO 4.
NG >> Repair or replace harness or connectors.

4. CHECK HEATED OXYGEN SENSOR 1

Refer to EC-834, "Component Inspection" .

OK or NG

OK >> GO TO 5.
NG >> Replace malfunctioning heated oxygen sensor 1.

5. CHECK INTERMITTENT INCIDENT

Refer to EC-756, "TROUBLE DIAGNOSIS FOR INTERMITTENT INCIDENT" .

>> **INSPECTION END**

Component Inspection

UBS0038O

HEATED OXYGEN SENSOR 1

With CONSULT-II

1. Start engine and warm it up to normal operating temperature.
2. Select “MANU TRIG” and adjust “TRIGGER POINT” to 100% in “DATA MONITOR” mode with CONSULT-II.
3. Select “HO2S1 (B1)/(B2)” and “HO2S1 MNTR (B1)/(B2)”.
4. Hold engine speed at 2,000 rpm under no load during the following steps.
5. Touch “RECORD” on CONSULT-II screen.

DATA MONITOR	
MONITOR	NO DTC
ENG SPEED	XXX rpm
MAS A/F SE-B1	XXX V
COOLAN TEMP/S	XXX °C
HO2S1 (B1)	XXX V
HO2S1 MNTR (B1)	LEAN

SEF646Y

6. Check the following.
   - “HO2S1 MNTR (B1)/(B2)” in “DATA MONITOR” mode changes from “RICH” to “LEAN” to “RICH” 5 times in 10 seconds.
     5 times (cycles) are counted as shown at right.
   - “HO2S1 (B1)/(B2)” voltage goes above 0.6V at least once.
   - “HO2S1 (B1)/(B2)” voltage goes below 0.3V at least once.
   - “HO2S1 (B1)/(B2)” voltage never exceeds 1.0V.

Bank 1

cycle	1	2	3	4	5
HO2S1 MNTR (B1)	R-L-R-L-R-L-R-L-R-L-R				

Bank 2

cycle	1	2	3	4	5
HO2S1 MNTR (B2)	R-L-R-L-R-L-R-L-R-L-R				

R means HO2S1 MNTR (B1)/(B2) indicates RICH

L means HO2S1 MNTR (B1)/(B2) indicates LEAN

SEF647Y

Trigger	ENG SPEED	HO2S1 (B1)
	rpm	V
XXX	XXX	XXX
XXX	XXX	XXX
XXX	XXX	XXX
XXX	XXX	XXX
XXX	XXX	XXX
XXX	XXX	XXX
XXX	XXX	XXX
XXX	XXX	XXX
XXX	XXX	XXX
XXX	XXX	XXX
XXX	XXX	XXX
XXX	XXX	XXX

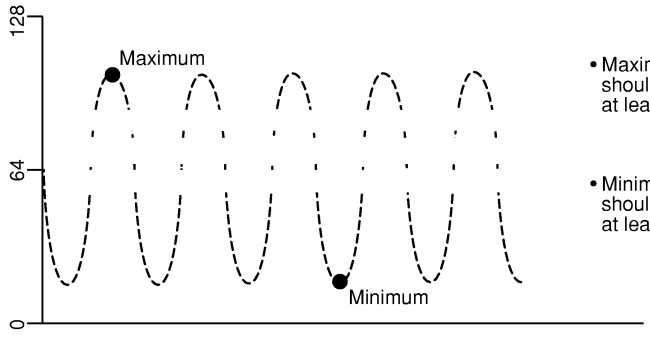

CAUTION:

- **Discard any heated oxygen sensor which has been dropped from a height of more than 0.5 m (19.7 in) onto a hard surface such as a concrete floor; use a new one.**
- **Before installing new oxygen sensor, clean exhaust system threads using Oxygen Sensor Thread Cleaner tool J-43897-18 or J-43897-12 and approved anti-seize lubricant.**

Without CONSULT-II

1. Start engine and warm it up to normal operating temperature.
2. Set voltmeter probes between ECM terminal 91 [HO2S1 (B1) signal] or 92 [HO2S1 (B2) signal] and engine ground.
3. Check the following with engine speed held at 2,000 rpm constant under no load.
   - The voltage fluctuates between 0 to 0.3V and 0.6 to 1.0V more than 5 times within 10 seconds.
   - The maximum voltage is over 0.6V at least one time.
   - The minimum voltage is below 0.3V at least one time.
   - The voltage never exceeds 1.0V.

   1 time: 0 - 0.3V → 0.6 - 1.0V → 0 - 0.3V
   2 times: 0 - 0.3V → 0.6 - 1.0V → 0 - 0.3V → 0.6 - 1.0V

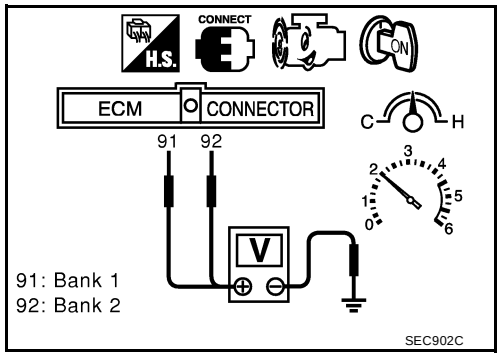

CAUTION:

- **Discard any heated oxygen sensor which has been dropped from a height of more than 0.5 m (19.7 in) onto a hard surface such as a concrete floor; use a new one.**
- **Before installing new oxygen sensor, clean exhaust system threads using Oxygen Sensor Thread Cleaner tool J-43897-18 or J-43897-12 and approved anti-seize lubricant.**

Removal and Installation

UBS0038P

HEATED OXYGEN SENSOR 1

Refer to EM-116, "EXHAUST MANIFOLD AND THREE WAY CATALYST" .

DTC P0133, P0153 HO2S1

PFP:22690

Component Description

UBS0038Q

The heated oxygen sensor 1 is placed into the front tube. It detects the amount of oxygen in the exhaust gas compared to the outside air. The heated oxygen sensor 1 has a closed-end tube made of ceramic zirconia. The zirconia generates voltage from approximately 1V in richer conditions to 0V in leaner conditions. The heated oxygen sensor 1 signal is sent to the ECM. The ECM adjusts the injection pulse duration to achieve the ideal air-fuel ratio. The ideal air-fuel ratio occurs near the radical change from 1V to 0V.

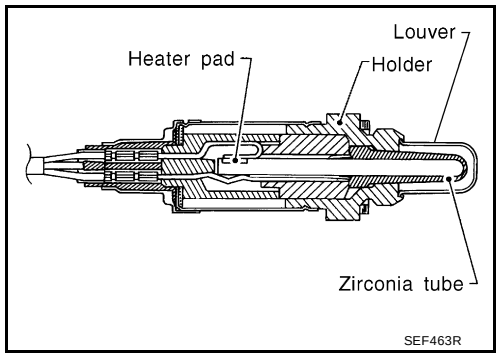

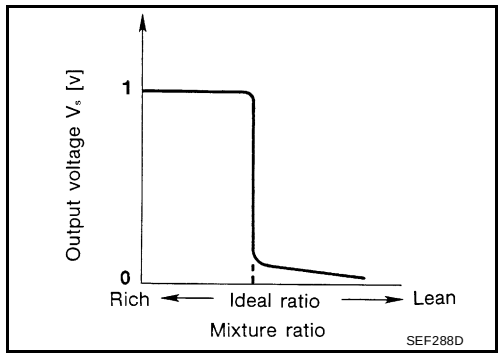

CONSULT-II Reference Value in Data Monitor Mode

UBS0038R

Specification data are reference values.

MONITOR ITEM	CONDITION		SPECIFICATION
HO2S1 (B1) HO2S1 (B2)	● Engine: After warming up	Maintaining engine speed at 2,000 rpm	0 - 0.3V ←→ Approx. 0.6 - 1.0V
HO2S1 MNTR (B1) HO2S1 MNTR (B2)	● Engine: After warming up	Maintaining engine speed at 2,000 rpm	LEAN ←→ RICH Changes more than 5 times during 10 seconds.

On Board Diagnosis Logic

UBS0038S

To judge the malfunction of heated oxygen sensor 1, this diagnosis measures response time of heated oxygen sensor 1 signal. The time is compensated by engine operating (speed and load), fuel feedback control constant, and heated oxygen sensor 1 temperature index. Judgment is based on whether the compensated time (heated oxygen sensor 1 cycling time index) is inordinately long or not.

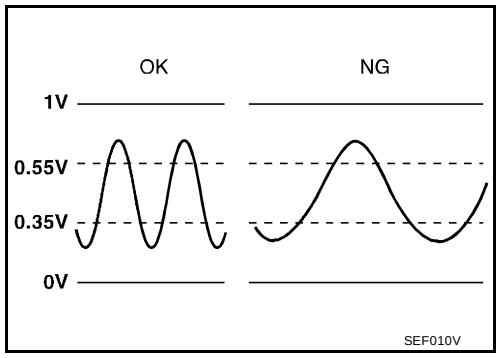

DTC No.	Trouble diagnosis name	DTC detecting condition	Possible cause
P0133 0133 (Bank 1)	Heated oxygen sensor 1 circuit slow response	The response of the voltage signal from the sensor takes more than the specified time.	● Harness or connectors (The sensor circuit is open or shorted) ● Heated oxygen sensor 1 ● Heated oxygen sensor 1 heater ● Fuel pressure ● Injectors ● Intake air leaks ● Exhaust gas leaks ● PCV valve ● Mass air flow sensor
P0153 0153 (Bank 2)			

DTC Confirmation Procedure

UBS0038T

CAUTION:

Always drive vehicle at a safe speed.

NOTE:

If "DTC Confirmation Procedure" has been previously conducted, always turn ignition switch "OFF" and wait at least 10 seconds before conducting the next test.

TESTING CONDITION:

- **Always perform at a temperature above –10°C (14°F).**
- **Before performing the following procedure, confirm that battery voltage is more than 11V at idle.**

WITH CONSULT-II

1. Start engine and warm it up to normal operating temperature.
2. Stop engine and wait at least 10 seconds.
3. Turn ignition switch "ON" and select "HO2S1 (B1) P0133" or "HO2S1 (B2) P0153" of "HO2S1" in "DTC WORK SUPPORT" mode with CONSULT-II.
4. Touch "START".
5. Start engine and let it idle for at least 3 minutes.

   NOTE:
   Never raise engine speed above 3,600 rpm after this step. If the engine speed limit is exceeded, return to step 5.

HO2S1 (B1) P0133	
OUT OF CONDITION	
MONITOR	
ENG SPEED	XXX rpm
B/FUEL SCHDL	XXX msec
COOLAN TEMP/S	XXX °C
VHCL SPEED SEN	XXX km/h

SEF338Z

6. When the following conditions are met, "TESTING" will be displayed on the CONSULT-II screen. Maintain the conditions continuously until "TESTING" changes to "COMPLETED". (It will take approximately 20 to 50 seconds.)

ENG SPEED	1,200 - 3,100 rpm
Vehicle speed	More than 80 km/h (50 MPH)
B/FUEL SCHDL	2.5 - 12.0 msec
Selector lever	Suitable position

If "TESTING" is not displayed after 5 minutes, retry from step 2.

HO2S1 (B1) P0133	
TESTING	
MONITOR	
ENG SPEED	XXX rpm
B/FUEL SCHDL	XXX msec
COOLAN TEMP/S	XXX °C
VHCL SPEED SEN	XXX km/h

SEF339Z

7. Make sure that “OK” is displayed after touching “SELF-DIAG RESULTS”. If “NG” is displayed, refer to EC-842, "Diagnostic Procedure" .

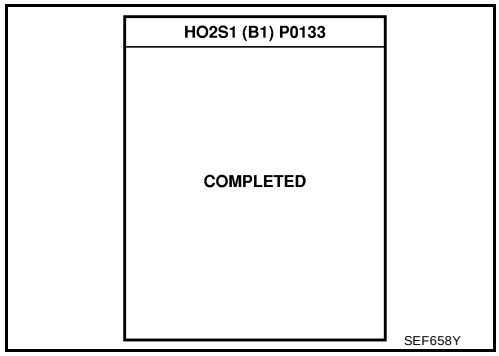

Overall Function Check

UBS0038U

Use this procedure to check the overall function of the heated oxygen sensor 1 circuit. During this check, a 1st trip DTC might not be confirmed.

WITH GST

1. Start engine and warm it up to normal operating temperature.
2. Set voltmeter probes between ECM terminal 91 [HO2S1(B1) signal] or 92 [HO2S1(B2) signal] and engine ground.
3. Check the following with engine speed held at 2,000 rpm constant under no load.

– The voltage fluctuates between 0 to 0.3V and 0.6 to 1.0V more than 5 times within 10 seconds.

1 time:	**0 - 0.3V → 0.6 - 1.0V → 0 - 0.3V**
2 times:	**0 - 0.3V → 0.6 - 1.0V → 0 - 0.3V → 0.6 - 1.0V → 0 - 0.3V**

4. If NG, go to EC-842, "Diagnostic Procedure" .

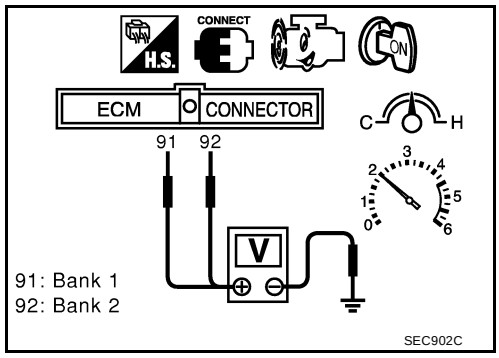

Wiring Diagram
BANK 1

UBS0038V

EC-O2S1B1-01

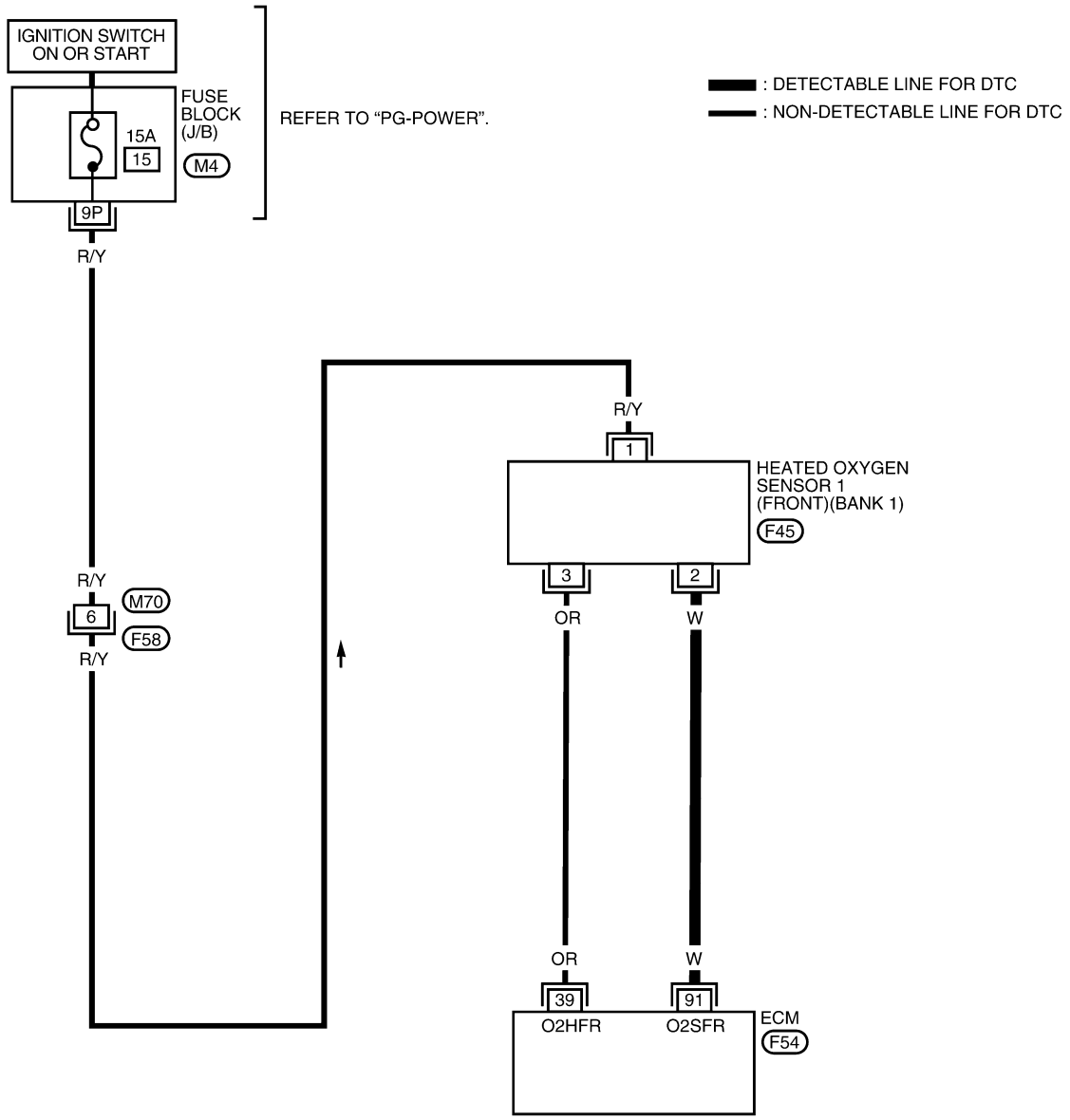

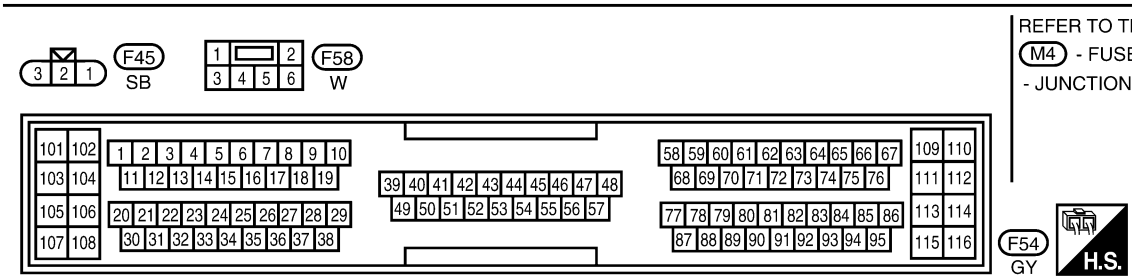

REFER TO THE FOLLOWING.
M4 - FUSE BLOCK
- JUNCTION BOX (J/B)

BBWA0054E

Specification data are reference values and are measured between each terminal and ground.

CAUTION:

Do not use ECM ground terminals when measuring input/output voltage. Doing so may result in damage to the ECM's transistor. Use a ground other than ECM terminals, such as the ground.

TERMINAL NO.	WIRE COLOR	ITEM	CONDITION	DATA (DC Voltage)
91	W	Heated oxygen sensor 1 (Bank 1)	**[Engine is running]** ● **Warm-up condition** ● Engine speed is 2,000 rpm.	0 - Approximately 1.0V (Periodically change)

BANK 2

EC-O2S1B2-01

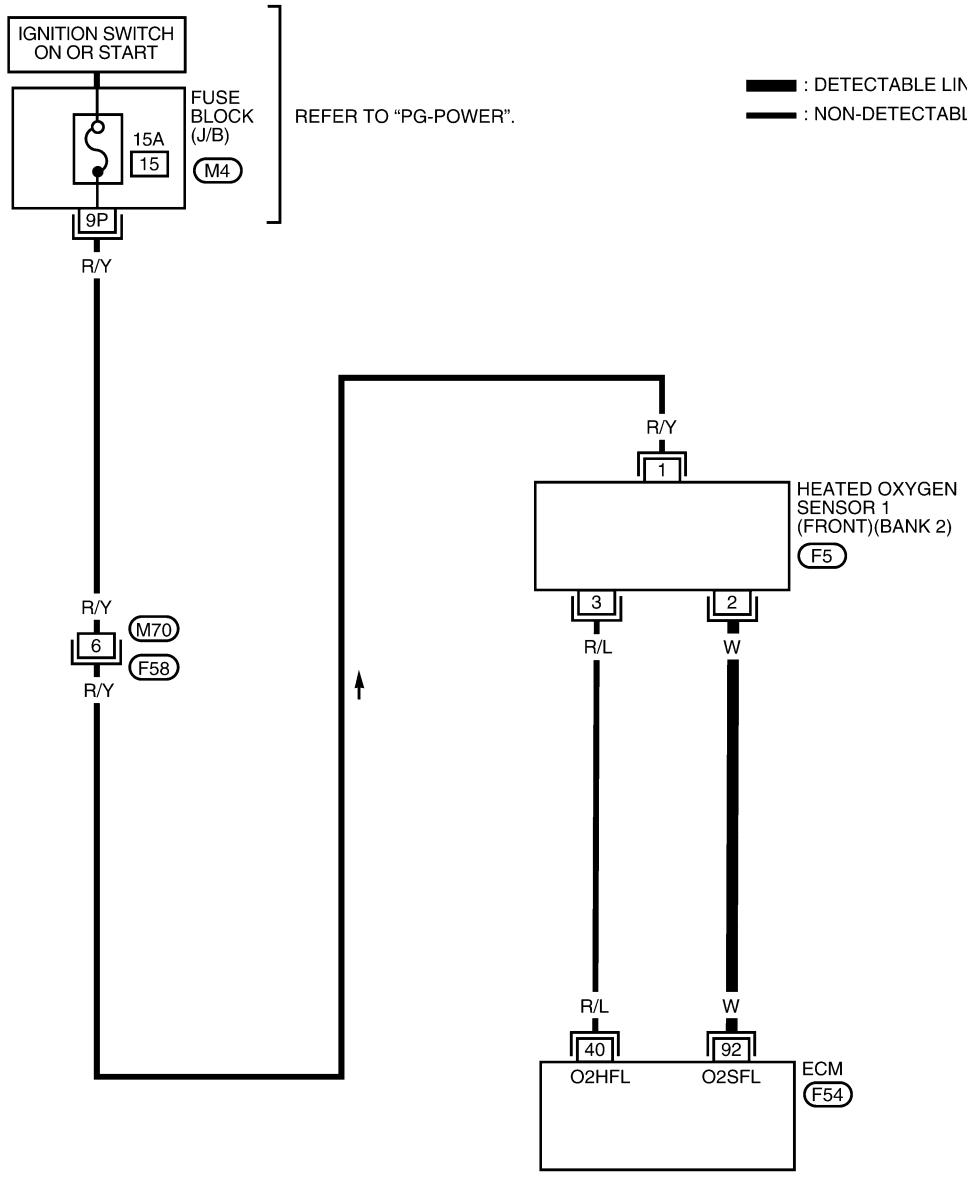

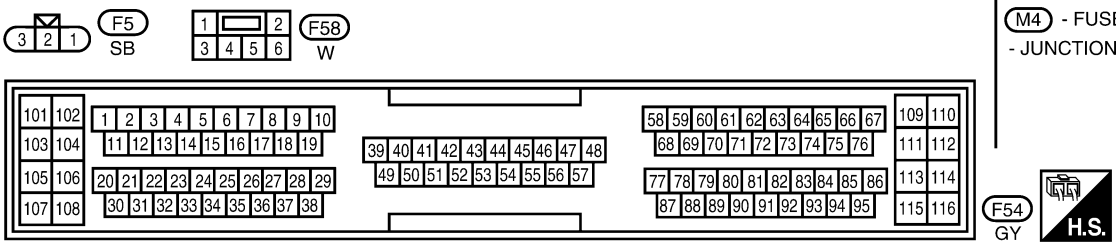

BBWA0055E

Specification data are reference values and are measured between each terminal and ground.

CAUTION:
Do not use ECM ground terminals when measuring input/output voltage. Doing so may result in damage to the ECM's transistor. Use a ground other than ECM terminals, such as the ground.

TERMINAL NO.	WIRE COLOR	ITEM	CONDITION	DATA (DC Voltage)
92	W	Heated oxygen sensor 1 (Bank 2)	**[Engine is running]** ● **Warm-up condition** ● Engine speed is 2,000 rpm.	0 - Approximately 1.0V (Periodically change)

Diagnostic Procedure

UBS0038W

1. RETIGHTEN GROUND SCREWS

1. Turn ignition switch “OFF”.
2. Loosen and retighten engine ground screws.

>> GO TO 2.

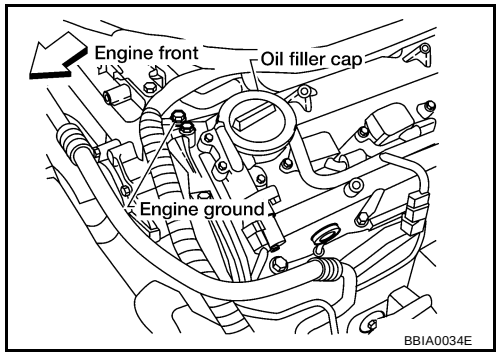

2. RETIGHTEN HEATED OXYGEN SENSOR 1

Loosen and retighten heated oxygen sensor 1.

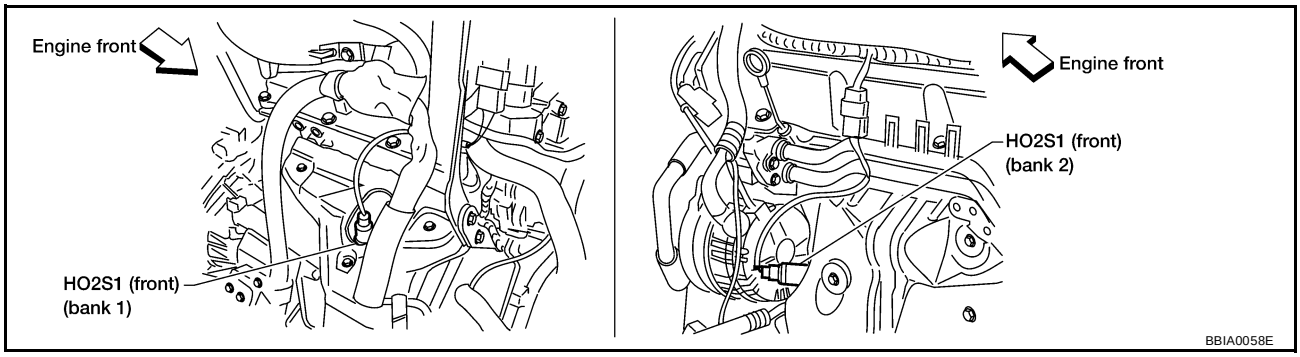

Tightening torque: 40 - 60 N·m (4.1 - 6.2 kg-m, 30 - 44 ft-lb)

>> GO TO 3.

3. CHECK FOR EXHAUST AIR LEAK

1. Start engine and run it at idle.
2. Listen for an exhaust air leak before three way catalyst (Manifold).

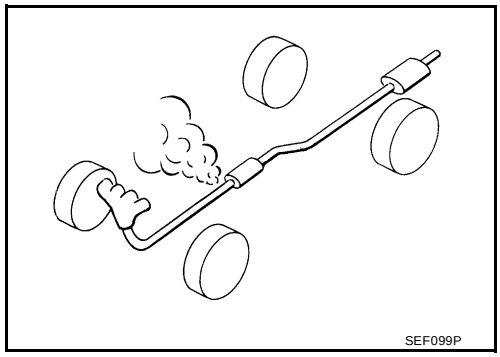

OK or NG

OK >> GO TO 4.
NG >> Repair or replace.

4. CHECK FOR INTAKE AIR LEAK

Listen for an intake air leak after the mass air flow sensor.

OK or NG

OK >> GO TO 5.
NG >> Repair or replace.

5. CLEAR THE SELF-LEARNING DATA

With CONSULT-II

1. Start engine and warm it up to normal operating temperature.
2. Select “SELF-LEARNING CONT” in “WORK SUPPORT” mode with CONSULT-II.
3. Clear the self-learning control coefficient by touching “CLEAR”.
4. Run engine for at least 10 minutes at idle speed.
   Is the 1st trip DTC P0171 or P0172 detected?
   Is it difficult to start engine?

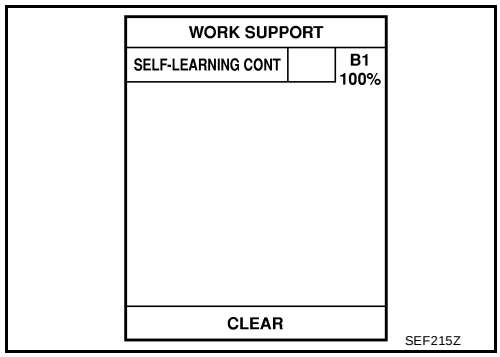

Without CONSULT-II

1. Start engine and warm it up to normal operating temperature.
2. Turn ignition switch “OFF”.
3. Disconnect mass air flow sensor harness connector, and restart and run engine for at least 5 seconds at idle speed.
4. Stop engine and reconnect mass air flow sensor harness connector.
5. Make sure DTC P0102 is displayed.
6. Erase the DTC memory. Refer to EC-687, "HOW TO ERASE EMISSION-RELATED DIAGNOSTIC INFORMATION" .
7. Make sure DTC P0000 is displayed.
8. Run engine for at least 10 minutes at idle speed.
   Is the 1st trip DTC P0171 or P0172 detected?
   Is it difficult to start engine?

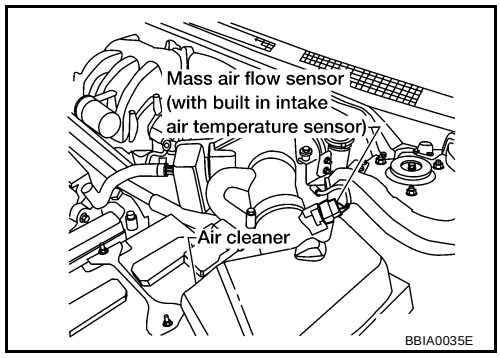

Yes or No

Yes >> Perform trouble diagnosis for DTC P0171 or DTC P0172 (Refer to EC-877 or EC-885).
No >> GO TO 6.

6. CHECK HO2S1 INPUT SIGNAL CIRCUIT FOR OPEN AND SHORT

1. Disconnect heated oxygen sensor 1 harness connector.
   Bank 1

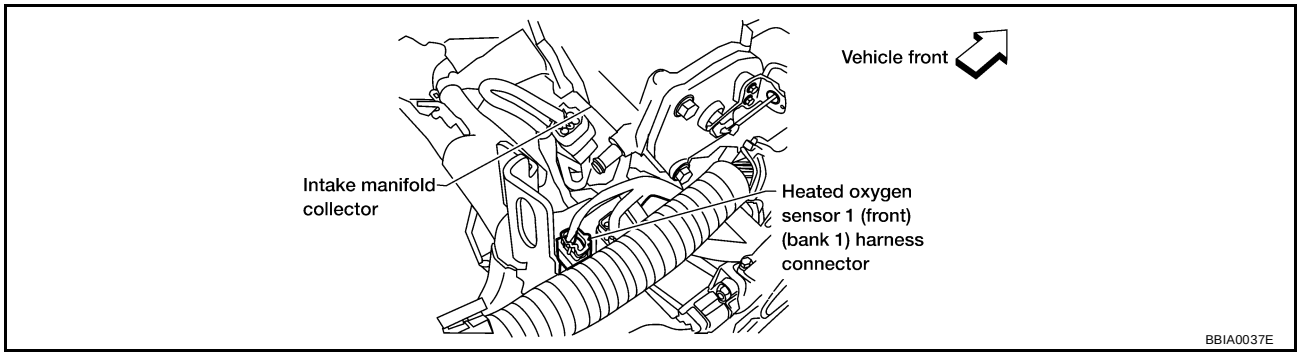

   Bank 2

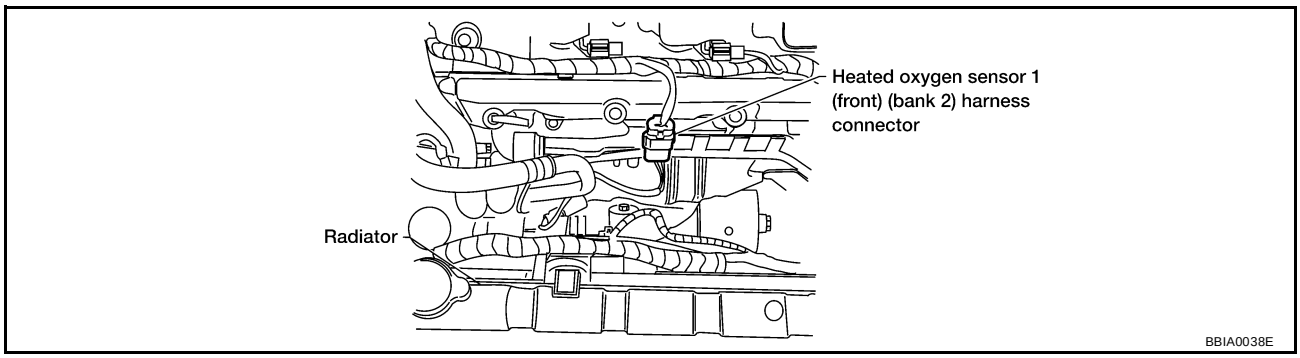

2. Disconnect ECM harness connector.
3. Check harness continuity between ECM terminal and HO2S1 terminal as follows.
   Refer to Wiring Diagram.

DTC	Terminals		Bank
	ECM	Sensor	
P0133	91	2	1
P0153	92	2	2

Continuity should exist.

4. Check harness continuity between the following terminals and ground.
   Refer to Wiring Diagram.

DTC	Terminals		Bank
	ECM	Sensor	
P0133	91	2	1
P0153	92	2	2

Continuity should not exist.

5. Also check harness for short to power.

OK or NG

OK >> GO TO 7.
NG >> Repair open circuit or short to ground or short to power in harness or connectors.

7. CHECK HEATED OXYGEN SENSOR 1 HEATER

Refer to EC-780, "Component Inspection" .

OK or NG

OK >> GO TO 8.
NG >> Replace malfunctioning heated oxygen sensor 1.

8. CHECK MASS AIR FLOW SENSOR

Refer to EC-803, "Component Inspection" .

OK or NG

OK >> GO TO 9.
NG >> Replace mass air flow sensor.

9. CHECK PCV VALVE

Refer to EC-1284, "Component Inspection" .

OK or NG

OK >> GO TO 10.
NG >> Replace PCV valve.

10. CHECK HEATED OXYGEN SENSOR 1

Refer to EC-845, "Component Inspection" .

OK or NG

OK >> GO TO 11.
NG >> Replace malfunctioning heated oxygen sensor 1.

11. CHECK INTERMITTENT INCIDENT

Refer to EC-756, "TROUBLE DIAGNOSIS FOR INTERMITTENT INCIDENT" .

>> **INSPECTION END**

Component Inspection

UBS0038X

HEATED OXYGEN SENSOR 1

With CONSULT-II

1. Start engine and warm it up to normal operating temperature.
2. Select “MANU TRIG” and adjust “TRIGGER POINT” to 100% in “DATA MONITOR” mode with CONSULT-II.
3. Select “HO2S1 (B1)/(B2)” and “HO2S1 MNTR (B1)/(B2)”.
4. Hold engine speed at 2,000 rpm under no load during the following steps.
5. Touch “RECORD” on CONSULT-II screen.

DATA MONITOR	
MONITOR	NO DTC
ENG SPEED	XXX rpm
MAS A/F SE-B1	XXX V
COOLAN TEMP/S	XXX °C
HO2S1 (B1)	XXX V
HO2S1 MNTR (B1)	LEAN

SEF646Y

6. Check the following.
   - “HO2S1 MNTR (B1)/(B2)” in “DATA MONITOR” mode changes from “RICH” to “LEAN” to “RICH” 5 times in 10 seconds.
     5 times (cycles) are counted as shown at right.
   - “HO2S1 (B1)/(B2)” voltage goes above 0.6V at least once.
   - “HO2S1 (B1)/(B2)” voltage goes below 0.3V at least once.
   - “HO2S1 (B1)/(B2)” voltage never exceeds 1.0V.

Bank 1

cycle	1	2	3	4	5
HO2S1 MNTR (B1)	R-L-R-L-R-L-R-L-R-L-R				

Bank 2

cycle	1	2	3	4	5
HO2S1 MNTR (B2)	R-L-R-L-R-L-R-L-R-L-R				

R means HO2S1 MNTR (B1)/(B2) indicates RICH

L means HO2S1 MNTR (B1)/(B2) indicates LEAN

SEF647Y

Trigger	ENG SPEED	HO2S1 (B1)
	rpm	V
XXX	XXX	XXX
XXX	XXX	XXX
XXX	XXX	XXX
XXX	XXX	XXX
XXX	XXX	XXX
XXX	XXX	XXX
XXX	XXX	XXX
XXX	XXX	XXX
XXX	XXX	XXX
XXX	XXX	XXX
XXX	XXX	XXX
XXX	XXX	XXX
XXX	XXX	XXX

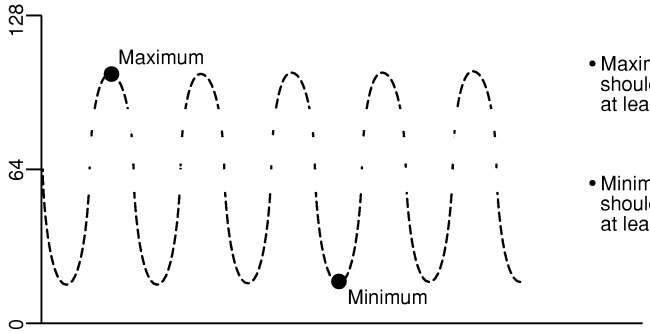

- Maximum voltage should be over 0.6V at least one time.
- Minimum voltage should be below 0.30V at least one time.

SEF648Y

CAUTION:

- **Discard any heated oxygen sensor which has been dropped from a height of more than 0.5 m (19.7 in) onto a hard surface such as a concrete floor; use a new one.**
- **Before installing new oxygen sensor, clean exhaust system threads using Oxygen Sensor Thread Cleaner tool J-43897-18 or J-43897-12 and approved anti-seize lubricant.**

Without CONSULT-II

1. Start engine and warm it up to normal operating temperature.
2. Set voltmeter probes between ECM terminal 91 [HO2S1 (B1) signal] or 92 [HO2S1 (B2) signal] and engine ground.
3. Check the following with engine speed held at 2,000 rpm constant under no load.
   - The voltage fluctuates between 0 to 0.3V and 0.6 to 1.0V more than 5 times within 10 seconds.
   - The maximum voltage is over 0.6V at least one time.
   - The minimum voltage is below 0.3V at least one time.
   - The voltage never exceeds 1.0V.

   1 time: 0 - 0.3V → 0.6 - 1.0V → 0 - 0.3V
   2 times: 0 - 0.3V → 0.6 - 1.0V → 0 - 0.3V → 0.6 - 1.0V

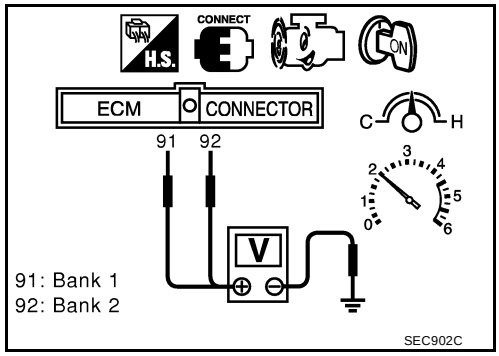

SEC902C

CAUTION:

- **Discard any heated oxygen sensor which has been dropped from a height of more than 0.5 m (19.7 in) onto a hard surface such as a concrete floor; use a new one.**
- **Before installing new oxygen sensor, clean exhaust system threads using Oxygen Sensor Thread Cleaner tool J-43897-18 or J-43897-12 and approved anti-seize lubricant.**

Removal and Installation

UBS0038Y

HEATED OXYGEN SENSOR 1

Refer to EM-116, "EXHAUST MANIFOLD AND THREE WAY CATALYST" .

DTC P0134, P0154 HO2S1

PFP:22690

Component Description

UBS0038Z

The heated oxygen sensor 1 is placed into the front tube. It detects the amount of oxygen in the exhaust gas compared to the outside air. The heated oxygen sensor 1 has a closed-end tube made of ceramic zirconia. The zirconia generates voltage from approximately 1V in richer conditions to 0V in leaner conditions. The heated oxygen sensor 1 signal is sent to the ECM. The ECM adjusts the injection pulse duration to achieve the ideal air-fuel ratio. The ideal air-fuel ratio occurs near the radical change from 1V to 0V.

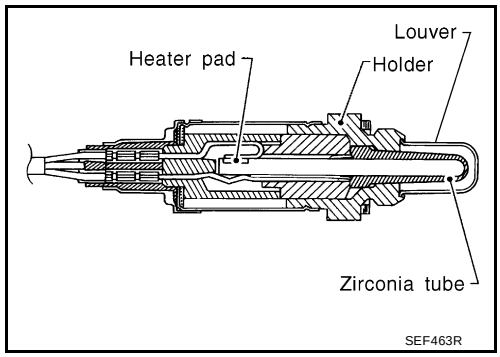

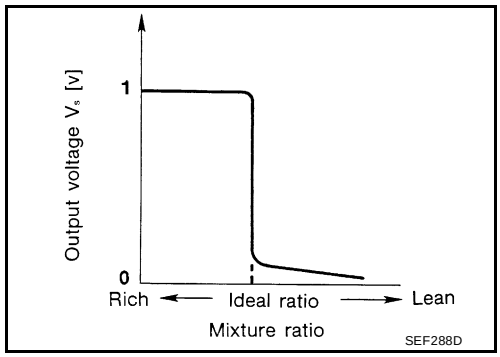

CONSULT-II Reference Value in Data Monitor Mode

UBS00390

Specification data are reference values.

MONITOR ITEM	CONDITION		SPECIFICATION
HO2S1 (B1) HO2S1 (B2)	● Engine: After warming up	Maintaining engine speed at 2,000 rpm	0 - 0.3V ←→ Approx. 0.6 - 1.0V
HO2S1 MNTR (B1) HO2S1 MNTR (B2)	● Engine: After warming up	Maintaining engine speed at 2,000 rpm	LEAN ←→ RICH Changes more than 5 times during 10 seconds.

On Board Diagnosis Logic

UBS00391

Under the condition in which the heated oxygen sensor 1 signal is not input, the ECM circuits will read a continuous approximately 0.3V. Therefore, for this diagnosis, the time that output voltage is within 200 to 400 mV range is monitored, and the diagnosis checks that this time is not inordinately long.

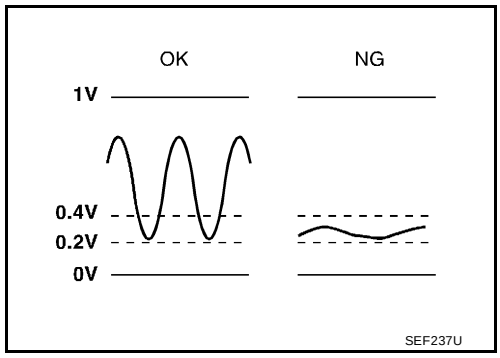

DTC No.	Trouble diagnosis name	DTC detecting condition	Possible cause
P0134 0134 (Bank 1)	Heated oxygen sensor 1 circuit no activity detected	The voltage from the sensor is constantly approx. 0.3V.	● Harness or connectors (The sensor circuit is open or shorted) ● Heated oxygen sensor 1
P0154 0154 (Bank 2)			

DTC Confirmation Procedure

UBS00392

CAUTION:
Always drive vehicle at a safe speed.

NOTE:
If “DTC Confirmation Procedure” has been previously conducted, always turn ignition switch “OFF” and wait at least 10 seconds before conducting the next test.

TESTING CONDITION:
Before performing the following procedure, confirm that battery voltage is more than 11V at idle.

WITH CONSULT-II

1. Start engine and warm it up to normal operating temperature.
2. Select “HO2S1 (B1) P0134" or “HO2S1 (B2) P0154" of “HO2S1” in “DTC WORK SUPPORT” mode with CONSULT-II.
3. Touch “START”.
4. Let it idle for at least 3 minutes.

   NOTE:
   Never raise engine speed above 3,600 rpm after this step. If the engine speed limit is exceeded, return to step 4.

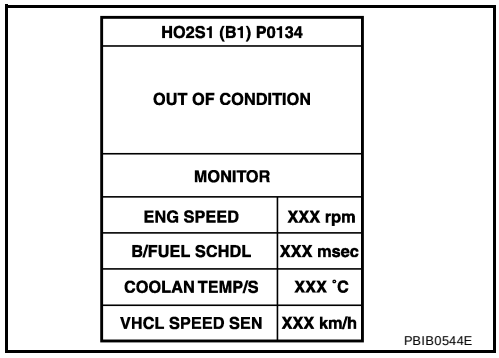

5. When the following conditions are met, “TESTING” will be displayed on the CONSULT-II screen. Maintain the conditions continuously until “TESTING” changes to “COMPLETED”. (It will take approximately 10 to 60 seconds.)

ENG SPEED	1,400 - 2,600 rpm
Vehicle speed	More than 64 km/h (40 MPH)
B/FUEL SCHDL	2.0 - 12.0 msec
Selector lever	Suitable position

   If “TESTING” is not displayed after 5 minutes, retry from step 2.

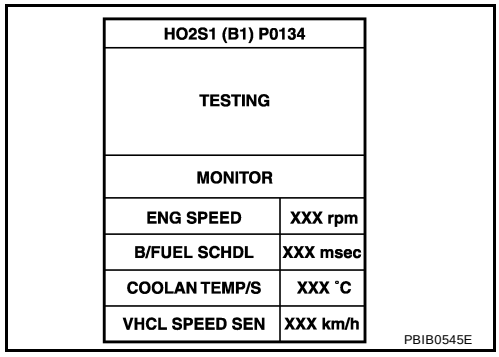

6. Make sure that “OK” is displayed after touching “SELF-DIAG RESULTS”. If “NG” is displayed, refer to EC-853, "Diagnostic Procedure" .

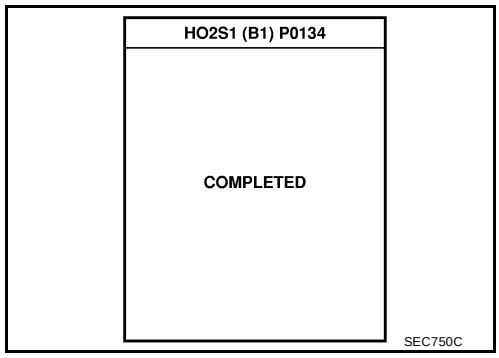

Overall Function Check

UBS00393

Use this procedure to check the overall function of the heated oxygen sensor 1 circuit. During this check, a 1st trip DTC might not be confirmed.

WITH GST

1. Start engine and warm it up to normal operating temperature.
2. Set voltmeter probes between ECM terminal 91 [HO2S1 (B1) signal] or 92 [HO2S1 (B2) signal] and engine ground.

3. Check the following with engine speed held at 2,000 rpm constant under no load.

– The voltage does not remain in the range of 0.2 - 0.4V.

4. If NG, go to EC-853, "Diagnostic Procedure" .

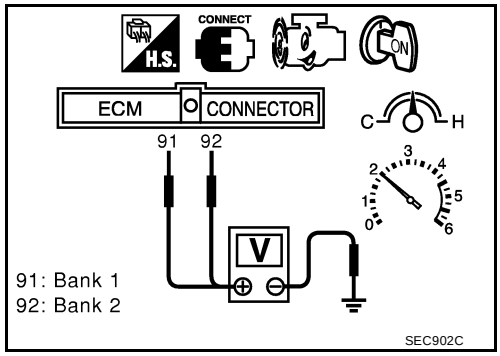

Wiring Diagram
BANK 1

UBS00394

EC-O2S1B1-01

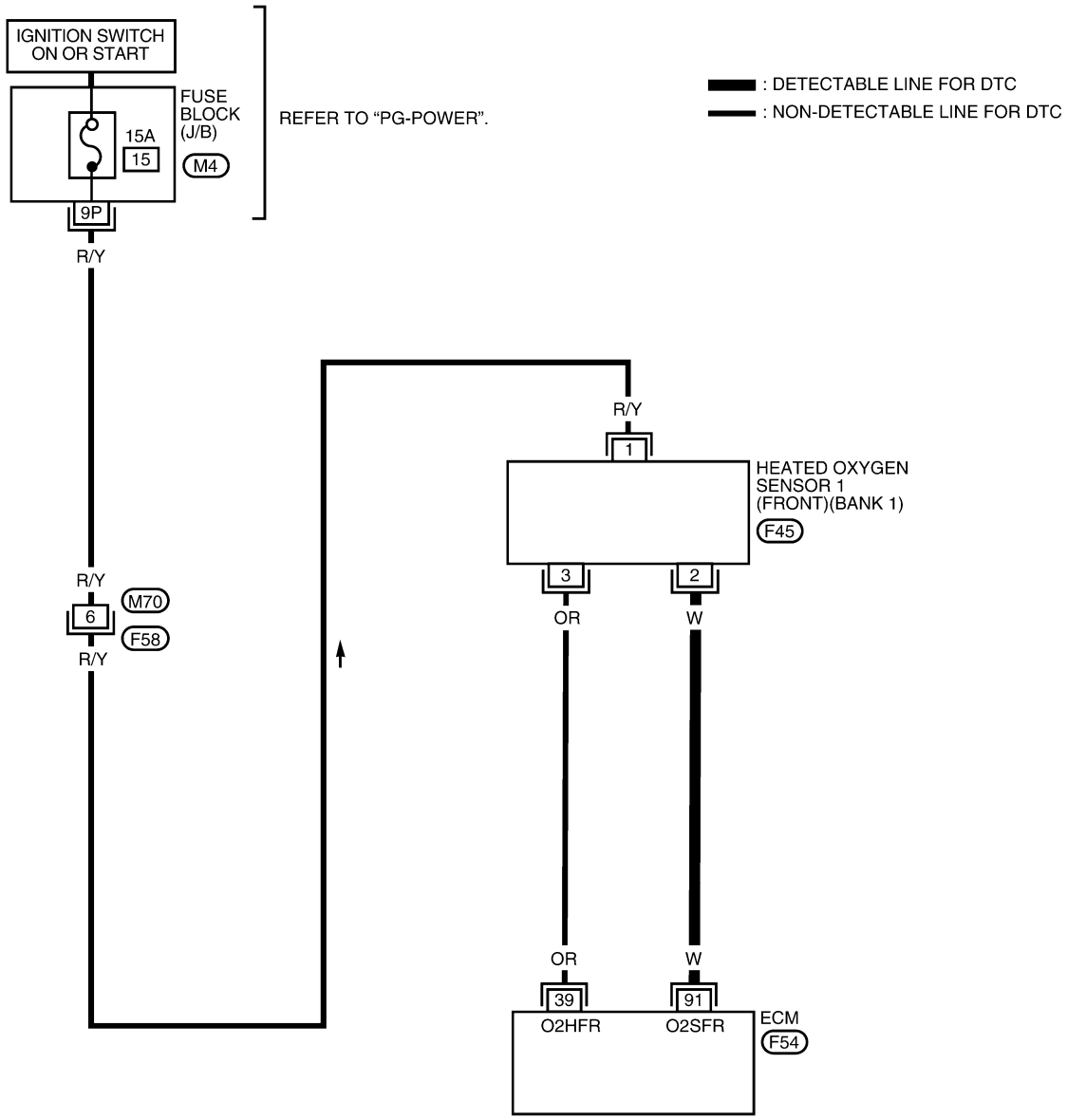

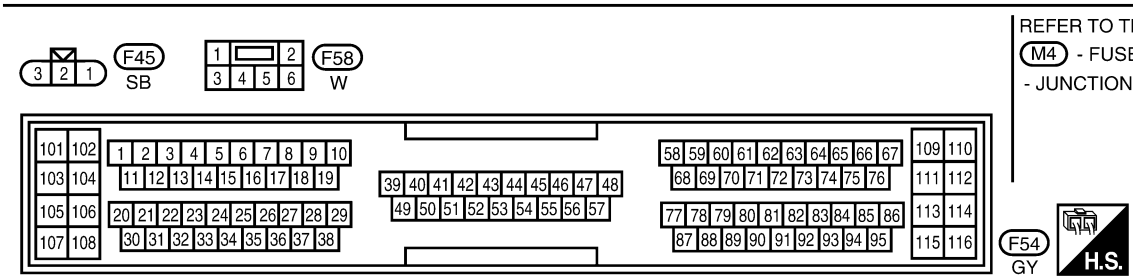

REFER TO THE FOLLOWING.
M4 - FUSE BLOCK
- JUNCTION BOX (J/B)

BBWA0054E

Specification data are reference values and are measured between each terminal and ground.

CAUTION:

Do not use ECM ground terminals when measuring input/output voltage. Doing so may result in damage to the ECM's transistor. Use a ground other than ECM terminals, such as the ground.

TERMINAL NO.	WIRE COLOR	ITEM	CONDITION	DATA (DC Voltage)
91	W	Heated oxygen sensor 1 (Bank 1)	**[Engine is running]** ● **Warm-up condition** ● Engine speed is 2,000 rpm.	0 - Approximately 1.0V (Periodically change)

BANK 2

EC-O2S1B2-01

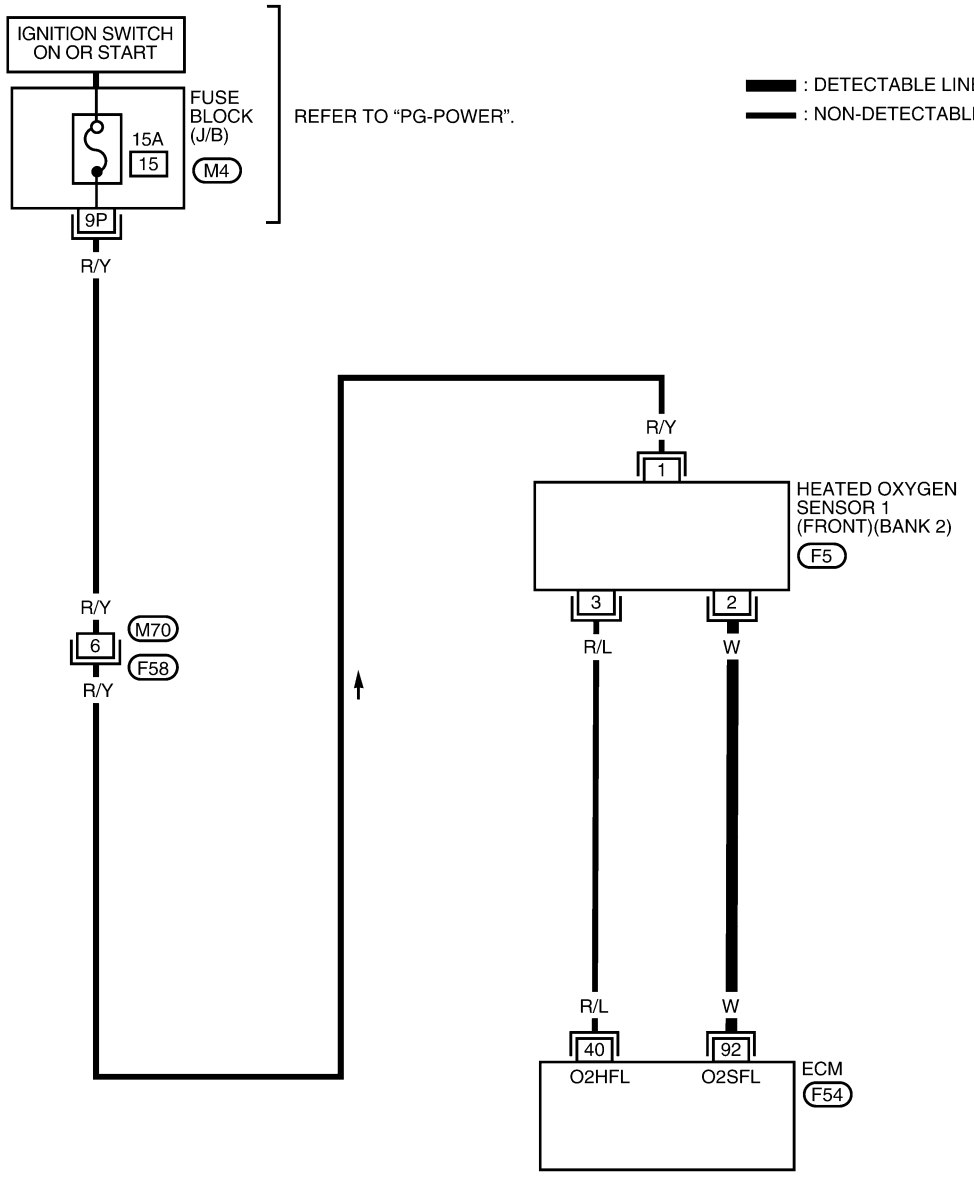

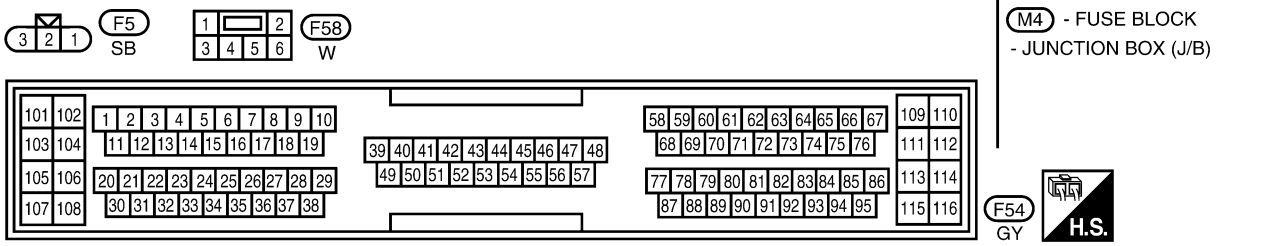

BBWA0055E

Specification data are reference values and are measured between each terminal and ground.

CAUTION:
Do not use ECM ground terminals when measuring input/output voltage. Doing so may result in damage to the ECM's transistor. Use a ground other than ECM terminals, such as the ground.

TERMINAL NO.	WIRE COLOR	ITEM	CONDITION	DATA (DC Voltage)
92	W	Heated oxygen sensor 1 (Bank 2)	**[Engine is running]** ● **Warm-up condition** ● Engine speed is 2,000 rpm.	0 - Approximately 1.0V (Periodically change)

Diagnostic Procedure

UBS00395

1. INSPECTION START

1. Turn ignition switch “OFF”.
2. Loosen and retighten engine ground screws.

>> GO TO 2.

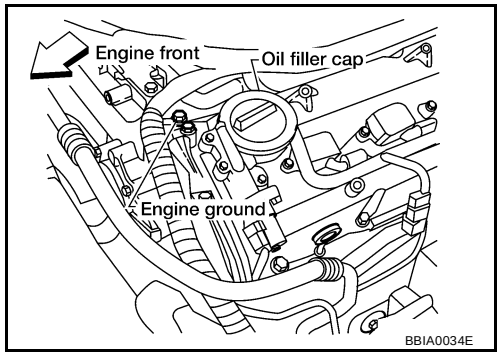

2. CHECK HO2S1 INPUT SIGNAL CIRCUIT FOR OPEN AND SHORT

1. Disconnect HO2S1 harness connector.
   Bank 1

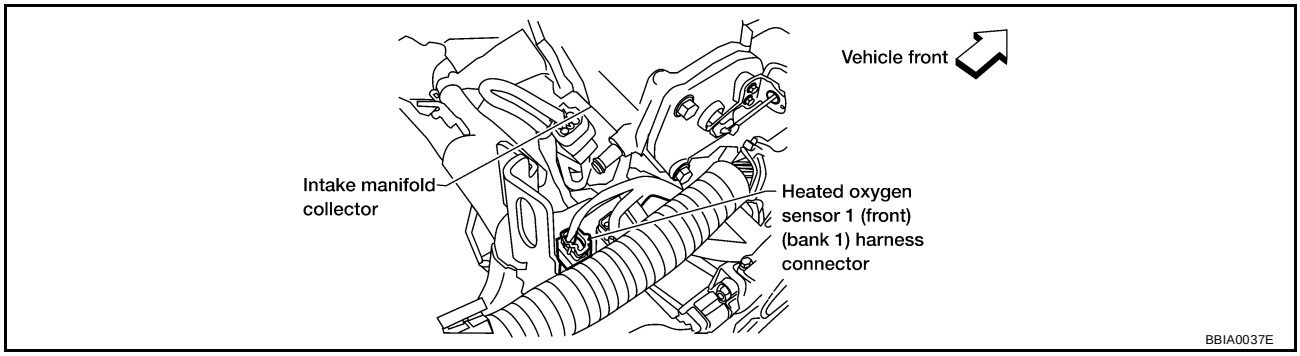

   Bank 2

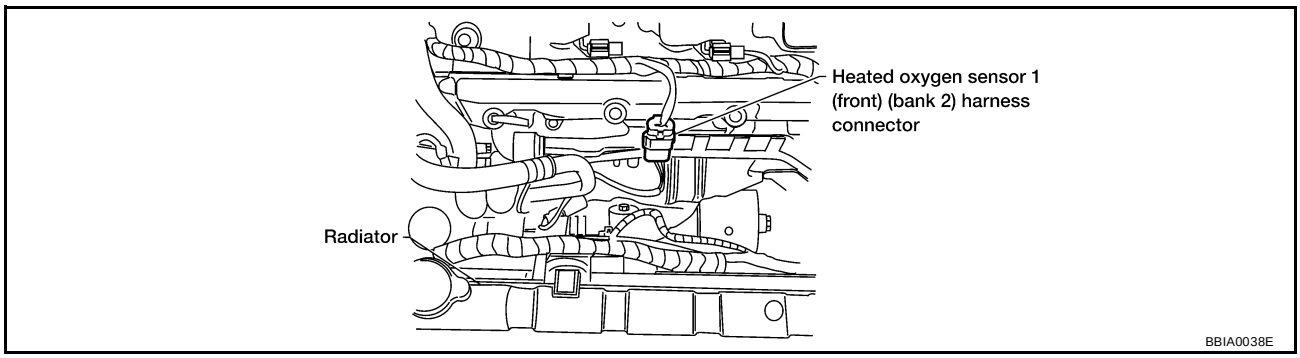

2. Disconnect ECM harness connector.
3. Check harness continuity between ECM terminal and HO2S1 terminal as follows.
   Refer to Wiring Diagram.

DTC	Terminals		Bank
	ECM	Sensor	
P0134	91	2	1
P0154	92	2	2

Continuity should exist.

4. Check harness continuity between the following terminals and ground.
   Refer to Wiring Diagram.

DTC	Terminals		Bank
	ECM	Sensor	
P0134	91	2	1
P0154	92	2	2

Continuity should not exist.

5. Also check harness for short to power.

OK or NG

OK >> GO TO 3.
NG >> Repair open circuit or short to ground or short to power in harness or connectors.

3. CHECK HEATED OXYGEN SENSOR 1

Refer to EC-855, "Component Inspection" .

OK or NG

OK >> GO TO 4.
NG >> Replace malfunctioning heated oxygen sensor 1.

4. CHECK INTERMITTENT INCIDENT

Refer to EC-756, "TROUBLE DIAGNOSIS FOR INTERMITTENT INCIDENT" .

>> **INSPECTION END**

Component Inspection

UBS00396

HEATED OXYGEN SENSOR 1

With CONSULT-II

1. Start engine and warm it up to normal operating temperature.
2. Select “MANU TRIG” and adjust “TRIGGER POINT” to 100% in “DATA MONITOR” mode with CONSULT-II.
3. Select “HO2S1 (B1)/(B2)” and “HO2S1 MNTR (B1)/(B2)”.
4. Hold engine speed at 2,000 rpm under no load during the following steps.
5. Touch “RECORD” on CONSULT-II screen.

DATA MONITOR	
MONITOR	NO DTC
ENG SPEED	XXX rpm
MAS A/F SE-B1	XXX V
COOLAN TEMP/S	XXX °C
HO2S1 (B1)	XXX V
HO2S1 MNTR (B1)	LEAN

SEF646Y

6. Check the following.
   - “HO2S1 MNTR (B1)/(B2)” in “DATA MONITOR” mode changes from “RICH” to “LEAN” to “RICH” 5 times in 10 seconds.
     5 times (cycles) are counted as shown at right.
   - “HO2S1 (B1)/(B2)” voltage goes above 0.6V at least once.
   - “HO2S1 (B1)/(B2)” voltage goes below 0.3V at least once.
   - “HO2S1 (B1)/(B2)” voltage never exceeds 1.0V.

Bank 1

cycle	1	2	3	4	5
HO2S1 MNTR (B1)	R-L-R-L-R-L-R-L-R-L-R				

Bank 2

cycle	1	2	3	4	5
HO2S1 MNTR (B2)	R-L-R-L-R-L-R-L-R-L-R				

R means HO2S1 MNTR (B1)/(B2) indicates RICH

L means HO2S1 MNTR (B1)/(B2) indicates LEAN

SEF647Y

Trigger	ENG SPEED	HO2S1 (B1)
	rpm	V
XXX	XXX	XXX
XXX	XXX	XXX
XXX	XXX	XXX
XXX	XXX	XXX
XXX	XXX	XXX
XXX	XXX	XXX
XXX	XXX	XXX
XXX	XXX	XXX
XXX	XXX	XXX
XXX	XXX	XXX
XXX	XXX	XXX
XXX	XXX	XXX
XXX	XXX	XXX

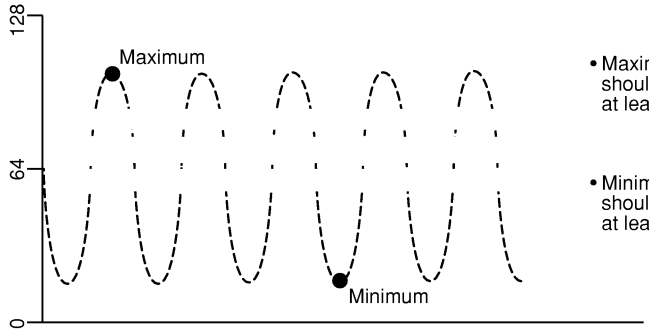

- Maximum voltage should be over 0.6V at least one time.
- Minimum voltage should be below 0.30V at least one time.

SEF648Y

CAUTION:

- **Discard any heated oxygen sensor which has been dropped from a height of more than 0.5 m (19.7 in) onto a hard surface such as a concrete floor; use a new one.**
- **Before installing new oxygen sensor, clean exhaust system threads using Oxygen Sensor Thread Cleaner tool J-43897-18 or J-43897-12 and approved anti-seize lubricant.**

Without CONSULT-II

1. Start engine and warm it up to normal operating temperature.
2. Set voltmeter probes between ECM terminal 91 [HO2S1 (B1) signal] or 92 [HO2S1 (B2) signal] and engine ground.
3. Check the following with engine speed held at 2,000 rpm constant under no load.
   - The voltage fluctuates between 0 to 0.3V and 0.6 to 1.0V more than 5 times within 10 seconds.
   - The maximum voltage is over 0.6V at least one time.
   - The minimum voltage is below 0.3V at least one time.
   - The voltage never exceeds 1.0V.

   1 time: 0 - 0.3V → 0.6 - 1.0V → 0 - 0.3V
   2 times: 0 - 0.3V → 0.6 - 1.0V → 0 - 0.3V → 0.6 - 1.0V

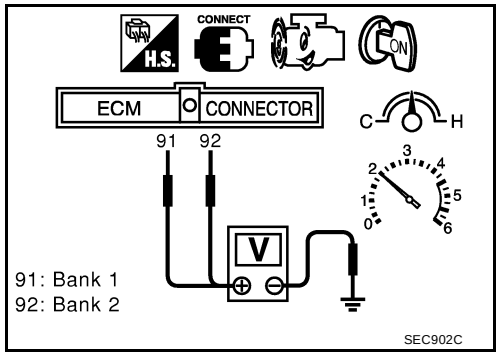

CAUTION:

- **Discard any heated oxygen sensor which has been dropped from a height of more than 0.5 m (19.7 in) onto a hard surface such as a concrete floor; use a new one.**
- **Before installing new oxygen sensor, clean exhaust system threads using Oxygen Sensor Thread Cleaner tool J-43897-18 or J-43897-12 and approved anti-seize lubricant.**

Removal and Installation

UBS00397

HEATED OXYGEN SENSOR 1

Refer to EM-116, "EXHAUST MANIFOLD AND THREE WAY CATALYST" .

DTC P0138, P0158 HO2S2

PFP:226A0

Component Description

UBS00398

The heated oxygen sensor 2, after three way catalyst, monitors the oxygen level in the exhaust gas on each bank.
Even if switching characteristics of the heated oxygen sensor 1 are shifted, the air fuel ratio is controlled to stoichiometric, by the signal from the heated oxygen sensor 2.
This sensor is made of ceramic zirconia. The zirconia generates voltage from approximately 1V in richer conditions to 0V in leaner conditions.
Under normal conditions the heated oxygen sensor 2 is not used for engine control operation.

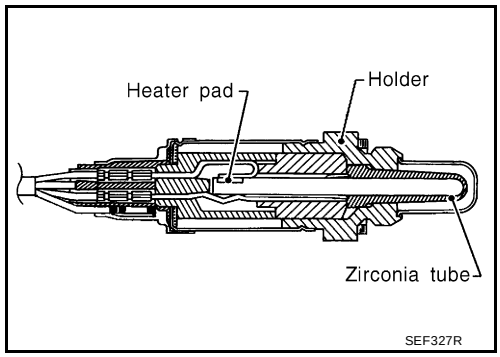

CONSULT-II Reference Value in Data Monitor Mode

UBS00399

Specification data are reference values.

MONITOR ITEM	CONDITION		SPECIFICATION
HO2S2 (B1) HO2S2 (B2)	● Engine: After warming up	Revving engine from idle to 3,000 rpm quickly.	0 - 0.3V ←→ Approx. 0.6 - 1.0V
HO2S2 MNTR (B1) HO2S2 MNTR (B2)	● Engine: After warming up	Revving engine from idle to 3,000 rpm quickly.	LEAN ←→ RICH

On Board Diagnosis Logic

UBS0039A

The heated oxygen sensor 2 has a much longer switching time between rich and lean than the heated oxygen sensor 1. The oxygen storage capacity before the three way catalyst causes the longer switching time. To judge the malfunctions of heated oxygen sensor 2, ECM monitors whether the voltage is unusually high during the various driving condition such as fuel-cut.

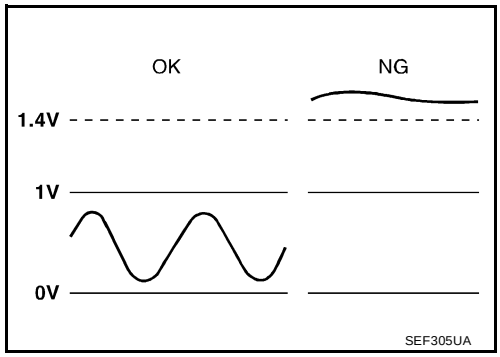

DTC No.	Trouble diagnosis name	DTC detecting condition	Possible cause
P0138 0138 (Bank 1)	Heated oxygen sensor 2 circuit high voltage	An excessively high voltage from the sensor is sent to ECM.	● Harness or connectors (The sensor circuit is open or shorted) ● Heated oxygen sensor 2
P0158 0158 (Bank 2)			

DTC Confirmation Procedure

UBS0039B

CAUTION:
Always drive vehicle at a safe speed.

NOTE:
If “DTC Confirmation Procedure” has been previously conducted, always turn ignition switch “OFF” and wait at least 10 seconds before conducting the next test.

WITH CONSULT-II

1. Turn ignition switch “ON” and select “DATA MONITOR” mode with CONSULT-II.
2. Start engine and drive vehicle at a speed of more than 70 km/h (43 MPH) for 2 consecutive minutes.
3. Stop vehicle with engine running.
4. Let engine idle for 1 minute.

5. Maintain the following conditions for at least 5 consecutive seconds.

ENG SPEED	1,000 - 3,000 rpm
VHCL SPEED SE	More than 32 km/h (20 MPH)
B/FUEL SCHDL	3.0 - 7.0 msec
COOLAN TEMP/S	70 - 100°C (158 - 212°F)
Selector lever	Suitable position

6. If 1st trip DTC is detected, go to EC-862, "Diagnostic Procedure" .

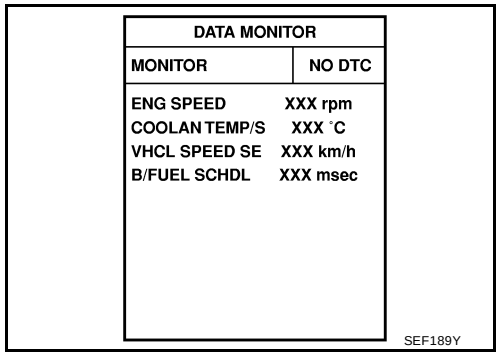

Overall Function Check

UBS0039C

Use this procedure to check the overall function of the heated oxygen sensor 2 circuit. During this check, a 1st trip DTC might not be confirmed.

WITH GST

1. Start engine and drive vehicle at a speed of more than 70 km/h (43 MPH) for 2 consecutive minutes.
2. Stop vehicle with engine running.
3. Set voltmeter probes between ECM terminal 88 [HO2S2 (B1) signal] or 90 [HO2S2 (B2) signal] and engine ground.
4. Check the voltage when revving up to 4,000 rpm under no load at least 10 times.
   (Depress and release accelerator pedal as soon as possible.)
   The voltage should be below 1.4V during this procedure.
5. If NG, go to EC-862, "Diagnostic Procedure" .

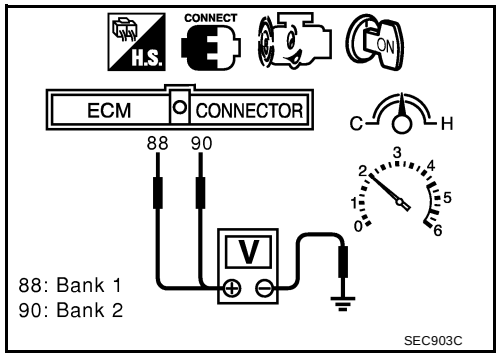

Wiring Diagram
BANK 1

UBS0039D

EC-O2S2B1-01

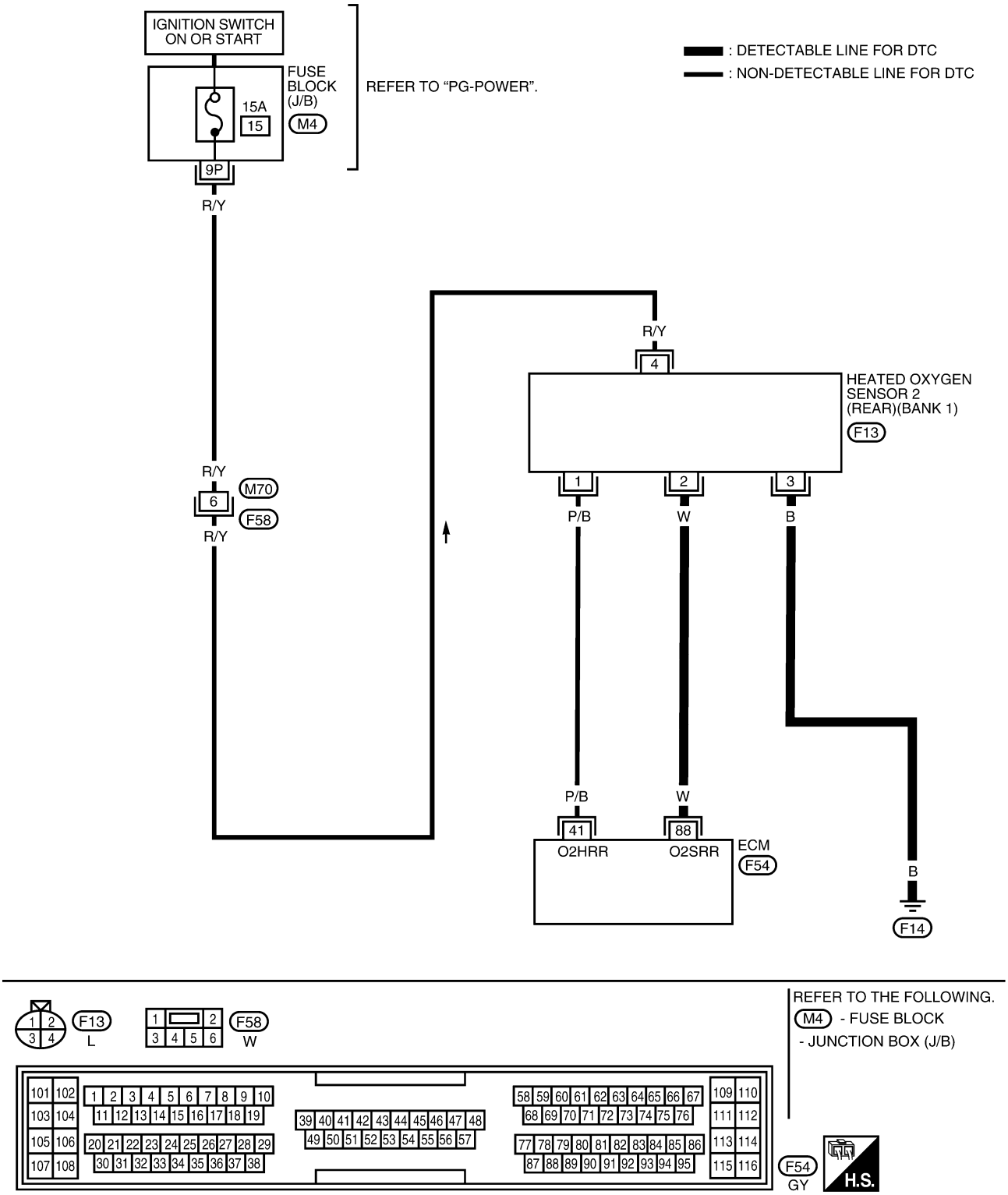

BBWA0058E

Specification data are reference values and are measured between each terminal and ground.

CAUTION:

Do not use ECM ground terminals when measuring input/output voltage. Doing so may result in damage to the ECM's transistor. Use a ground other than ECM terminals, such as the ground.

TERMINAL NO.	WIRE COLOR	ITEM	CONDITION	DATA (DC Voltage)
88	W	Heated oxygen sensor 2	**[Engine is running]** ● **Warm-up condition** ● Engine speed is 2,000 rpm.	0 - Approximately 1.0V

BANK 2

EC-O2S2B2-01

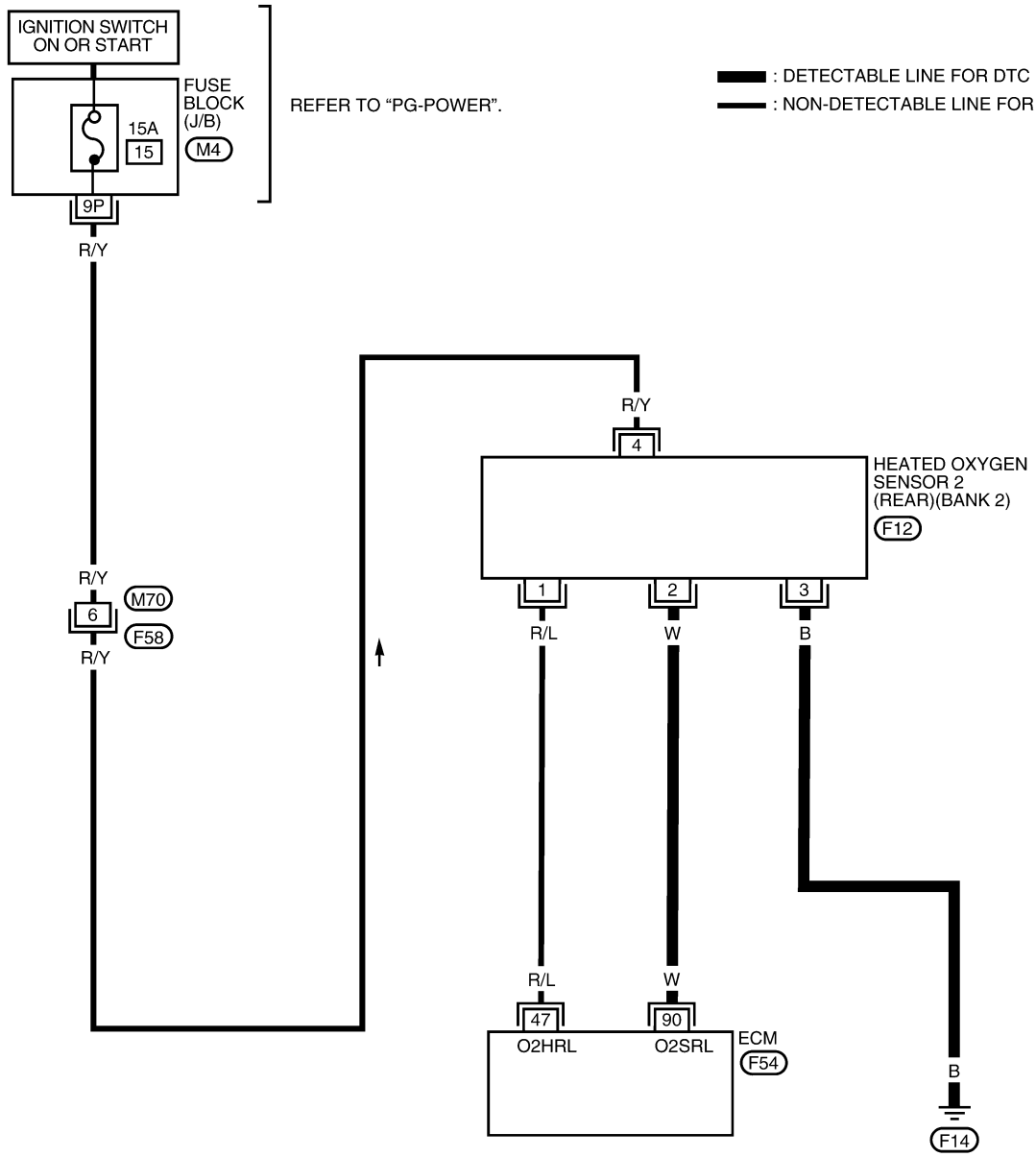

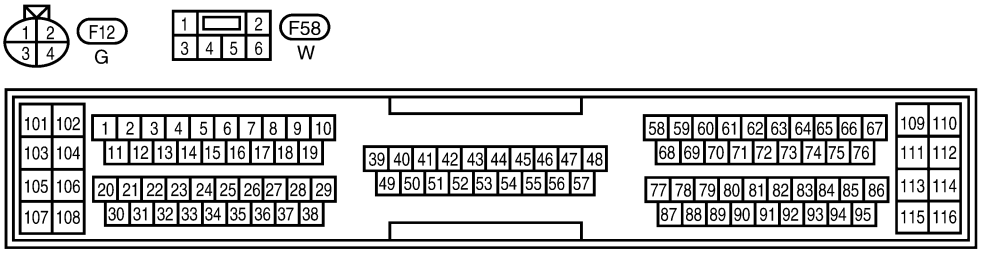

BBWA0059E

Specification data are reference values and are measured between each terminal and ground.

CAUTION:
Do not use ECM ground terminals when measuring input/output voltage. Doing so may result in damage to the ECM's transistor. Use a ground other than ECM terminals, such as the ground.

TERMINAL NO.	WIRE COLOR	ITEM	CONDITION	DATA (DC Voltage)
90	W	Heated oxygen sensor 2	**[Engine is running]** ● **Warm-up condition** ● Engine speed is 2,000 rpm.	0 - Approximately 1.0V

Diagnostic Procedure

UBS0039E

1. RETIGHTEN GROUND SCREWS

1. Turn ignition switch “OFF”.
2. Loosen and retighten engine ground screws.

>> GO TO 2.

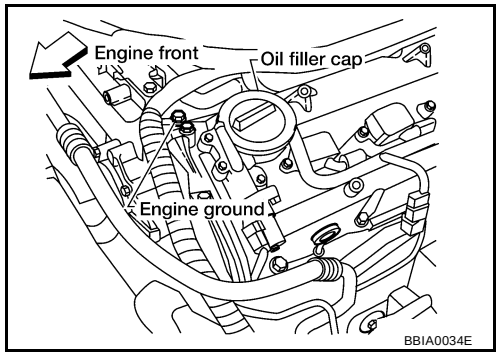

2. CLEAR THE SELF-LEARNING DATA

With CONSULT-II

1. Start engine and warm it up to normal operating temperature.
2. Select “SELF-LEARNING CONT” in “WORK SUPPORT” mode with CONSULT-II.
3. Clear the self-learning control coefficient by touching “CLEAR”.
4. Run engine for at least 10 minutes at idle speed.
   Is the 1st trip DTC P0172 or P0175 detected?
   Is it difficult to start engine?

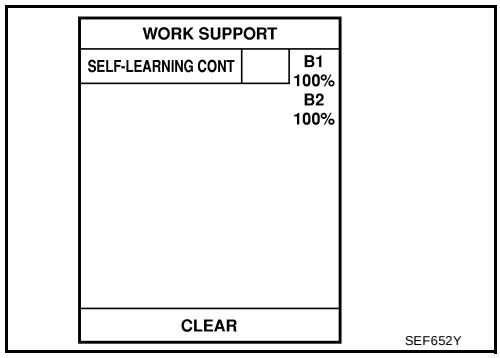

Without CONSULT-II

1. Start engine and warm it up to normal operating temperature.
2. Turn ignition switch “OFF”.
3. Disconnect mass air flow sensor harness connector, and restart and run engine for at least 5 seconds at idle speed.
4. Stop engine and reconnect mass air flow sensor harness connector.
5. Make sure DTC P0102 is displayed.
6. Erase the DTC memory. Refer to EC-687, "HOW TO ERASE EMISSION-RELATED DIAGNOSTIC INFORMATION" .
7. Make sure DTC P0000 is displayed.
8. Run engine for at least 10 minutes at idle speed.
   Is the 1st trip DTC P0172 o P0175 detected?
   Is it difficult to start engine?

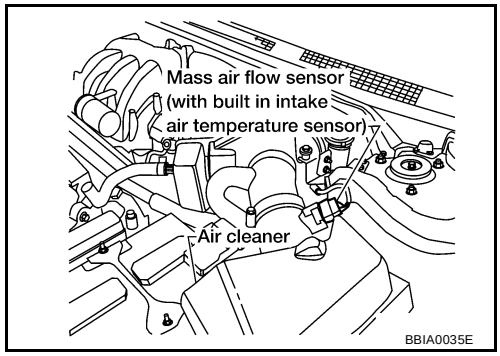

Yes or No

Yes >> Perform trouble diagnosis for DTC P0172 or P0175. Refer to EC-885 .
No >> GO TO 3.

3. CHECK HO2S2 GROUND CIRCUIT FOR OPEN AND SHORT

1. Turn ignition switch “OFF”.
2. Disconnect heated oxygen sensor 2 harness connector.
   Bank 1

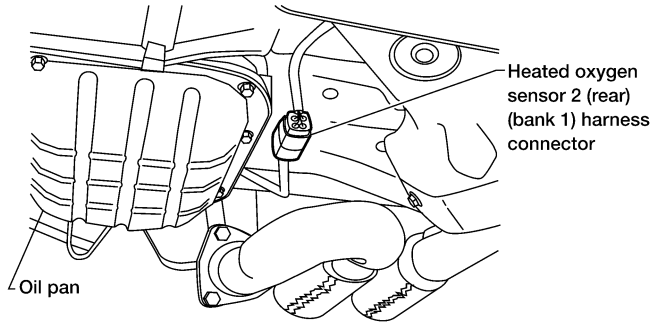

   Bank 2

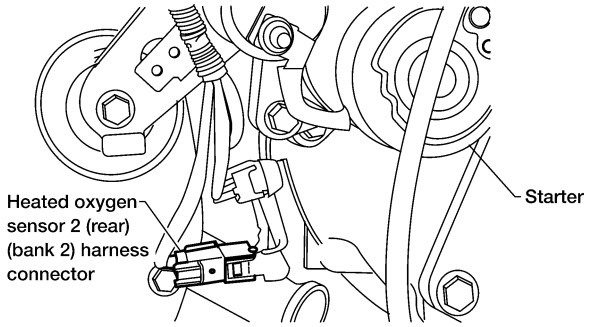

3. Check harness continuity between HO2S2 terminal 3 and engine ground.
   Refer to Wiring Diagram.

   Continuity should exist.

4. Also check harness for short to power.

OK or NG

OK >> GO TO 4.
NG >> Repair open circuit or short to power in harness or connectors.

4. CHECK HO2S2 INPUT SIGNAL CIRCUIT FOR OPEN AND SHORT

1. Disconnect ECM harness connector.
2. Check harness continuity between ECM terminal and HO2S2 terminal as follows. Refer to Wiring Diagram.

DTC	Terminals		Bank
	ECM	Sensor	
P0138	88	2	1
P0158	90	2	2

Continuity should exist.

3. Check harness continuity between the following terminals and ground. Refer to Wiring Diagram.

DTC	Terminals		Bank
	ECM	Sensor	
P0138	88	2	1
P0158	90	2	2

Continuity should not exist.

4. Also check harness for short to ground or short to power.

OK or NG

OK >> GO TO 5.
NG >> Repair open circuit or short to ground or short to power in harness or connectors.

5. CHECK HEATED OXYGEN SENSOR 2

Refer to EC-865, "Component Inspection" .

OK or NG

OK >> GO TO 6.
NG >> Replace malfunctioning heated oxygen sensor 2.

6. CHECK INTERMITTENT INCIDENT

Refer to EC-756, "TROUBLE DIAGNOSIS FOR INTERMITTENT INCIDENT" .

>> **INSPECTION END**

Component Inspection

UBS0039F

HEATED OXYGEN SENSOR 2

With CONSULT-II

1. Start engine and drive vehicle at a speed of more than 70 km/h (43 MPH) for 2 consecutive minutes.
2. Stop vehicle with engine running.
3. Select “FUEL INJECTION” in “ACTIVE TEST” mode, and select “HO2S2 (B1)/(B2)” as the monitor item with CONSULT-II.

ACTIVE TEST	
FUEL INJECTION	25 %
MONITOR	
ENG SPEED	XXX rpm
HO2S1 (B1)	XXX V
HO2S2 (B1)	XXX V
HO2S1 MNTR (B1)	RICH
HO2S2 MNTR (B1)	RICH

SEF662Y

4. Check “HO2S2 (B1)/(B2)” at idle speed when adjusting “FUEL INJECTION” to ±25%.

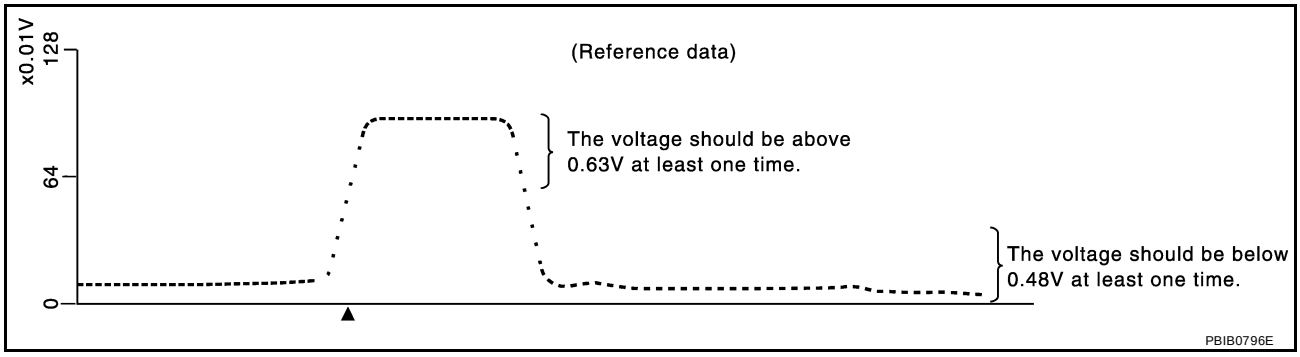

“HO2S2 (B1)/(B2)” should be above 0.63V at least once when the “FUEL INJECTION” is +25%.
“HO2S2 (B1)/(B2)” should be below 0.48V at least once when the “FUEL INJECTION” is –25%.

CAUTION:

- **Discard any heated oxygen sensor which has been dropped from a height of more than 0.5 m (19.7 in) onto a hard surface such as a concrete floor; use a new one.**
- **Before installing new oxygen sensor, clean exhaust system threads using Oxygen Sensor Thread Cleaner tool J-43897-18 or J-43897-12 and approved anti-seize lubricant.**

Without CONSULT-II

1. Start engine and drive vehicle at a speed of more than 70 km/h (43 MPH) for 2 consecutive minutes.
2. Stop vehicle with engine running.
3. Set voltmeter probes between ECM terminal 88 [HO2S2 (B1) signal] or 90 [HO2S2 (B2) signal] and engine ground.
4. Check the voltage when revving up to 4,000 rpm under no load at least 10 times.
   (Depress and release accelerator pedal as soon as possible.)
   The voltage should be above 0.63V at least once during this procedure.
   If the voltage is above 0.63V at step 4, step 5 is not necessary.
5. Keep vehicle at idling for 10 minutes, then check voltage. Or check the voltage when coasting from 80 km/h (50 MPH) in “D” position with “OD” OFF (A/T), 3rd gear position (M/T).
   The voltage should be below 0.48V at least once during this procedure.

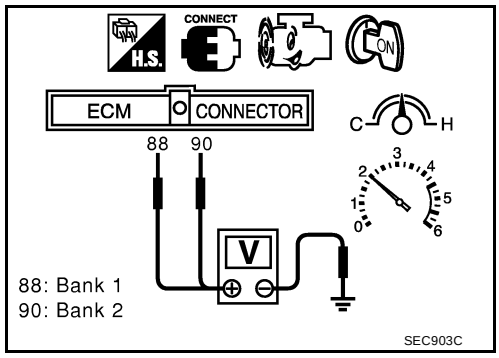

6. If NG, replace heated oxygen sensor 2.

CAUTION:

- **Discard any heated oxygen sensor which has been dropped from a height of more than 0.5 m (19.7 in) onto a hard surface such as a concrete floor; use a new one.**
- **Before installing new oxygen sensor, clean exhaust system threads using Oxygen Sensor Thread Cleaner tool J-43897-18 or J-43897-12 and approved anti-seize lubricant.**

Removal and Installation

UBS0039G

HEATED OXYGEN SENSOR 2

Refer to EX-6, "EXHAUST SYSTEM (VQ35DE)" .

DTC P0139, P0159 HO2S2

PFP:226A0

Component Description

UBS0039H

The heated oxygen sensor 2, after three way catalyst, monitors the oxygen level in the exhaust gas on each bank.
Even if switching characteristics of the heated oxygen sensor 1 are shifted, the air fuel ratio is controlled to stoichiometric, by the signal from the heated oxygen sensor 2.
This sensor is made of ceramic zirconia. The zirconia generates voltage from approximately 1V in richer conditions to 0V in leaner conditions.
Under normal conditions the heated oxygen sensor 2 is not used for engine control operation.

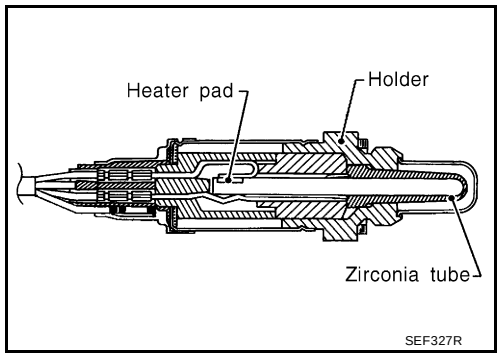

CONSULT-II Reference Value in Data Monitor Mode

UBS0039I

Specification data are reference values.

MONITOR ITEM	CONDITION		SPECIFICATION
HO2S2 (B1) HO2S2 (B2)	● Engine: After warming up	Revving engine from idle to 3,000 rpm quickly.	0 - 0.3V ←→ Approx. 0.6 - 1.0V
HO2S2 MNTR (B1) HO2S2 MNTR (B2)	● Engine: After warming up	Revving engine from idle to 3,000 rpm quickly.	LEAN ←→ RICH

On Board Diagnosis Logic

UBS0039J

The heated oxygen sensor 2 has a much longer switching time between rich and lean than the heated oxygen sensor 1. The oxygen storage capacity before the three way catalyst causes the longer switching time. To judge the malfunctions of heated oxygen sensor 2, ECM monitors whether the switching response of the sensor's voltage is faster than specified during the various driving condition such as fuel-cut.

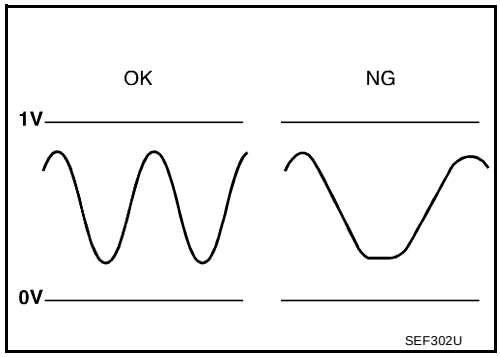

DTC No.	Trouble diagnosis name	DTC detecting condition	Possible cause
P0139 0139 (Bank 1)	Heated oxygen sensor 2 circuit slow response	It takes more time for the sensor to respond between rich and lean than the specified time.	● Harness or connectors (The sensor circuit is open or shorted) ● Heated oxygen sensor 2 ● Fuel pressure ● Injectors ● Intake air leaks
P0159 0159 (Bank 2)			

DTC Confirmation Procedure

UBS0039K

NOTE:
If “DTC Confirmation Procedure” has been previously conducted, always turn ignition switch “OFF” and wait at least 10 seconds before conducting the next test.
TESTING CONDITION:
Open engine hood before conducting following procedure.

WITH CONSULT-II

1. Start engine and warm it up to normal operating temperature.
2. Turn ignition switch “OFF” and wait at least 10 seconds.
3. Turn ignition switch "ON".
4. Select "DATA MONITOR" mode with CONSULT-II.

5. Make sure that "COOLAN TEMP/S" indicates more than 70°C (158°F).
6. Select “HO2S2 (B1) P0139” or “HO2S2 (B2) P0159” of “HO2S2” in “DTC WORK SUPPORT” mode with CONSULT-II.
7. Start engine and following the instruction of CONSULT-II.

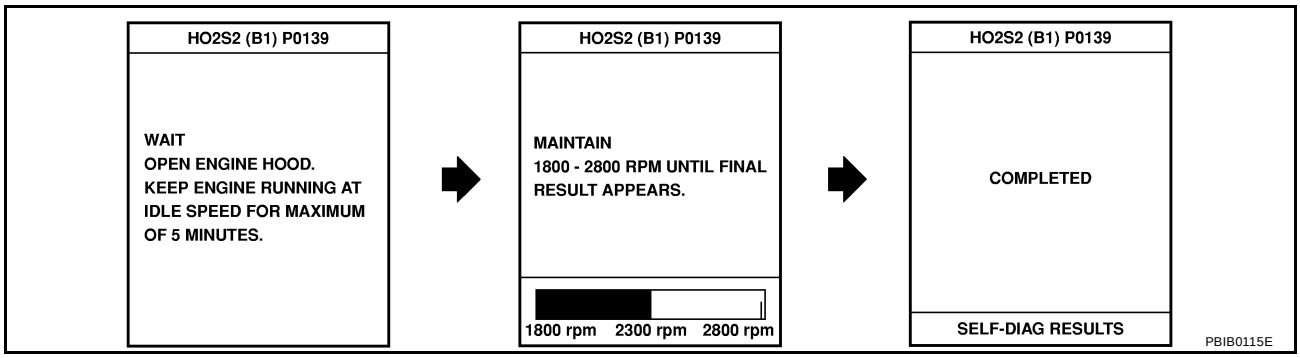

8. Make sure that “OK” is displayed after touching “SELF-DIAG RESULTS”.
   If "NG" is displayed, refer to EC-872, "Diagnostic Procedure" .
   If "CAN NOT BE DIAGNOSED" is displayed, perform the following.

a. Stop engine and cool down until "COOLAN TEMP/S" indicates less than 70°C (158°F).
b. Turn ignition switch "ON".
c. Select "DATA MONITOR" mode with CONSULT-II.
d. Start engine.
e. Return to step 6 again when the "COOLAN TEMP/S" reaches to 70°C (158°F).

Overall Function Check

UBS0039L

Use this procedure to check the overall function of the heated oxygen sensor 2 circuit. During this check, a 1st trip DTC might not be confirmed.

WITH GST

1. Start engine and drive vehicle at a speed of more than 70 km/h (43 MPH) for 2 consecutive minutes.
2. Stop vehicle with engine running.
3. Set voltmeter probes between ECM terminal 88 [HO2S2 (B1) signal] or 90 [HO2S2 (B2) signal] and engine ground.
4. Check the voltage when revving up to 4,000 rpm under no load at least 10 times.
   (Depress and release accelerator pedal as soon as possible.)
   The voltage should change at more than 0.06V for 1 second during this procedure.
   If the voltage can be confirmed in step 4, step 5 is not necessary.
5. Keep vehicle at idling for 10 minutes, then check the voltage. Or check the voltage when coasting from 80 km/h (50 MPH) in “D” position with “OD” OFF (A/T), 3rd gear position (M/T).
   The voltage should change at more than 0.06V for 1 second during this procedure.

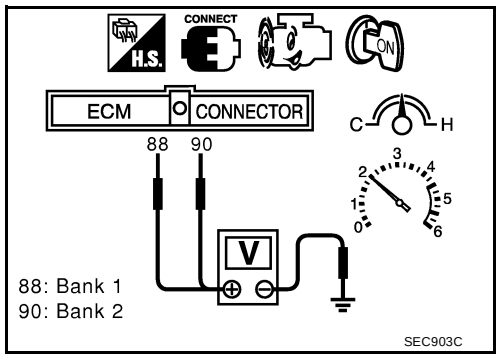

6. If NG, go to EC-872, "Diagnostic Procedure" .

Wiring Diagram
BANK 1

UBS0039M

EC-O2S2B1-01

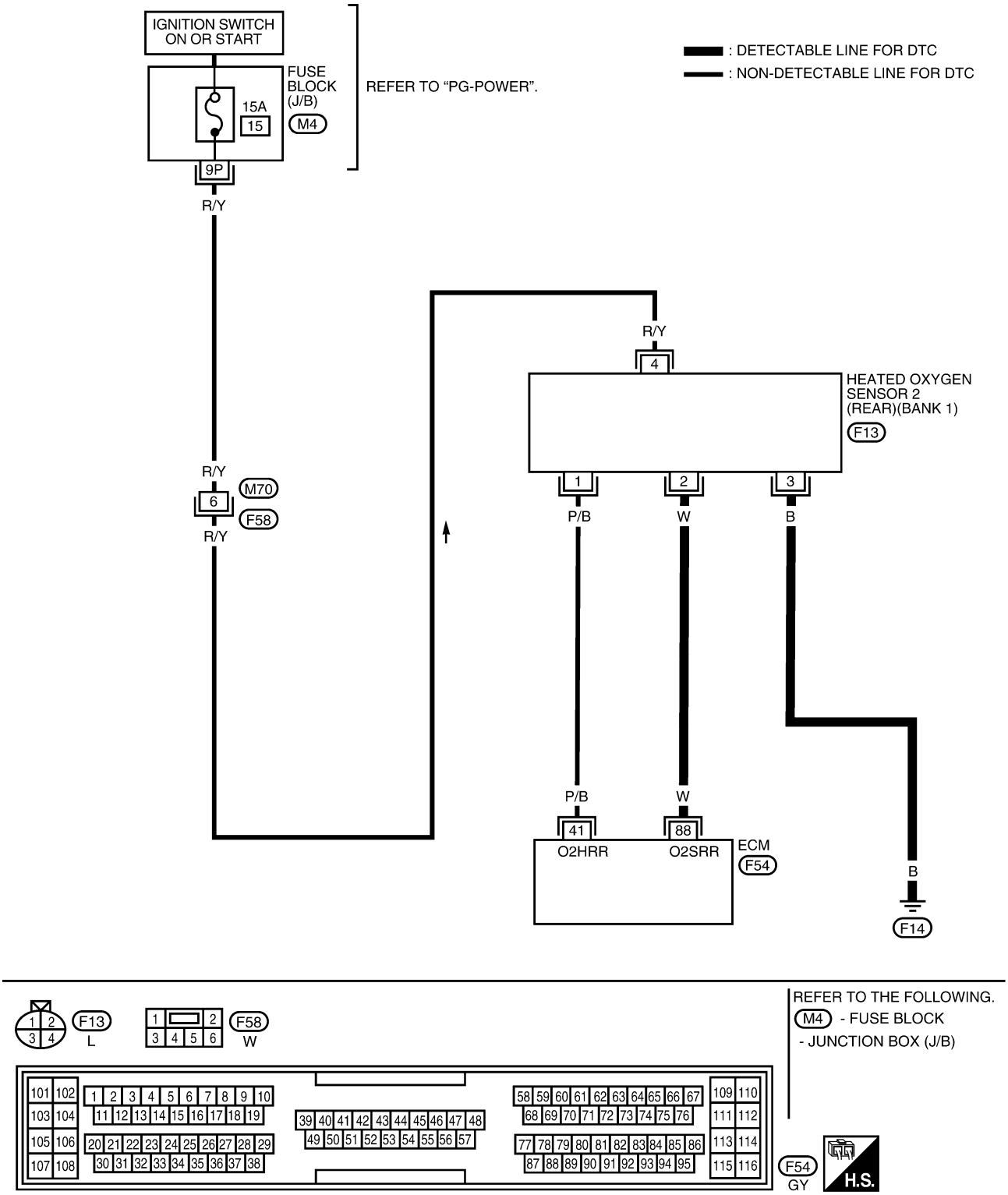

BBWA0058E

Specification data are reference values and are measured between each terminal and ground.

CAUTION:

Do not use ECM ground terminals when measuring input/output voltage. Doing so may result in damage to the ECM's transistor. Use a ground other than ECM terminals, such as the ground.

TERMINAL NO.	WIRE COLOR	ITEM	CONDITION	DATA (DC Voltage)
88	W	Heated oxygen sensor 2	**[Engine is running]** ● **Warm-up condition** ● Engine speed is 2,000 rpm.	0 - Approximately 1.0V

BANK 2

EC-O2S2B2-01

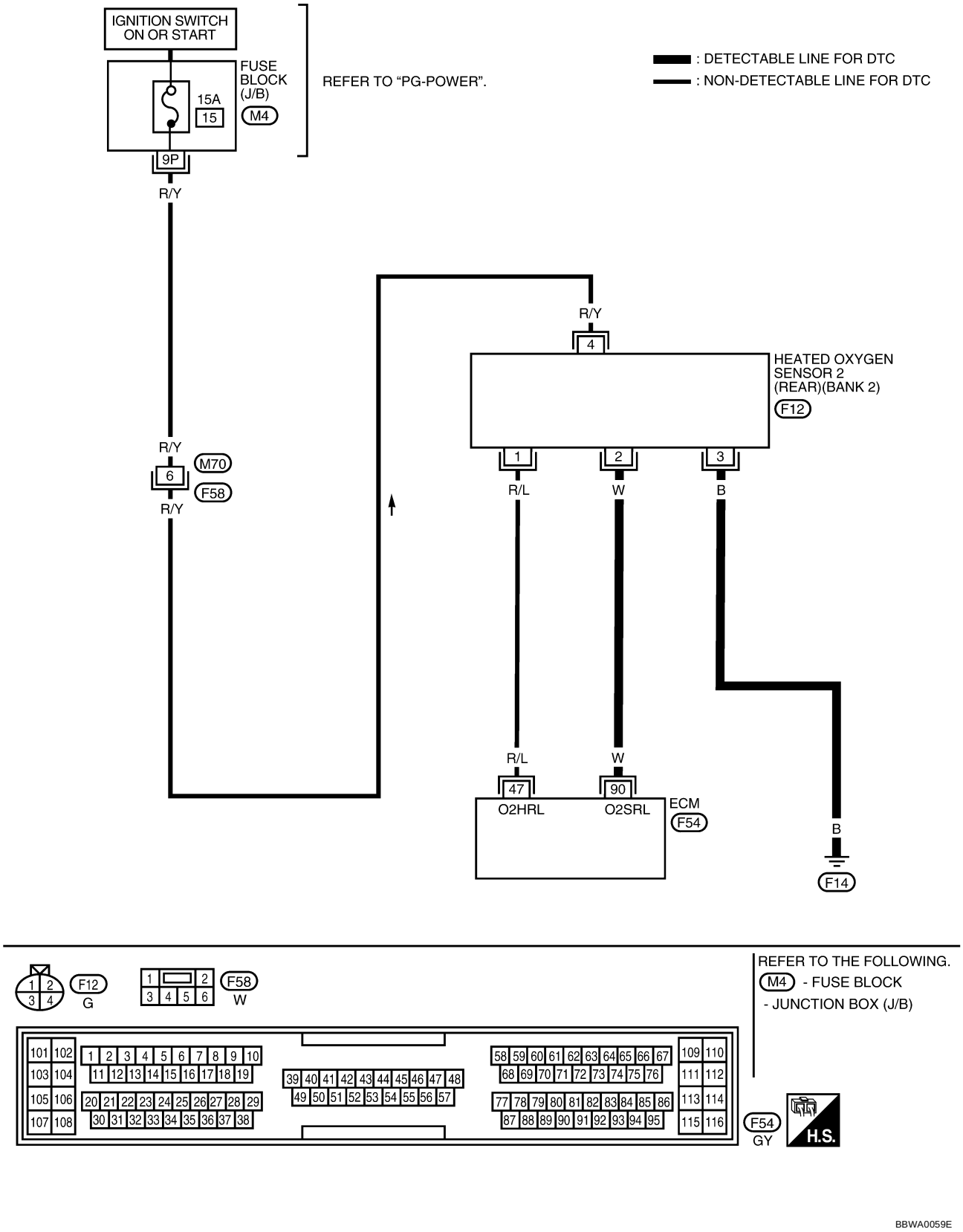

Specification data are reference values and are measured between each terminal and ground.

CAUTION:
Do not use ECM ground terminals when measuring input/output voltage. Doing so may result in damage to the ECM's transistor. Use a ground other than ECM terminals, such as the ground.

TERMINAL NO.	WIRE COLOR	ITEM	CONDITION	DATA (DC Voltage)
90	W	Heated oxygen sensor 2	**[Engine is running]** ● **Warm-up condition** ● Engine speed is 2,000 rpm.	0 - Approximately 1.0V

Diagnostic Procedure

UBS0039N

1. RETIGHTEN GROUND SCREWS

1. Turn ignition switch “OFF”.
2. Loosen and retighten engine ground screws.

>> GO TO 2.

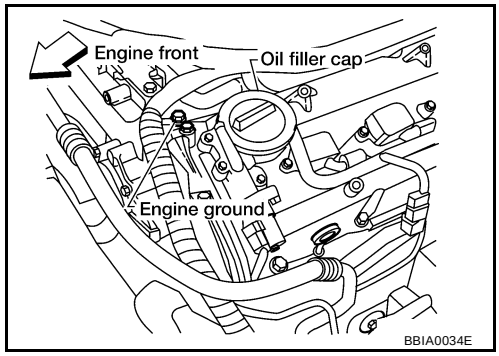

2. CLEAR THE SELF-LEARNING DATA

With CONSULT-II

1. Start engine and warm it up to normal operating temperature.
2. Select “SELF-LEARNING CONT” in “WORK SUPPORT” mode with CONSULT-II.
3. Clear the self-learning control coefficient by touching “CLEAR”.
4. Run engine for at least 10 minutes at idle speed.
   Is the 1st trip DTC P0171, P0172, P0174 or P0175 detected?
   Is it difficult to start engine?

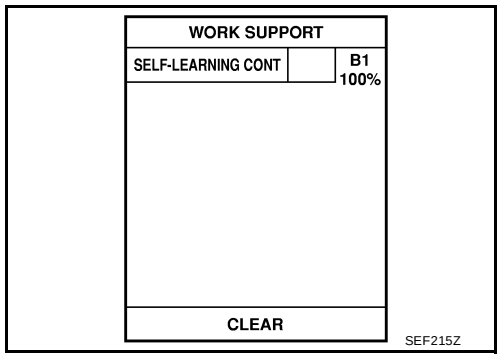

Without CONSULT-II

1. Start engine and warm it up to normal operating temperature.
2. Turn ignition switch “OFF”.
3. Disconnect mass air flow sensor harness connector, and restart and run engine for at least 5 seconds at idle speed.
4. Stop engine and reconnect mass air flow sensor harness connector.
5. Make sure DTC P0102 is displayed.
6. Erase the DTC memory. Refer to EC-687, "HOW TO ERASE EMISSION-RELATED DIAGNOSTIC INFORMATION" .
7. Make sure DTC P0000 is displayed.
8. Run engine for at least 10 minutes at idle speed.
   Is the 1st trip DTC P0171, P0172, P0174 or P0175 detected?
   Is it difficult to start engine?

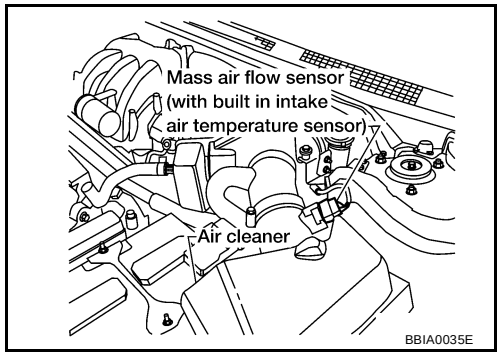

Yes or No

Yes >> Perform trouble diagnosis for DTC P0171, P0174 or P0172, P0175. Refer to EC-877 or EC-885 .
No >> GO TO 3.

3. CHECK HO2S2 GROUND CIRCUIT FOR OPEN AND SHORT

1. Turn ignition switch “OFF”.
2. Disconnect heated oxygen sensor 2 harness connector.
   Bank 1

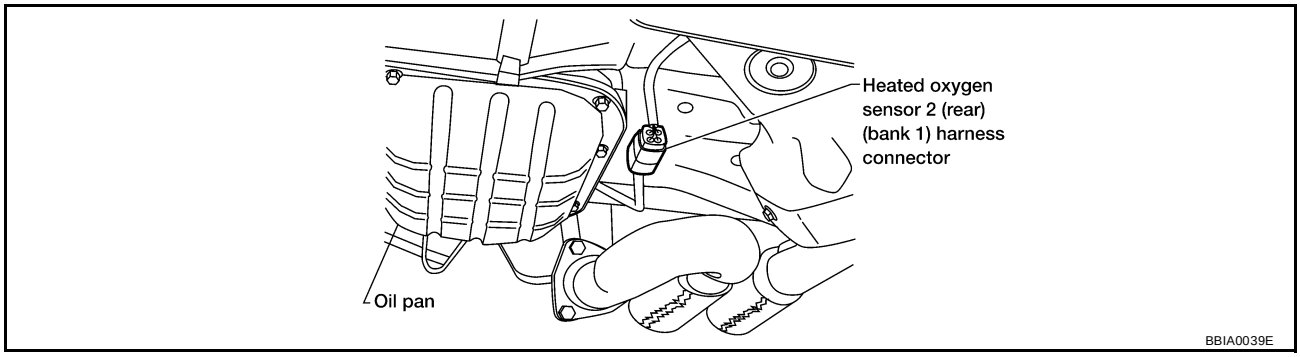

   Bank 2

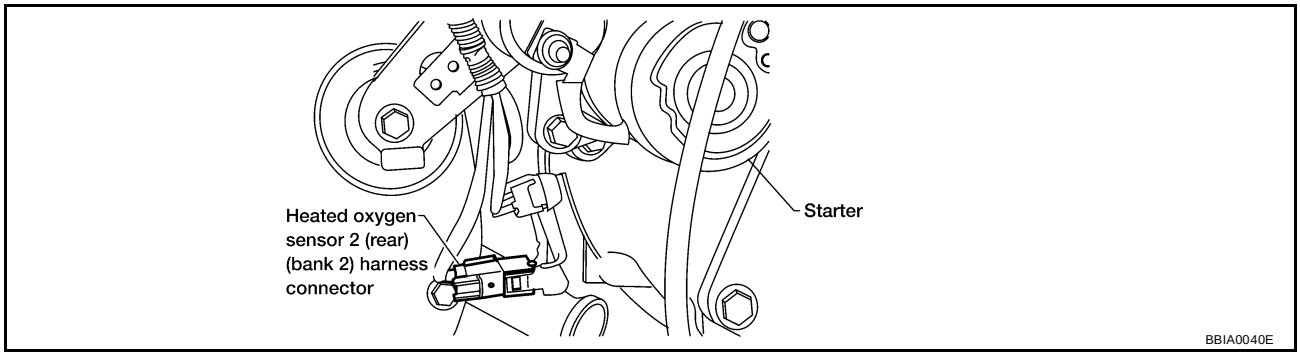

3. Check harness continuity between HO2S2 terminal 3 and engine ground.
   Refer to Wiring Diagram.

   Continuity should exist.

4. Also check harness for short to power.

OK or NG

OK >> GO TO 4.
NG >> Repair open circuit or short to power in harness or connectors.

4. CHECK HO2S2 INPUT SIGNAL CIRCUIT FOR OPEN AND SHORT

1. Disconnect ECM harness connector.
2. Check harness continuity between ECM terminal and HO2S2 terminal as follows. Refer to Wiring Diagram.

DTC	Terminals		Bank
	ECM	Sensor	
P0138	88	2	1
P0158	90	2	2

Continuity should exist.

3. Check harness continuity between the following terminals and ground. Refer to Wiring Diagram.

DTC	Terminals		Bank
	ECM	Sensor	
P0138	88	2	1
P0158	90	2	2

Continuity should not exist.

4. Also check harness for short to ground or short to power.

OK or NG

OK >> GO TO 5.
NG >> Repair open circuit or short to ground or short to power in harness or connectors.

5. CHECK HEATED OXYGEN SENSOR 2

Refer to EC-875, "Component Inspection" .

OK or NG

OK >> GO TO 6.
NG >> Replace malfunctioning heated oxygen sensor 2.

6. CHECK INTERMITTENT INCIDENT

Refer to EC-756, "TROUBLE DIAGNOSIS FOR INTERMITTENT INCIDENT" .

>> **INSPECTION END**

Component Inspection

UBS0039O

HEATED OXYGEN SENSOR 2

With CONSULT-II

1. Start engine and drive vehicle at a speed of more than 70 km/h (43 MPH) for 2 consecutive minutes.
2. Stop vehicle with engine running.
3. Select “FUEL INJECTION” in “ACTIVE TEST” mode, and select “HO2S2 (B1)/(B2)” as the monitor item with CONSULT-II.

ACTIVE TEST	
FUEL INJECTION	25 %
MONITOR	
ENG SPEED	XXX rpm
HO2S1 (B1)	XXX V
HO2S2 (B1)	XXX V
HO2S1 MNTR (B1)	RICH
HO2S2 MNTR (B1)	RICH

SEF662Y

4. Check “HO2S2 (B1)/(B2)” at idle speed when adjusting “FUEL INJECTION” to ±25%.

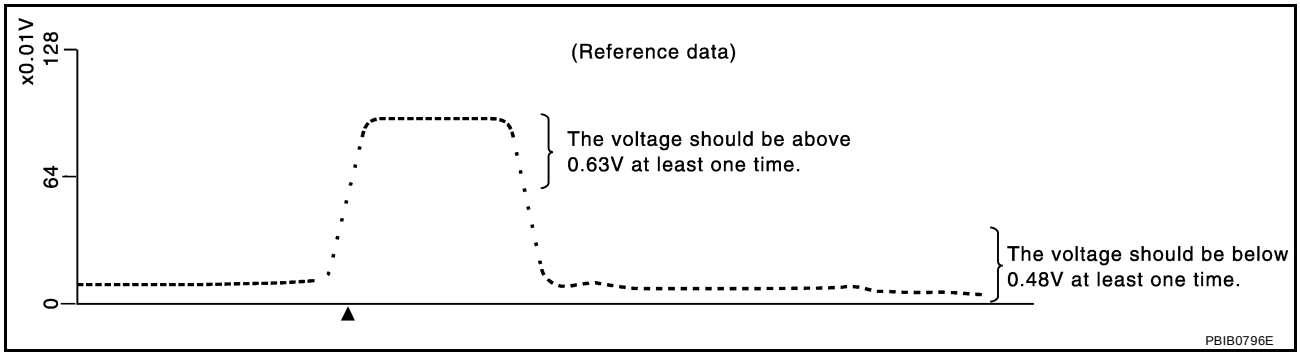

“HO2S2 (B1)/(B2)” should be above 0.63V at least once when the “FUEL INJECTION” is +25%.
“HO2S2 (B1)/(B2)” should be below 0.48V at least once when the “FUEL INJECTION” is –25%.

CAUTION:

- **Discard any heated oxygen sensor which has been dropped from a height of more than 0.5 m (19.7 in) onto a hard surface such as a concrete floor; use a new one.**
- **Before installing new oxygen sensor, clean exhaust system threads using Oxygen Sensor Thread Cleaner tool J-43897-18 or J-43897-12 and approved anti-seize lubricant.**

Without CONSULT-II

1. Start engine and drive vehicle at a speed of more than 70 km/h (43 MPH) for 2 consecutive minutes.
2. Stop vehicle with engine running.
3. Set voltmeter probes between ECM terminal 88 [HO2S2 (B1) signal] or 90 [HO2S2 (B2) signal] and engine ground.
4. Check the voltage when revving up to 4,000 rpm under no load at least 10 times.
   (Depress and release accelerator pedal as soon as possible.)
   The voltage should be above 0.63V at least once during this procedure.
   If the voltage is above 0.63V at step 4, step 5 is not necessary.
5. Keep vehicle at idling for 10 minutes, then check voltage. Or check the voltage when coasting from 80 km/h (50 MPH) in “D” position with “OD” OFF (A/T), 3rd gear position (M/T).
   The voltage should be below 0.48V at least once during this procedure.

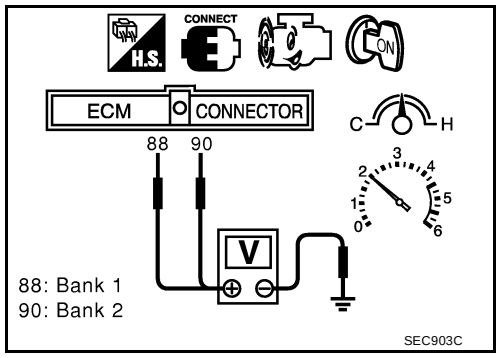

6. If NG, replace heated oxygen sensor 2.

CAUTION:

- **Discard any heated oxygen sensor which has been dropped from a height of more than 0.5 m (19.7 in) onto a hard surface such as a concrete floor; use a new one.**
- **Before installing new oxygen sensor, clean exhaust system threads using Oxygen Sensor Thread Cleaner tool J-43897-18 or J-43897-12 and approved anti-seize lubricant.**

Removal and Installation

UBS0039P

HEATED OXYGEN SENSOR 2

Refer to EX-6, "EXHAUST SYSTEM (VQ35DE)" .

DTC P0171, P0174 FUEL INJECTION SYSTEM FUNCTION

PFP:16600

On Board Diagnosis Logic

UBS0039Q

With the Air/Fuel Mixture Ratio Self-Learning Control, the actual mixture ratio can be brought closely to the theoretical mixture ratio based on the mixture ratio feedback signal from the heated oxygen sensors 1. The ECM calculates the necessary compensation to correct the offset between the actual and the theoretical ratios.
In case the amount of the compensation value is extremely large (The actual mixture ratio is too lean.), the ECM judges the condition as the fuel injection system malfunction and light up the MIL (2 trip detection logic).

Sensor	Input Signal to ECM	ECM function	Actuator
Heated oxygen sensors 1	Density of oxygen in exhaust gas (Mixture ratio feedback signal)	Fuel injection control	Fuel injectors

DTC No.	Trouble diagnosis name	DTC detecting condition	Possible cause
P0171 0171 (Bank 1)	Fuel injection system too lean	● Fuel injection system does not operate properly. ● The amount of mixture ratio compensation is too large. (The mixture ratio is too lean.)	● Intake air leaks ● Heated oxygen sensor 1 ● Injectors ● Exhaust gas leaks ● Incorrect fuel pressure ● Lack of fuel ● Mass air flow sensor ● Incorrect PCV hose connection
P0174 0174 (Bank 2)			

DTC Confirmation Procedure

UBS0039R

NOTE:
If “DTC Confirmation Procedure” has been previously conducted, always turn ignition switch “OFF” and wait at least 10 seconds before conducting the next test.

WITH CONSULT-II

1. Start engine and warm it up to normal operating temperature.
2. Turn ignition switch “OFF” and wait at least 10 seconds.
3. Turn ignition switch “ON” and select “SELF-LEARNING CONT” in “WORK SUPPORT” mode with CONSULT-II.
4. Clear the self-learning control coefficient by touching “CLEAR”.
5. Select “DATA MONITOR” mode with CONSULT-II.
6. Start engine again and let it idle for at least 10 minutes.
   The 1st trip DTC P0171 or P0174 should be detected at this stage, if a malfunction exists. If so, go to “Diagnostic Procedure”, EC-881 .
7. If it is difficult to start engine at step 6, the fuel injection system has a malfunction, too.
8. Crank engine while depressing accelerator pedal. If engine starts, go to “Diagnostic Procedure”, EC-881 . If engine does not start, check exhaust and intake air leak visually.

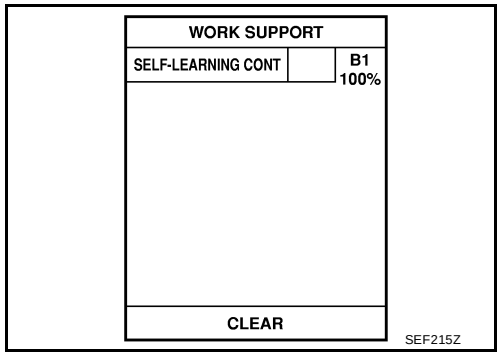

WITH GST

1. Start engine and warm it up to normal operating temperature.
2. Turn ignition switch “OFF” and wait at least 10 seconds.

3. Disconnect mass air flow sensor harness connector. Then restart and run engine for at least 5 seconds at idle speed.
4. Stop engine and reconnect mass air flow sensor harness connector.
5. Select “MODE 3” with GST. Make sure DTC P0102 is detected.
6. Select “MODE 4” with GST and erase the DTC P0102.
7. Start engine again and let it idle for at least 10 minutes.
8. Select “MODE 7” with GST. The 1st trip DTC P0171 or P0174 should be detected at this stage, if a malfunction exists. If so, go to “Diagnostic Procedure”, EC-881 .
9. If it is difficult to start engine at step 7, the fuel injection system has a malfunction.
10. Crank engine while depressing accelerator pedal. If engine starts, go to “Diagnostic Procedure”, EC-881 . If engine does not start, check exhaust and intake air leak visually.

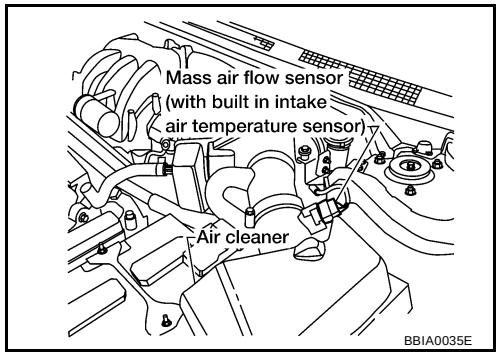

Wiring Diagram
BANK 1

UBS0039S

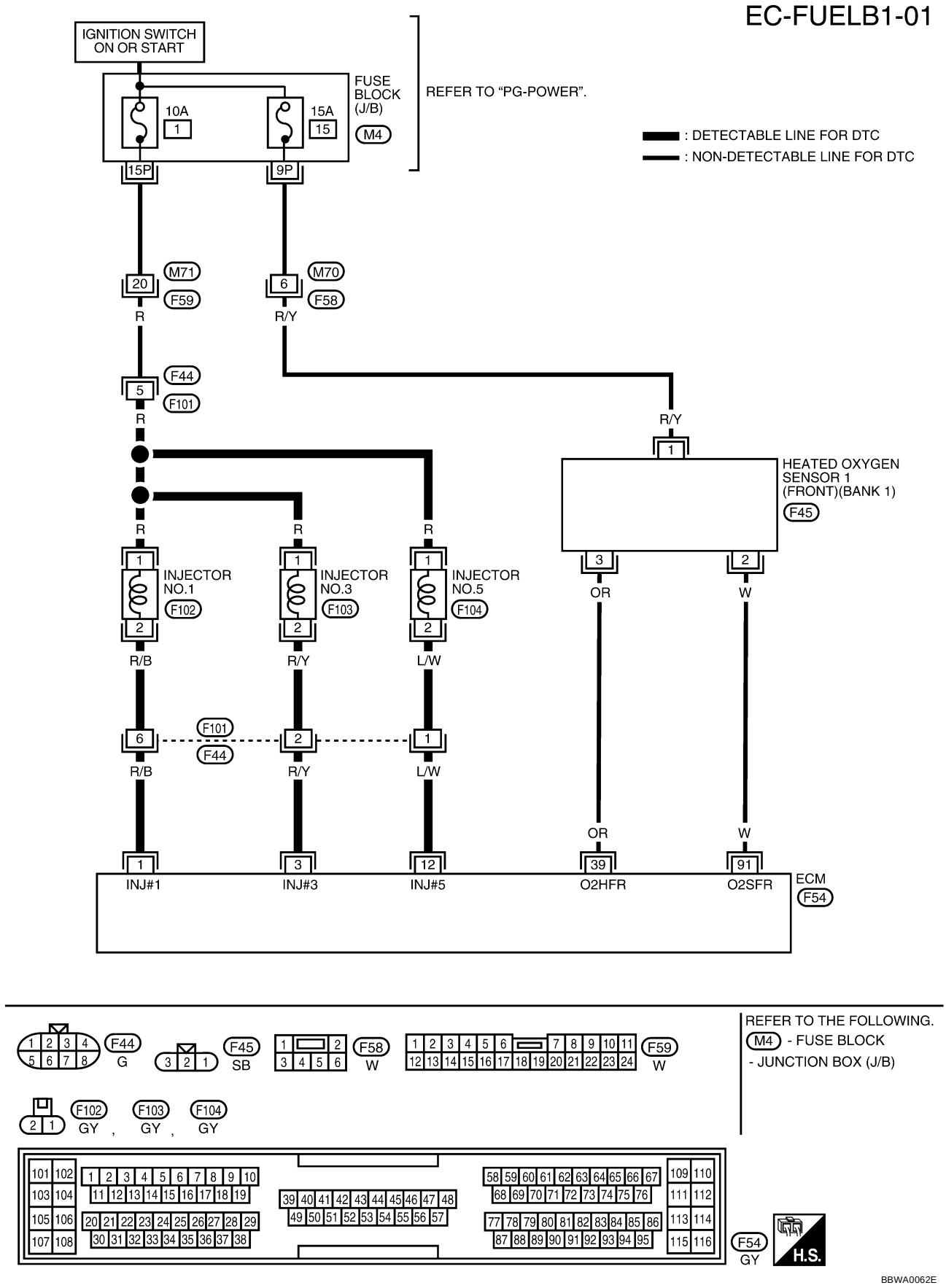

BBWA0062E

BANK 2

EC-FUELB2-01

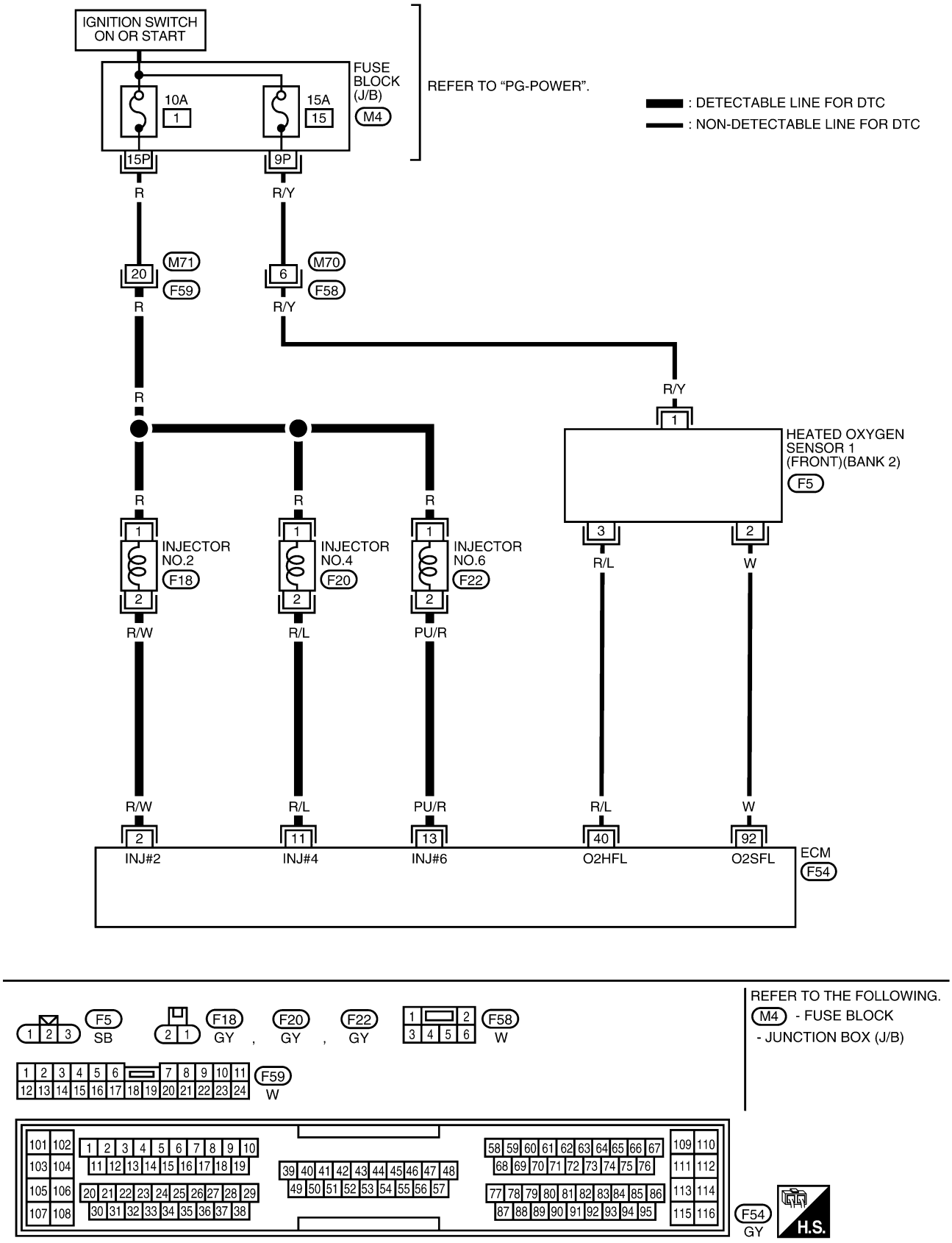

Diagnostic Procedure

UBS0039T

1. CHECK EXHAUST AIR LEAK

1. Start engine and run it at idle.
2. Listen for an exhaust air leak before three way catalyst.

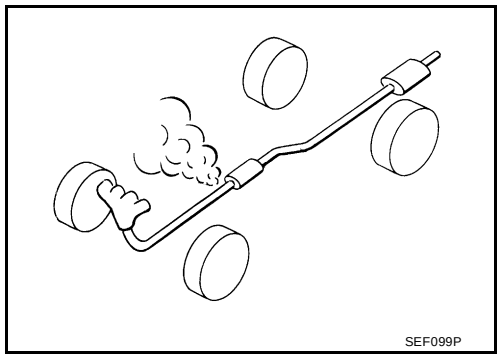

OK or NG

OK >> GO TO 2.
NG >> Repair or replace.

2. CHECK FOR INTAKE AIR LEAK

1. Listen for an intake air leak after the mass air flow sensor.
2. Check PCV hose connection.

OK or NG

OK >> GO TO 3.
NG >> Repair or replace.

3. CHECK HEATED OXYGEN SENSOR 1 CIRCUIT FOR OPEN AND SHORT

1. Turn ignition switch “OFF”.
2. Disconnect corresponding heated oxygen sensor 1 (HO2S1) harness connector.
3. Disconnect ECM harness connector.
4. Check harness continuity between ECM terminal and HO2S1 terminal as follows.
   Refer to Wiring Diagram.

DTC	Terminals		Bank
	ECM	Sensor	
P0171	91	1	1
P0174	92	1	2

Continuity should exist.

5. Check harness continuity between the following terminals and ground.
   Refer to Wiring Diagram.

DTC	Terminals		Bank
	ECM	Sensor	
P0171	91	1	1
P0174	92	1	2

Continuity should not exist.

6. Also check harness for short to power.

OK or NG

OK >> GO TO 4.
NG >> Repair open circuit or short to ground or short to power in harness or connectors.

4. CHECK FUEL PRESSURE

1. Release fuel pressure to zero. Refer to EC-671, "FUEL PRESSURE RELEASE" .
2. Install fuel pressure gauge and check fuel pressure. Refer to EC-672, "FUEL PRESSURE CHECK" .

At idling: 350 kPa (3.7 kg/cm^2 , 51 psi)

OK or NG

OK >> GO TO 6.
NG >> GO TO 5.

5. DETECT MALFUNCTIONING PART

Check the following.

- Fuel pump and circuit (Refer toEC-1240 .)
- Fuel pressure regulator (Refer toEC-672 .)
- Fuel lines (Refer to EC-1116, "Wiring Diagram" .)
- Fuel filter for clogging

>> Repair or replace.

6. CHECK MASS AIR FLOW SENSOR

With CONSULT-II

1. Install all removed parts.
2. Check “MASS AIR FLOW” in “DATA MONITOR” mode with CONSULT-II.

2.0 - 6.0 g·m/sec: at idling
7.0 - 20.0 g·m/sec: at 2,500 rpm

With GST

1. Install all removed parts.
2. Check mass air flow sensor signal in MODE 1 with GST.

2.0 - 6.0 g·m/sec: at idling
7.0 - 20.0 g·m/sec: at 2,500 rpm

OK or NG

OK >> GO TO 7.
NG >> Check connectors for rusted terminals or loose connections in the mass air flow sensor circuit or engine grounds. Refer to EC-790, "DTC P0101 MAF SENSOR" .

7. CHECK FUNCTION OF INJECTORS

With CONSULT-II

1. Start engine.
2. Perform “POWER BALANCE” in “ACTIVE TEST” mode with CONSULT-II.
3. Make sure that each circuit produces a momentary engine speed drop.

ACTIVE TEST	
POWER BALANCE	
MONITOR	
ENG SPEED	XXX rpm
MAS A/F SE-B1	XXX V

PBIB0133E

Without CONSULT-II

1. Start engine.
2. Listen to each injector operating sound.

Clicking noise should be heard.

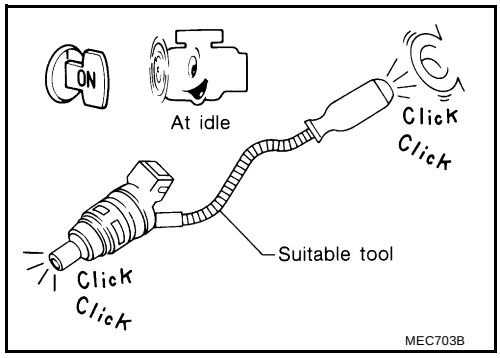

MEC703B

OK or NG

OK >> GO TO 8.
NG >> Perform trouble diagnosis for “INJECTORS”, EC-1230 .

8. CHECK INJECTOR

1. Confirm that the engine is cooled down and there are no fire hazards near the vehicle.
2. Turn ignition switch “OFF”.
3. Disconnect injector harness connectors on bank 2 (for DTC P0171), bank 1 (for DTC P0174).
4. Remove injector gallery assembly. Refer to EM-129, "FUEL INJECTOR AND FUEL TUBE" .
   Keep fuel hose and all injectors connected to injector gallery.
   The injector harness connectors on bank 1 (for DTC P0171), bank 2 (for DTC P0174) should remain connected.
5. Disconnect all ignition coil harness connectors.
6. Prepare pans or saucers under each injector.
7. Crank engine for about 3 seconds. Make sure that fuel sprays out from injectors.

Fuel should be sprayed evenly for each injector.

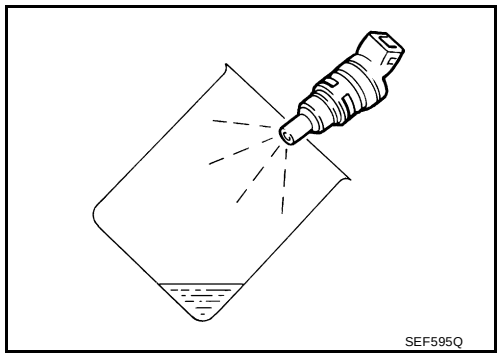
SEF595Q

OK or NG

OK >> GO TO 9.
NG >> Replace injectors from which fuel does not spray out. Always replace O-ring with new ones.

9. CHECK INTERMITTENT INCIDENT

Refer toEC-756, "TROUBLE DIAGNOSIS FOR INTERMITTENT INCIDENT" .

>> **INSPECTION END**

DTC P0172, P0175 FUEL INJECTION SYSTEM FUNCTION

PFP:16600

On Board Diagnosis Logic

UBS0039U

With the Air/Fuel Mixture Ratio Self-Learning Control, the actual mixture ratio can be brought closely to the theoretical mixture ratio based on the mixture ratio feedback signal from the heated oxygen sensors 1. The ECM calculates the necessary compensation to correct the offset between the actual and the theoretical ratios.
In case the amount of the compensation value is extremely large (The actual mixture ratio is too rich.), the ECM judges the condition as the fuel injection system malfunction and light up the MIL (2 trip detection logic).

Sensor	Input Signal to ECM	ECM function	Actuator
Heated oxygen sensors 1	Density of oxygen in exhaust gas (Mixture ratio feedback signal)	Fuel injection control	Fuel injectors

DTC No.	Trouble diagnosis name	DTC detecting condition	Possible cause
P0172 0172 (Bank 1)	Fuel injection system too rich	● Fuel injection system does not operate properly. ● The amount of mixture ratio compensation is too large. (The mixture ratio is too rich.)	● Heated oxygen sensor 1 ● Injectors ● Exhaust gas leaks ● Incorrect fuel pressure ● Mass air flow sensor
P0175 0175 (Bank 2)			

DTC Confirmation Procedure

UBS0039V

NOTE:
If “DTC Confirmation Procedure” has been previously conducted, always turn ignition switch “OFF” and wait at least 10 seconds before conducting the next test.

WITH CONSULT-II

1. Start engine and warm it up to normal operating temperature.
2. Turn ignition switch “OFF” and wait at least 10 seconds.
3. Turn ignition switch “ON” and select “SELF-LEARNING CONT” in “WORK SUPPORT” mode with CONSULT-II.
4. Clear the self-learning control coefficient by touching “CLEAR”.
5. Select “DATA MONITOR” mode with CONSULT-II.
6. Start engine again and let it idle for at least 10 minutes.
   The 1st trip DTC P0172, P0175 should be detected at this stage, if a malfunction exists. If so, go to "Diagnostic Procedure", EC-889 .
7. If it is difficult to start engine at step 6, the fuel injection system has a malfunction, too.
8. Crank engine while depressing accelerator pedal.
   If engine starts, go to “Diagnostic Procedure”, EC-889 . If engine does not start, remove ignition plugs and check for fouling, etc.

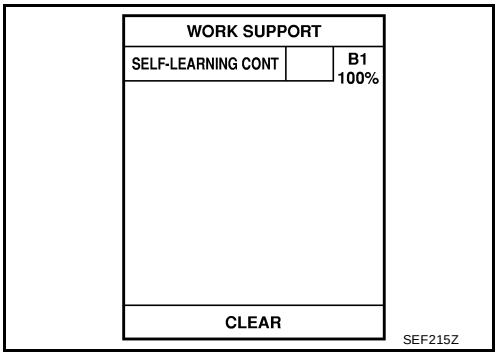

WITH GST

1. Start engine and warm it up to normal operating temperature.
2. Turn ignition switch “OFF” and wait at least 10 seconds.

3. Disconnect mass air flow sensor harness connector. Then restart and run engine for at least 5 seconds at idle speed.
4. Stop engine and reconnect mass air flow sensor harness connector.
5. Select “MODE 3” with GST. Make sure DTC P0102 is detected.
6. Select “MODE 4” with GST and erase the DTC P0102.
7. Start engine again and let it idle for at least 10 minutes.
8. Select “MODE 7” with GST. The 1st trip DTC P0172 or P0175 should be detected at this stage, if a malfunction exists. If so, go to “Diagnostic Procedure”, EC-889 .
9. If it is difficult to start engine at step 7, the fuel injection system has a malfunction.
10. Crank engine while depressing accelerator pedal.
    If engine starts, go to “Diagnostic Procedure”, EC-889 . If engine does not start, check exhaust and intake air leak visually.

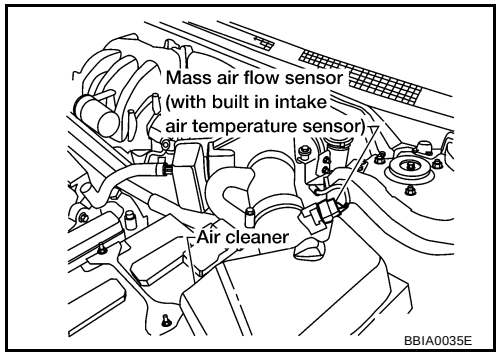

Wiring Diagram
BANK 1

UBS0039W

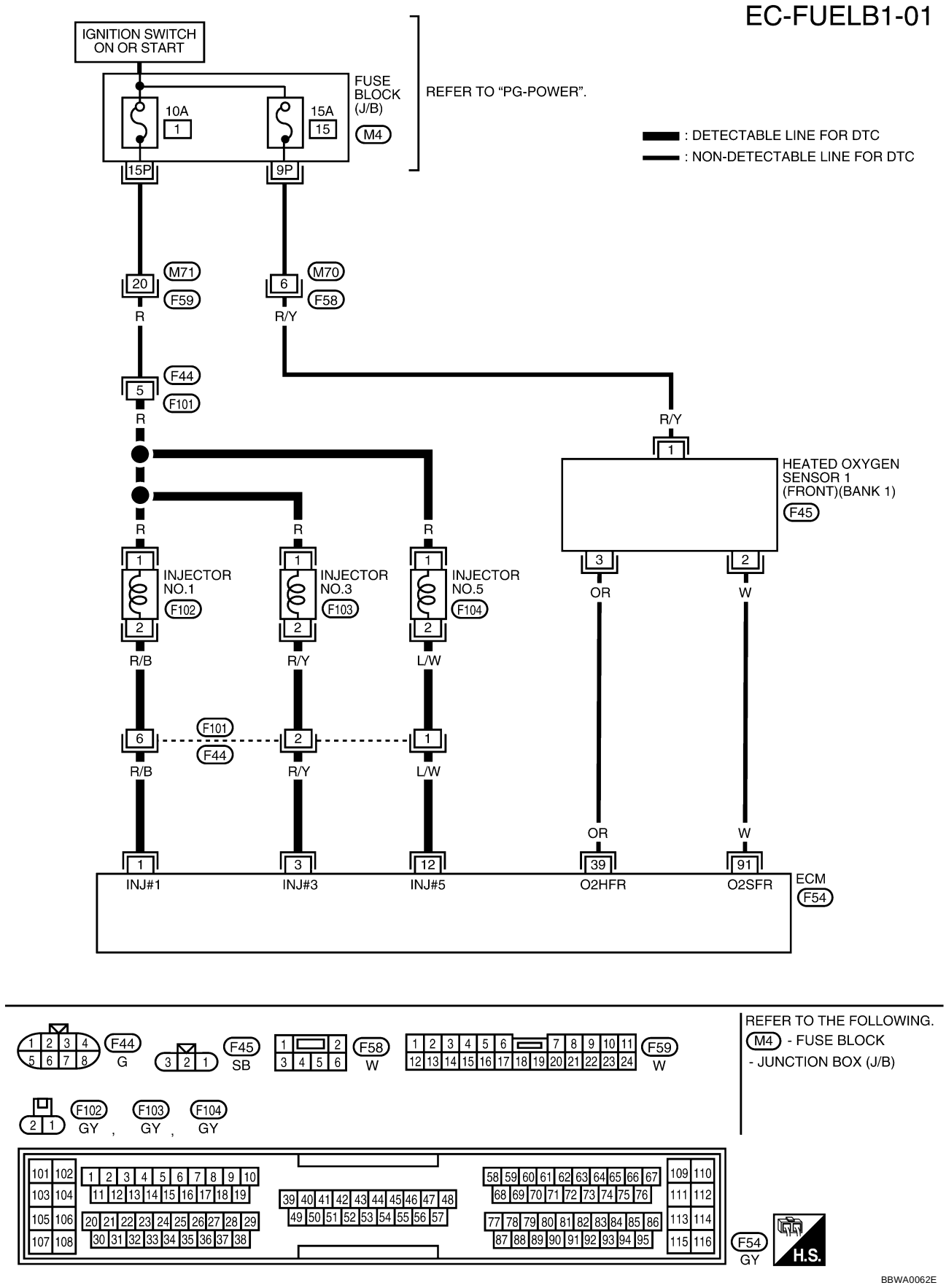

BBWA0062E

BANK 2

EC-FUELB2-01

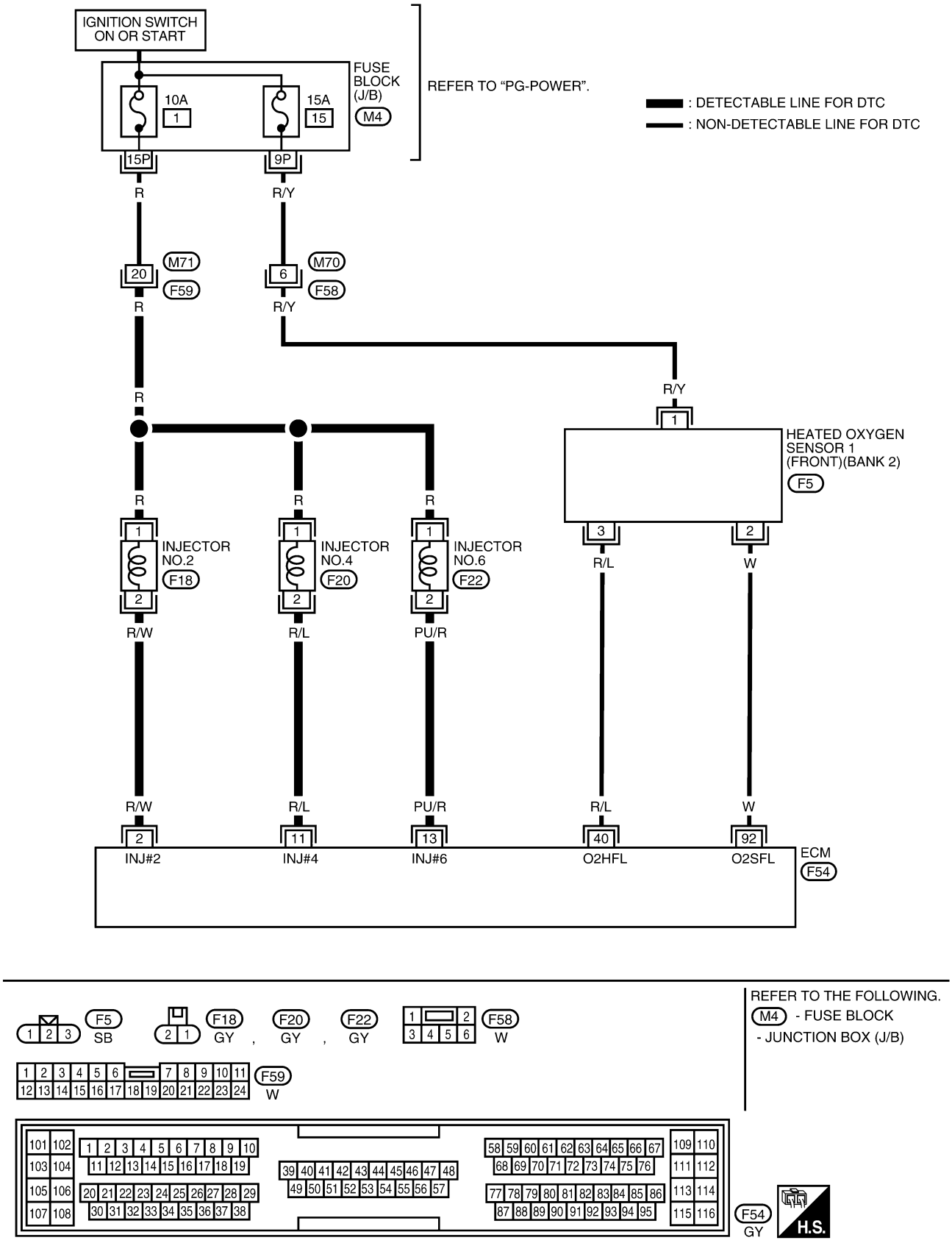

Diagnostic Procedure

UBS0039X

1. CHECK EXHAUST AIR LEAK

1. Start engine and run it at idle.
2. Listen for an exhaust air leak before three way catalyst.

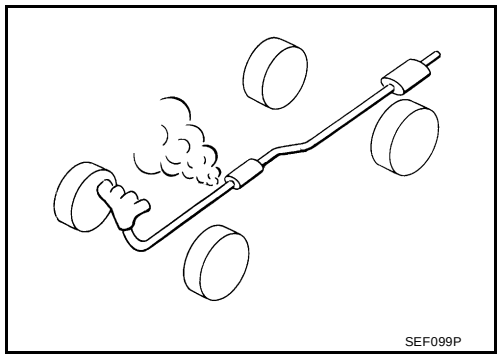

OK or NG

OK >> GO TO 2.
NG >> Repair or replace.

2. CHECK FOR INTAKE AIR LEAK

Listen for an intake air leak after the mass air flow sensor.

OK or NG

OK >> GO TO 3.
NG >> Repair or replace.

3. CHECK HEATED OXYGEN SENSOR 1 CIRCUIT FOR OPEN AND SHORT

1. Turn ignition switch “OFF”.
2. Disconnect corresponding heated oxygen sensor 1 (HO2S1) harness connector.
3. Disconnect ECM harness connector.
4. Check harness continuity between ECM terminal and HO2S1 terminal as follows.
   Refer to Wiring Diagram.

DTC	Terminals		Bank
	ECM	Sensor	
P0172	91	1	1
P0175	92	1	2

Continuity should exist.

5. Check harness continuity between the following terminals and ground.
   Refer to Wiring Diagram.

DTC	Terminals		Bank
	ECM	Sensor	
P0172	91	1	1
P0175	92	1	2

Continuity should not exist.

6. Also check harness for short to power.

OK or NG

OK >> GO TO 4.
NG >> Repair open circuit or short to ground or short to power in harness or connectors.

4. CHECK FUEL PRESSURE

1. Release fuel pressure to zero. Refer to EC-671, "FUEL PRESSURE RELEASE" .
2. Install fuel pressure gauge and check fuel pressure. Refer to EC-672, "FUEL PRESSURE CHECK" .

At idling: 350 kPa (3.7 kg/cm^2 , 51 psi)

OK or NG

OK >> GO TO 6.
NG >> GO TO 5.

5. DETECT MALFUNCTIONING PART

Check the following.

- Fuel pump and circuit (Refer to, EC-1240 .)
- Fuel pressure regulator (Refer to EC-672 .)

>> Repair or replace.

6. CHECK MASS AIR FLOW SENSOR

With CONSULT-II

1. Install all removed parts.
2. Check “MASS AIR FLOW” in “DATA MONITOR” mode with CONSULT-II.

2.0 - 6.0 g·m/sec: at idling
7.0 - 20.0 g·m/sec: at 2,500 rpm

With GST

1. Install all removed parts.
2. Check mass air flow sensor signal in MODE 1 with GST.

2.0 - 6.0 g·m/sec: at idling
7.0 - 20.0 g·m/sec: at 2,500 rpm

OK or NG

OK >> GO TO 7.
NG >> Check connectors for rusted terminals or loose connections in the mass air flow sensor circuit or engine grounds. Refer to EC-790, "DTC P0101 MAF SENSOR" .

7. CHECK FUNCTION OF INJECTORS

With CONSULT-II

1. Start engine.
2. Perform “POWER BALANCE” in “ACTIVE TEST” mode with CONSULT-II.
3. Make sure that each circuit produces a momentary engine speed drop.

ACTIVE TEST	
POWER BALANCE	
MONITOR	
ENG SPEED	XXX rpm
MAS A/F SE-B1	XXX V

PBIB0133E

Without CONSULT-II

1. Start engine.
2. Listen to each injector operating sound.

Clicking noise should be heard.

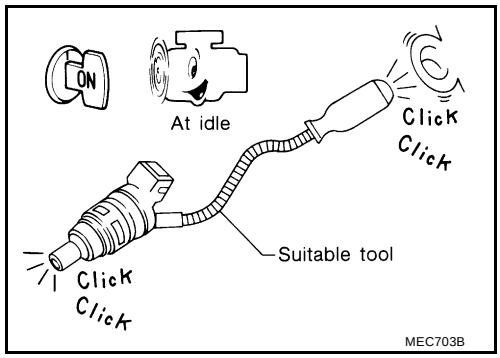

OK or NG

OK >> GO TO 8.
NG >> Perform trouble diagnosis for “INJECTORS”, EC-1230 .

8. CHECK INJECTOR

1. Remove injector assembly. Refer to EM-129, "FUEL INJECTOR AND FUEL TUBE" .
   Keep fuel hose and all injectors connected to injector gallery.
2. Confirm that the engine is cooled down and there are no fire hazards near the vehicle.
3. Disconnect injector harness connectors bank 2 (for DTC P0172), bank 1 (for P0175).
   The injector harness connectors on bank 1 (for P0172), bank 2 (for P0175) should remain connected.
4. Disconnect all ignition coil harness connectors.
5. Prepare pans or saucers under each injectors.
6. Crank engine for about 3 seconds.
   Make sure fuel does not drip from injector.

OK or NG

OK (Does not drip.)>>GO TO 9.
NG (Drips.)>>Replace the injectors from which fuel is dripping. Always replace O-ring with new one.

9. CHECK INTERMITTENT INCIDENT

Refer toEC-756, "TROUBLE DIAGNOSIS FOR INTERMITTENT INCIDENT" .

>> **INSPECTION END**

DTC P0181 FTT SENSOR

PFP:22630

Component Description

UBS0039Y

The fuel tank temperature sensor is used to detect the fuel temperature inside the fuel tank. The sensor modifies a voltage signal from the ECM. The modified signal returns to the ECM as the fuel temperature input. The sensor uses a thermistor which is sensitive to the change in temperature. The electrical resistance of the thermistor decreases as temperature increases.

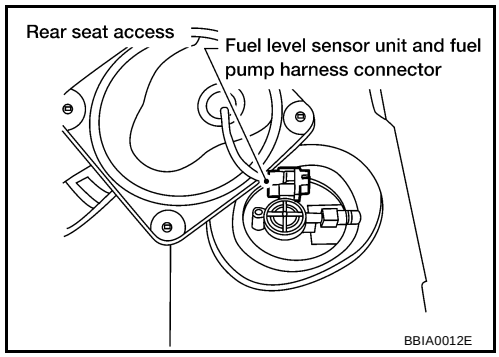

<Reference data>

Fluid temperature °C (°F)	Voltage* V	Resistance kΩ
20 (68)	3.5	2.3 - 2.7
50 (122)	2.2	0.79 - 0.90

*: These data are reference values and are measured between ECM terminal 75 (Fuel tank temperature sensor) and ground.

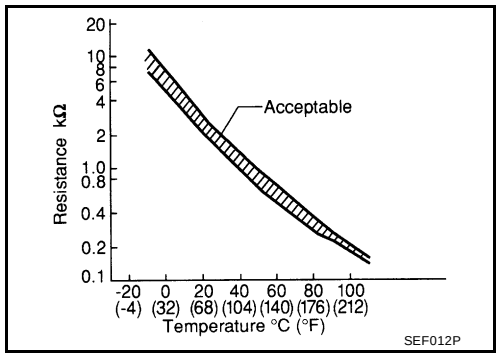

CAUTION:
Do not use ECM ground terminals when measuring input/output voltage. Doing so may result in damage to the ECM's transistor. Use a ground other than ECM terminals, such as the ground.

On Board Diagnosis Logic

UBS0039Z

DTC No.	Trouble diagnosis name	DTC detecting condition	Possible cause
P0181 0181	Fuel tank temperature sensor circuit range/ performance	Rationally incorrect voltage from the sensor is sent to ECM, compared with the voltage signals from engine coolant temperature sensor and intake air temperature sensor.	● Harness or connectors (The sensor circuit is open or shorted) ● Fuel tank temperature sensor

DTC Confirmation Procedure

UBS003A0

NOTE:
If “DTC Confirmation Procedure” has been previously conducted, always turn ignition switch “OFF” and wait at least 10 seconds before conducting the next test.

WITH CONSULT-II

1. Turn ignition switch “ON”.
2. Select “DATA MONITOR” mode with CONSULT-II.
3. Wait at least 10 seconds.
   If the result is NG, go to EC-895, "Diagnostic Procedure" .
   If the result is OK, go to following step.
4. Check “COOLAN TEMP/S” value.
   If “COOLAN TEMP/S” is less than 60°C (140°F), the result will be OK.
   If “COOLAN TEMP/S” is above 60°C (140°F), go to the following step.
5. Cool engine down until “COOLAN TEMP/S” is less than 60°C (140°F).
6. Wait at least 10 seconds.
7. If 1st trip DTC is detected, go to EC-895, "Diagnostic Procedure" .

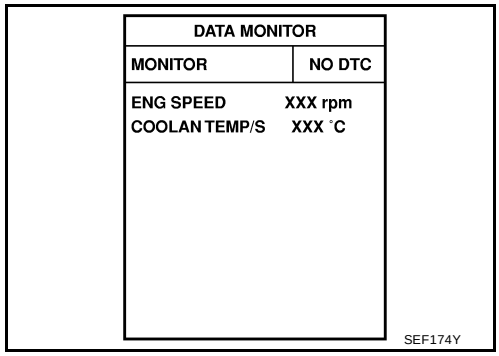

WITH GST

Follow the procedure “WITH CONSULT-II” above.

Wiring Diagram

UBS003A1

EC-FTTS-01

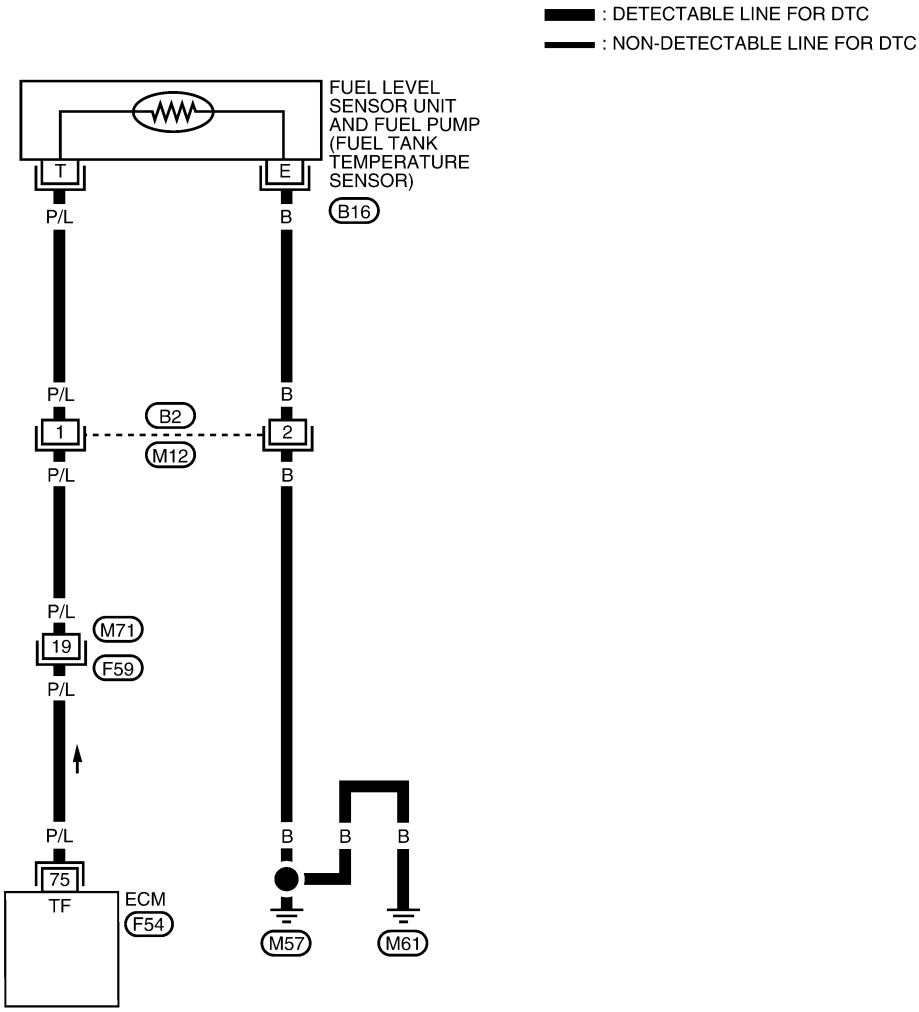

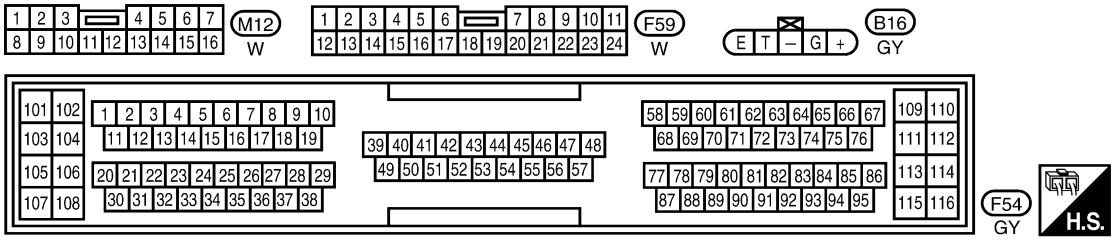

BBWA0064E

Diagnostic Procedure

UBS003A2

1. CHECK FUEL TANK TEMPERATURE SENSOR POWER SUPPLY CIRCUIT

1. Turn ignition switch “OFF”.
2. Disconnect fuel level sensor unit and fuel pump harness connector.
3. Turn ignition switch “ON”.

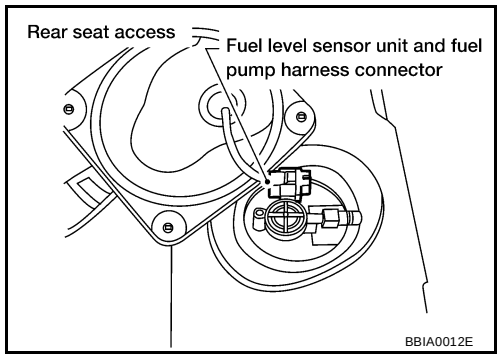

4. Check voltage between fuel level sensor unit and fuel pump terminal T and ground with CONSULT-II or tester.

   Voltage: Approximately 5V

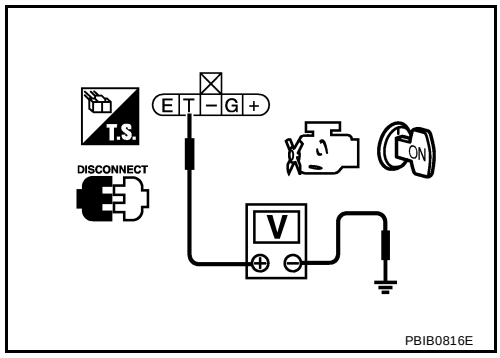

OK or NG

OK >> GO TO 3.
NG >> GO TO 2.

2. DETECT MALFUNCTIONING PART

Check the following.

- Harness connectors B2, M12
- Harness connectors M71, F59
- Harness for open or short between ECM and fuel level sensor unit and fuel pump

>> Repair harness or connector.

3. CHECK FUEL TANK TEMPERATURE SENSOR GROUND CIRCUIT FOR OPEN AND SHORT

1. Turn ignition switch “OFF”.
2. Check harness continuity between fuel level sensor unit and fuel pump terminal E and body ground. Refer to Wiring Diagram.

   Continuity should exist.

3. Also check harness for short to power.

OK or NG

OK >> GO TO 5.
NG >> GO TO 4.

4. DETECT MALFUNCTIONING PART

Check the following.

- Harness connectors B2, M12
- Harness for open or short between fuel level sensor unit and fuel pump and body ground

>> Repair open circuit or short to power in harness or connector.

5. CHECK FUEL TANK TEMPERATURE SENSOR

Refer to EC-896, "Component Inspection" .

OK or NG

OK >> GO TO 6.
NG >> Replace fuel level sensor unit.

6. CHECK INTERMITTENT INCIDENT

Refer to EC-756, "TROUBLE DIAGNOSIS FOR INTERMITTENT INCIDENT" .

>> **INSPECTION END**

Component Inspection

UBS003A3

FUEL TANK TEMPERATURE SENSOR

1. Remove fuel level sensor unit.
2. Check resistance between fuel level sensor unit and fuel pump terminals T and E by heating with hot water or heat gun as shown in the figure.

Temperature °C (°F)	Resistance kΩ
20 (68)	2.3 - 2.7
50 (122)	0.79 - 0.90

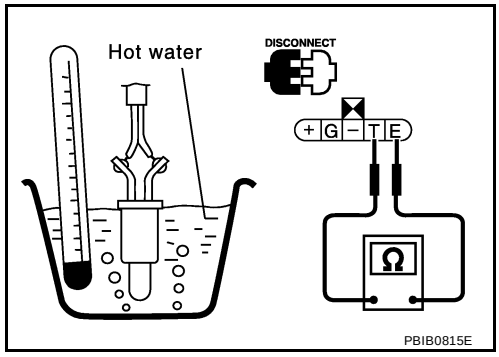

Removal and Installation

UBS003A4

FUEL TANK TEMPERATURE SENSOR

Refer to FL-5, "FUEL LEVEL SENSOR UNIT, FUEL FILTER AND FUEL PUMP ASSEMBLY" .

DTC P0182, P0183 FTT SENSOR

PFP:22630

Component Description

UBS003A5

The fuel tank temperature sensor is used to detect the fuel temperature inside the fuel tank. The sensor modifies a voltage signal from the ECM. The modified signal returns to the ECM as the fuel temperature input. The sensor uses a thermistor which is sensitive to the change in temperature. The electrical resistance of the thermistor decreases as temperature increases.

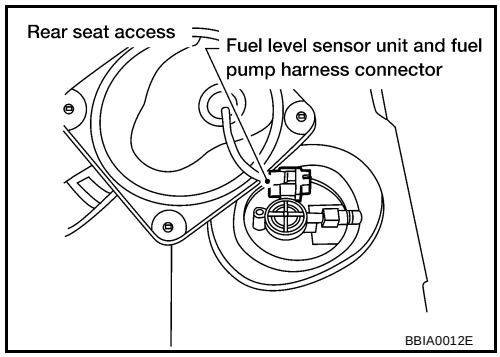

<Reference data>

Fluid temperature °C (°F)	Voltage* V	Resistance kΩ
20 (68)	3.5	2.3 - 2.7
50 (122)	2.2	0.79 - 0.90

*: These data are reference values and are measured between ECM terminal 75 (Fuel tank temperature sensor) and ground.

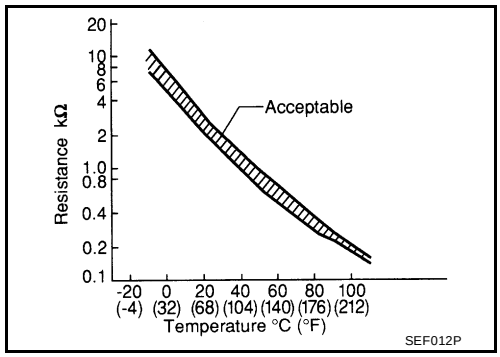

CAUTION:
Do not use ECM ground terminals when measuring input/output voltage. Doing so may result in damage to the ECM's transistor. Use a ground other than ECM terminals, such as the ground.

On Board Diagnosis Logic

UBS003A6

DTC No.	Trouble diagnosis name	DTC detecting condition	Possible cause
P0182 0182	Fuel tank temperature sensor circuit low input	An excessively low voltage from the sensor is sent to ECM.	● Harness or connectors (The sensor circuit is open or shorted.) ● Fuel tank temperature sensor
P0183 0183	Fuel tank temperature sensor circuit high input	An excessively high voltage from the sensor is sent to ECM.	

DTC Confirmation Procedure

UBS003A7

NOTE:
If “DTC Confirmation Procedure” has been previously conducted, always turn ignition switch “OFF” and wait at least 10 seconds before conducting the next test.

WITH CONSULT-II

1. Turn ignition switch “ON”.
2. Select “DATA MONITOR” mode with CONSULT-II.
3. Wait at least 5 seconds.
4. If 1st trip DTC is detected, go to EC-899, "Diagnostic Procedure"
.

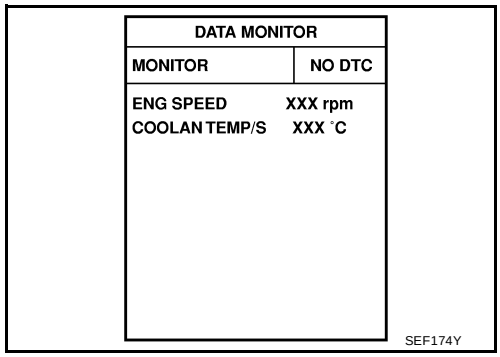

WITH GST

Follow the procedure “With CONSULT-II” above.

Wiring Diagram

UBS003A8

EC-FTTS-01

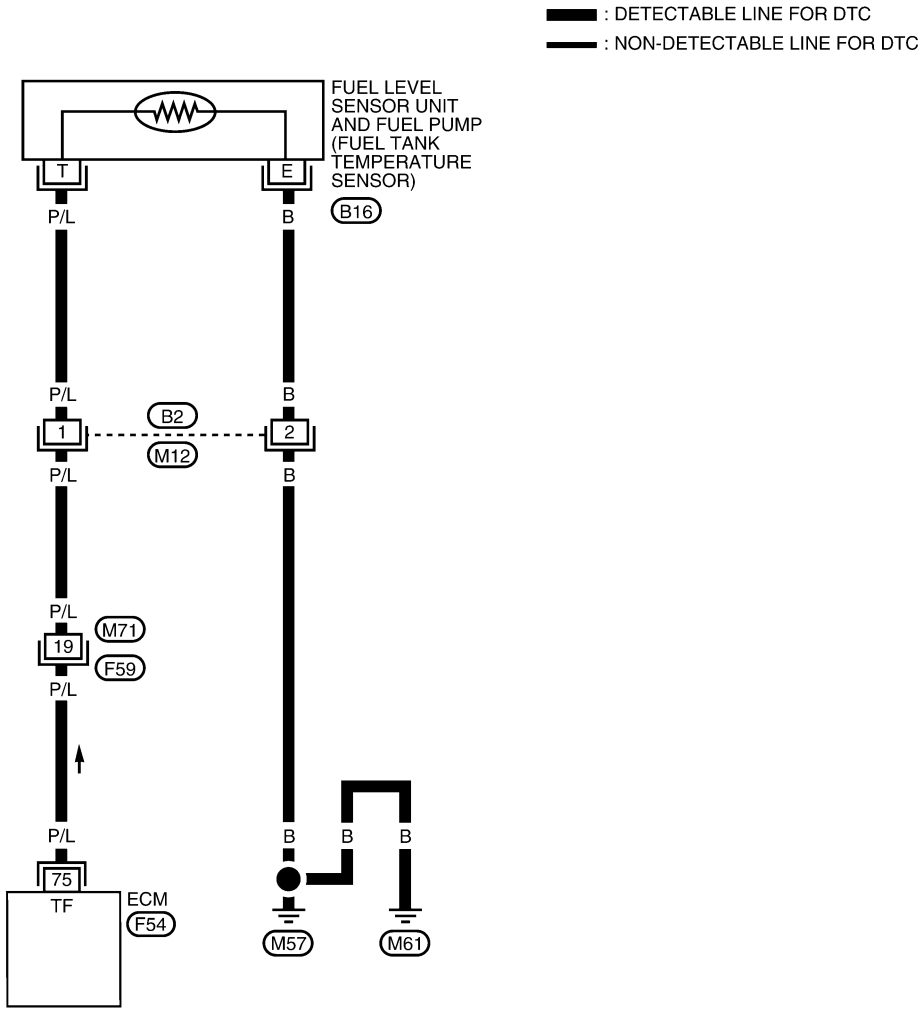

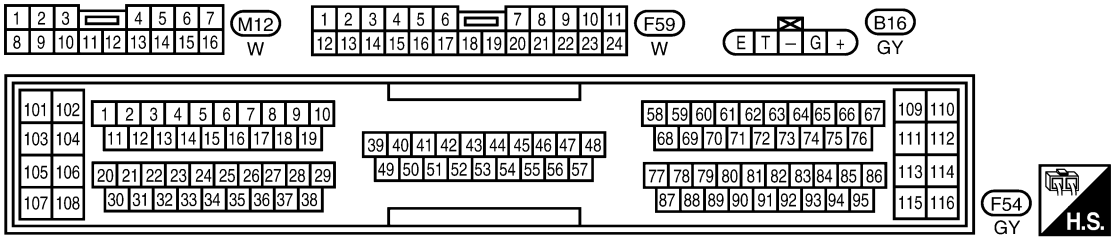

BBWA0064E

Diagnostic Procedure

UBS003A9

1. CHECK FUEL TANK TEMPERATURE SENSOR POWER SUPPLY CIRCUIT

1. Turn ignition switch “OFF”.
2. Disconnect fuel level sensor unit and fuel pump harness connector.
3. Turn ignition switch “ON”.

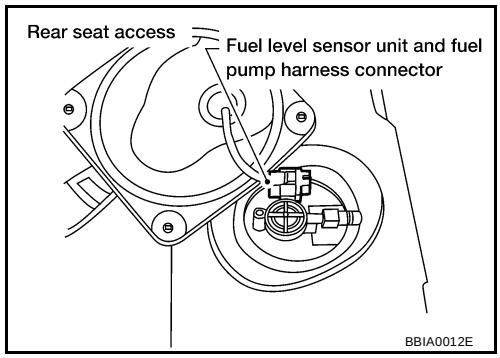

4. Check voltage between fuel level sensor unit and fuel pump terminal T and ground with CONSULT-II or tester.

   Voltage: Approximately 5V

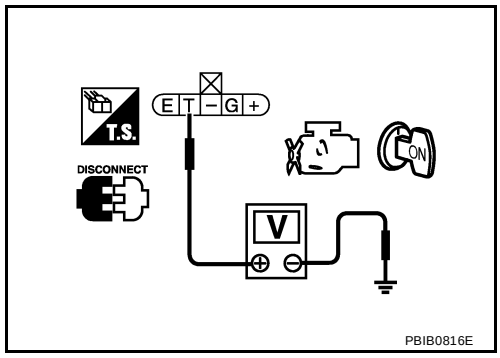

OK or NG

OK >> GO TO 3.
NG >> GO TO 2.

2. DETECT MALFUNCTIONING PART

Check the following.

- Harness connectors B2, M12
- Harness connectors M71, F59
- Harness for open or short between ECM and fuel level sensor unit and fuel pump

>> Repair harness or connector.

3. CHECK FUEL TANK TEMPERATURE SENSOR GROUND CIRCUIT FOR OPEN AND SHORT

1. Turn ignition switch “OFF”.
2. Check harness continuity between fuel level sensor unit and fuel pump terminal E and body ground. Refer to Wiring Diagram.

   Continuity should exist.

3. Also check harness for short to power.

OK or NG

OK >> GO TO 5.
NG >> GO TO 4.

4. DETECT MALFUNCTIONING PART

Check the following.

- Harness connectors B2, M12
- Harness for open or short between fuel level sensor unit and fuel pump and body ground

>> Repair open circuit or short to power in harness or connector.

5. CHECK FUEL TANK TEMPERATURE SENSOR

Refer to EC-900, "Component Inspection" .

OK or NG

OK >> GO TO 6.
NG >> Replace fuel level sensor unit.

6. CHECK INTERMITTENT INCIDENT

Refer to EC-756, "TROUBLE DIAGNOSIS FOR INTERMITTENT INCIDENT" .

>> **INSPECTION END**

Component Inspection

UBS003AA

FUEL TANK TEMPERATURE SENSOR

1. Remove fuel level sensor unit.
2. Check resistance between fuel level sensor unit and fuel pump terminals T and E by heating with hot water or heat gun as shown in the figure.

Temperature °C (°F)	Resistance kΩ
20 (68)	2.3 - 2.7
50 (122)	0.79 - 0.90

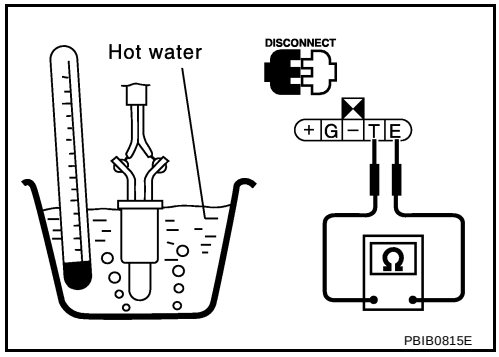

Removal and Installation

UBS003AB

FUEL TANK TEMPERATURE SENSOR

Refer to FL-5, "FUEL LEVEL SENSOR UNIT, FUEL FILTER AND FUEL PUMP ASSEMBLY" .

DTC P0221 TP SENSOR

PFP:16119

Component Description

UBS003AC

Electric Throttle Control Actuator consists of throttle control motor, throttle position sensor, etc. The throttle position sensor responds to the throttle valve movement.
The throttle position sensor has the two sensors. These sensors are a kind of potentiometers which transform the throttle valve position into output voltage, and emit the voltage signal to the ECM. In addition, these sensors detect the opening and closing speed of the throttle valve and feed the voltage signals to the ECM. The ECM judges the current opening angle of the throttle valve from these signals and the ECM controls the throttle control motor to make the throttle valve opening angle properly in response to driving condition.

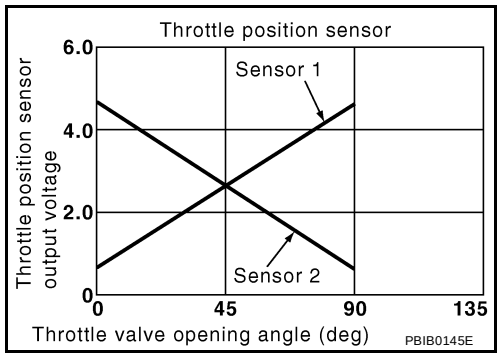

CONSULT-II Reference Value in Data Monitor Mode

UBS003AD

Specification data are reference values.

MONITOR ITEM	CONDITION		SPECIFICATION
THRTL SEN1 THRTL SEN2	● Ignition switch: ON (Engine stopped) ● Shift lever: D (A/T model) 1st (M/T model)	Accelerator pedal: Fully released	More than 0.36V
		Accelerator pedal: Fully depressed	Less than 4.75V

On Board Diagnosis Logic

UBS003AE

This self-diagnosis has the one trip detection logic.

DTC No.	Trouble diagnosis name	DTC detecting condition	Possible cause
P0221 0221	Throttle position sensor circuit range/performance problem	Rationally incorrect voltage is sent to ECM compared with the signals from TP sensor 1 and TP sensor 2.	● Harness or connector (The TP sensor 1 and 2 circuit is open or shorted.) ● Electric throttle control actuator (TP sensor 1 and 2)

FAIL-SAFE MODE

When the malfunction is detected, the ECM enters in fail-safe mode and the MIL lights up.

Engine operation condition in fail-safe mode
The ECM controls the electric throttle control actuator in regulating the throttle opening in order for the idle position to be within +10 degrees. The ECM regulates an opening speed of approx. 5 seconds to an opening of 10 degrees. So, the acceleration will be poor.

DTC Confirmation Procedure

UBS003AF

NOTE:
If “DTC Confirmation Procedure” has been previously conducted, always turn ignition switch “OFF” and wait at least 10 seconds before conducting the next test.
TESTING CONDITION:
Before performing the following procedure, confirm that battery voltage is more than 10V at idle.

WITH CONSULT-II

1. Turn ignition switch “ON”.

2. Select "DATA MONITOR" mode with CONSULT-II.
3. Start engine and let it idle for 1 second.
4. If DTC is detected, go to EC-904, "Diagnostic Procedure" .

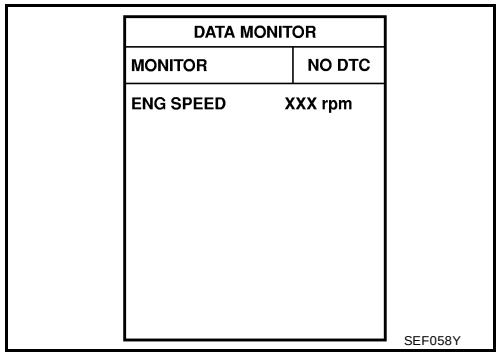

WITH GST

Follow the procedure “WITH CONSULT-II” above.

Wiring Diagram

UBS003AG

EC-TPS3-01

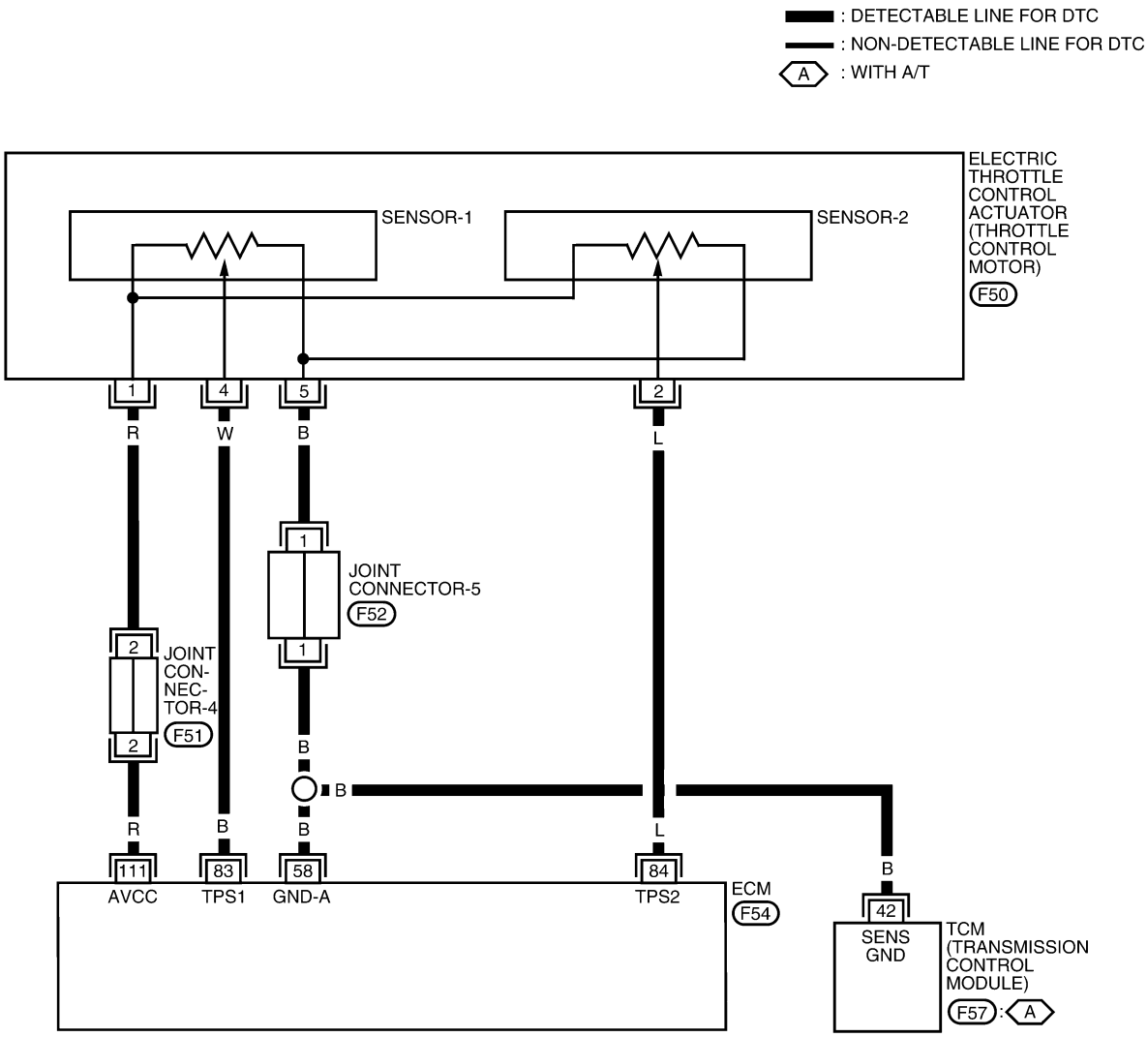

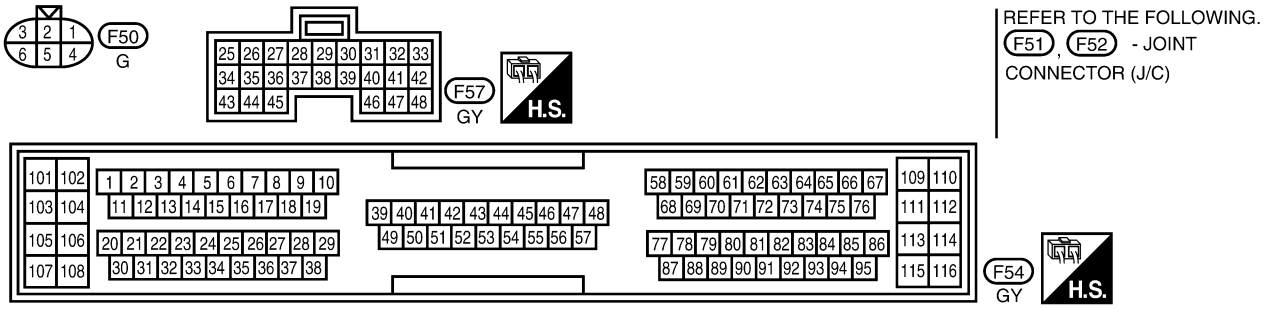

BBWA0195E

Specification data are reference values and are measured between each terminal and ground.

CAUTION:
Do not use ECM ground terminals when measuring input/output voltage. Doing so may result in damage to the ECM's transistor. Use a ground other than ECM terminals, such as the ground.

TERMINAL NO.	WIRE COLOR	ITEM	CONDITION	DATA (DC Voltage)
58	B	Sensors' ground	**[Engine is running]** ● **Warm-up condition** ● Idle speed	Approximately 0V
83	W	Throttle position sensor 1	**[Ignition switch "ON"]** ● Gear position: "D" (A/T models) ● Gear position: "1st" (M/T models) ● Accelerator pedal fully released	More than 0.36V
			[Ignition switch "ON"] ● Gear position: "D" (A/T models) ● Gear position: "1st" (M/T models) ● Accelerator pedal fully depressed	Less than 4.75V
84	L	Throttle position sensor 2	**[Ignition switch "ON"]** ● Gear position: "D" (A/T models) ● Gear position: "1st" (M/T models) ● Accelerator pedal fully released	Less than 4.75V
			[Ignition switch "ON"] ● Gear position: "D" (A/T models) ● Gear position: "1st" (M/T models) ● Accelerator pedal fully depressed	More than 0.36V
111	R	Sensor's power supply	**[Ignition switch "ON"]**	Approximately 5V

Diagnostic Procedure

UBS003AH

1. RETIGHTEN GROUND SCREWS

1. Turn ignition switch "OFF".
2. Loosen and retighten engine ground screws.

>> GO TO 2.

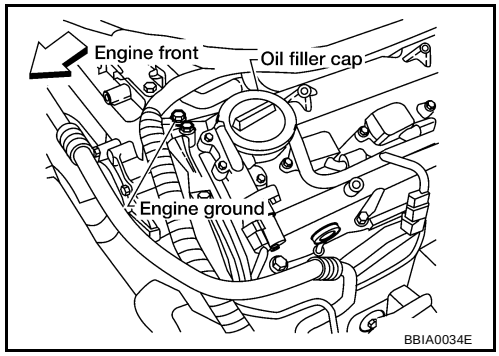

2. CHECK THROTTLE POSITION SENSOR POWER SUPPLY CIRCUIT

1. Disconnect electric throttle control actuator harness connector.
2. Turn ignition switch “ON”.

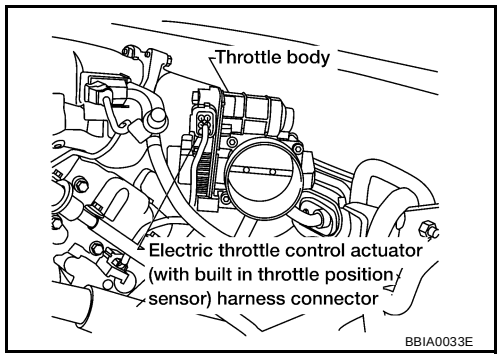

3. Check voltage between electric throttle control actuator terminal 1 and ground with CONSULT-II or tester.

Voltage: Approximately 5V

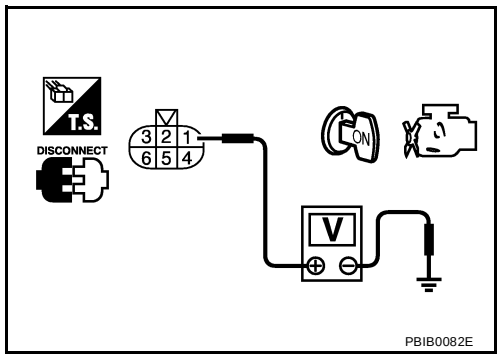

OK or NG

OK >> GO TO 4.
NG >> GO TO 3.

3. DETECT MALFUNCTIONING PART

Check the following.

- Joint connector-4
- Harness for open or short between electric throttle control actuator and ground

>> Repair open circuit or short to ground or short to power in harness or connectors.

4. CHECK THROTTLE POSITION SENSOR GROUND CIRCUIT FOR OPEN AND SHORT

1. Turn ignition switch “OFF”.
2. Check harness continuity between electric throttle control actuator terminal 5 and engine ground. Refer to Wiring Diagram.

Continuity should exist.

3. Also check harness for short to ground and short to power.

OK or NG

OK >> GO TO 6.
NG >> GO TO 5.

5. DETECT MALFUNCTIONING PART

Check the following.

- Joint connector-5
- Harness for open or short between electric throttle control actuator and ECM
- Harness for open or short between electric throttle control actuator and TCM

>> Repair open circuit or short to ground or short to power in harness or connectors.

6. CHECK THROTTLE POSITION SENSOR INPUT SIGNAL CIRCUIT FOR OPEN AND SHORT

1. Disconnect ECM harness connector.
2. Check harness continuity between ECM terminal 83 and electric throttle control actuator terminal 4, ECM terminal 84 and electric throttle control actuator terminal 2.
   Refer to Wiring Diagram.

   Continuity should exist.

3. Also check harness for short to ground and short to power.

OK or NG

OK >> GO TO 7.
NG >> Repair open circuit or short to ground or short to power in harness or connectors.

7. CHECK THROTTLE POSITION SENSOR

Refer to EC-906, "Component Inspection" .

OK or NG

OK >> GO TO 9.
NG >> GO TO 8.

8. REPLACE ELECTRIC THROTTLE CONTROL ACTUATOR

1. Replace the electric throttle control actuator.
2. Perform EC-669, "Throttle Valve Closed Position Learning" .
3. Perform EC-669, "Idle Air Volume Learning" .

>> **INSPECTION END**

9. CHECK INTERMITTENT INCIDENT

Refer to EC-756, "TROUBLE DIAGNOSIS FOR INTERMITTENT INCIDENT" .

>> **INSPECTION END**

Component Inspection

UBS003AI

THROTTLE POSITION SENSOR

1. Reconnect all harness connectors disconnected.
2. Perform EC-669, "Throttle Valve Closed Position Learning" .
3. Turn ignition switch "ON".
4. Set selector lever to "D" position (A/T models) or "1st" position (M/T models).
5. Check voltage between ECM terminals 83 (TP sensor 1signal), 84 (TP sensor 2signal) and engine ground under the following conditions.

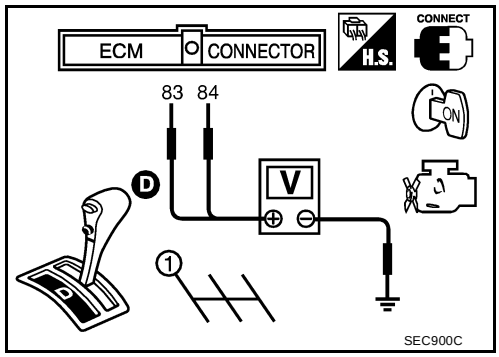

Terminal	Accelerator pedal	Voltage
83 (Throttle position sensor 1)	Fully released	More than 0.36V
	Fully depressed	Less than 4.75V
84 (Throttle position sensor 2)	Fully released	Less than 4.75V
	Fully depressed	More than 0.36V

6. If NG, replace electric throttle control actuator and go to the next step.
7. Perform EC-669, "Throttle Valve Closed Position Learning" .
8. Perform EC-669, "Idle Air Volume Learning" .

Removal and Installation

UBS003AJ

ELECTRIC THROTTLE CONTROL ACTUATOR

Refer to EM-112, "INTAKE MANIFOLD" .

DTC P0222, P0223 TP SENSOR

PFP:16119

Component Description

UBS003AK

Electric Throttle Control Actuator consists of throttle control motor, throttle position sensor, etc. The throttle position sensor responds to the throttle valve movement.
The throttle position sensor has the two sensors. These sensors are a kind of potentiometers which transform the throttle valve position into output voltage, and emit the voltage signal to the ECM. In addition, these sensors detect the opening and closing speed of the throttle valve and feed the voltage signals to the ECM. The ECM judges the current opening angle of the throttle valve from these signals and the ECM controls the throttle control motor to make the throttle valve opening angle properly in response to driving condition.

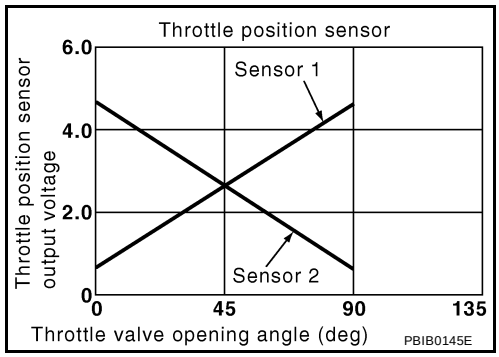

CONSULT-II Reference Value in Data Monitor Mode

UBS003AL

Specification data are reference values.

MONITOR ITEM	CONDITION		SPECIFICATION
THRTL SEN1	● Ignition switch: ON (Engine stopped) ● Shift lever: D (A/T model) 1st (M/T model)	Accelerator pedal: Fully released	More than 0.36V
		Accelerator pedal: Fully depressed	Less than 4.75V

On Board Diagnosis Logic

UBS003AM

These self-diagnoses have the one trip detection logic.

DTC No.	Trouble diagnosis name	DTC detecting condition	Possible cause
P0222 0222	Throttle position sensor 1 circuit low input	An excessively low voltage from the TP sensor 1 is sent to ECM.	● Harness or connectors (The TP sensor 1 circuit is open or shorted.) ● Electric throttle control actuator (TP sensor 1)
P0223 0223	Throttle position sensor 1 circuit high input	An excessively high voltage from the TP sensor 1 is sent to ECM.	

FAIL-SAFE MODE

When the malfunction is detected, ECM enters in fail-safe mode an the MIL lights up .

Engine operation condition in fail-safe mode
The ECM controls the electric throttle control actuator in regulating the throttle opening in order for the idle position to be within +10 degrees. The ECM regulates an opening speed of approx. 5 seconds to an opening of 10 degrees. So, the acceleration will be poor.

DTC Confirmation Procedure

UBS003AN

NOTE:
If “DTC Confirmation Procedure” has been previously conducted, always turn ignition switch “OFF” and wait at least 10 seconds before conducting the next test.
TESTING CONDITION:
Before performing the following procedure, confirm that battery voltage is more than 10V at idle.

WITH CONSULT-II

1. Turn ignition switch “ON”.

2. Select "DATA MONITOR" mode with CONSULT-II.
3. Start engine and let it idle for 1 second.
4. If DTC is detected, go to EC-911, "Diagnostic Procedure" .

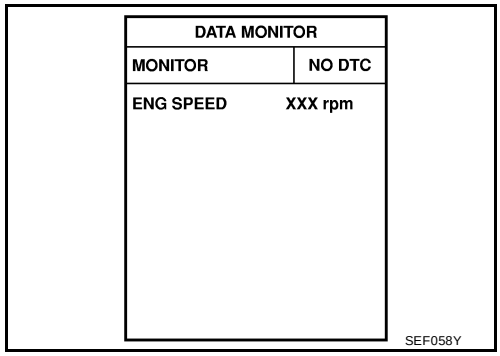

WITH GST

Follow the procedure “WITH CONSULT-II” above.

Wiring Diagram

UBS003AO

EC-TPS1-01

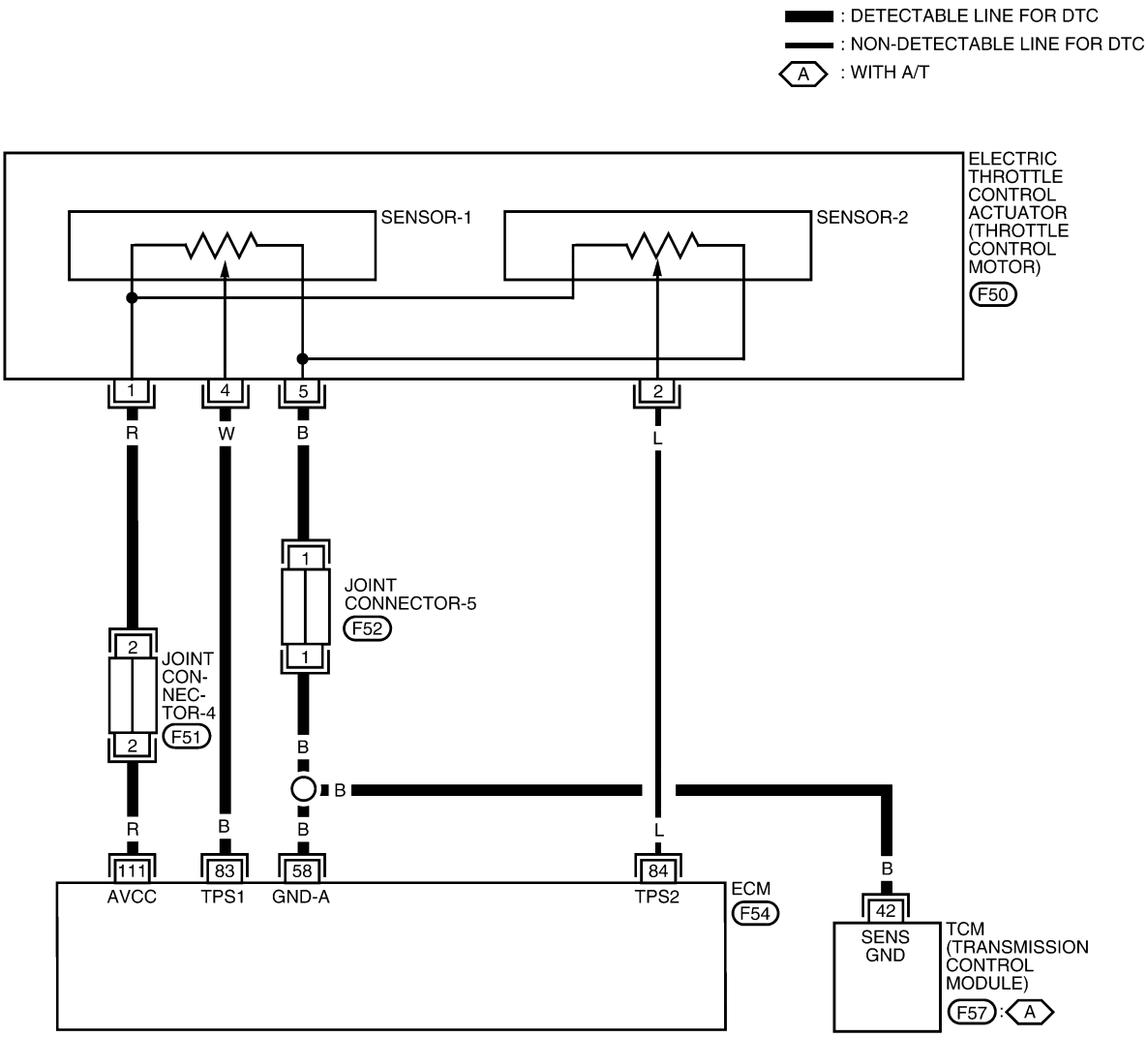

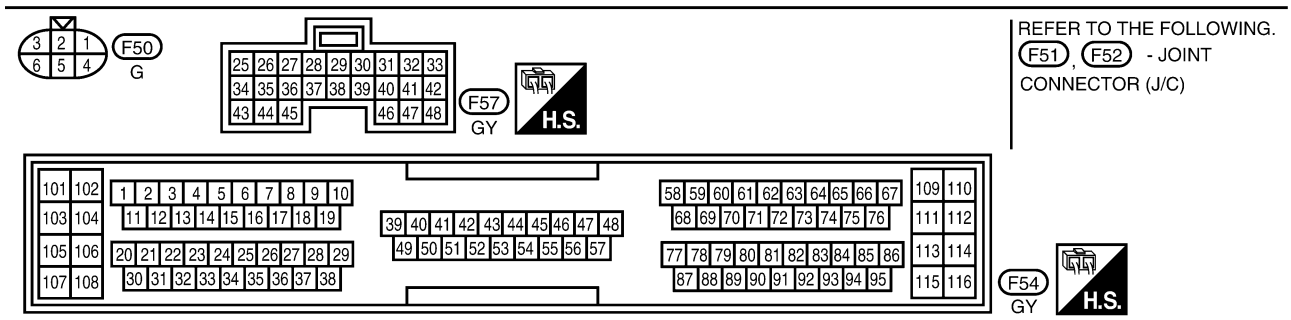

BBWA0053E

Specification data are reference values and are measured between each terminal and ground.

CAUTION:

Do not use ECM ground terminals when measuring input/output voltage. Doing so may result in damage to the ECM's transistor. Use a ground other than ECM terminals, such as the ground.

TERMINAL NO.	WIRE COLOR	ITEM	CONDITION	DATA (DC Voltage)
58	B	Sensors' ground	**[Engine is running]** ● **Warm-up condition** ● Idle speed	Approximately 0V
83	W	Throttle position sensor 1	**[Ignition switch "ON"]** ● Gear position: "D" (A/T models) ● Gear position: "1st" (M/T models) ● Accelerator pedal fully released	More than 0.36V
			[Ignition switch “ON”] ● Gear position: "D" (A/T models) ● Gear position: "1st" (M/T models) ● Accelerator pedal fully depressed	Less than 4.75V
84	L	Throttle position sensor 2	**[Ignition switch "ON"]** ● Gear position: "D" (A/T models) ● Gear position: "1st" (M/T models) ● Accelerator pedal fully released	Less than 4.75V
			[Ignition switch “ON”] ● Gear position: "D" (A/T models) ● Gear position: "1st" (M/T models) ● Accelerator pedal fully depressed	More than 0.36V
111	R	Sensor's power supply	**[Ignition switch “ON”]**	Approximately 5V

Diagnostic Procedure

UBS003AP

1. RETIGHTEN GROUND SCREWS

1. Turn ignition switch “OFF”.
2. Loosen and retighten engine ground screws.

>> GO TO 2.

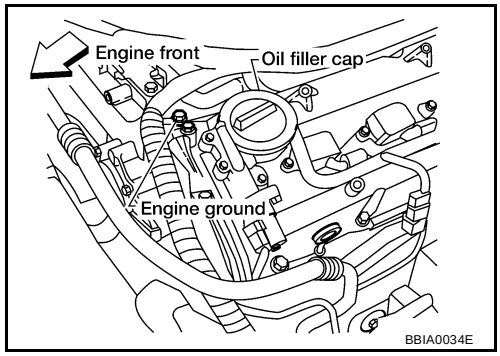

2. CHECK THROTTLE POSITION SENSOR 1 POWER SUPPLY CIRCUIT

1. Disconnect electric throttle control actuator harness connector.
2. Turn ignition switch “ON”.

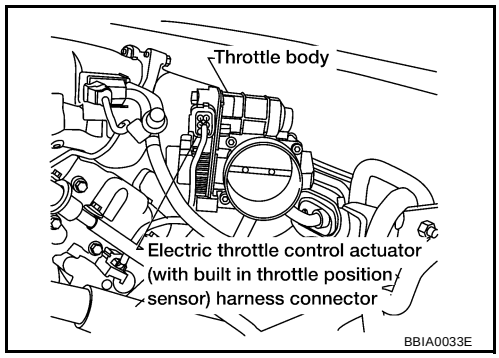

3. Check voltage between electric throttle control actuator terminal 1 and ground with CONSULT-II or tester.

Voltage: Approximately 5V

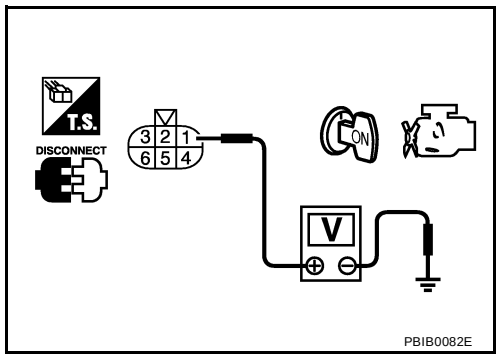

OK or NG

OK >> GO TO 3.
NG >> Repair open circuit or short to ground or short to power in harness or connectors.

3. DETECT MALFUNCTIONING PART

Check the following.

- Joint connector-4
- Harness for open or short between electric throttle control actuator and ground

>> Repair open circuit or short to ground or short to power in harness or connectors.

4. CHECK THROTTLE POSITION SENSOR 1 GROUND CIRCUIT FOR OPEN AND SHORT

1. Turn ignition switch “OFF”.
2. Check harness continuity between electric throttle control actuator terminal 5 and engine ground. Refer to Wiring Diagram.

Continuity should exist.

3. Also check harness for short to ground and short to power.

OK or NG

OK >> GO TO 6.
NG >> GO TO 5.

5. DETECT MALFUNCTIONING PART

Check the following.

- Joint connector-4
- Harness for open or short between electric throttle control actuator and ECM
- Harness for open or short between electric throttle control actuator and TCM

>> Repair open circuit or short to ground or short to power in harness or connectors.

6. CHECK THROTTLE POSITION SENSOR 1 INPUT SIGNAL CIRCUIT FOR OPEN AND SHORT

1. Disconnect ECM harness connector.
2. Check harness continuity between ECM terminal 83 and electric throttle control actuator terminal 4. Refer to Wiring Diagram.

Continuity should exist.

3. Also check harness for short to ground and short to power.

OK or NG

OK >> GO TO 7.
NG >> Repair open circuit or short to ground or short to power in harness or connectors.

7. CHECK THROTTLE POSITION SENSOR

Refer to EC-913, "Component Inspection" .

OK or NG

OK >> GO TO 9.
NG >> GO TO 8.

8. REPLACE ELECTRIC THROTTLE CONTROL ACTUATOR

1. Replace the electric throttle control actuator.
2. Perform EC-669, "Throttle Valve Closed Position Learning" .
3. Perform EC-669, "Idle Air Volume Learning" .

>> **INSPECTION END**

9. CHECK INTERMITTENT INCIDENT

Refer to EC-756, "TROUBLE DIAGNOSIS FOR INTERMITTENT INCIDENT" .

>> **INSPECTION END**

Component Inspection

UBS003AQ

THROTTLE POSITION SENSOR

1. Reconnect all harness connectors disconnected.
2. Perform EC-669, "Throttle Valve Closed Position Learning" .
3. Turn ignition switch "ON".
4. Set selector lever to "D" position (A/T models) or "1st" position (M/T models).
5. Check voltage between ECM terminals 83 (TP sensor 1 signal), 84 (TP sensor 2 signal) and engine ground under the following conditions.

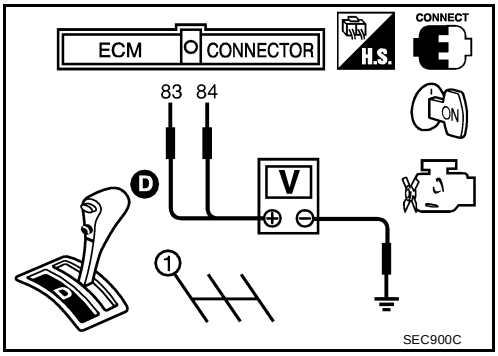

Terminal	Accelerator pedal	Voltage
83 (Throttle position sensor 1)	Fully released	More than 0.36V
	Fully depressed	Less than 4.75V
84 (Throttle position sensor 2)	Fully released	Less than 4.75V
	Fully depressed	More than 0.36V

6. If NG, replace electric throttle control actuator and go to the next step.
7. Perform EC-669, "Throttle Valve Closed Position Learning" .
8. Perform EC-669, "Idle Air Volume Learning" .

Removal and Installation

UBS003AR

ELECTRIC THROTTLE CONTROL ACTUATOR

Refer to EM-112, "INTAKE MANIFOLD" .

DTC P0226 APP SENSOR

PFP:18002

Component Description

UBS003AS

The accelerator pedal position sensor is installed on the upper end of the accelerator pedal assembly. The sensor detects the accelerator position and sends a signal to the ECM.
Accelerator pedal position sensor has two sensors. These sensors are a kind of potentiometers which transform the accelerator pedal position into output voltage, and emit the voltage signal to the ECM. In addition, these sensors detect the opening and closing speed of the accelerator pedal and feed the voltage signals to the ECM. The ECM judges the current opening angle of the accelerator pedal from these signals and controls the throttle control motor based on these signals.

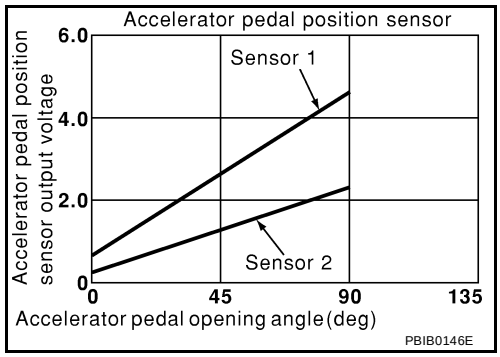

Idle position of the accelerator pedal is determined by the ECM receiving the signal from the accelerator pedal position sensor. The ECM uses this signal for the engine operation such as fuel cut.

CONSULT-II Reference Value in Data Monitor Mode

UBS003AT

Specification data are reference values.

MONITOR ITEM	CONDITION		SPECIFICATION
ACCEL SEN1 ACCEL SEN2	● Ignition switch: ON (engine stopped)	Accelerator pedal: Fully released	0.41 - 0.71V
		Accelerator pedal: Fully depressed	More than 4.2V
CLSD THL POS	● Ignition switch: ON	Accelerator pedal: Fully released	ON
		Accelerator pedal: Slightly depressed	OFF

On Board Diagnosis Logic

UBS003AU

This self-diagnosis has the one trip detection logic.

DTC No.	Trouble diagnosis name	DTC detecting condition	Possible cause
P0226 0226	Accelerator pedal position sensor circuit range/performance problem	Rationally incorrect voltage is sent to ECM compared with the signals from APP sensor 1 and APP sensor 2.	● Harness or connector (The APP sensor 1 and 2 circuit is open or shorted.) ● Accelerator pedal position sensor 1 and 2

FAIL-SAFE MODE

When the malfunction is detected, ECM enters in fail-safe mode and the MIL lights up.

Engine operating condition in fail-safe mode
The ECM controls the electric throttle control actuator in regulating the throttle opening in order for the idle position to be within +10 degrees. The ECM regulates an opening speed of approx. 5 seconds to an opening of 10 degrees. So, the acceleration will be poor.

DTC Confirmation Procedure

UBS003AV

NOTE:
If “DTC Confirmation Procedure” has been previously conducted, always turn ignition switch “OFF” and wait at least 10 seconds before conducting the next test.
TESTING CONDITION:
Before performing the following procedure, confirm that battery voltage is more than 10V at idle.

WITH CONSULT-II

1. Turn ignition switch “ON”.

2. Select “DATA MONITOR” mode with CONSULT-II.
3. Start engine and let it idle for 1 second.
4. If DTC is detected, go to EC-918, "Diagnostic Procedure" .

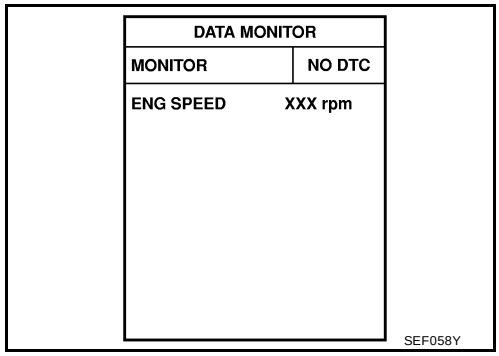

WITH GST

Follow the procedure “WITH CONSULT-II” above.

Wiring Diagram

UBS003AW

EC-APPS3-01

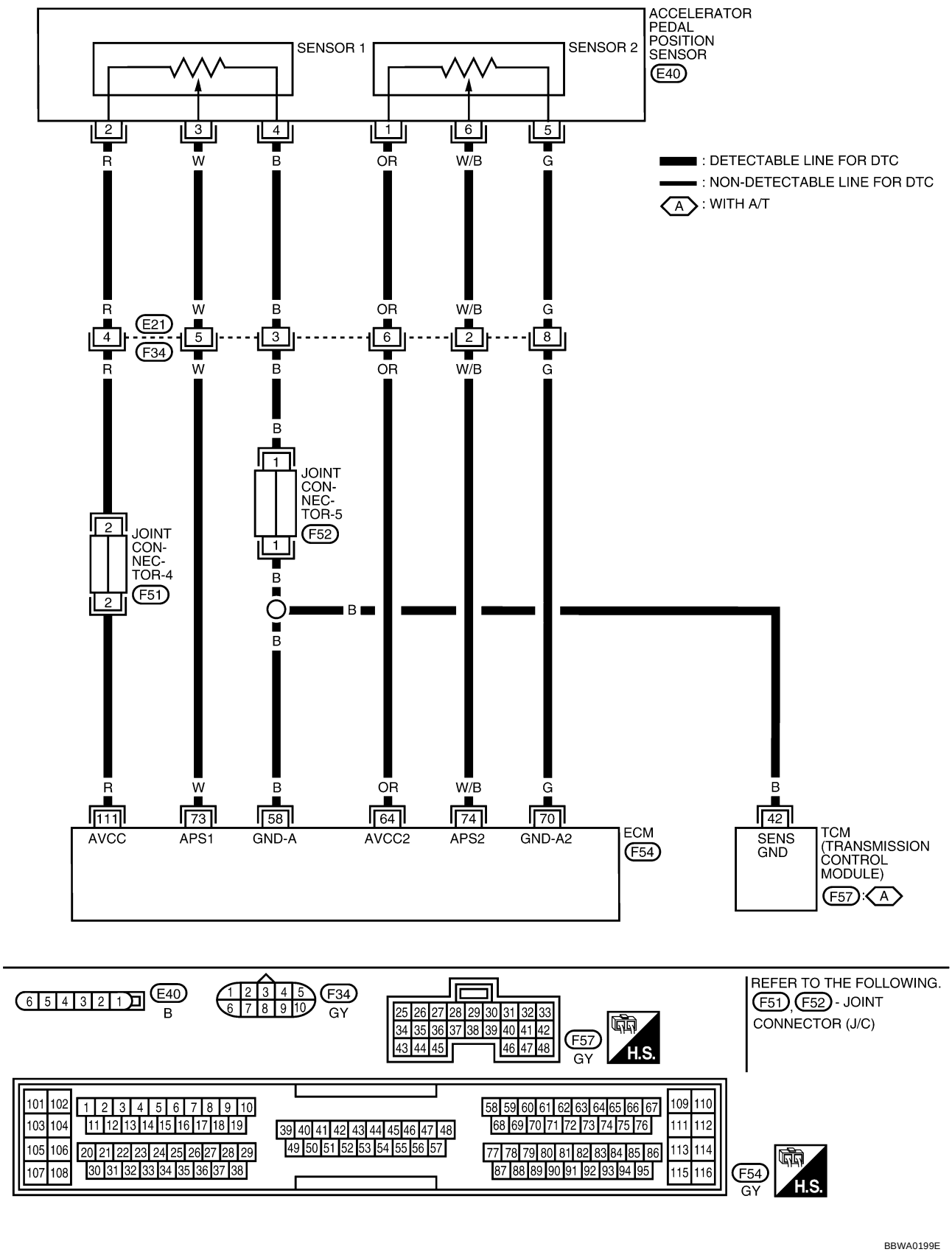

BBWA0199E

Specification data are reference values and are measured between each terminal and ground.

CAUTION:
Do not use ECM ground terminals when measuring input/output voltage. Doing so may result in damage to the ECM's transistor. Use a ground other than ECM terminals, such as the ground.

TERMINAL NO.	WIRE COLOR	ITEM	CONDITION	DATA (DC Voltage)
58	B	Sensors' ground	**[Engine is running]** ● **Warm-up condition** ● Idle speed	Approximately 0V
64	OR	Accelerator pedal position sensor 2 power supply	**[Ignition switch “ON”]**	Approximately 2.5V
70	G	Accelerator pedal position sensor 2 ground	**[Ignition switch “ON”]**	Approximately 0V
73	W	Accelerator pedal position sensor 1	**[Ignition switch "ON"]** ● Accelerator pedal fully released	0.41 - 0.71V
			[Ignition switch "ON"] ● Accelerator pedal fully depressed	More than 4.2V
74	W/B	Accelerator pedal position sensor 2	**[Ignition switch "ON"]** ● Accelerator pedal fully released	0.21 - 0.36V
			[Ignition switch "ON"] ● Accelerator pedal fully depressed	More than 2.1V
111	R	Sensor's power supply	**[Ignition switch “ON”]**	Approximately 5V

Diagnostic Procedure

UBS003AX

1. RETIGHTEN GROUND SCREWS

1. Turn ignition switch “OFF”.
2. Loosen and retighten engine ground screws.

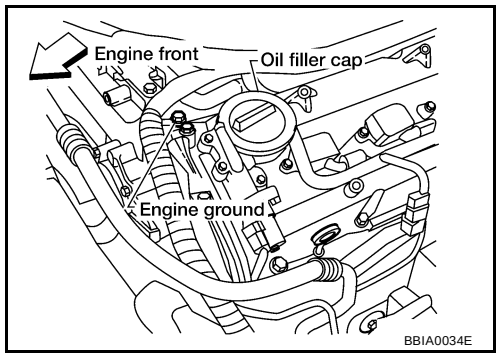

>> GO TO 2.

2. CHECK APP SENSOR POWER SUPPLY CIRCUIT

1. Disconnect accelerator pedal position (APP) sensor harness connector.
2. Turn ignition switch “ON”.

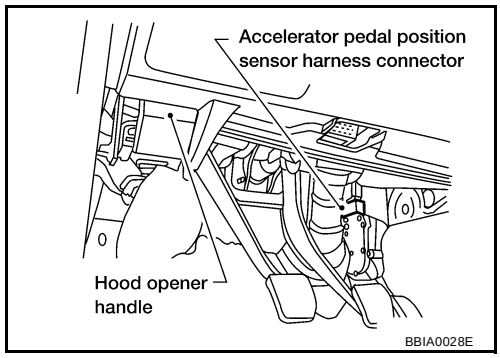

3. Check voltage between APP sensor terminals 1, 2 and ground with CONSULT-II or tester.

APP sensor terminal	Voltage (V)
1	Approximately 2.5
2	Approximately 5

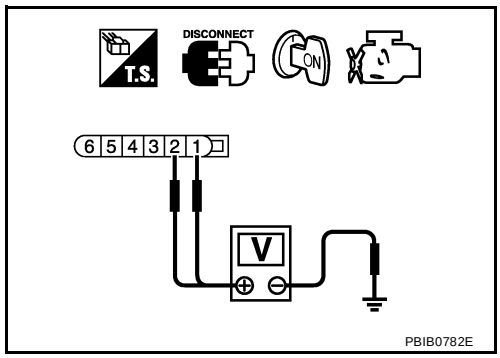

OK or NG

OK >> GO TO 4.
NG >> GO TO 3.

3. DETECT MALFUNCTIONING PART

Check the following.

- Harness connectors E21, F34
- Joint connector-4
- Harness for open or short between ECM and accelerator pedal position sensor

>> Repair open circuit or short to ground or short to power in harness or connectors.

4. CHECK APP SENSOR GROUND CIRCUIT FOR OPEN AND SHORT

1. Turn ignition switch “OFF”.
2. Check harness continuity between APP sensor terminals 4, 5 and engine ground.
   Refer to Wiring Diagram.

   Continuity should exist.

3. Also check harness for short to ground and short to power.

OK or NG

OK >> GO TO 6.
NG >> GO TO 5.

5. DETECT MALFUNCTIONING PART

Check the following.

- Harness connectors E21, F34
- Joint connector-5
- Harness for open or short between ECM and accelerator pedal position sensor
- Harness for open or short between TCM and accelerator pedal position sensor

>> Repair open circuit or short to ground or short to power in harness or connectors.

6. CHECK APP SENSOR INPUT SIGNAL CIRCUIT FOR OPEN AND SHORT

1. Disconnect ECM harness connector.
2. Check harness continuity between ECM terminal 73 and APP sensor terminal 3, ECM terminal 74 and APP sensor terminal 6.
   Refer to Wiring Diagram.

   Continuity should exist.

3. Also check harness for short to ground and short to power.

OK or NG

OK >> GO TO 8.
NG >> GO TO 7.

7. DETECT MALFUNCTIONING PART

Check the following.

- Harness connectors E21, F34
- Harness for open or short between ECM and accelerator pedal position sensor

>> Repair open circuit or short to ground or short to power in harness or connectors.

8. CHECK APP SENSOR

Refer to EC-920, "Component Inspection" .

OK or NG

OK >> GO TO 9.
NG >> Replace accelerator pedal assembly.

9. CHECK INTERMITTENT INCIDENT

Refer to EC-756, "TROUBLE DIAGNOSIS FOR INTERMITTENT INCIDENT" .

>> **INSPECTION END**

Component Inspection

UBS003AY

ACCELERATOR PEDAL POSITION SENSOR

1. Reconnect all harness connectors disconnected.
2. Turn ignition switch "ON".
3. Check voltage between ECM terminals 73 (APP sensor 1 signal), 74 (APP sensor 2 signal) and engine ground under the following conditions.

Terminal	Accelerator pedal	Voltage
73 (Accelerator pedal position sensor 1)	Fully released	0.41 - 0.71V
	Fully depressed	More than 4.2V
74 (Accelerator pedal position sensor 2)	Fully released	0.21 - 0.36V
	Fully depressed	More than 2.1V

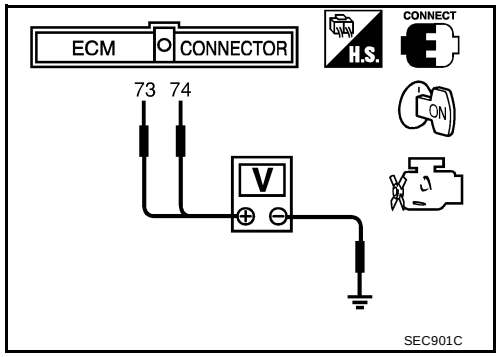

4. If NG, replace accelerator pedal assembly and go to next step.
5. Perform EC-668, "Accelerator Pedal Released Position Learning" .
6. Perform EC-669, "Throttle Valve Closed Position Learning" .
7. Perform EC-669, "Idle Air Volume Learning" .

Removal and Installation

UBS003AZ

ACCELERATOR PEDAL

Refer to ACC-2, "ACCELERATOR CONTROL SYSTEM" .

DTC P0227, P0228 APP SENSOR

PFP:18002

Component Description

UBS003B0

The accelerator pedal position sensor is installed on the upper end of the accelerator pedal assembly. The sensor detects the accelerator position and sends a signal to the ECM.
Accelerator pedal position sensor has two sensors. These sensors are a kind of potentiometers which transform the accelerator pedal position into output voltage, and emit the voltage signal to the ECM. In addition, these sensors detect the opening and closing speed of the accelerator pedal and feed the voltage signals to the ECM. The ECM judges the current opening angle of the accelerator pedal from these signals and controls the throttle control motor based on these signals.

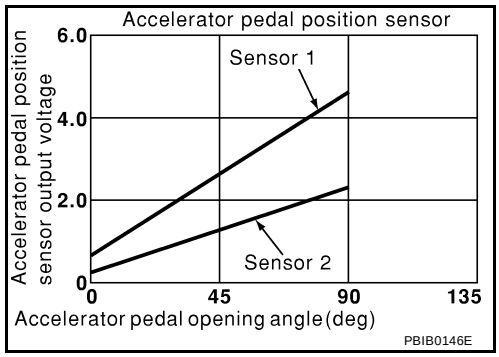

Idle position of the accelerator pedal is determined by the ECM receiving the signal from the accelerator pedal position sensor. The ECM uses this signal for the engine operation such as fuel cut.

CONSULT-II Reference Value in Data Monitor Mode

UBS003B1

Specification data are reference values.

MONITOR ITEM	CONDITION		SPECIFICATION
ACCEL SEN1 ACCEL SEN2	● Ignition switch: ON (engine stopped)	Accelerator pedal: Fully released	0.41 - 0.71V
		Accelerator pedal: Fully depressed	More than 4.2V
CLSD THL POS	● Ignition switch: ON	Accelerator pedal: Fully released	ON
		Accelerator pedal: Slightly depressed	OFF

On Board Diagnosis Logic

UBS003B2

These self-diagnoses have the one trip detection logic.

DTC No.	Trouble diagnosis name	DTC detecting condition	Possible cause
P0227 0227	Accelerator pedal position sensor 1 circuit low input	An excessively low voltage from the APP sensor 1 is sent to ECM.	● Harness or connectors (The APP sensor 1 circuit is open or shorted.) ● Accelerator pedal position sensor (Accelerator pedal position sensor 1)
P0228 0228	Accelerator pedal position sensor 1 circuit high input	An excessively high voltage from the APP sensor 1 is sent to ECM.	

FAIL-SAFE MODE

When the malfunction is detected, ECM enters in fail-safe mode and the MIL lights up.

Engine operating condition in fail-safe mode
The ECM controls the electric throttle control actuator in regulating the throttle opening in order for the idle position to be within +10 degrees. The ECM regulates an opening speed of approx. 5 seconds to an opening of 10 degrees. So, the acceleration will be poor.

DTC Confirmation Procedure

UBS003B3

NOTE:
If “DTC Confirmation Procedure” has been previously conducted, always turn ignition switch “OFF” and wait at least 10 seconds before conducting the next test.
TESTING CONDITION:
Before performing the following procedure, confirm that battery voltage is more than 10V at idle.

WITH CONSULT-II

1. Turn ignition switch “ON”.

2. Select “DATA MONITOR” mode with CONSULT-II.
3. Start engine and let it idle for 1 second.
4. If DTC is detected, go to EC-925, "Diagnostic Procedure" .

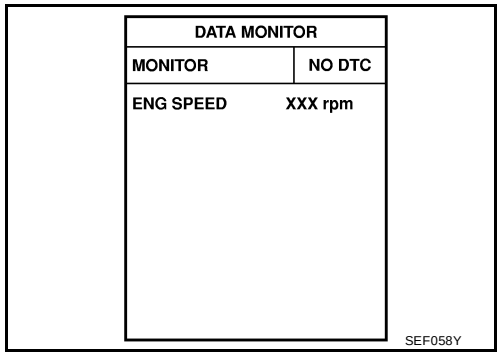

WITH GST

Follow the procedure “WITH CONSULT-II” above.

Wiring Diagram

UBS003B4

EC-APPS1-01

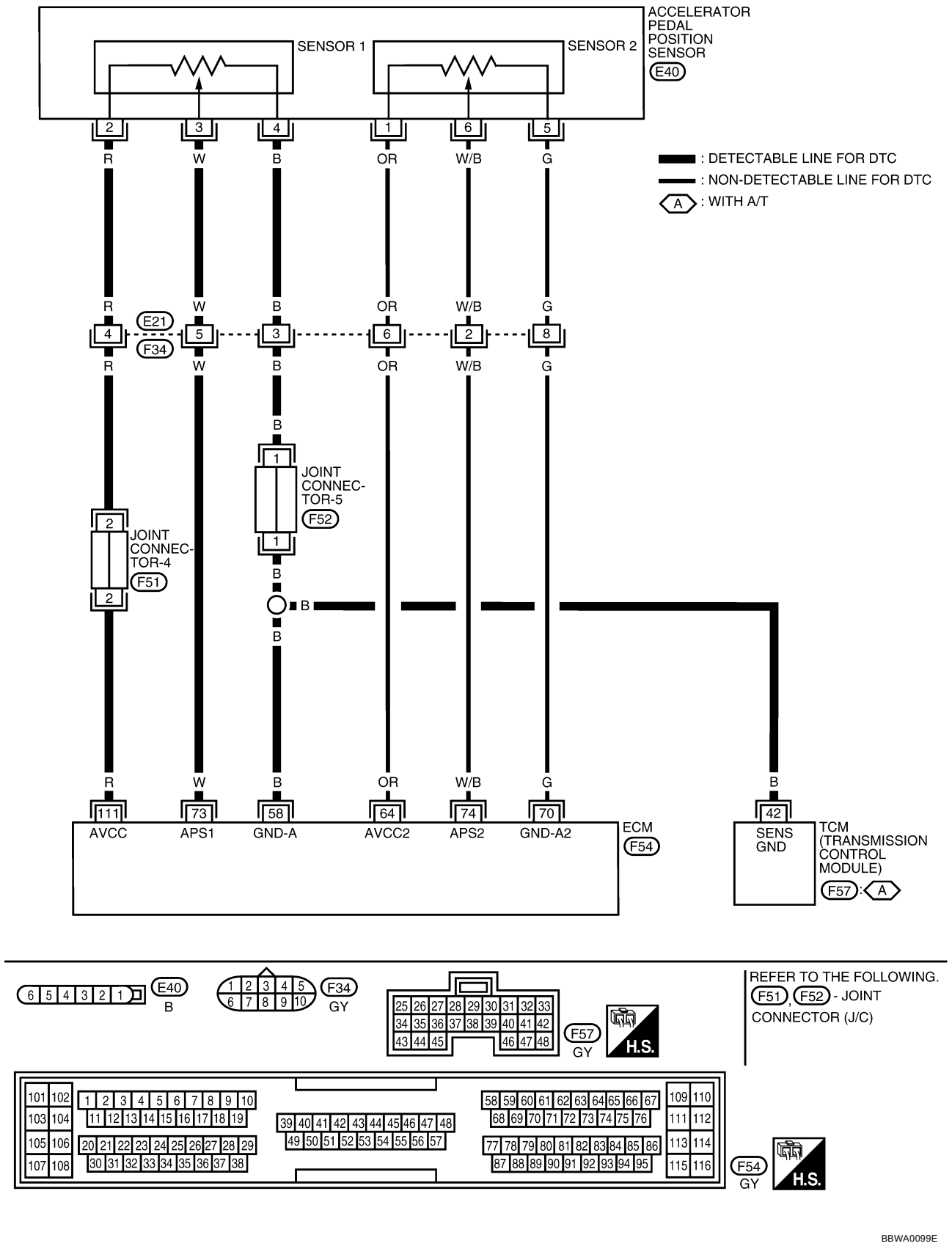

BBWA0099E

Specification data are reference values and are measured between each terminal and ground.

CAUTION:
Do not use ECM ground terminals when measuring input/output voltage. Doing so may result in damage to the ECM's transistor. Use a ground other than ECM terminals, such as the ground.

TERMINAL NO.	WIRE COLOR	ITEM	CONDITION	DATA (DC Voltage)
58	B	Sensors' ground	**[Engine is running]** ● **Warm-up condition** ● Idle speed	Approximately 0V
64	OR	Accelerator pedal position sensor 2 power supply	**[Ignition switch “ON”]**	Approximately 2.5V
70	G	Accelerator pedal position sensor 2 ground	**[Ignition switch “ON”]**	Approximately 0V
73	W	Accelerator pedal position sensor 1	**[Ignition switch "ON"]** ● Accelerator pedal fully released	0.41 - 0.71V
			[Ignition switch "ON"] ● Accelerator pedal fully depressed	More than 4.2V
74	W/B	Accelerator pedal position sensor 2	**[Ignition switch "ON"]** ● Accelerator pedal fully released	0.21 - 0.36V
			[Ignition switch "ON"] ● Accelerator pedal fully depressed	More than 2.1V
111	R	Sensor's power supply	**[Ignition switch “ON”]**	Approximately 5V

Diagnostic Procedure

UBS003B5

1. RETIGHTEN GROUND SCREWS

1. Turn ignition switch “OFF”.
2. Loosen and retighten engine ground screws.

>> GO TO 2.

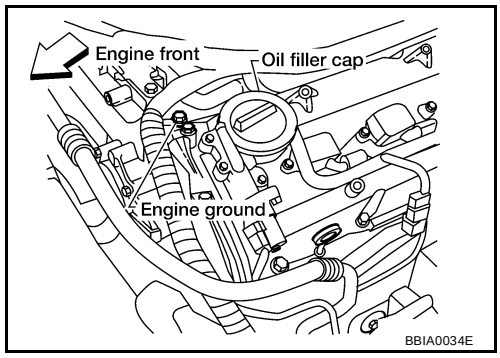

2. CHECK APP SENSOR 1 POWER SUPPLY CIRCUIT

1. Disconnect accelerator pedal position (APP) sensor harness connector.
2. Turn ignition switch “ON”.

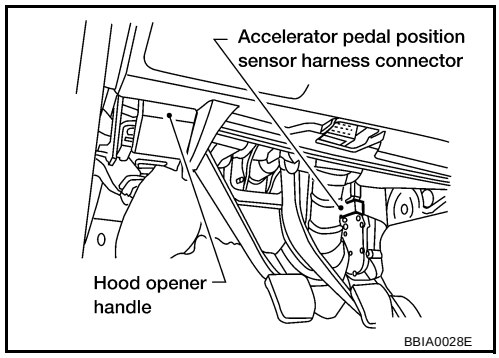

3. Check voltage between APP sensor terminal 2 and ground with CONSULT-II or tester.

Voltage: Approximately 5V

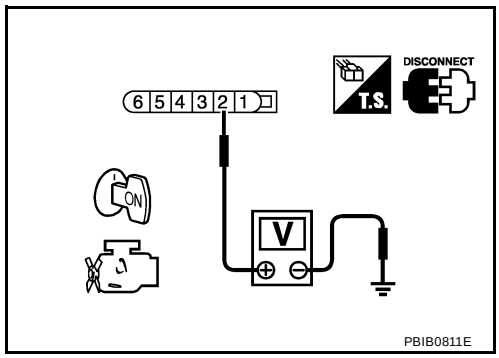

OK or NG

OK >> GO TO 4.
NG >> GO TO 3.

3. DETECT MALFUNCTIONING PART

Check the following.

- Harness connectors E21, F34
- Joint connector-4
- Harness for open or short between ECM and accelerator pedal position sensor

>> Repair open circuit or short to ground or short to power in harness or connectors.

4. CHECK APP SENSOR 1 GROUND CIRCUIT FOR OPEN AND SHORT

1. Turn ignition switch “OFF”.
2. Check harness continuity between APP sensor terminal 4 and engine ground.
   Refer to Wiring Diagram.

Continuity should exist.

3. Also check harness for short to ground and short to power.

OK or NG

OK >> GO TO 6.
NG >> GO TO 5.

5. DETECT MALFUNCTIONING PART

Check the following.

- Harness connectors E21, F34
- Joint connector-5
- Harness for open or short between ECM and accelerator pedal position sensor
- Harness for open or short between TCM and accelerator pedal position sensor

>> Repair open circuit or short to ground or short to power in harness or connectors.

6. CHECK APP SENSOR 1 INPUT SIGNAL CIRCUIT FOR OPEN AND SHORT

1. Disconnect ECM harness connector.
2. Check harness continuity between ECM terminal 73 and APP sensor terminal 3. Refer to Wiring Diagram.

Continuity should exist.

3. Also check harness for short to ground and short to power.

OK or NG

OK >> GO TO 8.
NG >> GO TO 7.

7. DETECT MALFUNCTIONING PART

Check the following.

- Harness connectors E21, F34
- Harness for open or short between ECM and accelerator pedal position sensor

>> Repair open circuit or short to ground or short to power in harness or connectors.

8. CHECK APP SENSOR

Refer to EC-927, "Component Inspection" .

OK or NG

OK >> GO TO 9.
NG >> Replace accelerator pedal assembly.

9. CHECK INTERMITTENT INCIDENT

Refer to EC-756, "TROUBLE DIAGNOSIS FOR INTERMITTENT INCIDENT" .

>> **INSPECTION END**

Component Inspection

UBS003B6

ACCELERATOR PEDAL POSITION SENSOR

1. Reconnect all harness connectors disconnected.
2. Turn ignition switch "ON".
3. Check voltage between ECM terminals 73 (APP sensor 1 signal), 74 (APP sensor 2 signal) and engine ground under the following conditions.

Terminal	Accelerator pedal	Voltage
73 (Accelerator pedal position sensor 1)	Fully released	0.41 - 0.71V
	Fully depressed	More than 3.9V
74 (Accelerator pedal position sensor 2)	Fully released	0.09 - 0.48V
	Fully depressed	More than 1.9V

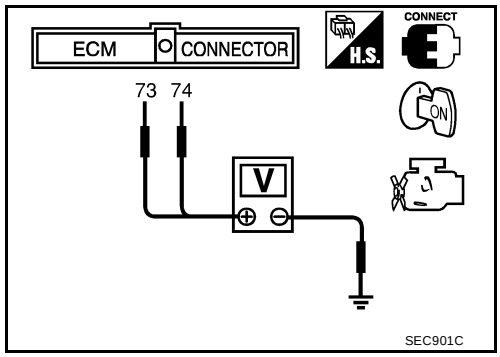

4. If NG, replace accelerator pedal assembly.
5. Perform EC-668, "Accelerator Pedal Released Position Learning" .
6. Perform EC-669, "Throttle Valve Closed Position Learning" .
7. Perform EC-669, "Idle Air Volume Learning" .

Removal and Installation

UBS003B7

ACCELERATOR PEDAL

Refer to ACC-2, "ACCELERATOR CONTROL SYSTEM" .

DTC P0300 - P0306 MULTIPLE CYLINDER MISFIRE, NO. 1 - 6 CYLINDER MISFIRE

PFP:00000

On Board Diagnosis Logic

UBS003B8

When a misfire occurs, engine speed will fluctuate. If the engine speed fluctuates enough to cause the crankshaft position (CKP) sensor (POS) signal to vary, ECM can determine that a misfire is occurring.

Sensor	Input Signal to ECM	ECM function
Crankshaft position sensor (POS)	Engine speed	On board diagnosis of misfire

The misfire detection logic consists of the following two conditions.

1. One Trip Detection Logic (Three Way Catalyst Damage)
   On the first trip that a misfire condition occurs that can damage the three way catalyst (TWC) due to overheating, the MIL will blink.
   When a misfire condition occurs, the ECM monitors the CKP sensor signal every 200 engine revolutions for a change.
   When the misfire condition decreases to a level that will not damage the TWC, the MIL will turn off.
   If another misfire condition occurs that can damage the TWC on a second trip, the MIL will blink.
   When the misfire condition decreases to a level that will not damage the TWC, the MIL will remain on.
   If another misfire condition occurs that can damage the TWC, the MIL will begin to blink again.
2. Two Trip Detection Logic (Exhaust quality deterioration)
   For misfire conditions that will not damage the TWC (but will affect vehicle emissions), the MIL will only light when the misfire is detected on a second trip. During this condition, the ECM monitors the CKP sensor signal every 1,000 engine revolutions.
   A misfire malfunction can be detected on any one cylinder or on multiple cylinders.

DTC No.	Trouble diagnosis name	DTC detecting condition	Possible cause
P0300 0300	Multiple cylinder misfire detected	Multiple cylinder misfire.	● Improper spark plug ● Insufficient compression ● Incorrect fuel pressure ● The injector circuit is open or shorted ● Fuel injectors ● Intake air leak ● The ignition signal circuit is open or shorted ● Lack of fuel ● Drive plate or flywheel ● Heated oxygen sensor 1
P0301 0301	No.1 cylinder misfire detected	No. 1 cylinder misfires.	
P0302 0302	No. 2 cylinder misfire detected	No. 2 cylinder misfires.	
P0303 0303	No. 3 cylinder misfire detected	No. 3 cylinder misfires.	
P0304 0304	No. 4 cylinder misfire detected	No. 4 cylinder misfires.	
P0305 0305	No. 5 cylinder misfire detected	No. 4 cylinder misfires.	
P0306 0306	No. 6 cylinder misfire detected	No. 4 cylinder misfires.	

DTC Confirmation Procedure

UBS003B9

CAUTION:
Always drive vehicle at a safe speed.

NOTE:
If “DTC Confirmation Procedure” has been previously conducted, always turn ignition switch “OFF” and wait at least 10 seconds before conducting the next test.

WITH CONSULT-II

1. Turn ignition switch “ON”, and select “DATA MONITOR” mode with CONSULT-II.
2. Start engine and warm it up to normal operating temperature.
3. Turn ignition switch “OFF” and wait at least 10 seconds.

4. Start engine again and drive at 1,500 to 3,000 rpm for at least 3 minutes.
   Hold the accelerator pedal as steady as possible.
   NOTE:
   Refer to the freeze frame data for the test driving conditions.
5. If 1st trip DTC is detected, go to EC-929, "Diagnostic Procedure".

DATA MONITOR	
MONITOR	NO DTC
ENG SPEED	XXX rpm
COOLAN TEMP/S	XXX °C
VHCL SPEED SE	XXX km/h
B/FUEL SCHDL	XXX msec

PBIB0164E

WITH GST

Follow the procedure “WITH CONSULT-II” above.

Diagnostic Procedure

UBS003BA

1. CHECK FOR INTAKE AIR LEAK

1. Start engine and run it at idle speed.
2. Listen for the sound of the intake air leak.

OK or NG

OK >> GO TO 2.
NG >> Discover air leak location and repair.

2. CHECK FOR EXHAUST SYSTEM CLOGGING

Stop engine and visually check exhaust tube, three way catalyst and muffler for dents.

OK or NG

OK >> GO TO 3.
NG >> Repair or replace it.

3. PERFORM POWER BALANCE TEST

With CONSULT-II

1. Perform “POWER BALANCE” in “ACTIVE TEST” mode.
2. Is there any cylinder which does not produce a momentary engine speed drop?

ACTIVE TEST	
POWER BALANCE	
MONITOR	
ENG SPEED	XXX rpm
MAS A/F SE-B1	XXX V

PBIB0133E

Without CONSULT-II

When disconnecting each injector harness connector one at a time, is there any cylinder which does not produce a momentary engine speed drop?

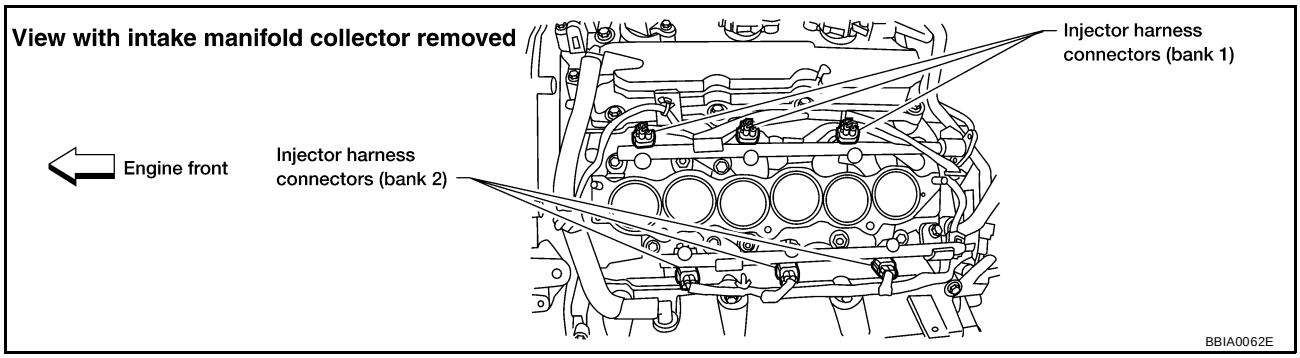

Yes or No

Yes >> GO TO 4.
No >> GO TO 7.

4. CHECK INJECTOR

Does each injector make an operating sound at idle?

Yes or No

Yes >> GO TO 5.
No >> Check injector(s) and circuit(s). Refer to EC-1230, "INJECTOR CIRCUIT" .

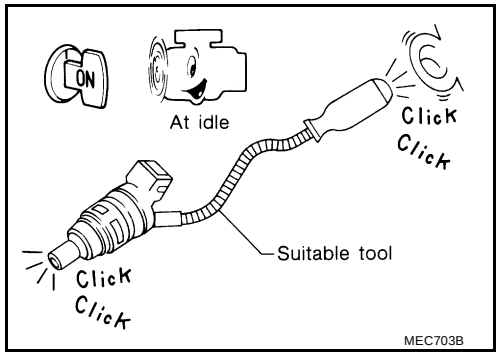

5. CHECK IGNITION SPARK

1. Remove ignition coil assembly from rocker cover.
2. Remove spark plug from ignition coil assembly
3. Connect a known good spark plug to the ignition coil.
4. Place end of spark plug against a suitable ground and crank engine.
5. Check for spark.

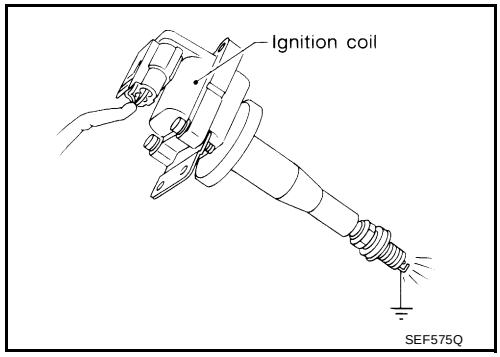

OK or NG

OK >> GO TO 6.
NG >> Check ignition coil, power transistor and their circuits. Refer to EC-1210, "IGNITION SIGNAL" .

6. CHECK SPARK PLUGS

Remove the spark plugs and check for fouling, etc.

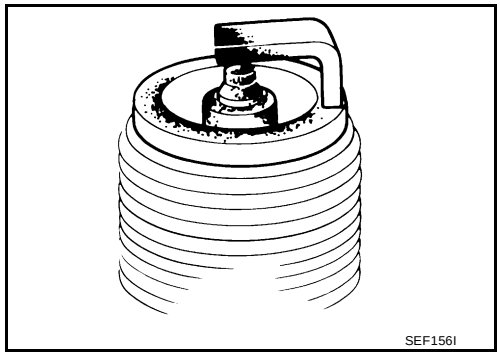

OK or NG

OK >> GO TO 7.
NG >> Repair or replace spark plug(s) with standard type one(s). For spark plug type, refer to, MA-21, "ENGINE MAINTENANCE (VQ35DE ENGINE)" .

7. CHECK COMPRESSION PRESSURE

Check compression pressure. Refer to EM-164, "CHECKING COMPRESSION PRESSURE" .

Standard:	**1,275 kPa (13.0 kg/cm^2 , 185 psi)/300 rpm**
Minimum:	**981 kPa (10.0 kg/cm^2 , 142 psi)/300 rpm**
Difference between each cylinder:	**98 kPa (1.0 kg/cm^2 , 14 psi)/300 rpm**

OK or NG

OK >> GO TO 8.
NG >> Check pistons, piston rings, valves, valve seats and cylinder head gaskets.

8. CHECK FUEL PRESSURE

1. Install all removed parts.
2. Release fuel pressure to zero. Refer to EC-671, "FUEL PRESSURE RELEASE" .
3. Install fuel pressure gauge and check fuel pressure. Refer to EC-672, "FUEL PRESSURE CHECK" .

At idle: Approx. 350 kPa (3.7 kg/cm^2 , 51 psi)

OK or NG

OK >> GO TO 10.
NG >> GO TO 9.

9. DETECT MALFUNCTIONING PART

Check the following.

- Fuel pump and circuit (Refer to EC-1240, "FUEL PUMP CIRCUIT" .)
- Fuel pressure regulator (Refer to EC-672, "FUEL PRESSURE CHECK" .)
- Fuel lines (Refer to EC-1116, "Wiring Diagram" .)
- Fuel filter for clogging

>> Repair or replace.

10. CHECK IGNITION TIMING

Check the following items. Refer to EC-705, "Basic Inspection" .

Items	Specifications
Target idle speed	M/T: 700 ± 50 rpm
	A/T: 700 ± 50 rpm (in "P" or "N" position)
Ignition timing	M/T: 15 ± 5° BTDC
	A/T: 15 ± 5° BTDC (in "P" or "N" position)

OK or NG

OK >> GO TO 11.
NG >> Follow the EC-705, "Basic Inspection" .

11. CHECK HEATED OXYGEN SENSOR 1 (BANK 1)/(BANK 2)

Refer to EC-834, "Component Inspection" .

OK or NG

OK >> GO TO 13.
NG >> GO TO 12.

12. CHECK MASS AIR FLOW SENSOR

With CONSULT-II

Check mass air flow sensor signal in “DATA MONITOR” mode with CONSULT-II.

2.0 - 6.0 g·m/sec: at idling
7.0 - 20.0 g·m/sec: at 2,500 rpm

With GST

Check mass air flow sensor signal in MODE 1 with GST.

2.0 - 6.0 g·m/sec: at idling
7.0 - 20.0 g·m/sec: at 2,500 rpm

OK or NG

OK >> GO TO 13.
NG >> Check connectors for rusted terminals or loose connections in the mass air flow sensor circuit or engine grounds. Refer to EC-790, "DTC P0101 MAF SENSOR" .

13. CHECK SYMPTOM MATRIX CHART

Check items on the rough idle symptom in EC-710, "Symptom Matrix Chart" .

OK or NG

OK >> GO TO 14.
NG >> Repair or replace.

14. ERASE THE 1ST TRIP DTC

Some tests may cause a 1st trip DTC to be set.
Erase the 1st trip DTC from the ECM memory after performing the tests. Refer to EC-687, "HOW TO ERASE EMISSION-RELATED DIAGNOSTIC INFORMATION" .

>> GO TO 15.

15. CHECK INTERMITTENT INCIDENT

Refer to EC-756, "TROUBLE DIAGNOSIS FOR INTERMITTENT INCIDENT" .

>> **INSPECTION END**

DTC P0327, P0328 KS

PFP:22060

Component Description

UBS003BB

The knock sensor is attached to the cylinder block. It senses engine knocking using a piezoelectric element. A knocking vibration from the cylinder block is sensed as vibrational pressure. This pressure is converted into a voltage signal and sent to the ECM.

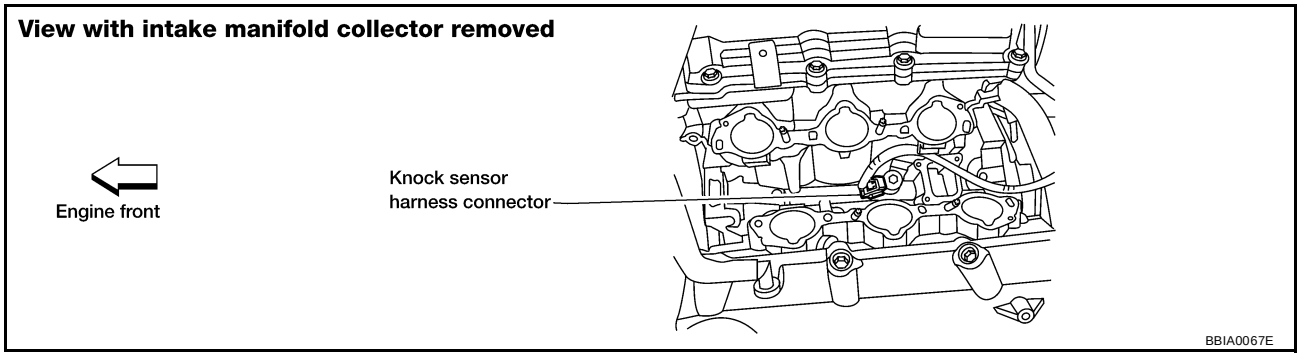

On Board Diagnosis Logic

UBS003BC

The MIL will not light for knock sensor malfunction.

DTC No.	Trouble Diagnosis Name	DTC Detected Condition	Possible Cause
P0327 0327	Knock sensor circuit low input	An excessively low voltage from the sensor is sent to ECM.	● Harness or connectors (The sensor circuit is open or shorted.) ● Knock sensor
P0328 0328	Knock sensor circuit high input	An excessively high voltage from the sensor is sent to ECM.	

DTC Confirmation Procedure

UBS003BD

NOTE:
If “DTC Confirmation Procedure” has been previously conducted, always turn ignition switch “OFF” and wait at least 10 seconds before conducting the next test.
TESTING CONDITION:
Before performing the following procedure, confirm that battery voltage is more than 10V at idle.

WITH CONSULT-II

1. Turn ignition switch “ON” and select “DATA MONITOR” mode with CONSULT-II.
2. Start engine and run it for at least 5 seconds at idle speed.
3. If 1st trip DTC is detected, go to EC-936, "Diagnostic Procedure"
.

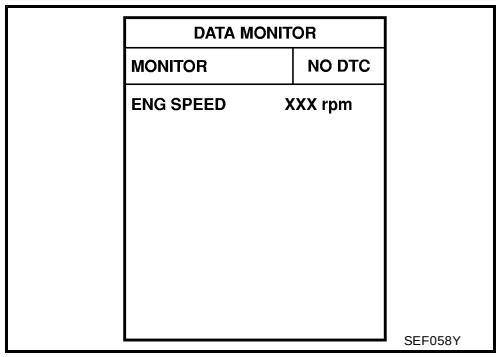

WITH GST

Follow the procedure "WITH CONSULT-II" above.

Wiring Diagram

UBS003BE

EC-KS-01

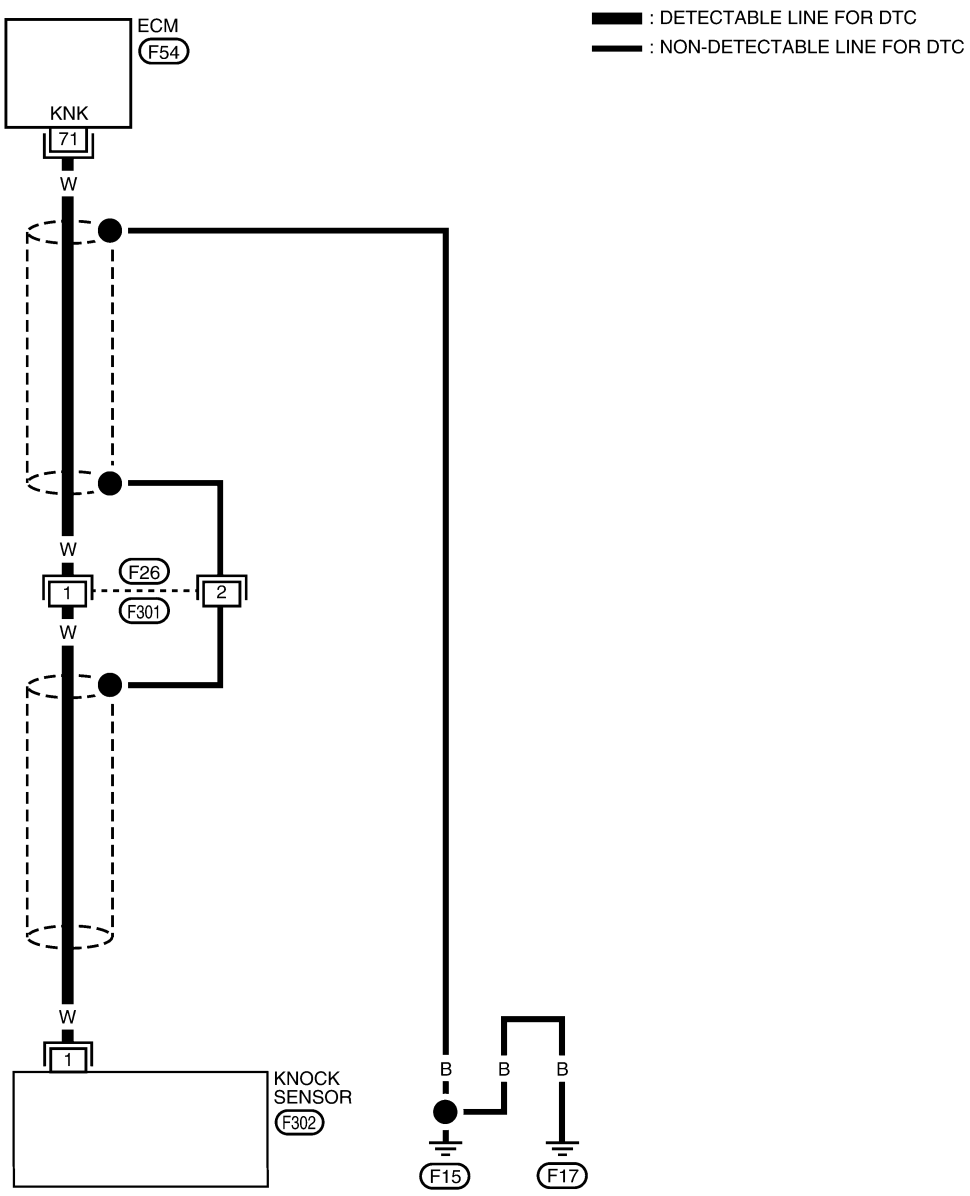

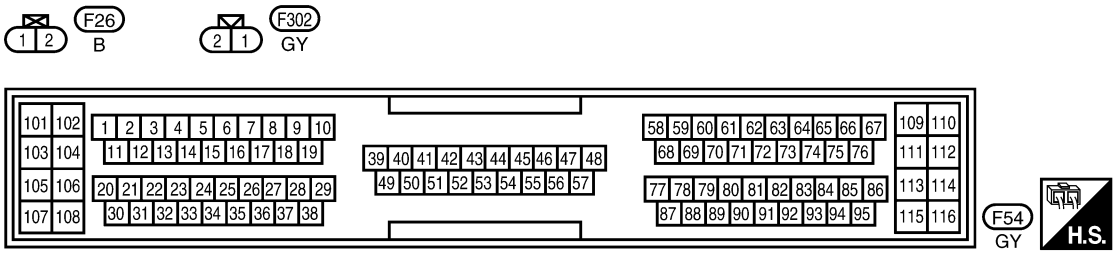

BBWA0374E

Specification data are reference values and are measured between each terminal and ground.

CAUTION:
Do not use ECM ground terminals when measuring input/output voltage. Doing so may result in damage to the ECM's transistor. Use a ground other than ECM terminals, such as the ground.

TERMINAL NO.	WIRE COLOR	ITEM	CONDITION	DATA (DC Voltage)
71	W	Knock sensor	**[Engine is running]** ● Idle speed	Approximately 2.5V

Diagnostic Procedure

UBS003BF

1. CHECK KNOCK SENSOR INPUT SIGNAL CIRCUIT FOR OPEN AND SHORT-I

1. Turn ignition switch “OFF”.
2. Disconnect ECM harness connector.
3. Check resistance between ECM terminal 71 and engine ground. Refer to Wiring Diagram.

   NOTE:
   It is necessary to use an ohmmeter which can measure more than 10 MΩ.

   Resistance: Approximately 530 - 590kΩ [at 20°C (68°F)]

4. Also check harness for short to ground and short to power.

OK or NG

OK >> GO TO 4.
NG >> GO TO 2.

2. CHECK KNOCK SENSOR INPUT SIGNAL CIRCUIT FOR OPEN AND SHORT-II

1. Disconnect knock sensor harness connector.

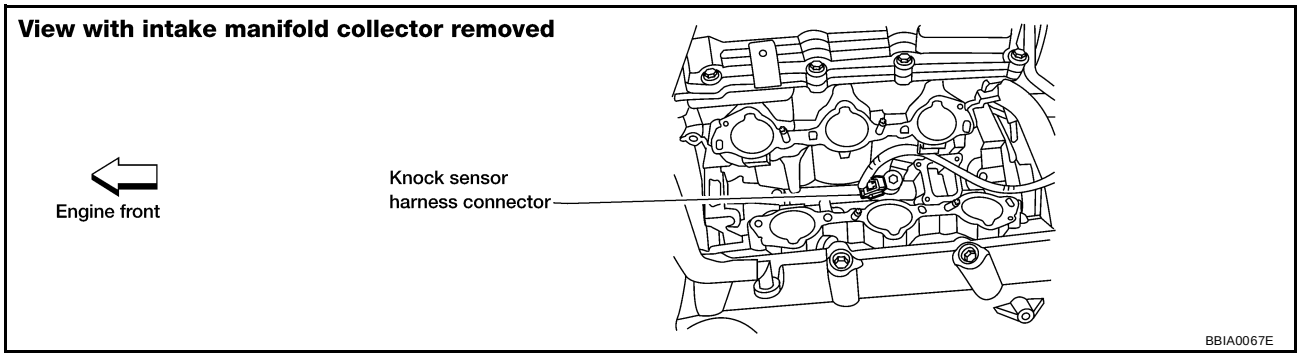

2. Check harness continuity between ECM terminal 71 and knock sensor terminal 1.
   Refer to Wiring Diagram.

   Continuity should exist.

3. Also check harness for short to ground and short to power.

OK or NG

OK >> GO TO 4.
NG >> GO TO 3.

3. DETECT MALFUNCTIONING PART

Check the following.

- Harness connectors F26, F301
- Harness for open or short between ECM and knock sensor

>> Repair open circuit or short to ground or short to power in harness or connectors.

4. CHECK KNOCK SENSOR

Refer to EC-937, "Component Inspection" .

OK or NG

OK >> GO TO 5.
NG >> Replace knock sensor.

5. RETIGHTEN GROUND SCREWS

Loosen and retighten engine ground screws.

>> GO TO 6.

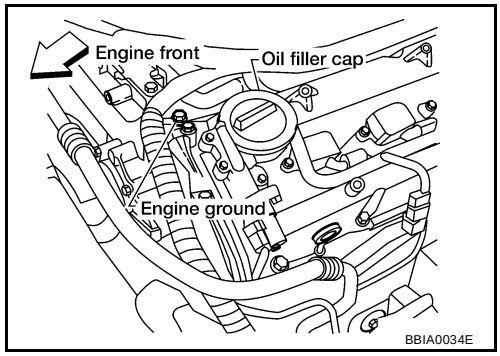

6. CHECK INTERMITTENT INCIDENT

Refer to EC-756, "TROUBLE DIAGNOSIS FOR INTERMITTENT INCIDENT" .

>> **INSPECTION END**

Component Inspection

UBS003BG

KNOCK SENSOR

Check resistance between knock sensor terminal 1 and ground.

NOTE:
It is necessary to use an ohmmeter which can measure more than 10 MΩ.

Resistance: Approximately 530 - 590kΩ [at 20°C (68°F)]

CAUTION:
Do not use any knock sensors that have been dropped or physically damaged. Use only new ones.

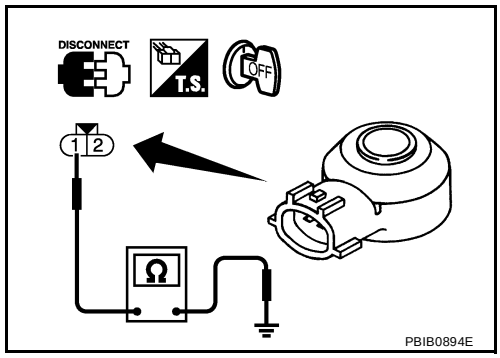

Removal and Installation

UBS003BH

KNOCK SENSOR

Refer to EM-186, "CYLINDER BLOCK" .

DTC P0335 CKP SENSOR (POS)

PFP:23731

Component Description

UBS003BI

The crankshaft position sensor (POS) is located on the cylinder block rear housing facing the gear teeth (cogs) of the signal plate at the end of the crankshaft. It detects the fluctuation of the engine revolution.
The sensor consists of a permanent magnet and hall IC.
When the engine is running, the high and low parts of the teeth cause the gap with the sensor change.
The changing gap causes the magnetic field near the sensor to change.
Due to the changing magnetic field, the voltage from the sensor changes.
The ECM receives the voltage signal and detects the fluctuation of the engine revolution.

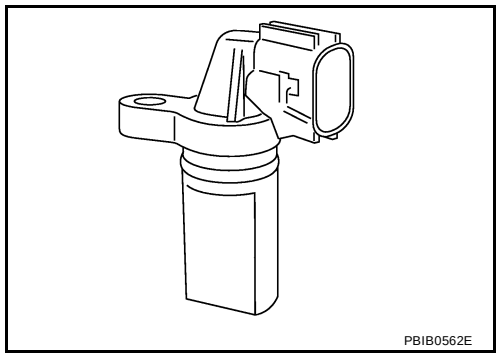

PBIB0562E

CONSULT-II Reference Value in Data Monitor Mode

UBS003BJ

Specification data are reference values.

MONITOR ITEM	CONDITION	SPECIFICATION
ENG SPEED·	● Tachometer: Connect ● Run engine and compare tachometer indication with the CONSULT-II value.	Almost the same speed as the CONSULT-II value.

On Board Diagnosis Logic

UBS003BK

DTC No.	Trouble diagnosis name	DTC detecting condition	Possible cause
P0335 0335	Crankshaft position sensor (POS) circuit	● The crankshaft position sensor (POS) signal is not detected by the ECM during the first few seconds of engine cranking. ● The proper pulse signal from the crankshaft position sensor (POS) is not sent to ECM while the engine is running. ● The crankshaft position sensor (POS) signal is not in the normal pattern during engine running.	● Harness or connectors (The sensor circuit is open or shorted) ● Crankshaft position sensor (POS) ● Signal plate

DTC Confirmation Procedure

UBS003BL

NOTE:
If “DTC Confirmation Procedure” has been previously conducted, always turn ignition switch “OFF” and wait at least 10 seconds before conducting the next test.
TESTING CONDITION:
Before performing the following procedure, confirm that battery voltage is more than 10.5V with ignition switch "ON".

WITH CONSULT-II

1. Turn ignition switch “ON” and select “DATA MONITOR” mode with CONSULT-II.
2. Crank engine for at least 2 seconds and run it for at least 5 seconds at idle speed.
3. If 1st trip DTC is detected, go to EC-941, "Diagnostic Procedure".
   If 1st trip DTC is not detected, go to next step.
4. Maintaining engine speed at more than 800 rpm for at least 5 seconds.
5. If 1st trip DTC is detected, go to EC-941, "Diagnostic Procedure".

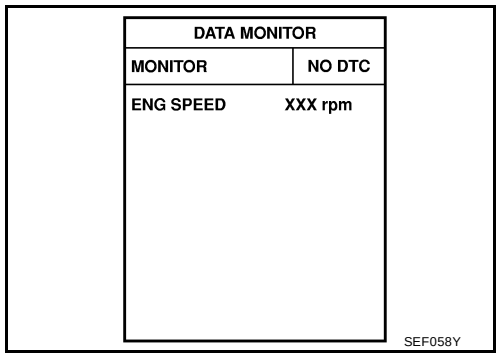

SEF058Y

WITH GST

Follow the procedure “WITH CONSULT-II” above.

Wiring Diagram

UBS003BM

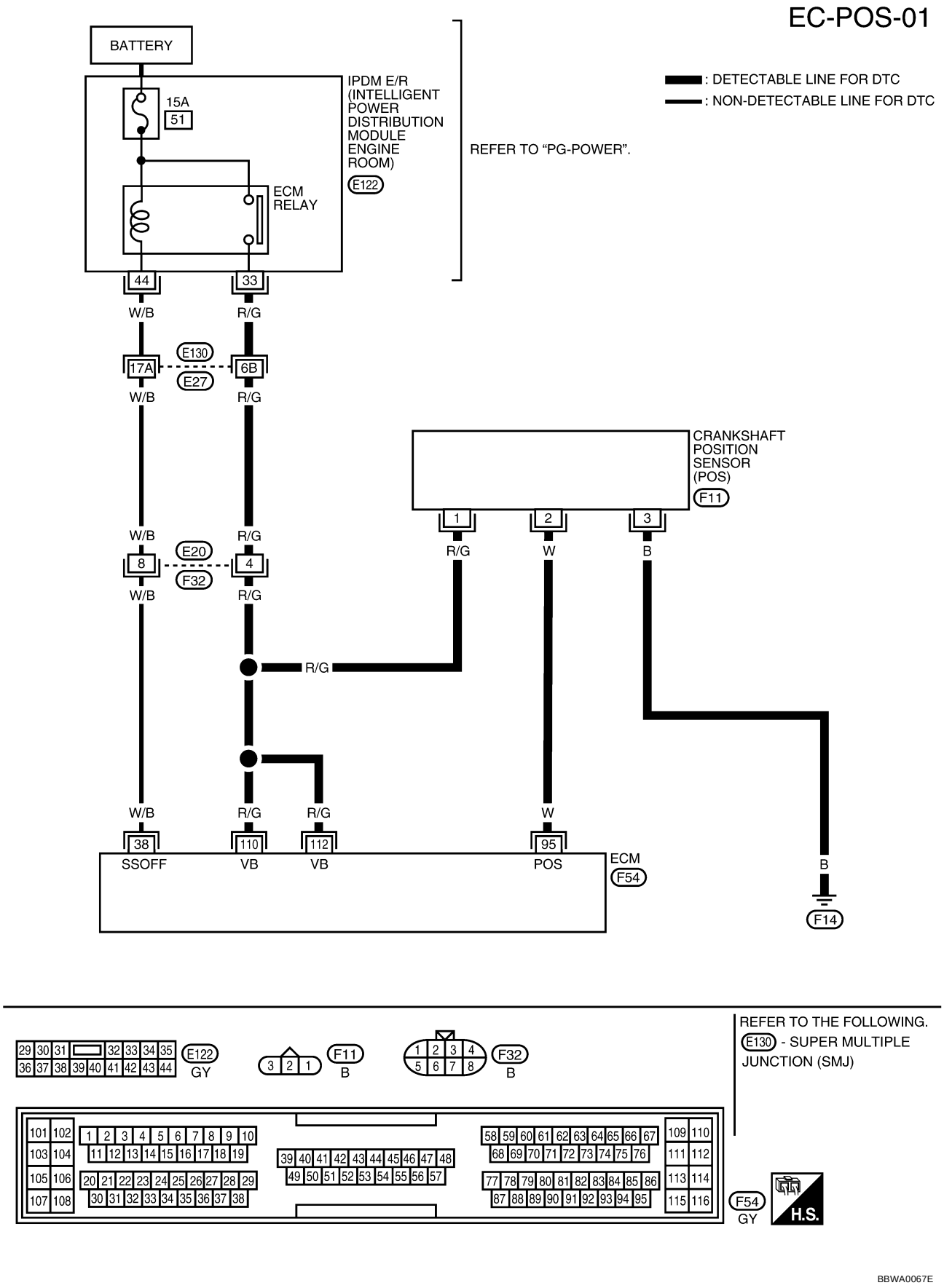

Specification data are reference values and are measured between each terminal and ground.

CAUTION:
Do not use ECM ground terminals when measuring input/output voltage. Doing so may result in damage to the ECM's transistor. Use a ground other than ECM terminals, such as the ground.

TERMINAL NO.	WIRE COLOR	ITEM	CONDITION	DATA (DC Voltage)
95	W	Crankshaft position sensor (POS)	**[Engine is running]** ● **Warm-up condition** ● Idle speed	Approximately 2.4V★ 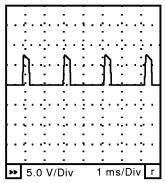 SEC035D
			[Engine is running] ● Engine speed is 2,000 rpm	Approximately 2.3V★ 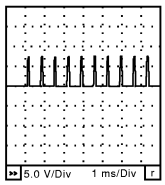 SEC036D

★: Average voltage for pulse signal (Actual pulse signal can be confirmed by oscilloscope.)

Diagnostic Procedure

UBS003BN

1. RETIGHTEN GROUND SCREWS

1. Turn ignition switch “OFF”.
2. Loosen and retighten engine ground screws.

>> GO TO 2.

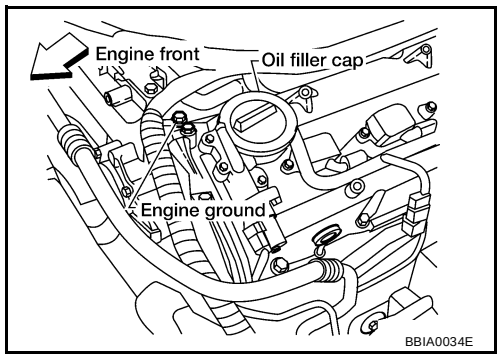

2. CHECK CRANKSHAFT POSITION (CKP) SENSOR (POS) POWER SUPPLY CIRCUIT

1. Disconnect crankshaft position (CKP) sensor (POS) harness connector.
2. Turn ignition switch "ON".

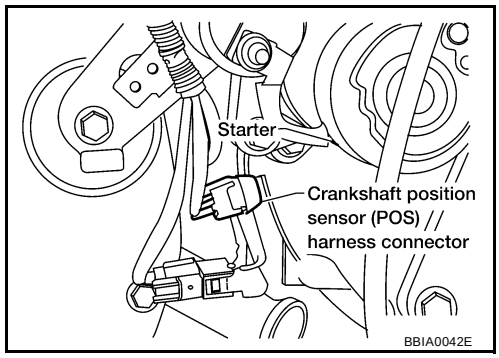

3. Check voltage between CKP sensor (POS) terminal 1 and ground with CONSULT-II or tester.

   Voltage: Battery voltage

4. Also check harness for short to ground and short to power.

OK or NG

OK >> GO TO 4.
NG >> GO TO 3.

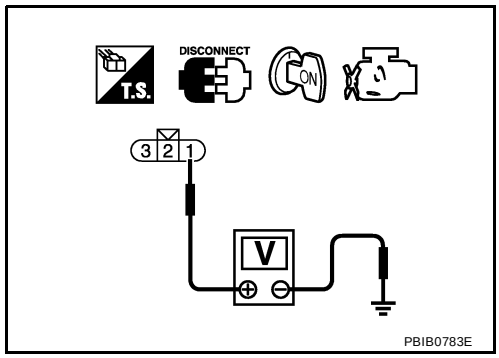

3. DETECT MALFUNCTIONING PART

Check the following.

- Harness connectors E130, E27
- Harness connectors E20, F32
- Harness for open or short between crankshaft position sensor (POS) and ECM
- Harness for open or short between crankshaft position sensor (POS) and IPDM E/R

>> Repair open circuit or short to ground or short to power in harness or connectors.

4. CHECK CKP SENSOR (POS) GROUND CIRCUIT FOR OPEN AND SHORT

1. Turn ignition switch "OFF".
2. Check harness continuity between CKP sensor (POS) terminal 3 and engine ground. Refer to Wiring Diagram.

   Continuity should exist.

3. Also check harness for short to ground and short to power.

OK or NG

OK >> GO TO 5.
NG >> Repair open circuit or short to ground or short to power in harness or connectors.

5. CHECK CKP SENSOR (POS) INPUT SIGNAL CIRCUIT FOR OPEN AND SHORT

1. Disconnect ECM harness connector.
2. Check harness continuity between ECM terminal 95 and CKP sensor (POS) terminal 2. Refer to Wiring Diagram.

   Continuity should exist.

3. Also check harness for short to ground and short to power.

OK or NG

OK >> GO TO 6.
NG >> Repair open circuit or short to ground or short to power in harness or connectors.

6. CHECK CRANKSHAFT POSITION SENSOR (POS)

Refer to EC-943, "Component Inspection" .

OK or NG

OK >> GO TO 7.
NG >> Replace crankshaft position sensor (POS).

7. CHECK GEAR TOOTH

Visually check for chipping signal plate gear tooth.

OK or NG

OK >> GO TO 8.
NG >> Replace the signal plate.

8. CHECK INTERMITTENT INCIDENT

Refer to EC-756, "TROUBLE DIAGNOSIS FOR INTERMITTENT INCIDENT" .

>> **INSPECTION END**

Component Inspection

UBS003BO

CRANKSHAFT POSITION SENSOR (POS)

1. Loosen the fixing bolt of the sensor.
2. Disconnect crankshaft position sensor (POS) harness connector.
3. Remove the sensor.
4. Visually check the sensor for chipping.

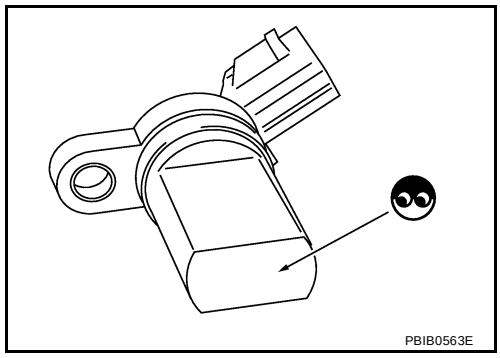

5. Check resistance as shown in the figure.

Terminal No. (Polarity)	Resistance Ω [at 25°C (77°F)]
1 (+) - 2 (-)	Except 0 or ∞
1 (+) - 3 (-)	
2 (+) - 3 (-)	

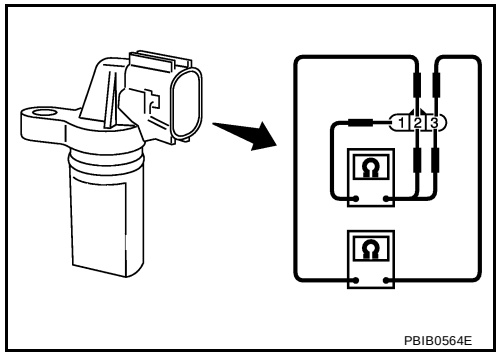

UBS003BP

Removal and Installation

CRANKSHAFT POSITION SENSOR (POS)

Refer to EM-186, "CYLINDER BLOCK" .

DTC P0340, P0345 CMP SENSOR (PHASE)

PFP:23731

Component Description

UBS003BQ

The camshaft position sensor (PHASE) senses the retraction with intake valve camshaft to identify a particular cylinder. The camshaft position sensor (PHASE) senses the piston position.
When the crankshaft position sensor (POS) system becomes inoperative, the camshaft position sensor (PHASE) provides various controls of engine parts instead, utilizing timing of cylinder identification signals.
The sensor consists of a permanent magnet and Hall IC.
When engine is running, the high and low parts of the teeth cause the gap with the sensor to change.
The changing gap causes the magnetic field near the sensor to change.
Due to the changing magnetic field, the voltage from the sensor changes.

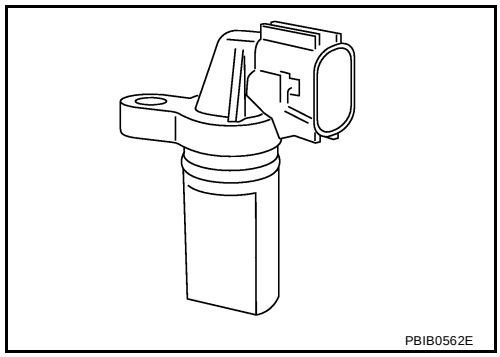
PBIB0562E

On Board Diagnosis Logic

UBS003BR

DTC No.	Trouble diagnosis name	DTC detecting condition	Possible cause
P0340 0340	Camshaft position sensor (PHASE) circuit	● The cylinder No. signal is not sent to ECM for the first few seconds during engine cranking. ● The cylinder No. signal is not sent to ECM during engine running. ● The cylinder No. signal is not in the normal pattern during engine running.	● Harness or connectors (The sensor circuit is open or shorted) ● Camshaft position sensor (PHASE) ● Camshaft (Intake) ● Starter motor (Refer to SC-9 .) ● Starting system circuit (Refer to SC-9 .) ● Dead (Weak) battery

DTC Confirmation Procedure

UBS003BS

NOTE:
If “DTC Confirmation Procedure” has been previously conducted, always turn ignition switch OFF and wait at least 10 seconds before conducting the next test.
TESTING CONDITION:
Before performing the following procedure, confirm that battery voltage is more than 10.5V with ignition switch "ON".

WITH CONSULT-II

1. Turn ignition switch “ON”.
2. Select “DATA MONITOR” mode with CONSULT-II.
3. Crank engine for at least 2 seconds and run it for at least 5 seconds at idle speed.
4. If 1st trip DTC is detected, go to EC-949, "Diagnostic Procedure" .
   If 1st trip DTC is not detected, go to next step.
5. Maintaining engine speed at more than 800 rpm for at least 5 seconds.
6. If 1st trip DTC is detected, go to EC-949, "Diagnostic Procedure" .

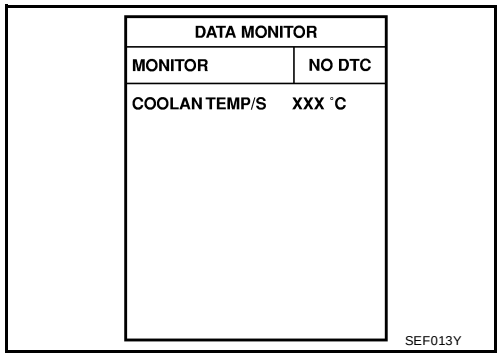

SEF013Y

WITH GST

Follow the procedure “WITH CONSULT-II” above.

Wiring Diagram
BANK 1

UBS003BT

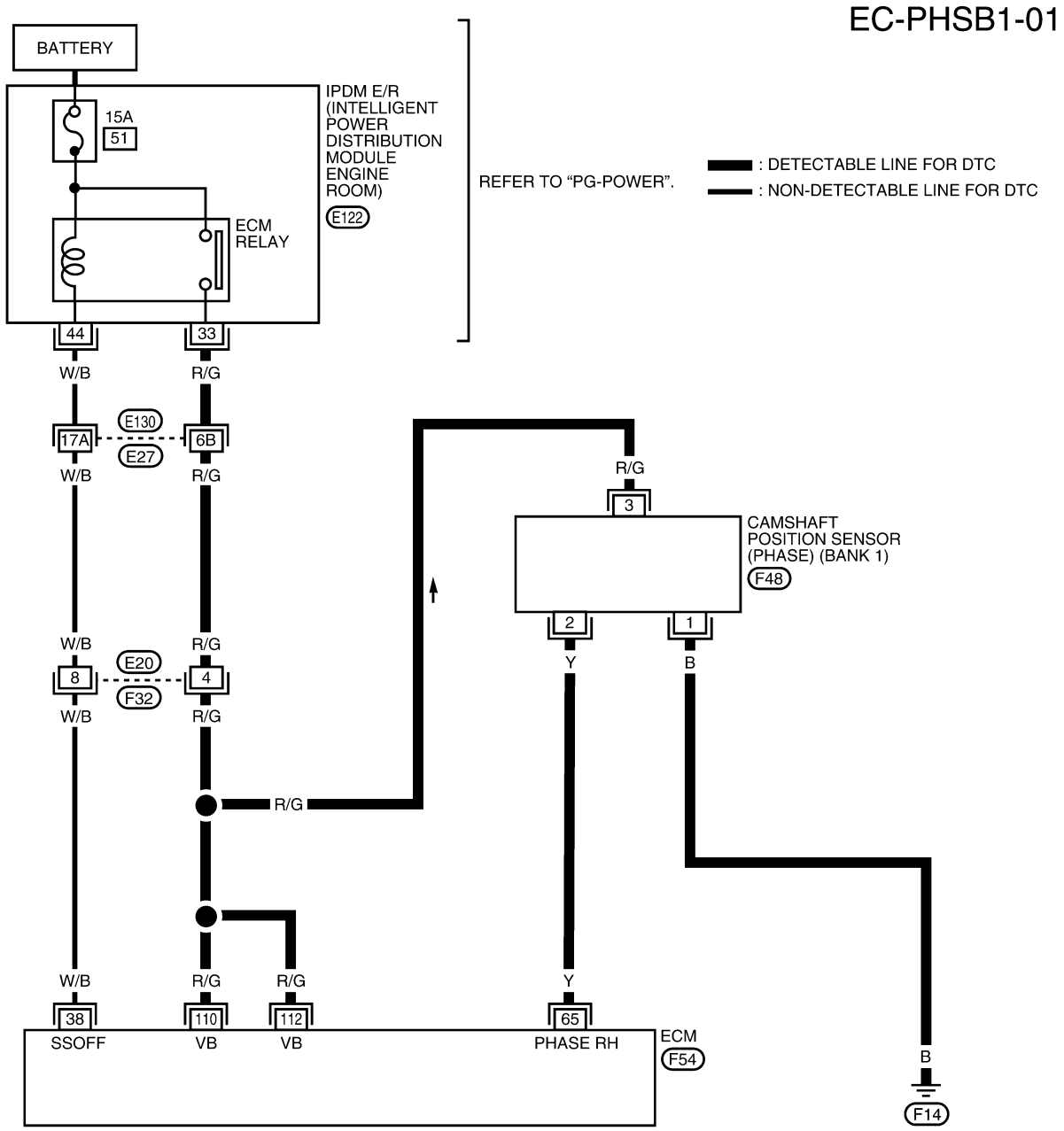

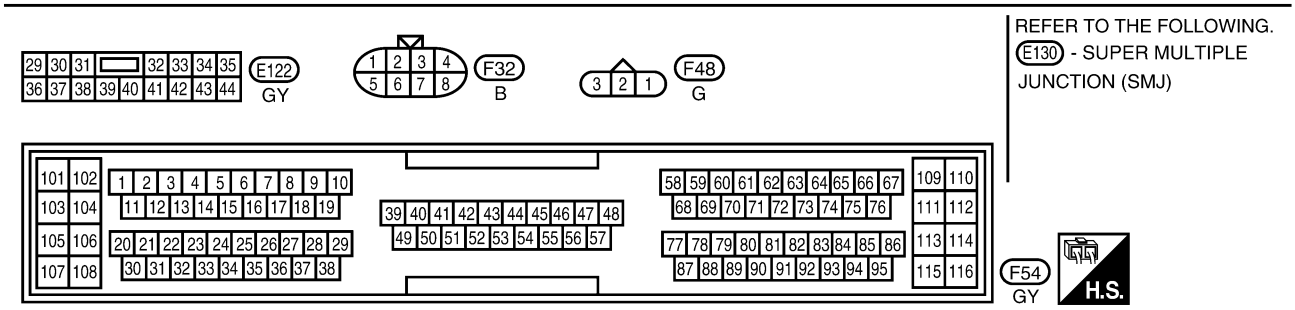

BBWA0079E

Specification data are reference values and are measured between each terminal and ground.

CAUTION:

Do not use ECM ground terminals when measuring input/output voltage. Doing so may result in damage to the ECM's transistor. Use a ground other than ECM terminals, such as the ground.

TERMINAL NO.	WIRE COLOR	ITEM	CONDITION	DATA (DC Voltage)
65	Y	Camshaft position sensor (PHASE) (bank 1)	**[Engine is running]** ● **Warm-up condition** ● Idle speed	1.0 - 4.0V★ 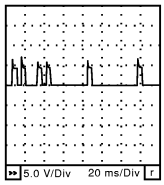 SEC033D
			[Engine is running] ● Engine speed is 2,000 rpm.	1.0 - 4.0V★ 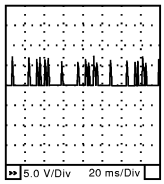 SEC034D

★: Average voltage for pulse signal (Actual pulse signal can be confirmed by oscilloscope.)

BANK 2

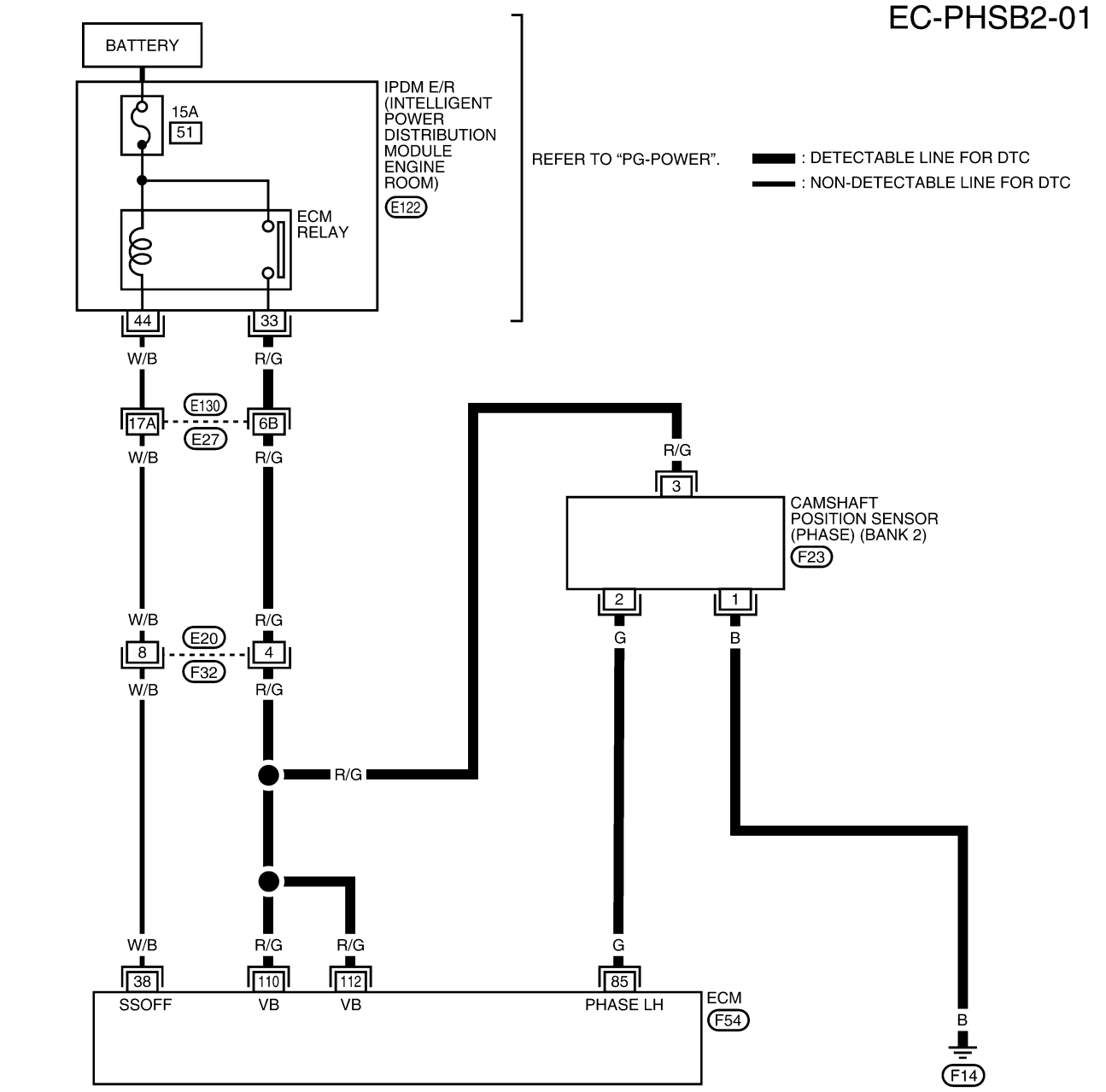

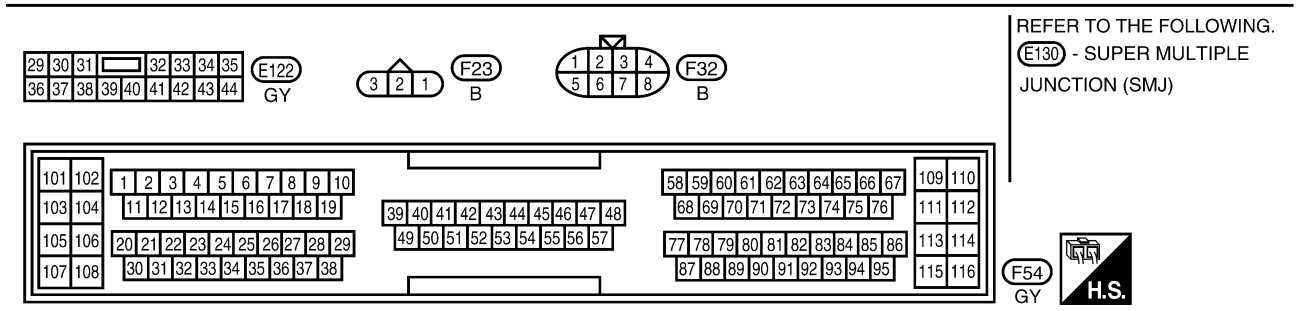

BBWA0080E

Specification data are reference values and are measured between each terminal and ground.

CAUTION:
Do not use ECM ground terminals when measuring input/output voltage. Doing so may result in damage to the ECM's transistor. Use a ground other than ECM terminals, such as the ground.

TERMINAL NO.	WIRE COLOR	ITEM	CONDITION	DATA (DC Voltage)
85	G	Camshaft position sensor (PHASE) (bank 2)	**[Engine is running]** ● **Warm-up condition** ● Idle speed	1.0 - 4.0V★ 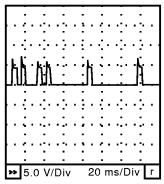 SEC033D
			[Engine is running] ● Engine speed is 2,000 rpm.	1.0 - 4.0V★ 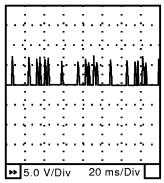 SEC034D

★: Average voltage for pulse signal (Actual pulse signal can be confirmed by oscilloscope.)

Diagnostic Procedure

UBS003BU

1. CHECK STARTING SYSTEM

Turn ignition switch to “START” position.

Does the engine turn over?
Does the starter motor operate?

Yes or No

Yes >> GO TO 2.
No >> Check starting system. (Refer to SC-9, "STARTING SYSTEM" .)

2. RETIGHTEN GROUND SCREWS

1. Turn ignition switch “OFF”.
2. Loosen and retighten engine ground screws.

>> GO TO 3.

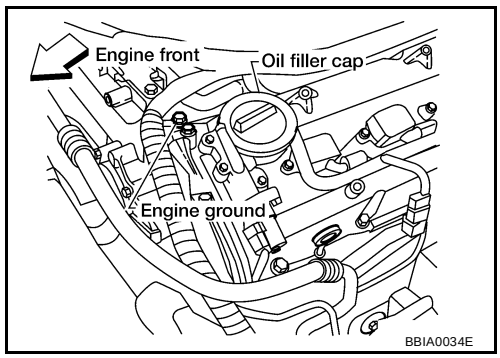

BBIA0034E

3. CHECK CAMSHAFT POSITION (CMP) SENSOR (PHASE) POWER SUPPLY CIRCUIT

1. Disconnect camshaft position (CMP) sensor (PHASE) harness connector.

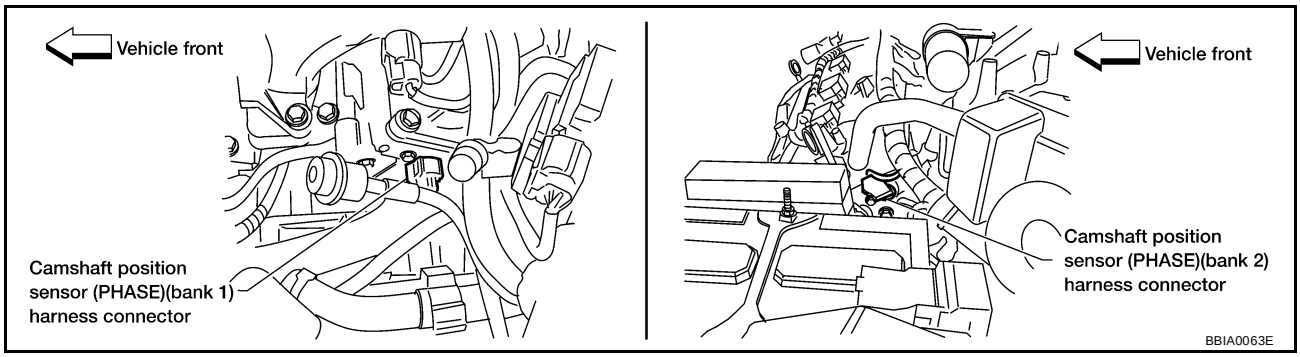

2. Turn ignition switch "ON".
3. Check voltage between CMP sensor (PHASE) terminal 3 and ground with CONSULT-II or tester.

   Voltage: Battery voltage

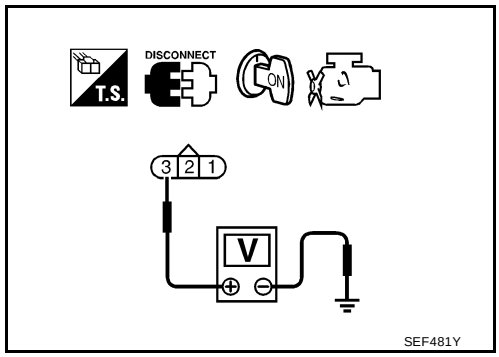

4. Also check harness for short to ground and short to power.

OK or NG

OK >> GO TO 5.
NG >> GO TO 4.

4. DETECT MALFUNCTIONING PART

Check the following.

- Harness connectors E130, E27
- Harness connectors E20, F32
- Harness for open or short between camshaft position sensor (PHASE) and ECM
- Harness for open or short between camshaft position sensor (PHASE) and IPDM E/R

>> Repair open circuit or short to ground or short to power in harness or connectors.

5. CHECK CMP SENSOR (PHASE) GROUND CIRCUIT FOR OPEN AND SHORT

1. Turn ignition switch "OFF".
2. Check harness continuity between CMP sensor (PHASE) terminal 1 and engine ground.

   Continuity should exist.

3. Also check harness for short to power.

OK or NG

OK >> GO TO 6.
NG >> Repair open circuit or short to power in harness or connectors.

6. CHECK CMP SENSOR (PHASE) INPUT SIGNAL CIRCUIT FOR OPEN AND SHORT

1. Disconnect ECM harness connector.
2. Check harness continuity between ECM terminal 65 or 85 and CMP sensor (PHASE) terminal 2. Refer to Wiring Diagram.

Continuity should exist.

3. Also check harness for short to ground or short to power.

OK or NG

OK >> GO TO 7.
NG >> Repair open circuit or short to ground or short to power in harness or connectors.

7. CHECK CAMSHAFT POSITION SENSOR (PHASE)

Refer to EC-951, "Component Inspection" .

OK or NG

OK >> GO TO 8.
NG >> Replace camshaft position sensor (PHASE).

8. CHECK CAMSHAFT (INTAKE)

Check the following.

- Accumulation of debris to the signal plate of camshaft rear end
- Chipping signal plate of camshaft rear end

OK or NG

OK >> GO TO 9.
NG >> Remove debris and clean the signal plate of camshaft rear end or replace camshaft.

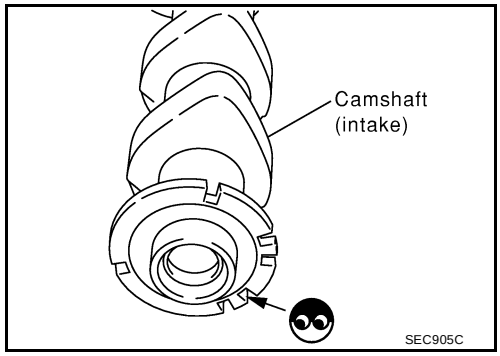

9. CHECK INTERMITTENT INCIDENT

Refer to EC-756, "TROUBLE DIAGNOSIS FOR INTERMITTENT INCIDENT" .

>> **INSPECTION END**

Component Inspection

UBS003BV

CAMSHAFT POSITION SENSOR (PHASE)

1. Loosen the fixing bolt of the sensor.
2. Disconnect camshaft position sensor (PHASE) harness connector.
3. Remove the sensor.
4. Visually check the sensor for chipping.

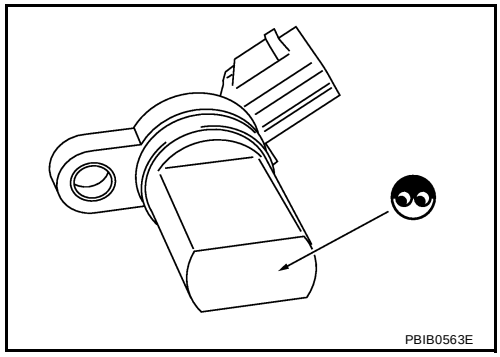

5. Check resistance as shown in the figure.

Terminal No. (Polarity)	Resistance Ω [at 25°C (77°F)]
1 (+) - 2 (-)	Except 0 or ∞
1 (+) - 3 (-)	
2 (+) - 3 (-)	

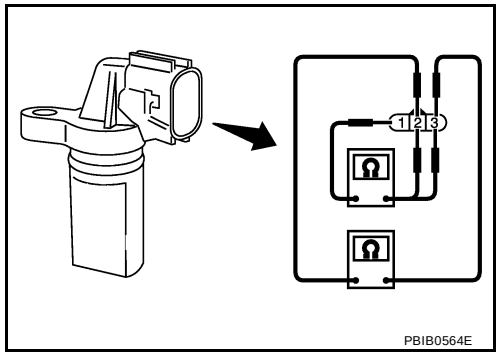

Removal and Installation

UBS003BW

CAMSHAFT POSITION SENSOR (PHASE)

Refer to EM-134, "CAMSHAFT" .

DTC P0420, P0430 THREE WAY CATALYST FUNCTION

PFP:20905

On Board Diagnosis Logic

UBS003BX

The ECM monitors the switching frequency ratio of heated oxygen sensors 1 and 2.
A three way catalyst (Manifold) with high oxygen storage capacity will indicate a low switching frequency of heated oxygen sensor 2. As oxygen storage capacity decreases, the heated oxygen sensor 2 switching frequency will increase.
When the frequency ratio of heated oxygen sensors 1 and 2 approaches a specified limit value, the three way catalyst (Manifold) malfunction is diagnosed.

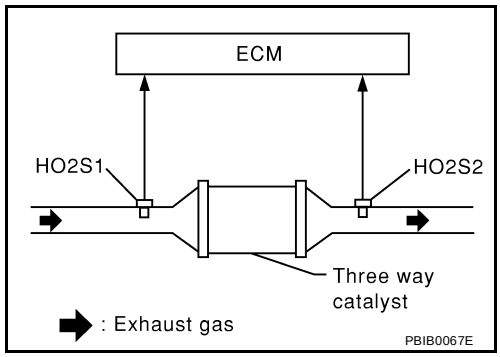

DTC No.	Trouble diagnosis name	DTC detecting condition	Possible cause
P0420 0420 (Bank 1)	Catalyst system efficiency below threshold	● Three way catalyst (Manifold) does not operate properly. ● Three way catalyst (Manifold) does not have enough oxygen storage capacity.	● Three way catalyst (Manifold) ● Exhaust tube ● Intake air leaks ● Fuel injectors ● Fuel injector leaks ● Spark plug ● Improper ignition timing
P0430 0430 (Bank 2)			

DTC Confirmation Procedure

UBS003BY

NOTE:
If “DTC Confirmation Procedure” has been previously conducted, always turn ignition switch “OFF” and wait at least 10 seconds before conducting the next test.

WITH CONSULT-II

TESTING CONDITION:

- **Open engine hood before conducting the following procedure.**
- **Do not hold engine speed for more than the specified minutes below.**

1. Turn ignition switch “ON”.
2. Select “DTC & SRT CONFIRMATION” then “SRT WORK SUPPORT” mode with CONSULT-II.
3. Start engine.
4. Rev engine up to 2,000 to 3,000 rpm and hold it for 3 consecutive minutes then release the accelerator pedal completely.
   If "INCMP" of "CATALYST" changed to "COMPLT", go to step 7
5. Wait 5 seconds at idle.

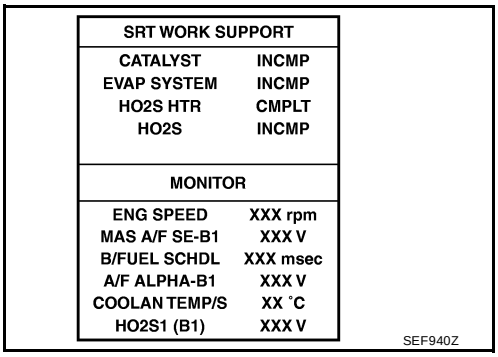

SRT WORK SUPPORT	
CATALYST	INCMP
EVAP SYSTEM	INCMP
HO2S HTR	CMPLT
HO2S	INCMP

MONITOR	
ENG SPEED	XXX rpm
MAS A/F SE-B1	XXX V
B/FUEL SCHDL	XXX msec
A/F ALPHA-B1	XXX V
COOLAN TEMP/S	XX ˚C
HO2S1 (B1)	XXX V

SEF940Z

6. Rev engine up to 2,000 to 3,000 rpm and maintain it until “INCMP” of "CATALYST" changes to “CMPLT” (It will take approximately 5 minutes).
   If not “CMPLT”, stop engine and cool it down to less than 70°C (158°F) and then retest from step 1.

SRT WORK SUPPORT	
CATALYST	CMPLT
EVAP SYSTEM	INCMP
HO2S HTR	CMPLT
HO2S	INCMP
MONITOR	
ENG SPEED	XXX rpm
MAS A/F SE-B1	XXX V
B/FUEL SCHDL	XXX msec
A/F ALPHA-B1	XXX V
COOLAN TEMP/S	XX ˚C
HO2S1 (B1)	XXX V

SEF941Z

7. Select “SELF-DIAG RESULTS” mode with CONSULT-II.
8. Confirm that the 1st trip DTC is not detected.
   If the 1st trip DTC is detected, go to EC-955, "Diagnostic Procedure" .

SELF DIAG RESULTS	
DTC RESULTS	TIME
NO DTC IS DETECTED. FURTHER TESTING MAY BE REQUIRED.	

SEF535Z

Overall Function Check

UBS003BZ

Use this procedure to check the overall function of the three way catalyst (Manifold). During this check, a 1st trip DTC might not be confirmed.

CAUTION:
Always drive vehicle at a safe speed.

WITH GST

1. Start engine and drive vehicle at a speed of more than 70 km/h (43 MPH) for 2 consecutive minutes.
2. Stop vehicle with engine running.
3. Set voltmeters probes between ECM terminals 91 [HO2S1 (bank 1) signal], 92 [HO2S1 (bank 2) signal] and engine ground, and ECM terminals 88 [HO2S2 (bank 1) signal], 90 [HO2S2 (bank 2) signal] and engine ground.
4. Keep engine speed at 2,000 rpm constant under no load.

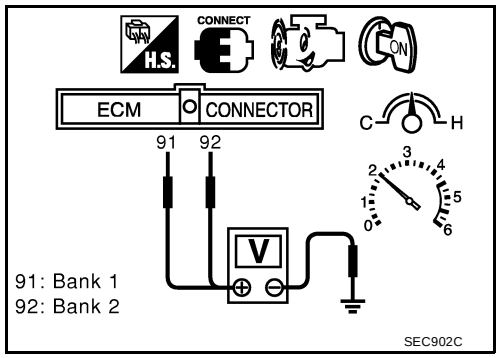

SEC902C

5. Make sure that the voltage switching frequency (high & low) between ECM terminals 88 and engine ground, or 90 and engine ground is very less than that of ECM terminals 91 and engine ground, or 92 and engine ground.
   Switching frequency ratio = A/B
   A: Heated oxygen sensor 2 voltage switching frequency
   B: Heated oxygen sensor 1 voltage switching frequency
   This ratio should be less than 0.75.
   If the ratio is greater than above, it means three way catalyst does not operate properly. Go to EC-955, "Diagnostic Procedure" .

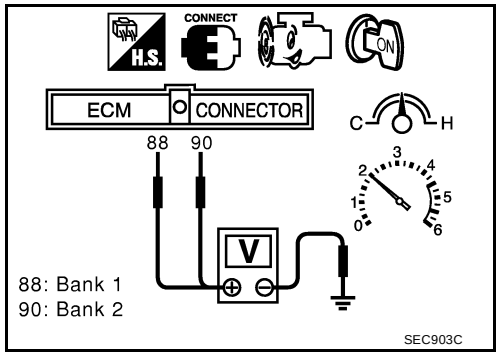

SEC903C

NOTE:
If the voltage at terminal 91 or 92 does not switch periodically more than 5 times within 10 seconds at step 5, perform trouble diagnosis for “DTC P0133, P0153” first. (See EC-836 .)

Diagnostic Procedure

UBS003C0

1. CHECK EXHAUST SYSTEM

Visually check exhaust tubes and muffler for dent.

OK or NG

OK >> GO TO 2.
NG >> Repair or replace.

2. CHECK EXHAUST AIR LEAK

1. Start engine and run it at idle.
2. Listen for an exhaust air leak before the three way catalyst (Manifold).

OK or NG

OK >> GO TO 3.
NG >> Repair or replace.

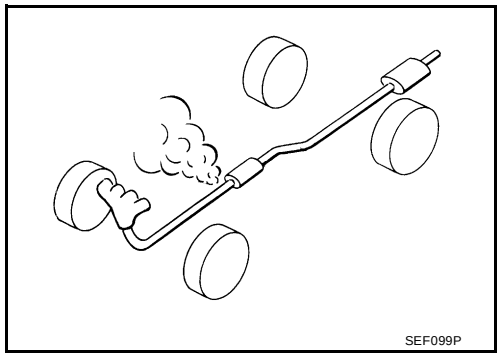

3. CHECK INTAKE AIR LEAK

Listen for an intake air leak after the mass air flow sensor.

OK or NG

OK >> GO TO 4.
NG >> Repair or replace.

4. CHECK IGNITION TIMING

Check the following items. Refer to EC-705, "Basic Inspection" .

Items	Specifications
Ignition timing	M/T: 15° ± 5° BTDC
	A/T: 15° ± 5° BTDC (in "P" or "N" position)
Target idle speed	M/T: 700 ± 50 rpm
	A/T: 700 ± 50 rpm (in "P" or "N" position)

OK or NG

OK >> GO TO 5.
NG >> Follow the EC-705, "Basic Inspection" .

5. CHECK INJECTORS

1. Stop engine and then turn ignition switch “ON”.
2. Check voltage between ECM terminals 5, 6, 7, 13, 14, 15, 16, 17 and ground with CONSULT-II or tester.

   Battery voltage should exist.

3. Refer to Wiring Diagram for Injectors, EC-1231 .

OK or NG

OK >> GO TO 6.
NG >> Perform EC-1232, "Diagnostic Procedure" .

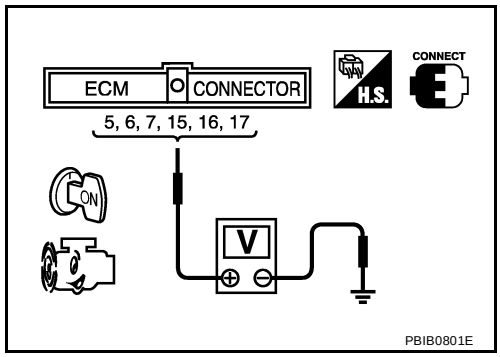

6. CHECK IGNITION SPARK

1. Turn ignition switch “OFF”.
2. Disconnect ignition coil assembly from rocker cover.
3. Connect a known good spark plug to the ignition coil assembly.
4. Place end of spark plug against a suitable ground and crank engine.
5. Check for spark.

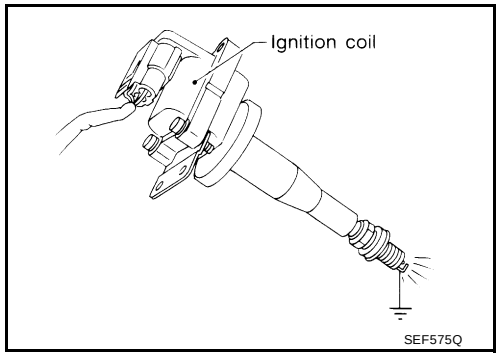

OK or NG

OK >> GO TO 7.
NG >> Check ignition coil with power transistor and their circuit. Refer to EC-1210, "IGNITION SIGNAL" .

7. CHECK INJECTOR

1. Turn ignition switch “OFF”.
2. Remove injector assembly.
   Refer to EM-129, "FUEL INJECTOR AND FUEL TUBE" .
   Keep fuel hose and all injectors connected to injector gallery.
3. Disconnect all ignition coil harness connectors.
4. Turn ignition switch “ON”.
   Make sure fuel does not drip from injector.

OK or NG

OK (Does not drip.)>>GO TO 8.
NG (Drips.)>>Replace the injector(s) from which fuel is dripping.

8. CHECK INTERMITTENT INCIDENT

Refer to EC-756, "TROUBLE DIAGNOSIS FOR INTERMITTENT INCIDENT" .

Trouble is fixed.>>**INSPECTION END**
Trouble is not fixed.>>Replace three way catalyst (Manifold).

DTC P0441 EVAP CONTROL SYSTEM

PFP:14950

System Description

UBS003C1

NOTE:
If DTC P0441 is displayed with other DTC such as P0226, P0227, P0228, P1227 or P1228, first perform trouble diagnosis for other DTC.

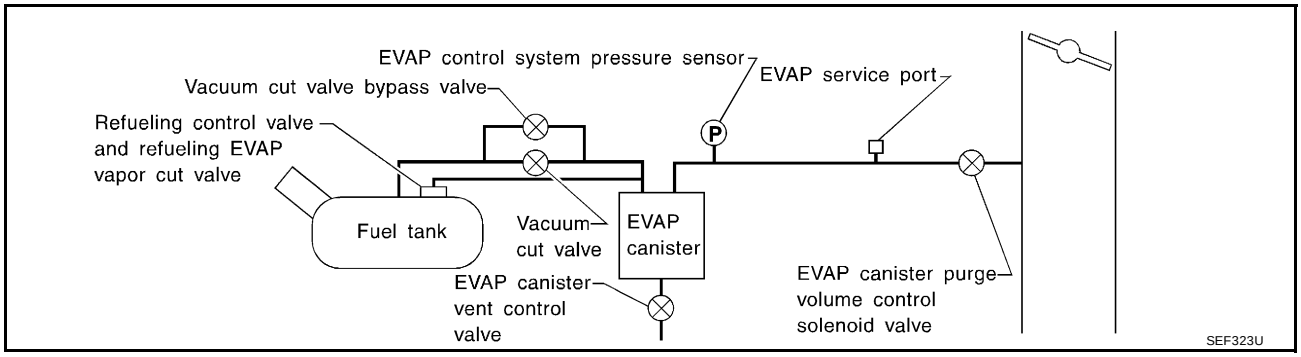

In this evaporative emission (EVAP) control system, purge flow occurs during non-closed throttle conditions. Purge volume is related to air intake volume. Under normal purge conditions (non-closed throttle), the EVAP canister purge volume control solenoid valve is open to admit purge flow. Purge flow exposes the EVAP control system pressure sensor to intake manifold vacuum.

On Board Diagnosis Logic

UBS003C2

Under normal conditions (non-closed throttle), sensor output voltage indicates if pressure drop and purge flow are adequate. If not, a malfunction is determined.

DTC No.	Trouble diagnosis name	DTC detecting condition	Possible cause
P0441 0441	EVAP control system incorrect purge flow	EVAP control system does not operate properly, EVAP control system has a leak between intake manifold and EVAP control system pressure sensor.	● EVAP canister purge volume control solenoid valve stuck closed ● EVAP control system pressure sensor and the circuit ● Loose, disconnected or improper connection of rubber tube ● Blocked rubber tube ● Cracked EVAP canister ● EVAP canister purge volume control solenoid valve circuit ● Accelerator pedal position sensor ● Blocked purge port ● EVAP canister vent control valve

DTC Confirmation Procedure

UBS003C3

CAUTION:
Always drive vehicle at a safe speed.

NOTE:
If “DTC Confirmation Procedure” has been previously conducted, always turn ignition switch “OFF” and wait at least 10 seconds before conducting the next test.

TESTING CONDITION:
Always perform test at a temperature of 5°C (41°F) or more.

WITH CONSULT-II

1. Start engine and warm it up to normal operating temperature.
2. Turn ignition switch “OFF” and wait at least 10 seconds.
3. Start engine and let it idle for at least 70 seconds.
4. Select “PURG FLOW P0441” of “EVAPORATIVE SYSTEM” in “DTC CONFIRMATION” mode with CONSULT-II.
5. Touch “START”.

If “COMPLETED” is displayed, go to step 7.

6. When the following conditions are met, “TESTING” will be displayed on the CONSULT-II screen. Maintain the conditions continuously until “TESTING” changes to “COMPLETED”. (It will take at least 35 seconds.)

Selector lever	Suitable position
Vehicle speed	32 - 120 km/h (20 - 75 MPH)
ENG SPEED	500 - 3,000 rpm
B/FUEL SCHDL	1.3 - 9.0 msec
Engine coolant temperature	70 - 100°C (158 - 212°F)

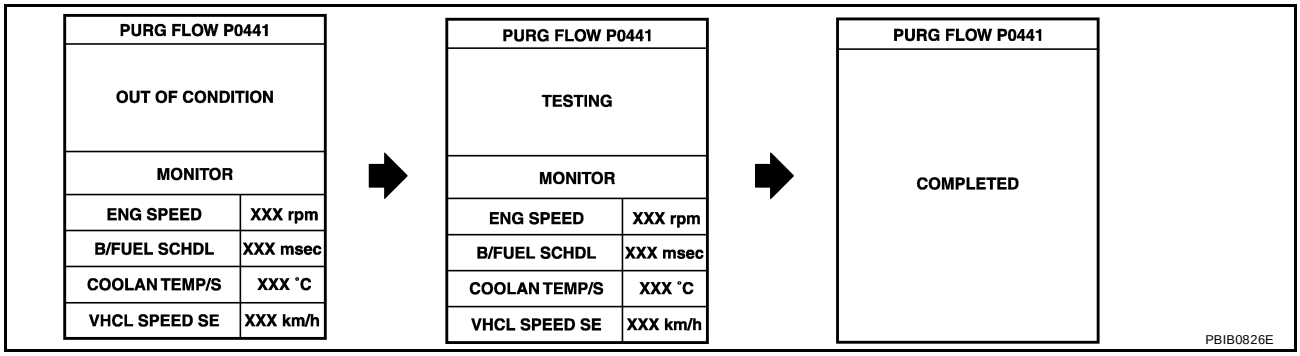

If “TESTING” is not changed for a long time, retry from step 2.

7. Make sure that “OK” is displayed after touching “SELF-DIAG RESULTS”. If “NG” is displayed, refer to EC-959, "Diagnostic Procedure" .

Overall Function Check

UBS003C4

Use this procedure to check the overall monitoring function of the EVAP control system purge flow monitoring. During this check, a 1st trip DTC might not be confirmed.

WITH GST

1. Lift up drive wheels.
2. Start engine (TCS switch “OFF”) and warm it up to normal operating temperature.
3. Turn ignition switch “OFF”, wait at least 10 seconds.
4. Start engine and wait at least 70 seconds.
5. Set voltmeter probes to ECM terminals 60 (EVAP control system pressure sensor signal) and ground.
6. Check EVAP control system pressure sensor value at idle speed and note it.
7. Establish and maintain the following conditions for at least 1 minute.

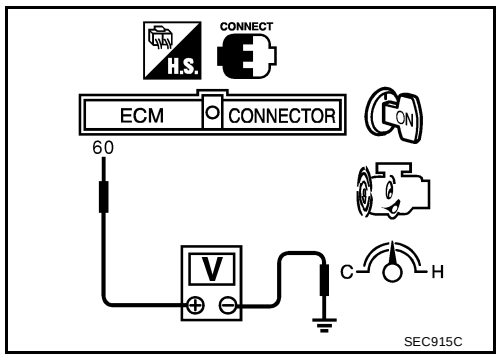

Air conditioner switch	ON
Steering wheel	Fully turned
Headlamp switch	ON
Rear window defogger switch	ON
Engine speed	Approx. 3,000 rpm
Gear position	Any position other than “P”, “N” or “R”

8. Verify that EVAP control system pressure sensor value stays 0.1V less than the value at idle speed (measured at step 6) for at least 1 second.
9. If NG, go to EC-959, "Diagnostic Procedure" .

Diagnostic Procedure

UBS003C5

1. CHECK EVAP CANISTER

1. Turn ignition switch “OFF”.
2. Check EVAP canister for cracks.

OK or NG

OK (With CONSULT-II)>>GO TO 2.
OK (Without CONSULT-II)>>GO TO 3.
NG >> Replace EVAP canister.

2. CHECK PURGE FLOW

With CONSULT-II

1. Disconnect vacuum hose connected to EVAP canister purge volume control solenoid valve at EVAP service port and install vacuum gauge. For the location of EVAP service port, refer to EC-1273, "EVAPORATIVE EMISSION LINE DRAWING" .
2. Start engine and let it idle.
3. Select “PURG VOL CONT/V” in “ACTIVE TEST” mode with CONSULT-II.
4. Rev engine up to 2,000 rpm.
5. Touch “Qd” and “Qu” on CONSULT-II screen to adjust “PURG VOL CONT/V” opening and check vacuum existence.

PURG VOL CONT/V	Vacuum
100.0%	Should exist.
0.0%	Should not exist.

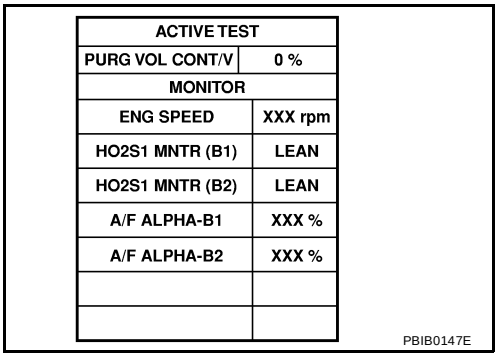

ACTIVE TEST	
PURG VOL CONT/V	0 %
MONITOR	
ENG SPEED	XXX rpm
HO2S1 MNTR (B1)	LEAN
HO2S1 MNTR (B2)	LEAN
A/F ALPHA-B1	XXX %
A/F ALPHA-B2	XXX %

PBIB0147E

OK or NG

OK >> GO TO 7.
NG >> GO TO 4.

3. CHECK PURGE FLOW

Without CONSULT-II

1. Start engine and warm it up to normal operating temperature.
2. Stop engine.
3. Disconnect vacuum hose connected to EVAP canister purge volume control solenoid valve at EVAP service port and install vacuum gauge. For the location of EVAP service port, refer to EC-1273, "EVAPORATIVE EMISSION LINE DRAWING" .
4. Start engine and let it idle for at least 80 seconds.
5. Check vacuum gauge indication when revving engine up to 2,000 rpm.

   Vacuum should exist.

6. Release the accelerator pedal fully and let idle.

   Vacuum should not exist.

OK or NG

OK >> GO TO 7.
NG >> GO TO 4.

4. CHECK EVAP PURGE LINE

1. Turn ignition switch “OFF”.
2. Check EVAP purge line for improper connection or disconnection.
   Refer to EC-1273, "EVAPORATIVE EMISSION LINE DRAWING" .

OK or NG

OK (With CONSULT-II)>>GO TO 5.
OK (Without CONSULT-II)>>GO TO 6.
NG >> Repair it.

5. CHECK EVAP PURGE HOSE AND PURGE PORT

1. Disconnect purge hoses connected to EVAP service port **A** and EVAP canister purge volume control solenoid valve **B** .
2. Blow air into each hose and EVAP purge port **C** .

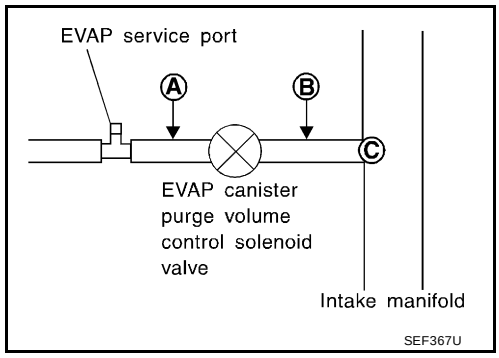

3. Check that air flows freely.

OK or NG

OK >> GO TO 6.
NG >> Repair or clean hoses and/or purge port.

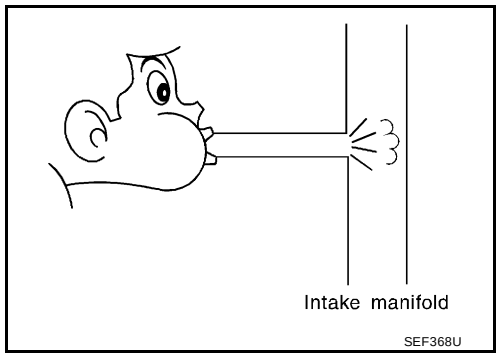

6. CHECK EVAP CANISTER PURGE VOLUME CONTROL SOLENOID VALVE

With CONSULT-II

1. Start engine.
2. Perform “PURG VOL CONT/V” in “ACTIVE TEST” mode with CONSULT-II. Check that engine speed varies according to the valve opening.

OK or NG

OK >> GO TO 8.
NG >> GO TO 7.

ACTIVE TEST	
PURG VOL CONT/V	0 %
MONITOR	
ENG SPEED	XXX rpm
HO2S1 MNTR (B1)	LEAN
HO2S1 MNTR (B2)	LEAN
A/F ALPHA-B1	XXX %
A/F ALPHA-B2	XXX %

PBIB0147E

7. CHECK EVAP CANISTER PURGE VOLUME CONTROL SOLENOID VALVE

Refer to EC-977, "Component Inspection" .

OK or NG

OK >> GO TO 8.
NG >> Replace EVAP canister purge volume control solenoid valve.

8. CHECK EVAP CONTROL SYSTEM PRESSURE SENSOR HOSE

1. Turn ignition switch “OFF”.
2. Check disconnection or improper connection of hose connected to EVAP control system pressure sensor.

OK or NG

OK >> GO TO 9.
NG >> Repair it.

9. CHECK EVAP CONTROL SYSTEM PRESSURE SENSOR CONNECTOR

1. Disconnect EVAP control system pressure sensor harness connector.
2. Check connectors for water.

Water should not exist.

OK or NG

OK >> GO TO 10.
NG >> Replace EVAP control system pressure sensor.

10. CHECK EVAP CONTROL SYSTEM PRESSURE SENSOR FUNCTION

Refer to “DTC Confirmation Procedure” for DTC P0452 EC-985 , P0453 EC-991 .

OK or NG

OK >> GO TO 11.
NG >> Replace EVAP control system pressure sensor.

11. CHECK RUBBER TUBE FOR CLOGGING

1. Disconnect rubber tube connected to EVAP canister vent control valve.
2. Check the rubber tube for clogging.

OK or NG

OK >> GO TO 12.
NG >> Clean the rubber tube using an air blower.

12. CHECK EVAP CANISTER VENT CONTROL VALVE

Refer to EC-983, "Component Inspection" .

OK or NG

OK >> GO TO 13.
NG >> Replace EVAP canister vent control valve.

13. CHECK EVAP PURGE LINE

Inspect EVAP purge line (pipe and rubber tube). Check for evidence of leaks.
Refer to EC-1273, "EVAPORATIVE EMISSION LINE DRAWING" .

OK or NG

OK >> GO TO 14.
NG >> Replace it.

14. CLEAN EVAP PURGE LINE

Clean EVAP purge line (pipe and rubber tube) using air blower.

>> GO TO 15.

15. CHECK INTERMITTENT INCIDENT

Refer to EC-756, "TROUBLE DIAGNOSIS FOR INTERMITTENT INCIDENT" .

>> **INSPECTION END**

DTC P0442 EVAP CONTROL SYSTEM

PFP:14950

On Board Diagnosis Logic

UBS003C6

NOTE:
If DTC P0442 is displayed with P1448, perform trouble diagnosis for DTC P1448 first. (See EC-1149 .)
This diagnosis detects leaks in the EVAP purge line using engine intake manifold vacuum.
If pressure does not increase, the ECM will check for leaks in the line between the fuel tank and EVAP canister purge volume control solenoid valve, under the following “Vacuum test” conditions.
The vacuum cut valve bypass valve is opened to clear the line between the fuel tank and the EVAP canister purge volume control solenoid valve. The EVAP canister vent control valve will then be closed to shut the EVAP purge line off. The EVAP canister purge volume control solenoid valve is opened to depressurize the EVAP purge line using intake manifold vacuum. After this occurs, the EVAP canister purge volume control solenoid valve will be closed.

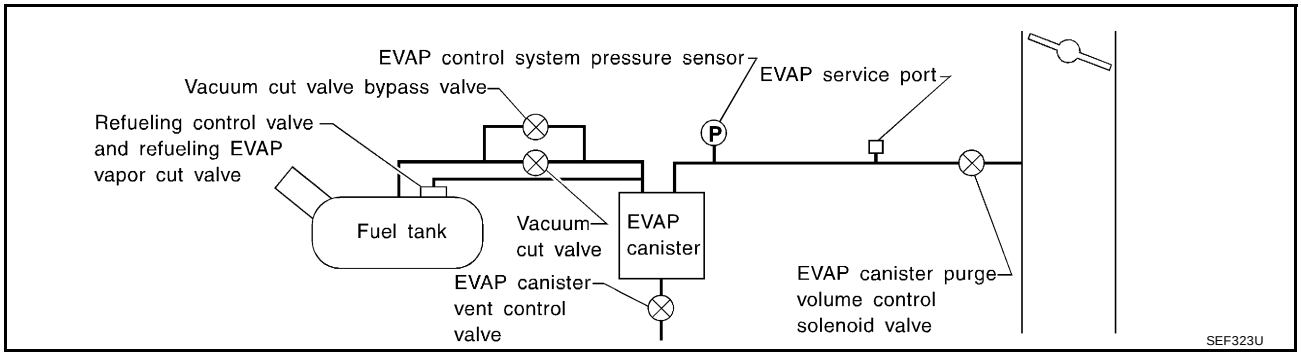

DTC No.	Trouble diagnosis name	DTC detecting condition	Possible cause
P0442 0442	EVAP control system small leak detected (negative pressure)	EVAP control system has a leak, EVAP control system does not operate properly.	● Incorrect fuel tank vacuum relief valve ● Incorrect fuel filler cap used ● Fuel filler cap remains open or fails to close. ● Foreign matter caught in fuel filler cap. ● Leak is in line between intake manifold and EVAP canister purge volume control solenoid valve. ● Foreign matter caught in EVAP canister vent control valve. ● EVAP canister or fuel tank leaks ● EVAP purge line (pipe and rubber tube) leaks ● EVAP purge line rubber tube bent ● Blocked or bent rubber tube to EVAP control system pressure sensor ● Loose or disconnected rubber tube ● EVAP canister vent control valve and the circuit ● EVAP canister purge volume control solenoid valve and the circuit ● Absolute pressure sensor ● Fuel tank temperature sensor ● O-ring of EVAP canister vent control valve is missing or damaged ● Water separator ● EVAP canister is saturated with water ● EVAP control system pressure sensor ● Fuel level sensor and the circuit ● Refueling control valve ● ORVR system leaks

CAUTION:

- **Use only a genuine NISSAN fuel filler cap as a replacement. If an incorrect fuel filler cap is used, the MIL may come on.**
- **If the fuel filler cap is not tightened properly, the MIL may come on.**
- **Use only a genuine NISSAN rubber tube as a replacement.**

DTC Confirmation Procedure

UBS003C7

NOTE:

- **If DTC P0442 is displayed with P1448, perform trouble diagnosis for DTC P1448 first. (See EC-1149 .)**
- If "DTC Confirmation Procedure" has been previously conducted, always turn ignition switch "OFF" and wait at least 10 seconds before conducting the next test.

TESTING CONDITION:

- **Perform "DTC WORK SUPPORT" when the fuel level is between 1/4 to 3/4 full and vehicle is placed on flat level surface.**
- **Always perform test at a temperature of 0 to 30°C (32 to 86°F).**

WITH CONSULT-II

1. Turn ignition switch "ON".
2. Turn ignition switch "OFF" and wait at least 10 seconds.
3. Turn ignition switch "ON" and select "DATA MONITOR" mode with CONSULT-II.
4. Make sure that the following conditions are met.
   COOLAN TEMP/S: 0 - 70°C (32 - 158°F)
   INT/A TEMP SE: 0 - 30°C (32 - 86°F)
5. Select "EVAP SML LEAK P0442/P1442" of "EVAPORATIVE SYSTEM" in "DTC WORK SUPPORT" mode with CONSULT-II.
   Follow the instruction displayed.

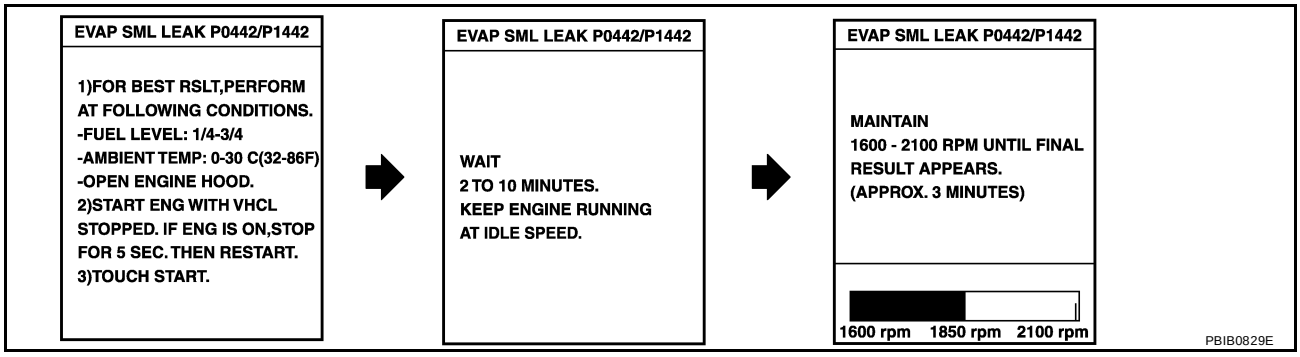

NOTE:
If the engine speed cannot be maintained within the range displayed on the CONSULT-II screen, go to EC-705, "Basic Inspection" .

6. Make sure that "OK" is displayed.
   If "NG" is displayed, refer to EC-965, "Diagnostic Procedure" .
   NOTE:
   Make sure that EVAP hoses are connected to EVAP canister purge volume control solenoid valve properly.

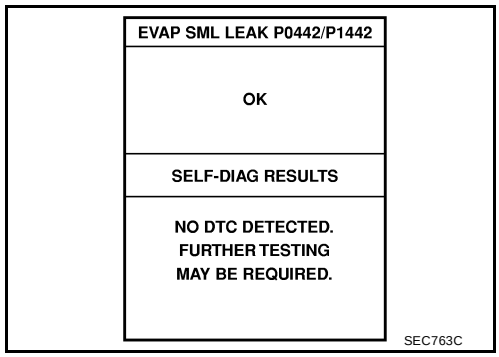

WITH GST

NOTE:
Be sure to read the explanation of "Driving Pattern" on EC-684 before driving vehicle.

1. Start engine.
2. Drive vehicle according to “Driving Pattern”, EC-684 .
3. Stop vehicle.
4. Select “MODE 1” with GST.
- If SRT of EVAP system is not set yet, go to the following step.
- If SRT of EVAP system is set, the result will be OK.
5. Turn ignition switch “OFF” and wait at least 10 seconds.
6. Start engine.
   It is not necessary to cool engine down before driving.
7. Drive vehicle again according to the “Driving Pattern”, EC-684 .
8. Stop vehicle.
9. Select “MODE 3” with GST.
- If P0442 is displayed on the screen, go to EC-965, "Diagnostic Procedure" .
- If P0441 is displayed on the screen, go to “Diagnostic Procedure” for DTC P0441, EC-959 .
- If P0441 and P0442 are not displayed on the screen, go to the following step.
10. Select “MODE 1” with GST.
- If SRT of EVAP system is set, the result will be OK.
- If SRT of EVAP system is not set, go to step 6.

Diagnostic Procedure

UBS003C8

1. CHECK FUEL FILLER CAP DESIGN

1. Turn ignition switch “OFF”.
2. Check for genuine NISSAN fuel filler cap design.

OK or NG

OK >> GO TO 2.
NG >> Replace with genuine NISSAN fuel filler cap.

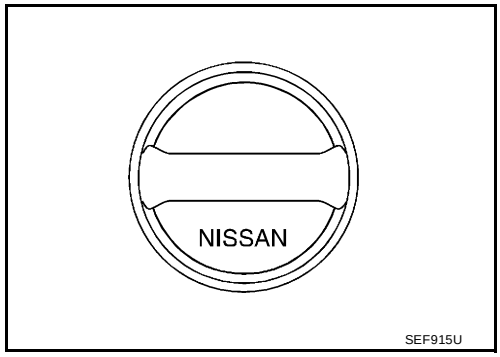

2. CHECK FUEL FILLER CAP INSTALLATION

Check that the cap is tightened properly by rotating the cap clockwise.

OK or NG

OK >> GO TO 3.
NG >> ● Open fuel filler cap, then clean cap and fuel filler neck threads using air blower.
● Retighten until ratcheting sound is heard.

3. CHECK FUEL FILLER CAP FUNCTION

Check for air releasing sound while opening the fuel filler cap.

OK or NG

OK >> GO TO 5.
NG >> GO TO 4.

4. CHECK FUEL TANK VACUUM RELIEF VALVE

Refer to EC-1275, "FUEL TANK VACUUM RELIEF VALVE (BUILT INTO FUEL FILLER CAP)" .

OK or NG

OK >> GO TO 5.
NG >> Replace fuel filler cap with a genuine one.

5. INSTALL THE PRESSURE PUMP

To locate the EVAP leak, install EVAP service port adapter and pressure pump to EVAP service port securely. For the location of EVAP service port, refer to EC-1273, "EVAPORATIVE EMISSION LINE DRAWING" .

NOTE:
Improper installation of the EVAP service port adapter to the EVAP service port may cause leaking.

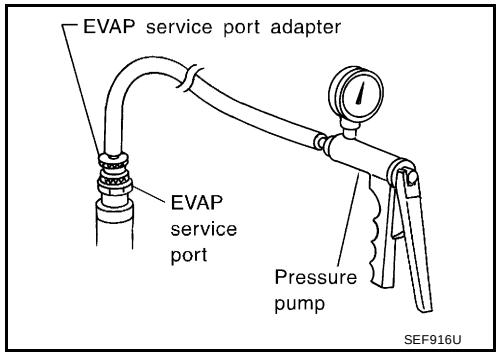

Models with CONSULT-II>>GO TO 6.
Models without CONSULT-II>>GO TO 7.

6. CHECK FOR EVAP LEAK

With CONSULT-II

1. Turn ignition switch “ON”.
2. Select “EVAP SYSTEM CLOSE” of “WORK SUPPORT” mode with CONSULT-II.
3. Touch “START” and apply pressure into the EVAP line until the pressure indicator reaches the middle of the bar graph.

   NOTE:
   - **Never use compressed air or a high pressure pump.**
   - **Do not exceed 4.12 kPa (0.042 kg/cm^2 , 0.6 psi) of pressure in the system.**

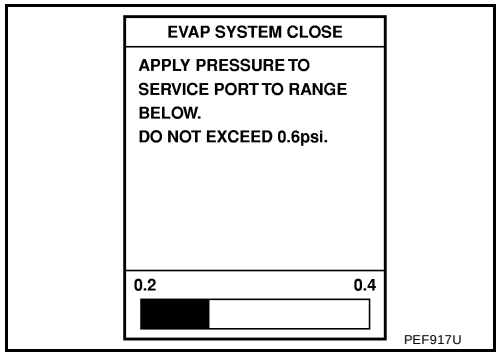

4. Using EVAP leak detector, locate the EVAP leak. For the leak detector, refer to the instruction manual for more details.
   Refer to EC-1273, "EVAPORATIVE EMISSION LINE DRAWING" .

OK or NG

OK >> GO TO 8.
NG >> Repair or replace.

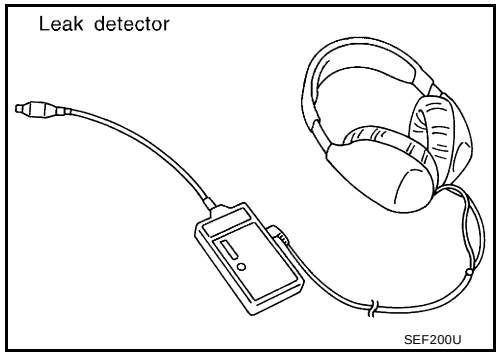

7. CHECK FOR EVAP LEAK

Without CONSULT-II

1. Turn ignition switch “OFF”.
2. Apply 12 volts DC to EVAP canister vent control valve. The valve will close. (Continue to apply 12 volts until the end of test.)
3. Apply 12 volts DC to vacuum cut valve bypass valve. The valve will open. (Continue to apply 12V until the end of test.)

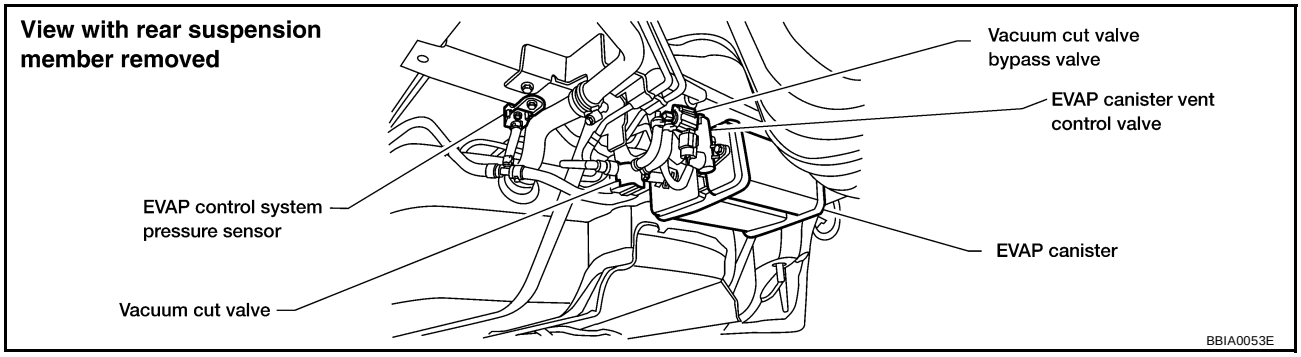

4. Pressurize the EVAP line using pressure pump with 1.3 to 2.7 kPa (10 to 20 mmHg, 0.39 to 0.79 inHg), then remove pump and EVAP service port adapter.

   NOTE:
   - **Never use compressed air or a high pressure pump.**
   - **Do not exceed 4.12 kPa (0.042 kg/cm^2 , 0.6 psi) of pressure in the system.**

5. Using EVAP leak detector, locate the EVAP leak. For the leak detector, refer to the instruction manual for more details. Refer to EC-1273, "EVAPORATIVE EMISSION LINE DRAWING" .

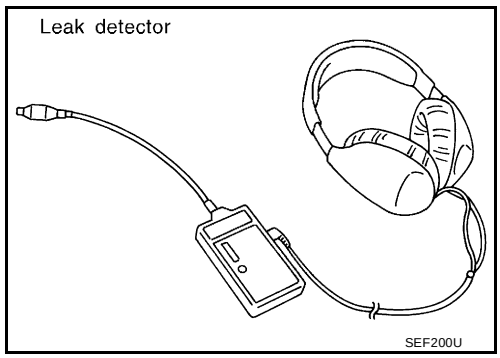

OK or NG

OK >> GO TO 8.
NG >> Repair or replace.

8. CHECK WATER SEPARATOR

Refer to EC-970, "Component Inspection" .

OK or NG

OK >> GO TO 9.
NG >> Replace water separator.

9. CHECK EVAP CANISTER VENT CONTROL VALVE, O-RING AND CIRCUIT

Refer to “DTC Confirmation Procedure”, EC-1143 .

OK or NG

OK >> GO TO 10.
NG >> Repair or replace EVAP canister vent control valve and O-ring or harness/connector.

10. CHECK IF EVAP CANISTER SATURATED WITH WATER

1. Remove EVAP canister with EVAP canister vent control valve attached.
2. Does water drain from the EVAP canister?

Yes or No

Yes >> GO TO 11.
No (With CONSULT-II)>>GO TO 13.
No (Without CONSULT-II)>>GO TO 14.

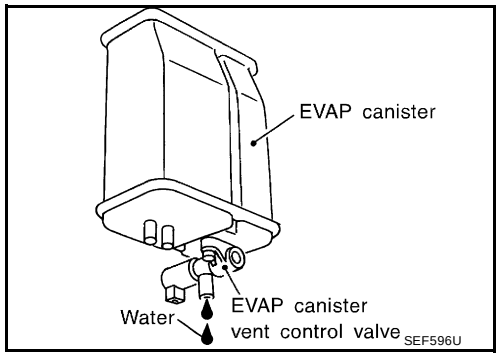

11. CHECK EVAP CANISTER

Weigh the EVAP canister with the EVAP canister vent control valve attached.
The weight should be less than 1.8 kg (4.0 lb).

OK or NG

OK (With CONSULT-II)>>GO TO 13.
OK (Without CONSULT-II)>>GO TO 14.
NG >> GO TO 12.

12. DETECT MALFUNCTIONING PART

Check the following.

- EVAP canister for damage
- EVAP hose between EVAP canister and water separator for clogging or poor connection

>> Repair hose or replace EVAP canister.

13. CHECK EVAP CANISTER PURGE VOLUME CONTROL SOLENOID VALVE OPERATION

With CONSULT-II

1. Disconnect vacuum hose to EVAP canister purge volume control solenoid valve at EVAP service port.
2. Start engine.
3. Perform “PURG VOL CONT/V” in “ACTIVE TEST” mode.
4. Touch “Qu” on CONSULT-II screen to increase “PURG VOL CONT/V” opening to 100.0%.
5. Check vacuum hose for vacuum when revving engine up to 2,000 rpm.

OK or NG

OK >> GO TO 16.
NG >> GO TO 15.

ACTIVE TEST	
PURG VOL CONT/V	0 %
MONITOR	
ENG SPEED	XXX rpm
HO2S1 MNTR (B1)	LEAN
HO2S1 MNTR (B2)	LEAN
A/F ALPHA-B1	XXX %
A/F ALPHA-B2	XXX %

PBIB0147E

14. CHECK EVAP CANISTER PURGE VOLUME CONTROL SOLENOID VALVE OPERATION

Without CONSULT-II

1. Start engine and warm it up to normal operating temperature.
2. Stop engine.
3. Disconnect vacuum hose to EVAP canister purge volume control solenoid valve at EVAP service port.
4. Start engine and let it idle for at least 80 seconds.
5. Check vacuum hose for vacuum when revving engine up to 2,000 rpm.

Vacuum should exist.

OK or NG

OK >> GO TO 17.
NG >> GO TO 15.

15. CHECK VACUUM HOSE

Check vacuum hoses for clogging or disconnection. Refer to EC-647, "Vacuum Hose Drawing" .

OK or NG

OK >> GO TO 16.
NG >> Repair or reconnect the hose.

16. CHECK EVAP CANISTER PURGE VOLUME CONTROL SOLENOID VALVE

Refer to EC-977, "Component Inspection" .

OK or NG

OK >> GO TO 17.
NG >> Replace EVAP canister purge volume control solenoid valve.

17. CHECK ABSOLUTE PRESSURE SENSOR

Refer to EC-804, "DTC Confirmation Procedure" .

OK or NG

OK >> GO TO 18.
NG >> Replace absolute pressure sensor.

18. CHECK FUEL TANK TEMPERATURE SENSOR

Refer to EC-896, "Component Inspection" .

OK or NG

OK >> GO TO 19.
NG >> Replace fuel level sensor unit.

19. CHECK EVAP CONTROL SYSTEM PRESSURE SENSOR

Refer to EC-990, "Component Inspection" .

OK or NG

OK >> GO TO 20.
NG >> Replace EVAP control system pressure sensor.

20. CHECK EVAP PURGE LINE

Check EVAP purge line (pipe, rubber tube, fuel tank and EVAP canister) for cracks or improper connection.
Refer to EC-1273, "EVAPORATIVE EMISSION LINE DRAWING" .

OK or NG

OK >> GO TO 21.
NG >> Repair or reconnect the hose.

21. CLEAN EVAP PURGE LINE

Clean EVAP purge line (pipe and rubber tube) using air blower.

>> GO TO 22.

22. CHECK REFUELING EVAP VAPOR LINE

Check refueling EVAP vapor line between EVAP canister and fuel tank for clogging, kink, looseness and improper connection. For location, refer to EC-1278, "ON BOARD REFUELING VAPOR RECOVERY (ORVR)" .

OK or NG

OK >> GO TO 23.
NG >> Repair or replace hoses and tubes.

23. CHECK SIGNAL LINE AND RECIRCULATION LINE

Check signal line and recirculation line between filler neck tube and fuel tank for clogging, kink, cracks, looseness and improper connection.

OK or NG

OK >> GO TO 24.
NG >> Repair or replace hoses, tubes or filler neck tube.

24. CHECK REFUELING CONTROL VALVE

Refer to EC-1283, "REFUELING CONTROL VALVE" .

OK or NG

OK >> GO TO 25.
NG >> Replace refueling control valve with fuel tank.

25. CHECK FUEL LEVEL SENSOR

Refer to FL-5, "FUEL LEVEL SENSOR UNIT, FUEL FILTER AND FUEL PUMP ASSEMBLY" .

OK or NG

OK >> GO TO 26.
NG >> Replace fuel level sensor unit.

26. CHECK INTERMITTENT INCIDENT

Refer to EC-756, "TROUBLE DIAGNOSIS FOR INTERMITTENT INCIDENT" .

>> **INSPECTION END**

Component Inspection

UBS003C9

WATER SEPARATOR

1. Check visually for insect nests in the water separator air inlet.
2. Check visually for cracks or flaws in the appearance.
3. Check visually for cracks or flaws in the hose.

4. Check that **A** and **C** are not clogged by blowing air into **B** with **A** , and then **C** plugged.
5. In case of NG in items 2 - 4, replace the parts.

NOTE:
- Do not disassemble water separator.

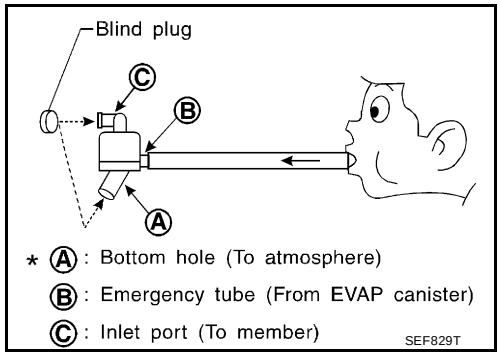

DTC P0444, P0445 EVAP CANISTER PURGE VOLUME CONTROL SOLENOID VALVE

PFP:14920

Description

UBS003CA

SYSTEM DESCRIPTION

Sensor	Input Signal to ECM	ECM function	Actuator
Crankshaft position sensor (POS) Camshaft position sensor (PHASE)	Engine speed	EVAP canister purge flow control	EVAP canister purge volume control solenoid valve
Mass air flow sensor	Amount of intake air		
Engine coolant temperature sensor	Engine coolant temperature		
Ignition switch	Start signal		
Throttle position sensor	Throttle position		
Accelerator pedal position sensor	Accelerator pedal position		
Heated oxygen sensors 1	Density of oxygen in exhaust gas (Mixture ratio feedback signal)		
Vehicle speed signal	Vehicle speed		

This system controls flow rate of fuel vapor from the EVAP canister. The opening of the vapor by-pass passage in the EVAP canister purge volume control solenoid valve changes to control the flow rate. The EVAP canister purge volume control solenoid valve repeats ON/OFF operation according to the signal sent from the ECM. The opening of the valve varies for optimum engine control. The optimum value stored in the ECM is determined by considering various engine conditions. When the engine is operating, the flow rate of fuel vapor from the EVAP canister is regulated as the air flow changes.

COMPONENT DESCRIPTION

The EVAP canister purge volume control solenoid valve uses a ON/OFF duty to control the flow rate of fuel vapor from the EVAP canister. The EVAP canister purge volume control solenoid valve is moved by ON/OFF pulses from the ECM. The longer the ON pulse, the greater the amount of fuel vapor that will flow through the valve.

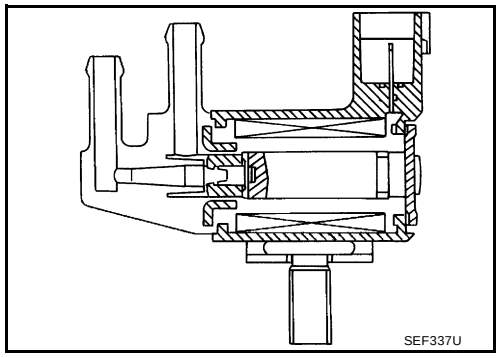

CONSULT-II Reference Value in Data Monitor Mode

UBS003CB

Specification data are reference values.

MONITOR ITEM	CONDITION		SPECIFICATION
PURG VOL C/V	● Engine: After warming up ● Shift lever: N ● Air conditioner switch: OFF ● No-load	Idle	0%
		2,000 rpm	20 - 30%

On Board Diagnosis Logic

UBS003CC

DTC No.	Trouble diagnosis name	DTC detecting condition	Possible cause
P0444 0444	EVAP canister purge volume control solenoid valve circuit open	An excessively low voltage signal is sent to ECM through the valve	● Harness or connectors (The solenoid valve circuit is open or shorted.) ● EVAP canister purge volume control solenoid valve
P0445 0445	EVAP canister purge volume control solenoid valve circuit shorted	An excessively high voltage signal is sent to ECM through the valve	● Harness or connectors (The solenoid valve circuit is shorted.) ● EVAP canister purge volume control solenoid valve

DTC Confirmation Procedure

UBS003CD

NOTE:
If “DTC Confirmation Procedure” has been previously conducted, always turn ignition switch “OFF” and wait at least 10 seconds before conducting the next test.
TESTING CONDITION:
Before performing the following procedure, confirm battery voltage is more than 11V at idle.

WITH CONSULT-II

1. Turn ignition switch “ON”.
2. Select “DATA MONITOR” mode with CONSULT-II.
3. Start engine and let it idle for at least 13 seconds.
4. If 1st trip DTC is detected, go to EC-975, "Diagnostic Procedure"
.

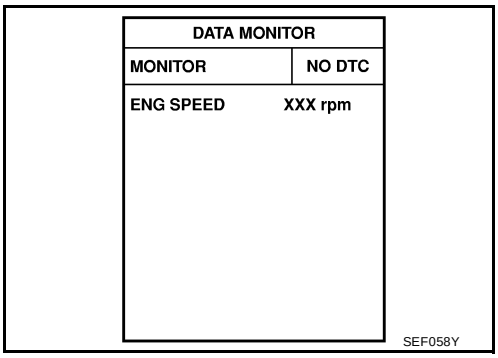

WITH GST

Follow the procedure “WITH CONSULT-II” above.

Wiring Diagram

UBS003CE

EC-PGC/V-01

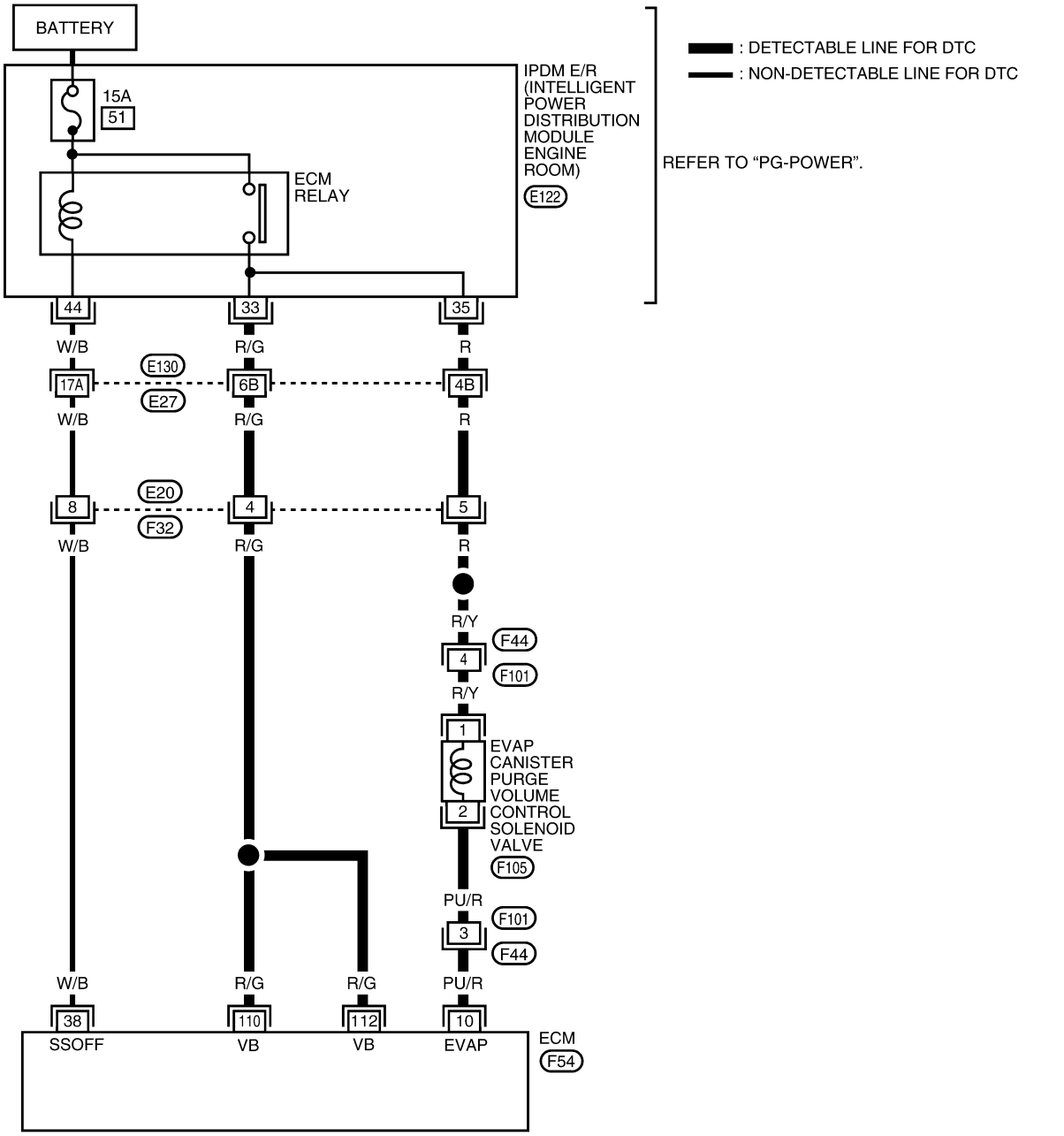

Specification data are reference values and are measured between each terminal and ground.

CAUTION:
Do not use ECM ground terminals when measuring input/output voltage. Doing so may result in damage to the ECM's transistor. Use a ground other than ECM terminals, such as the ground.

TERMINAL NO.	WIRE COLOR	ITEM	CONDITION	DATA (DC Voltage)
10	PU/R	EVAP canister purge volume control solenoid valve	**[Engine is running]** ● Idle speed	BATTERY VOLTAGE (11 - 14V)★ 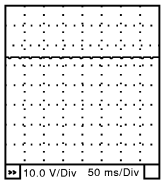 SEC990C
			[Engine is running] ● Engine speed is about 2,000 rpm	BATTERY VOLTAGE (11 - 14V)★ 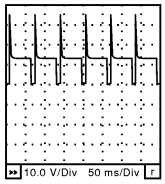 SEC991C

★: Average voltage for pulse signal (Actual pulse signal can be confirmed by oscilloscope.)

Diagnostic Procedure

UBS003CF

1. CHECK EVAP CANISTER PURGE VOLUME CONTROL SOLENOID VALVE POWER SUPPLY CIRCUIT

1. Turn ignition switch “OFF”.
2. Disconnect EVAP canister purge volume control solenoid valve harness connector.
3. Turn ignition switch “ON”.

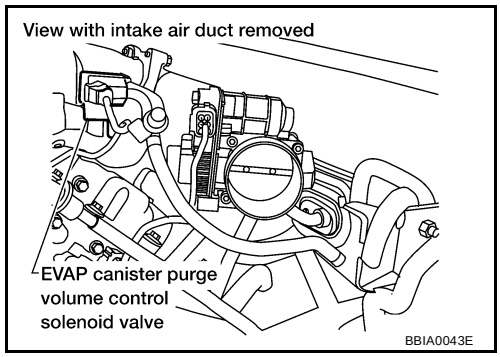

4. Check voltage between EVAP canister purge volume control solenoid valve terminal 1 and ground with CONSULT-II or tester.

Voltage: Battery voltage

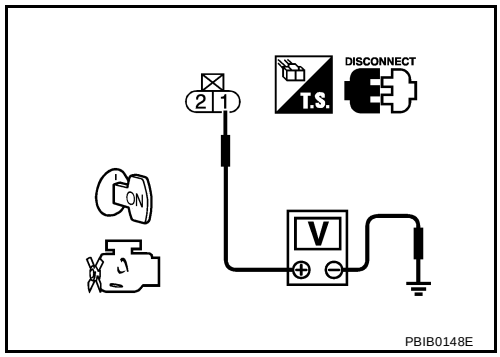

OK or NG

OK >> GO TO 3.
NG >> GO TO 2.

2. DETECT MALFUNCTIONING PART

Check the following.

- Harness connectors F44, F101
- Harness connectors E20, F32
- Harness connectors E130, E27
- IPDM E/R harness connector E122
- Harness for open or short between EVAP canister purge volume control solenoid valve and IPDM E/R
- Harness for open or short between ECM and IPDM E/R

>> Repair harness or connectors.

3. CHECK EVAP CANISTER PURGE VOLUME CONTROL SOLENOID VALVE OUTPUT SIGNAL CIRCUIT FOR OPEN AND SHORT

1. Turn ignition switch “OFF”.
2. Disconnect ECM harness connector.
3. Check harness continuity between ECM terminal 10 and EVAP canister purge volume control solenoid valve terminal 2. Refer to Wiring Diagram.

Continuity should exist.

4. Also check harness for short to ground and short to power.

OK or NG

OK (With CONSULT-II)>>GO TO 5.
OK (Without CONSULT-II)>>GO TO 6.
NG >> GO TO 4.

4. DETECT MALFUNCTIONING PART

Check the following.

- Harness connectors F44, F101
- Harness for open or short between EVAP canister purge volume control solenoid valve and ECM

>> Repair open circuit or short to ground or short to power in harness or connectors.

5. CHECK EVAP CANISTER PURGE VOLUME CONTROL SOLENOID VALVE OPERATION

With CONSULT-II

1. Reconnect all harness connectors disconnected.
2. Start engine.
3. Perform “PURG VOL CONT/V” in “ACTIVE TEST” mode with CONSULT-II. Check that engine speed varies according to the valve opening.

OK or NG

OK >> GO TO 7.
NG >> GO TO 6.

ACTIVE TEST	
PURG VOL CONT/V	0 %
MONITOR	
ENG SPEED	XXX rpm
HO2S1 MNTR (B1)	LEAN
HO2S1 MNTR (B2)	LEAN
A/F ALPHA-B1	XXX %
A/F ALPHA-B2	XXX %

PBIB0147E

6. CHECK EVAP CANISTER PURGE VOLUME CONTROL SOLENOID VALVE

Refer to EC-977, "Component Inspection" .

OK or NG

OK >> GO TO 7.
NG >> Replace EVAP canister purge volume control solenoid valve.

7. CHECK INTERMITTENT INCIDENT

Refer to EC-756, "TROUBLE DIAGNOSIS FOR INTERMITTENT INCIDENT" .

>> **INSPECTION END**

Component Inspection

UBS003CG

EVAP CANISTER PURGE VOLUME CONTROL SOLENOID VALVE

With CONSULT-II

Check air passage continuity of EVAP canister purge volume control solenoid valve under the following conditions.

Condition (PURG VOL CONT/V value)	Air passage continuity between A and B
100.0%	Yes
0.0%	No

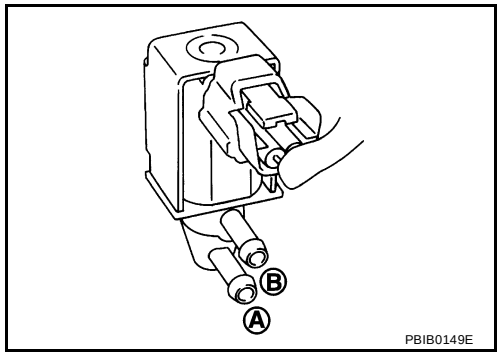

Without CONSULT-II

Check air passage continuity of EVAP canister purge volume control solenoid valve under the following conditions.

Condition	Air passage continuity between A and B
12V direct current supply between terminals 1 and 2	Yes
No supply	No

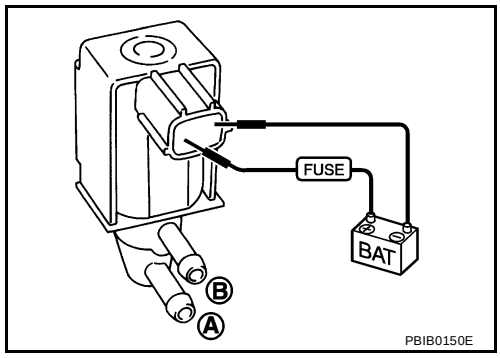

Removal and Installation

UBS003CH

EVAP CANISTER PURGE VOLUME CONTROL SOLENOID VALVE

Refer to EM-112, "INTAKE MANIFOLD" .

DTC P0447 EVAP CANISTER VENT CONTROL VALVE

PFP:14935

Component Description

UBS003CI

The EVAP canister vent control valve is located on the EVAP canister and is used to seal the canister vent.
This solenoid valve responds to signals from the ECM. When the ECM sends an ON signal, the coil in the solenoid valve is energized. A plunger will then move to seal the canister vent. The ability to seal the vent is necessary for the on board diagnosis of other evaporative emission control system components.
This solenoid valve is used only for diagnosis, and usually remains opened.
When the vent is closed, under normal purge conditions, the evaporative emission control system is depressurized and allows “EVAP Control System (Small Leak)” diagnosis.

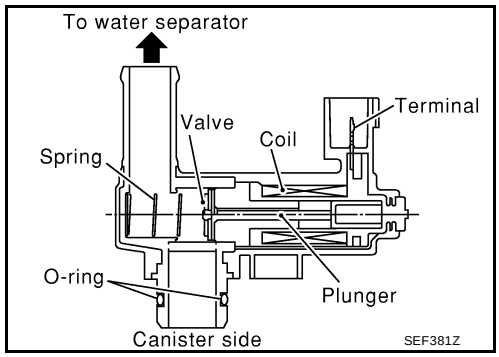

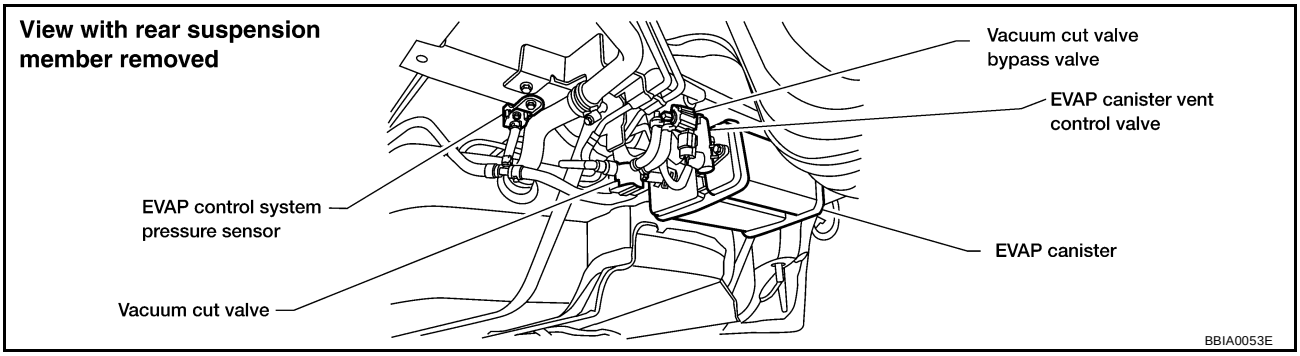

CONSULT-II Reference Value in Data Monitor Mode

UBS003CJ

Specification data are reference values.

MONITOR ITEM	CONDITION	SPECIFICATION
VENT CONT/V	● Ignition switch: ON	OFF

On Board Diagnosis Logic

UBS003CK

DTC No.	Trouble diagnosis name	DTC detecting condition	Possible cause
P0447 0447	EVAP canister vent control valve circuit open	An improper voltage signal is sent to ECM through EVAP canister vent control valve.	● Harness or connectors (The valve circuit is open or shorted.) ● EVAP canister vent control valve

DTC Confirmation Procedure

UBS003CL

NOTE:
If “DTC Confirmation Procedure” has been previously conducted, always turn ignition switch “OFF” and wait at least 10 seconds before conducting the next test.
TESTING CONDITION:
Before performing the following procedure, confirm battery voltage is more than 11V at idle.

WITH CONSULT-II

1. Turn ignition switch “ON”.
2. Select “DATA MONITOR” mode with CONSULT-II.

3. Start engine and wait at least 8 seconds.
4. If 1st trip DTC is detected, go to EC-981, "Diagnostic Procedure"
.

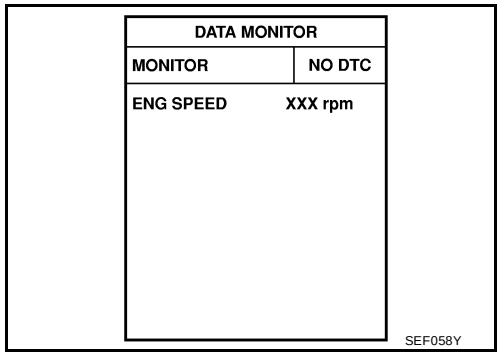

WITH GST

Follow the procedure “WITH CONSULT-II” above.

Wiring Diagram

UBS003CM

EC-VENT/V-01

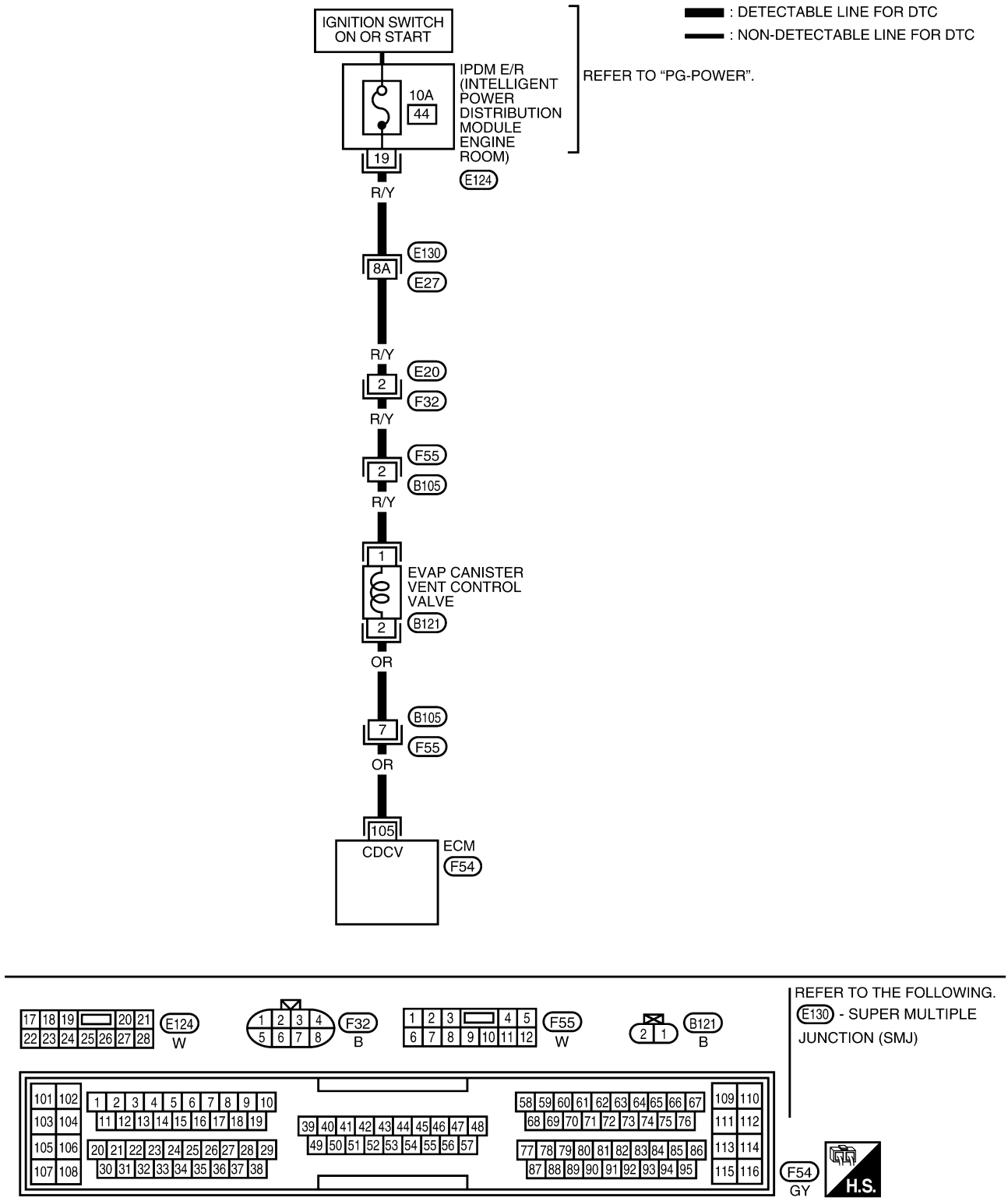

Specification data are reference values and are measured between each terminal and ground.

CAUTION:
Do not use ECM ground terminals when measuring input/output voltage. Doing so may result in damage to the ECM's transistor. Use a ground other than ECM terminals, such as the ground.

TERMINAL NO.	WIRE COLOR	ITEM	CONDITION	DATA (DC Voltage)
105	OR	EVAP canister vent control valve	**[Ignition switch "ON"]**	BATTERY VOLTAGE (11 - 14V)

Diagnostic Procedure

UBS003CN

1. INSPECTION START

Do you have CONSULT-II?

Yes or No

Yes >> GO TO 2.
No >> GO TO 3.

2. CHECK EVAP CANISTER VENT CONTROL VALVE CIRCUIT

With CONSULT-II

1. Turn ignition switch "OFF" and then turn "ON".
2. Select "VENT CONTROL/V" in "ACTIVE TEST" mode with CONSULT-II.
3. Touch "ON/OFF" on CONSULT-II screen.
4. Check for operating sound of the valve.
   Clicking noise should be heard.

ACTIVE TEST	
VENT CONTROL/V	OFF
MONITOR	
ENG SPEED	XXX rpm
A/F ALPHA-B1	XXX %
A/F ALPHA-B2	XXX %
HO2S1 (B1)	XXX V
HO2S1 (B2)	XXX V

PBIB0151E

OK or NG

OK >> GO TO 7.
NG >> GO TO 3.

3. CHECK EVAP CANISTER VENT CONTROL VALVE POWER SUPPLY CIRCUIT

1. Turn ignition switch “OFF”.
2. Disconnect EVAP canister vent control valve harness connector.

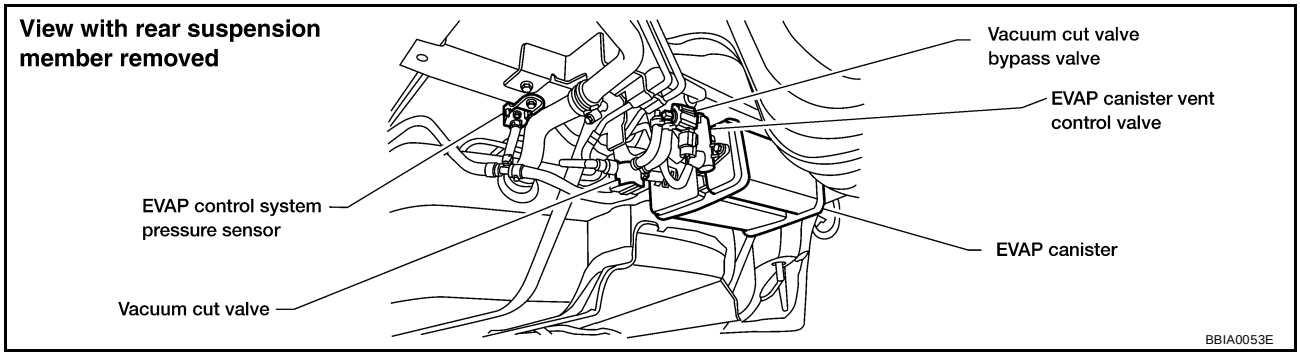

3. Turn ignition switch “ON”.
4. Check voltage between EVAP canister vent control valve terminal 1 and ground with CONSULT-II or tester.

Voltage: Battery voltage

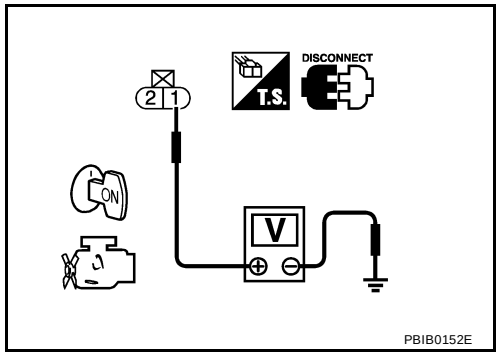

OK or NG

OK >> GO TO 5.
NG >> GO TO 4.

4. DETECT MALFUNCTIONING PART

Check the following.

- Harness connectors B105, F55
- Harness connectors F32, E20
- Harness connectors E27, E130
- IPDM E/R harness connector E124
- 10A fuse
- Harness for open or short between EVAP canister vent control valve and IPDM E/R

>> Repair harness or connectors.

5. CHECK EVAP CANISTER VENT CONTROL VALVE OUTPUT SIGNAL CIRCUIT FOR OPEN AND SHORT

1. Turn ignition switch “OFF”.
2. Disconnect ECM harness connector.
3. Check harness continuity between ECM terminal 105 and EVAP canister vent control valve terminal 2. Refer to Wiring Diagram.

Continuity should exist.

4. Also check harness for short to ground and short to power.

OK or NG

OK >> GO TO 7.
NG >> GO TO 6.

6. DETECT MALFUNCTIONING PART

Check the following.

- Harness connectors B105, F55
- Harness for open or short between EVAP canister vent control valve and ECM

>> Repair open circuit or short to ground or short to power in harness or connectors.

7. CHECK RUBBER TUBE FOR CLOGGING

1. Disconnect rubber tube connected to EVAP canister vent control valve.
2. Check the rubber tube for clogging.

OK or NG

OK >> GO TO 8.
NG >> Clean the rubber tube using an air blower.

8. CHECK EVAP CANISTER VENT CONTROL VALVE

Refer to EC-983, "Component Inspection" .

OK or NG

OK >> GO TO 9.
NG >> Replace EVAP canister vent control valve.

9. CHECK INTERMITTENT INCIDENT

Refer to EC-756, "TROUBLE DIAGNOSIS FOR INTERMITTENT INCIDENT" .

>> **INSPECTION END**

Component Inspection

UBS003CO

EVAP CANISTER VENT CONTROL VALVE

With CONSULT-II

1. Remove EVAP canister vent control valve from EVAP canister.
2. Check portion **B** of EVAP canister vent control valve for being rusted.
   If NG, replace EVAP canister vent control valve.
   If OK, go to next step.
3. Reconnect harness connectors disconnected.
4. Turn ignition switch “ON”.
5. Perform “VENT CONTROL/V” in “ACTIVE TEST” mode.

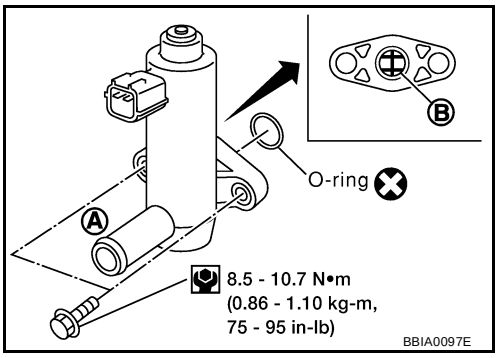

6. Check air passage continuity and operation delay time.

Condition VENT CONTROL/V	Air passage continuity between A and B
ON	No
OFF	Yes

Operation takes less than 1 second.

If NG, replace EVAP canister vent control valve.
If OK, go to next step.

7. Clean the air passage (Portion **A** to **B**) of EVAP canister vent control valve using an air blower.

ACTIVE TEST	
VENT CONTROL/V	OFF
MONITOR	
ENG SPEED	XXX rpm
A/F ALPHA-B1	XXX %
A/F ALPHA-B2	XXX %
HO2S1 (B1)	XXX V
HO2S1 (B2)	XXX V

PBIB0151E

8. Perform step 6 again.

Without CONSULT-II

1. Remove EVAP canister vent control valve from EVAP canister.
2. Check portion **B** of EVAP canister vent control valve for being rusted.

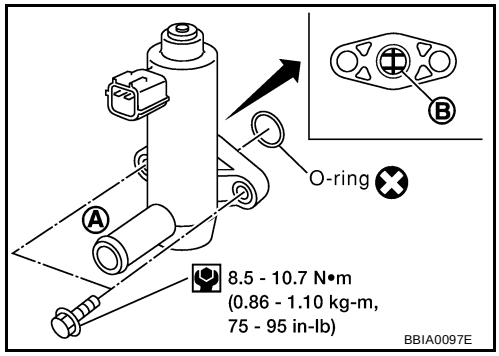

3. Check air passage continuity and operation delay time under the following conditions.
   Make sure new O-ring is installed properly.

Condition	Air passage continuity between A and B
12V direct current supply between terminals 1 and 2	No
OFF	Yes

Operation takes less than 1 second.

If NG, replace EVAP canister vent control valve.
If OK, go to next step.

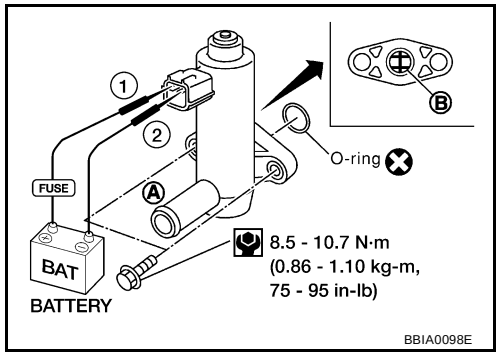

4. Clean the air passage (Portion **A** to **B**) of EVAP canister vent control valve using an air blower.
5. Perform step 3 again.

DTC P0452 EVAP CONTROL SYSTEM PRESSURE SENSOR

PFP:25085

Component Description

UBS003CP

The EVAP control system pressure sensor detects pressure in the purge line. The sensor output voltage to the ECM increases as pressure increases. The EVAP control system pressure sensor is not used to control the engine system. It is used only for on board diagnosis.

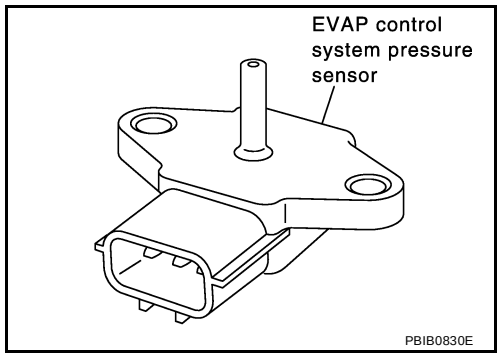

CONSULT-II Reference Value in Data Monitor Mode

UBS003CQ

Specification data are reference values.

MONITOR ITEM	CONDITION	SPECIFICATION
EVAP SYS PRES	● Ignition switch: ON	Approx. 1.8 - 4.8V

On Board Diagnosis Logic

UBS003CR

DTC No.	Trouble diagnosis name	DTC detecting condition	Possible cause
P0452 0452	EVAP control system pressure sensor low input	An excessively low voltage from the sensor is sent to ECM.	● Harness or connectors (The sensor circuit is open or shorted.) ● EVAP control system pressure sensor

DTC Confirmation Procedure

UBS003CS

NOTE:
If “DTC Confirmation Procedure” has been previously conducted, always turn ignition switch “OFF” and wait at least 10 seconds before conducting the next test.
TESTING CONDITION:
Always perform test at a temperature of 5°C (41°F) or more.

WITH CONSULT-II

1. Start engine and warm it up to normal operating temperature.
2. Turn ignition switch “OFF” and wait at least 10 seconds.
3. Turn ignition switch “ON”.
4. Select “DATA MONITOR” mode with CONSULT-II.
5. Make sure that “FUEL T/TEMP SE” is more than 0°C (32°F).
6. Start engine and wait at least 20 seconds.
   If 1st trip DTC is detected, go to EC-988, "Diagnostic Procedure"
   .

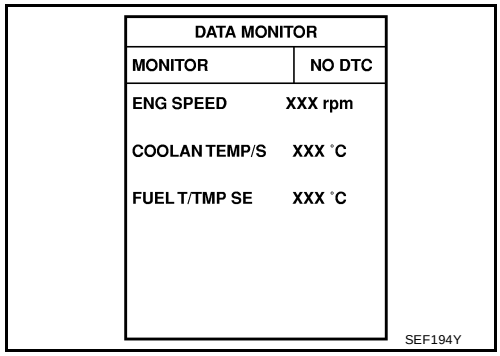

WITH GST

1. Start engine and warm it up to normal operating temperature.

2. Check that voltage between ECM terminal 75 (Fuel tank temperature sensor signal) and ground is less than 4.2V.
3. Turn ignition switch “OFF” and wait at least 10 seconds.
4. Start engine and wait at least 20 seconds.
5. Select “MODE 7” with GST.
   If 1st trip DTC is detected, go to EC-988, "Diagnostic Procedure"
   .

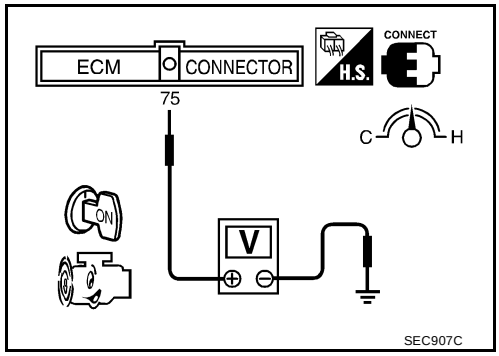

Wiring Diagram

UBS003CT

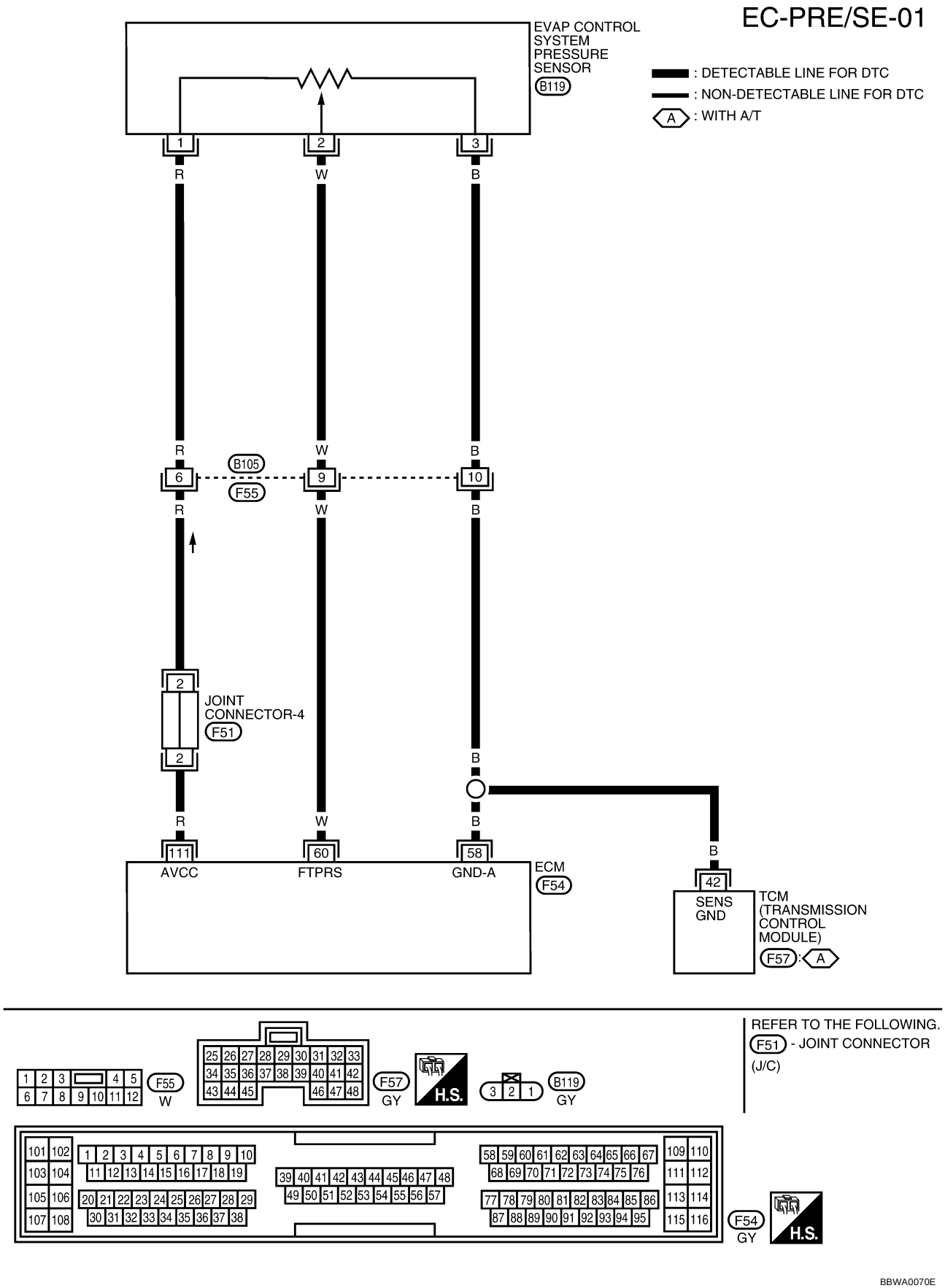

Specification data are reference values and are measured between each terminal and ground.

CAUTION:
Do not use ECM ground terminals when measuring input/output voltage. Doing so may result in damage to the ECM's transistor. Use a ground other than ECM terminals, such as the ground.

TERMINAL NO.	WIRE COLOR	ITEM	CONDITION	DATA (DC Voltage)
58	B	Sensors' ground	**[Engine is running]** ● **Warm-up condition** ● Idle speed	Approximately 0V
60	W	EVAP control system pressure sensor	**[Ignition switch "ON"]**	Approximately 1.8 - 4.8V
111	R	Sensor's power supply	**[Ignition switch "ON"]**	Approximately 5V

Diagnostic Procedure

UBS003CU

1. RETIGHTEN GROUND SCREWS

Loosen and retighten engine ground screws.

>> GO TO 2.

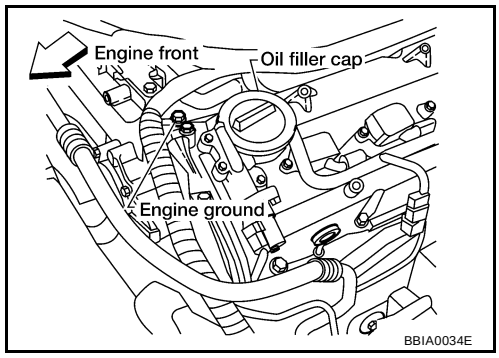

2. CHECK CONNECTOR

1. Disconnect EVAP control system pressure sensor harness connector.

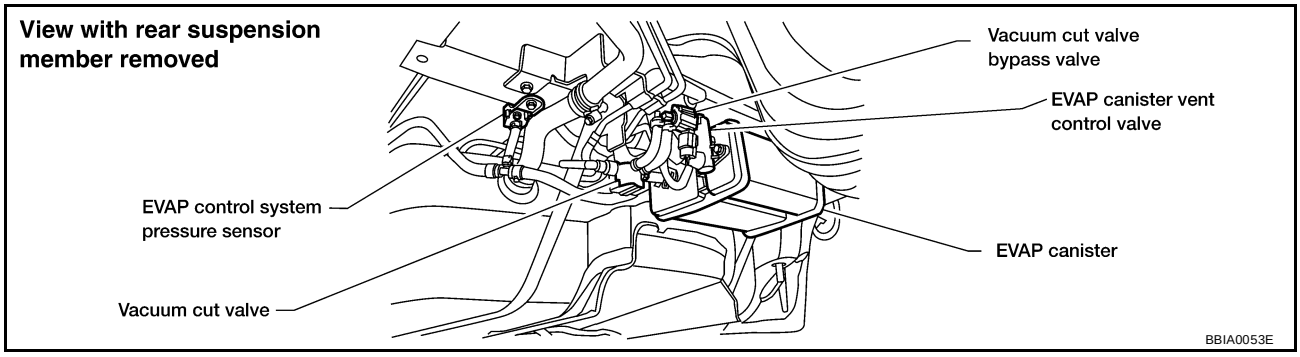

2. Check sensor harness connector for water.

Water should not exist.

OK or NG

OK >> GO TO 3.
NG >> Repair or replace harness connector.

3. CHECK EVAP CONTROL SYSTEM PRESSURE SENSOR POWER SUPPLY CIRCUIT

1. Turn ignition switch “ON”.
2. Check voltage between EVAP control system pressure sensor terminal 1 and ground with CONSULT-II or tester.

   Voltage: Approximately 5V

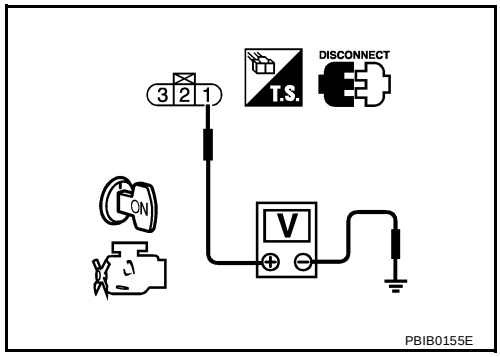

OK or NG

OK >> GO TO 5.
NG >> GO TO 4.

4. DETECT MALFUNCTIONING PART

Check the following.

- Harness connectors B105, F55
- Joint connector-4
- Harness for open or short between EVAP control system pressure sensor and ECM

>> Repair harness or connectors.

5. CHECK EVAP CONTROL SYSTEM PRESSURE SENSOR GROUND CIRCUIT FOR OPEN AND SHORT

1. Turn ignition switch “OFF”.
2. Check harness continuity between EVAP control system pressure sensor terminal 3 and engine ground. Refer to Wiring Diagram.

   Continuity should exist.

3. Also check harness for short to ground and short to power.

OK or NG

OK >> GO TO 7.
NG >> GO TO 6.

6. DETECT MALFUNCTIONING PART

Check the following.

- Harness connectors B105, F55
- Harness for open or short between EVAP control system pressure sensor and ECM
- Harness for open or short between EVAP control system pressure sensor and TCM

>> Repair open circuit or short to ground or short to power in harness or connectors.

7. CHECK EVAP CONTROL SYSTEM PRESSURE SENSOR INPUT SIGNAL CIRCUIT FOR OPEN AND SHORT

1. Disconnect ECM harness connector.
2. Check harness continuity between ECM terminal 60 and EVAP control system pressure sensor terminal 2.
   Refer to Wiring Diagram.

   Continuity should exist.
3. Also check harness for short to ground and short to power.

OK or NG

OK >> GO TO 9.
NG >> GO TO 8.

8. DETECT MALFUNCTIONING PART

Check the following.

- Harness connectors B105, F55
- Harness for open or short between ECM and EVAP control system pressure sensor

>> Repair open circuit or short to ground or short to power in harness or connectors.

9. CHECK EVAP CONTROL SYSTEM PRESSURE SENSOR

Refer to EC-990, "Component Inspection" .

OK or NG

OK >> GO TO 10.
NG >> Replace EVAP control system pressure sensor.

10. CHECK INTERMITTENT INCIDENT

Refer to EC-756, "TROUBLE DIAGNOSIS FOR INTERMITTENT INCIDENT" .

>> **INSPECTION END**

Component Inspection

UBS003CV

EVAP CONTROL SYSTEM PRESSURE SENSOR

1. Remove EVAP control system pressure sensor with its harness connector connected.
2. Remove hose from EVAP control system pressure sensor.
3. Install a vacuum pump to EVAP control system pressure sensor.
4. Turn ignition switch "ON" and check output voltage between ECM terminal 60 and ground under the following conditions.

Applied vacuum kPa (mmHg, inHg)	Voltage V
Not applied	1.8 - 4.8
-26.7 (-200, -7.87)	2.1 - 2.5V lower than above value

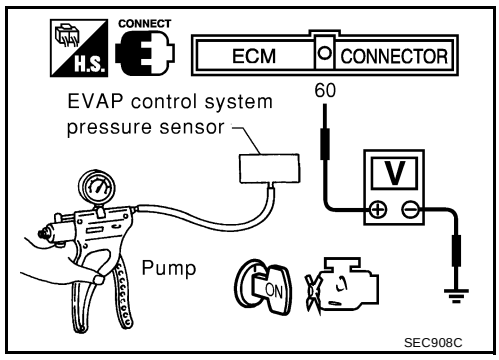

CAUTION:

- **Always calibrate the vacuum pump gauge when using it.**
- **Do not apply vacuum below -93.3 kPa (-700 mmHg, -27.56 inHg) or pressure over 101.3 kPa (760 mmHg, 29.92 inHg).**

5. If NG, replace EVAP control system pressure sensor.

DTC P0453 EVAP CONTROL SYSTEM PRESSURE SENSOR

PFP:25085

Component Description

UBS003CW

The EVAP control system pressure sensor detects pressure in the purge line. The sensor output voltage to the ECM increases as pressure increases. The EVAP control system pressure sensor is not used to control the engine system. It is used only for on board diagnosis.

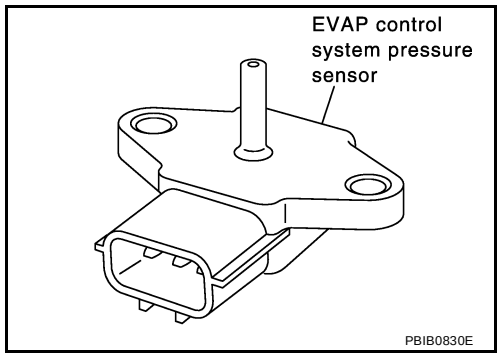

CONSULT-II Reference Value in Data Monitor Mode

UBS003CX

Specification data are reference values.

MONITOR ITEM	CONDITION	SPECIFICATION
EVAP SYS PRES	● Ignition switch: ON	Approx. 1.8 - 4.8V

On Board Diagnosis Logic

UBS003CY

DTC No.	Trouble diagnosis name	DTC detecting condition	Possible cause
P0453 0453	EVAP control system pressure sensor high input	An excessively high voltage from the sensor is sent to ECM.	● Harness or connectors (The sensor circuit is open or shorted.) ● EVAP control system pressure sensor ● EVAP canister vent control valve ● EVAP canister ● Water separator ● Rubber hose from EVAP canister vent control valve to water separator

DTC Confirmation Procedure

UBS003CZ

NOTE:
If “DTC Confirmation Procedure” has been previously conducted, always turn ignition switch “OFF” and wait at least 10 seconds before conducting the next test.
TESTING CONDITION:
Always perform test at a temperature of 5°C (41°F) or more.

WITH CONSULT-II

1. Start engine and warm it up to normal operating temperature.
2. Turn ignition switch “OFF” and wait at least 10 seconds.
3. Turn ignition switch “ON”.
4. Select “DATA MONITOR” mode with CONSULT-II.
5. Make sure that “FUEL T/TEMP SE” is more than 0°C (32°F).
6. Start engine and wait at least 20 seconds.
7. If 1st trip DTC is detected, go to EC-994, "Diagnostic Procedure"
.

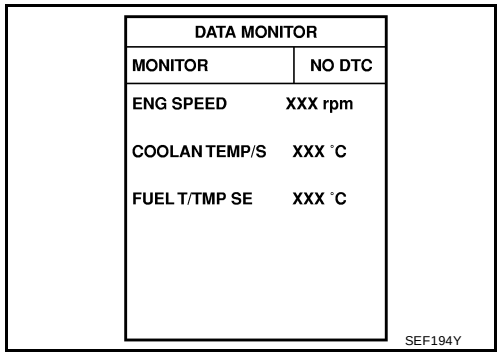

WITH GST

1. Start engine and warm it up to normal operating temperature.

2. Check that voltage between ECM terminal 75 (Fuel tank temperature sensor signal) and ground is less than 4.2V.
3. Turn ignition switch “OFF” and wait at least 10 seconds.
4. Start engine and wait at least 20 seconds.
5. Select “MODE 7” with GST.
   If 1st trip DTC is detected, go to EC-994, "Diagnostic Procedure"
   .

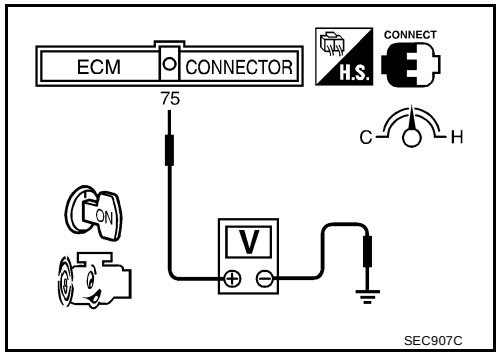

Wiring Diagram

UBS003D0

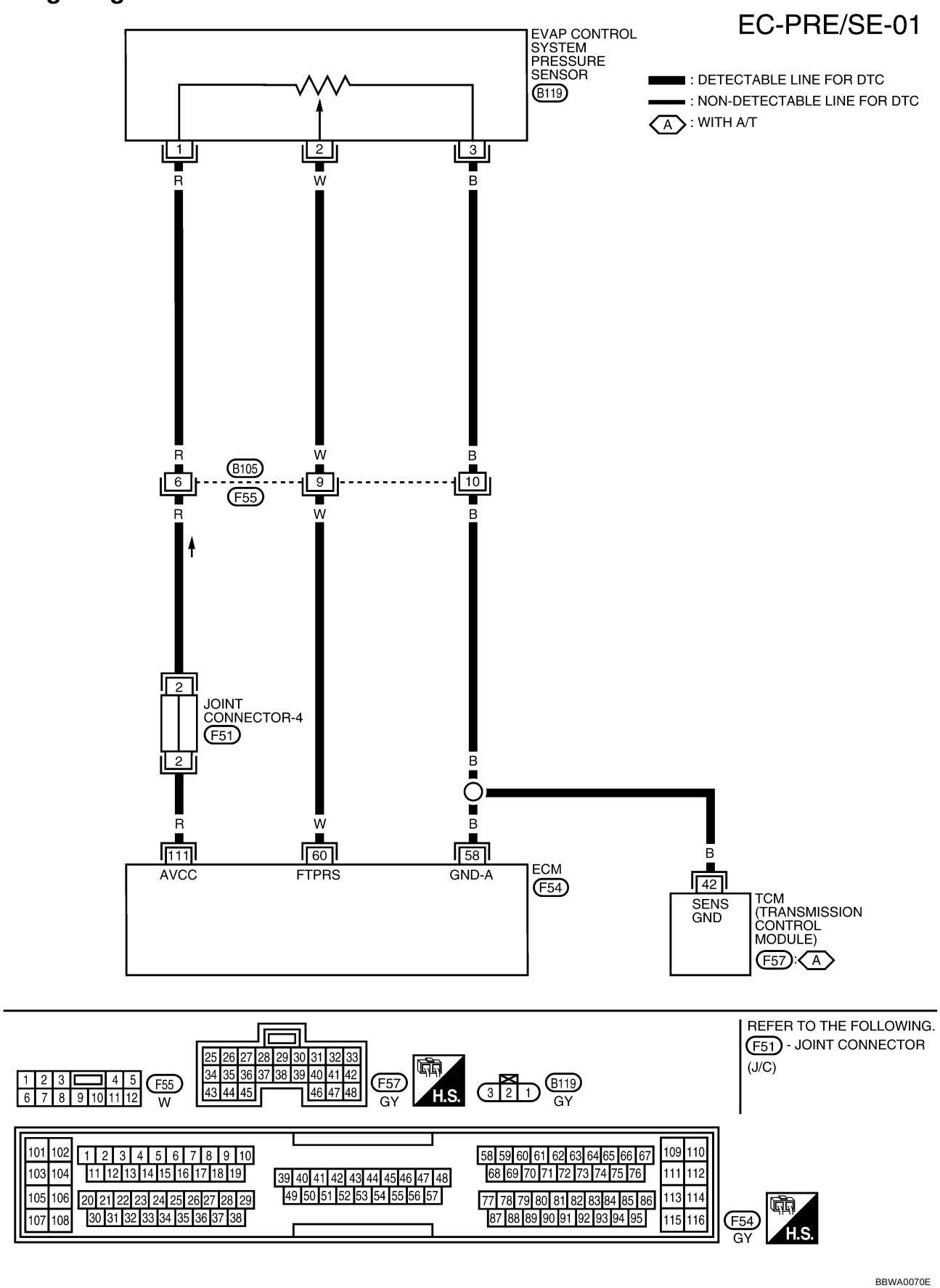

Specification data are reference values and are measured between each terminal and ground.

CAUTION:
Do not use ECM ground terminals when measuring input/output voltage. Doing so may result in damage to the ECM's transistor. Use a ground other than ECM terminals, such as the ground.

TERMINAL NO.	WIRE COLOR	ITEM	CONDITION	DATA (DC Voltage)
58	B	Sensors' ground	**[Engine is running]** ● **Warm-up condition** ● Idle speed	Approximately 0V
60	W	EVAP control system pressure sensor	**[Ignition switch "ON"]**	Approximately 1.8 - 4.8V
111	R	Sensor's power supply	**[Ignition switch "ON"]**	Approximately 5V

Diagnostic Procedure

UBS003D1

1. RETIGHTEN GROUND SCREWS

Loosen and retighten engine ground screws.

>> GO TO 2.

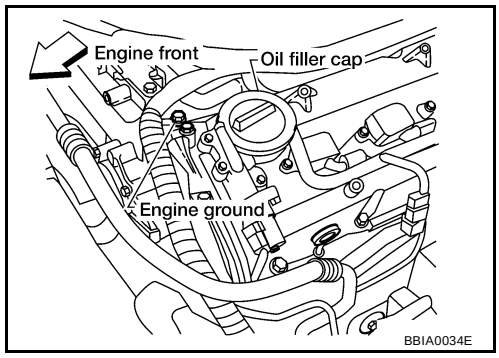

2. CHECK CONNECTOR

1. Disconnect EVAP control system pressure sensor harness connector.

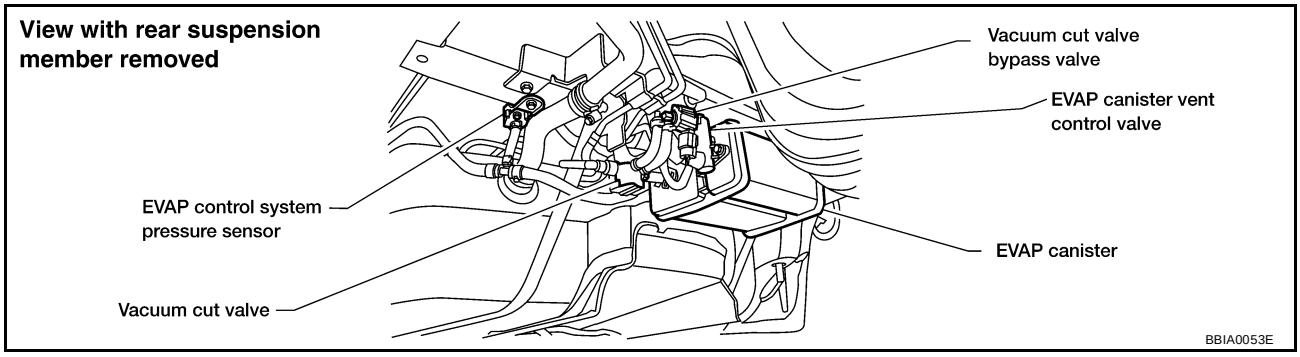

2. Check sensor harness connector for water.

Water should not exist.

OK or NG

OK >> GO TO 3.
NG >> Repair or replace harness connector.

3. CHECK EVAP CONTROL SYSTEM PRESSURE SENSOR POWER SUPPLY CIRCUIT

1. Turn ignition switch “ON”.
2. Check voltage between EVAP control system pressure sensor terminal 1 and ground with CONSULT-II or tester.

   Voltage: Battery voltage

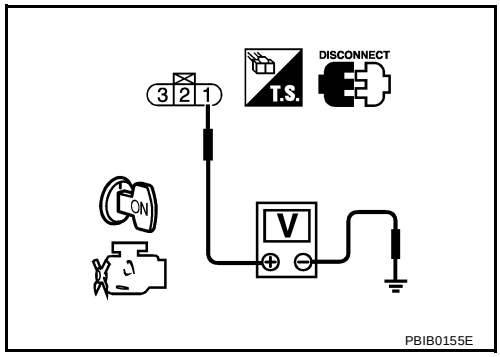

OK or NG

OK >> GO TO 5.
NG >> GO TO 4.

4. DETECT MALFUNCTIONING PART

Check the following.

- Harness connectors B105, F55
- Joint connector-4
- Harness for open or short between EVAP control system pressure sensor and ECM

>> Repair harness or connectors.

5. CHECK EVAP CONTROL SYSTEM PRESSURE SENSOR GROUND CIRCUIT FOR OPEN AND SHORT

1. Turn ignition switch “OFF”.
2. Check harness continuity between EVAP control system pressure sensor terminal 3 and engine ground. Refer to Wiring Diagram.

   Continuity should exist.

3. Also check harness for short to ground and short to power.

OK or NG

OK >> GO TO 7.
NG >> GO TO 6.

6. DETECT MALFUNCTIONING PART

Check the following.

- Harness connectors B105, F55
- Harness for open or short between EVAP control system pressure sensor and ECM
- Harness for open or short between EVAP control system pressure sensor and TCM

>> Repair open circuit or short to ground or short to power in harness or connectors.

7. CHECK EVAP CONTROL SYSTEM PRESSURE SENSOR INPUT SIGNAL CIRCUIT FOR OPEN AND SHORT

1. Disconnect ECM harness connector.
2. Check harness continuity between ECM terminal 60 and EVAP control system pressure sensor terminal 2.
   Refer to Wiring Diagram.

   Continuity should exist.

3. Also check harness for short to ground and short to power.

OK or NG

OK >> GO TO 9.
NG >> GO TO 8.

8. DETECT MALFUNCTIONING PART

Check the following.

- Harness connectors B105, F55
- Harness for open or short between ECM and EVAP control system pressure sensor

>> Repair open circuit or short to ground or short to power in harness or connectors.

9. CHECK RUBBER TUBE FOR CLOGGING

1. Disconnect rubber tube connected to EVAP canister vent control valve.
2. Check the rubber tube for clogging.

OK or NG

OK >> GO TO 10.
NG >> Clean the rubber tube using an air blower.

10. CHECK EVAP CANISTER VENT CONTROL VALVE

Refer to EC-983, "Component Inspection" .

OK or NG

OK >> GO TO 11.
NG >> Replace EVAP canister vent control valve.

11. CHECK EVAP CONTROL SYSTEM PRESSURE SENSOR

Refer to EC-997, "Component Inspection" .

OK or NG

OK >> GO TO 12.
NG >> Replace EVAP control system pressure sensor.

12. CHECK RUBBER TUBE

Check obstructed rubber tube connected to EVAP canister vent control valve.

OK or NG

OK >> GO TO 13.
NG >> Clean rubber tube using an air blower, repair or replace rubber tube.

13. CHECK WATER SEPARATOR

Refer to EC-970, "Component Inspection" .

OK or NG

OK >> GO TO 14.
NG >> Replace water separator.

14. CHECK IF EVAP CANISTER SATURATED WITH WATER

1. Remove EVAP canister with EVAP canister vent control valve attached.
2. Check if water will drain from the EVAP canister.

Yes or No

Yes >> GO TO 15.
No >> GO TO 17.

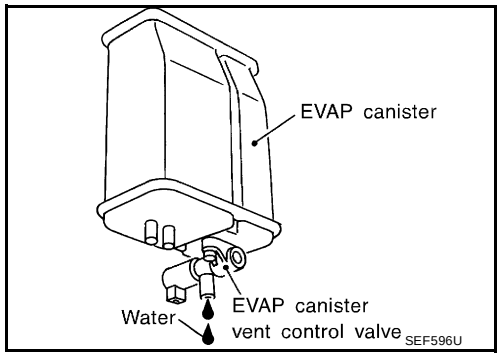

15. CHECK EVAP CANISTER

Weigh the EVAP canister with the EVAP canister vent control valve attached.
The weight should be less than 1.8 kg (4.0 lb).

OK or NG

OK >> GO TO 17.
NG >> GO TO 16.

16. DETECT MALFUNCTIONING PART

Check the following.

- EVAP canister for damage
- EVAP hose between EVAP canister and water separator for clogging or poor connection

>> Repair hose or replace EVAP canister.

17. CHECK INTERMITTENT INCIDENT

Refer to EC-756, "TROUBLE DIAGNOSIS FOR INTERMITTENT INCIDENT" .

>> **INSPECTION END**

Component Inspection

UBS003D2

EVAP CONTROL PRESSURE SENSOR

1. Remove EVAP control system pressure sensor with its harness connector connected.
2. Remove hose from EVAP control system pressure sensor.
3. Install a vacuum pump to EVAP control system pressure sensor.
4. Turn ignition switch "ON" and check output voltage between ECM terminal 60 and ground under the following conditions.

Applied vacuum kPa (mmHg, inHg)	Voltage V
Not applied	1.8 - 4.8
-26.7 (-200, -7.87)	2.1 - 2.5 lower than above value

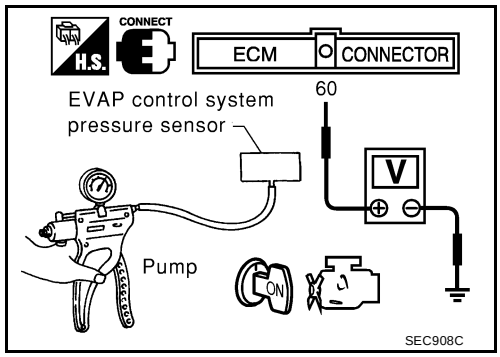

CAUTION:

- **Always calibrate the vacuum pump gauge when using it.**
- **Do not apply vacuum below -93.3 kPa (-700 mmHg, -27.56 inHg) or over 101.3 kPa (760 mmHg, 29.92 inHg).**

5. If NG, replace EVAP control system pressure sensor.

DTC P0456 EVAP CONTROL SYSTEM

PFP:14950

On Board Diagnosis Logic

UBS003D3

This diagnosis detects very small leaks in the EVAP line between fuel tank and EVAP canister purge volume control solenoid valve, using the intake manifold vacuum in the same way as conventional EVAP small leak diagnosis.
If ECM judges a leak which corresponds to a very small leak, the very small leak P0456 will be detected.
If ECM judges a leak equivalent to a small leak, EVAP small leak P0442 will be detected.
If ECM judges there are no leaks, the diagnosis will be OK.

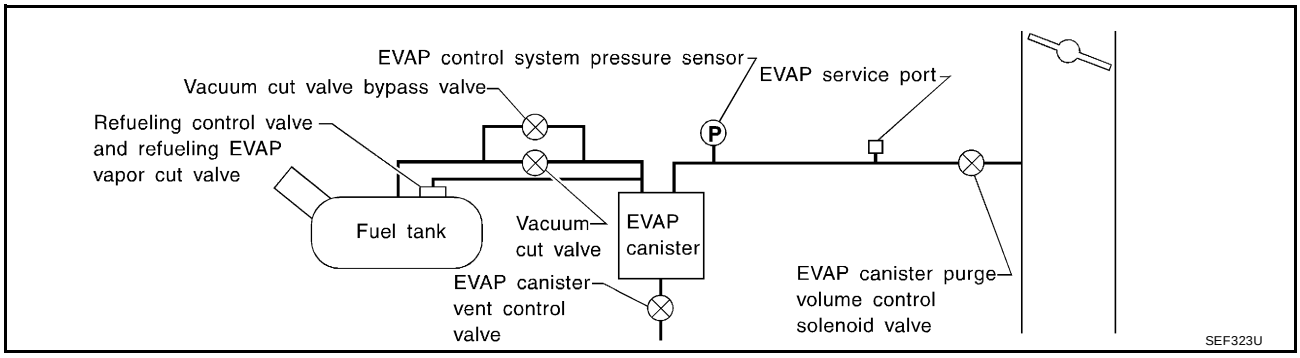

DTC No.	Trouble diagnosis name	DTC detecting condition	Possible cause
P0456 0456	Evaporative emission control system very small leak (negative pressure check)	● EVAP system has a very small leak. ● EVAP system does not operate properly.	● Incorrect fuel tank vacuum relief valve ● Incorrect fuel filler cap used ● Fuel filler cap remains open or fails to close. ● Foreign matter caught in fuel filler cap. ● Leak is in line between intake manifold and EVAP canister purge volume control solenoid valve. ● Foreign matter caught in EVAP canister vent control valve. ● EVAP canister or fuel tank leaks ● EVAP purge line (pipe and rubber tube) leaks ● EVAP purge line rubber tube bent ● Blocked or bent rubber tube to EVAP control system pressure sensor ● Loose or disconnected rubber tube ● EVAP canister vent control valve and the circuit ● EVAP canister purge volume control solenoid valve and the circuit ● Absolute pressure sensor ● Fuel tank temperature sensor ● O-ring of EVAP canister vent control valve is missing or damaged ● Water separator ● EVAP canister is saturated with water ● EVAP control system pressure sensor ● Refueling control valve ● ORVR system leaks ● Fuel level sensor and the circuit ● Foreign matter caught in EVAP canister purge volume control solenoid valve

CAUTION:

- **Use only a genuine NISSAN fuel filler cap as a replacement. If an incorrect fuel filler cap is used, the MIL may come on.**
- **If the fuel filler cap is not tightened properly, the MIL may come on.**

- **Use only a genuine NISSAN rubber tube as a replacement.**

DTC Confirmation Procedure

UBS003D4

NOTE:

- **If DTC P0456 is displayed with P0442, perform TROUBLE DIAGNOSIS FOR DTC P0456 first.**
- **After repair, make sure that the hoses and clips are installed properly.**
- If "DTC Confirmation Procedure" has been previously conducted, always turn ignition switch "OFF" and wait at least 10 seconds before conducting the next test.

TESTING CONDITION:

- **Open engine hood before conducting following procedure.**
- **If any of following conditions are met just before the DTC confirmation procedure, leave the vehicle for more than 1 hour.**
  - **Fuel filler cap is removed.**
  - **Refilled or drained the fuel.**
  - **EVAP component parts is/are removed.**
- **Before performing the following procedure, confirm that battery voltage is more than 11V at idle.**

WITH CONSULT-II

1. Turn ignition switch "ON" and select "DATA MONITOR" mode with CONSULT-II.
2. Make sure the following conditions are met.
   FUEL LEVEL SE: 0.25 - 1.15V
   COOLAN TEMP/S: 0 - 32°C (32 - 90°F)
   FUEL T/TMP SE: 0 - 35°C (32 - 95°F)
   INT A/TEMP SE: More than 0°C (32°F)
   If NG, turn ignition switch "OFF" and leave the vehicle in a cool place (soak the vehicle) or refilling/draining fuel until the output voltage condition of the "FUEL LEVEL SE" meets within the range above and leave the vehicle for more than 1 hour. Then start from step 1).
3. Turn ignition switch "OFF" and wait at least 10 seconds.
4. Turn ignition switch "ON".
5. Select "EVAP V/S LEAK P0456/P1456" of "EVAPORATIVE SYSTEM" in "DTC WORK SUPPORT" mode with CONSULT-II.
   Follow the instruction displayed.

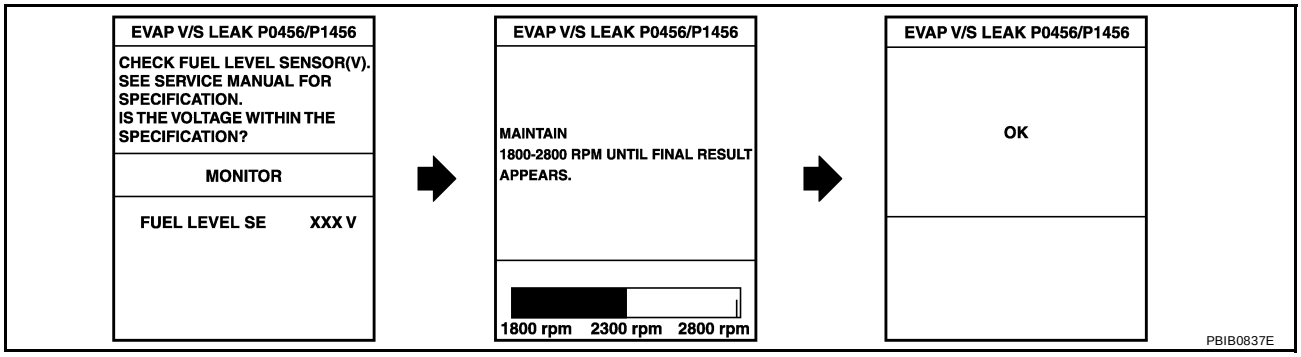

6. Make sure that "OK" is displayed.
   If "NG" is displayed, refer to EC-1000, "Diagnostic Procedure" .

   NOTE:
   - **If the engine speed cannot be maintained within the range displayed on CONSULT-II screen, go to EC-705, "Basic Inspection" .**
   - **Make sure that EVAP hoses are connected to EVAP canister purge volume control solenoid valve properly.**

Overall Function Check

UBS003D5

WITH GST

Use this procedure to check the overall function of the EVAP very small leak function. During this check, a 1st trip DTC might not be confirmed.

CAUTION:

- **Never use compressed air, doing so may damage the EVAP system.**
- **Do not start engine.**
- **Do not exceeded 4.12 kPa (0.042 kg/cm^2 , 0.6 psi).**

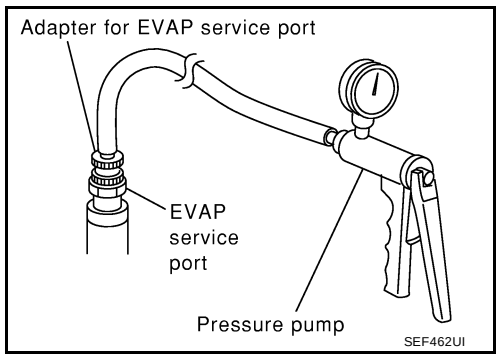

1. Attach the EVAP service port adapter securely to the EVAP service port.
2. Set the pressure pump and a hose.
3. Also set a vacuum gauge via 3-way connector and a hose.
4. Turn ignition switch “ON”.
5. Connect GST and select mode 8.
6. Using mode 8 control the EVAP canister vent control valve (close) and vacuum cut valve bypass valve (open).
7. Apply pressure and make sure the following conditions are satisfied.
   Pressure to be applied: 2.7 kPa (20 mmHg, 0.79 inHg)
   Time to be waited after the pressure drawn in to the EVAP system and the pressure to be dropped: 60 seconds and the pressure should not be dropped more than 0.4 kPa (3 mmHg, 0.12 inHg).
   If NG, go to EC-1000, "Diagnostic Procedure" .
   If OK, go to next step.
8. Disconnect GST.
9. Start engine and warm it up to normal operating temperature.
10. Turn ignition switch “OFF” and wait at least 10 seconds.
11. Restart engine and let it idle for 90 seconds.
12. Keep engine speed at 2,000 rpm for 30 seconds.
13. Turn ignition switch “OFF”.

    NOTE:
    For more information, refer to GST instruction manual.

Diagnostic Procedure

UBS003D6

1. CHECK FUEL FILLER CAP DESIGN

1. Turn ignition switch “OFF”.
2. Check for genuine NISSAN fuel filler cap design.

OK or NG

OK >> GO TO 2.
NG >> Replace with genuine NISSAN fuel filler cap.

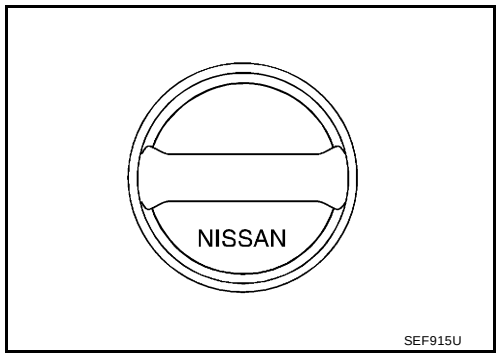

2. CHECK FUEL FILLER CAP INSTALLATION

Check that the cap is tightened properly by rotating the cap clockwise.

OK or NG

OK >> GO TO 3.
NG >>
- Open fuel filler cap, then clean cap and fuel filler neck threads using air blower.
- Retighten until ratcheting sound is heard.

3. CHECK FUEL FILLER CAP FUNCTION

Check for air releasing sound while opening the fuel filler cap.

OK or NG

OK >> GO TO 5.
NG >> GO TO 4.

4. CHECK FUEL TANK VACUUM RELIEF VALVE

Refer to EC-1275, "FUEL TANK VACUUM RELIEF VALVE (BUILT INTO FUEL FILLER CAP)" .

OK or NG

OK >> GO TO 5.
NG >> Replace fuel filler cap with a genuine one.

5. INSTALL THE PRESSURE PUMP

To locate the EVAP leak, install EVAP service port adapter and pressure pump to EVAP service port securely. For the location of EVAP service port, refer to EC-1273, "EVAPORATIVE EMISSION LINE DRAWING" .

NOTE:
Improper installation of the EVAP service port adapter to the EVAP service port may cause leaking.

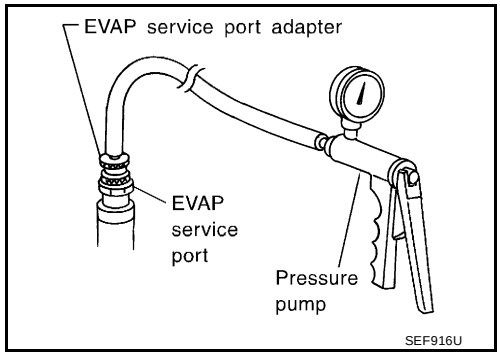

Models with CONSULT-II>>GO TO 6.
Models without CONSULT-II>>GO TO 7.

6. CHECK FOR EVAP LEAK

With CONSULT-II

1. Turn ignition switch “ON”.
2. Select “EVAP SYSTEM CLOSE” of “WORK SUPPORT” mode with CONSULT-II.
3. Touch “START” and apply pressure into the EVAP line until the pressure indicator reaches the middle of the bar graph.

   NOTE:
   - **Never use compressed air or a high pressure pump.**
   - **Do not exceed 4.12 kPa (0.042 kg/cm^2 , 0.6 psi) of pressure in the system.**

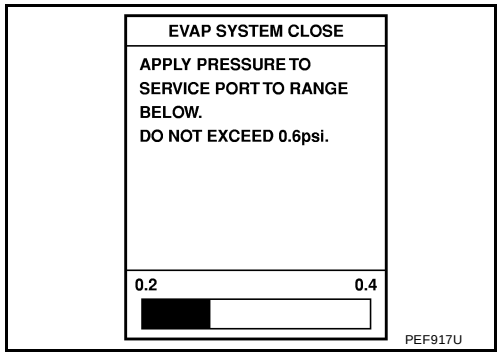

4. Using EVAP leak detector, locate the EVAP leak. For the leak detector, refer to the instruction manual for more details.
   Refer to EC-1273, "EVAPORATIVE EMISSION LINE DRAWING" .

OK or NG

OK >> GO TO 8.
NG >> Repair or replace.

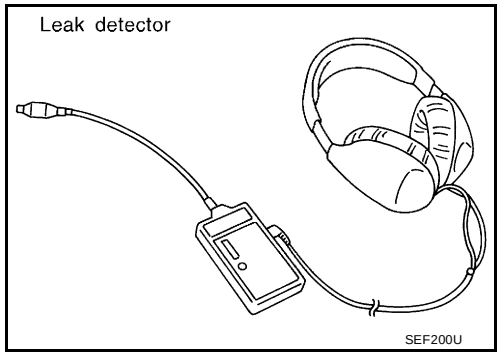

7. CHECK FOR EVAP LEAK

Without CONSULT-II

1. Turn ignition switch “OFF”.
2. Apply 12 volts DC to EVAP canister vent control valve. The valve will close. (Continue to apply 12 volts until the end of test.)
3. Apply 12 volts DC to vacuum cut valve bypass valve. The valve will open. (Continue to apply 12V until the end of test.)

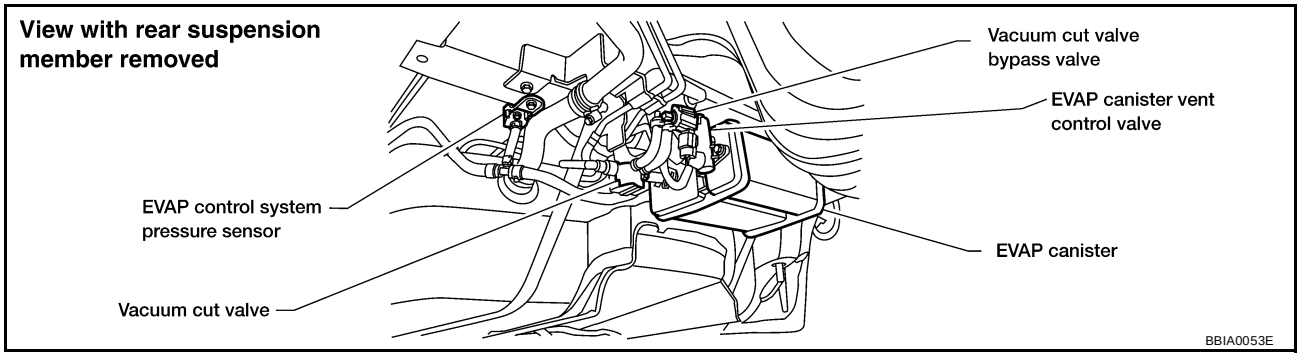

4. Pressurize the EVAP line using pressure pump with 1.3 to 2.7 kPa (10 to 20 mmHg, 0.39 to 0.79 inHg), then remove pump and EVAP service port adapter.

   NOTE:
   - **Never use compressed air or a high pressure pump.**
   - **Do not exceed 4.12 kPa (0.042 kg/cm^2 , 0.6 psi) of pressure in the system.**

5. Using EVAP leak detector, locate the EVAP leak. For the leak detector, refer to the instruction manual for more details. Refer to EC-1273, "EVAPORATIVE EMISSION LINE DRAWING" .

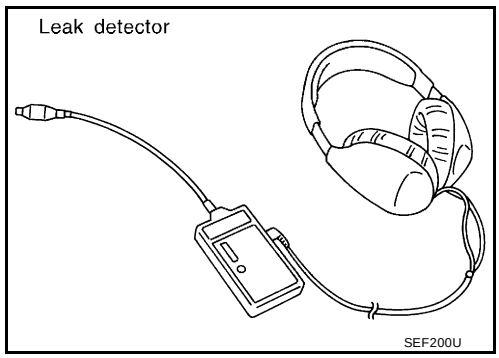

OK or NG

OK >> GO TO 8.
NG >> Repair or replace.

8. CHECK WATER SEPARATOR

Refer to EC-1005, "Component Inspection" .

OK or NG

OK >> GO TO 9.
NG >> Replace water separator.

9. CHECK EVAP CANISTER VENT CONTROL VALVE, O-RING AND CIRCUIT

Refer to “DTC Confirmation Procedure”, EC-1143 .

OK or NG

OK >> GO TO 10.
NG >> Repair or replace EVAP canister vent control valve and O-ring or harness/connector.

10. CHECK IF EVAP CANISTER SATURATED WITH WATER

1. Remove EVAP canister with EVAP canister vent control valve attached.
2. Does water drain from the EVAP canister?

Yes or No

Yes >> GO TO 11.
No (With CONSULT-II)>>GO TO 13.
No (Without CONSULT-II)>>GO TO 14.

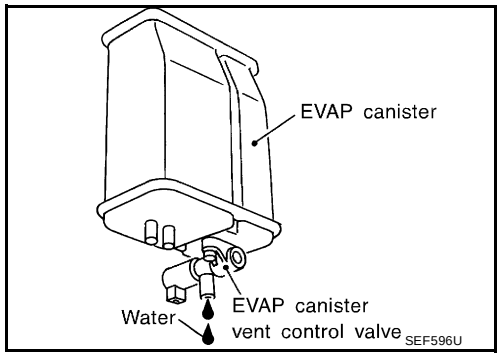

11. CHECK EVAP CANISTER

Weigh the EVAP canister with the EVAP canister vent control valve attached.
The weight should be less than 1.8 kg (4.0 lb).

OK or NG

OK (With CONSULT-II)>>GO TO 13.
OK (Without CONSULT-II)>>GO TO 14.
NG >> GO TO 12.

12. DETECT MALFUNCTIONING PART

Check the following.

- EVAP canister for damage
- EVAP hose between EVAP canister and water separator for clogging or poor connection

>> Repair hose or replace EVAP canister.

13. CHECK EVAP CANISTER PURGE VOLUME CONTROL SOLENOID VALVE OPERATION

With CONSULT-II

1. Disconnect vacuum hose to EVAP canister purge volume control solenoid valve at EVAP service port.
2. Start engine.
3. Perform “PURG VOL CONT/V” in “ACTIVE TEST” mode.
4. Touch “Qu” on CONSULT-II screen to increase “PURG VOL CONT/V” opening to 100.0%.
5. Check vacuum hose for vacuum when revving engine up to 2,000 rpm.

OK or NG

OK >> GO TO 16.
NG >> GO TO 15.

ACTIVE TEST	
PURG VOL CONT/V	0 %
MONITOR	
ENG SPEED	XXX rpm
HO2S1 MNTR (B1)	LEAN
HO2S1 MNTR (B2)	LEAN
A/F ALPHA-B1	XXX %
A/F ALPHA-B2	XXX %

PBIB0147E

14. CHECK EVAP CANISTER PURGE VOLUME CONTROL SOLENOID VALVE OPERATION

Without CONSULT-II

1. Start engine and warm it up to normal operating temperature.
2. Stop engine.
3. Disconnect vacuum hose to EVAP canister purge volume control solenoid valve at EVAP service port.
4. Start engine and let it idle for at least 80 seconds.
5. Check vacuum hose for vacuum when revving engine up to 2,000 rpm.

Vacuum should exist.

OK or NG

OK >> GO TO 17.
NG >> GO TO 15.

15. CHECK VACUUM HOSE

Check vacuum hoses for clogging or disconnection. Refer to EC-647, "Vacuum Hose Drawing" .

OK or NG

OK >> GO TO 16.
NG >> Repair or reconnect the hose.

16. CHECK EVAP CANISTER PURGE VOLUME CONTROL SOLENOID VALVE

Refer to EC-977, "Component Inspection" .

OK or NG

OK >> GO TO 17.
NG >> Replace EVAP canister purge volume control solenoid valve.

17. CHECK ABSOLUTE PRESSURE SENSOR

Refer to EC-804, "DTC Confirmation Procedure" .

OK or NG

OK >> GO TO 18.
NG >> Replace absolute pressure sensor.

18. CHECK FUEL TANK TEMPERATURE SENSOR

Refer to EC-896, "Component Inspection" .

OK or NG

OK >> GO TO 19.
NG >> Replace fuel level sensor unit.

19. CHECK EVAP CONTROL SYSTEM PRESSURE SENSOR

Refer to EC-990, "Component Inspection" .

OK or NG

OK >> GO TO 20.
NG >> Replace EVAP control system pressure sensor.

20. CHECK EVAP PURGE LINE

Check EVAP purge line (pipe, rubber tube, fuel tank and EVAP canister) for cracks or improper connection.
Refer to EC-1273, "EVAPORATIVE EMISSION LINE DRAWING" .

OK or NG

OK >> GO TO 21.
NG >> Repair or reconnect the hose.

21. CLEAN EVAP PURGE LINE

Clean EVAP purge line (pipe and rubber tube) using air blower.

>> GO TO 22.

22. CHECK REFUELING EVAP VAPOR LINE

Check refueling EVAP vapor line between EVAP canister and fuel tank for clogging, kink, looseness and improper connection. For location, refer to EC-1278, "ON BOARD REFUELING VAPOR RECOVERY (ORVR)" .

OK or NG

OK >> GO TO 23.
NG >> Repair or replace hoses and tubes.

23. CHECK SIGNAL LINE AND RECIRCULATION LINE

Check signal line and recirculation line between filler neck tube and fuel tank for clogging, kink, cracks, looseness and improper connection.

OK or NG

OK >> GO TO 24.
NG >> Repair or replace hoses, tubes or filler neck tube.

24. CHECK REFUELING CONTROL VALVE

Refer to EC-1281, "Component Inspection" .

OK or NG

OK >> GO TO 25.
NG >> Replace refueling control valve with fuel tank.

25. CHECK FUEL LEVEL SENSOR

Refer to FL-5, "FUEL LEVEL SENSOR UNIT, FUEL FILTER AND FUEL PUMP ASSEMBLY" .

OK or NG

OK >> GO TO 26.
NG >> Replace fuel level sensor unit.

26. CHECK INTERMITTENT INCIDENT

Refer to EC-756, "TROUBLE DIAGNOSIS FOR INTERMITTENT INCIDENT" .

>> **INSPECTION END**

Component Inspection

UBS003D7

WATER SEPARATOR

1. Check visually for insect nests in the water separator air inlet.
2. Check visually for cracks or flaws in the appearance.
3. Check visually for cracks or flaws in the hose.

4. Check that **A** and **C** are not clogged by blowing air into **B** with **A** , and then **C** plugged.
5. In case of NG in items 2 - 4, replace the parts.

   NOTE:
   - Do not disassemble water separator.

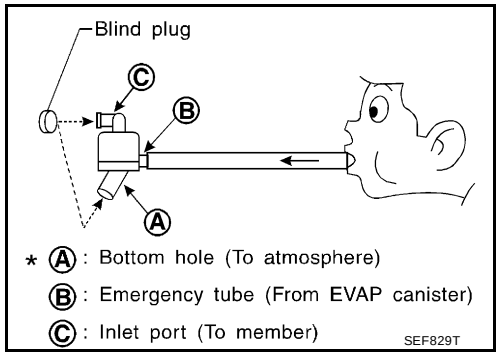

DTC P0460 FUEL LEVEL SENSOR

PFP:25060

Component Description

UBS003D8

The fuel level sensor is mounted in the fuel level sensor unit. The sensor detects a fuel level in the fuel tank and transmits a signal to the ECM.
It consists of two parts, one is mechanical float and the other side is variable resistor. Fuel level sensor output voltage changes depending on the movement of the fuel mechanical float.

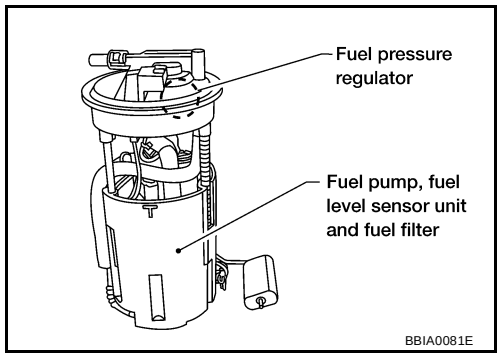

On Board Diagnosis Logic

UBS003D9

When the vehicle is parked, naturally the fuel level in the fuel tank is stable. It means that output signal of the fuel level sensor does not change. If ECM senses sloshing signal from the sensor, fuel level sensor malfunction is detected.

DTC No.	Trouble diagnosis name	DTC detecting condition	Possible cause
P0460 0460	Fuel level sensor circuit noise	Even though the vehicle is parked, a signal being varied is sent from the fuel level sensor to ECM.	● Harness or connectors (The sensor circuit is open or shorted) ● Fuel level sensor

DTC Confirmation Procedure

UBS003DA

NOTE:
If “DTC Confirmation Procedure” has been previously conducted, always turn ignition switch “OFF” and wait at least 10 seconds before conducting the next test.

WITH CONSULT-II

1. Turn ignition switch “ON”.
2. Select “DATA MONITOR” mode with CONSULT-II.
3. Start engine and wait maximum of 2 consecutive minutes.
4. If 1st trip DTC is detected, go to EC-1009, "Diagnostic Procedure" .

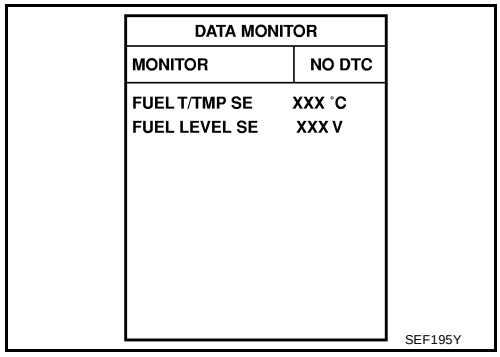

WITH GST

Follow the procedure “WITH CONSULT-II” above.

Wiring Diagram

UBS003DB

EC-FLS1-01

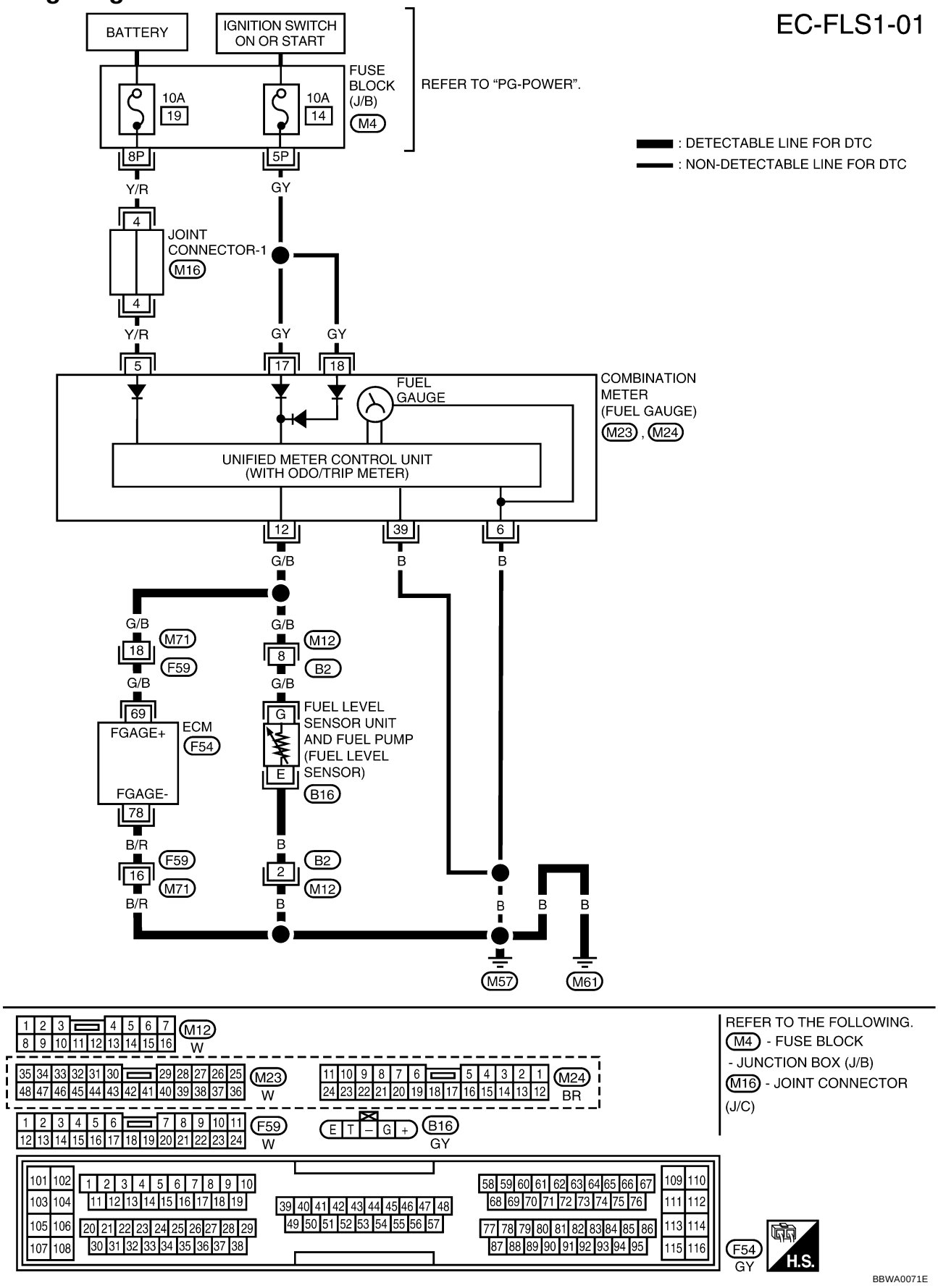

Specification data are reference values and are measured between each terminal and ground.

CAUTION:
Do not use ECM ground terminals when measuring input/output voltage. Doing so may result in damage to the ECM's transistor. Use a ground other than ECM terminals, such as the ground.

TERMINAL NO.	WIRE COLOR	ITEM	CONDITION	DATA (DC Voltage)
69	G/B	Fuel level sensor	**[Ignition switch "ON"]**	Approximately 0 - 4.8V Output voltage varies with fuel level.
78	B/R	Fuel level sensor ground	**[Engine is running]** ● Idle speed	Approximately 0V

Diagnostic Procedure

UBS003DC

1. CHECK FUEL LEVEL SENSOR POWER SUPPLY CIRCUIT

1. Turn ignition switch "OFF".
2. Disconnect fuel level sensor unit and fuel pump harness connector.
3. Turn ignition switch "ON".

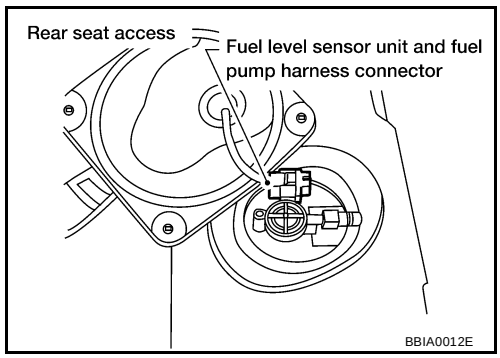

4. Check voltage between fuel level sensor unit and fuel pump terminal G and ground with CONSULT-II or tester.

Voltage: Battery voltage

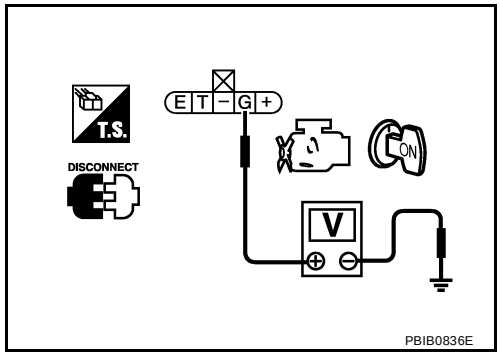

OK or NG

OK >> GO TO 3.
NG >> GO TO 2.

2. DETECT MALFUNCTIONING PART

Check the following.

- Harness connectors M12, B2
- Harness for open or short between combination meter and fuel level sensor until and fuel pump

>> Repair open circuit or short to ground or short to power in harness or connectors.

3. CHECK FUEL LEVEL SENSOR GROUND CIRCUIT FOR OPEN AND SHORT

1. Turn ignition switch “OFF”.
2. Check harness continuity between fuel level sensor unit and fuel pump terminal E and body ground.
   Refer to Wiring Diagram.

   Continuity should exist.

3. Also check harness for short to power.

OK or NG

OK >> GO TO 5.
NG >> GO TO 4.

4. DETECT MALFUNCTIONING PART

Check the following.

- Harness connectors M12, B2
- Harness for open or short between ECM and fuel level sensor until and fuel pump

>> Repair open circuit or short to power in harness or connectors.

5. CHECK FUEL LEVEL SENSOR INPUT SIGNAL CIRCUIT FOR OPEN AND SHORT

1. Disconnect ECM harness connector.
2. Check harness continuity between ECM terminal 69 and fuel level sensor unit and fuel pump terminal G, ECM terminal 78 and fuel level sensor unit and fuel pump terminal E.
   Refer to Wiring Diagram.

   Continuity should exist.

3. Also check harness for short to ground or short to power.

OK or NG

OK >> GO TO 7.
NG >> GO TO 6.

6. DETECT MALFUNCTIONING PART

Check the following.

- Harness connectors M12, B2
- Harness connectors M71, F59
- Harness for open or short between ECM and fuel level sensor until and fuel pump

>> Repair open circuit or short to ground or short to power in harness or connectors.

7. CHECK FUEL LEVEL SENSOR

Refer to FL-5, "FUEL LEVEL SENSOR UNIT, FUEL FILTER AND FUEL PUMP ASSEMBLY" .

OK or NG

OK >> GO TO 8.
NG >> Replace fuel level sensor unit.

8. CHECK INTERMITTENT INCIDENT

Refer to EC-756, "TROUBLE DIAGNOSIS FOR INTERMITTENT INCIDENT" .

>> **INSPECTION END**

Removal and Installation

UBS003DD

FUEL LEVEL SENSOR

Refer to FL-5, "FUEL LEVEL SENSOR UNIT, FUEL FILTER AND FUEL PUMP ASSEMBLY" .

DTC P0461 FUEL LEVEL SENSOR

PFP:25060

Component Description

UBS003DE

The fuel level sensor is mounted in the fuel level sensor unit. The sensor detects a fuel level in the fuel tank and transmits a signal to the ECM.
It consists of two parts, one is mechanical float and the other side is variable resistor. Fuel level sensor output voltage changes depending on the movement of the fuel mechanical float.

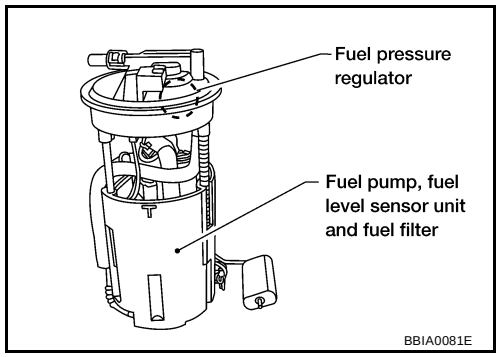

On Board Diagnosis Logic

UBS003DF

Driving long distances naturally affect fuel gauge level.
This diagnosis detects the fuel gauge malfunction of the gauge not moving even after a long distance has been driven.

DTC No.	Trouble diagnosis name	DTC detecting condition	Possible cause
P0461 0461	Fuel level sensor circuit range/performance	The output signal of the fuel level sensor does not change within the specified range even though the vehicle has been driven a long distance.	● Harness or connectors (The sensor circuit is open or shorted) ● Fuel level sensor

Overall Function Check

UBS003DG

Use this procedure to check the overall function of the fuel level sensor function. During this check, a 1st trip DTC might not be confirmed.

WARNING:
When performing following procedure, be sure to observe the handling of the fuel. Refer to FL-8, "FUEL TANK" .
TESTING CONDITION:
Before starting overall function check, preparation of draining fuel and refilling fuel is required.

WITH CONSULT-II

NOTE:
Start from step 11, if it is possible to confirm that the fuel cannot be drained by 30 ℓ (7-7/8 US gal, 6-5/8 Imp gal) in advance.

1. Prepare a fuel container and a spare hose.
2. Release fuel pressure from fuel line, refer to EC-671, "FUEL PRESSURE RELEASE" .
3. Remove the fuel feed hose on the fuel level sensor unit.
4. Connect a spare fuel hose where the fuel feed hose was removed.
5. Turn ignition switch “OFF” and wait at least 10 seconds then turn “ON”.
6. Select “FUEL LEVEL SE” in “DATA MONITOR” mode with CONSULT-II.
7. Check “FUEL LEVEL SE” output voltage and note it.
8. Select “FUEL PUMP” in “ACTIVE TEST” mode with CONSULT-II.
9. Touch “ON” and drain fuel approximately 30 ℓ (7-7/8 US gal, 6-5/8 Imp gal) and stop it.
10. Fill fuel into the fuel tank for 30 ℓ (7-7/8 US gal, 6-5/8 Imp gal).
11. Check “FUEL LEVEL SE” output voltage and note it.
12. Check “FUEL LEVEL SE” output voltage and confirm whether the voltage changes more than 0.03V during step 7 to 11.
    If NG, check the fuel level sensor, refer to FL-5, "FUEL LEVEL SENSOR UNIT, FUEL FILTER AND FUEL PUMP ASSEMBLY" .

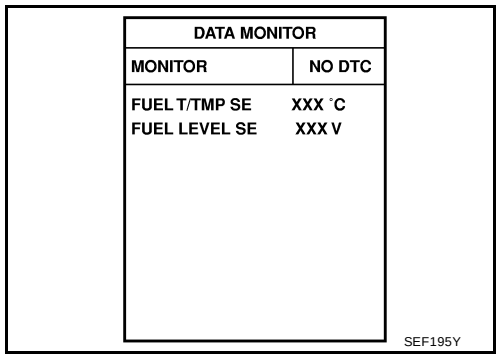

WITH GST

NOTE:
Start from step 8, if it is possible to confirm that the fuel cannot be drained by 30 ℓ (7-7/8 US gal, 6-5/8 Imp gal) in advance.

1. Prepare a fuel container and a spare hose.
2. Release fuel pressure from fuel line, refer to EC-671, "FUEL PRESSURE RELEASE" .
3. Remove the fuel feed hose on the fuel level sensor unit.
4. Connect a spare fuel hose where the fuel feed hose was removed.
5. Turn ignition switch “OFF”.
6. Set voltmeters probe between ECM terminal 69 (fuel level sensor signal) and ground.
7. Turn ignition switch “ON”.
8. Check voltage between ECM terminal 69 and ground and note it.
9. Drain fuel by 30 ℓ (7-7/8 US gal, 6-5/8 Imp gal) from the fuel tank using proper equipment.
10. Fill fuel into the fuel tank for 30 ℓ (7-7/8 US gal, 6-5/8 Imp gal).
11. Confirm that the voltage between ECM terminal 69 and ground changes more than 0.03V during step 8 - 10.
    If NG, check component of fuel level sensor, refer to FL-5, "FUEL LEVEL SENSOR UNIT, FUEL FILTER AND FUEL PUMP ASSEMBLY" .

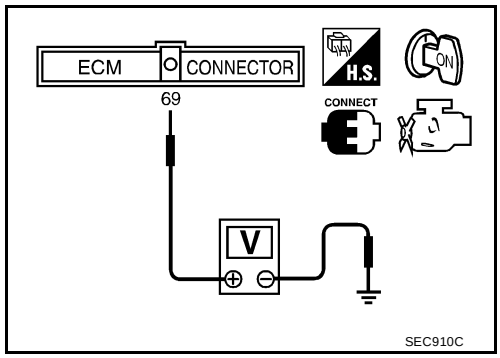

DTC P0462, P0463 FUEL LEVEL SENSOR

PFP:25060

Component Description

UBS003DH

The fuel level sensor is mounted in the fuel level sensor unit. The sensor detects a fuel level in the fuel tank and transmits a signal to the ECM.
It consists of two parts, one is mechanical float and the other side is variable resistor. Fuel level sensor output voltage changes depending on the movement of the fuel mechanical float.

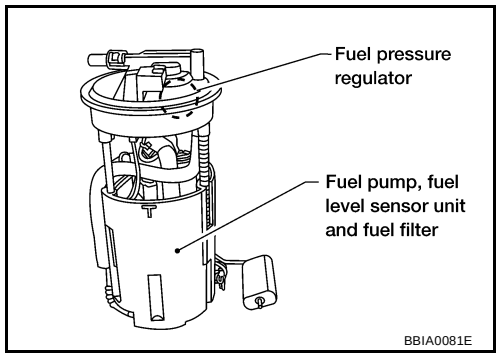

On Board Diagnosis Logic

UBS003DI

ECM receives two signals from the fuel level sensor circuit.
One is fuel level sensor power supply circuit, and the other is fuel level sensor ground circuit.
This diagnosis indicates the former, to detect open or short circuit malfunction.

DTC No.	Trouble diagnosis name	DTC detecting condition	Possible cause
P0462 0462	Fuel level sensor circuit low input	An excessively low voltage is sent from the sensor is sent to ECM.	● Harness or connectors (The sensor circuit is open or shorted) ● Fuel level sensor
P0463 0463	Fuel level sensor circuit high input	An excessively high voltage is sent from the sensor is sent to ECM.	

DTC Confirmation Procedure

UBS003DJ

NOTE:
If “DTC Confirmation Procedure” has been previously conducted, always turn ignition switch “OFF” and wait at least 10 seconds before conducting the next test.
TESTING CONDITION:
Before performing the following procedure, confirm that battery voltage is more than 11V at ignition switch “ON”.

WITH CONSULT-II

1. Turn ignition switch “ON”.
2. Select “DATA MONITOR” mode with CONSULT-II.
3. Wait at least 5 seconds.
4. If 1st trip DTC is detected, go to EC-1016, "Diagnostic Procedure" .

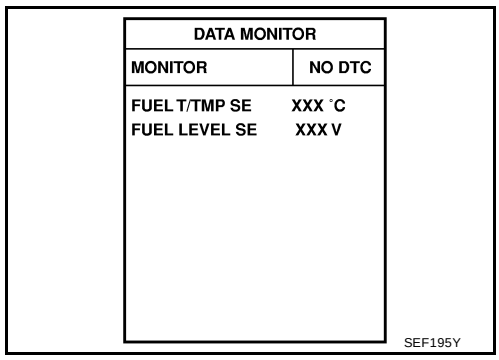

WITH GST

Follow the procedure “WITH CONSULT-II” above.

Wiring Diagram

UBS003DK

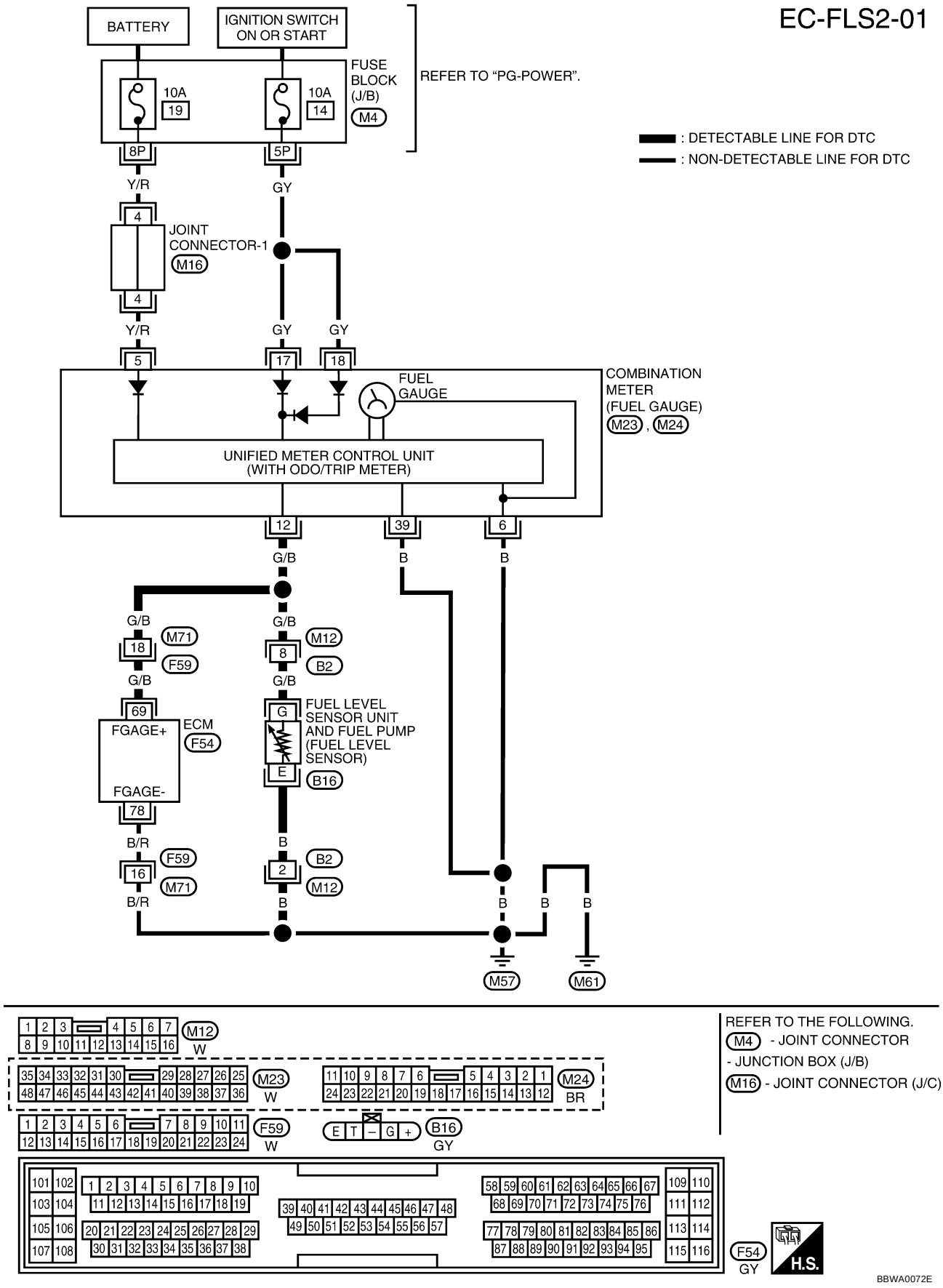

Specification data are reference values and are measured between each terminal and ground.

CAUTION:
Do not use ECM ground terminals when measuring input/output voltage. Doing so may result in damage to the ECM's transistor. Use a ground other than ECM terminals, such as the ground.

TERMINAL NO.	WIRE COLOR	ITEM	CONDITION	DATA (DC Voltage)
69	G/B	Fuel level sensor	**[Ignition switch "ON"]**	Approximately 0 - 4.8V Output voltage varies with fuel level.
78	B/R	Fuel level sensor ground	**[Engine is running]** ● Idle speed	Approximately 0V

Diagnostic Procedure

UBS003DL

1. CHECK FUEL LEVEL SENSOR POWER SUPPLY CIRCUIT

1. Turn ignition switch "OFF".
2. Disconnect fuel level sensor unit and fuel pump harness connector.
3. Turn ignition switch "ON".

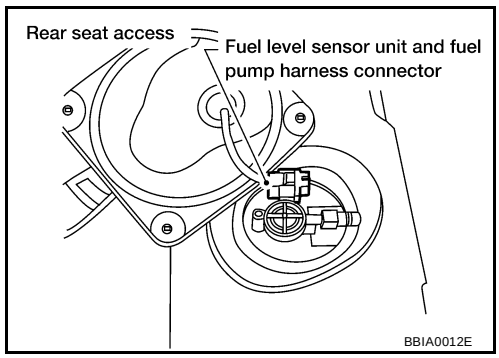

4. Check voltage between fuel level sensor unit and fuel pump terminal G and ground with CONSULT-II or tester.

Voltage: Battery voltage

OK or NG

OK >> GO TO 3.
NG >> GO TO 2.

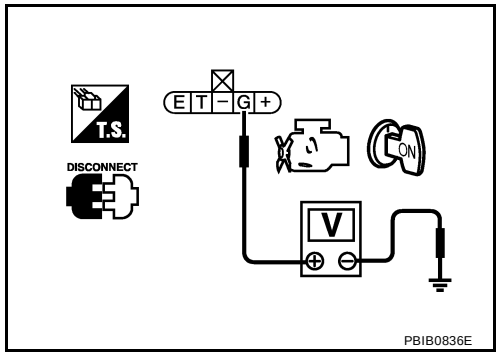

2. DETECT MALFUNCTIONING PART

Check the following.

- Harness connectors M12, B2
- Harness for open or short between combination meter and fuel level sensor until and fuel pump

>> Repair open circuit or short to ground or short to power in harness or connectors.

3. CHECK FUEL LEVEL SENSOR GROUND CIRCUIT FOR OPEN AND SHORT

1. Turn ignition switch “OFF”.
2. Check harness continuity between fuel level sensor unit and fuel pump terminal E and body ground. Refer to Wiring Diagram.

   Continuity should exist.

3. Also check harness for short to power.

OK or NG

OK >> GO TO 5.
NG >> GO TO 4.

4. DETECT MALFUNCTIONING PART

Check the following.

- Harness connectors M12, B2
- Harness for open or short between ECM and fuel level sensor until and fuel pump

>> Repair open circuit or short to power in harness or connectors.

5. CHECK FUEL LEVEL SENSOR INPUT SIGNAL CIRCUIT FOR OPEN AND SHORT

1. Disconnect ECM harness connector.
2. Check harness continuity between ECM terminal 69 and fuel level sensor unit and fuel pump terminal G. Refer to Wiring Diagram.

   Continuity should exist.

3. Also check harness for short to ground or short to power.

OK or NG

OK >> GO TO 7.
NG >> GO TO 6.

6. DETECT MALFUNCTIONING PART

Check the following.

- Harness connectors M12, B2
- Harness connectors M71, F59
- Harness for open or short between ECM and fuel level sensor until and fuel pump

>> Repair open circuit or short to ground or short to power in harness or connectors.

7. CHECK FUEL LEVEL SENSOR

Refer to FL-5, "FUEL LEVEL SENSOR UNIT, FUEL FILTER AND FUEL PUMP ASSEMBLY" .

OK or NG

OK >> GO TO 8.
NG >> Replace fuel level sensor unit.

8. CHECK INTERMITTENT INCIDENT

Refer to EC-756, "TROUBLE DIAGNOSIS FOR INTERMITTENT INCIDENT" .

>> **INSPECTION END**

Removal and Installation

UBS003DM

FUEL LEVEL SENSOR

Refer to FL-5, "FUEL LEVEL SENSOR UNIT, FUEL FILTER AND FUEL PUMP ASSEMBLY" .

DTC P0500 VSS

PFP:32702

Description

UBS003DN

NOTE:
If DTC P0500 is displayed with DTC U1000 or U1001, first perform the trouble diagnosis for DTC U1000, U1001. Refer to EC-763, "DTC U1000, U1001 CAN COMMUNICATION LINE" .
The vehicle speed sensor is installed in the transaxle. It contains a pulse generator which provides a vehicle speed signal to the combination meter. The combination meter then sends a signal to the ECM through CAN communication line.

On Board Diagnosis Logic

UBS003DO

DTC No.	Trouble diagnosis name	DTC detecting condition	Possible cause
P0500 0500	Vehicle speed sensor	The almost 0 km/h (0 MPH) signal from vehicle speed sensor is sent to ECM even when vehicle is being driven.	● Harness or connectors (The CAN communication line is open or shorted) ● Harness or connectors (The vehicle speed sensor circuit is open or shorted) ● Vehicle speed sensor ● Combination meter

DTC Confirmation Procedure

UBS003DP

CAUTION:
Always drive vehicle at a safe speed.

NOTE:
If “DTC Confirmation Procedure” has been previously conducted, always turn ignition switch “OFF” and wait at least 10 seconds before conducting the next test.

TESTING CONDITION:
Steps 1 and 2 may be conducted with the drive wheels lifted in the shop or by driving the vehicle. If a road test is expected to be easier, it is unnecessary to lift the vehicle.

WITH CONSULT-II

1. Start engine (TCS switch “OFF”).
2. Read “VHCL SPEED SE” in “DATA MONITOR” mode with CONSULT-II. The vehicle speed on CONSULT-II should exceed 10 km/h (6 MPH) when rotating wheels with suitable gear position.
   If NG, go to EC-1020, "Diagnostic Procedure" .
   If OK, go to following step.
3. Select “DATA MONITOR” mode with CONSULT-II.
4. Warm engine up to normal operating temperature.
5. Maintain the following conditions for at least 60 consecutive seconds.

ENG SPEED	More than 1,700 rpm (A/T models) More than 1,800 rpm (M/T models)
COOLAN TEMP/S	More than 70°C (158°F)
B/FUEL SCHDL	More than 5.5 msec
Selector lever	Except "P" or "N" position
PW/ST SIGNAL	OFF

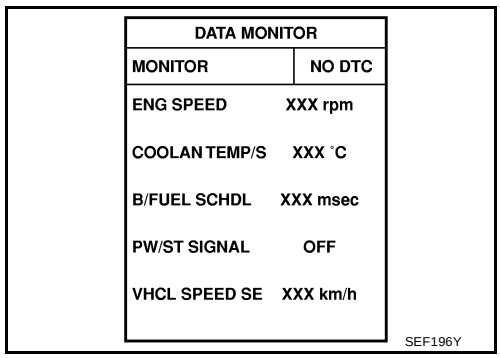

6. If 1st trip DTC is detected, go to EC-1020, "Diagnostic Procedure" .

Overall Function Check

UBS003DQ

Use this procedure to check the overall function of the vehicle speed sensor circuit. During this check, a 1st trip DTC might not be confirmed.

WITH GST

1. Lift up drive wheels.

2. Start engine.
3. Read vehicle speed sensor signal in “MODE 1” with GST.
   The vehicle speed sensor on GST should be able to exceed 10 km/h (6 MPH) when rotating wheels with suitable gear position.
4. If NG, go to EC-1020, "Diagnostic Procedure" .

Diagnostic Procedure

UBS003DR

1. CHECK VEHICLE SPEED SENSOR CIRCUIT

Refer to DI-19, "Vehicle Speed System" .

OK or NG

OK >> GO TO 2.
NG >> Repair or replace.

2. CHECK COMBINATION METER

Check combination meter function.
Refer to DI-4, "COMBINATION METERS" .

>> **INSPECTION END**

DTC P0506 ISC SYSTEM

PFP:23781

Description

UBS003DS

NOTE:
If DTC P0506 is displayed with other DTC, first perform the trouble diagnosis for the other DTC.
The ECM controls the engine idle speed to a specified level through the fine adjustment of the air, which is let into the intake manifold, by operating the electric throttle control actuator. The operating of the throttle valve is varied to allow for optimum control of the engine idling speed. The crankshaft position sensor (POS) detects the actual engine speed and sends a signal to the ECM.
The ECM controls the electric throttle control actuator so that the engine speed coincides with the target value memorized in the ECM. The target engine speed is the lowest speed at which the engine can operate steadily. The optimum value stored in the ECM is determined by taking into consideration various engine conditions, such as during warming up, deceleration, and engine load (air conditioner, power steering and cooling fan operation, etc.).

On Board Diagnosis Logic

UBS003DT

DTC No.	Trouble diagnosis name	DTC detecting condition	Possible cause
P0506 0506	Idle speed control system RPM lower than expected	The idle speed is less than the target idle speed by 100 rpm or more.	● Electric throttle control actuator ● Intake air leak

DTC Confirmation Procedure

UBS003DU

NOTE:
- If “DTC Confirmation Procedure” has been previously conducted, always turn ignition switch “OFF” and wait at least 10 seconds before conducting the next test.
- **If the target idle speed is out of the specified value, perform “Idle Air Volume Learning”, EC-669 , before conducting “DTC Confirmation Procedure”. For the target idle speed, refer to the “Service Data and Specifications (SDS)”, EC-1288 .**

TESTING CONDITION:
- **Before performing the following procedure, confirm that battery voltage is more than 11V at idle.**
- **Always perform the test at a temperature above –10°C (14°F).**

WITH CONSULT-II

1. Open engine hood.
2. Start engine and warm it up to normal operating temperature.
3. Turn ignition switch “OFF” and wait at least 10 seconds.
4. Turn ignition switch “ON” again and select “DATA MONITOR” mode with CONSULT-II.
5. Start engine and run it for at least 1 minute at idle speed.
6. If 1st trip DTC is detected, go to EC-1022, "Diagnostic Procedure" .

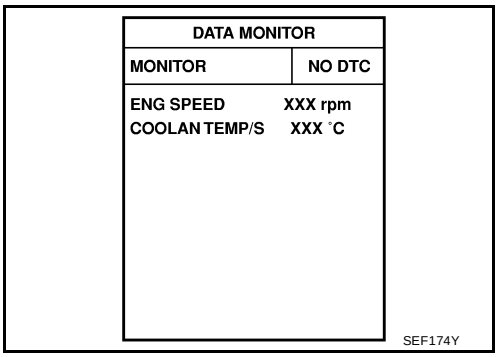

WITH GST

Follow the procedure “WITH CONSULT-II” above.

Diagnostic Procedure

UBS003DV

1. CHECK INTAKE AIR LEAK

1. Start engine and let it idle.
2. Listen for an intake air leak after the mass air flow sensor.

OK or NG

OK >> GO TO 2.
NG >> Discover air leak location and repair.

2. REPLACE ECM

1. Stop engine.
2. Replace ECM.
3. Perform initialization of NATS system and registration of all NATS ignition key IDs. Refer to EC-EC-689, "NVIS (Nissan Vehicle Immobilizer System — NATS)"
4. Perform EC-668, "Accelerator Pedal Released Position Learning" .
5. Perform EC-669, "Throttle Valve Closed Position Learning" .
6. Perform EC-669, "Idle Air Volume Learning" .

>> **INSPECTION END**

DTC P0507 ISC SYSTEM

PFP:23781

Description

UBS003DW

NOTE:
If DTC P0507 is displayed with other DTC, first perform the trouble diagnosis for the other DTC.
The ECM controls the engine idle speed to a specified level through the fine adjustment of the air, which is let into the intake manifold, by operating the electric throttle control actuator. The operating of the throttle valve is varied to allow for optimum control of the engine idling speed. The crankshaft position sensor (POS) detects the actual engine speed and sends a signal to the ECM.
The ECM controls the electric throttle control actuator so that the engine speed coincides with the target value memorized in the ECM. The target engine speed is the lowest speed at which the engine can operate steadily. The optimum value stored in the ECM is determined by taking into consideration various engine conditions, such as during warming up, deceleration, and engine load (air conditioner, power steering and cooling fan operation, etc.).

On Board Diagnosis Logic

UBS003DX

DTC No.	Trouble diagnosis name	DTC detecting condition	Possible cause
P0507 0507	Idle speed control system RPM higher than expected	The idle speed is more than the target idle speed by 200 rpm or more.	● Electric throttle control actuator ● Intake air leak ● PCV system

DTC Confirmation Procedure

UBS003DY

NOTE:
- If “DTC Confirmation Procedure” has been previously conducted, always turn ignition switch “OFF” and wait at least 10 seconds before conducting the next test.
- **If the target idle speed is out of the specified value, perform “Idle Air Volume Learning”, EC-669 , before conducting “DTC Confirmation Procedure”. For the target idle speed, refer to the “Service Data and Specifications (SDS)”, EC-1288 .**

TESTING CONDITION:
- **Before performing the following procedure, confirm that battery voltage is more than 11V at idle.**
- **Always perform the test at a temperature above –10°C (14°F).**

WITH CONSULT-II

1. Open engine hood.
2. Start engine and warm it up to normal operating temperature.
3. Turn ignition switch “OFF” and wait at least 10 seconds.
4. Turn ignition switch “ON” again and select “DATA MONITOR” mode with CONSULT-II.
5. Start engine and run it for at least 1 minute at idle speed.
6. If 1st trip DTC is detected, go to EC-1024, "Diagnostic Procedure" .

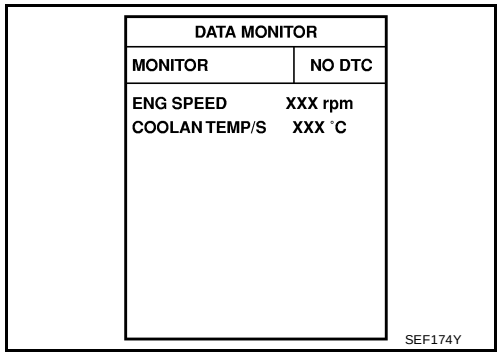

WITH GST

Follow the procedure “WITH CONSULT-II” above.

Diagnostic Procedure

UBS003DZ

1. CHECK PCV HOSE CONNECTION

Confirm that PCV hose is connected correctly.

OK or NG

OK >> GO TO 2.
NG >> Repair or replace.

2. CHECK INTAKE AIR LEAK

1. Start engine and let it idle.
2. Listen for an intake air leak after the mass air flow sensor.

OK or NG

OK >> GO TO 3.
NG >> Discover air leak location and repair.

3. REPLACE ECM

1. Stop engine.
2. Replace ECM.
3. Perform initialization of NATS system and registration of all NATS ignition key IDs. Refer to EC-EC-689, "NVIS (Nissan Vehicle Immobilizer System — NATS)"
4. Perform EC-668, "Accelerator Pedal Released Position Learning" .
5. Perform EC-669, "Throttle Valve Closed Position Learning" .
6. Perform EC-669, "Idle Air Volume Learning" .

>> **INSPECTION END**

DTC P0550 PSP SENSOR

PFP:49763

Component Description

UBS003E0

Power steering pressure (PSP) sensor is installed to the power steering high-pressure tube and detects a power steering load. This sensor is a potentiometer which transforms the power steering load into output voltage, and emits the voltage signal to the ECM. The ECM controls the electric throttle control actuator and adjusts the throttle valve opening angle to increase the engine speed and adjusts the idle speed for the increased load.

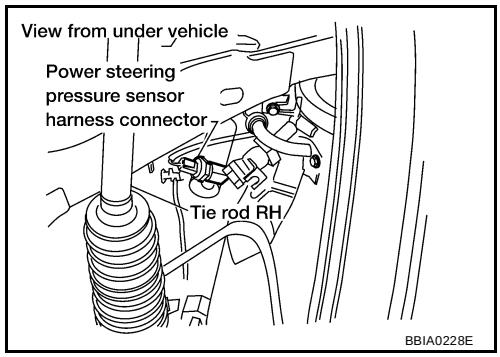

CONSULT-II Reference Value in Data Monitor Mode

UBS003E1

Specification data are reference values.

MONITOR ITEM	CONDITION		SPECIFICATION
PW/ST SIGNAL	● Engine: After warming up, idle the engine	Steering wheel is in neutral position. (Forward direction)	OFF
		Steering wheel is turned.	ON

On Board Diagnosis Logic

UBS003E2

DTC No.	Trouble diagnosis name	DTC detecting condition	Possible cause
P0550 0550	Power steering pressure sensor circuit	An excessively low or high voltage from the sensor is sent to ECM.	● Harness or connectors (The sensor circuit is open or shorted) ● Power steering pressure sensor

DTC Confirmation Procedure

UBS003E3

NOTE:
If “DTC Confirmation Procedure” has been previously conducted, always turn ignition switch “OFF” and wait at least 10 seconds before conducting the next test.

WITH CONSULT-II

1. Turn ignition switch "ON".
2. Select "DATA MONITOR" mode with CONSULT-II.
3. Start engine and let it idle for at least 5 seconds.
4. If 1st trip DTC is detected, go to EC-1027, "Diagnostic Procedure" .

WITH GST

Follow the procedure “WITH CONSULT-II” above.

Wiring Diagram

UBS003E4

EC-PS/SEN-01

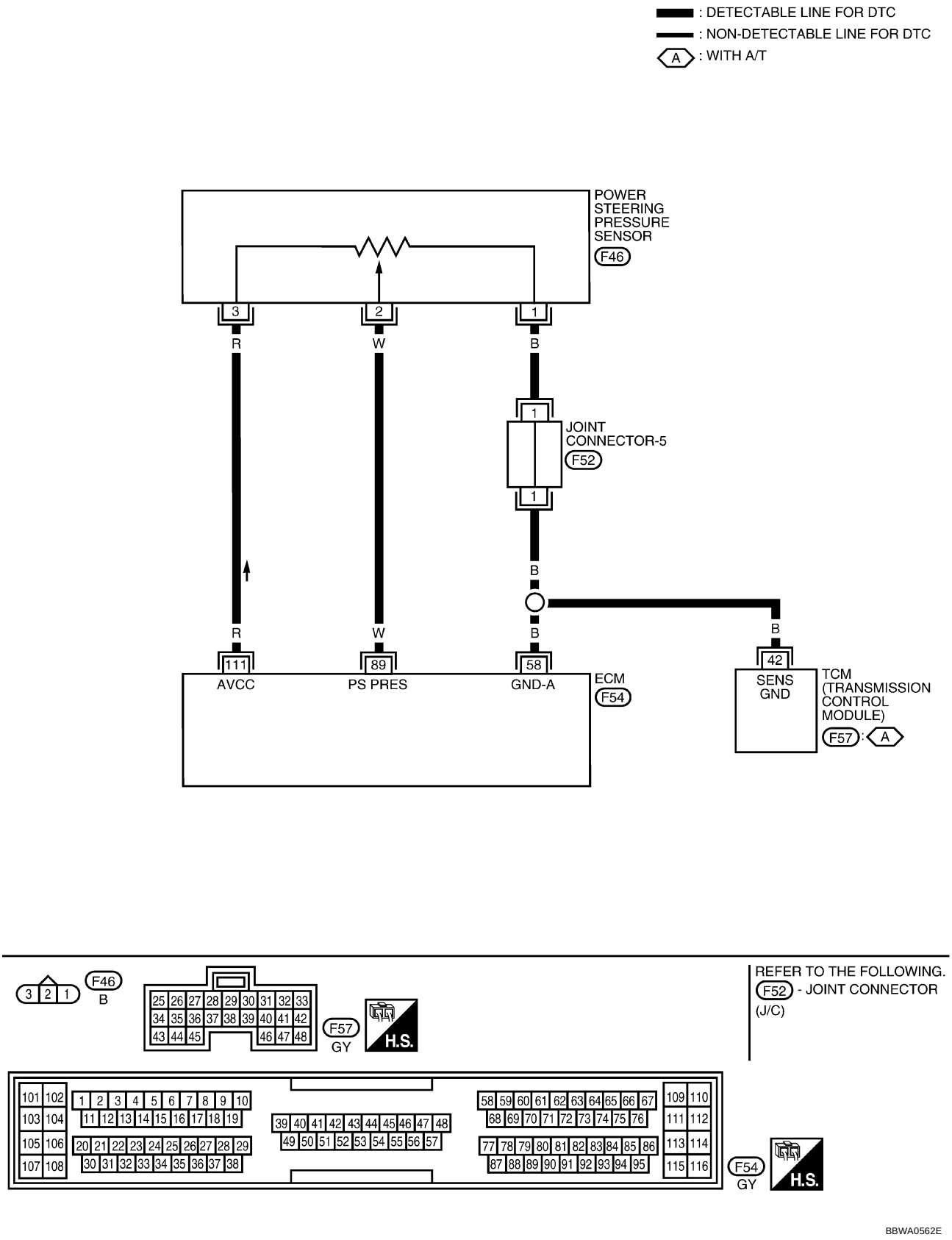

Specification data are reference values and are measured between each terminal and ground.

CAUTION:
Do not use ECM ground terminals when measuring input/output voltage. Doing so may result in damage to the ECM's transistor. Use a ground other than ECM terminals, such as the ground.

TERMINAL NO.	WIRE COLOR	ITEM	CONDITION	DATA (DC Voltage)
58	B	Sensors' ground	**[Engine is running]** ● **Warm-up condition** ● Idle speed	Approximately 0V
89	W	Power steering pressure sensor	**[Engine is running]** ● Steering wheel is being turned.	0.5 - 4.0V
			[Engine is running] ● Steering wheel is not being turned.	0.4 - 0.8V
111	R	Sensor's power supply	**[Ignition switch "ON"]**	Approximately 5V

Diagnostic Procedure

UBS003E5

1. RETIGHTEN GROUND SCREWS

1. Turn ignition switch "OFF".
2. Loosen and retighten engine ground screws.

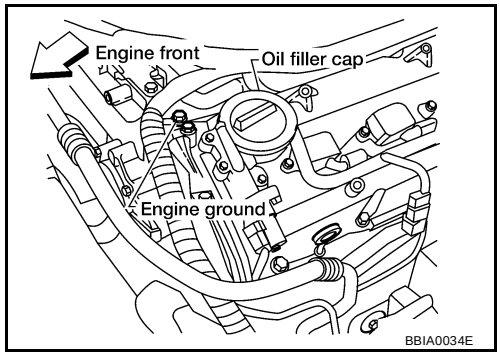

>> GO TO 2.

2. CHECK PSP SENSOR POWER SUPPLY CIRCUIT

1. Disconnect PSP sensor harness connector.
2. Turn ignition switch "ON".

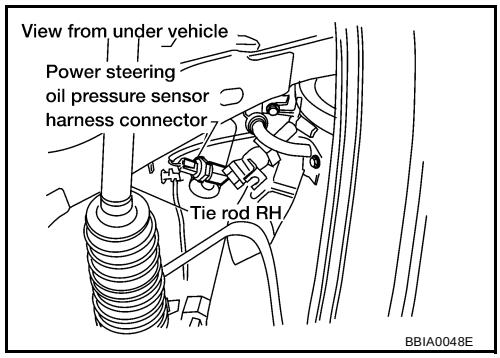

3. Check voltage between PSP sensor terminal 3 and ground with CONSULT-II or tester.

Voltage: Approximately 5V

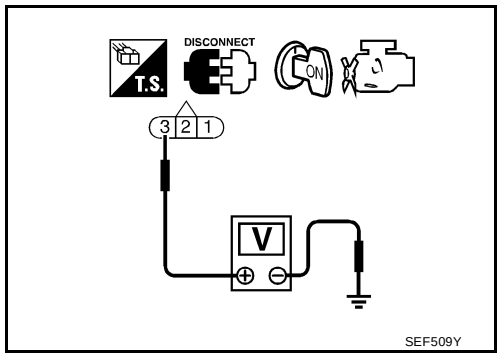

OK or NG

OK >> GO TO 3.
NG >> Repair harness or connectors.

3. CHECK PSP SENSOR GROUND CIRCUIT FOR OPEN AND SHORT

1. Turn ignition switch “OFF”.
2. Check harness continuity between PSP sensor terminal 1 and engine ground.
   Refer to Wiring Diagram.

   Continuity should exist.

3. Also check harness for short to power.

OK or NG

OK >> GO TO 5.
NG >> GO TO 4.

4. DETECT MALFUNCTIONING PART

Check the following.

- Joint connector-5
- Harness for open or short between power steering pressure sensor and ECM
- Harness for open or short between power steering pressure sensor and TCM

>> Repair open circuit or short to power in harness or connectors.

5. CHECK PSP SENSOR INPUT SIGNAL CIRCUIT FOR OPEN AND SHORT

1. Disconnect ECM harness connector.
2. Check harness continuity between ECM terminal 89 and PSP sensor terminal 2.

   Continuity should exist.

3. Also check harness for short to ground and short to power.

OK or NG

OK >> GO TO 6.
NG >> Repair open circuit or short to ground or short to power in harness or connectors.

6. CHECK PSP SENSOR

Refer to EC-1028, "Component Inspection" .

OK or NG

OK >> GO TO 7.
NG >> Replace PSP sensor.

7. CHECK INTERMITTENT INCIDENT

Refer to EC-756, "TROUBLE DIAGNOSIS FOR INTERMITTENT INCIDENT" .

>> **INSPECTION END**

Component Inspection

UBS003E6

POWER STEERING PRESSURE SENSOR

1. Reconnect all harness connectors disconnected.
2. Start engine and let it idle.

3. Check voltage between ECM terminal 89 and ground under the following conditions.

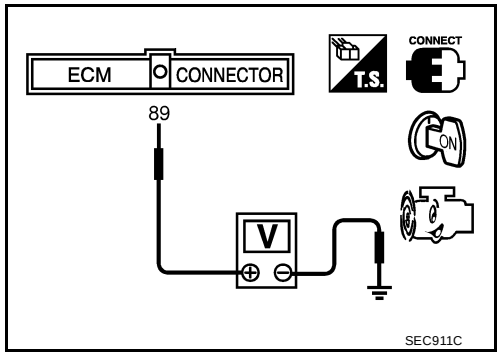

Condition	Voltage
Steering wheel is being turned fully.	Approximately 3.6V
Steering wheel is not being turned.	Approximately 0.6V

DTC P0605 ECM

PFP:23710

Component Description

UBS003E7

The ECM consists of a microcomputer and connectors for signal input and output and for power supply. The ECM controls the engine.

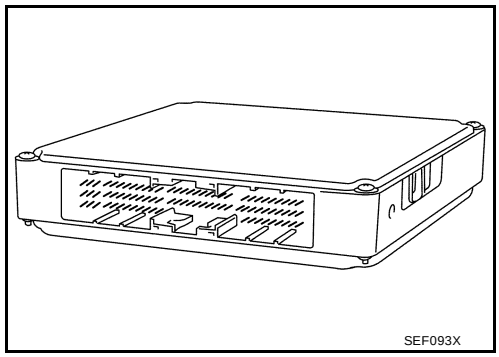

On Board Diagnosis Logic

UBS003E8

DTC No.	Trouble diagnosis name	DTC detecting condition		Possible cause
P0605 0605	Engine control module	A)	ECM calculation function is malfunctioning.	● ECM
		B)	ECM EEP-ROM system is malfunctioning.	
		C)	ECM self shut-off function is malfunctioning.	

FAIL-SAFE MODE

ECM enters in fail-safe mode when the malfunction A is detected.

Detected items	Engine operation condition in fail-safe mode
Malfunction A	● ECM stops the electric throttle control actuator control, throttle valve is maintained at a fixed opening (approx. 5 degrees) by the return spring. ● ECM deactivates ASCD operation.

DTC Confirmation Procedure

UBS003E9

Perform "PROCEDURE FOR MALFUNCTION A" first. If the 1st trip DTC cannot be confirmed, perform " PROCEDURE FOR MALFUNCTION B". If there is no problem on "PROCEDURE FOR MALFUNCTION B", perform "PROCEDURE FOR MALFUNCTION C".

NOTE:

If “DTC Confirmation Procedure” has been previously conducted, always turn ignition switch “OFF” and wait at least 10 seconds before conducting the next test.

PROCEDURE FOR MALFUNCTION A

With CONSULT-II

1. Turn ignition switch “ON”.
2. Select “DATA MONITOR” mode with CONSULT-II.
3. If 1st trip DTC is detected, go to EC-1031, "Diagnostic Procedure" .

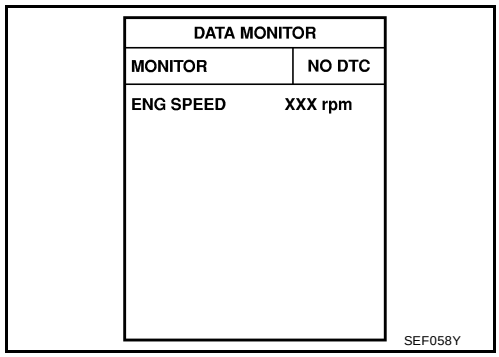

With GST

Follow the procedure “With CONSULT-II” above.

PROCEDURE FOR MALFUNCTION B

With CONSULT-II

1. Turn ignition switch “ON” and wait at least 1 second.
2. Select “DATA MONITOR” mode with CONSULT-II.
3. Turn ignition switch "OFF", wait at least 10 seconds, and then turn "ON".
4. If 1st trip DTC is detected, go to EC-1031, "Diagnostic Procedure" .

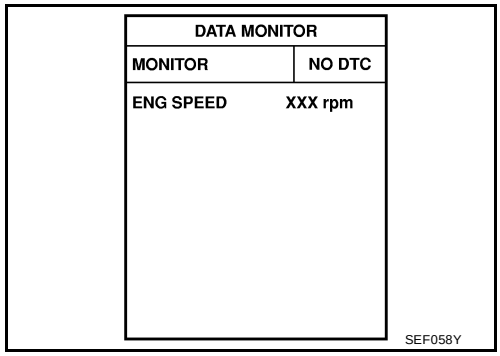

With GST

Follow the procedure “With CONSULT-II” above.

PROCEDURE FOR MALFUNCTION C

With CONSULT-II

1. Turn ignition switch “ON” and wait at least 1 second.
2. Select “DATA MONITOR” mode with CONSULT-II.
3. Turn ignition switch "OFF", wait at least 10 seconds, and then turn "ON".
4. Repeat step 3 procedure, 32 times.
5. If 1st trip DTC is detected, go to EC-1031, "Diagnostic Procedure" .

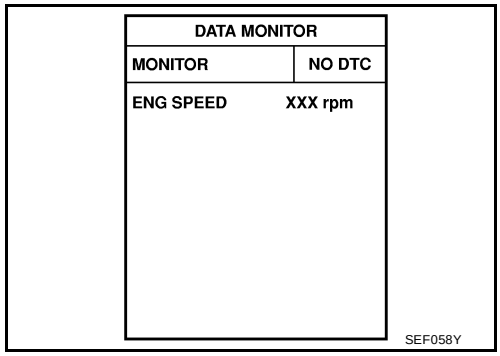

With GST

Follow the procedure “With CONSULT-II” above.

Diagnostic Procedure

UBS003EA

1. INSPECTION START

With CONSULT-II

1. Turn ignition switch “ON”.
2. Select “SELF DIAG RESULTS” mode with CONSULT-II.
3. Touch “ERASE”.
4. **Perform “DTC Confirmation Procedure”.**
   See EC-1030 .
5. Is the 1st trip DTC P0605 displayed again?

With GST

1. Turn ignition switch “ON”.
2. Select MODE 4 with GST.
3. Touch “ERASE”.
4. **Perform “DTC Confirmation Procedure”.**
   See EC-1030 .
5. Is the 1st trip DTC P0605 displayed again?

Yes or No

Yes >> GO TO 2.
No >> **INSPECTION END**

2. REPLACE ECM

1. Replace ECM.
2. Perform initialization of NATS system and registration of all NATS ignition key IDs. Refer to EC-EC-689, "NVIS (Nissan Vehicle Immobilizer System — NATS)" .
3. Perform EC-668, "Accelerator Pedal Released Position Learning" .
4. Perform EC-669, "Throttle Valve Closed Position Learning" .
5. Perform EC-669, "Idle Air Volume Learning" .

>> **INSPECTION END**

DTC P0650 MIL

PFP:24810

Component Description

UBS003EB

Malfunction Indicator Lamp (MIL) is located on the instrument panel. When the ignition switch is turned ON without engine running, MIL will light up. This is a bulb check. When the engine is started, MIL should go off. If MIL remains on, the on board diagnostic system has detected an engine system malfunction.

On Board Diagnosis Logic

UBS003EC

DTC No.	Trouble diagnosis name	DTC detecting condition	Possible cause
P0650 0650	Malfunction indicator lamp (MIL) control circuit	● An excessively high voltage is sent to ECM through the MIL circuit under the condition that calls for MIL light up. ● An excessively low voltage is sent to ECM through the MIL circuit under the condition that calls for MIL not to light up.	● Harness or connectors (MIL circuit is open or shorted.) ● MIL

FAIL-SAFE MODE

ECM enters in fail-safe mode when both DTC P0650 and another DTC, which calls for MIL to light up, are detected at the same time.

Detected items	Engine operating condition in fail-safe mode
MIL circuit	Engine speed will not rise more than 2,500 rpm due to the fuel cut

DTC Confirmation Procedure

UBS003ED

NOTE:
If "DTC Confirmation Procedure" has been previously conducted, always turn ignition switch "OFF" and wait at least 10 seconds before conducting the next test.

WITH CONSULT-II

1. Turn ignition switch "ON" and wait at least 1 second.
2. Select "DATA MONITOR" mode with CONSULT-II.
3. Start engine and let it idle for 1 second.
4. If 1st trip DTC is detected, go to EC-1035, "Diagnostic Procedure" .

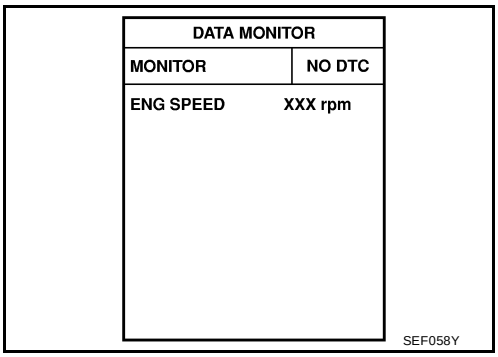

WITH GST

Follow the procedure "WITH CONSULT-II" above.

Wiring Diagram

UBS003EE

EC-MIL-01

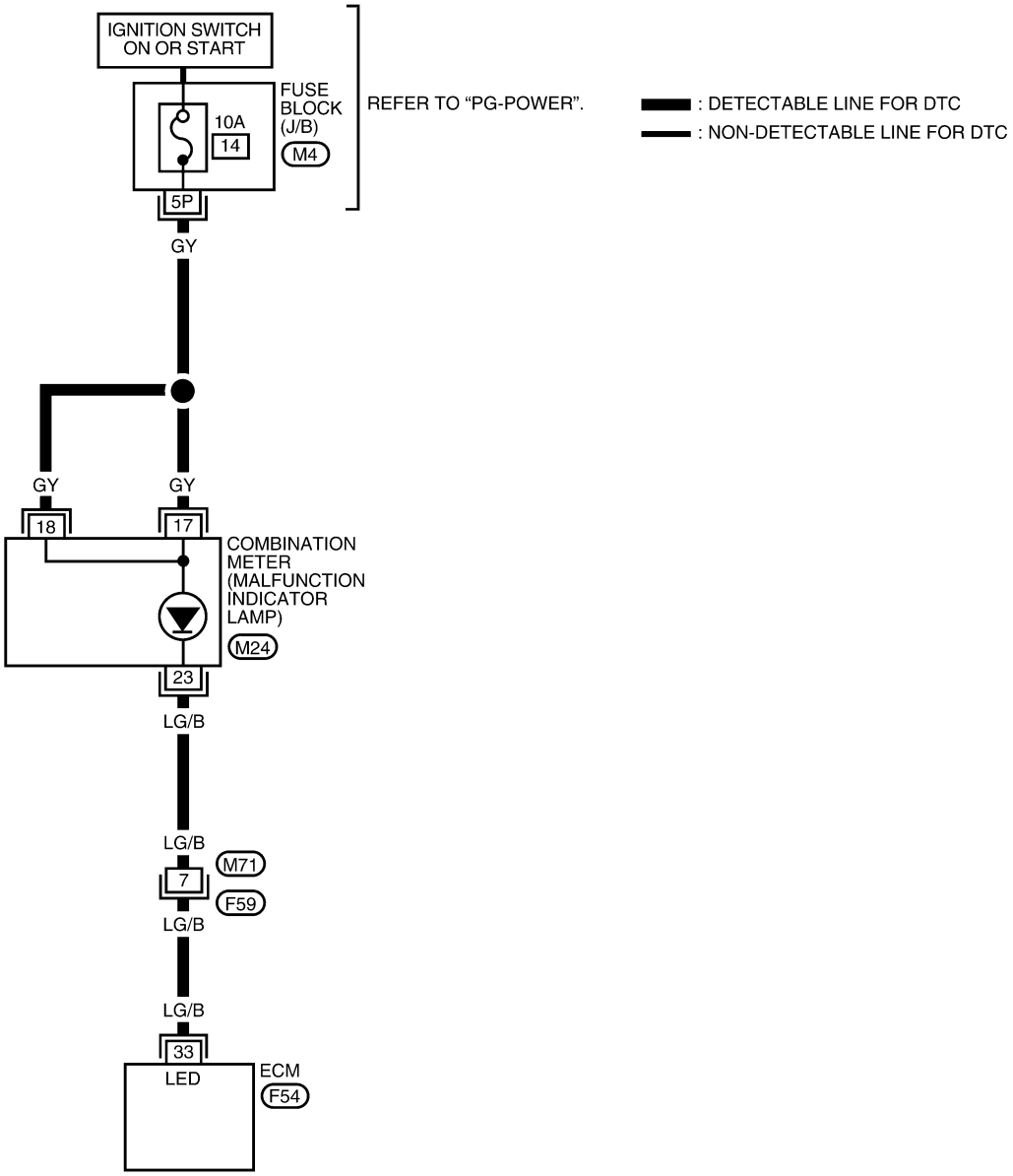

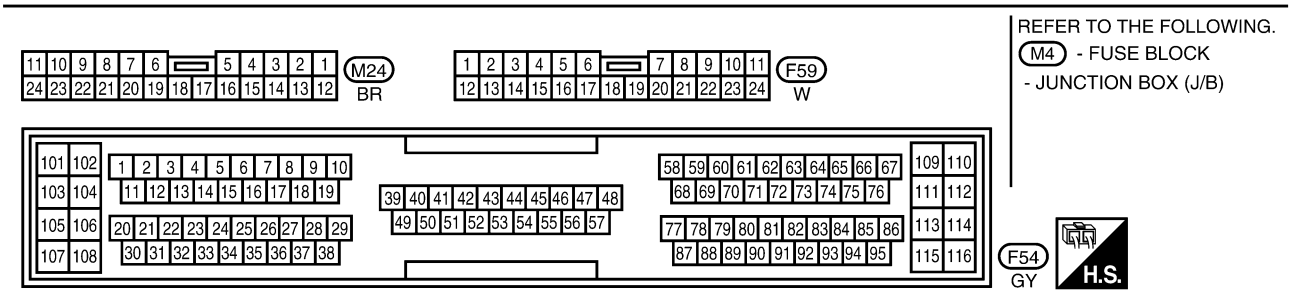

BBWA0075E

Specification data are reference values and are measured between each terminal and ground.

CAUTION:
Do not use ECM ground terminals when measuring input/output voltage. Doing so may result in damage to the ECM's transistor. Use a ground other than ECM terminals, such as the ground.

TERMINAL NO.	WIRE COLOR	ITEM	CONDITION	DATA (DC Voltage)
33	LG/B	MIL	**[Ignition switch "ON"]**	0 - 1.0V
			[Engine is running] ● Idle speed	BATTERY VOLTAGE (11 - 14V)

Diagnostic Procedure

UBS003EF

1. CHECK MIL POWER SUPPLY

1. Turn ignition switch "OFF".
2. Disconnect combination meter harness connector.
3. Turn ignition switch "ON".
4. Check voltage between combination meter terminals17, 18 and ground with CONSULT-II or tester

Voltage: Battery voltage

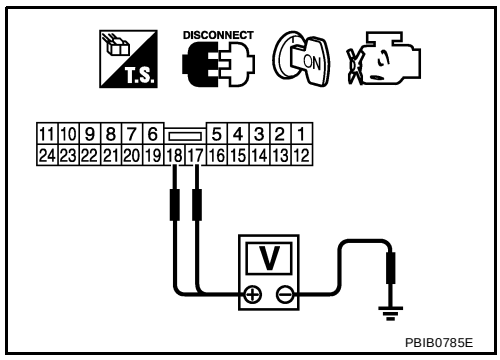

OK or NG

OK >> GO TO 3.
NG >> GO TO 2.

2. DETECT MALFUNCTIONING PART

Check the following.

- Fuse block (J/B) connector M4
- 10A fuse
- Harness for open or short between fuse block (J/B) and combination meter

>> Repair harness or connectors.

3. CHECK MIL OUTPUT SIGNAL CIRCUIT FOR OPEN AND SHORT

1. Turn ignition switch "OFF".
2. Disconnect ECM harness connector.
3. Check harness continuity between ECM terminal 33 and combination meter terminal 23. Refer to Wiring Diagram.

Continuity should exist.

4. Also check harness for short to ground and short to power.

OK or NG

OK >> GO TO 5.
NG >> GO TO 4.

4. DETECT MALFUNCTIONING PART

Check the following.

- Harness connectors F59, M71
- Harness for open or short between ECM and combination meter

>> Repair open circuit or short to ground or short to power in harness or connectors.

5. CHECK COMBINATION METER

1. Turn ignition switch "OFF".
2. Disconnect combination meter harness connector.
3. Check continuity under the following conditions.

CONDITION	Combination meter terminal No. (Polarity)	Continuity
1	23 (+) - 17 (–)	Should exist.
	23 (+) - 18 (–)	
2	17 (+) - 23 (–)	Should not exist.
	18 (+) - 23 (–)	

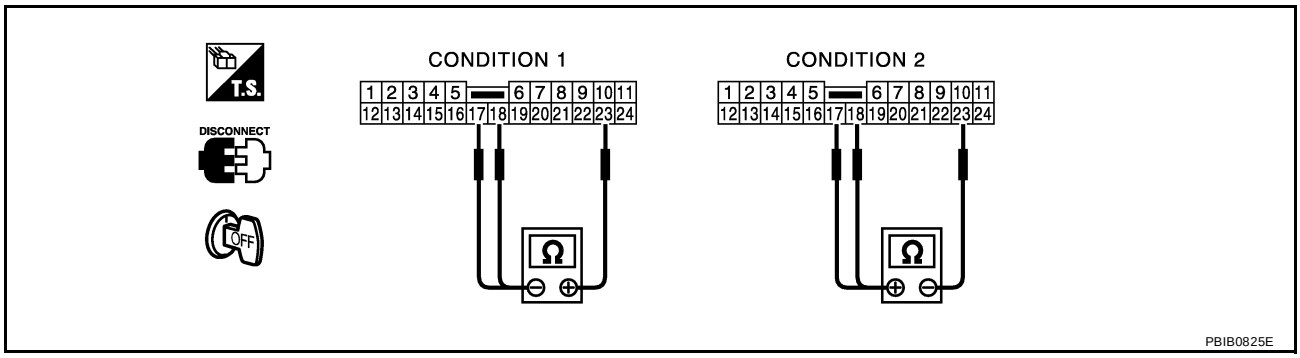

OK or NG

OK >> GO TO 6.

NG >> Replace combination meter. Refer to DI-21, "Removal and Installation" .

6. CHECK INTERMITTENT INCIDENT

Refer to EC-756, "TROUBLE DIAGNOSIS FOR INTERMITTENT INCIDENT" .

>> INSPECTION END

DTC P1065 ECM POWER SUPPLY

PFP:23710

Component Description

UBS003EG

Battery voltage is supplied to the ECM even when the ignition switch is turned OFF for the ECM memory function of the DTC memory, the air fuel ratio feedback compensation value memory, the idle air volume learning value memory, etc.

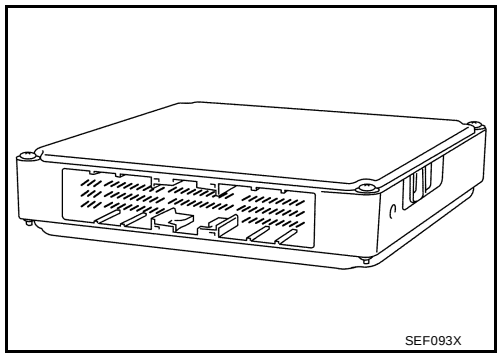

On Board Diagnosis Logic

UBS003EH

DTC No.	Trouble diagnosis name	DTC detecting condition	Possible cause
P1065 1065	ECM power supply circuit	ECM back up RAM system does not function properly.	● Harness or connectors [ECM power supply (back-up) circuit is open or shorted.] ● ECM

DTC Confirmation Procedure

UBS003EI

NOTE:
If “DTC Confirmation Procedure” has been previously conducted, always turn ignition switch “OFF” and wait at least 10 seconds before conducting the next test.

WITH CONSULT-II

1. Turn ignition switch “ON” and wait at least 1 second.
2. Select “DATA MONITOR” mode with CONSULT-II.
3. Start engine and let it idle for 1 second.
4. Turn ignition switch "OFF", wait at least 10 seconds, and then turn "ON".
5. Repeat steps 3 and 4 four times.
6. If 1st trip DTC is detected, go to EC-1039, "Diagnostic Procedure" .

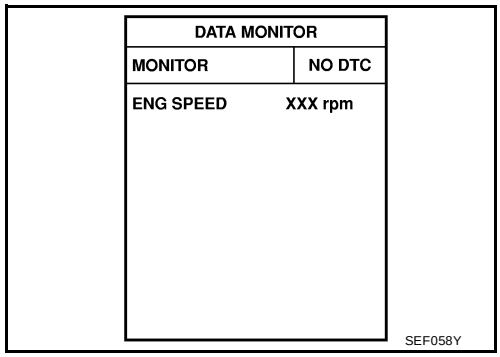

WITH GST

Follow the procedure “WITH CONSULT-II” above.

Wiring Diagram

UBS003EJ

EC-ECM/PW-01

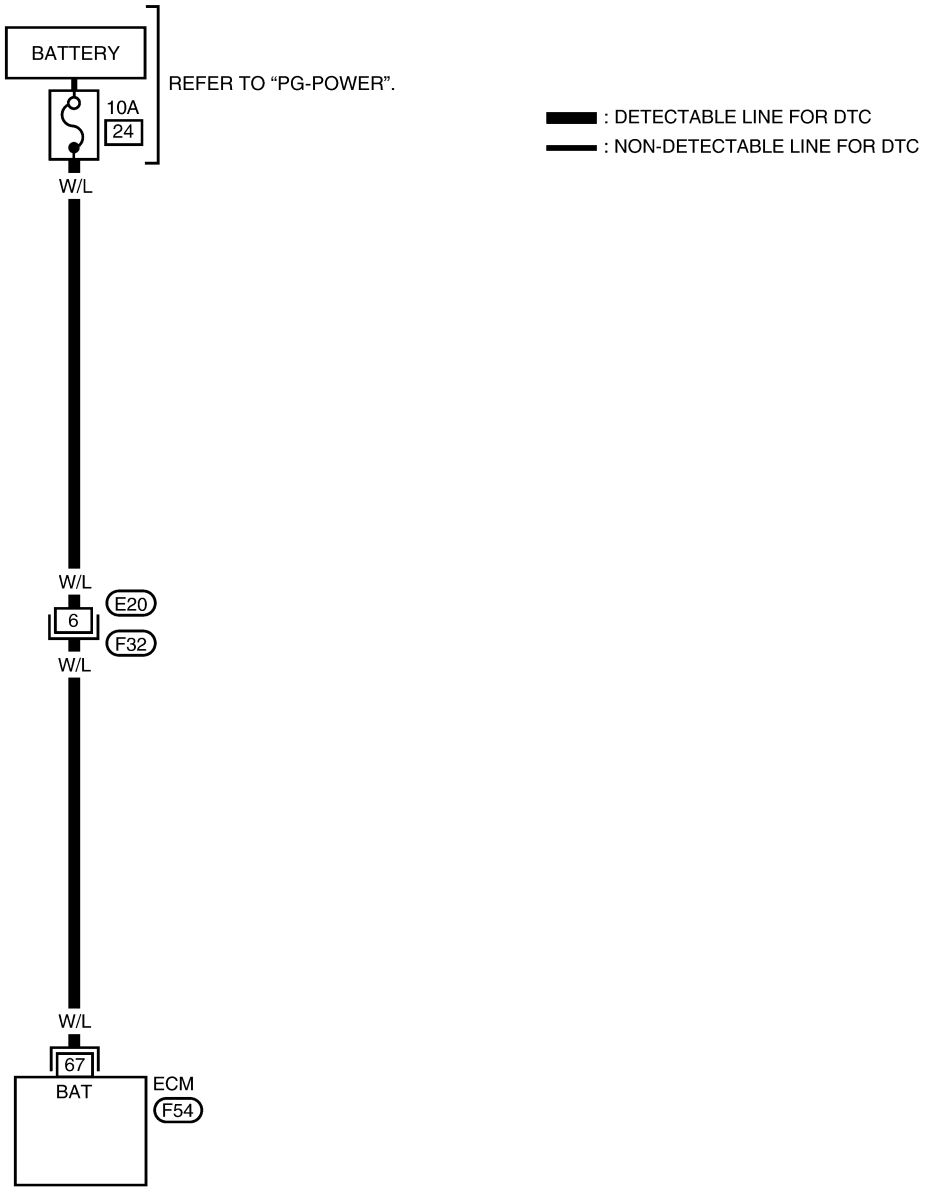

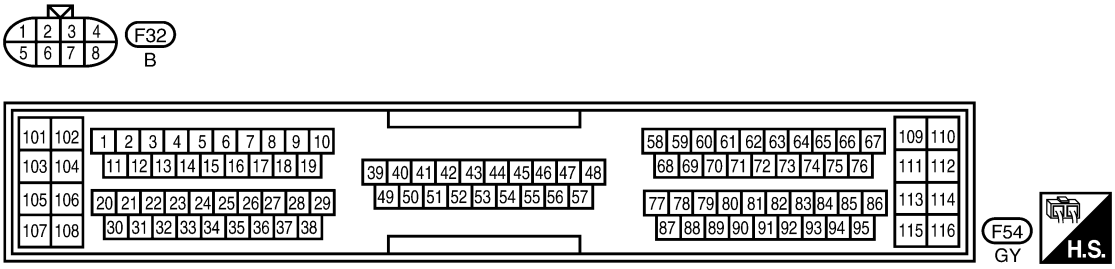

BBWA0076E

Diagnostic Procedure

UBS003EK

1. CHECK ECM POWER SUPPLY

1. Turn ignition switch "OFF".
2. Disconnect ECM harness connector.
3. Check voltage between ECM terminal 67 and ground with CONSULT-II or tester.

Voltage: Battery voltage

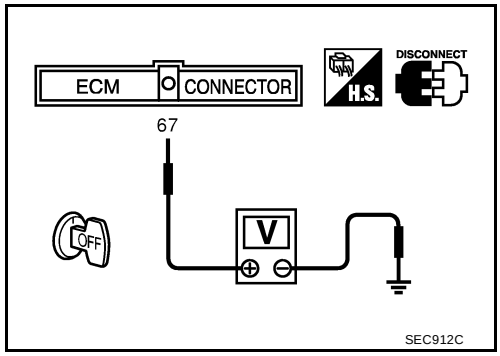

OK or NG

OK >> GO TO 3.
NG >> GO TO 2.

2. DETECT MALFUNCTIONING PART

Check the following.

- Harness connectors E20, F32
- 10A fuse
- Harness for open or short between ECM and battery

>> Repair or replace harness or connectors.

3. CHECK INTERMITTENT INCIDENT

Refer to EC-756, "TROUBLE DIAGNOSIS FOR INTERMITTENT INCIDENT" .

OK or NG

OK >> GO TO 4.
NG >> Repair or replace harness or connectors.

4. PERFORM DTC CONFIRMATION PROCEDURE

With CONSULT-II

1. Turn ignition switch “ON”.
2. Select “SELF DIAG RESULTS” mode with CONSULT-II.
3. Touch “ERASE”.
4. **Perform “DTC Confirmation Procedure”.**
   See EC-1037 .
5. Is the 1st trip DTC P1065 displayed again?

With GST

1. Turn ignition switch “ON”.
2. Select MODE 4 with GST.
3. Touch “ERASE”.
4. **Perform “DTC Confirmation Procedure”.**
   See EC-1037 .
5. Is the 1st trip DTC P1065 displayed again?

Yes or No

Yes >> GO TO 5.
No >> **INSPECTION END**

5. REPLACE ECM

1. Replace ECM.
2. Perform initialization of NATS system and registration of all NATS ignition key IDs. Refer to EC- EC-689, "NVIS (Nissan Vehicle Immobilizer System — NATS)" .
3. Perform EC-668, "Accelerator Pedal Released Position Learning" .
4. Perform EC-669, "Throttle Valve Closed Position Learning" .
5. Perform EC-669, "Idle Air Volume Learning" .

>> **INSPECTION END**

DTC P1102 MAF SENSOR

PFP:22680

Component Description

UBS003EL

The mass air flow sensor is placed in the stream of intake air. It measures the intake flow rate by measuring a part of the entire intake flow. It consists of a hot film that is supplied with electric current from the ECM. The temperature of the hot film is controlled by the ECM a certain amount. The heat generated by the hot film is reduced as the intake air flows around it. The more air, the greater the heat loss.
Therefore, the ECM must supply more electric current to maintain the temperature of the hot film as air flow increases. The ECM detects the air flow by means of this current change.

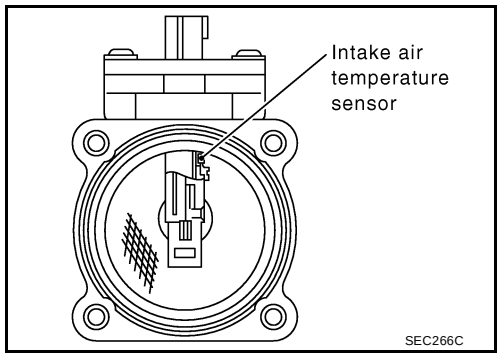

CONSULT-II Reference Value in Data Monitor Mode

UBS003EM

Specification data are reference values.

CAUTION:

Do not use ECM ground terminals when measuring input/output voltage. Doing so may result in damage to the ECM's transistor. Use a ground other than ECM terminals, such as the ground.

MONITOR ITEM	CONDITION		SPECIFICATION
MAS A/F SE-B1	● Engine: After warming up ● Air conditioner switch: OFF ● Shift lever: N ● No-load	Idle	Approx. 1.0 - 1.5V
		2,500 rpm	Approx. 1.7 - 2.4V
CAL/LD VALUE	● Engine: After warming up ● Shift lever: N ● Air conditioner switch: OFF ● No-load	Idle	10% - 35%
		2,500 rpm	10% - 35%
MASS AIRFLOW	● Engine: After warming up ● Shift lever: N ● Air conditioner switch: OFF ● No-load	Idle	2.0 - 6.0 g·m/s
		2,500 rpm	7.0 - 20.0 g·m/s

On Board Diagnosis Logic

UBS003EN

This self-diagnosis has the one trip detection logic.

DTC No.	Trouble diagnosis name	DTC detecting condition	Possible cause
P1102 1102	Mass air flow sensor circuit range/performance problem	A voltage from the sensor is constantly approx.1.0V when engine is running.	● Harness or connectors (The sensor circuit is open or shorted.) ● Mass air flow sensor

FAIL-SAFE MODE

When the malfunction is detected, the ECM enters in fail-safe mode and the MIL lights up.

Detected items	Engine operating condition in fail-safe mode
Mass air flow sensor circuit	Engine speed will not rise more than 2,400 rpm due to the fuel cut.

DTC Confirmation Procedure

UBS003EO

NOTE:

If “DTC Confirmation Procedure” has been previously conducted, always turn ignition switch “OFF” and wait at least 10 seconds before conducting the next test.

WITH CONSULT-II

1. Turn ignition switch “ON”.

2. Select “DATA MONITOR” mode with CONSULT-II.
3. Start engine and wait 5 seconds at most.
4. If DTC is detected, go to EC-1044, "Diagnostic Procedure" .

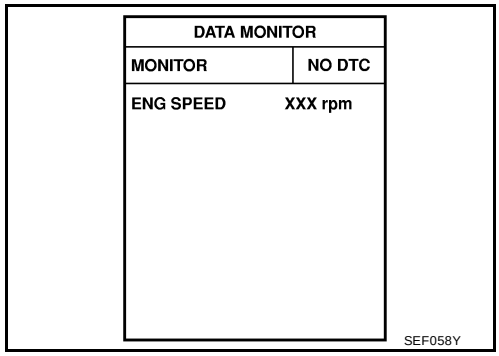

WITH GST

Follow the procedure “WITH CONSULT-II” above.

Wiring Diagram

UBS003EP

EC-MAFS-01

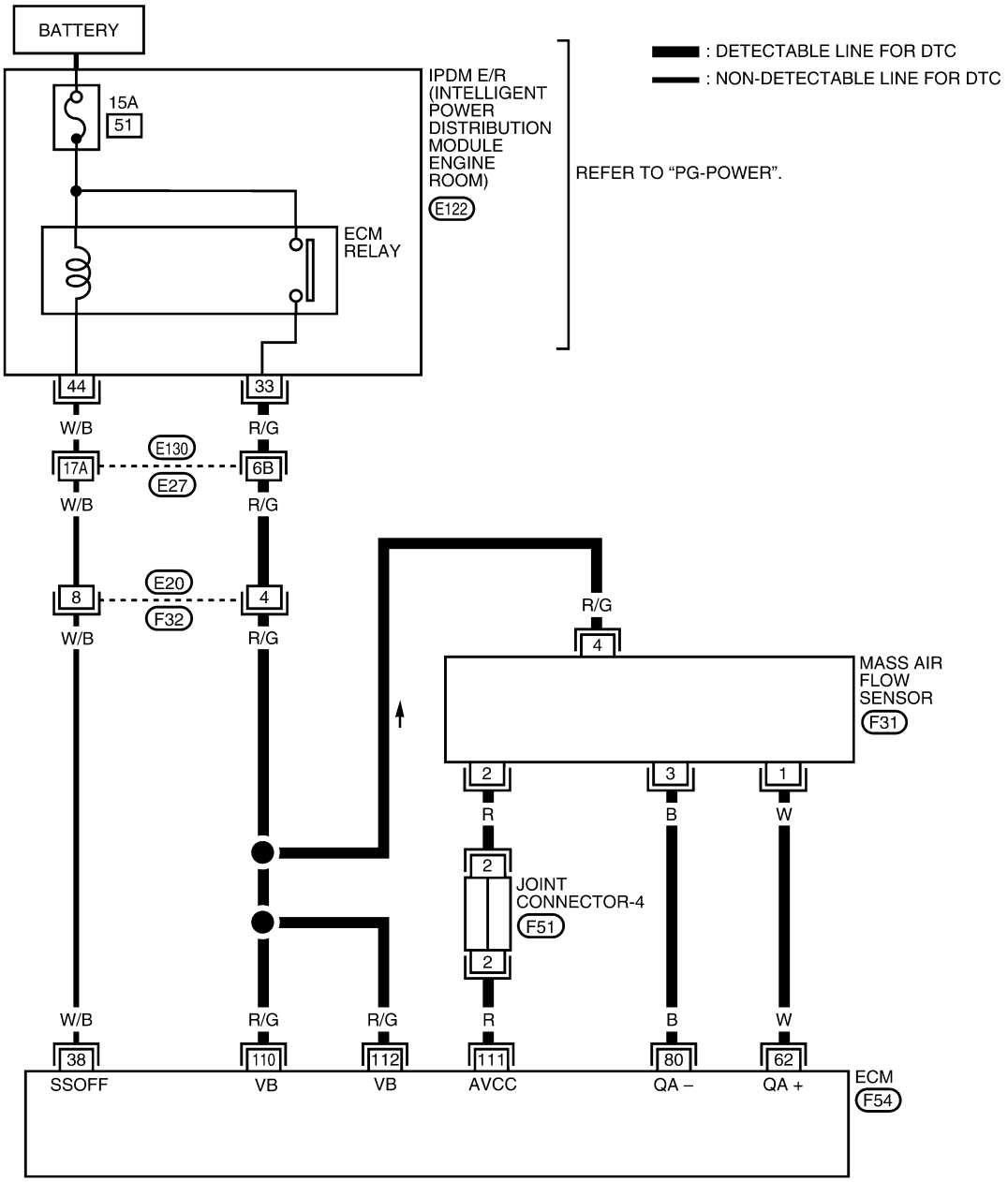

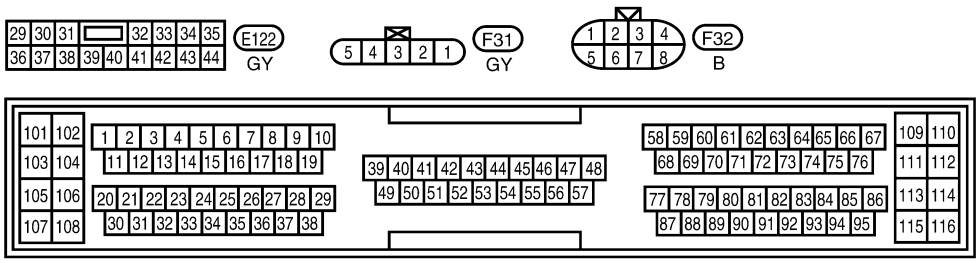

REFER TO THE FOLLOWING.
E130 - SUPER MULTIPLE JUNCTION (SMJ)
F51 - JOINT CONNECTOR (J/C)

BBWA0050E

Specification data are reference values and are measured between each terminal and ground.

CAUTION:
Do not use ECM ground terminals when measuring input/output voltage. Doing so may result in damage to the ECM's transistor. Use a ground other than ECM terminals, such as the ground.

TERMINAL NO.	WIRE COLOR	ITEM	CONDITION	DATA (DC Voltage)
38	W/B	ECM relay (Self shut-off)	**[Engine is running]** **[Ignition switch "OFF"]** ● For a few seconds after turning ignition switch "OFF"	0 - 1.5V
			[Ignition switch "OFF"] ● a few seconds passed after turning ignition switch "OFF"	BATTERY VOLTAGE (11 - 14V)
62	W	Mass air flow sensor	**[Engine is running]** ● **Warm-up condition** ● Idle speed	1.1 - 1.5V
			[Engine is running] ● **Warm-up condition** ● Engine speed is 2,500 rpm.	1.7 - 2.4V
80	B	Mass air flow sensor ground	**[Engine is running]** ● **Warm-up condition** ● Idle speed	Approximately 0V
111	R	Sensors' power supply	**[Ignition switch "ON"]**	Approximately 5V
110 112	R/G R/G	Power supply for ECM	**[Ignition switch "ON"]**	BATTERY VOLTAGE (11 - 14V)

Diagnostic Procedure

UBS003EQ

1. RETIGHTEN GROUND SCREWS

1. Turn ignition switch "OFF".
2. Loosen and retighten engine ground screws.

>> GO TO 2.

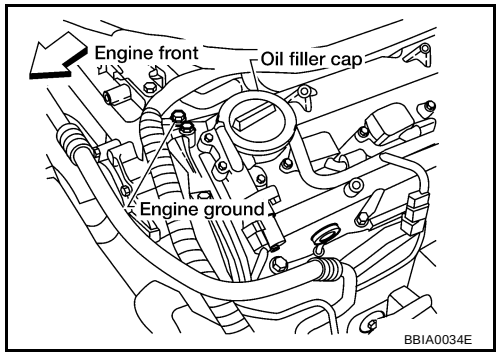

2. CHECK MAF SENSOR POWER SUPPLY CIRCUIT

1. Disconnect MAF sensor harness connector.
2. Turn ignition switch “ON”.

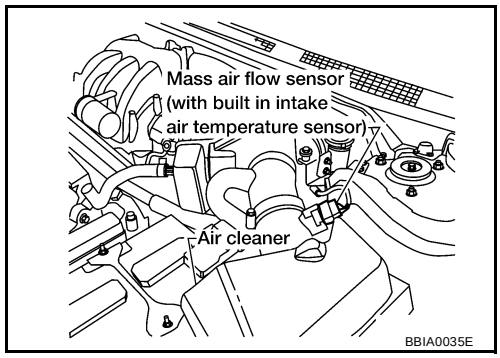

3. Check voltage between MAF sensor terminals 2, 4 and ground with CONSULT-II or tester.

Terminal	Voltage
2	Approximately 5V
4	Battery voltage

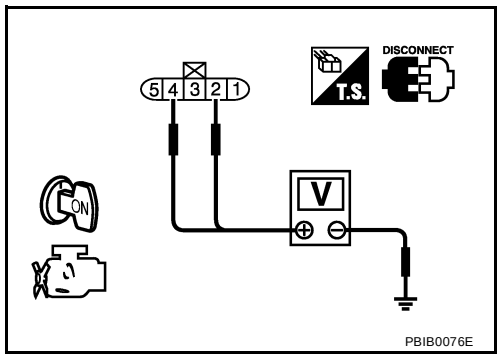

OK or NG

OK >> GO TO 4.
NG >> GO TO 3.

3. DETECT MALFUNCTIONING PART

Check the following.

- Harness connector E130, E27
- Harness connectors E20, F32
- Joint connector-4
- Harness for open or short between mass air flow sensor and IPDM E/R
- Harness for open or short between mass air flow sensor and ECM

>> Repair harness or connectors.

4. CHECK MAF SENSOR GROUND CIRCUIT FOR OPEN AND SHORT

1. Turn ignition switch “OFF”.
2. Disconnect ECM harness connector.
3. Check harness continuity between MAF sensor terminal 3 and ECM terminal 80. Refer to Wiring Diagram.

Continuity should exist.

4. Also check harness for short to ground and short to power.

OK or NG

OK >> GO TO 5.
NG >> Repair open circuit or short to ground or short to power in harness or connectors.

5. CHECK MAF SENSOR INPUT SIGNAL CIRCUIT FOR OPEN AND SHORT

1. Check harness continuity between MAF sensor terminal 1 and ECM terminal 62.
   Refer to Wiring Diagram.

   Continuity should exist.

2. Also check harness for short to ground and short to power.

OK or NG

OK >> GO TO 6.
NG >> Repair open circuit or short to ground or short to power in harness or connectors.

6. CHECK MASS AIR FLOW SENSOR

Refer to EC-1046, "Component Inspection" .

OK or NG

OK >> GO TO 7.
NG >> Replace mass air flow sensor.

7. CHECK INTERMITTENT INCIDENT

Refer to EC-756, "TROUBLE DIAGNOSIS FOR INTERMITTENT INCIDENT" .

>> **INSPECTION END**

Component Inspection

UBS003ER

MASS AIR FLOW SENSOR

1. Reconnect harness connectors disconnected.
2. Start engine and warm it up to normal operating temperature.
3. Check voltage between ECM terminal 62 (Mass air flow sensor signal) and ground.

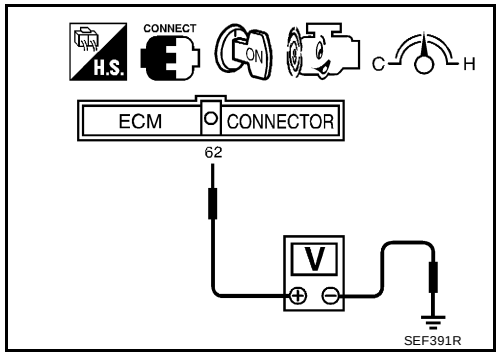

Condition	Voltage V
Ignition switch "ON" (Engine stopped.)	Approx. 1.0
Idle (Engine is warmed-up to normal operating temperature.)	1.1 - 1.5
2,500 rpm (Engine is warmed-up to normal operating temperature.)	1.7 - 2.4
Idle to about 4,000 rpm*	1.1 - 1.5 to Approx. 4.0

*: Check for liner voltage rise in response to engine being increased to about 4,000 rpm.

4. If the voltage is out of specification, proceed the following.
   - Turn ignition switch "OFF".
   - Disconnect mass air flow sensor harness connector and reconnect it again.
   - Perform steps 2 and 3 again.
5. If NG, remove mass air flow sensor from air duct. Check hot film for damage or dust.
6. If NG, clean or replace mass air flow sensor.

Removal and Installation

UBS003ES

MASS AIR FLOW SENSOR

Refer to EM-110, "AIR CLEANER AND AIR DUCT" .

DTC P1121 ELECTRIC THROTTLE CONTROL ACTUATOR

PFP:16119

Component Description

UBS003ET

Electric Throttle Control Actuator consists of throttle control motor, throttle position sensor, etc.
The throttle control motor is operated by the ECM and it opens and closes the throttle valve.
The throttle position sensor detects the throttle valve position, and the opening and closing speed of the throttle valve and feeds the voltage signals to the ECM. The ECM judges the current opening angle of the throttle valve from these signals and the ECM controls the throttle control motor to make the throttle valve opening angle properly in response to driving condition.

On Board Diagnosis Logic

UBS003EU

DTC No.	Trouble diagnosis name	DTC detecting condition		Possible cause
P1121 1121	Electric throttle control actuator	A)	Electric throttle control actuator does not function properly due to the return spring malfunction.	● Electric throttle control actuator
		B)	Throttle valve opening angle in fail-safe mode is not in specified range.	
		C)	ECM detect the throttle valve is stuck open. **This self-diagnosis has the one trip detection logic.**	

FAIL-SAFE MODE

When the malfunction A or B is detected, ECM enters in fail-safe mode.
When the malfunction C is detected, ECM enters in fail-safe mode and the MIL lights up.

Detected items	Engine operating condition in fail-safe mode
Malfunction A	The ECM controls the electric throttle actuator by regulating the throttle opening around the idle position. The engine speed will not rise more than 2,000 rpm.
Malfunction B	ECM controls the electric throttle control actuator by regulating the throttle opening to 20 degrees or less.
Malfunction C	While the vehicle is driving, it slows down gradually by fuel cut. After the vehicle stops, the engine stalls. The engine can restart in "N" or "P" position, and engine speed will not exceed 1,000 rpm or more.

DTC Confirmation Procedure

UBS003EV

NOTE:

- **Perform “PROCEDURE FOR MALFUNCTION A AND B” first. If the 1st trip DTC cannot be confirmed, perform “PROCEDURE FOR MALFUNCTION C".**
  If there is no problem on “PROCEDURE FOR MALFUNCTION A AND B”, perform “PROCEDURE FOR MALFUNCTION C”.
- If “DTC Confirmation Procedure” has been previously conducted, always turn ignition switch “OFF” and wait at least 10 seconds before conducting the next test.

PROCEDURE FOR MALFUNCTION A AND B

With CONSULT-II

1. Turn ignition witch "ON" and wait at least 1 second.
2. Select "DATA MONITOR" mode with CONSULT-II.
3. Shift selector lever to "D" position (A/T), "1st" position (M/T) and wait at least 2 seconds.
4. Turn ignition switch "OFF", wait at least 10 seconds, and then turn "ON".
5. If 1st trip DTC is detected, go to EC-1048, "Diagnostic Procedure" .

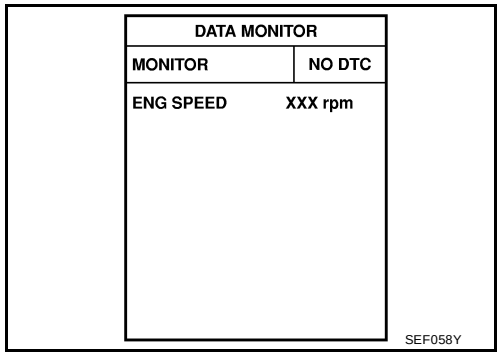

With GST

Follow the procedure "With CONSULT-II" above.

PROCEDURE FOR MALFUNCTION C

With CONSULT-II

1. Turn ignition switch "ON" and wait at least 1 second.
2. Select "DATA MONITOR" mode with CONSULT-II.
3. Shift selector lever to "D" position (A/T), "1st" position (M/T) and wait at least 2 seconds.
4. Shift selector lever to "N" or "P" position.
5. Start engine and let it idle for 3 seconds.
6. If DTC is detected, go to EC-1048, "Diagnostic Procedure" .

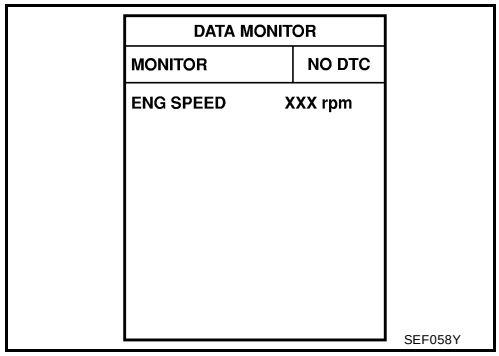

With GST

Follow the procedure "With CONSULT-II" above.

Diagnostic Procedure

UBS003EW

1. CHECK ELECTRIC THROTTLE CONTROL ACTUATOR VISUALLY

1. Remove the intake air duct.
2. Check if a foreign matter is caught between the throttle valve and the housing.

OK or NG

OK >> GO TO 2.
NG >> Remove the foreign matter and clean the electric throttle control actuator inside.

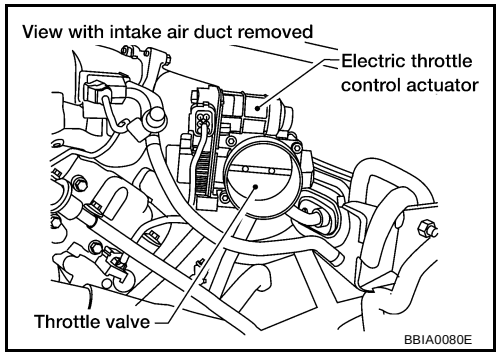

2. REPLACE ELECTRIC THROTTLE CONTROL ACTUATOR

1. Replace the electric throttle control actuator.
2. Perform EC-669, "Throttle Valve Closed Position Learning" .
3. Perform EC-669, "Idle Air Volume Learning" .

>> **INSPECTION END**

DTC P1122 ELECTRIC THROTTLE CONTROL FUNCTION

PFP:16119

Description

UBS003EX

NOTE:
If DTC P1122 is displayed with DTC P1121 or 1126, first perform the trouble diagnosis for DTC P1121 or P1126. Refer to EC-1047 or EC-1056 .

Electric Throttle Control Actuator consists of throttle control motor, throttle position sensor, etc.
The throttle control motor is operated by the ECM and it opens and closes the throttle valve.
The current opening angle of the throttle valve is detected by the throttle position sensor and it provides feedback to the ECM to control the throttle control motor to make the throttle valve opening angle properly in response to driving condition.

On Board Diagnosis Logic

UBS003EY

This self-diagnosis has the one trip detection logic.

DTC No.	Trouble diagnosis name	DTC detecting condition	Possible cause
P1122 1122	Electric throttle control performance problem	Electric throttle control function does not operate properly.	● Harness or connectors (Throttle control motor circuit is open or shorted) ● Electric throttle control actuator

FAIL-SAFE MODE

When the malfunction is detected, ECM enters in fail-safe mode and the MIL lights up.

Engine operating condition in fail-safe mode
ECM stops the electric throttle control actuator control, throttle valve is maintained at a fixed opening (approx. 5 degrees) by the return spring.

DTC Confirmation Procedure

UBS003EZ

NOTE:
If “DTC Confirmation Procedure” has been previously conducted, always turn ignition switch “OFF” and wait at least 10 seconds before conducting the next test.

WITH CONSULT-II

1. Turn ignition switch “ON” and wait at least 2 seconds.
2. Select "DATA MONITOR" mode with CONSULT-II.
3. Start engine and let it idle for 5 seconds.
4. If DTC is detected, go to EC-1051, "Diagnostic Procedure" .

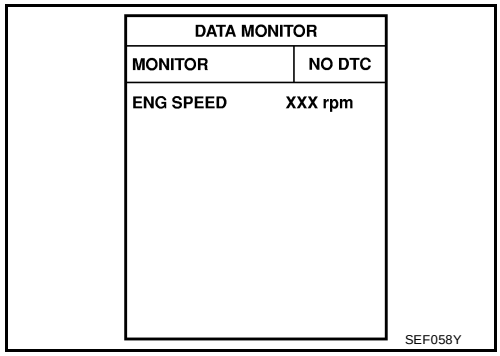

WITH GST

Follow the procedure “WITH CONSULT-II” above.

Wiring Diagram

UBS003F0

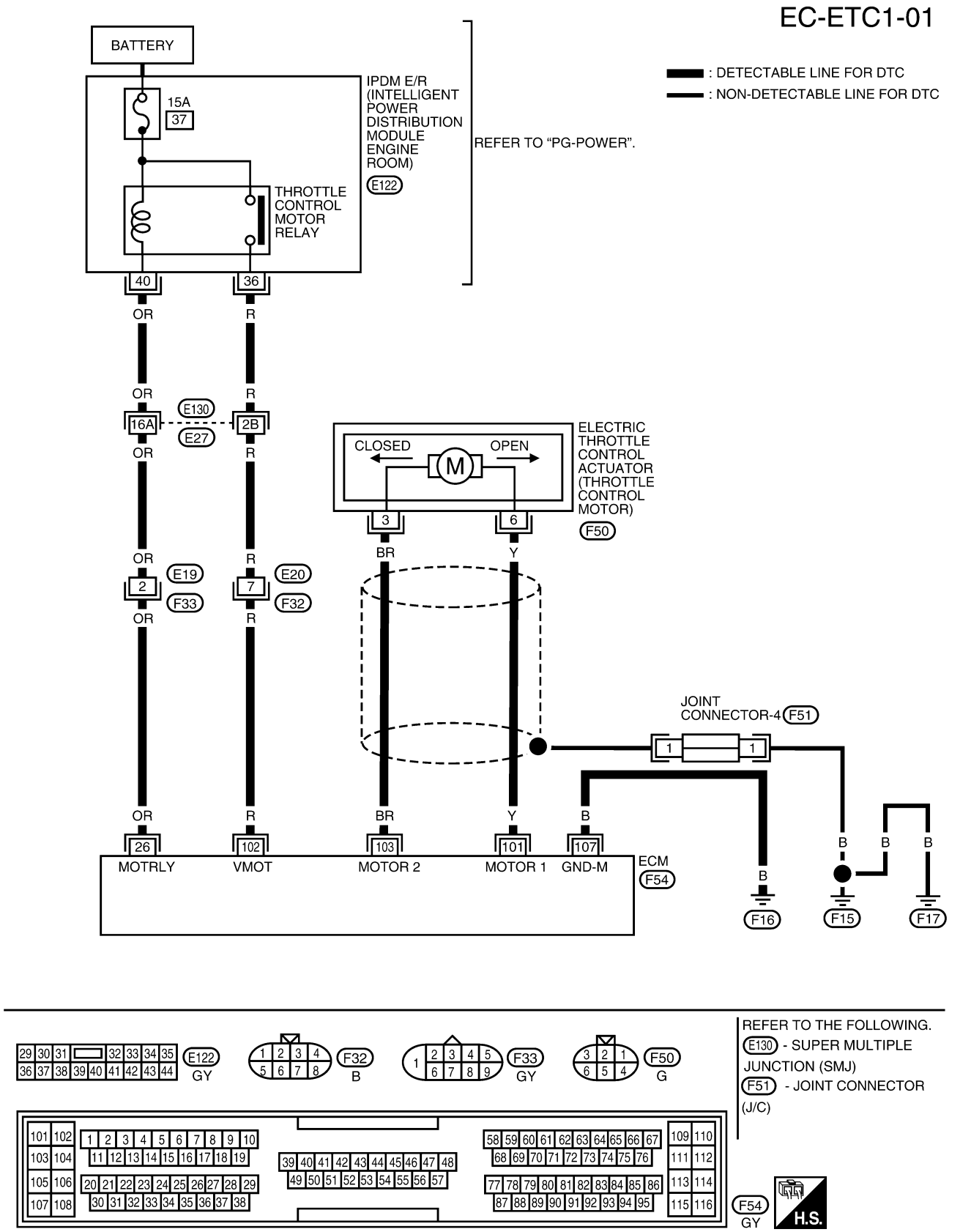

Specification data are reference values and are measured between each terminal and ground.

CAUTION:
Do not use ECM ground terminals when measuring input/output voltage. Doing so may result in damage to the ECM's transistor. Use a ground other than ECM terminals, such as the ground.

TERMINAL NO.	WIRE COLOR	ITEM	CONDITION	DATA (DC Voltage)
26	OR	Throttle control motor relay	**[Ignition switch "OFF"]**	BATTERY VOLTAGE (11 - 14V)
			[Ignition switch "ON"]	0 - 1.0V
101	Y	Throttle control motor (Open)	**[Ignition switch "ON"]** ● Shift lever position is "D" (A/T model) ● Shift lever position is "1st" (M/T model) ● Accelerator pedal is depressing	0 - 14V★ 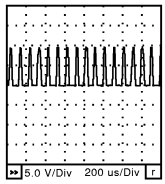 SEC037D
102	R	Throttle control motor relay power supply	**[Ignition switch "ON"]**	BATTERY VOLTAGE (11 - 14V)
103	BR	Throttle control motor (Close)	**[Ignition switch "ON"]** ● Shift lever position is "D" (A/T model) ● Shift lever position is "1st" (M/T model) ● Accelerator pedal is releasing	0 - 14V★ 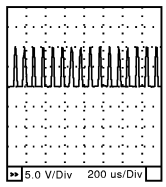 SEC038D
107	B	Throttle control motor ground	**[Engine is running]** ● Idle speed	Approximately 0V

★: Average voltage for pulse signal (Actual pulse signal can be confirmed by oscilloscope.)

Diagnostic Procedure

UBS003F1

1. RETIGHTEN GROUND SCREWS

1. Turn ignition switch "OFF".
2. Loosen and retighten engine ground screws.

>> GO TO 2.

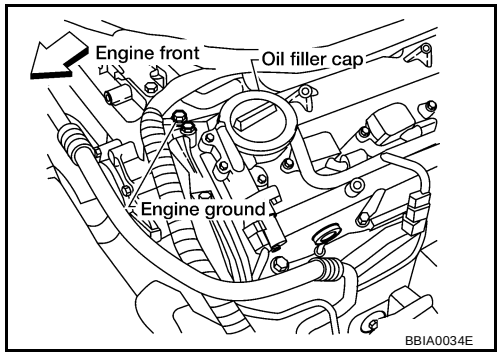

2. CHECK THROTTLE CONTROL MOTOR GROUND CIRCUIT FOR OPEN AND SHORT

1. Disconnect ECM harness connector.
2. Check harness continuity between ECM terminal 107 and engine ground.
   Refer to Wiring Diagram.

   Continuity should exist.

3. Also check harness for short to power.

OK or NG

OK >> GO TO 3.
NG >> Repair open circuit or short to power in harness or connectors.

3. CHECK THROTTLE CONTROL MOTOR RELAY INPUT SIGNAL CIRCUIT-I

1. Reconnect harness connectors disconnected.
2. Check voltage between ECM terminal 102 and ground under the following conditions with CONSULT-II or tester.

Ignition switch	Voltage
OFF	Approximately 0V
ON	Battery voltage (11 - 14V)

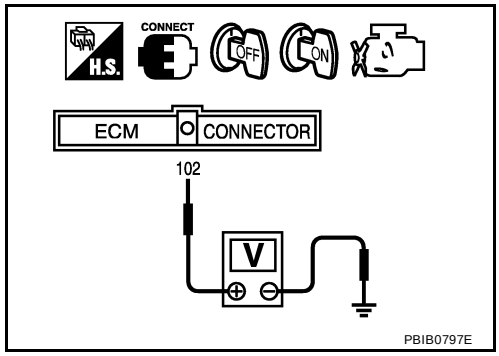

OK or NG

OK >> GO TO 11.
NG >> GO TO 4.

4. CHECK THROTTLE CONTROL MOTOR RELAY INPUT SIGNAL CIRCUIT-II

1. Turn ignition switch "OFF".
2. Disconnect ECM harness connector.
3. Disconnect IPDM E/R harness connector E122.
4. Check continuity between ECM terminal 102 and IPDM E/R terminal 36.
   Refer to Wiring Diagram.

   Continuity should exist.

5. Also check harness for short to ground and short to power.

OK or NG

OK >> GO TO 6.
NG >> GO TO 5.

5. DETECT MALFUNCTIONING PART

Check the following.

- Harness connectors E130, E27
- Harness connectors E20, F32
- Harness for open or short between ECM and IPDM E/R

>> Repair open circuit or short to ground or short to power in harness or connectors.

6. CHECK THROTTLE CONTROL MOTOR RELAY POWER SUPPLY CIRCUIT-I

1. Reconnect all harness connectors disconnected.
2. Turn ignition switch “OFF”.
3. Check voltage between ECM terminal 26 and ground with CONSULT-II or tester.

Voltage: Battery voltage

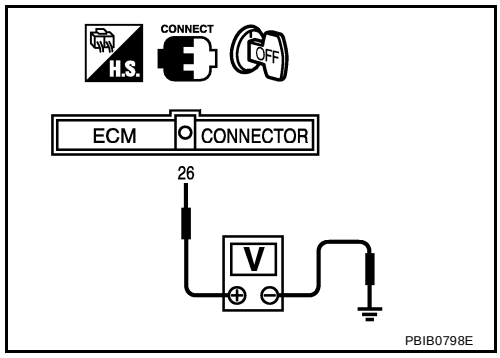

OK or NG

OK >> GO TO 10.
NG >> GO TO 7.

7. CHECK THROTTLE CONTROL MOTOR RELAY POWER SUPPLY CIRCUIT-II

1. Disconnect ECM harness connector.
2. Disconnect IPDM E/R harness connector E122.
3. Check continuity between ECM terminal 26 and IPDM E/R terminal 40.
   Refer to Wiring Diagram.

Continuity should exist.

4. Also check harness for short to ground and short to power.

OK or NG

OK >> GO TO 9.
NG >> GO TO 8.

8. DETECT MALFUNCTIONING PART

Check the following.

- Harness connectors E130, E27
- Harness connectors E19, F33
- Harness for open or short between ECM and IPDM E/R

>> Repair open circuit or short to ground or short to power in harness or connectors.

9. CHECK FUSE

1. Disconnect 15A fuse.
2. Check 15A fuse for blown.

OK or NG

OK >> GO TO 10.
NG >> Replace 15A fuse.

10. CHECK INTERMITTENT INCIDENT

Refer to EC-756, "TROUBLE DIAGNOSIS FOR INTERMITTENT INCIDENT" .

OK or NG

OK >> Replace IPDM E/R. Refer to PG-14, "IPDM E/R (INTELLIGENT POWER DISTRIBUTION MODULE ENGINE ROOM)" .
NG >> Repair or replace harness or connectors.

11. CHECK THROTTLE CONTROL MOTOR OUTPUT SIGNAL CIRCUIT FOR OPEN OR SHORT

1. Turn ignition switch “OFF”.
2. Disconnect electric throttle control actuator harness connector.
3. Disconnect ECM harness connector.
4. Check harness continuity between the following terminals. Refer to Wiring Diagram.

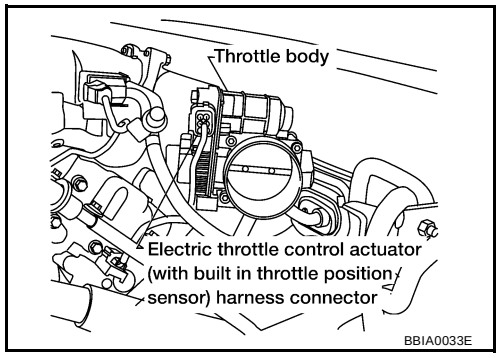

Electric throttle control actuator terminal	ECM terminal	Continuity
3	101	Should not exist
	103	Should exist
6	101	Should exist
	103	Should not exist

5. Also check harness for short to ground and short to power.

OK or NG

OK >> GO TO 12.
NG >> Repair or replace.

12. CHECK ELECTRIC THROTTLE CONTROL ACTUATOR VISUALLY

1. Remove the intake air duct.
2. Check if foreign matter is caught between the throttle valve and the housing.

OK or NG

OK >> GO TO 13.
NG >> Remove the foreign matter and clean the electric throttle control actuator inside.

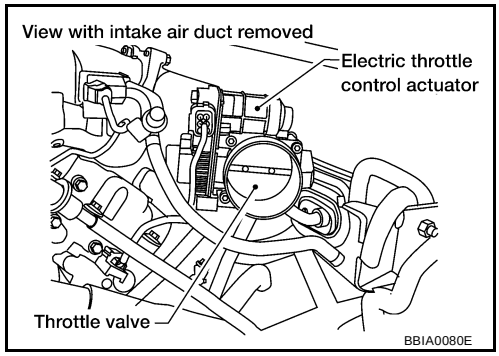

13. CHECK THROTTLE CONTROL MOTOR

Refer to EC-1055, "Component Inspection" .

OK or NG

OK >> GO TO 14.
NG >> GO TO 15.

14. CHECK INTERMITTENT INCIDENT

Refer to EC-756, "TROUBLE DIAGNOSIS FOR INTERMITTENT INCIDENT" .

OK or NG

OK >> GO TO 15.
NG >> Repair or replace harness or connectors.

15. REPLACE ELECTRIC THROTTLE CONTROL ACTUATOR

1. Replace the electric throttle control actuator.
2. Perform EC-669, "Throttle Valve Closed Position Learning" .
3. Perform EC-669, "Idle Air Volume Learning" .

>> **INSPECTION END**

Component Inspection

UBS003F2

THROTTLE CONTROL MOTOR

1. Disconnect electric throttle control actuator harness connector.
2. Check resistance between terminals 3 and 6.

Resistance: Approximately 1 - 15 Ω [at 25 °C (77°F)]

3. If NG, replace electric throttle control actuator and go to next step.
4. Perform EC-669, "Throttle Valve Closed Position Learning" .
5. Perform EC-669, "Idle Air Volume Learning" .

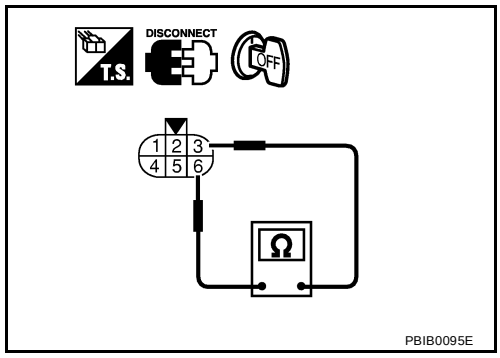

Remove and Installation

UBS003F3

ELECTRIC THROTTLE CONTROL ACTUATOR

Refer to EM-112, "INTAKE MANIFOLD" .

DTC P1124, P1126 THROTTLE CONTROL MOTOR RELAY

PFP:16119

Component Description

UBS003F4

Power supply for the throttle control motor is provided to the ECM via throttle control motor relay. The throttle control motor relay is ON/OFF controlled by the ECM. When the ignition switch is turned ON, the ECM sends an ON signal to throttle control motor relay and battery voltage is provided to the ECM. When the ignition switch is turned OFF, the ECM sends an OFF signal to throttle control motor relay and battery voltage is not provided to the ECM.

CONSULT-II Reference Value in Data Monitor Mode

UBS003F5

Specification data are reference values.

MONITOR ITEM	CONDITION	SPECIFICATION
THRTL RELAY	● Ignition switch: ON	ON

On Board Diagnosis Logic

UBS003F6

DTC No.	Trouble diagnosis name	DTC detecting condition	Possible cause
P1124 1124	Throttle control motor relay circuit short	ECM detect the throttle control motor relay is stuck ON.	● Harness or connectors (Throttle control motor relay circuit is shorted) ● Throttle control motor relay
P1126 1126	Throttle control motor relay circuit open	ECM detects a voltage of power source for throttle control motor is excessively low. **This self-diagnosis has the one trip detection logic.**	● Harness or connectors (Throttle control motor relay circuit is open) ● Throttle control motor relay

FAIL-SAFE MODE

When the malfunction is detected, ECM enters in fail-safe mode (for DTC P1124).
When the malfunction is detected, ECM enters in fail-safe mode and the MIL lights up (for DTC P1126).

Engine operating condition in fail-safe mode
ECM stops the electric throttle control actuator control, throttle valve is maintained at a fixed opening (approx. 5 degrees) by the return spring.

DTC Confirmation Procedure

UBS003F7

NOTE:
If “DTC Confirmation Procedure” has been previously conducted, always turn ignition switch “OFF” and wait at least 10 seconds before conducting the next test.

PROCEDURE FOR DTC P1124

TESTING CONDITION:
Before performing the following procedure, confirm that battery voltage is more than 10V at idle.

With CONSULT-II

1. Turn ignition switch “ON” and wait at least 1 second.
2. Select “DATA MONITOR” mode with CONSULT-II.
3. If 1st trip DTC is detected, go to EC-1059, "Diagnostic Procedure" .

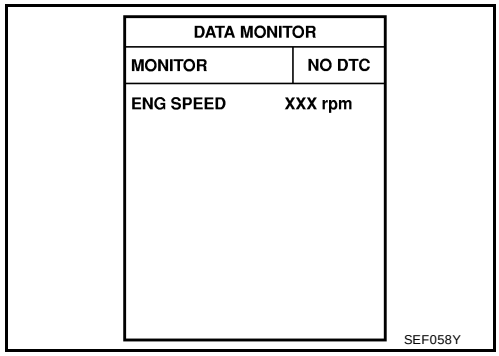

With GST

Follow the procedure “With CONSULT-II” above.

PROCEDURE FOR DTC P1126

With CONSULT-II

1. Turn ignition switch “ON” and wait at least 2 seconds.
2. Select "DATA MONITOR" mode with CONSULT-II.
3. Start engine and let it idle for 5 seconds.
4. If DTC is detected, go to EC-1059, "Diagnostic Procedure" .

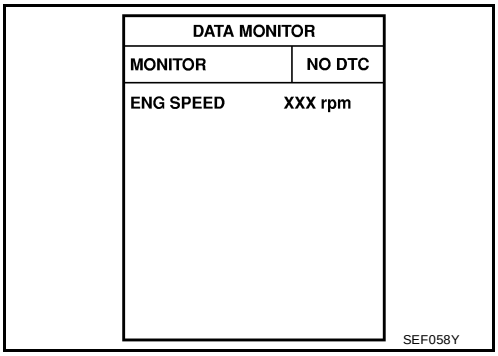

With GST

Follow the procedure “With CONSULT-II” above.

Wiring Diagram

UBS003F8

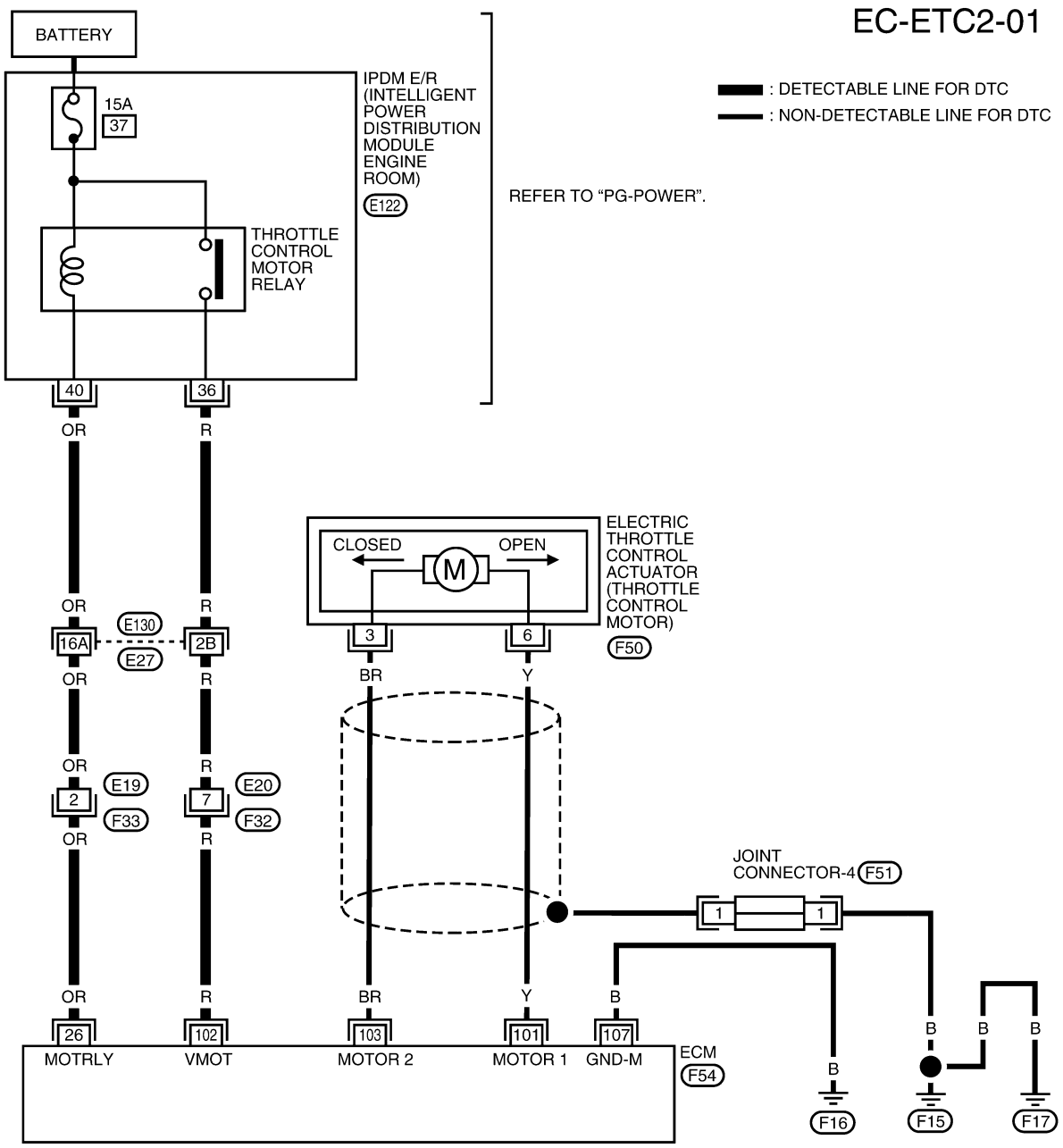

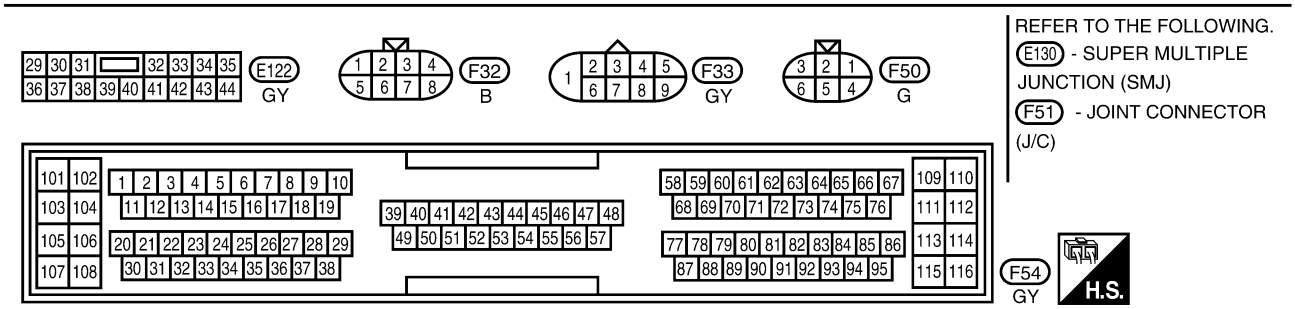

BBWA0096E

Specification data are reference values and are measured between each terminal and ground.

CAUTION:
Do not use ECM ground terminals when measuring input/output voltage. Doing so may result in damage to the ECM's transistor. Use a ground other than ECM terminals, such as the ground.

TERMINAL NO.	WIRE COLOR	ITEM	CONDITION	DATA (DC Voltage)
26	OR	Throttle control motor relay	**[Ignition switch "OFF"]**	BATTERY VOLTAGE (11 - 14V)
			[Ignition switch "ON"]	0 - 1.0V
102	R	Throttle control motor relay power supply	**[Ignition switch "ON"]**	BATTERY VOLTAGE (11 - 14V)

Diagnostic Procedure

UBS003F9

1. CHECK THROTTLE CONTROL MOTOR RELAY POWER SUPPLY CIRCUIT-I

1. Turn ignition switch “OFF”.
2. Check voltage between ECM terminal 26 and ground with CONSULT-II or tester.

Voltage: Battery voltage

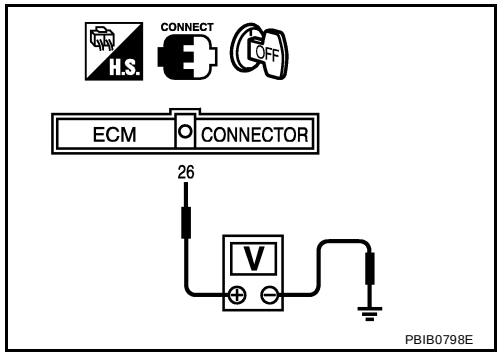

OK or NG

OK >> GO TO 5.
NG >> GO TO 2.

2. CHECK THROTTLE CONTROL MOTOR RELAY POWER SUPPLY CIRCUIT-II

1. Disconnect ECM harness connector.
2. Disconnect IPDM E/R harness connector E122.
3. Check continuity between ECM terminal 26 and IPDM E/R terminal 40.
   Refer to Wiring Diagram.

Continuity should exist.

4. Also check harness for short to ground and short to power.

OK or NG

OK >> GO TO 4.
NG >> GO TO 3.

3. DETECT MALFUNCTIONING PART

Check the following.

- Harness connectors E130, E27
- Harness connectors E19, F33
- Harness for open or short between ECM and IPDM E/R

>> Repair open circuit or short to ground or short to power in harness or connectors.

4. CHECK FUSE

1. Disconnect 15A fuse.
2. Check 15A fuse for blown.

OK or NG

OK >> GO TO 8.
NG >> Replace 15A fuse.

5. CHECK THROTTLE CONTROL MOTOR RELAY INPUT SIGNAL CIRCUIT-I

1. Reconnect all harness connectors disconnected.
2. Check voltage between ECM terminal 102 and ground under the following conditions with CONSULT-II or tester.

Ignition switch	Voltage
OFF	Approximately 0V
ON	Battery voltage (11 - 14V)

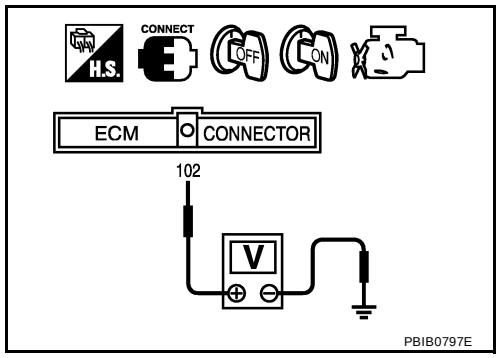

OK or NG

OK >> GO TO 8.
NG >> GO TO 6.

6. CHECK THROTTLE CONTROL MOTOR RELAY INPUT SIGNAL CIRCUIT-II

1. Turn ignition switch OFF.
2. Disconnect ECM harness connector.
3. Disconnect IPDM E/R harness connector E122.
4. Check continuity between ECM terminal 102 and IPDM E/R terminal 36. Refer to Wiring Diagram.

Continuity should exist.

5. Also check harness for short to ground and short to power.

OK or NG

OK >> GO TO 8.
NG >> GO TO 7.

7. DETECT MALFUNCTIONING PART

Check the following.

- Harness connectors E130, E27
- Harness connectors E20, F32
- Harness for open or short between ECM and IPDM E/R

>> Repair open circuit or short to ground or short to power in harness or connectors.

8. CHECK INTERMITTENT INCIDENT

Refer to EC-756, "TROUBLE DIAGNOSIS FOR INTERMITTENT INCIDENT" .

OK or NG

OK >> Replace IPDM E/R. Refer to PG-14, "IPDM E/R (INTELLIGENT POWER DISTRIBUTION MODULE ENGINE ROOM)" .
NG >> Repair or replace harness or connectors.

DTC P1128 THROTTLE CONTROL MOTOR

PFP:16119

Component Description

UBS003FA

The throttle control motor is operated by the ECM and it opens and closes the throttle valve.
The current opening angle of the throttle valve is detected by the throttle position sensor and it provides feedback to the ECM to control the throttle control motor to make the throttle valve opening angle properly in response to driving condition.

On Board Diagnosis Logic

UBS003FB

This self-diagnosis has the one trip detection logic.

DTC No.	Trouble diagnosis name	DTC detecting condition	Possible cause
P1128 1128	Throttle control motor circuit short	ECM detects short both circuits between ECM and throttle control motor.	● Harness or connectors (Throttle control motor circuit is shorted.) ● Electric throttle control actuator (Throttle control motor)

DTC Confirmation Procedure

UBS003FC

NOTE:
If “DTC Confirmation Procedure” has been previously conducted, always turn ignition switch “OFF” and wait at least 10 seconds before conducting the next test.

WITH CONSULT-II

1. Turn ignition switch “ON” and wait at least 2 seconds.
2. Select "DATA MONITOR" mode with CONSULT-II.
3. Start engine and let it idle for 5 seconds.
4. If DTC is detected, go to EC-1063, "Diagnostic Procedure" .

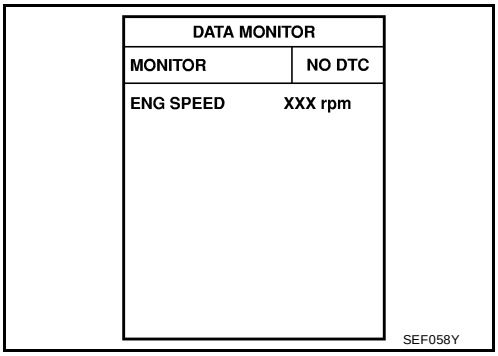

WITH GST

Follow the procedure “WITH CONSULT-II” above.

Wiring Diagram

UBS003FD

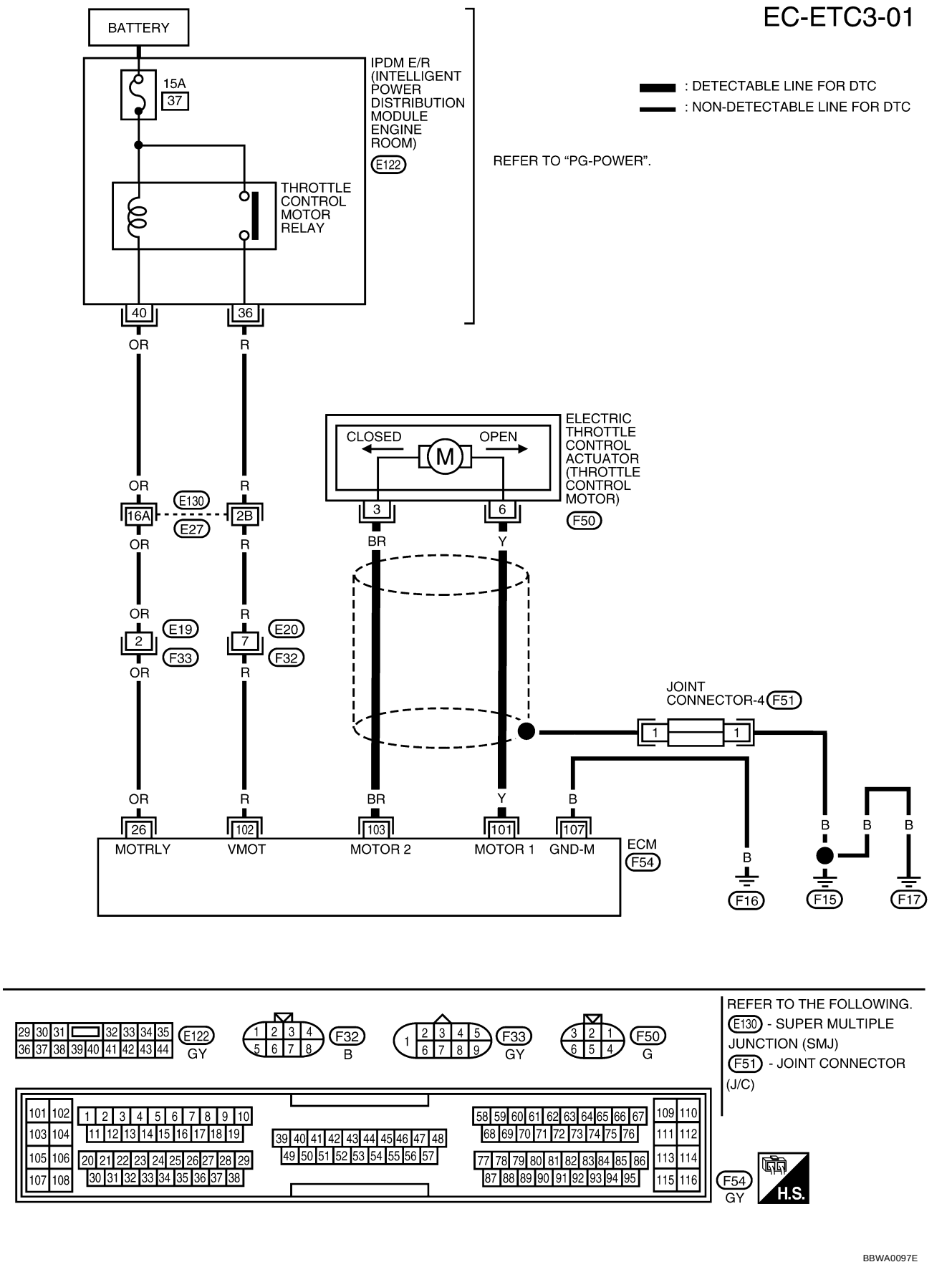

Specification data are reference values and are measured between each terminal and ground.

CAUTION:
Do not use ECM ground terminals when measuring input/output voltage. Doing so may result in damage to the ECM's transistor. Use a ground other than ECM terminals, such as the ground.

TERMINAL NO.	WIRE COLOR	ITEM	CONDITION	DATA (DC Voltage)
101	Y	Throttle control motor (Open)	**[Ignition switch "ON"]** ● Shift lever position is "D" (A/T model) ● Shift lever position is "1st" (M/T model) ● Accelerator pedal is depressing	0 - 14V★ 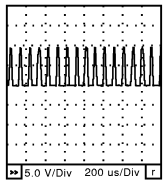 SEC037D
103	BR	Throttle control motor (Close)	**[Ignition switch "ON"]** ● Shift lever position is "D" (A/T model) ● Shift lever position is "1st" (M/T model) ● Accelerator pedal is releasing	0 - 14V★ 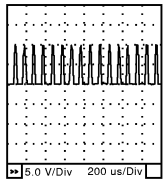 SEC038D

★: Average voltage for pulse signal (Actual pulse signal can be confirmed by oscilloscope.)

Diagnostic Procedure

UBS003FE

1. RETIGHTEN GROUND SCREWS

1. Turn ignition switch "OFF".
2. Loosen and retighten engine ground screws.

>> GO TO 2.

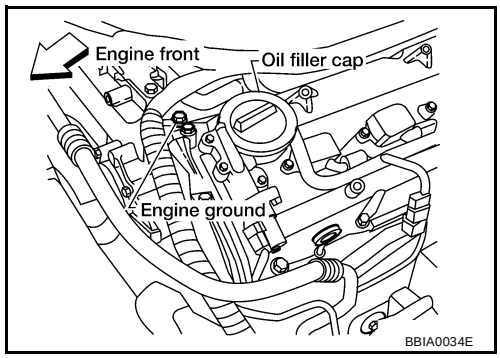

2. CHECK THROTTLE CONTROL MOTOR OUTPUT SIGNAL CIRCUIT FOR OPEN OR SHORT

1. Turn ignition switch “OFF”.
2. Disconnect electric throttle control actuator harness connector.
3. Disconnect ECM harness connector.
4. Check harness continuity between the following terminals. Refer to Wiring Diagram.

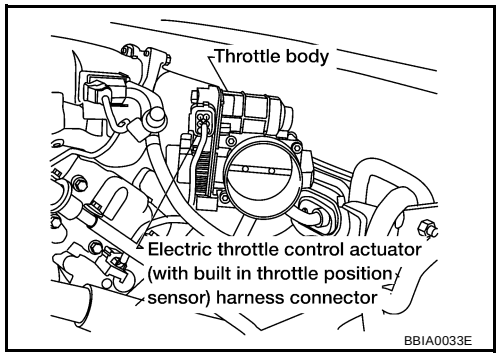

Electric throttle control actuator terminal	ECM terminal	Continuity
3	101	Should not exist
	103	Should exist
6	101	Should exist
	103	Should not exist

5. Also check harness for short to ground and short to power.

OK or NG

OK >> GO TO 3.
NG >> Repair or replace.

3. CHECK THROTTLE CONTROL MOTOR

Refer to EC-1064, "Component Inspection" .

OK or NG

OK >> GO TO 4.
NG >> GO TO 5.

4. CHECK INTERMITTENT INCIDENT

Refer to EC-756, "TROUBLE DIAGNOSIS FOR INTERMITTENT INCIDENT" .

OK or NG

OK >> GO TO 5.
NG >> Repair or replace harness or connectors.

5. REPLACE ELECTRIC THROTTLE CONTROL ACTUATOR

1. Replace the electric throttle control actuator.
2. Perform EC-669, "Throttle Valve Closed Position Learning" .
3. Perform EC-669, "Idle Air Volume Learning" .

>> **INSPECTION END**

Component Inspection

UBS003FF

THROTTLE CONTROL MOTOR

1. Disconnect electric throttle control actuator harness connector.
2. Check resistance between terminals 3 and 6.

Resistance: Approximately 1 - 15 Ω [at 25 °C (77°F)]

3. If NG, replace electric throttle control actuator and go to next step.
4. Perform EC-669, "Throttle Valve Closed Position Learning" .
5. Perform EC-669, "Idle Air Volume Learning" .

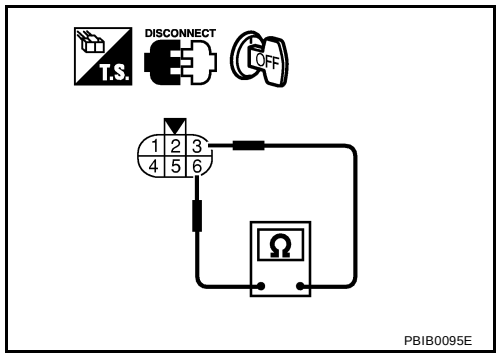

Removal and Installation

UBS003FG

ELECTRIC THROTTLE CONTROL ACTUATOR

Refer to EM-112, "INTAKE MANIFOLD" .

DTC P1143, P1163 HO2S1

PFP:22690

Component Description

UBS003FH

The heated oxygen sensor 1 is placed into the front tube. It detects the amount of oxygen in the exhaust gas compared to the outside air. The heated oxygen sensor 1 has a closed-end tube made of ceramic zirconia. The zirconia generates voltage from approximately 1V in richer conditions to 0V in leaner conditions. The heated oxygen sensor 1 signal is sent to the ECM. The ECM adjusts the injection pulse duration to achieve the ideal air-fuel ratio. The ideal air-fuel ratio occurs near the radical change from 1V to 0V.

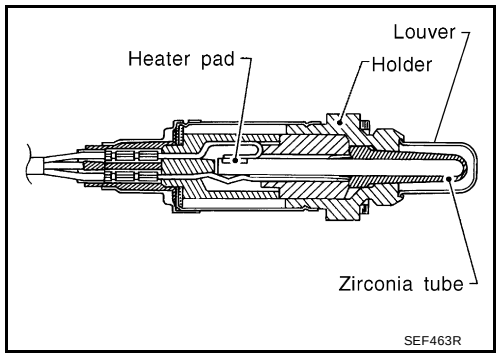

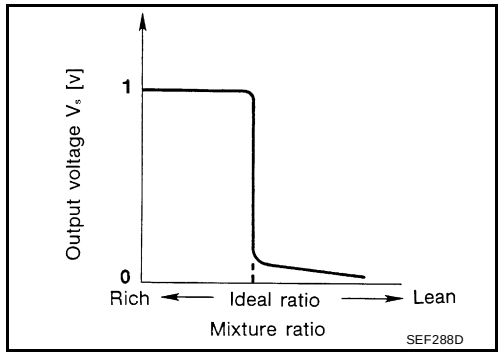

CONSULT-II Reference Value in Data Monitor Mode

UBS003FI

Specification data are reference values.

MONITOR ITEM	CONDITION		SPECIFICATION
HO2S1 (B1) HO2S1 (B2)	● Engine: After warming up	Maintaining engine speed at 2,000 rpm	0 - 0.3V ←→ Approx. 0.6 - 1.0V
HO2S1 MNTR (B1) HO2S1 MNTR (B2)	● Engine: After warming up	Maintaining engine speed at 2,000 rpm	LEAN ←→ RICH Changes more than 5 times during 10 seconds.

On Board Diagnosis Logic

UBS003FJ

To judge the malfunction, the output from the heated oxygen sensor 1 is monitored to determine whether the “rich” output is sufficiently high and whether the “lean” output is sufficiently low. When both the outputs are shifting to the lean side, the malfunction will be detected.

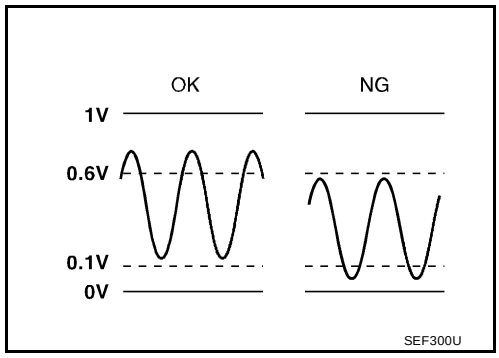

DTC No.	Trouble diagnosis name	DTC detecting condition	Possible cause
P1143 1143 (Bank 1)	Heated oxygen sensor 1 lean shift monitoring	The maximum and minimum voltage from the sensor are not reached to the specified voltages.	● Heated oxygen sensor 1 ● Heated oxygen sensor 1 heater ● Fuel pressure ● Injectors ● Intake air leaks
P1163 1163 (Bank 2)			

DTC Confirmation Procedure

UBS003FK

CAUTION:

Always drive vehicle at a safe speed.

NOTE:

If “DTC Confirmation Procedure” has been previously conducted, always turn ignition switch “OFF” and wait at least 10 seconds before conducting the next test.

TESTING CONDITION:

- **Always perform at a temperature above –10°C (14°F).**
- **Before performing following procedure, confirm that battery voltage is more than 11V at idle.**

WITH CONSULT-II

1. Start engine and warm it up to normal operating temperature.
2. Stop engine and wait at least 10 seconds.
3. Turn ignition switch “ON” and select “HO2S1 (B1) P1143" of “HO2S1” or “HO2S1 (B2) P1163" of “HO2S1” in “DTC WORK SUPPORT” mode with CONSULT-II.
4. Touch “START”.
5. Start engine and let it idle for at least 3 minutes.

   NOTE:
   Never raise engine speed above 3,600 rpm after this step. If the engine speed limit is exceeded, return to step 5.

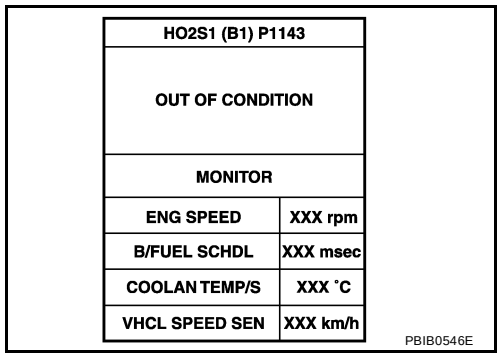

6. When the following conditions are met, “TESTING” will be displayed on the CONSULT-II screen. Maintain the conditions continuously until “TESTING” changes to “COMPLETED”. (It will take approximately 50 seconds or more.)

ENG SPEED	1,200 - 2,600 rpm
Vehicle speed	Less than 100 km/h (62 MPH)
B/FUEL SCHDL	2.5 - 12.0 msec
Selector lever	Suitable position

   If “TESTING” is not displayed after 5 minutes, retry from step 2.

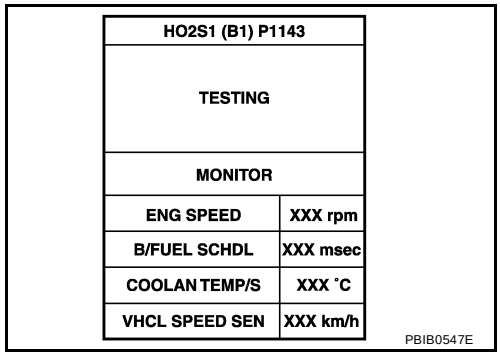

7. Make sure that “OK” is displayed after touching “SELF-DIAG RESULTS”. If “NG” is displayed, refer to EC-1068, "Diagnostic Procedure" .

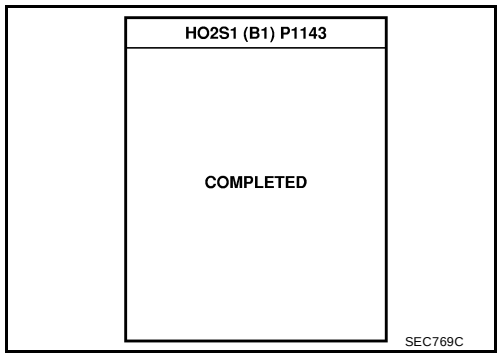

Overall Function Check

UBS003FL

Use this procedure to check the overall function of the heated oxygen sensor 1 circuit. During this check, a 1st trip DTC might not be confirmed.

WITH GST

1. Start engine and warm it up to normal operating temperature.

2. Set voltmeter probes between ECM terminal 91 [HO2S1(B1) signal] or 92 [HO2S1(B2) signal] and engine ground.
3. Check one of the following with engine speed held at 2,000 rpm constant under no load.
- The maximum voltage is over 0.6V at least one time.
- The minimum voltage is over 0.1V at least one time.
4. If NG, go to EC-1068, "Diagnostic Procedure" .

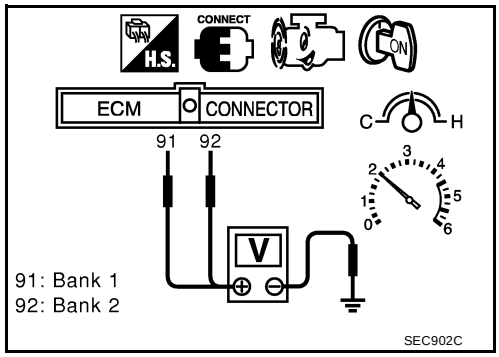

Diagnostic Procedure

UBS003FM

1. RETIGHTEN GROUND SCREWS

1. Turn ignition switch “OFF”.
2. Loosen and retighten engine ground screws.

>> GO TO 2.

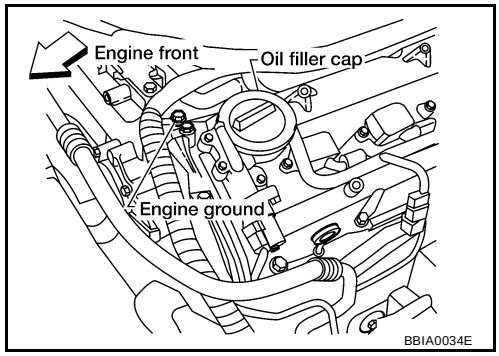

2. RETIGHTEN HEATED OXYGEN SENSOR 1

Loosen and retighten corresponding heated oxygen sensor 1.

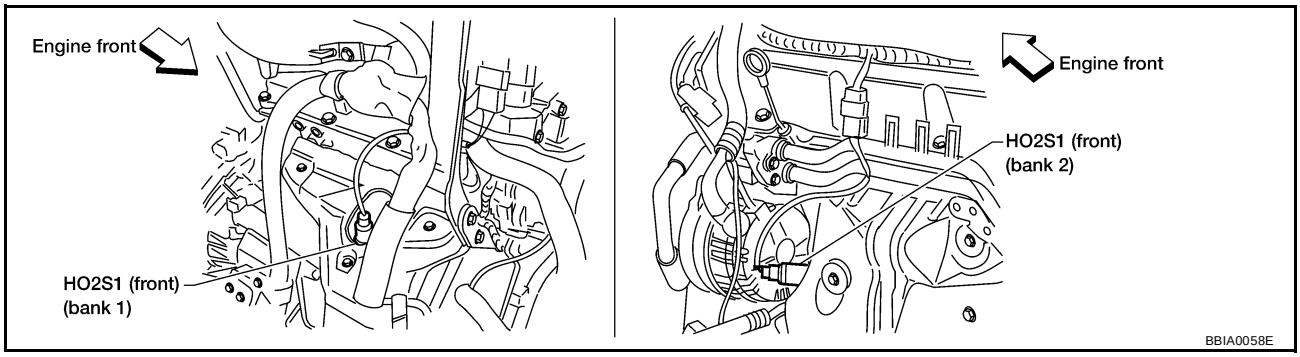

Tightening torque: 40 - 60 N·m (4.1 - 6.2 kg-m, 30 - 44 ft-lb)

>> GO TO 3.

3. CLEAR THE SELF-LEARNING DATA

With CONSULT-II

1. Start engine and warm it up to normal operating temperature.
2. Select “SELF-LEARNING CONT” in “WORK SUPPORT” mode with CONSULT-II.
3. Clear the self-learning control coefficient by touching “CLEAR”.
4. Run engine for at least 10 minutes at idle speed.
   Is the 1st trip DTC P0171 detected?
   Is it difficult to start engine?

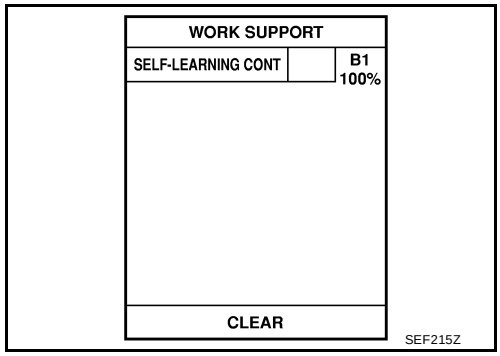

Without CONSULT-II

1. Start engine and warm it up to normal operating temperature.
2. Turn ignition switch “OFF”.
3. Disconnect mass air flow sensor harness connector, and restart and run engine for at least 5 seconds at idle speed.
4. Stop engine and reconnect mass air flow sensor harness connector.
5. Make sure DTC P0102 is displayed.
6. Erase the DTC memory. Refer to EC-687, "HOW TO ERASE EMISSION-RELATED DIAGNOSTIC INFORMATION" .
7. Make sure DTC P0000 is displayed.
8. Run engine for at least 10 minutes at idle speed.
   Is the 1st trip DTC P0171 detected?
   Is it difficult to start engine?

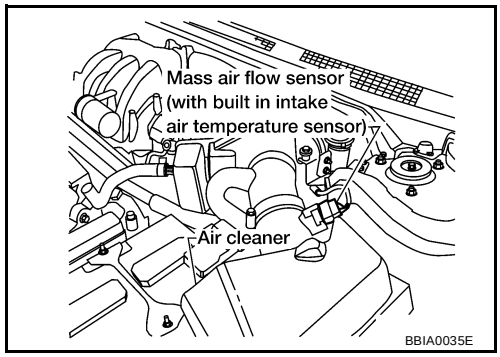

Yes or No

Yes >> Perform trouble diagnosis for DTC P0171. Refer to EC-877 .
No >> GO TO 4.

4. CHECK HEATED OXYGEN SENSOR 1 HEATER

Refer to EC-780, "Component Inspection" .

OK or NG

OK >> GO TO 5.
NG >> Replace malfunctioning heated oxygen sensor 1.

5. CHECK HEATED OXYGEN SENSOR 1

Refer to EC-1070, "Component Inspection" .

OK or NG

OK >> GO TO 6.
NG >> Replace malfunctioning heated oxygen sensor 1.

6. CHECK INTERMITTENT INCIDENT

Refer to EC-756, "TROUBLE DIAGNOSIS FOR INTERMITTENT INCIDENT" .
For circuit, refer to EC-829, "Wiring Diagram" .

>> **INSPECTION END**

Component Inspection

UBS003FN

HEATED OXYGEN SENSOR 1

With CONSULT-II

1. Start engine and warm it up to normal operating temperature.
2. Select “MANU TRIG” and adjust “TRIGGER POINT” to 100% in “DATA MONITOR” mode with CONSULT-II.
3. Select “HO2S1 (B1)/(B2)” and “HO2S1 MNTR (B1)/(B2)”.
4. Hold engine speed at 2,000 rpm under no load during the following steps.
5. Touch “RECORD” on CONSULT-II screen.

DATA MONITOR	
MONITOR	NO DTC
ENG SPEED	XXX rpm
MAS A/F SE-B1	XXX V
COOLAN TEMP/S	XXX °C
HO2S1 (B1)	XXX V
HO2S1 MNTR (B1)	LEAN

SEF646Y

6. Check the following.
   - “HO2S1 MNTR (B1)/(B2)” in “DATA MONITOR” mode changes from “RICH” to “LEAN” to “RICH” 5 times in 10 seconds.
     5 times (cycles) are counted as shown at right.
   - “HO2S1 (B1)/(B2)” voltage goes above 0.6V at least once.
   - “HO2S1 (B1)/(B2)” voltage goes below 0.3V at least once.
   - “HO2S1 (B1)/(B2)” voltage never exceeds 1.0V.

Bank 1

cycle	1	2	3	4	5
HO2S1 MNTR (B1)	R-L-R-L-R-L-R-L-R-L-R				

Bank 2

cycle	1	2	3	4	5
HO2S1 MNTR (B2)	R-L-R-L-R-L-R-L-R-L-R				

R means HO2S1 MNTR (B1)/(B2) indicates RICH

L means HO2S1 MNTR (B1)/(B2) indicates LEAN

SEF647Y

Trigger	ENG SPEED	HO2S1 (B1)
	rpm	V
XXX	XXX	XXX
XXX	XXX	XXX
XXX	XXX	XXX
XXX	XXX	XXX
XXX	XXX	XXX
XXX	XXX	XXX
XXX	XXX	XXX
XXX	XXX	XXX
XXX	XXX	XXX
XXX	XXX	XXX
XXX	XXX	XXX
XXX	XXX	XXX

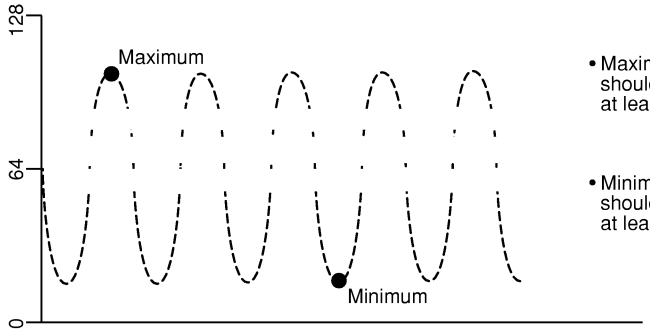

- Maximum voltage should be over 0.6V at least one time.
- Minimum voltage should be below 0.30V at least one time.

SEF648Y

CAUTION:

- **Discard any heated oxygen sensor which has been dropped from a height of more than 0.5 m (19.7 in) onto a hard surface such as a concrete floor; use a new one.**
- **Before installing new oxygen sensor, clean exhaust system threads using Oxygen Sensor Thread Cleaner tool J-43897-18 or J-43897-12 and approved anti-seize lubricant.**

Without CONSULT-II

1. Start engine and warm it up to normal operating temperature.
2. Set voltmeter probes between ECM terminal 91 [HO2S1 (B1) signal] or 92 [HO2S1 (B2) signal] and engine ground.

3. Check the following with engine speed held at 2,000 rpm constant under no load.
   - The voltage fluctuates between 0 to 0.3V and 0.6 to 1.0V more than 5 times within 10 seconds.
   - The maximum voltage is over 0.6V at least one time.
   - The minimum voltage is below 0.3V at least one time.
   - The voltage never exceeds 1.0V.

   1 time: 0 - 0.3V → 0.6 - 1.0V → 0 - 0.3V
   2 times: 0 - 0.3V → 0.6 - 1.0V → 0 - 0.3V → 0.6 - 1.0V

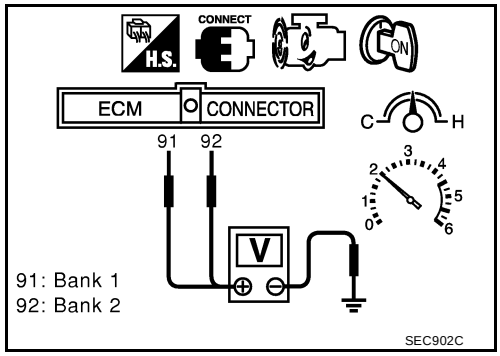

CAUTION:
- **Discard any heated oxygen sensor which has been dropped from a height of more than 0.5 m (19.7 in) onto a hard surface such as a concrete floor; use a new one.**
- **Before installing new oxygen sensor, clean exhaust system threads using Oxygen Sensor Thread Cleaner tool J-43897-18 or J-43897-12 and approved anti-seize lubricant.**

Removal and Installation

UBS003FO

HEATED OXYGEN SENSOR 1

Refer to EM-116, "EXHAUST MANIFOLD AND THREE WAY CATALYST" .

DTC P1144, P1164 HO2S1

PFP:22690

Component Description

UBS003FP

The heated oxygen sensor 1 is placed into the front tube. It detects the amount of oxygen in the exhaust gas compared to the outside air. The heated oxygen sensor 1 has a closed-end tube made of ceramic zirconia. The zirconia generates voltage from approximately 1V in richer conditions to 0V in leaner conditions. The heated oxygen sensor 1 signal is sent to the ECM. The ECM adjusts the injection pulse duration to achieve the ideal air-fuel ratio. The ideal air-fuel ratio occurs near the radical change from 1V to 0V.

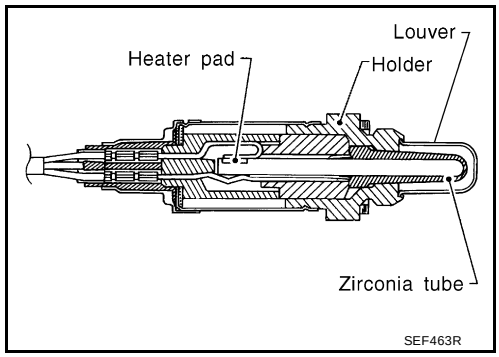

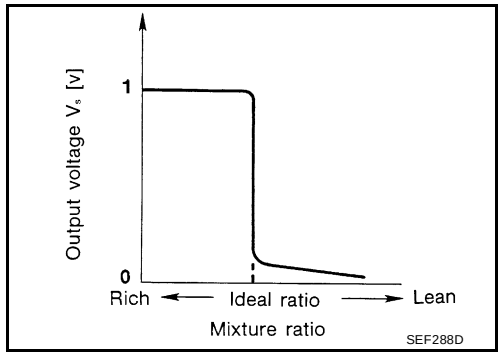

CONSULT-II Reference Value in Data Monitor Mode

UBS003FQ

Specification data are reference values.

MONITOR ITEM	CONDITION		SPECIFICATION
HO2S1 (B1) HO2S1 (B2)	● Engine: After warming up	Maintaining engine speed at 2,000 rpm	0 - 0.3V ←→ Approx. 0.6 - 1.0V
HO2S1 MNTR (B1) HO2S1 MNTR (B2)	● Engine: After warming up	Maintaining engine speed at 2,000 rpm	LEAN ←→ RICH Changes more than 5 times during 10 seconds.

On Board Diagnosis Logic

UBS003FR

To judge the malfunction, the output from the heated oxygen sensor 1 is monitored to determine whether the “rich” output is sufficiently high. The “lean” output is sufficiently low. When both the outputs are shifting to the rich side, the malfunction will be detected.

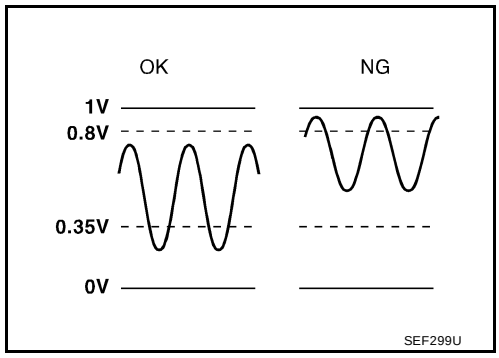

DTC No.	Trouble diagnosis name	DTC detecting condition	Possible cause
P1144 1144 (Bank 1)	Heated oxygen sensor 1 rich shift monitoring	The maximum and minimum voltages from the sensor are beyond the specified voltages.	● Heated oxygen sensor 1 ● Heated oxygen sensor 1 heater ● Fuel pressure ● Injectors
P1164 1164 (Bank 2)			

DTC Confirmation Procedure

UBS003FS

CAUTION:

Always drive vehicle at a safe speed.

NOTE:

If "DTC Confirmation Procedure" has been previously conducted, always turn ignition switch "OFF" and wait at least 10 seconds before conducting the next test.

TESTING CONDITION:

- **Always perform at a temperature above –10°C (14°F).**
- **Before performing the following procedure, confirm that battery voltage is more than 11V at idle.**

WITH CONSULT-II

1. Start engine and warm it up to normal operating temperature.
2. Stop engine and wait at least 5 seconds.
3. Turn ignition switch "ON" and select "HO2S1 (B1) P1144" or "HO2S1 (B2) P1164" of "HO2S1" in "DTC WORK SUPPORT" mode with CONSULT-II.
4. Touch "START".
5. Start engine and let it idle for at least 3 minutes.

   NOTE:
   Never raise engine speed above 3,600 rpm after this step. If the engine speed limit is exceeded, return to step 5.

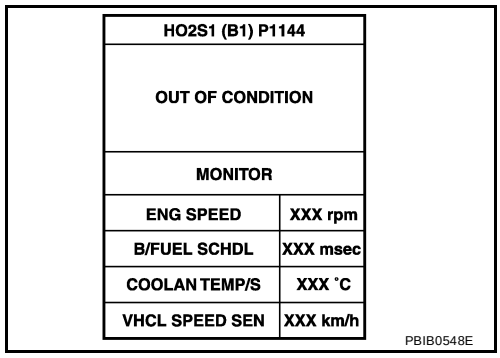

6. When the following conditions are met, "TESTING" will be displayed on the CONSULT-II screen. Maintain the conditions continuously until "TESTING" changes to "COMPLETED". (It will take approximately 50 seconds or more.)

ENG SPEED	1,200 - 2,600 rpm
Vehicle speed	Less than 100 km/h (62 MPH)
B/FUEL SCHDL	2.5 - 12.0 msec
Selector lever	Suitable position

   If "TESTING" is not displayed after 5 minutes, retry from step 2.

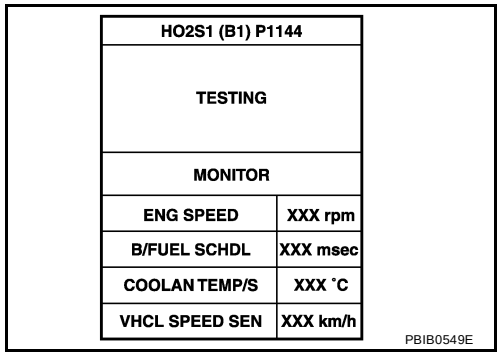

7. Make sure that "OK" is displayed after touching "SELF-DIAG RESULTS". If "NG" is displayed, refer to EC-1074, "Diagnostic Procedure" .

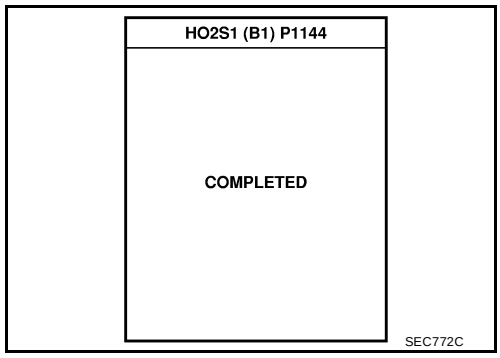

Overall Function Check

UBS003FT

Use this procedure to check the overall function of the heated oxygen sensor 1 circuit. During this check, a 1st trip DTC might not be confirmed.

WITH GST

1. Start engine and warm it up to normal operating temperature.

2. Set voltmeter probes between ECM terminal 91 [HO2S1(B1) signal] 92 [HO2S1(B2) signal] and engine ground.
3. Check one of the following with engine speed held at 2,000 rpm constant under no load.
- The maximum voltage is below 0.8V at least one time.
- The minimum voltage is below 0.35V at least one time.
4. If NG, go to EC-1074, "Diagnostic Procedure" .

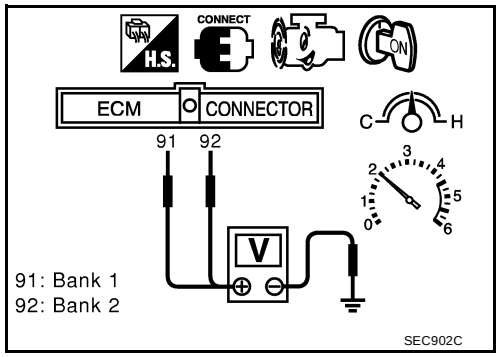

Diagnostic Procedure

UBS003FU

1. RETIGHTEN GROUND SCREWS

1. Turn ignition switch “OFF”.
2. Loosen and retighten engine ground screws.

>> GO TO 2.

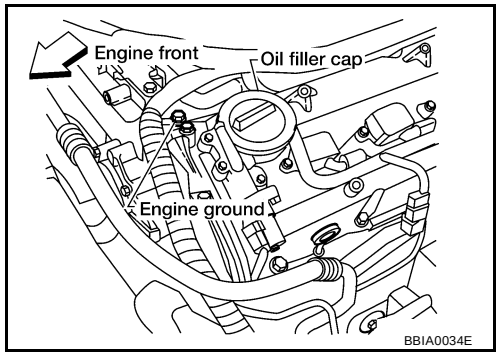

2. RETIGHTEN HEATED OXYGEN SENSOR 1

Loosen and retighten heated oxygen sensor 1.

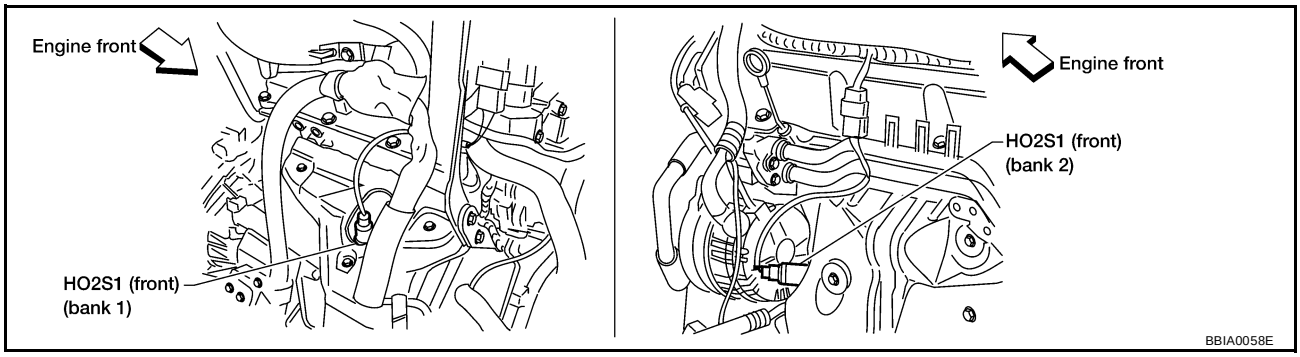

Tightening torque: 40 - 60 N·m (4.1 - 6.2 kg-m, 30 - 44 ft-lb)

>> GO TO 3.

3. CLEAR THE SELF-LEARNING DATA

With CONSULT-II

1. Start engine and warm it up to normal operating temperature.
2. Select “SELF-LEARNING CONT” in “WORK SUPPORT” mode with CONSULT-II.
3. Clear the self-learning control coefficient by touching “CLEAR”.
4. Run engine for at least 10 minutes at idle speed.
   Is the 1st trip DTC P0172 detected?
   Is it difficult to start engine?

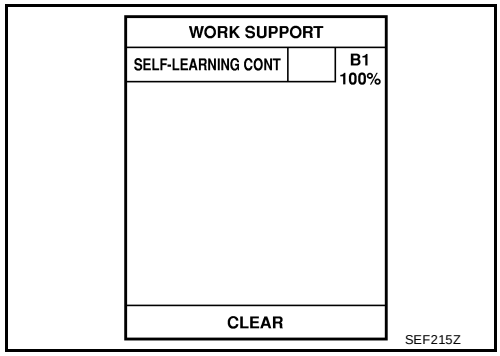

Without CONSULT-II

1. Start engine and warm it up to normal operating temperature.
2. Turn ignition switch “OFF”.
3. Disconnect mass air flow sensor harness connector, and restart and run engine for at least 5 seconds at idle speed.
4. Stop engine and reconnect mass air flow sensor harness connector.
5. Make sure DTC P0102 is displayed.
6. Erase the DTC memory. Refer to EC-687, "HOW TO ERASE EMISSION-RELATED DIAGNOSTIC INFORMATION" .
7. Make sure DTC P0000 is displayed.
8. Run engine for at least 10 minutes at idle speed.
   Is the 1st trip DTC P0172 detected?
   Is it difficult to start engine?

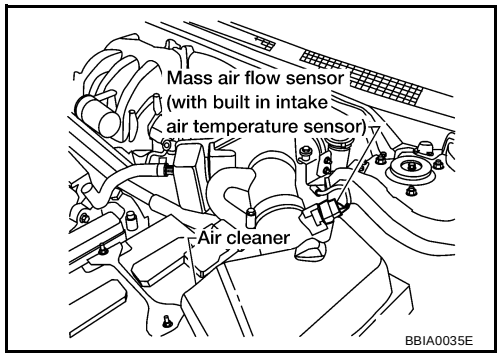

Yes or No

Yes >> Perform trouble diagnosis for DTC P0172. Refer to EC-885 .
No >> GO TO 4.

4. CHECK HO2S1 CONNECTOR FOR WATER

1. Turn ignition switch “OFF”.
2. Disconnect heated oxygen sensor 1 harness connector.
   Bank 1

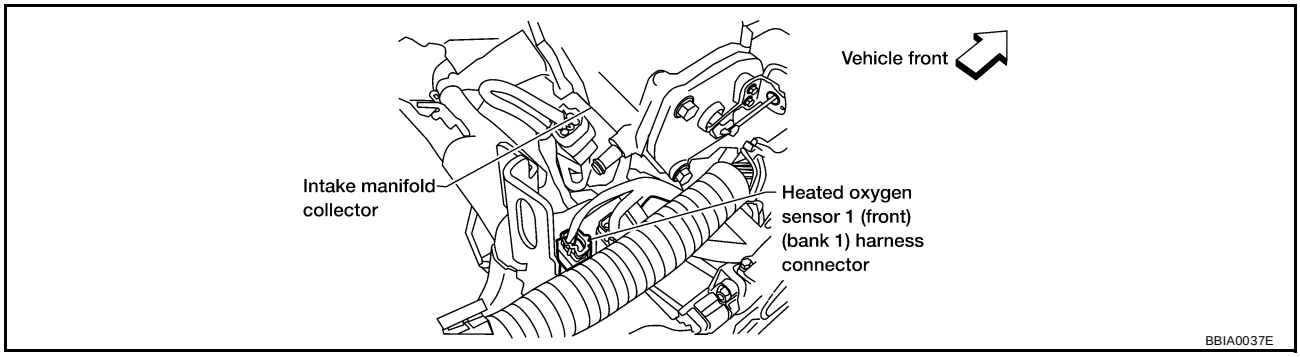

   Bank 2

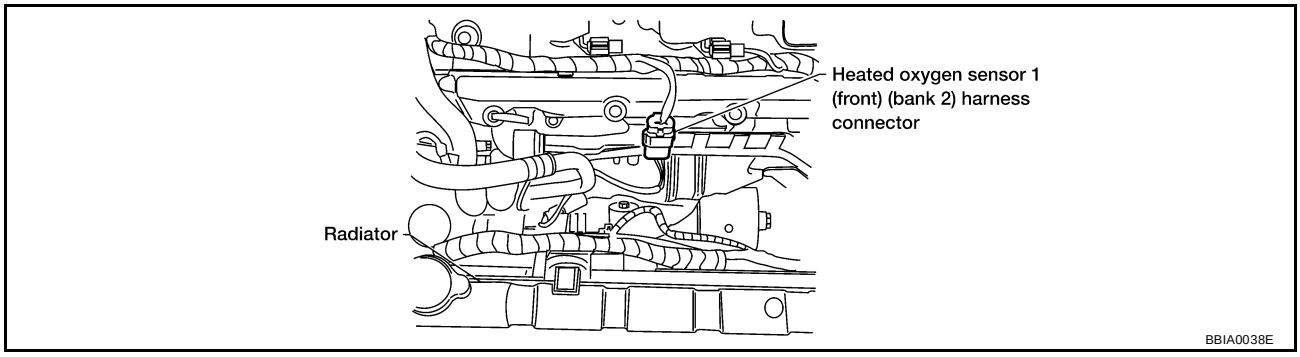

3. Check connectors for water.

   Water should not exist.

OK or NG

OK >> GO TO 5.
NG >> Repair or replace harness or connectors.

5. CHECK HEATED OXYGEN SENSOR 1 HEATER

Refer to EC-780, "Component Inspection" .

OK or NG

OK >> GO TO 6.
NG >> Replace malfunctioning heated oxygen sensor 1.

6. CHECK HEATED OXYGEN SENSOR 1

Refer to EC-1077, "Component Inspection" .

OK or NG

OK >> GO TO 7.
NG >> Replace malfunctioning heated oxygen sensor 1.

7. CHECK INTERMITTENT INCIDENT

Refer to EC-756, "TROUBLE DIAGNOSIS FOR INTERMITTENT INCIDENT" .
For circuit, refer to EC-829, "Wiring Diagram" .

>> **INSPECTION END**

Component Inspection

UBS003FV

HEATED OXYGEN SENSOR 1

With CONSULT-II

1. Start engine and warm it up to normal operating temperature.
2. Select “MANU TRIG” and adjust “TRIGGER POINT” to 100% in “DATA MONITOR” mode with CONSULT-II.
3. Select “HO2S1 (B1)” and “HO2S1 MNTR (B1)”.
4. Hold engine speed at 2,000 rpm under no load during the following steps.
5. Touch “RECORD” on CONSULT-II screen.

DATA MONITOR	
MONITOR	NO DTC
ENG SPEED	XXX rpm
MAS A/F SE-B1	XXX V
COOLAN TEMP/S	XXX °C
HO2S1 (B1)	XXX V
HO2S1 MNTR (B1)	LEAN

SEF646Y

6. Check the following.
   - “HO2S1 MNTR (B1)/(B2)” in “DATA MONITOR” mode changes from “RICH” to “LEAN” to “RICH” 5 times in 10 seconds.
     5 times (cycles) are counted as shown at right.
   - “HO2S1 (B1)/(B2)” voltage goes above 0.6V at least once.
   - “HO2S1 (B1)/(B2)” voltage goes below 0.3V at least once.
   - “HO2S1 (B1)/(B2)” voltage never exceeds 1.0V.

Bank 1

cycle	1	2	3	4	5
HO2S1 MNTR (B1)	R-L-R-L-R-L-R-L-R-L-R				

Bank 2

cycle	1	2	3	4	5
HO2S1 MNTR (B2)	R-L-R-L-R-L-R-L-R-L-R				

R means HO2S1 MNTR (B1)/(B2) indicates RICH

L means HO2S1 MNTR (B1)/(B2) indicates LEAN

SEF647Y

Trigger	ENG SPEED	HO2S1 (B1)
	rpm	V
XXX	XXX	XXX
XXX	XXX	XXX
XXX	XXX	XXX
XXX	XXX	XXX
XXX	XXX	XXX
XXX	XXX	XXX
XXX	XXX	XXX
XXX	XXX	XXX
XXX	XXX	XXX
XXX	XXX	XXX
XXX	XXX	XXX
XXX	XXX	XXX

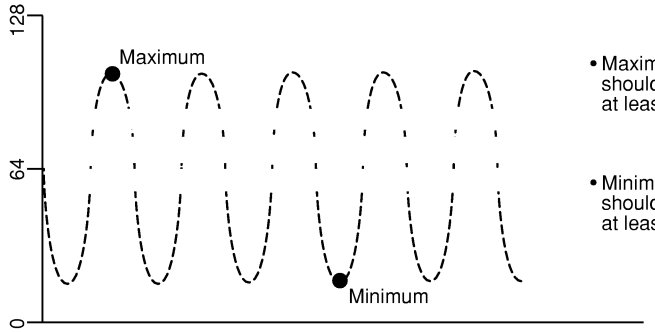

SEF648Y

CAUTION:

- **Discard any heated oxygen sensor which has been dropped from a height of more than 0.5 m (19.7 in) onto a hard surface such as a concrete floor; use a new one.**
- **Before installing new oxygen sensor, clean exhaust system threads using Oxygen Sensor Thread Cleaner tool J-43897-18 or J-43897-12 and approved anti-seize lubricant.**

Without CONSULT-II

1. Start engine and warm it up to normal operating temperature.
2. Set voltmeter probes between ECM terminal 91 [HO2S1 (B1) signal] or 92 [HO2S1 (B2) signal] and engine ground.

3. Check the following with engine speed held at 2,000 rpm constant under no load.
   - The voltage fluctuates between 0 to 0.3V and 0.6 to 1.0V more than 5 times within 10 seconds.
   - The maximum voltage is over 0.6V at least one time.
   - The minimum voltage is below 0.3V at least one time.
   - The voltage never exceeds 1.0V.

   1 time: 0 - 0.3V → 0.6 - 1.0V → 0 - 0.3V
   2 times: 0 - 0.3V → 0.6 - 1.0V → 0 - 0.3V → 0.6 - 1.0V

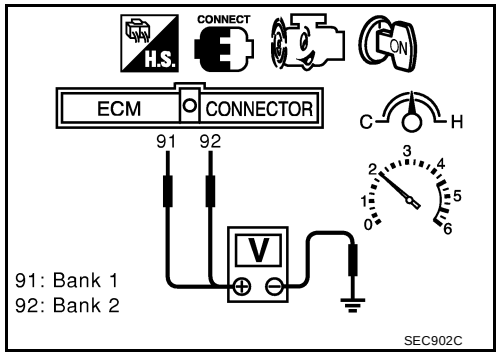

CAUTION:
- **Discard any heated oxygen sensor which has been dropped from a height of more than 0.5 m (19.7 in) onto a hard surface such as a concrete floor; use a new one.**
- **Before installing new oxygen sensor, clean exhaust system threads using Oxygen Sensor Thread Cleaner tool J-43897-18 or J-43897-12 and approved anti-seize lubricant.**

Removal and Installation

UBS003FW

HEATED OXYGEN SENSOR 1

Refer to EM-116, "EXHAUST MANIFOLD AND THREE WAY CATALYST" .

DTC P1146, P1166 HO2S2

PFP:226A0

Component Description

UBS003FX

The heated oxygen sensor 2, after three way catalyst, monitors the oxygen level in the exhaust gas on each bank.
Even if switching characteristics of the heated oxygen sensor 1 are shifted, the air fuel ratio is controlled to stoichiometric, by the signal from the heated oxygen sensor 2.
This sensor is made of ceramic zirconia. The zirconia generates voltage from approximately 1V in richer conditions to 0V in leaner conditions.
Under normal conditions the heated oxygen sensor 2 is not used for engine control operation.

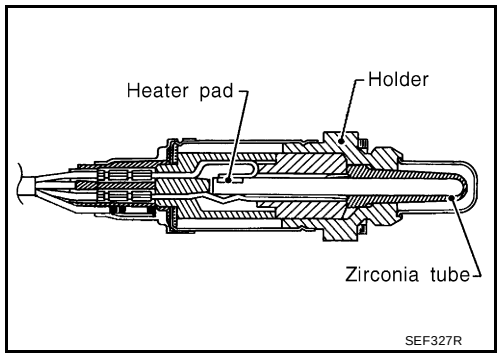

CONSULT-II Reference Value in Data Monitor Mode

UBS003FY

Specification data are reference values.

MONITOR ITEM	CONDITION		SPECIFICATION
HO2S2 (B1) HO2S2 (B2)	● Engine: After warming up	Revving engine from idle to 3,000 rpm quickly.	0 - 0.3V ←→ Approx. 0.6 - 1.0V
HO2S2 MNTR (B1) HO2S2 MNTR (B2)	● Engine: After warming up	Revving engine from idle to 3,000 rpm quickly.	LEAN ←→ RICH

On Board Diagnosis Logic

UBS003FZ

The heated oxygen sensor 2 has a much longer switching time between rich and lean than the heated oxygen sensor 1. The oxygen storage capacity before the three way catalyst causes the longer switching time. To judge the malfunctions of heated oxygen sensor 2, ECM monitors whether the minimum voltage of sensor is sufficiently low during the various driving condition such as fuel-cut.

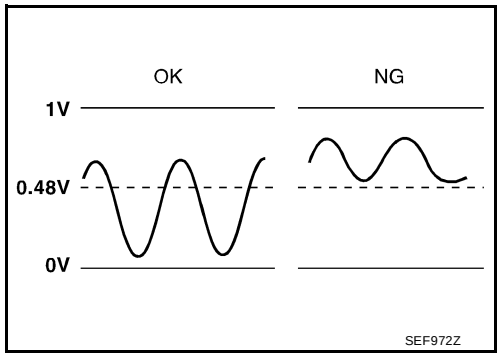

DTC No.	Trouble diagnosis name	DTC detecting condition	Possible cause
P1146 1146 (Bank 1)	Heated oxygen sensor 2 minimum voltage monitoring	The minimum voltage from the sensor is not reached to the specified voltage.	● Harness or connectors (The sensor circuit is open or shorted) ● Heated oxygen sensor 2 ● Fuel pressure ● Injectors
P1166 1166 (Bank 2)			

DTC Confirmation Procedure

UBS003G0

NOTE:
If "DTC confirmation Procedure" has been previously conducted, always turn ignition switch "OFF" and wait at least 10 seconds before conducting the next test.
TESTING CONDITION:
Open engine hood before conducting following procedure.

WITH CONSULT-II

1. Start engine and warm it up to normal operating temperature.
2. Turn ignition switch “OFF” and wait at least 10 seconds.
3. Turn ignition switch "ON".
4. Select "DATA MONITOR" mode with CONSULT-II.

5. Make sure that "COOLAN TEMP/S" indicates more than 70°C (158°F).
6. Select “HO2S2 (B1) P1146” or “HO2S2 (B2) P1166” of “HO2S2” in “DTC WORK SUPPORT” mode with CONSULT-II.
7. Start engine and following the instruction of CONSULT-II.

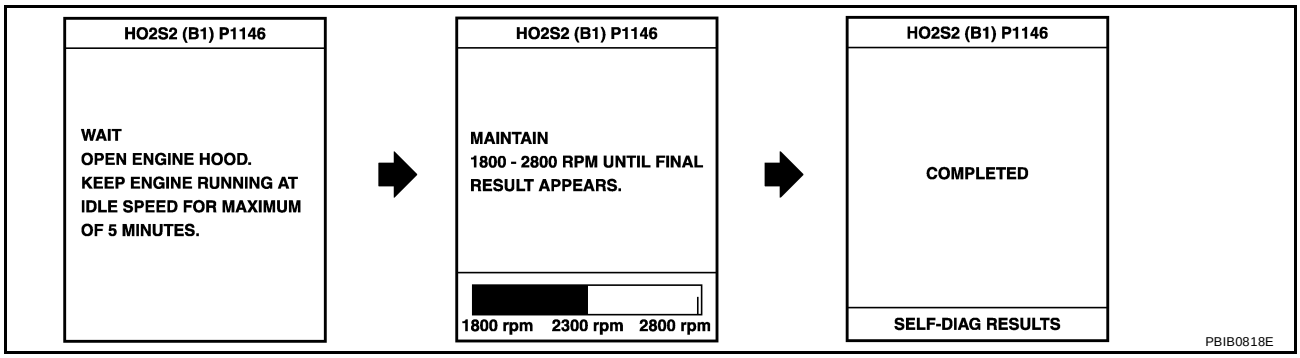

8. Make sure that “OK” is displayed after touching “SELF-DIAG RESULTS”.
   If "NG" is displayed, refer to EC-1084, "Diagnostic Procedure" .
   If "CAN NOT BE DIAGNOSED" is displayed, perform the following.

a. Stop engine and cool down until "COOLAN TEMP/S" indicates less than 70°C (158°F).
b. Turn ignition switch "ON".
c. Select "DATA MONITOR" mode with CONSULT-II.
d. Start engine.
e. Return to step 6 again when the "COOLAN TEMP/S" reaches to 70°C (158°F).

Overall Function Check

UBS003G1

Use this procedure to check the overall function of the heated oxygen sensor 2 circuit. During this check, a 1st trip DTC might not be confirmed.

WITH GST

1. Start engine and drive vehicle at a speed of more than 70 km/h (43 MPH) for 2 consecutive minutes.
2. Stop vehicle with engine running.
3. Set voltmeter probes between ECM terminal 88 [HO2S2 (B1) signal] or 90 [HO2S2 (B2) signal] and engine ground.
4. Check the voltage when revving up to 4,000 rpm under no load at least 10 times.
   (Depress and release accelerator pedal as soon as possible.)
   The voltage should be below 0.48V at least once during this procedure.
   If the voltage can be confirmed in step 4, step 5 is not necessary.
5. Keep vehicle at idling for 10 minutes, then check the voltage. Or check the voltage when coasting from 80 km/h (50 MPH) in “D” position with “OD” OFF (A/T), 3rd gear position (M/T).
   The voltage should be below 0.48V at least once during this procedure.

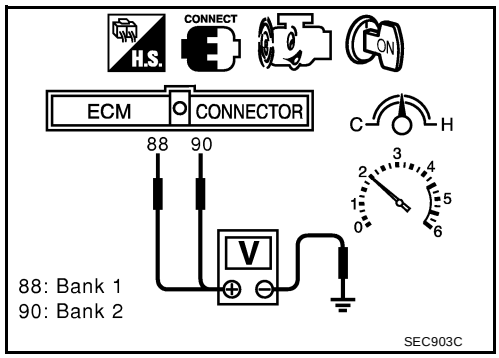

6. If NG, go to EC-1084, "Diagnostic Procedure" .

Wiring Diagram
BANK 1

UBS003G2

EC-O2S2B1-01

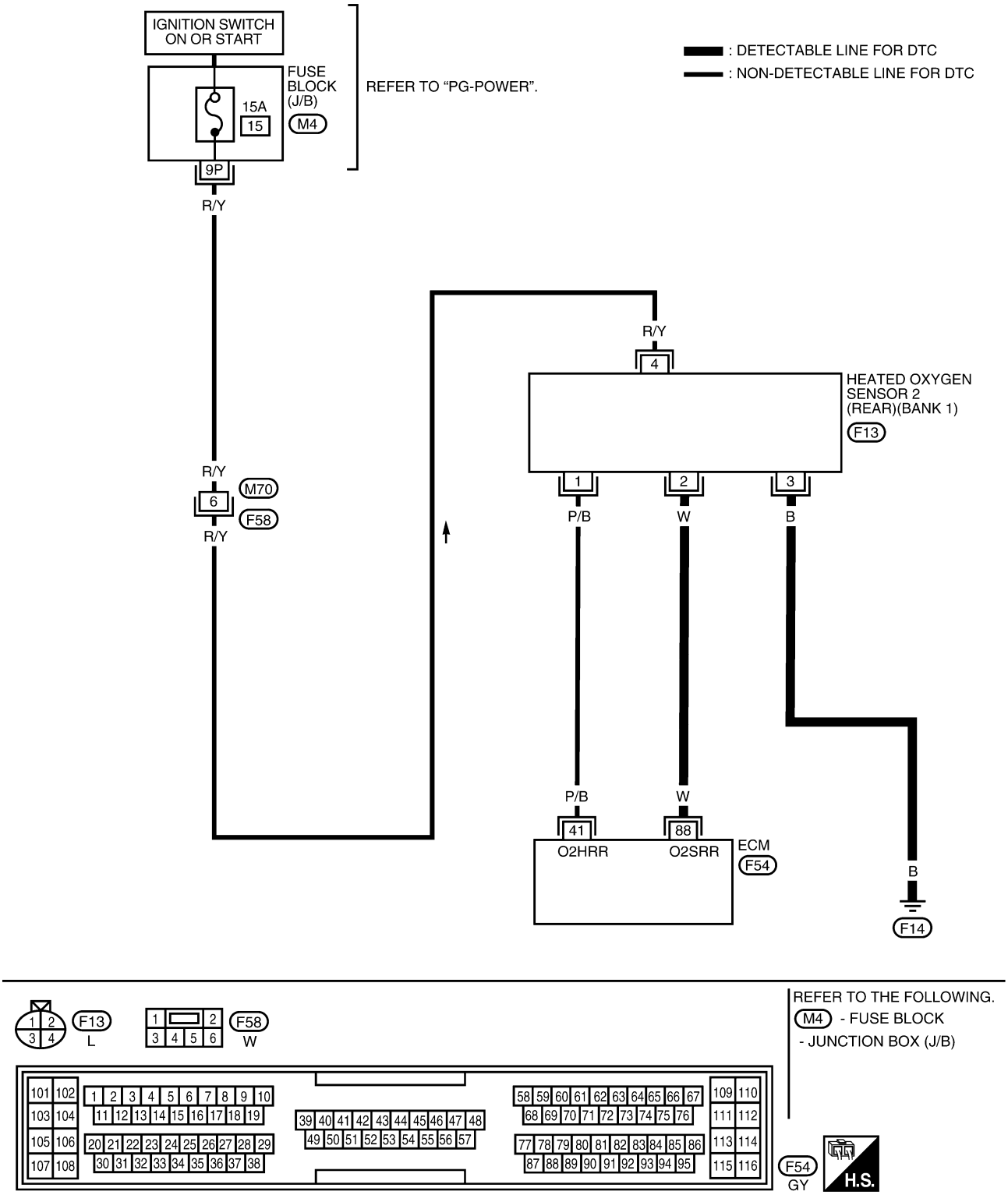

BBWA0058E

Specification data are reference values and are measured between each terminal and ground.

CAUTION:

Do not use ECM ground terminals when measuring input/output voltage. Doing so may result in damage to the ECM's transistor. Use a ground other than ECM terminals, such as the ground.

TERMINAL NO.	WIRE COLOR	ITEM	CONDITION	DATA (DC Voltage)
88	W	Heated oxygen sensor 2 (bank 1)	**[Engine is running]** ● **Warm-up condition** ● Engine speed is 2,000 rpm.	0 - Approximately 1.0V

BANK 2

EC-O2S2B2-01

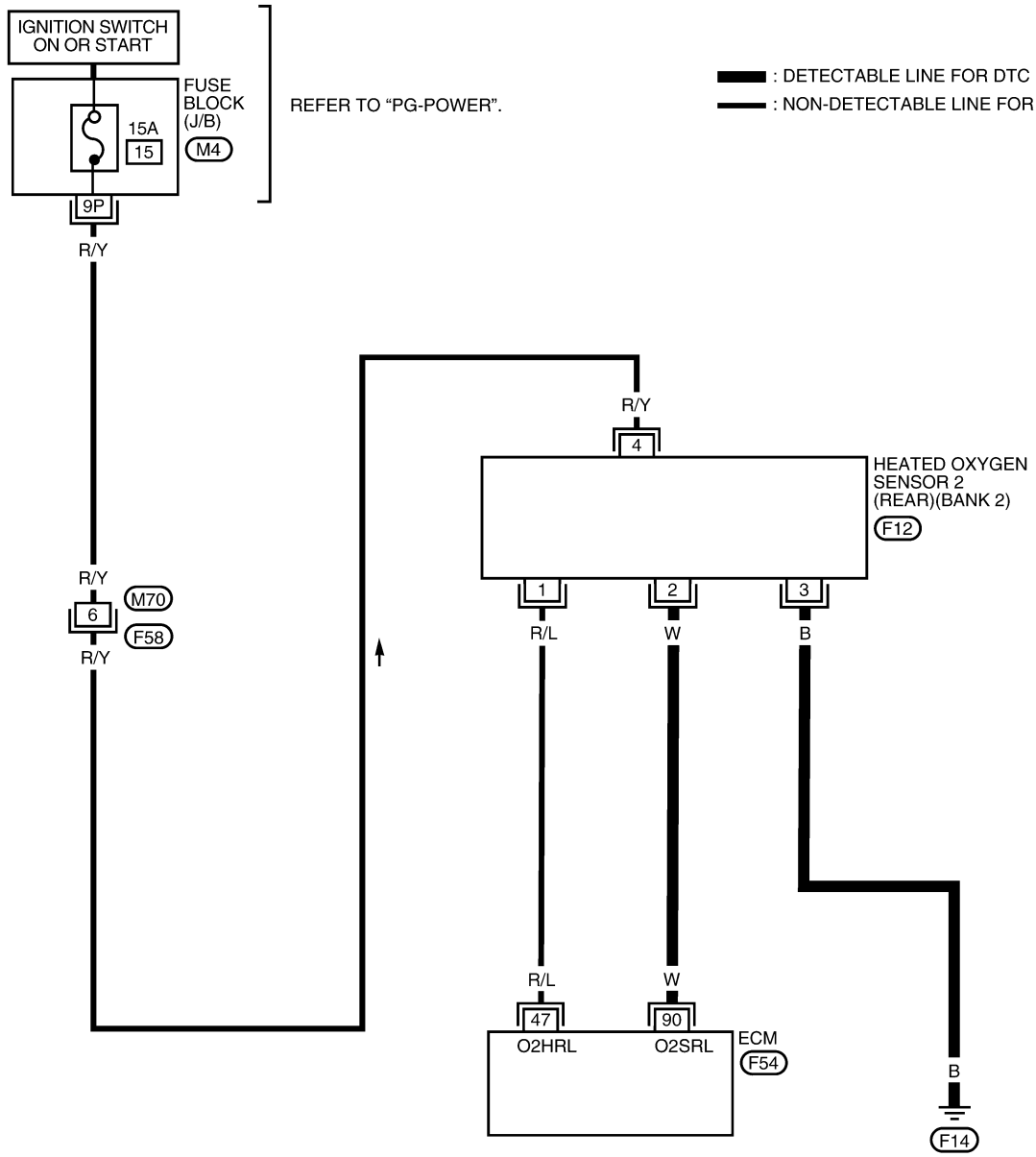

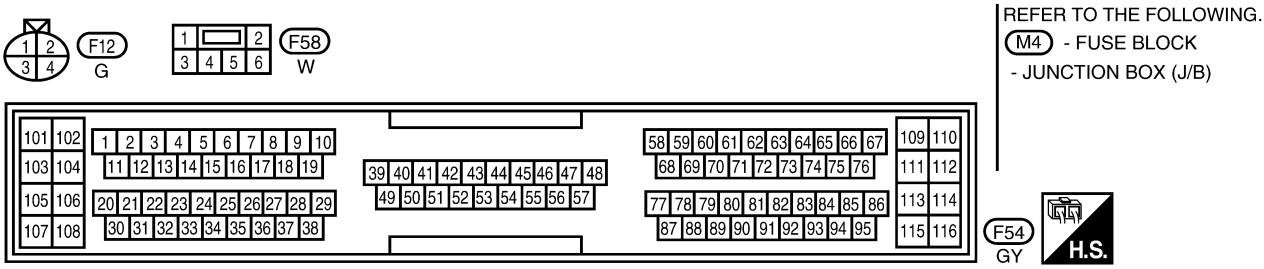

BBWA0059E

Specification data are reference values and are measured between each terminal and ground.

CAUTION:
Do not use ECM ground terminals when measuring input/output voltage. Doing so may result in damage to the ECM's transistor. Use a ground other than ECM terminals, such as the ground.

TERMINAL NO.	WIRE COLOR	ITEM	CONDITION	DATA (DC Voltage)
90	W	Heated oxygen sensor 2 (bank 2)	**[Engine is running]** ● **Warm-up condition** ● Engine speed is 2,000 rpm.	0 - Approximately 1.0V

Diagnostic Procedure

UBS003G3

1. RETIGHTEN GROUND SCREWS

1. Turn ignition switch “OFF”.
2. Loosen and retighten engine ground screws.

>> GO TO 2.

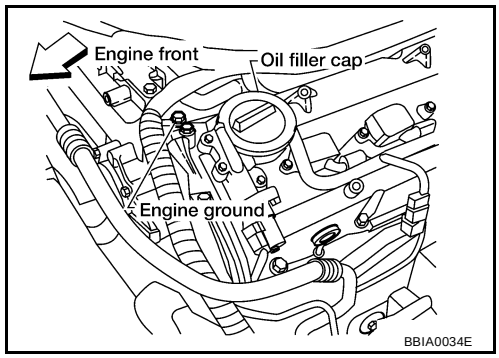

2. CLEAR THE SELF-LEARNING DATA

With CONSULT-II

1. Start engine and warm it up to normal operating temperature.
2. Select “SELF-LEARNING CONT” in “WORK SUPPORT” mode with CONSULT-II.
3. Clear the self-learning control coefficient by touching “CLEAR”.
4. Run engine for at least 10 minutes at idle speed.
   Is the 1st trip DTC P0172 or P0175 detected?
   Is it difficult to start engine?

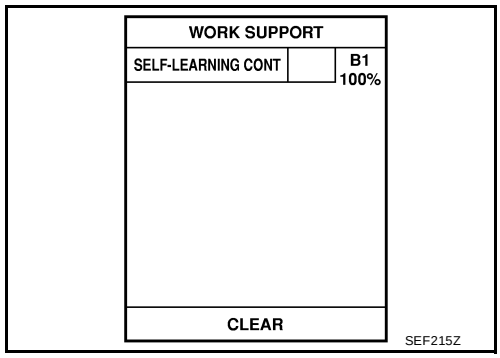

Without CONSULT-II

1. Start engine and warm it up to normal operating temperature.
2. Turn ignition switch “OFF”.
3. Disconnect mass air flow sensor harness connector, and restart and run engine for at least 5 seconds at idle speed.
4. Stop engine and reconnect mass air flow sensor harness connector.
5. Make sure DTC P0102 is displayed.
6. Erase the DTC memory. Refer to EC-687, "HOW TO ERASE EMISSION-RELATED DIAGNOSTIC INFORMATION" .
7. Make sure DTC P0000 is displayed.
8. Run engine for at least 10 minutes at idle speed.
   Is the 1st trip DTC P0172 or P0175 detected?
   Is it difficult to start engine?

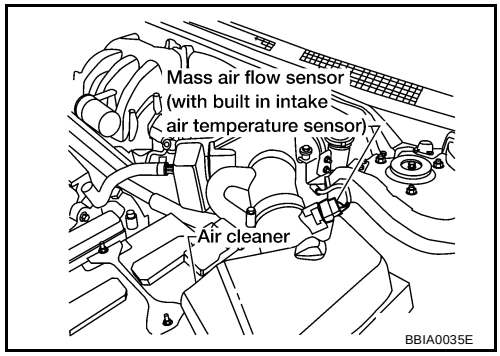

Yes or No

Yes >> Perform trouble diagnosis for DTC P0172, P0175. Refer to EC-885 .
No >> GO TO 3.

3. CHECK HO2S2 GROUND CIRCUIT FOR OPEN AND SHORT

1. Turn ignition switch “OFF”.
2. Disconnect heated oxygen sensor 2 harness connector.
   Bank 1

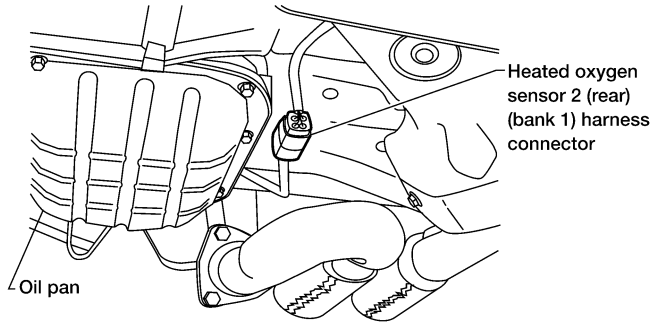

   Bank 2

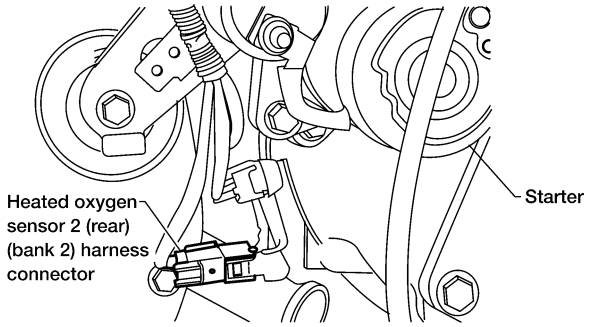

3. Check harness continuity between HO2S2 terminal 3 and engine ground.
   Refer to Wiring Diagram.

   Continuity should exist.

4. Also check harness for short to power.

OK or NG

OK >> GO TO 4.
NG >> Repair open circuit or short to power in harness or connectors.

4. CHECK HO2S2 INPUT SIGNAL CIRCUIT FOR OPEN AND SHORT

1. Disconnect ECM harness connector.
2. Check harness continuity between ECM terminal and HO2S2 terminal as follows. Refer to Wiring Diagram.

DTC	Terminals		Bank
	ECM	Sensor	
P1146	88	2	1
P1166	90	2	2

Continuity should exist.

3. Check harness continuity between the following terminals and ground. Refer to Wiring Diagram.

DTC	Terminals		Bank
	ECM	Sensor	
P1146	88	2	1
P1166	90	2	2

Continuity should not exist.

4. Also check harness for short to short to power.

OK or NG

OK >> GO TO 5.
NG >> Repair open circuit or short to ground or short to power in harness or connectors.

5. CHECK HEATED OXYGEN SENSOR 2

Refer to EC-1087, "Component Inspection" .

OK or NG

OK >> GO TO 6.
NG >> Replace malfunctioning heated oxygen sensor 2.

6. CHECK INTERMITTENT INCIDENT

Refer to EC-756, "TROUBLE DIAGNOSIS FOR INTERMITTENT INCIDENT" .

>> **INSPECTION END**

Component Inspection

UBS003G4

HEATED OXYGEN SENSOR 2

With CONSULT-II

1. Start engine and drive vehicle at a speed of more than 70 km/h (43 MPH) for 2 consecutive minutes.
2. Stop vehicle with engine running.
3. Select “FUEL INJECTION” in “ACTIVE TEST” mode, and select “HO2S2 (B1)/(B2)” as the monitor item with CONSULT-II.

ACTIVE TEST	
FUEL INJECTION	25 %
MONITOR	
ENG SPEED	XXX rpm
HO2S1 (B1)	XXX V
HO2S2 (B1)	XXX V
HO2S1 MNTR (B1)	RICH
HO2S2 MNTR (B1)	RICH

SEF662Y

4. Check “HO2S2 (B1)/(B2)” at idle speed when adjusting “FUEL INJECTION” to ±25%.

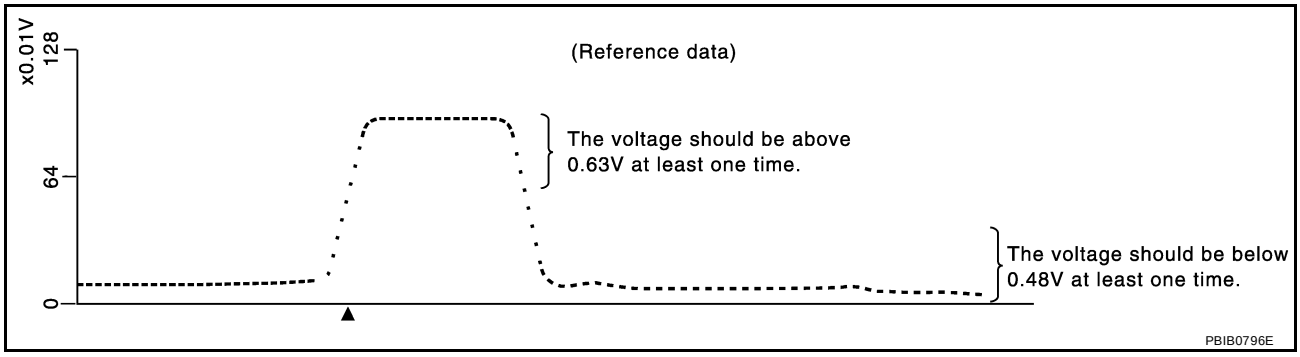

“HO2S2 (B1)/(B2)” should be above 0.63V at least once when the “FUEL INJECTION” is +25%.
“HO2S2 (B1)/(B2)” should be below 0.48V at least once when the “FUEL INJECTION” is –25%.

CAUTION:

- **Discard any heated oxygen sensor which has been dropped from a height of more than 0.5 m (19.7 in) onto a hard surface such as a concrete floor; use a new one.**
- **Before installing new oxygen sensor, clean exhaust system threads using Oxygen Sensor Thread Cleaner tool J-43897-18 or J-43897-12 and approved anti-seize lubricant.**

Without CONSULT-II

1. Start engine and drive vehicle at a speed of more than 70 km/h (43 MPH) for 2 consecutive minutes.
2. Stop vehicle with engine running.
3. Set voltmeter probes between ECM terminal 88 [HO2S2 (B1) signal] or 90 [HO2S2 (B2) signal] and engine ground.
4. Check the voltage when revving up to 4,000 rpm under no load at least 10 times.
   (Depress and release accelerator pedal as soon as possible.)
   The voltage should be above 0.63V at least once during this procedure.
   If the voltage is above 0.63V at step 4, step 5 is not necessary.
5. Keep vehicle at idling for 10 minutes, then check voltage. Or check the voltage when coasting from 80 km/h (50 MPH) in “D” position with “OD” OFF (A/T), 3rd gear position (M/T).
   The voltage should be below 0.48V at least once during this procedure.

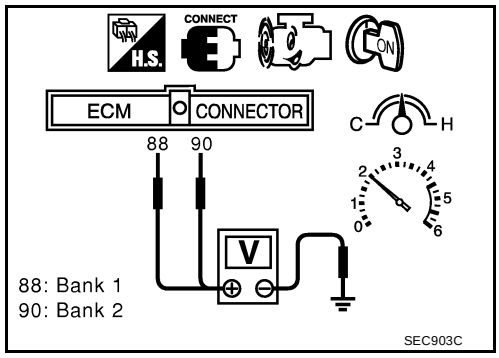

6. If NG, replace heated oxygen sensor 2.

CAUTION:

- **Discard any heated oxygen sensor which has been dropped from a height of more than 0.5 m (19.7 in) onto a hard surface such as a concrete floor; use a new one.**
- **Before installing new oxygen sensor, clean exhaust system threads using Oxygen Sensor Thread Cleaner tool J-43897-18 or J-43897-12 and approved anti-seize lubricant.**

Removal and Installation

UBS003G5

HEATED OXYGEN SENSOR 2

Refer to EX-6, "EXHAUST SYSTEM (VQ35DE)" .

DTC P1147, P1167 HO2S2

PFP:226A0

Component Description

UBS003G6

The heated oxygen sensor 2, after three way catalyst, monitors the oxygen level in the exhaust gas on each bank.
Even if switching characteristics of the heated oxygen sensor 1 are shifted, the air fuel ratio is controlled to stoichiometric, by the signal from the heated oxygen sensor 2.
This sensor is made of ceramic zirconia. The zirconia generates voltage from approximately 1V in richer conditions to 0V in leaner conditions.
Under normal conditions the heated oxygen sensor 2 is not used for engine control operation.

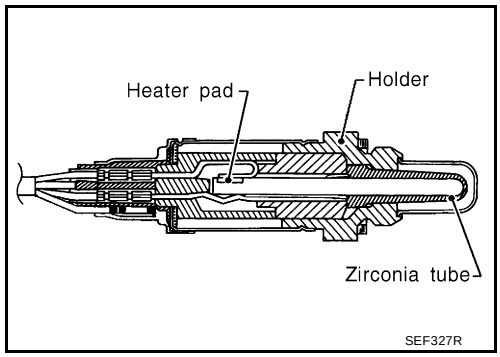

CONSULT-II Reference Value in Data Monitor Mode

UBS003G7

Specification data are reference values.

MONITOR ITEM	CONDITION		SPECIFICATION
HO2S2 (B1) HO2S2 (B2)	● Engine: After warming up	Revving engine from idle to 3,000 rpm quickly.	0 - 0.3V ←→ Approx. 0.6 - 1.0V
HO2S2 MNTR (B1) HO2S2 MNTR (B2)	● Engine: After warming up	Revving engine from idle to 3,000 rpm quickly.	LEAN ←→ RICH

On Board Diagnosis Logic

UBS003G8

The heated oxygen sensor 2 has a much longer switching time between rich and lean than the heated oxygen sensor 1. The oxygen storage capacity before the three way catalyst causes the longer switching time. To judge the malfunctions of heated oxygen sensor 2, ECM monitors whether the maximum voltage of the sensor is sufficiently high during the various driving condition such as fuel-cut.

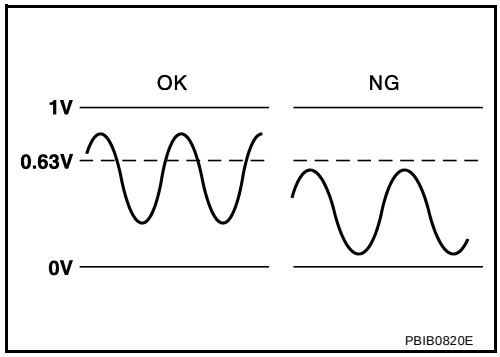

DTC No.	Trouble diagnosis name	DTC detecting condition	Possible cause
P1147 1147 (Bank 1) P1167 1167 (Bank 2)	Heated oxygen sensor 2 maximum voltage monitoring	The maximum voltage from the sensor is not reached to the specified voltage.	● Harness or connectors (The sensor circuit is open or shorted) ● Heated oxygen sensor 2 ● Fuel pressure ● Injectors ● Intake air leaks

DTC Confirmation Procedure

UBS003G9

NOTE:
If "DTC confirmation Procedure" has been previously conducted, always turn ignition switch "OFF" and wait at least 10 seconds before conducting the next test.
TESTING CONDITION:
Open engine hood before conducting following procedure.

WITH CONSULT-II

1. Start engine and warm it up to normal operating temperature.
2. Turn ignition switch “OFF” and wait at least 10 seconds.
3. Turn ignition switch "ON".
4. Select "DATA MONITOR" mode with CONSULT-II.

5. Make sure that "COOLAN TEMP/S" indicates more than 70°C (158°F).
6. Select “HO2S2 (B1) P1147” or “HO2S2 (B2) P1167” of “HO2S2” in “DTC WORK SUPPORT” mode with CONSULT-II.
7. Start engine and following the instruction of CONSULT-II.

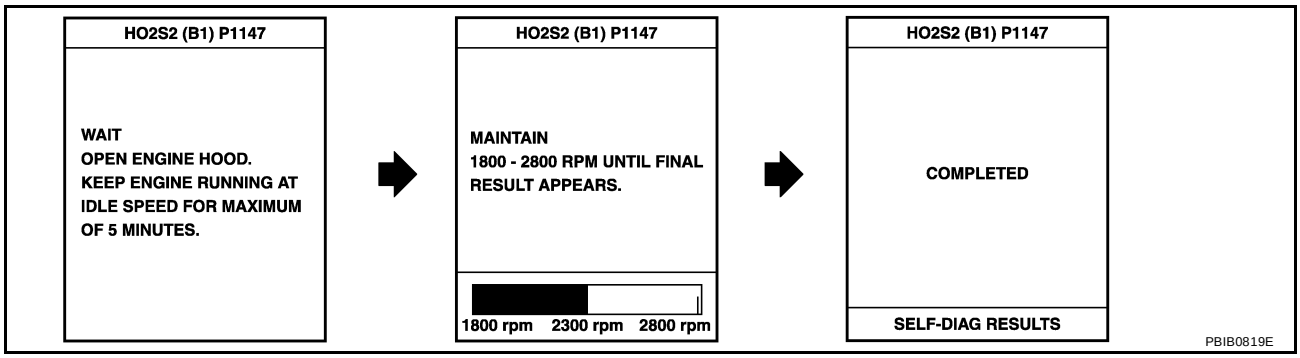

8. Make sure that “OK” is displayed after touching “SELF-DIAG RESULTS”.
   If "NG" is displayed, refer to EC-1094, "Diagnostic Procedure" .
   If "CAN NOT BE DIAGNOSED" is displayed, perform the following.

a. Stop engine and cool down until "COOLAN TEMP/S" indicates less than 70°C (158°F).
b. Turn ignition switch "ON".
c. Select "DATA MONITOR" mode with CONSULT-II.
d. Start engine.
e. Return to step 6 again when the "COOLAN TEMP/S" reaches to 70°C (158°F).

Overall Function Check

UBS003GA

Use this procedure to check the overall function of the heated oxygen sensor 2 circuit. During this check, a 1st trip DTC might not be confirmed.

WITH GST

1. Start engine and drive vehicle at a speed of more than 70 km/h (43 MPH) for 2 consecutive minutes.
2. Stop vehicle with engine running.
3. Set voltmeter probes between ECM terminal 88 [HO2S2 (B1) signal] or 90 [HO2S2 (B2) signal] and engine ground.
4. Check the voltage when revving up to 4,000 rpm under no load at least 10 times.
   (Depress and release accelerator pedal as soon as possible.)
   The voltage should be above 0.63V at least once during this procedure.
   If the voltage can be confirmed in step 4, step 5 is not necessary.
5. Keep vehicle at idling for 10 minutes, then check the voltage. Or check the voltage when coasting from 80 km/h (50 MPH) in “D” position with “OD” OFF (A/T), 3rd gear position (M/T).
   The voltage should be above 0.63V at least once during this procedure.

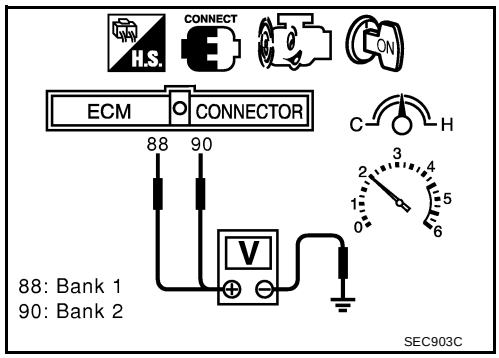

6. If NG, go to EC-1094, "Diagnostic Procedure" .

Wiring Diagram
BANK 1

UBS003GB

EC-O2S2B1-01

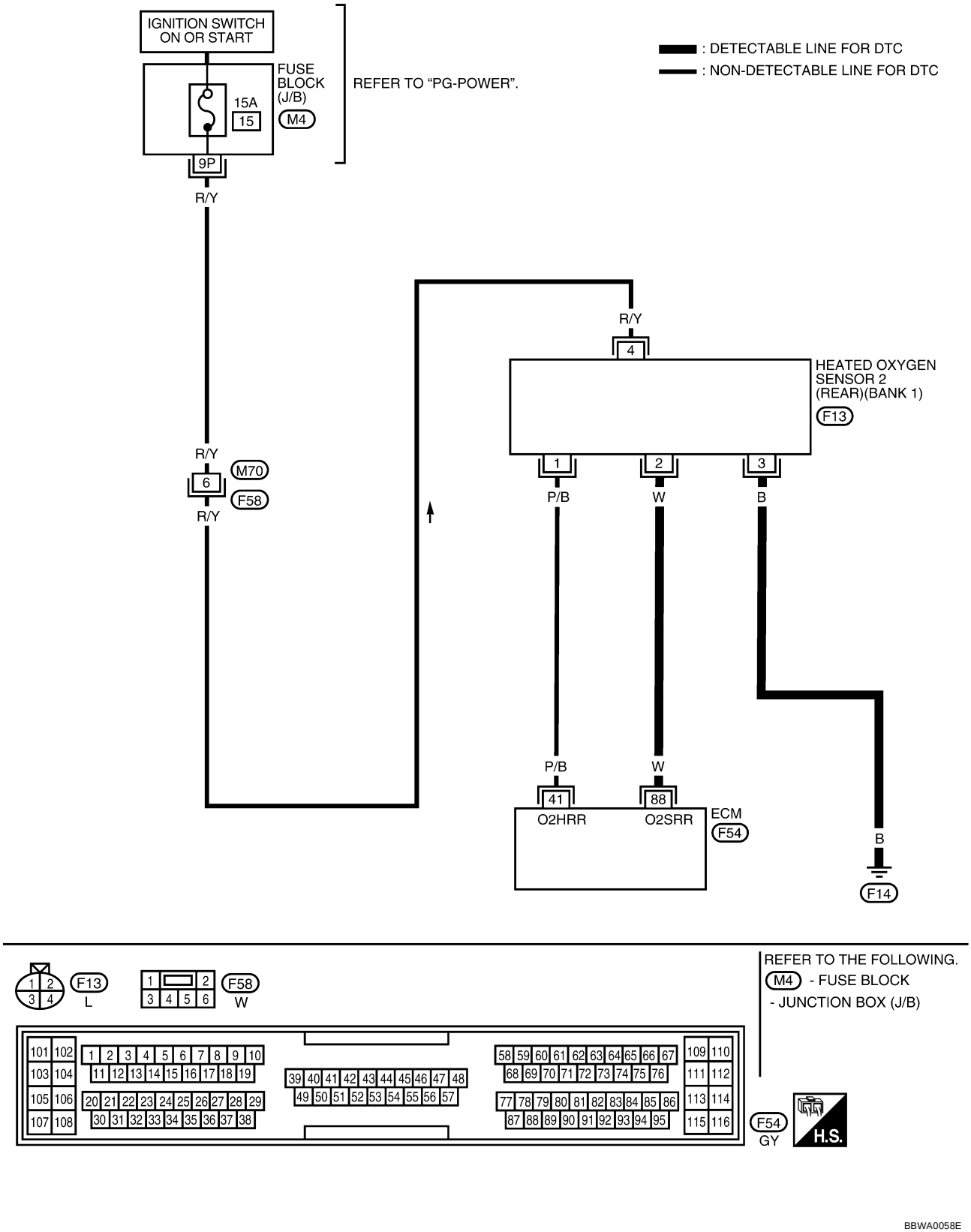

Specification data are reference values and are measured between each terminal and ground.

CAUTION:

Do not use ECM ground terminals when measuring input/output voltage. Doing so may result in damage to the ECM's transistor. Use a ground other than ECM terminals, such as the ground.

TERMINAL NO.	WIRE COLOR	ITEM	CONDITION	DATA (DC Voltage)
88	W	Heated oxygen sensor 2 (bank 1)	**[Engine is running]** ● **Warm-up condition** ● Engine speed is 2,000 rpm.	0 - Approximately 1.0V

BANK 2

EC-O2S2B2-01

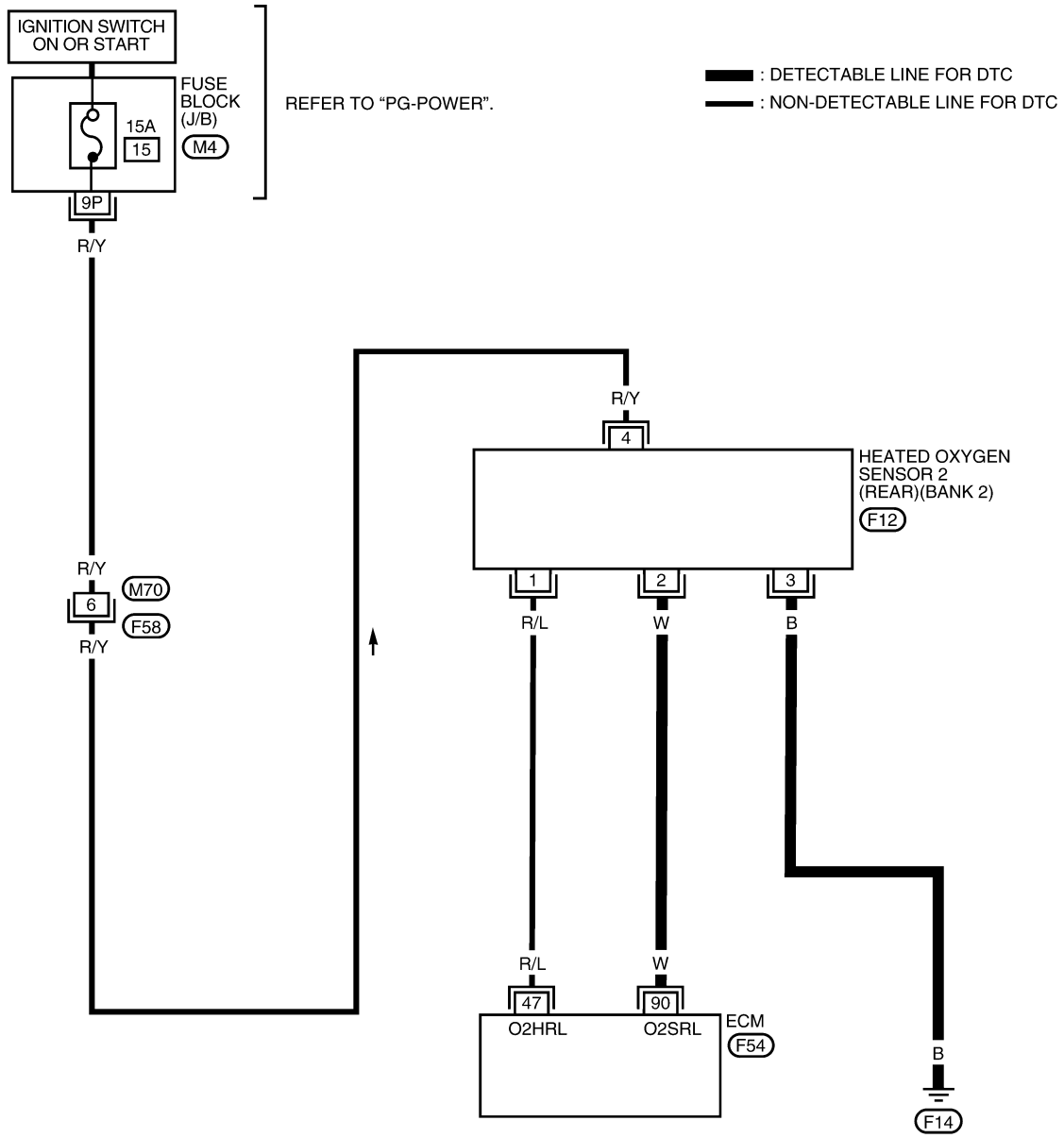

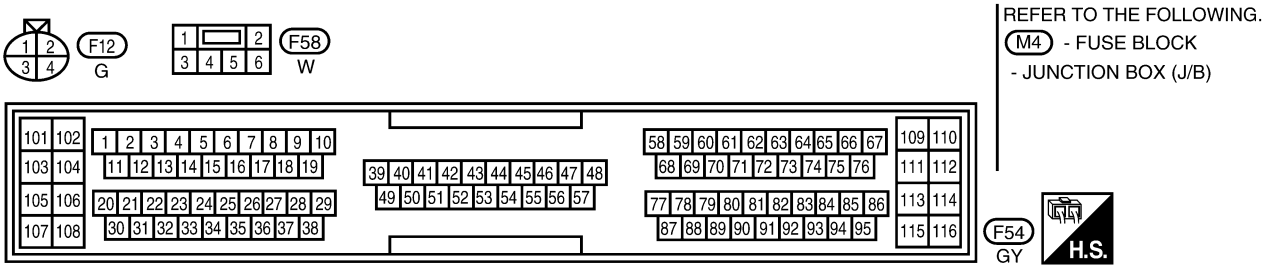

BBWA0059E

Specification data are reference values and are measured between each terminal and ground.

CAUTION:
Do not use ECM ground terminals when measuring input/output voltage. Doing so may result in damage to the ECM's transistor. Use a ground other than ECM terminals, such as the ground.

TERMINAL NO.	WIRE COLOR	ITEM	CONDITION	DATA (DC Voltage)
90	W	Heated oxygen sensor 2 (bank 2)	**[Engine is running]** ● **Warm-up condition** ● Engine speed is 2,000 rpm.	0 - Approximately 1.0V

Diagnostic Procedure

UBS003GC

1. RETIGHTEN GROUND SCREWS

1. Turn ignition switch “OFF”.
2. Loosen and retighten engine ground screws.

>> GO TO 2.

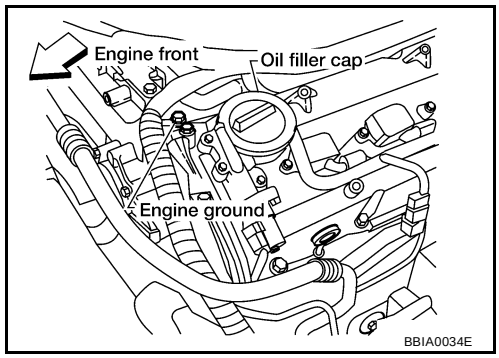

2. CLEAR THE SELF-LEARNING DATA

With CONSULT-II

1. Start engine and warm it up to normal operating temperature.
2. Select “SELF-LEARNING CONT” in “WORK SUPPORT” mode with CONSULT-II.
3. Clear the self-learning control coefficient by touching “CLEAR”.
4. Run engine for at least 10 minutes at idle speed.
   Is the 1st trip DTC P0171 or P0174 detected?
   Is it difficult to start engine?

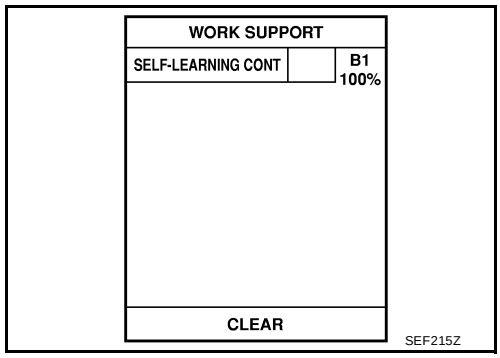

Without CONSULT-II

1. Start engine and warm it up to normal operating temperature.
2. Turn ignition switch “OFF”.
3. Disconnect mass air flow sensor harness connector, and restart and run engine for at least 5 seconds at idle speed.
4. Stop engine and reconnect mass air flow sensor harness connector.
5. Make sure DTC P0102 is displayed.
6. Erase the DTC memory. Refer to EC-687, "HOW TO ERASE EMISSION-RELATED DIAGNOSTIC INFORMATION" .
7. Make sure DTC P0000 is displayed.
8. Run engine for at least 10 minutes at idle speed.
   Is the 1st trip DTC P0171 or P0174 detected?
   Is it difficult to start engine?

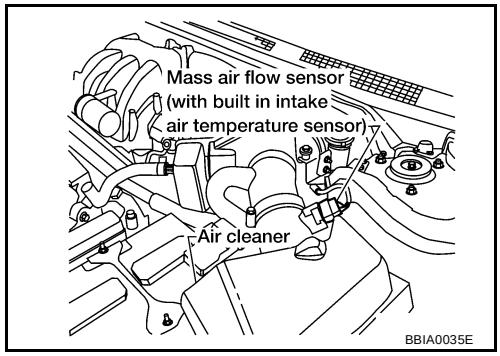

Yes or No

Yes >> Perform trouble diagnosis for DTC P0171or P0174. Refer to EC-877 .
No >> GO TO 3.

3. CHECK HO2S2 GROUND CIRCUIT FOR OPEN AND SHORT

1. Turn ignition switch “OFF”.
2. Disconnect heated oxygen sensor 2 harness connector.
   Bank 1

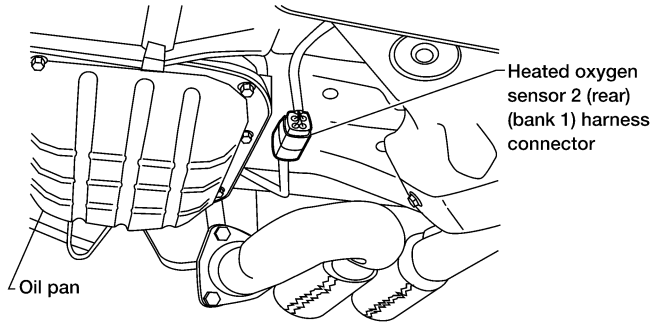

   Bank 2

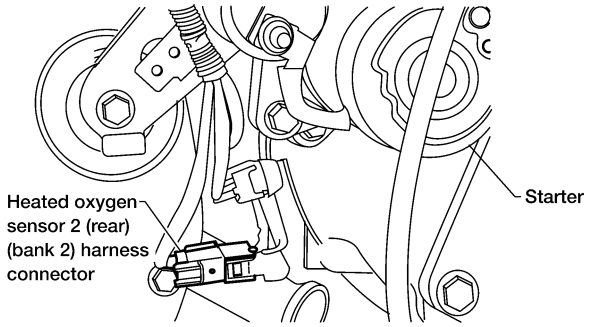

3. Check harness continuity between HO2S2 terminal 3 and engine ground.
   Refer to Wiring Diagram.

   Continuity should exist.

4. Also check harness for short to power.

OK or NG

OK >> GO TO 4.
NG >> Repair open circuit or short to power in harness or connectors.

4. CHECK HO2S2 INPUT SIGNAL CIRCUIT FOR OPEN AND SHORT

1. Disconnect ECM harness connector.
2. Check harness continuity between ECM terminal and HO2S2 terminal as follows. Refer to Wiring Diagram.

DTC	Terminals		Bank
	ECM	Sensor	
P1147	88	2	1
P1167	90	2	2

Continuity should exist.

3. Check harness continuity between the following terminals and ground. Refer to Wiring Diagram.

DTC	Terminals		Bank
	ECM	Sensor	
P1147	88	2	1
P1167	90	2	2

Continuity should not exist.

4. Also check harness for short to ground or short to power.

OK or NG

OK >> GO TO 5.
NG >> Repair open circuit or short to ground or short to power in harness or connectors.

5. CHECK HEATED OXYGEN SENSOR 2

Refer to EC-1097, "Component Inspection" .

OK or NG

OK >> GO TO 6.
NG >> Replace malfunctioning heated oxygen sensor 2.

6. CHECK INTERMITTENT INCIDENT

Refer to EC-756, "TROUBLE DIAGNOSIS FOR INTERMITTENT INCIDENT" .

>> **INSPECTION END**

Component Inspection

UBS003GD

HEATED OXYGEN SENSOR 2

With CONSULT-II

1. Start engine and drive vehicle at a speed of more than 70 km/h (43 MPH) for 2 consecutive minutes.
2. Stop vehicle with engine running.
3. Select “FUEL INJECTION” in “ACTIVE TEST” mode, and select “HO2S2 (B1)/(B2)” as the monitor item with CONSULT-II.

ACTIVE TEST	
FUEL INJECTION	25 %
MONITOR	
ENG SPEED	XXX rpm
HO2S1 (B1)	XXX V
HO2S2 (B1)	XXX V
HO2S1 MNTR (B1)	RICH
HO2S2 MNTR (B1)	RICH

SEF662Y

4. Check “HO2S2 (B1)/(B2)” at idle speed when adjusting “FUEL INJECTION” to ±25%.

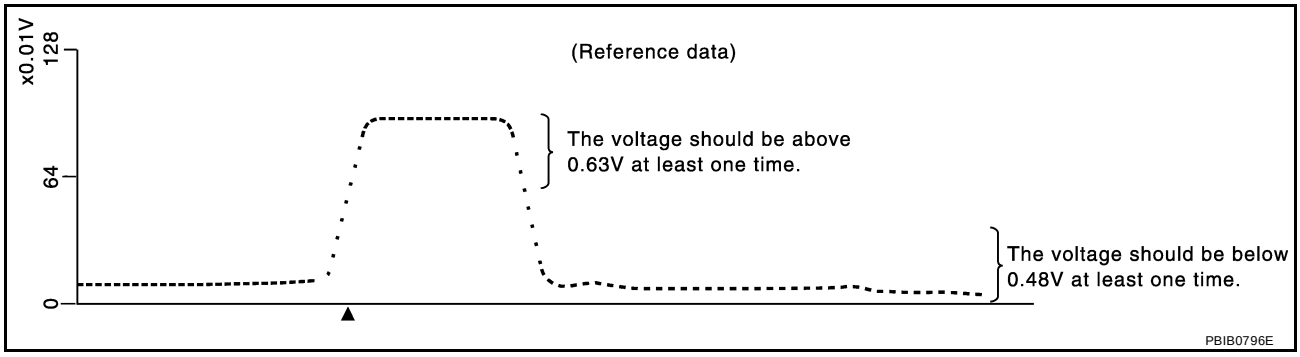

“HO2S2 (B1)/(B2)” should be above 0.63V at least once when the “FUEL INJECTION” is +25%.
“HO2S2 (B1)/(B2)” should be below 0.48V at least once when the “FUEL INJECTION” is –25%.

CAUTION:

- **Discard any heated oxygen sensor which has been dropped from a height of more than 0.5 m (19.7 in) onto a hard surface such as a concrete floor; use a new one.**
- **Before installing new oxygen sensor, clean exhaust system threads using Oxygen Sensor Thread Cleaner tool J-43897-18 or J-43897-12 and approved anti-seize lubricant.**

Without CONSULT-II

1. Start engine and drive vehicle at a speed of more than 70 km/h (43 MPH) for 2 consecutive minutes.
2. Stop vehicle with engine running.
3. Set voltmeter probes between ECM terminal 88 [HO2S2 (B1) signal] or 90 [HO2S2 (B2) signal] and engine ground.
4. Check the voltage when revving up to 4,000 rpm under no load at least 10 times.
   (Depress and release accelerator pedal as soon as possible.)
   The voltage should be above 0.63V at least once during this procedure.
   If the voltage is above 0.63V at step 4, step 5 is not necessary.
5. Keep vehicle at idling for 10 minutes, then check voltage. Or check the voltage when coasting from 80 km/h (50 MPH) in “D” position with “OD” OFF (A/T), 3rd gear position (M/T).
   The voltage should be below 0.48V at least once during this procedure.

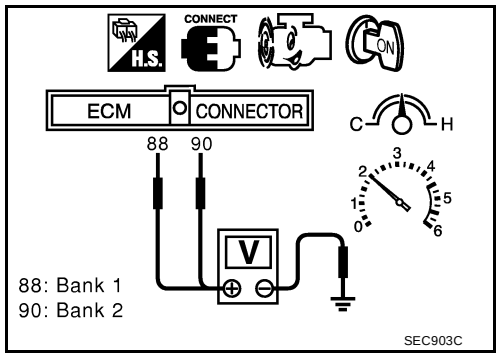

6. If NG, replace heated oxygen sensor 2.

CAUTION:

- **Discard any heated oxygen sensor which has been dropped from a height of more than 0.5 m (19.7 in) onto a hard surface such as a concrete floor; use a new one.**
- **Before installing new oxygen sensor, clean exhaust system threads using Oxygen Sensor Thread Cleaner tool J-43897-18 or J-43897-12 and approved anti-seize lubricant.**

Removal and Installation

UBS003GE

HEATED OXYGEN SENSOR 2

Refer to EX-6, "EXHAUST SYSTEM (VQ35DE)" .

DTC P1148, P1168 CLOSED LOOP CONTROL

PFP:22690

On Board Diagnosis Logic

UBS003GF

These self-diagnoses have the one trip detection logic.

DTC No.	Trouble diagnosis name	DTC detecting condition	Possible cause
P1148 1148 (Bank 1)	Closed loop control function	The closed loop control function for bank 1 does not operate even when vehicle is driving in the specified condition.	● The heated oxygen sensor 1 circuit is open or shorted. ● Heated oxygen sensor 1 ● Heated oxygen sensor heater
P1168 1168 (Bank 2)		The closed loop control function for bank 2 does not operate even when vehicle is driving in the specified condition.	

DTC Confirmation Procedure

UBS003GG

CAUTION:
Always drive vehicle at a safe speed.

NOTE:
If "DTC Confirmation Procedure" has been previously conducted, always turn ignition switch "OFF" and wait at least 10 seconds before conducting the next test.

TESTING CONDITION:

- **Never raise engine speed above 3,600 rpm during the "DTC Confirmation Procedure". If the engine speed limit is exceeded, retry the procedure from step 2.**
- **Before performing the following procedure, confirm that battery voltage is more than 11V at idle.**

WITH CONSULT-II

1. Start engine and warm it up to normal operating temperature.
2. Select "DATA MONITOR" mode with CONSULT-II.
3. Hold engine speed at 2,000 rpm and check one of the following.
   - "HO2S1 (B1)/(B2)" voltage should go above 0.70V at least once.
   - "HO2S1 (B1)/(B2)" voltage should go below 0.21V at least once.
   If the check result is NG, perform EC-1100, "Diagnostic Procedure" .
   If the check result is OK, perform the following step.
4. Let engine idle at least 5 minutes.
5. Maintain the following condition at least 50 consecutive seconds.

B/FUEL SCHDL	2.5 msec or more
ENG SPEED	More than 1,500 rpm
Selector lever	Suitable position
VHCL SPEED SE	More than 71 km/h (44 MPH)

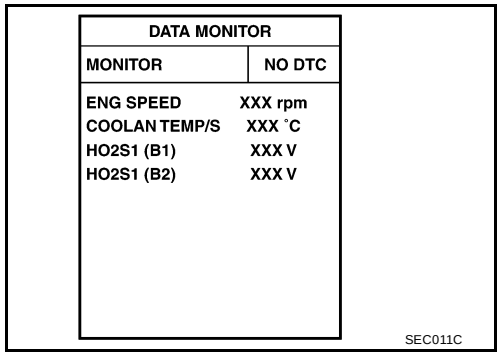

During this test, P0132 and/or P0152 may be displayed on CONSULT-II screen.

6. If DTC is detected, go to EC-1100, "Diagnostic Procedure" .

Overall Function Check

UBS003GH

Use this procedure to check the overall function of the closed loop control. During this check, a DTC might not be confirmed.

WITH GST

1. Start engine and warm it up to normal operating temperature.

2. Set voltmeter probes between ECM terminal 91 [HO2S1 (B1) signal] or 92 [HO2S1 (B2) signal] and engine ground.
3. Check the following with engine speed held at 2,000 rpm constant under no-load.
- The voltage should go above 0.70V at least once.
- The voltage should go below 0.21V at least once.
4. If NG, go to EC-1100, "Diagnostic Procedure" .

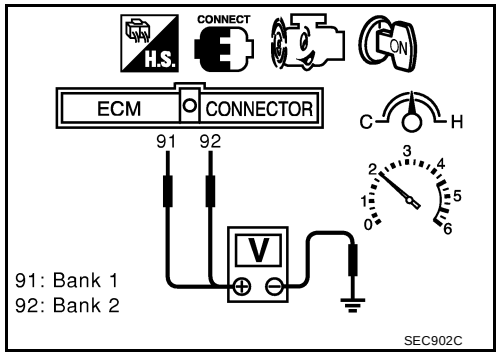

Diagnostic Procedure

UBS003GI

Perform trouble diagnosis for “DTC P0133, P0153”. Refer to EC-842, "Diagnostic Procedure" .

DTC P1211 ABS/TCS CONTROL UNIT

PFP:47850

Description

UBS003GJ

The malfunction information related to ABS or ABS/TCS is transferred through the CAN communication line from ABS actuator and electric unit (control unit) to ECM.
Be sure to erase the malfunction information such as DTC not only for ABS actuator and electric unit (control unit) but also for ECM after ABS or ABS/TCS related repair.

On Board Diagnosis Logic

UBS003GK

Freeze frame data is not stored in the ECM for this self-diagnosis. The MIL will not light up for this self-diagnosis.

DTC No.	Trouble diagnosis name	DTC detecting condition	Possible cause
P1211 1211	ABS/TCS control unit	ECM receives a malfunction information from ABS actuator and electric unit (Control unit).	● ABS actuator and electric unit (control unit) ● ABS or ABS/TCS related parts

DTC Confirmation Procedure

UBS003GL

TESTING CONDITION:
Before performing the following procedure, confirm that battery voltage is more than 10.5V at idle.

WITH CONSULT-II

1. Turn ignition switch “ON”.
2. Select “DATA MONITOR” mode with CONSULT-II.
3. Start engine and let it idle for at least 60 seconds.
4. If 1st trip DTC is detected, go to EC-1101, "Diagnostic Procedure" .

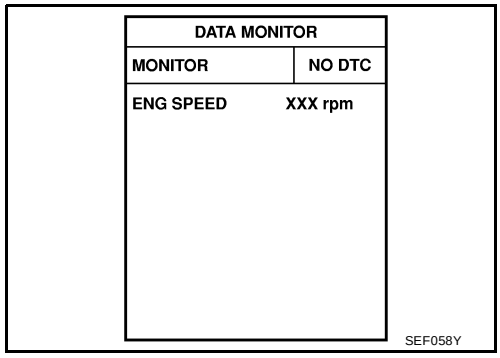

WITH GST

Follow the procedure "WITH CONSULT-II" above.

Diagnostic Procedure

UBS003GM

Go to BRC-7, "TROUBLE DIAGNOSIS" or BRC-50, "TROUBLE DIAGNOSIS" .

DTC P1212 ABS/TCS COMMUNICATION LINE

PFP:47850

Description

UBS003GN

NOTE:
If DTC P1212 is displayed with DTC U1000 or U1001, first perform the trouble diagnosis for DTC U1000, U1001. Refer to EC-763, "DTC U1000, U1001 CAN COMMUNICATION LINE" .
This CAN communication line is used to control the smooth engine operation during the ABS or TCS operation. Pulse signals are exchanged between ECM and ABS actuator and electric unit (control unit).
Be sure to erase the malfunction information such as DTC not only for ABS actuator and electric unit (control unit) but also for ECM after ABS or ABS/TCS related repair.

On Board Diagnosis Logic

UBS003GO

Freeze frame data is not stored in the ECM for this self-diagnosis. The MIL will not light up for this self-diagnosis.

DTC No.	Trouble diagnosis name	DTC detecting condition	Possible cause
P1212 1212	ABS/TCS communication line	ECM can not receive the information from ABS/TCS control unit continuously.	● Harness or connectors (The CAN communication line is open or shorted.) ● ABS actuator and electric unit (control unit) ● Dead (Weak) battery

DTC Confirmation Procedure

UBS003GP

TESTING CONDITION:
Before performing the following procedure, confirm that battery voltage is more than 10.5V at idle.

WITH CONSULT-II

1. Turn ignition switch “ON”.
2. Select “DATA MONITOR” mode with CONSULT-II.
3. Start engine and let it idle for at least 10 seconds.
4. If a 1st trip DTC is detected, go to EC-1102, "Diagnostic Procedure" .

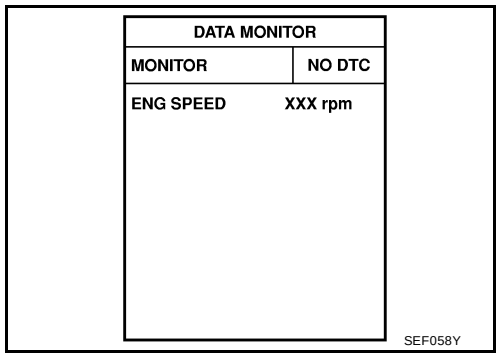

WITH GST

Follow the procedure "WITH CONSULT-II" above.

Diagnostic Procedure

UBS003GQ

1. CHECK ABS ACTUATOR AND ELECTRIC UNIT (CONTROL UNIT) FUNCTION

Refer to BRC-7, "TROUBLE DIAGNOSIS" or BRC-50, "TROUBLE DIAGNOSIS" .

>> **INSPECTION END**

DTC P1217 ENGINE OVER TEMPERATURE

PFP:00000

System Description

UBS003GR

NOTE:
If DTC P1217 is displayed with DTC U1000 or U1001, first perform the trouble diagnosis for DTC U1000 or U1001. Refer to EC-763, "DTC U1000, U1001 CAN COMMUNICATION LINE" .

COOLING FAN CONTROL

Sensor	Input Signal to ECM	ECM function	Actuator
USP sensor	Vehicle speed	Cooling fan control	Cooling fan relay(s)
Engine coolant temperature sensor	Engine coolant temperature		
Air conditioner switch	Air conditioner “ON” signal*		
Ignition switch	Start signal		
Refrigerant pressure sensor	Refrigerant pressure		

*: These signals are sent to ECM through CAN communication line.

The ECM controls the cooling fan corresponding to the vehicle speed, engine coolant temperature, refrigerant pressure, and air conditioner ON signal. The control system has 3-step control [HIGH/LOW/OFF].
The ECM controls cooling fan relays through CAN communication line.

OPERATION

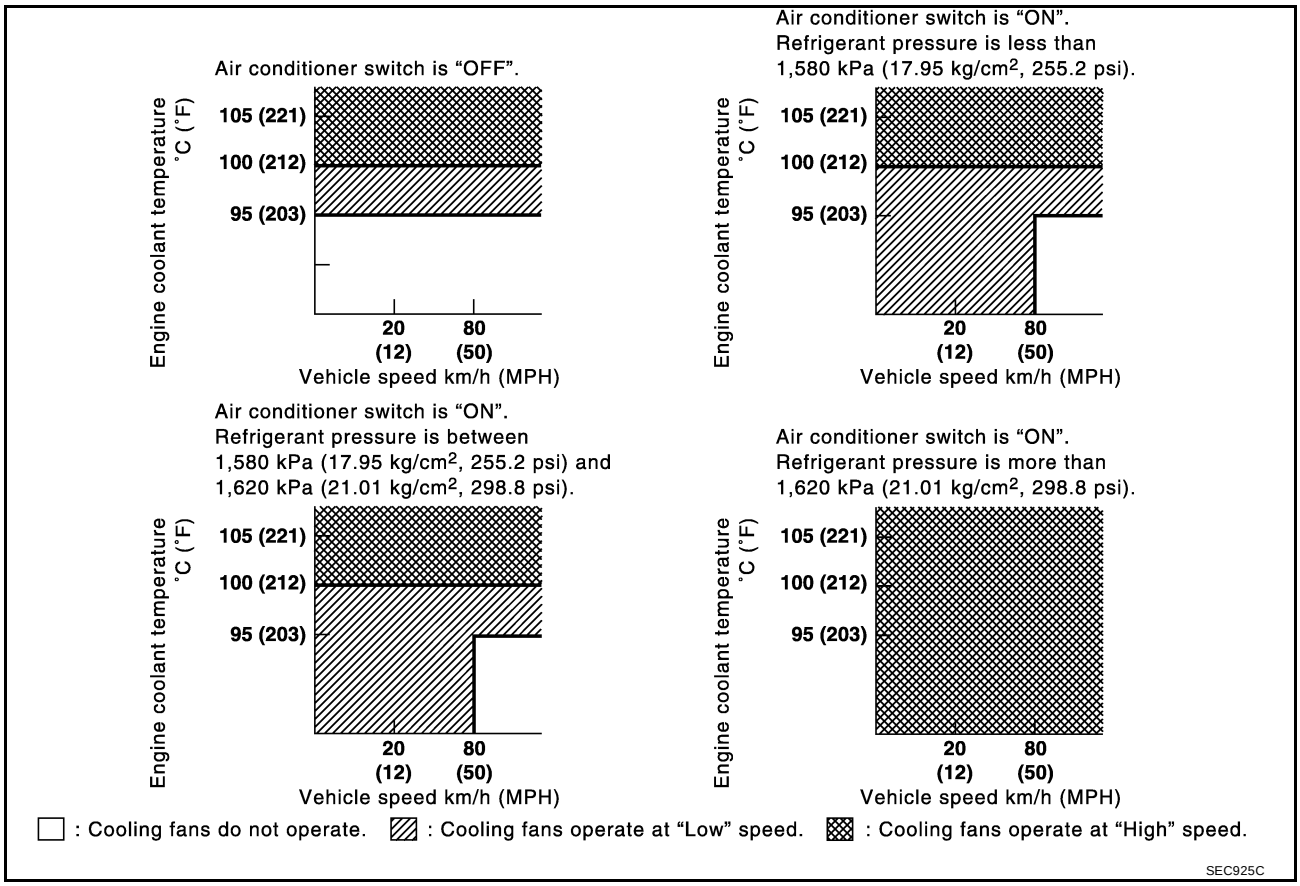

CONSULT-II Reference Value in Data Monitor Mode

UBS003GS

Specification data are reference values.

MONITOR ITEM	CONDITION		SPECIFICATION
AIR COND SIG	● Engine: After warming up, idle the engine	Air conditioner switch: OFF	OFF
		Air conditioner switch: ON (Compressor operates.)	ON

MONITOR ITEM	CONDITION		SPECIFICATION
COOLING FAN	● Engine: After warming up, idle the engine ● Air conditioner switch: OFF	Engine coolant temperature is 99°C (210°F) or less	OFF
		Engine coolant temperature is between 95°C (203°F) and 104°C (219°F)	LOW
		Engine coolant temperature is 100°C (212°F) or more	HIGH

On Board Diagnosis Logic

UBS003GT

If the cooling fan or another component in the cooling system malfunctions, engine coolant temperature will rise.
When the engine coolant temperature reaches an abnormally high temperature condition, a malfunction is indicated.

DTC No.	Trouble diagnosis name	DTC detecting condition	Possible cause
P1217 1217	Engine over temperature (Overheat)	● Cooling fan does not operate properly (Overheat). ● Cooling fan system does not operate properly (Overheat). ● Engine coolant was not added to the system using the proper filling method.	● Harness or connectors (The cooling fan circuit is open or shorted.) ● Cooling fan ● Radiator hose ● Radiator ● Radiator cap ● Water pump ● Thermostat For more information, refer to EC-1113, "Main 12 Causes of Overheating" .

CAUTION:
When a malfunction is indicated, be sure to replace the coolant. Refer to EC-1102, "Description" . Also, replace the engine oil. Refer to EC-1101, "Description" .

1. **Fill radiator with coolant up to specified level with a filling speed of 2 liters per minute. Be sure to use coolant with the proper mixture ratio. Refer to MA-13, "ANTI-FREEZE COOLANT MIXTURE RATIO" .**
2. **After refilling coolant, run engine to ensure that no water-flow noise is emitted.**

Overall Function Check

UBS003GU

Use this procedure to check the overall function of the cooling fan. During this check, a DTC might not be confirmed.

WARNING:
Never remove the radiator cap when the engine is hot. Serious burns could be caused by high pressure fluid escaping from the radiator.
Wrap a thick cloth around cap. Carefully remove the cap by turning it a quarter turn to allow built-up pressure to escape. Then turn the cap all the way off.

WITH CONSULT-II

1. Check the coolant level in the reservoir tank and radiator.
   Allow engine to cool before checking coolant level.
   If the coolant level in the reservoir tank and/or radiator is below the proper range, skip the following steps and go to EC-1107, "Diagnostic Procedure" .
2. Confirm whether customer filled the coolant or not. If customer filled the coolant, skip the following steps and go to EC-1107, "Diagnostic Procedure" .
3. Turn ignition switch “ON”.

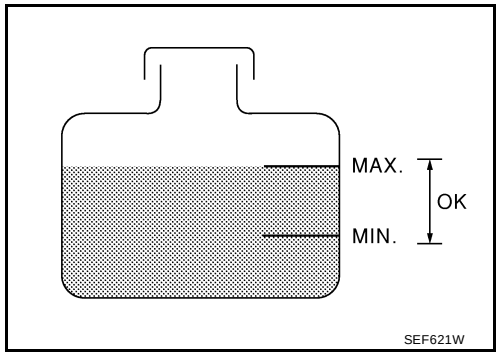

4. Perform “COOLING FAN” in “ACTIVE TEST” mode with CONSULT-II.
5. If the results are NG, go to EC-1107, "Diagnostic Procedure" .

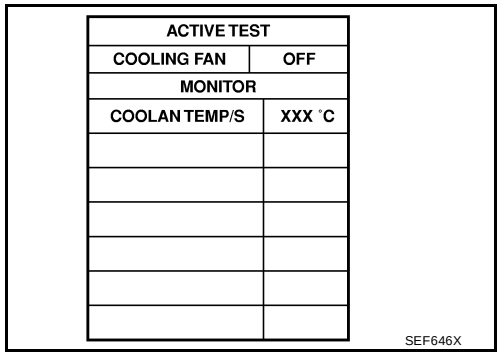

ACTIVE TEST	
COOLING FAN	OFF
MONITOR	
COOLAN TEMP/S	XXX °C

SEF646X

WITH GST

1. Check the coolant level in the reservoir tank and radiator.
   Allow engine to cool before checking coolant level.
   If the coolant level in the reservoir tank and/or radiator is below the proper range, skip the following steps and go to EC-1107, "Diagnostic Procedure" .
2. Confirm whether customer filled the coolant or not. If customer filled the coolant, skip the following steps and go to EC-1107, "Diagnostic Procedure" .
3. Start engine.
   Be careful not to overheat engine.
4. Turn air conditioner switch “ON”.
5. Turn blower fan switch “ON”.
6. Make sure that cooling fan operates at low speed.
   If NG, go to EC-1107, "Diagnostic Procedure" .
   If OK, go to the following step.
7. Turn ignition switch “OFF”.
8. Turn air conditioner switch and blower fan switch “OFF”.
9. Disconnect engine coolant temperature sensor harness connector.
10. Connect 150Ω resistor to engine coolant temperature sensor harness connector.

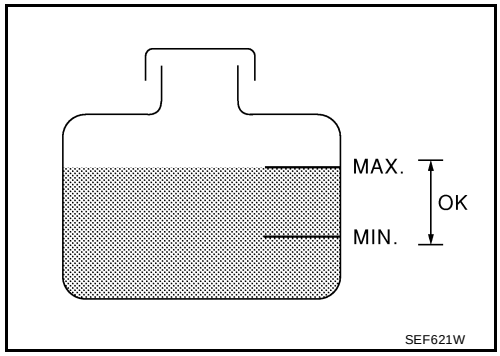

SEF621W

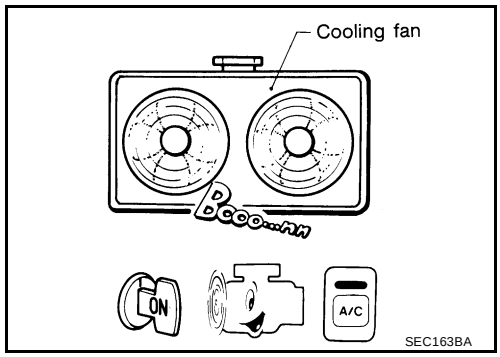

SEC163BA

11. Restart engine and make sure that cooling fan operates at higher speed than low speed.
    Be careful not to overheat engine.
12. If NG, go to EC-1107, "Diagnostic Procedure" .

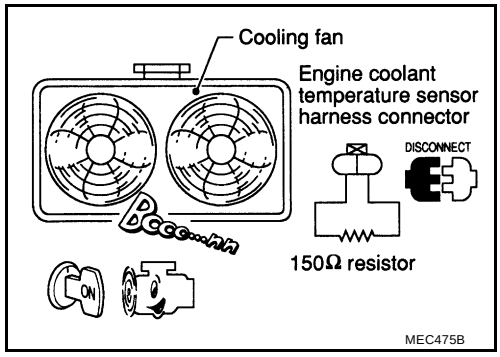

MEC475B

Wiring Diagram

UBS003GV

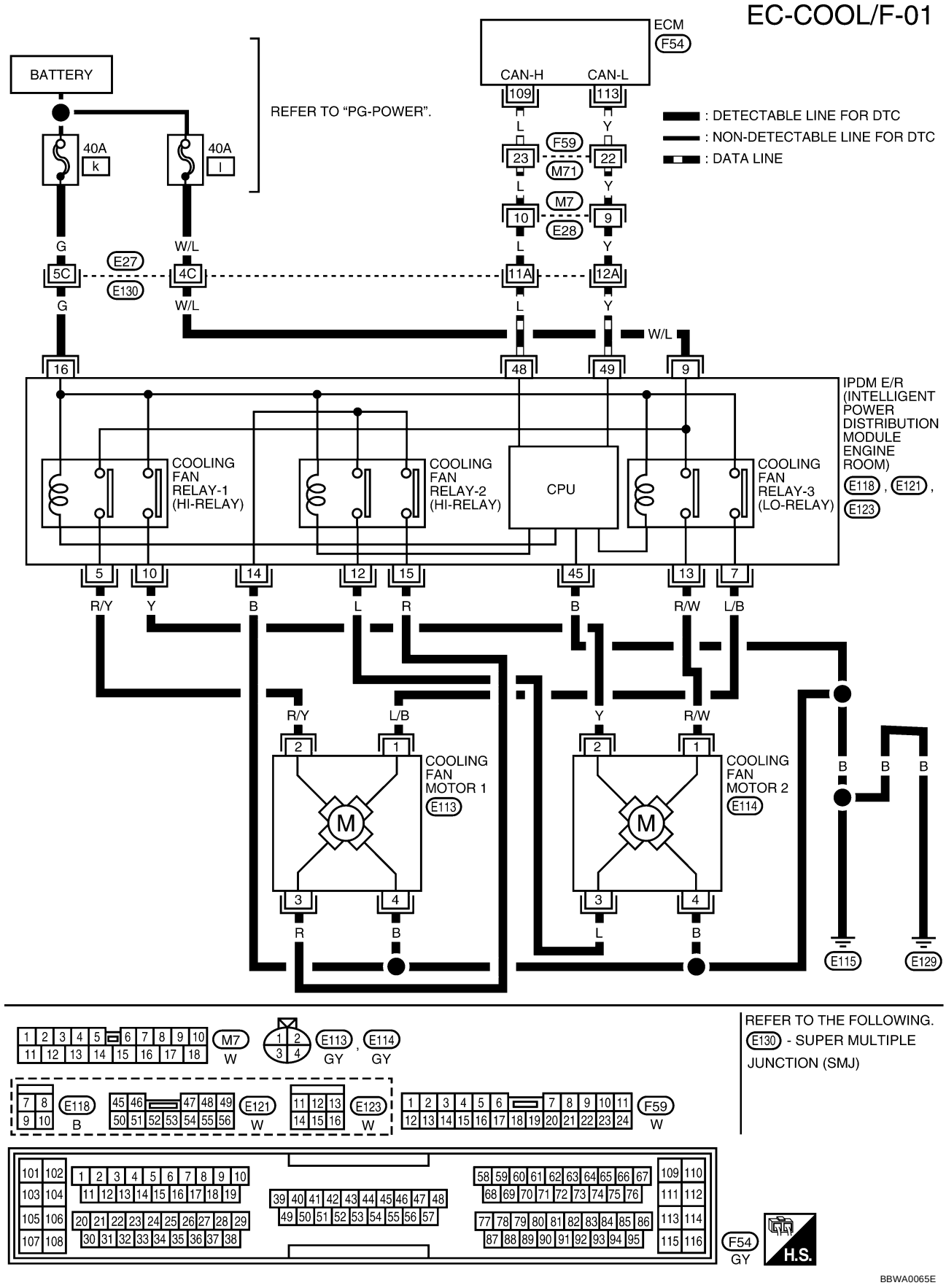

Diagnostic Procedure

UBS003GW

1. INSPECTION START

Do you have CONSULT-II?

Yes or No

Yes >> GO TO 2.
No >> GO TO 4.

2. CHECK COOLING FAN LOW SPEED OPERATION

With CONSULT-II

1. Start engine and let it idle.
2. Select “COOLING FAN” in “ACTIVE TEST” mode with CONSULT-II and touch "LOW" on the CONSULT-II screen.
3. Make sure that cooling fans-1 and -2 operate at low speed.

OK or NG

OK >> GO TO 3.
NG >> Check cooling fan low speed control circuit. (Go to EC-1110, "PROCEDURE A" .)

ACTIVE TEST	
COOLING FAN	LOW
MONITOR	
COOLAN TEMP/S	XXX °C

SEF784Z

3. CHECK COOLING FAN HIGH SPEED OPERATION

With CONSULT-II

1. Touch "HIGH" on the CONSULT-II screen.
2. Make sure that cooling fans-1 and -2 operate at higher speed than low speed.

OK or NG

OK >> GO TO 6.
NG >> Check cooling fan high speed control circuit. (Go to EC-1112, "PROCEDURE B" .)

ACTIVE TEST	
COOLING FAN	HIGH
MONITOR	
COOLAN TEMP/S	XXX °C

SEF785Z

4. CHECK COOLING FAN LOW SPEED OPERATION

Without CONSULT-II

1. Start engine and let it idle.
2. Turn air conditioner switch “ON”.
3. Turn blower fan switch “ON”.
4. Make sure that cooling fans-1 and -2 operate at low speed.

OK or NG

OK >> GO TO 5.
NG >> Check cooling fan low speed control circuit. (Go to EC-1110, "PROCEDURE A" .)

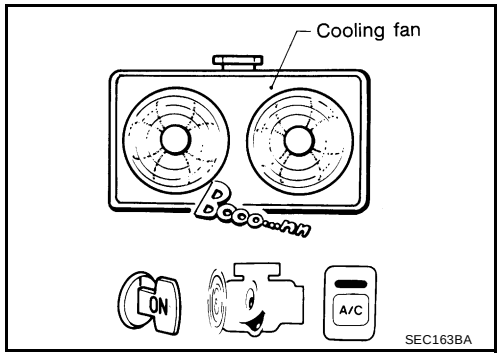

SEC163BA

5. CHECK COOLING FAN HIGH SPEED OPERATION

Without CONSULT-II

1. Turn ignition switch “OFF”.
2. Turn air conditioner switch and blower fan switch “OFF”.
3. Disconnect engine coolant temperature sensor harness connector.
4. Connect 150Ω resistor to engine coolant temperature sensor harness connector.
5. Restart engine and make sure that cooling fans-1 and -2 operate at higher speed than low speed.

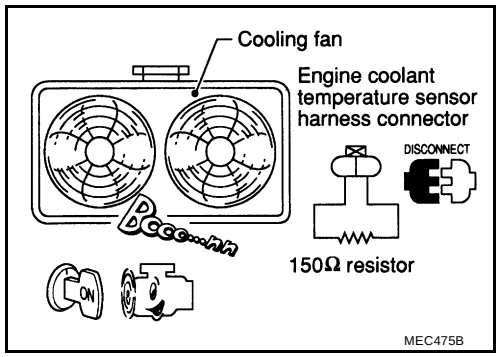

OK or NG

OK >> GO TO 6.
NG >> Check cooling fan high speed control circuit. (Go to EC-1112, "PROCEDURE B" .)

6. CHECK COOLING SYSTEM FOR LEAK

Apply pressure to the cooling system with a tester, and check if the pressure drops.

Testing pressure: 157 kPa (1.6 kg/cm^2 , 23 psi)

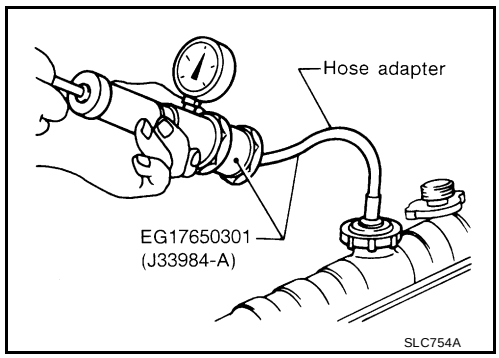

CAUTION:
Higher than the specified pressure may cause radiator damage. Pressure should not drop.

OK or NG

OK >> GO TO 7.
NG >> Check the following for leak
- Hose
- Radiator
- Water pump
  Refer to CO-41, "WATER PUMP" .

7. CHECK RADIATOR CAP

Apply pressure to cap with a tester.

Radiator cap relief pressure: 59 - 98 kPa (0.59 - 0.98 bar, 0.6 - 1.0 kg/cm^2 , 9 - 14 psi)

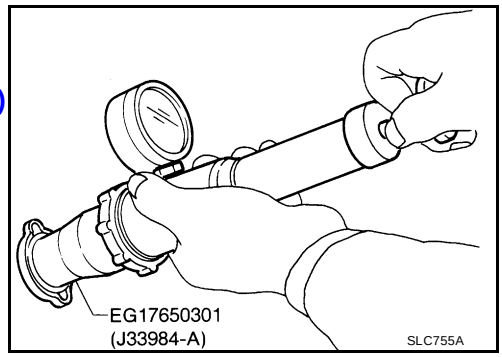

OK or NG

OK >> GO TO 8.
NG >> Replace radiator cap.

8. CHECK THERMOSTAT

1. Check valve seating condition at normal room temperatures.
   It should seat tightly.
2. Check valve opening temperature and valve lift.

   Valve opening temperature: 82°C (180°F) [standard]
   Valve lift: More than 8.6 mm/95°C (0.339 in/203°F)

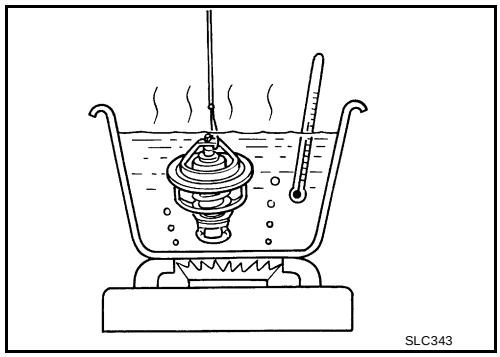

3. Check if valve is closed at 5°C (9°F) below valve opening temperature.
   For details, refer to CO-45, "THERMOSTAT AND THERMOSTAT HOUSING" .

OK or NG

OK >> GO TO 9.
NG >> Replace thermostat

9. CHECK ENGINE COOLANT TEMPERATURE SENSOR

Refer to EC-815, "Component Inspection" .

OK or NG

OK >> GO TO 10.
NG >> Replace engine coolant temperature sensor.

10. CHECK MAIN 12 CAUSES

If the cause cannot be isolated, go to EC-1113, "Main 12 Causes of Overheating" .

>> **INSPECTION END**

PROCEDURE A

1. CHECK POWER SUPPLY CIRCUIT

1. Turn ignition switch “OFF”.
2. Disconnect IPDM E/R harness connectors E118 and E123.
3. Check voltage between IPDM E/R terminals 9, 16 and ground with CONSULT-II or tester.

Voltage: Battery voltage

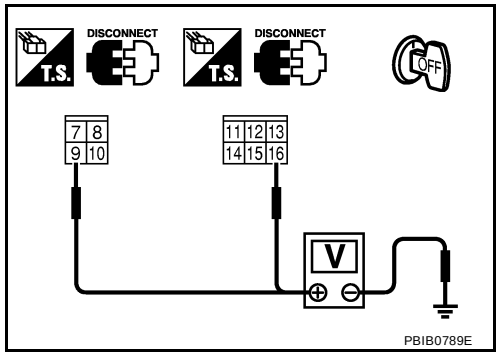

OK or NG

OK >> GO TO 3.
NG >> GO TO 2.

2. DETECT MALFUNCTIONING PART

Check the following.

- 40A fusible links
- Harness connectors E27, E130
- Harness for open or short between IPDM E/R and battery

>> Repair open circuit or short to ground or short to power in harness or connectors.

3. CHECK COOLING FAN MOTORS CIRCUIT

1. Disconnect cooling fan motor-1 harness connector and cooling fan motor-2 harness connector.

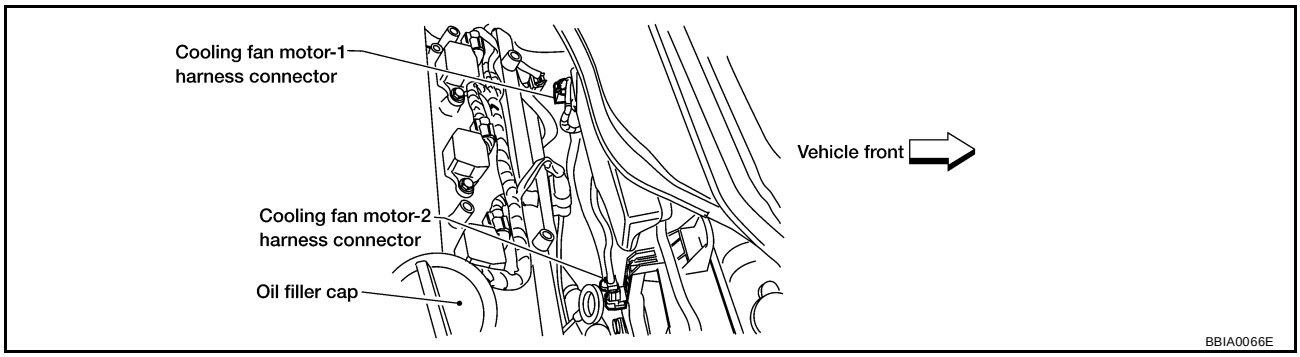

2. Check harness continuity between cooling fan motor-1 terminal 1 and IPDM E/R terminal 7, cooling fan motor-1 terminal 4 and body ground.
   Refer to wiring diagram.

Continuity should exist.

3. Also check harness for short to ground and short to power.
4. Check harness continuity between cooling fan motor-2 terminal 1 and IPDM E/R terminal 13, cooling fan motor-2 terminal 4 and body ground.
   Refer to wiring diagram.

Continuity should exist.

5. Also check harness for short to ground and short to power.

OK or NG

OK >> GO TO 4.
NG >> Repair open circuit or short to ground or short to power in harness or connectors.

4. CHECK COOLING FAN MOTORS

Refer to EC-1113, "COOLING FAN MOTORS-1 AND -2" .

OK or NG

OK >> GO TO 5.
NG >> Replace cooling fan motors.

5. CHECK INTERMITTENT INCIDENT

Perform EC-756, "TROUBLE DIAGNOSIS FOR INTERMITTENT INCIDENT" .

OK or NG

OK >> Replace IPDM E/R. Refer to PG-14, "IPDM E/R (INTELLIGENT POWER DISTRIBUTION MODULE ENGINE ROOM)" .
NG >> Repair or replace harness or connector.

PROCEDURE B

1. CHECK COOLING FAN MOTORS CIRCUIT

1. Turn ignition switch “OFF”.
2. Disconnect cooling fan motor-1 harness connector and cooling fan motor-2 harness connector.

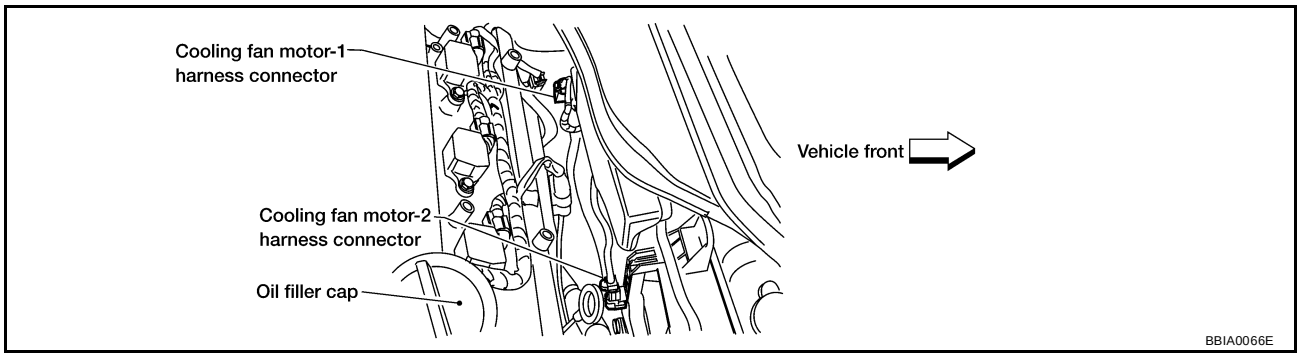

3. Check harness continuity between the following;
   cooling fan motor-1 terminal 2 and IPDM E/R terminal 5,
   cooling fan motor-1 terminal 3 and IPDM E/R terminal 15,
   IPDM E/R terminal 14 and body ground.
   Refer to wiring diagram.

   Continuity should exist.

4. Also check harness for short to ground and short to power.
5. Check harness continuity between the following;
   cooling fan motor-2 terminal 2 and IPDM E/R terminal 10,
   cooling fan motor-2 terminal 3 and IPDM E/R terminal 12,
   IPDM E/R terminal 14 and body ground.
   Refer to wiring diagram.

   Continuity should exist.

6. Also check harness for short to ground and short to power.

OK or NG

OK >> GO TO 2.
NG >> Repair open circuit or short to ground or short to power in harness or connectors.

2. CHECK COOLING FAN MOTORS

Refer to EC-1113, "COOLING FAN MOTORS-1 AND -2" .

OK or NG

OK >> GO TO 3.
NG >> Replace cooling fan motors.

3. CHECK INTERMITTENT INCIDENT

Perform EC-756, "TROUBLE DIAGNOSIS FOR INTERMITTENT INCIDENT" .

OK or NG

OK >> Replace IPDM E/R. Refer to PG-14, "IPDM E/R (INTELLIGENT POWER DISTRIBUTION MODULE ENGINE ROOM)" .
NG >> Repair or replace harness connectors.

Main 12 Causes of Overheating

UBS003GX

Engine	Step	Inspection item	Equipment	Standard	Reference page
OFF	1	● Blocked radiator ● Blocked condenser ● Blocked radiator grille ● Blocked bumper	● Visual	No blocking	—
	2	● Coolant mixture	● Coolant tester	50 - 50% coolant mixture	MA-12
	3	● Coolant level	● Visual	Coolant up to MAX level in reservoir tank and radiator filler neck	MA-22
	4	● Radiator cap	● Pressure tester	59 - 98 kPa (0.6 - 1.0 kg/cm^2 , 9 - 14 psi) (Limit)	CO-33
ON*2	5	● Coolant leaks	● Visual	No leaks	CO-32
ON*2	6	● Thermostat	● Touch the upper and lower radiator hoses	Both hoses should be hot	CO-45
ON*1	7	● Cooling fan	● CONSULT-II	Operating	See trouble diagnosis for DTC P1217 (EC-1103).
OFF	8	● Combustion gas leak	● Color checker chemical tester 4 Gas analyzer	Negative	—
ON*3	9	● Coolant temperature gauge	● Visual	Gauge less than 3/4 when driving	—
		● Coolant overflow to reservoir tank	● Visual	No overflow during driving and idling	MA-22
OFF*4	10	● Coolant return from reservoir tank to radiator	● Visual	Should be initial level in reservoir tank	MA-22
OFF	11	● Cylinder head	● Straight gauge feeler gauge	0.1 mm (0.004 in) Maximum distortion (warping)	EM-178
	12	● Cylinder block and pistons	● Visual	No scuffing on cylinder walls or piston	EM-194

*1: Turn the ignition switch ON.
*2: Engine running at 3,000 rpm for 10 minutes.
*3: Drive at 90 km/h (55 MPH) for 30 minutes and then let idle for 10 minutes.
*4: After 60 minutes of cool down time.
For more information, refer to CO-29, "OVERHEATING CAUSE ANALYSIS" .

Component Inspection

UBS003GY

COOLING FAN MOTORS-1 AND -2

1. Disconnect cooling fan motor harness connectors.
2. Supply cooling fan motor terminals with battery voltage and check operation.

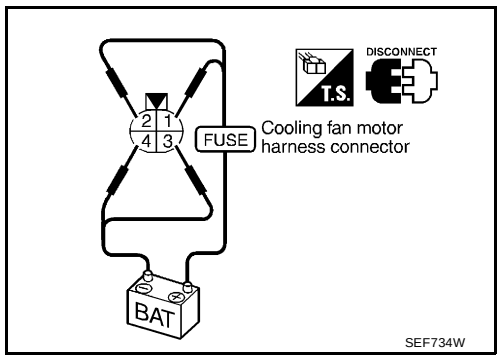

	Speed	Terminals	
		(+)	(–)
Cooling fan motor	Low	1	4
	High	1, 2	3, 4

Cooling fan motor should operate.
If NG, replace cooling fan motor.

DTC P1223, P1224 TP SENSOR

PFP:16119

Component Description

UBS003GZ

Electric Throttle Control Actuator consists of throttle control motor, throttle position sensor, etc. The throttle position sensor responds to the throttle valve movement.
The throttle position sensor has the two sensors. These sensors are a kind of potentiometers which transform the throttle valve position into output voltage, and emit the voltage signal to the ECM. In addition, these sensors detect the opening and closing speed of the throttle valve and feed the voltage signals to the ECM. The ECM judges the current opening angle of the throttle valve from these signals and the ECM controls the throttle control motor to make the throttle valve opening angle properly in response to driving condition.

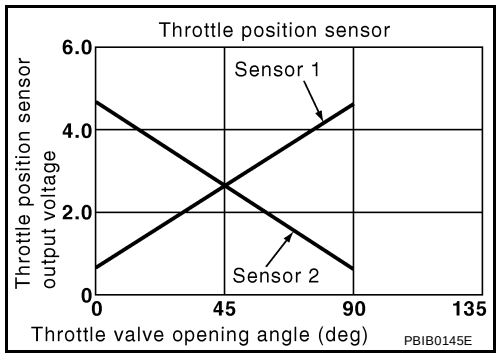

CONSULT-II Reference Value in Data Monitor Mode

UBS003H0

Specification data are reference values.

MONITOR ITEM	CONDITION		SPECIFICATION
THRTL SEN2	● Ignition switch: ON (Engine stopped) ● Shift lever: D (A/T model) 1st (M/T model)	Accelerator pedal: Fully released	More than 0.36V
		Accelerator pedal: Fully depressed	Less than 4.75V

On Board Diagnosis Logic

UBS003H1

These self-diagnoses have the one trip detection logic.

DTC No.	Trouble diagnosis name	DTC detecting condition	Possible cause
P1223 1223	Throttle position sensor 2 circuit low input	An excessively low voltage from the TP sensor 2 is sent to ECM.	● Harness or connectors (The TP sensor 2 circuit is open or shorted.) ● Electric throttle control actuator (TP sensor 2)
P1224 1224	Throttle position sensor 2 circuit high input	An excessively high voltage from the TP sensor 2 is sent to ECM.	

FAIL-SAFE MODE

When the malfunction is detected, ECM enters in fail-safe mode and the MIL lights up.

Engine operation condition in fail-safe mode
The ECM controls the electric throttle control actuator in regulating the throttle opening in order for the idle position to be within +10 degrees. The ECM regulates an opening speed of approx. 5 seconds to an opening of 10 degrees. So, the acceleration will be poor.

DTC Confirmation Procedure

UBS003H2

NOTE:
If “DTC Confirmation Procedure” has been previously conducted, always turn ignition switch “OFF” and wait at least 10 seconds before conducting the next test.
TESTING CONDITION:
Before performing the following procedure, confirm that battery voltage is more than 10V at idle.

WITH CONSULT-II

1. Turn ignition switch “ON”.

2. Select "DATA MONITOR" mode with CONSULT-II.
3. Start engine and let it idle for 1 second.
4. If DTC is detected, go to EC-1117, "Diagnostic Procedure" .

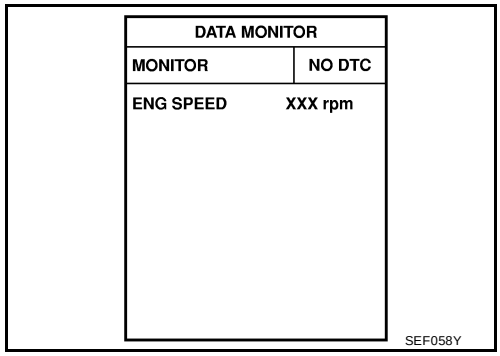

WITH GST

Follow the procedure “WITH CONSULT-II” above.

Wiring Diagram

UBS003H3

EC-TPS2-01

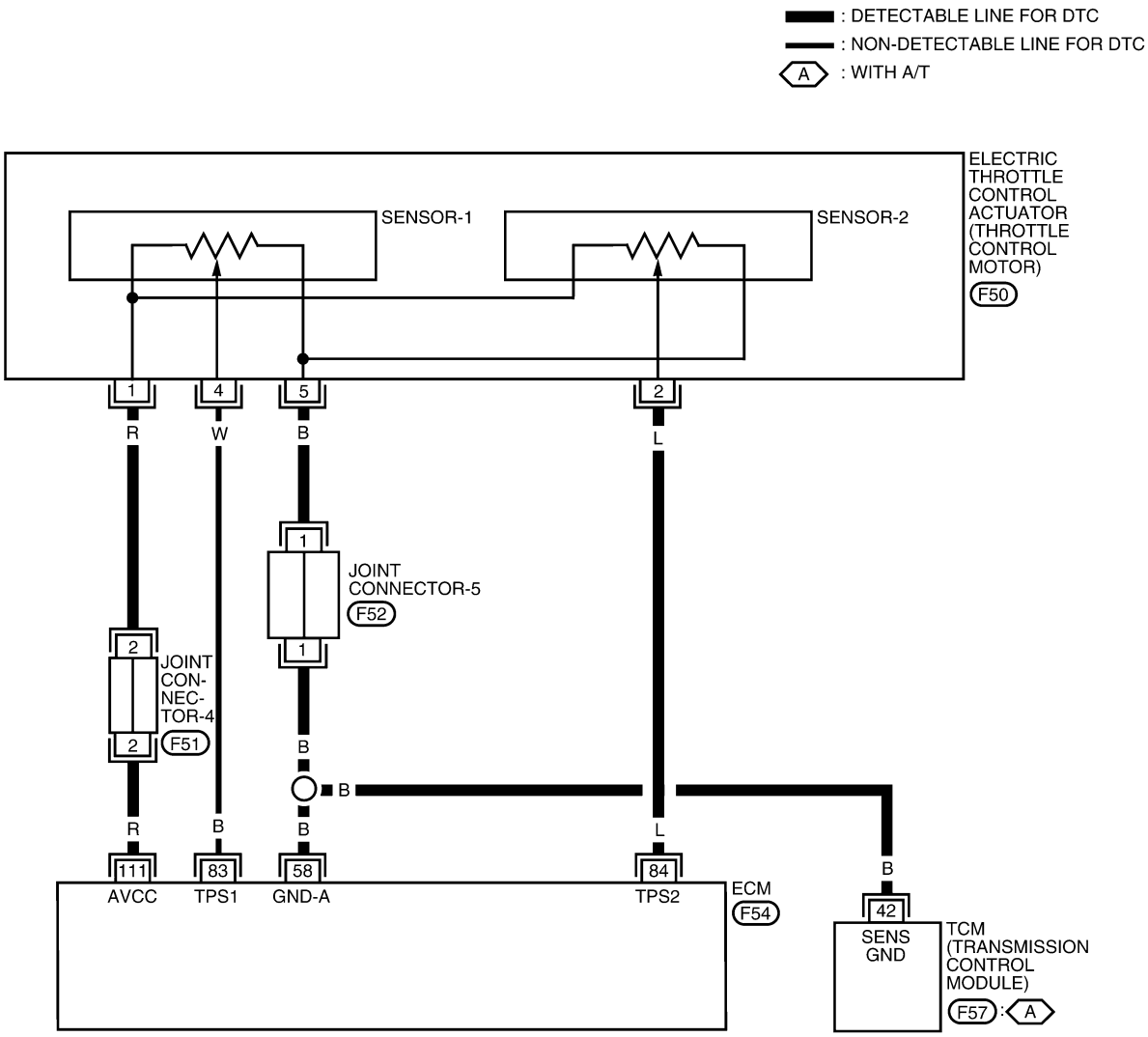

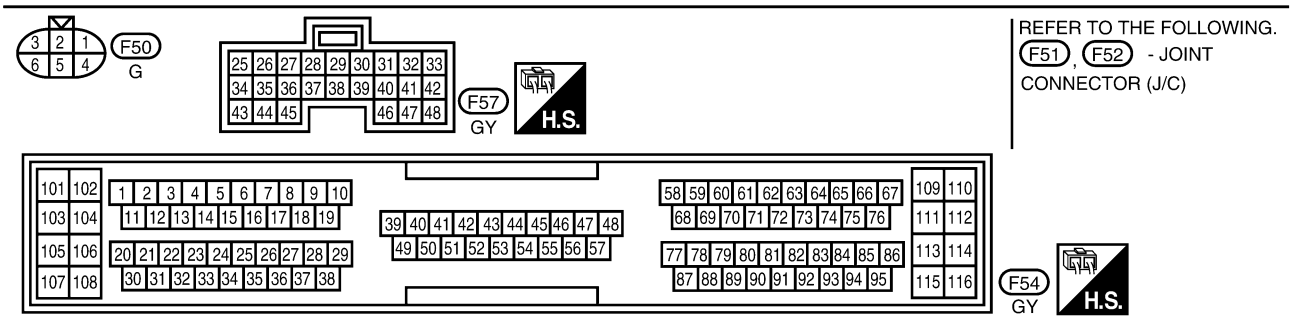

BBWA0194E

Specification data are reference values and are measured between each terminal and ground.

CAUTION:

Do not use ECM ground terminals when measuring input/output voltage. Doing so may result in damage to the ECM's transistor. Use a ground other than ECM terminals, such as the ground.

TERMINAL NO.	WIRE COLOR	ITEM	CONDITION	DATA (DC Voltage)
58	B	Sensors' ground	**[Engine is running]** ● **Warm-up condition** ● Idle speed	Approximately 0V
83	W	Throttle position sensor 1	**[Ignition switch "ON"]** ● Gear position: "D" (A/T models) ● Gear position: "1st" (M/T models) ● Accelerator pedal fully released	More than 0.36V
			[Ignition switch "ON"] ● Gear position: "D" (A/T models) ● Gear position: "1st" (M/T models) ● Accelerator pedal fully depressed	Less than 4.75V
84	L	Throttle position sensor 2	**[Ignition switch "ON"]** ● Gear position: "D" (A/T models) ● Gear position: "1st" (M/T models) ● Accelerator pedal fully released	Less than 4.75V
			[Ignition switch "ON"] ● Gear position: "D" (A/T models) ● Gear position: "1st" (M/T models) ● Accelerator pedal fully depressed	More than 0.36V
111	R	Sensor's power supply	**[Ignition switch "ON"]**	Approximately 5V

Diagnostic Procedure

UBS003H4

1. RETIGHTEN GROUND SCREWS

1. Turn ignition switch "OFF".
2. Loosen and retighten engine ground screws.

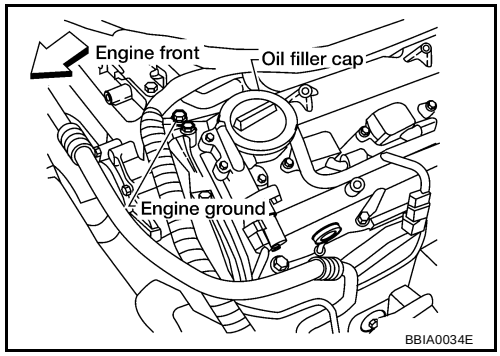

>> GO TO 2.

2. CHECK THROTTLE POSITION SENSOR 2 POWER SUPPLY CIRCUIT

1. Disconnect electric throttle control actuator harness connector.
2. Turn ignition switch “ON”.

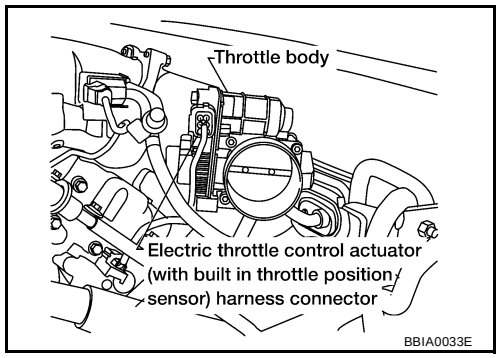

3. Check voltage between electric throttle control actuator terminal 1 and ground with CONSULT-II or tester.

Voltage: Approximately 5V

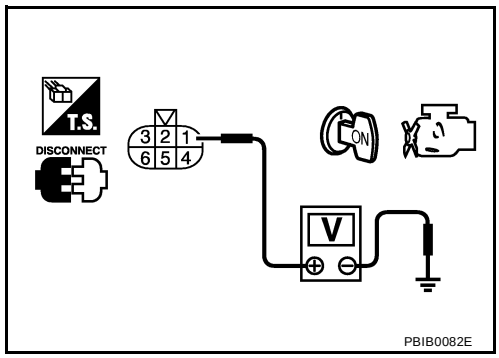

OK or NG

OK >> GO TO 3.
NG >> Repair open circuit or short to ground or short to power in harness or connectors.

3. CHECK THROTTLE POSITION SENSOR 2 GROUND CIRCUIT FOR OPEN AND SHORT

1. Turn ignition switch “OFF”.
2. Check harness continuity between electric throttle control actuator terminal 5 and engine ground. Refer to Wiring Diagram.

Continuity should exist.

3. Also check harness for short to ground and short to power.

OK or NG

OK >> GO TO 5.
NG >> GO TO 4.

4. DETECT MALFUNCTIONING PART

Check the following.

- Joint connector-5
- Harness for open or short between electric throttle control actuator and ECM
- Harness for open or short between electric throttle control actuator and TCM

>> Repair open circuit or short to ground or short to power in harness or connectors.

5. CHECK THROTTLE POSITION SENSOR 2 INPUT SIGNAL CIRCUIT FOR OPEN AND SHORT

1. Disconnect ECM harness connector.
2. Check harness continuity between ECM terminal 84 and electric throttle control actuator terminal 2. Refer to Wiring Diagram.

Continuity should exist.

3. Also check harness for short to ground and short to power.

OK or NG

OK >> GO TO 6.
NG >> Repair open circuit or short to ground or short to power in harness or connectors.

6. CHECK THROTTLE POSITION SENSOR

Refer to EC-1119, "Component Inspection" .

OK or NG

OK >> GO TO 8.
NG >> GO TO 7.

7. REPLACE ELECTRIC THROTTLE CONTROL ACTUATOR

1. Replace the electric throttle control actuator.
2. Perform EC-669, "Throttle Valve Closed Position Learning" .
3. Perform EC-669, "Idle Air Volume Learning" .

>> **INSPECTION END**

8. CHECK INTERMITTENT INCIDENT

Refer to EC-756, "TROUBLE DIAGNOSIS FOR INTERMITTENT INCIDENT" .

>> **INSPECTION END**

Component Inspection

UBS003H5

THROTTLE POSITION SENSOR

1. Reconnect all harness connectors disconnected.
2. Perform EC-669, "Throttle Valve Closed Position Learning" .
3. Turn ignition switch "ON".
4. Set selector lever to "D" position (A/T models) or "1st" position (M/T models).
5. Check voltage between ECM terminals 83 (TP sensor 1signal), 84 (TP sensor 2signal) and engine ground under the following conditions.

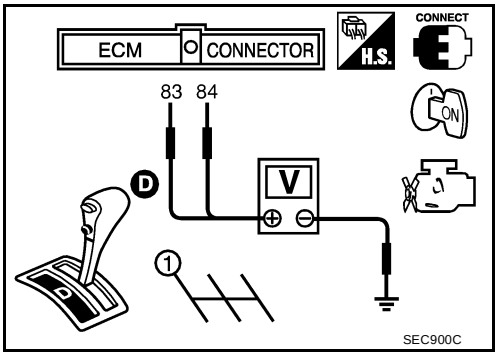

Terminal	Accelerator pedal	Voltage
83 (Throttle position sensor 1)	Fully released	More than 0.36V
	Fully depressed	Less than 4.75V
84 (Throttle position sensor 2)	Fully released	Less than 4.75V
	Fully depressed	More than 0.36V

6. If NG, replace electric throttle control actuator and go to the next step.
7. Perform EC-669, "Throttle Valve Closed Position Learning" .
8. Perform EC-669, "Idle Air Volume Learning" .

Removal and Installation

UBS003H6

ELECTRIC THROTTLE CONTROL ACTUATOR

Refer to EM-112, "INTAKE MANIFOLD" .

DTC P1225 TP SENSOR

PFP:16119

Component Description

UBS003H7

Electric Throttle Control Actuator consists of throttle control motor, acceleration pedal position sensor, throttle position sensor, etc. The throttle position sensor responds to the throttle valve movement.
The throttle position sensor has the two sensors. These sensors are a kind of potentiometers which transform the throttle valve position into output voltage, and emit the voltage signal to the ECM. In addition, these sensors detect the opening and closing speed of the throttle valve and feed the voltage signals to the ECM. The ECM judges the current opening angle of the throttle valve from these signals and the ECM controls the throttle control motor to make the throttle valve opening angle properly in response to driving condition.

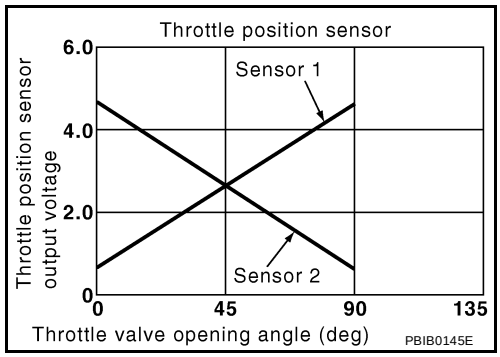

On Board Diagnosis Logic

UBS003H8

DTC No.	Trouble diagnosis name	DTC detecting condition	Possible cause
P1225 1225	Closed throttle position learning performance problem	Closed throttle position learning value is excessively low.	● Electric throttle control actuator (TP sensor 1 and 2)

DTC Confirmation Procedure

UBS003H9

NOTE:
If “DTC Confirmation Procedure” has been previously conducted, always turn ignition switch “OFF” and wait at least 10 seconds before conducting the next test.
TESTING CONDITION:
Before performing the following procedure, confirm that battery voltage is more than 10V at idle.

WITH CONSULT-II

1. Turn ignition switch “ON”.
2. Select “DATA MONITOR” mode with CONSULT-II.
3. Turn ignition switch "OFF", wait at least 10 seconds.
4. Turn ignition switch "ON".
5. If 1st trip DTC is detected, go to EC-1122, "Diagnostic Procedure" .

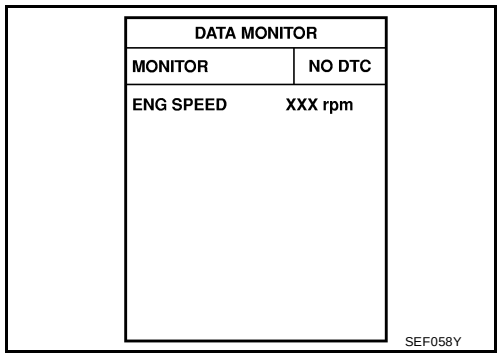

WITH GST

Follow the procedure “WITH CONSULT-II” above.

Diagnostic Procedure

UBS003HA

1. CHECK ELECTRIC THROTTLE CONTROL ACTUATOR VISUALLY

1. Turn ignition switch “OFF”.
2. Remove the intake air duct.
3. Check if foreign matter is caught between the throttle valve and the housing.

OK or NG

OK >> GO TO 2.
NG >> Remove the foreign matter and clean the electric throttle control actuator inside.

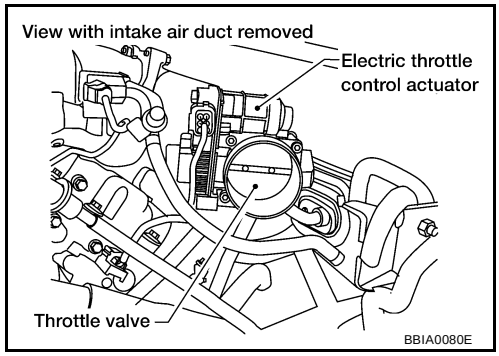

2. REPLACE ELECTRIC THROTTLE CONTROL ACTUATOR

1. Replace the electric throttle control actuator.
2. Perform EC-669, "Throttle Valve Closed Position Learning" .
3. Perform EC-669, "Idle Air Volume Learning" .

>> **INSPECTION END**

Removal and Installation

UBS003HB

ELECTRIC THROTTLE CONTROL ACTUATOR

Refer to EM-112, "INTAKE MANIFOLD" .

DTC P1226 TP SENSOR

PFP:16119

Component Description

UBS003HC

Electric Throttle Control Actuator consists of throttle control motor, acceleration pedal position sensor, throttle position sensor, etc. The throttle position sensor responds to the throttle valve movement.
The throttle position sensor has the two sensors. These sensors are a kind of potentiometers which transform the throttle valve position into output voltage, and emit the voltage signal to the ECM. In addition, these sensors detect the opening and closing speed of the throttle valve and feed the voltage signals to the ECM. The ECM judges the current opening angle of the throttle valve from these signals and the ECM controls the throttle control motor to make the throttle valve opening angle properly in response to driving condition.

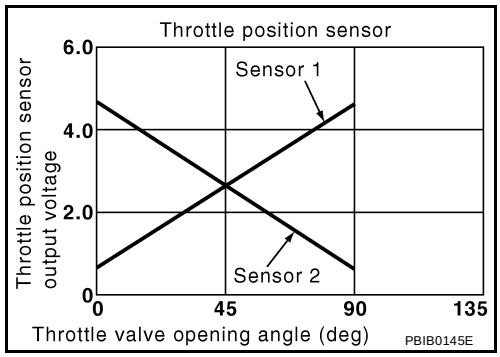

On Board Diagnosis Logic

UBS003HD

DTC No.	Trouble diagnosis name	DTC detecting condition	Possible cause
P1226 1226	Closed throttle position learning performance problem	Closed throttle position learning is not performed successfully, repeatedly.	● Electric throttle control actuator (TP sensor 1 and 2)

DTC Confirmation Procedure

UBS003HE

NOTE:
If “DTC Confirmation Procedure” has been previously conducted, always turn ignition switch “OFF” and wait at least 10 seconds before conducting the next test.
TESTING CONDITION:
Before performing the following procedure, confirm that battery voltage is more than 10V at idle.

WITH CONSULT-II

1. Turn ignition switch "ON".
2. Select "DATA MONITOR" mode with CONSULT-II.
3. Turn ignition switch “OFF”, wait at least 10 seconds.
4. Turn ignition switch "ON".
5. Repeat steps 3 and 4, 32 times.
6. If 1st trip DTC is detected, go to EC-1124, "Diagnostic Procedure" .

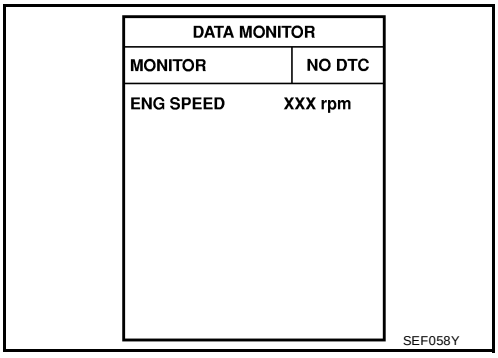

WITH GST

Follow the procedure “With CONSULT-II” above.

Diagnostic Procedure

UBS003HF

1. CHECK ELECTRIC THROTTLE CONTROL ACTUATOR VISUALLY

1. Turn ignition switch “OFF”.
2. Remove the intake air duct.
3. Check if foreign matter is caught between the throttle valve and the housing.

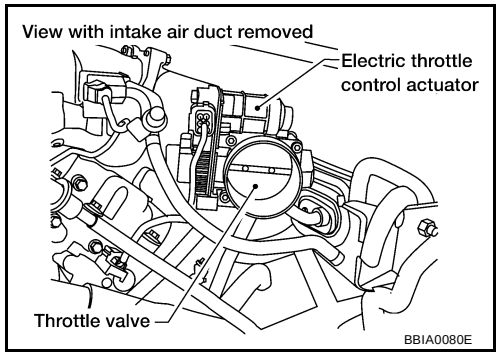

OK or NG

OK >> GO TO 2.
NG >> Remove the foreign matter and clean the electric throttle control actuator inside.

2. REPLACE ELECTRIC THROTTLE CONTROL ACTUATOR

1. Replace the electric throttle control actuator.
2. Perform EC-669, "Throttle Valve Closed Position Learning" .
3. Perform EC-669, "Idle Air Volume Learning" .

>> **INSPECTION END**

Removal and Installation

UBS003HG

ELECTRIC THROTTLE CONTROL ACTUATOR

Refer to EM-112, "INTAKE MANIFOLD" .

DTC P1227, P1228 APP SENSOR

PFP:18002

Component Description

UBS003HH

The accelerator pedal position sensor is installed on the upper end of the accelerator pedal assembly. The sensor detects the accelerator position and sends a signal to the ECM.
Accelerator pedal position sensor has two sensors. These sensors are a kind of potentiometers which transform the accelerator pedal position into output voltage, and emit the voltage signal to the ECM. In addition, these sensors detect the opening and closing speed of the accelerator pedal and feed the voltage signals to the ECM. The ECM judges the current opening angle of the accelerator pedal from these signals and controls the throttle control motor based on these signals.

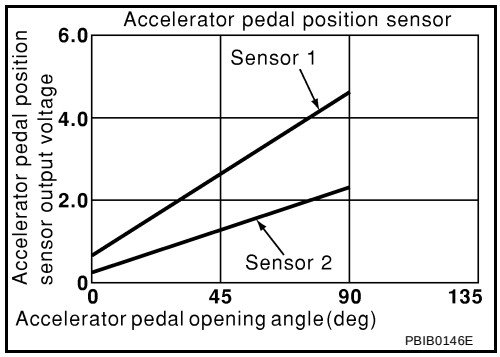

Idle position of the accelerator pedal is determined by the ECM receiving the signal from the accelerator pedal position sensor. The ECM uses this signal for the engine operation such as fuel cut.

CONSULT-II Reference Value in Data Monitor Mode

UBS003HI

Specification data are reference values.

MONITOR ITEM	CONDITION		SPECIFICATION
ACCEL SEN1 ACCEL SEN2	● Ignition switch: ON (engine stopped)	Accelerator pedal: Fully released	0.41 - 0.71V
		Accelerator pedal: Fully depressed	More than 4.2V
CLSD THL POS	● Ignition switch: ON	Accelerator pedal: Fully released	ON
		Accelerator pedal: Slightly depressed	OFF

On Board Diagnosis Logic

UBS003HJ

These self-diagnoses have the one trip detection logic.

DTC No.	Trouble diagnosis name	DTC detecting condition	Possible cause
P1227 1227	Accelerator pedal position sensor 2 circuit low input	An excessively low voltage from the APP sensor 2 is sent to ECM.	● Harness or connectors (The APP sensor 2 circuit is open or shorted.) ● Accelerator pedal position sensor (Accelerator pedal position sensor 2)
P1228 1228	Accelerator pedal position sensor 2 circuit high input	An excessively high voltage from the APP sensor 2 is sent to ECM.	

FAIL-SAFE MODE

When the malfunction is detected, ECM enters in fail-safe mode and the MIL lights up.

Engine operating condition in fail-safe mode
The ECM controls the electric throttle control actuator in regulating the throttle opening in order for the idle position to be within +10 degrees. The ECM regulates an opening speed of approx. 5 seconds to an opening of 10 degrees. So, the acceleration will be poor.

DTC Confirmation Procedure

UBS003HK

NOTE:
If “DTC Confirmation Procedure” has been previously conducted, always turn ignition switch “OFF” and wait at least 10 seconds before conducting the next test.
TESTING CONDITION:
Before performing the following procedure, confirm that battery voltage is more than 10V at idle.

WITH CONSULT-II

1. Turn ignition switch “ON”.

2. Select “DATA MONITOR” mode with CONSULT-II.
3. Start engine and let it idle for 1 second.
4. If DTC is detected, go to EC-1128, "Diagnostic Procedure" .

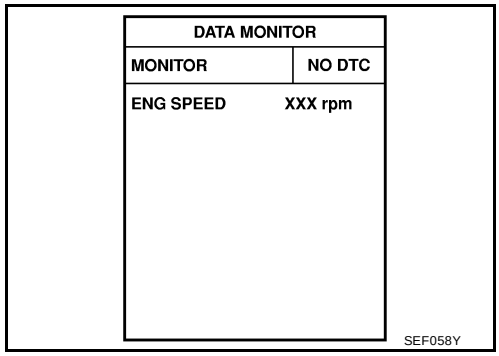

WITH GST

Follow the procedure “With CONSULT-II” above.

Wiring Diagram

UBS003HL

EC-APPS2-01

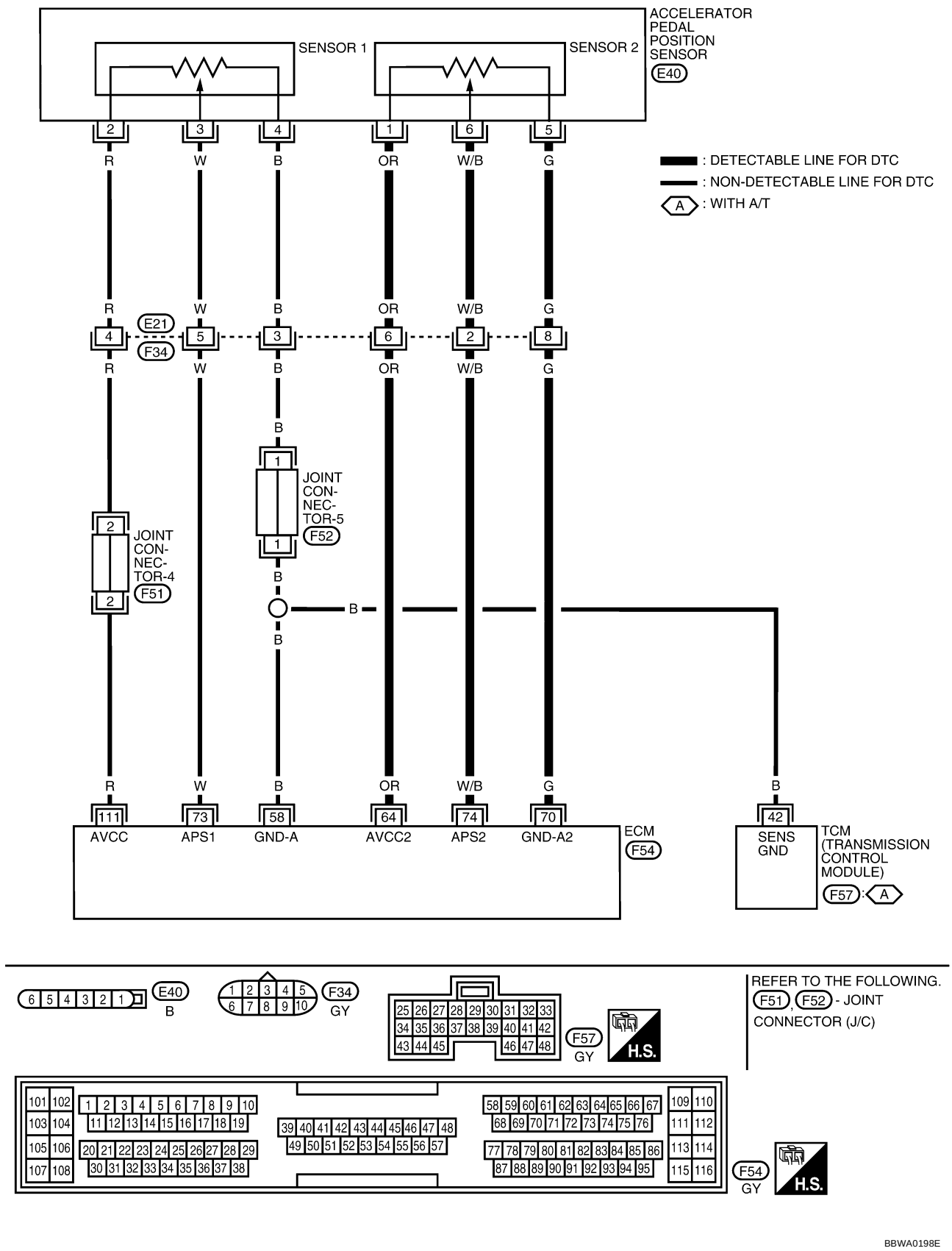

BBWA0198E

Specification data are reference values and are measured between each terminal and ground.

CAUTION:
Do not use ECM ground terminals when measuring input/output voltage. Doing so may result in damage to the ECM's transistor. Use a ground other than ECM terminals, such as the ground.

TERMINAL NO.	WIRE COLOR	ITEM	CONDITION	DATA (DC Voltage)
58	B	Sensors' ground	**[Engine is running]** ● **Warm-up condition** ● Idle speed	Approximately 0V
64	OR	Accelerator pedal position sensor 2 power supply	**[Ignition switch “ON”]**	Approximately 2.5V
70	G	Accelerator pedal position sensor 2 ground	**[Ignition switch “ON”]**	Approximately 0V
73	W	Accelerator pedal position sensor 1	**[Ignition switch "ON"]** ● Accelerator pedal fully released	0.41 - 0.71V
			[Ignition switch "ON"] ● Accelerator pedal fully depressed	More than 4.2V
74	W/B	Accelerator pedal position sensor 2	**[Ignition switch "ON"]** ● Accelerator pedal fully released	0.21 - 0.36V
			[Ignition switch "ON"] ● Accelerator pedal fully depressed	More than 2.1V
111	R	Sensor's power supply	**[Ignition switch “ON”]**	Approximately 5V

Diagnostic Procedure

UBS003HM

1. RETIGHTEN GROUND SCREWS

1. Turn ignition switch “OFF”.
2. Loosen and retighten engine ground screws.

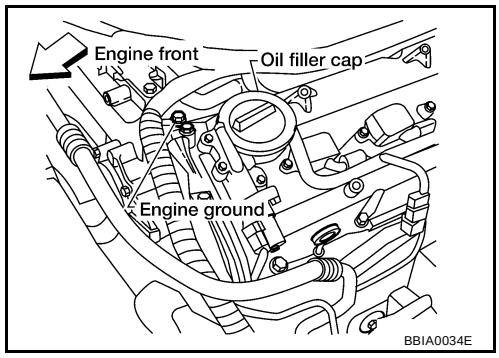

>> GO TO 2.

2. CHECK APP SENSOR 2 POWER SUPPLY CIRCUIT

1. Disconnect accelerator pedal position (APP) sensor harness connector.
2. Turn ignition switch “ON”.

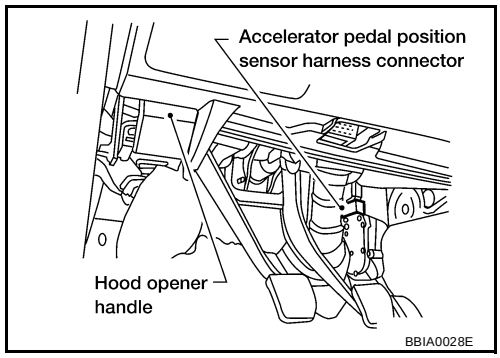

3. Check voltage between APP sensor terminal 1 and ground with CONSULT-II or tester.

Voltage: Approximately 2.5V

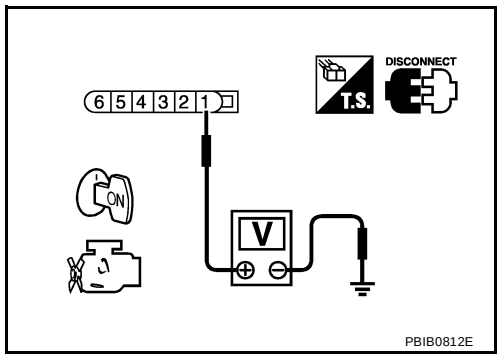

OK or NG

OK >> GO TO 4.
NG >> GO TO 3.

3. DETECT MALFUNCTIONING PART

Check the following.

- Harness connectors E21, F34
- Harness for open or short between ECM and accelerator pedal position sensor

>> Repair open circuit or short to ground or short to power in harness or connectors.

4. CHECK APP SENSOR 2 GROUND CIRCUIT FOR OPEN AND SHORT

1. Turn ignition switch “OFF”.
2. Check harness continuity between APP sensor terminal 5 and engine ground. Refer to Wiring Diagram.

Continuity should exist.

3. Also check harness for short to ground and short to power.

OK or NG

OK >> GO TO 6.
NG >> GO TO 5.

5. DETECT MALFUNCTIONING PART

Check the following.

- Harness connectors E21, F34
- Harness for open or short between ECM and accelerator pedal position sensor

>> Repair open circuit or short to ground or short to power in harness or connectors.

6. CHECK APP SENSOR 2 INPUT SIGNAL CIRCUIT FOR OPEN AND SHORT

1. Disconnect ECM harness connector.
2. Check harness continuity between ECM terminal 74 and APP sensor terminal 6.
   Refer to Wiring Diagram.

   Continuity should exist.

3. Also check harness for short to ground and short to power.

OK or NG

OK >> GO TO 8.
NG >> GO TO 7.

7. DETECT MALFUNCTIONING PART

Check the following.

- Harness connectors E21, F34
- Harness for open or short between ECM and accelerator pedal position sensor

>> Repair open circuit or short to ground or short to power in harness or connectors.

8. CHECK APP SENSOR

Refer to EC-1130, "Component Inspection" .

OK or NG

OK >> GO TO 9.
NG >> Replace accelerator pedal assembly.

9. CHECK INTERMITTENT INCIDENT

Refer to EC-756, "TROUBLE DIAGNOSIS FOR INTERMITTENT INCIDENT" .

>> **INSPECTION END**

Component Inspection

UBS003HN

ACCELERATOR PEDAL POSITION SENSOR

1. Reconnect all harness connectors disconnected.
2. Turn ignition switch "ON".
3. Check voltage between ECM terminals 73 (APP sensor 1 signal), 74 (APP sensor 2 signal) and engine ground under the following conditions.

Terminal	Accelerator pedal	Voltage
73 (Accelerator pedal position sensor 1)	Fully released	0.41 - 0.71V
	Fully depressed	More than 4.2V
74 (Accelerator pedal position sensor 2)	Fully released	0.21 - 0.36V
	Fully depressed	More than 2.1V

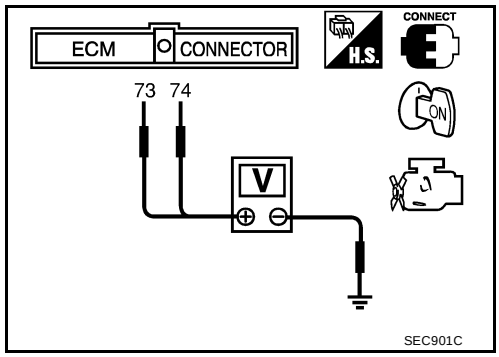

4. If NG, replace accelerator pedal assembly.

Removal and Installation

UBS003HO

ACCELERATOR PEDAL

Refer to ACC-2, "ACCELERATOR CONTROL SYSTEM" .

DTC P1229 SENSOR POWER SUPPLY

PFP:16119

On Board Diagnosis Logic

UBS003HP

This self-diagnosis has the one trip detection logic.

DTC No.	Trouble diagnosis name	DTC detecting condition	Possible cause
P1229 1229	Sensor power supply circuit short	ECM detects a voltage of power source for sensor is excessively low or high.	● Harness or connectors (The TP sensor 1 and 2 circuit is shorted.) (APP sensor 1 circuit is shorted.) (MAF sensor circuit is shorted.) (EVAP control system pressure sensor circuit is shorted.) (Power steering pressure sensor circuit is shorted.) (Refrigerant pressure sensor circuit is shorted.) ● Electric throttle control actuator (TP sensor 1 and 2) ● Accelerator pedal position sensor (APP sensor 1) ● MAF sensor ● EVAP control system pressure sensor ● Power steering pressures sensor ● Refrigerant pressures sensor ● ECM pin terminal

FAIL-SAFE MODE

When the malfunction is detected, ECM enters in fail-safe mode and the MIL lights up.

Engine operation condition in fail-safe mode
ECM stops the electric throttle control actuator control, throttle valve is maintained at a fixed opening (approx. 5 degrees) by the return spring.

DTC Confirmation Procedure

UBS003HQ

NOTE:
If “DTC Confirmation Procedure” has been previously conducted, always turn ignition switch “OFF” and wait at least 10 seconds before conducting the next test.
TESTING CONDITION:
Before performing the following procedure, confirm that battery voltage is more than 10V at idle.

WITH CONSULT-II

1. Turn ignition switch “ON”.
2. Select "DATA MONITOR" mode with CONSULT-II.
3. Start engine and let it idle for 1 second.
4. If DTC is detected, go to EC-1133, "Diagnostic Procedure" .

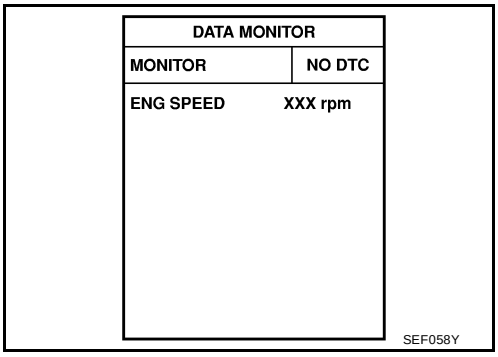

WITH GST

Follow the procedure “WITH CONSULT-II” above.

Wiring Diagram

UBS003HR

EC-SEN/PW-01

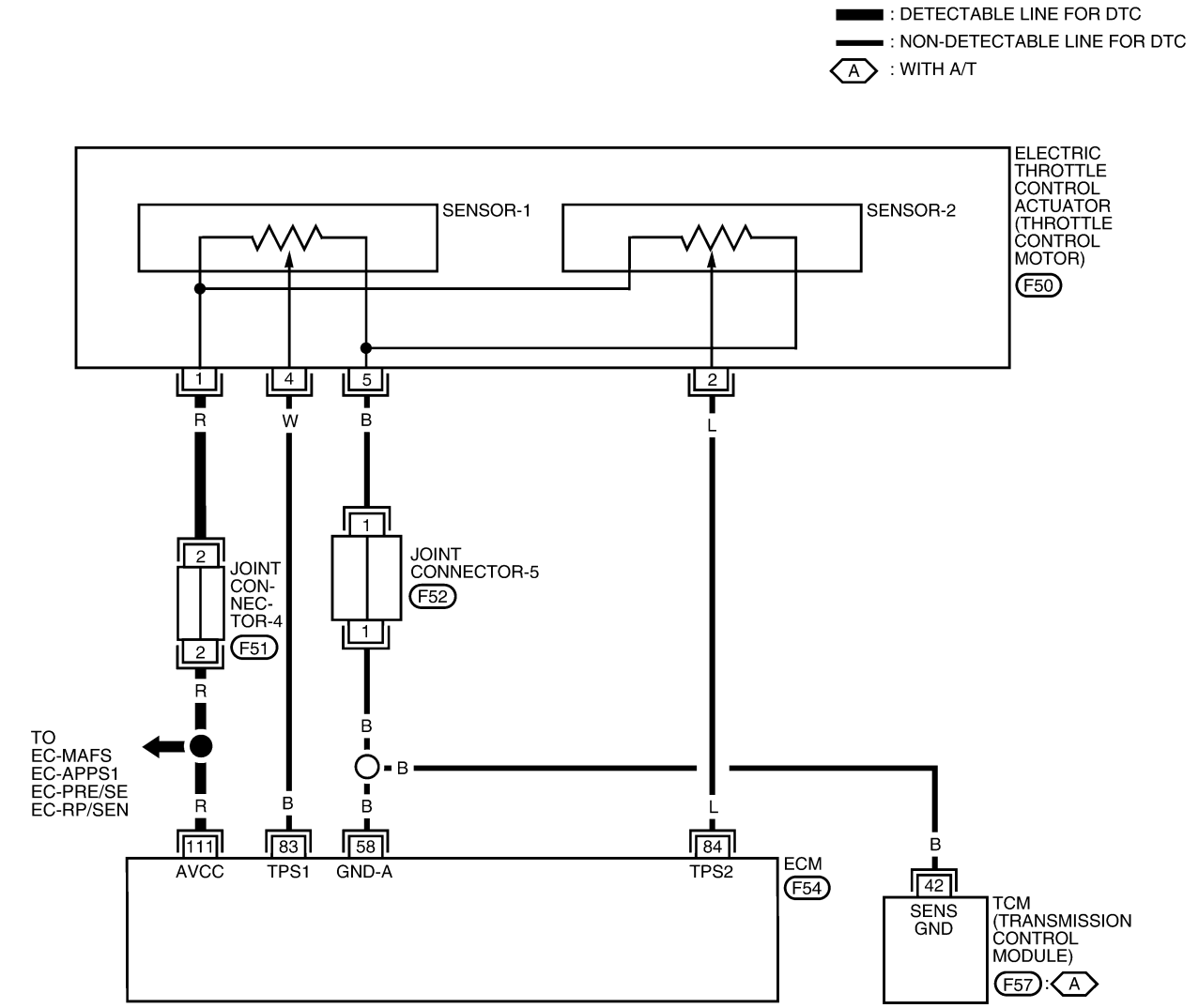

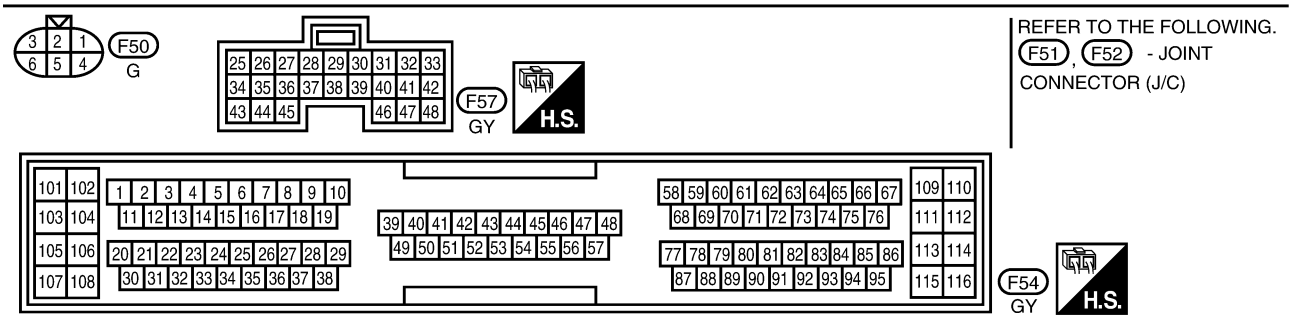

WBWA0005E

Specification data are reference values and are measured between each terminal and ground.

CAUTION:
Do not use ECM ground terminals when measuring input/output voltage. Doing so may result in damage to the ECM's transistor. Use a ground other than ECM terminals, such as the ground.

TERMINAL NO.	WIRE COLOR	ITEM	CONDITION	DATA (DC Voltage)
111	R	Sensor's power supply	**[Ignition switch "ON"]**	Approximately 5V

Diagnostic Procedure

UBS003HS

1. RETIGHTEN GROUND SCREWS

1. Turn ignition switch "OFF".
2. Loosen and retighten engine ground screws.

>> GO TO 2.

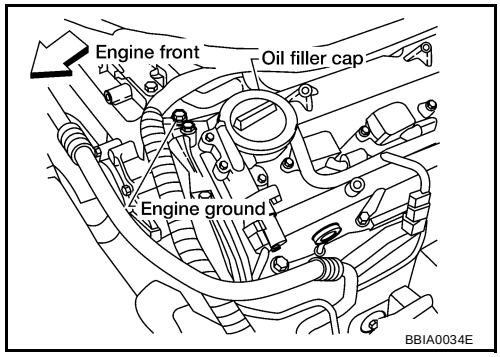

2. CHECK THROTTLE POSITION SENSOR POWER SUPPLY CIRCUIT

1. Disconnect electric throttle control actuator harness connector.
2. Turn ignition switch "ON".

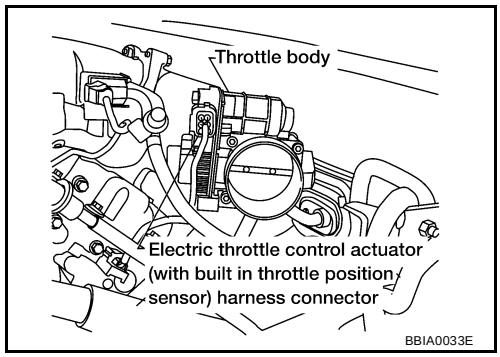

3. Check voltage between electric throttle control actuator terminal 1 and ground with CONSULT-II or tester.

Voltage: Approximately 5V

OK or NG

OK >> GO TO 5.
NG >> GO TO 3.

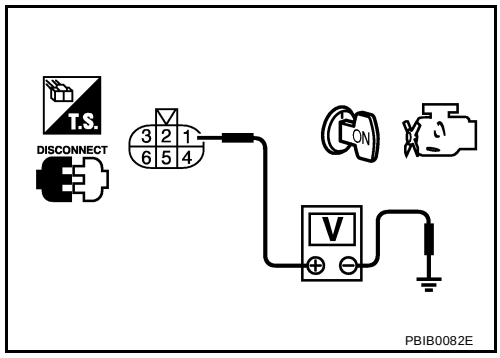

3. CHECK SENSOR POWER SUPPLY CIRCUITS

Check the following.

- Harness for short to power and short to ground, between the following terminals.

ECM terminal	Sensor terminals	Reference Wiring Diagram
111	Electric throttle control actuator terminal 1	EC-1132
	APP sensor terminal 2	EC-1127
	MAF sensor terminal 2	EC-800
	EVAP control system pressure sensor terminal 1	EC-987
	Power steering pressure sensor terminal 3	EC-1026
	Refrigerant pressure sensor terminal 1	EC-1253

- ECM pin terminal.

OK or NG

OK >> GO TO 4.
NG >> Repair short to ground or short to power in harness or connectors.

4. CHECK COMPONENTS

Check the following.

- Accelerator pedal position sensor (Refer to EC-1130 "Component Inspection".)
- Mass air flow sensor (Refer to EC-796 "Component Inspection".)
- EVAP control system pressure sensor (Refer to EC-990 "Component Inspection".)
- Power steering pressure sensor (Refer to EC-1028 "Component Inspection".)
- Refrigerant pressure sensor (Refer to EC-1254 "Component Inspection".)

OK or NG

OK >> GO TO 7.
NG >> Replace malfunctioning component.

5. CHECK THROTTLE POSITION SENSOR

Refer to EC-906 "Component Inspection".

OK or NG

OK >> GO TO 7.
NG >> GO TO 6.

6. REPLACE ELECTRIC THROTTLE CONTROL ACTUATOR

1. Replace electric throttle control actuator.
2. Perform EC-669, "Throttle Valve Closed Position Learning" .
3. Perform EC-669, "Idle Air Volume Learning" .

>> **INSPECTION END**

7. CHECK INTERMITTENT INCIDENT

Refer to EC-756, "TROUBLE DIAGNOSIS FOR INTERMITTENT INCIDENT" .

>> **INSPECTION END**

DTC P1444 EVAP CANISTER PURGE VOLUME CONTROL SOLENOID VALVE

PFP:14920

Description

UBS003HT

SYSTEM DESCRIPTION

Sensor	Input Signal to ECM	ECM function	Actuator
Crankshaft position sensor (POS) Camshaft position sensor (PHASE)	Engine speed	EVAP canister purge flow control	EVAP canister purge volume control solenoid valve
Mass air flow sensor	Amount of intake air		
Engine coolant temperature sensor	Engine coolant temperature		
Ignition switch	Start signal		
Throttle position sensor	Throttle position		
Accelerator pedal position switch	Accelerator pedal position		
Heated oxygen sensors 1	Density of oxygen in exhaust gas (Mixture ratio feedback signal)		
Fuel tank temperature sensor	Fuel temperature in fuel tank		
Vehicle speed signal (CAN communication line)	Vehicle speed		

This system controls flow rate of fuel vapor from the EVAP canister. The opening of the vapor by-pass passage in the EVAP canister purge volume control solenoid valve changes to control the flow rate. The EVAP canister purge volume control solenoid valve repeats ON/OFF operation according to the signal sent from the ECM. The opening of the valve varies for optimum engine control. The optimum value stored in the ECM is determined by considering various engine conditions. When the engine is operating, the flow rate of fuel vapor from the EVAP canister is regulated as the air flow changes.

COMPONENT DESCRIPTION

The EVAP canister purge volume control solenoid valve uses a ON/OFF duty to control the flow rate of fuel vapor from the EVAP canister. The EVAP canister purge volume control solenoid valve is moved by ON/OFF pulses from the ECM. The longer the ON pulse, the greater the amount of fuel vapor that will flow through the valve.

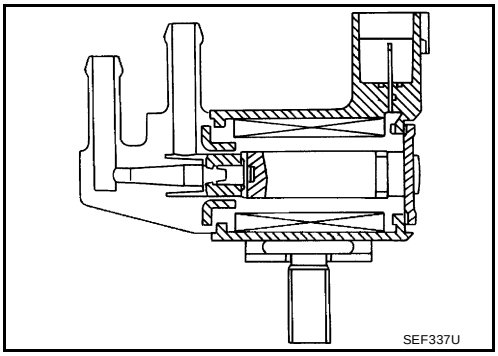

CONSULT-II Reference Value in Data Monitor Mode

UBS003HU

Specification data are reference values.

MONITOR ITEM	CONDITION		SPECIFICATION
PURG VOL C/V	● Engine: After warming up ● Air conditioner switch “OFF” ● Shift lever: “N” ● No-load	Idle (Vehicle stopped)	0%
		2,000 rpm	—

On Board Diagnosis Logic

UBS003HV

DTC No.	Trouble diagnosis name	DTC detecting condition	Possible cause
P1444 1444	EVAP canister purge volume control solenoid valve	The canister purge flow is detected during the specified driving conditions, even when EVAP canister purge volume control solenoid valve is completely closed.	● EVAP control system pressure sensor ● EVAP canister purge volume control solenoid valve (The valve is stuck open.) ● EVAP canister vent control valve ● EVAP canister ● Hoses (Hoses are connected incorrectly or clogged.)

DTC Confirmation Procedure

UBS003HW

NOTE:
If “DTC Confirmation Procedure” has been previously conducted, always turn ignition switch “OFF” and wait at least 10 seconds before conducting the next test.
TESTING CONDITION:
Always perform test at a temperature of 5°C (41°F) or more.

WITH CONSULT-II

1. Start engine and warm it up to normal operating temperature.
2. Turn ignition switch “OFF” and wait at least 10 seconds.
3. Turn ignition switch “ON”.
4. Select “PURG VOL CN/V P1444” of “EVAPORATIVE SYSTEM” in “DTC WORK SUPPORT” mode with CONSULT-II.
5. Touch “START”.

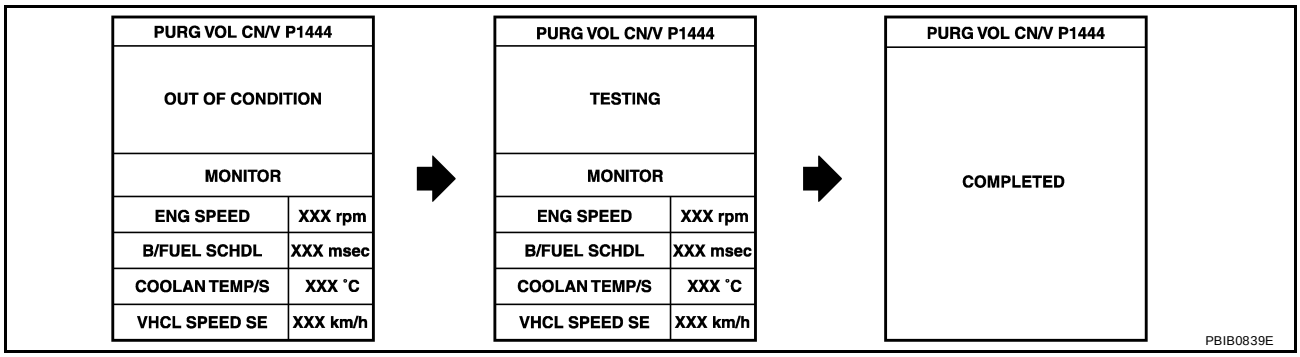

6. Start engine and let it idle until “TESTING” on CONSULT-II changes to “COMPLETED”. (It will take approximately 10 seconds.)
   If “TESTING” is not displayed after 5 minutes, retry from step 2.
7. Make sure that “OK” is displayed after touching “SELF-DIAG RESULTS”. If “NG” is displayed, refer to EC-1138, "Diagnostic Procedure" .

WITH GST

1. Start engine and warm it up to normal operating temperature.
2. Turn ignition switch “OFF” and wait at least 10 seconds.
3. Start engine and let it idle for at least 20 seconds.
4. Select “MODE 7” with GST.
5. If 1st trip DTC is detected, go to EC-1138, "Diagnostic Procedure" .

Wiring Diagram

UBS003HX

EC-PGC/V-01

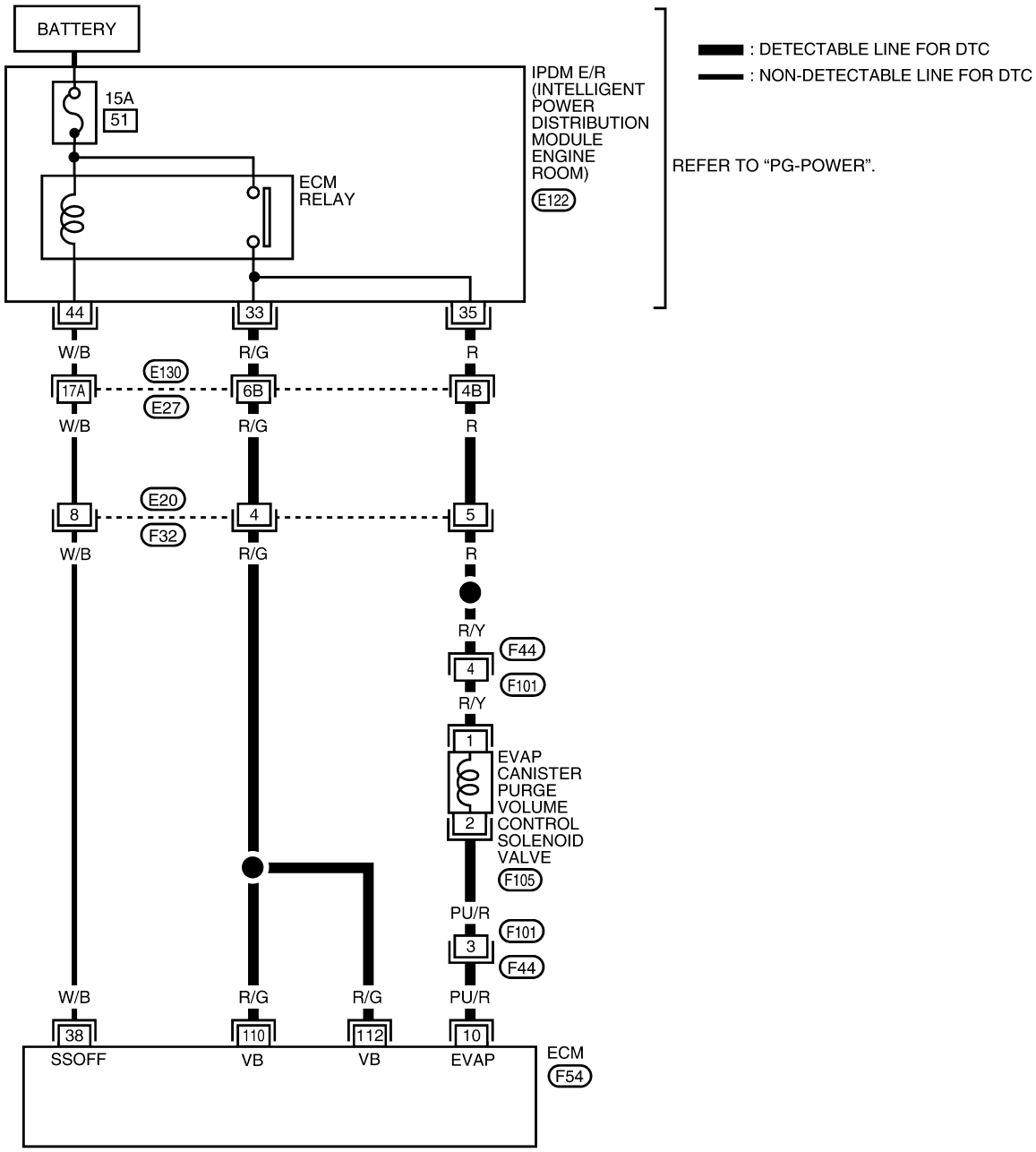

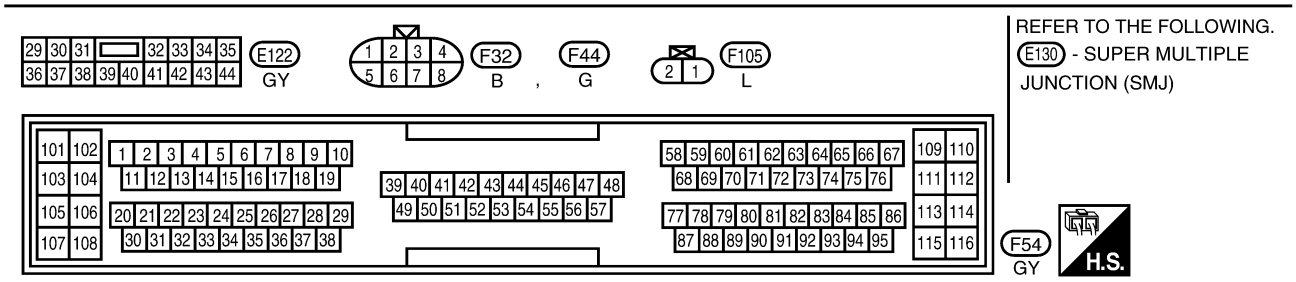

BBWA0068E

Specification data are reference values and are measured between each terminal and ground.

CAUTION:
Do not use ECM ground terminals when measuring input/output voltage. Doing so may result in damage to the ECM's transistor. Use a ground other than ECM terminals, such as the ground.

TERMINAL NO.	WIRE COLOR	ITEM	CONDITION	DATA (DC Voltage)
10	PU/R	EVAP canister purge volume control solenoid valve	**[Engine is running]** ● Idle speed	BATTERY VOLTAGE (11 - 14V)★ 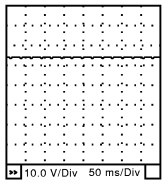 SEC990C
			[Engine is running] ● Engine speed is about 2,000 rpm (More than 100 seconds after starting engine).	BATTERY VOLTAGE (11 - 14V)★ 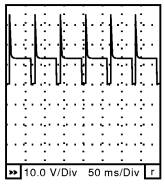 SEC991C

★: Average voltage for pulse signal (Actual pulse signal can be confirmed by oscilloscope.)

Diagnostic Procedure

UBS003HY

1. CHECK EVAP CANISTER PURGE VOLUME CONTROL SOLENOID VALVE POWER SUPPLY CIRCUIT

1. Turn ignition switch “OFF”.
2. Disconnect EVAP canister purge volume control solenoid valve harness connector.
3. Turn ignition switch “ON”.

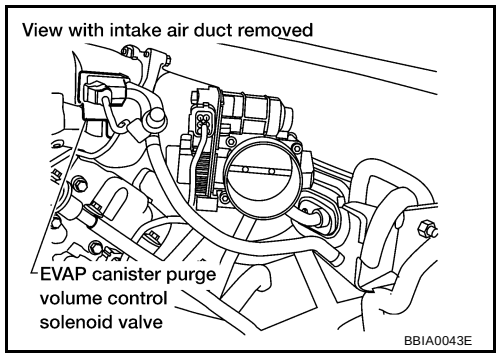

4. Check voltage between EVAP canister purge volume control solenoid valve terminal 1 and ground with CONSULT-II or tester.

Voltage: Battery voltage

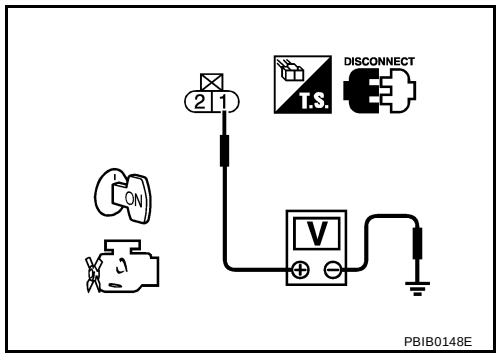

OK or NG

OK >> GO TO 3.
NG >> GO TO 2.

2. DETECT MALFUNCTIONING PART

Check the following.

- Harness connectors E130, E27
- Harness connectors E20, F32
- Harness connectors F44, F101
- IPDM E/R harness connector E122
- Harness for open or short between EVAP canister purge volume control solenoid valve and IPDM E/R
- Harness for open or short between ECM and IPDM E/R

>> Repair harness or connectors.

3. CHECK EVAP CANISTER PURGE VOLUME CONTROL SOLENOID VALVE OUTPUT SIGNAL CIRCUIT FOR OPEN AND SHORT

1. Turn ignition switch “OFF”.
2. Disconnect ECM harness connector.
3. Check harness continuity between ECM terminal 10 and EVAP canister purge volume control solenoid valve terminal 2. Refer to Wiring Diagram.

Continuity should exist.

4. Also check harness for short to ground and short to power.

OK or NG

OK >> GO TO 5.
NG >> GO TO 4.

4. DETECT MALFUNCTIONING PART

Check the following.

- Harness connectors F44, F101
- Harness for open or short between EVAP canister purge volume control solenoid valve and ECM

>> Repair open circuit or short to ground or short to power in harness or connectors.

5. CHECK EVAP CONTROL SYSTEM PRESSURE SENSOR HOSE

Check disconnection or improper connection of hose connected to EVAP control system pressure sensor.

OK or NG

OK >> GO TO 6.
NG >> Repair it.

6. CHECK EVAP CONTROL SYSTEM PRESSURE SENSOR CONNECTOR

1. Disconnect EVAP control system pressure sensor harness connector.
2. Check connectors for water.

Water should not exist.

OK or NG

OK >> GO TO 7.
NG >> Replace EVAP control system pressure sensor.

7. CHECK EVAP CONTROL SYSTEM PRESSURE SENSOR

Refer to EC-990, "Component Inspection" .

OK or NG

OK (With CONSULT-II)>>GO TO 8.
OK (Without CONSULT-II)>>GO TO 9.
NG >> Replace EVAP control system pressure sensor.

8. CHECK EVAP CANISTER PURGE VOLUME CONTROL SOLENOID VALVE

With CONSULT-II

1. Turn ignition switch “OFF”.
2. Reconnect harness connectors disconnected.
3. Start engine.
4. Perform “PURG VOL CONT/V” in “ACTIVE TEST” mode with CONSULT-II. Check that engine speed varies according to the valve opening.

ACTIVE TEST	
PURG VOL CONT/V	0 %
MONITOR	
ENG SPEED	XXX rpm
HO2S1 MNTR (B1)	LEAN
HO2S1 MNTR (B2)	LEAN
A/F ALPHA-B1	XXX %
A/F ALPHA-B2	XXX %

PBIB0147E

OK or NG

OK >> GO TO 10.
NG >> GO TO 9.

9. CHECK EVAP CANISTER PURGE VOLUME CONTROL SOLENOID VALVE

Refer to EC-1142, "Component Inspection" .

OK or NG

OK >> GO TO 10.
NG >> Replace EVAP canister purge volume control solenoid valve.

10. CHECK RUBBER TUBE FOR CLOGGING

1. Disconnect rubber tube connected to EVAP canister vent control valve.
2. Check the rubber tube for clogging.

OK or NG

OK >> GO TO 11.
NG >> Clean the rubber tube using an air blower.

11. CHECK EVAP CANISTER VENT CONTROL VALVE

Refer to EC-983, "Component Inspection" .

OK or NG

OK >> GO TO 12.
NG >> Replace EVAP canister vent control valve.

12. CHECK IF EVAP CANISTER SATURATED WITH WATER

1. Remove EVAP canister with EVAP canister vent control valve attached.
2. Check if water will drain from the EVAP canister.

Yes or No

Yes >> GO TO 13.
No >> GO TO 16.

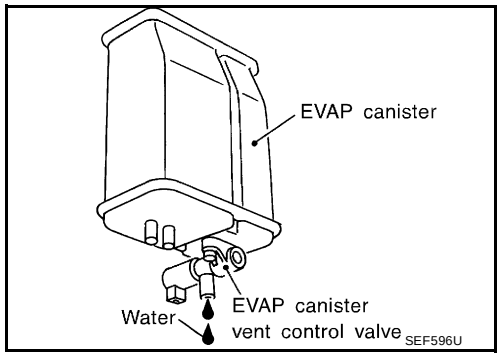

13. CHECK EVAP CANISTER

Weigh the EVAP canister with the EVAP canister vent control valve attached.
The weight should be less than 1.8 kg (4.0 lb).

OK or NG

OK >> GO TO 15.
NG >> GO TO 14.

14. DETECT MALFUNCTIONING PART

Check the following.

- EVAP canister for damage
- EVAP hose between EVAP canister and water separator for clogging or poor connection

>> Repair hose or replace EVAP canister.

15. CHECK WATER SEPARATOR

Refer to EC-970, "Component Inspection" .

OK or NG

OK >> GO TO 16.
NG >> Clean or replace water separator.

16. CHECK INTERMITTENT INCIDENT

Refer to EC-756, "TROUBLE DIAGNOSIS FOR INTERMITTENT INCIDENT" .

>> **INSPECTION END**

Component Inspection

UBS003HZ

EVAP CANISTER PURGE VOLUME CONTROL SOLENOID VALVE

With CONSULT-II

Check air passage continuity of EVAP canister purge volume control solenoid valve under the following conditions.

Condition (PURG VOL CONT/V value)	Air passage continuity between A and B
100.0%	Yes
0.0%	No

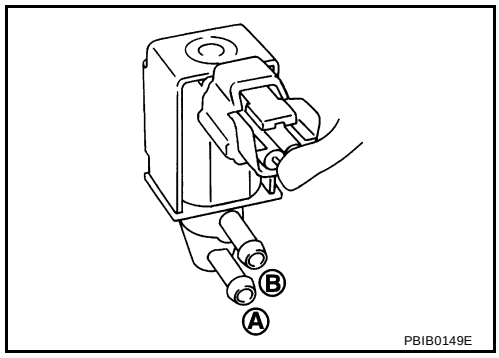

Without CONSULT-II

Check air passage continuity of EVAP canister purge volume control solenoid valve under the following conditions.

Condition	Air passage continuity between A and B
12V direct current supply between terminals 1 and 2	Yes
No supply	No

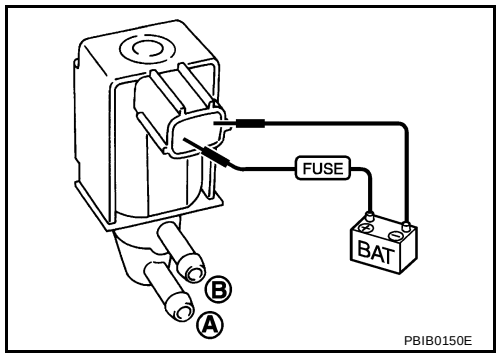

Removal and Installation

UBS003I0

EVAP CANISTER PURGE VOLUME CONTROL SOLENOID VALVE

Refer to EM-112, "INTAKE MANIFOLD" .

DTC P1446 EVAP CANISTER VENT CONTROL VALVE

PFP:14935

Component Description

UBS003I1

The EVAP canister vent control valve is located on the EVAP canister and is used to seal the canister vent.
This solenoid valve responds to signals from the ECM. When the ECM sends an ON signal, the coil in the solenoid valve is energized. A plunger will then move to seal the canister vent. The ability to seal the vent is necessary for the on board diagnosis of other evaporative emission control system components.
This solenoid valve is used only for diagnosis, and usually remains opened.
When the vent is closed, under normal purge conditions, the evaporative emission control system is depressurized and allows “EVAP Control System (Small Leak)” diagnosis.

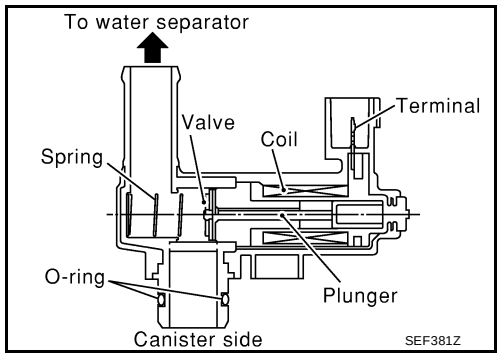

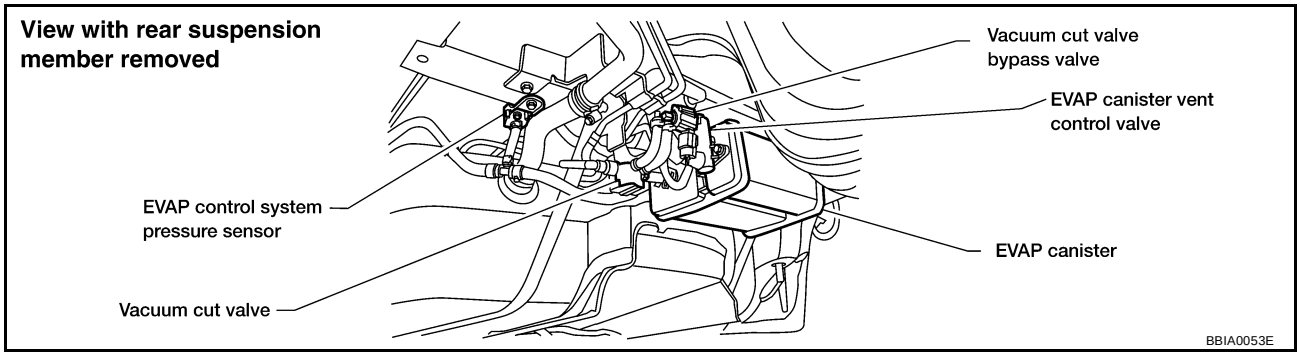

CONSULT-II Reference Value in Data Monitor Mode

UBS003I2

Specification data are reference values.

MONITOR ITEM	CONDITION	SPECIFICATION
VENT CONT/V	● Ignition switch: ON	OFF

On Board Diagnosis Logic

UBS003I3

DTC No.	Trouble diagnosis name	DTC detecting condition	Possible cause
P1446 1446	EVAP canister vent control valve close	EVAP canister vent control valve remains closed under specified driving conditions.	● EVAP canister vent control valve ● EVAP control system pressure sensor and the circuit ● Blocked rubber tube to EVAP canister vent control valve ● Water separator ● EVAP canister is saturated with water

DTC Confirmation Procedure

UBS003I4

CAUTION:
Always drive vehicle at a safe speed.

NOTE:
If “DTC Confirmation Procedure” has been previously conducted, always turn ignition switch “OFF” and wait at least 10 seconds before conducting the next test.

WITH CONSULT-II

1. Turn ignition switch “ON”.
2. Select “DATA MONITOR” mode with CONSULT-II.
3. Start engine.

4. Drive vehicle at a speed of approximately 80 km/h (50 MPH) for a maximum of 15 minutes.

   NOTE:
   If a malfunction exists, NG result may be displayed quicker.

5. If 1st trip DTC is detected, go to EC-1146, "Diagnostic Procedure" .

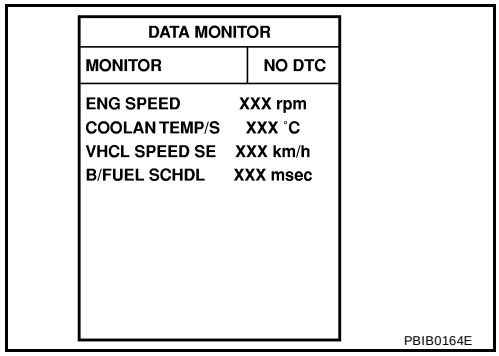

WITH GST

Follow the procedure “WITH CONSULT-II” above.

Wiring Diagram

UBS003I5

EC-VENT/V-01

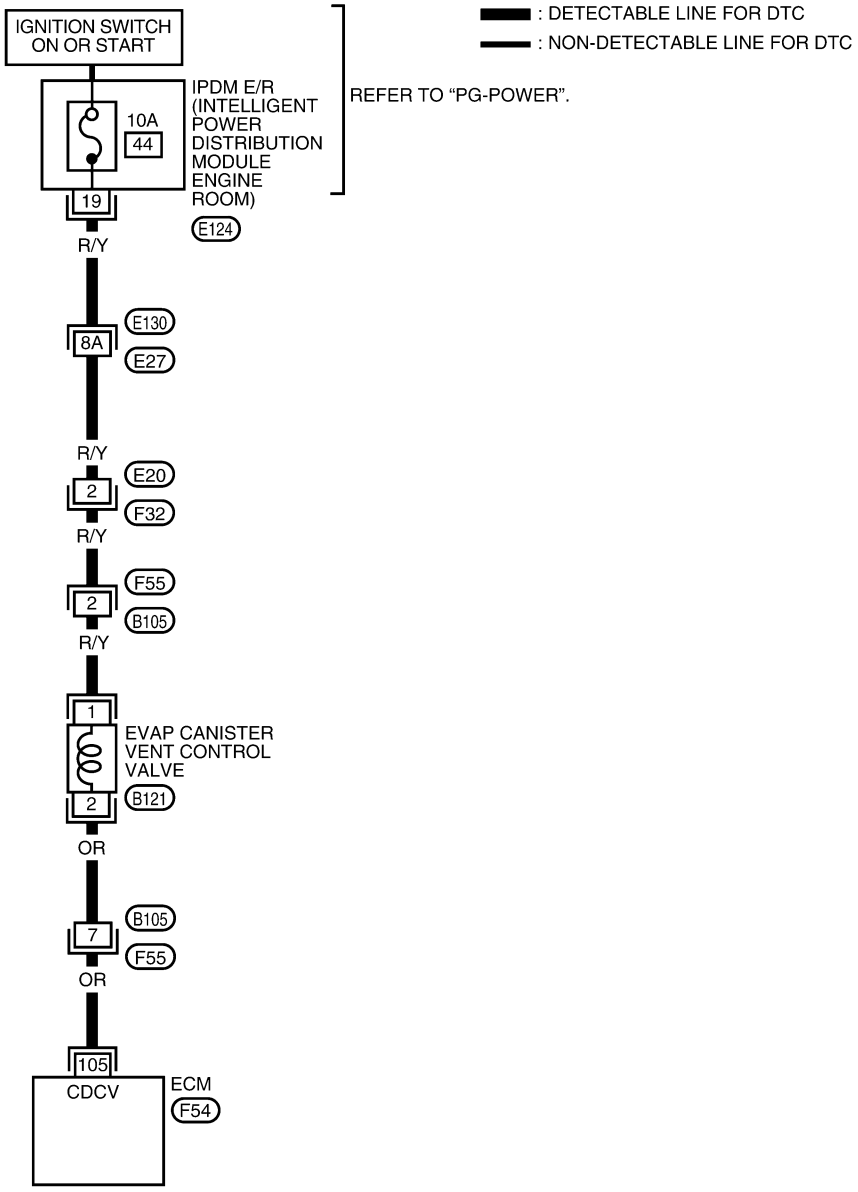

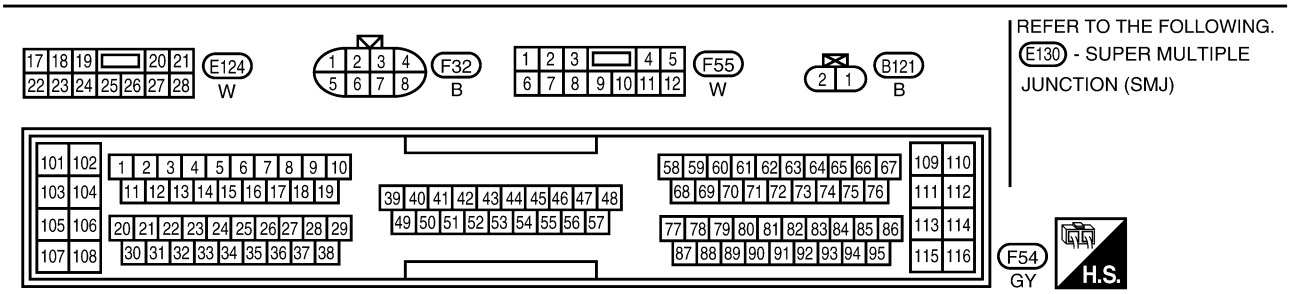

BBWA0069E

Specification data are reference values and are measured between each terminal and ground.

CAUTION:
Do not use ECM ground terminals when measuring input/output voltage. Doing so may result in damage to the ECM's transistor. Use a ground other than ECM terminals, such as the ground.

TERMINAL NO.	WIRE COLOR	ITEM	CONDITION	DATA (DC Voltage)
105	OR	EVAP canister vent control valve	**[Ignition switch "ON"]**	BATTERY VOLTAGE (11 - 14V)

Diagnostic Procedure

UBS003I6

1. CHECK RUBBER TUBE

1. Turn ignition switch "OFF".
2. Disconnect rubber tube connected to EVAP canister vent control valve.

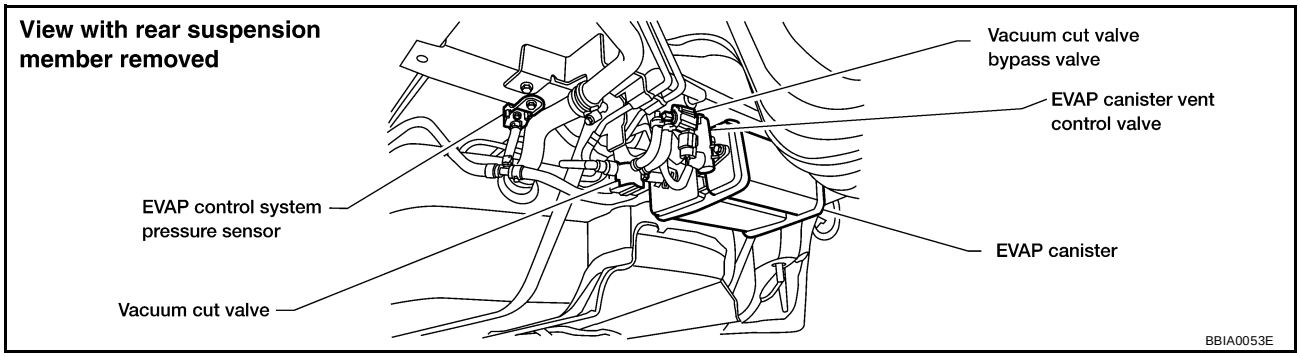

3. Check the rubber tube for clogging.

OK or NG

OK >> GO TO 2.
NG >> Clean rubber tube using an air blower.

2. CHECK WATER SEPARATOR

Refer to EC-970, "Component Inspection" .

OK or NG

OK >> GO TO 3.
NG >> Clean or replace water separator.

3. CHECK EVAP CANISTER VENT CONTROL VALVE

Refer to EC-1147, "EVAP CANISTER VENT CONTROL VALVE" .

OK or NG

OK >> GO TO 4.
NG >> Replace EVAP canister vent control valve.

4. CHECK IF EVAP CANISTER SATURATED WITH WATER

1. Remove EVAP canister with EVAP canister vent control valve attached.
2. Check if water will drain from the EVAP canister.

Yes or No

Yes >> GO TO 5.
No >> GO TO 7.

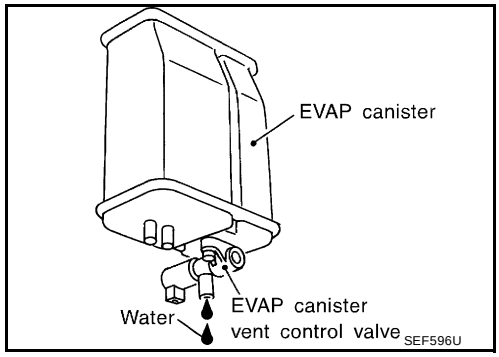

5. CHECK EVAP CANISTER

Weigh the EVAP canister with the EVAP canister vent control valve attached.
The weight should be less than 1.8 kg (4.0 lb).

OK or NG

OK >> GO TO 7.
NG >> GO TO 6.

6. DETECT MALFUNCTIONING PART

Check the following.

- EVAP canister for damage
- EVAP hose between EVAP canister and water separator for clogging or poor connection

>> Repair hose or replace EVAP canister.

7. CHECK EVAP CONTROL SYSTEM PRESSURE SENSOR HOSE

Check disconnection or improper connection of hose connected to EVAP control system pressure sensor.

OK or NG

OK >> GO TO 8.
NG >> Repair it.

8. CHECK EVAP CONTROL SYSTEM PRESSURE SENSOR CONNECTOR

1. Disconnect EVAP control system pressure sensor harness connector.
2. Check connectors for water.

Water should not exist.

OK or NG

OK >> GO TO 9.
NG >> Replace EVAP control system pressure sensor.

9. CHECK EVAP CONTROL SYSTEM PRESSURE SENSOR

Refer to EC-990, "Component Inspection" .

OK or NG

OK >> GO TO 10.
NG >> Replace EVAP control system pressure sensor.

10. CHECK INTERMITTENT INCIDENT

Refer to EC-756, "TROUBLE DIAGNOSIS FOR INTERMITTENT INCIDENT" .

>> **INSPECTION END**

Component Inspection

UBS003I7

EVAP CANISTER VENT CONTROL VALVE

With CONSULT-II

1. Remove EVAP canister vent control valve from EVAP canister.

2. Check portion **B** of EVAP canister vent control valve for being rusted.
   If NG, replace EVAP canister vent control valve.
   If OK, go to next step.
3. Reconnect harness connectors disconnected.
4. Turn ignition switch “ON”.
5. Perform “VENT CONTROL/V” in “ACTIVE TEST” mode.

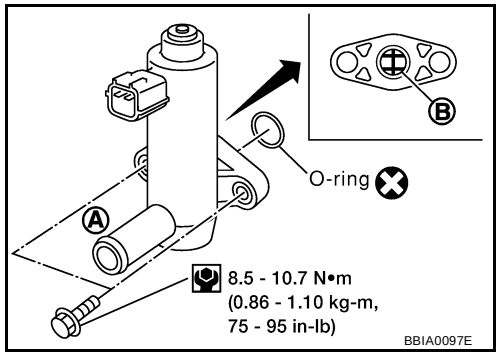

6. Check air passage continuity and operation delay time.

Condition VENT CONTROL/V	Air passage continuity between A and B
ON	No
OFF	Yes

Operation takes less than 1 second.

ACTIVE TEST	
VENT CONTROL/V	OFF
MONITOR	
ENG SPEED	XXX rpm
A/F ALPHA-B1	XXX %
A/F ALPHA-B2	XXX %
HO2S1 (B1)	XXX V
HO2S1 (B2)	XXX V

PBIB0151E

If NG, replace EVAP canister vent control valve.
If OK, go to next step.

7. Clean the air passage (Portion **A** to **B**) of EVAP canister vent control valve using an air blower.
8. Perform step 6 again.

Without CONSULT-II

1. Remove EVAP canister vent control valve from EVAP canister.
2. Check portion **B** of EVAP canister vent control valve for being rusted.

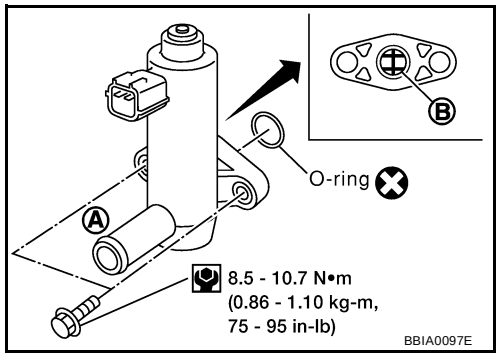

3. Check air passage continuity and operation delay time under the following conditions.
   Make sure new O-ring is installed properly.

Condition	Air passage continuity between A and B
12V direct current supply between terminals 1 and 2	No
OFF	Yes

Operation takes less than 1 second.

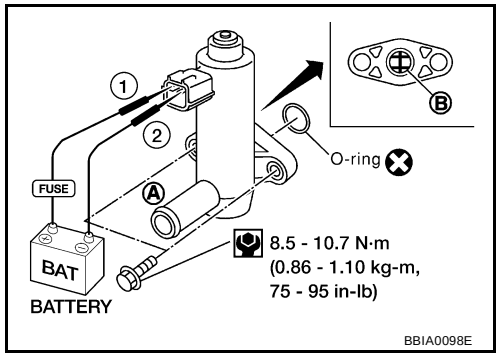

If NG, replace EVAP canister vent control valve.
If OK, go to next step.

4. Clean the air passage (Portion **A** to **B**) of EVAP canister vent control valve using an air blower.
5. Perform step 3 again.

DTC P1448 EVAP CANISTER VENT CONTROL VALVE

PFP:14935

Component Description

UBS003I8

NOTE:
If DTC P1448 is displayed with P0442, perform trouble diagnosis for DTC P1448 first.

The EVAP canister vent control valve is located on the EVAP canister and is used to seal the canister vent.
This solenoid valve responds to signals from the ECM. When the ECM sends an ON signal, the coil in the solenoid valve is energized. A plunger will then move to seal the canister vent. The ability to seal the vent is necessary for the on board diagnosis of other evaporative emission control system components.
This solenoid valve is used only for diagnosis, and usually remains opened.
When the vent is closed, under normal purge conditions, the evaporative emission control system is depressurized and allows "EVAP Control System (Small Leak)" diagnosis.

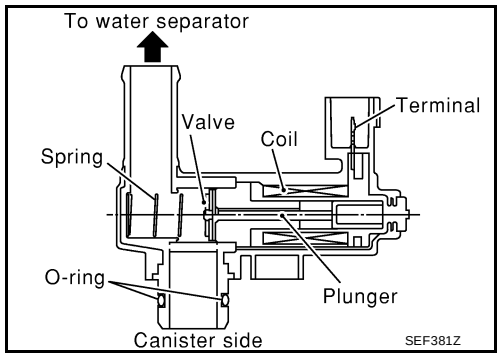

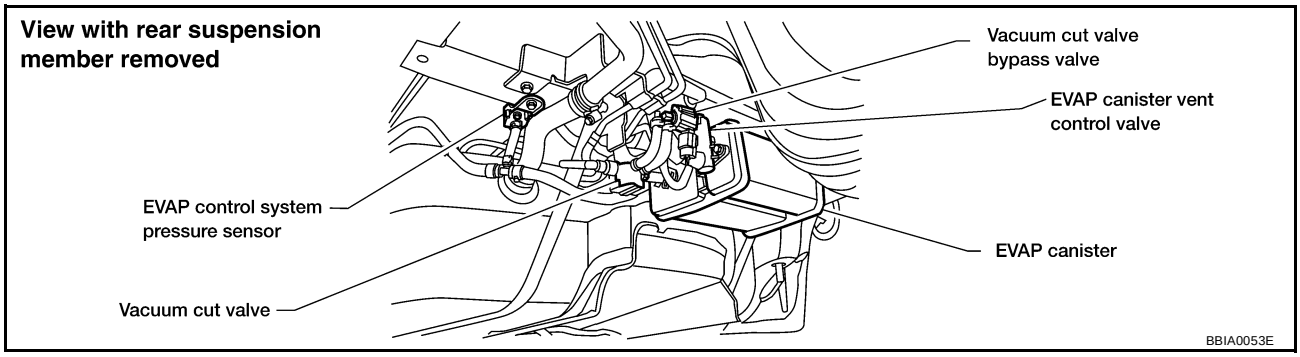

CONSULT-II Reference Value in Data Monitor Mode

UBS003I9

Specification data are reference values.

MONITOR ITEM	CONDITION	SPECIFICATION
VENT CONT/V	● Ignition switch: ON	OFF

On Board Diagnosis Logic

UBS003IA

DTC No.	Trouble diagnosis name	DTC detecting condition	Possible cause
P1448 1448	EVAP canister vent control valve open	EVAP canister vent control valve remains opened under specified driving conditions.	● EVAP canister vent control valve ● EVAP control system pressure sensor and the circuit ● Blocked rubber tube to EVAP canister vent control valve ● Water separator ● EVAP canister is saturated with water ● Vacuum cut valve

DTC Confirmation Procedure

UBS003IB

NOTE:
- **If DTC P1448 is displayed with P0442, perform trouble diagnosis for DTC P1448 first.**
- If "DTC Confirmation Procedure" has been previously conducted, always turn ignition switch "OFF" and wait at least 10 seconds before conducting the next test.

WITH CONSULT-II

TESTING CONDITION:
- **Perform "DTC WORK SUPPORT" when the fuel level is between 1/4 to 3/4 full and vehicle is placed on flat level surface.**

- **Always perform test at a temperature of 0 to 30°C (32 to 86°F).**

1. Turn ignition switch “ON”.
2. Turn ignition switch “OFF” and wait at least 10 seconds.
3. Turn ignition switch “ON” and select “DATA MONITOR” mode with CONSULT-II.
4. Make sure that the following conditions are met.

COOLAN TEMP/S	0 - 70°C (32 - 158°F)
INT/A TEMP SE	0 - 30°C (32 - 86°F)

5. Select “EVAP SML LEAK P0442/P1442” of “EVAPORATIVE SYSTEM” in “DTC WORK SUPPORT” mode with CONSULT-II.
   Follow the instruction displayed.

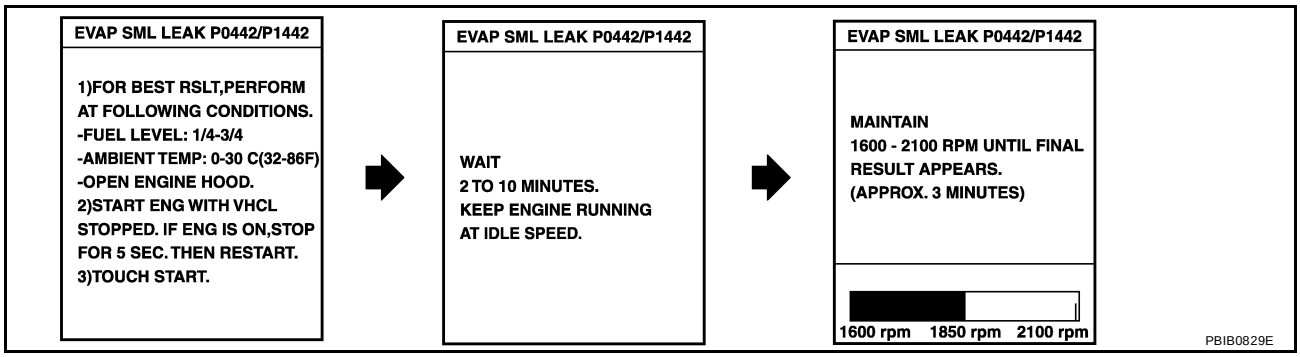

   If the engine speed cannot be maintained within the range displayed on the CONSULT-II screen, go to EC-705, "Basic Inspection" .

6. Make sure that “OK” is displayed.
   If “NG” is displayed, go to the following step.

   NOTE:
   Make sure that EVAP hoses are connected to EVAP canister purge volume control solenoid valve properly.

7. Stop engine and wait at least 10 seconds, then turn “ON”.
8. Disconnect hose from water separator.

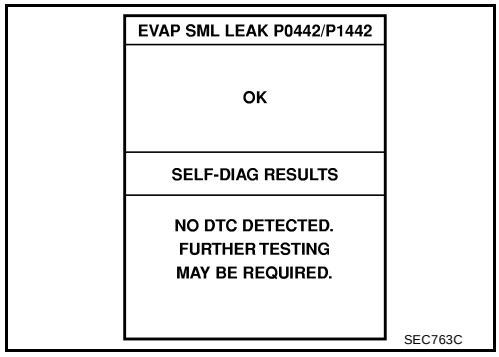

9. Select “VENT CONTROL/V” of “ACTIVE TEST” mode with CONSULT-II.
10. Touch “ON” and “OFF” alternately.

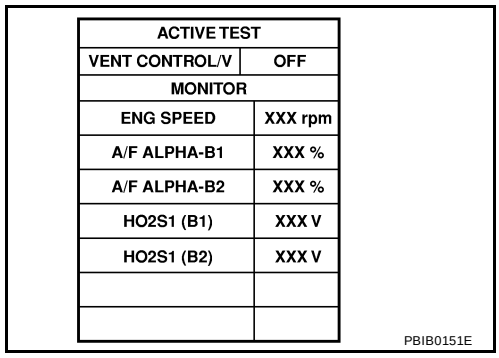

11. Make sure the following.

Condition VENT CONTROL/V	Air passage continuity between **A** and **B**
ON	No
OFF	Yes

If the result is NG, go to EC-1153, "Diagnostic Procedure" .
If the result is OK, go to “Diagnostic Procedure” for DTC P0442, EC-965 .

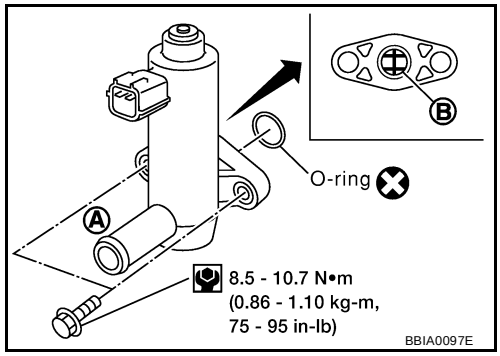

Overall Function Check

UBS003IC

Use this procedure to check the overall function of the EVAP canister vent control valve circuit. During this check, a DTC might not be confirmed.

WITH GST

1. Disconnect hose from water separator.
2. Disconnect EVAP canister vent control valve harness connector.
3. Verify the following.

Condition	Air passage continuity
12V direct current supply between terminals 1 and 2	No
No supply	Yes

If the result is NG, go to EC-1153, "Diagnostic Procedure" .
If the result is OK, go to “Diagnostic Procedure” for DTC P0442, EC-965 .

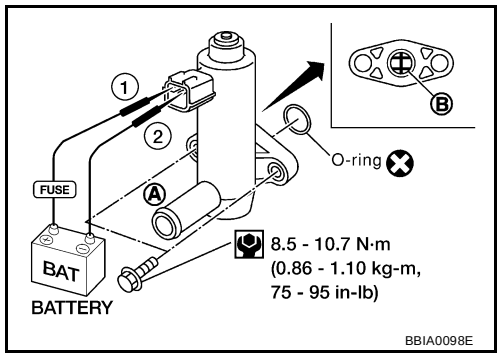

Wiring Diagram

UBS003ID

EC-VENT/V-01

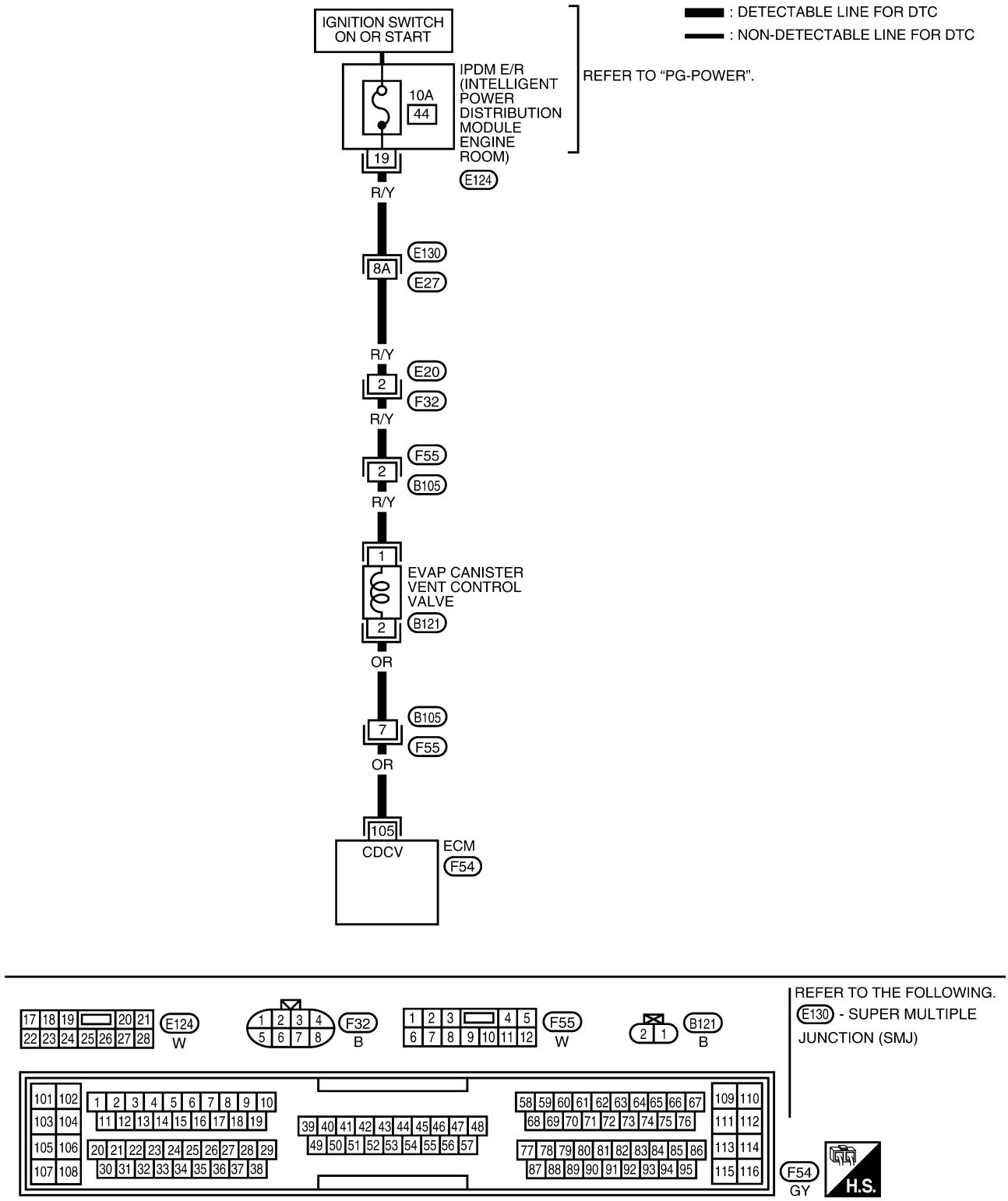

Specification data are reference values and are measured between each terminal and ground.

CAUTION:
Do not use ECM ground terminals when measuring input/output voltage. Doing so may result in damage to the ECM's transistor. Use a ground other than ECM terminals, such as the ground.

TERMINAL NO.	WIRE COLOR	ITEM	CONDITION	DATA (DC Voltage)
105	OR	EVAP canister vent control valve	**[Ignition switch "ON"]**	BATTERY VOLTAGE (11 - 14V)

Diagnostic Procedure

UBS003IE

1. CHECK RUBBER TUBE

1. Turn ignition switch "OFF".
2. Disconnect rubber tube connected to EVAP canister vent control valve.

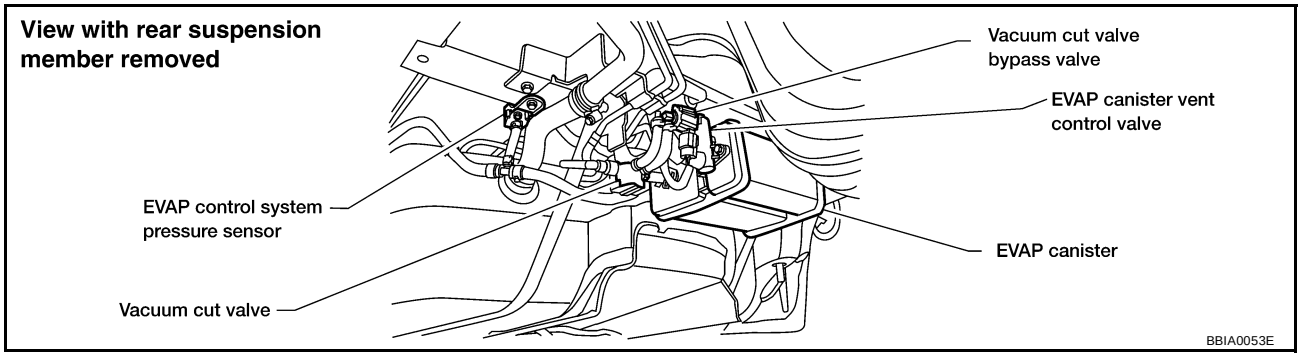

3. Check the rubber tube for clogging.

OK or NG

OK >> GO TO 2.
NG >> Clean rubber tube using an air blower.

2. CHECK EVAP CANISTER VENT CONTROL VALVE

Refer to EC-1155, "EVAP CANISTER VENT CONTROL VALVE" .

OK or NG

OK >> GO TO 3.
NG >> Replace EVAP canister vent control valve.

3. CHECK VACUUM CUT VALVE

Refer to EC-1173, "Component Inspection" .

OK or NG

OK >> GO TO 6.
NG >> Replace vacuum cut valve.

4. CHECK IF EVAP CANISTER SATURATED WITH WATER

1. Remove EVAP canister with EVAP canister vent control valve attached.
2. Check if water will drain from the EVAP canister.

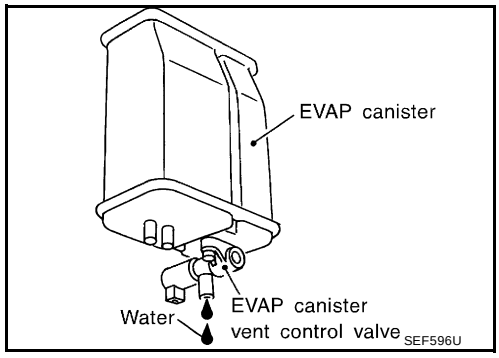

Yes or No

Yes >> GO TO 5.
No >> GO TO 7.

5. CHECK EVAP CANISTER

Weigh the EVAP canister with the EVAP canister vent control valve attached.
The weight should be less than 1.8 kg (4.0 lb).

OK or NG

OK >> GO TO 7.
NG >> GO TO 6.

6. DETECT MALFUNCTIONING PART

Check the following.

- EVAP canister for damage
- EVAP hose between EVAP canister and water separator for clogging or poor connection

>> Repair hose or replace EVAP canister.

7. CHECK EVAP CONTROL SYSTEM PRESSURE SENSOR HOSE

Check disconnection or improper connection of hose connected to EVAP control system pressure sensor.

OK or NG

OK >> GO TO 8.
NG >> Repair it.

8. CHECK EVAP CONTROL SYSTEM PRESSURE SENSOR CONNECTOR

1. Disconnect EVAP control system pressure sensor harness connector.
2. Check connectors for water.

Water should not exist.

OK or NG

OK >> GO TO 9.
NG >> Replace EVAP control system pressure sensor.

9. CHECK EVAP CONTROL SYSTEM PRESSURE SENSOR

Refer to EC-990, "Component Inspection" .

OK or NG

OK >> GO TO 10.
NG >> Replace EVAP control system pressure sensor.

10. CHECK INTERMITTENT INCIDENT

Refer to EC-756, "TROUBLE DIAGNOSIS FOR INTERMITTENT INCIDENT" .

>> **INSPECTION END**

Component Inspection

UBS003IF

EVAP CANISTER VENT CONTROL VALVE

With CONSULT-II

1. Remove EVAP canister vent control valve from EVAP canister.
2. Check portion **B** of EVAP canister vent control valve for being rusted.
   If NG, replace EVAP canister vent control valve.
   If OK, go to next step.
3. Reconnect harness connectors disconnected.
4. Turn ignition switch “ON”.
5. Perform “VENT CONTROL/V” in “ACTIVE TEST” mode.

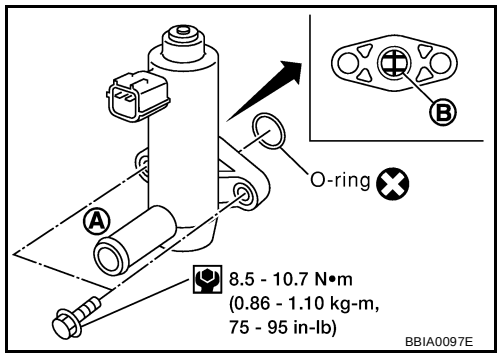

6. Check air passage continuity and operation delay time.

Condition VENT CONTROL/V	Air passage continuity between A and B
ON	No
OFF	Yes

Operation takes less than 1 second.

If NG, replace EVAP canister vent control valve.
If OK, go to next step.

7. Clean the air passage (Portion **A** to **B**) of EVAP canister vent control valve using an air blower.
8. Perform step 6 again.

ACTIVE TEST	
VENT CONTROL/V	OFF
MONITOR	
ENG SPEED	XXX rpm
A/F ALPHA-B1	XXX %
A/F ALPHA-B2	XXX %
HO2S1 (B1)	XXX V
HO2S1 (B2)	XXX V

PBIB0151E

Without CONSULT-II

1. Remove EVAP canister vent control valve from EVAP canister.
2. Check portion **B** of EVAP canister vent control valve for being rusted.

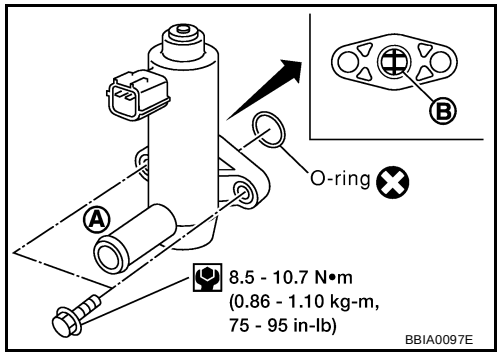

3. Check air passage continuity and operation delay time under the following conditions.
   Make sure new O-ring is installed properly.

Condition	Air passage continuity between A and B
12V direct current supply between terminals 1 and 2	No
OFF	Yes

Operation takes less than 1 second.

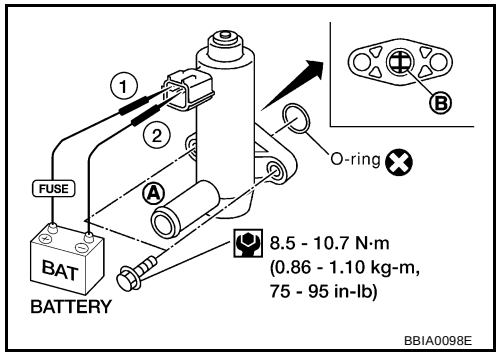

If NG, replace EVAP canister vent control valve.
If OK, go to next step.

4. Clean the air passage (Portion **A** to **B**) of EVAP canister vent control valve using an air blower.
5. Perform step 3 again.

DTC P1464 FUEL LEVEL SENSOR

PFP:25060

Component Description

UBS003IG

The fuel level sensor is mounted in the fuel level sensor unit. The sensor detects a fuel level in the fuel tank and transmits a signal to the ECM.
It consists of two parts, one is mechanical float and the other side is variable resistor. Fuel level sensor output voltage changes depending on the movement of the fuel mechanical float.

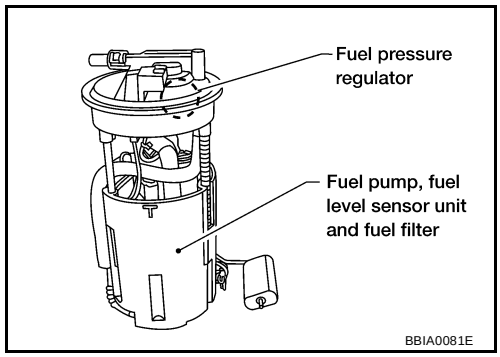

On Board Diagnosis Logic

UBS003IH

ECM receives two signals from the fuel level sensor.
One is fuel level sensor power supply circuit, and the other is fuel level sensor ground circuit.
This diagnosis indicates the latter to detect open circuit malfunction.

DTC No.	Trouble diagnosis name	DTC detecting condition	Possible cause
P1464 1464	Fuel level sensor circuit ground signal	A high voltage from the sensor is sent to ECM.	● Harness or connectors (The sensor circuit is open or shorted)

DTC Confirmation Procedure

UBS003II

NOTE:
If “DTC Confirmation Procedure” has been previously conducted, always turn ignition switch “OFF” and wait at least 10 seconds before conducting the next test.

WITH CONSULT-II

1. Turn ignition switch “ON”.
2. Select “DATA MONITOR” mode with CONSULT-II.
3. Wait at least 5 seconds.
4. If 1st trip DTC is detected, go to EC-1159, "Diagnostic Procedure" .

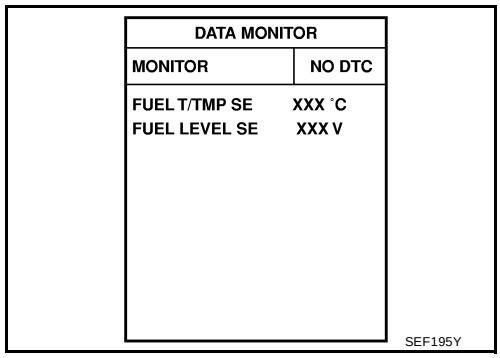

WITH GST

Follow the procedure “WITH CONSULT-II” above.

Wiring Diagram

UBS003IJ

EC-FLS3-01

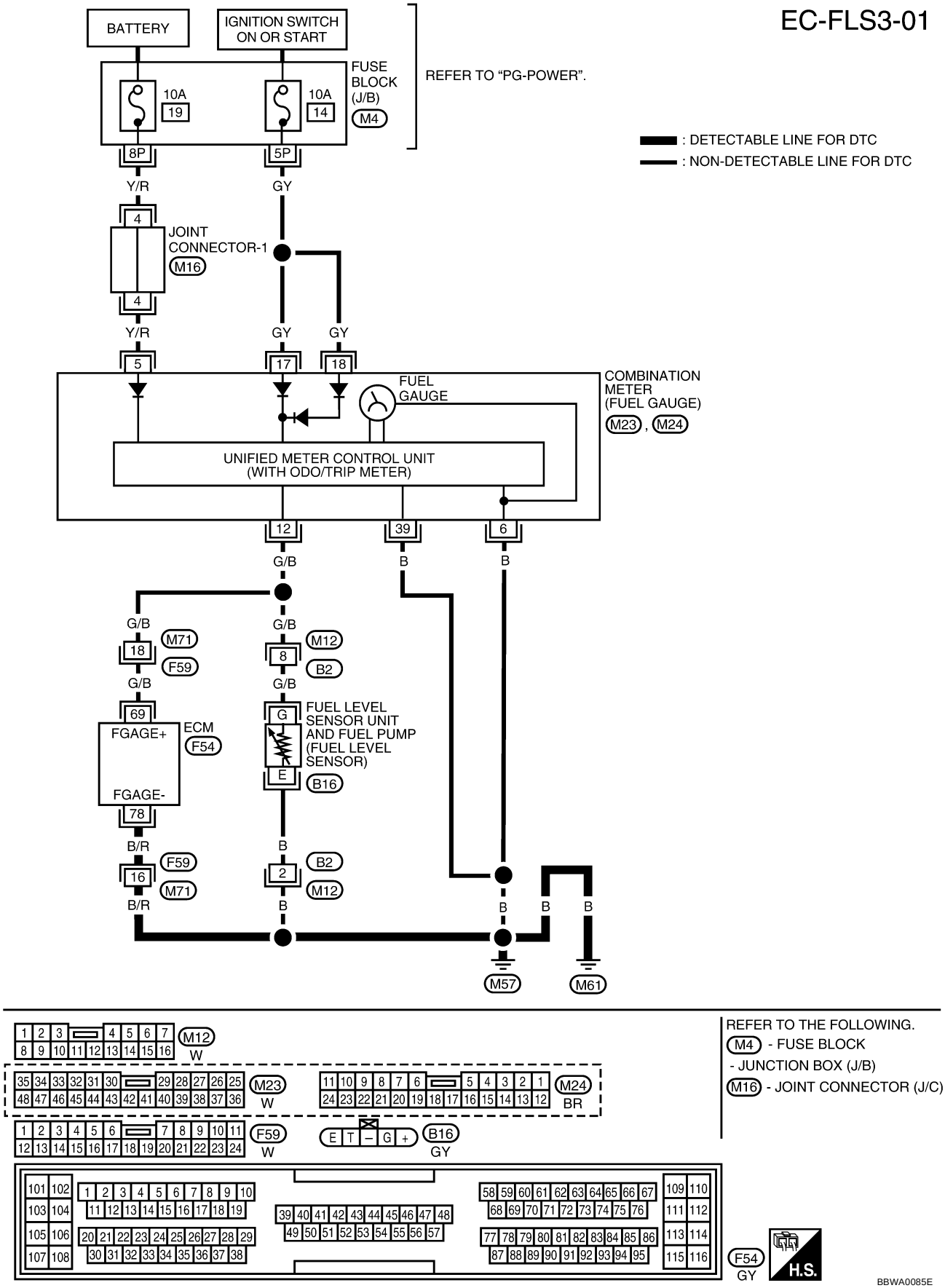

Specification data are reference values and are measured between each terminal and ground.

CAUTION:
Do not use ECM ground terminals when measuring input/output voltage. Doing so may result in damage to the ECM's transistor. Use a ground other than ECM terminals, such as the ground.

TERMINAL NO.	WIRE COLOR	ITEM	CONDITION	DATA (DC Voltage)
69	G/B	Fuel level sensor	**[Ignition switch "ON"]**	Approximately 0 - 4.8V Output voltage varies with fuel level.
78	B	Fuel level sensor ground	**[Engine is running]** ● Idle speed	Approximately 0V

Diagnostic Procedure

UBS003IK

1. CHECK FUEL LEVEL SENSOR GROUND CIRCUIT FOR OPEN AND SHORT

1. Turn ignition switch "OFF".
2. Disconnect ECM harness connector.
3. Check harness continuity between ECM terminal 78 and body ground.
   Refer to Wiring Diagram.

   Continuity should exist.

4. Also check harness for short to power.

OK or NG

OK >> GO TO 3.
NG >> GO TO 2.

2. DETECT MALFUNCTIONING PART

Check the following.

- Harness connectors F59, M71
- Harness for open and short between ECM and body ground

>> Replace open circuit or short to power in harness or connectors.

3. CHECK FUEL LEVEL SENSOR

Refer to DI-21, "Electrical Components Inspection" .

OK or NG

OK >> GO TO 4.
NG >> Replace fuel level sensor unit.

4. CHECK INTERMITTENT INCIDENT

Refer to EC-756, "TROUBLE DIAGNOSIS FOR INTERMITTENT INCIDENT" .

>> **INSPECTION END**

Removal and Installation

UBS003IL

FUEL LEVEL SENSOR

Refer to FL-5, "Removal and Installation" .

DTC P1490 VACUUM CUT VALVE BYPASS VALVE

PFP:17372

Description

UBS003IM

COMPONENT DESCRIPTION

The vacuum cut valve and vacuum cut valve bypass valve are installed in parallel on the EVAP purge line between the fuel tank and the EVAP canister.
The vacuum cut valve prevents the intake manifold vacuum from being applied to the fuel tank.
The vacuum cut valve bypass valve is a solenoid type valve and generally remains closed. It opens only for on board diagnosis.
The vacuum cut valve bypass valve responds to signals from the ECM. When the ECM sends an ON (ground) signal, the valve is opened. The vacuum cut valve is then bypassed to apply intake manifold vacuum to the fuel tank.

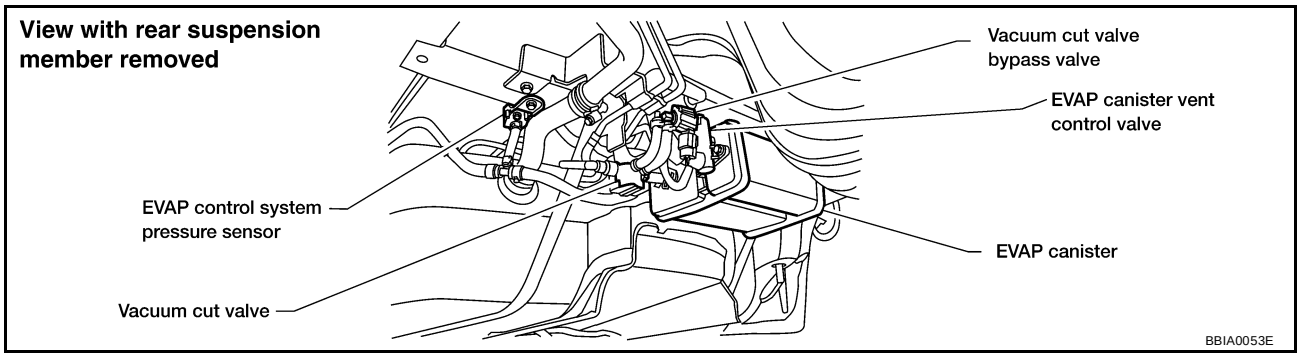

EVAPORATIVE EMISSION SYSTEM DIAGRAM

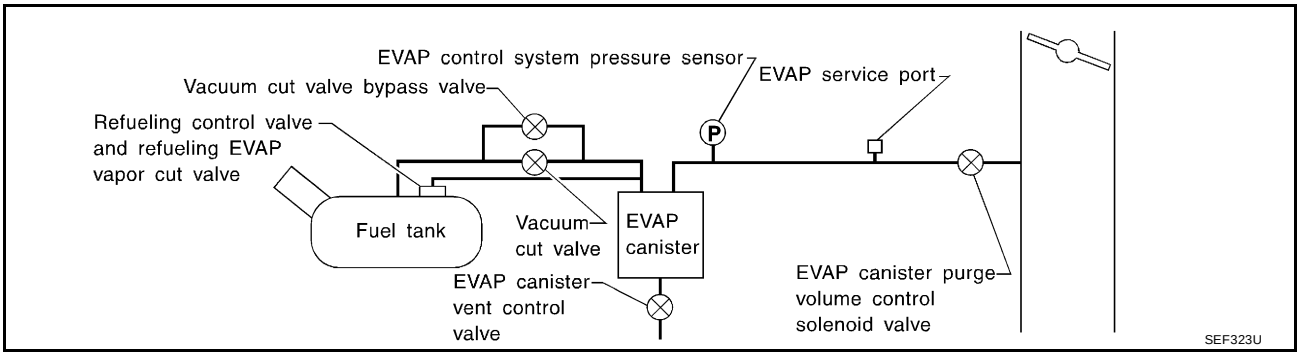

CONSULT-II Reference Value in Data Monitor Mode

UBS003IN

Specification data are reference values.

MONITOR ITEM	CONDITION	SPECIFICATION
VC/V BYPAS S/V	● Ignition switch: ON	OFF

On Board Diagnosis Logic

UBS003IO

DTC No.	Trouble diagnosis name	DTC detecting condition	Possible cause
P1490 1490	Vacuum cut valve bypass valve circuit	An improper voltage signal is sent to ECM through vacuum cut valve bypass valve.	● Harness or connectors (The vacuum cut valve bypass valve circuit is open or shorted) ● Vacuum cut valve bypass valve

DTC Confirmation Procedure

UBS003IP

NOTE:
If “DTC Confirmation Procedure” has been previously conducted, always turn ignition switch “OFF” and wait at least 10 seconds before conducting the next test.
TESTING CONDITION:
Before performing the following procedure, confirm that battery voltage is more than 11V at idle speed.

WITH CONSULT-II

1. Turn ignition switch “ON”.
2. Select “DATA MONITOR” mode with CONSULT-II.
3. Start engine and wait at least 5 seconds.
4. If 1st trip DTC is detected, go to EC-1163, "Diagnostic Procedure" .

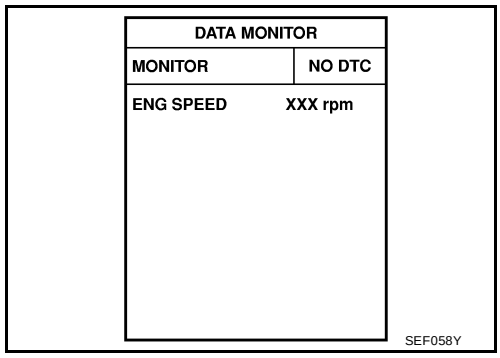

WITH GST

Follow the procedure “WITH CONSULT-II” above.

Wiring Diagram

UBS003IQ

EC-BYPS/V-01

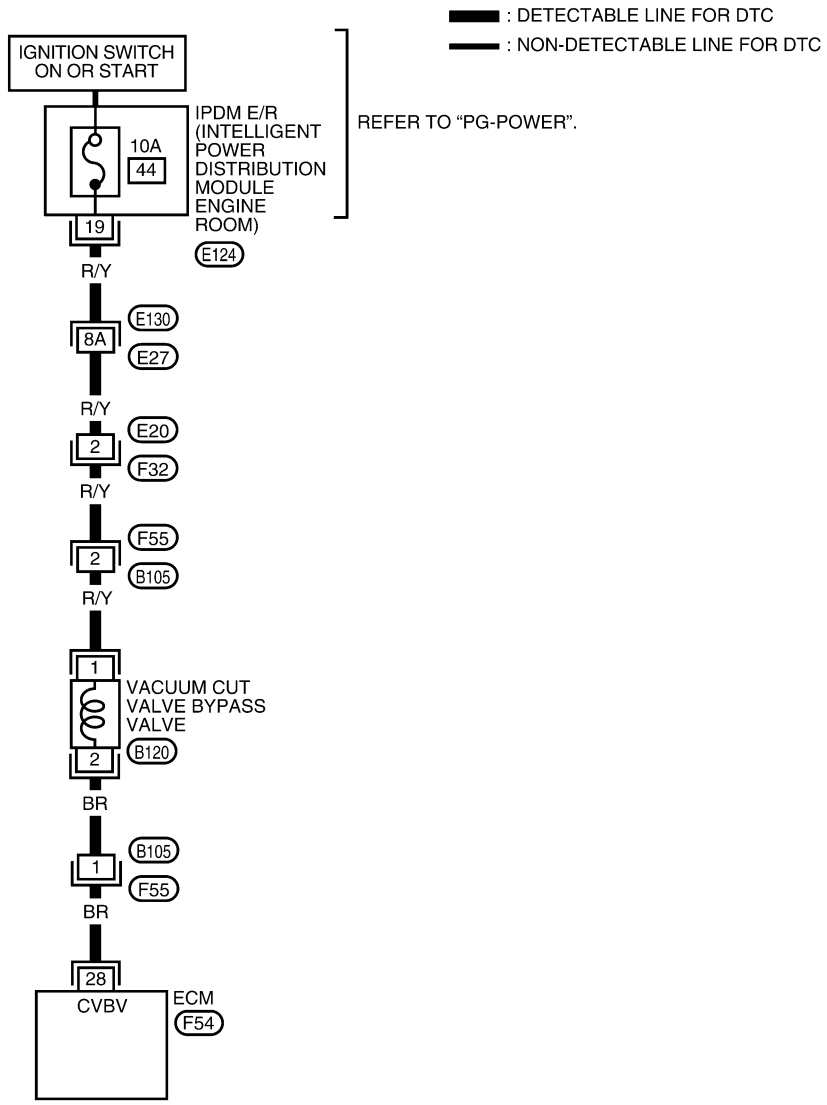

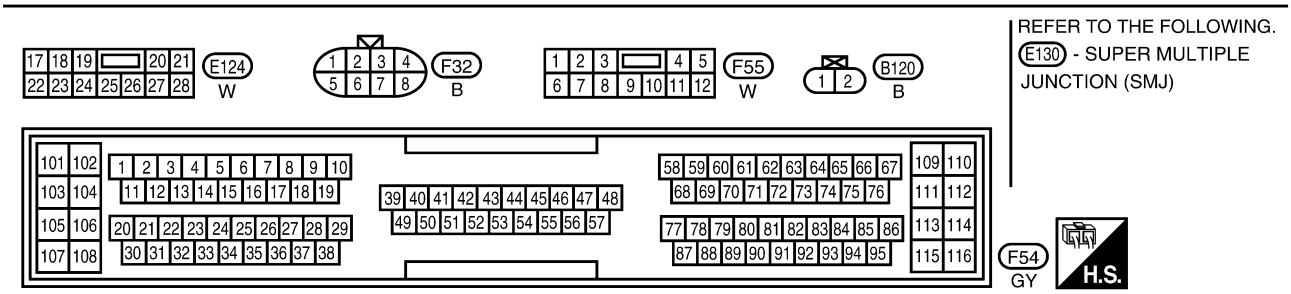

BBWA0086E

Specification data are reference values and are measured between each terminal and ground.

CAUTION:
Do not use ECM ground terminals when measuring input/output voltage. Doing so may result in damage to the ECM's transistor. Use a ground other than ECM terminals, such as the ground.

TERMINAL NO.	WIRE COLOR	ITEM	CONDITION	DATA (DC Voltage)
28	BR	Vacuum cut valve bypass valve	**[Ignition switch "ON"]**	BATTERY VOLTAGE (11 - 14V)

Diagnostic Procedure

UBS003IR

1. INSPECTION START

Do you have CONSULT-II?

Yes or No

Yes >> GO TO 2.
No >> GO TO 3.

2. CHECK VACUUM CUT VALVE BYPASS VALVE CIRCUIT

With CONSULT-II

1. Turn ignition switch "OFF" and then "ON".
2. Select "VC/V BYPASS/V" in "ACTIVE TEST" mode with CONSULT-II.
3. Touch "ON/OFF" on CONSULT-II screen.
4. Make sure that clicking sound is heard from the vacuum cut valve bypass valve.

OK or NG

OK >> GO TO 7.
NG >> GO TO 3.

ACTIVE TEST	
VC/V BYPASS/V	OFF
MONITOR	
ENG SPEED	XXX rpm
A/F ALPHA-B1	XXX %
A/F ALPHA-B2	XXX %
HO2S1 MNTR (B1)	LEAN
HO2S1 MNTR (B2)	LEAN

PBIB0157E

3. CHECK VACUUM CUT VALVE BYPASS VALUE POWER SUPPLY CIRCUIT

1. Turn ignition switch “OFF”.
2. Disconnect vacuum cut valve bypass valve harness connector.

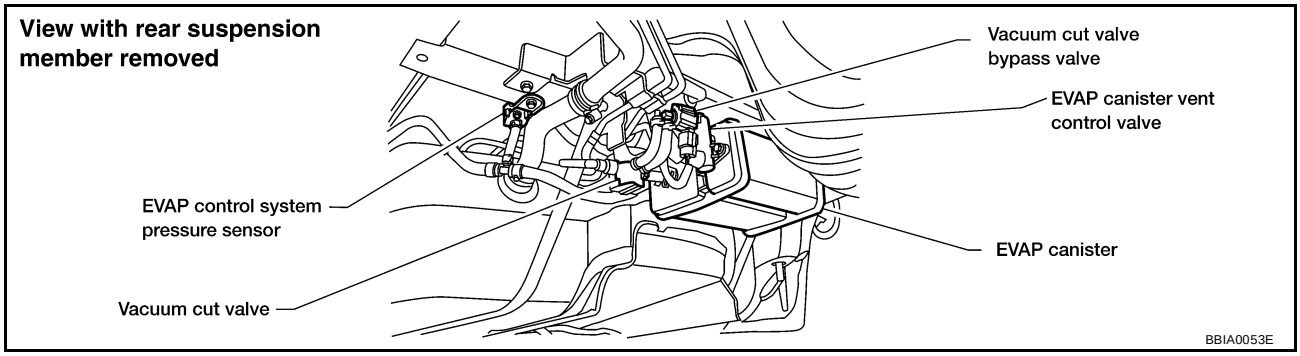

3. Turn ignition switch “ON”.
4. Check voltage between vacuum cut valve bypass valve terminal 1 and ground with CONSULT-II or tester.

Voltage: Battery voltage

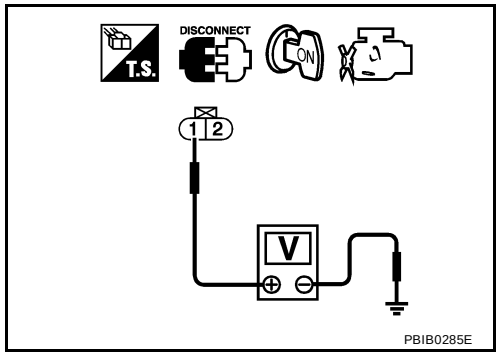

OK or NG

OK >> GO TO 5.
NG >> GO TO 4.

4. DETECT MALFUNCTIONING PART

Check the following.

- Harness connectors E130, E27
- Harness connectors E20, F32
- Harness connectors F55, B105
- IPDM E/R connector E124
- 10A fuse
- Harness for open or short between vacuum cut valve bypass valve and fuse

>> Repair harness or connectors.

5. CHECK VACUUM CUT VALVE BYPASS VALVE OUTPUT SIGNAL CIRCUIT FOR OPEN AND SHORT

1. Turn ignition switch “OFF”.
2. Disconnect ECM harness connector.
3. Check harness continuity between ECM terminal 28 and vacuum cut valve bypass valve terminal 2. Refer to Wiring Diagram.

Continuity should exist.

4. Also check harness for short to ground and short to power.

OK or NG

OK >> GO TO 7.
NG >> GO TO 6.

6. DETECT MALFUNCTIONING PART

Check the following.

- Harness connectors B105, F55
- Harness for open or short between vacuum cut valve bypass valve and ECM

>> Repair open circuit or short to ground or short to power in harness or connectors.

7. CHECK VACUUM CUT VALVE BYPASS VALVE

Refer to EC-1165, "Component Inspection" .

OK or NG

OK >> GO TO 8.
NG >> Replace vacuum cut valve bypass valve.

8. CHECK INTERMITTENT INCIDENT

Refer to EC-756, "TROUBLE DIAGNOSIS FOR INTERMITTENT INCIDENT" .

>> **INSPECTION END**

Component Inspection

UBS003IS

VACUUM CUT VALVE BYPASS VALVE

With CONSULT-II

1. Reconnect harness disconnected connectors.
2. Turn ignition switch ON.
3. Perform “VC/V BYPASS/V” in “ACTIVE TEST” mode.
4. Check air passage continuity and operation delay time under the following conditions.

Condition VC/V BYPASS/V	Air passage continuity between A and B
ON	Yes
OFF	No

Operation takes less than 1 second.

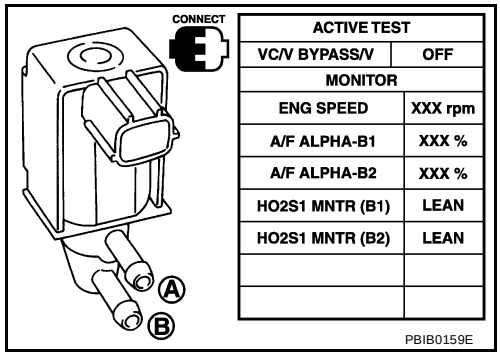

ACTIVE TEST	
VC/V BYPASS/V	OFF
MONITOR	
ENG SPEED	XXX rpm
A/F ALPHA-B1	XXX %
A/F ALPHA-B2	XXX %
HO2S1 MNTR (B1)	LEAN
HO2S1 MNTR (B2)	LEAN

Without CONSULT-II

Check air passage continuity and operation delay time under the following conditions.

Condition	Air passage continuity between A and B
12V direct current supply between terminals 1 and 2	Yes
No supply	No

Operation takes less than 1 second.

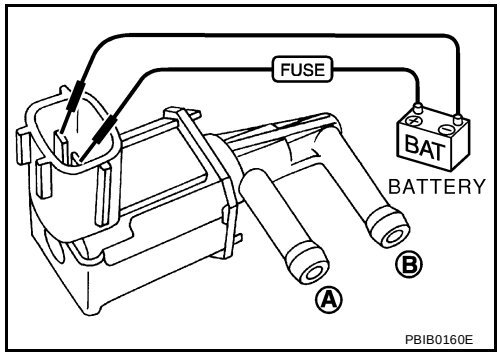

DTC P1491 VACUUM CUT VALVE BYPASS VALVE

PFP:17372

Description

UBS003IT

COMPONENT DESCRIPTION

The vacuum cut valve and vacuum cut valve bypass valve are installed in parallel on the EVAP purge line between the fuel tank and the EVAP canister.
The vacuum cut valve prevents the intake manifold vacuum from being applied to the fuel tank.
The vacuum cut valve bypass valve is a solenoid type valve and generally remains closed. It opens only for on board diagnosis.
The vacuum cut valve bypass valve responds to signals from the ECM. When the ECM sends an ON (ground) signal, the valve is opened. The vacuum cut valve is then bypassed to apply intake manifold vacuum to the fuel tank.

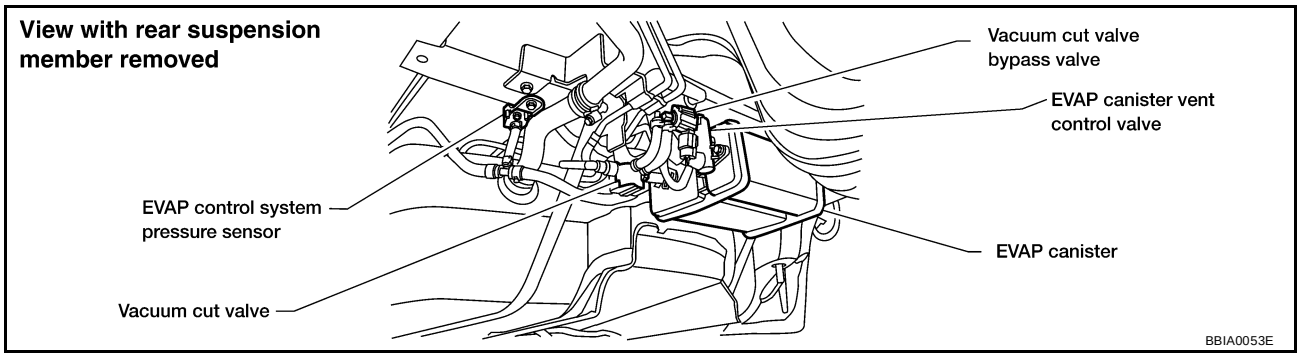

EVAPORATIVE EMISSION SYSTEM DIAGRAM

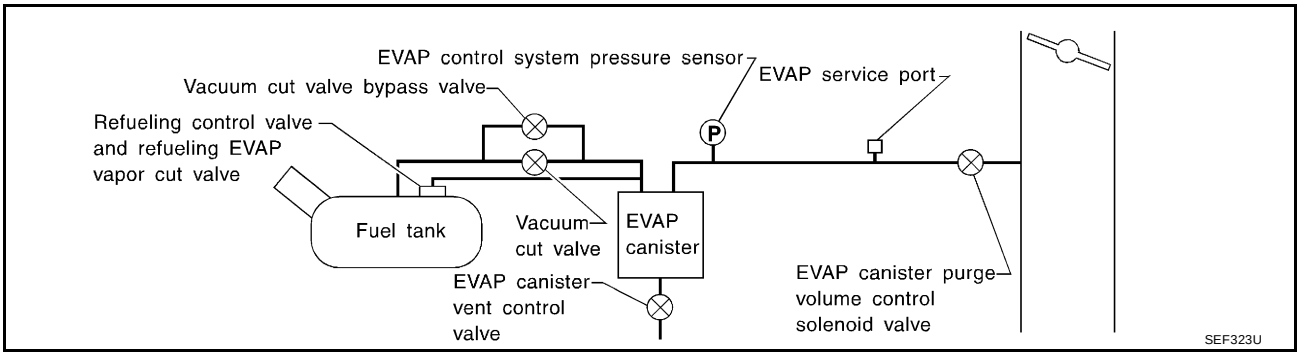

CONSULT-II Reference Value in Data Monitor Mode

UBS003IU

Specification data are reference values.

MONITOR ITEM	CONDITION	SPECIFICATION
VC/V BYPAS S/V	● Ignition switch: ON	OFF

On Board Diagnosis Logic

UBS003IV

DTC No.	Trouble diagnosis name	DTC detecting condition	Possible cause
P1491 1491	Vacuum cut valve bypass valve	Vacuum cut valve bypass valve does not operate properly.	● Vacuum cut valve bypass valve ● Vacuum cut valve ● Bypass hoses for clogging ● EVAP control system pressure sensor and circuit ● EVAP canister vent control valve ● Hose between fuel tank and vacuum cut valve clogged ● Hose between vacuum cut valve and EVAP canister clogged ● EVAP canister ● EVAP purge port of fuel tank for clogging

DTC Confirmation Procedure

UBS003IW

CAUTION:
Always drive vehicle at a safe speed.

NOTE:
If "DTC Confirmation Procedure" has been previously conducted, always turn ignition switch "OFF" and wait at least 10 seconds before conducting the next test.

TESTING CONDITION:
Always perform test at a temperature of more than 0°C (32°F).

WITH CONSULT-II

1. Turn ignition switch "ON".
2. Start engine and warm it up to normal operating temperature.
3. Turn ignition switch "OFF" and wait at least 10 seconds.
4. Start engine and let it idle for at least 70 seconds.
5. Select "VC CUT/V BP/V P1491" of "EVAPORATIVE SYSTEM" in "DTC WORK SUPPORT" mode with CONSULT-II.
6. Touch "START".

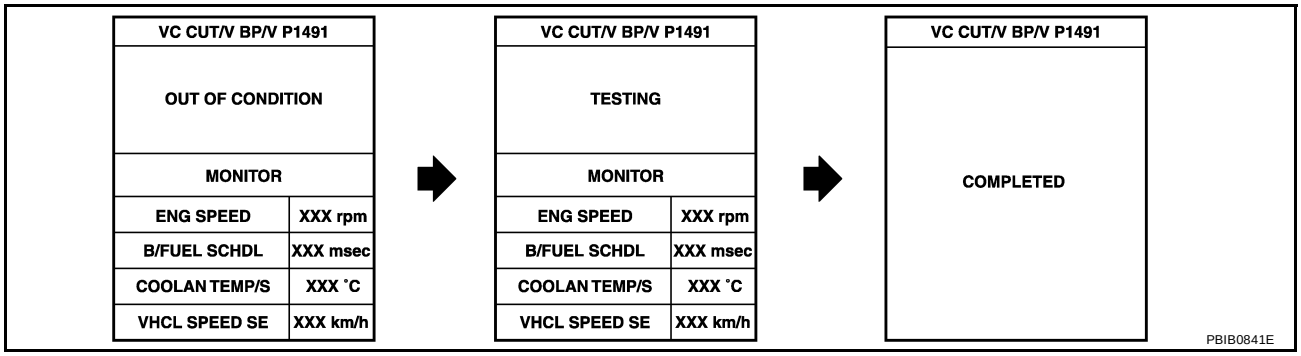

7. When the following conditions are met, "TESTING" will be displayed on the CONSULT-II screen. Maintain the conditions continuously until "TESTING" changes to "COMPLETED". (It will take at least 30 seconds.)

ENG SPEED	More than 1,000 rpm
Selector lever	Suitable position
Vehicle speed	More than 37 km/h (23 MPH)
B/FUEL SCHDL	1.0 - 10.0 msec

If "TESTING" is not displayed after 5 minutes, retry from step 3.

8. Make sure that "OK" is displayed after touching "SELF-DIAG RESULTS". If "NG" is displayed, refer to EC-1170, "Diagnostic Procedure" .

Overall Function Check

UBS003IX

Use this procedure to check the overall function of vacuum cut valve bypass valve. During this check, the 1st trip DTC might not be confirmed.

WITH GST

1. Remove vacuum cut valve and vacuum cut valve bypass valve as an assembly.

2. Apply vacuum to port **A** and check that there is no suction from port **B** .
3. Apply vacuum to port **B** and check that there is suction from port **A** .
4. Blow air in port **B** and check that there is a resistance to flow out of port **A** .
5. Supply battery voltage to the terminal.
6. Blow air in port **A** and check that air flows freely out of port **B** .
7. Blow air in port **B** and check that air flows freely out of port **A** .
8. If NG, go to EC-1170, "Diagnostic Procedure" .

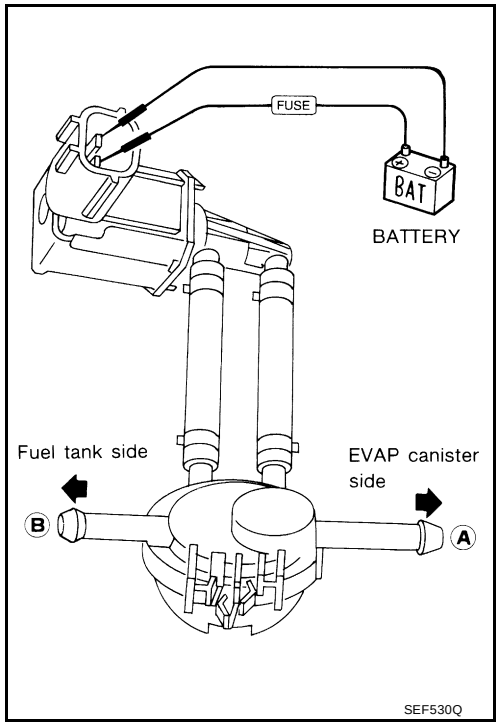

Wiring Diagram

UBS003IY

EC-BYPS/V-01

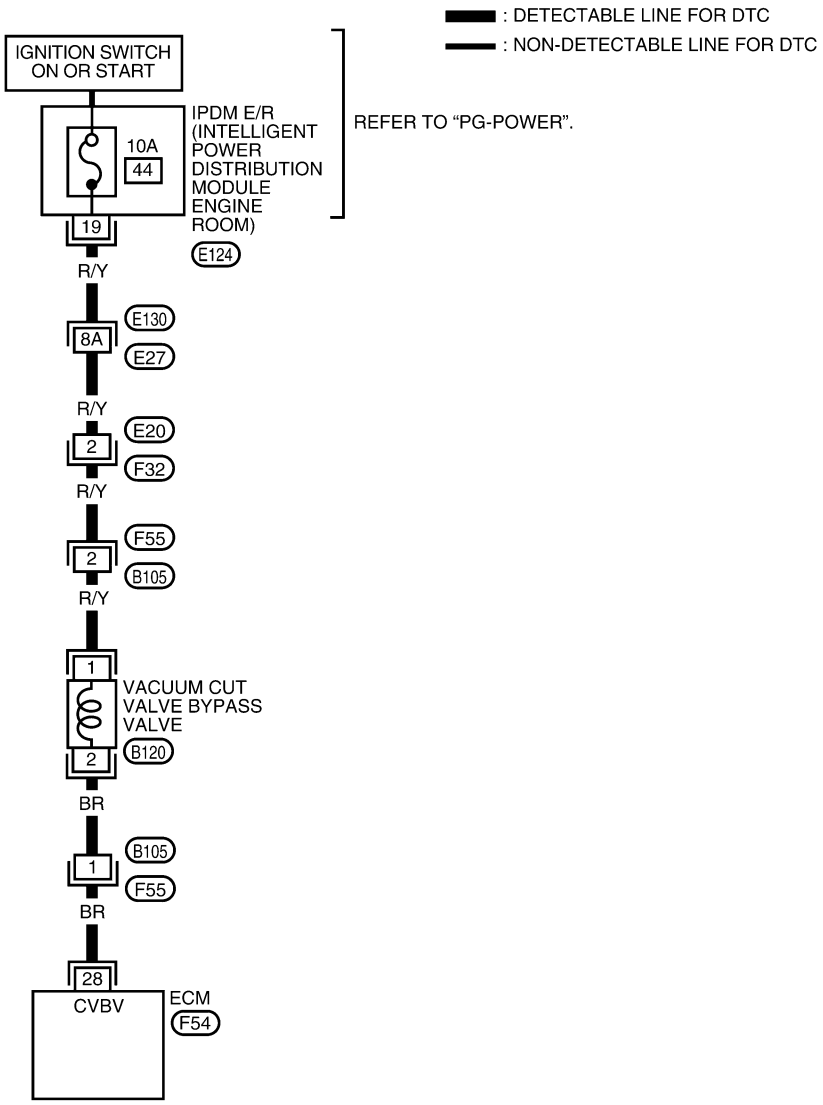

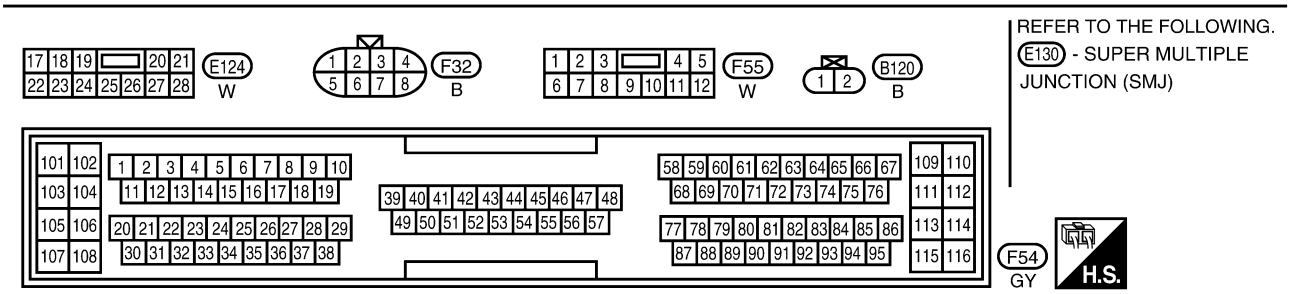

BBWA0086E

Specification data are reference values and are measured between each terminal and ground.

CAUTION:
Do not use ECM ground terminals when measuring input/output voltage. Doing so may result in damage to the ECM's transistor. Use a ground other than ECM terminals, such as the ground.

TERMINAL NO.	WIRE COLOR	ITEM	CONDITION	DATA (DC Voltage)
28	BR	Vacuum cut valve bypass valve	**[Ignition switch "ON"]**	BATTERY VOLTAGE (11 - 14V)

Diagnostic Procedure

UBS003IZ

1. INSPECTION START

Do you have CONSULT-II?

Yes or No

Yes >> GO TO 2.
No >> GO TO 3.

2. CHECK VACUUM CUT VALVE BYPASS VALVE OPERATION

With CONSULT-II

1. Turn ignition switch "OFF".
2. Remove vacuum cut valve and vacuum cut valve bypass valve as an assembly.
3. Apply vacuum to port A and check that there is no suction from port B.
4. Apply vacuum to port B and check that there is suction from port A.
5. Blow air in port B and check that there is a resistance to flow out of port A.
6. Turn ignition switch "ON".
7. Select "VC/V BYPASS/V" in "ACTIVE TEST" mode with CONSULT-II and touch "ON".
8. Blow air in port A and check that air flows freely out of port B.
9. Blow air in port B and check that air flows freely out of port A.

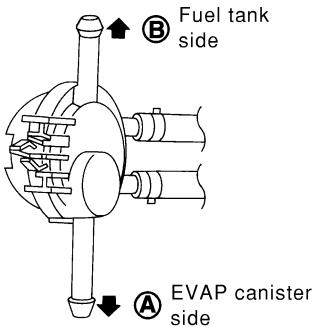

ACTIVE TEST	
VC/V BYPASS/V	OFF
MONITOR	
ENG SPEED	XXX rpm
A/F ALPHA-B1	XXX %
A/F ALPHA-B2	XXX %
HO2S1 MNTR (B1)	LEAN
HO2S1 MNTR (B2)	LEAN

PBIB0161E

OK or NG

OK >> GO TO 4.
NG >> GO TO 5.

3. CHECK VACUUM CUT VALVE BYPASS VALVE OPERATION

Without CONSULT-II

1. Turn ignition switch “OFF”.
2. Remove vacuum cut valve and vacuum cut valve bypass valve as an assembly.
3. Apply vacuum to port A and check that there is no suction from port B.
4. Apply vacuum to port B and check that there is suction from port A.
5. Blow air in port B and check that there is a resistance to flow out of port A.
6. Disconnect vacuum cut valve bypass valve harness connector.
7. Supply battery voltage to the terminal.
8. Blow air in port A and check that air flows freely out of port B.
9. Blow air in port B and check that air flows freely out of port A.

OK or NG

OK >> GO TO 4.
NG >> GO TO 7.

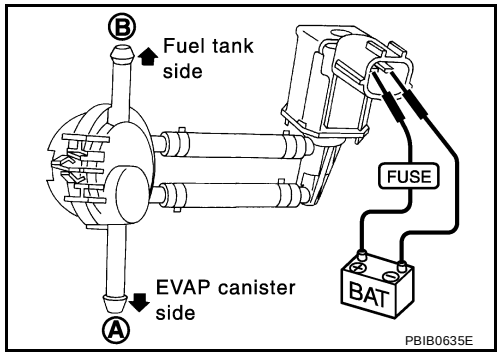

4. CHECK EVAP PURGE LINE

Check EVAP purge line between EVAP canister and fuel tank for clogging or disconnection.

OK or NG

OK >> GO TO 5.
NG >> Repair it.

5. CHECK EVAP PURGE PORT

Check EVAP purge port of fuel tank for clogging.

OK or NG

OK >> GO TO 6.
NG >> Clean EVAP purge port.

6. CHECK EVAP CANISTER

1. Pinch the fresh air hose.
2. Blow air into port **A** and check that it flows freely out of port **B** .

OK or NG

OK >> GO TO 12.
NG >> Replace EVAP canister.

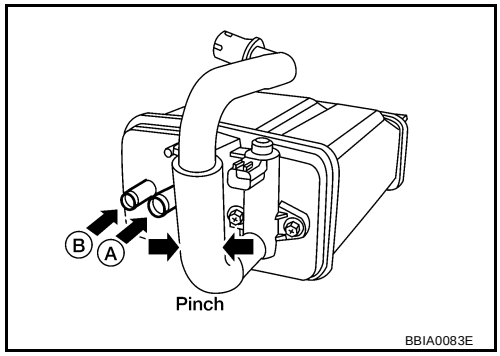

7. CHECK BYPASS HOSE

Check bypass hoses for clogging.

OK or NG

OK >> GO TO 8.
NG >> Repair or replace hoses.

8. CHECK VACUUM CUT VALVE BYPASS VALVE

Refer to EC-1173, "Component Inspection" .

OK or NG

OK >> GO TO 9.
NG >> Replace vacuum cut valve bypass valve.

9. CHECK VACUUM CUT VALVE

Refer to EC-1173, "Component Inspection" .

OK or NG

OK >> GO TO 10.
NG >> Replace vacuum cut valve.

10. CHECK EVAP CONTROL SYSTEM PRESSURE SENSOR HOSE

1. Turn ignition switch “OFF”.
2. Check disconnection or improper connection of hose connected to EVAP control system pressure sensor.

OK or NG

OK >> GO TO 11.
NG >> Repair or replace.

11. CHECK EVAP CONTROL SYSTEM PRESSURE SENSOR CONNECTOR

1. Disconnect EVAP control system pressure sensor harness connector.
2. Check connectors for water.

Water should not exist.

OK or NG

OK >> GO TO 12.
NG >> Replace EVAP control system pressure sensor.

12. CHECK EVAP CONTROL SYSTEM PRESSURE SENSOR

Refer to EC-990, "Component Inspection" .

OK or NG

OK >> GO TO 13.
NG >> Replace EVAP control system pressure sensor.

13. CHECK RUBBER TUBE FOR CLOGGING

1. Disconnect rubber tube connected to EVAP canister vent control valve.
2. Check the rubber tube for clogging.

OK or NG

OK >> GO TO 14.
NG >> Clean the rubber tube using an air blower.

14. CHECK EVAP CANISTER VENT CONTROL VALVE

Refer to EC-983, "Component Inspection" .

OK or NG

OK >> GO TO 15.
NG >> Replace EVAP canister vent control valve.

15. CHECK INTERMITTENT INCIDENT

Refer to EC-756, "TROUBLE DIAGNOSIS FOR INTERMITTENT INCIDENT" .

>> **INSPECTION END**

Component Inspection

UBS003J0

VACUUM CUT VALVE BYPASS VALVE

With CONSULT-II

1. Reconnect harness disconnected connectors.
2. Turn ignition switch ON.
3. Perform “VC/V BYPASS/V” in “ACTIVE TEST” mode.
4. Check air passage continuity and operation delay time under the following conditions.

Condition VC/V BYPASS/V	Air passage continuity between A and B
ON	Yes
OFF	No

Operation takes less than 1 second.

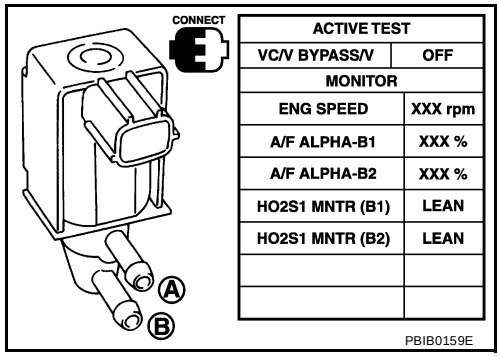

With GST

Check air passage continuity and operation delay time under the following conditions.

Condition	Air passage continuity between A and B
12V direct current supply between terminals 1 and 2	Yes
No supply	No

Operation takes less than 1 second.

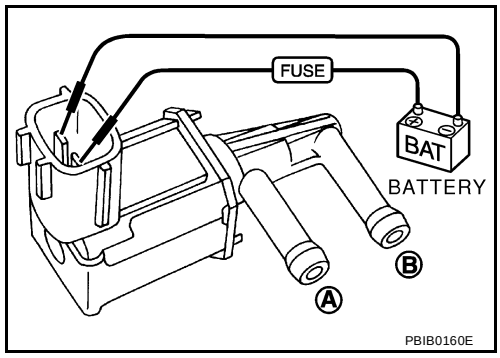

VACUUM CUT VALVE

Check vacuum cut valve as follows:

- Plug port **C** and **D** with fingers.
- Apply vacuum to port **A** and check that there is no suction from port **B** .
- Apply vacuum to port **B** and check that there is suction from port **A** .
- Blow air in port **B** and check that there is a resistance to flow out of port **A** .
- Open port **C** and **D** .
- Blow air in port **A** check that air flows freely out of port **C** .
- Blow air in port **B** check that air flows freely out of port **D** .

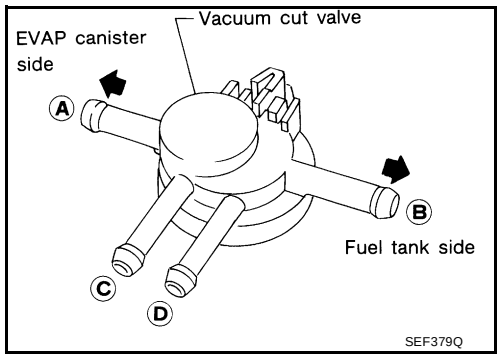

DTC P1564 ASCD STEERING SWITCH

PFP:25551

Component Description

UBS003J1

ASCD steering switch has variant values of electrical resistance for each button. ECM reads voltage variation of switch, and determines which button is operated.
Refer to EC-1286, "AUTOMATIC SPEED CONTROL DEVICE (ASCD)" for the ASCD function.

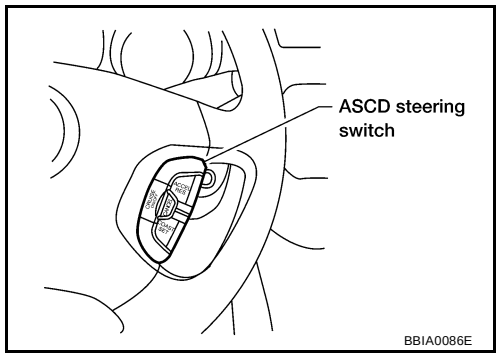

CONSULT-II Reference Value in Data Monitor Mode

UBS003J2

Specification data are reference values.

MONITOR ITEM	CONDITION		SPECIFICATION
MAIN SW	● Ignition switch: ON	● CRUISE switch pressed	ON
		● CRUISE switch released	OFF
CANCEL	● Ignition switch: ON	● CANCEL switch pressed	ON
		● CANCEL switch released	OFF
RESUME/ACC	● Ignition switch: ON	● ACCEL/RES switch pressed	ON
		● ACCEL/RES switch released	OFF
SET SW	● Ignition switch: ON	● COAST/SET switch pressed	ON
		● COAST/SET switch released	OFF

On Board Diagnosis Logic

UBS003J3

NOTE:
If DTC P1564 is displayed with DTC P0605, first perform the trouble diagnosis for DTC P0605. Refer to EC-1030.

DTC No.	Trouble Diagnosis Name	DTC Detecting Condition	Possible Cause
P1564 1564	ASCD steering switch	● An excessively high voltage signal from the ASCD steering switch is sent to ECM. ● ECM detects that input signal from the ASCD steering switch is out of the specified range. ● ECM detects that the ASCD steering switch is stuck ON.	● Harness or connectors (The switch circuit is open or shorted.) ● ASCD steering switch ● ECM

DTC Confirmation Procedure

UBS003J4

NOTE:
If "DTC Confirmation Procedure" has been previously conducted, always turn ignition switch "OFF" and wait at least 10 seconds before conducting the next test.

WITH CONSULT-II

1. Turn ignition switch "ON".
2. Select "DATA MONITOR" mode with CONSULT-II.
3. Wait at least 10 seconds.
4. Press "CRUISE" switch for at least 10 seconds, then release it and wait at least 10 seconds.
5. Press "ACCEL/RES" switch for at least 10 seconds, then release it and wait at least 10 seconds.
6. Press "COAST/SET" switch for at least 10 seconds, then release it and wait at least 10 seconds.
7. Press "CANCEL" switch for at least 10 seconds, then release it and wait at least 10 seconds.
8. If 1st trip DTC is detected, go to EC-1178, "Diagnostic Procedure" .

WITH GST

Follow the procedure “WITH CONSULT-II” above.

Wiring Diagram

UBS003J5

EC-ASC/SW-01

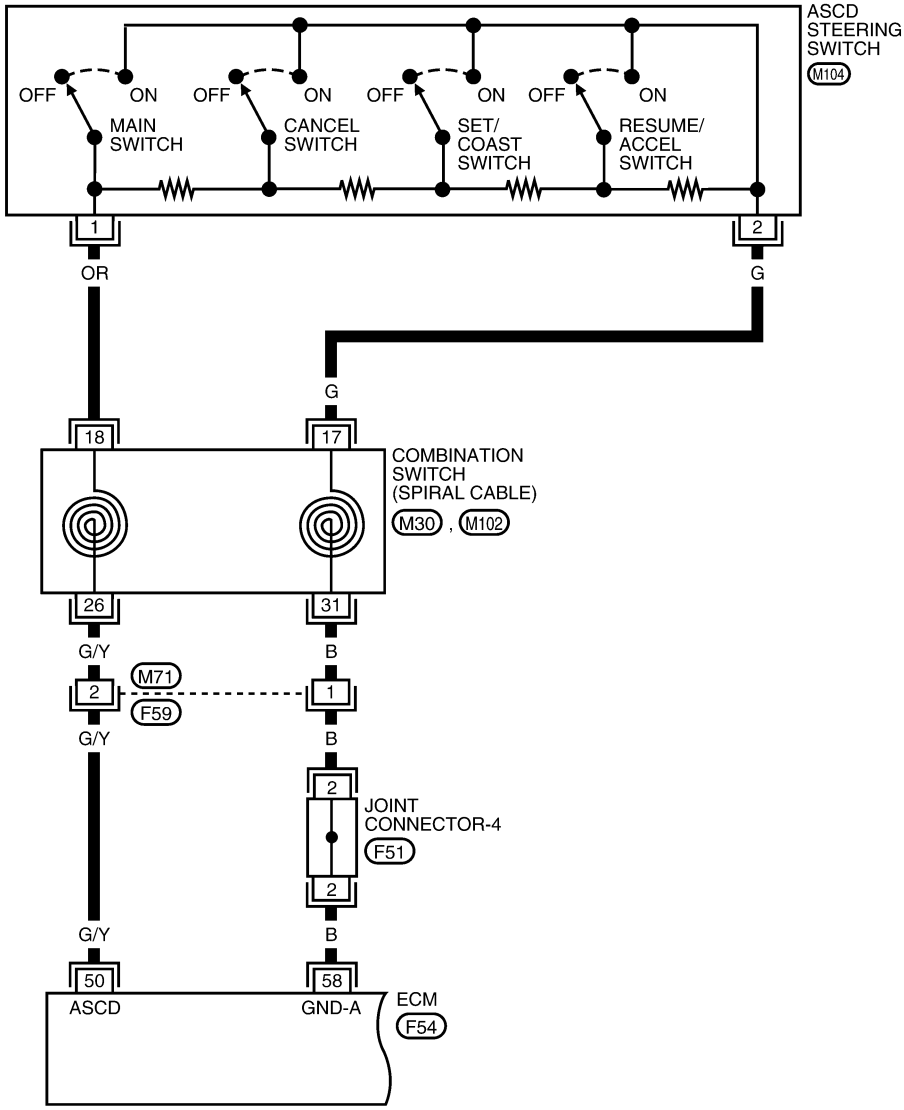

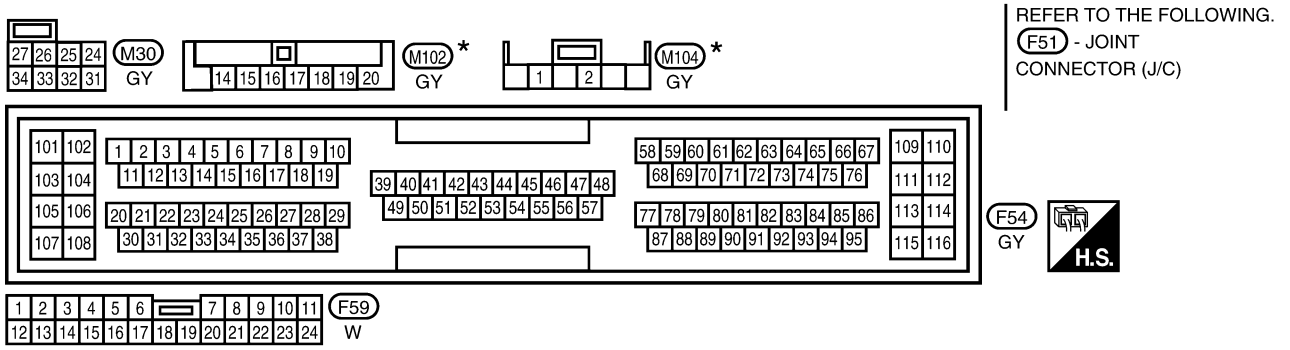

*: This connector is not shown in "HARNESS LAYOUT" of PG section.

BBIA0227E

Specification data are reference values and are measured between each terminal and ground.

CAUTION:

Do not use ECM ground terminals when measuring input/output voltage. Doing so may result in damage to the ECM's transistor. Use a ground other than ECM terminals, such as the ground.

TERMINAL NO.	WIRE COLOR	ITEM	CONDITION	DATA (DC Voltage)
50	G/Y	ASCD steering switch	**[Ignition switch "ON"]** ● ASCD steering switch is "OFF".	Approximately 4.0V
			[Ignition switch "ON"] ● CRUISE switch is "ON".	Approximately 0V
			[Ignition switch "ON"] ● CANCEL switch is "ON".	Approximately 1V
			[Ignition switch "ON"] ● COAST/SET switch is "ON".	Approximately 2V
			[Ignition switch "ON"] ● ACCEL/RES switch is "ON".	Approximately 3V
58	B	Sensors' ground	**[Engine is running]** ● **Warm-up condition** ● Idle speed	Approximately 0V

Diagnostic Procedure

UBS003J6

1. CHECK ASCD STEERING SWITCH CIRCUIT

With CONSULT-II

1. Turn ignition switch "ON".
2. Select "MAIN SW", "RESUME/ACC SW", "SET SW" and "CANCEL SW" in "DATA MONITOR" mode with CONSULT-II.
3. Check each item indication under the following conditions.

Switch	Monitor item	Condition	Indication
CRUISE	MAIN SW	Pressed	ON
		Released	OFF
COAST/SET	SET SW	Pressed	ON
		Released	OFF
ACCEL/RES	RESUME/ACC SW	Pressed	ON
		Released	OFF
CANCEL	CANCEL SW	Pressed	ON
		Released	OFF

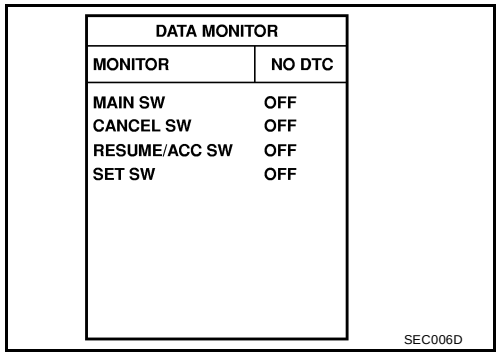

Without CONSULT-II

1. Turn ignition switch "ON".
2. Check voltage between ECM terminal 50 and ground with pressing each button.

Switch	Condition	Voltage [V]
CRUISE SW	Pressed	Approx. 0.5
	Released	Approx. 4.0
COAST/SET SW	Pressed	Approx. 2.0
	Released	Approx. 4.0
ACCEL/RES SW	Pressed	Approx. 3.0
	Released	Approx. 4.0
CANCEL SW	Pressed	Approx. 1.0
	Released	Approx. 4.0

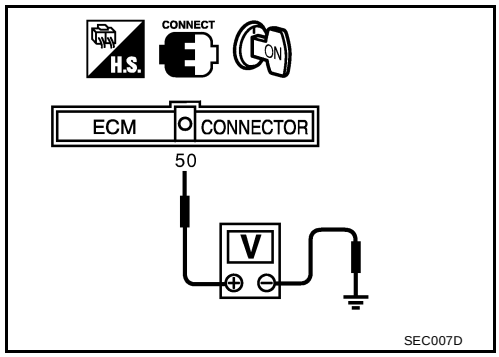

OK or NG

OK >> GO TO 7.
NG >> GO TO 2.

2. CHECK ASCD STEERING SWITCH GROUND CIRCUIT FOR OPEN AND SHORT

1. Turn ignition switch "OFF".
2. Disconnect ASCD steering harness connector.
3. Check harness continuity between switch terminal 2 and ground. Refer to Wiring Diagram.

   Continuity should exist.

4. Also check harness for short to power.

OK or NG

OK >> GO TO 4.
NG >> GO TO 3.

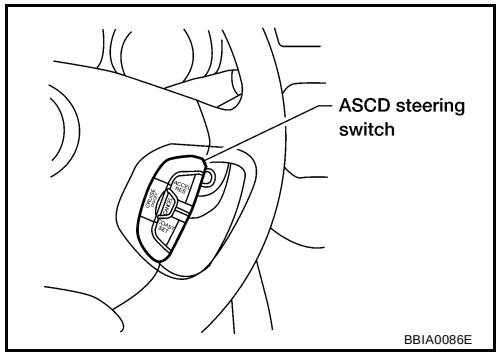

3. DETECT MALFUNCTIONING PART

Check the following.

- Harness connectors M71, F59
- Joint connector-4
- Combination switch (spiral cable)
- Harness for open and short between ECM and ASCD steering switch

>> Repair open circuit or short to power in harness or connectors.

4. CHECK ASCD STEERING SWITCH INPUT SIGNAL CIRCUIT FOR OPEN AND SHORT

1. Disconnect ECM harness connector.
2. Check harness continuity between ECM terminal 50 and ASCD steering switch terminal 1. Refer to Wiring Diagram.

Continuity should exist.

3. Also check harness for short to ground and short to power.

OK or NG

OK >> GO TO 6.
NG >> GO TO 5.

5. DETECT MALFUNCTIONING PART

Check the following.

- Harness connectors M71, F59
- Combination switch (spiral cable)
- Harness for open and short between ECM and ASCD steering switch

>> Repair open circuit or short to ground or short to power in harness or connectors.

6. CHECK ASCD STEERING SWITCH

Refer to EC-1180, "Component Inspection" .

OK or NG

OK >> GO TO 7.
NG >> Replace ASCD steering switch.

7. CHECK INTERMITTENT INCIDENT

Refer to EC-756, "TROUBLE DIAGNOSIS FOR INTERMITTENT INCIDENT" .

>> **INSPECTION END**

Component Inspection

UBS003J7

ASCD STEERING SWITCH

1. Disconnect ASCD steering switch.
2. Check continuity between ASCD steering switch terminals 1 and 2 with pushing each switch.

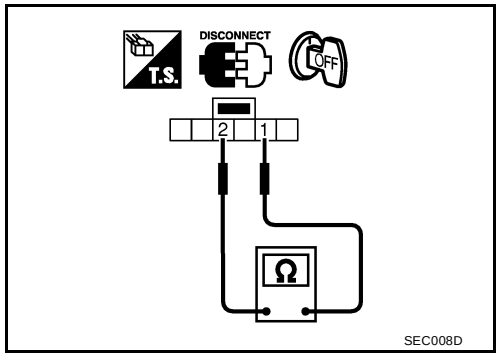

Switch	Condition	Resistance [Ω]
CRUISE SW	Pressed	Approx. 0
	Released	Approx. 4,000
COAST/SET SW	Pressed	Approx. 660
	Released	Approx. 4,000
ACCEL/RES SW	Pressed	Approx. 1,480
	Released	Approx. 4,000
CANCEL SW	Pressed	Approx. 250
	Released	Approx. 4,000

DTC P1572 ASCD BRAKE SWITCH

PFP:25320

Component Description

UBS003J8

When the brake pedal is depressed, ASCD brake switch is turned OFF and stop lamp switch is turned ON. ECM detects the state of the brake pedal by this input of two kinds (ON/OFF signal).
Refer to EC-1286, "AUTOMATIC SPEED CONTROL DEVICE (ASCD)" for the ASCD function.

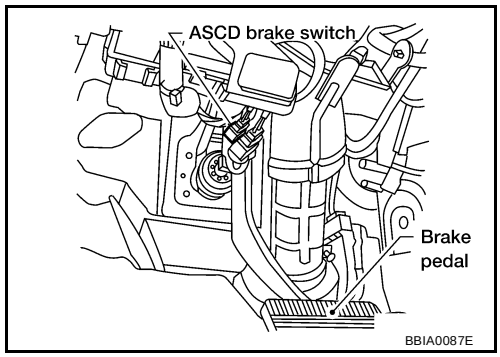

CONSULT-II Reference Value in Data Monitor Mode

UBS003J9

Specification data are reference values.

MONITOR ITEM	CONDITION		SPECIFICATION
BRAKE SW 1 (ASCD brake switch)	● Ignition switch: ON	● Brake pedal fully released	ON
		● Brake pedal depressed	OFF
BRAKE SW 2 (stop lamp switch)	● Ignition switch: ON	● Brake pedal fully released	OFF
		● Brake pedal depressed	ON

On Board Diagnosis Logic

UBS003JA

NOTE:
If DTC P 1572 is displayed with DTC P0605, first perform the trouble diagnosis for DTC P0605. Refer to EC-1030

DTC No.	Trouble Diagnosis Name	DTC Detecting Condition	Possible Cause
P1572 1572	ASCD brake switch	When the vehicle speed is above 30 km/h (19 MPH), ON signals from the stop lamp switch and the ASCD brake switch are sent to the ECM at the same time.	● Harness or connectors (The stop lamp switch circuit is open or shorted.) ● Harness or connectors (The ASCD brake switch circuit is open or shorted.) ● Harness or connectors (The ASCD clutch switch circuit is open or shorted.) ● Stop lamp switch ● ASCD brake switch ● ASCD clutch switch ● Incorrect stop lamp switch installation ● Incorrect ASCD brake switch installation ● Incorrect ASCD clutch switch installation ● ECM

DTC confirmation Procedure

UBS003JB

CAUTION:
Always drive vehicle at a safe speed.

NOTE:
If "DTC Confirmation Procedure" has been previously conducted, always turn ignition switch "OFF" and wait at least 10 seconds before conducting the next test.

TESTING CONDITION:
Steps 3 and 4 may be conducted with the drive wheels lifted in the shop or by driving the vehicle. If a road test is expected to be easier, it is unnecessary to lift the vehicle.

WITH CONSULT-II

1. Start engine (TCS switch "OFF").
2. Select "DATA MONITOR" mode with CONSULT-II.
3. Drive the vehicle for at least 5 consecutive seconds under the following condition.

VHCL SPEED SE	More than 30 km/h (19 MPH)
Selector lever	Suitable position

If 1st trip DTC is detected, go to EC-1184, "Diagnostic Procedure" .
If 1st trip DTC is not detected, go to the following step.

4. Drive the vehicle for at least 5 consecutive seconds under the following condition.

VHCL SPEED SE	More than 30 km/h (19 MPH)
Selector lever	Suitable position
Driving location	Depress the brake pedal for more than five seconds so as not to come off from the above-mentioned condition.

5. If 1st trip DTC is detected, go to EC-1184, "Diagnostic Procedure" .

WITH GST

Follow the procedure “WITH CONSULT-II” above.

Wiring Diagram

UBS003JC

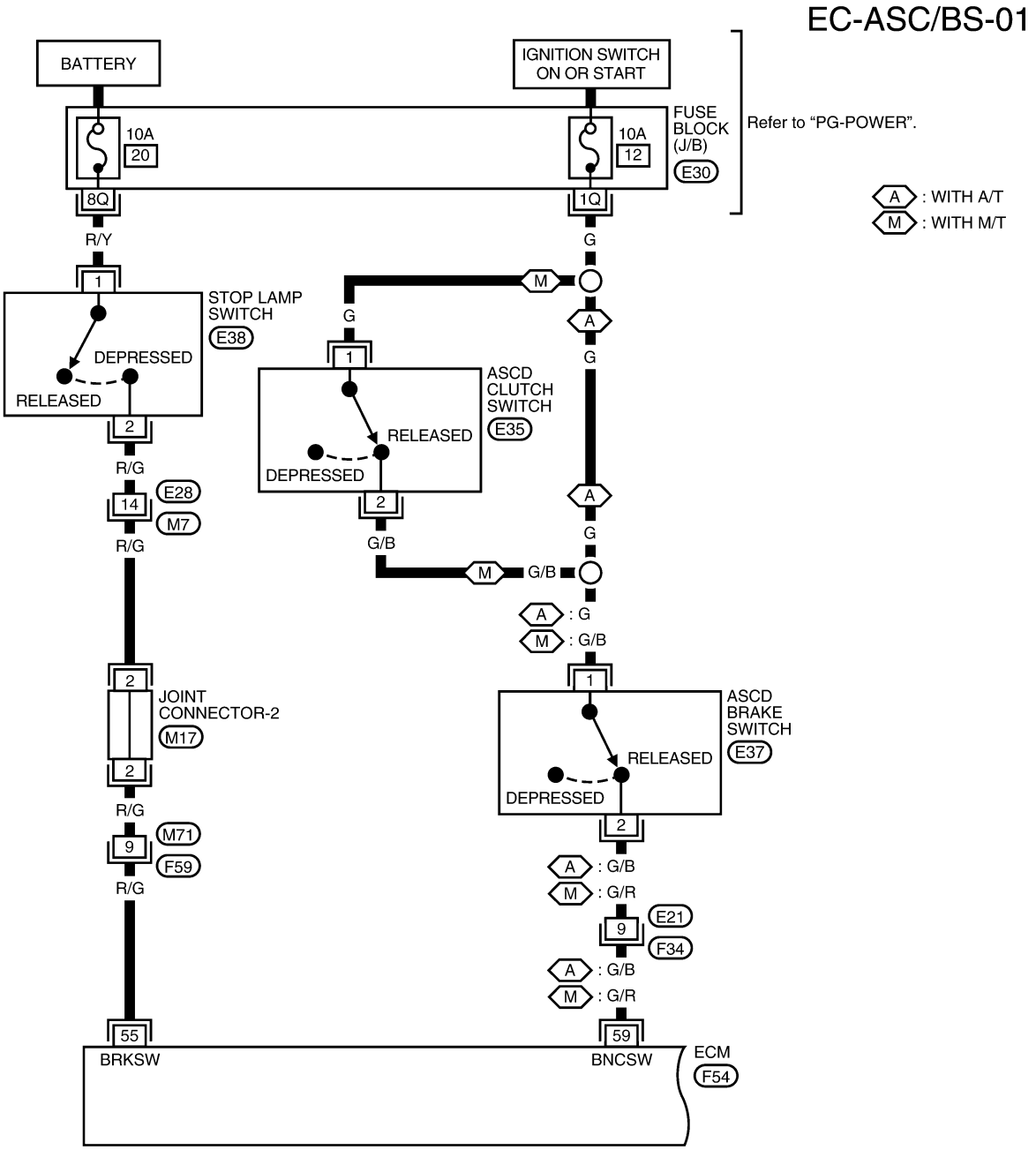

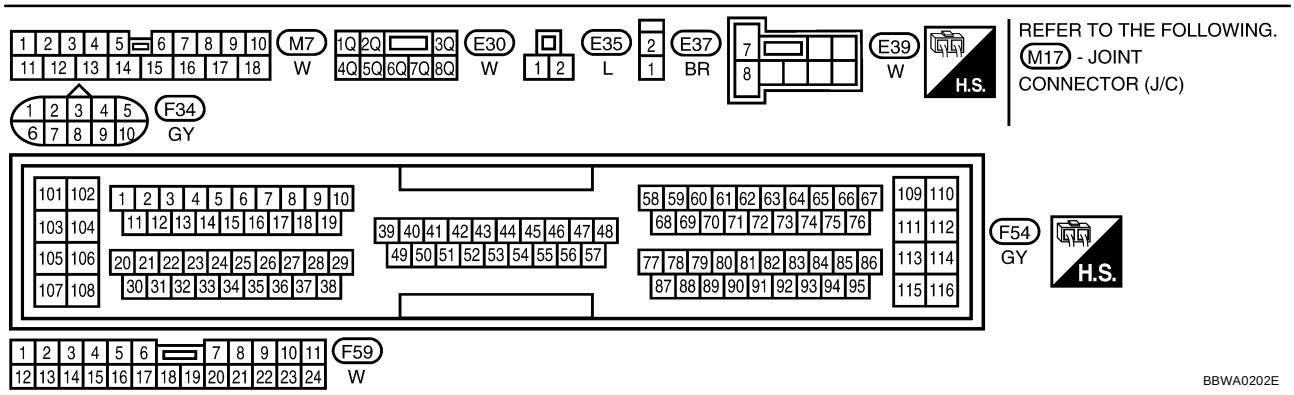

Specification data are reference values and are measured between each terminal and ground.

CAUTION:
Do not use ECM ground terminals when measuring input/output voltage. Doing so may result in damage to the ECM's transistor. Use a ground other than ECM terminals, such as the ground.

TERMINAL NO.	WIRE COLOR	ITEM	CONDITION	DATA (DC Voltage)
55	R/G	Stop lamp switch	**[Ignition switch "ON"]** ● Brake pedal is fully released	Approximately 0V
			[Ignition switch "ON"] ● Brake pedal is depressed	BATTERY VOLTAGE (11 - 14V)
59	G/B (A/T) G/R (M/T)	ASCD brake switch	**[Ignition switch "ON"]** ● Brake pedal is fully released ● Clutch pedal is fully released (M/T models)	BATTERY VOLTAGE (11 - 14V)
			[Ignition switch "ON"] ● Brake pedal is depressed ● Clutch pedal is depressed (M/T models)	Approximately 0V

Diagnostic Procedure

UBS003JD

1. CHECK OVERALL FUNCTION-I

With CONSULT-II

1. Turn ignition switch "ON".
2. Select "BRAKE SW1" in "DATA MONITOR" mode with CONSULT-II.
3. Check "BRAKE SW1" indication under the following conditions.

A/T models

CONDITION	INDICATION
When brake pedal is depress	OFF
When brake pedal is fully released	ON

M/T models

CONDITION	INDICATION
When clutch pedal or brake pedal is depressed	OFF
When clutch pedal and brake pedal are fully released	ON

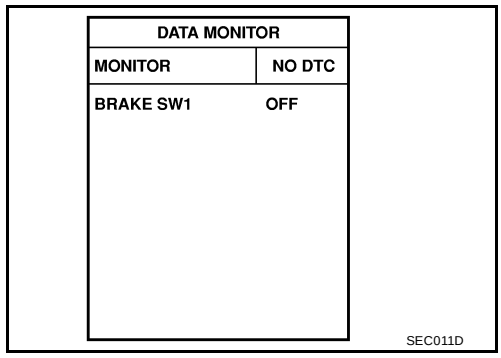

Without CONSULT-II

1. Turn ignition switch "ON".
2. Check voltage between ECM terminal 59 and ground under the following conditions.

A/T models

CONDITION	VOLTAGE
When brake pedal is depress	Approximately 0V
When brake pedal is fully released	Battery voltage

M/T models

CONDITION	VOLTAGE
When clutch pedal or brake pedal is depressed	Approximately 0V
When clutch pedal and brake pedal are fully released	Battery voltage

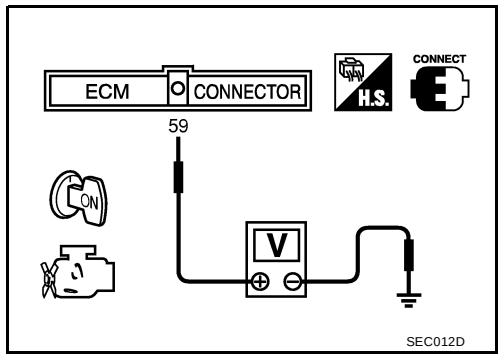

OK or NG

OK >> GO TO 2.
NG (M/T models) >>GO TO 3.
NG (A/T models) >>GO TO 8.

2. CHECK OVERALL FUNCTION-II

With CONSULT-II

Check "BRAKE SW2" indication in "DATA MONITOR" mode.

CONDITION	INDICATION
When brake pedal is released	OFF
When brake pedal is depressed	ON

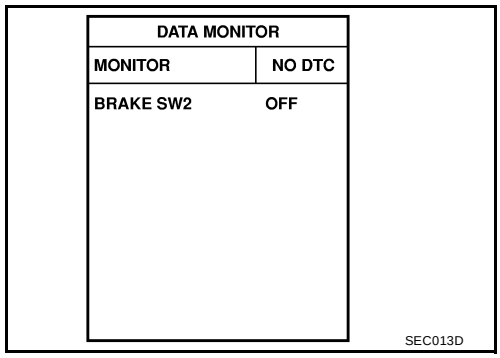

Without CONSULT-II

Check voltage between ECM terminal 55 and ground under the following conditions.

CONDITION	VOLTAGE
When brake pedal is released	Approximately 0V
When brake pedal is depressed	Battery voltage

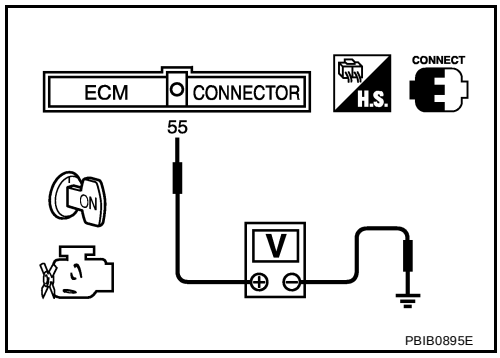

OK or NG

OK >> GO TO 18.
NG >> GO TO 13.

3. CHECK ASCD CLUTCH SWITCH CIRCUIT

1. Turn ignition switch "OFF".
2. Disconnect ASCD brake switch harness connector.
3. Turn ignition switch "ON".

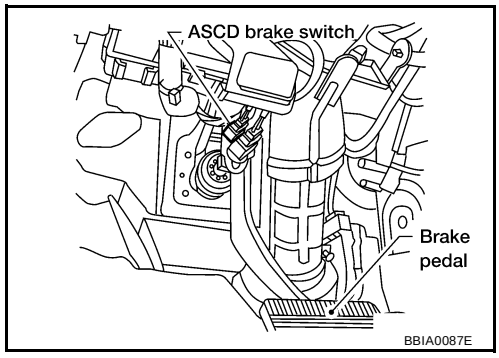

4. Check voltage between ASCD brake switch terminal 1 and ground under the following conditions with CONSULT-II or tester.

CONDITION	VOLTAGE
When clutch pedal is released	Battery voltage
When clutch pedal is depressed	Approx. 0V

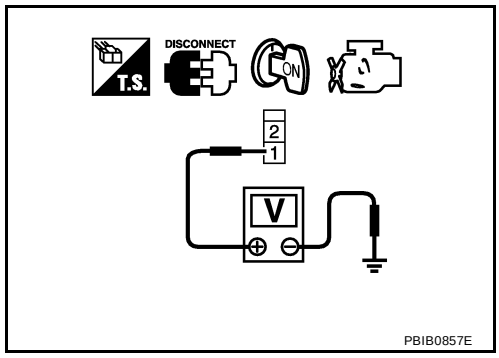

OK or NG

OK >> GO TO 10.
NG >> GO TO 4.

4. CHECK ASCD CLUTCH SWITCH POWER SUPPLY CIRCUIT

1. Turn ignition switch "OFF".
2. Disconnect ASCD clutch switch harness connector.
3. Turn ignition switch "ON".

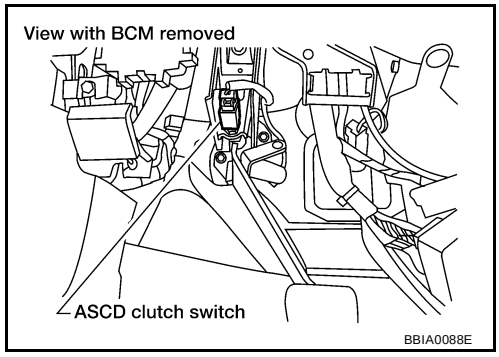

4. Check voltage between ASCD clutch switch terminal 1 and ground with CONSULT-II or tester.

Voltage: Battery voltage

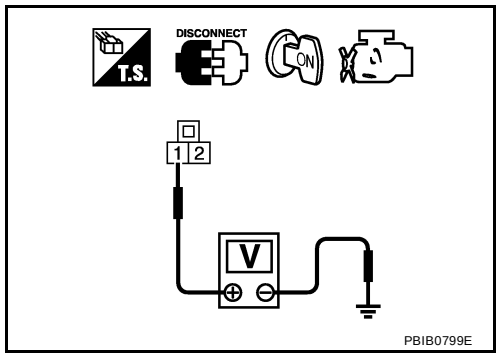

OK or NG

OK >> GO TO 6.
NG >> GO TO 5.

5. DETECT MALFUNCTIONING PART

Check the following.

- Fuse block (J/B) connector E30
- 10A fuse
- Harness for open or short between ASCD clutch switch and fuse

>> Repair open circuit or short to ground or short to power in harness or connectors.

6. CHECK ASCD CLUTCH SWITCH INPUT SIGNAL CIRCUIT FOR OPEN AND SHORT

1. Turn ignition switch "OFF".
2. Check harness continuity between ASCD clutch switch terminal 2 and ASCD brake switch terminal 1. Refer to Wiring Diagram.

Continuity should exist.

3. Also check harness for short to ground and short to power.

OK or NG

OK >> GO TO 7.
NG >> Repair open circuit or short to ground or short to power in harness or connectors.

7. CHECK ASCD CLUTCH SWITCH

Refer to EC-1190, "Component Inspection"

OK or NG

OK >> GO TO 18.
NG >> Replace ASCD clutch switch.

8. CHECK ASCD BRAKE SWITCH POWER SUPPLY CIRCUIT

1. Turn ignition switch "OFF".
2. Disconnect ASCD brake switch harness connector.
3. Turn ignition switch "ON".

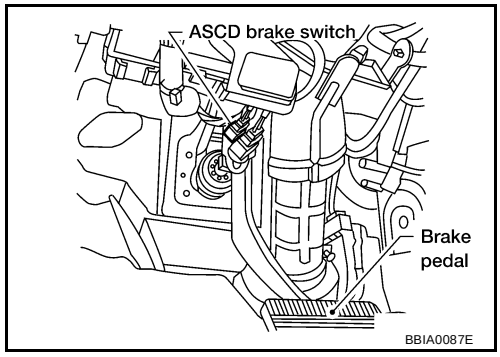

4. Check voltage between ASCD brake switch terminal 1 and ground with CONSULT-II or tester.

Voltage: Battery voltage

OK or NG

OK >> GO TO 10.
NG >> GO TO 9.

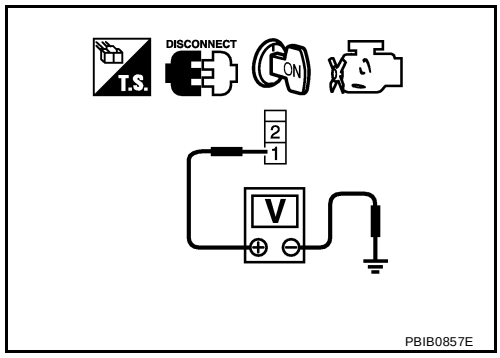

9. DETECT MALFUNCTIONING PART

Check the following.

- Fuse block (J/B) connector E30
- 10A fuse
- Harness for open or short between ASCD brake switch and fuse

>> Repair open circuit or short to ground or short to power in harness or connectors.

10. CHECK ASCD BRAKE SWITCH INPUT SIGNAL CIRCUIT FOR OPEN AND SHORT

1. Turn ignition switch "OFF".
2. Disconnect ECM harness connector.
3. Check harness continuity between ECM terminal 59 and ASCD brake switch terminal 2.
   Refer to Wiring Diagram.

   Continuity should exist.

4. Also check harness for short to ground or short to power.

OK or NG

OK >> GO TO 12.
NG >> GO TO 11.

11. DETECT MALFUNCTIONING PART

Check the following.

- Harness connectors E21, F34
- Harness for open or short between ECM and ASCD brake switch

>> Repair open circuit or short to ground or short to power in harness or connectors.

12. CHECK ASCD BRAKE SWITCH

Refer to EC-1190, "Component Inspection"

OK or NG

OK >> GO TO 18.
NG >> Replace ASCD brake switch.

13. CHECK STOP LAMP SWITCH POWER SUPPLY CIRCUIT

1. Turn ignition switch "OFF".
2. Disconnect stop lamp switch harness connector.

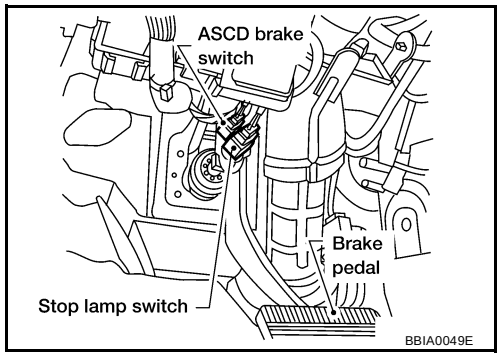

3. Check voltage between stop lamp switch terminal 1 and ground with CONSULT -II or tester.

Voltage: Battery voltage

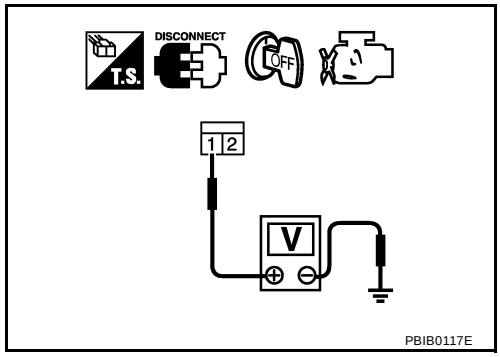

OK or NG

OK >> GO TO 15.
NG >> GO TO 14.

14. DETECT MALFUNCTIONING PART

Check the following.

- Fuse block (J/B) connector E30
- 10A fuse
- Harness for open or short between stop lamp switch and fuse

>> Repair open circuit or short to ground or short to power in harness or connectors.

15. CHECK STOP LAMP SWITCH INPUT SIGNAL CIRCUIT FOR OPEN AND SHORT

1. Disconnect ECM harness connector.
2. Check harness continuity between ECM terminal 55 and stop lamp switch terminal 2. Refer to Wiring Diagram.

Continuity should exist.

3. Also check harness for short to ground and short to power.

OK or NG

OK >> GO TO 17.
NG >> GO TO 16.

16. DETECT MALFUNCTIONING PART

Check the following.

- Harness connectors E28, M7
- Harness connectors M71, F59
- Joint connector-2
- Harness for open or short between ECM and stop lamp switch

>> Repair open circuit or short to ground or short to power in harness or connectors.

17. CHECK STOP LAMP SWITCH

Refer to EC-1190, "Component Inspection"

OK or NG

OK >> GO TO 18.
NG >> Replace stop lamp switch.

18. CHECK INTERMITTENT INCIDENT

Refer to EC-756, "TROUBLE DIAGNOSIS FOR INTERMITTENT INCIDENT" .

>> **INSPECTION END**

Component Inspection

UBS003JE

ASCD BRAKE SWITCH

1. Turn ignition switch "OFF".
2. Disconnect ASCD brake switch harness connector.
3. Check harness continuity between ASCD brake switch terminals 1 and 2 under the following conditions.

Condition	Continuity
When brake pedal is fully released.	Should exist.
When brake pedal is depressed.	Should not exist.

If NG, adjust ASCD brake switch installation, refer to BR-6, "BRAKE PEDAL" , and perform step 3 again.

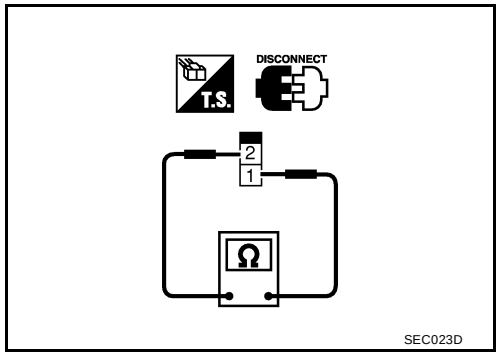

ASCD CLUTCH SWITCH (FOR M/T MODELS)

1. Turn ignition switch "OFF".
2. Disconnect ASCD clutch switch harness connector.
3. Check harness continuity between ASCD clutch switch terminals 1 and 2 under the following conditions.

Condition	Continuity
When clutch pedal is fully released.	Should exist.
When clutch pedal is depressed.	Should not exist.

If NG, adjust ASCD clutch switch installation, refer to CL-5, "CLUTCH PEDAL" , and perform step 3 again.

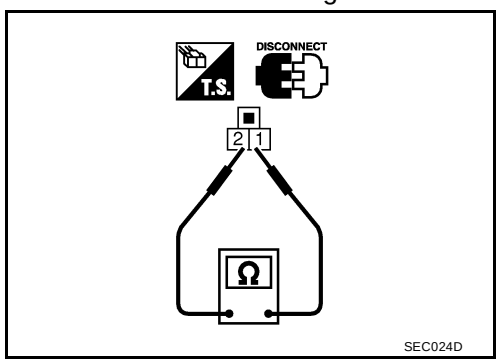

STOP LAMP SWITCH

1. Turn ignition switch "OFF".
2. Disconnect stop lamp switch harness connector.
3. Check harness continuity between stop lamp switch terminals 1 and 2 under the following conditions.

Condition	Continuity
When brake pedal is fully released.	Should not exist.
When brake pedal is depressed.	Should exist.

If NG, adjust stop lamp switch installation, refer to BR-6, "BRAKE PEDAL" , and perform step 3 again.

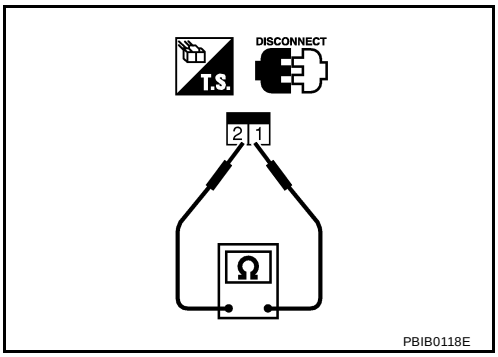

DTC P1574 ASCD VEHICLE SPEED SENSOR

PFP:31036

Component Description

UBS003JF

The ECM receives two vehicle speed sensor signals via CAN communication line. One is sent from combination meter, and the other is from TCM (Transmission control module). The ECM uses these signals for ASCD control. Refer to EC-1286, "AUTOMATIC SPEED CONTROL DEVICE (ASCD)" for ASCD functions.

On Board Diagnosis Logic

UBS003JG

NOTE:

- **If DTC P1574 is displayed with DTC U1000, U1001, first perform the trouble diagnosis for DTC U1000, U1001. Refer to EC-763, "DTC U1000, U1001 CAN COMMUNICATION LINE" .**
- **If DTC P1574 is displayed with DTC P0500, first perform the trouble diagnosis for DTC P0500. Refer to EC-1019, "DTC P0500 VSS"**
- **If DTC P1574 is displayed with DTC P0605, first perform the trouble diagnosis for DTC P0605. Refer to EC-1030, "DTC P0605 ECM"**

DTC No.	Trouble Diagnosis Name	DTC Detecting Condition	Possible Cause
P1574 1574	ASCD vehicle speed sensor	ECM detects a difference between two vehicle speed signals is out of the specified range.	● Harness or connectors (The CAN communication line is open or shorted.) ● Harness or connectors (The combination meter circuit is open or shorted.) ● Combination meter ● Vehicle speed sensor ● TCM ● ECM

DTC Confirmation Procedure

UBS003JH

CAUTION:
Always drive vehicle at a safe speed.

NOTE:
If "DTC Confirmation Procedure" has been previously conducted, always turn ignition switch "OFF" and wait at least 10 seconds before conducting the next test.

TESTING CONDITION:
Step 3 may be conducted with the drive wheels lifted in the shop or by driving the vehicle. If a road test is expected to be easier, it is unnecessary to lift the vehicle.

WITH CONSULT-II

1. Start engine (TCS switch "OFF").
2. Select "DATA MONITOR" mode with CONSULT-II.
3. Drive the vehicle at more than 40 km/h (25 MPH).
4. If 1st trip DTC is detected, go to EC-1193, "Diagnostic Procedure" .

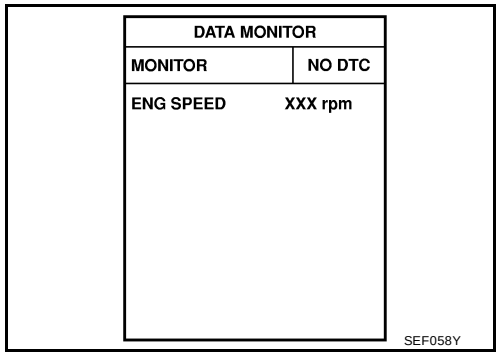

WITH GST

Follow the procedure “WITH CONSULT-II” above.

Diagnostic Procedure

UBS003JI

1. CHECK DTC WITH TCM

Check DTC with TCM. Refer to AT-36, "ON BOARD DIAGNOSTIC SYSTEM DESCRIPTION" .

OK or NG

OK >> GO TO 2.
NG >> Perform trouble shooting relevant to DTC indicated.

2. CHECK VEHICLE SPEED SENSOR CIRCUIT

Refer to DI-19, "Vehicle Speed System" .

OK or NG

OK >> GO TO 3.
NG >> Repair or replace.

3. CHECK COMBINATION METER

Check combination meter function.
Refer to DI-4, "COMBINATION METERS" .

>> **INSPECTION END**

DTC P1706 PNP SWITCH

PFP:32006

Component Description

UBS003JJ

When the gear position is “P” (A/T models only) or “N”, park/neutral position (PNP) switch is “ON”.
ECM detects the position because the continuity of the line (the “ON” signal) exists.

CONSULT-II Reference Value in Data Monitor Mode

UBS003JK

Specification data are reference values.

MONITOR ITEM	CONDITION		SPECIFICATION
P/N POSI SW	● Ignition switch: ON	Shift lever: P or N (A/T model) N (M/T model)	ON
		Shift lever: Except above	OFF

On Board Diagnosis Logic

UBS003JL

DTC No.	Trouble diagnosis name	DTC detecting condition	Possible cause
P1706 1706	Park/neutral position switch	The signal of the park/neutral position (PNP) switch is not changed in the process of engine starting and driving.	● Harness or connectors [The park/neutral position (PNP) switch circuit is open or shorted.] ● Park/neutral position (PNP) switch

DTC Confirmation Procedure

UBS003JM

CAUTION:
Always drive vehicle at a safe speed.

NOTE:
If “DTC Confirmation Procedure” has been previously conducted, always turn ignition switch “OFF” and wait at least 10 seconds before conducting the next test.

WITH CONSULT-II

1. Turn ignition switch “ON”.
2. Select “P/N POSI SW” in “DATA MONITOR” mode with CONSULT-II. Then check the “P/N POSI SW” signal under the following conditions.

Position (Selector lever)	Known-good signal
“N” and “P” position	ON
Except the above position	OFF

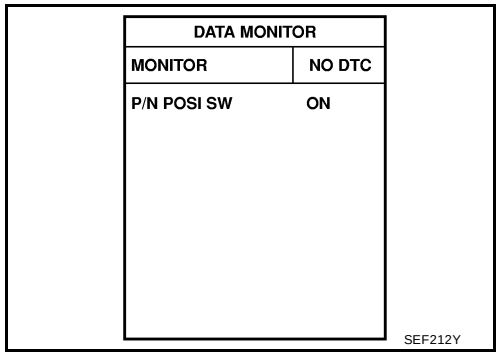

If NG, go to EC-1197, "Diagnostic Procedure" .
If OK, go to following step.

3. Select “DATA MONITOR” mode with CONSULT-II.
4. Start engine and warm it up to normal operating temperature.
5. Maintain the following conditions for at least 60 consecutive seconds.

ENG SPEED	More than 1,400 rpm
COOLAN TEMP/S	More than 70°C (158°F)
B/FUEL SCHDL	More than 2.0 msec
VHCL SPEED SE	More than 64 km/h (40 MPH)
Selector lever	Suitable position (A/T) 5th position (M/T)

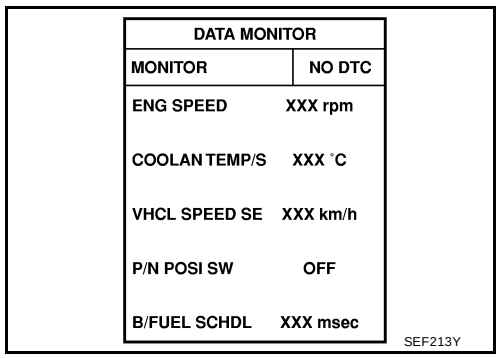

6. If 1st trip DTC is detected, go to EC-1197, "Diagnostic Procedure" .

Overall Function Check

UBS003JN

Use this procedure to check the overall function of the park/neutral position (PNP) switch circuit. During this check, a 1st trip DTC might not be confirmed.

WITH GST

1. Turn ignition switch “ON”.
2. Check voltage between ECM terminal 44 (PNP switch signal) and body ground under the following conditions.

Condition (Gear position)	Voltage V (Known good data)
“P” (A/T models only) and “N” position	Approx. 0
Except the above position	A/T models BATTERY VOLTAGE (11 - 14V)
	M/T Approximately 5V

3. If NG, go to EC-1197, "Diagnostic Procedure" .

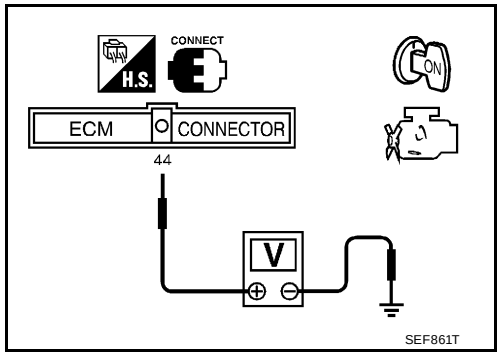

Wiring Diagram

UBS003JO

EC-PNP/SW-01

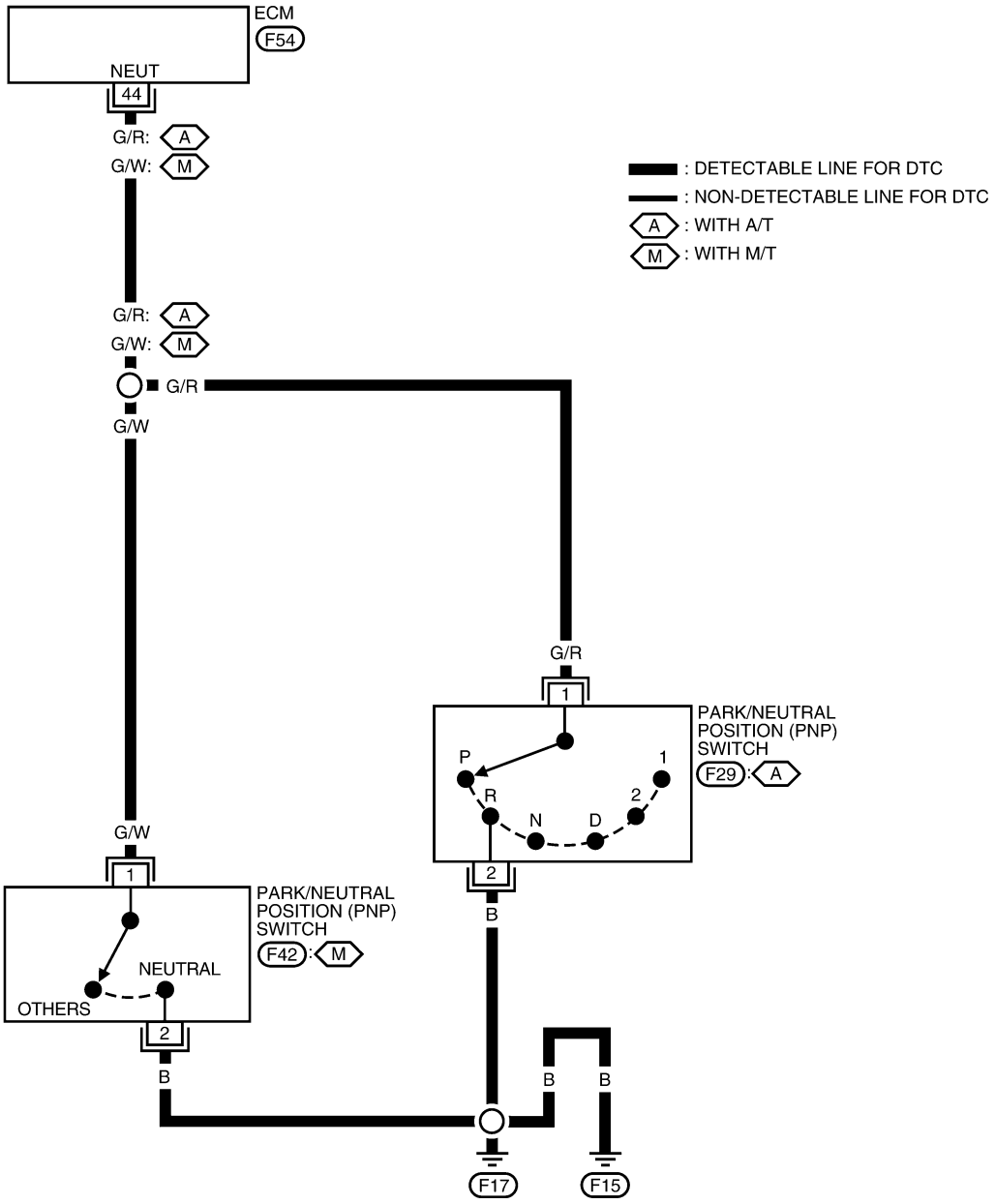

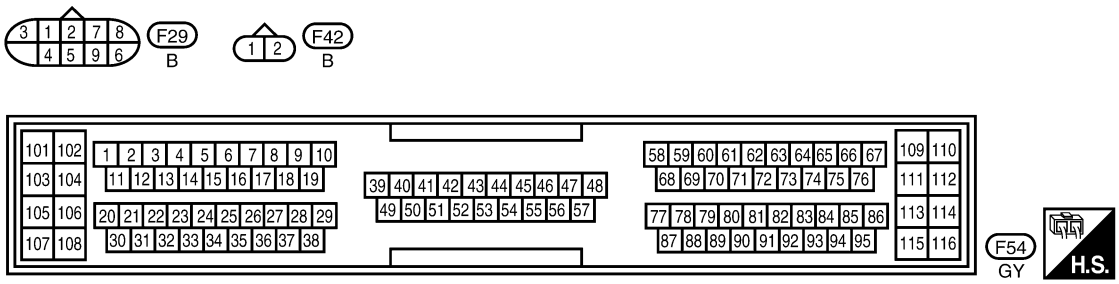

BBWA0087E

Specification data are reference values and are measured between each terminal and ground.

CAUTION:
Do not use ECM ground terminals when measuring input/output voltage. Doing so may result in damage to the ECM's transistor. Use a ground other than ECM terminals, such as the ground.

TERMINAL NO.	WIRE COLOR	ITEM	CONDITION	DATA (DC Voltage)
44	G/R (A/T) G/W (M/T)	PNP switch	**[Ignition switch "ON"]** ● Shift lever position is "P" or "N" (A/T models), "Neutral" (M/T models).	Approximately 0V
			[Ignition switch "ON"] ● Except the above position	**A/T models** BATTERY VOLTAGE (11 - 14V) **M/T models** Approximately 5V

Diagnostic Procedure

UBS003JP

1. CHECK GROUND CIRCUIT

1. Turn ignition switch "OFF".
2. Disconnect PNP switch harness connector.

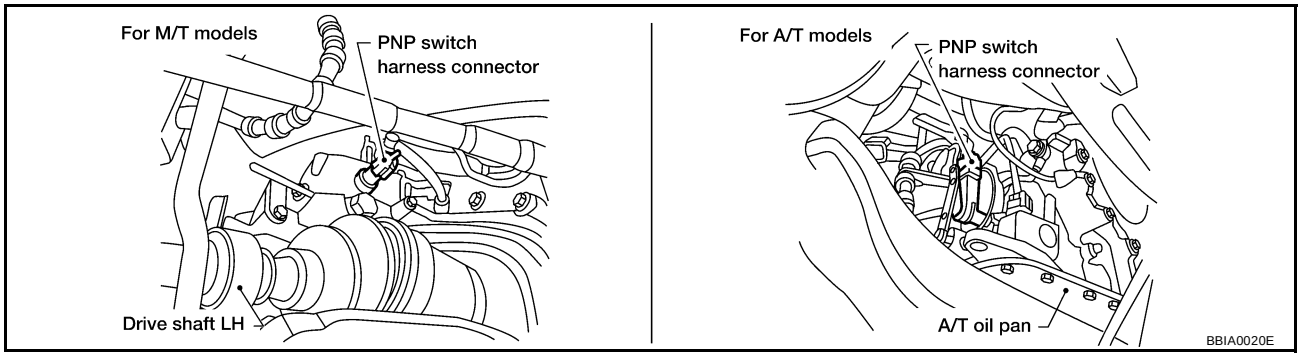

3. Check harness continuity between PNP switch terminal 2 and body ground. Refer to Wiring Diagram.

Continuity should exist.

4. Also check harness for short to power.

OK or NG

OK >> GO TO 2.
NG >> Repair open circuit or short to power in harness or connectors.

2. CHECK INPUT SIGNAL CIRCUIT

1. Disconnect ECM harness connector.
2. Check harness continuity between ECM terminal 44 and PNP switch terminal 1. Refer to Wiring Diagram.

Continuity should exist.

3. Also check harness for short to ground and short to power.

OK or NG

OK >> GO TO 3.
NG >> Repair open circuit or short to ground short to power in harness or connectors.

3. CHECK PNP SWITCH

Refer to AT-106 (A/T models) or MT-12 (M/T models).

OK or NG

OK >> GO TO 4.
NG >> Replace PNP switch.

4. CHECK INTERMITTENT INCIDENT

Refer to EC-756, "TROUBLE DIAGNOSIS FOR INTERMITTENT INCIDENT" .

>> **INSPECTION END**

DTC P1800 VIAS CONTROL SOLENOID VALVE

PFP:14955

Description

UBS003JQ

SYSTEM DESCRIPTION

Sensor	Input Signal to ECM	ECM function	Actuator
Mass air flow sensor	Amount of intake air	VIAS control	VIAS control solenoid valve
Throttle position sensor	Throttle position		
Accelerator pedal position sensor	Accelerator pedal position		
Ignition switch	Start signal		
Crankshaft position sensor (POS) Camshaft position sensor (PHASE)	Engine speed		
Engine coolant temperature sensor	Engine coolant temperature		

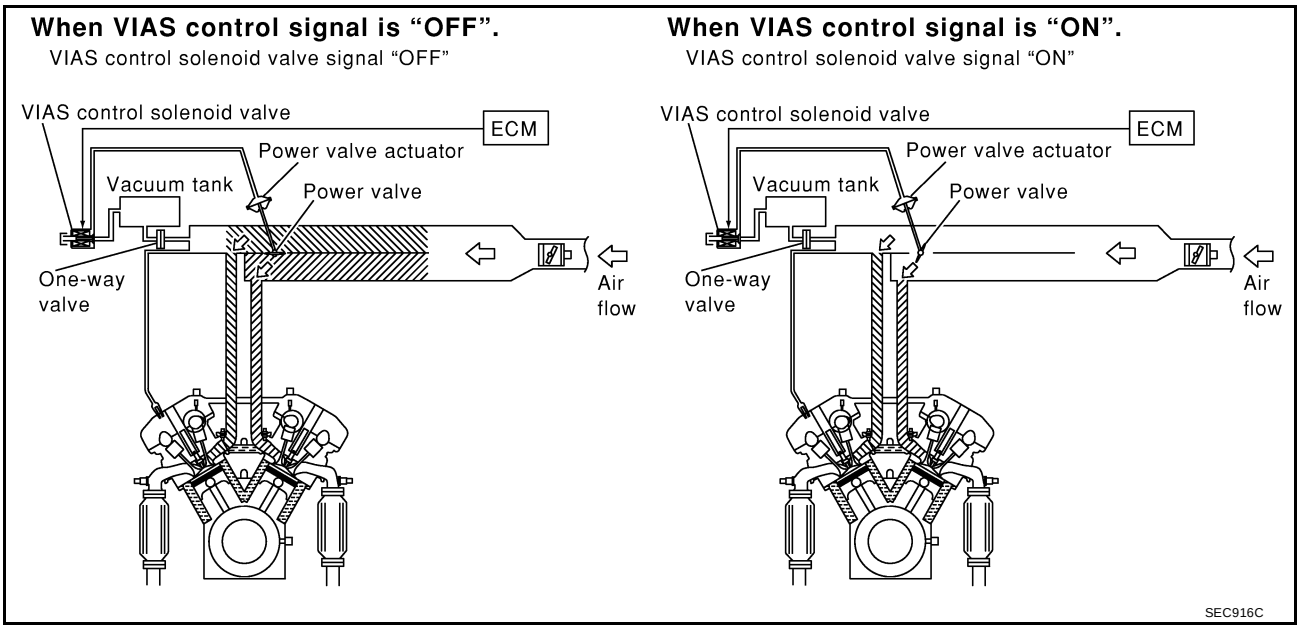

When the engine is running at low or medium speed, the power valve is fully closed. Under this condition, the effective suction port length is equivalent to the total length of the intake manifold collector's suction port including the intake valve. This long suction port provides increased air intake which results in improved suction efficiency and higher torque generation.

The surge tank and one-way valve are provided. When engine is running at high speed, the ECM sends the signal to the VIAS control solenoid valve. This signal introduces the intake manifold vacuum into the power valve actuator and therefore opens the power valve to two suction passages together in the collector.

Under this condition, the effective port length is equivalent to the length of the suction port provided independently for each cylinder. This shortened port length results in enhanced engine output with reduced suction resistance under high speeds.

COMPONENT DESCRIPTION

Power Valve

The power valve is installed in intake manifold collector and used to control the suction passage of the variable induction air control system. It is set in the fully closed or fully opened position by the power valve actuator operated by the vacuum stored in the surge tank. The vacuum in the surge tank is controlled by the VIAS control solenoid valve.

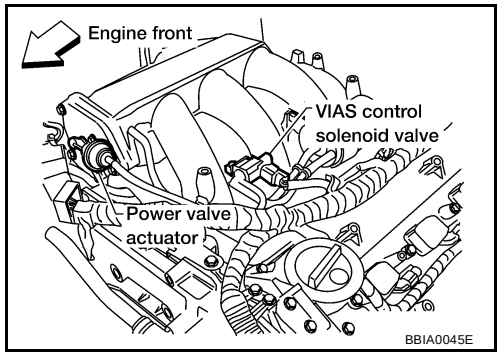

VIAS Control Solenoid Valve

The VIAS control solenoid valve cuts the intake manifold vacuum signal for power valve control. It responds to ON/OFF signals from the ECM. When the solenoid is off, the vacuum signal from the intake manifold is cut. When the ECM sends an ON signal the coil pulls the plunger downward and feeds the vacuum signal to the power valve actuator.

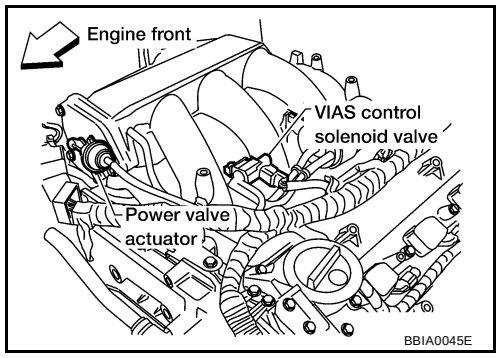

On Board Diagnosis Logic

UBS003JR

DTC No.	Trouble diagnosis name	DTC detecting condition	Possible cause
P1800 1800	VIAS control solenoid valve circuit	An excessively low or high voltage signal is sent to ECM through the valve	● Harness or connectors (The solenoid valve circuit is open or shorted.) ● VIAS control solenoid valve

CONSULT-II Reference Value in Data Monitor Mode

UBS003JS

Specification data are reference values.

MONITOR ITEM	CONDITION		SPECIFICATION
VIAS S/V	● Engine: After warming up	1,800 - 3,600 rpm	ON
		Except the above condition	OFF

DTC Confirmation Procedure

UBS003JT

NOTE:
If “DTC Confirmation Procedure” has been previously conducted, always turn ignition switch “OFF” and wait at least 10 seconds before conducting the next test.
TESTING CONDITION:
Before performing the following procedure, confirm that battery voltage is between 11V at idle.

WITH CONSULT-II

1. Turn ignition switch "ON".
2. Select “DATA MONITOR” mode with CONSULT-II.
3. Start engine and let it idle for at least 5 seconds.
4. If 1st trip DTC is detected, go to EC-1202, "Diagnostic Procedure" .

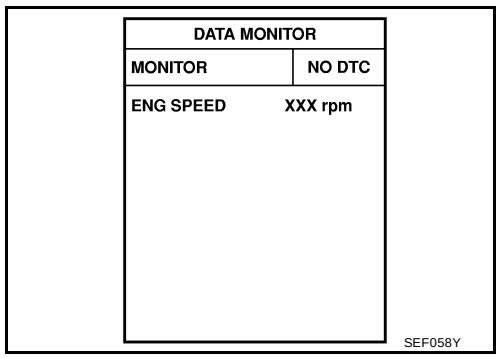

WITH GST

Follow the procedure "WITH CONSULT-II" above.

Wiring Diagram

UBS003JU

EC-VIAS/V-01

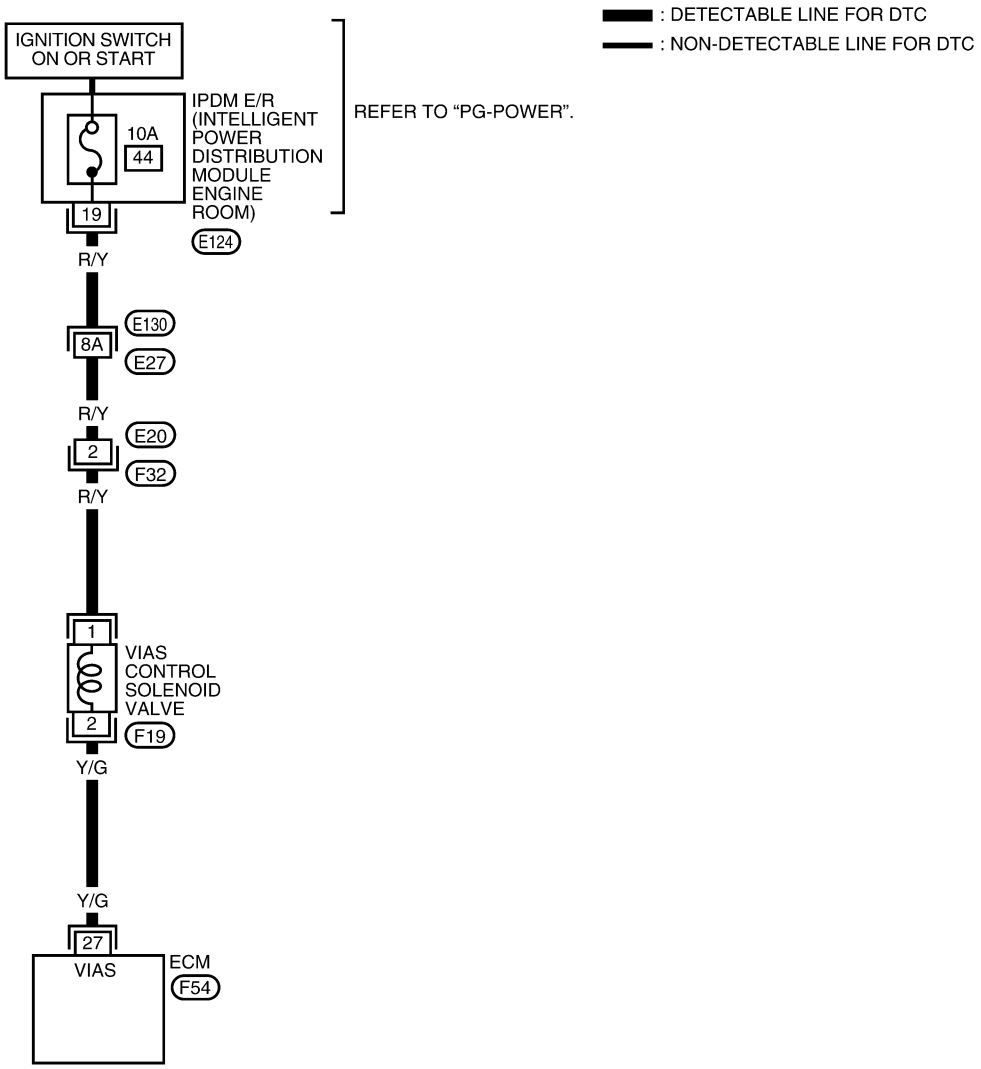

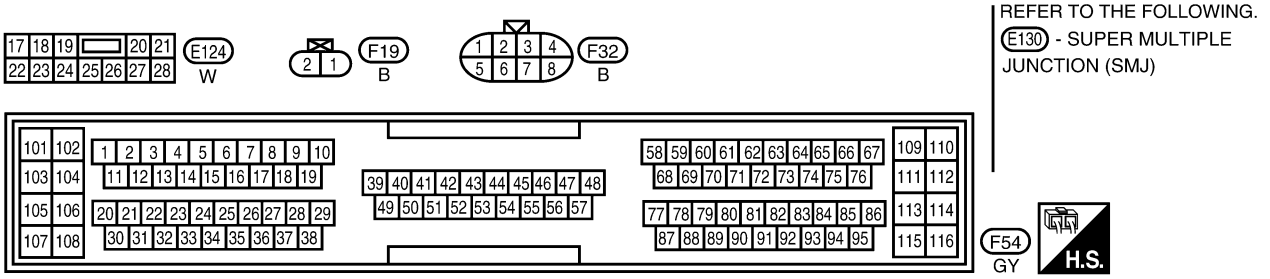

BBWA0088E

Specification data are reference values and are measured between each terminal and ground.

CAUTION:
Do not use ECM ground terminals when measuring input/output voltage. Doing so may result in damage to the ECM's transistor. Use a ground other than ECM terminals, such as the ground.

TERMINAL NO.	WIRE COLOR	ITEM	CONDITION	DATA (DC Voltage)
27	Y/G	VIAS control solenoid valve	**[Engine is running]** ● Engine speed is 1,800 - 3,600 rpm	0 - 1.0V
			[Engine is running] ● Except the above condition	BATTERY VOLTAGE (11 - 14V)

Diagnostic Procedure

UBS003JV

1. CHECK VIAS CONTROL SOLENOID VALVE POWER SUPPLY CIRCUIT

1. Turn ignition switch "OFF".
2. Disconnect VIAS control solenoid valve harness connector.
3. Turn ignition switch “ON”.

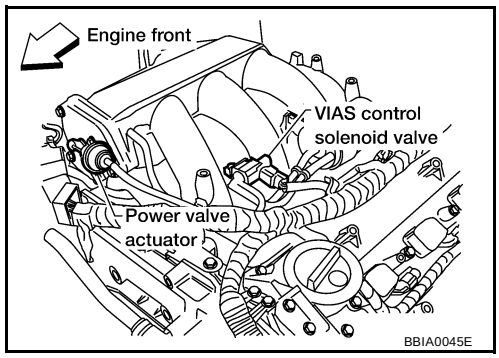

4. Check voltage between terminal 1 and ground with CONSULT-II or tester.

   Voltage: Battery voltage

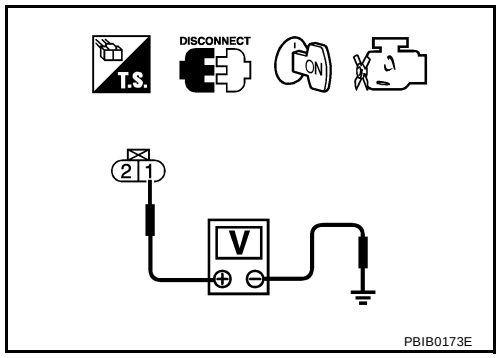

OK or NG

OK >> GO TO 3.
NG >> GO TO 2.

2. DETECT MALFUNCTIONING PART

Check the following.

- Harness connectors E130, E27
- Harness connectors E20, F32
- IPDM E/R connector E124
- 10A fuse
- Harness continuity between fuse and VIAS control solenoid valve

>> Repair harness or connectors.

3. CHECK VIAS CONTROL SOLENOID VALVE OUTPUT SIGNAL CIRCUIT FOR OPEN AND SHORT

1. Turn ignition switch “OFF”.
2. Disconnect ECM harness connector.
3. Check harness continuity between ECM terminal 27 and VIAS control solenoid valve terminal 2. Refer to Wiring Diagram.

Continuity should exist.

4. Also check harness for short to ground and short to power.

OK or NG

OK >> GO TO 4.
NG >> Repair open circuit or short to ground or short to power in harness or connectors.

4. CHECK VIAS CONTROL SOLENOID VALVE

Refer to EC-1203, "Component Inspection" .

OK or NG

OK >> GO TO 5.
NG >> Replace VIAS control solenoid valve.

5. CHECK INTERMITTENT INCIDENT

Refer to EC-756, "TROUBLE DIAGNOSIS FOR INTERMITTENT INCIDENT" .

>> **INSPECTION END**

Component Inspection

UBS003JW

VIAS CONTROL SOLENOID VALVE

With CONSULT-II

1. Reconnect harness connectors disconnected.
2. Turn ignition switch ON.
3. Perform “VIAS SOL VALVE” in “ACTIVE TEST” mode.
4. Check air passage continuity and operation delay time under the following conditions.

Condition VIAS SOL VALVE	Air passage continuity between A and B	Air passage continuity between A and C
ON	Yes	No
OFF	No	Yes

Operation takes less than 1 second.

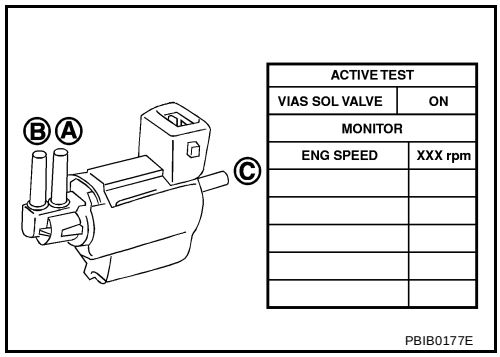

With GST

Check air passage continuity and operation delay time under the following conditions.

Condition	Air passage continuity between A and B	Air passage continuity between A and C
12V direct current supply between terminals 1 and 2	Yes	No
No supply	No	Yes

Operation takes less than 1 second.

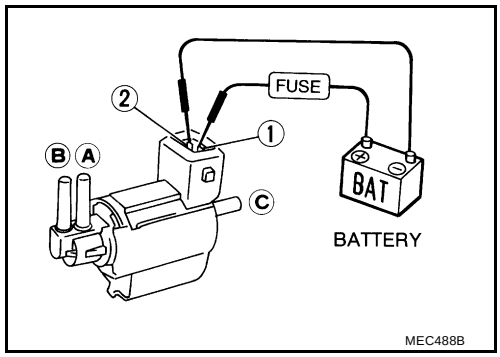

Removal and Installation

UBS003JX

VIAS CONTROL SOLENOID VALVE

Refer to EM-112, "INTAKE MANIFOLD" .

DTC P1805 BRAKE SWITCH

PFP:25320

Description

UBS003JY

Brake switch signal is applied to the ECM through the stop lamp switch when the brake pedal is depressed. This signal is used mainly to decrease the engine speed when the vehicle is driving.

CONSULT-II Reference Value in Data Monitor Mode

UBS003JZ

Specification data are reference values.

MONITOR ITEM	CONDITION		SPECIFICATION
BRAKE SW	● Ignition switch: ON	Brake pedal: Fully released	OFF
		Brake pedal: Slightly depressed	ON

On Board Diagnosis Logic

UBS003K0

DTC No.	Trouble diagnosis name	DTC detecting condition	Possible cause
P1805 1805	Brake switch	A brake switch signal is not sent to ECM for an extremely long time while the vehicle is driving.	● Harness or connectors (Stop lamp switch circuit is open or shorted.) ● Stop lamp switch

DTC Confirmation Procedure

UBS003K1

WITH CONSULT-II

1. Turn ignition switch "ON".
2. Fully depress the brake pedal for at least 5 seconds.
3. Erase the DTC with CONSULT-II.
4. Select "DATA MONITOR" mode with CONSULT-II.
5. If 1st trip DTC is detected, go to EC-1207, "Diagnostic Procedure" .

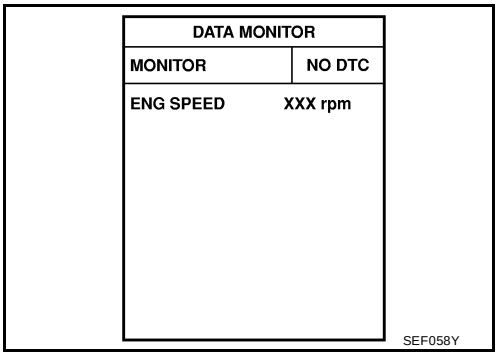

WITH GST

Follow the procedure "WITH CONSULT-II" above.

Wiring Diagram

UBS003K2

EC-BRK/SW-01

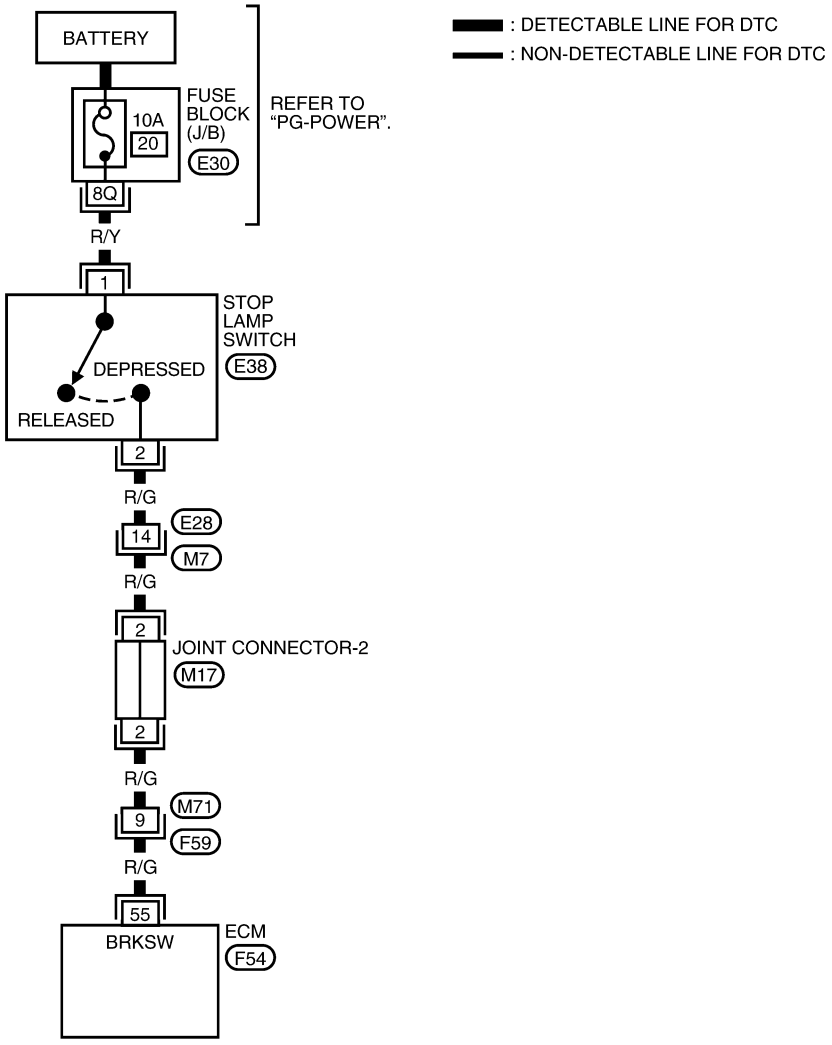

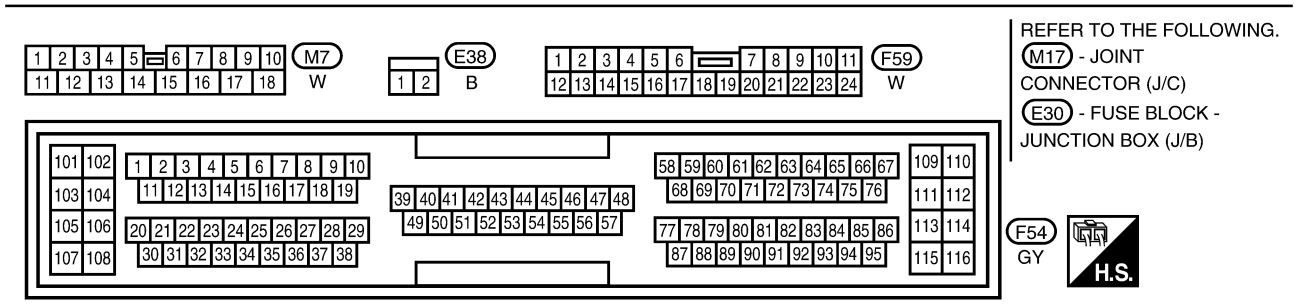

BBWA0206E

Specification data are reference values and are measured between each terminal and ground.

CAUTION:
Do not use ECM ground terminals when measuring input/output voltage. Doing so may result in damage to the ECM's transistor. Use a ground other than ECM terminals, such as the ground.

TERMINAL NO.	WIRE COLOR	ITEM	CONDITION	DATA (DC Voltage)
55	R/G	Stop lamp switch	**[Engine is running]** ● Brake pedal fully released	Approximately 0V
			[Engine is running] ● Brake pedal fully depressed	BATTERY VOLTAGE (11 - 14V)

Diagnostic Procedure

UBS003K3

1. CHECK STOP LAMP SWITCH CIRCUIT

1. Turn ignition switch "OFF".
2. Check the stop lamp when depressing and releasing the brake pedal.

Brake pedal	Stop lamp
Fully released	Not illuminated
Depressed	Illuminated

OK or NG

OK >> GO TO 4.
NG >> GO TO 2.

2. CHECK STOP LAMP SWITCH POWER SUPPLY CIRCUIT

1. Disconnect stop lamp switch harness connector.

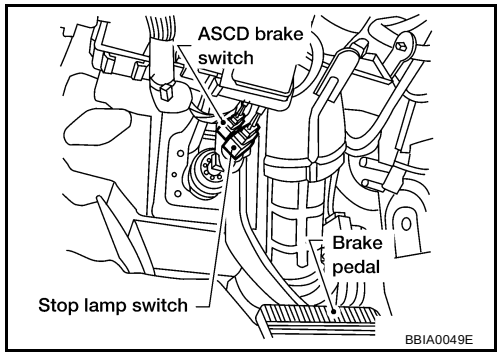

2. Check voltage between stop lamp switch terminal 1 and ground with CONSULT-II or tester.

Voltage: Battery voltage

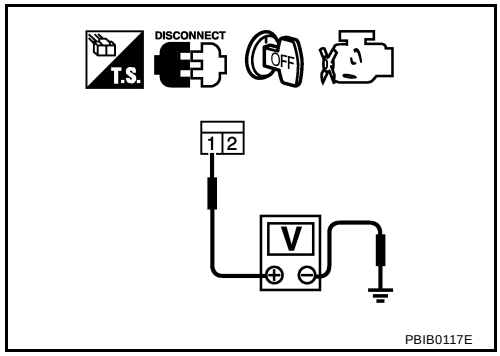

OK or NG

OK >> GO TO 4.
NG >> GO TO 3.

3. DETECT MALFUNCTIONING PART

Check the following.

- 10A fuse
- Fuse block (J/B) connector E30
- Harness for open and short between stop lamp switch and battery

>> Repair open circuit or short to ground or short to power in harness or connectors.

4. CHECK STOP LAMP SWITCH INPUT SIGNAL CIRCUIT FOR OPEN AND SHORT

1. Turn ignition switch "OFF".
2. Disconnect ECM harness connector.
3. Disconnect stop lamp switch harness connector.
4. Check harness continuity between ECM terminal 55 and stop lamp switch terminal 2.
   Refer to Wiring Diagram.

   Continuity should exist.

5. Also check harness for short to ground and short to power.

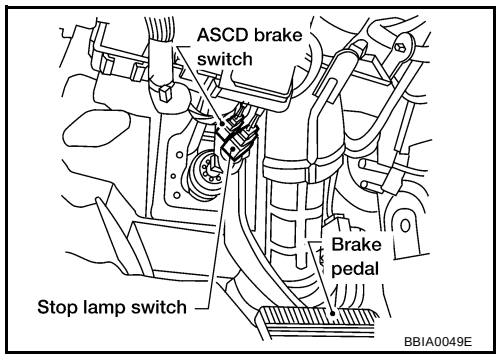

OK or NG

OK >> GO TO 6.
NG >> GO TO 5.

5. DETECT MALFUNCTIONING PART

Check the following.

- Harness connectors E28, M7
- Harness connectors M71, F59
- Joint connector-2
- Harness for open or short between ECM and stop lamp switch

>> Repair open circuit or short to ground or short to power in harness or connectors.

6. CHECK STOP LAMP SWITCH

Refer to EC-1209, "Component Inspection" .

OK or NG

OK >> GO TO 7.
NG >> Replace stop lamp switch.

7. CHECK INTERMITTENT INCIDENT

Refer to EC-756, "TROUBLE DIAGNOSIS FOR INTERMITTENT INCIDENT" .

>> **INSPECTION END**

Component Inspection

UBS003K4

STOP LAMP SWITCH

1. Disconnect stop lamp switch harness connector.

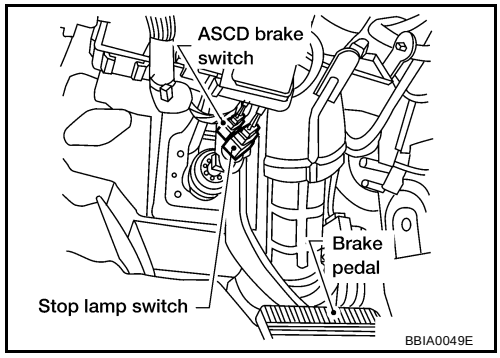

2. Check continuity between stop lamp switch terminals 1 and 2 under the following conditions.

Conditions	Continuity
Brake pedal fully released	Should not exist.
Brake pedal depressed	Should exist.

3. If NG, replace stop lamp switch.

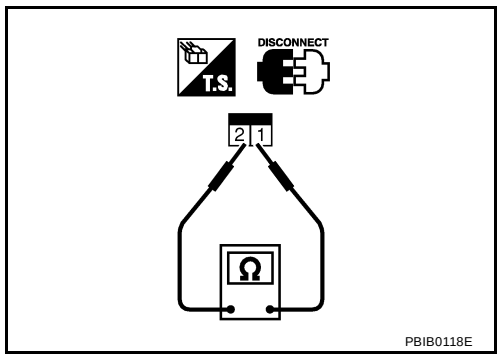

IGNITION SIGNAL

PFP:22448

Component Description

UBS003K5

IGNITION COIL & POWER TRANSISTOR

The ignition signal from the ECM is sent to and amplified by the power transistor. The power transistor turns on and off the ignition coil primary circuit. This on-off operation induces the proper high voltage in the coil secondary circuit.

Bank 1

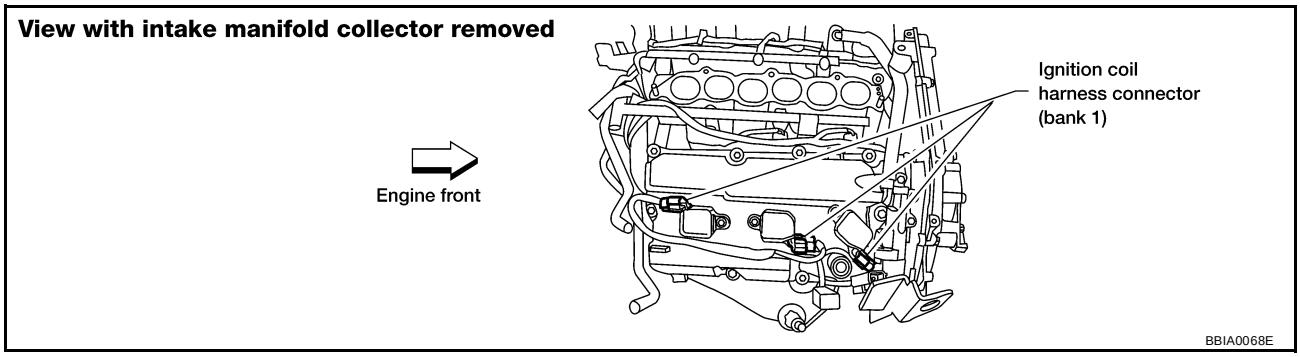

Bank 2

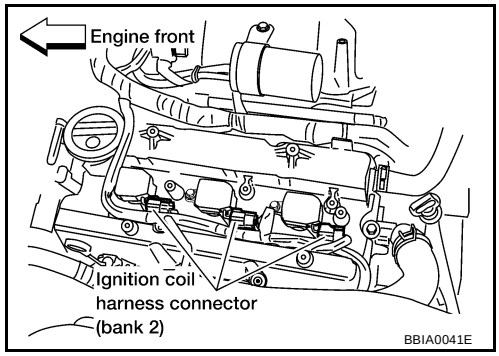

Wiring Diagram

UBS003K6

EC-IGNSYS-01

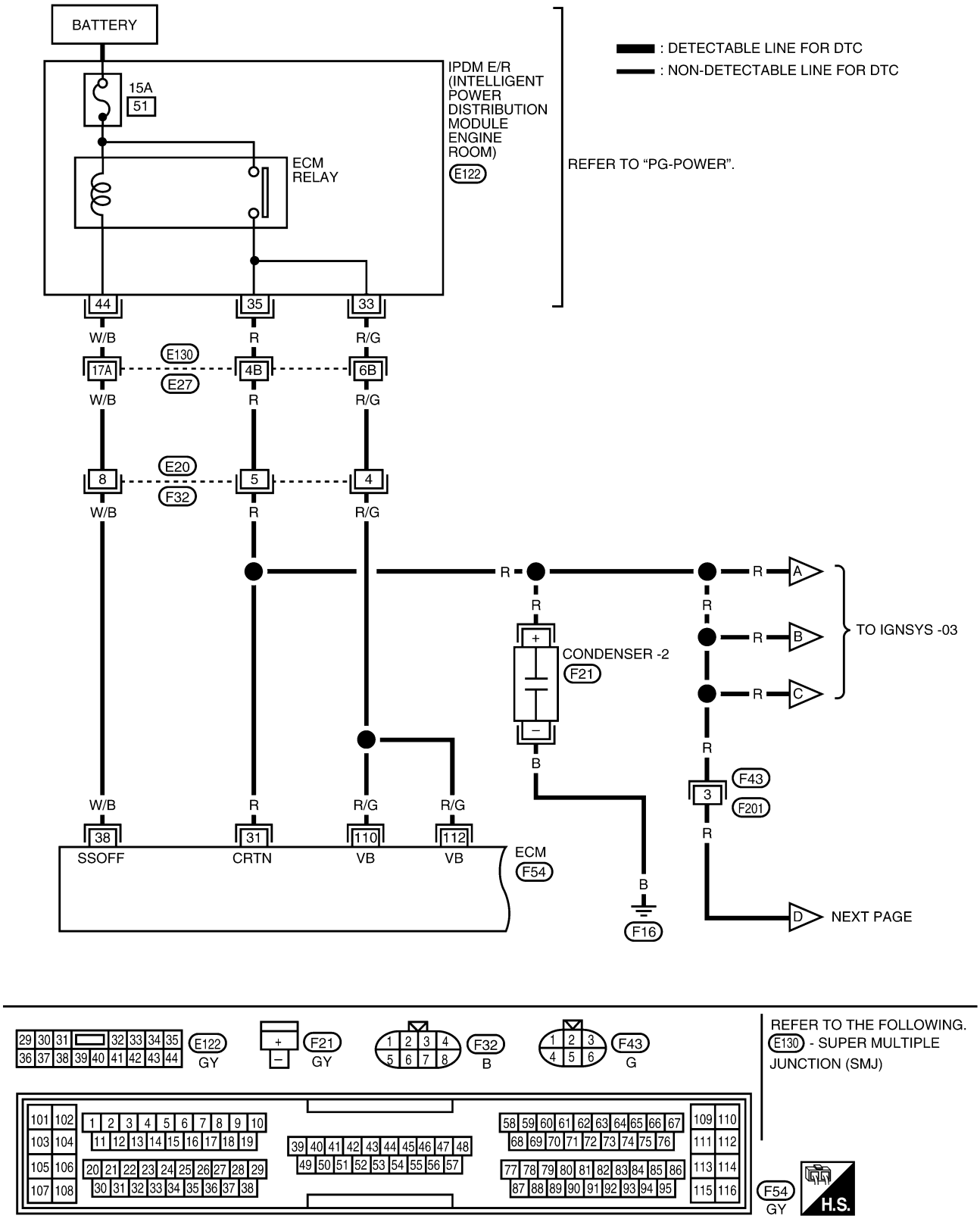

Specification data are reference values and are measured between each terminal and ground.

CAUTION:
Do not use ECM ground terminals when measuring input/output voltage. Doing so may result in damage to the ECM's transistor. Use a ground other than ECM terminals, such as the ground.

TERMINAL NO.	WIRE COLOR	ITEM	CONDITION	DATA (DC Voltage)
31	R	Counter current return	**[Ignition switch "ON"]**	BATTERY VOLTAGE (11 - 14V)
38	W/B	ECM relay (Self shut-off)	**[Engine is running]** **[Ignition switch “OFF”]** ● For a few seconds after turning ignition switch “OFF”	0 - 1.5V
			[Ignition switch “OFF”] ● A few seconds passed after turning ignition switch “OFF”	BATTERY VOLTAGE (11 - 14V)
110 112	R/G R/G	Power supply for ECM	**[Ignition switch “ON”]**	BATTERY VOLTAGE (11 - 14V)

EC-IGNSYS-02

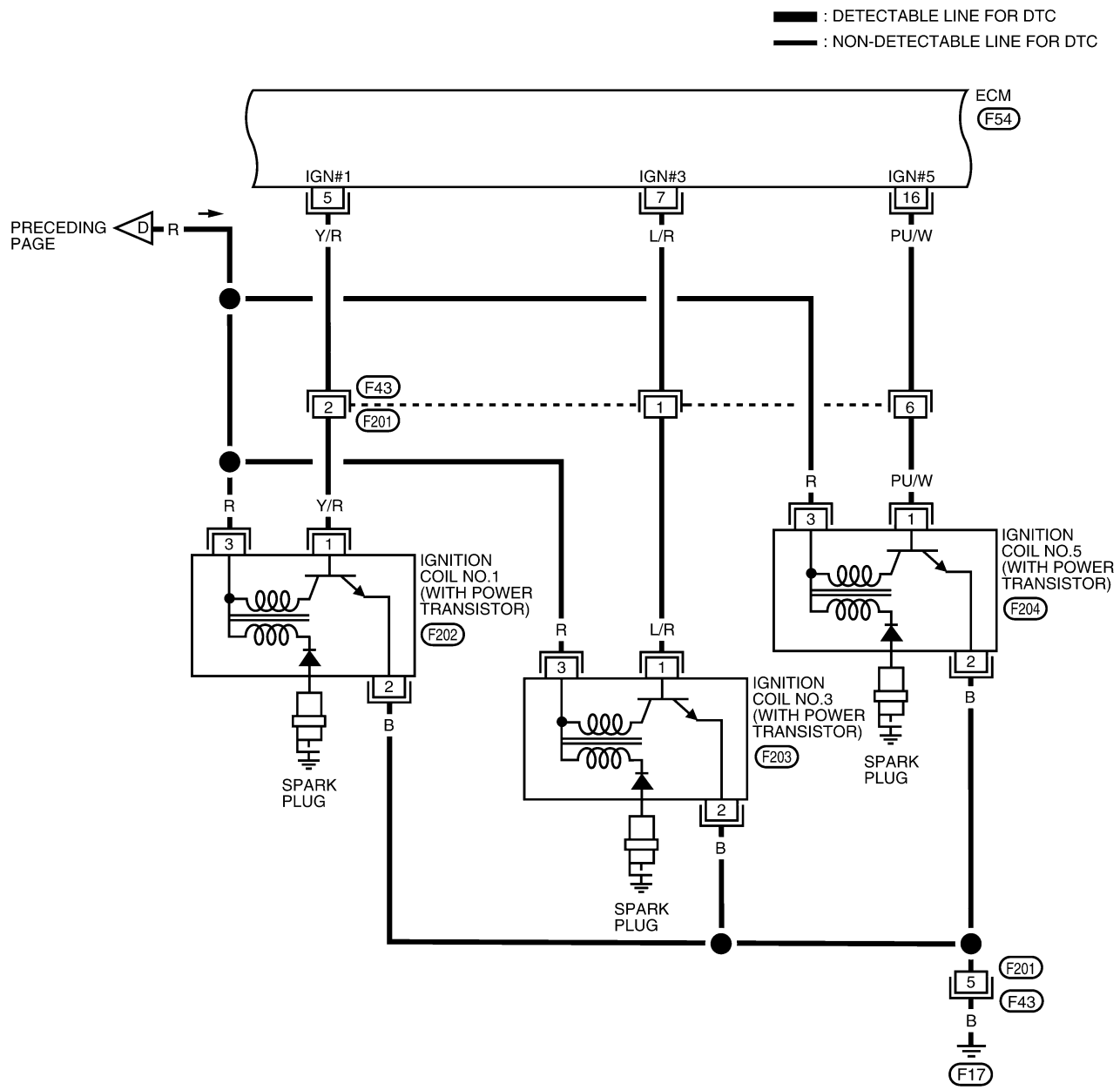

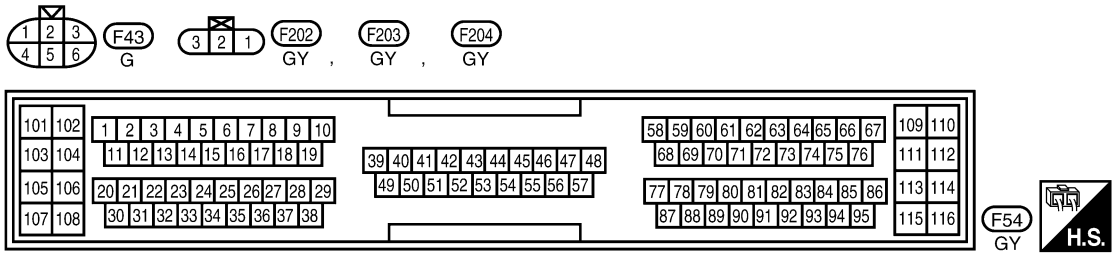

BBWA0082E

Specification data are reference values and are measured between each terminal and ground.

CAUTION:

Do not use ECM ground terminals when measuring input/output voltage. Doing so may result in damage to the ECM's transistor. Use a ground other than ECM terminals, such as the ground.

TERMINAL NO.	WIRE COLOR	ITEM	CONDITION	DATA (DC Voltage)
5 7 16	Y/R L/R PU/W	Ignition signal No. 1 Ignition signal No. 3 Ignition signal No. 5	**[Engine is running]** ● **Warm-up condition** ● Idle speed	0 - 0.2V★ 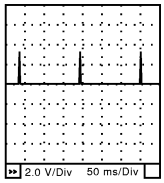 SEC986C
			[Engine is running] ● **Warm-up condition** ● Engine speed is 2,000 rpm.	0.1 - 0.3V★ 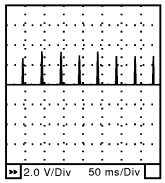 SEC987C

★: Average voltage for pulse signal (Actual pulse signal can be confirmed by oscilloscope.)

EC-IGNSYS-03

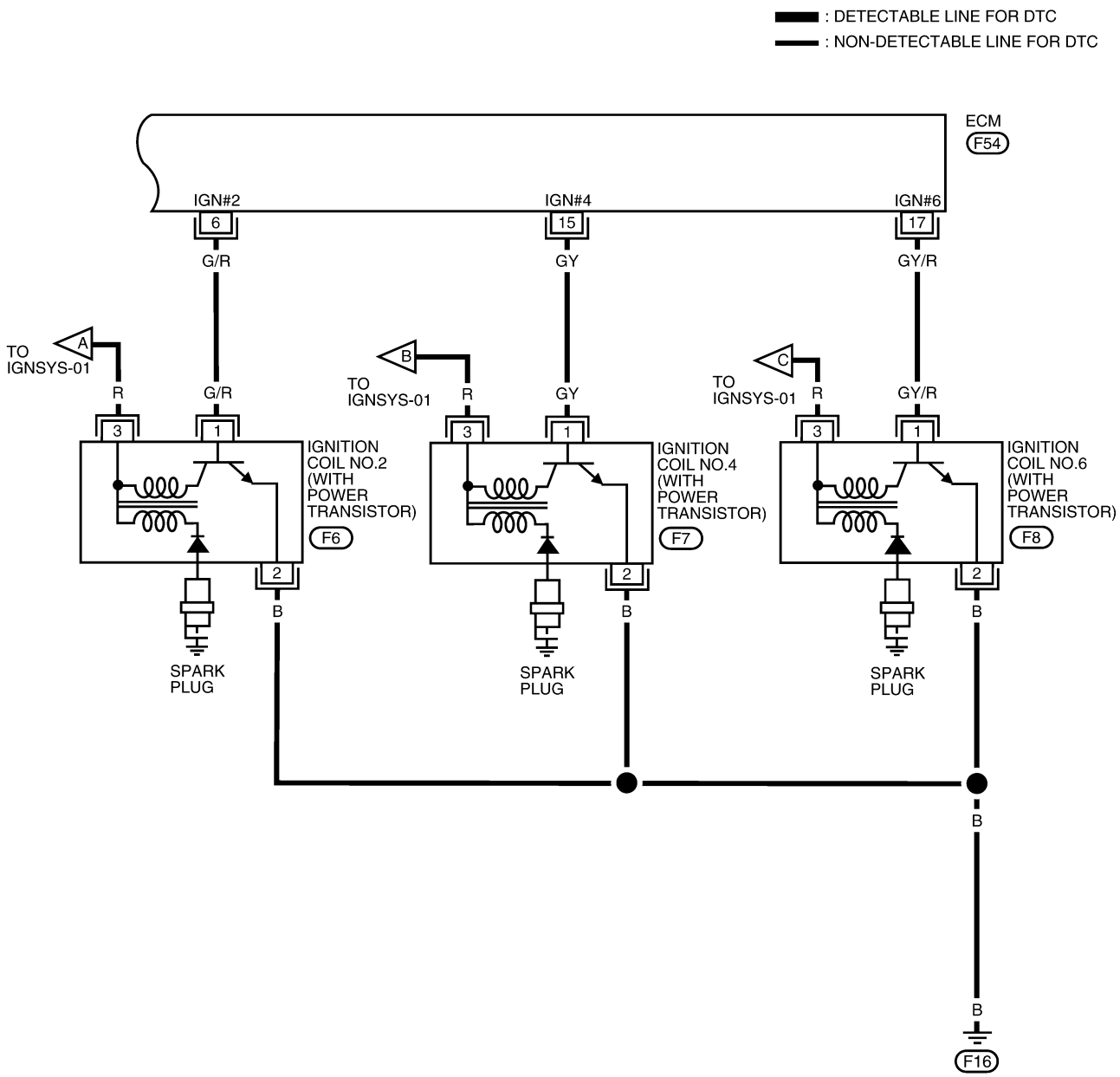

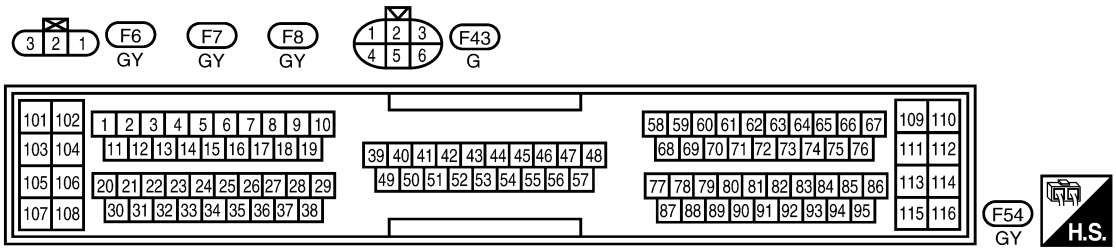

BBWA0083E

Specification data are reference values and are measured between each terminal and ground.

CAUTION:
Do not use ECM ground terminals when measuring input/output voltage. Doing so may result in damage to the ECM's transistor. Use a ground other than ECM terminals, such as the ground.

TERMINAL NO.	WIRE COLOR	ITEM	CONDITION	DATA (DC Voltage)
6 15 17	G/R GY GY/R	Ignition signal No. 2 Ignition signal No. 4 Ignition signal No. 6	**[Engine is running]** ● **Warm-up condition** ● Idle speed	0 - 0.2V★ 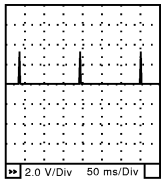 SEC986C
			[Engine is running] ● **Warm-up condition** ● Engine speed is 2,000 rpm.	0.1 - 0.3V★ 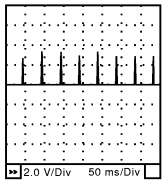 SEC987C

★: Average voltage for pulse signal (Actual pulse signal can be confirmed by oscilloscope.)

Diagnostic Procedure

UBS003K7

1. CHECK ENGINE START

Turn ignition switch “OFF”, and restart engine.
Is engine running?

Yes or No

Yes (With CONSULT-II)>>GO TO 2.
Yes (Without CONSULT-II)>>GO TO 3.
No >> GO TO 4.

2. CHECK OVERALL FUNCTION

With CONSULT-II

1. Perform “POWER BALANCE” in “ACTIVE TEST” mode with CONSULT-II.
2. Make sure that each circuit produces a momentary engine speed drop.

OK or NG

OK >> **INSPECTION END**
NG >> GO TO 10.

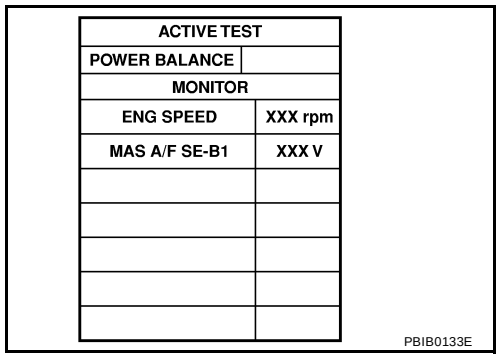

ACTIVE TEST	
POWER BALANCE	
MONITOR	
ENG SPEED	XXX rpm
MAS A/F SE-B1	XXX V

PBIB0133E

3. CHECK OVERALL FUNCTION

Without CONSULT-II

1. Let engine idle.
2. Read the voltage signal between ECM terminals 5, 6, 7, 15, 16, 17 and ground with an oscilloscope.
3. Verify that the oscilloscope screen shows the signal wave as shown below.

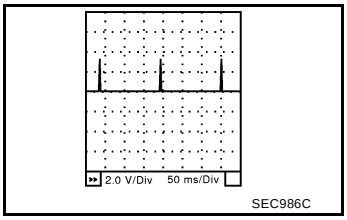

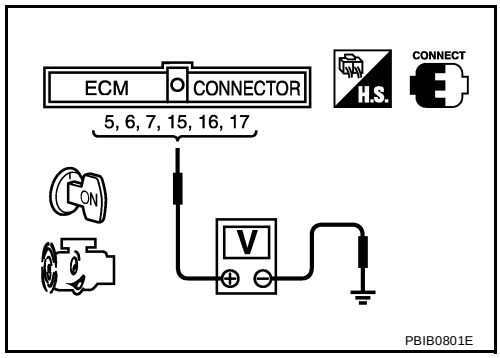

OK or NG

OK >> **INSPECTION END**
NG >> GO TO 10.

4. CHECK IGNITION COIL POWER SUPPLY CIRCUIT-I

1. Turn ignition switch OFF, wait at least 10 seconds and then turn ON.
2. Check voltage between ECM terminals 110, 112 and ground with CONSULT-II or tester.

Voltage: Battery voltage

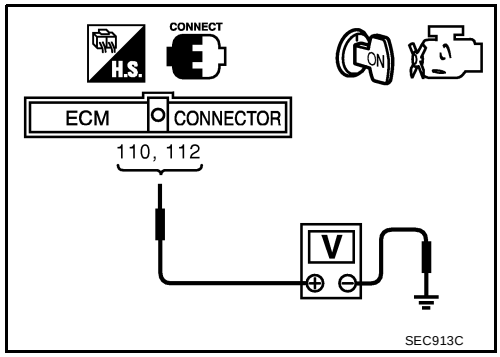

OK or NG

OK >> GO TO 5.
NG >> Go to EC-757, "POWER SUPPLY CIRCUIT FOR ECM"
.

5. CHECK IGNITION COIL POWER SUPPLY CIRCUIT-II

Check voltage between ECM terminal 31 and ground with CONSULT-II or tester.

Voltage: Battery voltage

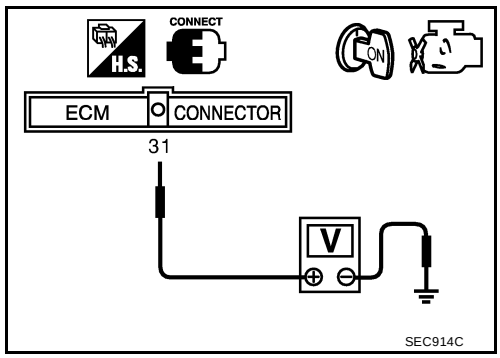

OK or NG

OK >> GO TO 8.
NG >> GO TO 6.

6. CHECK IGNITION COIL POWER SUPPLY CIRCUIT-III

1. Turn ignition switch OFF.
2. Disconnect ECM harness connector.
3. Disconnect IPDM E/R harness connector.
4. Check harness continuity between ECM terminal 31 and IPDM E/R terminal 35. Refer to Wiring Diagram.

Continuity should exist.

5. Also check harness for short to ground and short to power.

OK or NG

OK >> Replace IPDM E/R.
NG >> GO TO 7.

7. DETECT MALFUNCTIONING PART

Check the following.

- Harness connector E130, E27
- Harness or connectors E20, F32
- Harness for open and short between ECM and IPDM E/R

>> Repair open circuit or short to ground or short to power in harness or connectors.

8. CHECK CONDENSER CIRCUIT FOR OPEN AND SHORT

1. Turn ignition switch OFF.
2. Disconnect condenser harness connector.
3. Disconnect ECM harness connector.
4. Check harness continuity between ECM terminal 31 and condenser terminal +, condenser terminal – and engine ground. Refer to Wiring Diagram.

Continuity should exist.

5. Also check harness for short to ground and short to power.

OK or NG

OK >> GO TO 9.
NG >> Repair open circuit or short to ground or short to power in harness or connectors.

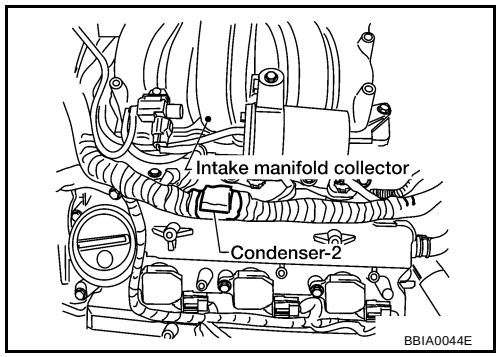

9. CHECK CONDENSER

Refer to EC-1220, "Component Inspection" .

OK or NG

OK >> GO TO 10.
NG >> Replace condenser.

10. CHECK IGNITION COIL POWER SUPPLY CIRCUIT-V

1. Turn ignition switch OFF.
2. Reconnect all harness connectors disconnected.
3. Disconnect ignition coil harness connector.

Bank 1

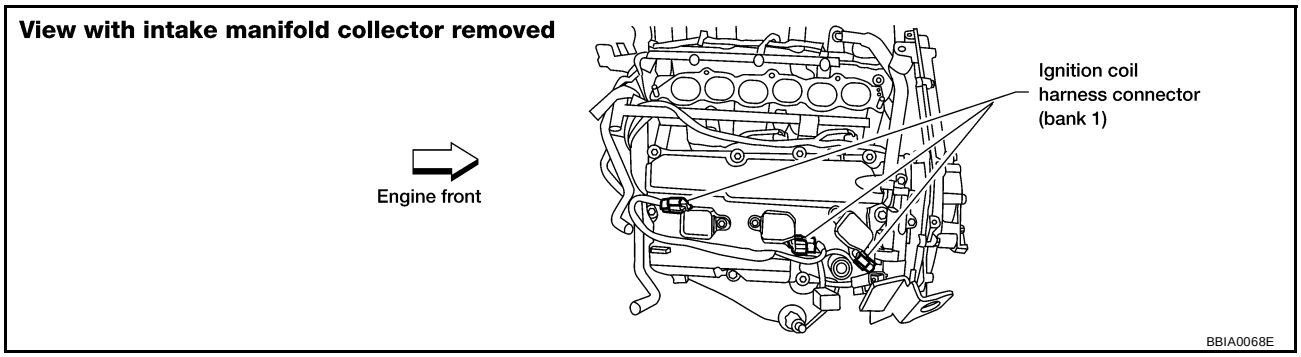

Bank 2

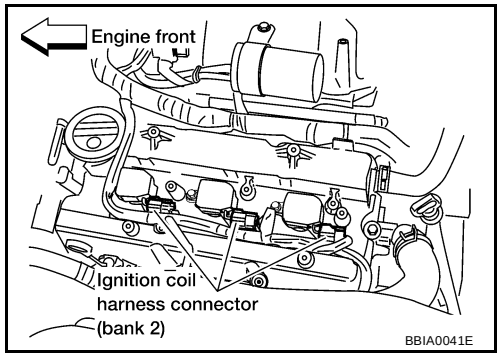

4. Turn ignition switch ON.
5. Check voltage between ignition coil terminal 3 and ground with CONSULT-II or tester.

Voltage: Battery voltage

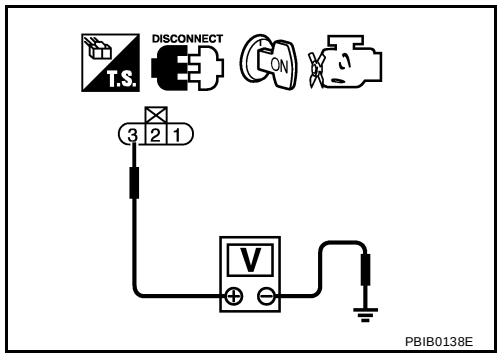

OK or NG

OK >> GO TO 12.
NG >> GO TO 11.

11. DETECT MALFUNCTIONING PART

Check the following.

- Harness connectors F43, F201
- Harness for open or short between ignition coil and ECM
- Harness for open or short between ignition coil and harness connector F32

>> Repair or replace harness or connectors.

12. CHECK IGNITION COIL GROUND CIRCUIT FOR OPEN AND SHORT

1. Turn ignition switch OFF.
2. Check harness continuity between ignition coil terminal 2 and engine ground.
   Refer to Wiring Diagram.

   Continuity should exist.

3. Also check harness for short to power.

OK or NG

OK >> GO TO 14.
NG >> GO TO 13.

13. DETECT MALFUNCTIONING PART

Check the following.

- Harness connectors F43, F201
- Harness for open or short between ignition coil and engine ground

>> Repair open circuit or short to power in harness or connectors.

14. CHECK IGNITION COIL OUTPUT SIGNAL CIRCUIT FOR OPEN AND SHORT

1. Disconnect ECM harness connector.
2. Check harness continuity between ECM terminals 5, 6, 7, 15, 16, 17 and ignition coil terminal 1.
   Refer to Wiring Diagram.

   Continuity should exist.

3. Also check harness for short to ground and short to power.

OK or NG

OK >> GO TO 16.
NG >> GO TO 15.

15. DETECT MALFUNCTIONING PART

Check the following.

- Harness connectors F43, F201
- Harness for open or short between ignition coil and ECM

>> Repair open circuit or short to ground or short to power in harness or connectors.

16. CHECK IGNITION COIL WITH POWER TRANSISTOR

Refer to EC-1220, "Component Inspection" .

OK or NG

OK >> GO TO 17.
NG >> Replace ignition coil with power transistor.

17. CHECK INTERMITTENT INCIDENT

Refer to EC-756, "TROUBLE DIAGNOSIS FOR INTERMITTENT INCIDENT" .

>> **INSPECTION END**

Component Inspection

UBS003K8

IGNITION COIL WITH POWER TRANSISTOR

1. Turn ignition switch "OFF".

2. Disconnect ignition coil harness connector.
3. Check resistance between ignition coil terminals as follows.

Terminal No. (Polarity)	Resistance Ω [at 25°C (77°F)]
1 and 2	Except 0 or ∞
1 and 3	Except 0
2 and 3	

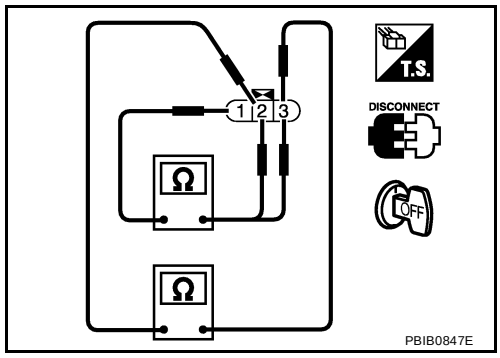

CONDENSER

1. Turn ignition switch "OFF".
2. Disconnect condenser harness connector.
3. Check resistance between condenser terminals + and –.

Resistance	Above 1 MΩ at 25°C (77°F)

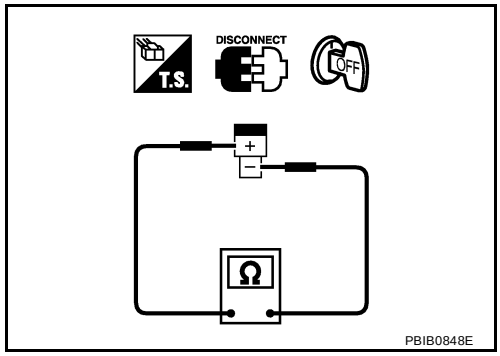

UBS003K9

Removal and Installation

IGNITION COIL WITH POWER TRANSISTOR

Refer to EM-126, "IGNITION COIL" .

VIAS

PFP:14956

Description

UBS003KA

SYSTEM DESCRIPTION

Sensor	Input Signal to ECM	ECM function	Actuator
Mass air flow sensor	Amount of intake air	VIAS control	VIAS control solenoid valve
Throttle position sensor	Throttle position		
Accelerator pedal position sensor	Accelerator pedal position		
Ignition switch	Start signal		
Crankshaft position sensor (POS) Camshaft position sensor (PHASE)	Engine speed		
Engine coolant temperature sensor	Engine coolant temperature		

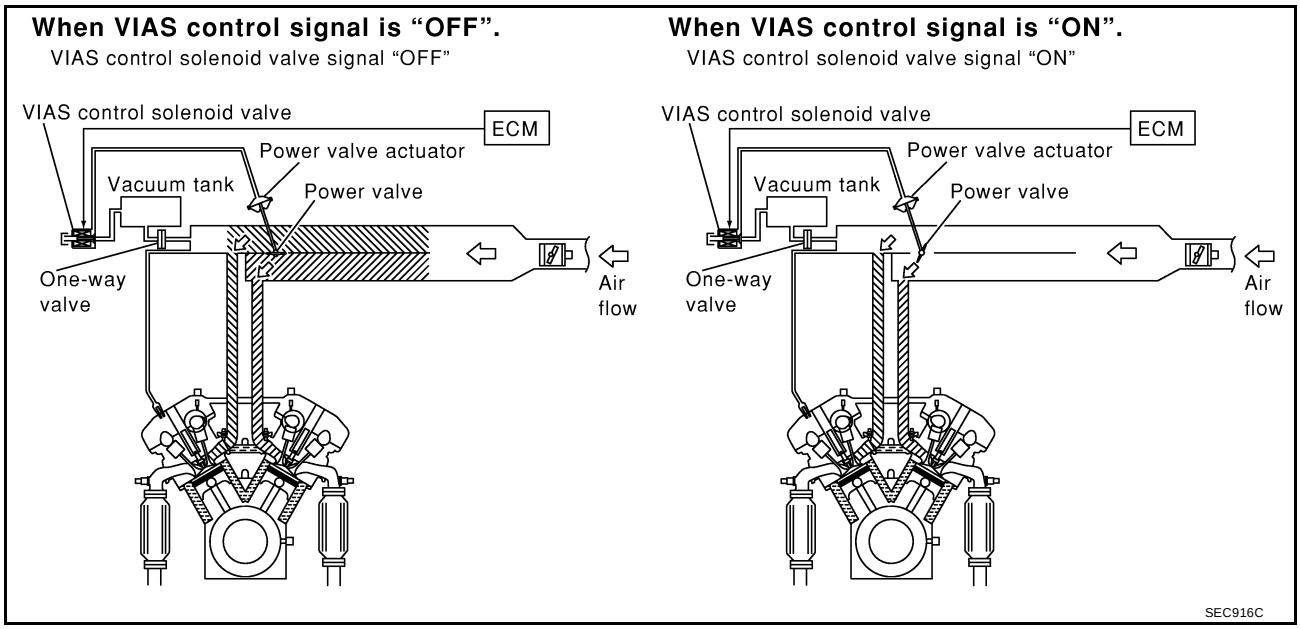

When the engine is running at low or medium speed, the power valve is fully closed. Under this condition, the effective suction port length is equivalent to the total length of the intake manifold collector's suction port including the intake valve. This long suction port provides increased air intake which results in improved suction efficiency and higher torque generation.

The surge tank and one-way valve are provided. When engine is running at high speed, the ECM sends the signal to the VIAS control solenoid valve. This signal introduces the intake manifold vacuum into the power valve actuator and therefore opens the power valve to two suction passages together in the collector.

Under this condition, the effective port length is equivalent to the length of the suction port provided independently for each cylinder. This shortened port length results in enhanced engine output with reduced suction resistance under high speeds.

COMPONENT DESCRIPTION

Power Valve

The power valve is installed in intake manifold collector and used to control the suction passage of the variable induction air control system. It is set in the fully closed or fully opened position by the power valve actuator operated by the vacuum stored in the surge tank. The vacuum in the surge tank is controlled by the VIAS control solenoid valve.

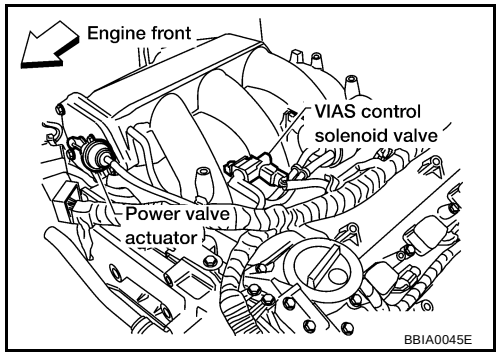

VIAS Control Solenoid Valve

The VIAS control solenoid valve cuts the intake manifold vacuum signal for power valve control. It responds to ON/OFF signals from the ECM. When the solenoid is off, the vacuum signal from the intake manifold is cut. When the ECM sends an ON signal the coil pulls the plunger downward and feeds the vacuum signal to the power valve actuator.

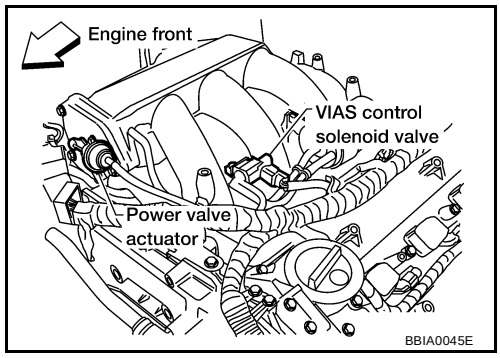

CONSULT-II Reference Value in Data Monitor Mode

UBS003KB

Specification data are reference values.

MONITOR ITEM	CONDITION		SPECIFICATION
VIAS S/V	● Engine: After warming up	1,800 - 3,600 rpm	OFF
		Except the above condition	ON

Wiring Diagram

UBS003KC

EC-VIAS-01

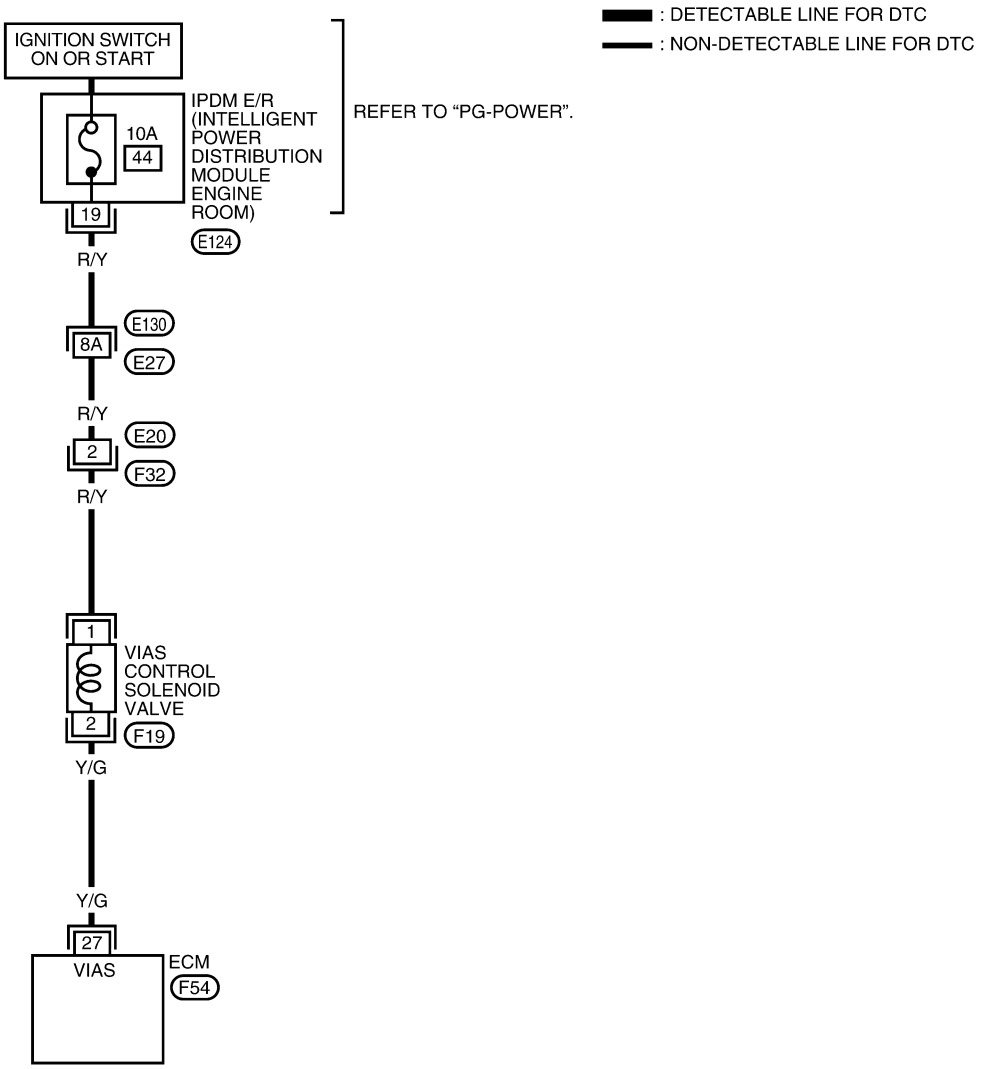

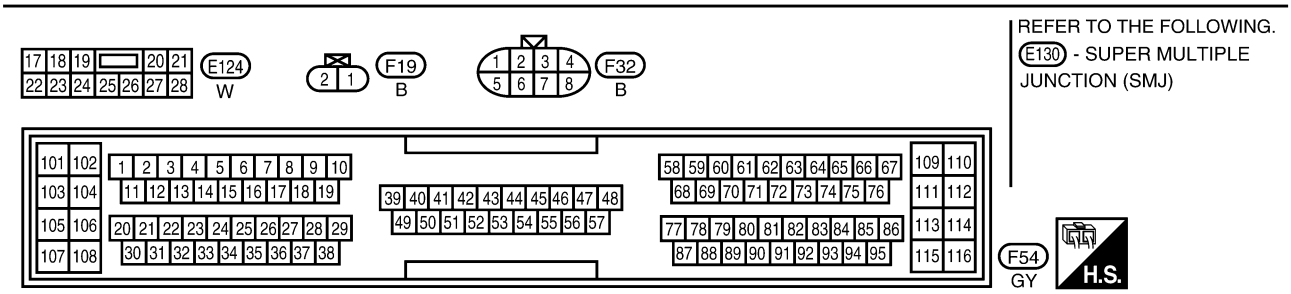

BBWA0197E

Specification data are reference values and are measured between each terminal and ground.

CAUTION:
Do not use ECM ground terminals when measuring input/output voltage. Doing so may result in damage to the ECM's transistor. Use a ground other than ECM terminals, such as the ground.

TERMINAL NO.	WIRE COLOR	ITEM	CONDITION	DATA (DC Voltage)
27	Y/G	VIAS control solenoid valve	**[Engine is running]** ● Engine speed is 1,800 - 3,600 rpm	0 - 1.0V
			[Engine is running] ● Except the above condition	BATTERY VOLTAGE (11 - 14V)

Diagnostic Procedure

UBS003KD

1. CHECK OVERALL FUNCTION

With CONSULT-II

1. Start engine and warm it up to normal operating temperature.
2. Perform “VIAS SOL VALVE” in “ACTIVE TEST” mode with CONSULT-II.
3. Turn VIAS control solenoid valve “ON” and “OFF”, and make sure that power valve actuator rod moves.

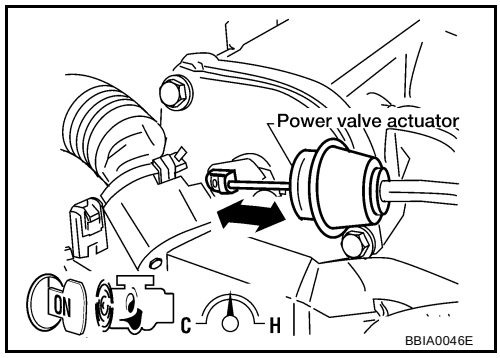

Without CONSULT-II

1. Start engine and warm it up to normal operating temperature.
2. Rev engine quickly up to above 5,000 rpm and make sure that power valve actuator rod moves.

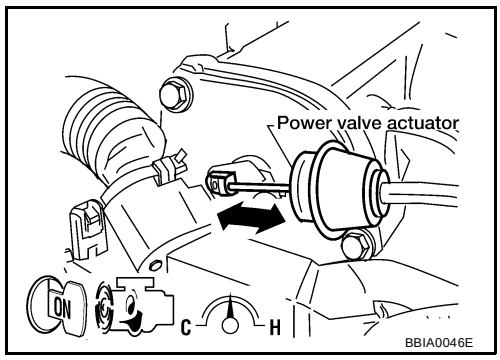

OK or NG

OK >> **INSPECTION END**
NG (With CONSULT-II) >>GO TO 2.
NG (Without CONSULT-II) >>GO TO 3.

2. CHECK VACUUM EXISTENCE

With CONSULT-II

1. Stop engine and disconnect vacuum hose connected to power valve actuator.
2. Start engine and let it idle.
3. Perform “VIAS SOL VALVE” in “ACTIVE TEST” mode with CONSULT-II.
4. Turn VIAS control solenoid valve “ON” and “OFF”, and check vacuum existence under the following conditions.

VIAS SOL VALVE	Vacuum
ON	Should exist.
OFF	Should not exist.

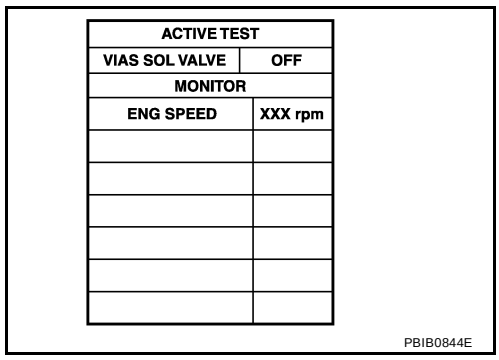

OK or NG

OK >> Repair or replace power valve actuator.
NG >> GO TO 4.

3. CHECK VACUUM EXISTENCE

Without CONSULT-II

1. Stop engine and disconnect vacuum hose connected to power valve actuator.
2. Disconnect VIAS control solenoid valve harness connector.
3. Start engine and let it idle.
4. Apply 12V of direct current between VIAS control solenoid valve terminals 1 and 2.
5. Check vacuum existence under the following conditions.

Condition	Vacuum
12V direct current supply	Should exist.
No supply	Should not exist.

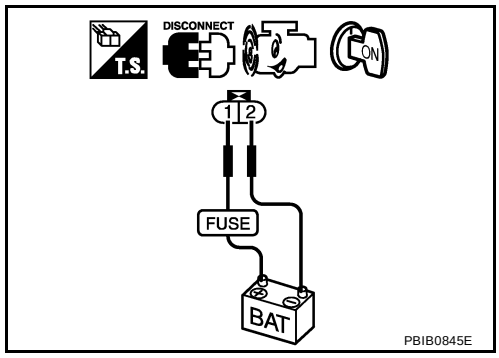

OK or NG

OK >> Repair or replace power valve actuator.
NG >> GO TO 4.

4. CHECK VACUUM HOSE

1. Stop engine.
2. Check hoses and tubes between intake manifold and power valve actuator for crack, clogging, improper connection or disconnection. Refer to EC-647, "Vacuum Hose Drawing" .

OK or NG

OK >> GO TO 5.
NG >> Repair hoses or tubes.

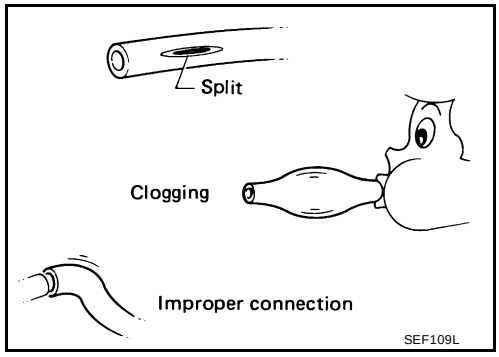

5. CHECK VACUUM TANK

Refer to EC-1228, "Component Inspection" .

OK or NG

OK >> GO TO 6.
NG >> Replace vacuum tank.

6. CHECK VIAS CONTROL SOLENOID VALVE POWER SUPPLY CIRCUIT

1. Turn ignition switch "OFF".
2. Disconnect VIAS control solenoid valve harness connector.
3. Turn ignition switch “ON”.

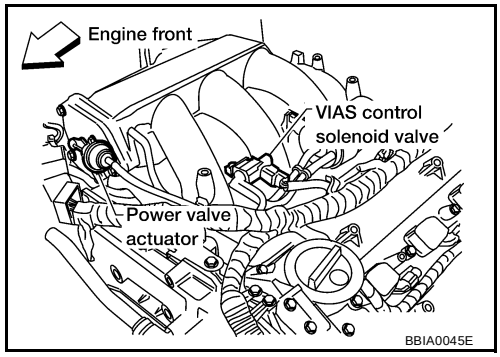

4. Check voltage between terminal 1 and ground with CONSULT-II or tester.

Voltage: Battery voltage

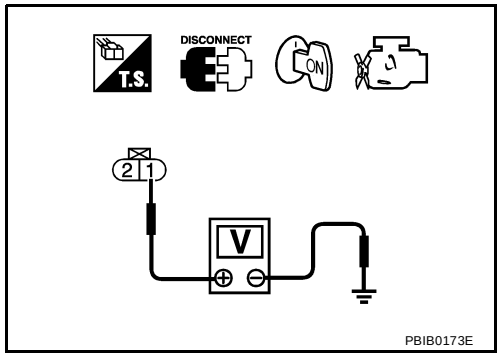

OK or NG

OK >> GO TO 8.
NG >> GO TO 7.

7. DETECT MALFUNCTIONING PART

Check the following.

- Harness connectors E130, E27
- Harness connectors E20, F32
- IPDM E/R connector E124
- 10A fuse
- Harness continuity between fuse and VIAS control solenoid valve

>> Repair harness or connectors.

8. CHECK VIAS CONTROL SOLENOID VALVE OUTPUT SIGNAL CIRCUIT FOR OPEN AND SHORT

1. Turn ignition switch “OFF”.
2. Disconnect ECM harness connector.
3. Check harness continuity between ECM terminal 27 and VIAS control solenoid valve terminal 2. Refer to Wiring Diagram.

   Continuity should exist.

4. Also check harness for short to ground and short to power.

OK or NG

OK >> GO TO 9.
NG >> Repair open circuit or short to ground or short to power in harness or connectors.

9. CHECK VIAS CONTROL SOLENOID VALVE

Refer to EC-1228, "Component Inspection" .

OK or NG

OK >> GO TO 10.
NG >> Replace VIAS control solenoid valve.

10. CHECK INTERMITTENT INCIDENT

Refer to EC-756, "TROUBLE DIAGNOSIS FOR INTERMITTENT INCIDENT" .

>> **INSPECTION END**

Component Inspection

UBS003KE

VIAS CONTROL SOLENOID VALVE

With CONSULT-II

1. Reconnect harness connectors disconnected.
2. Turn ignition switch ON.
3. Perform “VIAS SOL VALVE” in “ACTIVE TEST” mode.
4. Check air passage continuity and operation delay time under the following conditions.

Condition VIAS SOL VALVE	Air passage continuity between A and B	Air passage continuity between A and C
ON	Yes	No
OFF	No	Yes

Operation takes less than 1 second.

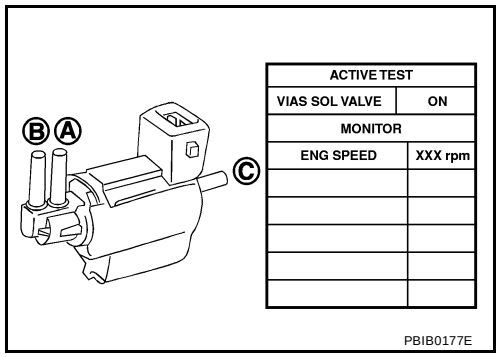

Without CONSULT-II

Check air passage continuity and operation delay time under the following conditions.

Condition	Air passage continuity between A and B	Air passage continuity between A and C
12V direct current supply between terminals 1 and 2	Yes	No
No supply	No	Yes

Operation takes less than 1 second.

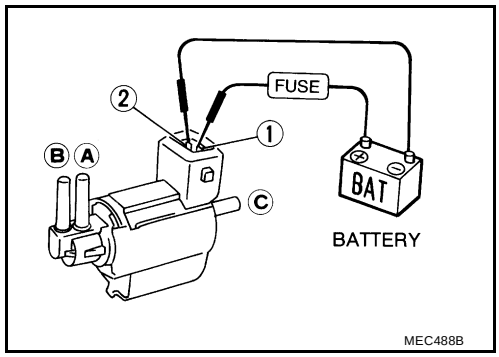

VACUUM TANK

1. Disconnect vacuum hose connected to vacuum tank.
2. Connect a vacuum pump to the center port of vacuum tank.
3. Apply vacuum and make sure that vacuum exists at the other port.

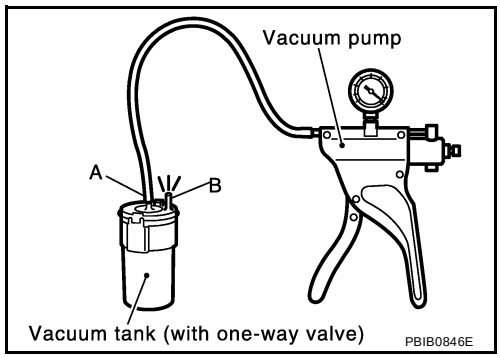

UBS003KF

Removal and Installation

VIAS CONTROL SOLENOID VALVE

Refer to EM-112, "INTAKE MANIFOLD" .

INJECTOR CIRCUIT

PFP:16600

Component Description

UBS003KG

The fuel injector is a small, precise solenoid valve. When the ECM supplies a ground to the injector circuit, the coil in the injector is energized. The energized coil pulls the needle valve back and allows fuel to flow through the injector into the intake manifold. The amount of fuel injected depends upon the injection pulse duration. Pulse duration is the length of time the injector remains open. The ECM controls the injection pulse duration based on engine fuel needs.

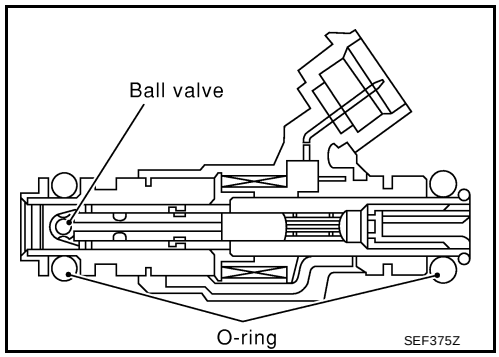

CONSULT-II Reference Value in Data Monitor Mode

UBS003KH

Specification data are reference values.

MONITOR ITEM	CONDITION		SPECIFICATION
B/FUEL SCHDL	● Engine: After warming up ● Shift lever: N ● Air conditioner switch: OFF ● No-load	Idle	2.3 - 2.9 msec
		2,000 rpm	2.3 - 2.9 msec
INJ PULSE-B1 INJ PULSE-B2	● Engine: After warming up ● Shift lever: N ● Air conditioner switch: OFF ● No-load	Idle	2.0 - 3.0 msec
		2,000 rpm	1.9 - 2.9 msec

Wiring Diagram

UBS003KI

EC-INJECT-01

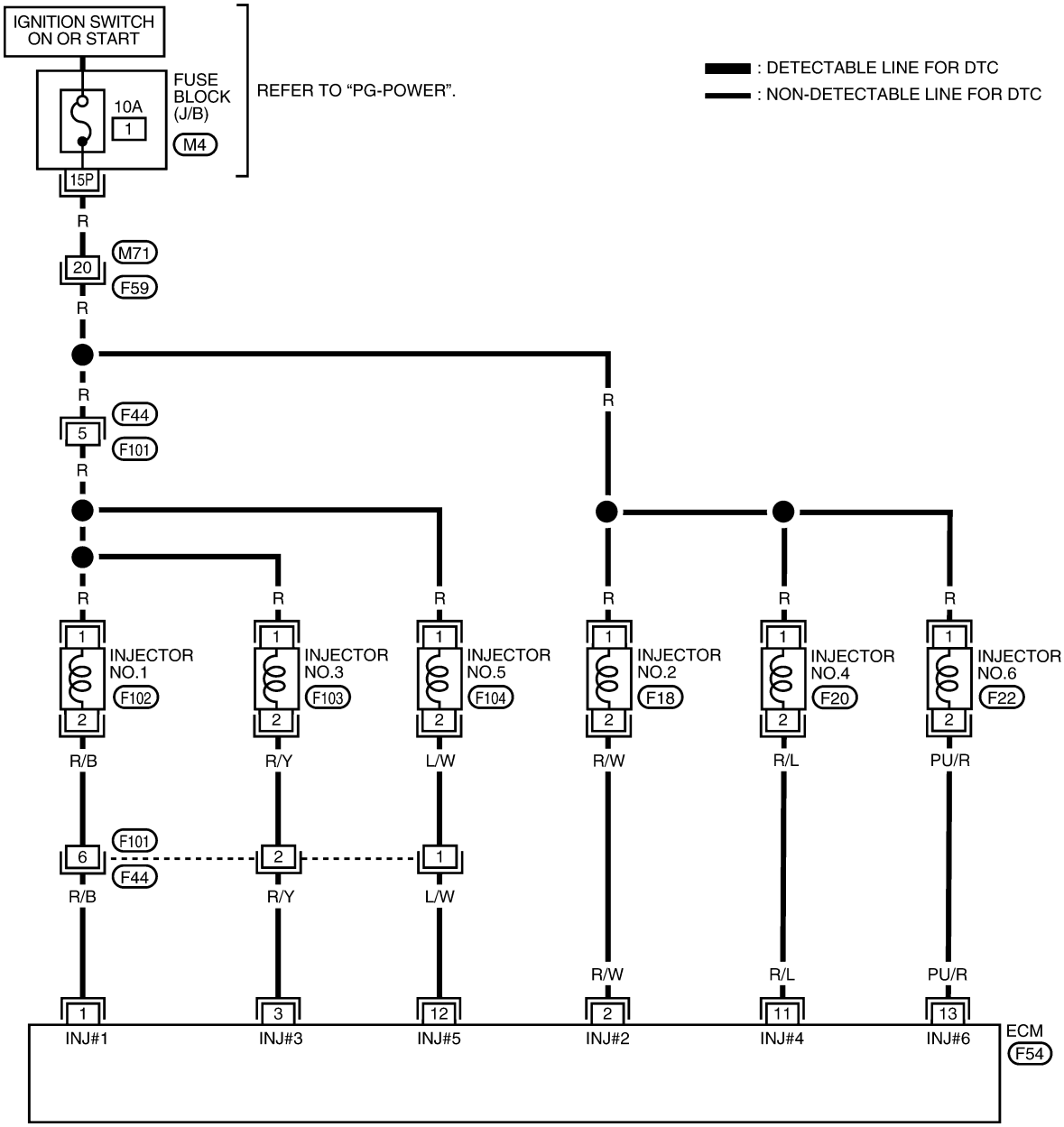

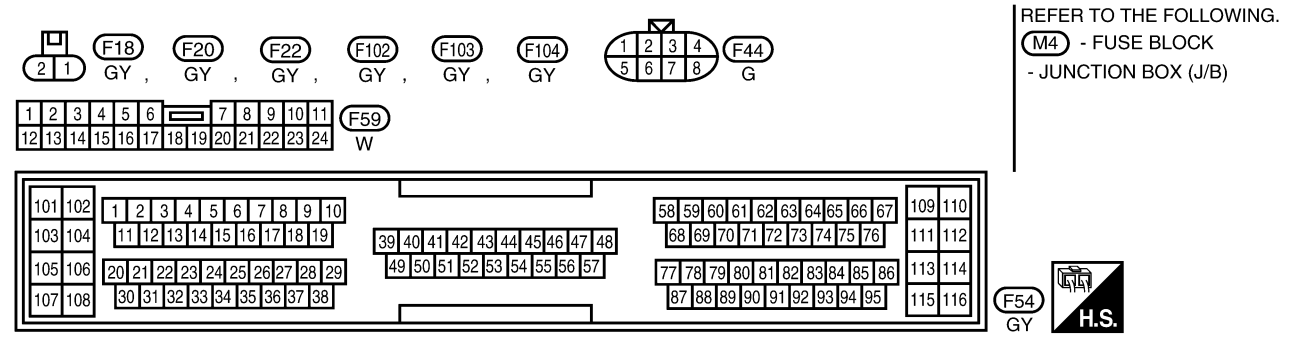

BBWA0089E

Specification data are reference values and are measured between each terminal and ground.

CAUTION:

Do not use ECM ground terminals when measuring input/output voltage. Doing so may result in damage to the ECM's transistor. Use a ground other than ECM terminals, such as the ground.

Specification data are reference values and are measured between each terminal and body ground.

CAUTION:

Do not use ECM ground terminals when measuring input/output voltage. Doing so may result in damage to the ECM's transistor. Use a ground other than ECM terminals, such as the ground.

TERMINAL NO.	WIRE COLOR	ITEM	CONDITION	DATA (DC Voltage)
1 2 3 11 12 13	R/B R/W R/Y R/L L/W PU/R	Injector No. 1 Injector No. 2 Injector No. 3 Injector No. 4 Injector No. 5 Injector No. 6	**[Engine is running]** ● **Warm-up condition** ● Idle speed	BATTERY VOLTAGE (11 - 14V)★ 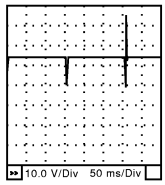 SEC984C
			[Engine is running] ● **Warm-up condition** ● Engine speed is 2,000 rpm	BATTERY VOLTAGE (11 - 14V)★ 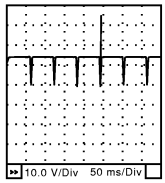 SEC985C

★: Average voltage for pulse signal (Actual pulse signal can be confirmed by oscilloscope.)

Diagnostic Procedure

UBS003KJ

1. INSPECTION START

Turn ignition switch to “START”.

Is any cylinder ignited?

Yes or No

Yes >> GO TO 2.

No >> GO TO 3.

2. CHECK OVERALL FUNCTION

With CONSULT-II

1. Start engine.
2. Perform “POWER BALANCE” in “ACTIVE TEST” mode with CONSULT-II.
3. Make sure that each circuit produces a momentary engine speed drop.

ACTIVE TEST	
POWER BALANCE	
MONITOR	
ENG SPEED	XXX rpm
MAS A/F SE-B1	XXX V

PBIB0133E

Without CONSULT-II

1. Start engine.
2. Listen to each injector operating sound.
   Clicking noise should be heard.

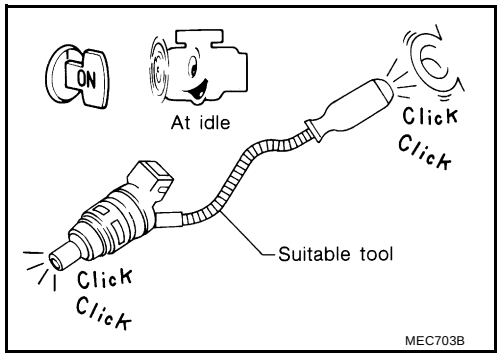

MEC703B

OK or NG

OK >> **INSPECTION END**
NG >> GO TO 3.

3. CHECK INJECTOR POWER SUPPLY CIRCUIT

1. Turn ignition switch “OFF”.
2. Disconnect injector harness connector.
3. Turn ignition switch “ON”.

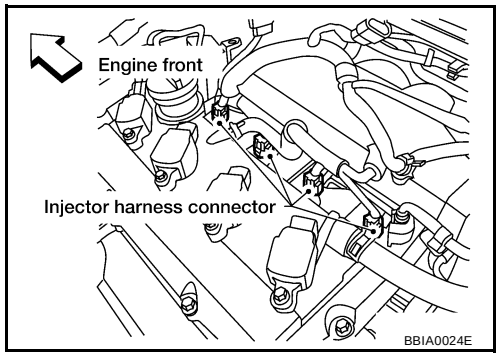

4. Check voltage between injector terminal 1 and ground with CONSULT-II or tester.

Voltage: Battery voltage

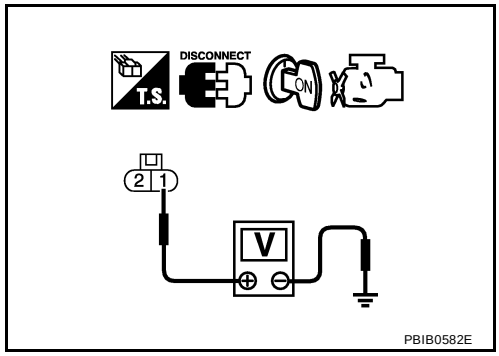

OK or NG

OK >> GO TO 5.
NG >> GO TO 4.

4. DETECT MALFUNCTIONING PART

Check the following.

- Harness connectors M71, F59
- Harness connectors F44, F101
- Fuse block (J/B) connector M4
- 10A fuse
- Harness for open or short between injector and fuse

>> Repair harness or connectors.

5. CHECK INJECTOR OUTPUT SIGNAL CIRCUIT FOR OPEN AND SHORT

1. Turn ignition switch “OFF”.
2. Disconnect ECM harness connector.
3. Check harness continuity between injector terminal 2 and ECM terminals 1, 2, 3, 11, 12, 13. Refer to Wiring Diagram.

Continuity should exist.

4. Also check harness for short to ground and short to power.

OK or NG

OK >> GO TO 7.
NG >> GO TO 6.

6. DETECT MALFUNCTIONING PART

Check the following.

- Harness connectors F44, F101
- Harness for open or short between injector and ECM

>> Repair open circuit or short to ground or short to power in harness or connectors.

7. CHECK INJECTOR

Refer to EC-1235, "Component Inspection" .

OK or NG

OK >> GO TO 8.
NG >> Replace injector.

8. CHECK INTERMITTENT INCIDENT

Refer to EC-756, "TROUBLE DIAGNOSIS FOR INTERMITTENT INCIDENT" .

>> **INSPECTION END**

Component Inspection

UBS003KK

INJECTOR

1. Disconnect injector harness connector.
2. Check resistance between terminals as shown in the figure.

Resistance: 13.5 - 17.5Ω [at 20°C (68°F)]

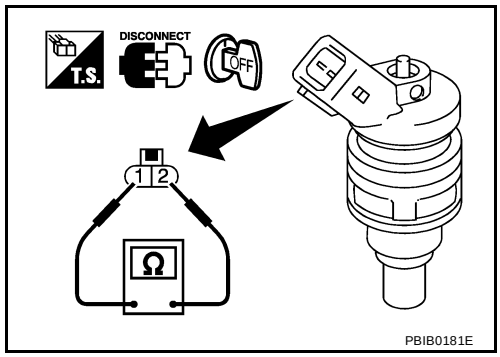

Removal and Installation

UBS003KL

INJECTOR

Refer to EM-129, "FUEL INJECTOR AND FUEL TUBE" .

START SIGNAL

PFP:48750

CONSULT-II Reference Value in Data Monitor Mode

UBS003KM

Specification data are reference values.

MONITOR ITEM	CONDITION	SPECIFICATION
START SIGNAL	● Ignition switch: ON → START → ON	OFF → ON → OFF

Wiring Diagram

UBS003KN

EC-S/SIG-01

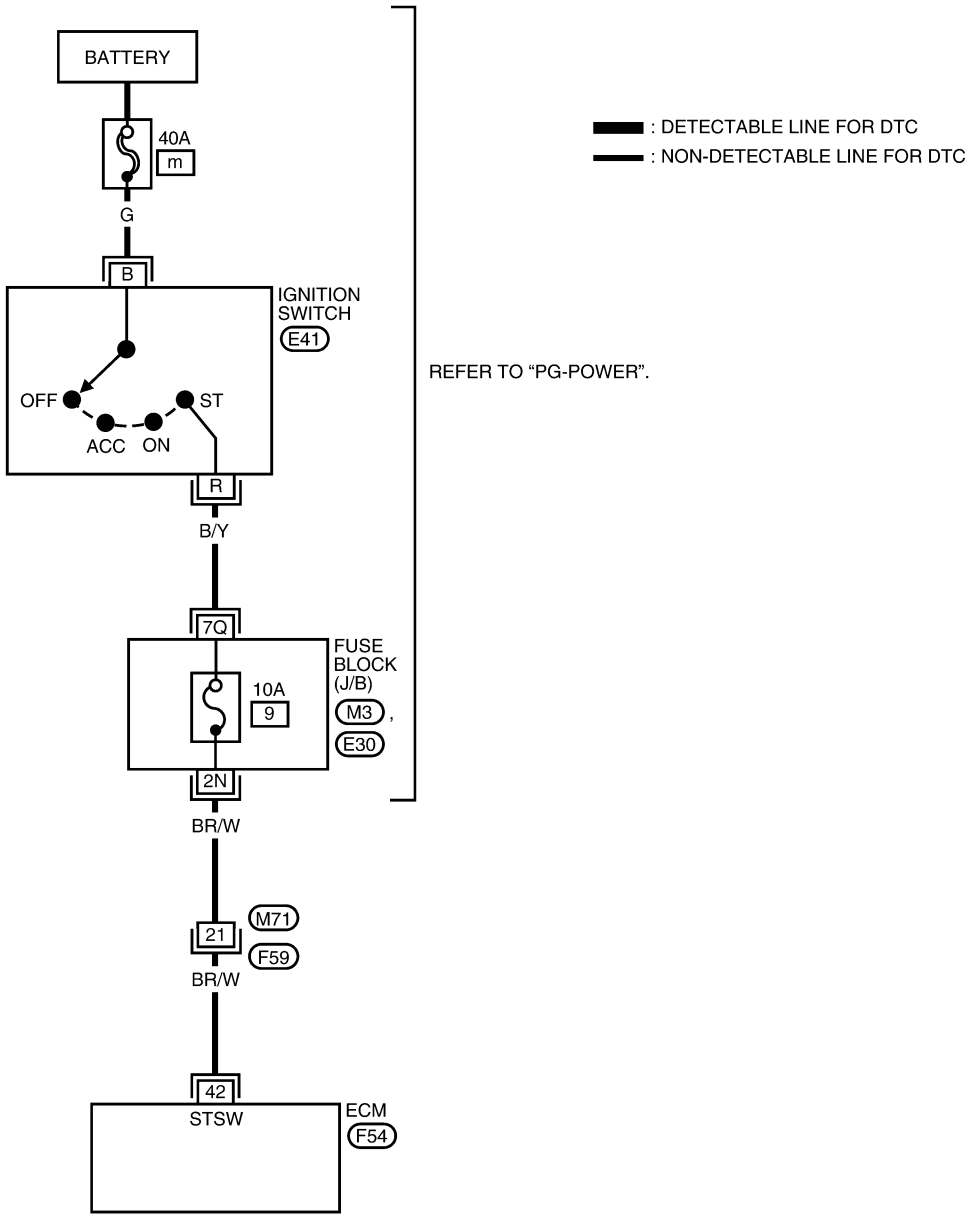

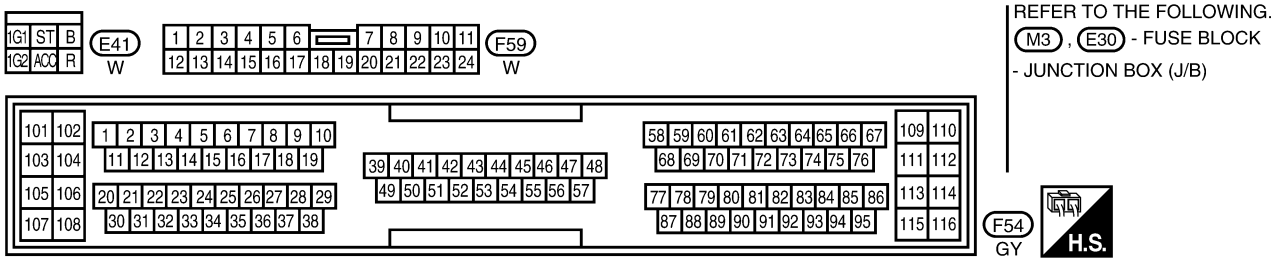

BBWA0090E

Specification data are reference values and are measured between each terminal and ground.

CAUTION:
Do not use ECM ground terminals when measuring input/output voltage. Doing so may result in damage to the ECM's transistor. Use a ground other than ECM terminals, such as the ground.

TERMINAL NO.	WIRE COLOR	ITEM	CONDITION	DATA (DC Voltage)
42	BR/W	Start signal	**[Ignition switch "ON"]**	Approximately 0V
			[Ignition switch "START"]	9 - 14V

Diagnostic Procedure

UBS003KO

1. INSPECTION START

Do you have CONSULT-II?

Yes or No

Yes >> GO TO 2.
No >> GO TO 3.

2. CHECK OVERALL FUNCTION

With CONSULT-II

1. Turn ignition switch "ON".
2. Check "START SIGNAL" in "DATA MONITOR" mode with CONSULT-II under the following conditions.

Condition	START SIGNAL
Ignition switch "ON"	OFF
Ignition switch "START"	ON

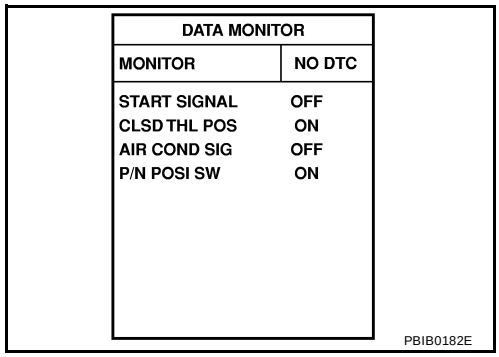

OK or NG

OK >> **INSPECTION END**
NG >> GO TO 4.

3. CHECK OVERALL FUNCTION

Without CONSULT-II

Check voltage between ECM terminal 42 and ground under the following conditions.

Condition	Voltage
Ignition switch "START"	Battery voltage
Other positions	Approximately 0V

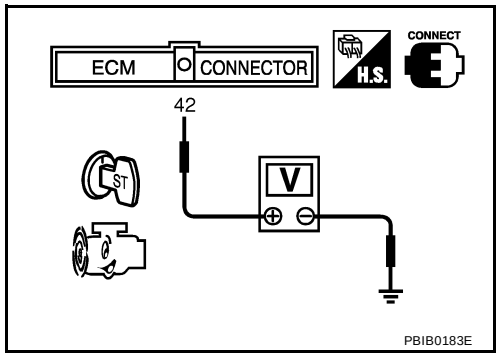

OK or NG

OK >> **INSPECTION END**
NG >> GO TO 4.

4. CHECK STARTING SYSTEM

Turn ignition switch "OFF", then turn it to "START".
Does starter motor operate?

Yes or No

Yes >> GO TO 5.
No >> Refer to SC-9, "STARTING SYSTEM" .

5. CHECK FUSE

1. Turn ignition switch “OFF”.
2. Disconnect 10A fuse.
3. Check if 10A fuse is OK.

OK or NG

OK >> GO TO 6.
NG >> Replace 10A fuse.

6. CHECK START SIGNAL INPUT SIGNAL CIRCUIT FOR OPEN AND SHORT

1. Disconnect ECM harness connector.
2. Disconnect ignition switch harness connector.
3. Check harness continuity between ECM terminal 42 and ignition switch terminal R. Refer to Wiring Diagram.

Continuity should exist.

4. Also check harness for short to ground and short to power.

OK or NG

OK >> GO TO 8.
NG >> GO TO 7.

7. DETECT MALFUNCTIONING PART

Check the following.

- Harness connectors M71, F59
- Fuse block (J/B) connectors M3, E30
- Harness for open or short between ignition switch and fuse block (J/B)
- Harness for open or short between ECM and fuse block (J/B)

>> Repair open circuit or short to ground or short to power in harness or connectors.

8. CHECK INTERMITTENT INCIDENT

Refer to EC-756, "TROUBLE DIAGNOSIS FOR INTERMITTENT INCIDENT" .

>> **INSPECTION END**

FUEL PUMP CIRCUIT

PFP:17042

Description

UBS003KP

SYSTEM DESCRIPTION

Sensor	Input Signal to ECM	ECM Function	Actuator
Crankshaft position sensor (POS) Camshaft position sensor (PHASE)	Engine speed	Fuel pump control	Fuel pump relay
Ignition switch	Start signal		

The ECM activates the fuel pump for several seconds after the ignition switch is turned on to improve engine startability. If the ECM receives a engine speed signal from the camshaft position sensor (PHASE), it knows that the engine is rotating, and causes the pump to operate. If the engine speed signal is not received when the ignition switch is ON, the engine stalls. The ECM stops pump operation and prevents battery discharging, thereby improving safety. The ECM does not directly drive the fuel pump. It controls the ON/OFF fuel pump relay, which in turn controls the fuel pump.

Condition	Fuel pump operation
Ignition switch is turned to ON.	Operates for 1 second.
Engine running and cranking	Operates.
When engine is stopped	Stops in 1.5 seconds.
Except as shown above	Stops.

COMPONENT DESCRIPTION

A turbine type design fuel pump is used in the furl tank.

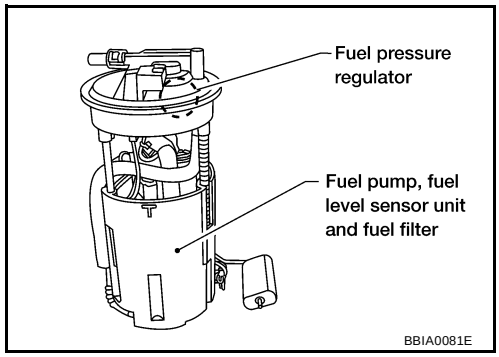

CONSULT-II Reference Value in Data Monitor Mode

UBS003KQ

Specification data are reference values.

MONITOR ITEM	CONDITION	SPECIFICATION
FUEL PUMP RLY	● For 1 seconds after turning ignition switch ON ● Engine running or cranking	ON
	● Except above conditions	OFF

Wiring Diagram

UBS003KR

EC-F/PUMP-01

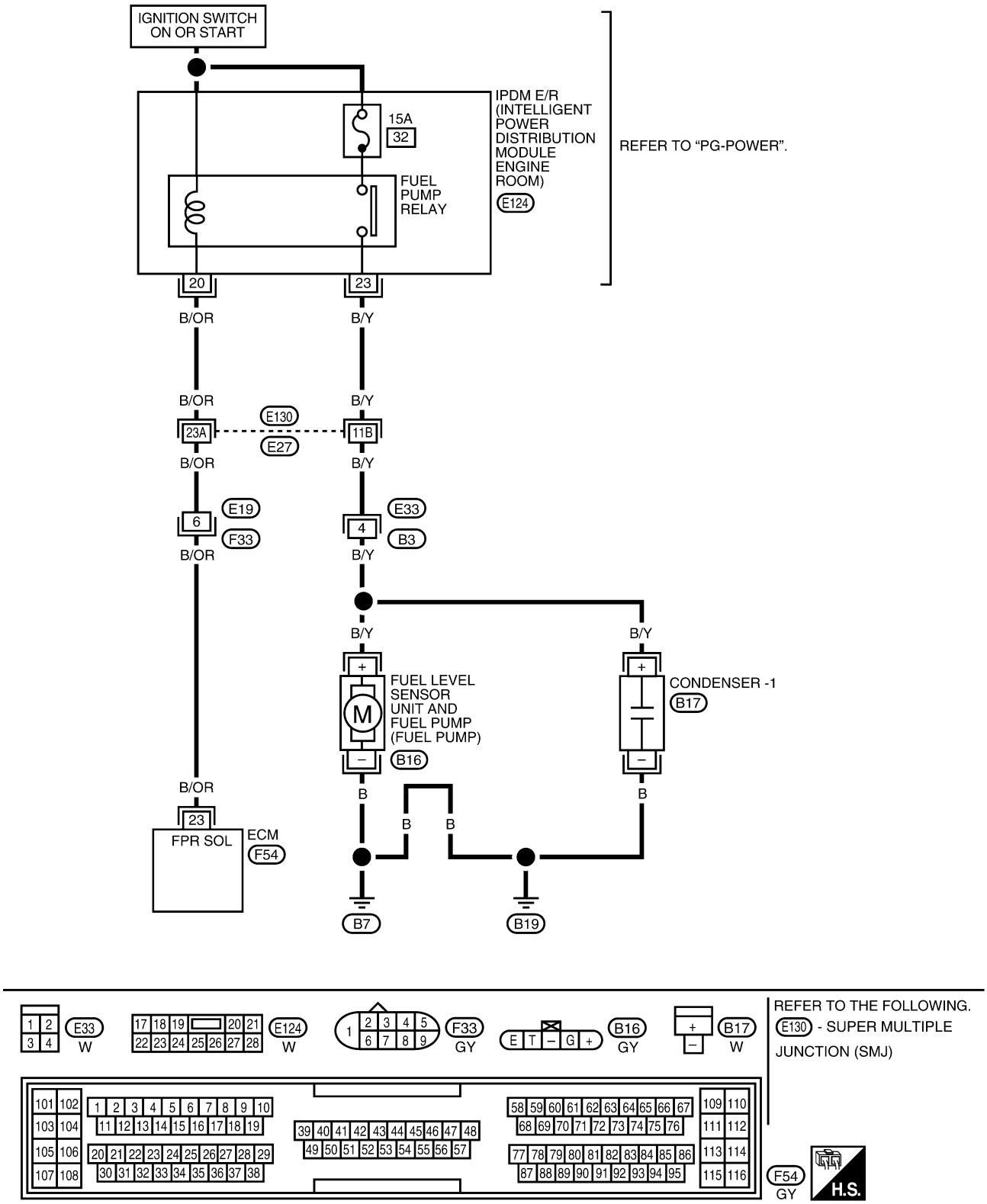

Specification data are reference values and are measured between each terminal and ground.

CAUTION:
Do not use ECM ground terminals when measuring input/output voltage. Doing so may result in damage to the ECM's transistor. Use a ground other than ECM terminals, such as the ground.

TERMINAL NO.	WIRE COLOR	ITEM	CONDITION	DATA (DC Voltage)
23	B/OR	Fuel pump relay	**[Ignition switch "ON"]** ● For 1 seconds after turning ignition switch "ON" **[Engine is running]**	0 - 1.5V
			[Ignition switch "ON"] ● More than 1 seconds after turning ignition switch "ON".	BATTERY VOLTAGE (11 - 14V)

Diagnostic Procedure

UBS003KS

1. CHECK OVERALL FUNCTION

1. Turn ignition switch "ON".
2. Pinch fuel feed hose with two fingers.
   Fuel pressure pulsation should be felt on the fuel feed hose for 1 second after ignition switch is turned "ON".

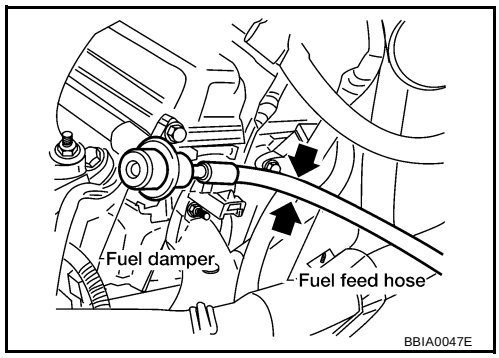

OK or NG

OK >> **INSPECTION END**
NG >> GO TO 2.

2. CHECK FUEL PUMP POWER SUPPLY CIRCUIT-I

1. Turn ignition switch "OFF".
2. Disconnect ECM harness connector.
3. Turn ignition switch "ON".
4. Check voltage between ECM terminal 23 and ground with CONSULT-II or tester.

   Voltage: Battery voltage

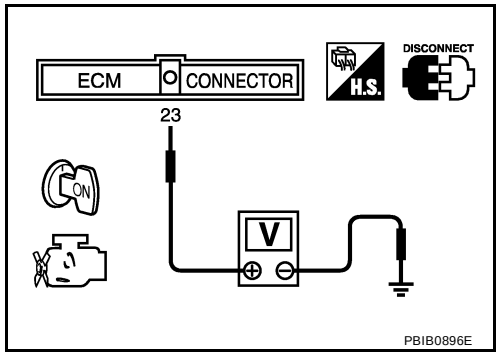

OK or NG

OK >> GO TO 5.
NG >> GO TO 3.

3. CHECK FUEL PUMP POWER SUPPLY CIRCUIT-I

1. Turn ignition switch "OFF".
2. Disconnect IPDM E/R harness connector E124.
3. Turn ignition switch "ON".
4. Check voltage between IPDM E/R terminal 20 and ground with CONSULT-II or tester.

Voltage: Battery voltage

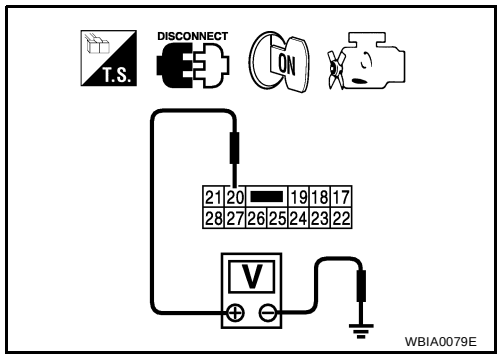

OK or NG

OK >> GO TO 4.
NG >> GO TO 13.

4. DETECT MALFUNCTIONING PART

Check the following.

- Harness connectors E130, E27
- Harness connectors E19, F33
- Harness for open or short between IPDM E/R and ECM

>> Repair harness or connectors.

5. CHECK CONDENSER POWER SUPPLU CIRCUIT-I

1. Turn ignition switch "OFF".
2. Reconnect all harness connectors disconnected.
3. Disconnect condenser harness connector.
4. Turn ignition switch "ON".

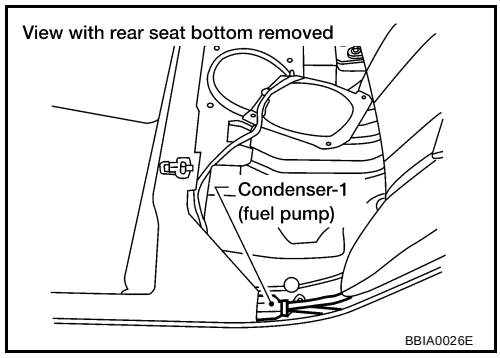

5. Check voltage between condenser terminal + and ground with CONSULT-II or tester.

Voltage: Battery voltage should exist for 1 second after ignition switch is turned "ON".

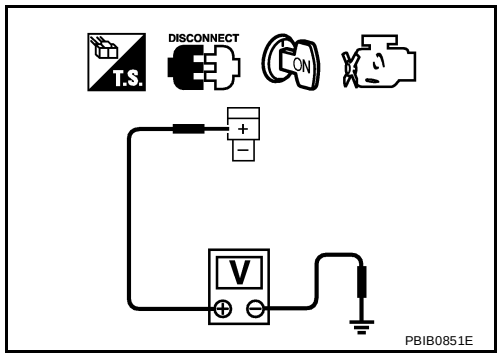

6. Also check harness for short to ground and short to power.

OK or NG

OK >> GO TO 9.
NG >> GO TO 6.

6. CHECK 15A FUSE

1. Turn ignition switch "OFF".
2. Disconnect 15A fuse.
3. Check 15A fuse.

OK or NG

OK >> GO TO 7.
NG >> Replace fuse.

7. CHECK CONDENSER POWER SUPPLY CIRCUIT-II

1. Disconnect IPDM E/R harness connector E124.
2. Check harness continuity between IPDM E/R terminal 23 and condenser terminal +.
   Refer to Wiring Diagram.

   Continuity should exist.

3. Also check harness for short to ground and short to power.

OK or NG

OK >> GO TO 13.
NG >> GO TO 8.

8. DETECT MALFUNCTIONING PART

Check the following.

- Harness connectors E130, E27
- Harness connectors E33, B3
- Harness for open or short between IPDM E/R and condenser

>> Repair harness or connectors.

9. CHECK CONDENSER GROUND CIRCUIT

1. Check harness continuity between condenser terminal – and body ground.
   Refer to Wiring Diagram.

   Continuity should exist.

2. Also check harness for short to power.

OK or NG

OK >> GO TO 10.
NG >> Repair open circuit or short to power in harness or connectors.

10. CHECK CONDENSER

Refer to EC-1245, "Component Inspection" .

OK or NG

OK >> GO TO 11.
NG >> Replace condenser.

11. CHECK FUEL PUMP POWER SUPPLU AND GROUND CIRCUIT FOR OPEN AND SHORT

1. Turn ignition switch "OFF".
2. Disconnect fuel level sensor unit and fuel pump harness connector.
3. Check harness continuity between fuel pump terminal + and harness connector B3 terminal 4, furl pump terminal – and body ground.
   Refer to Wiring Diagram.

   Continuity should exist.

4. Also check harness for short to ground and short to power.

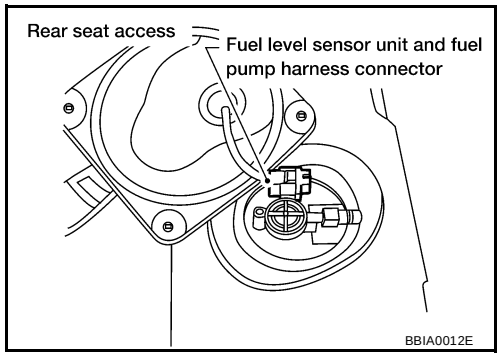

OK or NG

OK >> GO TO 12.
NG >> Repair open circuit or short to power in harness or connectors.

12. CHECK CONDENSER

Refer to EC-1245, "Component Inspection" .

OK or NG

OK >> GO TO 13.
NG >> Replace fuel pump.

13. CHECK INTERMITTENT INCIDENT

Refer to EC-756, "TROUBLE DIAGNOSIS FOR INTERMITTENT INCIDENT" .

OK or NG

OK >> Replace IPDM E/R.
NG >> Repair or replace harness or connectors.

Component Inspection

UBS003KT

FUEL PUMP

1. Disconnect fuel level sensor unit and fuel pump harness connector.
2. Check resistance between fuel level sensor unit and fuel pump terminals 3 and 5.

   Resistance: Approximately 1.0Ω [at 25°C (77°F)]

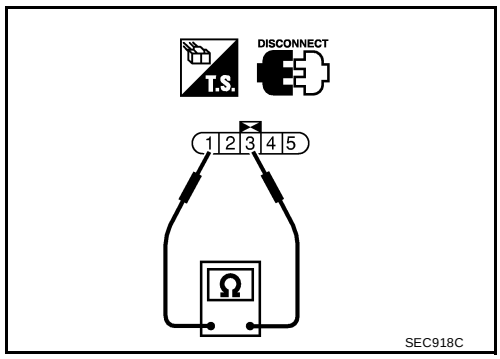

CONDENSER

1. Turn ignition switch "OFF".
2. Disconnect condenser harness connector.

3. Check resistance between condenser terminals as 1 and 2.

Resistance	Above 1 MΩ at 25°C (77°F)

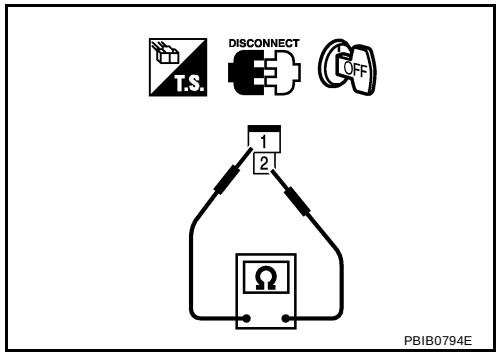

Removal and Installation

UBS003KU

FUEL PUMP

Refer to FL-5, "FUEL LEVEL SENSOR UNIT, FUEL FILTER AND FUEL PUMP ASSEMBLY" .

ELECTRONIC CONTROLLED ENGINE MOUNT

PFP:11270

System Description

UBS003KV

Sensor	Input Signal to ECM	ECM function	Actuator
Crankshaft position sensor (POS) Camshaft position sensor (PHASE)	Engine speed	Engine mount control	Electronic controlled engine mount
Vehicle speed sensor (CAN communication line)	Vehicle speed		

The ECM controls the engine mount operation corresponding to the engine speed and the vehicle speed. THe control system has 2-step control [Soft/Hard]

Vehicle condition	Engine mount control
Idle (with vehicle stopped)	Soft
Driving	Hard

CONSULT-II Reference Value in Data Monitor Mode

UBS003KW

MONITOR ITEM	CONDITION		SPECIFICATION
ENGINE MOUNT	● Engine: Running	Idle	"IDLE"
		Except above	"TRVL"

Wiring Diagram

UBS003KX

EC-EMNT-01

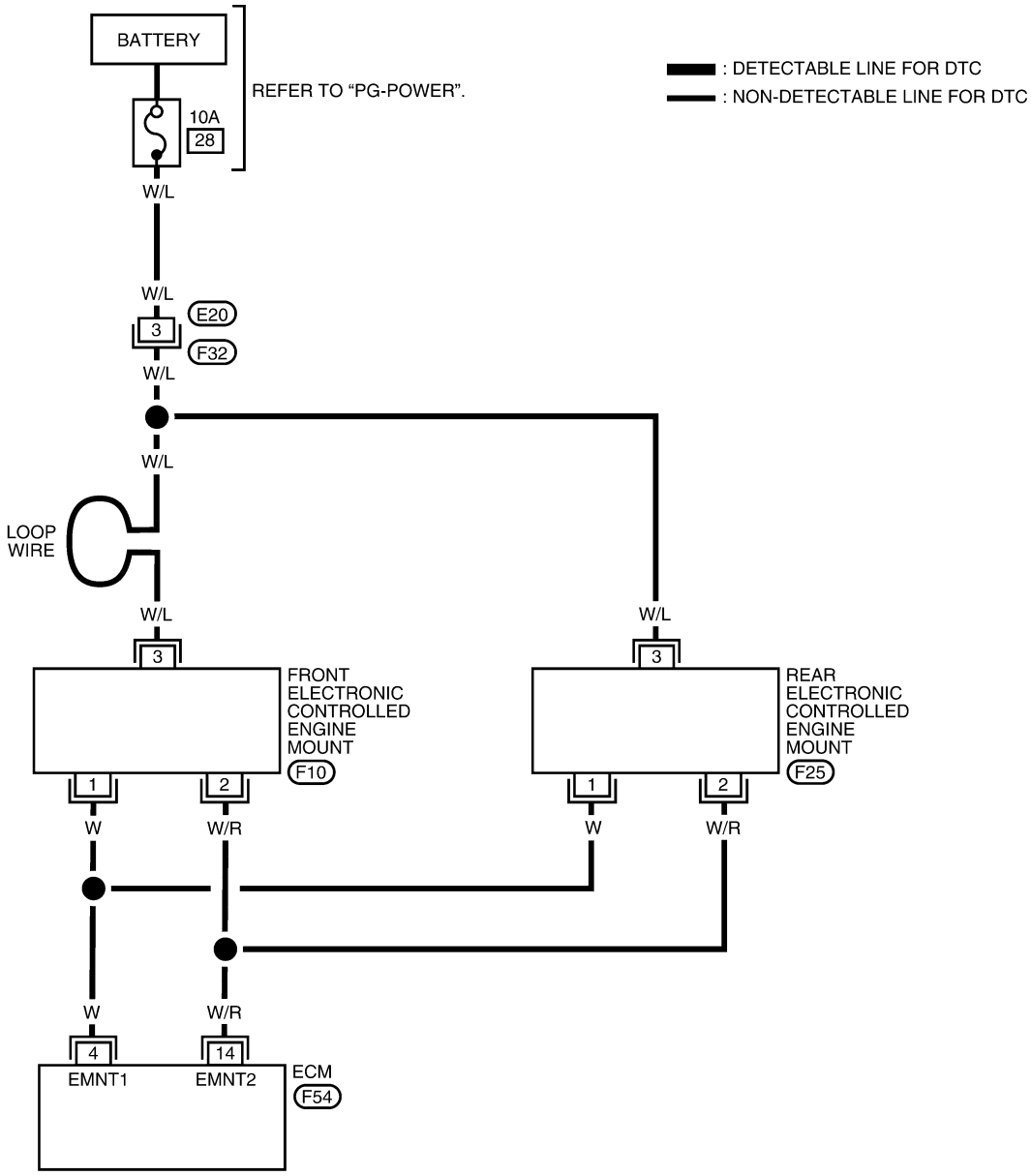

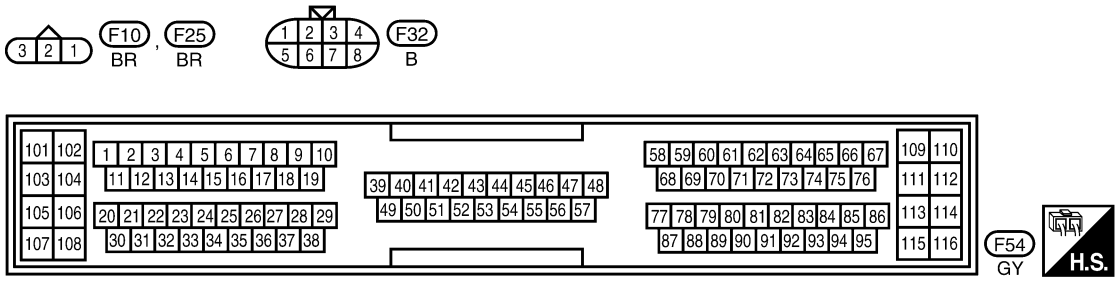

BBWA0094E

Specification data are reference values and are measured between each terminal and ground.

CAUTION:
Do not use ECM ground terminals when measuring input/output voltage. Doing so may result in damage to the ECM's transistor. Use a ground other than ECM terminals, such as the ground.

TERMINAL NO.	WIRE COLOR	ITEM	CONDITION	DATA (DC Voltage)
4	W	Electronic controlled engine mount-1	**[Engine is running]** ● Idle speed	0 - 1.0V
			[Engine is running] ● Except above condition	BATTERY VOLTAGE (11 - 14V)
14	W/R	Electronic controlled engine mount-2	**[Engine is running]** ● Idle speed	BATTERY VOLTAGE (11 - 14V)
			[Engine is running] ● Except above condition	0 - 1.0V

Diagnostic Procedure

UBS003KY

1. CHECK OVERALL FUNCTION

With CONSULT-II

1. Start engine and warm it up to normal operating temperature.
2. Shift selector lever to "D" range while depressing the brake pedal and pulling the parking brake control lever.
3. Perform “ENGINE MOUNTING” in “ACTIVE TEST” mode with CONSULT-II and check that the vibration changes according to switching the condition (with vehicle stopped).

ACTIVE TEST	
ENGINE MOUNTING	IDLE
MONITOR	
ENG SPEED	XXX rpm
COOLAN TEMP/S	XXX °C

SEC237C

Without CONSULT-II

1. Start engine and warm it up to normal operating temperature.
2. Shift selector lever to "D" range while depressing the brake pedal and pulling the parking brake control lever.
3. Disconnect front or rear electronic controlled engine mount harness connector when engine speed is more than 1,000 rpm.
4. When returning engine speed to idle speed, check that body vibration increases compared with the condition of the above step 2 (with vehicle stopped).

OK or NG

OK >> **INSPECTION END**
NG >> GO TO 2.

2. CHECK ELECTRONIC CONTROLLED ENGINE MOUNT POWER SUPPLY CIRCUIT

1. Turn ignition switch "OFF".
2. Disconnect front or rear electronic controlled engine mount harness connector.

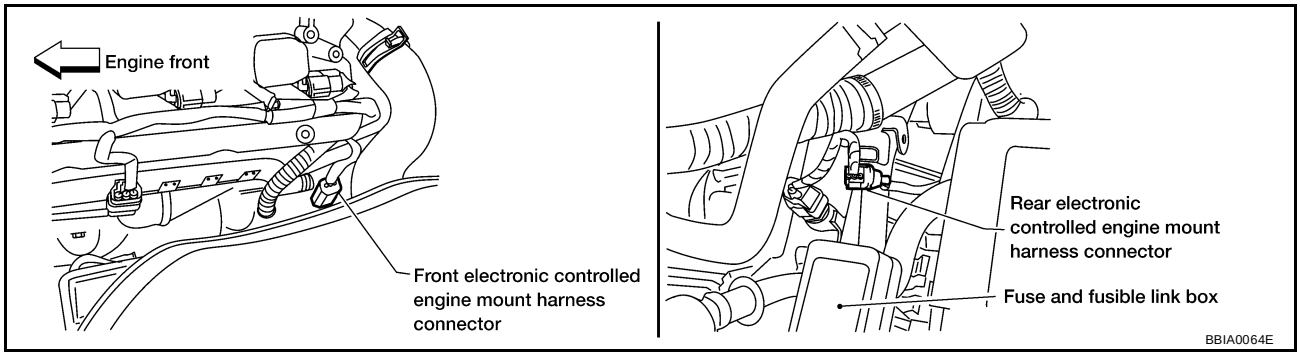

3. Check voltage between electronic controlled engine mount terminal 3 and ground with CONSULT-II or tester.

Voltage: Battery voltage

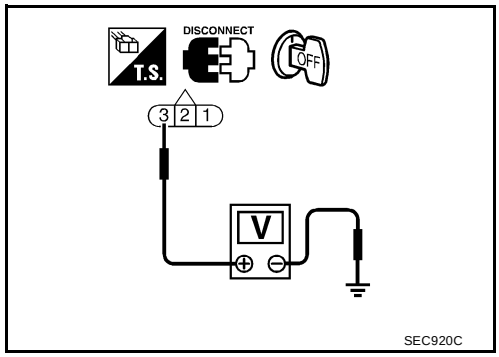

OK or NG

OK >> GO TO 4.
NG >> GO TO 3.

3. DETECT MALFUNCTIONING PART

Check the following.

- Harness connectors E20, F32
- 10A fuse
- Harness for open and short between electronic controlled engine mount and battery

>> Repair harness or connectors.

4. CHECK ELECTRONIC CONTROLLED ENGINE MOUNT OUTPUT SIGNAL CIRCUIT FOR OPEN AND SHORT

1. Turn ignition switch “OFF”.
2. Disconnect ECM harness connector.
3. Check harness continuity between ECM terminals and electronic engine mount terminals as follows. Refer to Wiring Diagram.

ECM terminal	Front electronic controlled engine mount terminal	Rear electronic controlled engine mount terminal
4	1	2
14	1	2

Continuity should exist.

4. Also check harness for short to ground and short to power.

OK or NG

OK >> GO TO 5.
NG >> Repair open circuit or short to ground or short to power in harness or connectors.

5. CHECK ELECTRONIC CONTROLLED ENGINE MOUNT

Visually check front and rear electronic controlled engine mount.

OK or NG

OK >> GO TO 6.
NG >> Replace front or rear electronic controlled engine mount.

6. CHECK INTERMITTENT INCIDENT

Refer to EC-756, "TROUBLE DIAGNOSIS FOR INTERMITTENT INCIDENT" .

>> **INSPECTION END**

REFRIGERANT PRESSURE SENSOR

PFP:92136

Component Description

UBS003KZ

The refrigerant pressure sensor is installed at the liquid tank of the air conditioner system. The sensor uses an electrostatic volume pressure transducer to convert refrigerant pressure to voltage. The voltage signal is sent to ECM, and ECM controls cooling fan system.

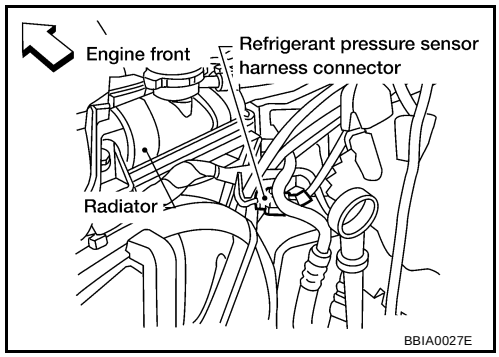

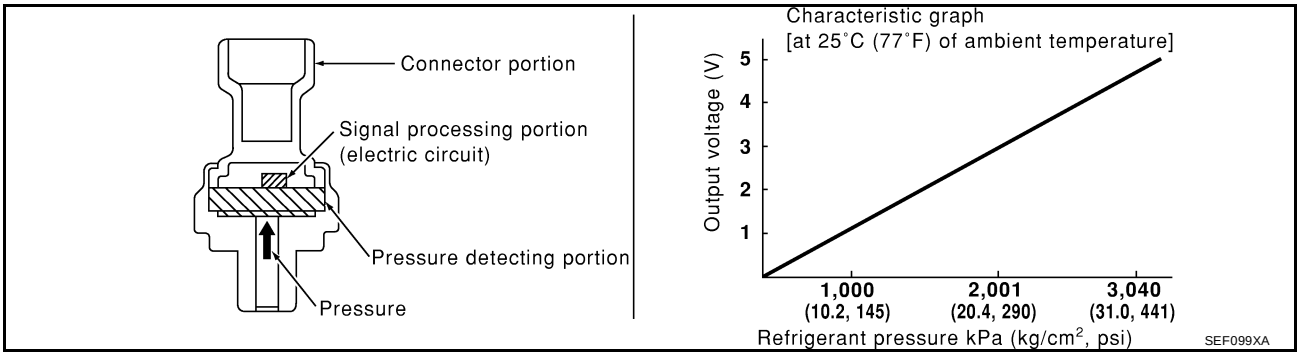

Wiring Diagram

UBS003L0

EC-RP/SEN-01

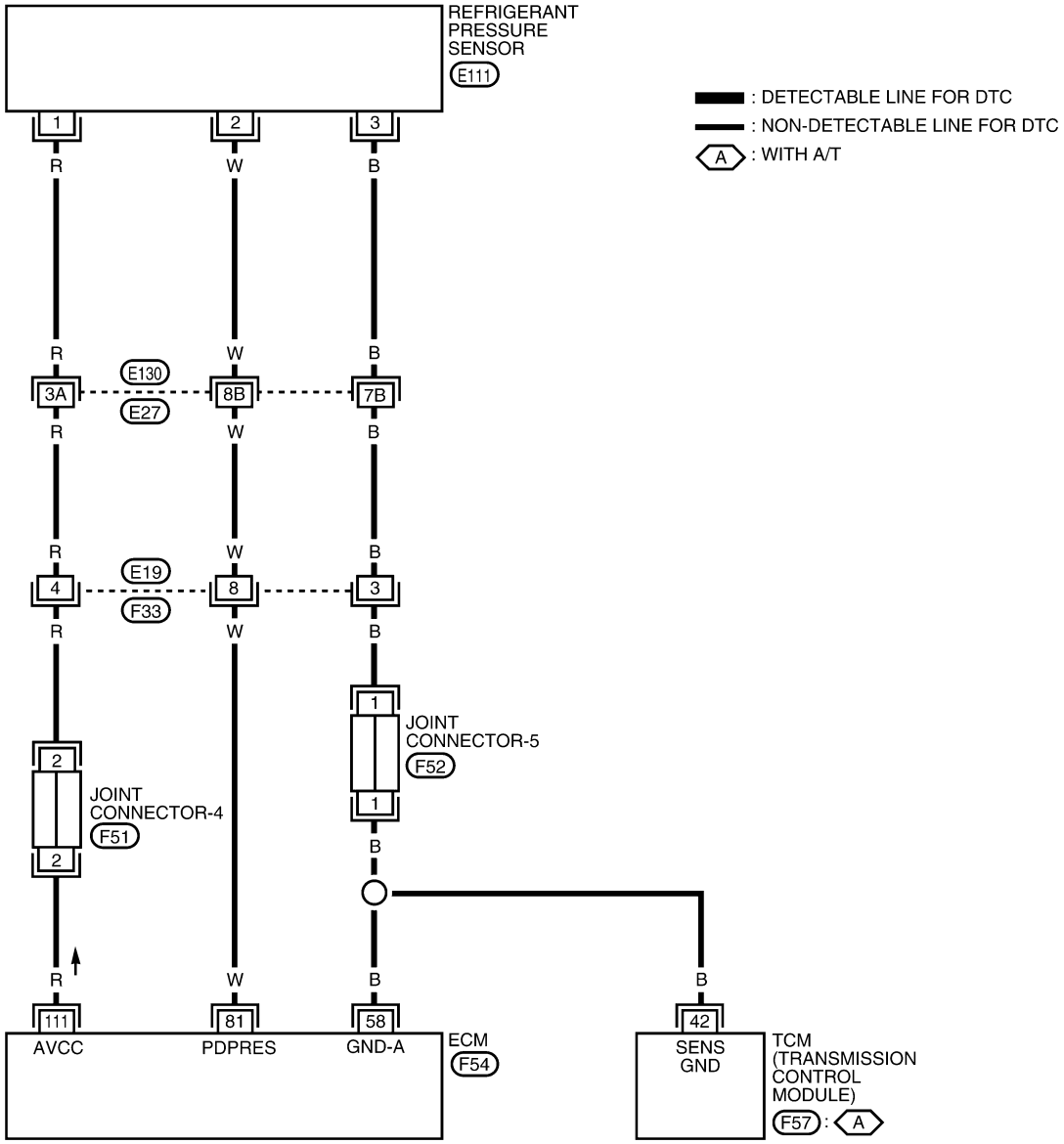

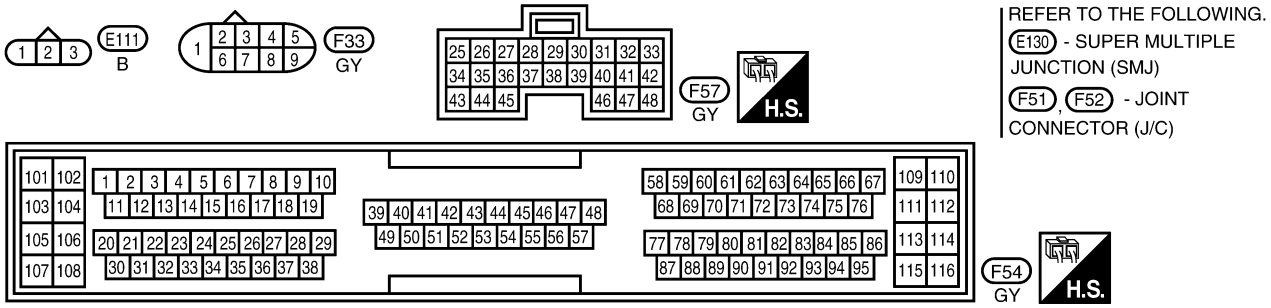

BBWA0093E

Specification data are reference values and are measured between each terminal and ground.

CAUTION:
Do not use ECM ground terminals when measuring input/output voltage. Doing so may result in damage to the ECM's transistor. Use a ground other than ECM terminals, such as the ground.

TERMINAL NO.	WIRE COLOR	ITEM	CONDITION	DATA (DC Voltage)
58	B	Sensors' ground	**[Engine is running]** ● **Warm-up condition** ● Idle speed	Approximately 0V
81	W	Refrigerant pressure sensor	**[Engine is running]** ● **Warm-up condition** ● Both A/C switch and blower switch are “ON”. (Compressor operates.)	1.0 - 4.0V
111	R	Sensor's power supply	**[Ignition switch “ON”]**	Approximately 5V

Diagnostic Procedure

UBS003L1

1. CHECK REFRIGERANT PRESSURE SENSOR OVERALL FUNCTION

1. Start engine and warm it up to normal operating temperature.
2. Turn A/C switch and blower switch “ON”.
3. Check voltage between ECM terminal 81 and ground with CONSULT-II or tester.

Voltage: 1.0 - 4.0V

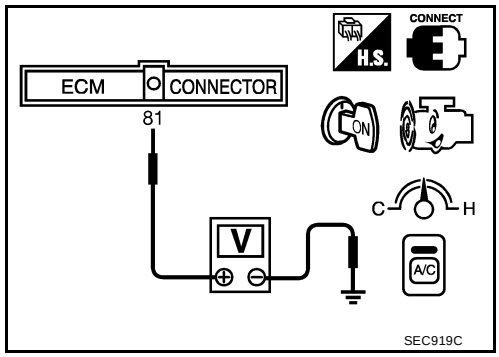

OK or NG

OK >> **INSPECTION END**
NG >> GO TO 2.

2. CHECK REFRIGERANT PRESSURE SENSOR POWER SUPPLY CIRCUIT

1. Turn A/C switch and blower switch “OFF”.
2. Stop engine.
3. Disconnect refrigerant pressure sensor harness connector.
4. Turn ignition switch “ON”.

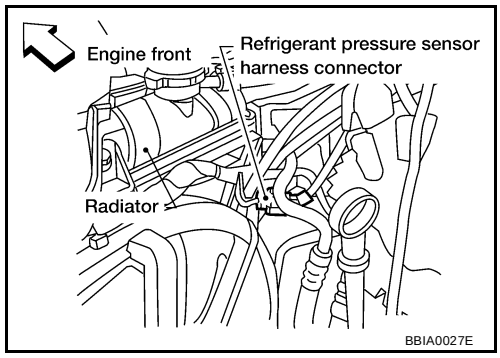

5. Check voltage between refrigerant pressure sensor terminal 1 and ground with CONSULT-II or tester.

Voltage: Approximately 5V

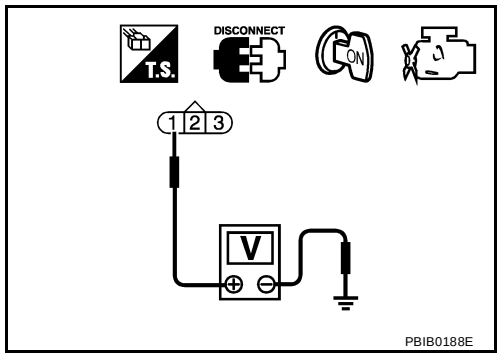

OK or NG

OK >> GO TO 4.
NG >> GO TO 3.

3. DETECT MALFUNCTIONING PART

Check the following.

- Harness connectors E130, E27
- Harness connectors E19, F33
- Joint connector-4
- Harness for open or short between ECM and refrigerant pressure sensor

>> Repair harness or connectors.

4. CHECK REFRIGERANT PRESSURE SENSOR GROUND CIRCUIT FOR OPEN AND SHORT

1. Turn ignition switch “OFF”.
2. Check harness continuity between refrigerant pressure sensor terminal 3 and engine ground. Refer to Wiring Diagram.

Continuity should exist.

3. Also check harness for short to power.

OK or NG

OK >> GO TO 6.
NG >> GO TO 5.

5. DETECT MALFUNCTIONING PART

Check the following.

- Harness connectors E130, E27
- Harness connectors E19, F33
- Joint connector-5
- Harness for open or short between ECM and refrigerant pressure sensor
- Harness for open or short between TCM and refrigerant pressure sensor

>> Repair open circuit or short to ground or short to power in harness or connectors.

6. CHECK REFRIGERANT PRESSURE SENSOR INPUT SIGNAL CIRCUIT FOR OPEN AND SHORT

1. Disconnect ECM harness connector.
2. Check harness continuity between ECM terminal 81 and refrigerant pressure sensor terminal 2. Refer to Wiring Diagram.

   Continuity should exist.

3. Also check harness for short to ground and short to power.

OK or NG

OK >> GO TO 8.
NG >> GO TO 7.

7. DETECT MALFUNCTIONING PART

Check the following.

- Harness connectors E130, E27
- Harness connectors E19, F33
- Harness for open or short between ECM and refrigerant pressure sensor

>> Repair open circuit or short to ground or short to power in harness or connectors.

8. CHECK INTERMITTENT INCIDENT

Refer to EC-756, "TROUBLE DIAGNOSIS FOR INTERMITTENT INCIDENT" .

OK or NG

OK >> Replace refrigerant pressure sensor.
NG >> Repair or replace.

Removal and Installation

UBS003L2

REFRIGERANT PRESSURE SENSOR

Refer to MTC-88, "Removal and Installation for Refrigerant Pressure Sensor" (manual A/C) or ATC-126, "Removal and Installation for Refrigerant Pressure Sensor" (auto A/C).

ELECTRICAL LOAD SIGNAL

PFP:25350

Description

UBS003L3

The electrical load signal (Headlamp switch signal, rear window defogger switch signal, etc.) is transferred through the CAN communication line from BCM to ECM via IPDM E/R.

Diagnostic Procedure

UBS003L4

1. CHECK LOAD SIGNAL CIRCUIT OVERALL FUNCTION-I

1. Turn ignition switch “ON”.
2. Connect CONSULT-II or GST and select "DATA MONITOR" mode.
3. Select "LOAD SIGNAL" and check indication under the following conditions.

Condition	Indication
Rear window defogger switch "ON"	ON
Rear window defogger switch "OFF"	OFF

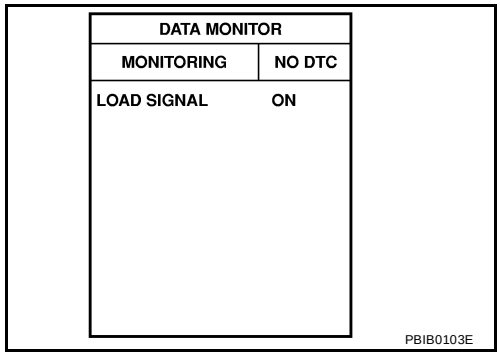

OK or NG

OK >> GO TO 2.
NG >> GO TO 3.

2. CHECK LOAD SIGNAL CIRCUIT OVERALL FUNCTION-II

Check "LOAD SIGNAL" indication under the following conditions.

Condition	Indication
Lighting switch "ON" at 2nd position	ON
Lighting switch "OFF"	OFF

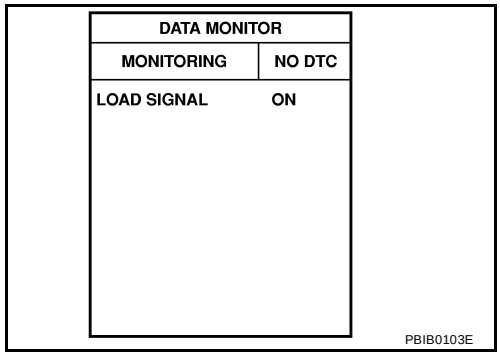

OK or NG

OK >> **INSPECTION END**
NG >> GO TO 4.

3. CHECK REAR WINDOW DEFOGGER SYSTEM

Refer to GW-41, "REAR WINDOW DEFOGGER" .

>> **INSPECTION END**

4. CHECK HEADLAMP SYSTEM

Refer to LT-5, "HEADLAMP (FOR USA)" or LT-28, "HEADLAMP (FOR CANADA) - DAYTIME LIGHT SYSTEM -" .

>> **INSPECTION END**

ASCD BRAKE SWITCH

PFP:25320

Component Description

UBS003L5

When depress on the brake pedal, ASCD brake switch is turned OFF and stop lamp switch is turned ON. ECM detects the state of the brake pedal by this input of two kinds (ON/OFF signal)
Refer to EC-1286, "AUTOMATIC SPEED CONTROL DEVICE (ASCD)" for the ASCD function.

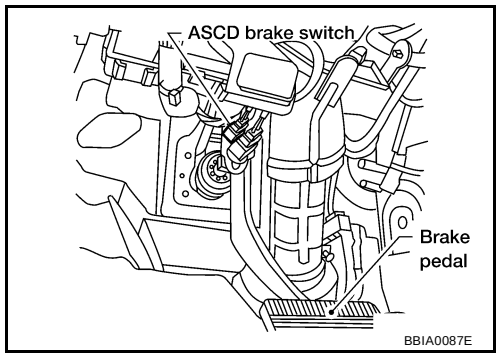

CONSULT-II Reference Value in Data Monitor Mode

UBS003L6

Specification data are reference values.

MONITOR ITEM	CONDITION		SPECIFICATION
BRAKE SW 1 (ASCD brake switch)	● Ignition switch: ON	● Brake pedal fully released	ON
		● Brake pedal depressed	OFF
BRAKE SW 2 (stop lamp switch)	● Ignition switch: ON	● Brake pedal fully released	OFF
		● Brake pedal depressed	ON

Wiring Diagram

UBS003L7

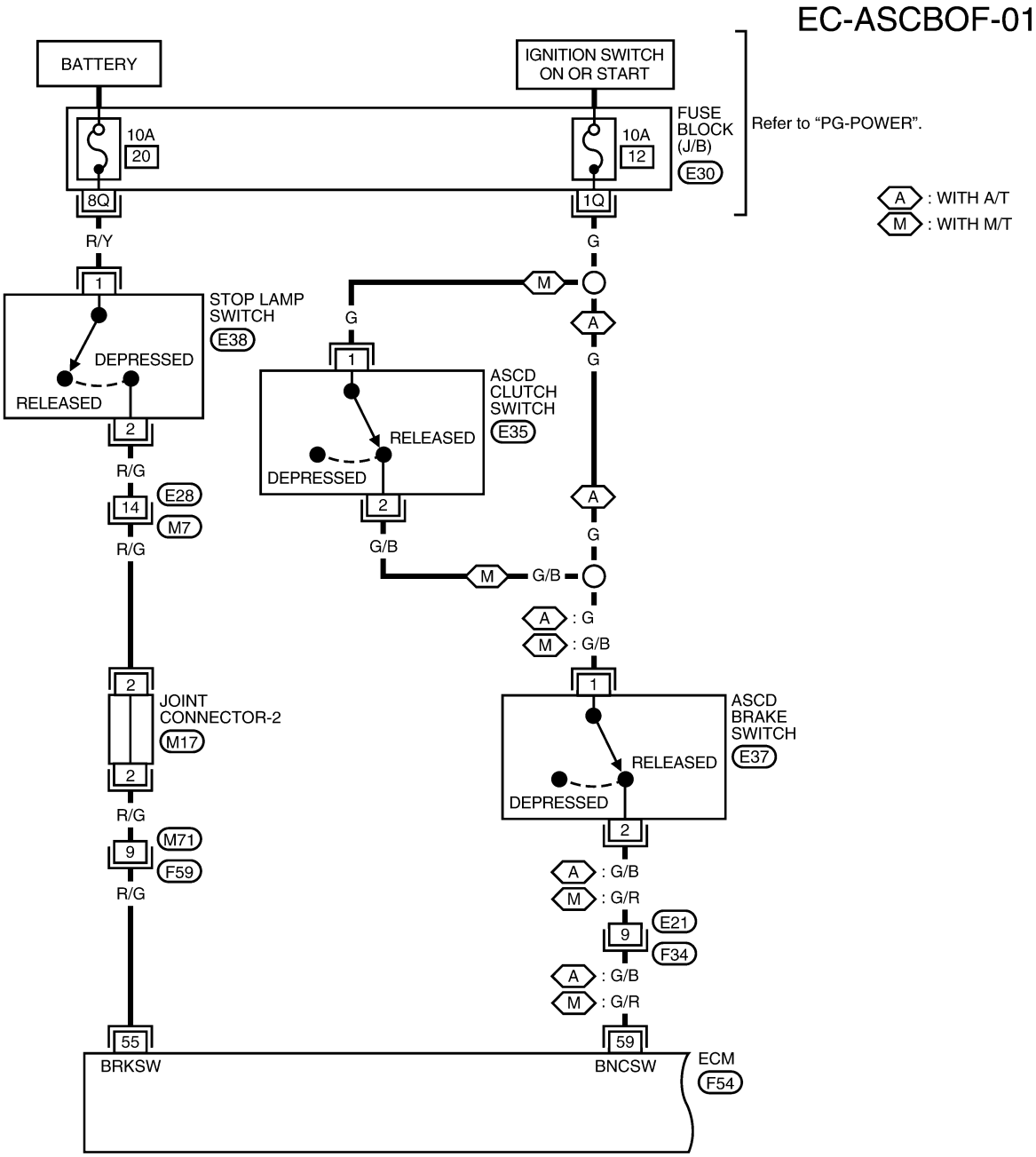

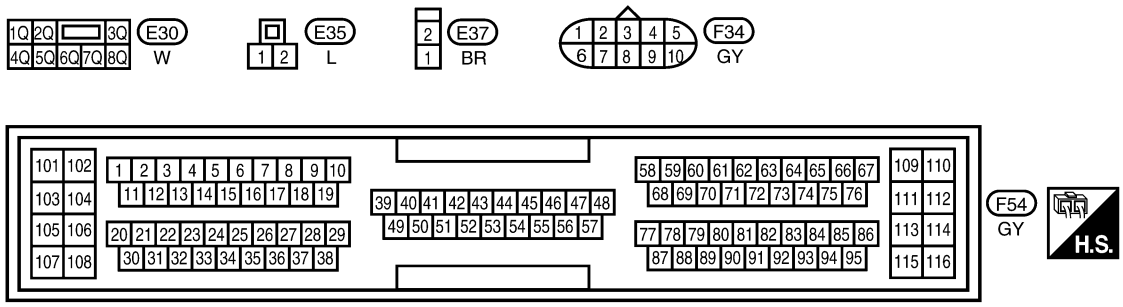

BBWA0203E

Specification data are reference values and are measured between each terminal and ground.

CAUTION:

Do not use ECM ground terminals when measuring input/output voltage. Doing so may result in damage to the ECM's transistor. Use a ground other than ECM terminals, such as the ground.

TERMINAL NO.	WIRE COLOR	ITEM	CONDITION	DATA (DC Voltage)
55	R/G	Stop lamp switch	**[Ignition switch "ON"]** ● Brake pedal is fully released	Approximately 0V
			[Ignition switch "ON"] ● Brake pedal is depressed	BATTERY VOLTAGE (11 - 14V)
59	G/B (A/T) G/R (M/T)	ASCD brake switch	**[Ignition switch "ON"]** ● Brake pedal is fully released ● Clutch pedal is fully released (M/T models)	BATTERY VOLTAGE (11 - 14V)
			[Ignition switch "ON"] ● Brake pedal is depressed ● Clutch pedal is depressed (M/T models)	Approximately 0V

Diagnostic Procedure

UBS003L8

1. CHECK OVERALL FUNCTION-I

With CONSULT-II

1. Turn ignition switch "ON".
2. Select "BRAKE SW1" in "DATA MONITOR" mode with CONSULT-II.
3. Check "BRAKE SW1" indication under the following conditions.

A/T models

CONDITION	INDICATION
When brake pedal is depress	OFF
When brake pedal is fully released	ON

M/T models

CONDITION	INDICATION
When clutch pedal or brake pedal is depressed	OFF
When clutch pedal and brake pedal are fully released	ON

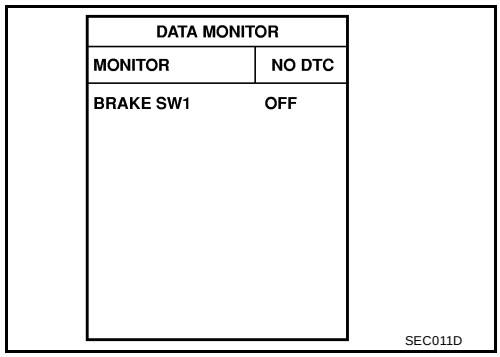

Without CONSULT-II

1. Turn ignition switch "ON".
2. Check voltage between ECM terminal 59 and ground under the following conditions.

A/T models

CONDITION	VOLTAGE
When brake pedal is depress	Approximately 0V
When brake pedal is fully released	Battery voltage

M/T models

CONDITION	VOLTAGE
When clutch pedal or brake pedal is depressed	Approximately 0V
When clutch pedal and brake pedal are fully released	Battery voltage

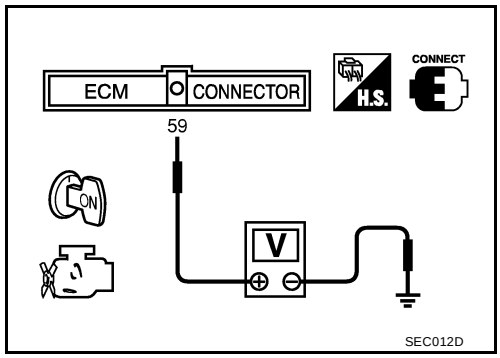

OK or NG

OK >> GO TO 2.
NG (M/T models) >>GO TO 3.
NG (A/T models) >>GO TO 8.

2. CHECK OVERALL FUNCTION-II

With CONSULT-II

Check "BRAKE SW2" indication in "DATA MONITOR" mode.

CONDITION	INDICATION
When brake pedal is released	OFF
When brake pedal is depressed	ON

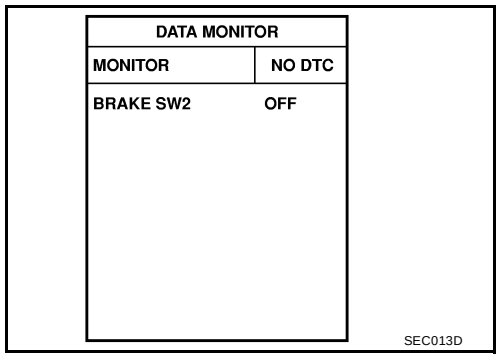

Without CONSULT-II

Check voltage between ECM terminal 55 and ground under the following conditions.

CONDITION	VOLTAGE
When brake pedal is released	Approximately 0V
When brake pedal is depressed	Battery voltage

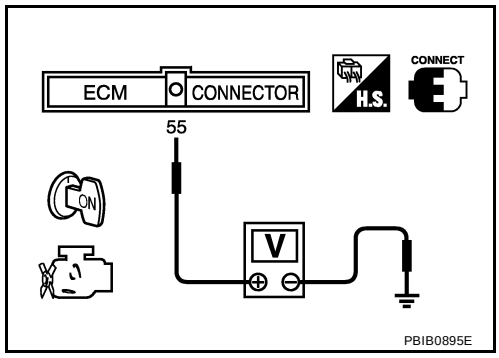

OK or NG

OK >> **INSPECTION END**

NG >> GO TO 13.

3. CHECK ASCD CLUTCH SWITCH CIRCUIT

1. Turn ignition switch "OFF".
2. Disconnect ASCD brake switch harness connector.
3. Turn ignition switch "ON".

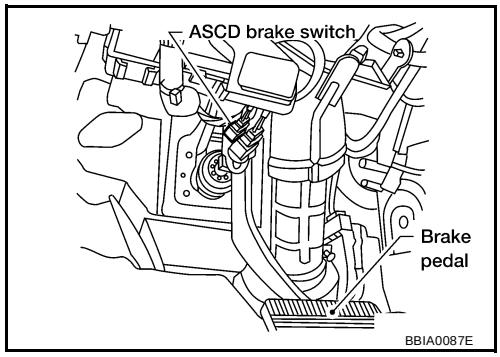

4. Check voltage between ASCD brake switch terminal 1 and ground under the following conditions with CONSULT-II or tester.

CONDITION	VOLTAGE
When clutch pedal is released	Battery voltage
When clutch pedal is depressed	Approx. 0V

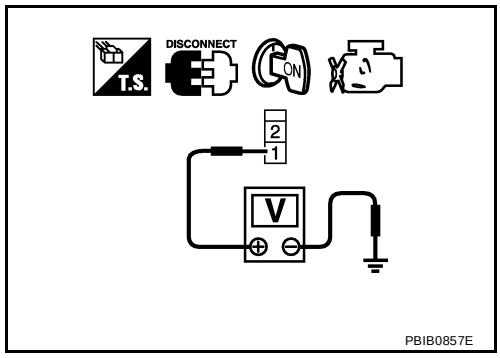

OK or NG

OK >> GO TO 10.
NG >> GO TO 4.

4. CHECK ASCD CLUTCH SWITCH POWER SUPPLY CIRCUIT

1. Turn ignition switch "OFF".
2. Disconnect ASCD clutch switch harness connector.
3. Turn ignition switch "ON".

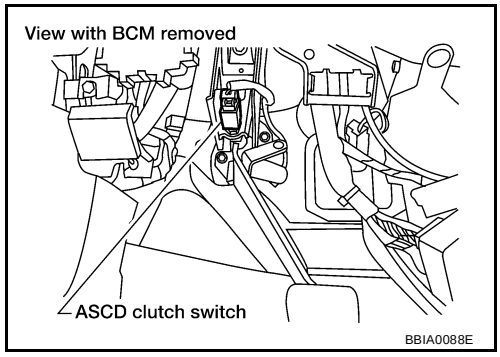

4. Check voltage between ASCD clutch switch terminal 1 and ground with CONSULT-II or tester.

Voltage: Battery voltage

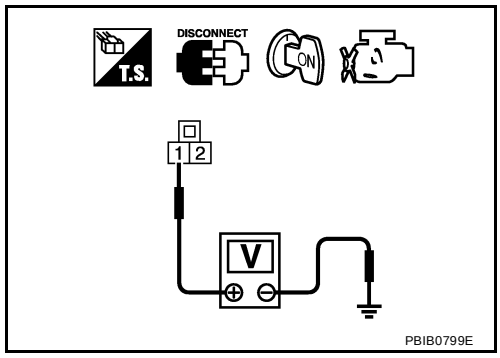

OK or NG

OK >> GO TO 6.
NG >> GO TO 5.

5. DETECT MALFUNCTIONING PART

Check the following.

- Fuse block (J/B) connector E30
- 10A fuse
- Harness for open or short between ASCD clutch switch and fuse

>> Repair open circuit or short to ground or short to power in harness or connectors.

6. CHECK ASCD CLUTCH SWITCH INPUT SIGNAL CIRCUIT FOR OPEN AND SHORT

1. Turn ignition switch "OFF".
2. Check harness continuity between ASCD clutch switch terminal 2 and ASCD brake switch terminal 1. Refer to Wiring Diagram.

Continuity should exist.

3. Also check harness for short to ground and short to power.

OK or NG

OK >> GO TO 7.
NG >> Repair open circuit or short to ground or short to power in harness or connectors.

7. CHECK ASCD CLUTCH SWITCH

Refer to EC-1190, "Component Inspection"

OK or NG

OK >> GO TO 18.
NG >> Replace ASCD clutch switch.

8. CHECK ASCD BRAKE SWITCH POWER SUPPLY CIRCUIT

1. Turn ignition switch "OFF".
2. Disconnect ASCD brake switch harness connector.
3. Turn ignition switch "ON".

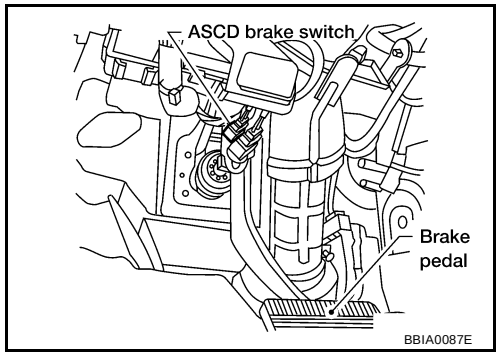

4. Check voltage between ASCD brake switch terminal 1 and ground with CONSULT-II or tester.

Voltage: Battery voltage

OK or NG

OK >> GO TO 10.
NG >> GO TO 9.

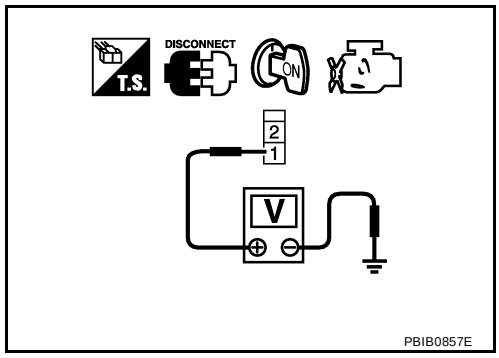

9. DETECT MALFUNCTIONING PART

Check the following.

- Fuse block (J/B) connector E30
- 10A fuse
- Harness for open or short between ASCD brake switch and fuse

>> Repair open circuit or short to ground or short to power in harness or connectors.

10. CHECK ASCD BRAKE SWITCH INPUT SIGNAL CIRCUIT FOR OPEN AND SHORT

1. Turn ignition switch "OFF".
2. Disconnect ECM harness connector.
3. Check harness continuity between ECM terminal 59 and ASCD brake switch terminal 2.
   Refer to Wiring Diagram.

   Continuity should exist.

4. Also check harness for short to ground or short to power.

OK or NG

OK >> GO TO 12.
NG >> GO TO 11.

11. DETECT MALFUNCTIONING PART

Check the following.

- Harness connectors E21, F34
- Harness for open or short between ECM and ASCD brake switch

>> Repair open circuit or short to ground or short to power in harness or connectors.

12. CHECK ASCD BRAKE SWITCH

Refer to EC-1190, "Component Inspection"

OK or NG

OK >> GO TO 18.
NG >> Replace ASCD brake switch.

13. CHECK STOP LAMP SWITCH POWER SUPPLY CIRCUIT

1. Turn ignition switch "OFF".
2. Disconnect stop lamp switch harness connector.

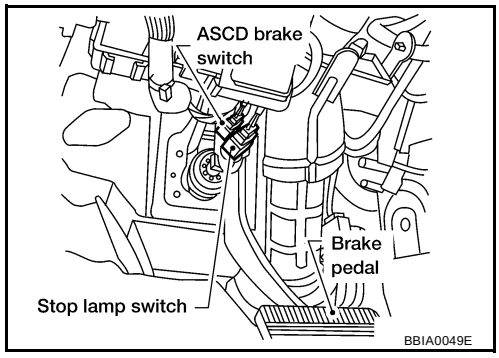

3. Check voltage between stop lamp switch terminal 1 and ground with CONSULT -II or tester.

Voltage: Battery voltage

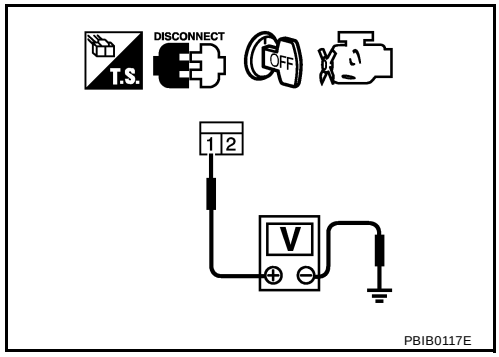

OK or NG

OK >> GO TO 15.
NG >> GO TO 14.

14. DETECT MALFUNCTIONING PART

Check the following.

- Fuse block (J/B) connector E30
- 10A fuse
- Harness for open or short between stop lamp switch and fuse

>> Repair open circuit or short to ground or short to power in harness or connectors.

15. CHECK STOP LAMP SWITCH INPUT SIGNAL CIRCUIT FOR OPEN AND SHORT

1. Disconnect ECM harness connector.
2. Check harness continuity between ECM terminal 55 and stop lamp switch terminal 2. Refer to Wiring Diagram.

Continuity should exist.

3. Also check harness for short to ground and short to power.

OK or NG

OK >> GO TO 17.
NG >> GO TO 16.

16. DETECT MALFUNCTIONING PART

Check the following.

- Harness connectors E28, M7
- Harness connectors M71, F59
- Joint connector-2
- Harness for open or short between ECM and stop lamp switch

>> Repair open circuit or short to ground or short to power in harness or connectors.

17. CHECK STOP LAMP SWITCH

Refer to EC-1190, "Component Inspection"

OK or NG

OK >> GO TO 18.
NG >> Replace stop lamp switch.

18. CHECK INTERMITTENT INCIDENT

Refer to EC-756, "TROUBLE DIAGNOSIS FOR INTERMITTENT INCIDENT" .

>> **INSPECTION END**

ASCD INDICATOR

PFP:24814

Component Description

UBS003L9

ASCD indicator lamp illuminates to indicate ASCD operation status. Lamp has two indicators, CRUISE and SET, and is integrated in combination meter.
CRUISE indicator illuminates when CRUISE switch on ASCD steering switch is turned ON to indicated that ASCD system is ready for operation.
SET indicator illuminates when following conditions are met.

- CRUISE indicator is illuminated.
- SET switch on ASCD steering switch is turned ON while vehicle speed is within the range of ASCD setting.

SET indicator remains lit during ASCD control.
Refer to EC-1286, "AUTOMATIC SPEED CONTROL DEVICE (ASCD)" for the ASCD function.

CONSULT-II Reference Value in Data Monitor Mode

UBS003LA

Specification data are reference value.

MONITOR ITEM	CONDITION		SPECIFICATION
CRUISE LAMP	● Ignition switch: ON	● CRUISE switch pressed	ON
		● CRUISE switch released	OFF
SET LAMP	● CRUISE switch: ON ● When vehicle speed is between 40 km/h (25 MPH) and 144 km/h (89 MPH)	● COAST/SET switch pressed	ON
		● COAST/SET switch released	OFF

Wiring Diagram

UBS003LB

EC-ASCIND-01

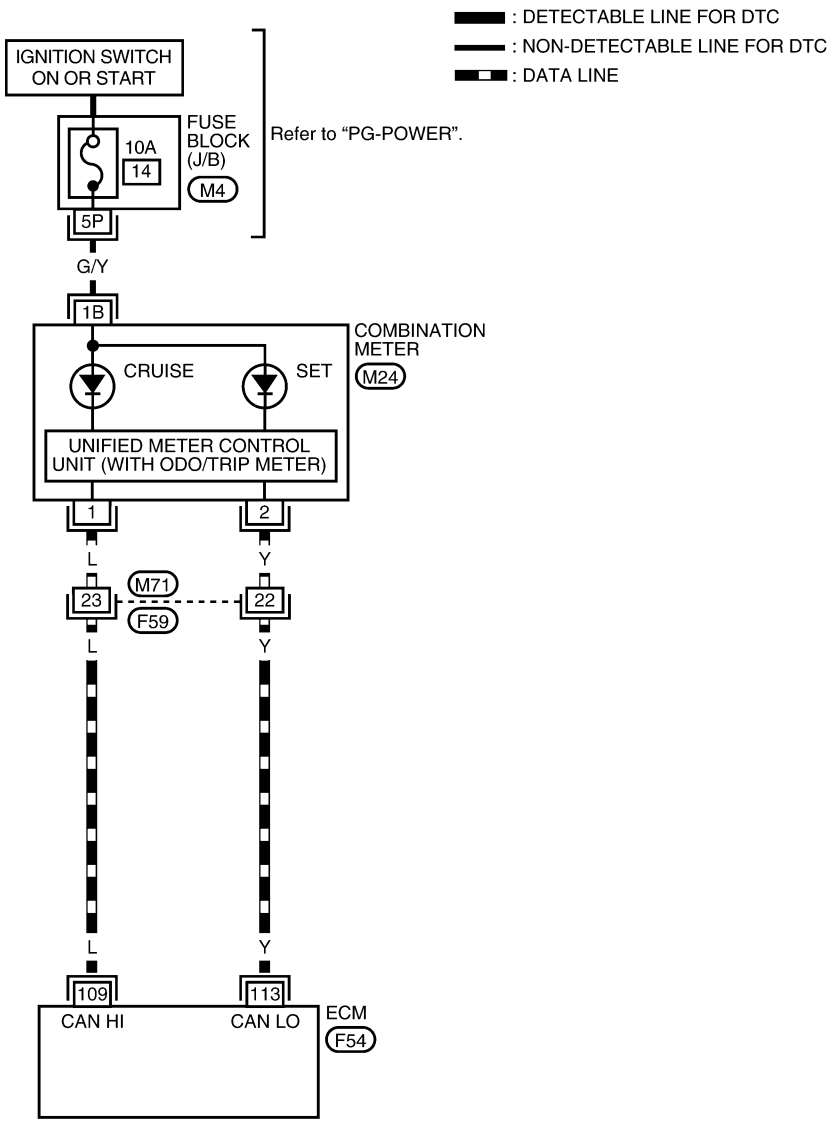

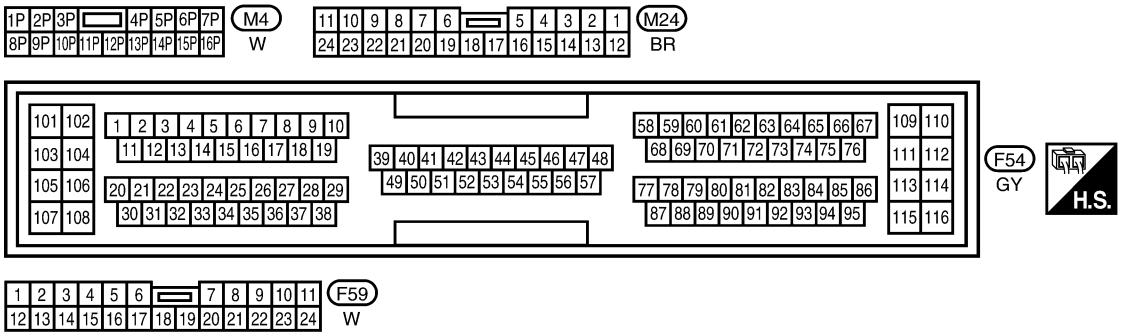

WBWA0006E

Diagnostic Procedure

UBS003LC

1. CHECK OVERALL FUNCTION

Check ASCD indicator under the following conditions.

ASCD INDICATOR	CONDITION		SPECIFICATION
CRUISE LAMP	● Ignition switch: ON	● CRUISE switch pressed	ON
		● CRUISE switch released	OFF
SET LAMP	● CRUISE switch: ON ● When vehicle speed is between 40 km/h (25 MPH) and 144 km/h (89 MPH)	● COAST/SET switch pressed	ON
		● COAST/SET switch released	OFF

OK or NG

OK >> **INSPECTION END**
NG >> GO TO 2.

2. CHECK DTC

Check that DTC U1000 or U1001is not displayed.

Yes or No

Yes >> Perform trouble diagnoses for DTC U1000, U1001, refer to EC-763, "DTC U1000, U1001 CAN COMMUNICATION LINE" .
No >> GO TO 3.

3. CHECK COMBINATION METER OPERATION

Does combination meter operate normally?

Yes or No

Yes >> GO TO 4.
No >> Check combination meter circuit. Refer to DI-4, "COMBINATION METERS" .

4. CHECK INTERMITTENT INCIDENT

Refer to EC-756, "TROUBLE DIAGNOSIS FOR INTERMITTENT INCIDENT" .

>> **INSPECTION END**

DATA LINK CONNECTOR

PFP:24814

Wiring Diagram

UBS003LD

EC-DLC-01

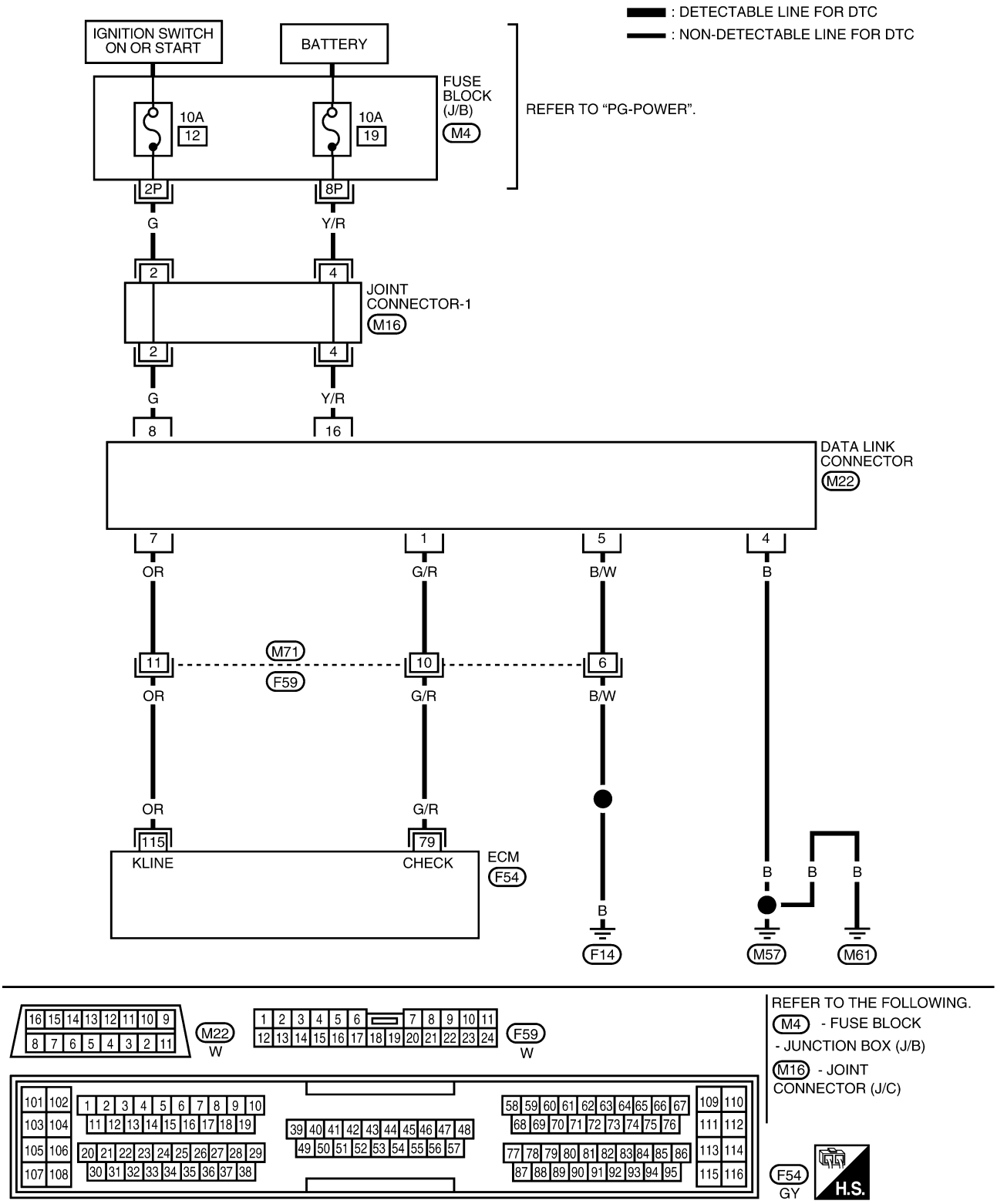

BBWA0100E

EVAPORATIVE EMISSION SYSTEM

PFP:14950

Description

UBS003LE

SYSTEM DESCRIPTION

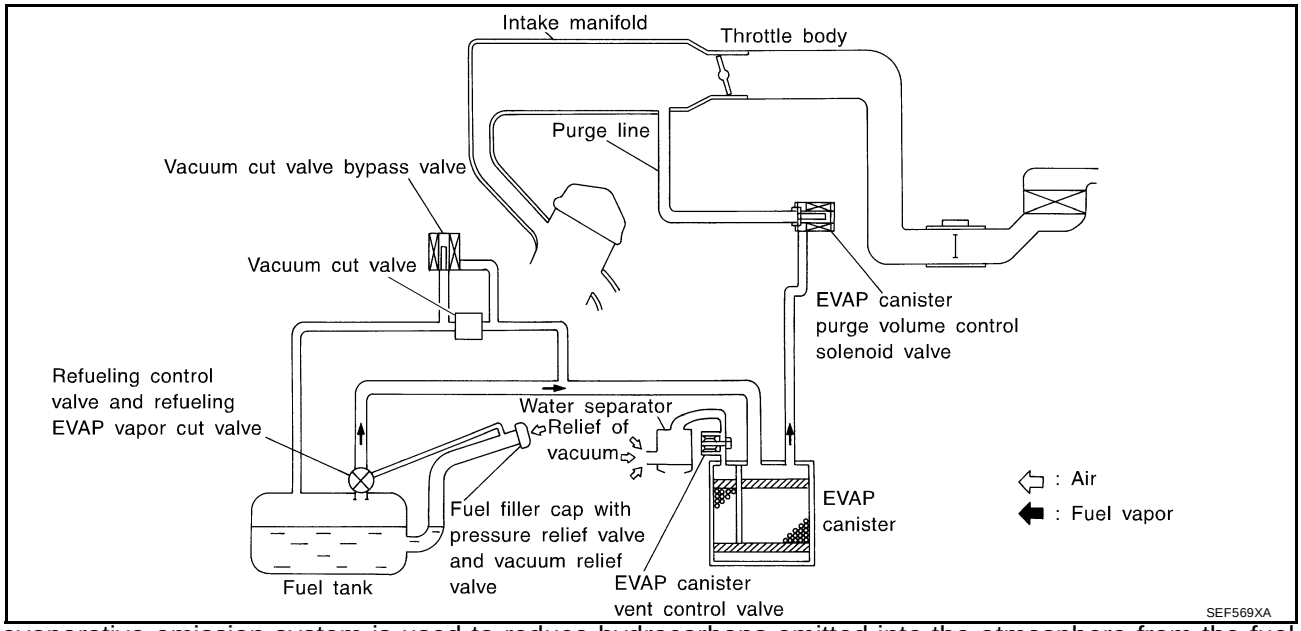

The evaporative emission system is used to reduce hydrocarbons emitted into the atmosphere from the fuel system. This reduction of hydrocarbons is accomplished by activated charcoals in the EVAP canister.

The fuel vapor in the sealed fuel tank is led into the EVAP canister which contains activated carbon and the vapor is stored there when the engine is not operating or when refueling to the fuel tank.

The vapor in the EVAP canister is purged by the air through the purge line to the intake manifold when the engine is operating. EVAP canister purge volume control solenoid valve is controlled by ECM. When the engine operates, the flow rate of vapor controlled by EVAP canister purge volume control solenoid valve is proportionally regulated as the air flow increases.

EVAP canister purge volume control solenoid valve also shuts off the vapor purge line during decelerating and idling.

EVAPORATIVE EMISSION LINE DRAWING

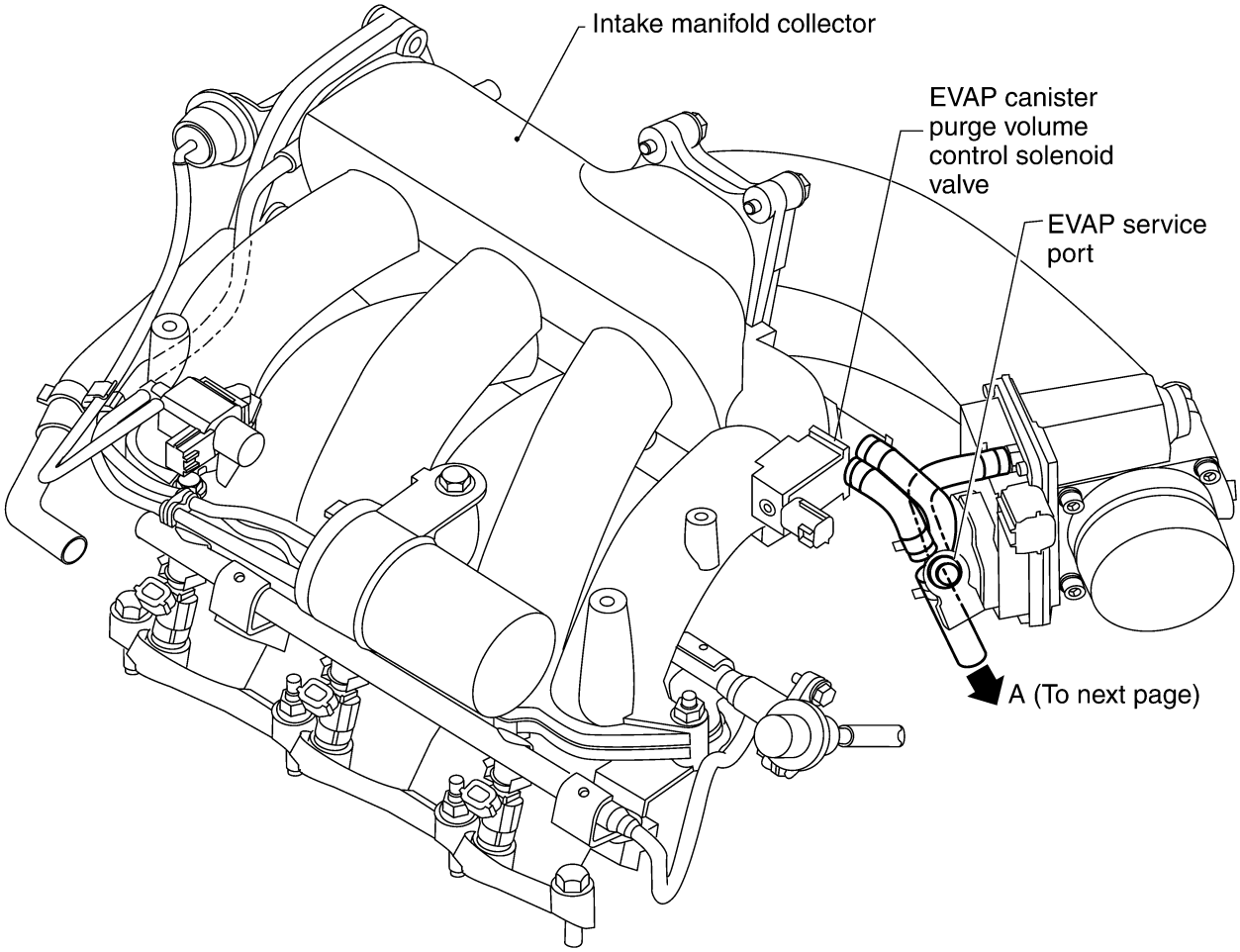

BBIA0056E

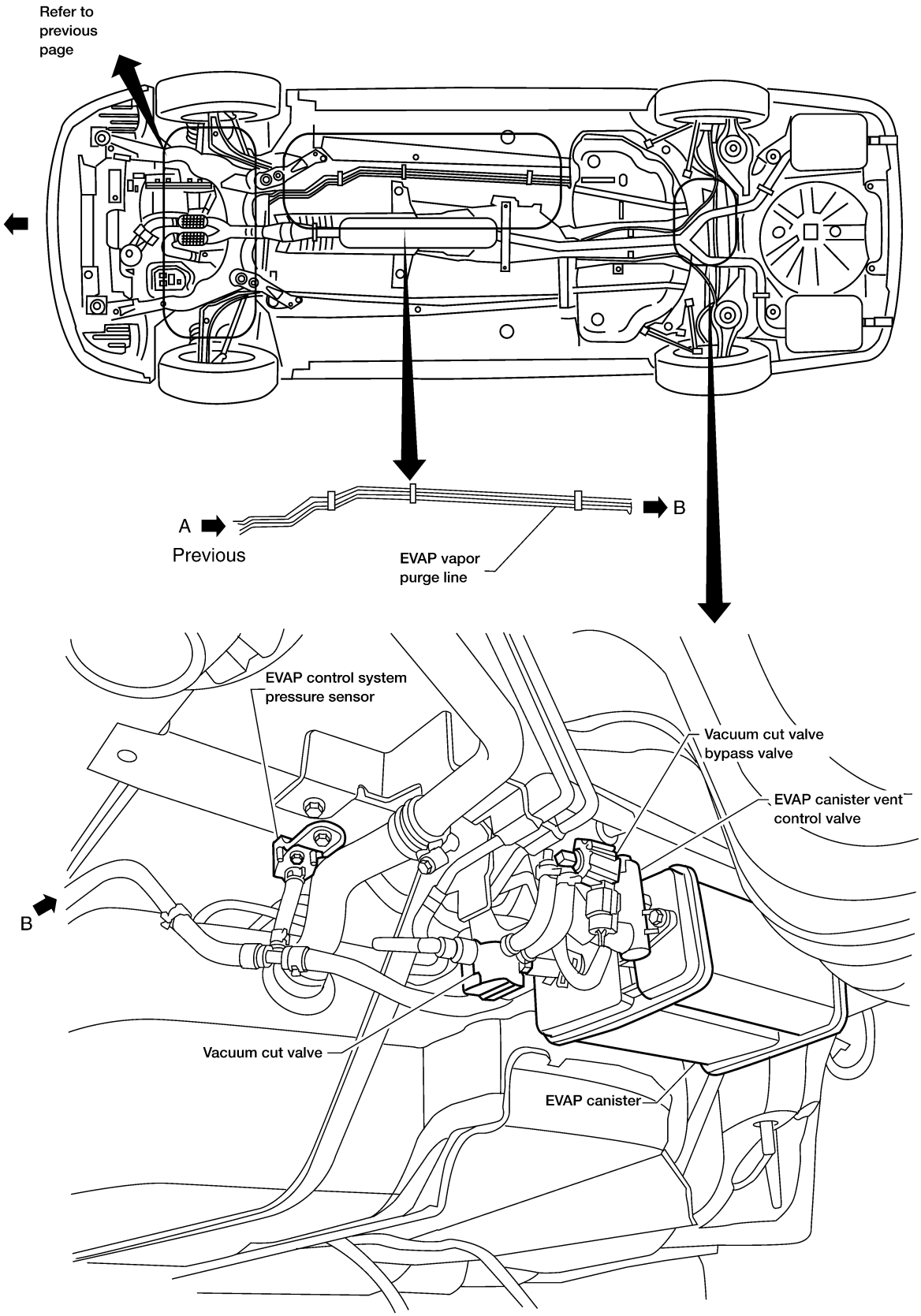
Refer to previous page
A
Previous
B
EVAP vapor purge line
EVAP control system pressure sensor
Vacuum cut valve bypass valve
EVAP canister vent control valve
B
Vacuum cut valve
EVAP canister

BBIA0057E

Component Inspection

UBS003LF

EVAP CANISTER

Check EVAP canister as follows:

1. Pinch the fresh air hose.
2. Blow air into port **A** and check that it flows freely out of port **B** .

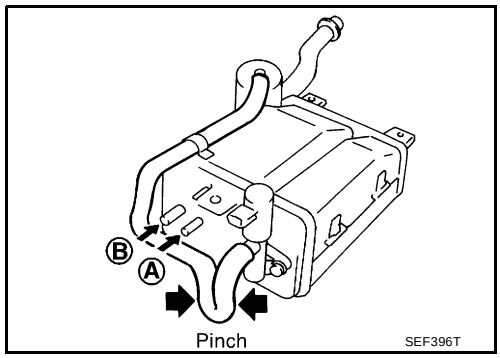

Tightening Torque

Tighten EVAP canister as shown in the figure.
Make sure new O-ring is installed properly between EVAP canister and EVAP canister vent control valve.

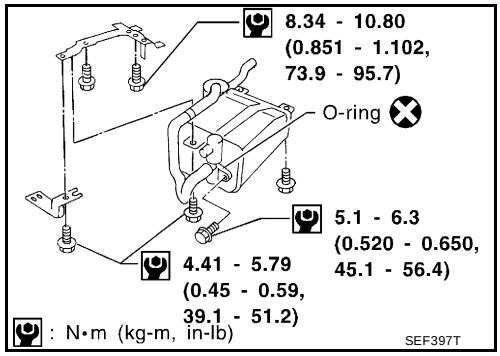

FUEL TANK VACUUM RELIEF VALVE (BUILT INTO FUEL FILLER CAP)

1. Wipe clean valve housing.

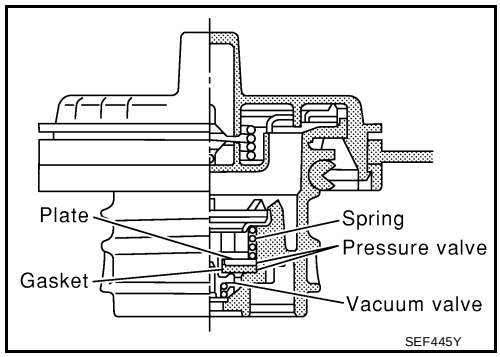

2. Check valve opening pressure and vacuum.

Pressure: **15.3 - 20.0 kPa (0.156 - 0.204 kg/cm^2 , 2.22 - 2.90 psi)**

Vacuum: **–6.0 to –3.3 kPa (–0.061 to –0.034 kg/cm^2 , –0.87 to –0.48 psi)**

3. If out of specification, replace fuel filler cap as an assembly.

CAUTION:
Use only a genuine fuel filler cap as a replacement. If an incorrect fuel filler cap is used, the MIL may come on.

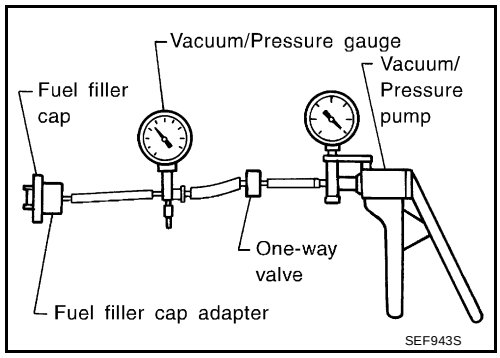

VACUUM CUT VALVE AND VACUUM CUT VALVE BYPASS VALVE

Refer to EC-1165 .

EVAP CANISTER PURGE VOLUME CONTROL SOLENOID VALVE

Refer to EC-977 .

FUEL TANK TEMPERATURE SENSOR

Refer to EC-900 .

EVAP SERVICE PORT

Positive pressure is delivered to the EVAP system through the EVAP service port. If fuel vapor leakage in the EVAP system occurs, use a leak detector to locate the leak.

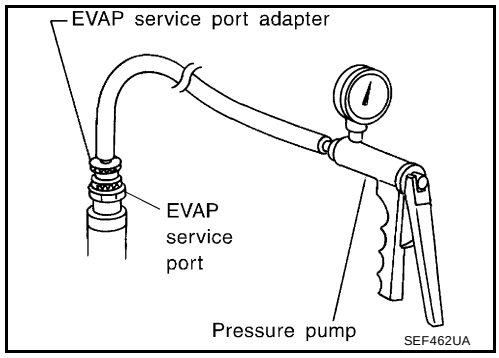

How to Detect Fuel Vapor Leakage

UBS003LG

CAUTION:

- **Never use compressed air or a high pressure pump.**
- **Do not exceed 4.12 kPa (0.042 kg/cm^2 , 0.6 psi) of pressure in EVAP system.**

NOTE:

- Do not start engine.
- Improper installation of EVAP service port adapter to the EVAP service port may cause a leak.

WITH CONSULT-II

1. Attach the EVAP service port adapter securely to the EVAP service port.
2. Also attach the pressure pump and hose to the EVAP service port adapter.
3. Turn ignition switch “ON”.
4. Select the “EVAP SYSTEM CLOSE” of “WORK SUPPORT MODE” with CONSULT-II.
5. Touch “START”. A bar graph (Pressure indicating display) will appear on the screen.

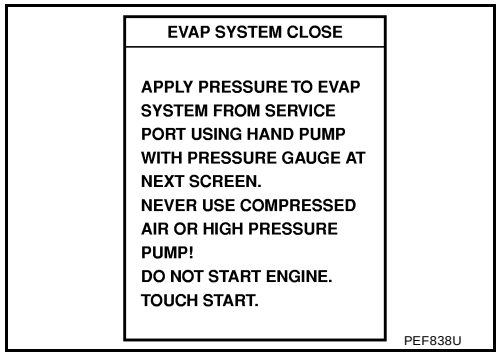

6. Apply positive pressure to the EVAP system until the pressure indicator reaches the middle of the bar graph.
7. Remove EVAP service port adapter and hose with pressure pump.

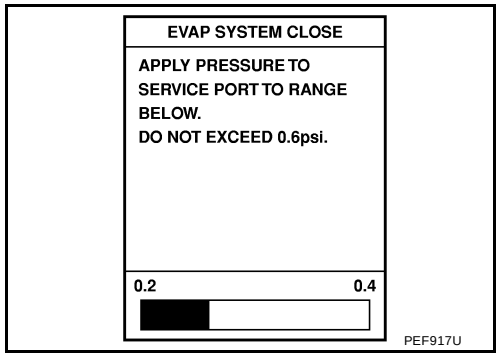

8. Locate the leak using a leak detector. Refer to EC-1273, "EVAPORATIVE EMISSION LINE DRAWING" .

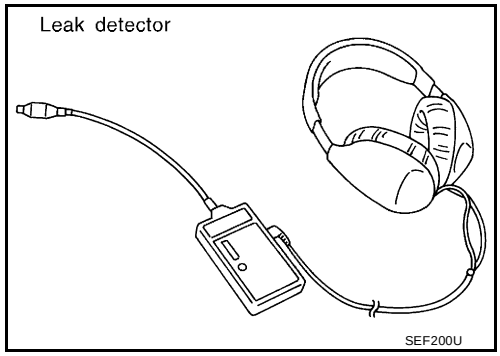

WITHOUT CONSULT-II

1. Attach the EVAP service port adapter securely to the EVAP service port.
2. Also attach the pressure pump with pressure gauge to the EVAP service port adapter.

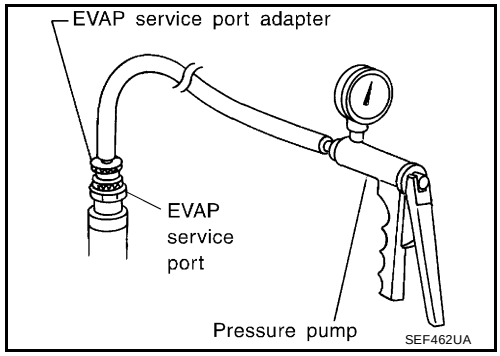

3. Apply battery voltage to between the terminals of both EVAP canister vent control valve and vacuum cut valve bypass valve to make a closed EVAP system.

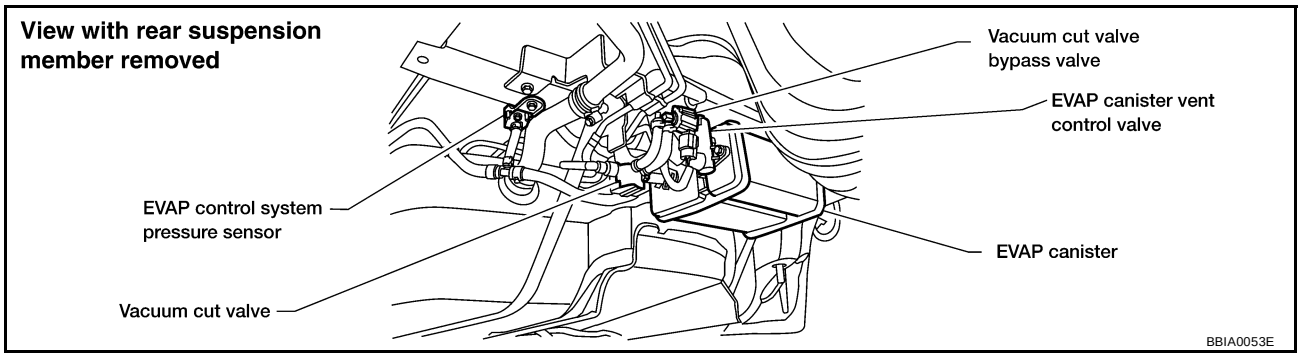

4. To locate the leak, deliver positive pressure to the EVAP system until pressure gauge points reach 1.38 to 2.76 kPa (0.014 to 0.028 kg/cm^2 , 0.2 to 0.4 psi).
5. Remove EVAP service port adapter and hose with pressure pump.
6. Locate the leak using a leak detector. Refer to EC-1273, "EVAPORATIVE EMISSION LINE DRAWING" .

ON BOARD REFUELING VAPOR RECOVERY (ORVR)

PFP:00032

System Description

UBS003LH

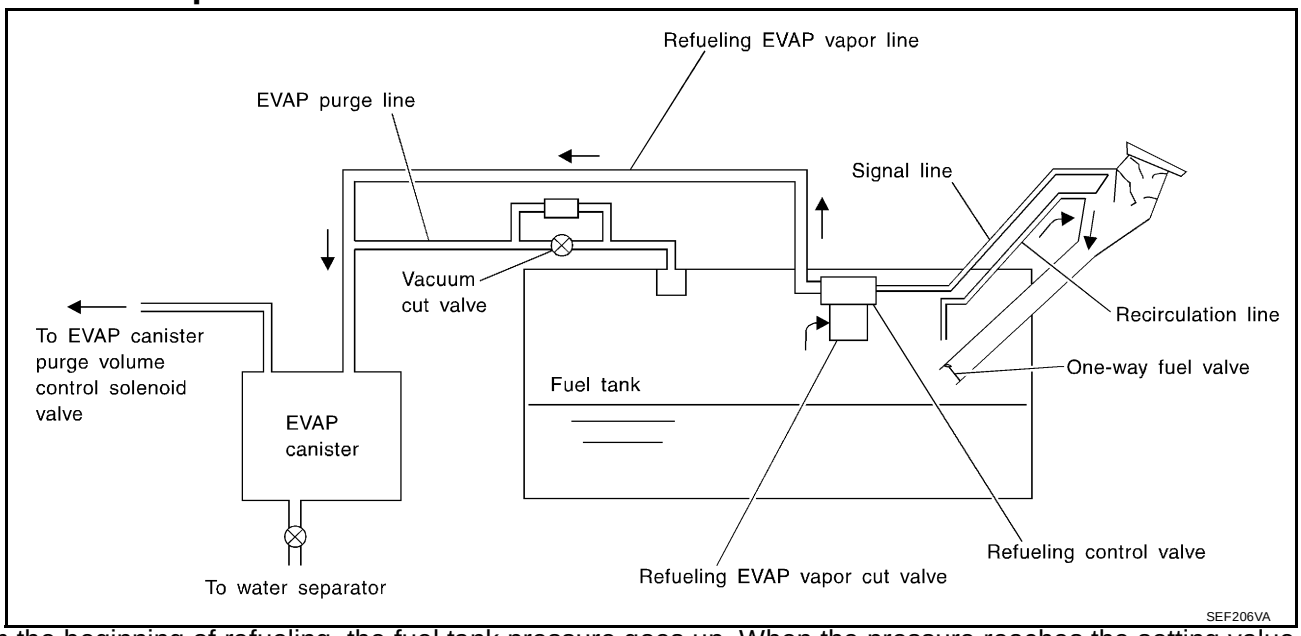

From the beginning of refueling, the fuel tank pressure goes up. When the pressure reaches the setting value of the refueling control valve (RCV) opening pressure, the RCV is opened. After RCV opens, the air and vapor inside the fuel tank go through refueling EVAP vapor cut valve, RCV and refueling vapor line to the EVAP canister. The vapor is absorbed by the EVAP canister and the air is released to the atmosphere.
When the refueling has reached the full level of the fuel tank, the refueling EVAP vapor cut valve is closed and refueling is stopped because of auto shut-off. The vapor which was absorbed by the EVAP canister is purged during driving.
The RCV is always closed during driving and the evaporative emission control system is operated the same as conventional system.

WARNING:

When conducting inspections below, be sure to observe the following:

- **Put a “CAUTION: INFLAMMABLE” sign in workshop.**
- **Do not smoke while servicing fuel system. Keep open flames and sparks away from work area.**
- **Be sure to furnish the workshop with a CO_2 fire extinguisher.**

CAUTION:

- **Before removing fuel line parts, carry out the following procedures:**
  - **Put drained fuel in an explosion-proof container and put lid on securely.**
  - **Release fuel pressure from fuel line. Refer to “Fuel Pressure Release”, EC-671 .**
  - **Disconnect battery ground cable.**
- **Always replace O-ring when the fuel gauge retainer is removed.**
- **Do not kink or twist hose and tube when they are installed.**
- **Do not tighten hose and clamps excessively to avoid damaging hoses.**
- **After installation, run engine and check for fuel leaks at connection.**
- **Do not attempt to top off the fuel tank after the fuel pump nozzle shuts off automatically. Continued refueling may cause fuel overflow, resulting in fuel spray and possibly a fire.**

Diagnostic Procedure

UBS003LI

SYMPTOM: FUEL ODOR FROM EVAP CANISTER IS STRONG.

1. CHECK EVAP CANISTER

1. Remove EVAP canister with EVAP canister vent control valve attached.
2. Weigh the EVAP canister with EVAP canister vent control valve attached.
   The weight should be less than 1.8 kg (4.0 lb).

OK or NG

OK >> GO TO 2.
NG >> GO TO 3.

2. CHECK IF EVAP CANISTER SATURATED WITH WATER

Does water drain from the EVAP canister?

Yes or No

Yes >> GO TO 3.
No >> GO TO 6.

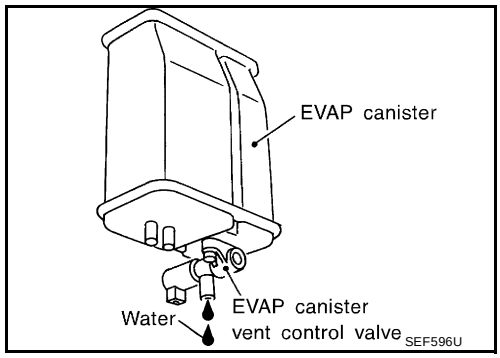

3. REPLACE EVAP CANISTER

Replace EVAP canister with a new one.

>> GO TO 4.

4. CHECK WATER SEPARATOR

Refer to EC-1281, "Component Inspection" .

OK or NG

OK >> GO TO 5.
NG >> Replace water separator.

5. DETECT MALFUNCTIONING PART

Check the EVAP hose between EVAP canister and water separator for clogging or poor connection.

>> Repair or replace EVAP hose.

6. CHECK REFUELING EVAP VAPOR CUT VALVE

Refer to EC-1281, "Component Inspection" .

OK or NG

OK >> GO TO 7.
NG >> Replace refueling EVAP vapor cut valve with fuel tank.

7. CHECK REFUELING CONTROL VALVE

Refer to EC-1281, "Component Inspection" .

OK or NG

OK >> **INSPECTION END**
NG >> Replace refueling control valve with fuel tank.

SYMPTOM: CANNOT REFUEL/FUEL ODOR FROM THE FUEL FILLER OPENING IS STRONG WHILE REFUELING.

1. CHECK EVAP CANISTER

1. Remove EVAP canister with EVAP canister vent control valve attached.
2. Weigh the EVAP canister with EVAP canister vent control valve attached.
   The weight should be less than 1.8 kg (4.0 lb).

OK or NG

OK >> GO TO 2.
NG >> GO TO 3.

2. CHECK IF EVAP CANISTER SATURATED WITH WATER

Does water drain from the EVAP canister?

Yes or No

Yes >> GO TO 3.
No >> GO TO 6.

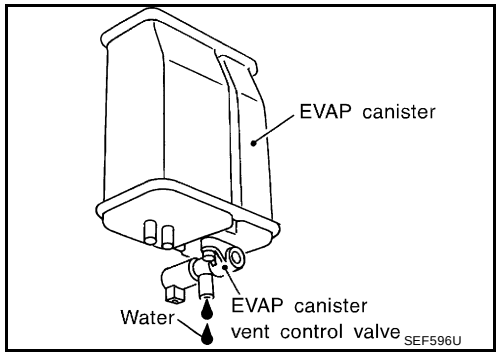

3. REPLACE EVAP CANISTER

Replace EVAP canister with a new one.

>> GO TO 4.

4. CHECK WATER SEPARATOR

Refer to EC-1281, "Component Inspection" .

OK or NG

OK >> GO TO 5.
NG >> Replace water separator.

5. DETECT MALFUNCTIONING PART

Check the EVAP hose between EVAP canister and water separator for clogging or poor connection.

>> Repair or replace EVAP hose.

6. CHECK VENT HOSES AND VENT TUBES

Check hoses and tubes between EVAP canister and refueling control valve for clogging, kink, looseness and improper connection.

OK or NG

OK >> GO TO 7.
NG >> Repair or replace hoses and tubes.

7. CHECK FILLER NECK TUBE

Check signal line and recirculation line for clogging, dents and cracks.

OK or NG

OK >> GO TO 8.
NG >> Replace filler neck tube.

8. CHECK REFUELING CONTROL VALVE

Refer to EC-1281, "Component Inspection" .

OK or NG

OK >> GO TO 9.
NG >> Replace refueling control valve with fuel tank.

9. CHECK REFUELING EVAP VAPOR CUT VALVE

Refer to EC-1281, "Component Inspection" .

OK or NG

OK >> GO TO 10.
NG >> Replace refueling EVAP vapor cut valve with fuel tank.

10. CHECK FUEL FILLER TUBE

Check filler neck tube and hose connected to the fuel tank for clogging, dents and cracks.

OK or NG

OK >> GO TO 11.
NG >> Replace fuel filler tube.

11. CHECK ONE-WAY FUEL VALVE-I

Check one-way valve for clogging.

OK or NG

OK >> GO TO 12.
NG >> Repair or replace one-way fuel valve with fuel tank.

12. CHECK ONE-WAY FUEL VALVE-II

1. Make sure that fuel is drained from the tank.
2. Remove fuel filler tube and hose.
3. Check one-way fuel valve for operation as follows.
   When a stick is inserted, the valve should open, when removing stick it should close.
   Do not drop any material into the tank.

OK or NG

OK >> **INSPECTION END**
NG >> Replace fuel filler tube or replace one-way fuel valve with fuel tank.

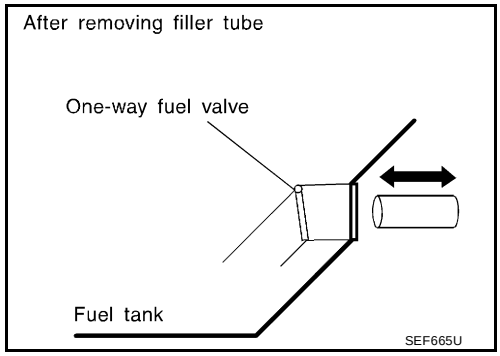

Component Inspection

UBS003LJ

WATER SEPARATOR

1. Check visually for insect nests in the water separator air inlet.
2. Check visually for cracks or flaws in the appearance.
3. Check visually for cracks or flaws in the hose.

4. Check that **A** and **C** are not clogged by blowing air into **B** with **A** , and then **C** plugged.
5. In case of NG in items 2 - 4, replace the parts.

NOTE:
- Do not disassemble water separator.

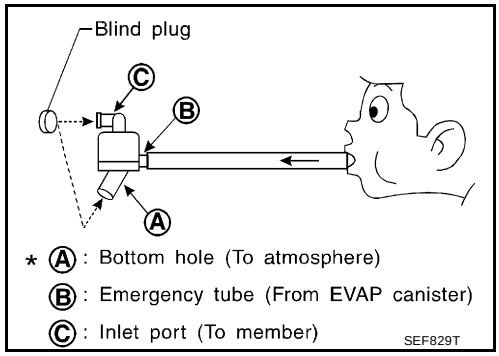

REFUELING EVAP VAPOR CUT VALVE

With CONSULT-II

1. Remove fuel tank. Refer to FL-8, "FUEL TANK" .
2. Drain fuel from the tank as follows:

a. Remove fuel feed hose located on the fuel gauge retainer.

b. Connect a spare fuel hose, one side to fuel gauge retainer where the hose was removed and the other side to a fuel container.

c. Drain fuel using “FUEL PUMP RELAY” in “ACTIVE TEST” mode with CONSULT-II.

3. Check refueling EVAP vapor cut valve for being stuck to close as follows.
Blow air into the refueling EVAP vapor cut valve (from hose end B), and check that the air flows freely into the tank.
4. Check EVAP vapor cut valve for being stuck to open as follows.

a. Connect vacuum pump to hose ends A and B using a suitable 3-way connector.

b. Remove fuel gauge retainer with fuel gauge unit.
Always replace O-ring with new one.

c. Put fuel tank upside down.

d. Apply vacuum pressure to both hose ends A and B [–13.3 kPa (–100 mmHg, –3.94 inHg)] with fuel gauge retainer remaining open and check that the pressure is applicable.

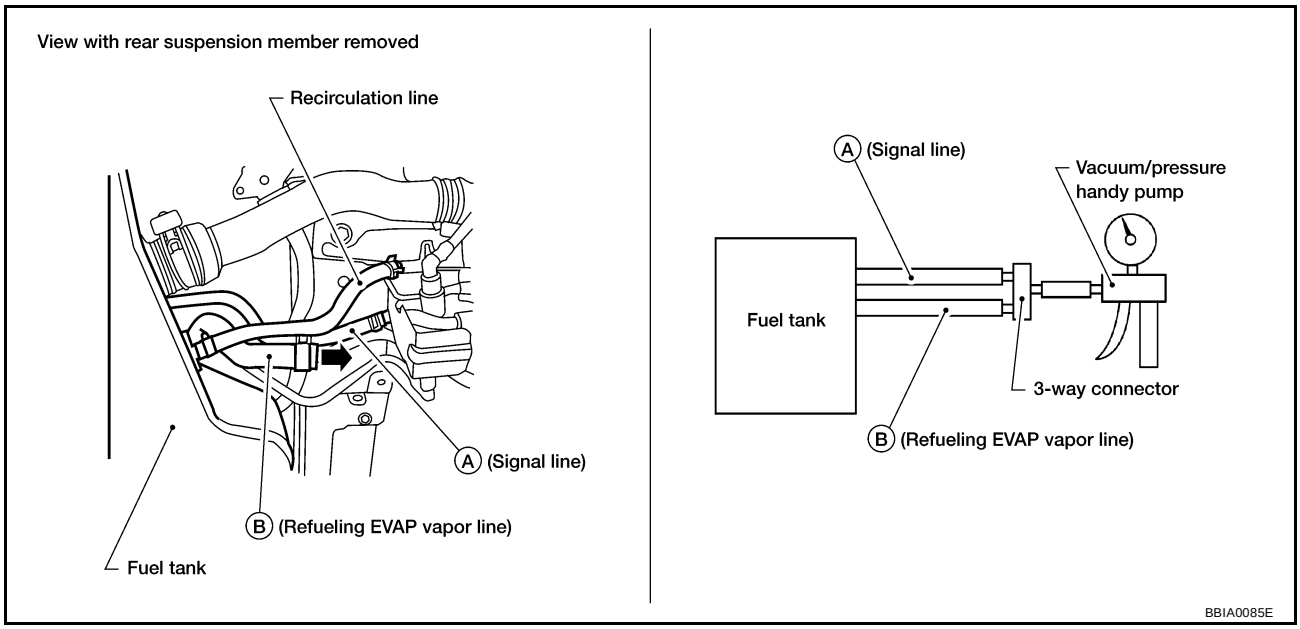

With GST

1. Remove fuel tank. Refer to FL-8, "FUEL TANK" .
2. Drain fuel from the tank as follows:

a. Remove fuel gauge retainer.

b. Drain fuel from the tank using a hand pump into a fuel container.

3. Check refueling EVAP vapor cut valve for being stuck to close as follows.

Blow air into the refueling EVAP vapor cut valve (from hose end B), and check that the air flows freely into the tank.

4. Check EVAP vapor cut valve for being stuck to open as follows.

a. Connect vacuum pump to hose ends A and B using a suitable 3-way connector.

b. Remove fuel gauge retainer with fuel gauge unit.
Always replace O-ring with new one.

c. Put fuel tank upside down.

d. Apply vacuum pressure to both hose ends A and B [–13.3 kPa (–100 mmHg, –3.94 inHg)] with fuel gauge retainer remaining open and check that the pressure is applicable.

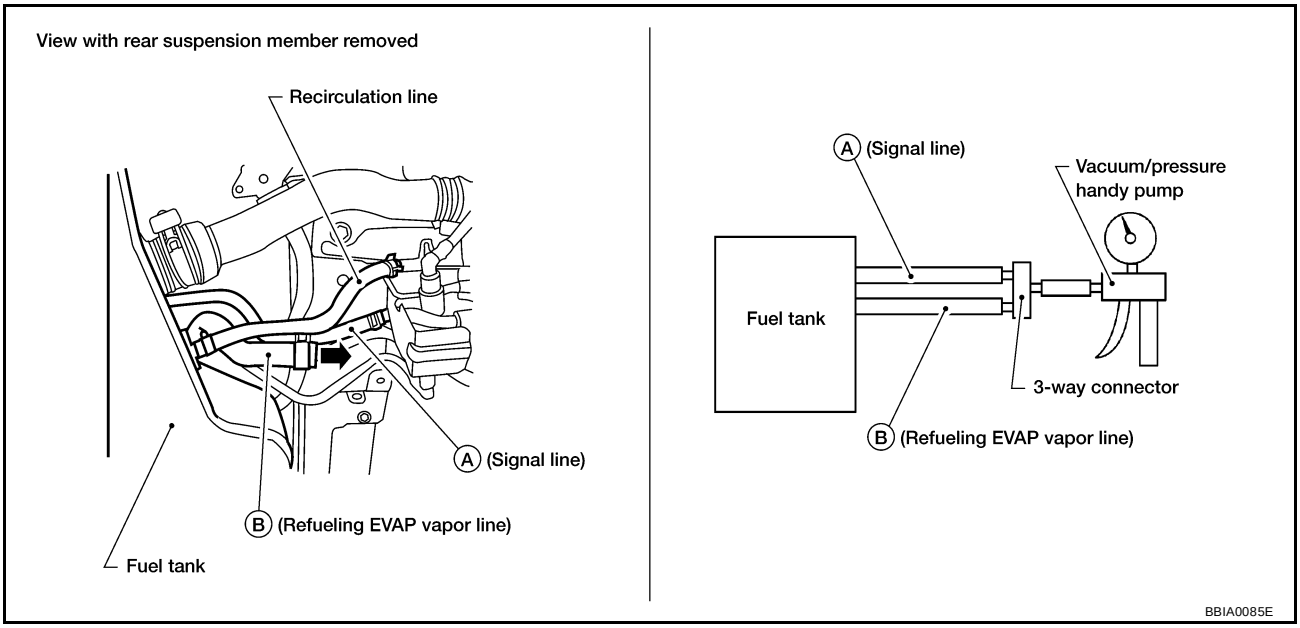

REFUELING CONTROL VALVE

1. Remove fuel filler cap.
2. Check air continuity between hose ends A and B.
Blow air into the hose end B. Air should flow freely into the fuel tank.
3. Blow air into hose end A and check there is no leakage.
4. Apply pressure to both hose ends A and B [20 kPa (150 mmHg, 5.91 inHg)] using a pressure pump and a suitable 3-way connector. Check that there is no leakage.

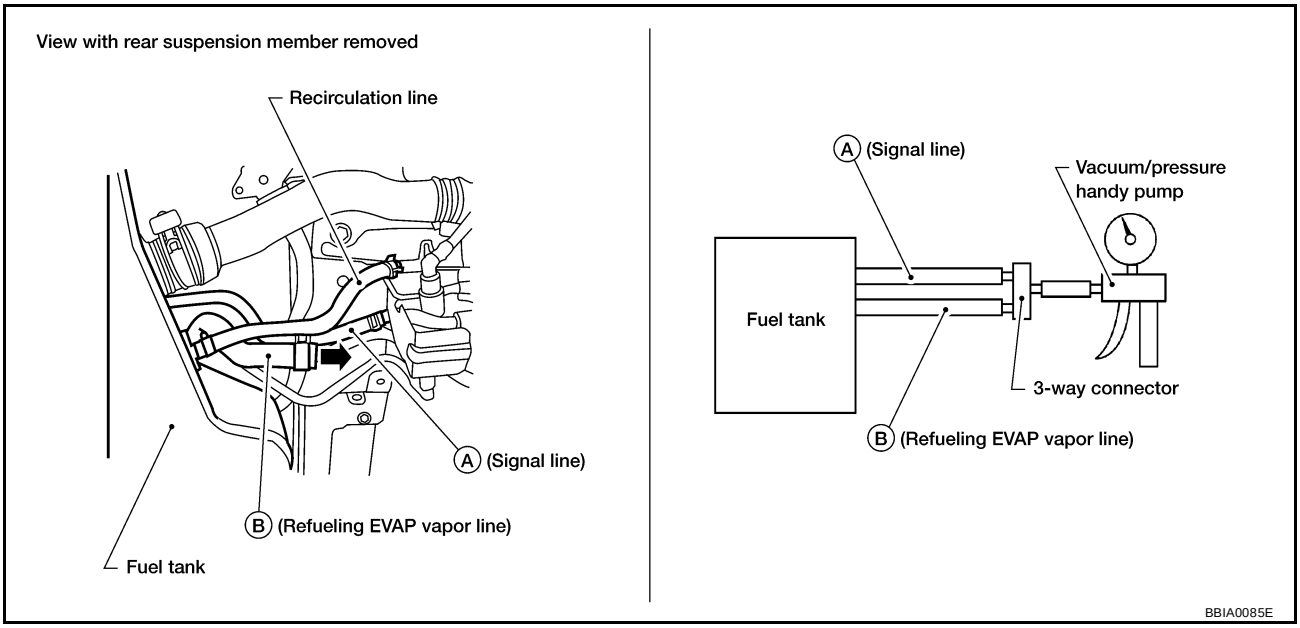

POSITIVE CRANKCASE VENTILATION

PFP:11810

Description

UBS003LK

SYSTEM DESCRIPTION

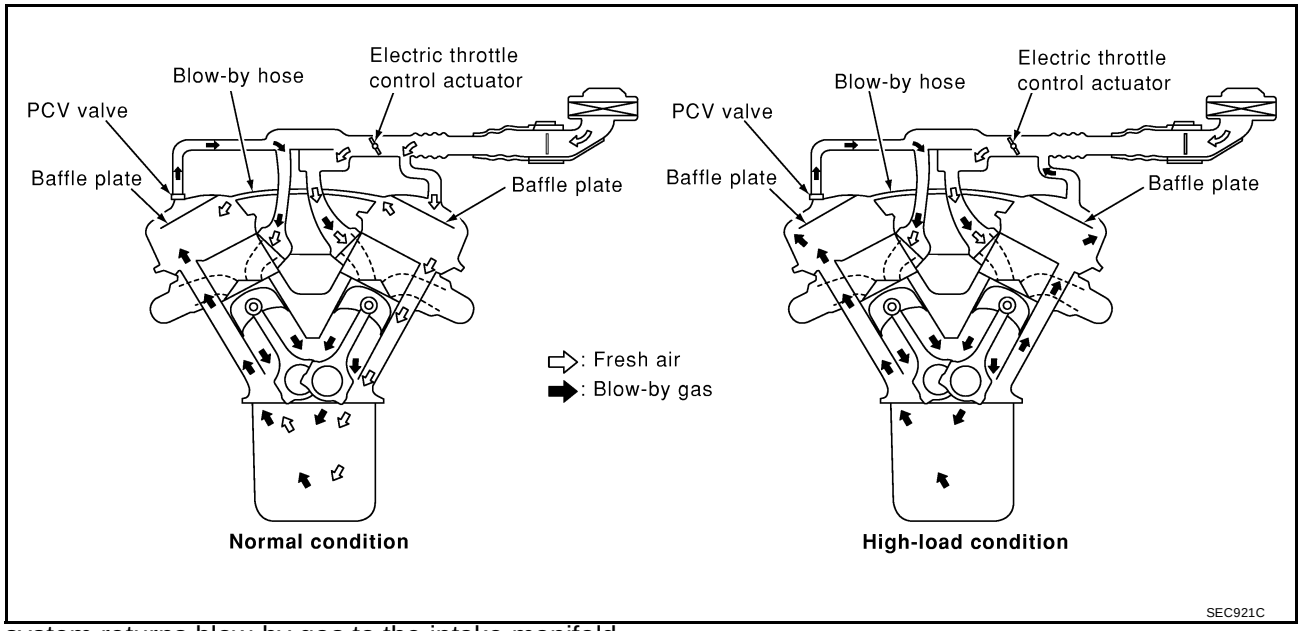

This system returns blow-by gas to the intake manifold.

The positive crankcase ventilation (PCV) valve is provided to conduct crankcase blow-by gas to the intake manifold. During partial throttle operation of the engine, the intake manifold sucks the blow-by gas through the PCV valve. Normally, the capacity of the valve is sufficient to handle any blow-by and a small amount of ventilating air. The ventilating air is then drawn from the air inlet tubes into the crankcase. In this process the air passes through the hose connecting air inlet tubes to rocker cover. Under full-throttle condition, the manifold vacuum is insufficient to draw the blow-by flow through the valve. The flow goes through the hose connection in the reverse direction.

On vehicles with an excessively high blow-by, the valve does not meet the requirement. This is because some of the flow will go through the hose connection to the air inlet tubes under all conditions.

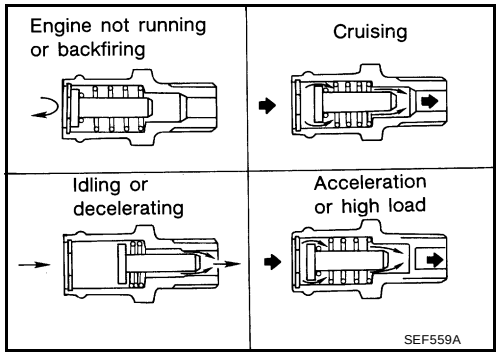

Component Inspection

UBS003LL

PCV (POSITIVE CRANKCASE VENTILATION) VALVE

With engine running at idle, remove PCV valve from rocker cover. A properly working valve makes a hissing noise as air passes through it. A strong vacuum should be felt immediately when a finger is placed over valve inlet.

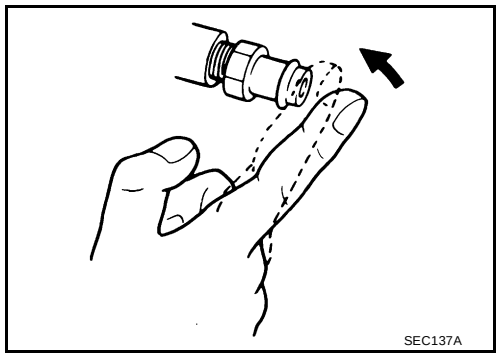

PCV VALVE VENTILATION HOSE

1. Check hoses and hose connections for leaks.
2. Disconnect all hoses and clean with compressed air. If any hose cannot be freed of obstructions, replace.

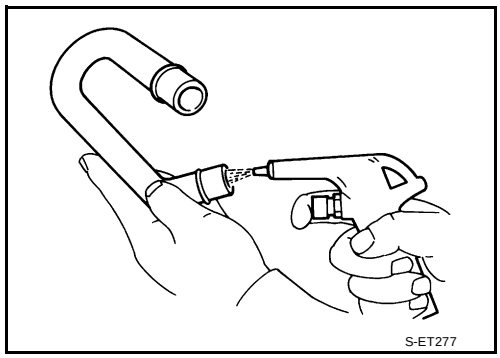

AUTOMATIC SPEED CONTROL DEVICE (ASCD)

PFP:18930

System Description

UBS003LM

INPUT/OUTPUT SIGNAL CHART

Sensor	Input signal to ECM	ECM function	Actuator
ASCD brake switch	Brake pedal operation	ASCD vehicle speed control	Electric throttle control actuator
Stop lamp switch	Brake pedal operation		
ASCD clutch switch (M/T models)	Clutch pedal operation		
ASCD steering switch	ASCD steering switch operation		
Park/Neutral position (PNP) switch (A/T models)	Gear position		
Combination meter	Vehicle speed		
TCM	Powertrain revolution		

BASIC ASCD SYSTEM

Refer to Owner's Manual for ASCD operating instructions.
Automatic Speed Control Device (ASCD) allows a driver to keep vehicle at predetermined constant speed without depressing accelerator pedal. Driver can set vehicle speed in advance between approximately 40 km/h (25 MPH) and 144 km/h (89 MPH).
ECM controls throttle angle of electric throttle control actuator to regulate engine speed.
Operation status of ASCD is indicated by CRUISE indicator and SET indicator in combination meter. If any malfunction occurs in ASCD system, it automatically deactivates control.

SET OPERATION

Press ASCD CRUISE switch (Main switch). (The CRUISE indicator in combination meter illuminates.)
When vehicle speed reaches a desired speed between approximately 40 km/h (25 MPH) and 144 km/h (89 MPH), press SET switch. (Then SET indicator in combination meter illuminates.)

ACCEL OPERATION

If the RESUME/ACCEL switch is depressed during cruise control driving, increase the vehicle speed until the switch is released or vehicle speed reaches maximum speed controlled by the system.
And then ASCD will keep the new set speed.

CANCEL OPERATION

When any of following conditions exist, cruise operation will be canceled.

- CANCEL switch is depressed
- Brake pedal is depressed
- Clutch pedal is depressed (M/T models)

If MAIN switch is turned to OFF during ASCD is activated, all of ASCD operations will be canceled and vehicle speed memory will be erased.

COAST OPERATION

When the SET/COAST switch is depressed during cruise control driving, decrease vehicle set speed until the switch is released. And then ASCD will keep the new set speed.

RESUME OPERATION

When the RESUME/ACCEL switch is depressed after cancel operation other than depressing MAIN switch is performed, vehicle speed will return to last set speed. To resume vehicle set speed, vehicle condition must meet following conditions.

- Brake pedal is released.
- Clutch pedal is released (M/T models)
- A/T selector lever is in other than P and N position (A/T models)
- Vehicle speed is greater than 40 km/h (25 MPH) and less than 144 km/h (89 MPH)

Component Description

UBS003LN

ASCD STEERING SWITCH

Refer to EC-1174 .

ASCD BRAKE SWITCH

Refer to EC-1181 , and EC-1258 .

ASCD CLUTCH SWITCH

Refer to EC-1181 and EC-1258 .

STOP LAMP SWITCH

Refer to EC-1181 , EC-1205 and EC-1258 .

ELECTRIC THROTTLE CONTROL ACTUATOR

Refer to EC-1047 , EC-1049 , EC-1056 and EC-1061 .

ASCD INDICATOR

Refer to EC-1268 .

SERVICE DATA AND SPECIFICATIONS (SDS)

PFP:00030

Fuel Pressure

UBS003LO

Fuel pressure at idling kPa (kg/cm^2 , psi)	Approximately 350 (3.7, 51)

Idle Speed and Ignition Timing

UBS003LP

Target idle speed	No-load*1 (in “P” or N” position)	700±50 rpm
Air conditioner: ON	In “P” or N” position	825 rpm or more
Ignition timing	In “P” or N” position	15° ± 5° BTDC

*1: Under the following conditions:

- Air conditioner switch: OFF
- Electric load: OFF (Lights, heater fan & rear window defogger)
- Steering wheel: Kept in straight-ahead position

Calculated Load Value

UBS003LQ

	Calculated load value % (Using CONSULT-II or GST)
At idle	10 - 35
At 2,500 rpm	10 - 35

Mass Air Flow Sensor

UBS003LR

Supply voltage	Battery voltage (11 - 14V)
Output voltage at idle	1.1 - 1.5*V
Mass air flow (Using CONSULT-II or GST)	2.0 - 6.0 g·m/sec at idle* 7.0 - 20.0 g·m/sec at 2,500 rpm*

*: Engine is warmed up to normal operating temperature and running under no-load.

Intake Air Temperature Sensor

UBS003LS

Temperature °C (°F)	Resistance kΩ
25 (77)	1.9 - 2.1
80 (176)	0.31 - 0.37

Engine Coolant Temperature Sensor

UBS003LT

Temperature °C (°F)	Resistance kΩ
20 (68)	2.1 - 2.9
50 (122)	0.68 - 1.00
90 (194)	0.236 - 0.260

Heated Oxygen Sensor 1 Heater

UBS003LU

Resistance [at 25°C (77°F)]	2.3 - 4.3Ω

Heated Oxygen sensor 2 Heater

UBS003LV

Resistance [at 25°C (77°F)]	2.3 - 4.3Ω

Crankshaft Position Sensor (POS)

UBS003LW

Refer to EC-943, "Component Inspection" .

Camshaft Position Sensor (PHASE)

UBS003LX

Refer to EC-951, "Component Inspection" .

Throttle Control Motor

UBS003LY

Resistance [at 25°C (77°F)]	Approximately 1 - 15Ω

Injector

UBS003LZ

Resistance [at 20°C (68°F)]	13.5 - 17.5Ω

Fuel Pump

UBS003M0

Resistance [at 25°C (77°F)]	Approximately 1.0Ω

SECTION EI
EXTERIOR & INTERIOR

CONTENTS

PRECAUTIONS 2
Precautions for Supplemental Restraint System (SRS) “AIR BAG” and “SEAT BELT PRE-TENSIONER” 2
Precautions 2
PREPARATION 3
Special Service Tools 3
Commercial Service Tools 3
SQUEAK AND RATTLE TROUBLE DIAGNOSIS 4
Work Flow 4
CUSTOMER INTERVIEW 4
DUPLICATE THE NOISE AND TEST DRIVE 5
CHECK RELATED SERVICE BULLETINS 5
LOCATE THE NOISE AND IDENTIFY THE ROOT CAUSE 5
REPAIR THE CAUSE 5
CONFIRM THE REPAIR 6
Generic Squeak and Rattle Troubleshooting 6
INSTRUMENT PANEL 6
CENTER CONSOLE 6
DOORS 6
TRUNK 7
SUNROOF/HEADLINER 7
SEATS 7
UNDERHOOD 7
Diagnostic Worksheet 8
CLIP AND FASTENER 10
Description 10
FRONT BUMPER 13
Removal and Installation 13
REAR BUMPER 15
Removal and Installation 15
FRONT GRILLE 17
Removal and Installation 17
COWL TOP 18
Removal and Installation 18
FRONT FENDER 19
Removal and Installation 19
FENDER PROTECTOR 20
Removal and Installation 20
MUDGUARD 21
Removal and Installation 21
LICENSE LAMP FINISHER 22
Removal and Installation 22
DRIP MOLDING 23
Removal and Installation 23
ROOF SIDE MOLDING 24
Removal and Installation 24
DOOR OUTSIDE MOLDING 25
Removal and Installation 25
FRONT DOOR OUTSIDE MOLDING 25
REAR DOOR OUTSIDE MOLDING 25
SIDE GUARD MOLDING 26
Removal and Installation 26
REMOVAL 26
INSTALLATION 26
DOOR FINISHER 27
Removal and Installation 27
FRONT DOOR 27
REAR DOOR 28
BODY SIDE TRIM 29
Removal and Installation 29
CENTER PILLAR LOWER GARNISH 30
CENTER PILLAR UPPER GARNISH 30
REAR PILLAR FINISHER 30
DASH SIDE FINISHER 30
REAR PARCEL SHELF FINISHER 31
Removal and Installation 31
FLOOR TRIM 32
Removal and Installation 32
HEADLINING 33
Removal and Installation 33
TRUNK ROOM TRIM & TRUNK LID FINISHER 35
Removal and Installation 35

PRECAUTIONS

PFP:00001

Precautions for Supplemental Restraint System (SRS) “AIR BAG” and “SEAT BELT PRE-TENSIONER”

EIS000TX

The Supplemental Restraint System such as “AIR BAG” and “SEAT BELT PRE-TENSIONER”, used along with a front seat belt, helps to reduce the risk or severity of injury to the driver and front passenger for certain types of collision. Information necessary to service the system safely is included in the SRS and SB section of this Service Manual.

WARNING:

- **To avoid rendering the SRS inoperative, which could increase the risk of personal injury or death in the event of a collision which would result in air bag inflation, all maintenance must be performed by an authorized NISSAN/INFINITI dealer.**
- **Improper maintenance, including incorrect removal and installation of the SRS, can lead to personal injury caused by unintentional activation of the system. For removal of Spiral Cable and Air Bag Module, see the SRS section.**
- **Do not use electrical test equipment on any circuit related to the SRS unless instructed to in this Service Manual. SRS wiring harnesses can be identified by yellow and/or orange harness connectors.**

Precautions

EIS000TY

- When removing or disassembling any part, be careful not to damage or deform it. Protect parts which may get in the way with cloth.
- When removing parts with a screwdriver or other tool, protect parts by wrapping them with vinyl or tape.
- Keep removed parts protected with cloth.
- If a clip is deformed or damaged, replace it.
- If an unreusable part is removed, replace it with a new one.
- Tighten bolts and nuts firmly to the specified torque.
- After re-assembly has been completed, make sure each part functions correctly.
- Remove stains in the following way.
  - Water-soluble stains:
    Dip a cloth in warm water, and squeeze tightly. After wiping the stain, wipe with a soft dry cloth.
  - Oil stain:
    Dissolve a synthetic detergent in warm water (density of 2 to 3% or less), dip the cloth, then clean off the stain with the cloth. Next, dip the soft cloth in fresh water, and then squeeze it tightly. Then clean off the detergent completely. Then wipe the area with a soft dry cloth.
- Do not use any organic solvent, such as thinner or benzine.

PREPARATION

PFP:00002

Special Service Tools

EIS000TZ

The actual shapes of Kent-Moore tools may differ from those of special service tools illustrated here.

Tool number (Kent-Moore No.) Tool name	Description
— (J-39570) Chassis ear 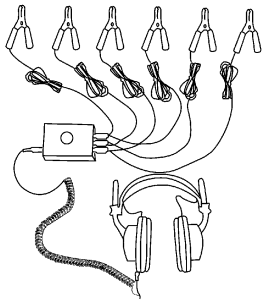 SBT839	Locating the noise
— (J-43980) NISSAN Squeak and Rattle kit 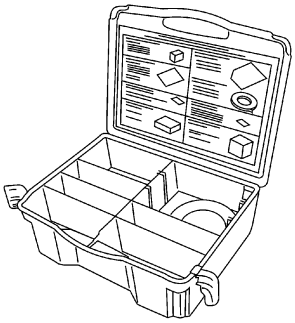 SBT840	Repairing the cause of noise

Commercial Service Tools

EIS000U0

Tool name	Description
Engine ear 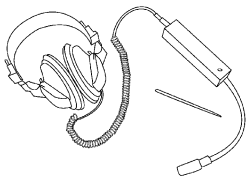 SIIA0995E	Locating the noise

SQUEAK AND RATTLE TROUBLE DIAGNOSIS

PFP:00000

Work Flow

EIS000U1

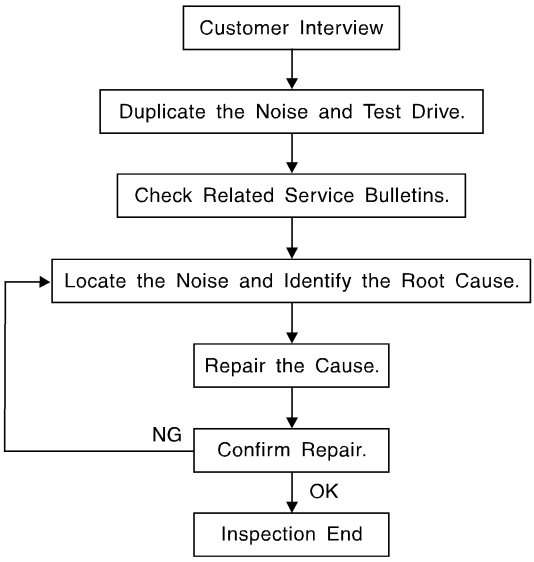

SBT842

CUSTOMER INTERVIEW

Interview the customer, if possible, to determine the conditions that exist when the noise occurs. Use the Diagnostic Worksheet during the interview to document the facts and conditions when the noise occurs and any customer's comments; refer to EI-8, "Diagnostic Worksheet" . This information is necessary to duplicate the conditions that exist when the noise occurs.

- The customer may not be able to provide a detailed description or the location of the noise. Attempt to obtain all the facts and conditions that exist when the noise occurs (or does not occur).
- If there is more than one noise in the vehicle, be sure to diagnose and repair the noise that the customer is concerned about. This can be accomplished by test driving the vehicle with the customer.
- After identifying the type of noise, isolate the noise in terms of its characteristics. The noise characteristics are provided so the customer, service adviser and technician are all speaking the same language when defining the noise.
  - Squeak — (Like tennis shoes on a clean floor)
    Squeak characteristics include the light contact/fast movement/brought on by road conditions/hard surfaces = higher pitch noise/softer surfaces = lower pitch noises/edge to surface = chirping
  - Creak — (Like walking on an old wooden floor)
    Creak characteristics include firm contact/slow movement/twisting with a rotational movement/pitch dependent on materials/often brought on by activity.
  - Rattle — (Like shaking a baby rattle)
    Rattle characteristics include the fast repeated contact/vibration or similar movement/loose parts/missing clip or fastener/incorrect clearance.
  - Knock — (Like a knock on a door)
    Knock characteristics include hollow sounding/sometimes repeating/often brought on by driver action.
  - Tick — (Like a clock second hand)
    Tick characteristics include gentle contacting of light materials/loose components/can be caused by driver action or road conditions.
  - Thump — (Heavy, muffled knock noise)
    Thump characteristics include softer knock/dead sound often brought on by activity.
  - Buzz — (Like a bumblebee)
    Buzz characteristics include high frequency rattle/firm contact.
- Often the degree of acceptable noise level will vary depending upon the person. A noise that you may judge as acceptable may be very irritating to the customer.
- Weather conditions, especially humidity and temperature, may have a great effect on noise level.

DUPLICATE THE NOISE AND TEST DRIVE

If possible, drive the vehicle with the customer until the noise is duplicated. Note any additional information on the Diagnostic Worksheet regarding the conditions or location of the noise. This information can be used to duplicate the same conditions when you confirm the repair.
If the noise can be duplicated easily during the test drive, to help identify the source of the noise, try to duplicate the noise with the vehicle stopped by doing one or all of the following:

- Close a door.
- Tap or push/pull around the area where the noise appears to be coming from.
- Rev the engine.
- Use a floor jack to recreate vehicle “twist”.
- At idle, apply engine load (electrical load, half-clutch on M/T model, drive position on A/T model).
- Raise the vehicle on a hoist and hit a tire with a rubber hammer.
- Drive the vehicle and attempt to duplicate the conditions the customer states exist when the noise occurs.
- If it is difficult to duplicate the noise, drive the vehicle slowly on an undulating or rough road to stress the vehicle body.

CHECK RELATED SERVICE BULLETINS

After verifying the customer concern or symptom, check ASIST for Technical Service Bulletins (TSBs) related to that concern or symptom.
If a TSB relates to the symptom, follow the procedure to repair the noise.

LOCATE THE NOISE AND IDENTIFY THE ROOT CAUSE

1. Narrow down the noise to a general area. To help pinpoint the source of the noise, use a listening tool (Chassis Ear: J39570, Engine Ear and mechanics stethoscope).
2. Narrow down the noise to a more specific area and identify the cause of the noise by:
   - Removing the components in the area that you suspect the noise is coming from.
     Do not use too much force when removing clips and fasteners, otherwise clips and fasteners can be broken or lost during the repair, resulting in the creation of new noise.
   - Tapping or pushing/pulling the component that you suspect is causing the noise.
     Do not tap or push/pull the component with excessive force, otherwise the noise will be eliminated only temporarily.
   - Feeling for a vibration with your hand by touching the component(s) that you suspect is (are) causing the noise.
   - Placing a piece of paper between components that you suspect are causing the noise.
   - Looking for loose components and contact marks.

   Refer to EI-6, "Generic Squeak and Rattle Troubleshooting" .

REPAIR THE CAUSE

- If the cause is a loose component, tighten the component securely.
- If the cause is insufficient clearance between components:

– Separate components by repositioning or loosening and retightening the component, if possible.
– Insulate components with a suitable insulator such as urethane pads, foam blocks, felt cloth tape or urethane tape. A NISSAN Squeak and Rattle Kit (J-43980) is available through your authorized NISSAN Parts Department.

CAUTION:
Do not use excessive force as many components are constructed of plastic and may be damaged. Always check with the Parts Department for the latest parts information.

The following materials are contained in the NISSAN Squeak and Rattle Kit (J-43980). Each item can be ordered separately as needed.
URETHANE PADS [1.5 mm (0.059 in) thick]
Insulates connectors, harness, etc.
76268-9E005: 100 x 135 mm (3.94 x 5.31 in)/76884-71L01: 60 x 85 mm (2.36 x 3.35 in)/76884-71L02: 15 x 25 mm (0.59 x 0.98 in)
INSULATOR (Foam blocks)
Insulates components from contact. Can be used to fill space behind a panel.

73982-9E000: 45 mm (1.77 in) thick, 50 x 50 mm (1.97 x 1.97 in)/73982-50Y00: 10 mm (0.39 in) thick, 50 x 50 mm (1.97 x 1.97 in)
INSULATOR (Light foam block)
80845-71L00: 30 mm (1.18 in) thick, 30 x 50 mm (1.18 x 1.97 in)
FELT CLOTH TAPE
Used to insulate where movement does not occur. Ideal for instrument panel applications.
68370-4B000: 15 x 25 mm (0.59 x 0.98 in) pad/68239-13E00: 5 mm (0.20 in) wide tape roll
The following materials, not found in the kit, can also be used to repair squeaks and rattles.
UHMW (TEFLON) TAPE
Insulates where slight movement is present. Ideal for instrument panel applications.
SILICONE GREASE
Used in place of UHMW tape that will be visible or not fit.
Note: Will only last a few months.
SILICONE SPRAY
Use when grease cannot be applied.
DUCT TAPE
Use to eliminate movement.

CONFIRM THE REPAIR

Confirm that the cause of a noise is repaired by test driving the vehicle. Operate the vehicle under the same conditions as when the noise originally occurred. Refer to the notes on the Diagnostic Worksheet.

Generic Squeak and Rattle Troubleshooting

EIS000U2

Refer to Table of Contents for specific component removal and installation information.

INSTRUMENT PANEL

Most incidents are caused by contact and movement between:

1. The cluster lid A and instrument panel
2. Acrylic lens and combination meter housing
3. Instrument panel to front pillar garnish
4. Instrument panel to windshield
5. Instrument panel mounting pins
6. Wiring harnesses behind the combination meter
7. A/C defroster duct and duct joint

These incidents can usually be located by tapping or moving the components to duplicate the noise or by pressing on the components while driving to stop the noise. Most of these incidents can be repaired by applying felt cloth tape or silicone spray (in hard to reach areas). Urethane pads can be used to insulate wiring harness.

CAUTION:
Do not use silicone spray to isolate a squeak or rattle. If you saturate the area with silicone, you will not be able to recheck the repair.

CENTER CONSOLE

Components to pay attention to include:

1. Shifter assembly cover to finisher
2. A/C control unit and upper/lower cluster lid C
3. Wiring harnesses behind audio and A/C control unit

The instrument panel repair and isolation procedures also apply to the center console.

DOORS

Pay attention to the:

1. Finisher and inner panel making a slapping noise
2. Inside handle escutcheon to door finisher
3. Wiring harnesses tapping
4. Door striker out of alignment causing a popping noise on starts and stops

Tapping or moving the components or pressing on them while driving to duplicate the conditions can isolate many of these incidents. You can usually insulate the areas with felt cloth tape or insulator foam blocks from the NISSAN Squeak and Rattle Kit (J-43980) to repair the noise.

TRUNK

Trunk noises are often caused by a loose jack or loose items put into the trunk by the owner.
In addition look for:

1. Trunk lid bumpers out of adjustment
2. Trunk lid striker out of adjustment
3. The trunk lid torsion bars knocking together
4. A loose license plate or bracket

Most of these incidents can be repaired by adjusting, securing or insulating the item(s) or component(s) causing the noise.

SUNROOF/HEADLINER

Noises in the sunroof/headliner area can often be traced to one of the following:

1. Sunroof lid, rail, linkage or seals making a rattle or light knocking noise
2. Sunvisor shaft shaking in the holder
3. Front or rear windshield touching headliner and squeaking

Again, pressing on the components to stop the noise while duplicating the conditions can isolate most of these incidents. Repairs usually consist of insulating with felt cloth tape.

SEATS

When isolating seat noises it is important to note the position the seat is in and the load placed on the seat when the noise is present. These conditions should be duplicated when verifying and isolating the cause of the noise.
Cause of seat noise include:

1. Headrest rods and holders
2. A squeak between the seat pad cushion and frame
3. The rear seat back lock and bracket

These noises can be isolated by moving or pressing on the suspected components while duplicating the conditions under which the noise occurs. Most of these incidents can be repaired by repositioning the component or applying urethane tape to the contact area.

UNDERHOOD

Some interior noises may be caused by components under the hood or on the engine wall. The noise is then transmitted into the passenger compartment.
Causes of transmitted underhood noises include:

1. Any component mounted to the engine wall
2. Components that pass through the engine wall
3. Engine wall mounts and connectors
4. Loose radiator mounting pins
5. Hood bumpers out of adjustment
6. Hood striker out of adjustment

These noises can be difficult to isolate since they cannot be reached from the interior of the vehicle. The best method is to secure, move or insulate one component at a time and test drive the vehicle. Also, engine RPM or load can be changed to isolate the noise. Repairs can usually be made by moving, adjusting, securing, or insulating the component causing the noise.

Diagnostic Worksheet

EIS000U3

SQUEAK & RATTLE DIAGNOSTIC WORKSHEET

Dear Nissan Customer:
We are concerned about your satisfaction with your Nissan vehicle. Repairing a squeak or rattle sometimes can be very difficult. To help us fix your Nissan right the first time, please take a moment to note the area of the vehicle where the squeak or rattle occurs and under what conditions. You may be asked to take a test drive with a service advisor or technician to ensure we confirm the noise you are hearing.

I. WHERE DOES THE NOISE COME FROM? (circle the area of the vehicle)
The illustrations are for reference only, and may not reflect the actual configuration of your vehicle.

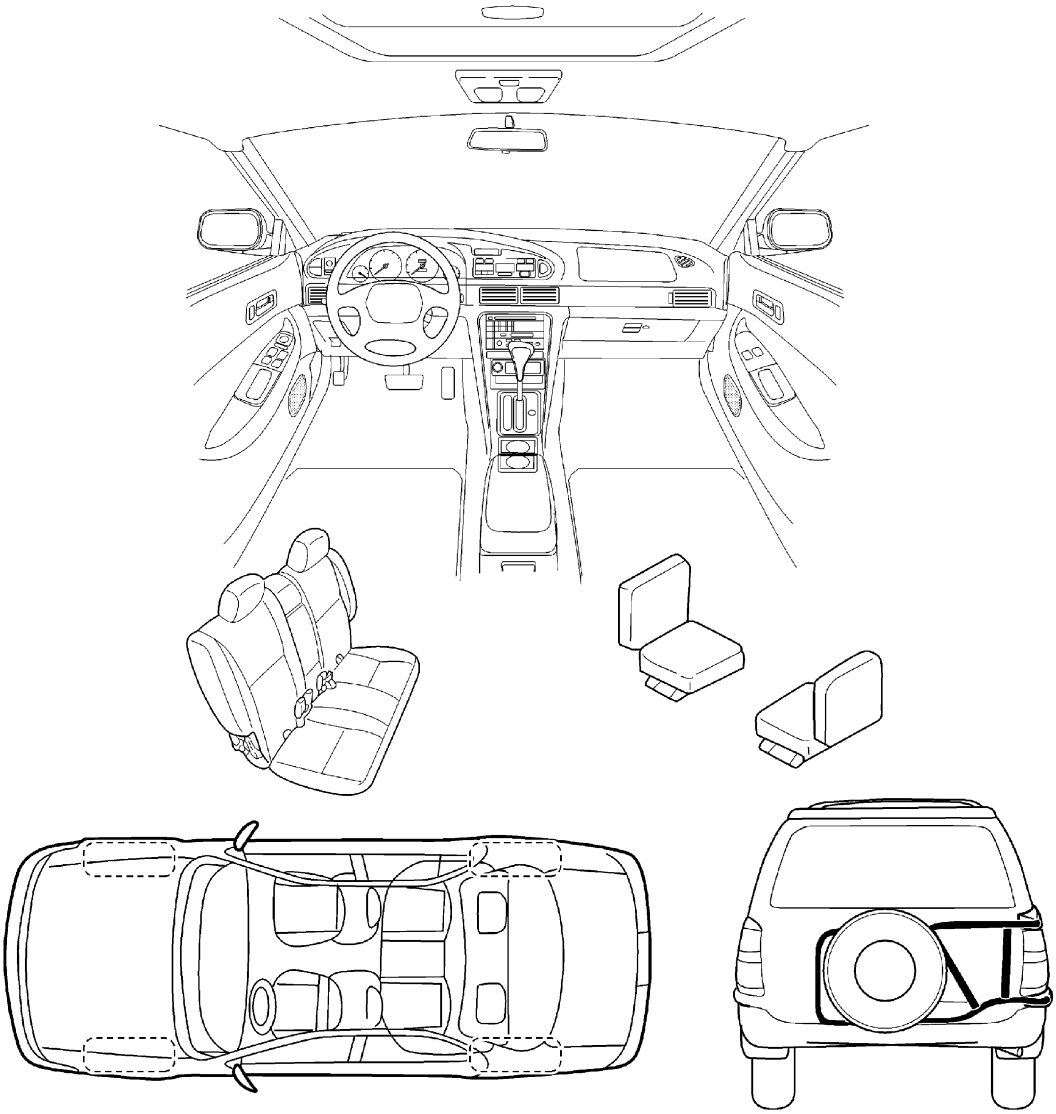

Continue to the back of the worksheet and briefly describe the location of the noise or rattle. In addition, please indicate the conditions which are present when the noise occurs.

SBT843

SQUEAK & RATTLE DIAGNOSTIC WORKSHEET- page 2

Briefly describe the location where the noise occurs:

_____

_____

II. WHEN DOES IT OCCUR? (check the boxes that apply)

- ❑ anytime
- ❑ 1st time in the morning
- ❑ only when it is cold outside
- ❑ only when it is hot outside
- ❑ after sitting out in the sun
- ❑ when it is raining or wet
- ❑ dry or dusty conditions
- ❑ other: _____

III. WHEN DRIVING:

- ❑ through driveways
- ❑ over rough roads
- ❑ over speed bumps
- ❑ only at about ____ mph
- ❑ on acceleration
- ❑ coming to a stop
- ❑ on turns : left, right or either (circle)
- ❑ with passengers or cargo
- ❑ other: _____
- ❑ after driving ____ miles or ____ minutes

IV. WHAT TYPE OF NOISE?

- ❑ squeak (like tennis shoes on a clean floor)
- ❑ creak (like walking on an old wooden floor)
- ❑ rattle (like shaking a baby rattle)
- ❑ knock (like a knock on a door)
- ❑ tick (like a clock second hand)
- ❑ thump (heavy, muffled knock noise)
- ❑ buzz (like a bumble bee)

TO BE COMPLETED BY DEALERSHIP PERSONNEL
Test Drive Notes:

_____

_____

	YES	NO	Initials of person performing
Vehicle test driven with customer	❑	❑	_____
- Noise verified on test drive	❑	❑	
- Noise source located and repaired	❑	❑	_____
- Follow up test drive performed to confirm repair	❑	❑	_____

VIN: _____ Customer Name: _____

W.O. #: _____ Date: _____

This form must be attached to Work Order

SBT844

CLIP AND FASTENER

PFP:76906

Description

EIS000U4

- Clips and fasteners in EI section correspond to the following numbers and symbols.
- Replace any clips and/or fasteners which are damaged during removal or installation.

Symbol No.	Shapes	Removal & Installation
C101	SBF302H	**Removal:** Remove by bending up with flat-bladed screwdrivers or clip remover. SBF367BA
C103	SBT095	**Removal:** Remove with a clip remover. SBF423H
C203	SBF258G	Push center pin to catching position. (Do not remove center pin by hitting it.) Push Push **Installation:** LIIA0236E
C205	MBT080A	**Removal:** Flat-bladed screwdriver Finisher Clip SBF638CA
C206	MBF519B	MBF520B
CE103	SBF104B	**Removal:** SBF147B

CLIP AND FASTENER

Symbol No.	Shapes	Removal & Installation
CE107	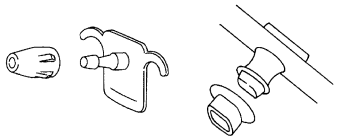 SBF411H	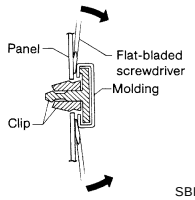 SBF767B
CE117	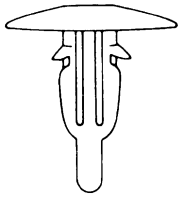 SBF174D	**Removal:** Remove by bending up with a flat-bladed screwdriver or pliers. 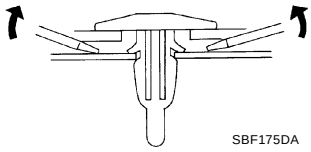 SBF175DA
CF110	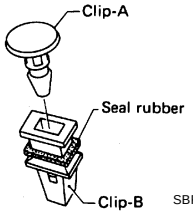 SBF648B	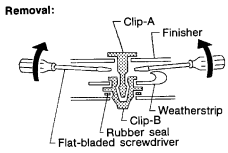 SBF649B
CF118	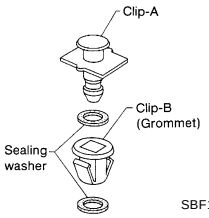 SBF151D	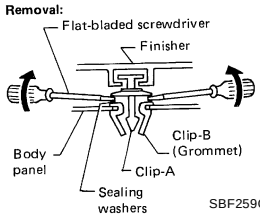 SBF259G
CG101	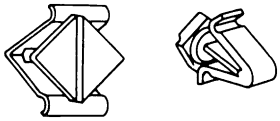 SBF145B	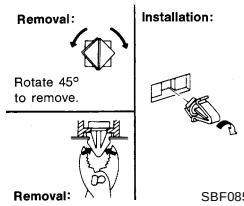 SBF085B
CS101	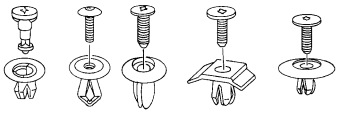 SBF078B	**Removal:** 1. Screw out with a Phillips screwdriver. 2. Remove female portion with flat-bladed screwdriver. 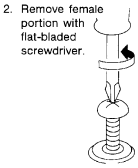 SBF992G

CLIP AND FASTENER

Symbol No.	Shapes	Removal & Installation
CR103	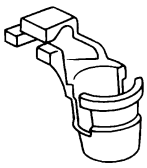 SBF768B	**Removal:** Holder portion of clip must be spread out to remove rod. 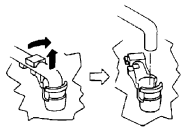 SBF770B
Metal Clip	WBT072	**Removal:** 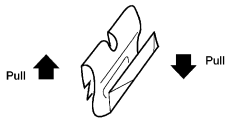 WBT073

FRONT BUMPER

PFP:F2022

Removal and Installation

EIS000U5

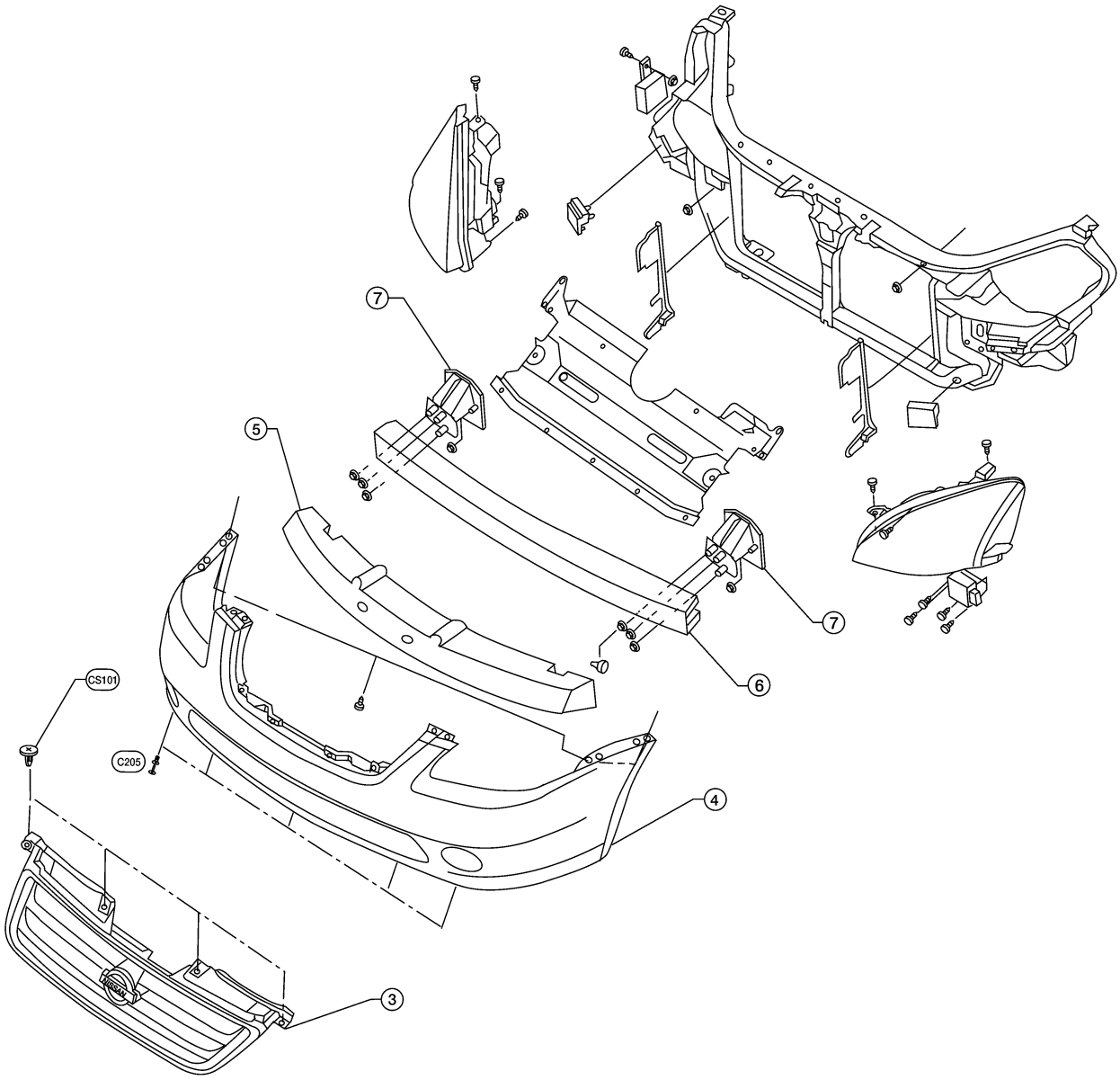

LIIA0073E

1. Remove fender protector. Refer to EI-20, "FENDER PROTECTOR" .
2. Remove engine under cover.
3. Remove radiator grille. Refer to EI-17, "FRONT GRILLE" .
4. Remove front bumper fascia.
5. Remove energy absorbing foam.
6. Remove front bumper reinforcement.
7. Remove front bumper supports.
8. Installation is in the reverse order of removal.

REAR BUMPER

PFP:H5022

Removal and Installation

EIS000U6

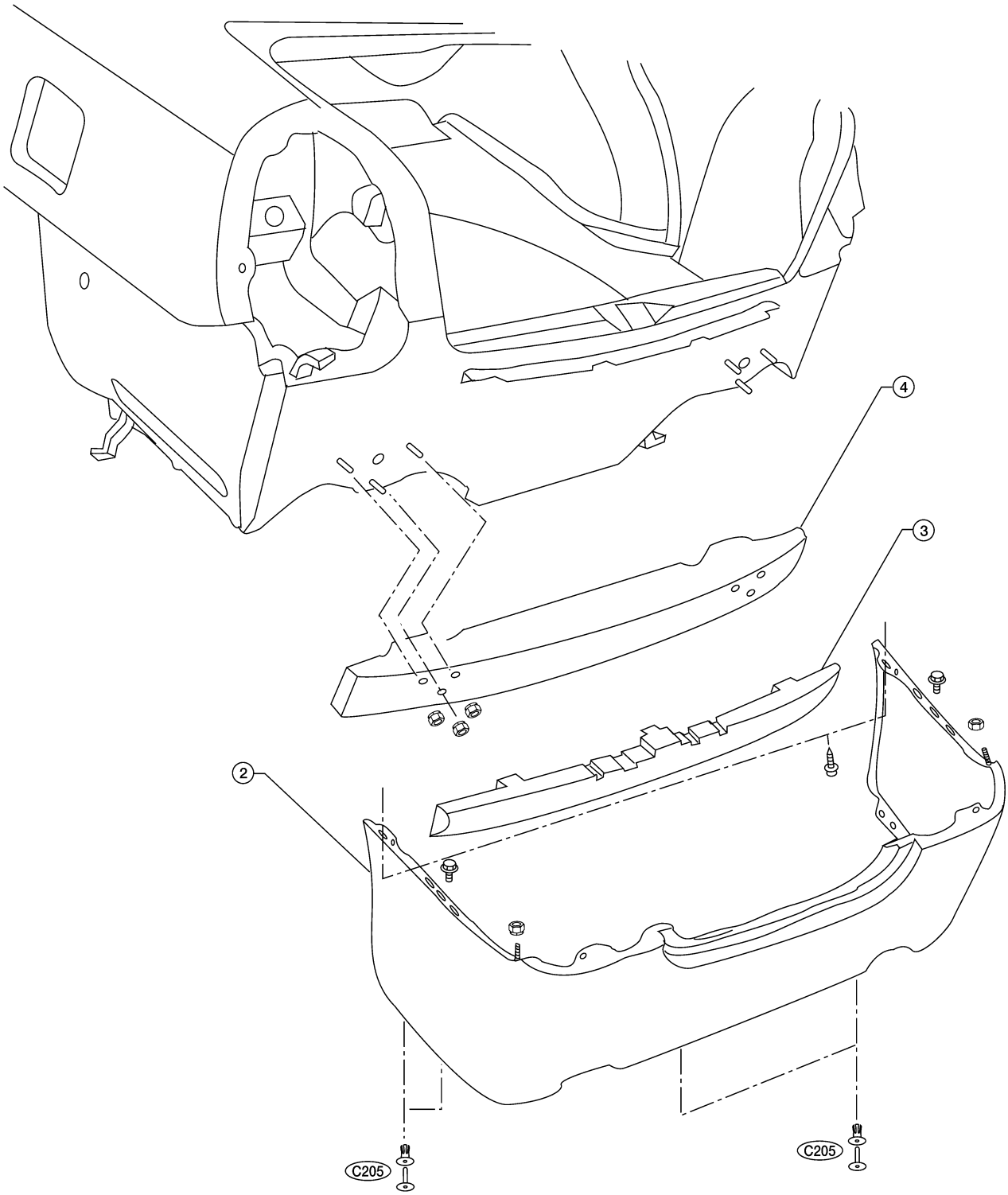

LIIA0074E

1. Remove rear combination lamp. Refer to LT-122, "Removal and Installation" .
2. Remove rear bumper fascia.
3. Remove energy absorbing foam.
4. Remove rear bumper reinforcement.
5. Installation is in the reverse order of removal.

FRONT GRILLE

PFP:62310

Removal and Installation

EIS000U7

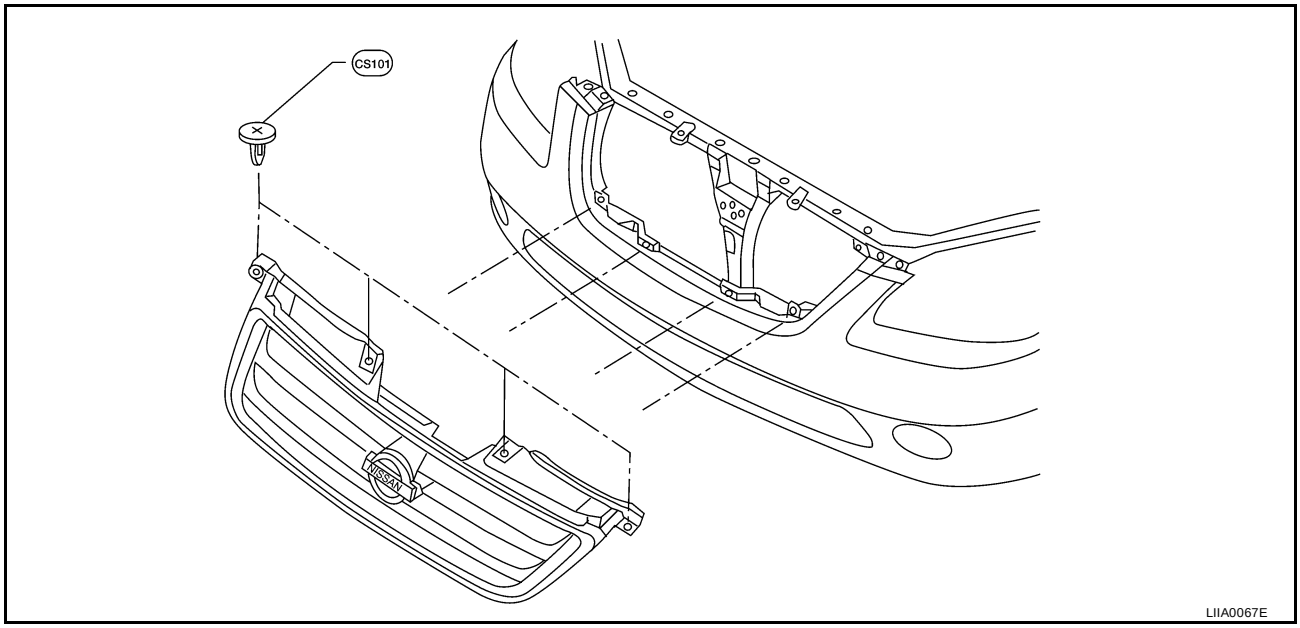

1. Remove four clips on top of radiator grille.
2. Remove radiator grille.
   - Release four lower clips.
3. Installation is in the reverse order of removal.

COWL TOP

PFP:66100

Removal and Installation

EIS000U8

1. Remove both the right and left wiper arms from the vehicle. Refer to WW-24, "Removal and Installation for Front Wiper Arms, Adjustment for Wiper Arms Stop Location" .
2. Place windshield washer hose aside. Refer to WW-26, "Washer Tube Layout" .
3. Release clips of both cowl top seal rubber and cowl top cover, and remove cowl top cover.

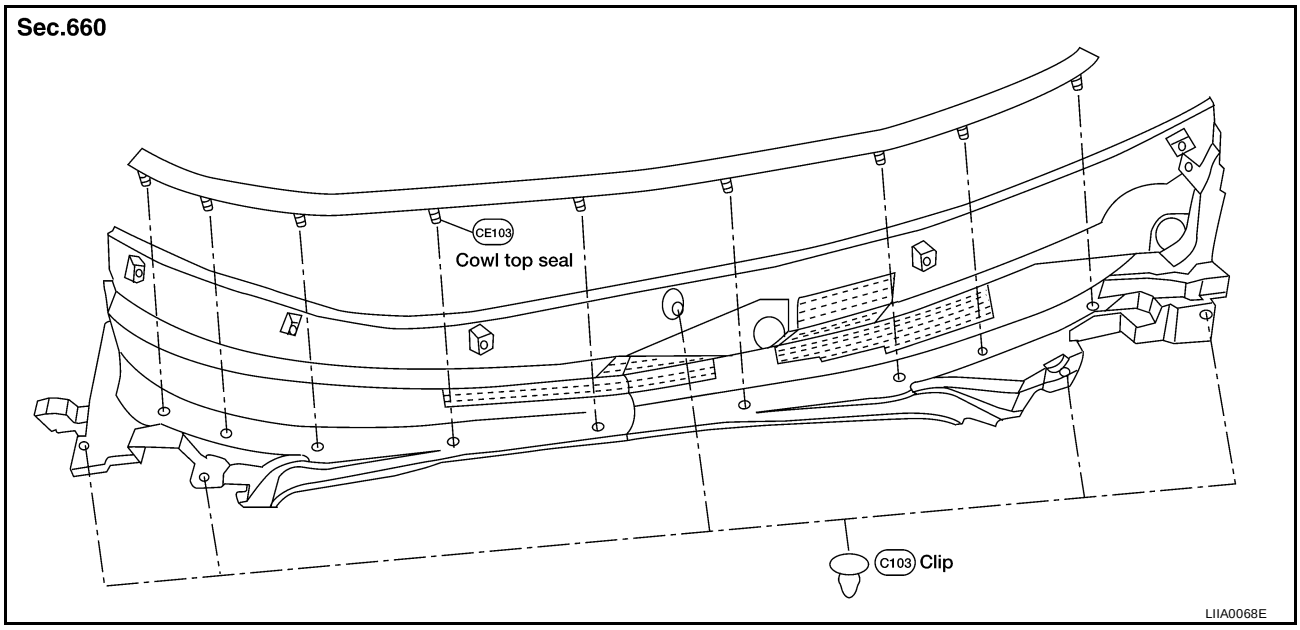

4. Installation is in the reverse order of removal.

FRONT FENDER

PFP:63100

Removal and Installation

EIS000U9

1. Remove front combination lamp. Refer to LT-122, "Removal and Installation" .
2. Remove fender protector. Refer to EI-20, "Removal and Installation" .
3. Remove front half of center mud guard. Refer to EI-21, "Removal and Installation" .
4. Remove front fender.
5. Installation is in the reverse order of removal.

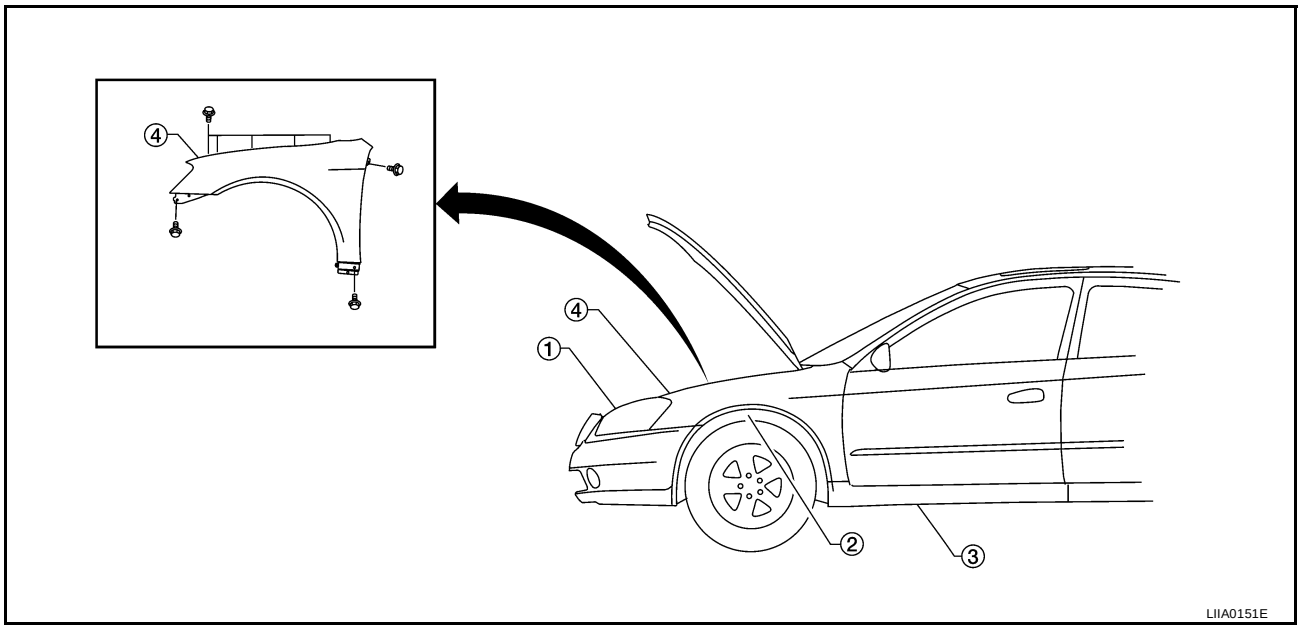

FENDER PROTECTOR

PFP:63840

Removal and Installation

EIS000UA

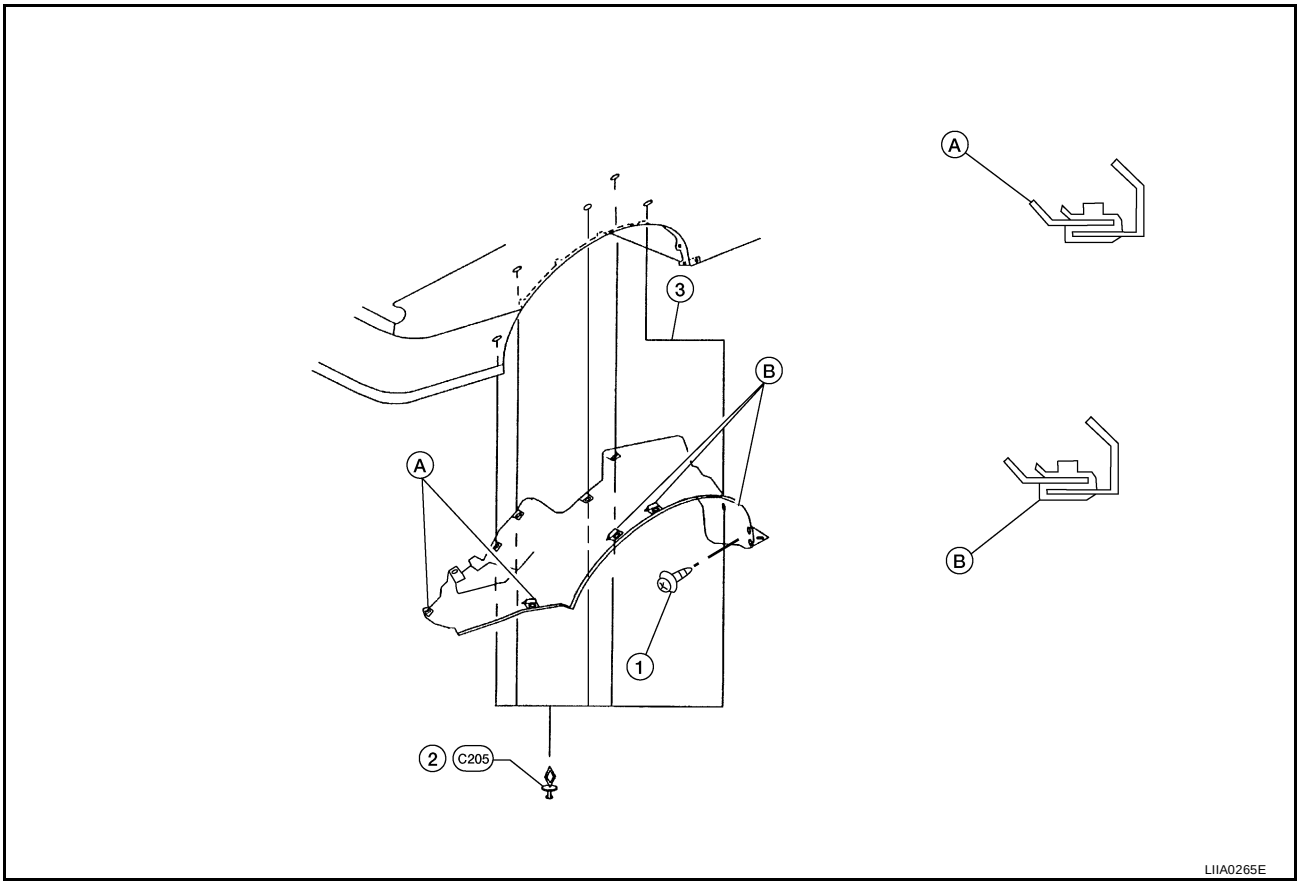

1. Remove screw from center mudguard.
2. Remove screws and pushpins from fender protector.
3. Remove fender protector.
4. Installation is in the reverse order of removal.

MUDGUARD

PFP:63854

Removal and Installation

EIS000UB

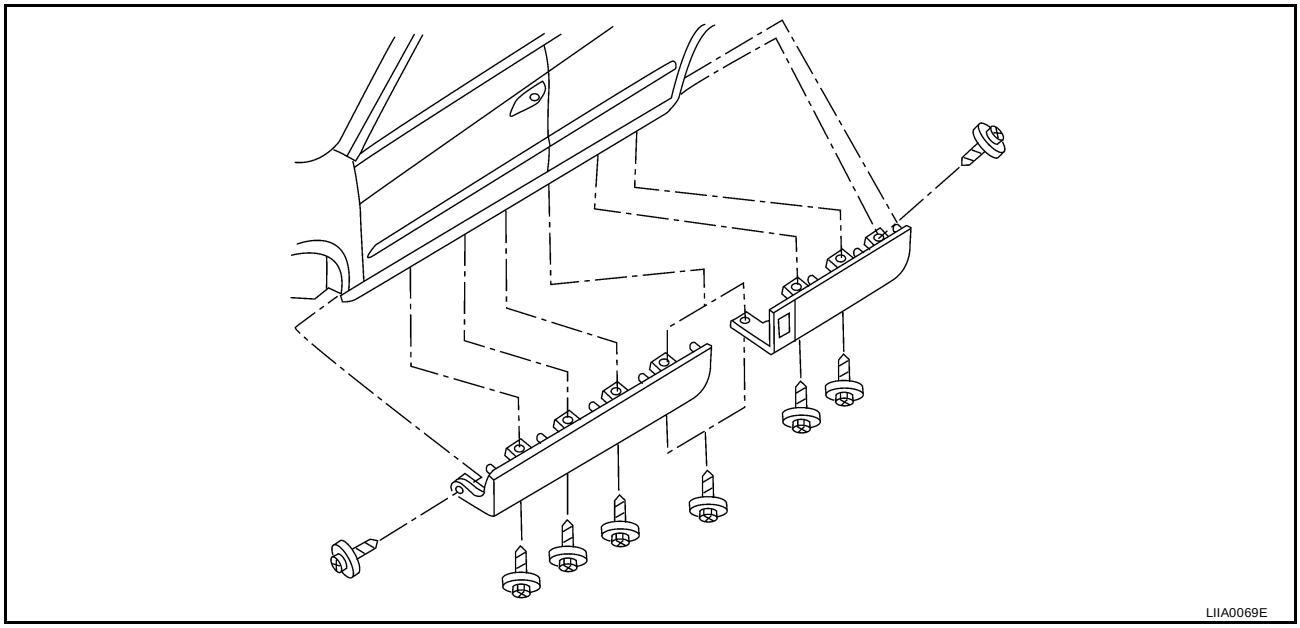

1. Remove screws.
2. Remove center mudguard.
3. Installation is in the reverse order of removal.

LICENSE LAMP FINISHER

PFP:84810

Removal and Installation

EIS000UC

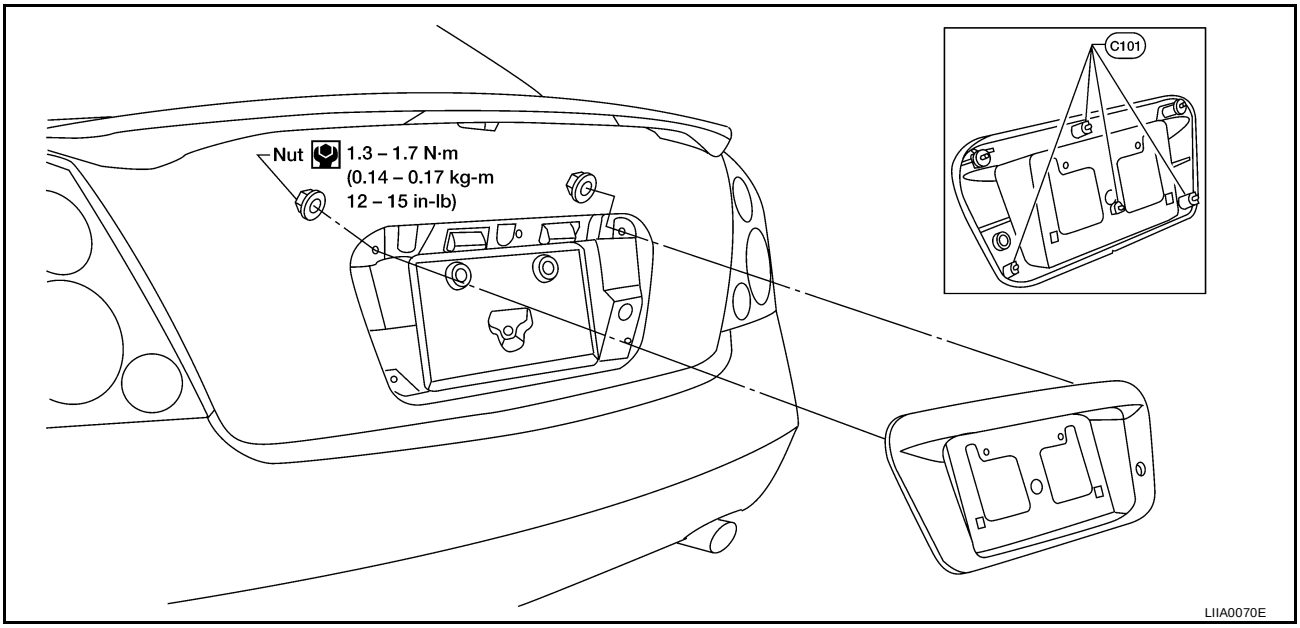

1. Remove trunk lid finisher (if equipped).
2. Remove nuts.
3. Remove license lamp finisher.
4. Installation is in the reverse order of removal.

DRIP MOLDING

PFP:76810

Removal and Installation

EIS000UD

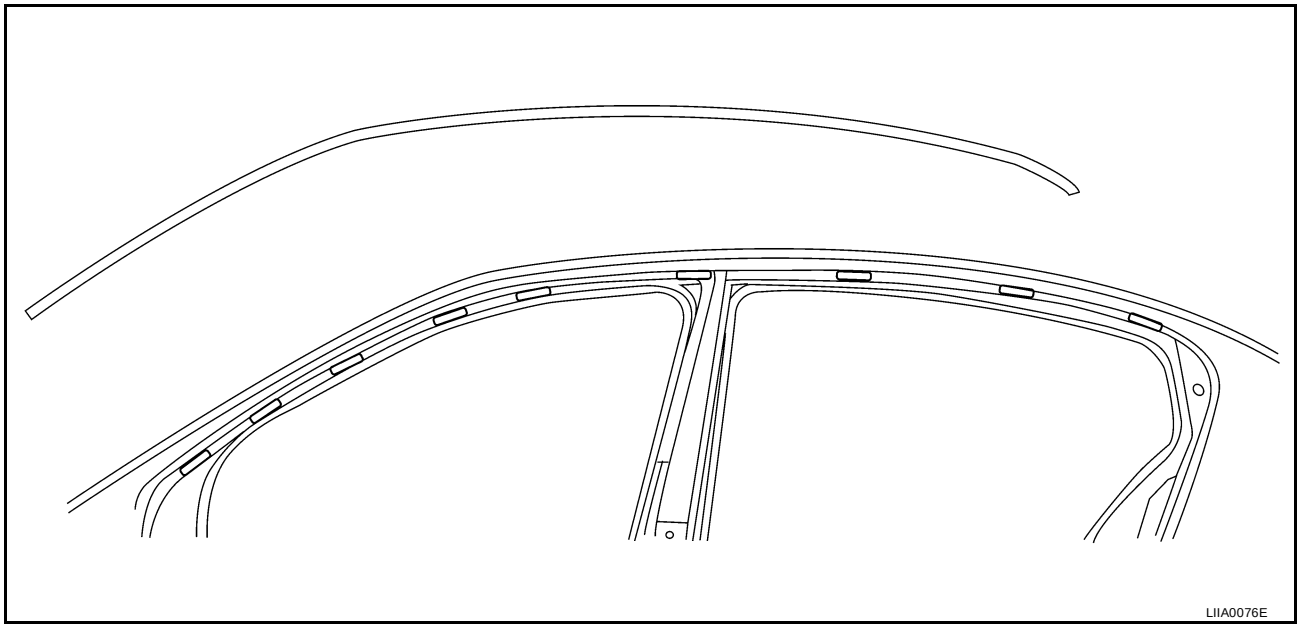

1. Starting at front, disconnect drip molding from clips with a resin spatula or equivalent.
2. To install, engage drip molding onto clips starting at the rear.

ROOF SIDE MOLDING

PFP:73854

Removal and Installation

EIS000UE

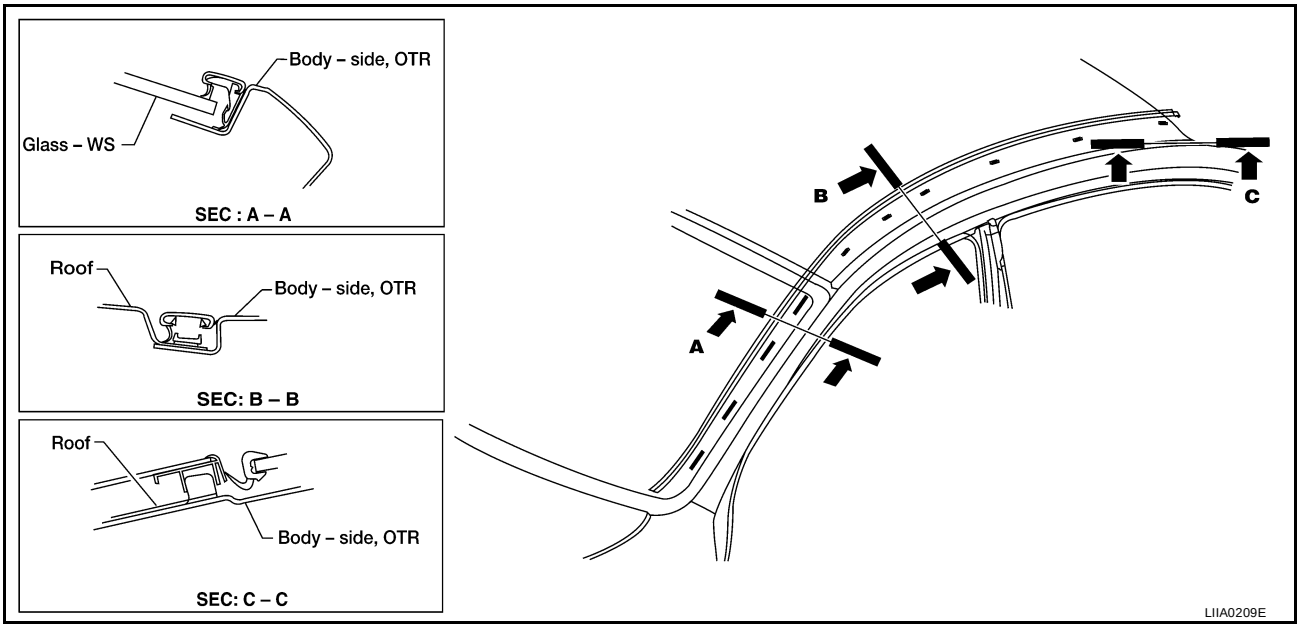

1. Lift and twist roof side molding up from rear edge. Disconnect clips, and remove roof side molding.
2. Installation is in the reverse order of removal.

DOOR OUTSIDE MOLDING

PFP:82820

Removal and Installation

EIS000UF

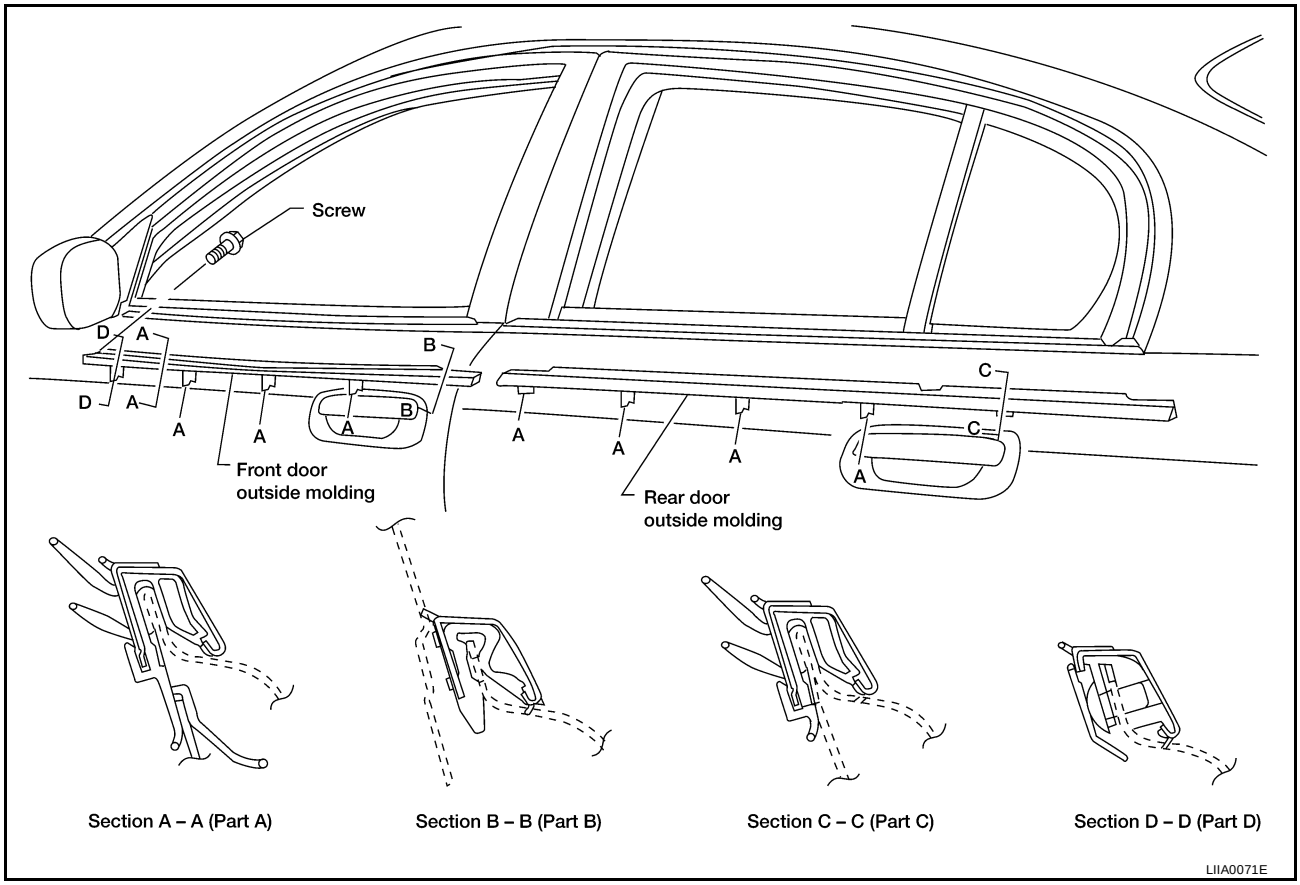

FRONT DOOR OUTSIDE MOLDING

Removal and Installation

1. Open windows fully.
2. Remove screw on front edge.
3. Lift and twist from rear side, disconnect clips from flange and pull molding out backwards.
4. Installation is in the reverse order of removal.

REAR DOOR OUTSIDE MOLDING

Removal and Installation

1. Open windows fully.
2. Lift and twist from rear side, and disconnect clips from flange.
3. Installation is in the reverse order of removal.

SIDE GUARD MOLDING

PFP:76840

Removal and Installation

EIS000UG

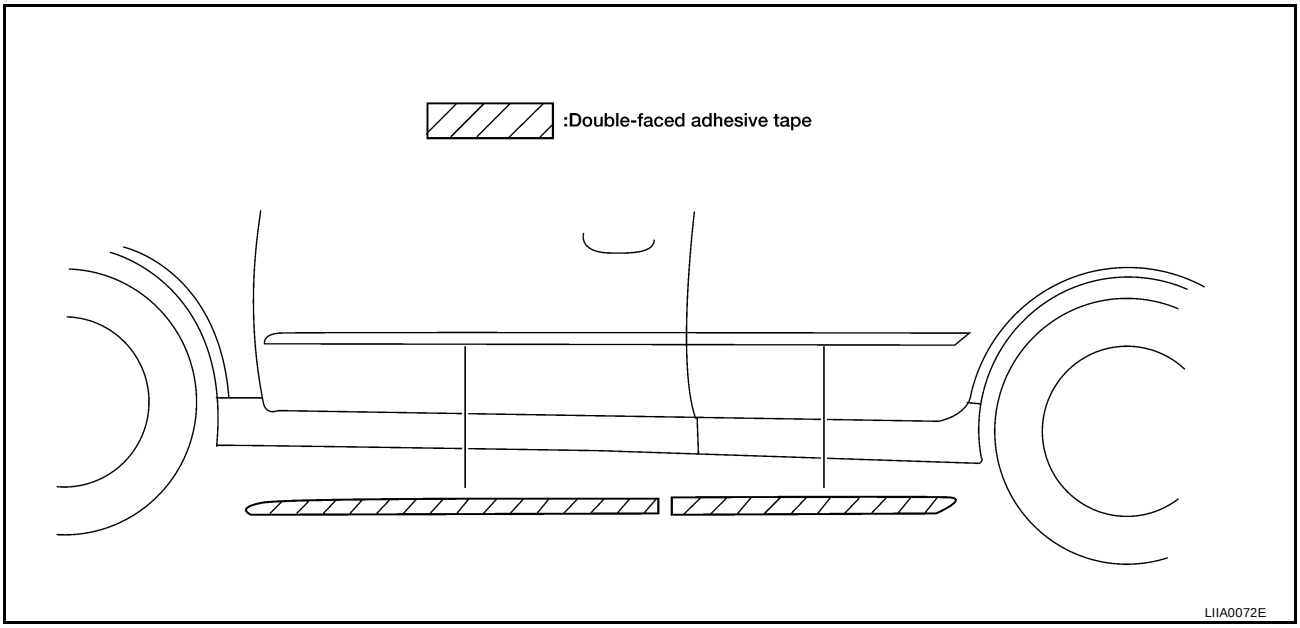

REMOVAL

CAUTION:

Never apply tack-paper adhesive remover to body panel surface finished with lacquer-based paints.

- Original side guard molding is affixed to body panel with double-faced adhesive tape.

1. Heat molding to between 30° and 40°C (86° to 104°F) with a heat gun.
2. Raise end of molding and cut away tape to remove molding.
3. Remove all traces of tape.

INSTALLATION

- On vehicles coated with Hard Clear Coat, use double-faced 3M adhesive tape Product No. 4210 or equivalent, after priming with 3M primer Product No. N200 or C-100 or equivalent.
- The repair parts are also affixed with double-faced adhesive tape.
- To re-use existing molding, clean all traces of double sided tape from the molding and apply new double-faced tape to the molding.

1. Clean the panel surface with isopropyl alcohol or equivalent to degrease the surface.
2. Heat the panel and molding tape surface to 30° to 40°C (86° to 104°F).
3. Remove the backing sheet from the tape surface.
4. Press ends by hand and use a roller to apply 5 kg-f (11 lbs.-f) to press molding to door surface.

CAUTION:

To secure contact, do not wash vehicle for 24 hours after installation.

DOOR FINISHER

PFP:80900

Removal and Installation

EIS000UH

FRONT DOOR

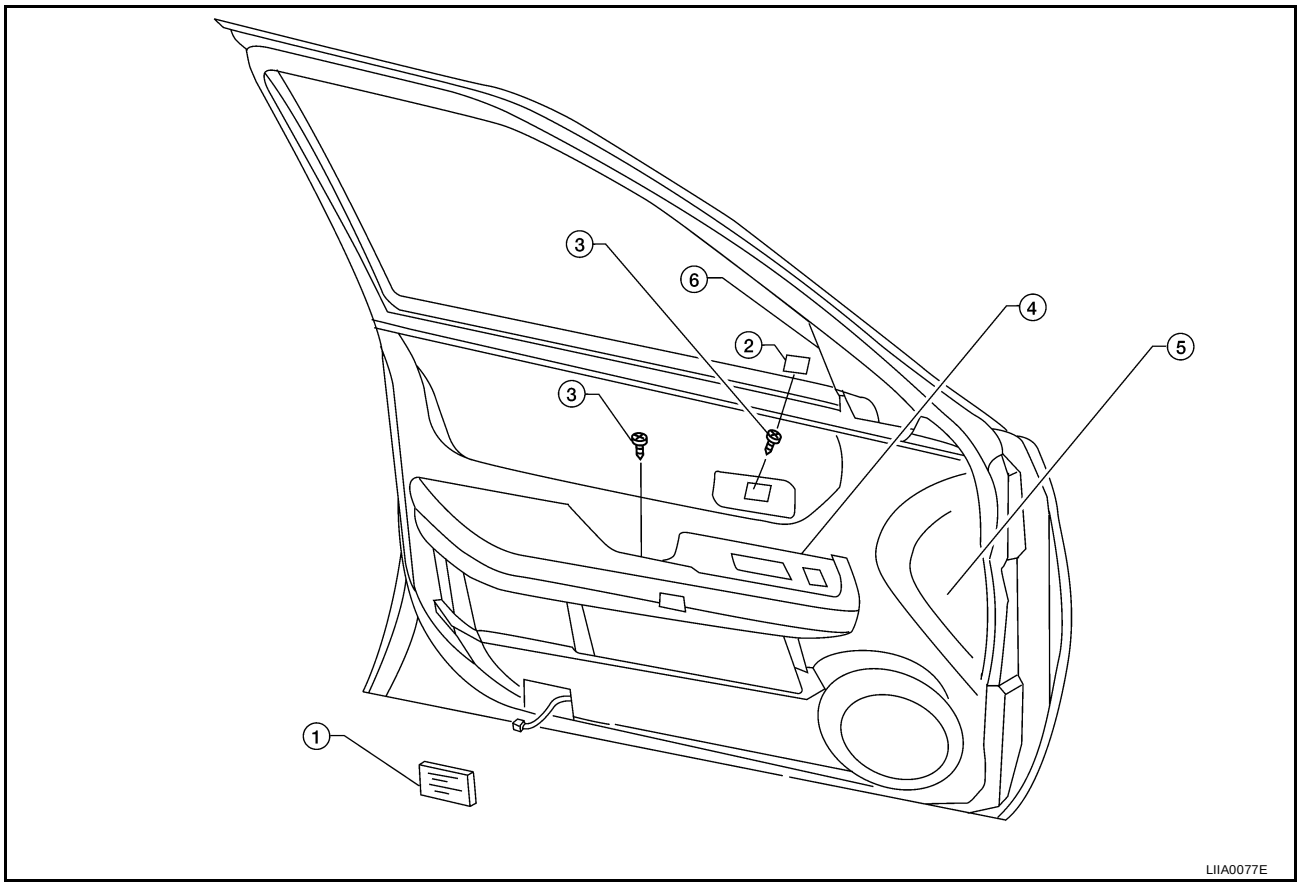

1. Remove step lamp lens and disconnect step lamp.
2. Remove screw cover.
3. Remove screws.
4. Disconnect and remove switch plate.
   - Remove screw beneath switch plate.
5. Remove door finisher.
6. If necessary, remove inner corner cover from door finisher.
7. Installation is in the reverse order of removal.

REAR DOOR

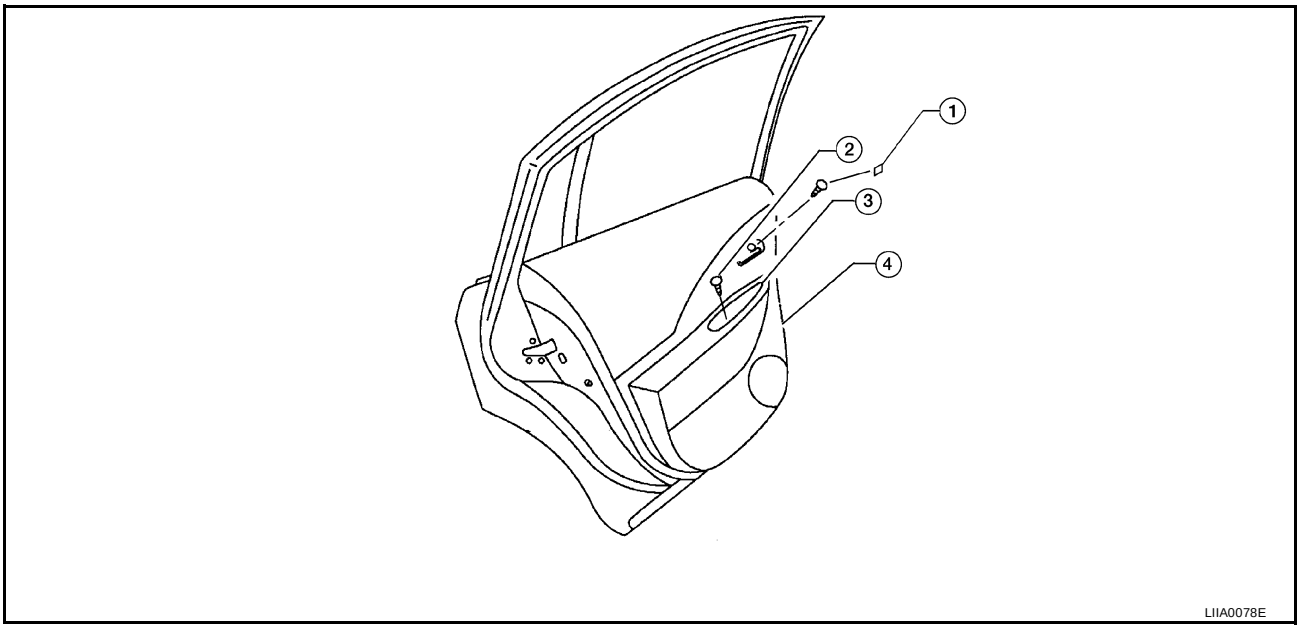

1. Remove screw cover.
2. Remove screws.
3. Disconnect and remove switch plate.
4. Remove door finisher.
5. Installation is in the reverse order of removal.

BODY SIDE TRIM

PFP:76913

Removal and Installation

EIS000UI

CAUTION:

- **Wrap the tip of flat-bladed screwdriver with a cloth when removing metal clips from garnishes.**
- **When removing or installing body side welts, do not allow butyl seal to come in contact with pillar garnish.**

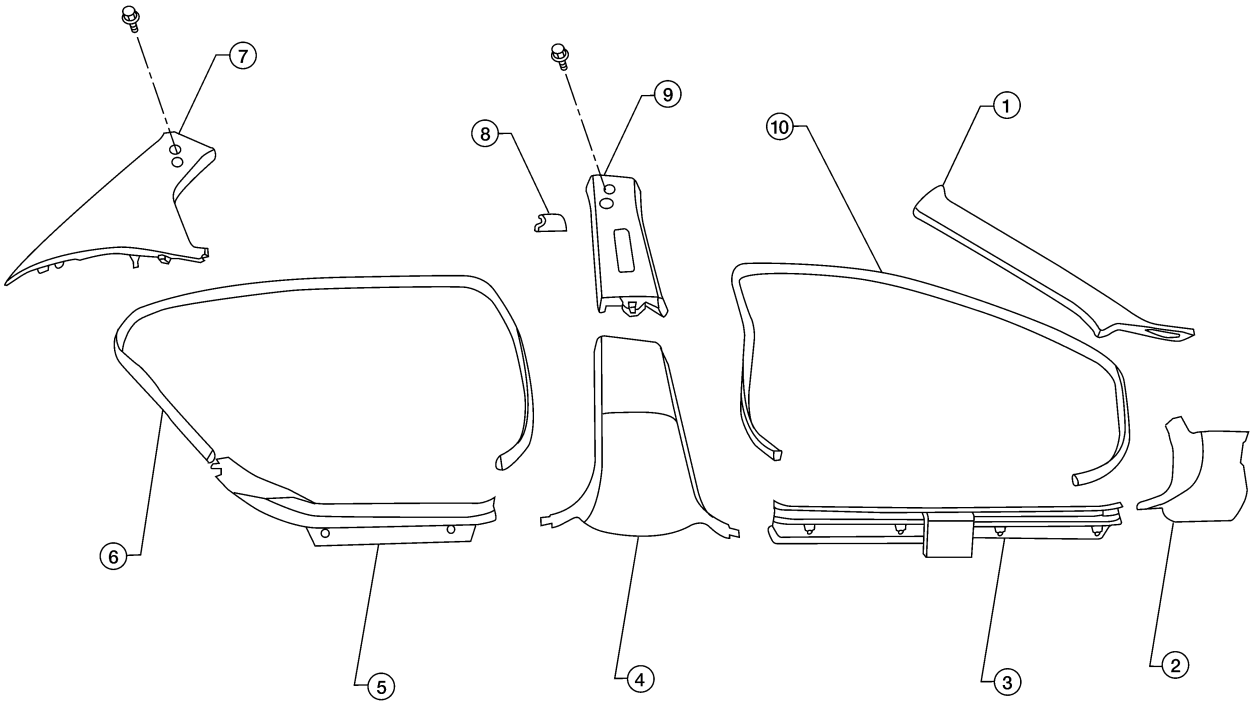

LIIA0079E

1. Front pillar garnish
2. Dash side finisher
3. Front kicking plate
4. Center pillar lower garnish
5. Rear kicking plate
6. Rear body side welt
7. Rear pillar finisher
8. Seat belt shoulder anchor cover
9. Center pillar upper garnish
10. Front body side welt

CENTER PILLAR LOWER GARNISH

Removal and Installation

1. Remove front and rear kicking plate.
2. Remove center pillar lower garnish.
3. Installation is in the reverse order of removal.

CENTER PILLAR UPPER GARNISH

Removal and Installation

1. Remove seat belt shoulder anchor. Refer to SB-3, "Removal and Installation of Front Seat Belt" .
2. Remove front and rear kicking plate.
3. Remove center pillar lower garnish.
4. Remove bolt covers and bolts.
5. Remove center pillar upper garnish.
6. Installation is in the reverse order of removal.

REAR PILLAR FINISHER

Removal and Installation

1. Remove bolt cover and bolt.
2. Remove rear pillar finisher.
3. Installation is in the reverse order of removal.

DASH SIDE FINISHER

Removal and Installation

1. Remove front kicking plate.
2. Remove dash side finisher.

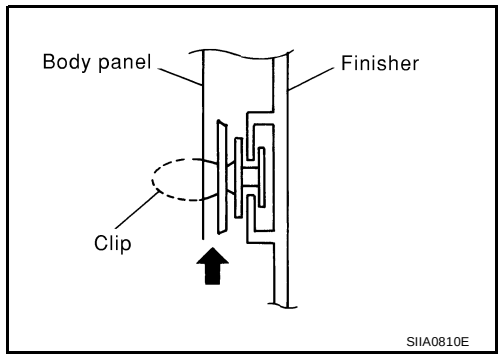

CAUTION:
Insert screw driver rolled with cloth between panel on vehicle and clips (as indicated with arrow), and disconnect clips.

3. Installation is in the reverse order of removal.

REAR PARCEL SHELF FINISHER

PFP:79910

Removal and Installation

EIS000UJ

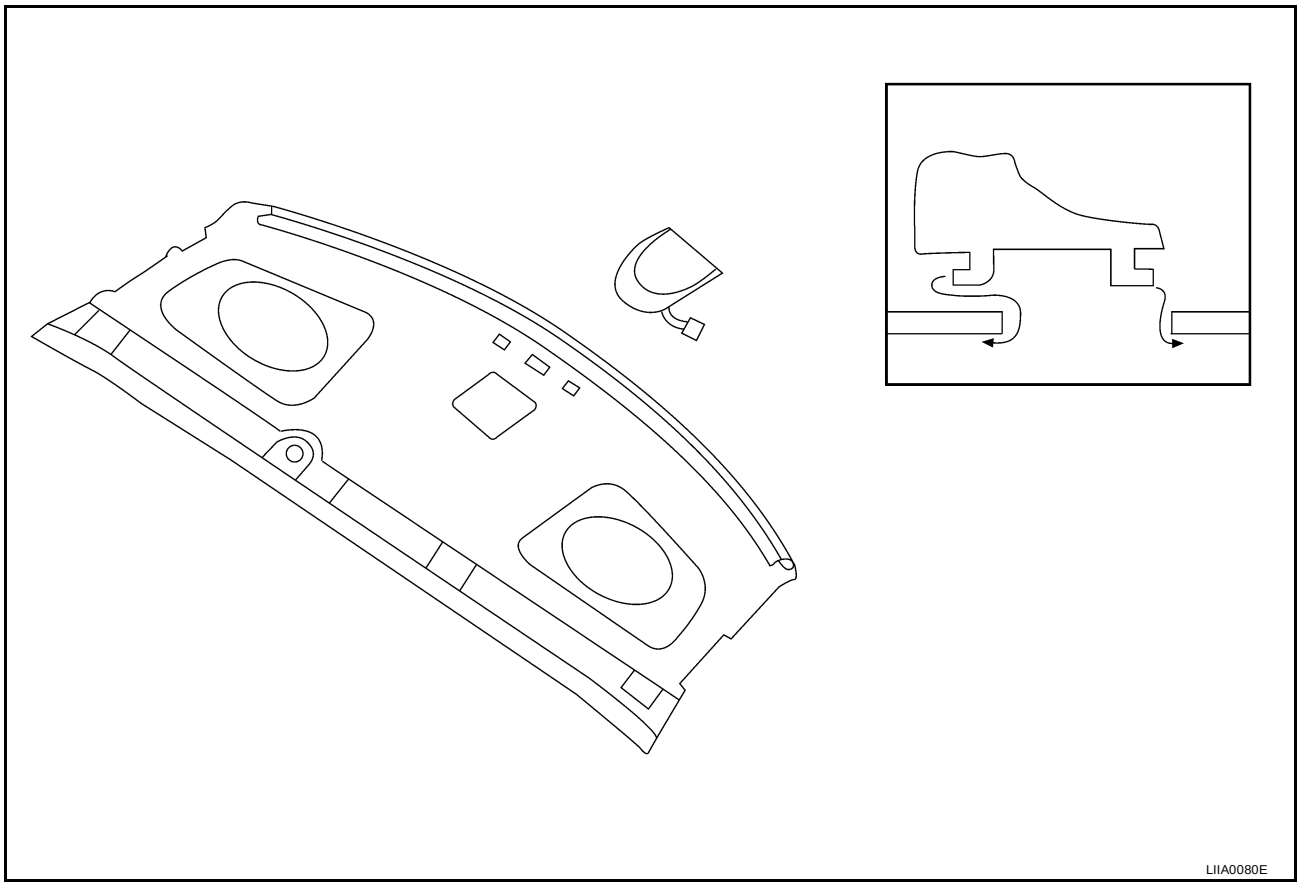

1. Remove rear seat. Refer to SE-18, "REAR SEAT" .
2. Remove rear seat belt anchor bolts. Refer to SB-4, "Removal and Installation of Rear Seat Belt" .
3. Remove rear pillar finisher. Refer to EI-29, "BODY SIDE TRIM" .
4. If equipped, remove high mounted stop lamp and disconnect connectors.

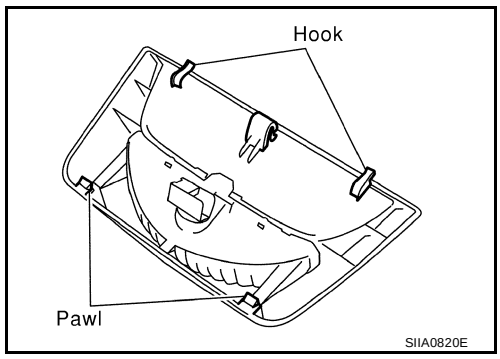

5. Remove halo trim.
6. Remove rear parcel shelf trim.

7. Installation is in the reverse order of removal.

FLOOR TRIM

PFP:74902

Removal and Installation

EIS000UK

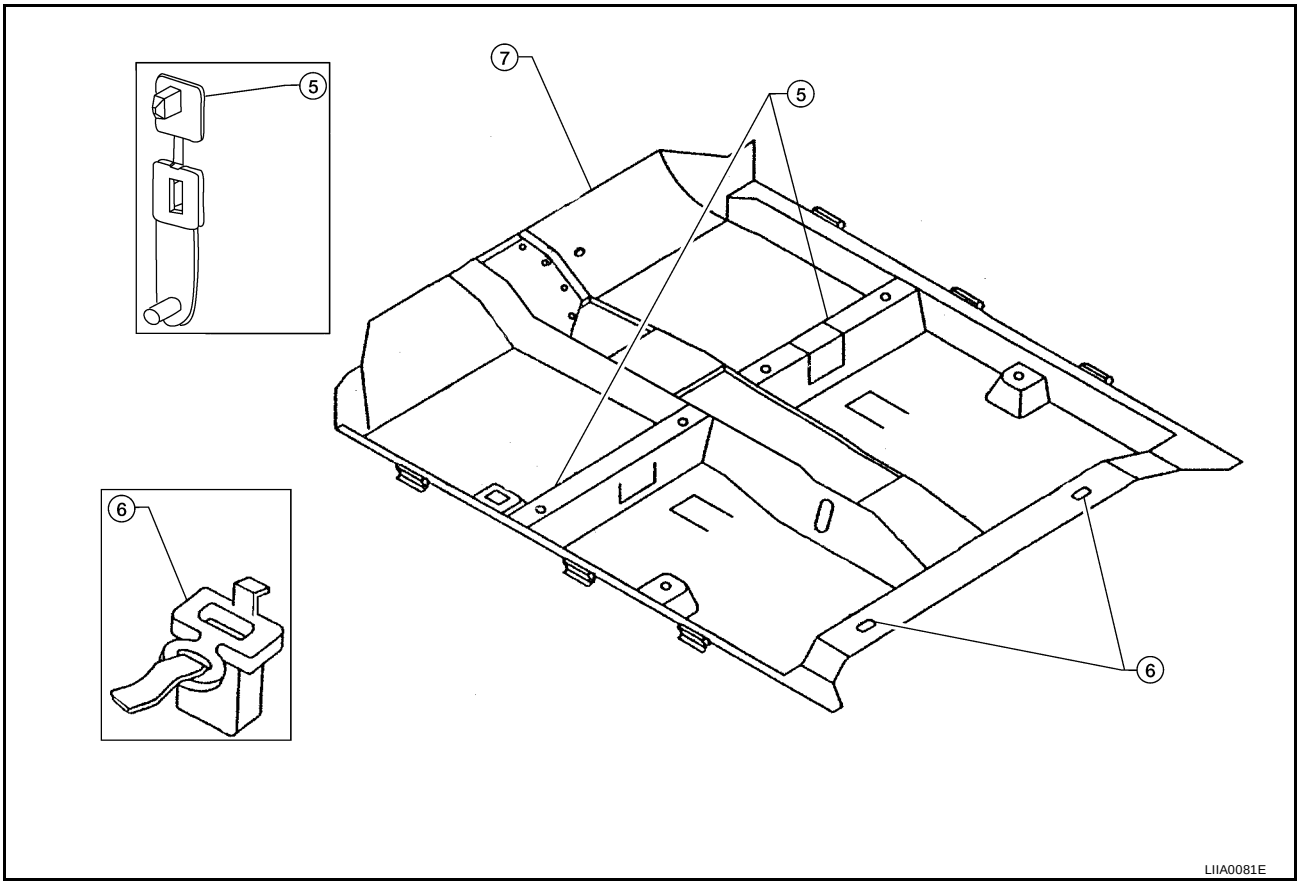

1. Remove lower body side trim. Refer to EI-29, "BODY SIDE TRIM" .
2. Remove rear seat cushion. Refer to SE-18, "REAR SEAT" .
3. Remove center console. Refer to IP-10, "INSTRUMENT PANEL ASSEMBLY" .
4. Remove lower seat belt anchors. Refer to SB-3, "SEAT BELTS" .
5. Remove service mat brackets.
6. Remove rear seat cushion hooks.
7. Remove carpet.
8. Installation is in the reverse order of removal.

HEADLINING

PFP:73910

Removal and Installation

EIS000UL

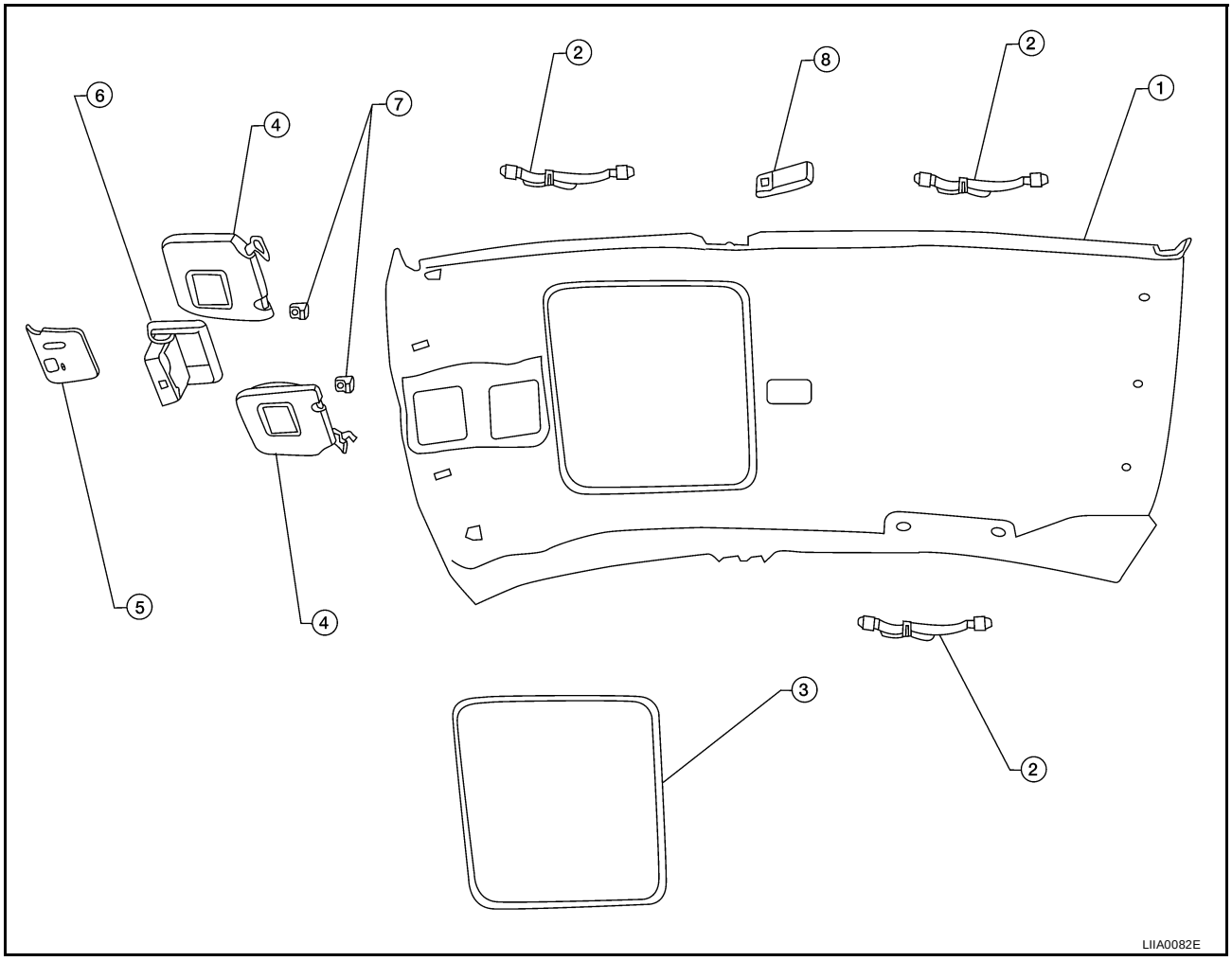

1. Headlining	2. Assist grips	3. Sunroof welt
4. Sunvisors	5. Map lamp	6. Storage compartment
7. Sunvisor clips	8. Dome lamp	

CAUTION:
Disconnect both terminals from battery in advance.

1. Remove front and rear door kicking plates. Refer to EI-29, "BODY SIDE TRIM" .
2. Remove lower dash side trim. Refer to EI-29, "BODY SIDE TRIM" .
3. Remove front pillar garnish, center pillar lower and upper garnish, and rear pillar garnish. Refer to EI-29, "BODY SIDE TRIM" .
4. Remove front and rear door welts. Refer to EI-29, "BODY SIDE TRIM" .
5. Remove assist grips.
6. Remove interior lamp.
7. Remove map lamp.
8. Remove storage bin.
9. Remove sunvisors.
10. Remove sunvisor clips.
11. Remove windshield garnish molding. Refer to EI-29, "BODY SIDE TRIM" .
12. Remove sunroof welt (if equipped) and door welts.
13. Remove clips attached to roof.

14. Take out headlining from the left rear door.
15. Installation is in the reverse order of removal.

TRUNK ROOM TRIM & TRUNK LID FINISHER

PFP:84920

Removal and Installation

EIS000UM

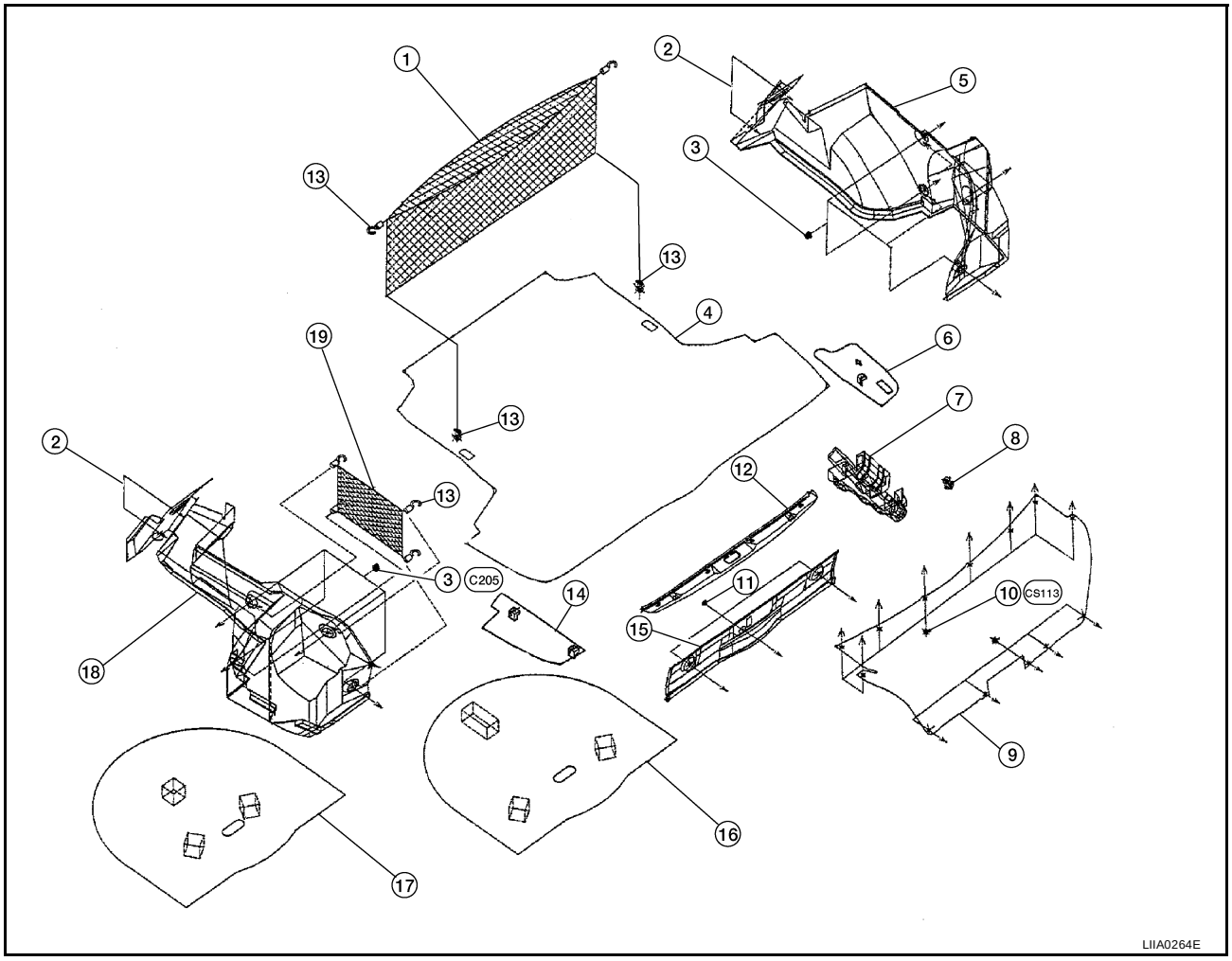

1.	Trunk net	2.	Trim clip	3.	Trim clip (2 piece)
4.	Trunk floor carpet	5.	Trunk finisher side, RH	6.	Trunk floor board, RH
7.	Box assembly	8.	Trunk room lamp	9.	Trunk lid finisher (if equipped)
10.	Trim clip	11.	Trim clip	12.	Rear trunk plate
13.	Trunk net hook	14.	Trunk floor board, LH	15.	Trunk finisher rear
16.	Spare tire cover (for temporary spare)	17.	Spare tire cover (for standard spare)	18.	Trunk side finisher, LH
19.	Trunk net, LH				

SECTION EM
ENGINE MECHANICAL

CONTENTS

QR25DE

PRECAUTIONS 4
Precautions for Draining Coolant 4
Precautions for Disconnecting Fuel Piping 4
Precautions for Removal and Disassembly 4
Precautions for Inspection, Repair and Replacement 4
Precautions for Assembly and Installation 4
Parts Requiring Angular Tightening 4
Precautions for Liquid Gasket 5
REMOVAL OF LIQUID GASKET SEALING 5
LIQUID GASKET APPLICATION PROCEDURE 5
PREPARATION 6
Special Service Tools 6
Commercial Service Tools 7
NOISE, VIBRATION, AND HARSHNESS (NVH) TROUBLESHOOTING 10
NVH Troubleshooting — Engine Noise 10
Use the Chart Below to Help You Find the Cause of the Symptom. 11
DRIVE BELTS 12
Checking Drive Belts 12
Tension Adjustment 12
Removal and Installation 12
REMOVAL 12
INSTALLATION 12
Removal and Installation of Auxiliary Drive Belt Auto-tensioner 13
REMOVAL 13
INSTALLATION 13
AIR CLEANER AND AIR DUCT 14
Removal and Installation 14
REMOVAL 14
INSTALLATION 14
CHANGING THE AIR CLEANER ELEMENT 15
INTAKE MANIFOLD 16
Removal and Installation 16
REMOVAL 16
INSPECTION AFTER REMOVAL 18
INSTALLATION 18
INSPECTION AFTER INSTALLATION 20
EXHAUST MANIFOLD AND THREE WAY CATALYST 21
Removal and Installation 21
REMOVAL 21
INSPECTION AFTER REMOVAL 22
INSTALLATION 22
OIL PAN AND OIL STRAINER 23
Removal and Installation 23
REMOVAL 23
INSPECTION AFTER REMOVAL 24
INSTALLATION 24
INSPECTION AFTER INSTALLATION 25
IGNITION COIL 26
Removal and Installation 26
REMOVAL 26
INSTALLATION 26
SPARK PLUG 27
Removal and Installation 27
REMOVAL 27
INSPECTION AFTER REMOVAL 27
INSTALLATION 28
FUEL INJECTOR AND FUEL TUBE 29
Removal and Installation 29
REMOVAL 29
INSTALLATION 30
INSPECTION AFTER INSTALLATION 31
ROCKER COVER 32
Removal and Installation 32
REMOVAL 32
INSTALLATION 32
CAMSHAFT 34
Removal and Installation 34
REMOVAL 34
INSPECTION AFTER REMOVAL 36

INSTALLATION 39
Valve Clearance 41
INSPECTION 41
ADJUSTMENT 43
TIMING CHAIN 45
Removal and Installation 45
REMOVAL 46
INSPECTION AFTER REMOVAL 48
INSTALLATION 48
CYLINDER HEAD 53
On-Vehicle Service 53
CHECKING COMPRESSION PRESSURE 53
Removal and Installation 54
REMOVAL 54
INSPECTION AFTER REMOVAL 55
INSTALLATION 55
Disassembly and Assembly 57
DISASSEMBLY 57
ASSEMBLY 58
Inspection After Disassembly 58
CYLINDER HEAD DISTORTION 58
VALVE DIMENSIONS 59
VALVE GUIDE CLEARANCE 59
VALVE GUIDE REPLACEMENT 59
VALVE SEAT CONTACT 60
VALVE SEAT REPLACEMENT 61
VALVE SPRING SQUARENESS 62
VALVE SPRING DIMENSIONS AND VALVE SPRING PRESSURE LOAD 62
ENGINE ASSEMBLY 63
Removal and Installation 63
REMOVAL 64
INSTALLATION 65
INSPECTION AFTER INSTALLATION 65
CYLINDER BLOCK 67
Disassembly and Assembly 67
DISASSEMBLY 68
ASSEMBLY 70
How to Select Piston and Bearing 75
DESCRIPTION 75
HOW TO SELECT A PISTON 76
HOW TO SELECT A CONNECTING ROD BEARING 76
HOW TO SELECT A MAIN BEARING 78
Inspection After Disassembly 81
CRANKSHAFT SIDE CLEARANCE 81
CONNECTING ROD SIDE CLEARANCE 82
PISTON AND PISTON PIN CLEARANCE 82
PISTON RING SIDE CLEARANCE 83
PISTON RING END GAP 83
CONNECTING ROD BEND AND TORSION 84
CONNECTING ROD BEARING (BIG END) 84
CONNECTING ROD BUSHING OIL CLEARANCE (SMALL END) 84
CYLINDER BLOCK DISTORTION 85
INNER DIAMETER OF MAIN BEARING HOUSING 86
PISTON TO CYLINDER BORE CLEARANCE 86
OUTER DIAMETER OF CRANKSHAFT JOURNAL 87
OUTER DIAMETER OF CRANKSHAFT PIN 87
OUT-OF-ROUND AND TAPER OF CRANKSHAFT 87
CRANKSHAFT RUNOUT 88
OIL CLEARANCE OF CONNECTING ROD BEARING 88
OIL CLEARANCE OF MAIN BEARING 88
CRUSH HEIGHT OF MAIN BEARING 89
OUTER DIAMETER OF LOWER CYLINDER BLOCK MOUNTING BOLT 89
OUTER DIAMETER OF CONNECTING ROD BOLT 89
MOVEMENT AMOUNT OF FLYWHEEL (M/T MODEL) 90
SERVICE DATA AND SPECIFICATIONS (SDS) 91
Standard and Limit 91
GENERAL SPECIFICATIONS 91
INTAKE MANIFOLD AND EXHAUST MANIFOLD 91
DRIVE BELTS 91
CYLINDER HEAD 92
VALVE 92
CAMSHAFT AND CAMSHAFT BEARING 95
CYLINDER BLOCK 95
PISTON, PISTON RING, AND PISTON PIN 96
CONNECTING ROD 97
CRANKSHAFT 98
MAIN BEARING 99
CONNECTING ROD BEARING 100

VQ35DE

PRECAUTIONS 101
Precautions for Draining Coolant 101
Precautions for Disconnecting Fuel Piping 101
Precautions for Removal and Disassembly 101
Precautions for Inspection, Repair and Replacement 101
Precautions for Assembly and Installation 101
Parts Requiring Angular Tightening 101
Precautions for Liquid Gasket 102
REMOVAL OF LIQUID GASKET SEALING 102
LIQUID GASKET APPLICATION PROCEDURE 102
PREPARATION 103
Special Service Tools 103
Commercial Service Tools 105
NOISE, VIBRATION, AND HARSHNESS (NVH) TROUBLESHOOTING 107
NVH Troubleshooting — Engine Noise 107
Use the Chart Below to Help You Find the Cause of the Symptom. 108
DRIVE BELTS 109
Checking Drive Belts 109
AIR CLEANER AND AIR DUCT 110
Removal and Installation 110
REMOVAL 110
INSTALLATION 110
CHANGING AIR CLEANER ELEMENT 110

INTAKE MANIFOLD 112
Removal and Installation 112
REMOVAL 113
INSPECTION AFTER REMOVAL 114
INSTALLATION 114
EXHAUST MANIFOLD AND THREE WAY CATALYST 116
Removal and Installation 116
REMOVAL 117
INSPECTION AFTER REMOVAL 118
INSTALLATION 119
OIL PAN 120
Removal and Installation 120
REMOVAL 120
INSTALLATION 123
IGNITION COIL 126
Removal and Installation 126
REMOVAL 126
INSTALLATION 126
SPARK PLUG (PLATINUM-TIPPED TYPE) 127
Removal and Installation 127
REMOVAL 127
INSPECTION AFTER REMOVAL 128
INSTALLATION 128
FUEL INJECTOR AND FUEL TUBE 129
Removal and Installation 129
REMOVAL 129
INSTALLATION 130
INSPECTION AFTER INSTALLATION 131
ROCKER COVER 132
Removal and Installation 132
REMOVAL 132
INSTALLATION 133
CAMSHAFT 134
Removal and Installation 134
REMOVAL 135
INSTALLATION 135
INSPECTION AFTER REMOVAL 139
Valve Clearance 141
CHECKING 141
ADJUSTING 144
TIMING CHAIN 146
Components 146
POSITION FOR APPLYING LIQUID GASKET . 148
Removal 149
Inspection 155
Installation 155
CYLINDER HEAD 164
On-Vehicle Service 164
CHECKING COMPRESSION PRESSURE 164
Removal and Installation 165
REMOVAL 165
INSTALLATION 169
Disassembly and Assembly 176
DISASSEMBLY 177
ASSEMBLY 177
Inspection After Disassembly 178
CYLINDER HEAD DISTORTION 178
VALVE GUIDE CLEARANCE 178
VALVE GUIDE REPLACEMENT 179
VALVE SEAT CONTACT 180
VALVE SEAT REPLACEMENT 180
VALVE SPRING SQUARENESS 181
VALVE SPRING DIMENSIONS AND VALVE SPRING PRESSURE LOAD 181
ENGINE ASSEMBLY 182
Removal and Installation 182
REMOVAL 183
INSTALLATION 185
INSPECTION AFTER INSTALLATION 185
CYLINDER BLOCK 186
Disassembly and Assembly 186
DISASSEMBLY 187
ASSEMBLY 189
Inspection 194
PISTON AND PISTON PIN CLEARANCE 194
PISTON RING SIDE CLEARANCE 195
PISTON RING END GAP 195
CONNECTING ROD BEND AND TORSION ... 195
CONNECTING ROD BEARING (BIG END) 196
CONNECTING ROD BUSHING OIL CLEARANCE (SMALL END) 196
CYLINDER BLOCK DISTORTION AND WEAR 197
INNER DIAMETER OF MAIN BEARING HOUSING 198
PISTON-TO-BORE CLEARANCE 198
CRANKSHAFT 199
BEARING CLEARANCE 200
CONNECTING ROD BUSHING CLEARANCE (SMALL END) 203
DRIVE PLATE RUNOUT (A/T) 204
FLYWHEEL RUNOUT (M/T) 204
SERVICE DATA AND SPECIFICATIONS (SDS) ... 206
Standard and Limit 206
GENERAL SPECIFICATIONS 206
CYLINDER HEAD 207
VALVE 207
CAMSHAFT AND CAMSHAFT BEARING 211
CYLINDER BLOCK 211
PISTON, PISTON RING AND PISTON PIN 212
CONNECTING ROD 213
CRANKSHAFT 214
AVAILABLE MAIN BEARING 215
CONNECTING ROD BEARING 215
MISCELLANEOUS COMPONENTS 216
BEARING CLEARANCE 216

PRECAUTIONS

PFP:00001

Precautions for Draining Coolant

EBS007OM

- Drain coolant when engine is cooled.

Precautions for Disconnecting Fuel Piping

EBS007ON

- Before starting work, make sure no fire or spark producing items are in the work area.
- Release fuel pressure before any removal or disassembly.
- After disconnecting pipes, plug openings to stop fuel leakage.

Precautions for Removal and Disassembly

EBS007OO

- When instructed to use special service tools, use the specified tools. Always be careful to work safely, avoid forceful operations.
- Use maximum care to avoid damage to mating or sliding surfaces.
- Cover openings of engine system with tape or equivalent, if necessary, to seal out foreign materials.
- Mark and arrange disassembly parts in an organized way for easy troubleshooting and assembly.
- When loosening nuts and bolts, as a basic rule, start with the one furthest outside, then the one diagonally opposite, and so on. If the order of loosening is specified, follow the specifications.

Precautions for Inspection, Repair and Replacement

EBS007OP

- Before repairing or replacing, thoroughly inspect parts. Inspect new replacement parts in the same way, and replace if necessary.

Precautions for Assembly and Installation

EBS007OQ

- Use torque wrench to tighten bolts or nuts.
- When tightening nuts and bolts, as a basic rule, equally tighten in several different steps starting with the ones in center, then ones on inside and outside diagonally in this order. If the order of tightening is specified, follow the specifications.
- Always replace the old with a new gasket, packing, oil seal or O-ring.
- Thoroughly wash, clean, and air-blow each part. Carefully check oil or coolant passages for any restriction and blockage.
- Avoid damaging sliding or mating surfaces. Completely remove foreign materials such as cloth lint or dust. Before assembly, oil sliding surfaces well.
- Bleed the air trapped within the system after draining the coolant.
- After repairing, start engine and increase engine speed to check coolant, fuel, oil, and exhaust systems for leakage or rattles.

Parts Requiring Angular Tightening

EBS007OR

- Use an angle wrench for the final tightening of the following engine parts.
  - Cylinder head bolts
  - Lower cylinder block bolts
  - Connecting rod cap bolts
  - Crankshaft pulley bolt (No angle wrench is required as the bolt flange is provided with notches for angular tightening)
- Do not use a torque value for final tightening.
- The torque value for these parts are for a preliminary step.
- Ensure thread and seat surfaces are clean and coated with engine oil.

Precautions for Liquid Gasket

EBS007OS

REMOVAL OF LIQUID GASKET SEALING

- After removing the mounting bolts and nuts, disconnect the component using a seal cutter.

  CAUTION:
  Be careful not to damage the mating surfaces.

- In areas where the cutter is difficult to use, use a plastic hammer to lightly tap the areas where the sealant is applied to disconnect the component.

  CAUTION:
  If for some unavoidable reason a tool such as a flat-bladed screwdriver is used, be careful not to damage the mating surfaces.

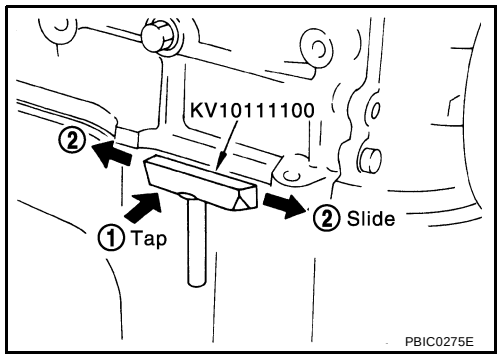

LIQUID GASKET APPLICATION PROCEDURE

1. Using a scraper, remove the old RTV Silicone Sealant adhering to the gasket application surface and the mating surface.
   - Remove the sealant completely from the groove of the gasket application surface, mounting bolts, and bolt holes.
2. Thoroughly clean the gasket application surface and the mating surface and remove adhering moisture, grease and foreign materials.
3. Attach the sealant tube to the tube presser.
   Use Genuine RTV Silicone Sealant or equivalent. Refer to GI-42, "RECOMMENDED CHEMICAL PRODUCTS AND SEALANTS" .

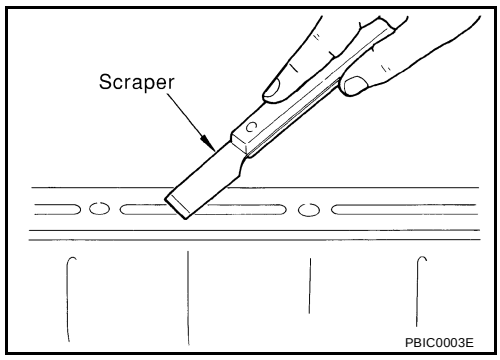

4. Apply the sealant without breaks to the specified location with the specified dimensions.

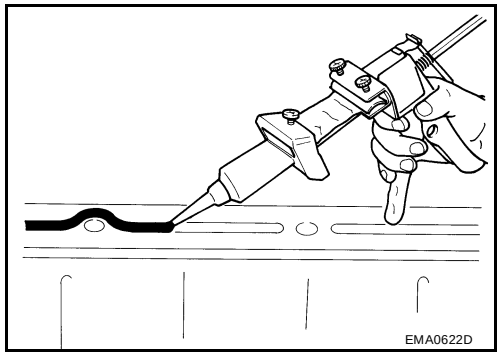

- If there is a groove for the sealant application, apply the sealant to the groove.
- As for the bolt holes, normally apply the sealant inside the holes. If specified, it should be applied outside the holes. Make sure to read the text of this manual.
- Within five minutes of the sealant application, install the mating component.
- If the sealant protrudes, wipe it off immediately.
- Do not retighten after the installation.
- After 30 minutes or more have passed from the installation, fill the engine with the specified oil and coolant. Refer to MA-12, "RECOMMENDED FLUIDS AND LUBRICANTS" .

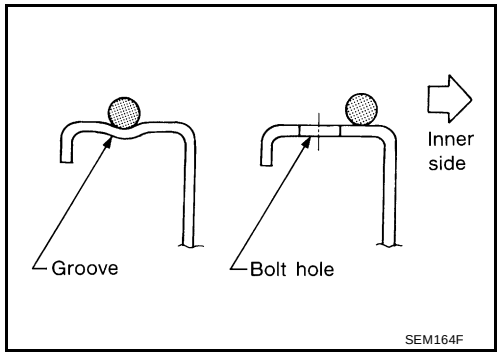

CAUTION:
Follow all specific instructions in this manual.

PREPARATION

PFP:00002

Special Service Tools

EBS007OT

The actual shapes of the Kent-Moore tools may differ from those of the special service tools illustrated here.

Tool number (Kent-Moore No.) Tool name		Description
KV10111100 (J-37228) Seal cutter	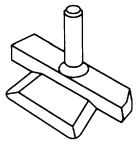 S-NT046	Removing steel oil pan and rear timing chain case
ST0501S000 Engine stand assembly 1, ST05011000 (—) Engine stand 2, ST05012000 (—) Base	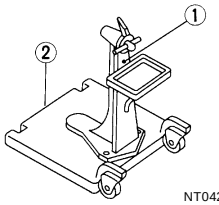 NT042	Disassembling and assembling
KV10106500 (—) Engine stand shaft	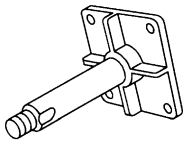 NT028	
KV10115300 (—) Engine sub-attachment	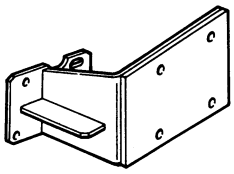 ZZA1078D	
KV10116200 (J26336-B) Valve spring compressor 1, KV10115900 (J-26336-20) Attachment	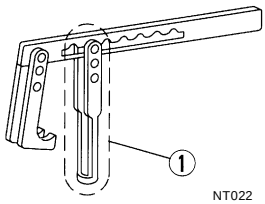 NT022	Disassembling valve mechanism
KV10112100 (BT8653-A) Angle wrench	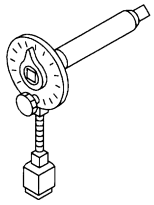 S-NT014	Tightening bolts for bearing cap, cylinder head, etc.
KV10117100 (J36471-A) Heated oxygen sensor wrench	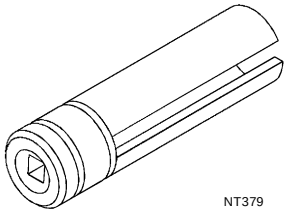 NT379	Loosening or tightening heated oxygen sensors with 22 mm 80.87 in) hexagon nut

Tool number (Kent-Moore No.) Tool name	Description
KV10107902 (J38959) Valve oil seal puller 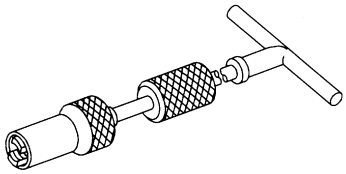 S-NT011	Removing valve oil seal
KV10115600 (J38958) Valve oil seal drift 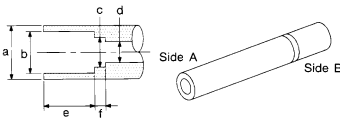 S-NT603	Installing valve oil seal **Use side A.** **a: 20 (0.79) dia.** **d: 8 (0.31) dia.** **b: 13 (0.51) dia.** **e: 10.7 (0.421) dia.** **c: 10.3 (0.406) dia.** **f: 5 (0.20) dia.** Unit: mm (in)
EM03470000 (J8037) Piston ring compressor 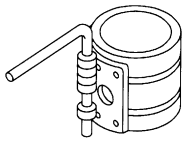 S-NT044	Installing piston assembly into cylinder bore
ST16610001 (J23907) Pilot bushing puller 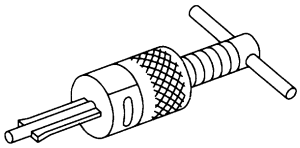 S-NT045	Removing crankshaft pilot bushing
— (J-45737) TP50 Torx® plus bit 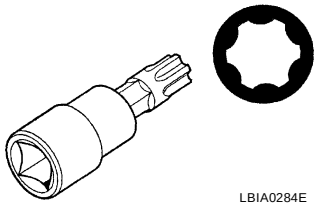 LBIA0284E	Removing and installing flywheel bolts (M/T models)
— (J-45816) E20 Torx® socket 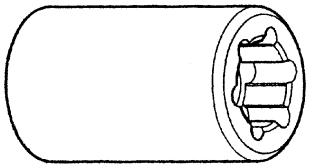 LBIA0285E	Removing and installing drive plate bolts (A/T models)
WS39930000 (—) Tube presser 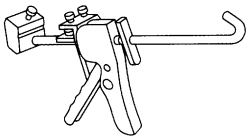 S-NT052	Pressing the tube of liquid gasket

Commercial Service Tools

EBS007OU

(Kent-Moore No.) Tool name	Description	
Quick connector release	 PBIC0198E	Removing fuel tube quick connectors in engine room (Available in SEC. 164 of PARTS CATALOG: Part No. 16441 6N210)
Pulley holder	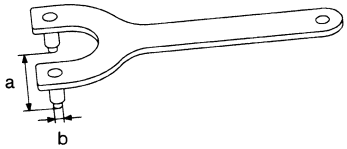 NT628	Crankshaft pulley removing and installing a: 68 mm (2.68 in) dia. b: 8 mm (0.31 in) dia.
Crank puller	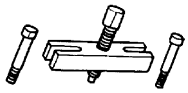 ZZA0010D	Crankshaft pulley removing
Spark plug wrench	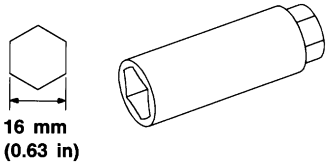 S-NT047	Removing and installing spark plug
Valve seat cutter set	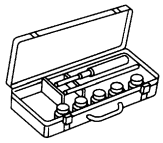 S-NT048	Finishing valve seat dimensions
Piston ring expander	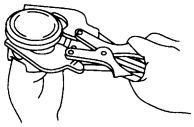 S-NT030	Removing and installing piston ring
Valve guide drift	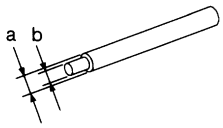 S-NT015	Removing and installing valve guide **Intake & Exhaust:** **a: 9.5 mm (0.374 in) dia.** **b: 5.5 mm (0.217 in) dia.**

(Kent-Moore No.) Tool name	Description	
Valve guide reamer	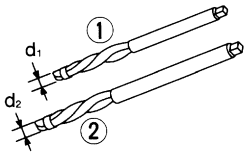 S-NT016	1: Reaming valve guide inner hole 2: Reaming hole for oversize valve guide **Intake & Exhaust:** **d_1 : 6.0 mm (0.236 in) dia.** **d_2 : 10.2 mm (0.402 in) dia.**
a: (J43897-18) b: (J43897-12) Oxygen sensor thread cleaner	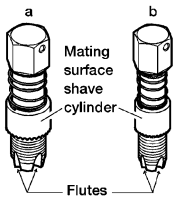 AEM488	Reconditioning the exhaust system threads before installing a new oxygen sensor (Use with anti-seize lubricant shown below.) **a: (18 mm 0.71in) for zirconia oxygen sensor** **b: (12 mm 0.47 in) for titania oxygen sensor**
Anti-seize lubricant (Permatex 133AR or equivalent meeting MIL specification MIL-A-907)	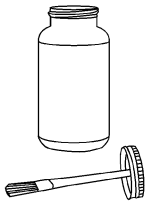 AEM489	Lubricating oxygen sensor thread cleaning tool when reconditioning exhaust system threads
Power tool	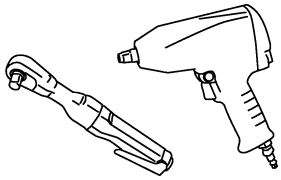 PBIC0190E	Loosening bolts and nuts

NOISE, VIBRATION, AND HARSHNESS (NVH) TROUBLESHOOTING

PFP:00003

NVH Troubleshooting — Engine Noise

EBS007OV

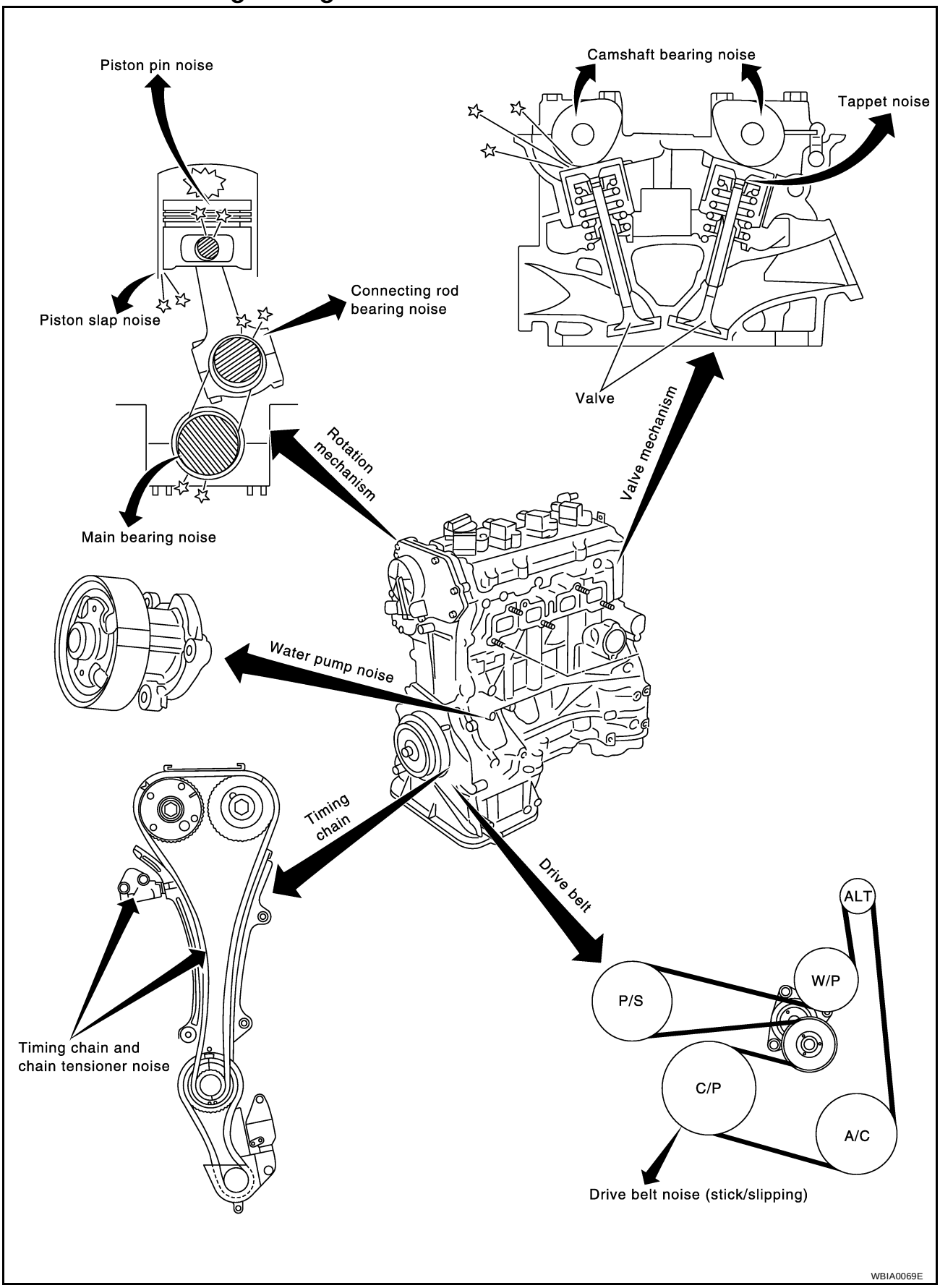

Use the Chart Below to Help You Find the Cause of the Symptom.

EBS007OW

1. Locate the area where noise occurs.
2. Confirm the type of noise.
3. Specify the operating condition of engine.
4. Check specified noise source.

If necessary, repair or replace these parts.

Location of noise	Type of noise	Operating condition of engine						Source of noise	Check item	Reference page
		Before warm-up	After warm-up	When starting	When idling	When racing	While driving			
Top of engine Rocker cover Cylinder head	Ticking or clicking	C	A	—	A	B	—	Tappet noise	Valve clearance	EM-41
	Rattle	C	A	—	A	B	C	Camshaft bearing noise	Camshaft journal clearance Camshaft runout	EM-37 EM-36
Crankshaft pulley Cylinder block (Side of engine) Oil pan	Slap or knock	—	A	—	B	B	—	Piston pin noise	Piston and piston pin clearance Connecting rod bushing clearance	EM-84 EM-84
	Slap or rap	A	—	—	B	B	A	Piston slap noise	Piston-to-bore clearance Piston ring side clearance Piston ring end gap Connecting rod bend and torsion	EM-84 EM-83 EM-83 EM-84
	Knock	A	B	C	B	B	B	Connecting rod bearing noise	Connecting rod bushing clearance (Small end) Connecting rod bearing clearance (Big end)	EM-84 EM-84
	Knock	A	B	—	A	B	C	Main bearing noise	Main bearing oil clearance Crankshaft runout	EM-88 EM-88
Front of engine Timing chain cover	Tapping or ticking	A	A	—	B	B	B	Timing chain and chain tensioner noise	Timing chain cracks and wear Timing chain tensioner operation	EM-45
Front of engine	Squeaking or fizzing	A	B	—	B	—	B	Drive belts (Sticking or slipping)	Drive belts deflection	EM-12
	Creaking	A	B	A	B	A	B	Drive belts (Slipping)	Idler pulley bearing operation	
	Squall Creak	A	B	—	B	A	B	Water pump noise	Water pump operation	CO-9

A: Closely related B: Related C: Sometimes related —: Not related

DRIVE BELTS

PFP:02117

Checking Drive Belts

EBS007OX

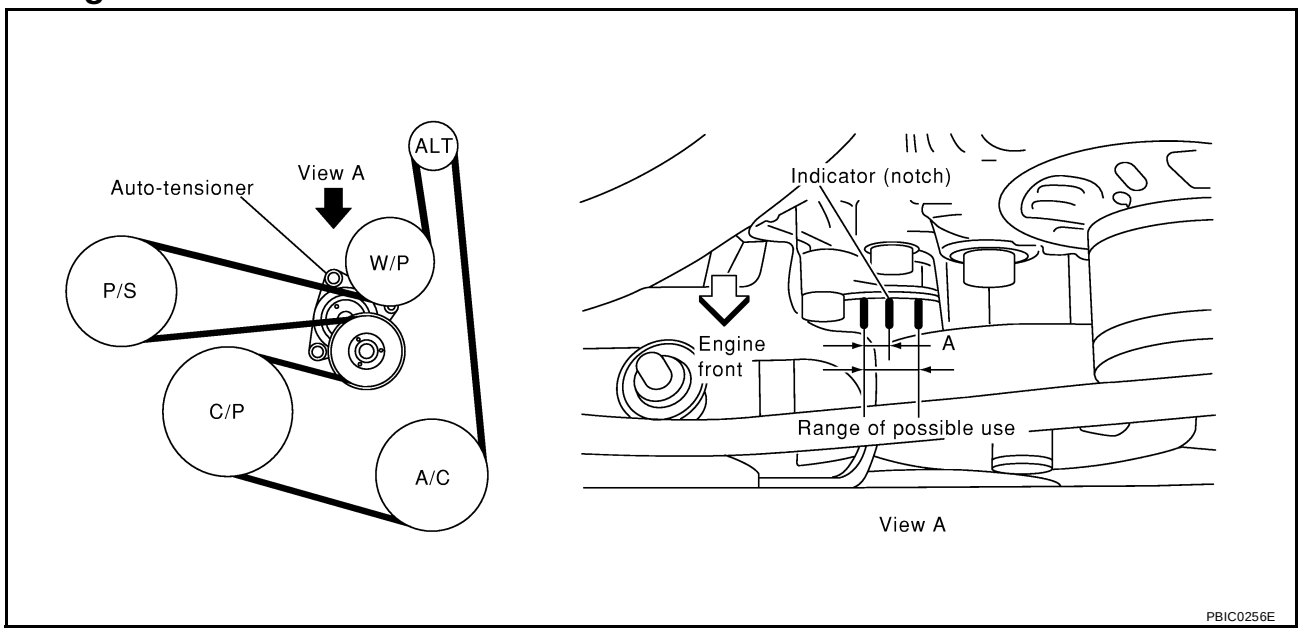

NOTE:
On vehicles not equipped with A/C, there is an idler pulley in the position for the drive belt routing.

WARNING:
Inspect the drive belt only when the engine is stopped.

Make sure that the stamp mark of auxiliary drive belt auto-tensioner is within the usable range.

- Check the auto-tensioner indication when the engine is cold.
- When the new drive belt is installed, the range should be A.
- Visually check entire belt for wear, damage or cracks.
- If the indicator is out of allowable use range or belt is damaged, replace the belt.

Tension Adjustment

EBS007OY

- Belt tension is not manually adjustable, it is automatically adjusted by the auto-tensioner.

Removal and Installation

EBS007OZ

REMOVAL

1. Remove front RH engine side cover.
2. With box wrench, and while securely holding the hexagonal part in pulley center of automatic tensioner, move the wrench handle in the direction of arrow (loosening direction of tensioner).

   CAUTION:
   Avoid placing hand in a location where pinching may occur if the holding tool accidentally comes off.
3. Insert a rod approximately 6 mm (0.24 in) in diameter through the rear of engine into holding boss to fix tensioner pulley.
   - Leave tensioner pulley arm locked until belt is installed again.
4. Loosen auxiliary drive belt from water pump pulley in sequence, and remove it.

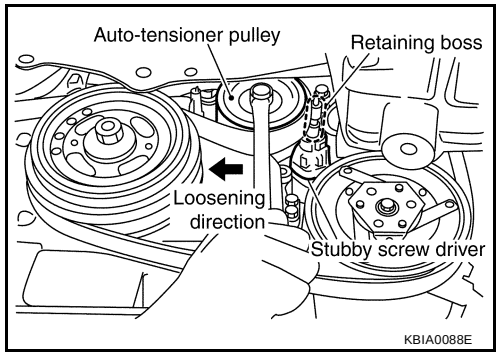

INSTALLATION

1. With box wrench, and while securely holding the hexagonal part in pulley center of automatic tensioner, move the wrench handle in the direction of arrow [loosening direction of tensioner].

   CAUTION:
   Avoid placing hand in a location where pinching may occur if the holding tool accidentally comes off.

2. Insert a rod approximately 6 mm (0.24 in) in diameter through the rear of engine into holding boss to fix tensioner pulley.
3. Hook the auxiliary drive belt onto all of the pulleys except for the water pump pulley. Hook the drive belt onto water pump pulley last.

   CAUTION:
   Confirm belts are completely set on the pulleys.
4. Release tensioner, and apply tensions to belt.
5. Turn crankshaft pulley clockwise several times to equalize tension between each pulley.
6. Confirm tensions of belt at indicator is within the allowable use range. Refer to EM-12, "Checking Drive Belts" .

Removal and Installation of Auxiliary Drive Belt Auto-tensioner

EBS007P0

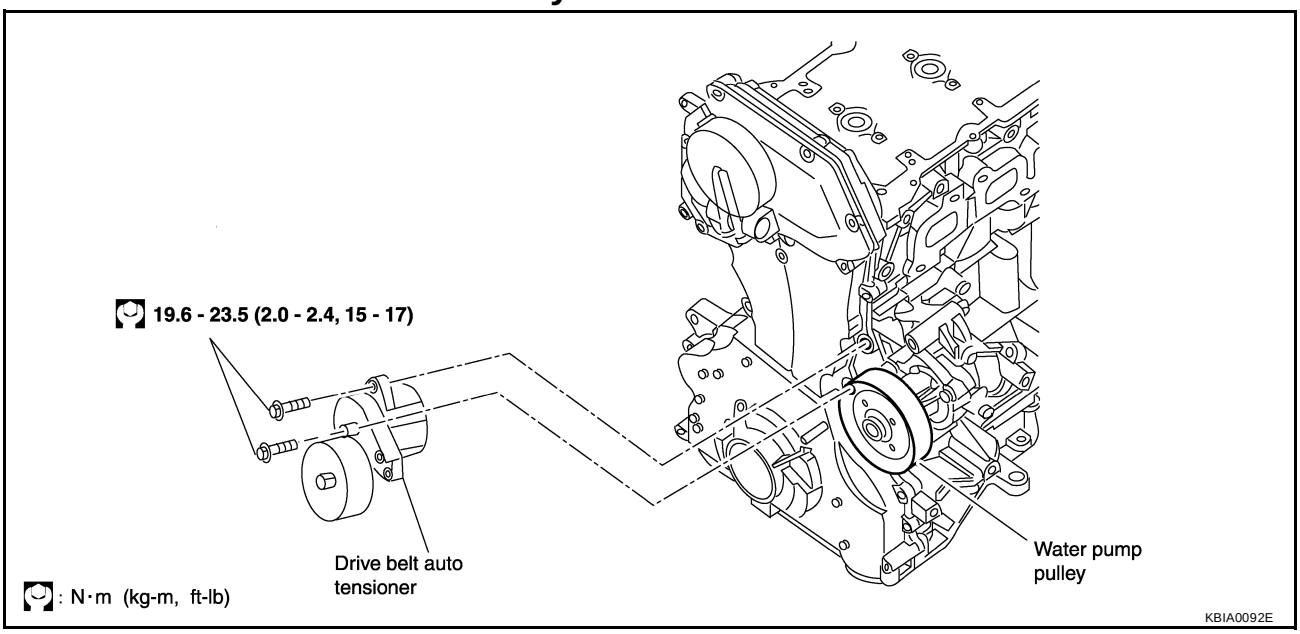

REMOVAL

1. Remove the front RH engine side cover.
2. Remove the auxiliary drive belt.
   - Keep the auto-tensioner pulley held back with a tool such as a short-length screwdriver.
3. Remove the alternator. Refer to SC-33, "Removal and Installation" .
4. Remove the auxiliary drive belt auto-tensioner, with power tool.

INSTALLATION

Installation is in the reverse order of removal.

CAUTION:
Install the auxiliary drive belt auto-tensioner carefully so not to damage the water pump pulley.

AIR CLEANER AND AIR DUCT

PFP:16500

Removal and Installation

EBS007P1

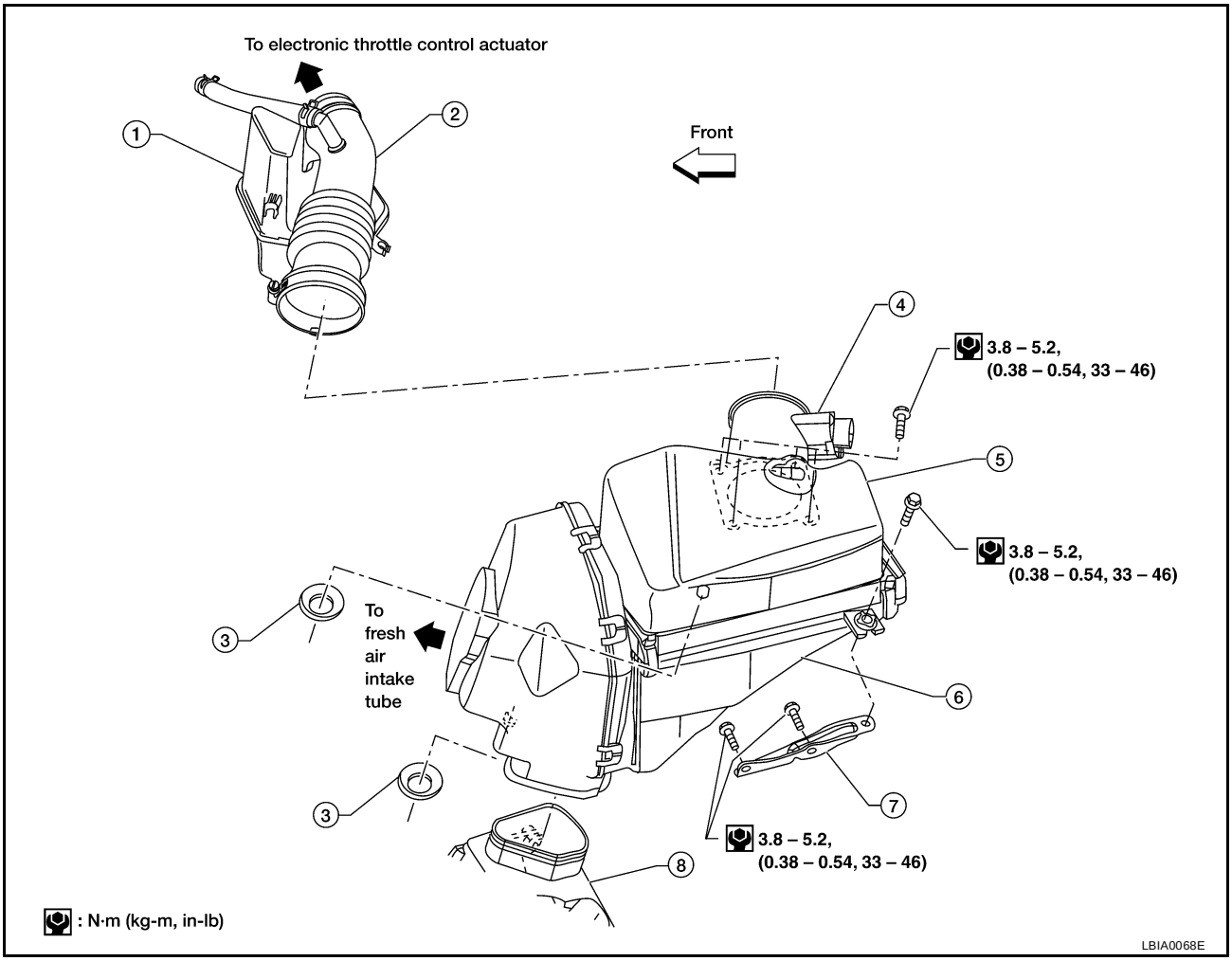

1. Resonator	2. Air cleaner to electronic throttle control actuator tube	3. Grommet
4. Mass air flow sensor	5. Air cleaner case (upper)	6. Air cleaner case (lower)
7. Air cleaner case mounting bracket	8. Resonator in fender	

REMOVAL

1. Disconnect the mass air flow sensor electrical connector.
2. Disconnect the tube clamp at the electronic throttle control actuator and the fresh air intake tube.
3. Remove air cleaner to electronic throttle control actuator tube, air cleaner case (upper), with mass air flow sensor attached.
4. Remove mass air flow sensor from air cleaner case (upper), as necessary.

   CAUTION:
   Handle the mass air flow sensor with care:
   - **Do not shock it.**
   - **Do not disassemble it.**
   - **Do not touch the internal sensor.**
5. Remove the resonator in the fender cavity, as necessary.

INSTALLATION

Installation is in the reverse order of removal.

- Attach each joint according to the alignment marks made during removal. Screw all clamps firmly.

CHANGING THE AIR CLEANER ELEMENT

1. Unhook the air cleaner case side clips and raise the air cleaner case (upper).
2. Remove the air cleaner element.
3. Install the new element, facing in the direction indicated on the element
4. position the air cleaner case (upper) and secure the air cleaner case side clips.

INTAKE MANIFOLD

PFP:14003

Removal and Installation

EBS007P2

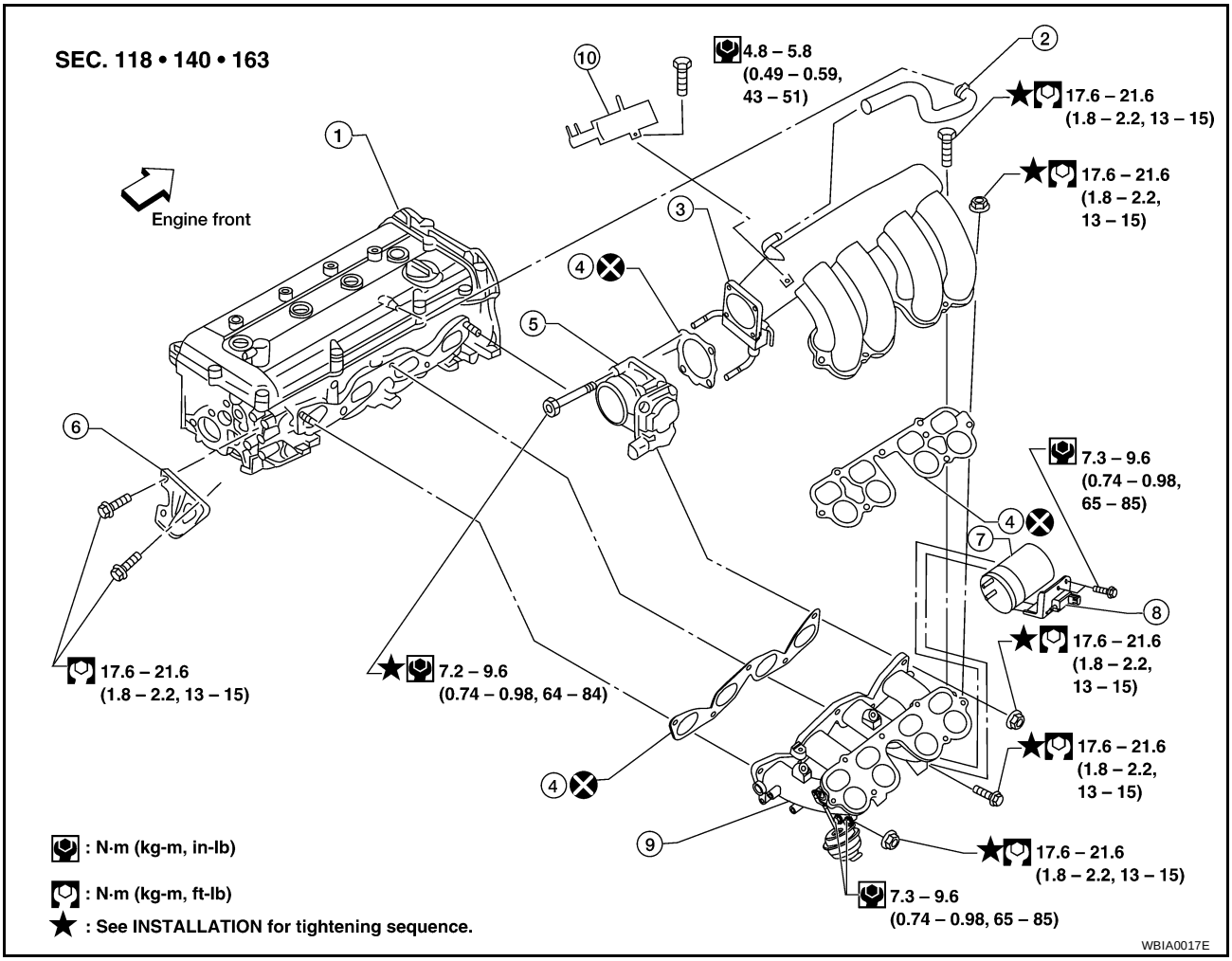

1. Cylinder head assembly	2. PCV hose	3. Intake manifold collector
4. Gasket	5. Electric throttle control actuator	6. Intake manifold support
7. Vacuum reservoir tank	8. VIAS control solenoid valve	9. Intake manifold
10. EVAP canister purge volume control solenoid		

REMOVAL

WARNING:

To avoid the danger of being scalded, never drain the coolant when the engine is hot.

1. Disconnect the negative battery terminal.
2. Release the fuel pressure.
   Refer to EC-51, "FUEL PRESSURE RELEASE" .
3. Drain coolant when engine is cooled. Refer to MA-14, "Changing Engine Coolant" .
4. Disconnect the MAF sensor electrical connector.
5. Remove air cleaner case and air duct assembly.
   Refer to EM-14, "Removal and Installation" .
6. Disconnect the following components at the intake side:

a. PCV hose
b. EVAP canister purge volume control solenoid
c. Electric throttle control actuator
d. Brake booster vacuum hose

7. Disconnect fuel hose quick connector on the vehicle engine side.
   - Using the quick connector release tool (here after called “release tool”), and perform the following steps to disconnect the fuel tube quick connector.

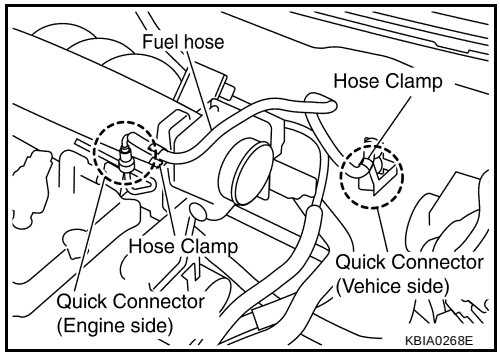

a. Remove quick connector cap.

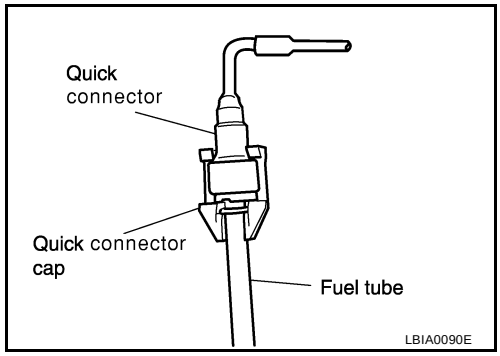

b. With the sleeve side of release facing quick connector, install release tool onto the fuel tube as shown.
c. Insert release tool into quick connector until sleeve contacts and goes no further. Hold the release tool on that position.

CAUTION:
Inserting the release tool hard will not disconnect quick connector. Hold release tool where it contacts and goes no further.

d. Pull the quick connector straight out from the fuel tube.

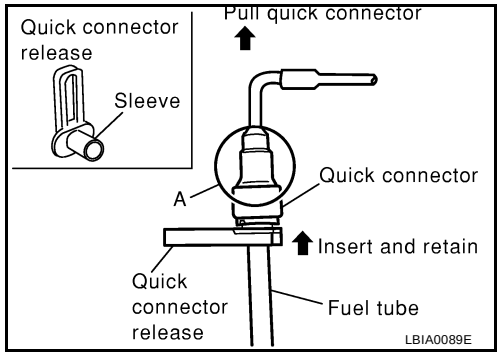

CAUTION:
- **Pull quick connector holding it at the "A" position, as shown.**
- **Do not pull with lateral force applied. O-ring inside quick connector may be damaged.**
- **Prepare container and cloth beforehand as fuel will leak out.**
- **Avoid fire and sparks.**
- **Be sure to cover openings of disconnected pipes with plug or plastic bag to avoid fuel leakage and entry of foreign materials.**

8. If necessary, disconnect the fuel tube, on the vehicle piping side, using the quick connector release tool (here after called "release tool"). Perform the following steps to disconnect the fuel tube quick connector.

a. With the sleeve side of the release facing quick connector, install release tool onto the fuel tube as shown.
b. Insert release tool into quick connector until sleeve contacts and goes no further. Hold the release tool on that position.

CAUTION:
Inserting the release tool hard will not disconnect quick connector. Hold release tool where it contacts and goes no further.

c. Pull the quick connector straight out off of the fuel tube.

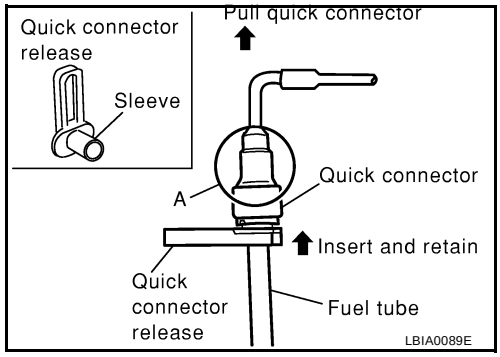

CAUTION:
- **Pull quick connector holding it at the "A" position, as shown.**

- **Do not pull with lateral force applied as the O-ring inside the quick connector may be damaged.**
- **Prepare a container and cloth beforehand as fuel will leak out.**
- **Avoid fire and sparks.**
- **Be sure to cover openings of disconnected pipes with plug or plastic bag to avoid fuel leakage and entry of foreign materials.**

9. Loosen mounting bolts diagonally, and remove the electric throttle control actuator.

   CAUTION:
   Handle carefully to avoid any damage.

10. Disconnect intake manifold collector harness, and vacuum hose.

    CAUTION:
    Cover engine openings to avoid entry of foreign materials.

11. Remove intake manifold collector mounting bolts on the support, using power tools.
12. Loosen the mounting bolts and nuts in the order shown to remove the intake manifold collector, using power tools.

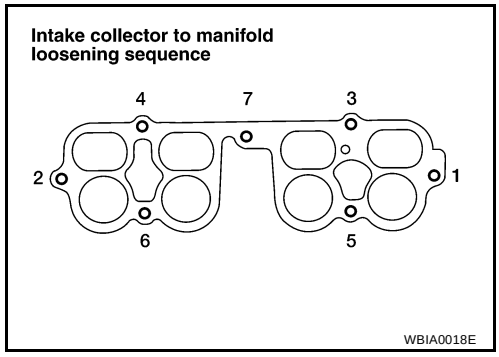

13. Loosen the bolts in the order shown to remove the intake manifold assembly, using power tools.

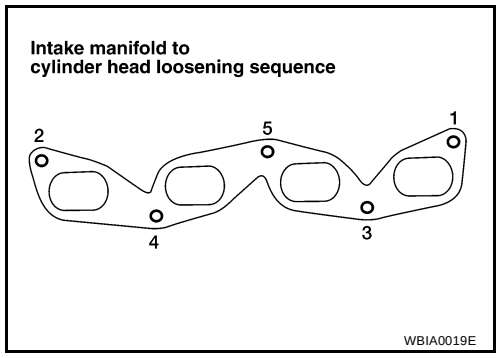

INSPECTION AFTER REMOVAL

Surface Distortion

- Using straightedge and feeler gauge, inspect surface distortion of intake manifold collector and intake manifold surface.

  Standard : 0.1 mm (0.004 in)

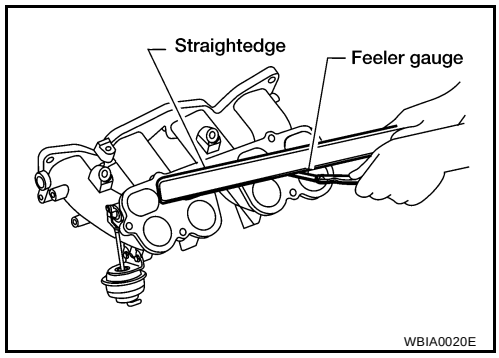

INSTALLATION

Install the intake manifold bolts and nuts in the reverse order of removal, following the tightening sequences below.

Tightening the Intake Manifold Bolts and Nuts

- Tighten in numerical order as shown.

  CAUTION:
  After tightening No.5, retighten the No.1 mounting bolt to specification.

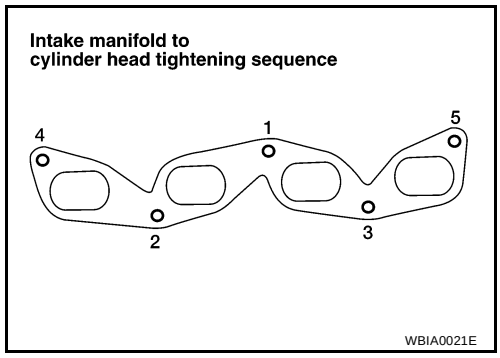

Tightening the Intake Manifold Collector Bolts and Nuts

- Tighten in numerical order as shown.

  CAUTION:
  After tightening No.7, retighten the No.1 mounting bolt to specification.

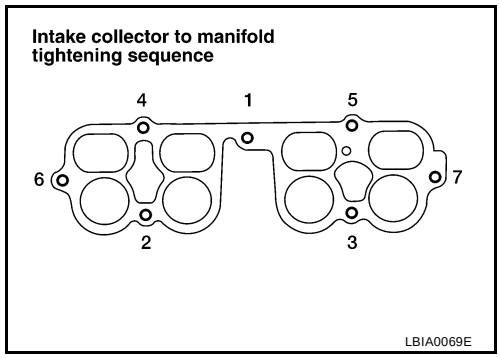

Installation of the Electric Throttle Control Actuator

- Tighten the electric throttle control actuator bolts equally and diagonally in several steps.

  Electric throttle control actuator bolts : 7.2 - 9.6 N·m (0.74 - 0.98 kg-m, 64 - 84 in-lb)

- After installation perform procedure in EM-20, "Inspection After Installation" .

Connecting the Quick Connector for the Fuel Hose (Engine Side)

- Install the fuel tube quick connector (engine side) as follows.

1. Make sure no foreign substances are deposited in and around tube and quick connector and there is no damage on them.
2. Thinly apply new engine oil around the fuel tube tip end.
3. Align center to insert quick connector straight into fuel tube.
   - Insert fuel tube into quick connector until the top spool on fuel tubes is inserted completely and the second level spool is positioned slightly below the quick connector bottom end.

   CAUTION:
   - **Hold it at the "A" position in illustration when inserting fuel tube into quick connector.**
   - **Carefully align center to avoid inclined insertion to prevent damage to O-ring inside quick connector.**
   - **Insert until you hear a “click” sound and actually feel the engagement.**
   - **To avoid misidentification of engagement with a similar sound, be sure to perform the next step.**

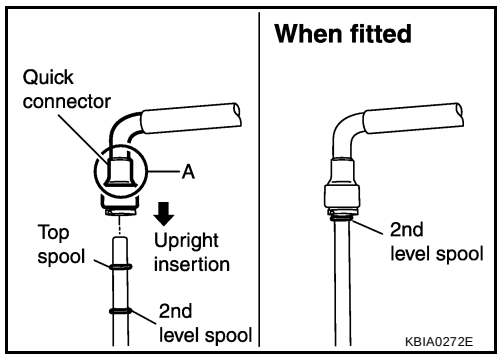

4. Before clamping fuel hose with hose clamp, pull the quick connector hard by hand with the recommended puling force, holding it at the "A" position, as shown. Make sure it is completely engaged (connected) so that it does not come off of the fuel tube.

   Pulling force : 50 N (5.1 kg, 11.2 lb)

5. Install quick connector cap on quick connector joint.

- Direct arrow mark on quick connector cap to upper side (fuel hose side).

6. Install fuel hose to hose clamp.

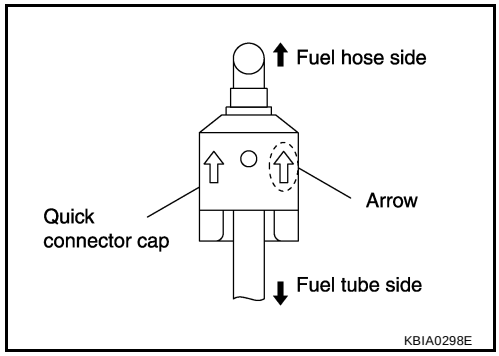

Connecting the Quick Connector for the Fuel Hose (Vehicle Piping Side)

- Install the fuel tube quick connector (vehicle piping side) as follows.

1. Make sure no foreign substances are deposited in and around tube and quick connector and there is no damage on them.
2. Thinly apply new engine oil around the fuel tube tip end.
3. Align center to insert quick connector straight into fuel tube.
   - Insert fuel tube into quick connector until the top spool on fuel tubes is inserted completely and the paint mark is positioned slightly below the quick connector bottom end.

   CAUTION:
   - **Carefully align center to avoid inclined insertion to prevent damage to O-ring inside quick connector.**
   - **Insert until you hear a "click" sound and actually feel the engagement.**
   - **To avoid misidentification of engagement with a similar sound, be sure to perform the next step.**

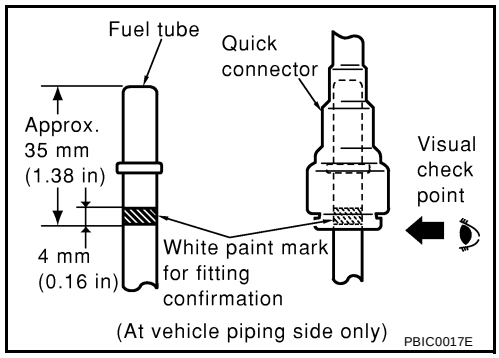

4. Before clamping fuel hose with hose clamp, pull the quick connector hard by hand with the recommended pulling force. Make sure it is completely engaged (connected) so that it does not come off of the fuel tube.

   Pulling force : 50 N (5.1 kg, 11.2 lb

INSPECTION AFTER INSTALLATION

1. Start the engine and run it for a few minutes with the engine at idle.
   - Check connections for fuel leakage.
2. Stop the engine and check for fuel leakage both visually and by odor of gasoline.
   - Perform procedures for "Throttle Valve Closed Position Learning" after finishing repairs. Refer to EC-49, "Throttle Valve Closed Position Learning" .
   - If electric throttle control actuator is replaced, perform procedures for "Idle Air Volume Learning" after finishing repairs. Refer to EC-49, "Idle Air Volume Learning" .

   NOTE:
   Use mirrors for checking on connections out of the direct line of sight.

   CAUTION:
   Do not touch engine immediately after stopped, as engine becomes extremely hot.

EXHAUST MANIFOLD AND THREE WAY CATALYST

PFP:14004

Removal and Installation

EBS007P3

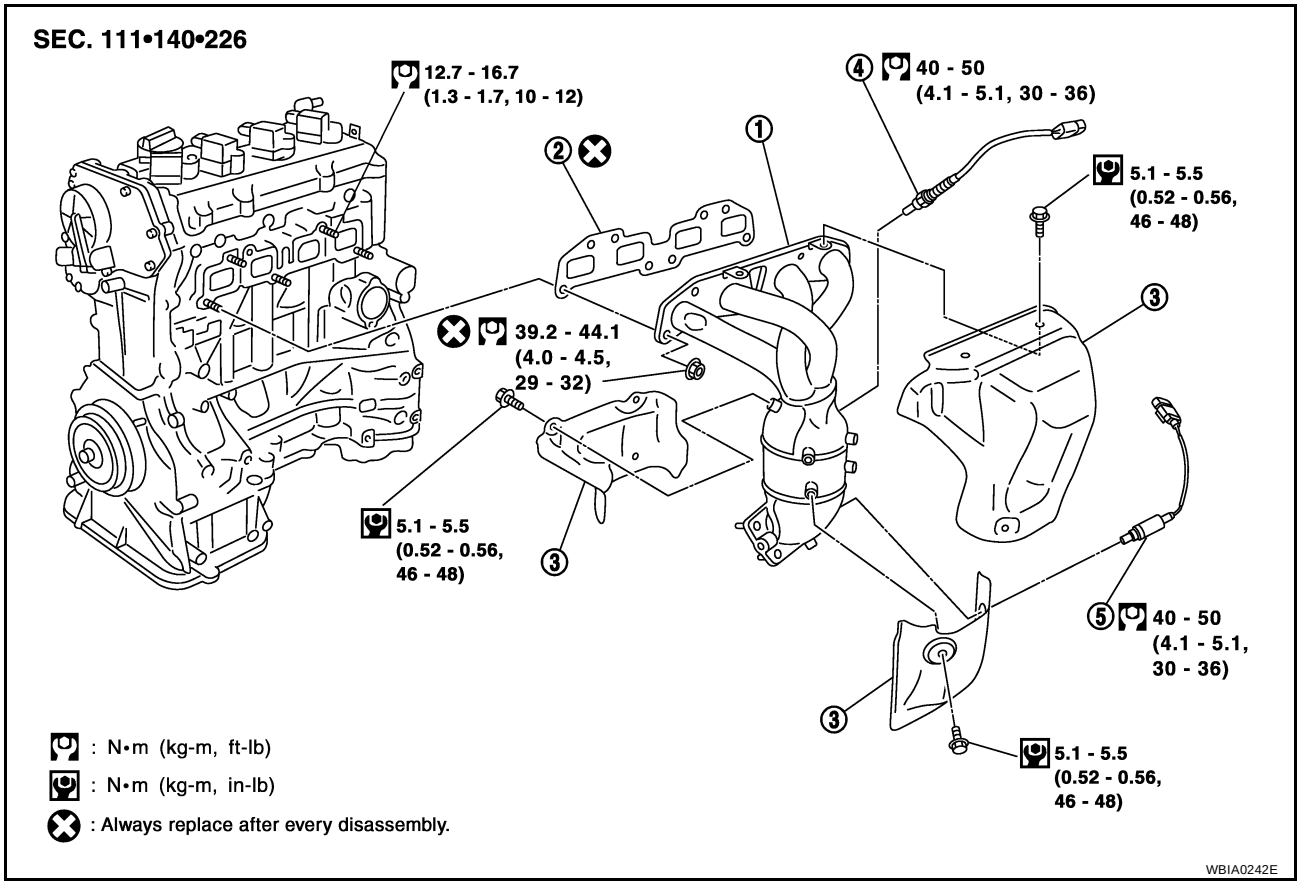

1. Exhaust manifold and three way catalyst assembly
2. Exhaust manifold gasket
3. Exhaust manifold cover (upper and lower)
4. Heated oxygen sensor 1 (front)
5. Heated oxygen sensor 2 (rear)

REMOVAL

1. Remove engine under cover, with power tool.
2. Disconnect the electrical connector of each heated oxygen sensor, and unhook the harness from the bracket and middle clamp on the cover.
3. Remove the heated oxygen sensors with Tool.

   CAUTION:
   - **Be careful not to damage heated oxygen sensor.**
   - **Discard any heated oxygen sensor which has been dropped from a height of more than 0.5 m (19.7 in) onto a hard surface such as a concrete floor; use a new one.**

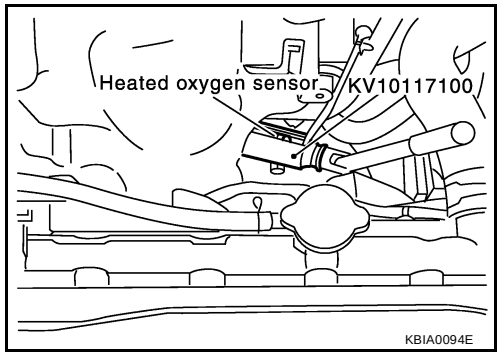

4. Remove the lower exhaust manifold cover.
5. Remove the exhaust front tube. Refer to EX-3, "Removal and Installation" .
6. Remove the upper exhaust manifold cover.

7. Loosen the nuts in the sequence shown, on the exhaust manifold and three way catalyst.
8. Remove the exhaust manifold and three way catalyst assembly and gasket. Discard the gasket.

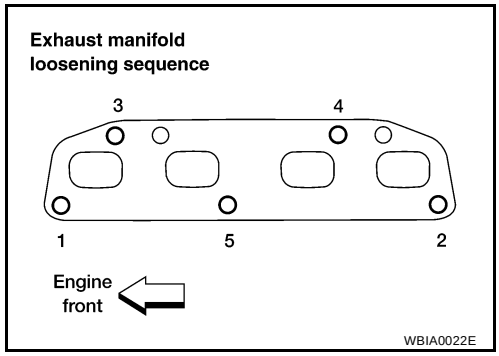

INSPECTION AFTER REMOVAL

Surface Distortion

- Use a reliable straightedge and feeler gauge to check the flatness of exhaust manifold fitting surface.

Standard : 0.3 mm (0.012 in)

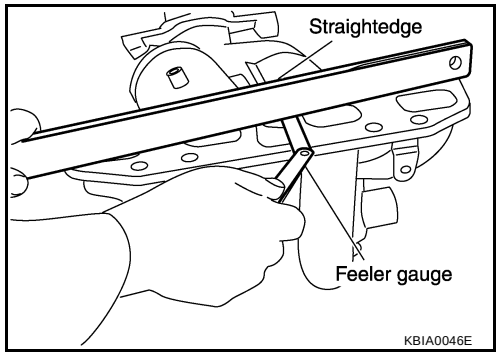

INSTALLATION

Installation is in the reverse order of removal. Pay attention to the following.

Tightening the Exhaust Manifold Bolts

- Tighten the nuts in the numerical order shown, to specification. After tightening No. 5, retighten No. 1 and then No. 3 to specification.

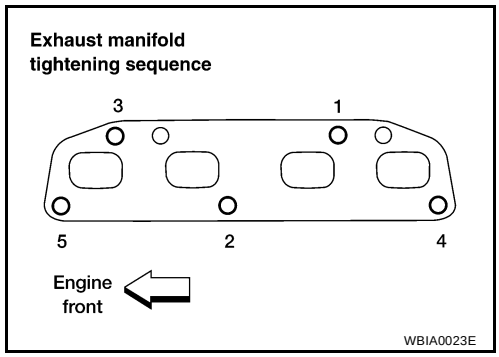

Installation of the Heated Oxygen Sensors

Clean the heated oxygen sensor threads with the Tool, then apply the anti-seize lubricant to the threads before installing the heated oxygen sensors.

CAUTION:

Do not over-tighten the heated oxygen sensors. Doing so may cause damage to the heated oxygen sensors, resulting in a malfunction and the MIL coming on.

OIL PAN AND OIL STRAINER

PFP:11110

Removal and Installation

EBS007P4

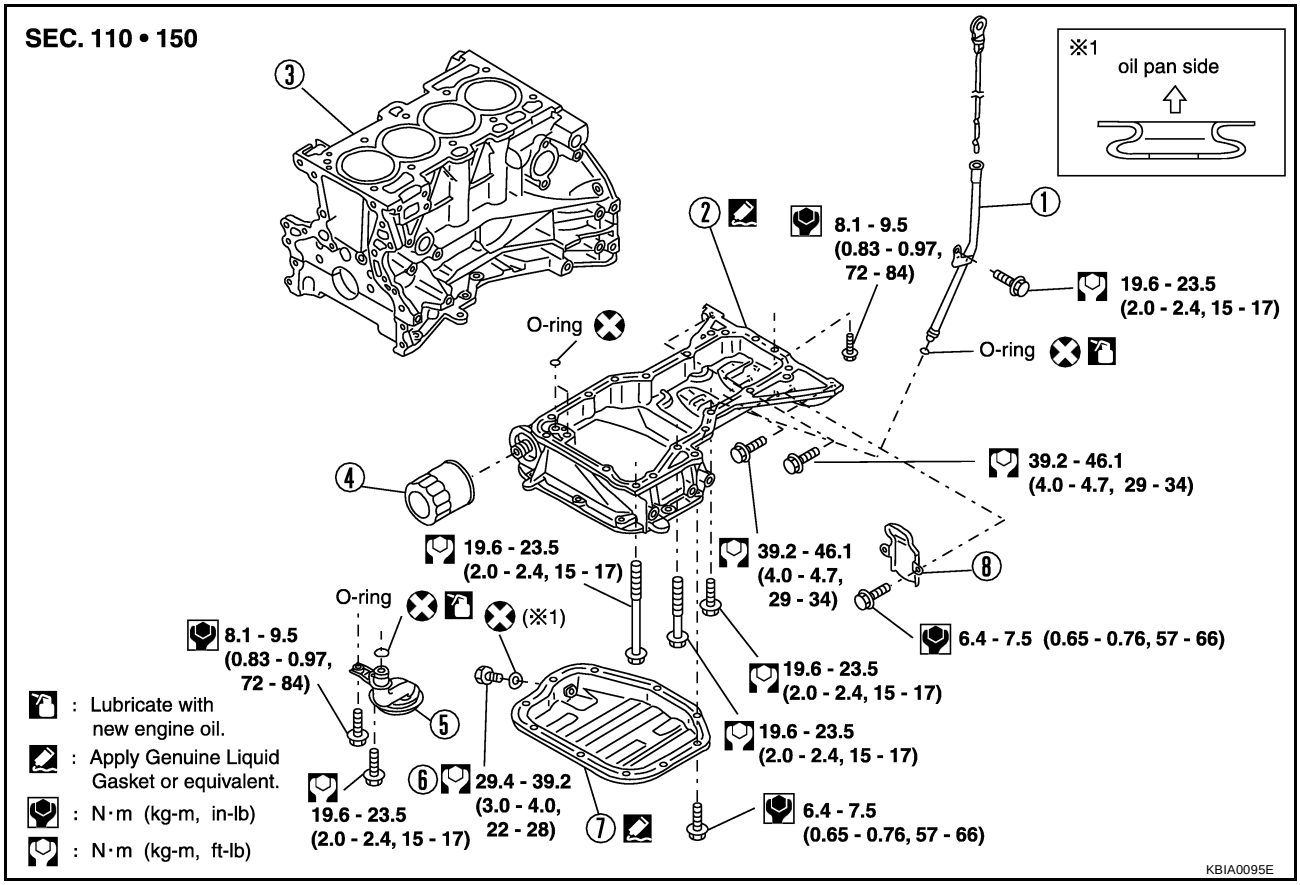

1. Oil dipstick tube	2. Oil pan, upper	3. Cylinder block
4. Oil filter	5. Oil pickup screen	6. Drain plug
7. Oil pan, lower	8. Rear plate cover	

REMOVAL

WARNING:

To avoid the danger of being scalded, never drain the engine oil when the engine is hot.

1. Remove the engine under covers on both sides, using power tool.
2. Drain engine oil. Refer to LU-7, "Changing Engine Oil" .
3. Remove the front exhaust tube. Refer to EX-3, "Removal and Installation" .
4. Remove the front suspension member, using power tool.

a. Unhook the power steering reservoir from the mounting bracket and reposition it lower to add slack to the power steering lines.

b. Disconnect the A/C compressor with piping connected from the mounting bracket and suspend with a strong wire. Refer toMTC-83, "Removal and Installation for Compressor — QR25DE Models" .

c. Disconnect the upper swaybar links. Refer to FSU-11, "Removal and Installation" .

d. Remove the front and rear engine mount through bolts while supporting the front suspension member with a suitable jack and tools. Refer to EM-63, "Removal and Installation" .

e. Disconnect the lower ball joints. Refer to FSU-14, "Removal and Installation" .

f. Remove the two steering gear mounting bolts (do not remove the mounting bracket from the steering gear housing). Refer to PS-13, "Removal and Installation" .

5. Remove the lower oil pan bolts. Loosen the bolts in the order shown, using power tool.

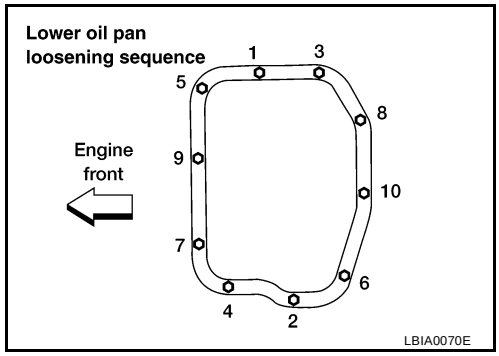

6. Insert the Tool between lower oil pan and the upper oil pan to separate them. Tap gently on the side to move the Tool around the pan; do not damage the mating surface.
7. Remove the lower oil pan.
8. Remove the oil pickup screen.
9. Remove rear plate cover, and four engine-to transaxle bolts, using power tool.

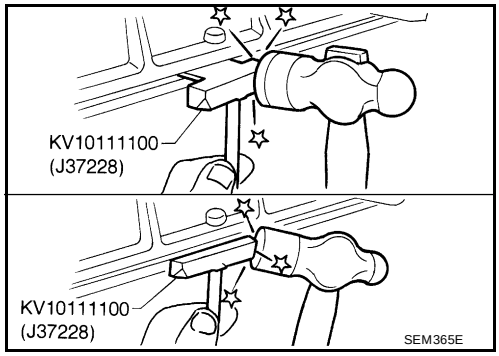

10. Loosen the upper oil pan bolts in the order shown to remove upper oil pan, using power tool.

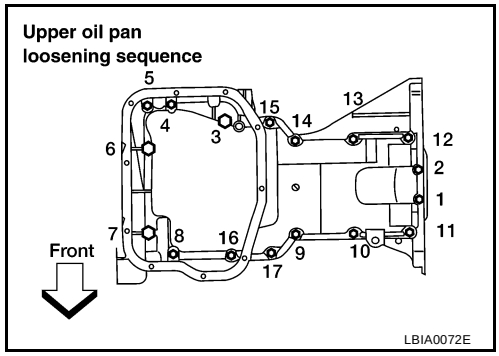

11. Insert the Tool between the upper oil pan and the cylinder block to separate them. Tap gently on the side to move the Tool around the pan; do not damage the mating surface.

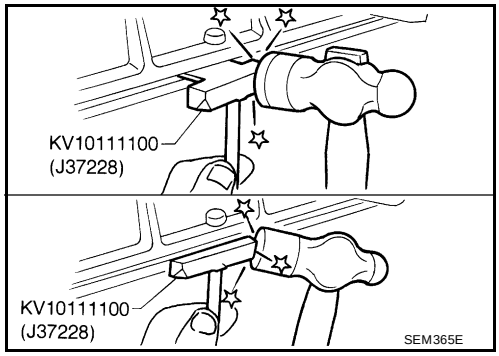

12. Remove the upper oil pan.

INSPECTION AFTER REMOVAL

- Clean the oil pickup screen to remove any foreign material.

INSTALLATION

1. Installation is in the reverse order of removal. Paying attention to the following.

a. Apply Genuine RTV Silicone Sealant, or equivalent, to the upper oil pan. Refer to GI-42, "RECOMMENDED CHEMICAL PRODUCTS AND SEALANTS" , and EM-5, "Precautions for Liquid Gasket" .
   - Install the two new O-rings in the upper oil pan.

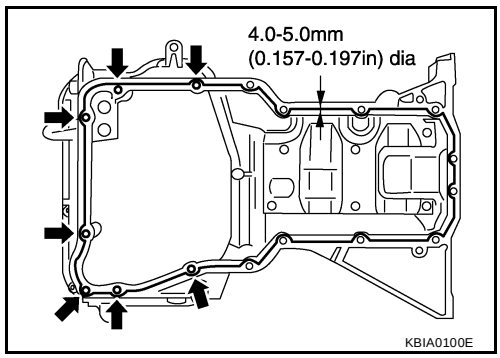

b. Tighten the upper oil pan bolts in the order as shown.
   - Bolt No.10,11,18 indicate a double tightening in the sequence of bolt No.s 1, 2, 3.

   NOTE:
   Refer below for specified bolt sizes:
   M6 × 20 mm (0.79 in): No.19, 20
   M8 × 25 mm (0.98 in): No.1, 3, 4, 9
   M8 x 45 mm (1.77 in): No.2, 5, 6, 7, 8, 17
   M8 x100 mm (3.97 in): No.12, 13, 14, 15, 16

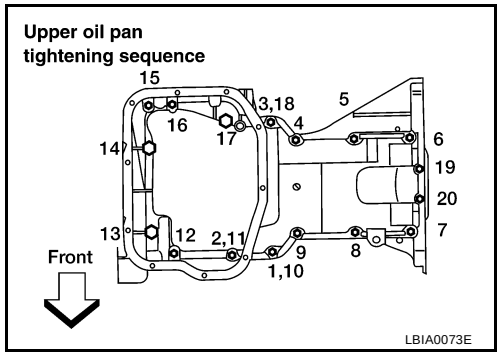

c. Apply Genuine RTV Silicone Sealant, or equivalent to the lower oil pan. Refer to GI-42, "RECOMMENDED CHEMICAL PRODUCTS AND SEALANTS" , and EM-5, "Precautions for Liquid Gasket"

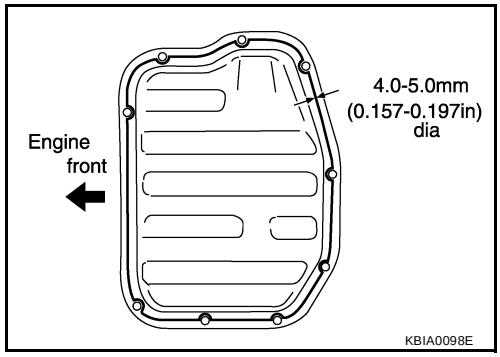

d. Tighten the lower oil pan bolts in the numerical order shown.
   - Wait at least 30 minutes after the oil pans are installed before filling the engine with oil.

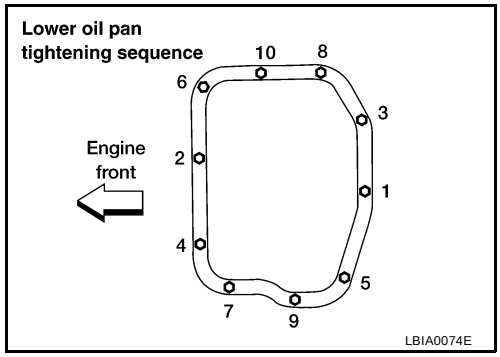

INSPECTION AFTER INSTALLATION

- Check for any engine oil leaks with the engine at operating temperature and running at idle.

IGNITION COIL

PFP:22448

Removal and Installation

EBS007P5

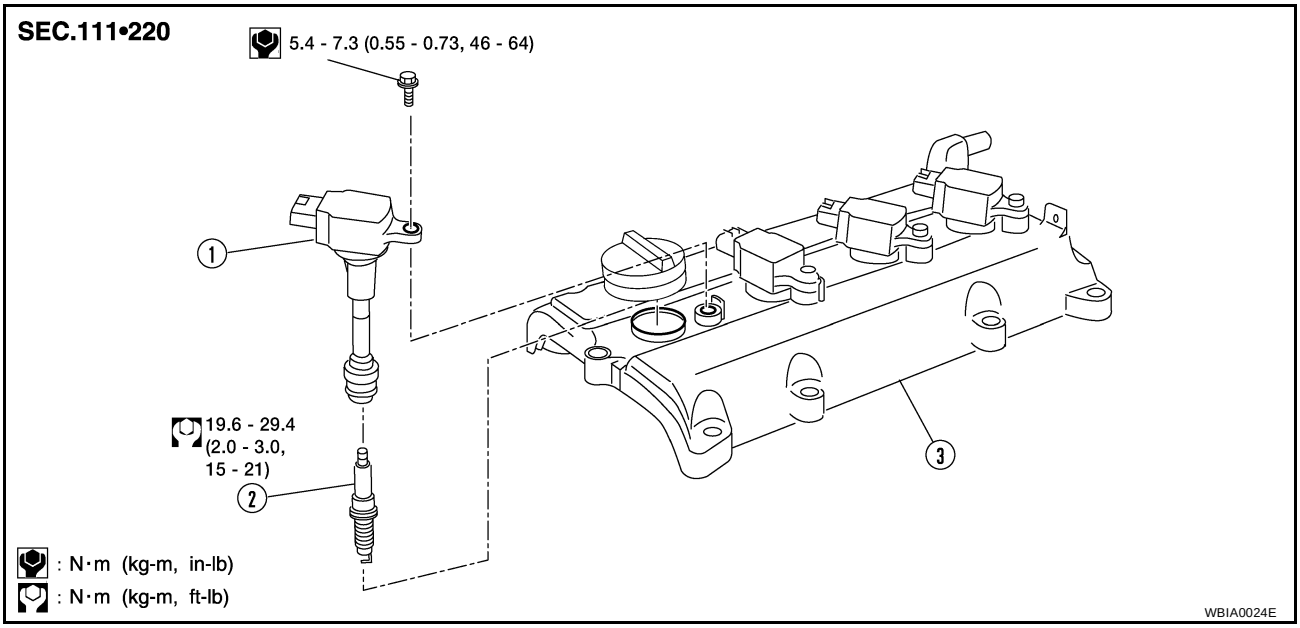

1. Ignition coil
2. Spark plug
3. Rocker cover

REMOVAL

1. Remove the engine cover.
2. Disconnect the harness connector from the ignition coil.
3. Remove the ignition coil.

   CAUTION:
   Do not drop or shock it.

INSTALLATION

Installation is in the reverse order of removal.

SPARK PLUG

PFP:22401

Removal and Installation

EBS007P6

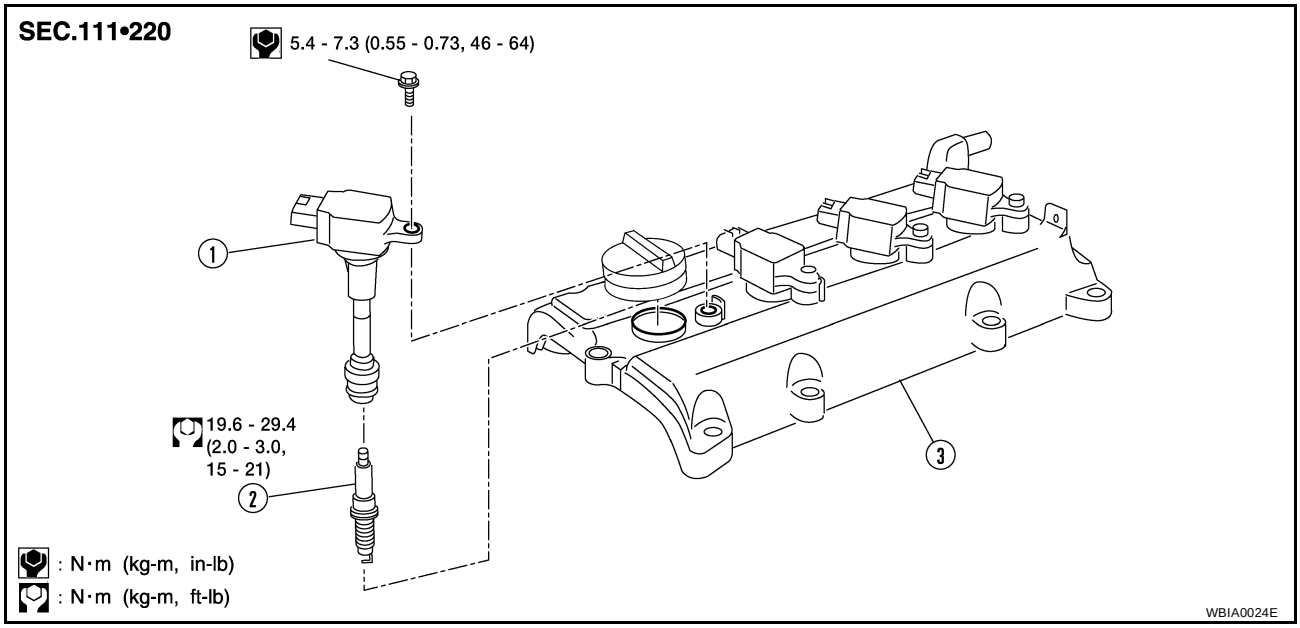

1. Ignition coil
2. Spark plug
3. Rocker cover

REMOVAL

1. Remove the ignition coil. Refer to EM-26, "Removal and Installation" .
2. Remove the spark plug with a suitable spark plug socket and wrench.

Temperature Range	NGK
Standard type	PLFR5A-11
Hot type	PLFR4A-11
Cold type	PLFR6A-11

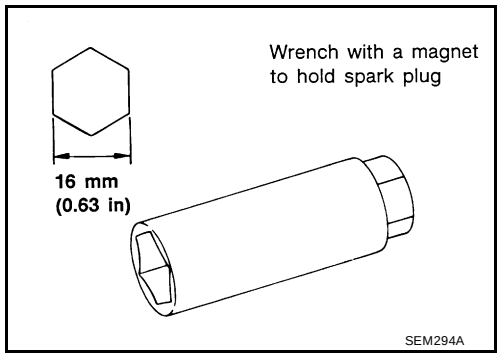

INSPECTION AFTER REMOVAL

Use standard type spark plug for normal conditions.
The hot type spark plug is suitable when fouling occurs with the standard type spark plug under conditions such as:

- frequent engine starts.
- low ambient temperatures.

The cold type spark plug is suitable when spark plug knock occurs with the standard type spark plug under conditions such as:

- extended highway driving.
- frequent high engine revolution.

CAUTION:
Do not use a wire brush for cleaning the spark plugs. Replace as necessary.

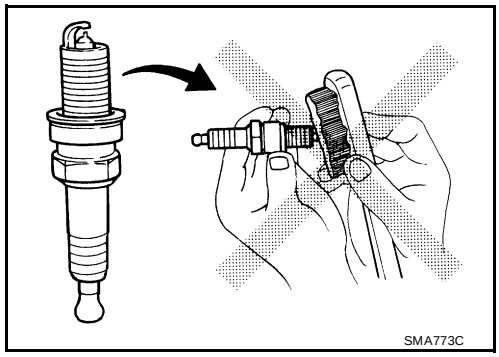

If a spark plug is covered with carbon, a spark plug cleaner may be used.

Cleaner air pressure : less than 588 kPa (6 kg/cm^2 , 85 psi)
Cleaning time : less than 20 seconds

Checking and adjusting the spark plug gap is not required between replacement intervals.

Gap : 1.0 - 1.1 mm (0.039 - 0.043 in)

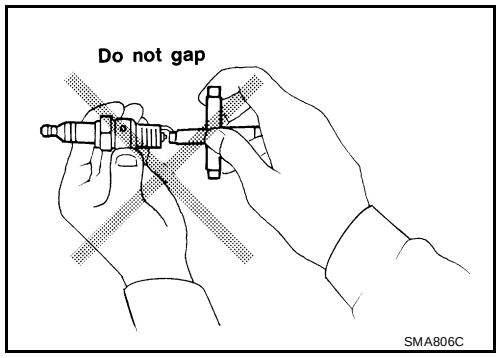

INSTALLATION

- Installation is in the reverse order of removal.

FUEL INJECTOR AND FUEL TUBE

PFP:16600

Removal and Installation

EBS007P7

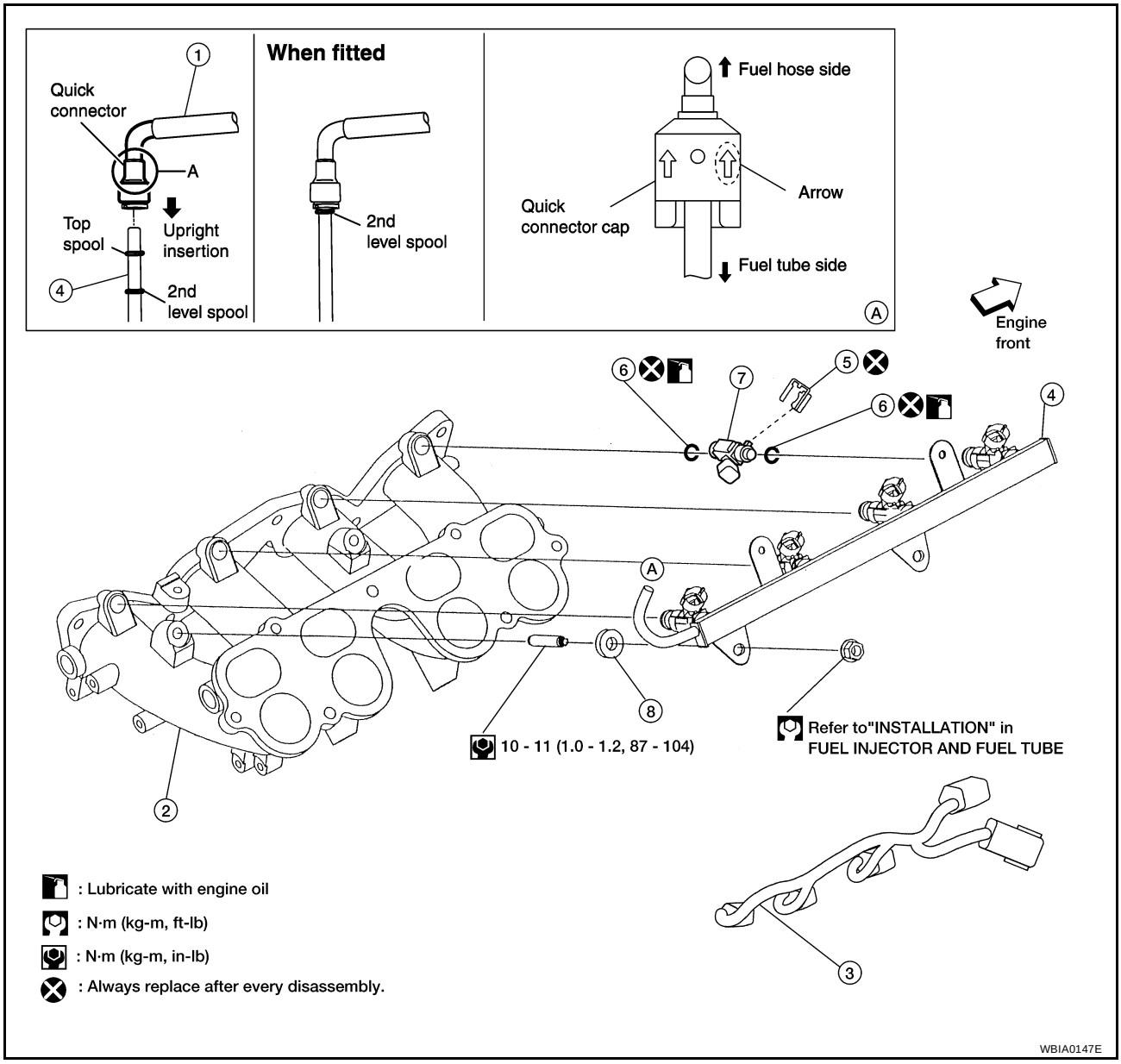

1. Fuel hose	2. Quick connector cap	3. Sub-harness
4. Fuel tube	5. Clip	6. O-ring
7. Fuel injector	8. Insulator	

CAUTION:

- **Apply new engine oil to parts before installing the parts, as shown above.**
- **Do not remove or disassemble parts unless instructed as shown in the figure.**

REMOVAL

1. Release the fuel pressure. Refer to EC-51, "FUEL PRESSURE RELEASE" .
2. Remove the intake air duct. Refer to EM-14, "Removal and Installation" .
3. Disconnect the fuel hose quick connector at the fuel tube side.
   - For how to disconnect and connect the quick connector, refer to EM-16, "INTAKE MANIFOLD" .

   CAUTION:
   - **Prepare a container and cloth for catching any spilled fuel.**
   - **This operation should be performed in a place that is free from any open flames.**

- **While hoses are disconnected seal their openings with vinyl bag or similar material to prevent foreign material from entering them.**

4. Remove the intake collector. Refer to EM-16, "INTAKE MANIFOLD" .
5. Disconnect sub-harness for injector at engine front side, and remove it from bracket.
6. Loosen the mounting bolts in the order as shown, then remove fuel tube and fuel injectors as an assembly.
7. Remove the fuel injectors from the fuel tube.
   - Release the clip and remove the fuel injector.
   - Pull fuel injector straight out of the fuel tube.
   - Be careful not to damage the nozzle.
   - Avoid any impact, such as dropping the fuel injector.
   - Do not disassemble or adjust the fuel injector.

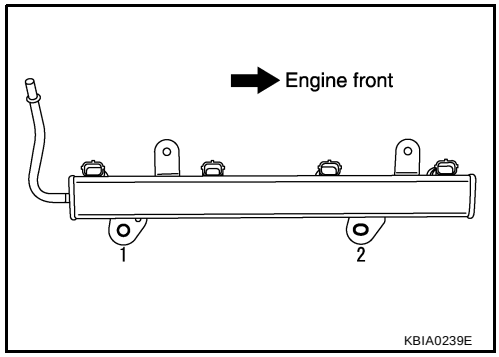

INSTALLATION

1. Install new O-rings on the fuel injector.
   - Lubricate the O-rings lightly with new engine oil.
   - Be careful not to scratch it during installation. Also be careful not to twist or stretch the O-ring. If the O-ring was stretched while it is attached, do not insert it into the fuel tube immediately.
2. Install the fuel injector into the fuel tube with the following procedure:
   - Do not reuse the clip, replace it with a new one.
   - Insert the new clip into the clip mounting groove on fuel injector.
   - Insert the clip so that projection "A" of fuel injector matches notch "A" of the clip.
3. Insert the fuel injector into the fuel tube with the clip attached.
   - Insert it while matching it to the axial center.
   - Insert fuel injector so that projection "B" of fuel injector matches notch "B" of the clip.
   - Make sure that fuel tube flange is securely fixed in flange fixing groove on the clip.
   - Make sure that installation is complete by checking that fuel injector does not rotate or come off.
4. Install the fuel tube assembly.

a. Insert the tip of each fuel injector into intake manifold.

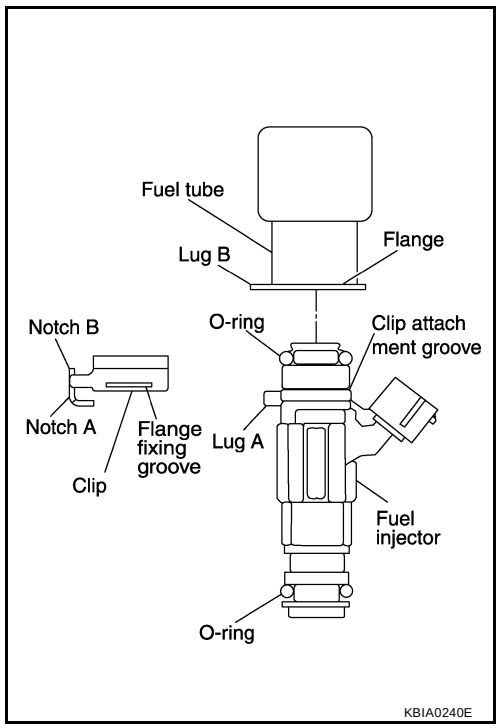

b. Tighten the mounting bolts in two steps in the numerical order shown.

   1st step : 9.3 - 10.8 N·m (0.95 - 1.1 kg-m, 83 - 95 in-lb)

   2nd step : 20.6 - 26.5 N·m (2.1 - 2.7 kg-m, 16 - 19 ft-lb)

   CAUTION:
   - **After properly connecting fuel tube assembly to injector and fuel hose, check connection for fuel leakage.**

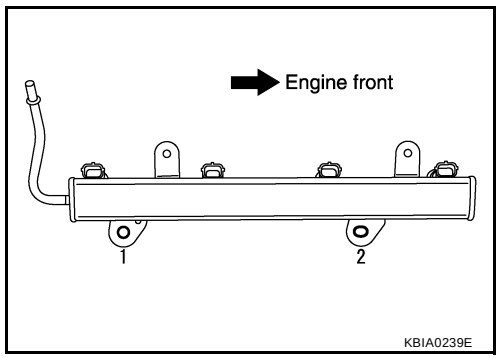

5. Install the intake collector. Refer to EM-16, "INTAKE MANIFOLD" .
6. Connect the fuel hose quick connector. Refer to EM-16, "INTAKE MANIFOLD" .
7. Installation of the remaining components is in the reverse order of removal.

INSPECTION AFTER INSTALLATION

Check connections for fuel leakage:

1. Start the engine and run it for a few minutes with engine at idle.
2. Stop the engine and check for fuel leakage both visually and by odor of gasoline.

   NOTE:
   Use mirrors for checking on connections out of the direct line of sight.

   CAUTION:
   Do not touch the engine immediately after stopping as engine is extremely hot.

ROCKER COVER

PFP:13264

Removal and Installation

EBS007P8

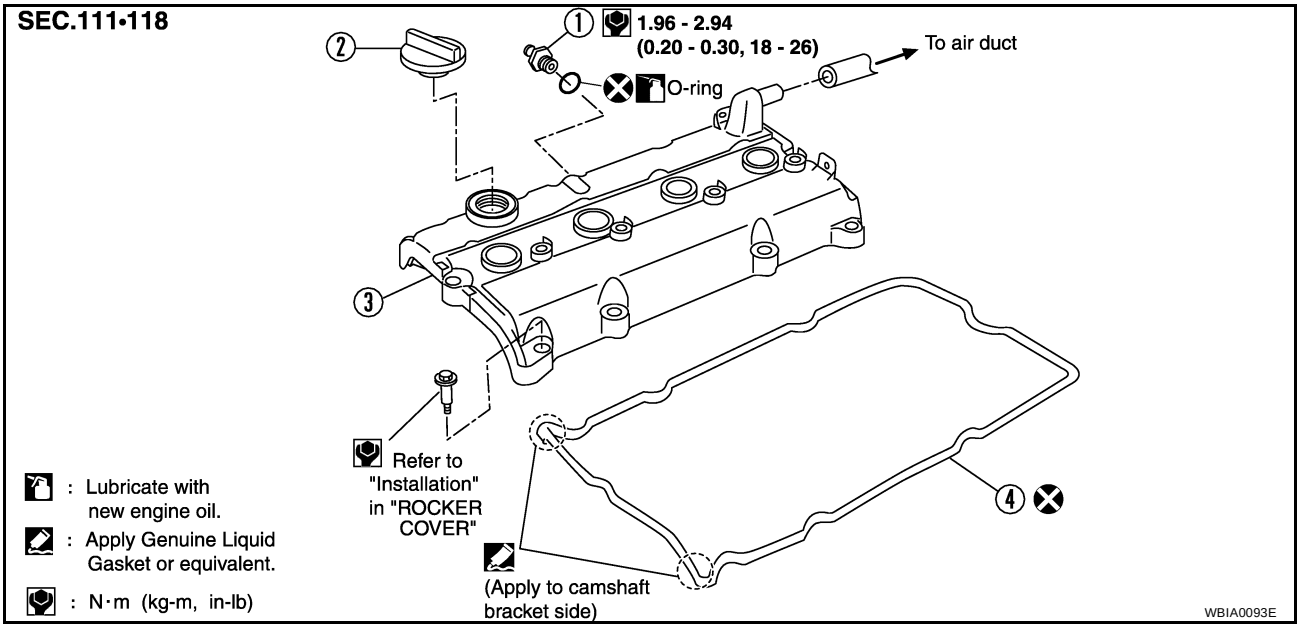

1	PCV valve	2	Oil filler cap	3	Rocker cover
4	Rocker cover gasket				

REMOVAL

1. Remove the ignition coils. Refer to EM-26, "Removal and Installation" .
2. Disconnect the PCV hose and breather hose from the rocker cover.
3. Loosen the bolts in the numerical order as shown using power tool.
4. Remove the rocker cover. Remove the oil filler cap and PCV valve if necessary to transfer to the new rocker cover.

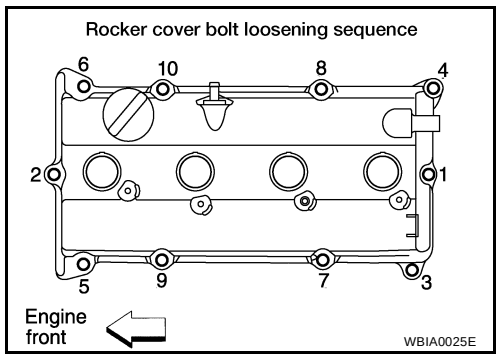

INSTALLATION

1. Apply RTV Silicone Sealant to the joint part of the cylinder head and camshaft bracket following the steps below:

a. Refer to illustration “a” to apply sealant to joint part of No.1 camshaft bracket and cylinder head.

b. Refer to illustration “b” to apply sealant in a 90° degree angle to the illustration “a”.

- Use Genuine RTV Silicone Sealant, or equivalent. Refer to GI-42, "RECOMMENDED CHEMICAL PRODUCTS AND SEALANTS" .

2. Install the rocker cover.
   - The rocker cover gasket must be securely installed in the groove in the rocker cover.

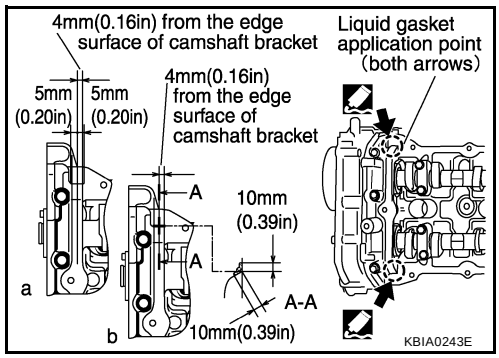

3. Tighten the rocker cover bolts in two steps, in the numerical order as shown.

   1st step : 1.0 - 2.9 N·m (0.1 - 0.3 kg-m, 9 - 26 in-lb)

   2nd step : 7.4 - 9.3 N·m (0.75 - 0.95 kg-m, 65 - 82 in-lb)

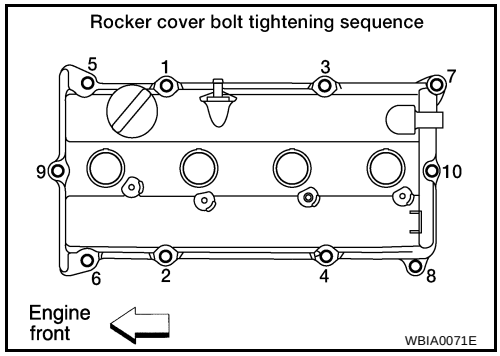

4. Connect the PCV hose and breather hose to the rocker cover. If necessary, install the oil filler cap and PCV valve and lubricate the PCV valve O-ring with new engine oil.
5. Install the ignition coils. Refer to EM-26, "Removal and Installation" .

CAMSHAFT

PFP:13001

Removal and Installation

EBS007P9

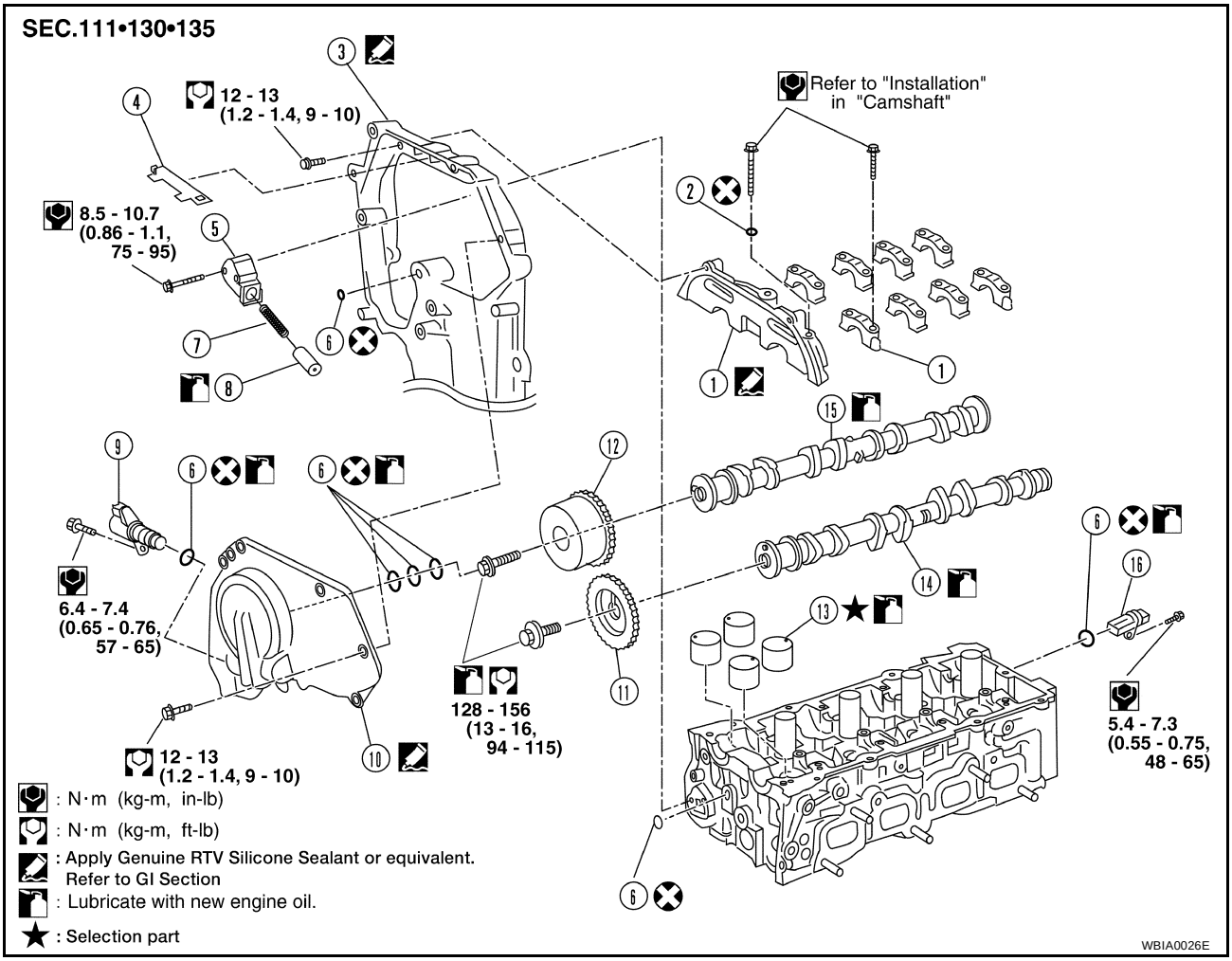

1. Camshaft brackets (1 - 5)	2. Washer	3. Front cover (partial view)
4. Chain guide	5. Chain tensioner	6. O-ring(s)
7. Chain tensioner spring	8. Chain tensioner plunger	9. IVTC solenoid valve
10. IVTC cover	11. Camshaft sprocket (EXH)	12. Camshaft sprocket (INT)
13. Valve lifter	14. Camshaft (EXH)	15. Camshaft (INT)
16. Camshaft position sensor (PHASE)		

REMOVAL

1. Remove the rocker cover. Refer to EM-32, "Removal and Installation" .
2. Remove the front right side tire and wheel using power tool.
3. Remove the RH splash shield using power tool.
4. Remove the auxiliary drive belt.
5. Remove the coolant overflow reservoir tank.

6. Remove the IVTC (intake valve timing control) cover by cutting the sealant using the Tool.
   - Loosen the bolts in the order shown.

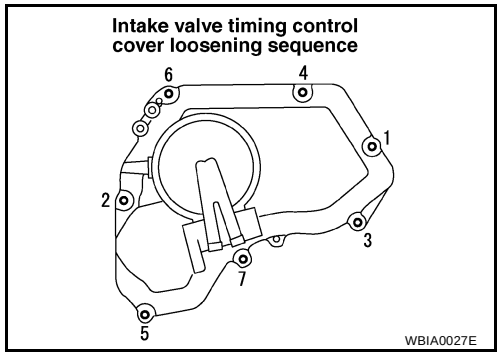

7. Set the No.1 cylinder at TDC on its compression stroke with the following procedure:

a. Open the splash cover on RH under cover.

b. Rotate crankshaft pulley clockwise, and align mating marks for TDC with timing indicator on front cover, as shown.

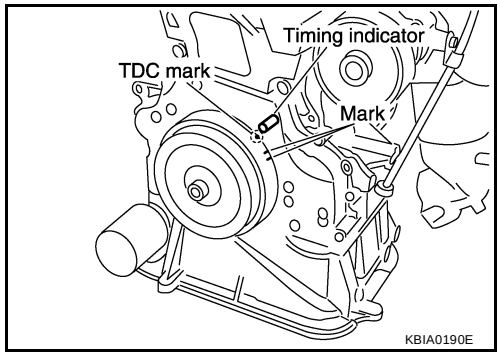

c. At the same time, make sure that the mating marks on camshaft sprockets are lined up with the yellow links in the timing chain, as shown.
   - If not, rotate crankshaft pulley one more turn to line up the mating marks to the yellow links, as shown.

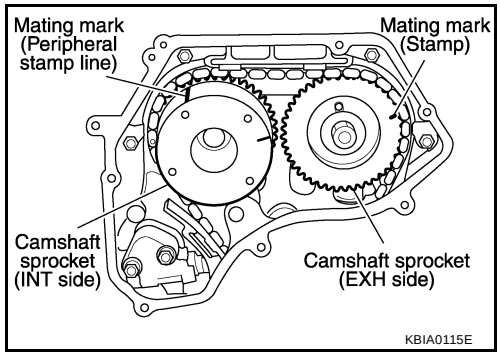

8. Pull the timing chain guide out between the camshaft sprockets through front cover.

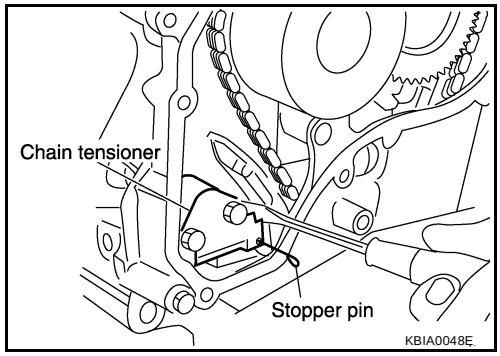

9. Remove camshaft sprockets with the following procedure.

CAUTION:

- **Do not rotate the crankshaft or camshaft while the timing chain is removed. It causes interference between valve and piston.**

NOTE:

- Chain tension holding work is not necessary. Crank sprocket and timing chain do not disconnect structurally while front cover is attached.

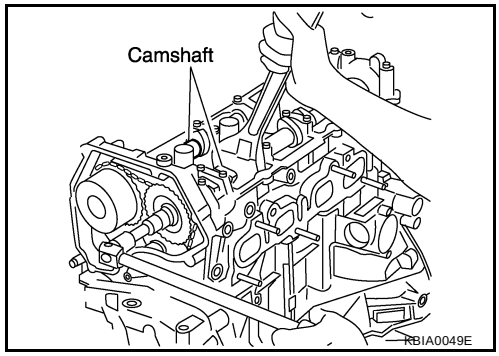

a. Line up the mating marks on camshaft sprockets with the yellow links in the timing chain, and paint an indelible mating mark on the sprocket and timing chain link plate.

b. Push in the tensioner plunger and hold. Insert a stopper pin into the hole on tensioner body to hold the chain tensioner. Remove the timing chain tensioner.

- Use a wire with 0.5 mm (0.02 in) diameter for a stopper pin.

c. Secure the hexagonal part of camshaft with a suitable tool. Loosen the camshaft sprocket mounting bolts and remove the camshaft sprockets.

10. Loosen the camshaft bracket bolts in the order shown, and remove the camshaft brackets and camshafts.

- Remove No.1 camshaft bracket by slightly tapping it with a rubber mallet.

11. Remove the valve lifters.

- Check mounting positions, and set them aside in the order removed.

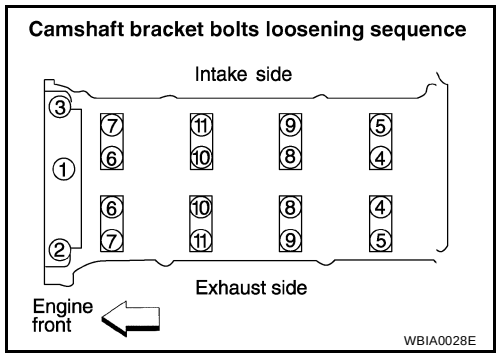

INSPECTION AFTER REMOVAL

Camshaft Runout

1. Put the camshaft on a V-block supporting the No.2 and No.5 journals.
2. Set the dial gauge vertically on the No.3 journal.
3. Turn camshaft in one direction by hand, and measure the camshaft runout on the dial gauge total indicator reading.

Standard : Less than 0.04 mm (0.0016 in)

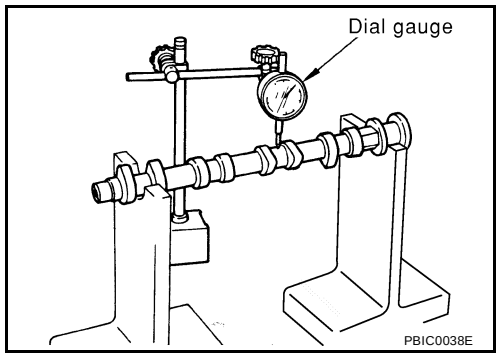

Camshaft Cam Height

1. Measure the camshaft cam height.

Standard intake cam height : 45.665 - 45.855 mm (1.7978 - 1.8053 in)

Standard exhaust cam height : 43.975 - 44.165 mm (1.7313 - 1.7388 in)

2. If wear is beyond the limit, replace the camshaft.

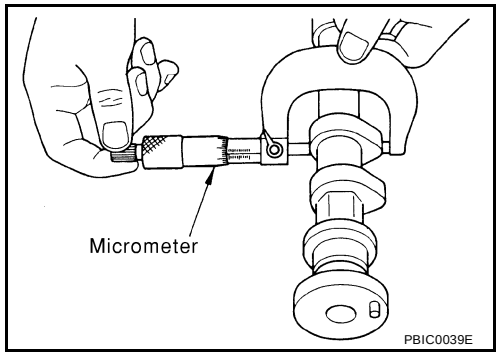

Camshaft Journal Clearance

Outer Diameter of Camshaft Journal

- Measure the outer diameter of the camshaft journal.

Standard No.1 outer diameter	**: 27.935 - 27.955 mm (1.0998 - 1.1006 in)**
Standard No.2, 3, 4, 5, outer diameter	**: 23.435 - 23.455 mm (0.9226 - 0.9234 in)**

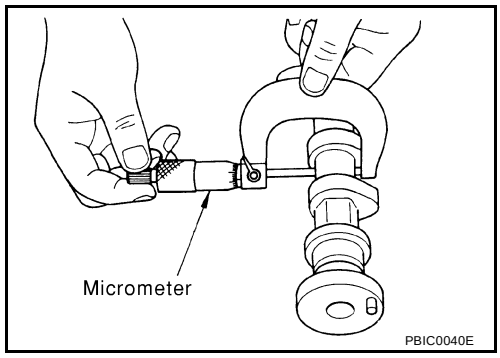

Inner Diameter of Camshaft Bracket

- Tighten the camshaft bracket bolts to the specified torque following the tightening pattern as shown. Refer to Step 4 of EM-39, "INSTALLATION" , of "CAMSHAFT" for the specified torque sequence.

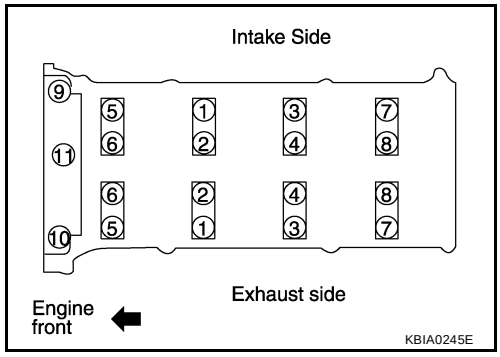

- Using inside micrometer, measure inner diameter of camshaft bracket.

Standard No.1	**: 28.000 - 28.021 mm (1.1024 - 1.1032 in)**
Standard No.2, 3, 4, 5	**: 23.500 - 23.521 mm (0.9252 - 0.9260 in)**

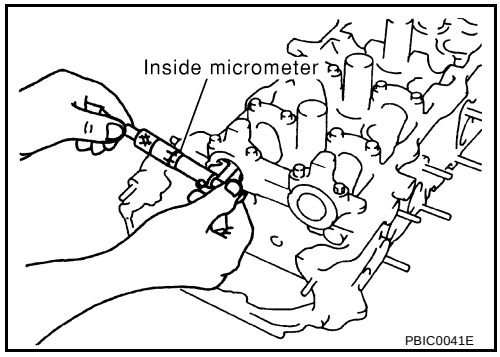

Calculation of Camshaft Journal Clearance

- (Journal clearance) = (inner diameter of camshaft bracket) – (outer diameter of camshaft journal)

Standard : 0.045 - 0.086 mm (0.0018 - 0.0034 in)

- When out of the specified range above, replace either or both the camshaft and the cylinder head assembly.

NOTE:
Inner diameter of the camshaft bracket is manufactured together with the cylinder head. If the camshaft bracket is out of specification, replace the whole cylinder head assembly.

Camshaft End Play

1. Install a dial gauge in the thrust direction on the front end of the camshaft. Measure the end play with the dial gauge while moving the camshaft forward and backward (in direction to axis).

   Standard end play : 0.115 - 0.188 mm (0.0045 - 0.0074 in)

2. If out of the specified range, replace with new camshaft and measure again.
3. If out of the specified range again, replace with new cylinder head assembly.

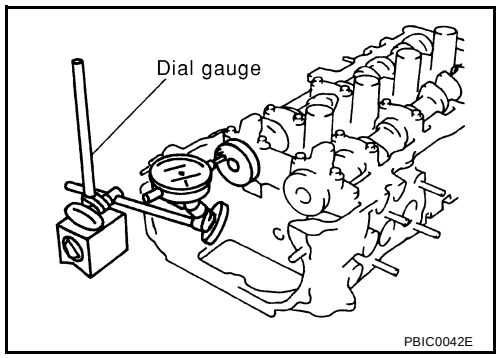

Camshaft Sprocket Runout

1. Install the camshaft in the cylinder head.
2. Install the camshaft sprocket on the camshaft.
3. Measure camshaft sprocket runout while turning the camshaft by hand.

   Runout : Less than 0.15 mm (0.0059 in)

4. If it exceeds the specification, replace camshaft sprocket.

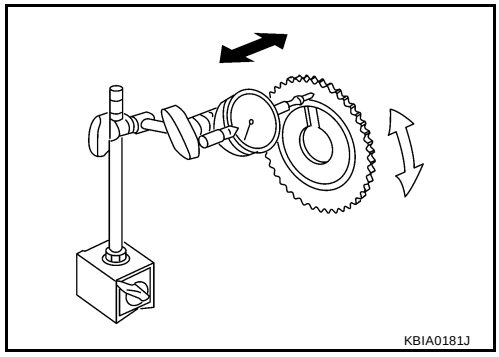

Valve Lifter

- Check if the surface of the valve lifter has any excessive wear or cracks, replace as necessary.

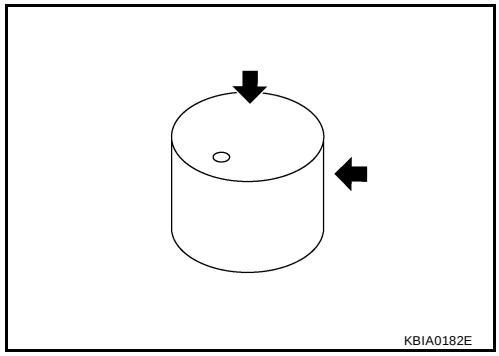

Valve Lifter Clearance

Outer Diameter of Valve Lifter

- Measure the outer diameter of the valve lifter.

  Valve lifter outer diameter : 33.965 - 33.980 mm (1.3372 - 1.3378 in)

- If out of the specified range, replace the valve lifter.

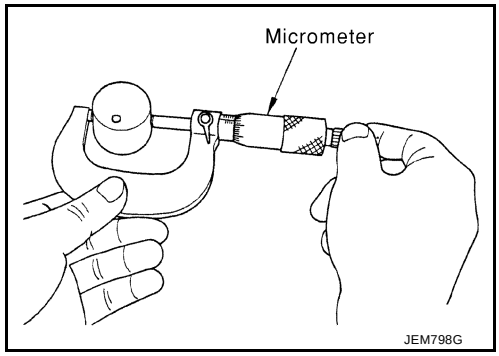

Valve Lifter Hole Diameter

- Using inside micrometer, measure diameter of valve lifter hole of cylinder head.

  Standard : 34.000 - 34.021 mm (1.3386 - 1.3394 in)

- If out of the specified range, replace the cylinder head assembly.

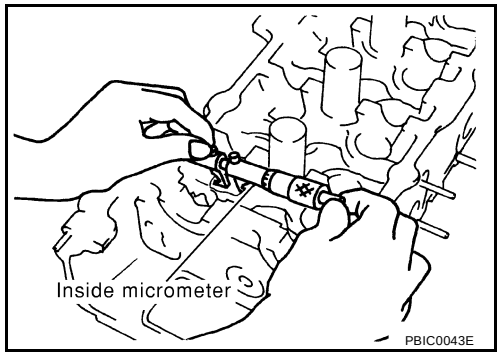

Calculation of Valve Lifter Clearance

- (Valve lifter clearance) = (hole diameter for valve lifter) – (outer diameter of valve lifter)

  Standard : 0.020 - 0.056 mm (0.0008 - 0.0022 in)

- If out of specified range, replace either or both valve lifter and cylinder head assembly.

INSTALLATION

1. Install the valve lifter.
   - Install them in the same position from which they were removed.
2. Install the camshafts.
   - The distinction between the intake and exhaust camshafts is in a difference of shapes of the back end:
     Intake: Signal plate for the camshaft position sensor (PHASE)
     Exhaust: Cone end shape

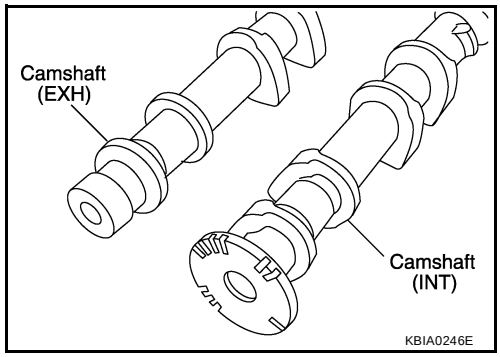

   - Install camshafts so that the dowel pins on the front side are positioned as shown.

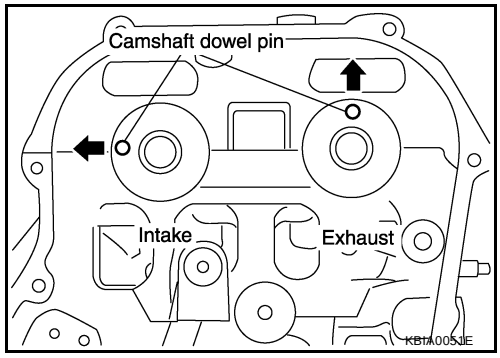

3. Install camshaft brackets.
   - Install by referring to identification mark on upper surface mark.
   - Install so that identification mark can be correctly read when viewed from the exhaust side.

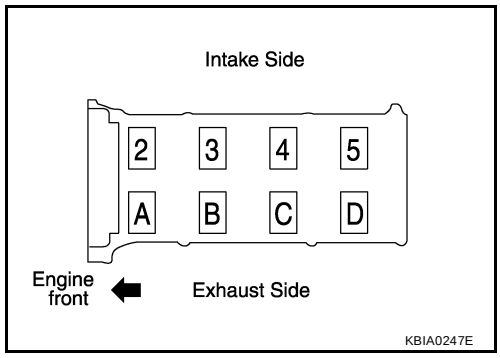

- Install No. 1 camshaft bracket as follows.
  - Apply sealant to No.1 camshaft bracket as shown.
- Use Genuine RTV Silicone Sealant, or equivalent. Refer to GI-42, "RECOMMENDED CHEMICAL PRODUCTS AND SEALANTS" .

CAUTION:

- **After installation, be sure to wipe off any excessive sealant leaking from part "A" (both on right and left sides).**

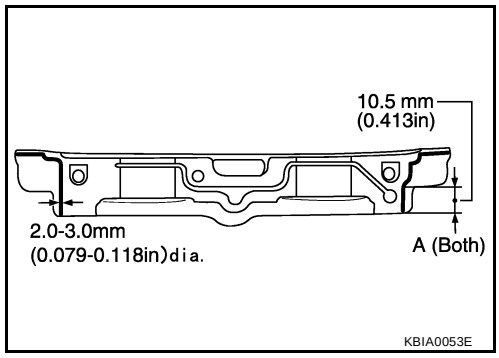

- Apply sealant to camshaft bracket contact surface on the front cover backside.
- Apply sealant to the outside of bolt hole on front cover.

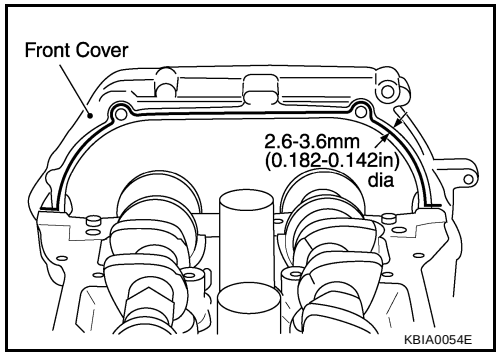

- Position the No.1 camshaft bracket near the mounting position, and install it without disturbing the sealant applied to the surfaces.

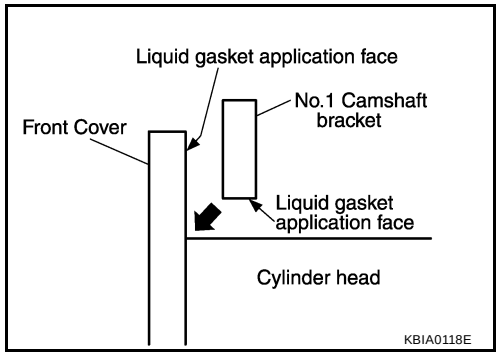

4. Tighten fixing bolts of camshaft brackets as follows.

a. Tighten in the order from 9 to 11 with tightening torque 2.0 N·m (0.2 kg-m, 17 in-lb).

b. Tighten in the order from 1 to 8 with tightening torque 2.0 N·m (0.2 kg-m, 17 in-lb).

c. Tighten in the order from 1 to 11 with tightening torque 5.9 N·m (0.6 kg-m, 52 in-lb).

d. Tighten in the order from 1 to 11 with tightening torque 9.0 to 11.8 N·m (0.92 to 1.2 kg-m, 80 to 104 in-lb).

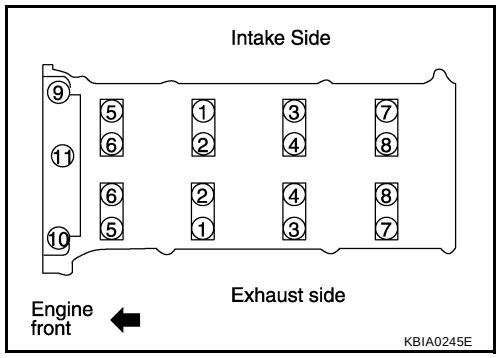

CAUTION:

After tightening fixing bolts of camshaft brackets, be sure to wipe off excessive sealant from the parts listed below:

- Mating surface of rocker cover.
- Mating surface of front cover, when installed without the front cover.

5. Install camshaft sprockets.
   - Install them by lining up the mating marks on each camshaft sprocket with the ones painted on the timing chain during removal.
   - Before installation of chain tensioner, it is possible to re-match the marks on timing chain with the ones on each sprocket.

     CAUTION:
     - **Aligned mating marks could slip. Therefore, after matching them, hold the timing chain in place by hand.**
     - **Before and after installing chain tensioner, check again to make sure that mating marks have not slipped.**

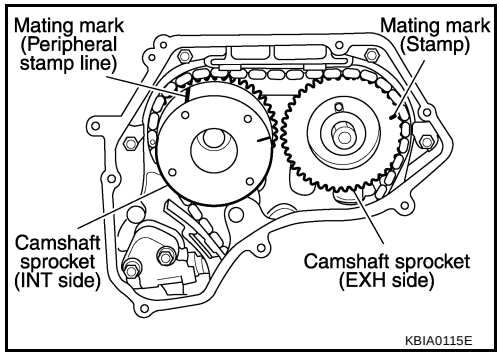

6. Install chain tensioner.

   CAUTION:
   - **After installation, pull the stopper pin off completely, and make sure that the tensioner is fully released.**
7. Install chain guide.
8. Install IVTC (intake valve timing control) cover with the following procedure.

a. Install IVTC solenoid valve to intake valve timing control cover.

b. Install O-ring to front cover side.

c. Apply Genuine RTV Silicone Sealant to the positions shown in the figure. Refer to GI-42, "RECOMMENDED CHEMICAL PRODUCTS AND SEALANTS" .

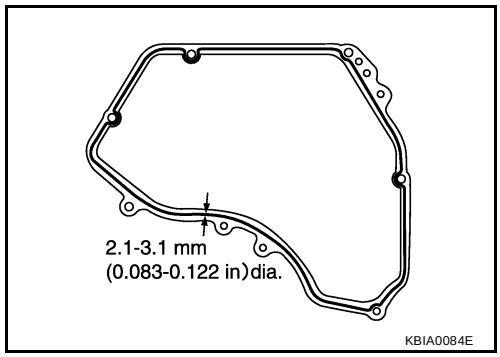

d. Install IVTC cover.
   - Tighten the bolts in the numerical order as shown.

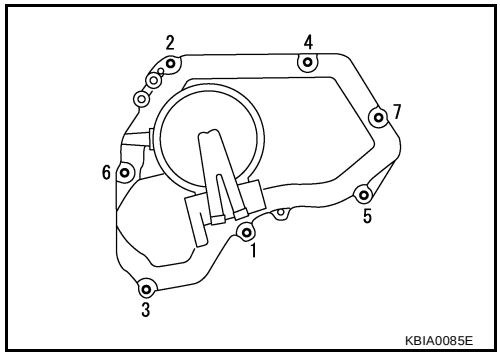

9. Check and adjust valve clearances. Refer to EM-41, "Valve Clearance" .
10. For the following operations, perform steps in the reverse order of removal.

Valve Clearance

EBS007PA

INSPECTION

NOTE:

Perform this inspection as follows after removal, installation, or replacement of the camshaft or any valve-related parts, or if there are any unusual engine conditions due to changes in valve clearance over time (starting, idling, and/or noise).

1. Warm up the engine, then stop it.
2. Remove front RH engine under cover using power tool.
3. Remove the rocker cover using power tool.
   Refer to EM-32, "Removal and Installation" .

4. Turn crankshaft pulley in normal direction (clockwise when viewed from front) to align TDC identification mark (without paint mark) with timing indicator.

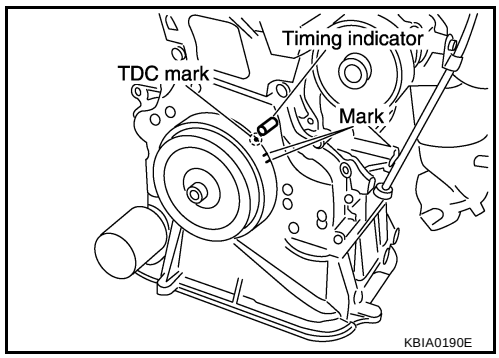

5. At this time, check that the both intake and exhaust cam noses of No. 1 cylinder face outside.
   - If they do not face outside, turn crankshaft pulley once more.

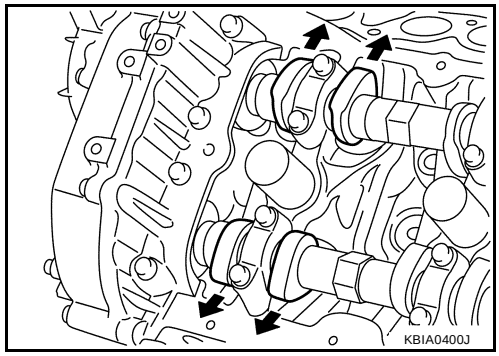

6. By referring to the figure, measure valve clearances at locations marked X as shown in the table below (locations indicated with black arrow in figure) with a feeler gauge.

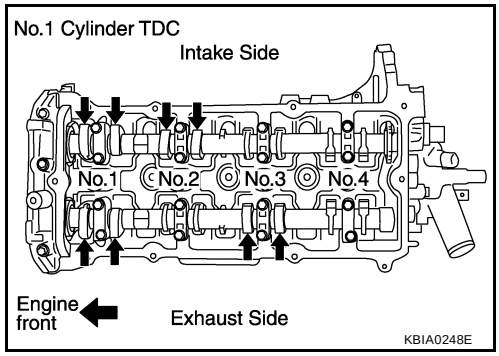

   - No.1 cylinder compression TDC.

Cylinder	No.1		No.2		No.3		No.4	
Valve	INT	EXH	INT	EXH	INT	EXH	INT	EXH
Measurable	×	×	×			x		

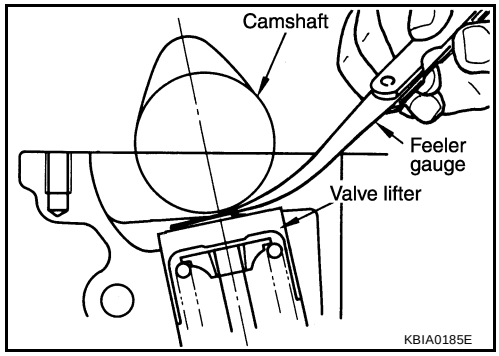

   - Use a feeler gauge, measure clearance between valve and camshaft.

Valve clearance standard:

Hot	**Intake**	**: 0.32 - 0.40 mm (0.013 - 0.016 in)**
	Exhaust	**: 0.33 - 0.41 mm (0.013 - 0.016 in)**
Cold*	**Intake**	**: 0.24 - 0.32 mm (0.009 - 0.013 in)**
	Exhaust	**: 0.26 - 0.34 mm (0.010 - 0.013 in)**

*Reference data at approximately 20°C (68°F)

CAUTION:

If inspection was carried out with cold engine, check that values with fully warmed up engine are still within specifications.

7. Turn crankshaft one complete revolution (360°) and align mark on crankshaft pulley with pointer.

8. By referring to the figure, measure valve clearances at locations marked X as shown in the table below (locations indicated with black arrow in figure).
   - No.4 cylinder compression TDC.

Cylinder	No.1		No.2		No.3		No.4	
Valve	INT	EXH	INT	EXH	INT	EXH	INT	EXH
Measurable				x	×		x	×

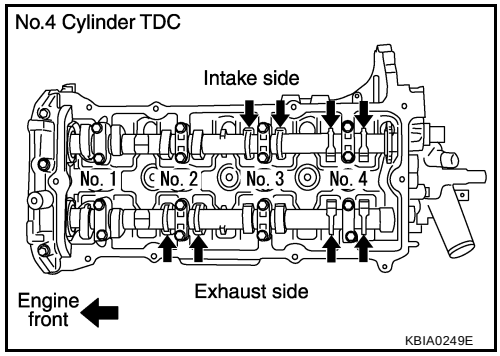

9. If out of specifications, adjust as follows.

ADJUSTMENT

NOTE:

- Perform adjustment depending on selected head thickness of valve lifter.
- The specified valve lifter thickness is the dimension at normal temperatures. Ignore dimensional differences caused by temperature. Use the specifications for hot engine condition to adjust.

1. Remove camshaft. Refer to EM-34, "Removal and Installation" .
2. Remove the valve lifters at the locations that are outside the standard.
3. Measure the center thickness of the removed valve lifters with a micrometer.

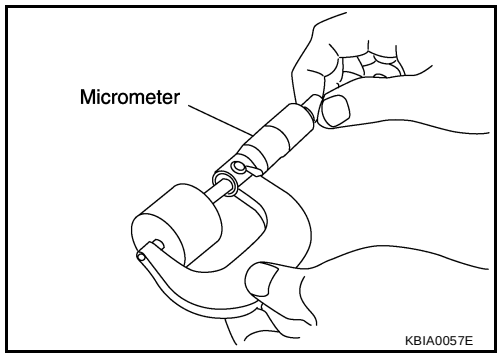

4. Use the equation below to calculate valve lifter thickness for replacement.
   - Valve lifter thickness calculation.
     t = t1 + (C1 - C2)
     t = Thickness of replacement valve lifter.
     t1 = Thickness of removed valve lifter.
     C1 = Measured valve clearance.
     C2 = Standard valve clearance.

     Intake : 0.36 mm (0.0142 in)
     Exhaust : 0.37 mm (0.0146 in)

   - Thickness of a new valve lifter can be identified by stamp marks on the reverse side (inside the cylinder).
     Stamp mark 696 indicates a thickness of 6.96 mm (0.2740 in)
     Available thickness of valve lifter: 26 sizes with a range of 6.96 to 7.46 mm (0.2740 to 0.2937 in), in steps of 0.02 mm (0.0008 in), when assembled at the factory.

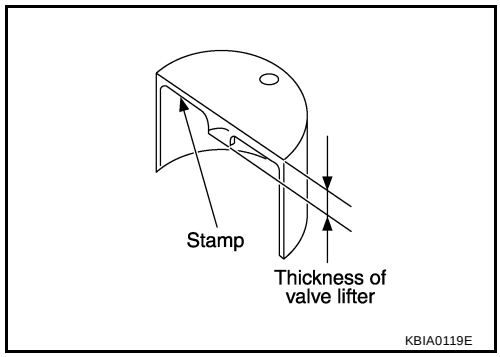

5. Install the selected valve lifter.
6. Install camshaft.
7. Manually turn crankshaft pulley a few turns.
8. Check that valve clearances for cold engine are within specifications, by referring to the specified values.
9. After completing the repair, check valve clearances again with the specifications for warmed engine. Use a feeler gauge to measure the clearance between the valve and camshaft. Make sure the values are within specifications.

Valve Clearance

Unit: mm (in)

Valve	Cold* (reference data)	Hot
Intake	0.24 - 0.32 (0.009 - 0.013)	0.32 - 0.40 (0.013 - 0.016)
Exhaust	0.26 - 0.34 (0.010 - 0.013)	0.33 - 0.41 (0.013 - 0.016)

*: Reference data at approximately 20°C (68°F)

TIMING CHAIN

PFP:13028

Removal and Installation

EBS007PB

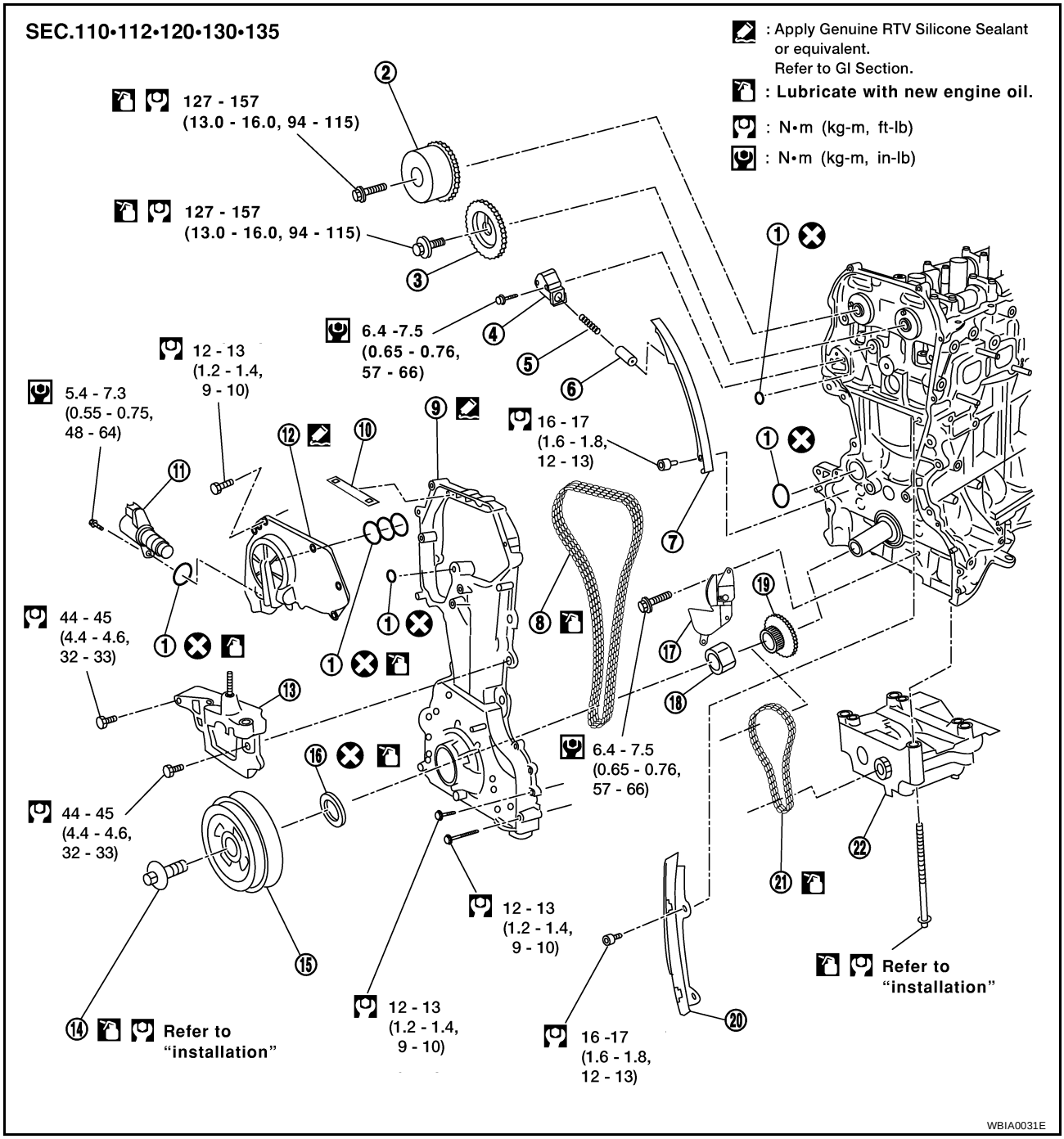

1.	Oil rings	2.	Camshaft sprocket (INT)	3.	Camshaft sprocket (EXH)
4.	Chain tensioner	5.	Spring	6.	Chain tensioner plunger
7.	Timing chain slack guide	8.	Timing chain	9.	Front cover
10.	Chain guide	11.	IVTC solenoid valve	12.	IVTC cover
13.	Engine mounting bracket	14.	Crankshaft pulley bolt	15.	Crankshaft pulley
16.	Front oil seal	17.	Balancer unit timing chain tensioner	18.	Oil pump drive spacer
19.	Crankshaft sprocket	20.	Timing chain tension guide	21.	Balancer unit timing chain
22.	Balancer unit				

CAUTION:

Apply new engine oil to parts marked in illustration before installation.

REMOVAL

1. Support the engine and transaxle assembly with suitable tools.
2. Remove the upper and lower oil pan, and oil strainer. Refer to EM-23, "Removal and Installation" .
3. Remove the IVTC (intake valve timing control) cover.

a. Loosen bolts in the numerical order as shown.

b. Remove the cover with suitable tool to cut the sealant.

4. Pull chain guide between camshaft sprockets out through front cover.

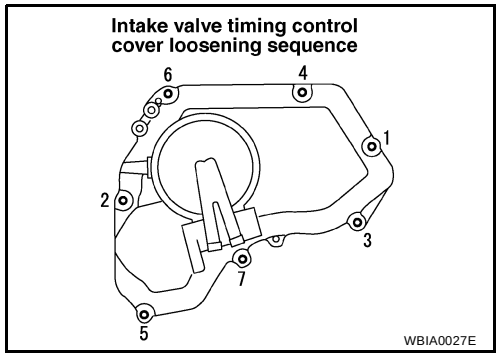

5. Set the No.1 cylinder at TDC on the compression stroke with the following procedure:

a. Rotate the crankshaft pulley clockwise and align the mating marks to the timing indicator on the front cover.

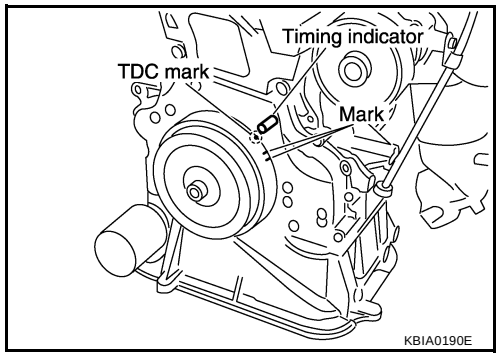

b. At the same time, make sure that the mating marks on the camshaft sprockets are lined up as shown.

- If not lined up, rotate the crankshaft pulley one more turn to line up the mating marks to the positions as shown.

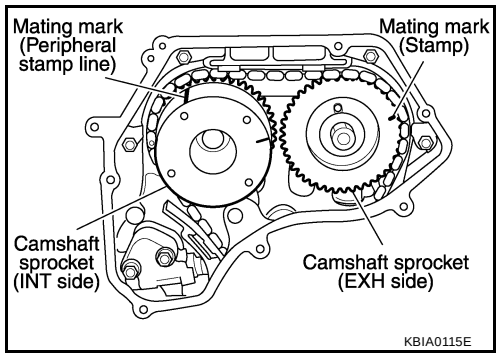

6. Remove crankshaft pulley with the following procedure:

a. Hold the crankshaft pulley with a suitable tool, then loosen the crankshaft pulley mounting bolt, and pull the pulley out about 10 mm (0.39 in).

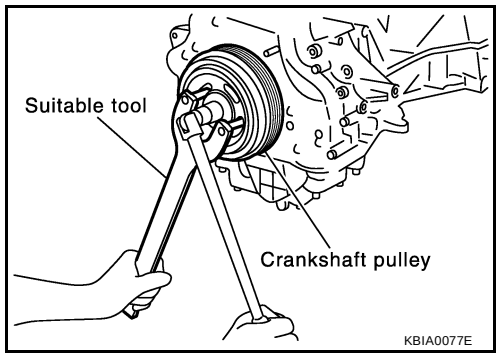

b. Attach a pulley puller in the M 6 (0.24 in diameter) thread hole on crankshaft pulley, and remove crankshaft pulley.

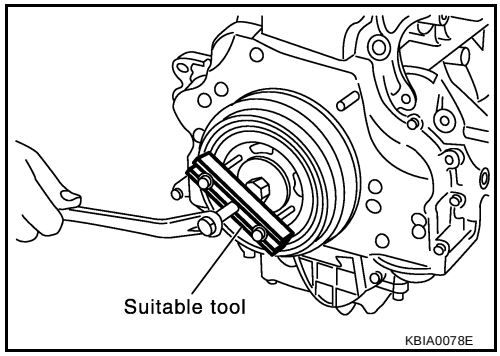

7. Remove the front cover with the following procedure:

a. Loosen the mounting bolts in the reverse order shown in the figure, and remove them.

b. Remove the front cover.

CAUTION:

- **Be careful not to damage the mounting surface.**

8. If the front oil seal needs to be replaced, lift it out with a screwdriver to remove it.

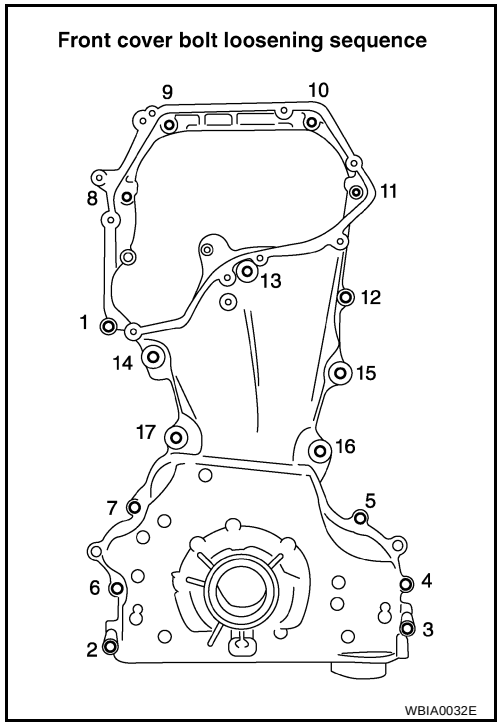

9. Remove timing chain with the following procedure:

a. Push in the tensioner plunger. Insert a stopper pin into the hole on the tensioner body to hold the chain tensioner.

- Use a wire of 0.5 mm (0.02 in) diameter as a stopper pin.

b. Remove the chain tensioner.

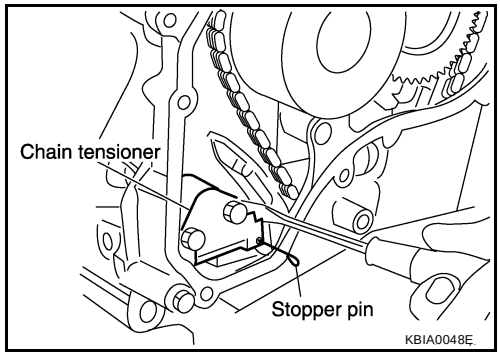

c. Secure hexagonal part of the camshaft with a wrench and loosen the camshaft sprocket mounting bolt and remove the camshaft sprocket for both camshafts.

CAUTION:

- **Do not rotate the crankshaft or camshafts while the timing chain is removed. It can cause damage to the valve and piston.**

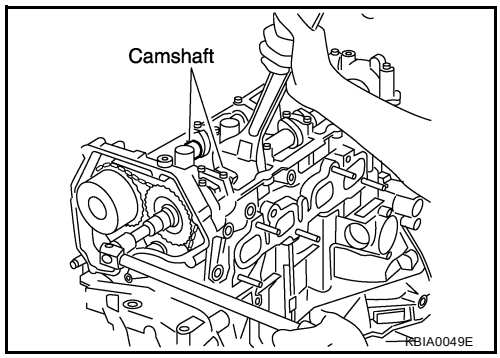

10. Remove the chain slack guide, tension guide, timing chain, and oil pump drive spacer.

11. Remove the timing chain tensioner for the balancer unit with the following procedure:
a. Lift the tensioner lever up, and release the ratchet claw for installation.
b. Push tensioner sleeve in, and hold it.
c. Matching the hole on lever with the one on body, insert a stopper pin to secure tensioner sleeve.
d. Remove the timing chain tensioner for the balancer unit.
12. Remove timing chain for balancer unit and crankshaft sprocket.

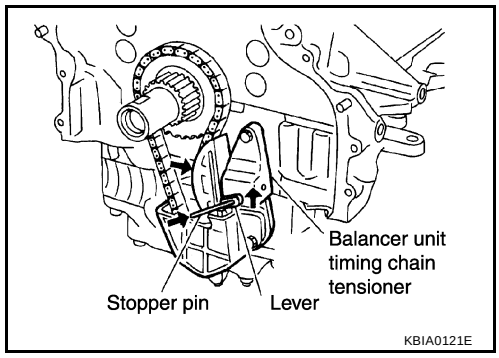

13. Loosen mounting bolts in reverse order shown in the figure, and remove balancer unit.
   - Use Torx socket (size E14)

   CAUTION:
   - **Do not disassemble balancer unit.**

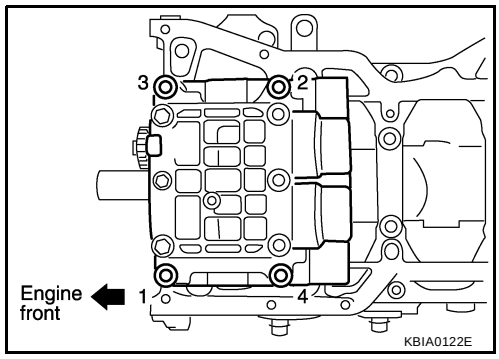

INSPECTION AFTER REMOVAL

Timing Chain

Check the timing chain for cracks or serious wear. If a defect is detected, replace it.

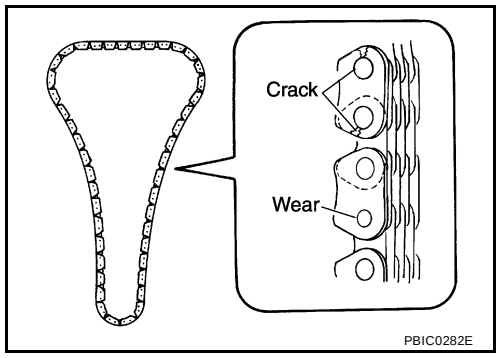

Balancer Unit Mounting Bolt Outer Diameter

- Measure outer diameters (d1, d2) at the two positions shown in the figure.
- Measure d2 within the range A.
- If the value difference (d1 - d2) exceeds the limit (a dimension difference is large), replace it with a new one.

Limit (d1 – d2) : 0.15 mm (0. 0059 in) or more

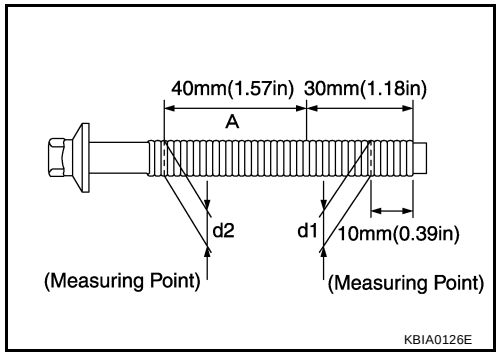

INSTALLATION

NOTE:
- There may be two color variations of the link marks (link colors) on the timing chain.
- There are 26 links between the gold/yellow mating marks on the timing chain; and 64 links between the camshaft sprocket gold/yellow link and the crankshaft sprocket orange/blue link, on the timing chain side without the tensioner.

1. Make sure the crankshaft key points straight up.
2. Install the balancer unit and tighten the mounting bolts in the numerical order shown with the following procedure:

   CAUTION:
   - **When reusing a mounting bolt, check its outer diameter before installation. Refer to EM-48, "Balancer Unit Mounting Bolt Outer Diameter" .**

a. Apply new engine oil to threads and seating surfaces of mounting bolts.

b. Tighten them to 45.2 - 51.0 N·m (4.6 - 5.2 kg-m, 34 - 37 ft-lb).

c. Turn them another 90° - 95° degrees (Target: 90° degrees).

d. Fully loosen in the reverse order of tightening to 0 N·m (0 kg-m, 0 ft-lb).

e. Tighten them to 45.2 - 51.0 N·m (4.6 - 5.2 kg-m, 34 - 37 ft-lb).

f. Turn them another 90° - 95° degrees (Target: 90° degrees).

   CAUTION:
   - **Check tightening angle with an angle wrench or a protractor. Do not make judgment by visual check alone.**

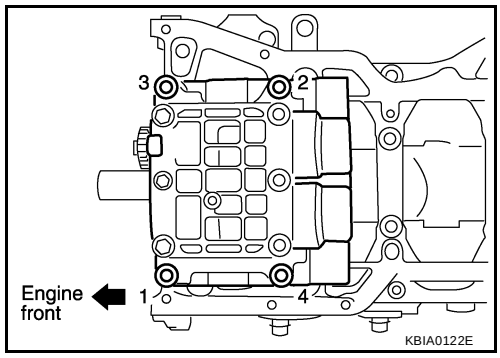

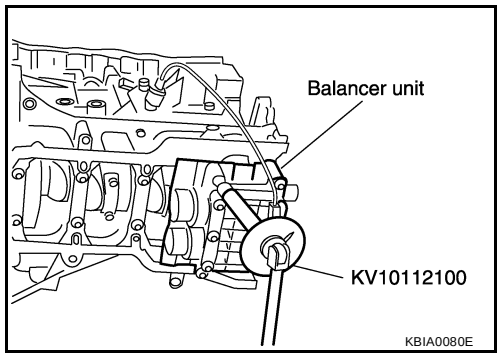

3. Install the crankshaft sprocket and timing chain for the balancer unit.
   - Make sure that the crankshaft sprocket is positioned with mating marks on the block and sprocket meeting at the top.
   - Install it by lining up mating marks on each sprocket and timing chain.

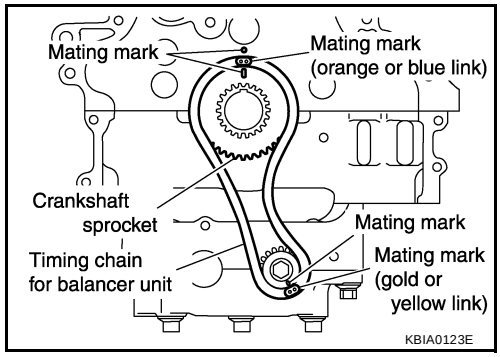

4. Install timing chain tensioner for balancer unit.

   NOTE:
   Chain guide and tensioner move freely with the caulking pin as the axle. Therefore, bolt hole position of the three points could be changed during removal. If points change, temporarily fix the two mounting bolts on the chain guide and move the tensioner to match the bolt holes.
   - Be careful not to let mating marks of each sprocket and timing chain slip.
   - After installation, make sure the mating marks have not slipped, then remove stopper pin and release tensioner.

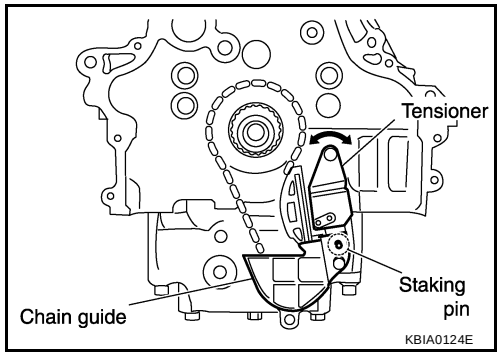

5. Install timing chain and related parts.
   - Install by lining up mating marks on each sprocket and timing chain as shown.

   NOTE:
   Before installing chain tensioner, it is possible to change the position of mating mark on timing chain for that of each sprocket for alignment.

   CAUTION:
   For the above reason, after the mating marks are aligned, keep them aligned by holding them with a hand.
   - Before and after installing chain tensioner, check again to make sure that mating marks have not slipped.
   - After installing chain tensioner, remove stopper pin, and make sure the tensioner moves freely.
   - To avoid skipped teeth, do not move crankshaft and camshaft until front cover is installed.

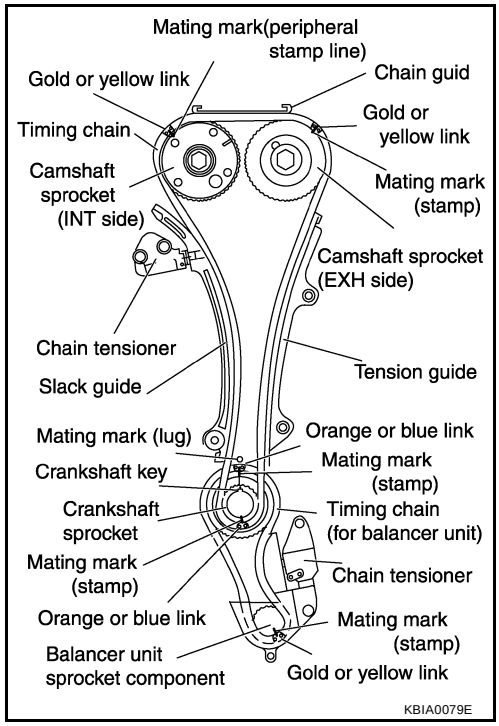

6. Install front oil seal to front cover.
   - Using a drift of 56 mm (2.20 in) diameter, press oil seal in until it is flush with front end surface of front cover.

   CAUTION:
   Be careful not to cause damage to circumference of oil seal.

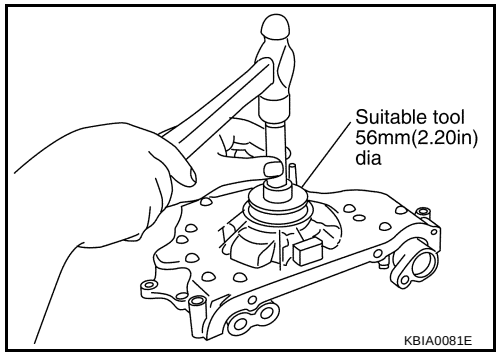

7. Install front cover with the following procedure:

a. Install O-rings to cylinder head and cylinder block.

b. Apply Genuine RTV Silicone Sealant or equivalent, to positions specified in the figure. Refer to GI-42, "RECOMMENDED CHEMICAL PRODUCTS AND SEALANTS" .

c. Make sure the mating marks on the timing chain and each sprocket are still aligned. Then install the front cover.

   CAUTION:
   - **Be careful not to damage the front oil seal during installation with the front end of the crankshaft.**

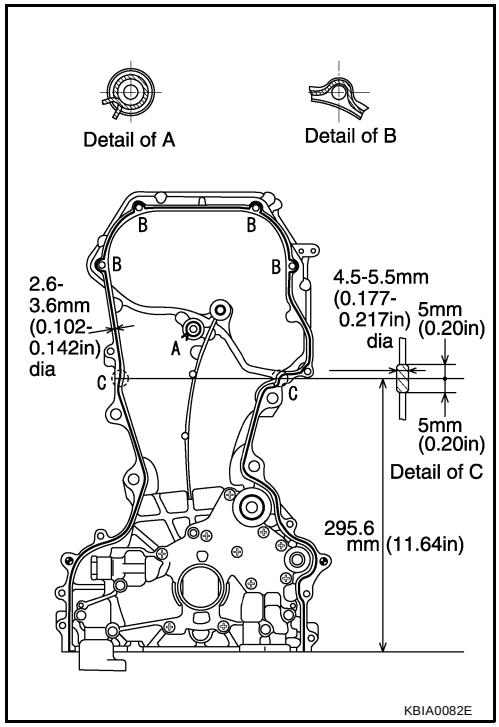

d. Tighten mounting bolts in the numerical order shown.

e. After all bolts are tightened, retighten them to the specified torque.

Front cover bolts : 12 - 13 N·m (1.2 - 1.4 kg-m, 9 - 10 ft-lb)

CAUTION:
Wipe off any excess sealant leaking at the surface for installing the oil pan.

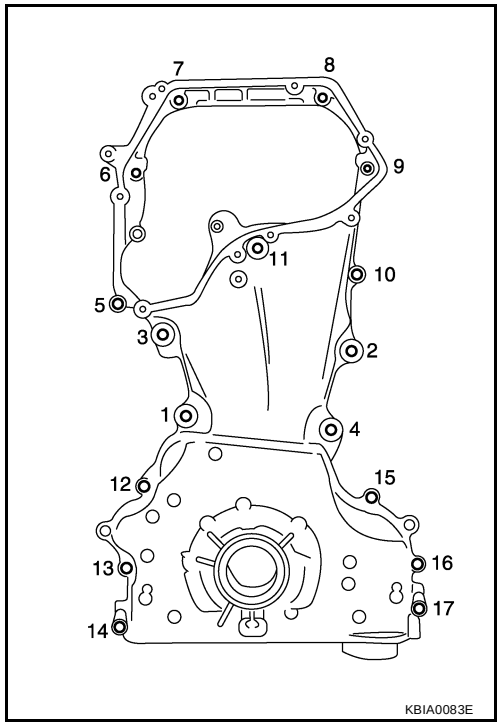

8. Install the chain guide between the camshaft sprockets.
9. Install IVTC cover with the following procedure:
a. Install IVTC solenoid valves to IVTC cover.
b. Install oil rings to the intake camshaft sprocket insertion points on Intake valve timing control backside cover.
c. Install O-ring to front cover.
d. Apply RTV Silicone Sealant to the positions in the figure.

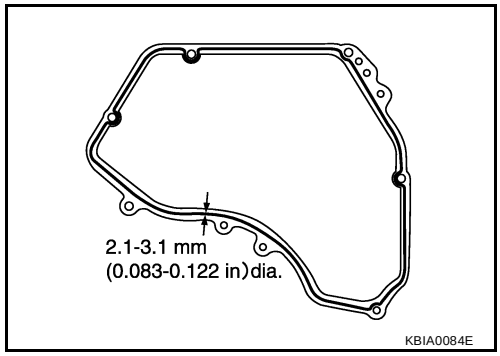

e. Tighten the mounting bolts in the numerical order as shown.

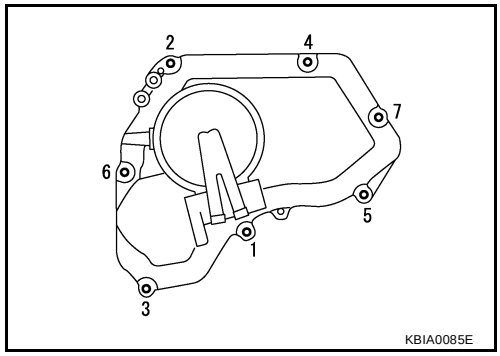

10. Insert crankshaft pulley by aligning with crankshaft key.
    - Tap its center with a plastic hammer to insert.
    - Do not tap the belt hook.
11. Tighten crankshaft pulley mounting bolts.

- Secure crankshaft pulley with a pulley holder to tighten the bolt.
- Perform angle tightening with the following procedure:

a. Apply new engine oil to threads and seat surfaces of mounting bolts.

b. Tighten to initial specifications:·

Crankshaft pulley bolt initial tightening : 37.3 - 47.1 N·m (3.8 - 4.8 kg-m, 28 - 34 ft-lb)

c. Apply a paint mark on the front cover, mating with any one of six easy to recognize stamp marks on bolt flange.

d. Turn crankshaft pulley bolt another 60° to 66° degrees [Target: 60° degrees].
   - Check vertical mounting angle with movement of one stamp mark.

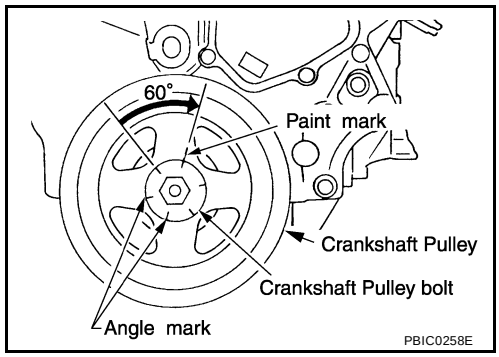

12. Install the remaining parts in the reverse order of removal.

CYLINDER HEAD

PFP:11041

On-Vehicle Service

EBS007PC

CHECKING COMPRESSION PRESSURE

1. Warm up the engine to full operating temperature.
2. Release the fuel pressure. Refer to EC-51, "FUEL PRESSURE RELEASE" .
3. Remove the ignition coil and spark plug from each cylinder.
   Refer to EM-27, "Removal and Installation" .
4. Connect engine tachometer (not required in use of CONSULT-II).
5. Disconnect the fuel injector harness connector to avoid any residual fuel injection during the measurement.
6. Install the compression tester with the adapter into the spark plug hole.

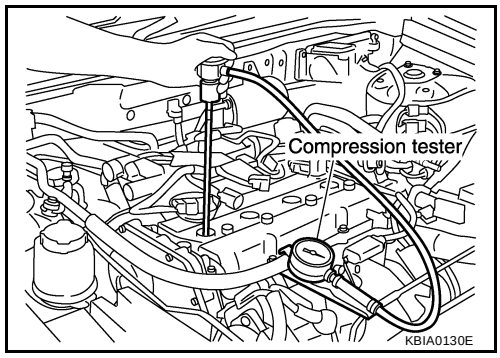

- Use compression gauge whose picking up end inserted to spark plug hole is smaller than 20 mm (0.79 in) in diameter. Otherwise, it may be caught by cylinder head during removal.

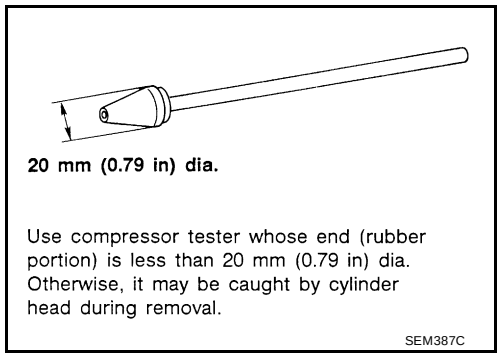

7. With the accelerator pedal fully depressed, turn the ignition switch to the “START” position to crank over the engine. When the gauge pointer stabilizes, read the compression pressure at the specified engine rpm. Perform these steps to check each cylinder.

Engine Compression Pressure

Unit: kPa (kg/cm^2) / rpm

Standard	Minimum	Difference limit between cylinders
1,250 (12.8) / 250	1,060 (10.8) / 250	100 (1.0) / 250

CAUTION:
Always use a fully charged battery to obtain specified engine cranking speed.

- If the engine speed is out of specified rpm range, check the battery. Check engine speed again with a fully charged battery.
- If compression pressure is below minimum value, check valve clearances and parts associated with combustion chamber (valve, valve seat, piston, piston ring, cylinder bore, cylinder head, cylinder head gasket). After the checking, measure compression pressure again.
- If some cylinders have low compression pressure, pour small amount of engine oil into the spark plug hole of the cylinder to re-check it for compression.
  - If the added engine oil improves the compression, the piston rings may be worn or damaged. Check the piston rings and replace if necessary.

- If the compression pressure remains at low level despite the addition of engine oil, the valves may be malfunctioning. Check the valves for damage. Replace the valve or valve seat accordingly.
- If two adjacent cylinders have respectively low compression pressure and their compression remains low even after the addition of engine oil, the head gasket is leaking. In such a case, replace the cylinder head gasket.

8. Install spark plug, ignition coil and harness connectors.

Removal and Installation

EBS007PD

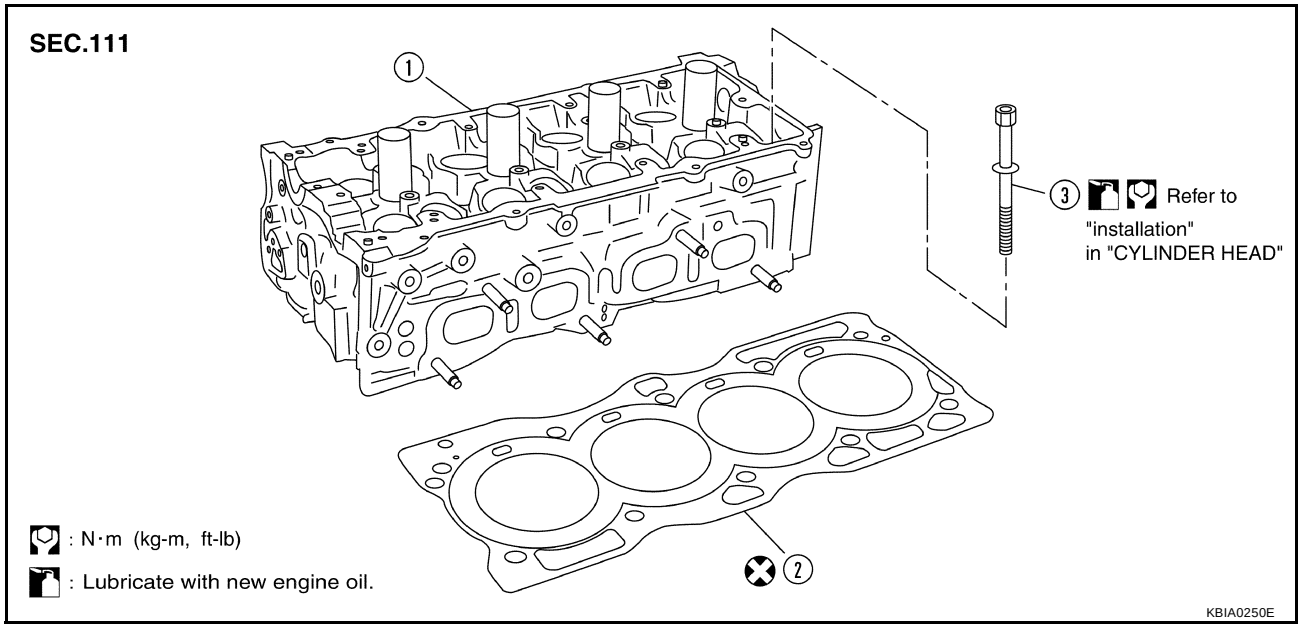

1. Cylinder head assembly
2. Cylinder head gasket
3. Cylinder head bolt

REMOVAL

1. Release fuel pressure. Refer to EC-51, "FUEL PRESSURE RELEASE" .
2. Remove the hood.
3. Drain engine coolant and engine oil.
4. Position the RH engine compartment fuse and relay box aside.
5. Remove the engine undercovers using power tool.
6. Remove the timing chain. Refer to EM-45, "Removal and Installation" .
7. Remove the camshafts. Refer to EM-34, "CAMSHAFT" .
8. Remove the exhaust manifold using power tool.
9. Support the engine from above and underneath with suitable hoist and floor jack.

10. Lower the front suspension member for clearance to remove the oil pan by disconnecting the following:

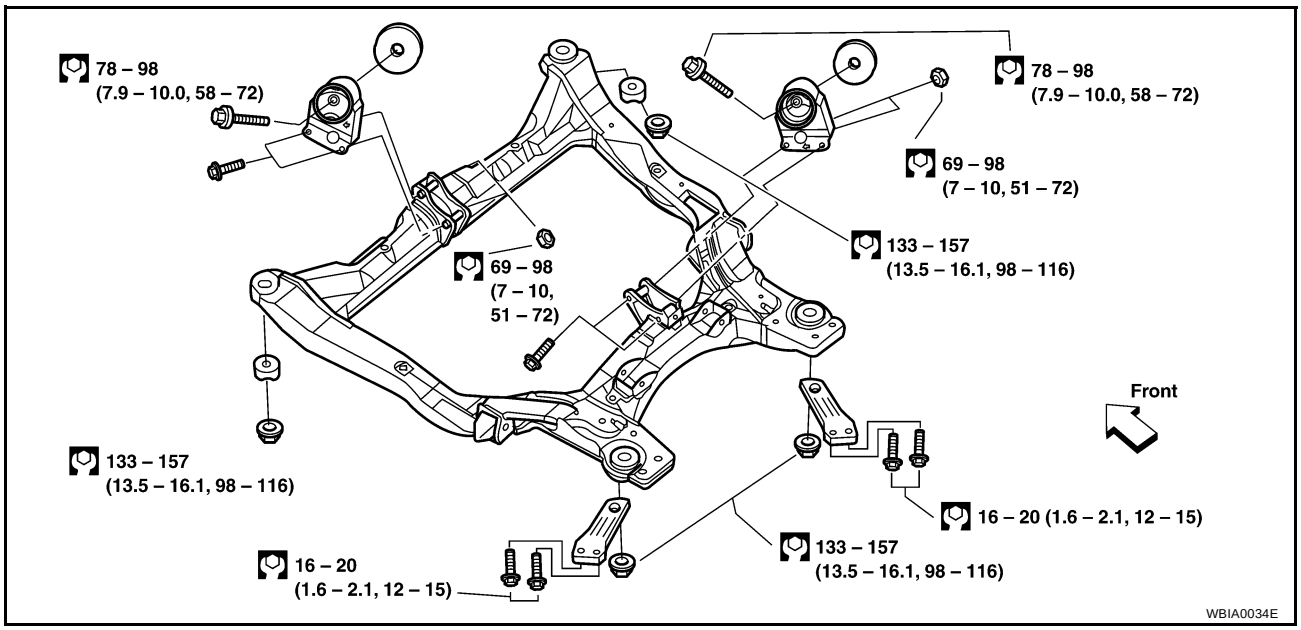

- Position the power steering reservoir aside.
- Remove auxiliary drive belts. Refer to EM-12, "Removal and Installation" .
- Dismount the A/C compressor and position it out of the way with wire.
- Disconnect the upper swaybar links. Refer to FSU-11, "Removal and Installation" .
- Remove the through bolts from the front and rear engine mounts.
- Disconnect the lower ball joints. Refer to FSU-5, "Components" .
- Remove the two steering gear housing mounting bolts. Refer to PS-13, "Removal and Installation" .

11. Remove cylinder head loosening bolts in the order shown, using power tool.
12. If necessary to transfer to new cylinder head or remove for reconditioning, remove the intake manifold collector, intake manifold, and fuel tube assembly. Refer to EM-16, "Removal and Installation" .

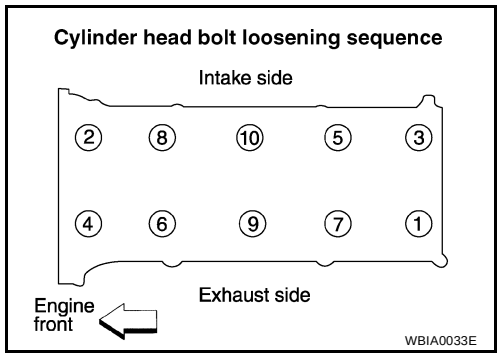

INSPECTION AFTER REMOVAL

Outer Diameter of Cylinder Head Bolts

- Cylinder head bolts are tightened by plastic zone tightening method. Whenever the size difference between d1 and d2 exceeds the limit, replace the bolts with new ones.

  Limit (d1 - d2) : 0.23 mm (0.0091 in) or less

- If reduction of outer diameter appears in a position other than d2, use it as d2 point.

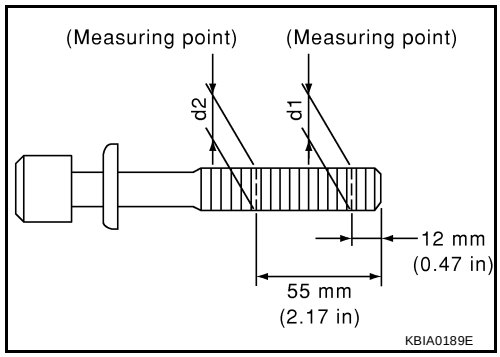

INSTALLATION

1. Install a new cylinder head gasket.

2. Follow the steps below to tighten the cylinder head bolts in the numerical order as shown.

CAUTION:

- **If cylinder head bolts are re-used, check their outer diameters before installation. Refer to** **EM-55, "Outer Diameter of Cylinder Head Bolts"** **.**

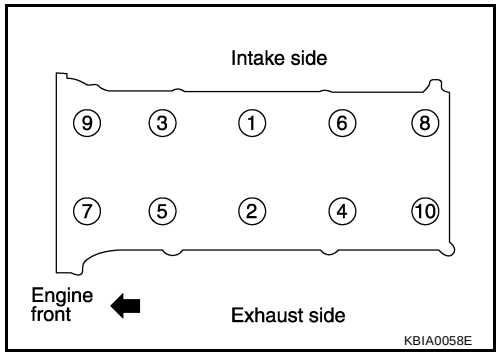

a. Apply new engine oil to the threads and the seating surfaces of mounting bolts.
b. Tighten all bolts to 98.1 N·m (10 kg-m, 72 ft-lb).
c. Completely loosen all bolts in the order shown.

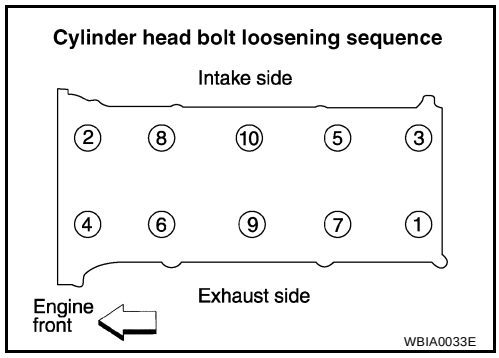

d. Retighten all bolts to 34.3 - 44.1 N·m (3.5 - 4.4 kg-m, 26 - 32 ft-lb).
e. Turn all bolts 75° - 80° degrees (target: 75° degrees) clockwise.
f. Turn all bolts 75° to 80° degrees (target: 75° degrees) clockwise again.

CAUTION:

Check and confirm the tightening angle by using angle wrench or protractor. Avoid judgment by visual inspection without the tool.

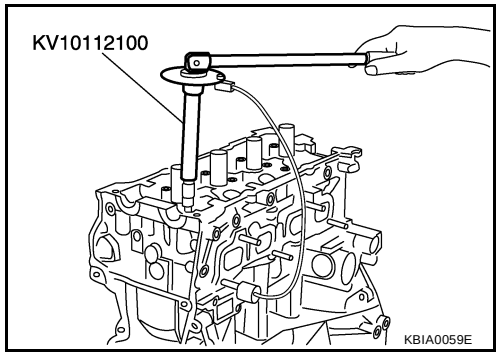

3. Installation of the remaining components is in the reverse order of removal.

Disassembly and Assembly

EBS007PE

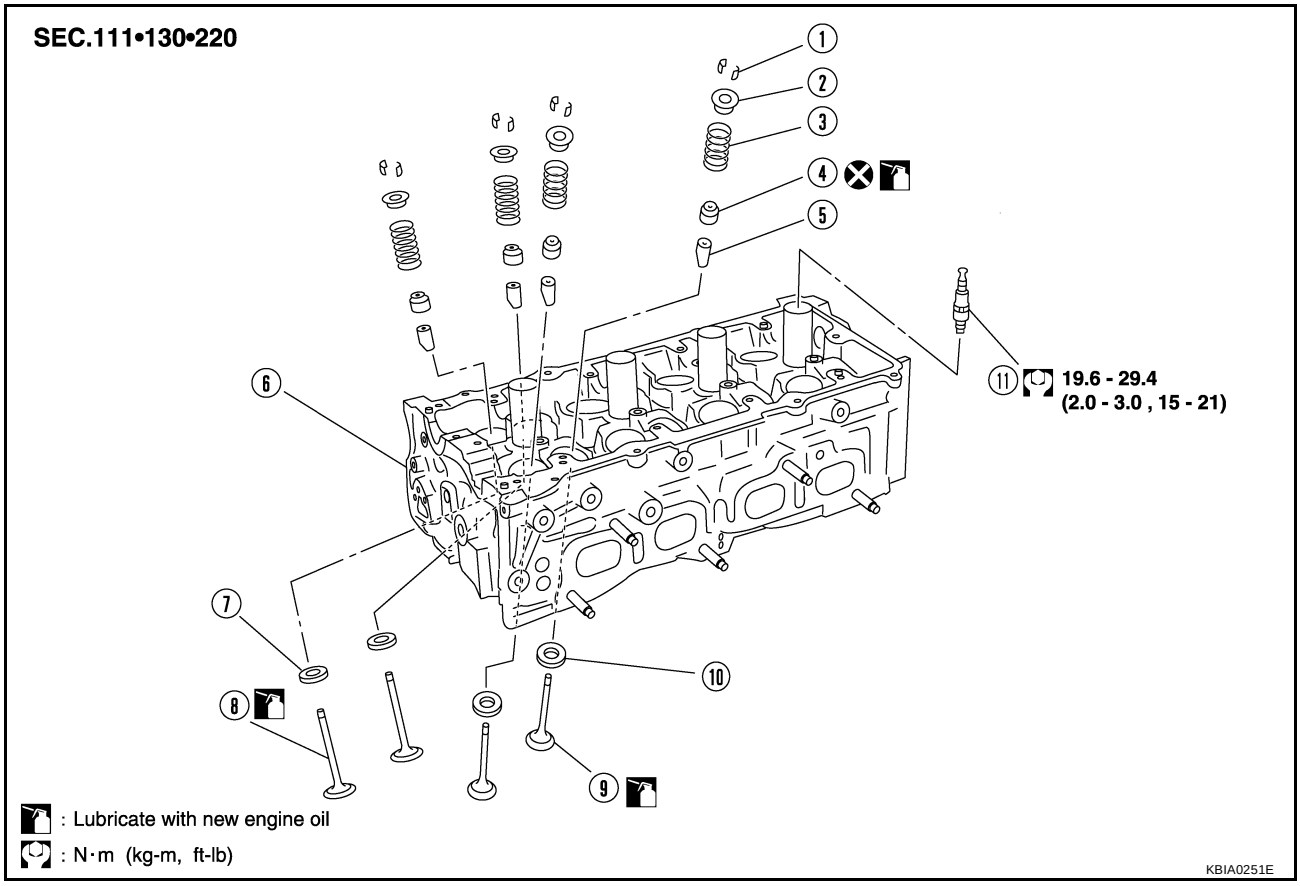

1. Valve collet	2. Valve spring retainer	3. Valve spring (with valve spring seat)
4. Valve oil seal	5. Valve guide	6. Cylinder head
7. Valve seat (INT)	8. valve (INT)	9. Valve (EXH)
10. Valve seat (EXH)	11. Spark plug	

CAUTION:

- **When installing camshafts, chain tensioners, oil seals or other sliding parts, lubricate the contact surfaces with new engine oil.**
- **Apply new engine oil to threads and seat surfaces when installing the cylinder head, camshaft sprocket, crankshaft pulley and camshaft bracket.**
- **Attach tags to valve lifters so all parts are assembled in their original position.**

DISASSEMBLY

1. Remove the valve lifter.
   - Confirm installation point.
2. Remove the valve collet.
   - Compress valve spring with valve spring compressor. Remove valve collet with magnet driver.
3. Remove valve spring retainer and valve spring.

   CAUTION:
   Do not remove valve spring seat from valve spring.
4. Push valve stem to combustion chamber side, and remove valve.
   - Inspect valve guide clearance before removal. Refer to EM-59, "VALVE GUIDE CLEARANCE" .
   - Confirm installation point.

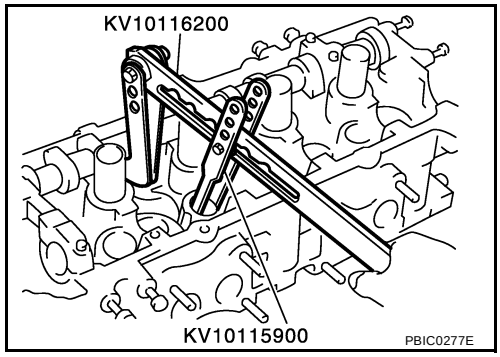

5. Remove valve oil seal with valve oil seal puller.
6. When valve seat must be replaced, refer to EM-61, "VALVE SEAT REPLACEMENT" .
7. When valve guide must be replaced, refer to EM-59, "VALVE GUIDE REPLACEMENT" .
8. Remove spark plug with spark plug wrench.

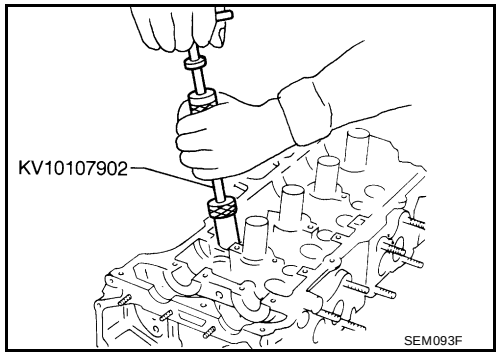

ASSEMBLY

1. Install valve guide. Refer to EM-59, "VALVE GUIDE REPLACEMENT" .
2. Install valve seat. Refer to EM-61, "VALVE SEAT REPLACEMENT" .
3. Install valve oil seal.
   - Install with valve oil seal drift to match dimension in illustration.
4. Install valve.
   - Install larger diameter to intake side.

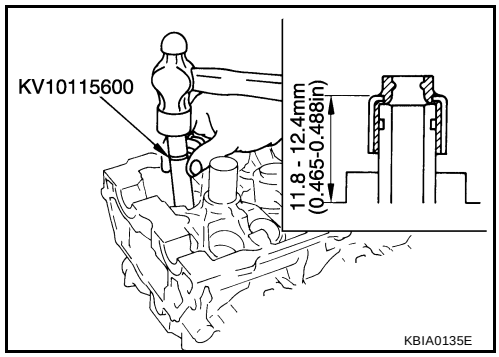

5. Install valve spring.
   - Install smaller pitch (valve spring seat side) to cylinder head side.
   - Confirm the identification color of the valve spring:
     Intake: blue
     Exhaust: yellow
6. Install valve spring retainer.
7. Install valve collet.
   - Compress valve spring with valve spring compressor. Install valve collet with magnet hand.
   - Tap stem edge lightly with plastic hammer after installation to check its installed condition.
8. Install valve lifter.
9. Install spark plug.

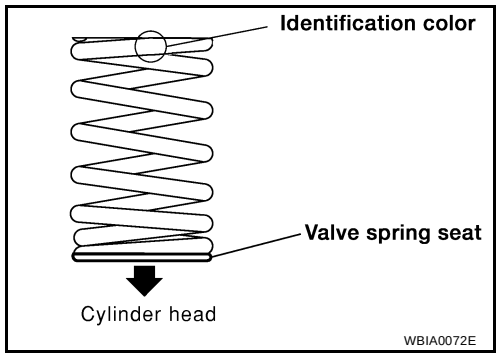

Inspection After Disassembly

EBS007PF

CYLINDER HEAD DISTORTION

1. Wipe off oil and remove water scale deposits, old gasket, old sealer, and carbon with a scraper.

   CAUTION:
   Use care not to allow gasket debris to enter passages for oil or water.
2. At each of several locations on bottom surface of cylinder head, measure distortion in six directions.

   Standard : 0.1 mm (0.004 in) or less

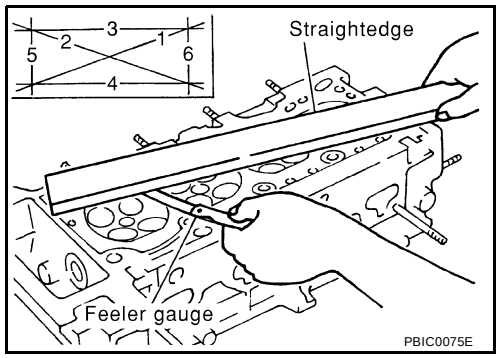

VALVE DIMENSIONS

Check dimensions of each valve. Refer to EM-92, "VALVE" .

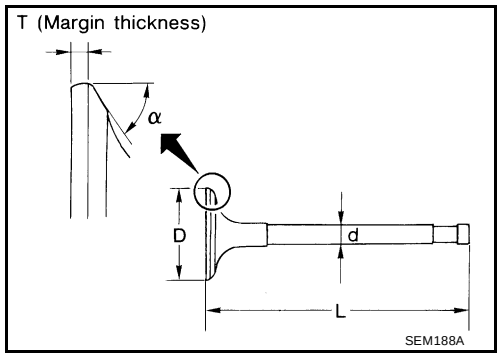

VALVE GUIDE CLEARANCE

NOTE:
Perform this inspection before removing the valve guide.

1. Make sure that the valve stem diameter is within the specification.
2. Push the valve out by approximately 15 mm (0.59 in) toward the combustion chamber side to measure the valve's run-out volume (in the direction of dial gauge) with dial gauge.
3. Half of the run-out volume accounts for the valve guide clearance.

Intake run-out	**: 0.020 - 0.053 mm (0.0008 - 0.0021 in) or less**
Exhaust run-out	**: 0.030 - 0.063 mm (0.0012 - 0.0025 in) or less**

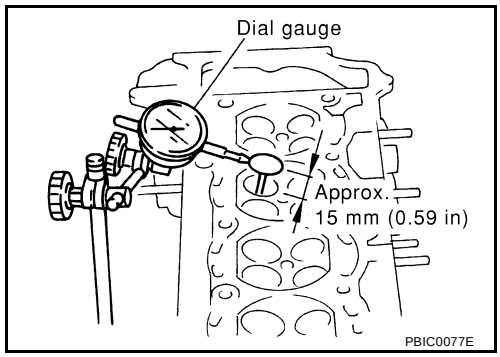

VALVE GUIDE REPLACEMENT

NOTE:
When valve guide is removed, replace with oversized (0.2 mm, 0.008 in) valve guide.

1. To remove valve guide, heat cylinder head to 110° to 130°C (230° to 266°F) by soaking in heated oil.

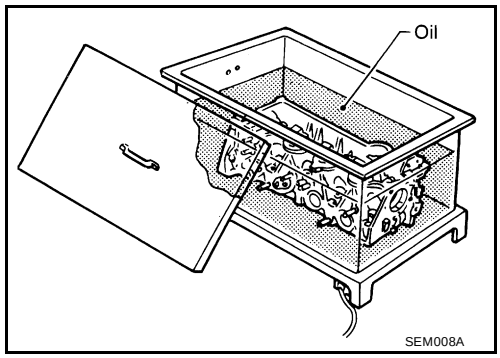

2. Drive out valve guide with a press [under a 20 kN (2.2 ton-force) pressure] or hammer and suitable tool.

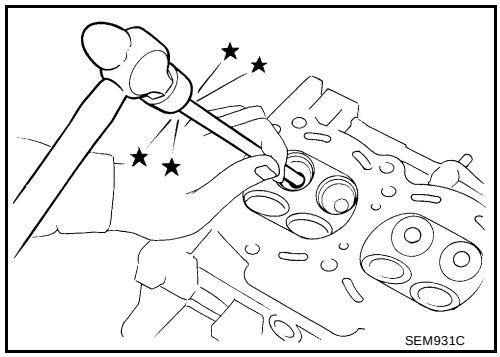

3. Ream cylinder head valve guide hole.

Valve guide hole diameter for intake and exhaust : 10.175 - 10.196 mm (0.4006 - 0.4014 in)

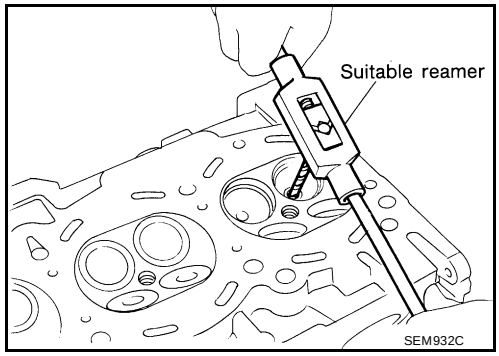

4. Heat cylinder head to 110° to 130°C (230° to 266°F) by soaking in heated oil.

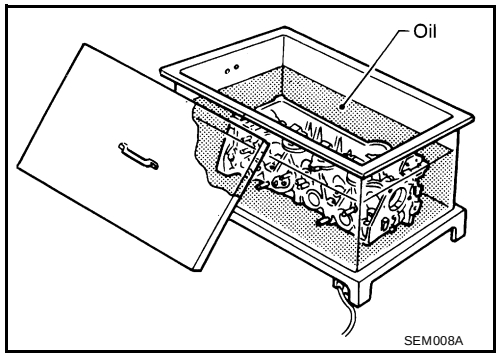

5. Press valve guide from camshaft side to dimensions as in illustration.

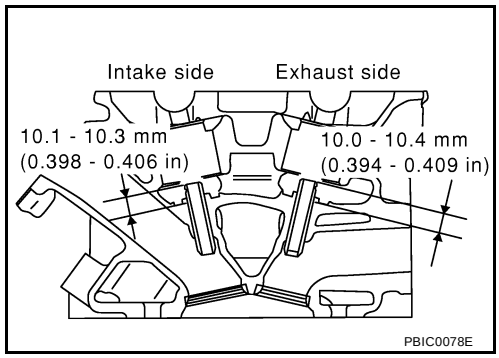

6. Using a suitable valve guide reamer, apply the reamer to finish the valve guide to the specified inner diameter.

Intake and exhaust valve guide (inner diameter finished size) : 6.000 - 6.018 mm (0.2362 - 0.2369 in)

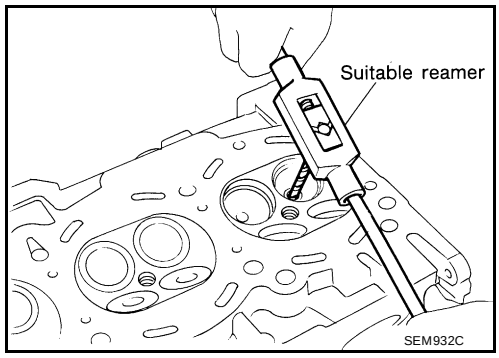

VALVE SEAT CONTACT

After confirming that the dimensions of valve guides and valves are within specifications, perform this procedure:

- Apply prussian blue (or white lead) onto contacting surface of valve seat to check the condition of the valve contact on the seat surface.
- Check if the contact area band is continuous all around the circumference.
- If not, grind to adjust valve fitting and check again. If the contacting surface still has N.G. conditions even after the re-check, replace the valve seat.

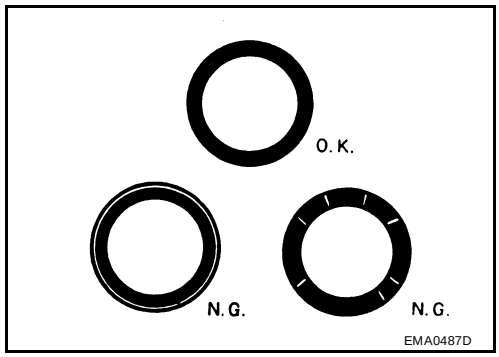

VALVE SEAT REPLACEMENT

When valve seat is removed, replace with an oversized [0.5 mm, (0.020 in)] valve seat.

1. Bore out old seat until it collapses. Boring should not continue beyond the bottom face of the seat recess in the cylinder head. Set the machine depth stop to ensure this.
2. Ream cylinder head recess diameter for service valve seat.

   Oversize : 0.5 mm (0.020 in)
   Intake : 37.000 - 37.016 mm (1.4567 - 1.4573 in)
   Exhaust : 32.000 - 32.016 mm (1.2598 - 1.2605 in)

   - Be sure to ream in circles concentric to the valve guide center. This will enable the valve seat to fit correctly.

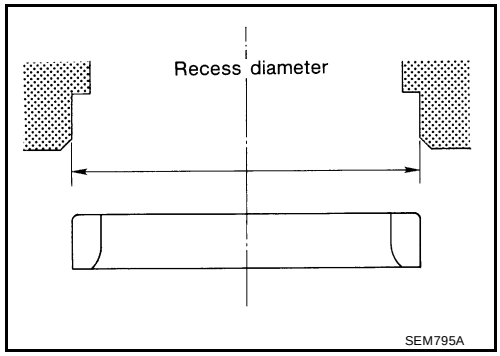

3. Heat cylinder head to 110° to 130°C (230° to 266°F) by soaking in heated oil.
4. Provide valve seats cooled well with dry ice. Force fit valve seat into cylinder head.

   CAUTION:
   Avoid directly touching the cold valve seats.

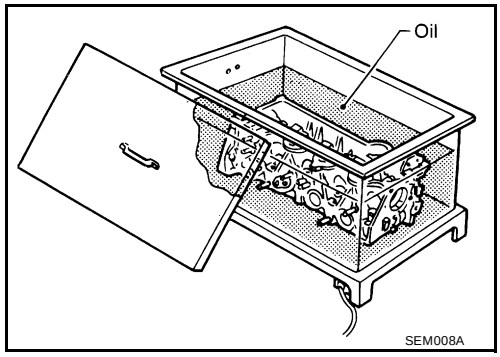

5. Using a valve seat cutter set or a valve seat grinder, finish the seat to the specified dimensions.

   CAUTION:
   When using valve seat cutter, firmly grip the cutter handle with both hands. Then, press on the contacting surface all around the circumference to cut in a single drive. Improper pressure on the cutter or cutting many different times may result in a defective valve seat.

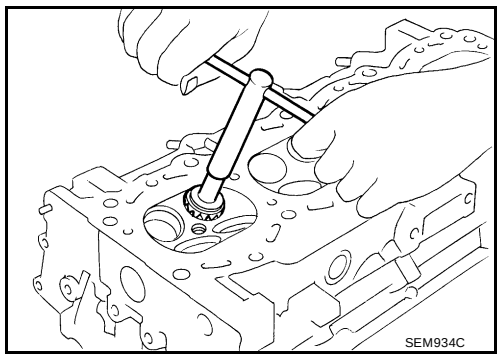

   Grind the valve seat to obtain the specified dimensions as shown.

   Standard
   D1 dia. : 33.5 mm (1.3189 in)
   D2 dia. : 35.1 - 35.3 mm (1.382 - 1.390 in)
   D3 dia. : 39.0 - 39.2 mm (1.535 - 1.543 in)
   D4 dia. : 28 mm (1.10 in)
   D5 dia. : 29.9 - 30.1 mm (1.177- 1.185 in)
   D6 dia. : 33.5 - 33.7 mm (1.319 - 1.327 in)

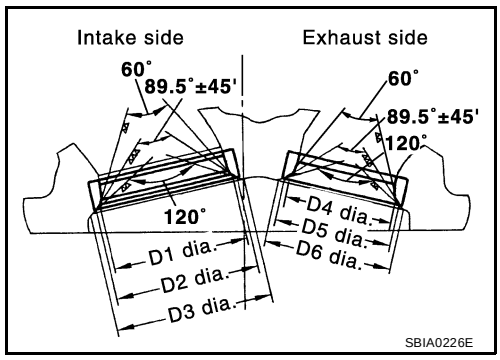

6. Using compound, grind the valve seat to adjust the valve fitting.
7. Check again for normal contact.

VALVE SPRING SQUARENESS

Set try square along the side of the valve spring and rotate the spring. Measure the maximum clearance between the top face of the spring and the try square.

Squareness limit : 1.9 mm (0.0748 in)

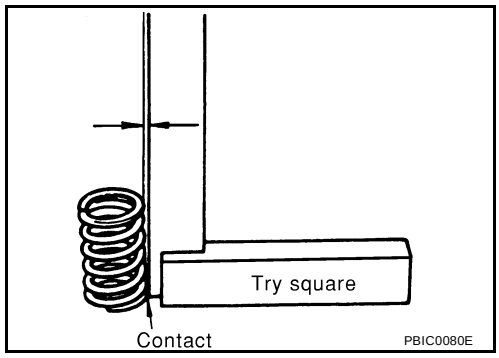

VALVE SPRING DIMENSIONS AND VALVE SPRING PRESSURE LOAD

Check valve spring pressure with valve spring seat installed at specified spring height. Replace if not within specifications.

CAUTION:
Do not remove the valve spring seat.

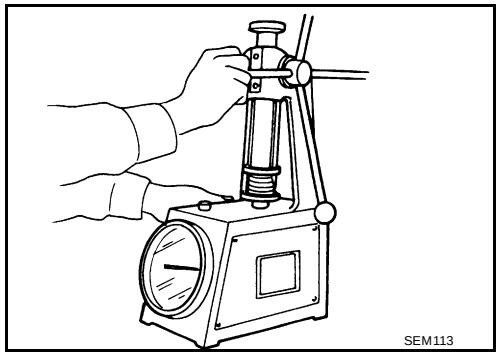

STANDARD	INTAKE (identification color: blue)	EXHAUST (identification color: yellow)
Free height	44.84 - 45.34 mm (1.7654 - 1.7850 in)	45.28 - 45.78 mm (1.7827 - 1.8024 in)
Installation height	35.30 mm (1.390 in)	35.30 mm (1.390 in)
Installation load	151 - 175 N (15.4 - 17.8 kg-force, 34 - 39 lb-force)	151 - 175 N (15.4 - 17.8 kg-force, 34 - 39 lb-force)
Height during valve open	24.94 mm (0.9819 in)	26.39 mm (1.0390 in)
Load with valve open	358 - 408 N (36.5 - 41.6 kg-force, 80 - 92 lb-force)	325 - 371 N (33.1 - 37.8 kg-force, 73-83 lb-force)

ENGINE ASSEMBLY

PFP:10001

Removal and Installation

EBS007PG

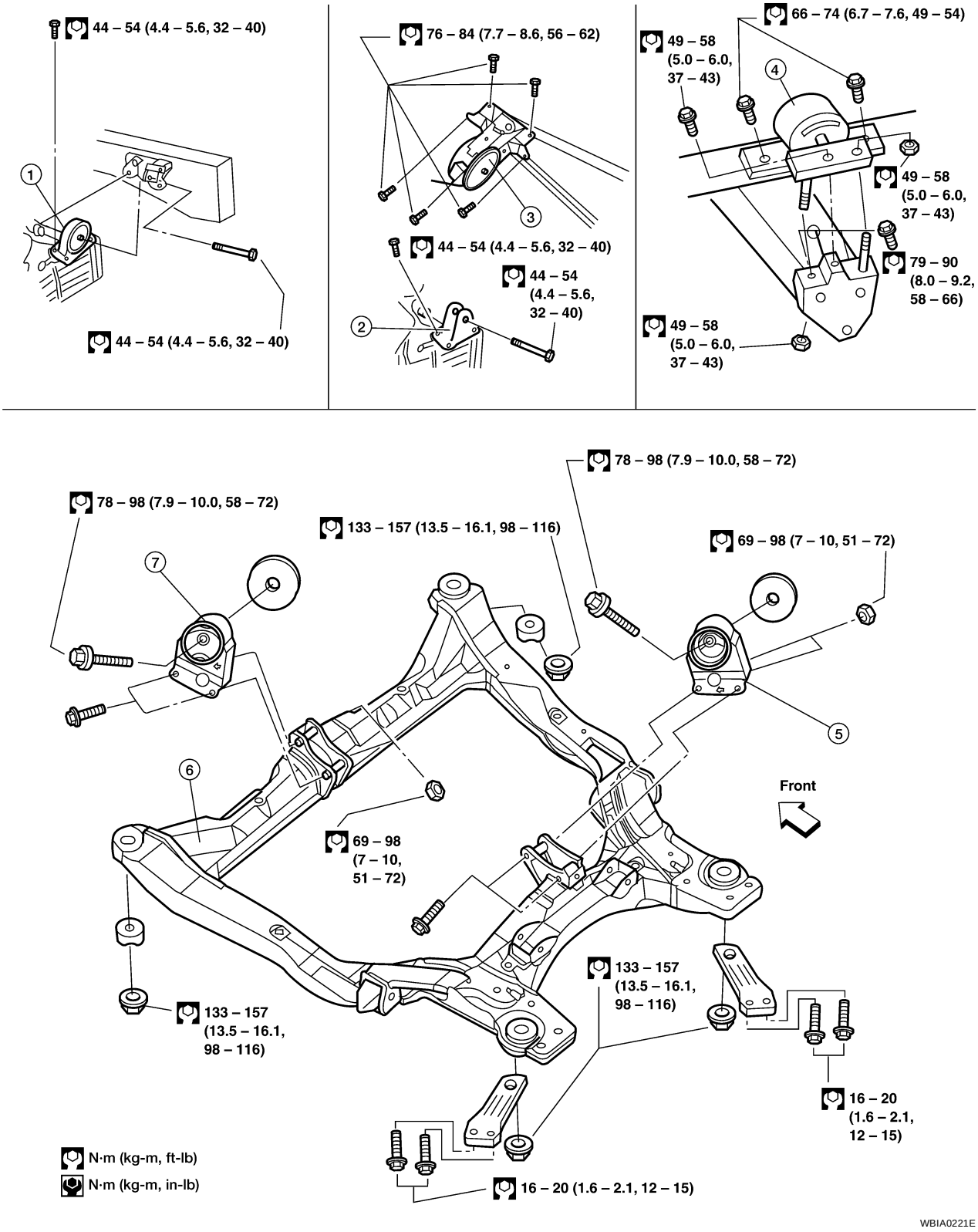

1. LH transaxle mounting insulator (A/T)
2. LH transaxle mounting bracket (M/T)
3. LH transaxle mounting insulator (M/T)
4. RH engine mounting insulator
5. Rear engine mounting insulator (orient by direction mark)
6. Front suspension member
7. Front engine mounting insulator (orient by direction mark)

WARNING:

- **Place chocks at the front and back of the rear wheels.**
- **For engines not equipped with slingers, attach proper slingers and bolts as described in the parts catalog.**

CAUTION:

- **Do not start working until the exhaust system and coolant are cool.**
- **If items or work required are not covered by the engine main body section, refer to the applicable sections.**
- **Use the correct supporting points for lifting and jacking. Refer to GI-37, "LIFTING POINT" .**
- **In removing the drive shaft, be careful not to damage the grease seals on the transaxle.**
- **Before separating the engine and transaxle, remove the crankshaft position sensor (POS) from the assembly.**
- **Be sure not to damage the edge of the crankshaft position sensor (POS) or the ring gear teeth.**

REMOVAL

1. Release fuel pressure. Refer to EC-51, "FUEL PRESSURE RELEASE" .
2. Disconnect the fuel rail at the fuel hose quick connector (engine side). Refer to EM-16, "INTAKE MANIFOLD" .
3. Drain the engine oil. Refer to MA-17, "Changing Engine Oil" .
4. Drain the engine coolant. Refer to MA-14, "DRAINING ENGINE COOLANT" .
5. Remove the engine hood assembly. Refer to BL-13, "Removal and Installation of Hood Assembly" .
6. Remove the battery, battery hold downs and battery tray.
7. Disconnect engine room harness from the engine side and position it aside. Disconnect engine harness ground connections. Access the connector through the glove box opening.
8. Disconnect the MAF sensor electrical connector.
9. Remove the air duct and air cleaner case assembly. Refer to EM-14, "Removal and Installation" .
10. Disconnect the heater hoses.
11. Remove the radiator and radiator fan assembly. Refer to CO-12, "Removal and Installation" .
12. Remove engine coolant reservoir tank.
13. Disconnect and set aside the IPDME/R and remove the IPDME/R bracket. Refer to PG-24, "Removal and Installation of IPDM E/R" .
14. Remove the generator. Refer to SC-33, "Removal" .
15. Remove the engine under covers and splash shield, using power tool.
16. Dismount the A/C compressor with piping connected and secure with wire to the radiator support.
17. Disconnect the engine wiring harness retainers and ground strap.
18. Remove clutch operating cylinder from transaxle, and move it aside (M/T models).
19. Disconnect the transaxle shift controls.
20. Remove front exhaust tube. Refer to EX-3, "Removal and Installation" .
21. Remove the left and right drive shafts. Refer to FAX-11, "Removal and Installation" .
22. Remove the front suspension member. Refer to FSU-14, "Removal and Installation" .
23. Dismount the power steering pump with piping connected and position it aside with wire.
24. Install engine slingers into front left cylinder head and rear right cylinder head.
    - Use alternator bracket mounting bolt holes for the front slinger.
    - Use the proper slingers and bolts as described in the Parts Catalog.

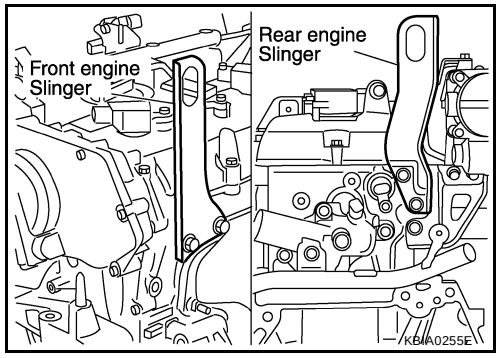

Slinger bolts - front	**: 51.0 - 64.7 N·m (5.2 - 6.5 kg-m, 38 - 47 ft-lb)**
Slinger bolts - rear	**: 24.5 - 31.4 N·m (2.5 - 3.2 kg-m, 18 - 23 ft-lb)**

25. Support engine and transaxle assembly with engine lifting equipment from the top with the vehicle raised on a hoist.
26. Remove RH engine mounting insulator.
27. Remove LH transaxle mounting insulator through-bolts.
28. Lower the engine and transaxle assembly from the engine compartment.
29. Remove the starter motor. Refer to SC-23, "Removal and Installation" .
30. Separate engine and transaxle.

INSTALLATION

Installation is in the reverse order of removal.

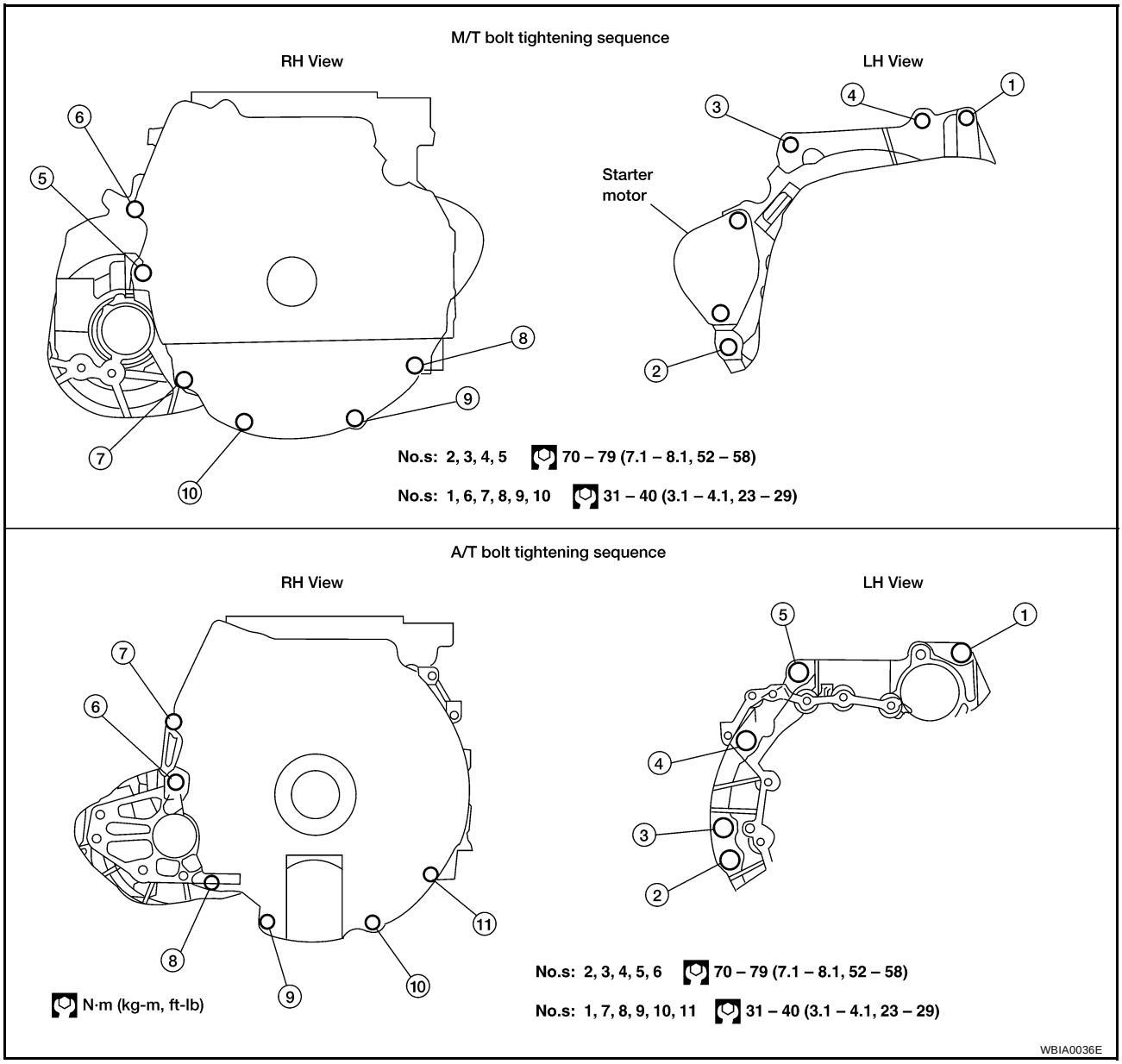

- Do not allow oil to get on mounting insulators. Be careful not to damage mounting insulators.
- If parts have a direction mark (arrow) this indicates front of the vehicle, and the parts must be installed according to the identification mark.

INSPECTION AFTER INSTALLATION

- Before starting engine, check the levels of engine coolant, lubricants, engine oil. If less than required quantity, fill to the specified level.
- Run engine to check for unusual noise and vibration.

- Warm up engine thoroughly to make sure there is no leakage of coolant, lubricants, oil, fuel, and exhaust gas.
- Bleed air from passages in pipes and tubes of applicable lines.

CYLINDER BLOCK

PFP:11010

Disassembly and Assembly

EBS007PH

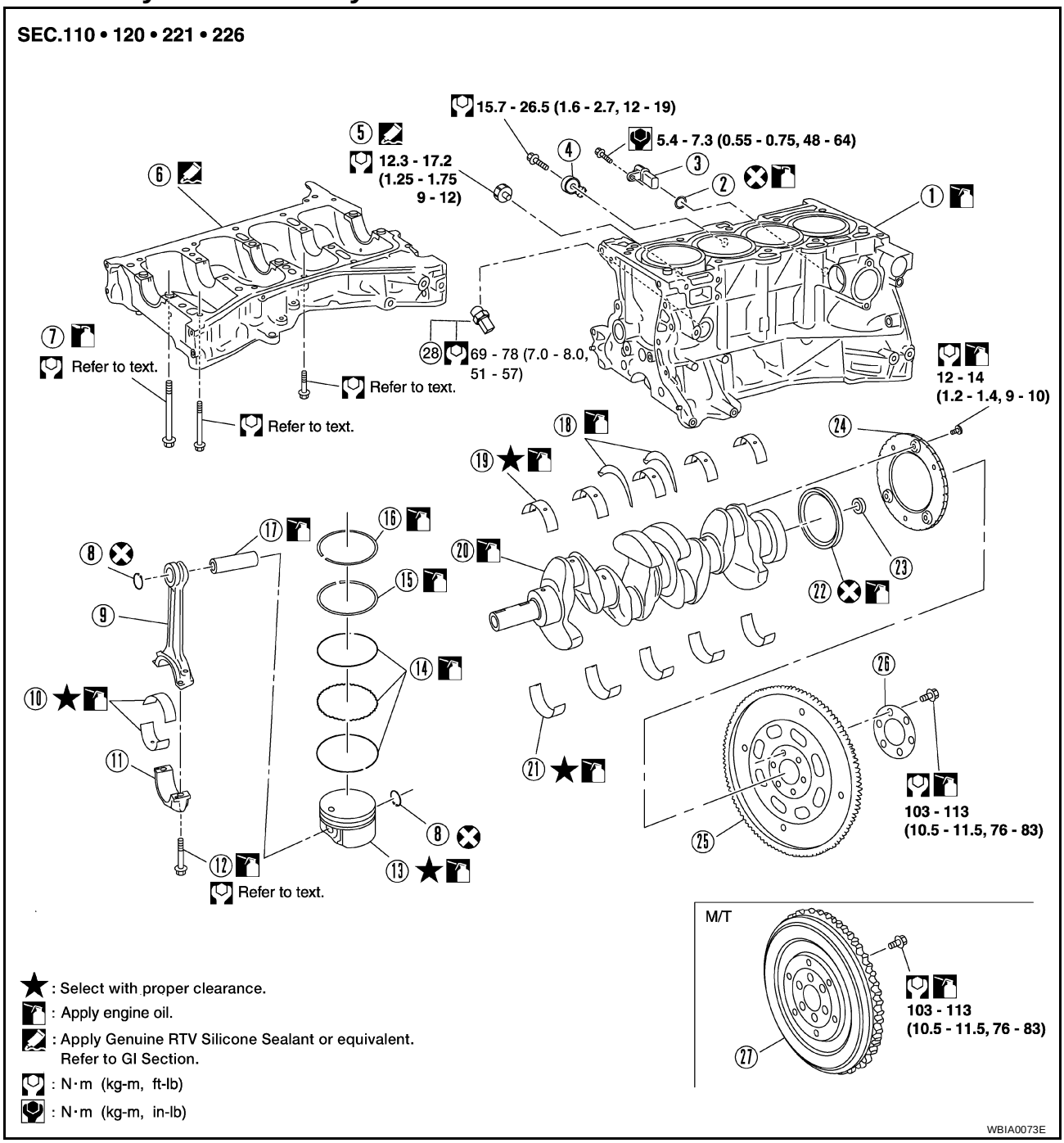

1.	Cylinder block	2.	O-ring	3.	Crankshaft position sensor (POS)
4.	Knock sensor	5.	Oil pressure switch	6.	Lower cylinder block
7.	Lower cylinder block bolt	8.	Snap ring	9.	Connecting rod
10.	Connecting rod bearing	11.	Connecting rod bearing cap	12.	Connecting rod bearing cap bolt
13.	Piston	14.	Oil ring	15.	Second ring
16.	Top ring	17.	Piston pin	18.	Main thrust bearing
19.	Main bearing upper	20.	Crankshaft	21.	Main bearing lower
22.	Crankshaft rear oil seal	23.	Pilot converter (A/T only)	24.	Crankshaft signal plate
25.	Drive plate	26.	Reinforcement plate	27.	Flywheel
28.	Cylinder block heater (if equipped)				

CAUTION:
Apply new engine oil to parts marked in illustration before installation.

DISASSEMBLY

1. Remove the engine and transaxle as an assembly from the vehicle, and separate the transaxle from the engine. Refer to EM-63, "Removal and Installation" .
2. Mount the engine on a suitable engine stand.
3. Drain any remaining engine oil and coolant from the engine.
4. Remove the following components and associated parts.
   - Exhaust manifold and three way catalyst assembly. Refer to EM-21, "Removal and Installation" .
   - Intake manifold collector. Refer to EM-16, "Removal and Installation" .
   - Intake manifold and fuel tube assembly. Refer to EM-16, "Removal and Installation" .
   - Ignition coils. Refer to EM-26, "Removal and Installation" .
   - Rocker cover. Refer to EM-32, "Removal and Installation" .
   - Front cover, timing chain, and balancer unit. Refer to EM-45, "Removal and Installation" .
   - Cylinder head. Refer to EM-54, "Removal and Installation" .
5. Remove the knock sensor.

   CAUTION:
   Carefully handle the sensor and do not drop the sensor.
6. Remove crankshaft position sensor (POS).

   CAUTION:
   - **Avoid impacts such as a dropping.**
   - **Do not disassemble.**
   - **Keep it away from metal particles.**
   - **Do not place sensor close to magnetic materials.**

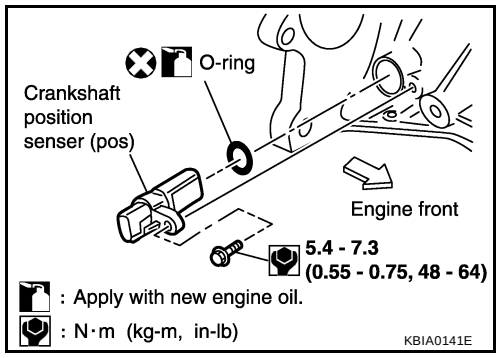

7. Remove the flywheel (M/T models) or drive plate (A/T models) using specified Tool. Hold the crankshaft with a stopper plate and remove the mounting bolts.

   Flywheel bolt Tool : J-45737
   Drive plate bolt Tool : J-45816

   CAUTION:
   Be careful not to damage the flywheel contact surface for the clutch disc.

   NOTE:
   The flywheel two-block construction allows movement in response to transmission side pressure, or when twisted in its rotational direction, therefore, some amount of noise is normal.

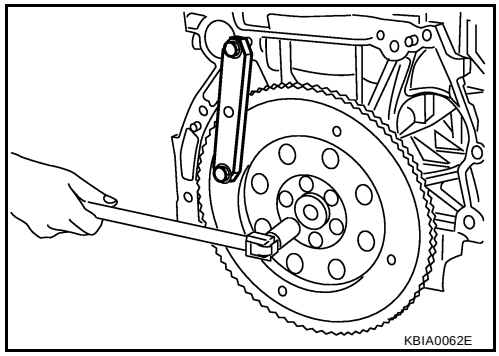

8. Remove pilot converter using Tool (A/T models).

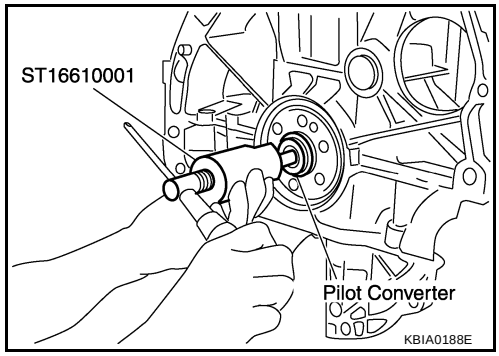

9. Remove the piston and connecting rod assemblies.

a. Position the crankshaft and corresponding connecting rod, to be removed, to the bottom dead center stroke.

b. Remove the connecting rod cap. Number the cap so it can be assembled in the same position.

c. Using a hammer handle or similar tool, push the piston and connecting rod assembly out of the top of the cylinder block. Number the piston and rod so it can be assembled in the same position.

- Before removing the piston and connecting rod assembly, check the connecting rod side clearance. Refer to EM-82, "CONNECTING ROD SIDE CLEARANCE" .

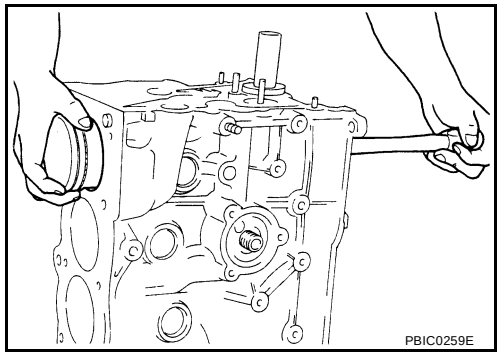

10. Remove the connecting rod bearings. If reusing, number them so they can be assembled in the same position and direction.

CAUTION:
When removing them, note the position for installation. Keep them in the correct order.

11. Remove the piston rings from the piston using a suitable piston ring expander.

- Before removing the piston rings, check the piston ring side clearance. Refer to EM-83, "PISTON RING SIDE CLEARANCE" .

CAUTION:
- **When removing the piston rings, be careful not to damage the piston.**
- **Be careful not to damage piston rings by expanding them excessively, if reusing them.**

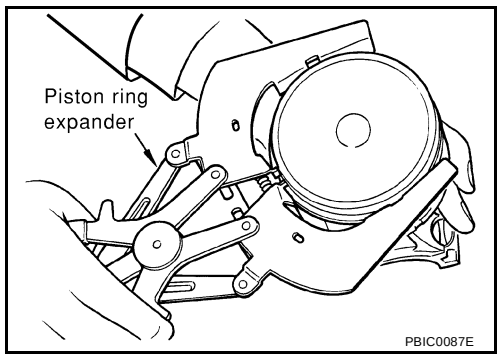

12. Remove the piston from the connecting rod as follows.

a. Using a snap ring pliers, remove the two snap rings.

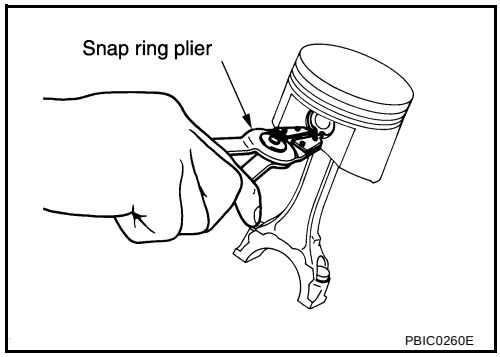

b. Heat the piston to 60° - 70°C (140° - 158°F) with a heat gun, or equivalent.

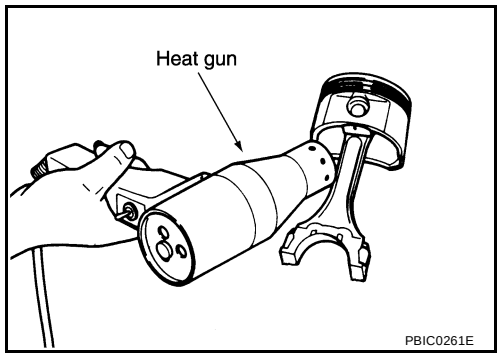

c. Push out piston pin with a punch of an outer diameter of approximately 19 mm (0.75 in).

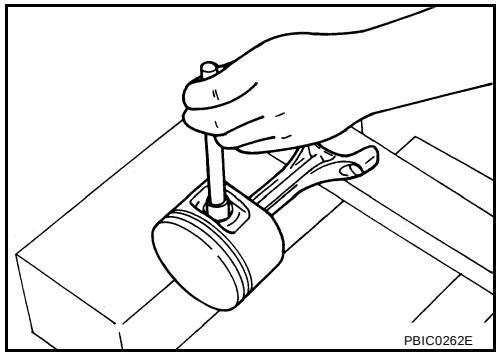

13. Remove the lower cylinder block mounting bolts.
    - Before loosening the lower cylinder block mounting bolts, measure the crankshaft side clearance. Refer to EM-81, "CRANKSHAFT SIDE CLEARANCE" .
    - Loosen them in the order shown to remove them.

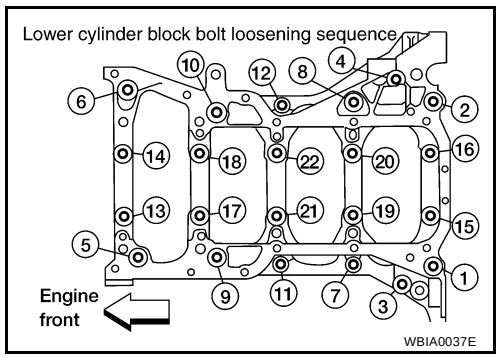

14. Remove the lower cylinder block.
    - Using Tool (seal cutter) cut the RTV Silicone Sealant and remove the lower cylinder block from the cylinder block.

    CAUTION:
    Be careful not to damage the mounting surface.

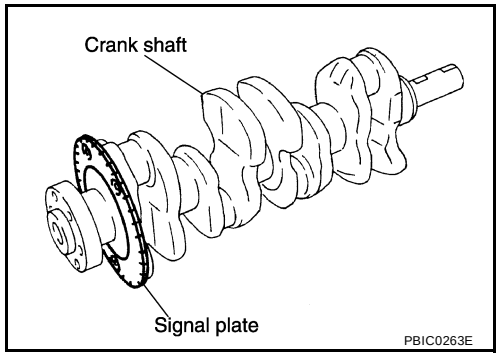

15. Remove the crankshaft.

    CAUTION:
    - **Do not damage or deform the signal plate while mounted on the crankshaft.**
    - **When setting the crankshaft on a flat surface, use a block of wood to avoid interference between the signal plate and the surface.**
    - **Do not remove signal plate unless it is necessary.**

16. Pull the rear oil seal out of the rear end of the crankshaft.

    CAUTION:
    Do not to damage the crankshaft or cylinder block when removing the rear oil seal.

    NOTE:
    When replacing the rear oil seal without removing the cylinder block, use a screwdriver to pull it out from between crankshaft and block.

17. Remove the main bearings and thrust bearings from the cylinder block and lower cylinder block.

    CAUTION:
    Identify and number the bearings, if reusing them, so that they are assembled in the same position and direction.

ASSEMBLY

1. Using compressed air, clean out the coolant and oil passages in the cylinder block, the cylinder bore and the crankcase to remove any foreign material.

    CAUTION:
    Use approved safety glasses to protect your eyes.

2. Install the drain plugs on the cylinder block.
   - Apply RTV Silicone Sealant.
     Use Genuine RTV Silicone Sealant, or equivalent. Refer to GI-42, "RECOMMENDED CHEMICAL PRODUCTS AND SEALANTS" .
   - Replace the copper washers with new ones.

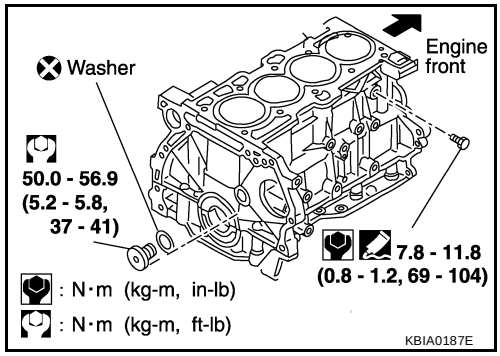

3. Install the main bearings and the thrust bearings.

a. Remove dust, dirt, and oil from the bearing mating surfaces of the cylinder block and lower cylinder block.

b. Install the thrust bearings to both sides of the No. 3 main bearing journal on the cylinder block.
   - Install the thrust bearings with the oil groove facing the crankshaft arm (outside).

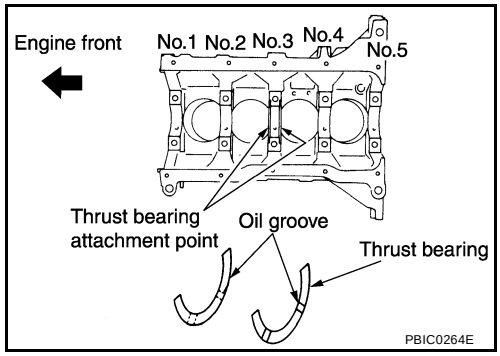

c. Install the main bearings paying attention to their position and direction.
   - The main bearing with an oil hole and groove goes on the cylinder block. The one without them goes on the lower cylinder block.
   - Only the main bearing (on the cylinder block) for No. 3 journal has different specifications.
   - Before installing the bearings, apply engine oil to the bearing friction surface (inside). Do not apply oil to the back surface, but thoroughly clean it.
   - When installing, align the bearing stopper to the notch.
   - Make sure that the oil holes on the cylinder block and those on the corresponding bearing are aligned.

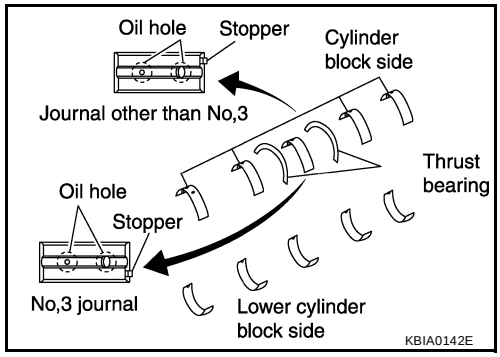

4. Install the signal plate to the crankshaft.

   Signal plate bolts : 12 - 14 N·m (1.22 - 1.43 kg-m, 9 - 10 ft-lb)

a. Position the crankshaft and signal plate using a positioning dowel pin, and tighten the mounting bolts to specification.

b. Remove the dowel pin.

   CAUTION:
   Be sure to remove dowel pin before installing the crankshaft.

   NOTE:
   Dowel pins for the crankshaft and signal plate are supplied as a set for each.

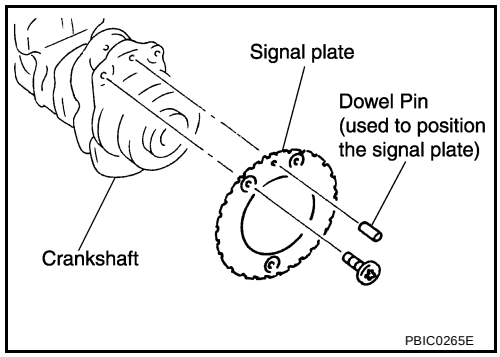

5. Install the crankshaft onto the cylinder block.
   - While turning the crankshaft by hand, check that it turns smoothly.

6. Install the lower cylinder block.
   - Apply RTV Silicone Sealant to the positions as shown.

   NOTE:
   Cylinder block and lower cylinder block are machined together. Neither of them can be replaced separately.

   CAUTION:
   After the RTV Silicone Sealant is applied, the lower cylinder block installation must be finished within 5 minutes.

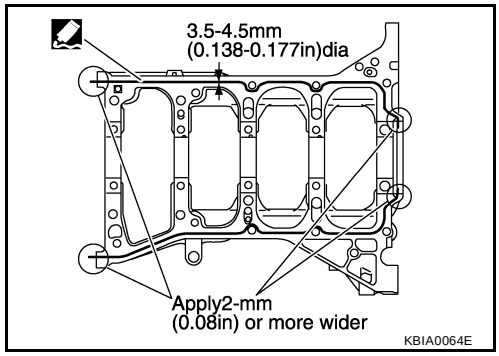

7. Tighten lower cylinder block mounting bolts in the numerical order shown and according to the following steps:

a. Apply new engine oil to threads and seat surfaces of the mounting bolts.

b. Tighten bolts No. 1 - 10 only in the order shown, to specification below.

First tightening, bolts 1 - 10 only	**: 36.3 - 42.2 N·m (3.7 - 4.3 kg-m, 27 - 31 ft-lb)**

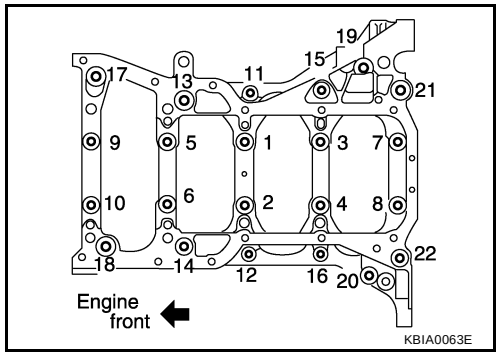

c. Tighten bolts No. 1 - 10 only in the order shown, to specification below.

   CAUTION:
   Use an angle wrench (special service tool) or protractor to check tightening angle. Do not make judgment by visual inspection.

Second tightening, bolts 1 - 10 only	**: 60° - 65° degrees rotation (target: 60° degrees)**

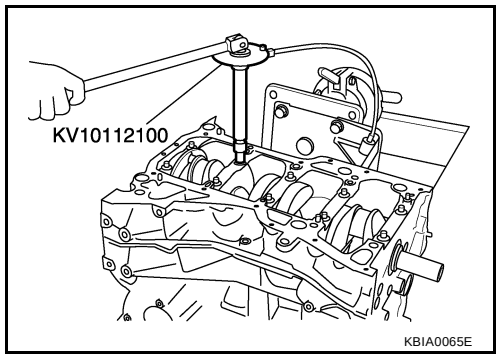

d. Tighten bolts No. 11 - 22 only in the order shown, to specification below.

Third tightening, bolts 11 - 22 only	**: 22.6 - 27.5 N·m (2.3 - 2.8 kg-m, 17 - 20 ft-lb)**

   - Wipe off completely any protruding RTV Silicone Sealant on the exterior of engine.
   - Check crankshaft side clearance. Refer to EM-81, "CRANKSHAFT SIDE CLEARANCE" .
   - After installing the mounting bolts, make sure that the crankshaft can be rotated smoothly by hand.

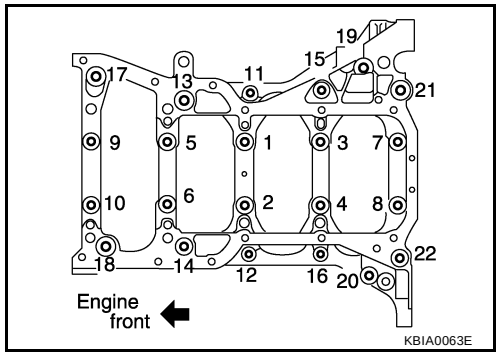

8. Install the rear oil seal.
   - Press the oil seal between cylinder block and crankshaft with a suitable drift as shown.
   - Be careful not to touch the grease on the oil seal lip.
   - Be careful not to cause scratches or burrs when pressing in the rear oil seal.

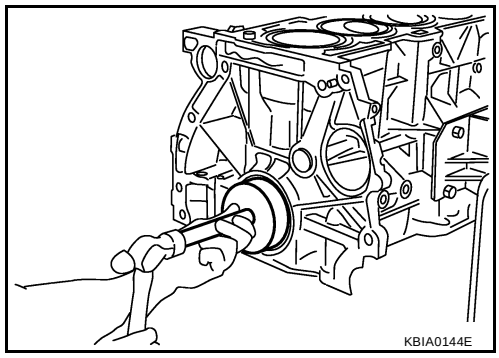

- Press in rear oil seal to the specified height as shown.

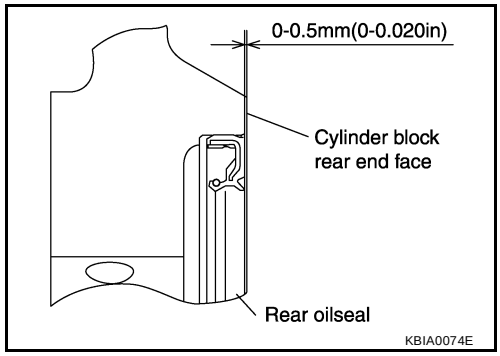

9. Install the piston to the connecting rod. Assemble the components in their original positions.

a. Using a snap ring pliers, install the snap ring to the grooves of the piston's rear side.
   - Insert the piston pin snap ring fully into groove.

b. Install the piston to the connecting rod.
   - Using a heat gun, heat the piston [approximately 60° - 70 C° (140° - 158 °F)] until the piston pin can be pushed in by hand without excessive force. From the front to the rear, insert the piston pin into the piston and the connecting rod.
   - Assemble so that the front mark on the piston crown and the oil holes and the cylinder No. on the connecting rod are positioned as shown.

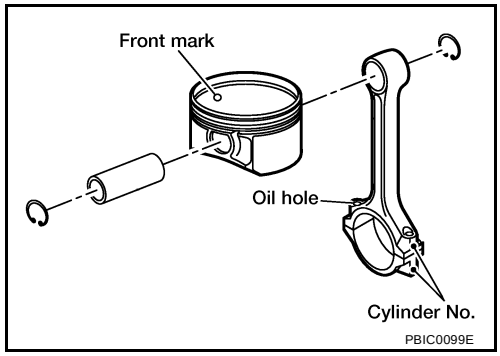

c. Install the piston pin snap ring into the front of the piston.
   - Check that the connecting rod moves smoothly.

10. Using a piston ring expander, install the piston rings. Assemble the components in their original positions.

CAUTION:
Be careful not to damage the piston.

- Position each ring with the gap as shown in the figure, referencing the piston front mark as the starting point.
- Install the top ring and the second ring with the stamped surface facing upward.

Stamped mark (face upwards)

Top ring : A

Second ring : 2A

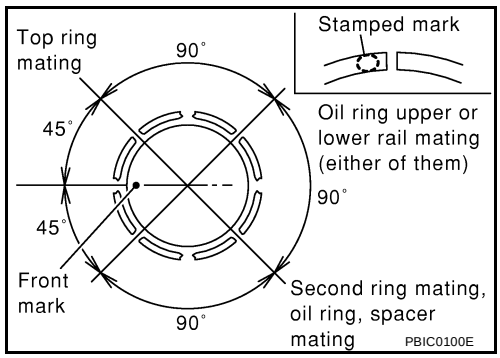

11. Install the connecting rod bearings to the connecting rod and the connecting rod cap. Assemble the components in their original positions.
   - When installing the connecting rod bearings, apply engine oil to the bearing friction surface (inside). Do not apply oil to the back surface, but thoroughly clean the back.
   - When installing, align the connecting rod bearing stopper protrusion with the notch of the connecting rod to install.
   - Check the oil holes on the connecting rod and those on the corresponding bearing are aligned.

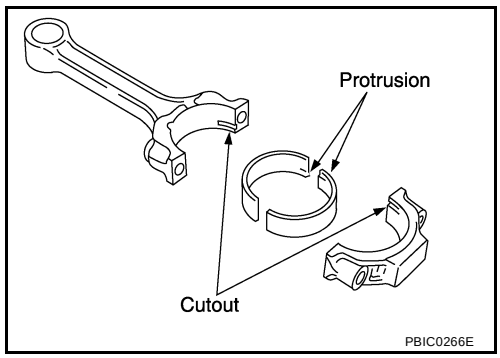

12. Install the piston and connecting rod assembly to the crankshaft. Assemble the components in their original positions.
    - Rotate the crankshaft so the pin corresponding to the connecting rod to be installed is at the bottom dead center position.
    - Apply engine oil sufficiently to the cylinder bore, piston, and crankshaft pin.
    - Match the cylinder position number with the cylinder No. on the connecting rod for installation.
    - Using a piston ring compressor, install the piston with the front mark on the piston crown facing the front of the engine.

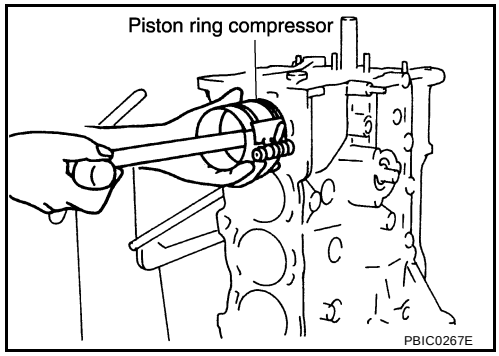

CAUTION:
Be careful not to damage the crankshaft pin, resulting from an interference of the connecting rod big end.

13. Install the connecting rod caps. Assemble the components in their original positions.
    - Match the stamped cylinder number marks on the connecting rod with those on the cap to install.

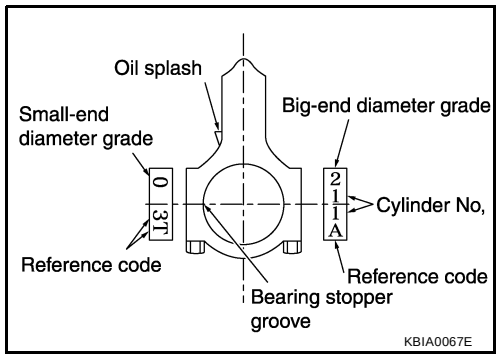

14. Tighten the connecting rod bolt as follows:
    Apply engine oil to the threads and seats of the connecting rod bolts.

    CAUTION:
    Always use either an angle wrench or protractor. Avoid tightening based on visual check alone.

    Stage 1 : 18.6 - 20.6 N·m (1.9 - 2.1 kg-m, 14 - 15 ft-lb)
    Stage 2 : Rotate bolts 85° - 95° degrees (target 90° degrees)

    - Check the connecting rod side clearance. Refer to EM-82, "CONNECTING ROD SIDE CLEARANCE" .
    - After tightening the bolts, make sure that the crankshaft rotates smoothly.

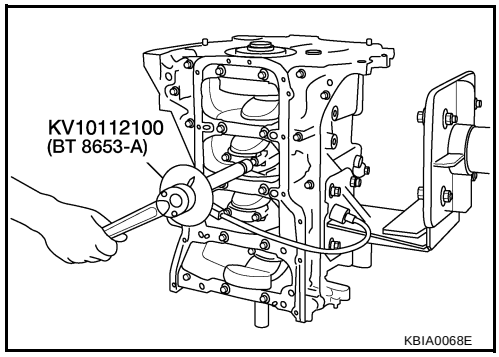

15. Install flywheel (M/T Models), or drive plate (A/T Models).
    - Install drive plate, reinforcement plate and pilot converter as shown in figure.
    - Using a drift with 33 mm (1.30 in) diameter, push pilot converter into the end of the crankshaft.

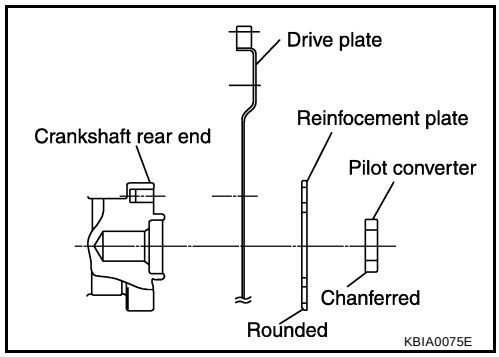

16. Install the knock sensor.
    - Make sure that there is no foreign material on the cylinder block mating surface and the back surface of the knock sensor.
    - Install the knock sensor with the connector facing lower left by 45° as shown.
    - Do not tighten the mounting bolts while holding the connector.
    - Make sure that the knock sensor does not interfere with other parts.

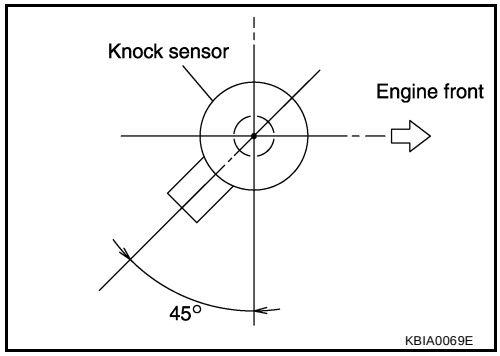

Knock sensor bolt : 15.7 - 26.5 N·m (1.6 - 2.7 kg-m, 12 - 19 ft-lb)

CAUTION:
If the knock sensor is dropped, replace it with new one.

17. Install the crankshaft position sensor (POS).

Crankshaft position sensor bolt : 5.4 - 7.3 N·m (0.55 - 0.75 kg-m, 48 - 65 in-lb)

18. Remaining installation is in the reverse order of removal.

How to Select Piston and Bearing

EBS007PI

DESCRIPTION

Selection points	Selection parts	Selection items	Selection methods
Between cylinder block to crankshaft	Main bearing	Main bearing grade (bearing thickness)	Determined by match of cylinder block bearing housing grade (inner diameter of housing) and crankshaft journal grade (outer diameter of journal)
Between crankshaft to connecting rod	Connecting rod bearing	Connecting rod bearing grade (bearing thickness)	Combining service grades for connecting rod big end inner diameter and crankshaft pin outer diameter determine connecting rod bearing selection
Between cylinder block to piston	Piston and piston pin assembly (The piston is available together with piston pin as an assembly)	Piston grade (piston outer diameter)	Piston grade = cylinder bore grade (inner diameter of bore)
*Between piston to connecting rod	—	—	—

*For the service parts, the grade for fitting cannot be selected between a piston pin and a connecting rod. (Only 0 grade is available.) The information at the shipment from the plant is described as a reference.

- The identification grade stamped on each part is the grade for the dimension measured in new condition. This grade cannot apply to reused parts.
- For reused or repaired parts, measure the dimension accurately. Determine the grade by comparing the measurement with the values of each selection table.
- For details of the measurement method of each part, the reuse standards, and the selection method of the selective fitting parts, refer to the text.

HOW TO SELECT A PISTON

When a New Cylinder Block is Used:

- Check the cylinder bore grade on rear left side of cylinder block, and select a piston of the same grade.

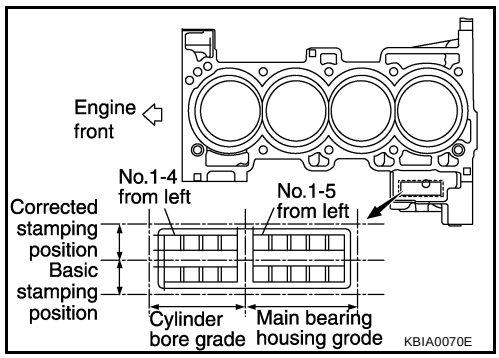

- If there is a corrected stamp mark on the cylinder block, use it as a correct reference.

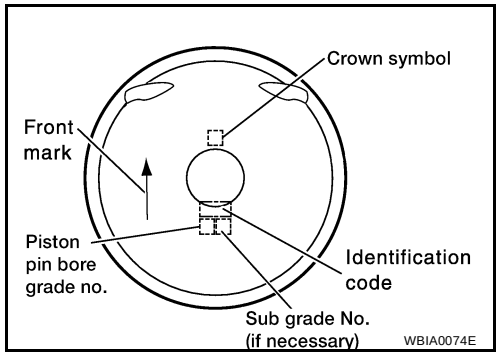

When a Cylinder Block is Reused:

1. Measure the cylinder block bore inner diameter.
2. Determine the bore grade by comparing the measurement with the values under the cylinder bore inner diameter of the "Piston Selection Table". Select the piston of the same grade.

Piston Selection Table

Unit: mm (in)

Grade number (Mark)	1	2 (or no mark)	3
Inner diameter of cylinder bore	89.000-89.010 (3.5039-3.5043)	89.010-89.020 (3.5043-3.5047)	89.020-89.030 (3.5047-3.5051)
Outer diameter of piston	88.980-88.990 (3.5031-3.5035)	88.990-89.000 (3.5035-3.5039)	89.000-89.010 (3.5039-3.5043)

NOTE:

- The piston is available together with piston pin as an assembly.
- The piston pin (piston pin bore) grade is provided only for the parts installed at the plant. For service parts, no grades can be selected. Only 0 grade is available.

HOW TO SELECT A CONNECTING ROD BEARING

When New Connecting Rod and Crankshaft are Used:

1. Apply big end inside diameter grade stamped on connecting rod side face to the row in the "Connecting Rod Bearing Selection Table".

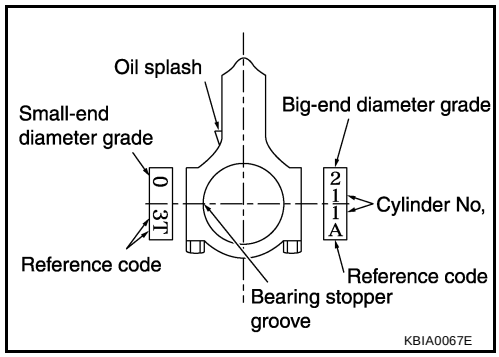

2. Apply pin diameter grade stamped on crankshaft front side to the column in the "Connecting Rod Bearing Selection Table".
3. Read the symbol at the cross point of selected row and column in the "Connecting Rod Bearing Selection Table".
4. Apply the symbol obtained to connecting rod bearing grade table to select.

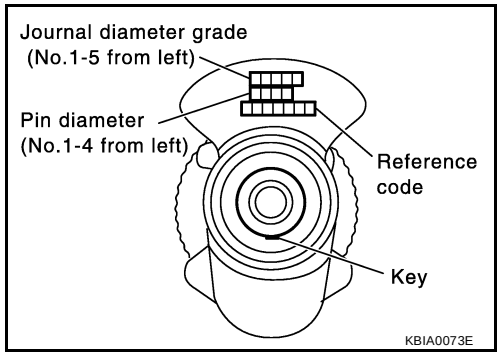

When Crankshaft and Connecting Rod are Reused:

1. Measure dimensions of the big end inner diameter of connecting rod and outer diameter of crankshaft pin individually.
2. Apply the dimension measured to the "Connecting Rod Bearing Selection Table" below.

Connecting Rod Bearing Selection Table

Mark	Outer diameter Unit: mm (in) \ Connecting rod big end. inner diameter / Inner diameter Unit: mm (in)	0 48.000 – 48.001 (1.8898 – 1.8898)	1 48.001 – 48.002 (1.8898 – 1.8898)	2 48.002 – 48.003 (1.8898 – 1.8899)	3 48.003 – 48.004 (1.8899 – 1.8899)	4 48.004 – 48.005 (1.8899 – 1.8900)	5 48.005 – 48.006 (1.8900 – 1.8900)	6 48.006 – 48.007 (1.8900 – 1.8900)	7 48.007 – 48.008 (1.8900 – 1.8901)	8 48.008 – 48.009 (1.8901 – 1.8901)	9 48.009 – 48.010 (1.8901 – 1.8902)	A 48.010 – 48.011 (1.8902 – 1.8902)	B 48.011 – 48.012 (1.8902 – 1.8902)	C 48.012 – 48.013 (1.8902 – 1.8903)
A	44.974 – 44.973 (1.7706 – 1.7706)	0	0	0	0	0	0	0	0	1	1	1	1	1
B	44.973 – 44.972 (1.7706 – 1.7705)	0	0	0	0	0	0	0	1	1	1	1	1	1
C	44.972 – 44.971 (1.7705 – 1.7705)	0	0	0	0	0	0	1	1	1	1	1	1	1
D	44.971 – 44.970 (1.7705 – 1.7705)	0	0	0	0	0	1	1	1	1	1	1	1	1
E	44.970 – 44.969 (1.7705 – 1.7704)	0	0	0	0	1	1	1	1	1	1	1	1	2
F	44.969 – 44.968 (1.7704 – 1.7704)	0	0	0	1	1	1	1	1	1	1	1	2	2
G	44.968 – 44.967 (1.7704 – 1.7704)	0	0	1	1	1	1	1	1	1	1	2	2	2
H	44.967 – 44.966 (1.7704 – 1.7703)	0	1	1	1	1	1	1	1	1	2	2	2	2
J	44.966 – 44.965 (1.7703 – 1.7703)	1	1	1	1	1	1	1	1	2	2	2	2	2
K	44.965 – 44.964 (1.7703 – 1.7702)	1	1	1	1	1	1	1	2	2	2	2	2	2
L	44.964 – 44.963 (1.7702 – 1.7702)	1	1	1	1	1	1	2	2	2	2	2	2	2
M	44.963 – 44.962 (1.7702 – 1.7702)	1	1	1	1	1	2	2	2	2	2	2	2	2
N	44.962 – 44.961 (1.7702 – 1.7701)	1	1	1	1	2	2	2	2	2	2	2	2	3
P	44.961 – 44.960 (1.7701 – 1.7701)	1	1	1	2	2	2	2	2	2	2	2	3	3
R	44.960 – 44.959 (1.7701 – 1.7700)	1	1	2	2	2	2	2	2	2	2	3	3	3
S	44.959 – 44.958 (1.7700 – 1.7700)	1	2	2	2	2	2	2	2	2	3	3	3	3
T	44.958 – 44.957 (1.7700 – 1.7700)	2	2	2	2	2	2	2	2	3	3	3	3	3
U	44.957 – 44.956 (1.7700 – 1.7699)	2	2	2	2	2	2	2	3	3	3	3	3	3

KBIA0147E

Connecting Rod Bearing Grade Table

Grade	0	1	2	3
Upper / Lower thickness mm (in)	1.499 / 1.495 (0.0590/0.0589)	1.503 / 1.499 (0.0592 / 0.0590)	1.507 / 1.503 (0.0593 / 0.0592)	1.511 / 1.507 (0.0595 / 0.0593)
Identification color	Black	Brown	Green	Yellow

Undersize Bearing Usage Guide

- When the specified oil clearance is not obtained with standard size connecting rod bearing, use undersize (US) bearing.
- When using undersize bearing, measure the bearing inner diameter with bearing installed, and grind the crankshaft pin so that the oil clearance satisfies the standard.

Bearing Undersize Table

Unit: mm (in)

Size U.S.	Thickness
0.25 (0.0098)	1.624 - 1.632 (0.0639 - 0.0643)

CAUTION:
In grinding the crankshaft pin to use undersize bearings, do not damage the fillet R (All crankshaft pins).

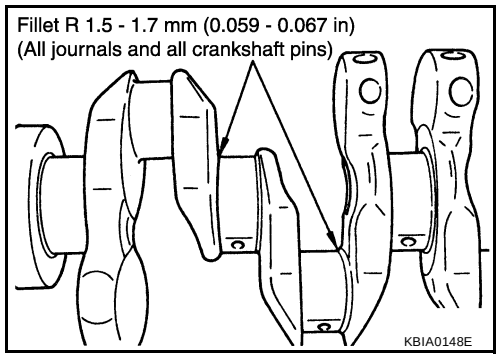

HOW TO SELECT A MAIN BEARING

When New Cylinder Block and Crankshaft are Used:

1. "Main Bearing Selection Table" rows correspond to bearing housing grade on rear left side of cylinder block.
   - If there is a corrected stamp mark on the cylinder block, use it as a correct reference.

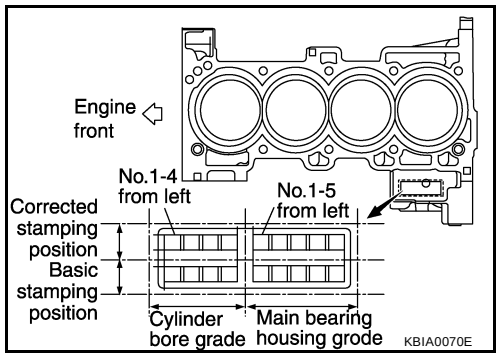

2. Apply journal diameter grade stamped on crankshaft front side to column in "Main Bearing Selection Table".

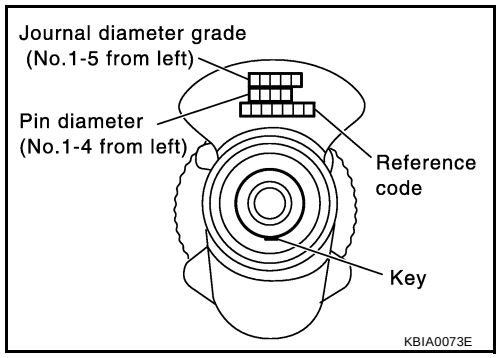

3. Find value at crossing of row and column in "Main Bearing Selection Table".

   CAUTION:
   There are two main bearing selection tables. One is for odd-numbered journals (1, 3, and 5) and the other is for even-numbered journals (2 and 4). Make certain to use the appropriate table. This is due to differences in the specified clearances.

4. Apply the symbol obtained to "Main Bearing Grade Table" to select.

   NOTE:
   Service parts are available as a set of both upper and lower.

When Cylinder Block and Crankshaft are Reused:

1. Measure inner diameter of cylinder block main bearing housing and outer diameter of crankshaft journal.
2. Apply measurement in above step 1 to the "Main Bearing Selection Table".
3. Follow steps 3 and 4 in “When New Cylinder Block and Crankshaft are Used”.

Main Bearing Selection Table (No.1, 3, and No.5 journals)

Cylinder block main bearing hausing inner diameter / Crankshaft journal outer diameter		Mark	A	B	C	D	E	F	G	H	J	K	L	M	N	P	R	S	T	U	V	W	X	Y	4	7
		Inner diameter Unit: mm (in)	58.944 – 58.945 (2.3206 – 2.3207)	58.945 – 58.946 (2.3207 – 2.3207)	58.946 – 58.947 (2.3207 – 2.3207)	58.947 – 58.948 (2.3207 – 2.3208)	58.948 – 58.949 (2.3208 – 2.3208)	58.949 – 58.950 (2.3208 – 2.3209)	58.950 – 58.951 (2.3209 – 2.3209)	58.951 – 58.952 (2.3209 – 2.3209)	58.952 – 58.953 (2.3209 – 2.3210)	58.953 – 58.954 (2.3210 – 2.3210)	58.954 – 58.955 (2.3210 – 2.3211)	58.955 – 58.956 (2.3211 – 2.3211)	58.956 – 58.957 (2.3211 – 2.3211)	58.957 – 58.958 (2.3211 – 2.3212)	58.958 – 58.959 (2.3212 – 2.3212)	58.959 – 58.960 (2.3212 – 2.3213)	58.960 – 58.961 (2.3213 – 2.3213)	58.961 – 58.962 (2.3213 – 2.3213)	58.962 – 58.963 (2.3213 – 2.3214)	58.963 – 58.964 (2.3214 – 2.3214)	58.964 – 58.965 (2.3214 – 2.3215)	58.965 – 58.966 (2.3215 – 2.3215)	58.966 – 58.967 (2.3215 – 2.3215)	58.967 – 58.968 (2.3215 – 2.3216)
Mark	Outer diameter Unit: mm (in)																									
A	54.979 – 54.978 (2.1645 – 2.1645)		0	0	01	01	01	1	1	1	12	12	12	2	2	2	23	23	23	3	3	3	34	34	34	4
B	54.978 – 54.977 (2.1645 – 2.1644)		0	01	01	01	1	1	1	12	12	12	2	2	2	23	23	23	3	3	3	34	34	34	4	4
C	54.977 – 54.976 (2.1644 – 2.1644)		01	01	01	1	1	1	12	12	12	2	2	2	23	23	23	3	3	3	34	34	34	4	4	4
D	54.976 – 54.975 (2.1644 – 2.1644)		01	01	1	1	1	12	12	12	2	2	2	23	23	23	3	3	3	34	34	34	4	4	4	45
E	54.975 – 54.974 (2.1644 – 2.1643)		01	1	1	1	12	12	12	2	2	2	23	23	23	3	3	3	34	34	34	4	4	4	45	45
F	54.974 – 54.973 (2.1643 – 2.1643)		1	1	1	12	12	12	2	2	2	23	23	23	3	3	3	34	34	34	4	4	4	45	45	45
G	54.973 – 54.972 (2.1643 – 2.1642)		1	1	12	12	12	2	2	2	23	23	23	3	3	3	34	34	34	4	4	4	45	45	45	5
H	54.972 – 54.971 (2.1642 – 2.1642)		1	12	12	12	2	2	2	23	23	23	3	3	3	34	34	34	4	4	4	45	45	45	5	5
J	54.971 – 54.970 (2.1642 – 2.1642)		12	12	12	2	2	2	23	23	23	3	3	3	34	34	34	4	4	4	45	45	45	5	5	5
K	54.970 – 54.969 (2.1642 – 2.1641)		12	12	2	2	2	23	23	23	3	3	3	34	34	34	4	4	4	45	45	45	5	5	5	56
L	54.969 – 54.968 (2.1641 – 2.1641)		12	2	2	2	23	23	23	3	3	3	34	34	34	4	4	4	45	45	45	5	5	5	56	56
M	54.968 – 54.967 (2.1641 – 2.1641)		2	2	2	23	23	23	3	3	3	34	34	34	4	4	4	45	45	45	5	5	5	56	56	56
N	54.967 – 54.966 (2.1641 – 2.1640)		2	2	23	23	23	3	3	3	34	34	34	4	4	4	45	45	45	5	5	5	56	56	56	6
P	54.966 – 54.965 (2.1640 – 2.1640)		2	23	23	23	3	3	3	34	34	34	4	4	4	45	45	45	5	5	5	56	56	56	6	6
R	54.965 – 54.964 (2.1640 – 2.1639)		23	23	23	3	3	3	34	34	34	4	4	4	45	45	45	5	5	5	56	56	56	6	6	6
S	54.964 – 54.963 (2.1639 – 2.1639)		23	23	3	3	3	34	34	34	4	4	4	45	45	45	5	5	5	56	56	56	6	6	6	67
T	54.963 – 54.962 (2.1639 – 2.1639)		23	3	3	3	34	34	34	4	4	4	45	45	45	5	5	5	56	56	56	6	6	6	67	67
U	54.962 – 54.961 (2.1639 – 2.1638)		3	3	3	34	34	34	4	4	4	45	45	45	5	5	5	56	56	56	6	6	6	67	67	67
V	54.961 – 54.960 (2.1638 – 2.1638)		3	3	34	34	34	4	4	4	45	45	45	5	5	5	56	56	56	6	6	6	67	67	67	7
W	54.960 – 54.959 (2.1638 – 2.1637)		3	34	34	34	4	4	4	45	45	45	5	5	5	56	56	56	6	6	6	67	67	67	7	7
X	54.959 – 54.958 (2.1637 – 2.1637)		34	34	34	4	4	4	45	45	45	5	5	5	56	56	56	6	6	6	67	67	67	7	7	7
Y	54.958 – 54.957 (2.1637 – 2.1637)		34	34	4	4	4	45	45	45	5	5	5	56	56	56	6	6	6	67	67	67	7	7	7	7
4	54.957 – 54.956 (2.1637 – 2.1636)		34	4	4	4	45	45	45	5	5	5	56	56	56	6	6	6	67	67	67	7	7	7	7	7
7	54.956 – 54.955 (2.1636 – 2.1636)		4	4	4	45	45	45	5	5	5	56	56	56	6	6	6	67	67	67	7	7	7	7	7	7

KBIA0149E

Main Bearing Selection Table (No.2,and 4 journals)

Mark	Crankshaft journal outer diameter: Outer diameter Unit: mm (in)	A 58.944 – 58.945 (2.3206 – 2.3207)	B 58.945 – 58.946 (2.3207 – 2.3207)	C 58.946 – 58.947 (2.3207 – 2.3207)	D 58.947 – 58.948 (2.3207 – 2.3208)	E 58.948 – 58.949 (2.3208 – 2.3208)	F 58.949 – 58.950 (2.3208 – 2.3209)	G 58.950 – 58.951 (2.3209 – 2.3209)	H 58.951 – 58.952 (2.3209 – 2.3209)	J 58.952 – 58.953 (2.3209 – 2.3210)	K 58.953 – 58.954 (2.3210 – 2.3210)	L 58.954 – 58.955 (2.3210 – 2.3211)	M 58.955 – 58.956 (2.3211 – 2.3211)	N 58.956 – 58.957 (2.3211 – 2.3211)	P 58.957 – 58.958 (2.3211 – 2.3212)	R 58.958 – 58.959 (2.3212 – 2.3212)	S 58.959 – 58.960 (2.3212 – 2.3213)	T 58.960 – 58.961 (2.3213 – 2.3213)	U 58.961 – 58.962 (2.3213 – 2.3213)	V 58.962 – 58.963 (2.3213 – 2.3214)	W 58.963 – 58.964 (2.3214 – 2.3214)	X 58.964 – 58.965 (2.3214 – 2.3215)	Y 58.965 – 58.966 (2.3215 – 2.3215)	4 58.966 – 58.967 (2.3215 – 2.3215)	7 58.967 – 58.968 (2.3215 – 2.3216)
A	54.979 – 54.978 (2.1645 – 2.1645)	0	0	0	0	0	0	0	0	01	01	01	1	1	1	12	12	12	2	2	2	23	23	23	3
B	54.978 – 54.977 (2.1645 – 2.1644)	0	0	0	0	0	0	0	01	01	01	1	1	1	12	12	12	2	2	2	23	23	23	3	3
C	54.977 – 54.976 (2.1644 – 2.1644)	0	0	0	0	0	0	01	01	01	1	1	1	12	12	12	2	2	2	23	23	23	3	3	3
D	54.976 – 54.975 (2.1644 – 2.1644)	0	0	0	0	0	01	01	01	1	1	1	12	12	12	2	2	2	23	23	23	3	3	3	34
E	54.975 – 54.974 (2.1644 – 2.1643)	0	0	0	0	01	01	01	1	1	1	12	12	12	2	2	2	23	23	23	3	3	3	34	34
F	54.974 – 54.973 (2.1643 – 2.1643)	0	0	0	01	01	01	1	1	1	12	12	12	2	2	2	23	23	23	3	3	3	34	34	34
G	54.973 – 54.972 (2.1643 – 2.1642)	0	0	01	01	01	1	1	1	12	12	12	2	2	2	23	23	23	3	3	3	34	34	34	4
H	54.972 – 54.971 (2.1642 – 2.1642)	0	01	01	01	1	1	1	12	12	12	2	2	2	23	23	23	3	3	3	34	34	34	4	4
J	54.971 – 54.970 (2.1642 – 2.1642)	01	01	01	1	1	1	12	12	12	2	2	2	23	23	23	3	3	3	34	34	34	4	4	4
K	54.970 – 54.969 (2.1642 – 2.1641)	01	01	1	1	1	12	12	12	2	2	2	23	23	23	3	3	3	34	34	34	4	4	4	45
L	54.969 – 54.968 (2.1641 – 2.1641)	01	1	1	1	12	12	12	2	2	2	23	23	23	3	3	3	34	34	34	4	4	4	45	45
M	54.968 – 54.967 (2.1641 – 2.1641)	1	1	1	12	12	12	2	2	2	23	23	23	3	3	3	34	34	34	4	4	4	45	45	45
N	54.967 – 54.966 (2.1641 – 2.1640)	1	1	12	12	12	2	2	2	23	23	23	3	3	3	34	34	34	4	4	4	45	45	45	5
P	54.966 – 54.965 (2.1640 – 2.1640)	1	12	12	12	2	2	2	23	23	23	3	3	3	34	34	34	4	4	4	45	45	45	5	5
R	54.965 – 54.964 (2.1640 – 2.1639)	12	12	12	2	2	2	23	23	23	3	3	3	34	34	34	4	4	4	45	45	45	5	5	5
S	54.964 – 54.963 (2.1639 – 2.1639)	12	12	2	2	2	23	23	23	3	3	3	34	34	34	4	4	4	45	45	45	5	5	5	56
T	54.963 – 54.962 (2.1639 – 2.1639)	12	2	2	2	23	23	23	3	3	3	34	34	34	4	4	4	45	45	45	5	5	5	56	56
U	54.962 – 54.961 (2.1639 – 2.1638)	2	2	2	23	23	23	3	3	3	34	34	34	4	4	4	45	45	45	5	5	5	56	56	56
V	54.961 – 54.960 (2.1638 – 2.1638)	2	2	23	23	23	3	3	3	34	34	34	4	4	4	45	45	45	5	5	5	56	56	56	6
W	54.960 – 54.959 (2.1638 – 2.1637)	2	23	23	23	3	3	3	34	34	34	4	4	4	45	45	45	5	5	5	56	56	56	6	6
X	54.959 – 54.958 (2.1637 – 2.1637)	23	23	23	3	3	3	34	34	34	4	4	4	45	45	45	5	5	5	56	56	56	6	6	6
Y	54.958 – 54.957 (2.1637 – 2.1637)	23	23	3	3	3	34	34	34	4	4	4	45	45	45	5	5	5	56	56	56	6	6	6	67
4	54.957 – 54.956 (2.1637 – 2.1636)	23	3	3	3	34	34	34	4	4	4	45	45	45	5	5	5	56	56	56	6	6	6	67	67
7	54.956 – 54.955 (2.1636 – 2.1636)	3	3	3	34	34	34	4	4	4	45	45	45	5	5	5	56	56	56	6	6	6	67	67	67

Cylinder block main bearing hausing inner diameter — Mark

Inner diameter Unit: mm (in)

KBIA0150E

Main Bearing Grade Table (All Journals)

Unit: mm (in)

Grade number	Thickness	Identification color (UPR / LWR)	Remarks
0	1.973 - 1.976 (0.0777 - 0.0778)	Black	Grade and color are the same for upper and lower bearings.
1	1.976 - 1.979 (0.0778 - 0.0779)	Brown	
2	1.979 - 1.982 (0.0779- 0.0780)	Green	
3	1.982 - 1.985 (0.0780 - 0.0781)	Yellow	
4	1.985 - 1.988 (0.0781 - 0.0783)	Blue	
5	1.988 - 1.991 (0.0783 - 0.0784)	Pink	
6	1.991 - 1.994 (0.0784 - 0.0785)	Purple	
7	1.994 - 1.997 (0.0785 - 0.0786)	Orange	

01	UPR	1.973 - 1.976 (0.0777 - 0.0778)	Black / Brown	Grade and color are different for upper and lower bearings.
	LWR	1.976 - 1.979 (0.0778 - 0.0779)		
12	UPR	1.976 - 1.979 (0.0778 - 0.0779)	Brown / Green	
	LWR	1.979 - 1.982 (0.0779 - 0.0780)		
23	UPR	1.979 - 1.982 (0.0779 - 0.0780)	Green / Yellow	
	LWR	1.982 - 1.985 (0.0780 - 0.0781)		
34	UPR	1.982 - 1.985 (0.0780 - 0.0781)	Yellow / Blue	
	LWR	1.985 - 1.988 (0.0781 - 0.0783)		
45	UPR	1.985 - 1.988 (0.0781 - 0.0783)	Blue / Pink	
	LWR	1.988 - 1.991 (0.0783 - 0.0784)		
56	UPR	1.988 - 1.991 (0.0783 - 0.0784)	Pink / Purple	
	LWR	1.991 - 1.994 (0.0784 - 0.0785)		
67	UPR	1.991 - 1.994 (0.0784 - 0.0785)	Purple / Orange	
	LWR	1.994 - 1.997 (0.0785 - 0.0786)		

Use Undersize Bearing Usage Guide

- Use undersize (U.S.) bearing when oil clearance with standard size main bearing is not within specification.
- When using undersize (U.S.) bearing, measure the bearing inner diameter with the bearing installed and grind journal until oil clearance falls within specification.

Bearing Undersize Table

Unit: mm (in)

Size U.S.	Thickness
0.25 (0.0098)	2.106 - 2.114 (0.0829 - 0.0832)

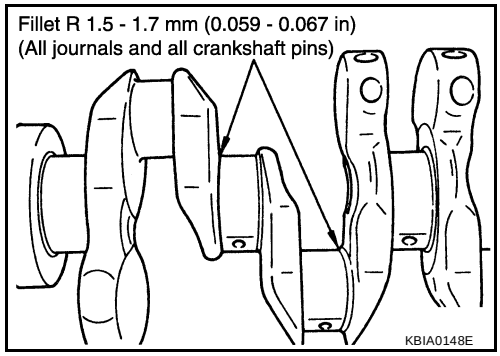

CAUTION:
Do not damage fillet R when grinding crankshaft journal in order to use an undersize bearing (all journals).

Inspection After Disassembly

EBS007PJ

CRANKSHAFT SIDE CLEARANCE

- Using a dial gauge, measure the clearance between the thrust bearings and the crankshaft arm when the crankshaft is moved fully forward or backward.

  Standard : 0.10 - 0.26 mm (0.0039 - 0.0102 in)
  Limit : 0.30 mm (0.0118 in)

- If the measured value exceeds the limit, replace the thrust bearings, and measure again. If it still exceeds the limit, replace the crankshaft.

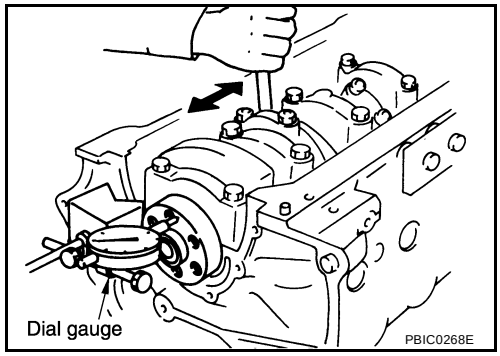

CONNECTING ROD SIDE CLEARANCE

- Measure side clearance between connecting rod and crankshaft arm with feeler gauge.

  Standard : 0.20 - 0.35 mm (0.0079 - 0.0138 in)

  Limit : 0.50 mm (0.0197 in)

- If the measured value exceeds the limit, replace the connecting rod bearings, and measure again. If it still exceeds the limit, replace the crankshaft also.

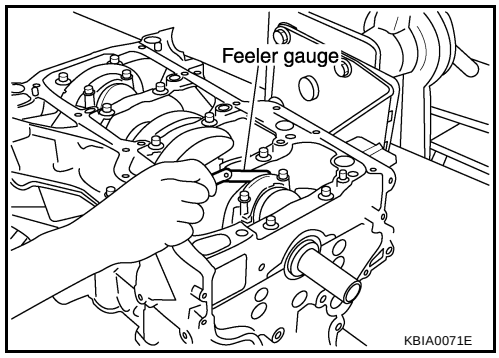

PISTON AND PISTON PIN CLEARANCE

Inner Diameter of Piston Pin

- Measure the inner diameter of piston pin bore with an inside micrometer.

  Standard : 19.993 - 20.005 mm (0.7871 - 0.7876 in)

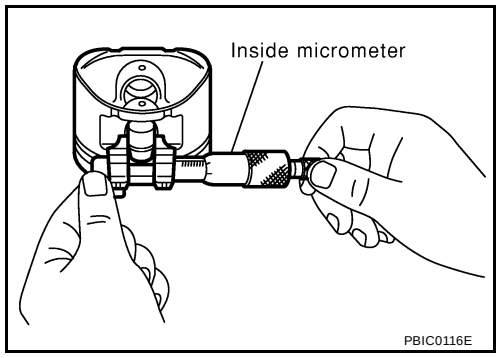

Outer Diameter of Piston Pin

- Measure outer diameter of piston pin with a micrometer.

  Standard : 19.989 - 20.001 mm (0.7870 - 0.7874 in)

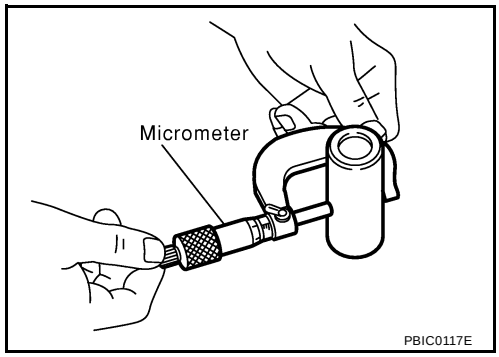

Piston and Piston Pin Clearance

(Piston pin clearance) = (Piston pin bore diameter) – (Outer diameter of piston pin)

Standard : 0.002 - 0.006 mm (0.0001 - 0.0002 in)

- If clearance exceeds specification, replace either or both of piston/piston pin assembly and connecting rod assembly with reference to specification of each parts.
- Refer to piston selection table to replace piston/piston pin assembly. Refer to EM-76, "HOW TO SELECT A PISTON" .

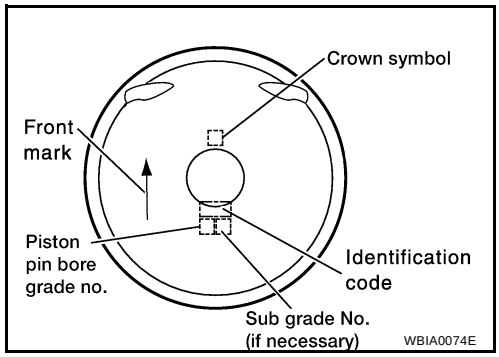

- Refer to connecting rod bearing selection table to replace connecting rod. Refer to EM-76, "HOW TO SELECT A CONNECTING ROD BEARING" .

  NOTE:
  The connecting rod small end grade and piston pin hole (piston pin) grade are provided only for the parts installed at the plant. For service parts, no grades can be selected. Only 0 grade is available.
- Refer to EM-84, "CONNECTING ROD BUSHING OIL CLEARANCE (SMALL END)" for the values for each grade at the plant.
- Regarding marks on piston head, Refer to EM-76, "HOW TO SELECT A PISTON" .

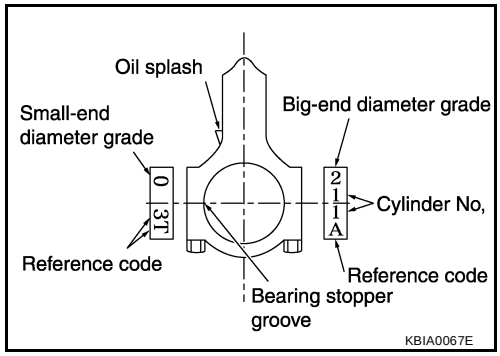

PISTON RING SIDE CLEARANCE

- Measure side clearance of piston ring and piston ring groove with feeler gauge.

  Standard

  Top ring : 0.045 - 0.080 mm (0.0018 - 0.0031 in)
  2nd ring : 0.030 - 0.070 mm (0.0012 - 0.0028 in)
  Oil ring : 0.065 - 0.135 mm (0.0026 - 0.0053 in)

  Limit

  Top ring : 0.11 mm (0.0043 in)
  2nd ring : 0.10 mm (0.0039 in)

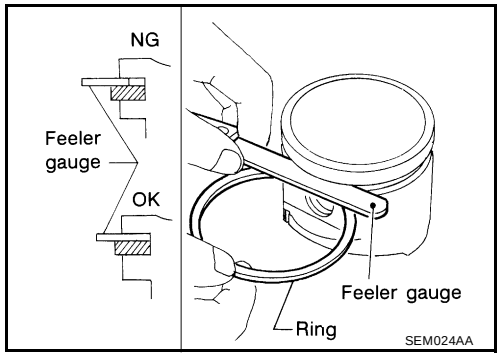

- If out of specification, replace piston and/or piston ring assembly.

PISTON RING END GAP

- Check if inner diameter of cylinder bore is within specification. Refer to EM-86, "PISTON TO CYLINDER BORE CLEARANCE" .
- Insert piston ring until middle of cylinder with piston, and measure gap.

  Standard

  Top ring : 0.21 - 0.31 mm (0.0083 - 0.0122 in)
  2nd ring : 0.32 - 0.47 mm (0.0126 - 0.0185 in)
  Oil ring : 0.20 - 0.60 mm (0.0079 - 0.0236 in)

  Limit

  Top ring : 0.54 mm (0.0213 in)
  2nd ring : 0.67 mm (0.0264 in)
  Oil ring : 0.95 mm (0.0374 in)

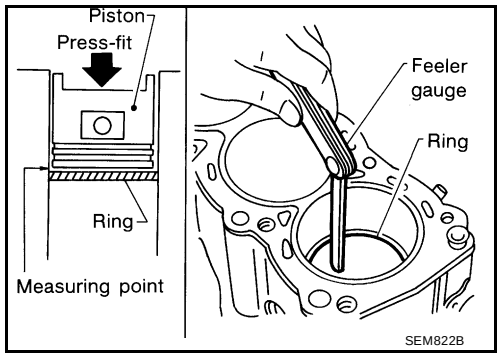

- If out of specification, replace piston ring. If gap still exceeds the limit even with a new ring, re-bore cylinder and use oversized piston and piston ring.

CONNECTING ROD BEND AND TORSION

- Check the connecting rod bend and torsion on the aligner.

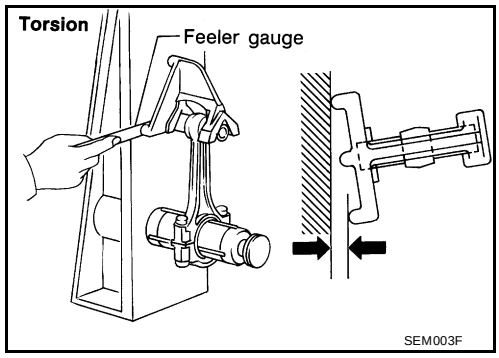

- If it exceeds the limit, replace connecting rod assembly.

Bend limit	**: 0.15 mm (0.0059 in) per 100 mm (3.94 in) length**
Torsion limit	**: 0.30 mm (0.0118 in) per 100 mm (3.94 in) length**

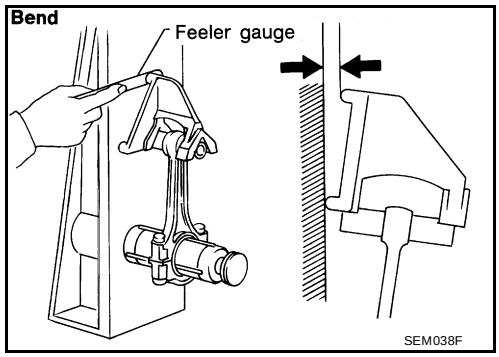

CONNECTING ROD BEARING (BIG END)

- Install the connecting rod cap without the connecting rod bearing installed. After tightening the connecting rod bolt to the specified torque, measure the connecting rod big end inner diameter using an inside micrometer.

Standard : 48.000 - 48.013 mm (1.8898 - 1.8903 in)

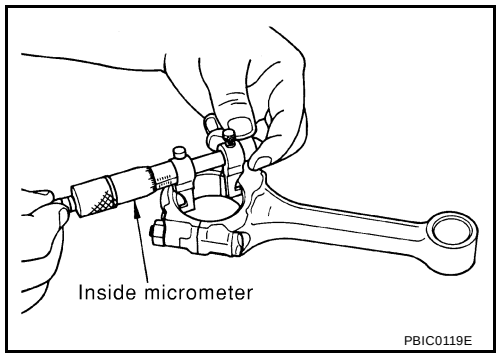

CONNECTING ROD BUSHING OIL CLEARANCE (SMALL END)

Inner Diameter of Connecting Rod (Small End)

- Measure inner diameter of bushing.

Standard : 20.000 - 20.012 mm (0.7874 - 0.7879 in)

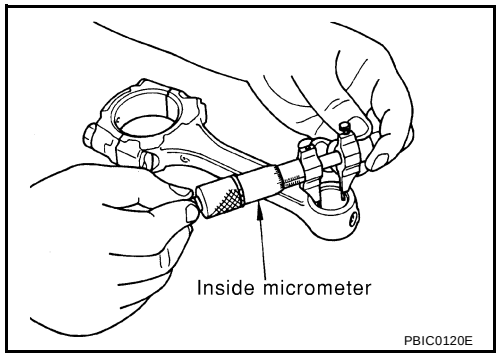

Outer Diameter of Piston Pin

- Measure outer diameter of piston pin.

Standard : 19.989 - 20.001 mm (0.7870 - 0.7874 in)

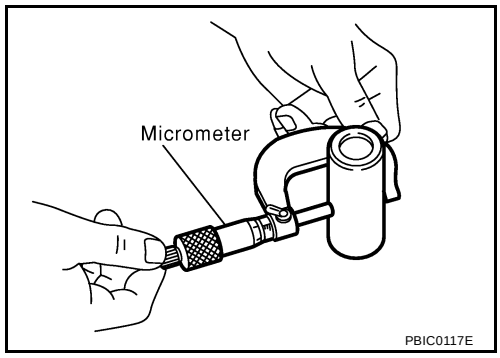

Connecting Rod Bushing Oil Clearance (Small End)

(Connecting rod small end oil clearance) = (Inner diameter of connecting rod small end) – (Outer diameter of piston pin)

Standard : 0.005 - 0.017 mm (0.0002 - 0.0007 in)

- If the measured value exceeds the standard, replace the connecting rod assembly and/or piston and piston pin assembly.
- If replacing the piston and piston pin assembly, refer to the "Piston Selection Table" to select the piston corresponding to the applicable bore grade of the cylinder block to be used. Refer to EM-76, "HOW TO SELECT A PISTON" .

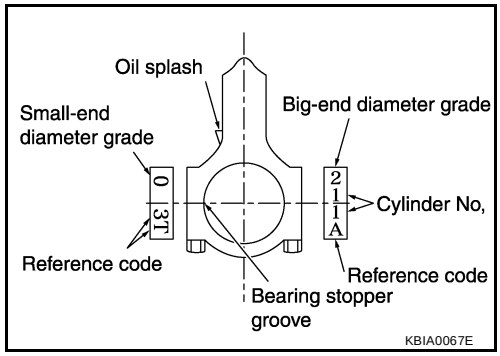

Factory Installed Parts Grading:

NOTE:
Service parts apply only to grade 0.

Unit: mm (in)

Grade	0	1
Connecting rod small end inner diameter	20.000 - 20.006 (0.7874 - 0.7876)	20.006 - 20.012 (0.7876 - 0.7879)
Piston pin outer diameter	19.989 - 19.995 (0.7870 - 0.7872)	19.995 - 20. 001 (0.7872 - 0.7874)
Piston pin bore diameter	19.993 - 19.999 (0.7871- 0.7874)	19.999 - 20.005 (0.7874 - 0.7876)

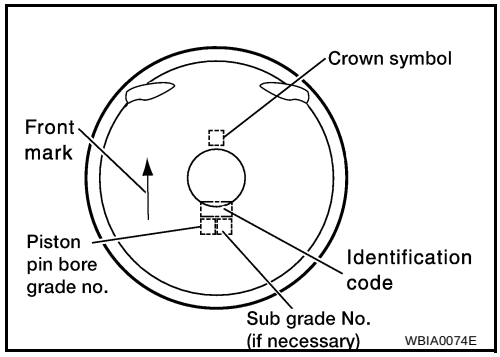

CYLINDER BLOCK DISTORTION

- Using a scraper, remove gasket on the cylinder block surface, and also remove oil, scale, carbon, or other contamination.

  CAUTION:
  Be careful not to allow gasket debris to enter the oil or coolant passages.
- Measure the distortion on the block upper face at some different points in 6 directions.
- If out of the distortion limit, replace the cylinder block.

Limit : 0.1 mm (0.004 in)

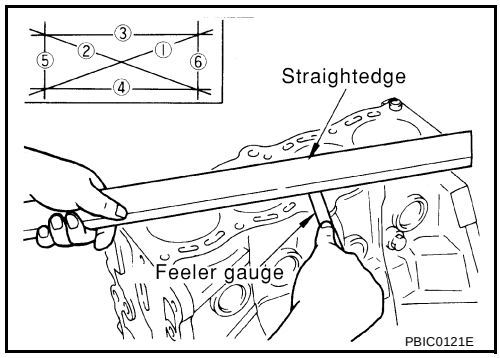

INNER DIAMETER OF MAIN BEARING HOUSING

- Install the main bearing caps with the main bearings removed and tighten the mounting bolts to the specified torque. Refer to EM-70, "ASSEMBLY" .
- Using a bore gauge, measure the inner diameter of the main bearing housing.
- If out of the standard, replace the cylinder block and lower cylinder block assembly.

  NOTE:
  These components cannot be replaced as a single unit because they were processed together.

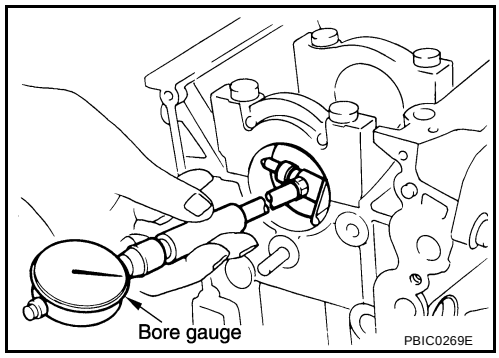

Standard : 58.944 - 58.967 mm (2.3206 - 2.3215 in)

PISTON TO CYLINDER BORE CLEARANCE

Inner Diameter of Cylinder Bore

- Using a bore gauge, measure cylinder bore for wear, out-of-round and taper at 6 different points on each cylinder. (X and Y directions at A, B and C). The Y axis is in the longitudinal direction of the engine.

  NOTE:
  When determining cylinder bore grade, measure cylinder bore at B position.

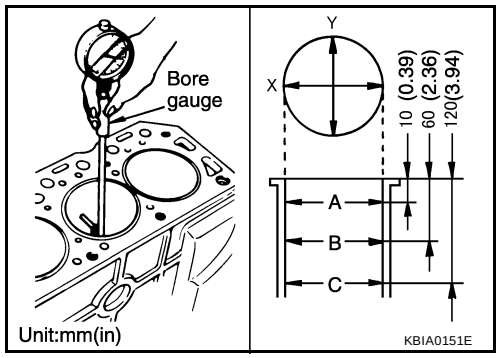

Standard inner diameter:	**89.000 - 89.030 mm (3.5039 - 3.5051 in)**
Wear limit:	**0.2 mm (0.008 in)**
Out-of-round (difference between X – Y):	**0.015 mm (0.0006 in)**
Taper limit (difference between C – A):	**0.01 mm (0.0004 in)**

- If the measured value rebore exceeds the limit, or if there are scratches and/or seizure on the cylinder inner wall, hone the inner wall.
- An oversize piston is provided. When using an oversize piston, rebore the cylinder so that the clearance of the piston cylinder satisfies the standard.

Over size (OS) : 0.2 mm (0.008 in)

Outer Diameter of Piston

- Measure piston skirt diameter.

Standard : 88.980 - 89.010 mm (3.5031 - 3.5043 in)

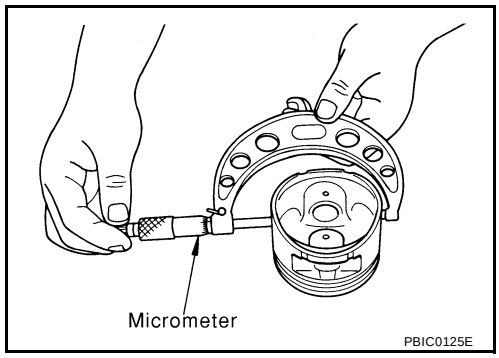

- Measure point (distance from the top): 42 mm (1.65 in)

Piston to Cylinder Bore Clearance

- Calculate by outer diameter of piston skirt and inner diameter of cylinder (direction X, position B).

(Clearance) = (Inner diameter of cylinder) – (Outer diameter of piston skirt).

Standard : 0.010 - 0.030 mm (0.0004 - 0.0012 in)
Limit : 0.08 mm (0.0031 in)

- If it exceeds the limit, replace piston/piston pin assembly.

Reboring Cylinder Bore

1. Cylinder bore size is determined by adding piston-to-bore clearance to piston diameter “A”.

   Rebored size calculation: D = A + B - C
   D : Bored diameter
   A : Piston diameter as measured
   B : Piston-to-bore clearance (standard value)
   C : Honing allowance 0.02 mm (0.0008 in)

2. Install main bearing caps, and tighten to the specified torque. Otherwise, cylinder bores may be distorted in final assembly.
3. Cut cylinder bores.
   - When any cylinder needs boring, all other cylinders must also be bored.
   - Do not cut too much out of cylinder bore at a time. Cut only 0.05 mm (0.0020 in) or so in diameter at a time.
4. Hone cylinders to obtain specified piston-to-bore clearance.
5. Measure finished cylinder bore for out-of-round and taper.
   - Measurement should be done after cylinder bore cools down.

OUTER DIAMETER OF CRANKSHAFT JOURNAL

Measure outer diameter of crankshaft journals.

Standard : 54.955 - 54.979 mm (2.1636 - 2.1645 in)

OUTER DIAMETER OF CRANKSHAFT PIN

Measure outer diameter of crankshaft pin.

Standard : 44.956 - 44.974 mm (1.7699 - 1.7706 in)

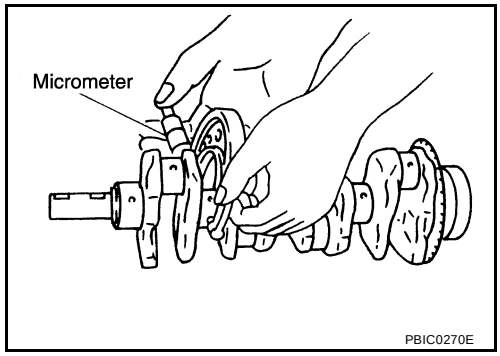

OUT-OF-ROUND AND TAPER OF CRANKSHAFT

- Using a micrometer, measure the dimensions at four different points shown in the figure on each journal and pin.
- Out-of-round is indicated by the difference in dimensions between (X —Y) at A and B.
- Taper is indicated by the difference in dimensions between (A – B) at X and Y.

Limit
Out-of-round (X - Y) : 0.005 mm (0.0002 in)
Taper (A - B) : 0.005 mm (0.0002 in)

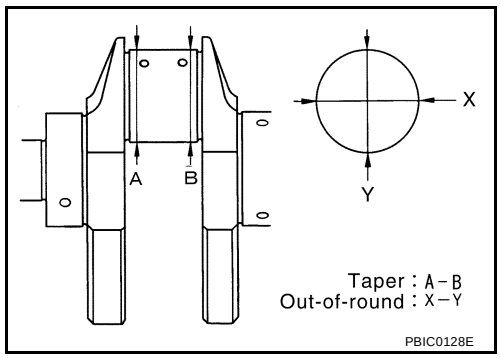

CRANKSHAFT RUNOUT

- Place a V-block on a precise flat table to support the journals on both ends of the crankshaft.
- Place a dial gauge straight up on the No. 3 journal.
- While rotating the crankshaft, read the movement of the pointer on the dial gauge, the total indicator reading.

Limit : 0.05 mm (0.002 in)

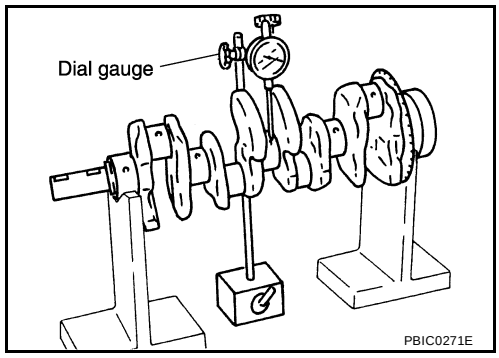

OIL CLEARANCE OF CONNECTING ROD BEARING

Method of Measurement

- Install the connecting rod bearings to the connecting rod and the cap, and tighten the connecting rod bolts to the specified torque. Using a inside micrometer measure the inner diameter of connecting rod bearing.
  (Oil clearance) = (Inner diameter of connecting rod bearing) – (Outer diameter of crankshaft pin)

Standard : 0.028 - 0.045 mm (0.0011 - 0.0018 in)
Limit : 0.10 mm (0.0039 in)

- If clearance cannot be adjusted within the standard, grind crankshaft pin and use undersized bearing. Refer to EM-76, "HOW TO SELECT A CONNECTING ROD BEARING" .

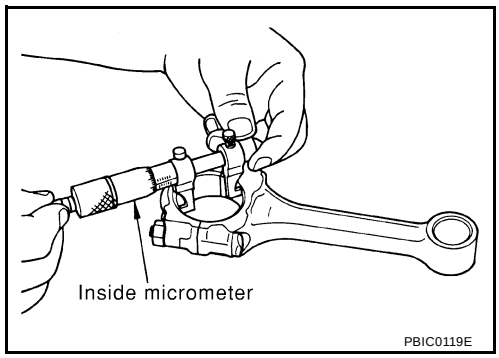

Method of Using Plastigage

- Remove oil and dust on the crankshaft pin and the surfaces of each bearing completely.
- Cut the Plastigage slightly shorter than the bearing width, and place it in crankshaft axial direction, avoiding oil holes.
- Install the connecting rod bearings to the connecting rod cap, and tighten the connecting rod bolts to the specified torque.

  CAUTION:
  Never rotate the crankshaft.
- Remove the connecting rod cap and bearings, and using the scale on the Plastigage bag, measure the Plastigage width.

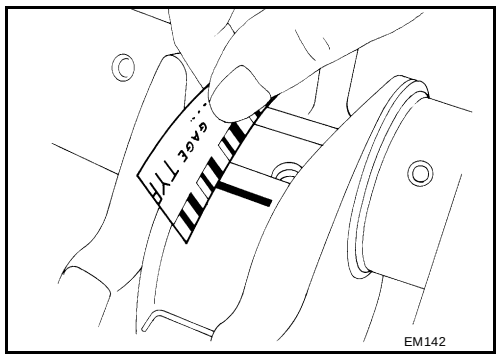

NOTE:
The procedure when the measured value exceeds the limit is same as that described in the method by calculation.

OIL CLEARANCE OF MAIN BEARING

Method of Measurement

- Install the main bearings to the cylinder block and bearing cap. Measure the main bearing inner diameter with the bearing cap bolt tightened to the specified torque.
  (Oil clearance) = (Inner diameter of main bearing) – (Outer diameter of crankshaft journal)

Standard
No. 1, 3, and 5 journals : 0.012 - 0.022 mm (0.0005 - 0.0009 in)
No. 2 and 4 journals : 0.018 - 0.028 mm (0.0007 - 0.0011 in)
Limit : 0.1 mm (0.004 in)

- If the measured value exceeds the limit, select main bearings referring to the main bearing inner diameter and crankshaft journal outer diameter, so that the oil clearance satisfies the standard. Refer to EM-78, "HOW TO SELECT A MAIN BEARING" .

Method of Using Plastigage

- Remove oil and dust on the crankshaft journal and the surfaces of each bearing completely.
- Cut the Plastigage slightly shorter than the bearing width, and place it in crankshaft axial direction, avoiding oil holes.
- Tighten the main bearing bolts to the specified torque.

  CAUTION:
  Never rotate the crankshaft.
- Remove the bearing cap and bearings, and using the scale on the plastigage bag, measure the plastigage width.

  NOTE:
  The procedure when the measured value exceeds the limit is same as that described in the "Method by Calculation".

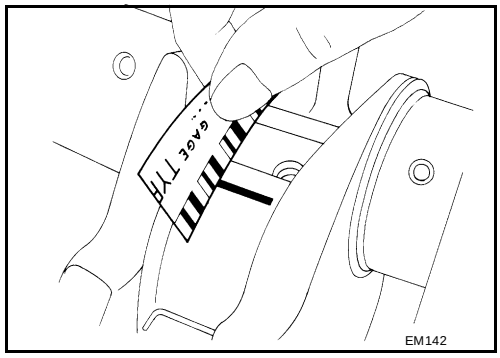

CRUSH HEIGHT OF MAIN BEARING

- When the bearing cap is removed after being tightened to the specified torque with main bearings installed, the tip end of bearing must protrude.

  Standard : There must be crush height.
- If the standard is not met, replace main bearings.

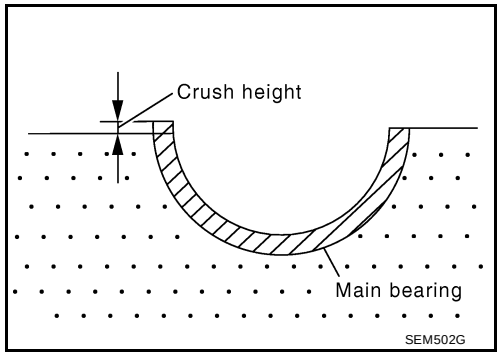

OUTER DIAMETER OF LOWER CYLINDER BLOCK MOUNTING BOLT

- Perform only with M10 (0.39 in) bolts.
- Measure outer diameters (d1, d2) at two positions as shown.
- Measure d2 at a point within block A.
- When the value of d1- d2 exceeds the limit (a large difference in dimensions), replace the bolt with a new one.

  Limit : 0.13 mm (0.0051 in) or more

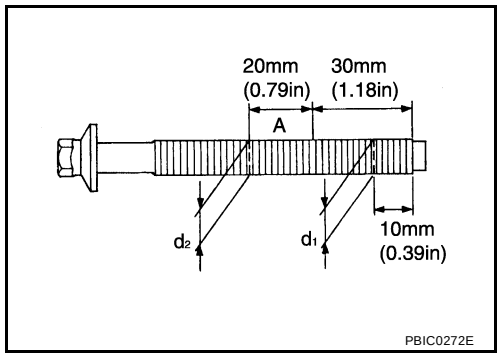

OUTER DIAMETER OF CONNECTING ROD BOLT

- Measure outer diameter (d) at position shown in the figure.
- When “d” exceeds the limit (when it becomes thinner), replace the bolt with a new one.

  Limit : 7.75 mm (0.3051 in) or less

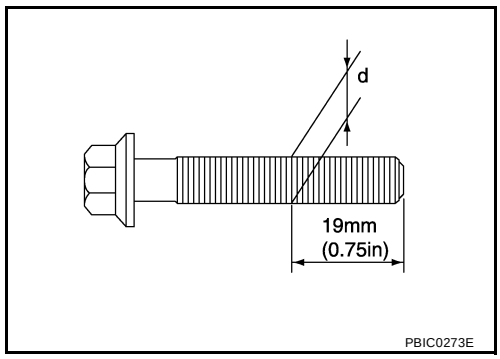

MOVEMENT AMOUNT OF FLYWHEEL (M/T MODEL)

NOTE:

- Inspection for double mass flywheel only.
- Do not disassemble double mass flywheel.

Flywheel Deflection

- Measure deflection of flywheel contact surface to the clutch with a dial gauge.
- Measure deflection at 210 mm (8.27 in) dia.

Standard : 0.45 mm (0.0177 in) or less
Limit : 1.3 mm (0.051 in) or less

- When measured value exceeds the limit, replace the flywheel with a new one.

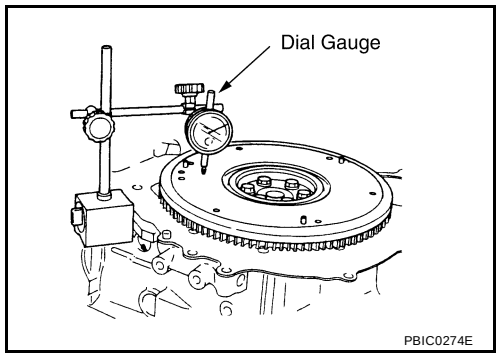

Movement Amount in Radial (Rotation) Direction

1. Install a bolt to clutch cover mounting hole, and place a torque wrench on the extended line of the flywheel center line.
   - Tighten bolt to keep it from loosening at a force of 9.8 N·m (1 kg-m, 87 in-lb).
2. Put a mating mark on circumferences of the two flywheel masses without applying any load (measurement standard points).
3. Apply a force of 9.8 N·m (1 kg-m, 87 in-lb) in each direction, and mark the movement amount on the mass on the transmission side.
4. Measure the dimensions of movement amounts "A" and "B" on the circumference of the flywheel on the transmission side.

   Standard : 28.3 mm (1.114 in) or less

   - When the measured value is outside the standard, replace the flywheel.

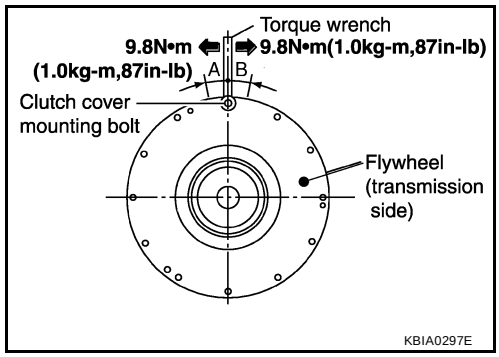

SERVICE DATA AND SPECIFICATIONS (SDS)

PFP:00030

Standard and Limit

EBS007PK

GENERAL SPECIFICATIONS

Cylinder arrangement		4 in-line
Displacement cm^3 (cu in)		2,488 (151.82)
Bore and stroke mm (in)		89.0x 100 (3.50 - 3.94)
Valve arrangement		DOHC
Firing order		1-3-4-2
Number of piston rings	Compression	2
	Oil	1
Compression ratio		9.5
Compression pressure kPa (kg/cm^2 , psi) / 250 rpm	Standard	1,250 (12.8, 181.3)
	Minimum	1,060 (10.8, 153.7)
	Differential limit between cylinders	100 (1.0, 14)
Valve timing	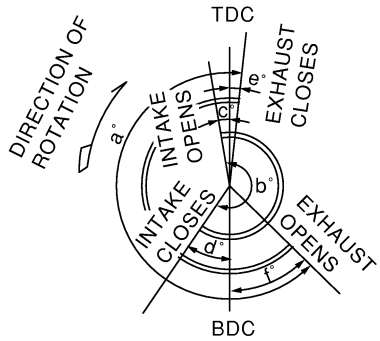	

Unit: degree

a	b	c	d	e	f
224	244	0	64	3	41

INTAKE MANIFOLD AND EXHAUST MANIFOLD

Unit: mm (in)

		Limit
Surface distortion	Intake manifold collector	0.1 (0.004)
	Intake manifold	0.1 (0.004)
	Exhaust manifold	0.3 (0.012)

DRIVE BELTS

Tension of drive belts	Auto adjustment by auto tensioner

CYLINDER HEAD

Unit: mm (in)

	Limit
Head surface distortion	0.1 (0.004)

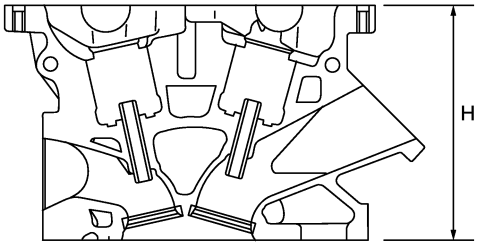

Nominal cylinder head height:
H = 129.4 mm (5.09 in)

PBIC0283E

VALVE

Valve Dimensions

Unit: mm (in)

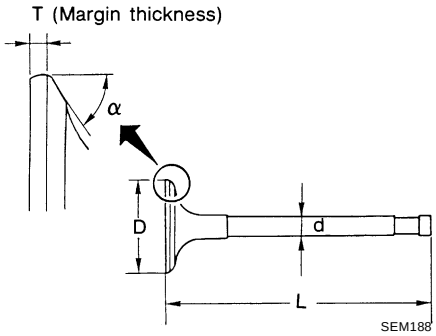

Valve head diameter “D”	Intake	35.5 - 35.8 (1.398 - 1.409)
	Exhaust	30.5 - 30.8 (1.201 - 1.213)
Valve length “L”	Intake	97.16 (3.8252)
	Exhaust	98.82 (3.8905)
Valve stem diameter “d”	Intake	5.965 - 5.980 (0.2348 - 0.2354)
	Exhaust	5.955 - 5.970 (0.2344 - 0.2350)
Valve seat angle “α”	Intake	45°15′ - 45°45′
	Exhaust	
Valve margin “T”	Intake	1.1 (0.043)
	Exhaust	1.3 (0.051)

Valve Clearance

Unit: mm (in)

	Cold* (reference data)	Hot
Intake	0.24 - 0.32 (0.009 - 0.013)	0.32 - 0.40 (0.013 - 0.016)
Exhaust	0.26 - 0.34 (0.010 - 0.013)	0.33 - 0.41 (0.013 - 0.016)

*: Approximately 20°C (68 °F)

Available Valve Lifter

Thickness mm (in)	Identification mark
6.96 (0.2740)	696
6.98 (0.2748)	698
7.00 (0.2756)	700

Thickness mm (in)	Identification mark
7.02 (0.2764)	702
7.04 (0.2772)	704
7.06 (0.2780)	706
7.08 (0.2787)	708
7.10 (02795)	710
7.12 (0.2803)	712
7.14 (0.2811)	714
7.16 (0.2819)	716
7.18 (0.2827)	718
7.20 (0.2835)	720
7.22 (0.2843)	722
7.24(0.2850)	724
7.26 (0.2858)	726
7.28 (0.2866)	728
7.30(0.2874)	730
7.32 (0.2882)	732
7.34 (0.2890)	734
7.36 (0.2898)	736
7.38 (0.2906)	738
7.40 (0.2913)	740
7.42 (0.2921)	742
744 (0.2929)	744
7.46 (0.2937)	746

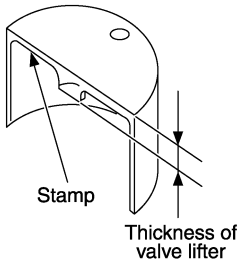

KBIA0119E

Valve Spring

Free height standard mm (in)	Intake	44.84 - 45.34 (1.7654 - 1.7850)
	Exhaust	45.28 - 45.78 (1.7827 - 1.8024)
Pressure standard N (kg, lb) at height mm (in)	Intake and Exhaust	151 - 175 (15.4 - 17.8, 34 - 39) at 35.30 (1.390)
Out-of-square mm (in)		1.9 (0.0748)

Valve Lifter

Unit: mm (in)

	Standard
Valve lifter outer diameter	33.965 - 33.980 (1.3372 - 1.3378)
Lifter guide inner diameter	34.000 - 34.021 (1.3386 - 1.3394)
Clearance between lifter and lifter guide	0.020 - 0.056 (0.0008 - 0.0022)

Valve Guide

Unit: mm (in)

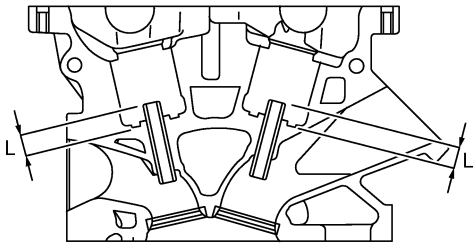

PBIC0184E

		Standard	Service
Valve guide	Outer diameter	10.023 - 10.034 (0.3946 - 0.3950)	10.223 - 10.234 (0.4025 - 0.4029)
	Inner diameter (Finished size)	6.000 - 6.018 (0.2362 - 0.2369)	
Cylinder head valve guide hole diameter		9.975 - 9.996 (0.3927 - 0.3935)	10.175 - 10.196 (0.4006 - 0.4014)
Interference fit of valve guide		0.027 - 0.059 (0.0011 - 0.0023)	
		Standard	
Stem to guide clearance	Intake	0.020 - 0.053 (0.0008 - 0.0021)	
	Exhaust	0.030 - 0.063 (0.0012 - 0.0025)	
Projection length “L”	Intake	10.1 - 10.3 (0.398 - 0.406)	
	Exhaust	10.0 - 10.4 (0.394 - 0.409)	

Valve Seat

Unit: mm (in)

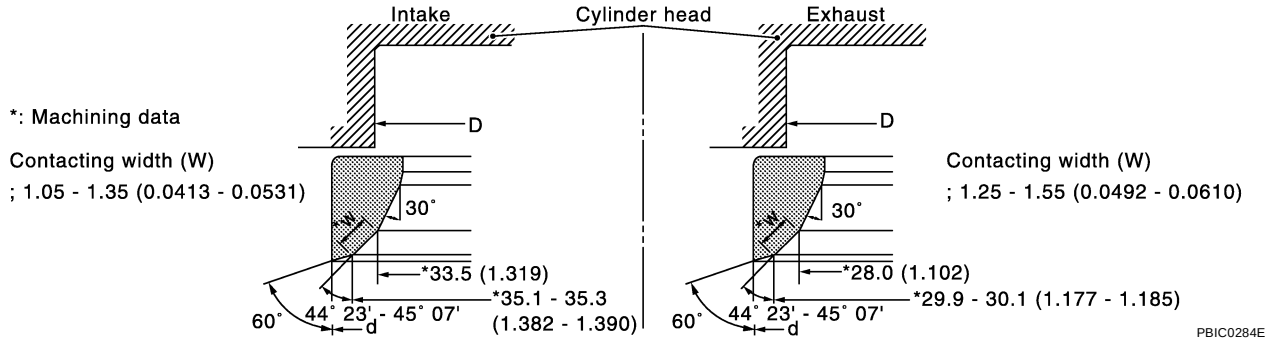

PBIC0284E

		Standard	Service
Cylinder head seat recess diameter (D)	Intake	36.500 - 36.516 (1.4370 - 1.4376)	37.000 - 37.016 (1.4567 - 1.4573)
	Exhaust	31.500 - 31.516 (1.2402 - 1.2408)	32.000 - 32.016 (1.2598 - 1.2605)
Valve seat interference fit	Intake	0.081 - 0.113 (0.0032 - 0.0044)	
	Exhaust	0.084 - 0.116 (0.0033 - 0.0046)	
Valve seat outer diameter (d)	Intake	36.597 - 36.613 (1.4408 - 1.4415)	37.097 - 37.113 (1.4605 - 1.4611)
	Exhaust	31.600 - 31.616 (1.2441 - 1.2447)	32.100 - 32.116 (1.2638 - 1.2644)

CAMSHAFT AND CAMSHAFT BEARING

Unit: mm (in)

		Standard
Camshaft runout [TIR*]		Less than 0.04 (0.0016)

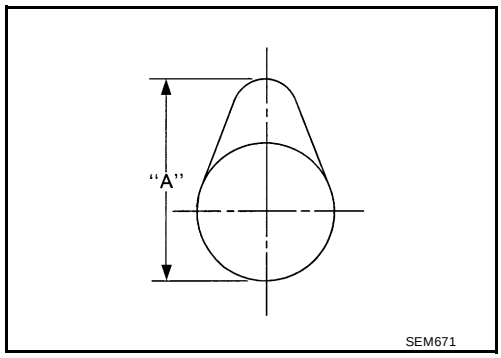

Cam height "A"	Intake	45.665 - 45.855 (1.7978 - 1.8053)
	Exhaust	43.975 - 44.165 (1.7313 - 1.7388)
Outer diameter of camshaft journal		No. 1 27.935 - 27.955 (1.0998 - 1.1006) No. 2, 3, 4, 5 23.435 - 23.455 (0.9226 - 0.9234)
Inner diameter of camshaft bracket		No.1 28.000 - 28.021 (1.1024 - 1.1032) No.2, 3, 4, 5 23.500 - 23.521 (0.9252 - 0.9260)
Camshaft journal clearance		0.045 - 0.086 (0.0018 - 0.0034)
Camshaft end play		0.115 - 0.188 (0.0045 - 0.0074)
Camshaft sprocket runout [TIR*]		Less than 0.15 (0.0059)

*: Total indicator reading

CYLINDER BLOCK

Unit: mm (in)

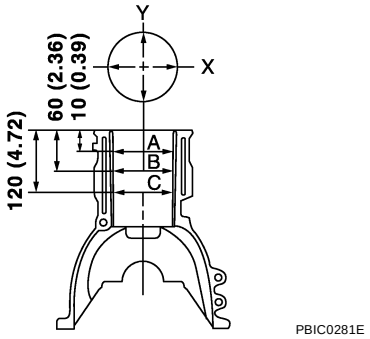

Surface flatness	Limit			0.1 (0.004)
Cylinder bore	Inner diameter	Standard	Grade No. 1	89.000 - 89.010 (3.5039 - 3.5043)
			Grade No. 2	89.010 - 89.020 (3.5043 - 3.5047)
			Grade No. 3	89.020 - 89.030 (3.5047 - 3.5051)
		Wear limit		0.2 (0.008)
Out-of-round (X – Y)				Less than 0.015 (0.0006)
Taper (C – A)				Less than 0.01 (0.0004)

Main journal inner diameter grade (Without bearing)	Grade No. A	58.944 - 58.945 (2.3206 - 2.3207)
	Grade No. B	58.945 - 58.946 (2.3207 - 2.3207)
	Grade No. C	58.946 - 58.947 (2.3207 - 2.3207)
	Grade No. D	58.947 - 58.948 (2.3207 - 2.3208)
	Grade No. E	58.948 - 58.949 (2.3208 - 2.3208)
	Grade No. F	58.949 - 58.950 (2.3208 - 2.3209)
	Grade No. G	58.950 - 58.951 (2.3209 - 2.3209)
	Grade No. H	58.951 - 58.952 (2.3209 - 2.3209)
	Grade No. J	58.952 - 58.953 (2.3209 - 2.3210)
	Grade No. K	58.953 - 58.954 (2.3210 - 2.3210)
	Grade No. L	58.954 - 58.955 (2.3210 - 2.3211)
	Grade No. M	58.955 - 58.956 (2.3211 - 2.3211)
	Grade No. N	58.956 - 58.957 (2.3211 - 2.3211)
	Grade No. P	58.957 - 58.958 (2.3211 - 2.3212)
	Grade No. R	58.958 - 58.959 (2.3212 - 2.3212)
	Grade No. S	58.959 - 58.960 (2.3212 - 2.3213)
	Grade No. T	58.960 - 58.961 (2.3213 - 2.3213)
	Grade No. U	58.961 - 58.962 (2.3213 - 2.3213)
	Grade No. V	58.962 - 58.963 (2.3213 - 2.3214)
	Grade No. W	58.963 - 58.964 (2.3214 - 2.3214)
	Grade No. X	58.964 - 58.965 (2.3214 - 2.3215)
	Grade No. Y	58.965 - 58.966 (2.3215 - 2.3215)
	Grade No. 4	58.966 - 58.967 (2.3215 - 2.3215)
	Grade No. 7	58.967 - 58.968 (2.3215 - 2.3216)
Difference in inner diameter between cylinders	Standard	Less than 0.03 (0.0012)

PISTON, PISTON RING, AND PISTON PIN

Available Piston

Unit: mm (in)

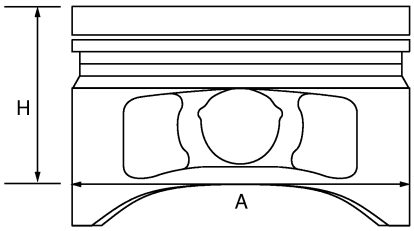

PBIC0188E

Piston skirt diameter “A”	Standard	Grade No. 1	88.980 - 88.990 (3.5031 - 3.5035)
		Grade No. 2	88.990 - 89.000 (3.5035 - 3.5039)
		Grade No. 3	89.000 - 89.010 (3.5039 - 3.5043)
		0.20 (0.0079) oversize (service)	89.180 - 89.210 (3.5110 - 3.5122)
“H” dimension			42 (1.65)
Piston pin bore diameter		Grade No. 0	19.993 - 19.999 (0.7871 - 0.7874)
		Grade No. 1	19.999 - 20.005 (0.7874 - 0.7876)
Piston clearance to cylinder block		Standard	0.010 - 0.030 (0.0004 - 0.0012)
		Limit	0.08 (0.0031)

Piston Ring

Unit: mm (in)

		Standard	Limit
Side clearance	Top	0.045 - 0.080 (0.0018 - 0.0031)	0.11 (0.0043)
	2nd	0.030 - 0.070 (0.0012 - 0.0028)	0.10 (0.004)
	Oil ring	0.065 - 0.135 (0.0026 - 0.0053)	—
End gap	Top	0.21- 0.31 (0.0083 - 0.0122)	0.54 (0.0213)
	2nd	0.32 - 0.47 (0.0126 - 0.0185)	0.67 (0.0264)
	Oil (rail ring)	0.20 - 0.60 (0.0079 - 0.0236)	0.95 (0.0374)

Piston Pin

Unit: mm (in)

Piston pin outer diameter	Grade No.0	19.989 - 19.995 (0.7870 - 0.7872)
	Grade No.1	19.995 - 20.001 (0.7872 - 0.7874)
Interference fit of piston pin to piston		0.002 - 0.006 (0.0001 - 0.0002)
Piston pin to connecting rod bushing clearance	Standard	0.005 - 0.017 (0.0002 - 0.0007)

CONNECTING ROD

Unit: mm (in)

Center distance		143.00 - 143.10 (5.63 - 5.63)
Bend [per 100 (3.94)]	Limit	0.15 (0.0059)
Torsion [per 100 (3.94)]	Limit	0.30 (0.0118)
Connecting rod small end inner diameter		22.000 - 22.012 (0.7874 - 0.7879)
Connecting rod small end inner diameter*	Grade No. 0	20.000 - 20.006 (0.7874 - 0.7876)
	Grade No. 1	20.006 - 20.012 (0.7876 - 0.7879)
Connecting rod big end inner diameter		48.000 - 48.013 (1.8898 - 1.8903)
Side clearance	Standard	0.20 - 0.35 (0.0079 - 0.0138)
	Limit	0.50 (0.0197)
Connecting rod bearing housing	Grade No. 0	48.000 - 48.001 (1.8898 - 1.8898)
	Grade No. 1	48.001 - 48.002 (1.8898 - 1.8898)
	Grade No. 2	48.002 - 48.003 (1.8898 - 1.8899)
	Grade No. 3	48.003 - 48.004 (1.8899 - 1.8899)
	Grade No. 4	48.004 - 48.005 (1.8899 - 1.8899)
	Grade No. 5	48.005 - 48.006 (1.8899 - 1.8900)
	Grade No. 6	48.006 - 48.007 (1.8900 - 1.8900)
	Grade No. 7	48.007 - 48.008 (1.8900 - 1.8901)
	Grade No. 8	48.008 - 48.009 (1.8901 - 1.8901)
	Grade No. 9	48.009 - 48.010 (1.8901 - 1.8902)
	Grade No. A	48.010 - 48.011 (1.8902 - 1.8902)
	Grade No. B	48.011 - 48.012 (1.8902 - 1.8902)
	Grade No. C	48.012 - 48.013 (1.8902 - 1.8903)

*: After installing in connecting rod

CRANKSHAFT

Unit: mm (in)

Pin journal dia. “DP”	Grade No. A	44.974 - 44.973 (1.7706 - 1.7706)
	Grade No. B	44.973 - 44.972 (1.7706 - 1.7705)
	Grade No. C	44.972 - 44.971 (1.7705 - 1.7705)
	Grade No. D	44.971 - 44.970 (1.7705 - 1.7705)
	Grade No. E	44.970 - 44.969 (1.7705 - 1.7704)
	Grade No. F	44.969 - 44.968 (1.7704 - 1.7704)
	Grade No. G	44.968 - 44.967 (1.7704 - 1.7704)
	Grade No. H	44.967 - 44.966 (1.7704 - 1.7703)
	Grade No. J	44.966 - 44.965 (1.7703 - 1.7703)
	Grade No. K	44.965 - 44.964 (1.7703 - 1.7702)
	Grade No. L	44.964 - 44.963 (1.7702 - 1.7702)
	Grade No. M	44.963 - 44.962 (1.7702 - 1.7702)
	Grade No. N	44.962 - 44.961 (1.7702 - 1.7701)
	Grade No. P	44.961 - 44.960 (1.7701 - 1.7701)
	Grade No. R	44.960 - 44.959 (1.7701 - 1.7700)
	Grade No. S	44.959 - 44.958 (1.7700 - 1.7700)
	Grade No. T	44.958 - 44.957 (1.7700 - 1.7700)
	Grade No. U	44.957 - 44.956 (1.7700 - 1.7699)
Main journal dia. “Dm” grade	Grade No. A	54.979 - 54.978 (2.1645 - 2.1645)
	Grade No. B	54.978 - 54.977 (2.1645 - 2.1644)
	Grade No. C	54.977 - 54.976 (2.1644 - 2.1644)
	Grade No. D	54.976 - 54.975 (2.1644 - 2.1644)
	Grade No. E	54.975 - 54.974 (2.1644 - 2.1643)
	Grade No. F	54.974 - 54.973 (2.1643 - 2.1643)
	Grade No. G	54.973 - 54.972 (2.1643 - 2.1642)
	Grade No. H	54.972 - 54.971 (2.1642 - 2.1642)
	Grade No. J	54.971 - 54.970 (2.1642 - 2.1642)
	Grade No. K	54.970 - 54.969 (2.1642 - 2.1641)
	Grade No. L	54.969 - 54.968 (2.1641 - 2.1641)
	Grade No. M	54.968 - 54.967 (2.1641 - 2.1641)
	Grade No. N	54.967 - 54.966 (2.1641 - 2.1640)
	Grade No. P	54.966 - 54.965 (2.1640 - 2.1640)
	Grade No. R	54.965 - 54.964 (2.1640 - 2.1639)
	Grade No. S	54.964 - 54.963 (2.1639 - 2.1639)
	Grade No. T	54.963 - 54.962 (2.1639 - 2.1639)
	Grade No. U	54.962 - 54.961 (2.1639 - 2.1638)
	Grade No. V	54.961 - 54.960 (2.1638 - 2.1638)
	Grade No. W	54.960 - 54.959 (2.1638 - 2.1637)
	Grade No. X	54.959 - 54.958 (2.1637 - 2.1637)
	Grade No. Y	54.958 - 54.957 (2.1637 - 2.1637)
	Grade No. 4	54.957 - 54.956 (2.1637 - 2.1636)
	Grade No. 7	54.956 - 54.955 (2.1636 - 2.1636)
Center distance “r”		49.60 - 50.04 (1.9528 - 1.9701)
Out-of-round (X – Y)	Standard	Less than 0.005 (0.0002)
Taper (A – B)	Standard	Less than 0.005 (0.0002)
Runout [TIR*]	Limit	Less than 0.05 (0.002)
Free end play	Standard	0.10 - 0.26 (0.0039 - 0.0102)
	Limit	0.30 (0.0118)

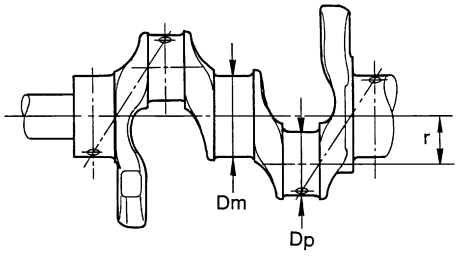

SEM645

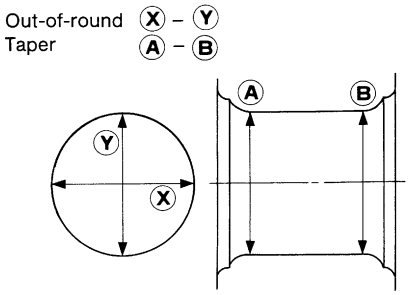

SEM715

*: Total indicator reading

MAIN BEARING

Unit: mm (in)

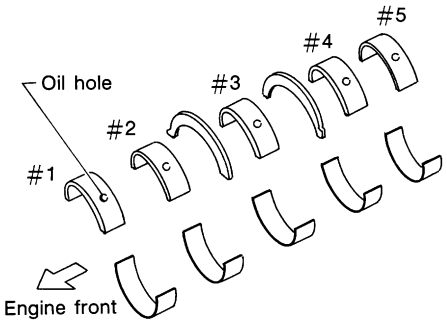

SEM685D

Grade number		Thickness	Identification color (UPR / LWR)	Remarks
0		1.973 - 1.976 (0.0777 - 0.0778)	Black	Grade and color are the same for upper and lower bearings.
1		1.976 - 1.979 (0.0778 - 0.0779)	Red	
2		1.979 - 1.982 (0.0779 - 0.0780)	Green	
3		1.982 - 1.985 (0.0780 - 0.0781)	Yellow	
4		1.985 - 1.988 (0.0781 - 0.0783)	Blue	
5		1.988 - 1.991 (0.0783 - 0.0784)	Pink	
6		1.991 - 1.994 (0.0784 - 0.0785)	Purple	
7		1.994 - 1.997 (0.0785 - 0.0786)	Orange	
01	UPR	1.973 - 1.976 (0.0777 - 0.0778)	Black / Red	Grade and color are different for upper and lower bearings.
	LWR	1.976 - 1.979 (0.0778 - 0.0779)		
12	UPR	1.976 - 1.979 (0.0778 - 0.0779)	Red / Green	
	LWR	1.979 - 1.982 (0.0779 - 0.0780)		
23	UPR	1.979 - 1.982 (0.0779 - 0.0780)	Green / Yellow	
	LWR	1.982 - 1.985 (0.0780 - 0.0781)		
34	UPR	1.982 - 1.985 (0.0780 - 0.0781)	Yellow / Blue	
	LWR	1.985 - 1.988 (0.0781 - 0.0783)		
45	UPR	1.985 - 1.988 (0.0781 - 0.0783)	Blue / Pink	
	LWR	1.988 - 1.991 (0.0783 - 0.0784)		
56	UPR	1.988 - 1.991 (0.0783 - 0.0784)	Pink / Purple	
	LWR	1.991 - 1.994 (0.0784 - 0.0785)		
67	UPR	1.991 - 1.994 (0.0784 - 0.0785)	Purple / Orange	
	LWR	1.994 - 1.997 (0.0785 - 0.0786)		

Undersize

Unit: mm (in)

Size U.S.	Thickness	Main journal diameter
0.25 (0.0098)	2.106 - 2.114 (0.0829 - 0.0832)	Grind so that bearing clearance is the specified value.

Bearing Clearance

Unit: mm (in)

Main bearing clearance	Standard	No.1, 3, and 5	0.012 - 0.022 (0.0005 - 0.0009)
		No.2 and 4	0.018 - 0.028 (0.0007 - 0.0011)
	Limit		0.1 (0.004)

CONNECTING ROD BEARING

Grade number	Thickness mm (in)	Identification color (mark)
0	1.499 - 1.495 (0.0590 - 0.0589)	Black
1	1.503 - 1.499 (0.0592 - 0.0590)	Red
2	1.507 - 1.503 (0.0593 - 0.0592)	Green
3	1.511 - 1.507 (0.0595 - 0.0593)	Yellow

Undersize

Unit: mm (in)

Size U.S.	Thickness	Crank pin journal diameter
0.25 (0.0098)	1.624 - 1.632 (0.0639 - 0.0643)	Grind so that bearing clearance is the specified value.

Bearing Clearance

Unit: mm (in)

Connecting rod bearing clearance	Standard	0.028 - 0.045 (0.0011 - 0.0018)
	Limit	0.10 (0.0039)

PRECAUTIONS

PFP:00001

Precautions for Draining Coolant

EBS007PL

- Drain coolant when engine is cooled.

Precautions for Disconnecting Fuel Piping

EBS007PM

- Before starting work, make sure no fire or spark producing items are in the work area.
- Release fuel pressure before disassembly.
- After disconnecting pipes, plug openings to stop fuel leakage.

Precautions for Removal and Disassembly

EBS007PN

- When instructed to use special service tools, use the specified tools. Always be careful to work safely, avoid forceful or uninstructed operations.
- Exercise maximum care to avoid damage to mating or sliding surfaces.
- Cover openings of engine system with tape or the equivalent, if necessary, to seal out foreign materials.
- Mark and arrange disassembly parts in an organized way for easy troubleshooting and assembly.
- When loosening nuts and bolts, as a basic rule, start with the one furthest outside, then the one diagonally opposite, and so on. If the order of loosening is specified, do exactly as specified. Power tools may be used where noted in the step.

Precautions for Inspection, Repair and Replacement

EBS007PO

- Before repairing or replacing, thoroughly inspect parts. Inspect new replacement parts in the same way, and replace if necessary.

Precautions for Assembly and Installation

EBS007PP

- Use torque wrench to tighten bolts or nuts to specification.
- When tightening nuts and bolts, as a basic rule, equally tighten in several different steps starting with the ones in center, then ones on inside and outside diagonally in this order. If the order of tightening is specified, do exactly as specified.
- Replace with new gasket, packing, oil seal or O-ring.
- Thoroughly wash, clean, and air-blow each part. Carefully check oil or coolant passages for any restriction and blockage.
- Avoid damaging sliding or mating surfaces. Completely remove foreign materials such as cloth lint or dust. Before assembly, oil sliding surfaces well.
- Release air within route after draining coolant.
- After repairing, start engine and increase engine speed to check coolant, fuel, oil, and exhaust systems for leakage.

Parts Requiring Angular Tightening

EBS007PQ

- Use an angle wrench for the final tightening of the following engine parts:
  - Cylinder head bolts
  - Main bearing cap bolts
  - Connecting rod cap nuts
  - Crankshaft pulley bolt (No angle wrench is required as the bolt flange is provided with notches for angular tightening)
- Do not use a torque value for final tightening.
- The torque value for these parts are for a preliminary step.
- Ensure thread and seat surfaces are clean and coated with engine oil.

Precautions for Liquid Gasket

EBS007PR

REMOVAL OF LIQUID GASKET SEALING

- After removing the mounting bolts and nuts, disconnect the component using a seal cutter.

  CAUTION:
  Be careful not to damage the mating surfaces.

- In areas where the cutter is difficult to use, use a plastic hammer to lightly tap the areas where the sealant is applied to disconnect the component.

  CAUTION:
  If a tool such as a flat-bladed screwdriver is used, be careful not to damage the mating surfaces.

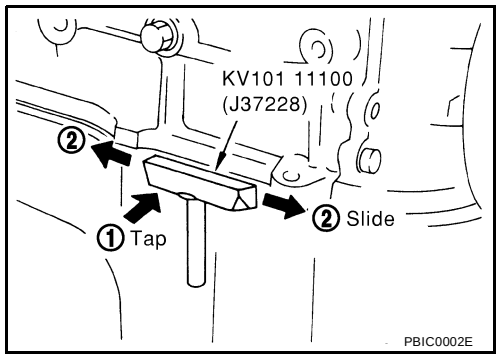

LIQUID GASKET APPLICATION PROCEDURE

1. Using a scraper, remove the old sealant adhering to the gasket application surface and the mating surface.
   - Remove the sealant completely from the groove of the gasket application surface, mounting bolts, and bolt holes.
2. Completely clean the gasket application surface and the mating surface to remove all of the adhering moisture, grease, and foreign materials.
3. Attach the sealant tube to the tube presser.
   Use Genuine RTV Silicone Sealant, or equivalent. Refer to GI-42, "RECOMMENDED CHEMICAL PRODUCTS AND SEALANTS" .

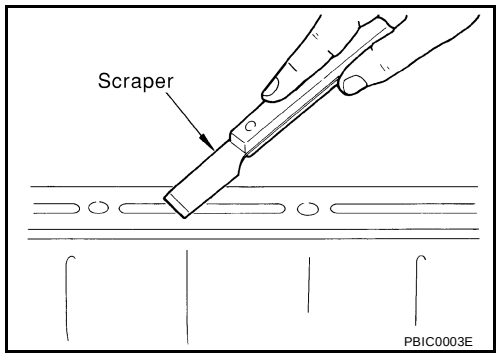

4. Apply the sealant without breaks to the specified location with the specified dimensions.
   - If there is a groove for the sealant application, apply the sealant to the groove.
   - As for the bolt holes, normally apply the sealant inside the holes. If specified, it should be applied outside the holes. Make sure to read the text in this manual.
   - Within five minutes of sealant application, install the mating component.
   - If the sealant protrudes, wipe it off immediately.
   - Do not retighten after the installation.
   - Wait 30 minutes or more after installation before filling the engine with oil and coolant.

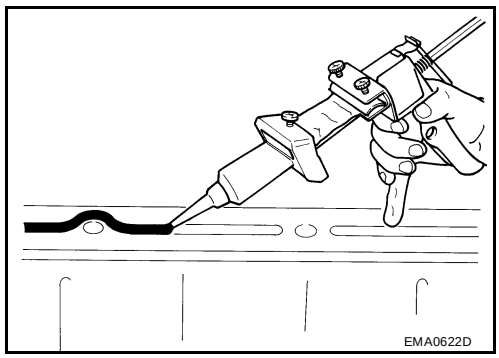

CAUTION:
Follow all specific instructions in this manual.

PREPARATION

PFP:00002

Special Service Tools

EBS007PS

The actual shapes of Kent-Moore tools may differ from those of special service tools illustrated here.

Tool number (Kent-Moore No.) Tool name		Description
ST0501S000 (—) Engine stand assembly 1 ST05011000 (—) Engine stand 2 ST05012000 (—) Base	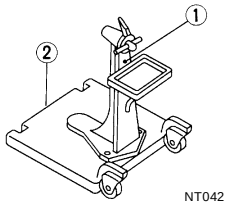	Disassembling and assembling
KV10106500 (—) Engine stand shaft	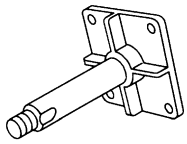	
KV10117000 (J41262) Engine sub-attachment	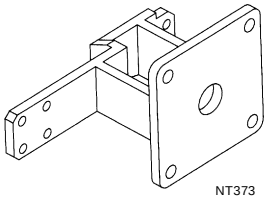	KV10117000 has been replaced with KV10117001 (KV10117000 is no longer in production, but it is usable).
KV10117001 (—) Engine sub-attachment	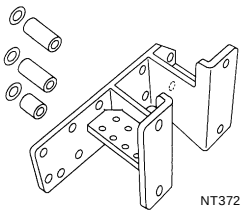	Installing on the cylinder block
ST10120000 (J24239-01) Cylinder head bolt wrench	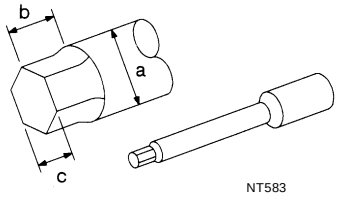	Loosening and tightening cylinder head bolt **a: 13 mm (0.51 in) diameter** **b: 12 mm (0.47in) height** **c: 10 mm (0.39 in) width**
KV10116200 (J26336-A) Valve spring compressor 1 KV10115900 (J26336-20) Attachment	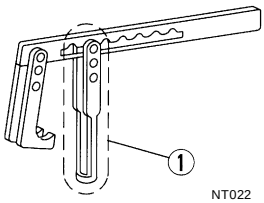	Disassembling valve mechanism

Tool number (Kent-Moore No.) Tool name	Description
(J39386) Valve oil seal drift 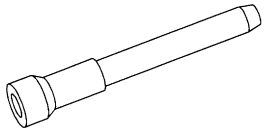 NT024	Installing valve oil seal
EM03470000 (J8037) Piston ring compressor 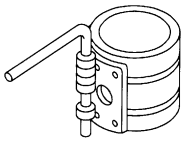 NT044	Installing piston assembly into cylinder bore
ST16610001 (J23907) Pilot bushing puller 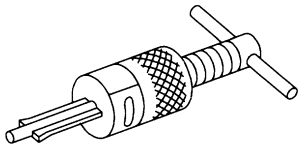 NT045	Removing crankshaft pilot bushing
KV10111100 (J37228) Seal cutter 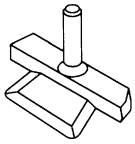 NT046	Removing steel oil pan and rear timing chain case
WS39930000 (—) Tube presser 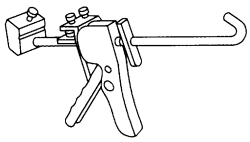 NT052	Pressing the tube of liquid gasket
KV10112100 (BT8653-A) Angle wrench 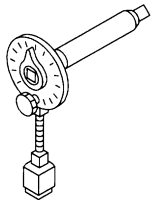 NT014	Tightening bolts for bearing cap, cylinder head, etc.
KV10117100 (J3647-A) Heated oxygen sensor wrench 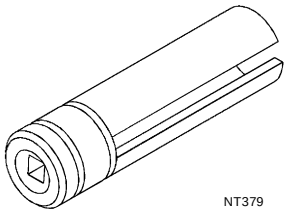 NT379	Loosening or tightening heated oxygen sensor **For 22 mm (0.87 in) hexagon nut**

Tool number (Kent-Moore No.) Tool name	Description
KV10114400 (J38365) Heated oxygen sensor wrench 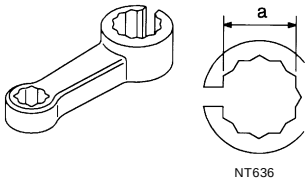	Loosening or tightening rear heated oxygen sensor **a: 22 mm (0.87 in)**
KV10117700 (J44716) Ring gear stopper 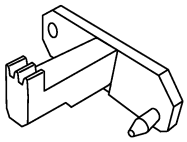	Removing and installing crankshaft pulley

Commercial Service Tools

EBS007PT

(Kent-Moore No.) Tool name	Description
Power tool 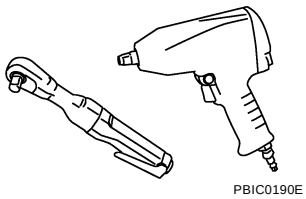	Loosening bolts and nuts
Spark plug wrench 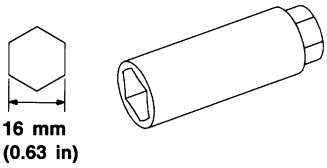	Removing and installing spark plug
Valve seat cutter set 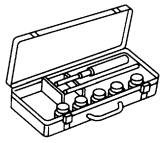	Finishing valve seat dimensions
Piston ring expander 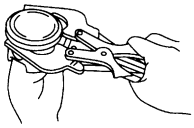	Removing and installing piston ring
Valve guide drift 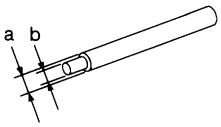	Removing and installing valve guide **Intake & Exhaust:** **a = 9.5 mm (0.374 in) dia.** **b = 5.5 mm (0.217 in) dia.**

(Kent-Moore No.) Tool name		Description
Valve guide reamer	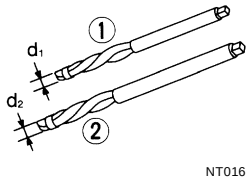	Reaming valve guide 1 or hole for oversize valve guide 2 **Intake & Exhaust:** **d_1 = 6.0 mm (0.236 in) dia.** **d_2 = 10.2 mm (0.402 in) dia.**
(J-43897-18) (J-43897-12) Oxygen sensor thread cleaner	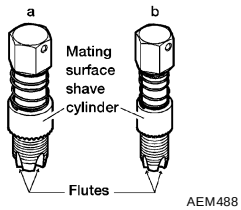	Reconditioning the exhaust system threads before installing a new oxygen sensor (use with anti-seize lubricant shown below) **a = J-43897-18 (18 mm dia.) for zirconia oxygen sensor** **b = J-43897-12 (12 mm dia.) for titania oxygen sensor**
Anti-seize lubricant (Permatex 133AR or equivalent meeting MIL specification MIL-A-907)		Lubricating oxygen sensor thread cleaning tool when reconditioning exhaust system threads
T55 Torx® bit	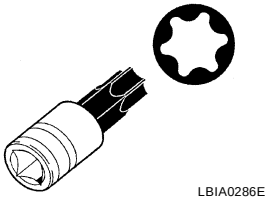	Removing and installing the driveplate bolts (A/T), and the flywheel bolts (M/T)

NOISE, VIBRATION, AND HARSHNESS (NVH) TROUBLESHOOTING

PFP:00003

NVH Troubleshooting — Engine Noise

EBS007PU

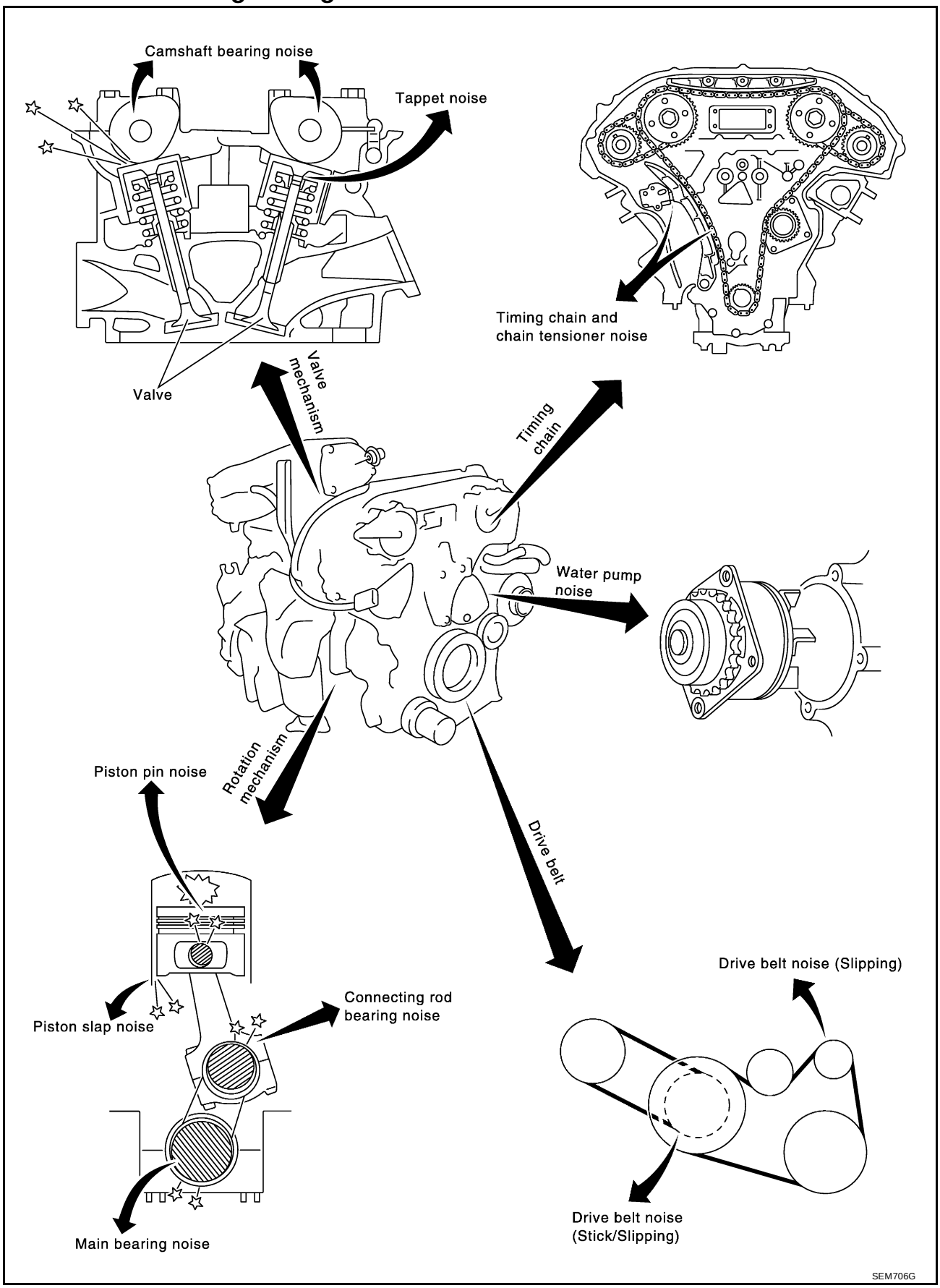

Use the Chart Below to Help You Find the Cause of the Symptom.

EBS007PV

1. Locate the area where noise occurs.
2. Confirm the type of noise.
3. Specify the operating condition of engine.
4. Check specified noise source. Repair or replace the identified part as necessary.

Location of noise	Type of noise	Operating condition of engine						Source of noise	Check item	Reference page
		Before warm-up	After warm-up	When starting	When idling	When racing	While driving			
Top of engine Rocker cover Cylinder head	Ticking or clicking	C	A	—	A	B	—	Tappet noise	Valve clearance	EM-164
	Rattle	C	A	—	A	B	C	Camshaft bearing noise	Camshaft journal clearance Camshaft runout	EM-134
Crankshaft pulley Cylinder block (Side of engine) Oil pan	Slap or knock	—	A	—	B	B	—	Piston pin noise	Piston and piston pin clearance Connecting rod bushing clearance	EM-164
	Slap or rap	A	—	—	B	B	A	Piston slap noise	Piston-to-bore clearance Piston ring side clearance Piston ring end gap Connecting rod bend and torsion	EM-186
	Knock	A	B	C	B	B	B	Connecting rod bearing noise	Connecting rod bushing clearance (Small end) Connecting rod bearing clearance (Big end)	EM-186
	Knock	A	B	—	A	B	C	Main bearing noise	Main bearing oil clearance Crankshaft runout	EM-186
Front of engine Timing chain cover	Tapping or ticking	A	A	—	B	B	B	Timing chain and chain tensioner noise	Timing chain cracks and wear Timing chain tensioner operation	EM-146
Front of engine	Squeaking or fizzing	A	B	—	B	—	C	Drive belts (Sticking or slipping)	Drive belts deflection	EM-109
	Creaking	A	B	A	B	A	B	Drive belts (Slipping)	Idler pulley bearing operation	
	Squall Creak	A	B	—	B	A	B	Water pump noise	Water pump operation	CO-41

A: Closely related B: Related C: Sometimes related —: Not related

DRIVE BELTS

PFP:02117

Checking Drive Belts

EBS007PW

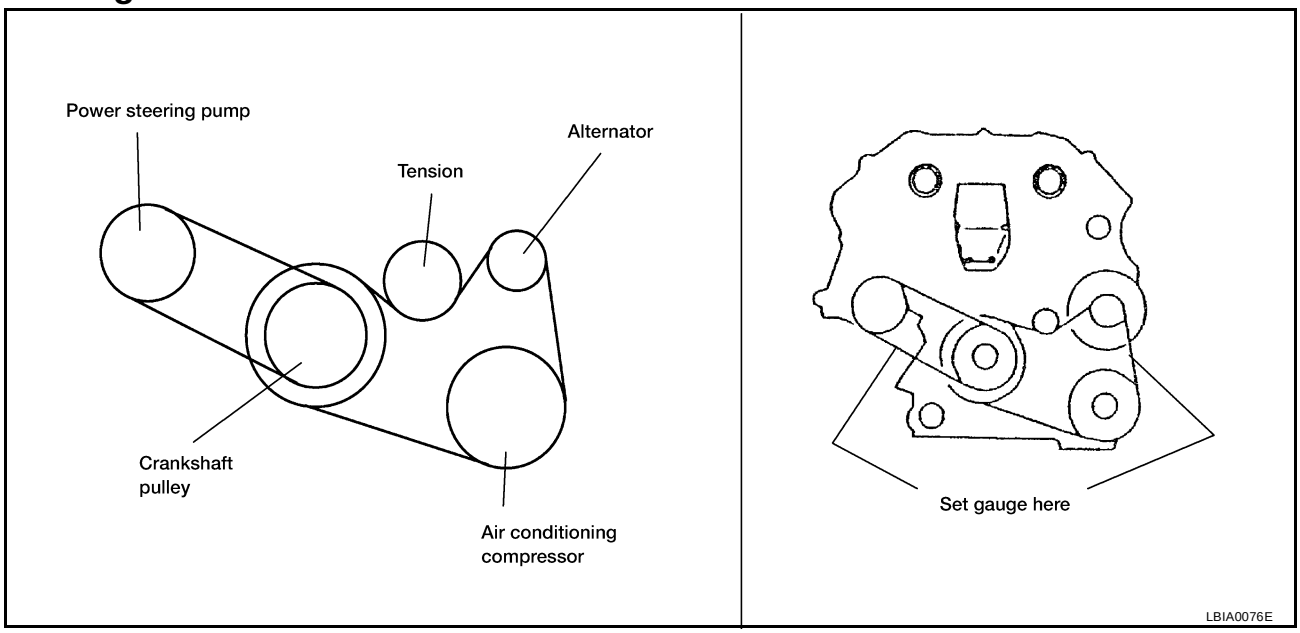

1. Inspect belt for cracks, fraying, wear or oil adhesion. If necessary, replace with a new one.
2. Inspect drive belt deflections by pushing on the belt midway between pulleys as shown.
3. Rotate the crankshaft pulley two times then check the belt tension using the Tool.

   NOTE:
   Inspect drive belt deflection or tension when engine is cold.
   Adjust if belt deflections exceed the limit or if belt tension is not within specifications.

Belt Deflection and Tension

	Deflection adjustment		Unit: mm (in)	Tension adjustment*		Unit: N (kg, lb)
	Used belt		New belt	Used belt		New belt
	Limit	After adjustment		Limit	After adjustment	
Alternator and air conditioning compressor	7 (0.28)	4.2 - 4.6 (0.17 - 0.18)	3.7 - 4.1 (0.15 - 0.16)	294 (30, 66)	730 - 818 (74.5 - 83.5, 164 - 184)	838 - 926 (85.5 - 94.5, 188 - 208)
Power steering pump	11 (0.43)	7.3 - 8 (0.29 - 0.30)	6.5 - 7.2 (0.26 - 0.28)	196 (20, 44)	495 - 583 (50.5 - 59.5, 111 - 131)	603 - 691 (61.5 - 70.5, 135.6 - 155.4)
Applied pushing force	98 (10, 22)			—		

*: If belt tension gauge cannot be installed at check points shown, check drive belt tension at different location on the belt.

AIR CLEANER AND AIR DUCT

PFP:16500

Removal and Installation

EBS007PX

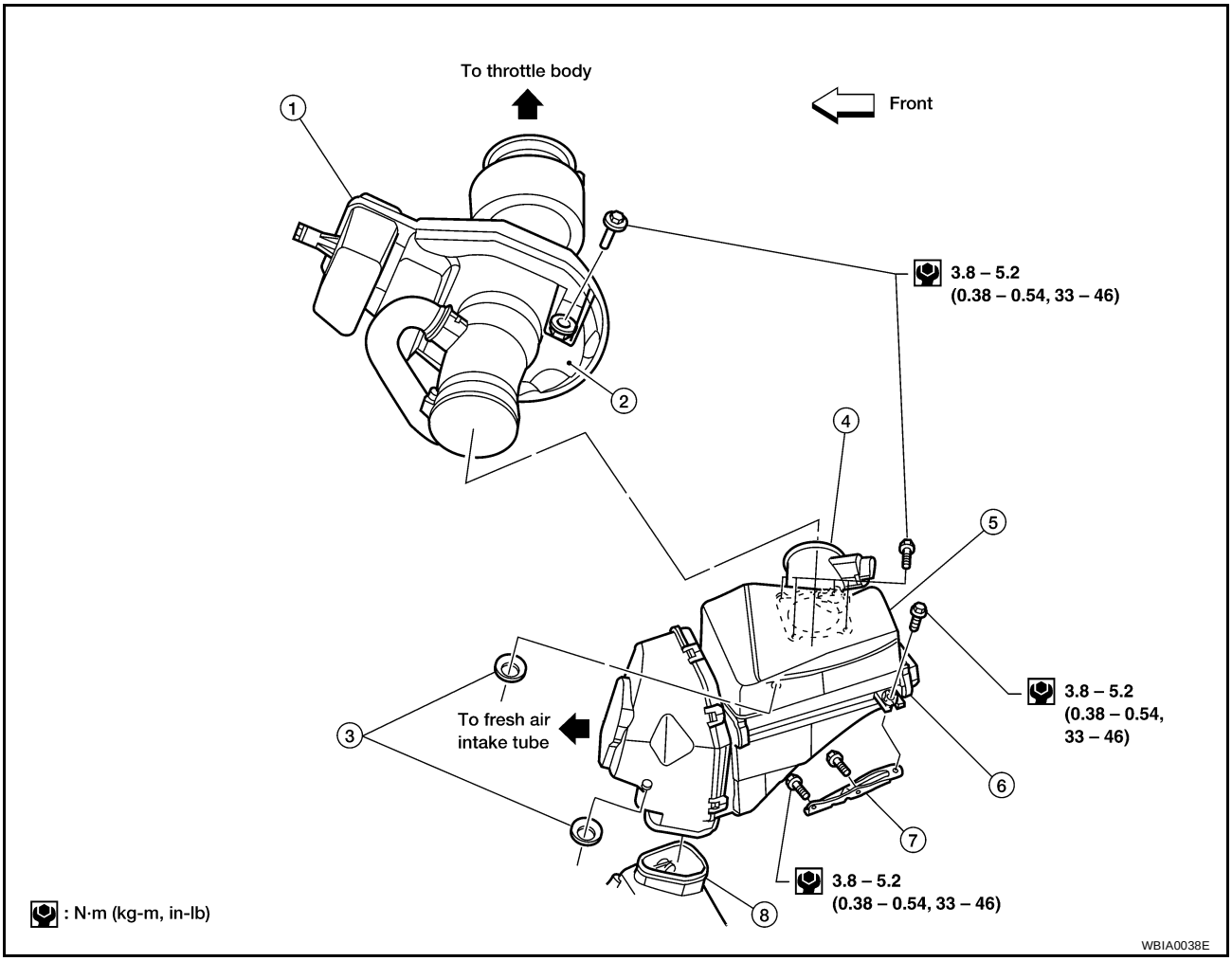

1. Resonator	2. Air cleaner to electric throttle control actuator tube	3. Grommet
4. Mass air flow sensor	5. Air cleaner case (upper)	6. Air cleaner case (lower)
7. Air cleaner case mounting bracket	8. Resonator in fender	

REMOVAL

1. Disconnect the harness connector from the mass air flow sensor.
2. Disconnect the tube clamp at the electric throttle control actuator and at the fresh air intake tube.
3. Remove air cleaner to electric throttle control actuator tube, air cleaner case (upper) with the mass air flow sensor attached.
4. Remove mass air flow sensor from air cleaner case (upper), as necessary.

   CAUTION:
   Handle mass air flow sensor with care.
   - **Do not shock it.**
   - **Do not disassemble it.**
   - **Do not touch its sensor.**
5. Remove resonator in the fender, lifting left fender protector, as necessary.

INSTALLATION

Installation is in the reverse order of removal.

CHANGING AIR CLEANER ELEMENT

1. Unhook the air cleaner case side clips and lift up the air cleaner case (upper).

2. Remove the air cleaner element.
3. Install the new air cleaner element, making sure it is facing in the correct direction.
4. Install the air cleaner case (upper) and hook the air cleaner case side clips securely.

INTAKE MANIFOLD

PFP:14003

Removal and Installation

EBS007PY

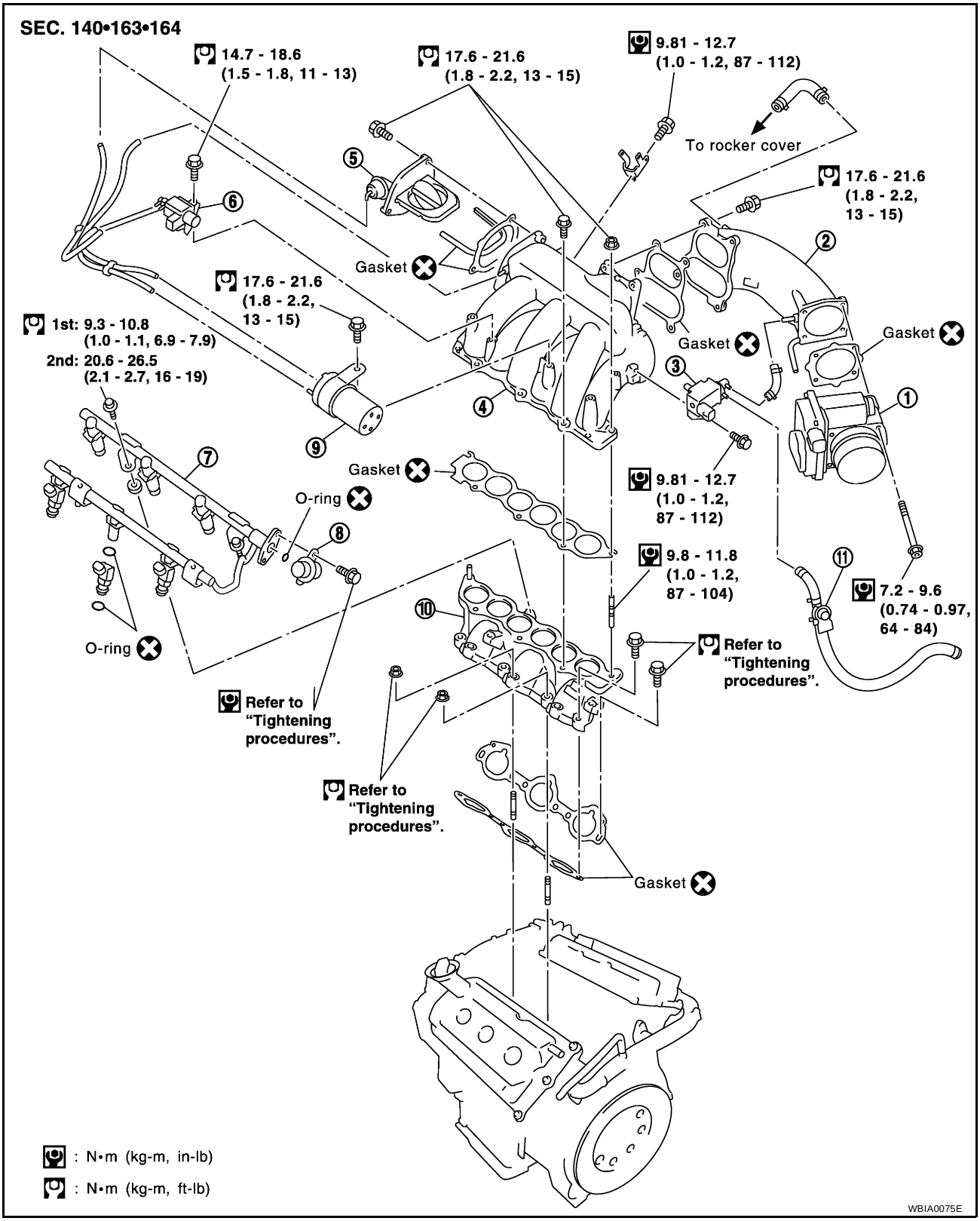

1.	Electric throttle control actuator	2.	Intake manifold collector (upper)	3.	EVAP canister purge volume control solenoid valve
4.	Intake manifold collector (lower)	5.	Power valve	6.	VIAS control solenoid valve
7.	Fuel tube	8.	Fuel damper	9.	Vacuum tank
10.	Intake manifold	11.	Service port		

REMOVAL

WARNING:
To avoid the danger of being scalded, never drain the coolant when the engine is hot.

1. Remove the engine cover with power tool.
2. Release the fuel pressure.
   Refer to EC-51, "FUEL PRESSURE RELEASE" .
3. Remove air cleaner case lid and mass air flow sensor, and air intake tube as an assembly.
   Refer to EM-110, "Removal and Installation" .
4. Partially drain the coolant when the engine is cool. Refer to EC-1102, "Description" .
5. Disconnect fuel tube quick connector at vehicle piping side.
6. To remove the quick connector cap, hold the sides of the connector, push in the tabs and pull out the tube. (Figure is for reference only.)

   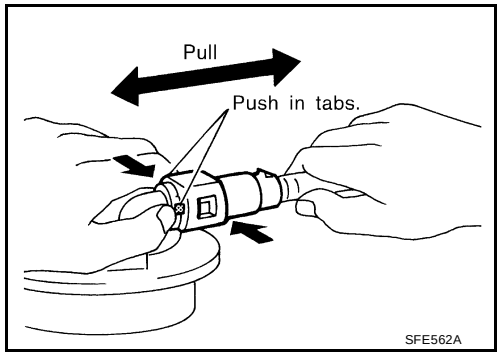

   NOTE:
   If the connector and the tube are stuck together, push and pull several times until they start to move. Then disconnect them by pulling.

   CAUTION:
   - **The tube can be removed when the tabs are completely depressed. Do not twist it more than necessary.**
   - **Do not use any tools to remove the quick connector.**
   - **Keep the resin tube away from heat. Be especially careful when welding near the tube.**
   - **Prevent acid liquids such as battery electrolyte, etc. from getting on the resin tube.**
   - **Do not bend or twist the tube during removal or installation.**
   - **Do not remove the remaining retainer on the tube**
   - **When the tube is replaced, also replace the retainer with a new one.**
   - **To keep the connecting portion clean and to avoid damage and foreign materials entering, cover the ends of the fuel tubes with plastic bags or something similar.**

   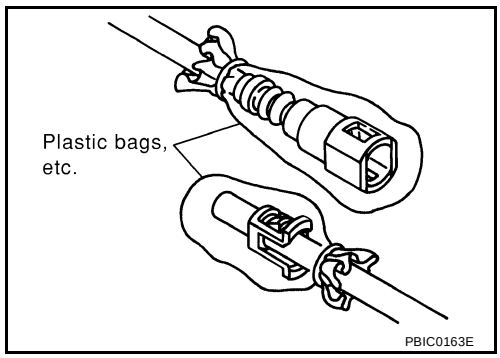

7. Disconnect the power brake booster vacuum hose, the coolant hoses from the electric throttle control actuator, the swirl control vacuum lines, the fuel injectors electrical connectors, and the PCV hose.

   CAUTION:
   Cover any engine openings to avoid the entry of any foreign material.
8. Disconnect the electric throttle control actuator electrical connectors.
9. Remove the cowl top grille and the windshield wiper assembly.
   Refer to EI-18, "Removal and Installation" .
10. Disconnect the power steering hose bracket.
11. Remove the vacuum tank from the back of the intake manifold collector.
12. Remove the intake manifold collector pipe and electric throttle control actuator by loosening the four bolts in a diagonal pattern.

    CAUTION:
    Handle carefully to avoid any shock to the electric throttle control actuator.

13. Loosen the bolts in the order shown, and remove the intake manifold collector with power tool.
14. Remove the fuel rail with the fuel injectors attached, from the intake manifold. Remove the fuel injector O-rings and use new O-rings for installation.

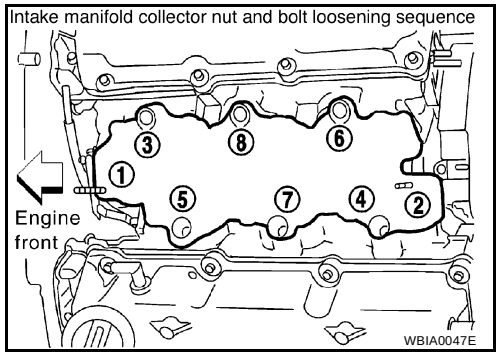

15. Loosen the bolts in the order shown, and remove the intake manifold with power tool.

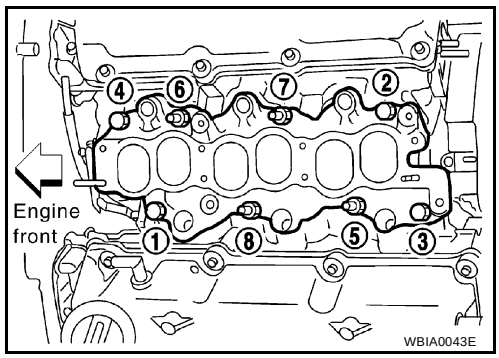

INSPECTION AFTER REMOVAL

Surface Distortion

- Using straightedge and feeler gauge, inspect the surface distortion of both the intake manifold and the intake manifold collector.

  Standard : 0.1 mm (0.004 in)

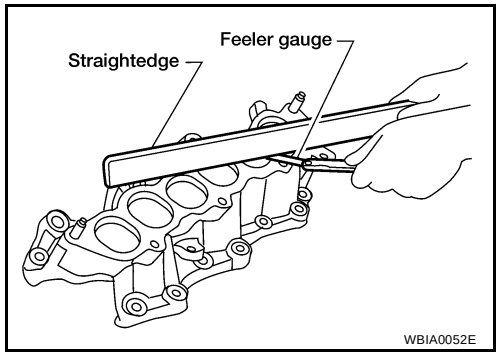

INSTALLATION

Installation is in the reverse order of removal. Follow the procedures below for specific tightening sequences and procedures.

- Install intake manifold bolts in two stages in the numerical order as shown.

  Stage 1 : 5- 10 N·m (0.5 - 1.0 kg-m, 44 - 86 in-lb)

  Stage 2 : 26 - 31 N·m (2.7 - 3.2 kg-m, 20 - 23 ft-lb)

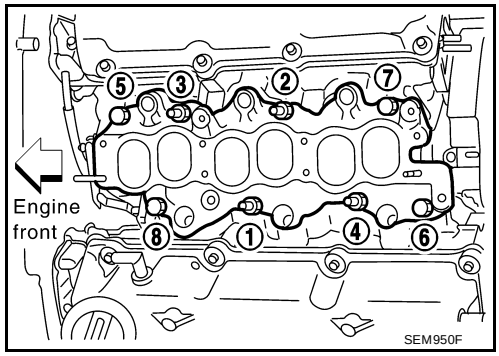

- Seat the fuel injectors into the intake manifold with new O-rings. Tighten the fuel rail bolts as shown, in two stages:

  Stage 1 : 9.3 - 10.8 N·m (0.95 - 1.1 kg-m, 83 - 95 in-lb)

  Stage 2 : 21 - 26 N·m (2.1 - 2.7 kg-m, 15 - 20 ft-lb)

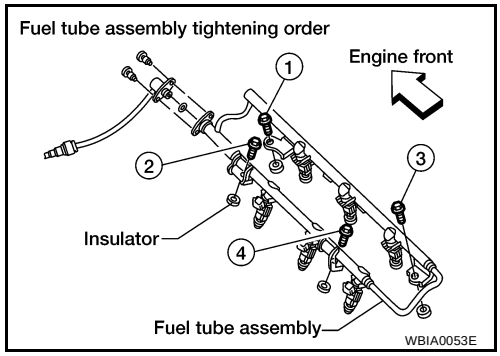

- Install the intake manifold collector bolts in the numerical order as shown.

  Intake manifold collector bolts : 18 - 21 N·m (1.8 - 2.2 kg-m, 13 - 15 ft-lb)

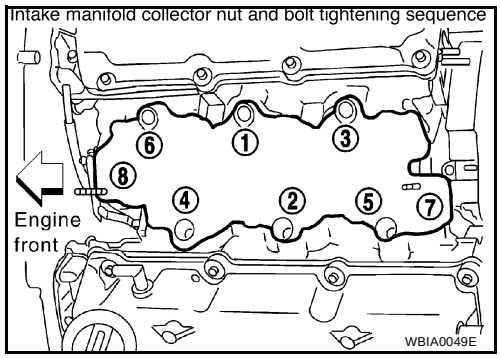

- Tighten the mounting bolts of the intake manifold collector pipe and electric throttle control actuator assembly equally and diagonally to specification.

  Electric throttle control actuator bolts : 7.2 - 9.6 N·m (0.74 - 0.97 kg-m, 64 - 84 in-lb)

- Install the quick connector as follows:
  - Make sure no foreign substances are deposited in and around the fuel tube and quick connector and that there is no damage.
  - Align the center to insert the quick connector straight onto the fuel tube.
  - Insert the fuel tube until a click is heard.
  - Install the quick connector cap on the quick connector joint. Align the arrow mark on the quick connector cap to the upper side.
  - Install the fuel hose into the hose clamp.

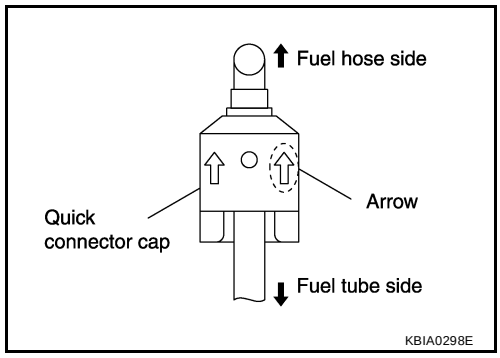

NOTE:
After installation, it is necessary to re-calibrate the electric throttle control actuator as follows:

1. Perform the "Throttle Valve Closed Position Learning" when harness connector of the electric throttle control actuator is disconnected. Refer to EC-657, "BASIC SERVICE PROCEDURE" .
2. Perform the "Idle Air Volume Learning" when the electric throttle control actuator is replaced. Refer to EC-657, "BASIC SERVICE PROCEDURE" .

EXHAUST MANIFOLD AND THREE WAY CATALYST

PFP:14004

Removal and Installation

EBS007PZ

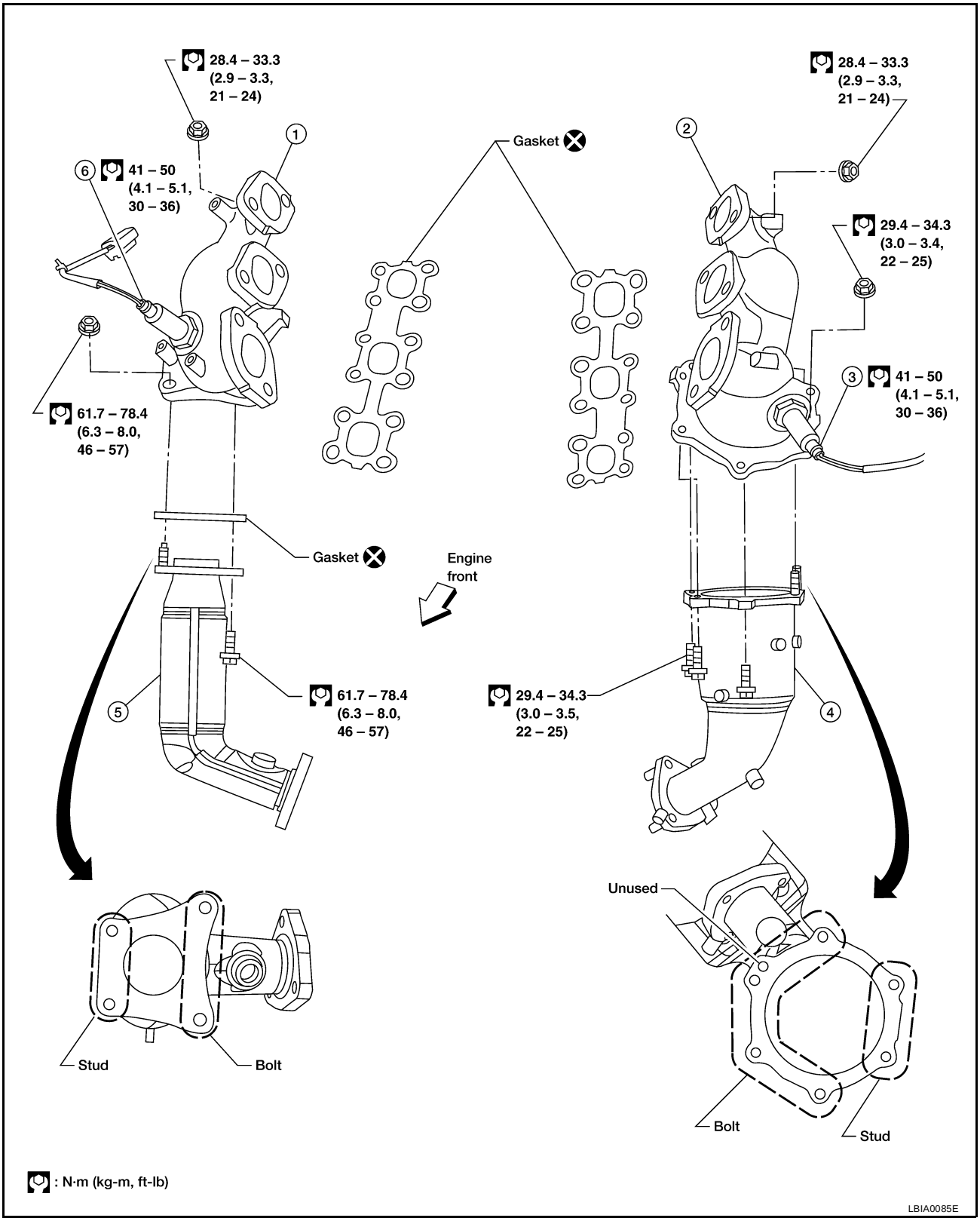

1. Exhaust manifold (bank 1)
2. Exhaust manifold (bank 2)
3. Heated oxygen sensor 1 (front) (bank 2)
4. Three way catalyst (manifold) (bank 2)
5. Three way catalyst (manifold) (bank 1)
6. Heated oxygen sensor 1 (front) (bank 1)

REMOVAL

WARNING:

- **Perform the work when the exhaust and cooling system have completely cooled down.**
- **When removing the front and rear engine mounting through bolts and nuts, lift the engine up slightly for safety. For engine slingers, refer to step 17 in EM-183, "REMOVAL" .**

1. Remove the front wheel and tires with power tool.
2. Remove the engine undercovers with power tool.
3. Remove the inner wheel well splash shields with power tool.
4. Remove the radiator and cooling fan assembly.
   Refer to EC-1079, "Component Description" .
5. Remove the front exhaust tube.
   Refer to EX-6, "Removal and Installation" .
6. Remove the front suspension member as follows:

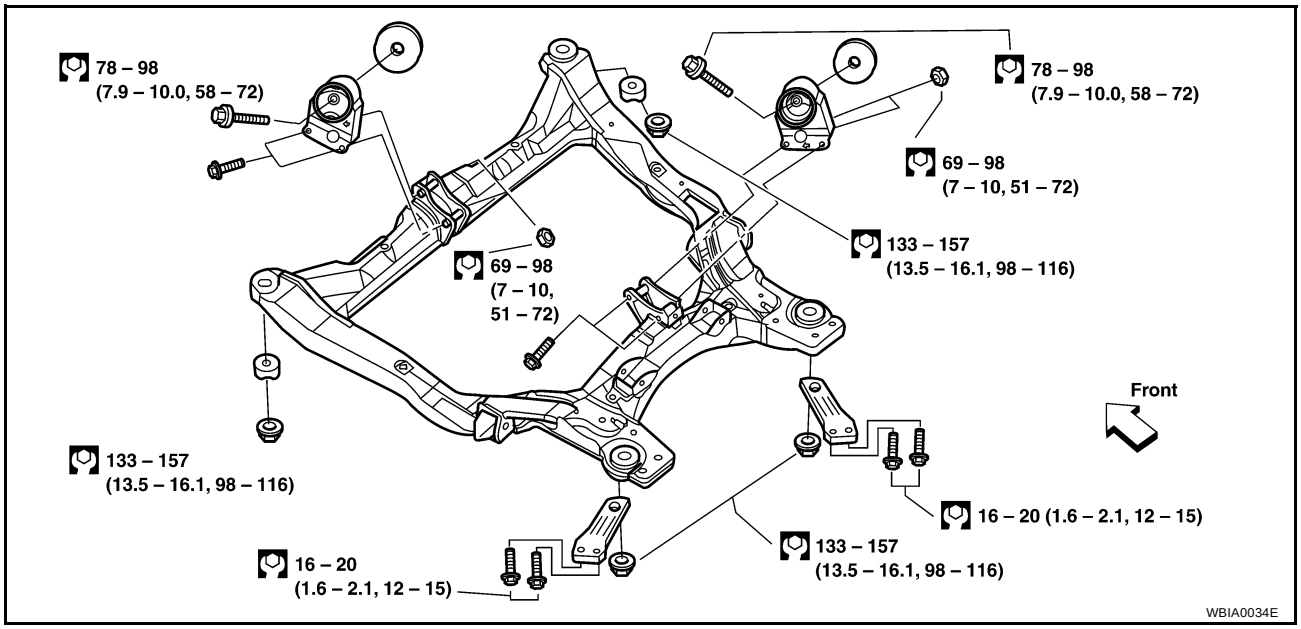

CAUTION:

Before disconnecting, support the front suspension member with a suitable power lift. Use the lift to lower the member to remove it.

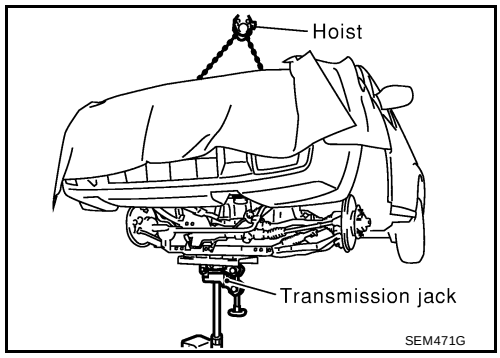

a. Disconnect the lower ball joints.
   Refer to FSU-14, "FRONT SUSPENSION MEMBER" .
b. Remove the steering gear mounting bolts.
   Refer to PS-13, "Removal and Installation" .
c. Disconnect the upper sway bar connecting rod.
   Refer to FSU-11, "Removal and Installation" .
d. Disconnect the front and rear engine mounts electrical connectors, if equipped. Remove the front and rear engine mount through bolts and nuts using power tool.

CAUTION:

For vehicles equipped with an automatic transaxle, the front and rear engine mounts are electrically controlled. Disconnect the engine mount electrical connector(s) before removing the through bolt and nut.

e. Disconnect the power steering line bracket.
f. Remove the LH and RH drive axles.
   Refer to FAX-11, "Removal and Installation" .
g. Remove the front suspension member mounting nuts and lower the member out of the engine compartment.

7. Remove heated oxygen sensor 1 (front) (bank 1) and heated oxygen sensor 2 (front) (bank 2).

a. Remove harness connector of each heated oxygen sensor, and disconnect the harness from the bracket and middle clamp.

b. Remove both heated oxygen sensors with the Tool.

CAUTION:

- **Be careful not to damage heated oxygen sensor.**
- **Discard any heated oxygen sensor which has been dropped from a height of more than 0.5 m (19.7 in) onto a hard surface such as a concrete floor; replace with a new sensor.**

8. Remove exhaust manifolds and the three way catalyst heat shields with power tool.
9. Remove the three way catalyst (manifold) (bank 1) and three way catalyst (manifold) (bank 2) by loosening the bolts first and then removing the nuts and through bolts.
10. Remove the exhaust manifolds. Loosen the nuts in the numerical order as shown.

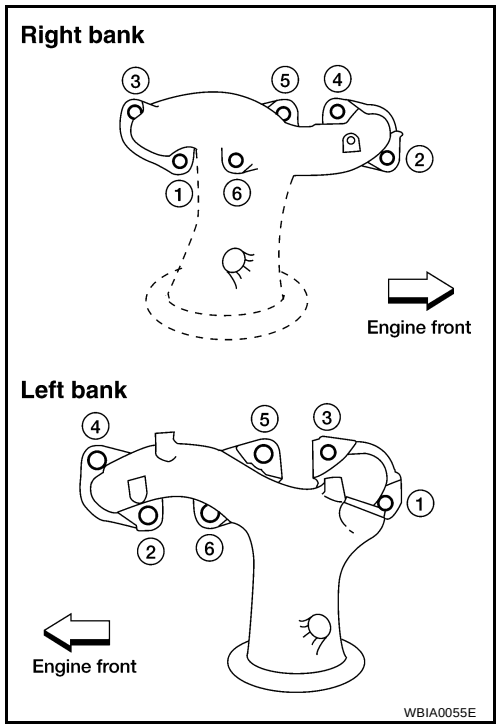

INSPECTION AFTER REMOVAL

Surface Distortion

Use a reliable straightedge and feeler gauge to check the flatness of the exhaust manifold mating surfaces.

Distortion limit : 0.3 mm (0.012 in)

INSTALLATION

Installation is in the reverse order of removal.

- Install the exhaust manifold nuts in the numerical order as shown.

CAUTION:

- **When using the heated oxygen sensor wrench, tighten to the middle of specified torque range, because the length of the Tool may increase the actual tightness. Do not tighten to the maximum specified torque range.**
- **Before installing a heated oxygen sensor, clean the exhaust manifold threads using the oxygen sensor thread cleaner tool, and apply anti-seize lubricant.**
- **Do not over-torque the heated oxygen sensors. Doing so may cause damage to the heated oxygen sensors.**

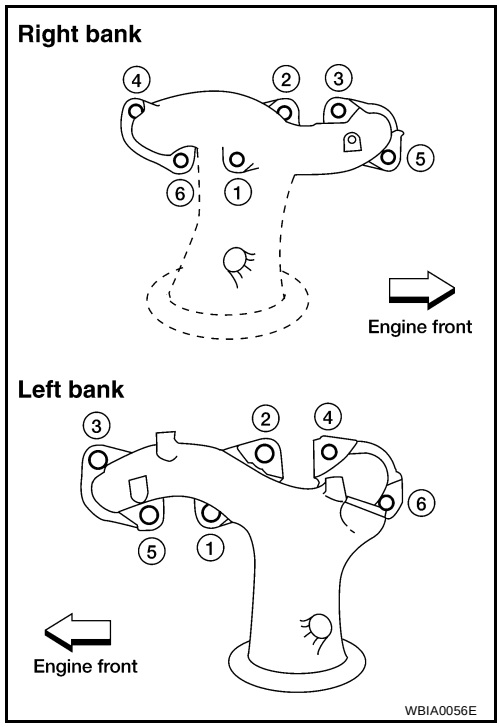

OIL PAN

PFP:11110

Removal and Installation

EBS007Q0

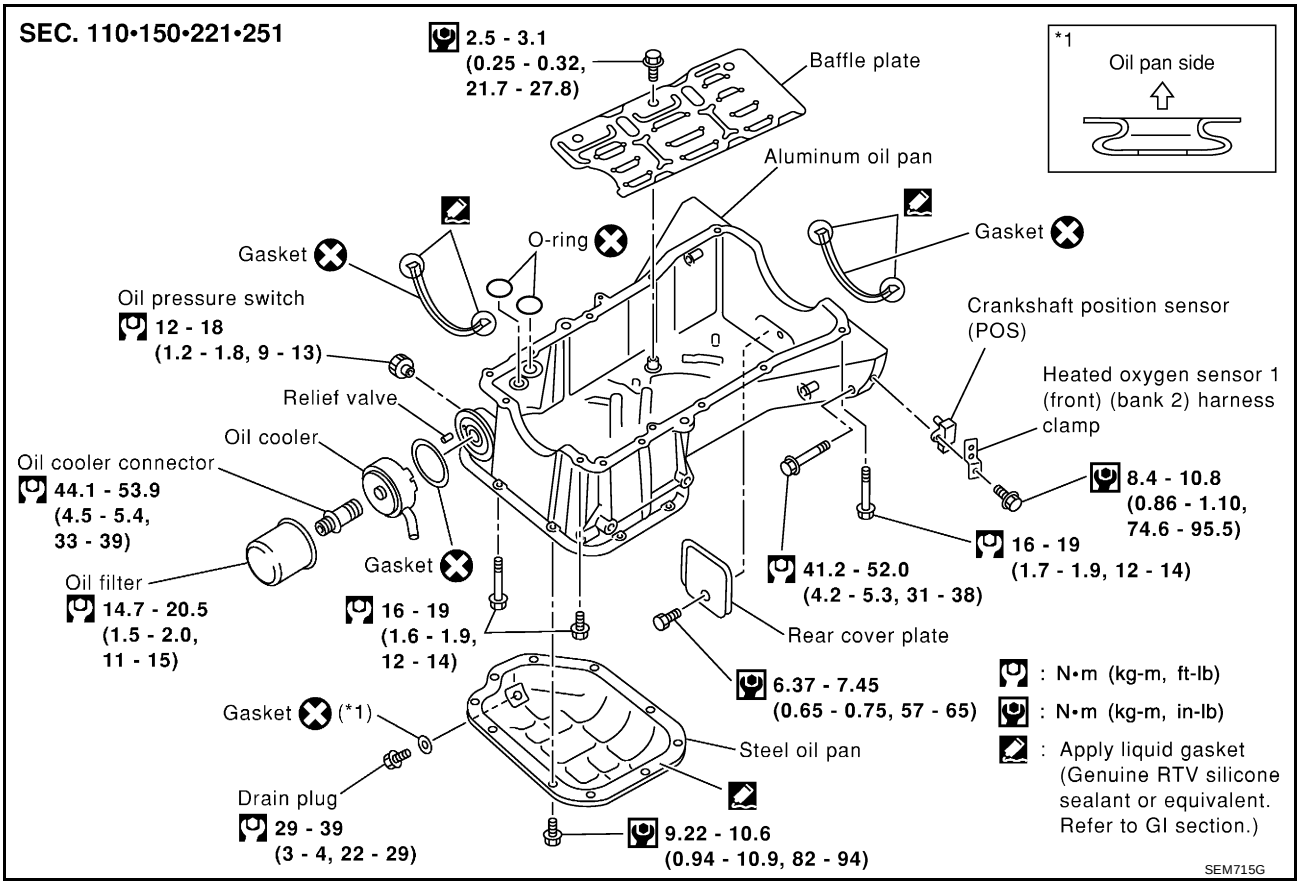

REMOVAL

WARNING:

- **You should not remove the oil pan until the exhaust system and cooling system have completely cooled off.**
- **When removing the front and rear engine mounting through bolts and nuts, lift the engine up slightly for safety. For engine slingers, refer to step 18 in EM-183, "REMOVAL" .**

CAUTION:

When removing the upper oil pan from the engine, first remove the crankshaft position sensor (POS). Be careful not to damage sensor edges or signal plate teeth.

1. Remove the front RH wheel and tire with power tool.
2. Disconnect the battery negative terminal.
3. Remove the oil dipstick.
4. Drain the engine coolant. Refer to EC-1102, "Description" .
5. Remove the engine undercover using power tool.
6. Remove the RH inner fender splash shield using power tool.
7. Remove the A/C drive belt.
8. Remove the front exhaust tube. Refer to EX-6, "Removal and Installation" .
9. Dismount the A/C compressor with piping attached, and reposition it out of the way securely with wire.

   CAUTION:

   Do not pull on or crimp the A/C lines and hoses.
10. Disconnect the coolant lines from the engine oil cooler and plug them to prevent coolant loss.
11. Remove the oil filter and engine oil cooler from the upper oil pan.
12. Remove the oil pressure switch, and the crankshaft position sensor (POS) from the upper oil pan.

13. Remove the front suspension member, as follows:

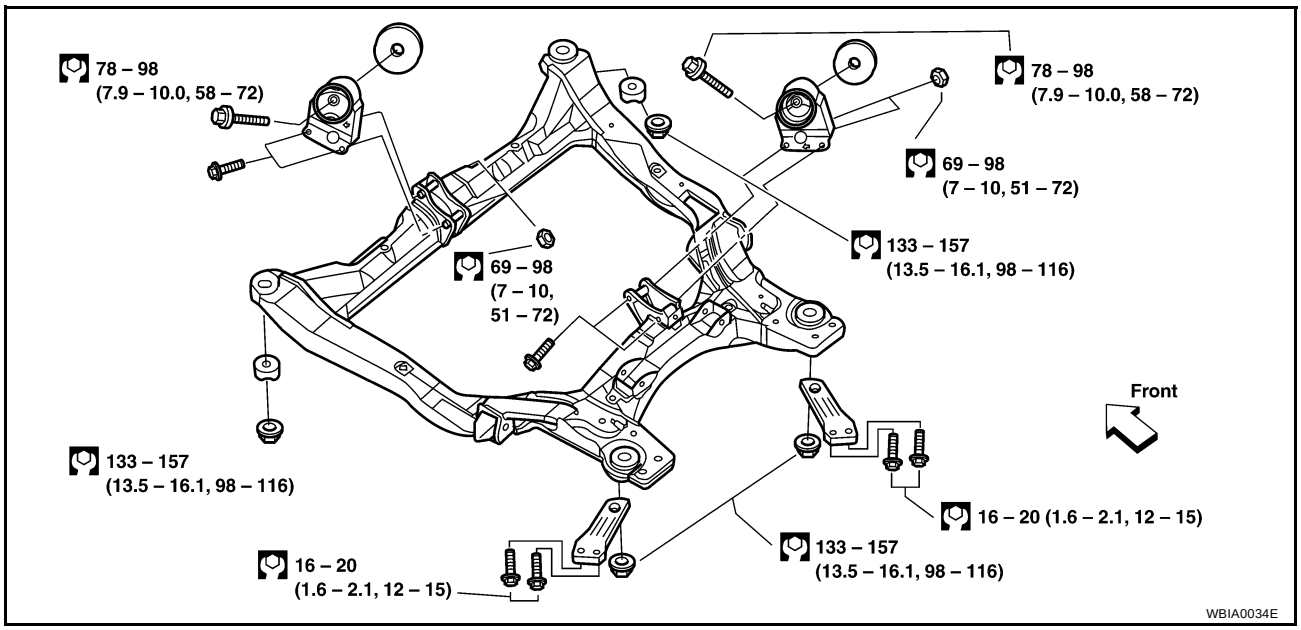

CAUTION:
Before disconnecting, support the front suspension member with a suitable power lift. Use the lift to lower the front suspension member to remove it.

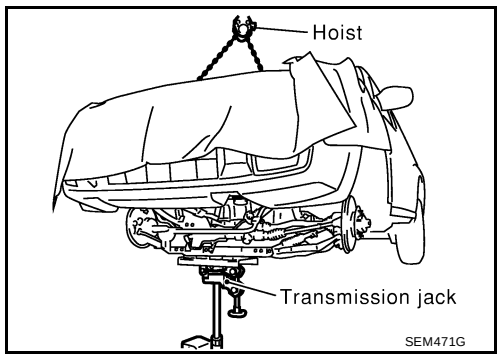

a. Disconnect the lower ball joints
Refer to FSU-5, "FRONT SUSPENSION ASSEMBLY" .

b. Disconnect the power steering line bracket.

c. Disconnect the steering gear mounting bolts.
Refer to PS-13, "Removal and Installation" .

d. Disconnect the upper sway bar links.
Refer to FSU-5, "FRONT SUSPENSION ASSEMBLY" .

e. Remove the LH and RH drive axles.
Refer to FAX-11, "Removal and Installation" .

f. Disconnect the front engine mounts electrical connectors, if equipped. Remove the front and rear engine mounts through bolts and nuts using power tool.

WARNING:
For additional safety, support the engine from above with a suitable hoist.

CAUTION:
For vehicles equipped with an automatic transaxle, the front and rear engine mounts are electrically controlled. Disconnect the engine mount electrical connector before removing the through bolt.

g. Remove the front suspension member mounting nuts and lower the member out of the engine compartment.

14. Disconnect the heated oxygen sensors and remove the two catalytic convertors from the exhaust manifolds using power tool.

15. Remove the rear plate cover from the upper oil pan.

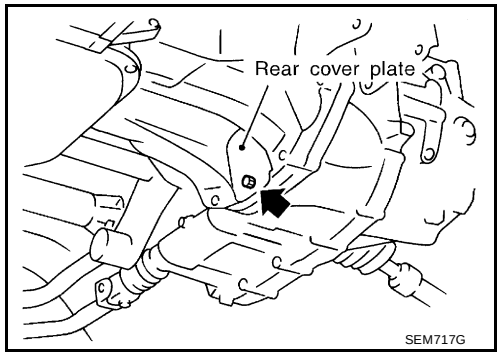

16. Remove the bottom oil pan. Loosen the bolts in the numerical sequence as shown with power tool.

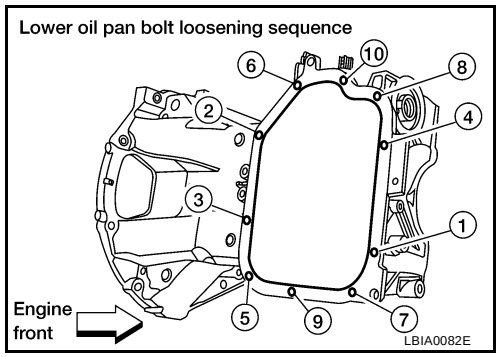

a. Insert a tool between the lower oil pan and the upper oil pan.

CAUTION:

- **Be careful not to damage the mating surface.**
- **Do not insert a screwdriver, this will damage the mating surfaces.**

b. Slide the tool by tapping its side with a hammer to remove the lower oil pan from the upper oil pan.

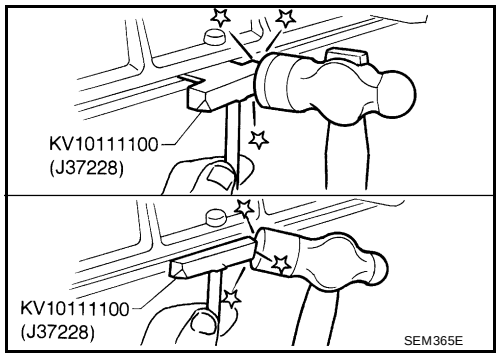

17. Remove the four engine-to-transaxle bolts.

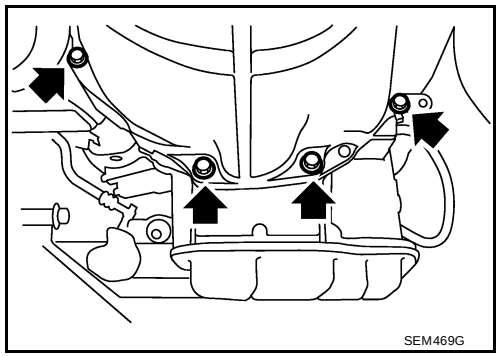

18. Remove the upper oil pan.

a. Loosen the bolts in the numerical order as shown, using power tool.

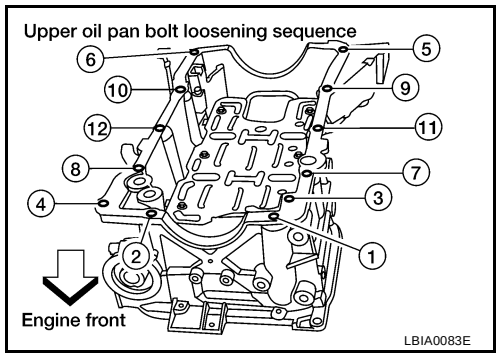

b. Insert an appropriate size tool into the notch of the upper oil pan as shown (1).

c. Pry off the upper oil pan by moving the tool up and down as shown (2).

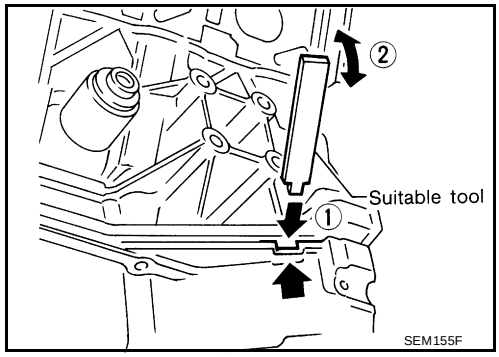

19. Remove the O-ring seals from the bottom of the cylinder block and oil pump housing, use new O-rings for installation.

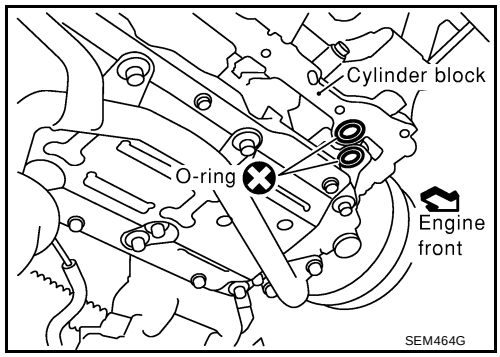

20. Remove front cover gasket and rear oil seal retainer gasket.

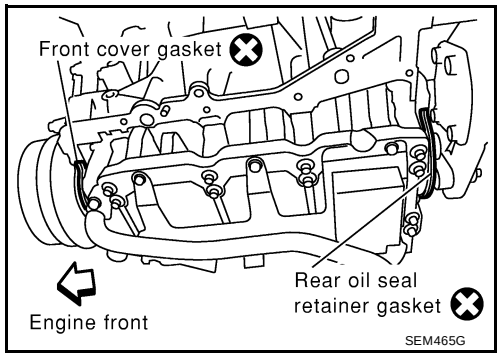

21. If re-installing the original oil pan, remove the old sealant from the mating surfaces using a scraper.
    - Also remove the old sealant from mating surface of the cylinder block.
    - Remove the old sealant from the bolt holes and threads.

    CAUTION:
    Do not scratch or damage the mating surfaces when cleaning off the old sealant.

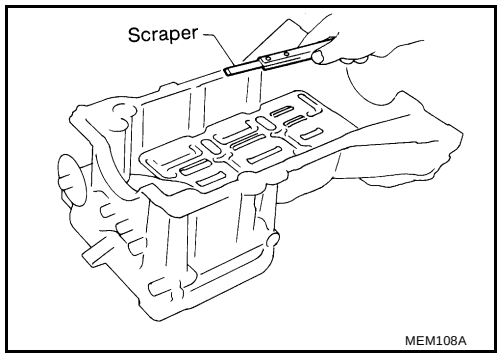

INSTALLATION

1. Installation is in the reverse order of removal.

    CAUTION:
    Wait at least 30 minutes before refilling the engine with oil.

a. Apply Genuine RTV Silicone Sealant or equivalent, to the front cover gasket and the rear oil seal retainer gasket as shown. Refer to GI-42, "RECOMMENDED CHEMICAL PRODUCTS AND SEALANTS" .

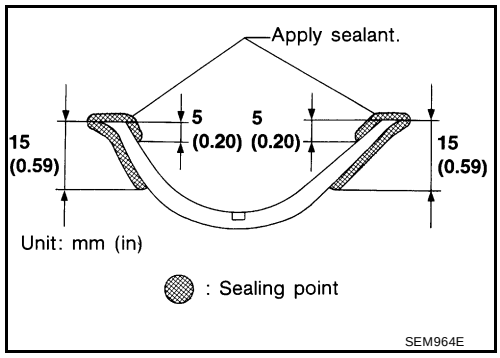

b. Install the front cover gasket and rear oil seal retainer gasket as shown.

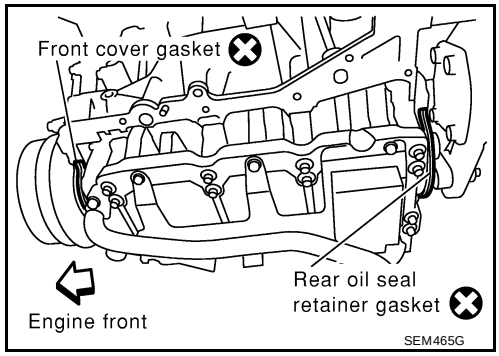

c. Apply a bead of sealant to the cylinder block mating surface of the upper oil pan to a limited portion as shown.
- Use Genuine RTV Silicone Sealant, or equivalent. Refer to GI-42, "RECOMMENDED CHEMICAL PRODUCTS AND SEALANTS" .
- Be sure the sealant is applied to a limited portion as shown, and the sealant is 4.0 - 5.0 mm (0.157 - 0.197 in) or 4.5 - 5.5 mm (0.177 - 0.217 in) wide.
- Attaching should be done within 5 minutes after coating.

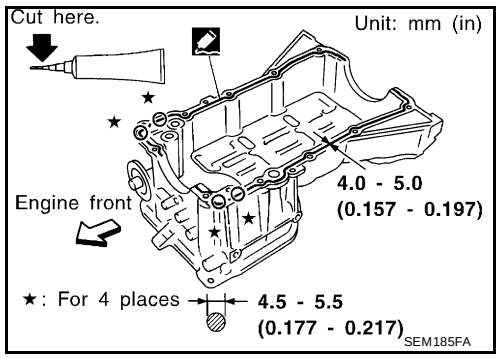

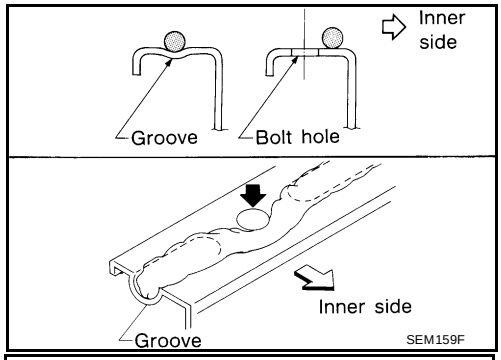

d. Install new O-rings on the cylinder block and oil pump body.

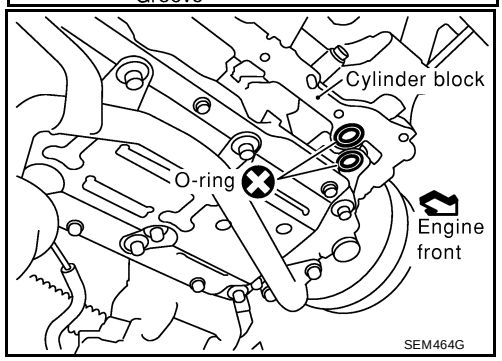

e. Install the upper oil pan.
- Tighten bolts in numerical order.
- Wait at least 30 minutes before refilling the engine with oil.

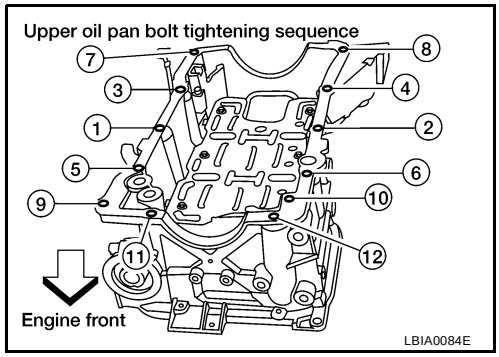

f. Install the four engine-to-transmission bolts. Refer to EM-182, "Removal and Installation" .

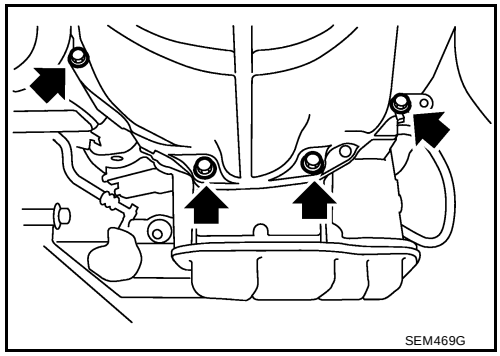

g. Apply a continuous bead of sealant to the lower oil pan.
- Use Genuine RTV Silicone Sealant, or equivalent. Refer to GI-42, "RECOMMENDED CHEMICAL PRODUCTS AND SEALANTS" .
- Be sure the sealant is 4.5 - 5.5 mm (0.177 - 0.217 in) wide.
- Attaching should be done within 5 minutes after coating.

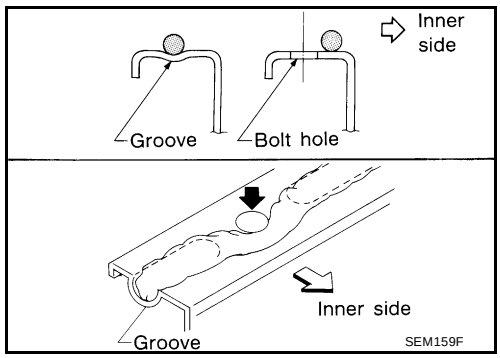

h. Install the lower oil pan. Tighten the bolts in the numerical order as shown.
- Wait at least 30 minutes before refilling the engine with oil.

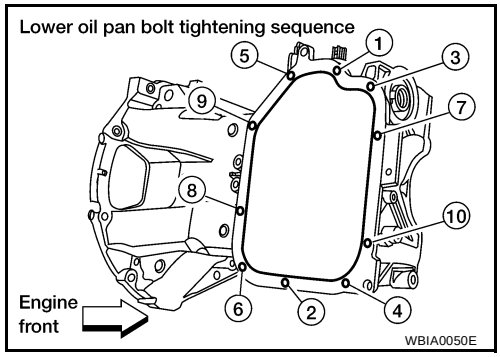

IGNITION COIL

PFP:22448

Removal and Installation

EBS007Q1

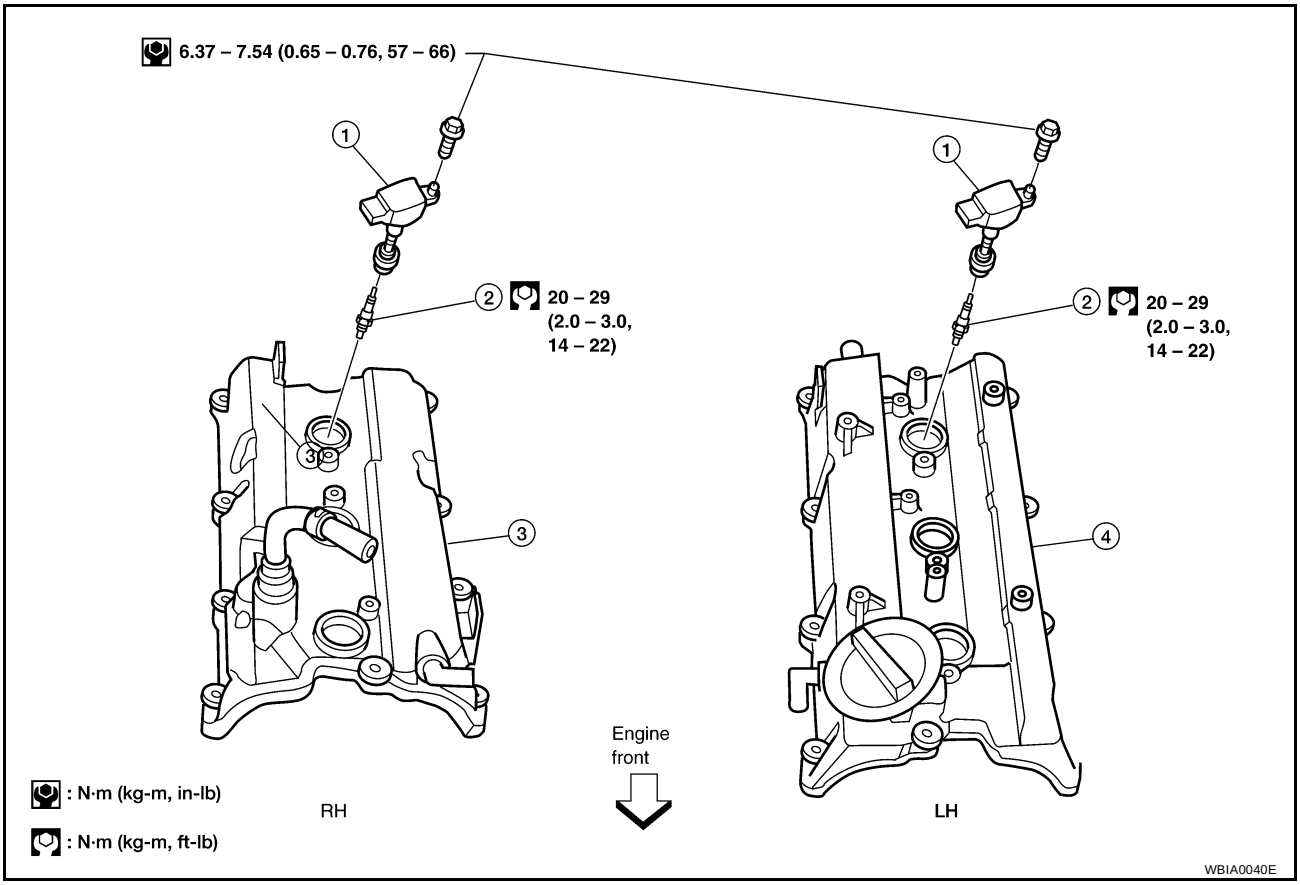

1. Ignition coil
2. Spark plug
3. Rocker cover (right bank)
4. Rocker cover (left bank)

REMOVAL

1. Remove the engine cover, with power tool.
2. Drain engine coolant. Refer to MA-22, "DRAINING ENGINE COOLANT" .
3. Disconnect the mass air flow sensor electrical connector and remove the air cleaner assembly and air intake tubes. Refer to EM-110, "Removal and Installation" .
4. Remove the windshield wiper arms and motor assembly and the front cowl panel. Refer to EI-18, "Removal and Installation" .
5. Remove the intake manifold collector, gasket, and throttle body. Refer to EM-112, "Removal and Installation" .
6. Remove the six ignition coils.

INSTALLATION

Installation is in the reverse order of removal.

SPARK PLUG (PLATINUM-TIPPED TYPE)

PFP:22401

Removal and Installation

EBS007Q2

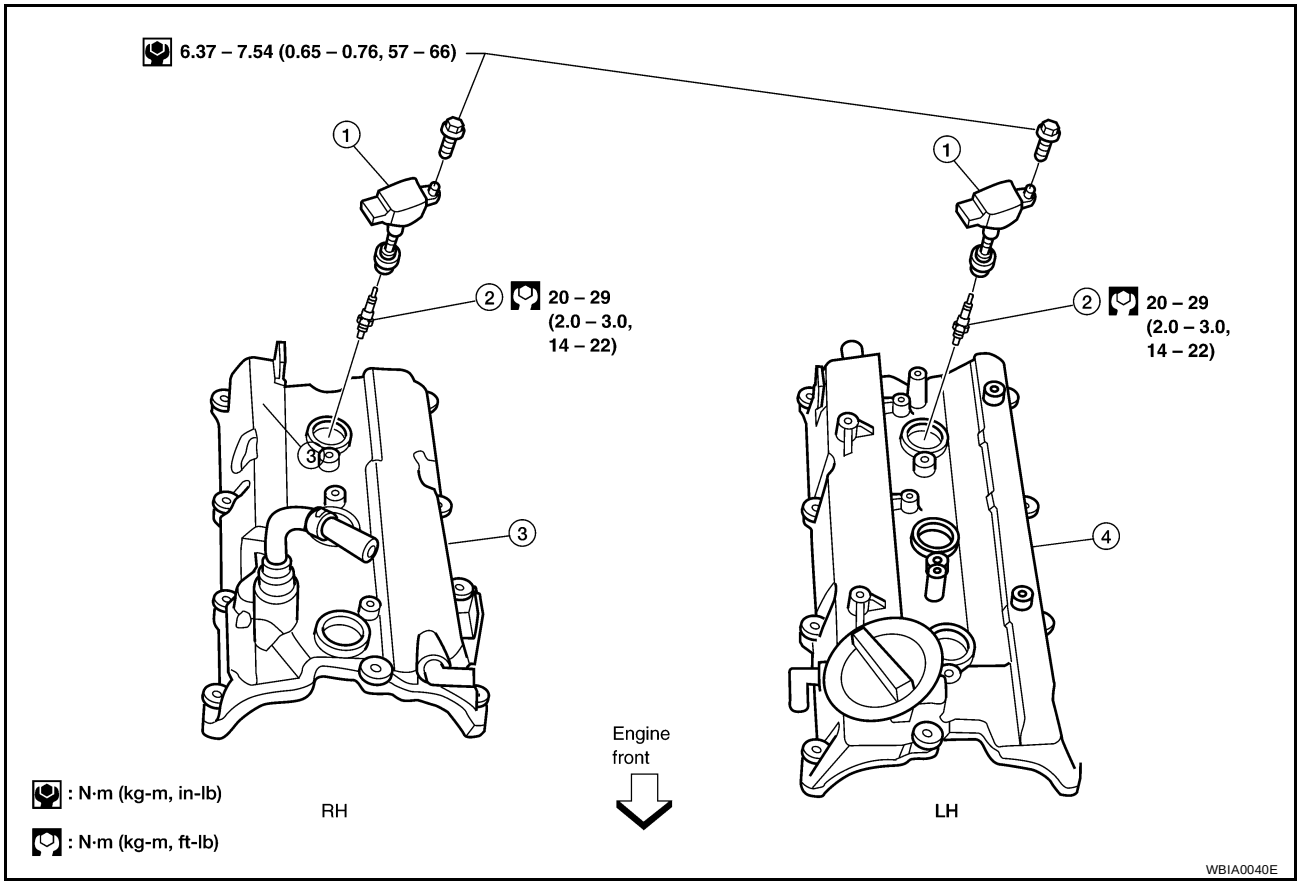

1. Ignition coil
2. Spark plug
3. Rocker cover (right bank)
4. Rocker cover (left bank)

REMOVAL

1. Remove the engine cover, with power tool.
2. Drain engine coolant. Refer to MA-22, "DRAINING ENGINE COOLANT" .
3. Disconnect the mass air flow sensor electrical connector and remove the air cleaner assembly and air intake tubes. Refer to EM-110, "Removal and Installation" .
4. Remove the windshield wiper arms and motor assembly and the front cowl panel. Refer to EI-18, "Removal and Installation" .
5. Remove the intake manifold collector, gasket, and throttle body. Refer to EM-112, "Removal and Installation" .
6. Remove the six ignition coils.
7. Remove the six spark plugs with a suitable tool.
   - If replacing the spark plugs use the correct spark plug for maximum performance. Refer to MA-26, "Changing Spark Plugs (Platinum - Tipped Type)" .

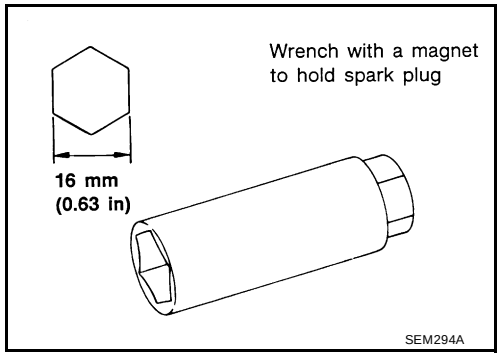

INSPECTION AFTER REMOVAL

CAUTION:
Use standard type spark plug for normal driving conditions.

The hot type spark plug is suitable when fouling occurs with the standard type spark plug under conditions such as:

- frequent engine starts
- low ambient temperatures

The cold type spark plug is suitable when engine spark knock occurs with the standard type spark plug under conditions such as:

- extended highway driving
- frequent high engine revolution

CAUTION:
Do not use a wire brush for cleaning.

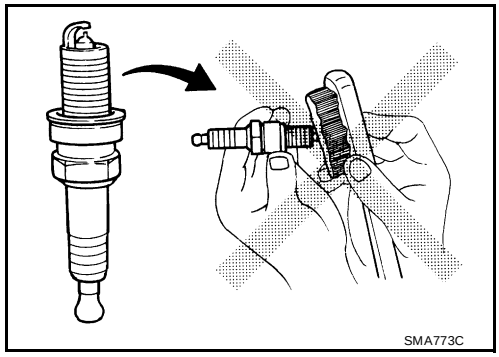

NOTE:
If plug tip is covered with carbon, a spark plug cleaner may be used.

Cleaner air pressure	**: less than 588 kPa (6 kg/cm^2 , 85 psi)**
Cleaning time	**: less than 20 seconds**

NOTE:
Checking and adjusting plug gap is not required between change intervals.

Gap (nominal) **: 1.1 mm (0.043 in)**

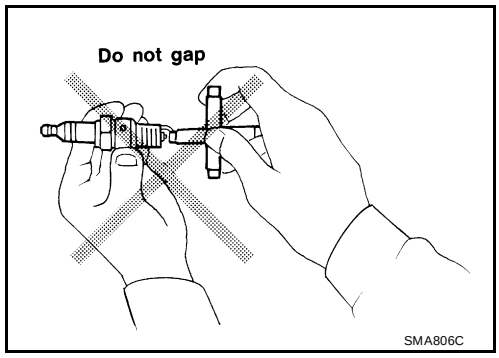

INSTALLATION

Installation is in the reverse order of removal.

FUEL INJECTOR AND FUEL TUBE

PFP:16600

Removal and Installation

EBS007Q3

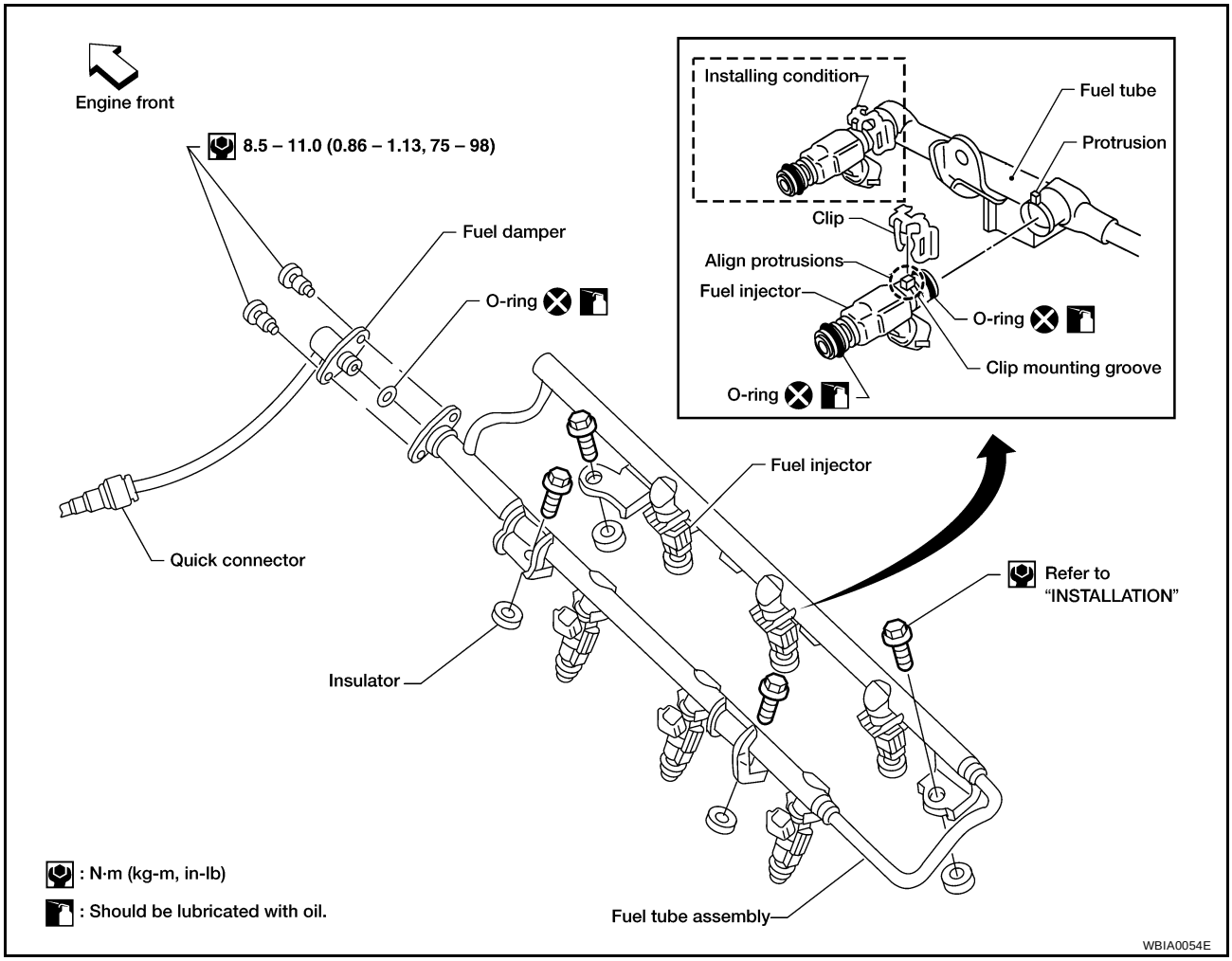

CAUTION:

- **Apply new engine oil when installing the parts that specified to do so in the figure.**
- **Do not remove or disassemble parts unless instructed as shown in the figure.**

REMOVAL

WARNING:

To avoid the danger of being scalded, never drain the coolant when the engine is hot.

1. Remove the engine cover using power tool.
2. Release the fuel pressure.
   Refer to EC-671, "FUEL PRESSURE RELEASE" .
3. Remove air cleaner case lid and mass air flow sensor, and air intake tube as an assembly.
   Refer to EM-110, "Removal and Installation" .
4. Partially drain the coolant when the engine is cool. Refer to EC-1102, "Description" .
5. Disconnect fuel tube quick connector at vehicle piping side.
   Refer to step 5 of EM-113, "REMOVAL" .
6. Disconnect the power brake booster vacuum hose, the coolant hoses from the electric throttle control actuator, the swirl control vacuum lines, the fuel injectors electrical connectors, and the PCV hose.

   CAUTION:

   Cover any engine openings to avoid the entry of any foreign material.
7. Disconnect the electric throttle control actuator electrical connector and coolant hoses.
8. Remove the cowl top grille and the windshield wiper assembly.
   Refer to EI-18, "Removal and Installation" .
9. Disconnect the power steering hose bracket.

10. Remove the vacuum tank from the back of the intake manifold collector.
11. Remove the intake manifold collector pipe and electric throttle control actuator, by loosening the four bolts in a diagonal pattern.

    CAUTION:
    Handle carefully to avoid any shock to the electric throttle control actuator.
12. Loosen the bolts in the order shown, and remove the intake manifold collector using power tool.
13. Remove the fuel rail with the fuel injectors attached, from the intake manifold. Remove the fuel injector O-rings and use new O-rings for installation.

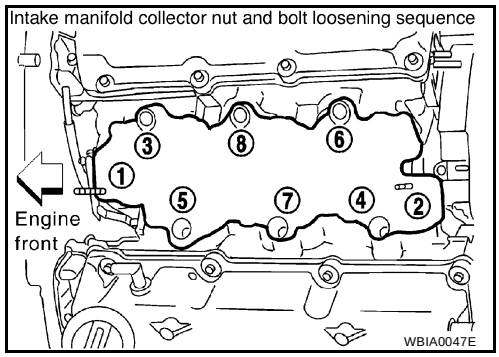

INSTALLATION

1. Installation is in the reverse order of removal.
   - Carefully install new O-rings, including the one used with the fuel damper.
   - **Lubricate O-rings by lightly coating with new engine oil.**
   - **Be careful not to damage the O-rings and surfaces for O-ring sealing surfaces. Do not expand or twist O-rings.**
   - **Discard old clips; replace with new ones.**
   - Position clips in grooves on the fuel injectors.
   - **Make sure that protrusions of fuel injectors are aligned with cutouts of clips after installation.**
   - Align the protrusions of the fuel tube assembly with those of the fuel injectors.

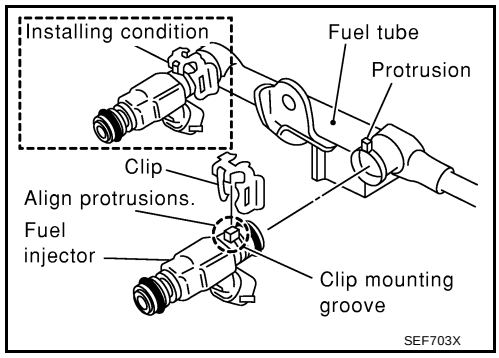

   - After properly inserting the fuel injectors onto the fuel tube assembly, check that the fuel tube protrusions are engaged with those of fuel injectors, and the flanges of the fuel tube assembly are fully engaged with the clips.
   - Tighten fuel tube assembly mounting bolts as shown, in two steps:

     1st step : 9.3 - 10.8 N·m (0.95 - 1.1 kg-m, 6.2 - 7.9 ft-lb)

     2nd step : 20.6 - 26.5 N·m (2.1 - 2.7 kg-m, 16 - 19 ft-lb)

     CAUTION:
     - **After properly connecting fuel tube assembly to injector and fuel hose, check connection for fuel leakage.**

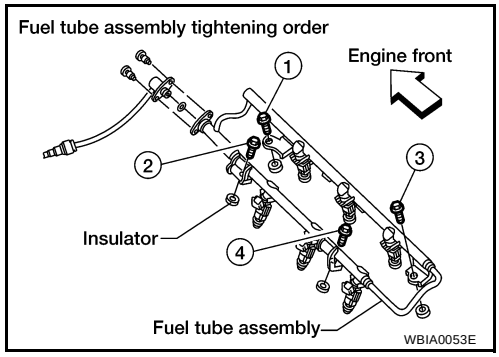

   - Install the intake manifold collector bolts in the numerical order as shown.

     Intake manifold collector bolts : 18 - 21 N·m (1.8 - 2.2 kg-m, 13 - 15 ft-lb

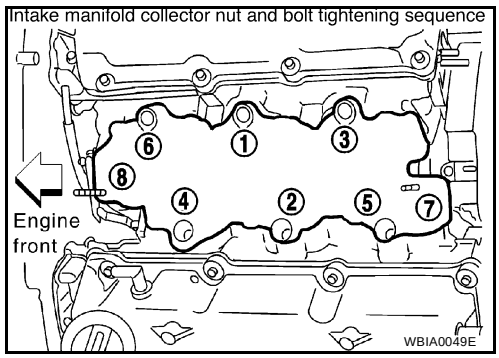

- Tighten the mounting bolts of the intake manifold collector pipe and electric throttle control actuator assembly diagonally to specification.

Electric throttle control actuator bolts : 7.2 - 9.8 N·m (0.74 - 0.97 kg-m, 64 - 84 ft-lb)

- After installation, it is necessary to re-calibrate the electric throttle control actuator.
  - Perform "Throttle Control Closed Position Learning" when the harness connector of the electric throttle control actuator is disconnected. Refer to EC-657, "BASIC SERVICE PROCEDURE" .
  - Perform "Idle Air Volume Learning" when the electric throttle control actuator is replaced. Refer to EC-657, "BASIC SERVICE PROCEDURE" .
- Install the quick connector.
  Refer to EM-114, "INSTALLATION" .

INSPECTION AFTER INSTALLATION

Check for fuel leaks

1. Start the engine, and run it for a few minutes with the engine at idle.
2. Stop the engine, and check for fuel leaks both visually and by odor.

   NOTE:
   Use mirrors for checking at points out of clear sight.

   CAUTION:
   Do not touch the engine immediately after stopped, as engine becomes extremely hot.

ROCKER COVER

PFP:13264

Removal and Installation

EBS007Q4

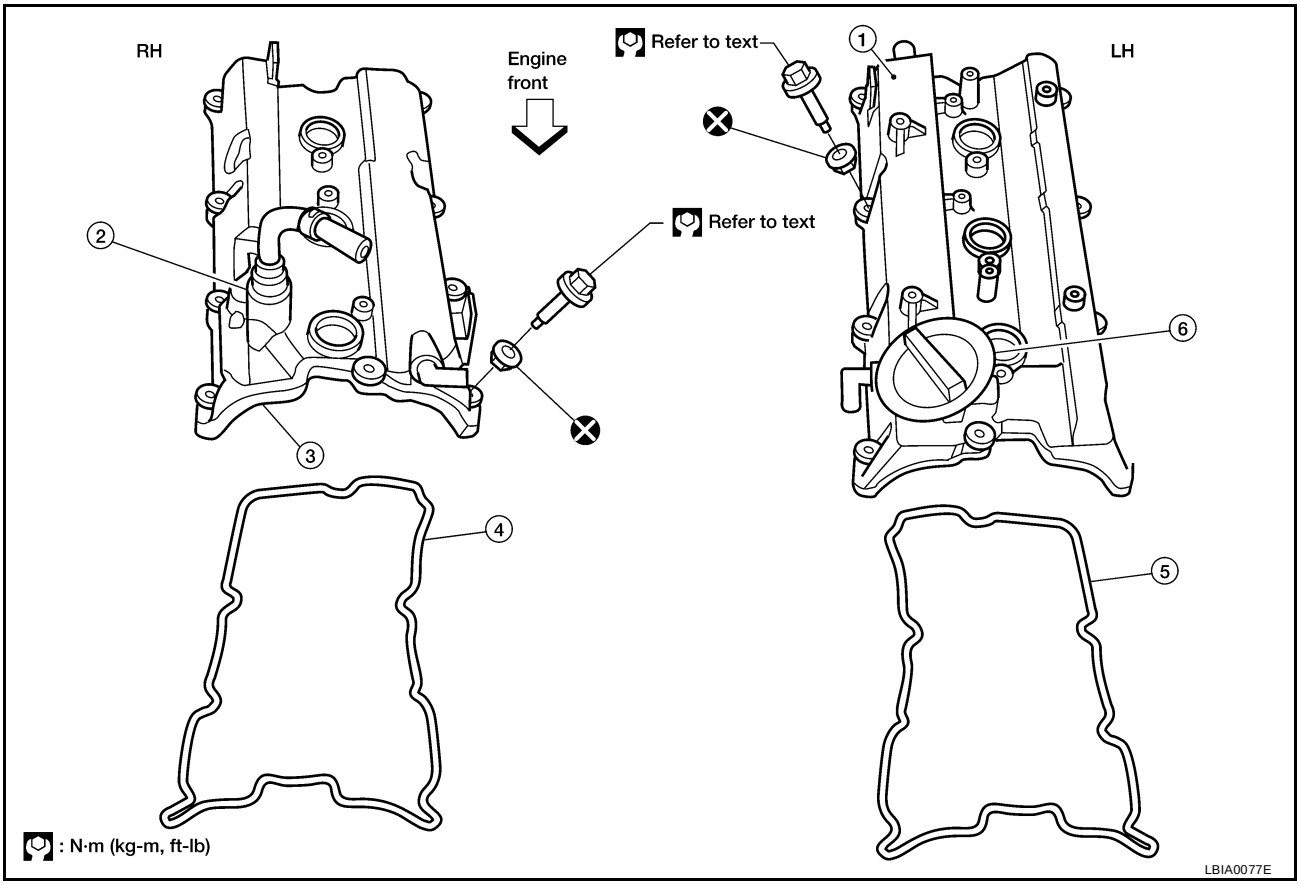

1. Rocker cover (left bank)	2. PCV valve	3. Rocker cover (right bank)
4. Rocker cover gasket (right bank)	5. Rocker cover (left bank)	6. Oil filler cap

REMOVAL

1. Remove the engine cover, using power tool.
2. Drain engine coolant. Refer to MA-22, "DRAINING ENGINE COOLANT" .
3. Disconnect the mass air flow sensor electrical connector and remove the air cleaner assembly and air intake tubes. Refer to EM-110, "Removal and Installation" .
4. Remove the windshield wiper arms and motor assembly and the front cowl panel. Refer to WW-25, "Removal and Installation for Wiper Motor and Linkage" .
5. Remove the intake manifold collector using power tool. Remove gasket and the electric throttle control actuator. Refer to EM-112, "Removal and Installation" .
6. Remove the six ignition coils. Refer to EM-126, "Removal and Installation" .
7. Remove the two intake valve timing control solenoid valves and gaskets. Refer to EC-773, "INTAKE VALVE TIMING CONTROL SOLENOID VALVE" .

8. Remove RH and LH rocker covers from cylinder head.
   - Follow the loosening sequence for each side rocker cover bolts as shown.

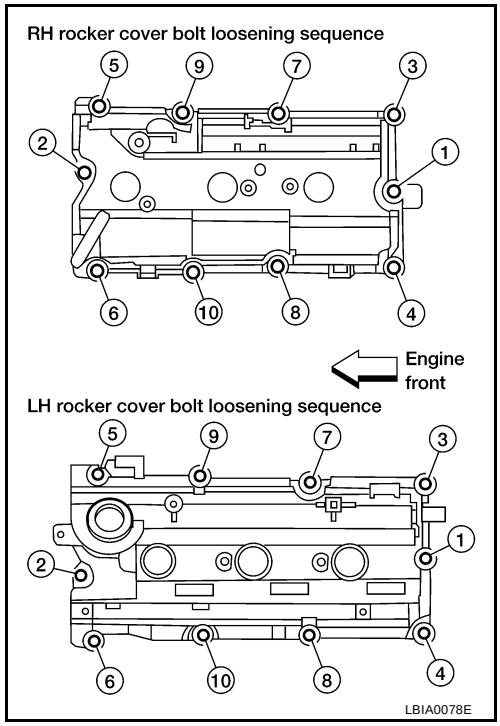

INSTALLATION

Installation is in the reverse order of removal.

- Apply sealant to the areas on the front corners. Refer to EM-148, "POSITION FOR APPLYING LIQUID GASKET" .
- Use Genuine RTV Silicone Sealant or equivalent. Refer to GI-42, "RECOMMENDED CHEMICAL PRODUCTS AND SEALANTS" .
- Tighten the rocker cover bolts in two stages and in the numerical order as shown.

Stage 1 rocker cover bolts	**: 0.96 - 2.96 N·m (0.10 - 0.30 kg-m, 9 - 26 in-lb)**
Stage 2 rocker cover bolts	**: 7.33 - 9.33 N·m (0.75 - 0.95 kg-m, 65 - 82 in-lb)**

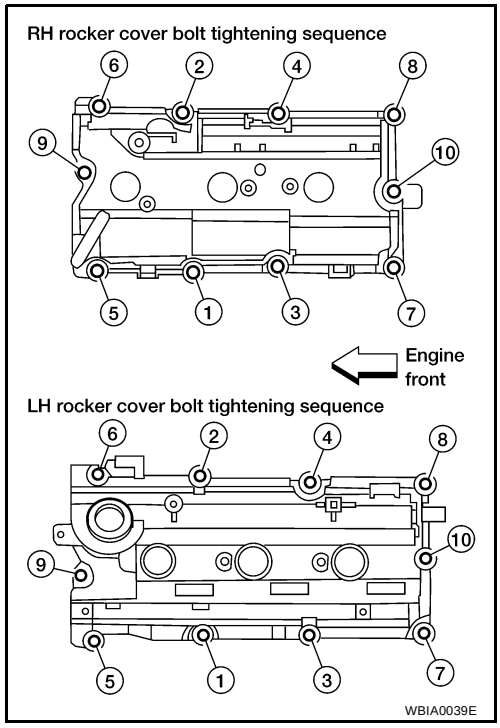

CAMSHAFT

PFP:13001

Removal and Installation

EBS007Q5

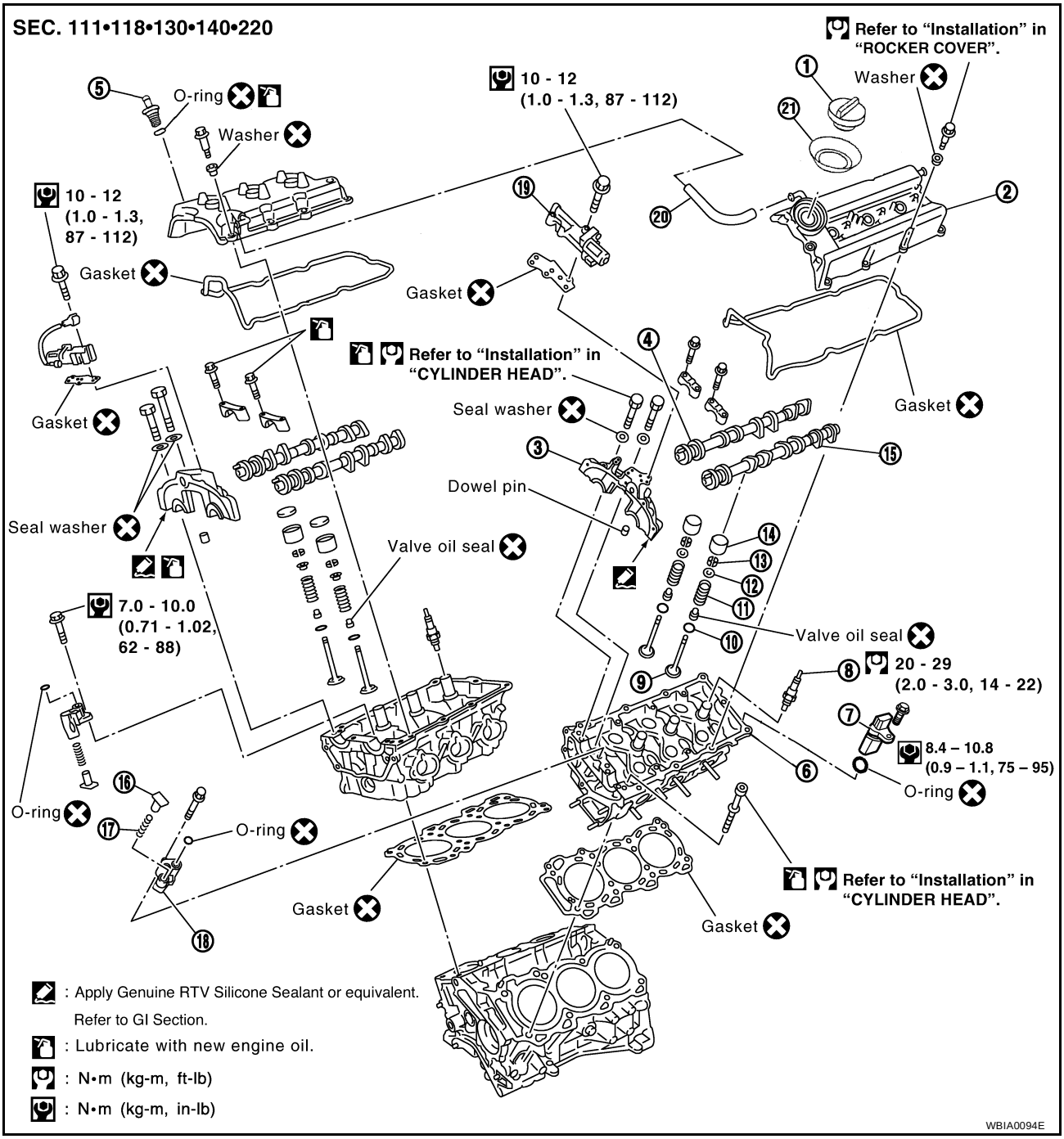

1.	Oil filler cap	2.	Rocker cover (LH)	3.	Camshaft bracket (LH)
4.	Camshaft (INT)	5.	PCV valve	6.	Cylinder head
7.	Camshaft position sensor (PHASE)	8.	Spark plug	9.	Valve
10.	Valve spring seat	11.	Valve spring	12.	Valve spring retainer
13.	Valve collet	14.	Valve lifter	15.	Camshaft (EXH)
16.	Chain tensioner	17.	Tensioner spring	18.	Tensioner sleeve
19.	IVTC solenoid valve	20.	PCV hose	21.	Oil catcher

CAUTION:

Apply new engine oil to parts marked in illustration before installation.

REMOVAL

1. Remove the timing chains. Refer to EM-149, "Removal" .
2. Remove the fuel rail and injectors. Refer to EM-129, "Removal and Installation" .
3. Remove the IVTC (intake valve timing control) solenoid valves.
   - Discard the IVTC solenoid valve gaskets and use new gaskets for installation.

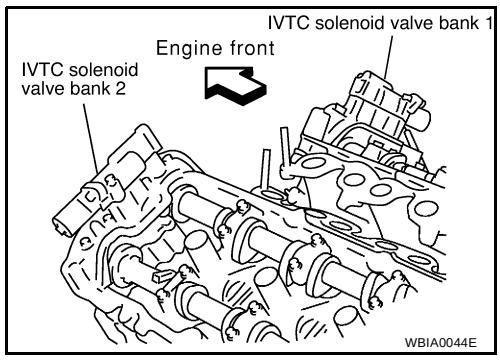

4. Remove the intake and exhaust camshaft brackets and the camshafts.
   - Mark the camshafts, camshaft brackets, and bolts so they are placed in the same position and direction for installation.
   - Equally loosen the camshaft bracket bolts in several steps in the numerical order shown.

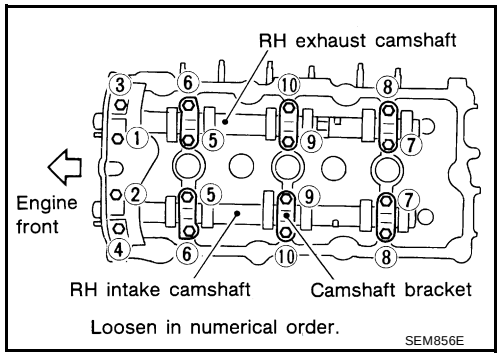

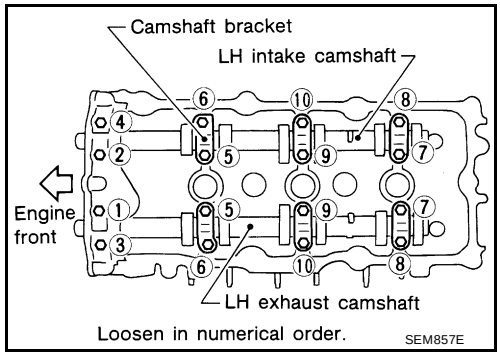

INSTALLATION

1. Before installation, remove any old RTV Silicone Sealant from component mating surfaces using a scraper.
   - Remove the old RTV Silicone Sealant from the bolt holes and threads.
   - Do not scratch or damage the mating surfaces.

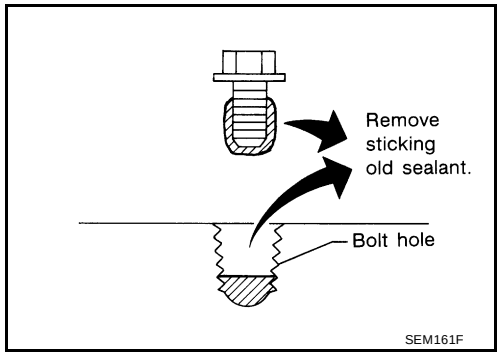

2. Before installing the front cam bracket, remove the old RTV Silicone Sealant from the mating surface using a scraper.
   - Do not scratch or damage the mating surface.

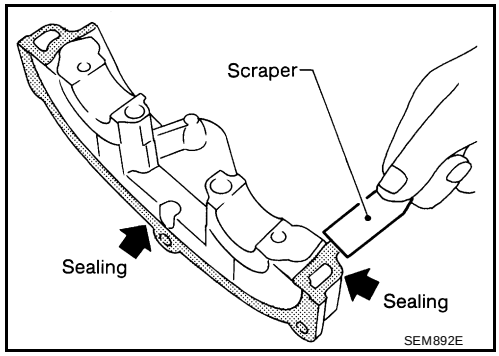

3. Turn the crankshaft until No. 1 piston is set at TDC on the compression stroke.
   - The crankshaft key should line up with the right bank cylinder center line as shown.

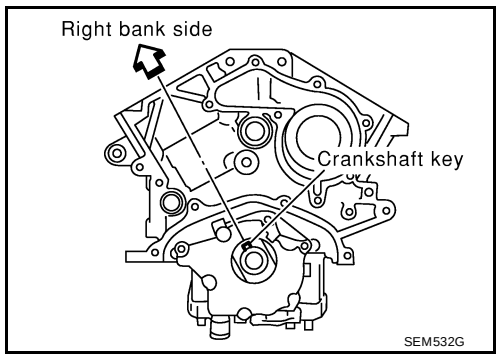

4. Install camshaft chain tensioners on both sides of cylinder head.

Camshaft chain tensioner bolts	**: 7 - 10 N·m (0.7 - 1.0 kg-m, 62 - 89 in-lb)**

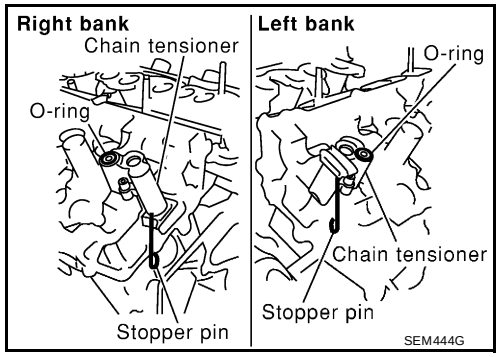

5. Install exhaust and intake camshafts and camshaft brackets.
   - Intake camshaft has a drill mark on camshaft sprocket mounting flange.

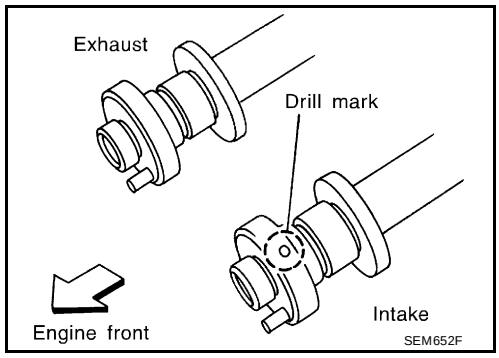

   - Follow your identification marks made during removal, or follow the identification marks that are present on the new camshafts components for proper placement and direction of the components.

Bank	INT/EXH	ID mark	Drill mark	Paint marks	
				M1	M2
RH	INT	RE	Yes	Yes	No
	EXH	RE	No	No	Yes

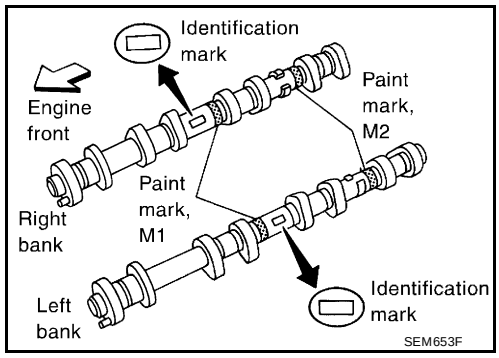

Bank	INT/EXH	ID mark	Drill mark	Paint marks	
				M1	M2
LH	INT	LH	Yes	Yes	No
	EXH	LH	No	No	Yes

- Position the camshafts:
  RH exhaust camshaft dowel pin at about 10 o'clock.
  LH exhaust camshaft dowel pin at about 2 o'clock.

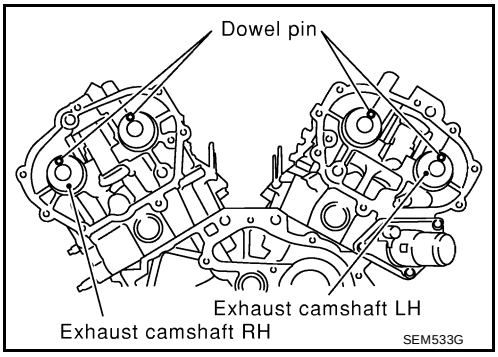

6. Before installing camshaft brackets, apply sealant to mating surface of No. 1 camshaft bracket.
   - Use Genuine RTV Silicone Sealant, or equivalent. Refer to GI-42, "RECOMMENDED CHEMICAL PRODUCTS AND SEALANTS" .

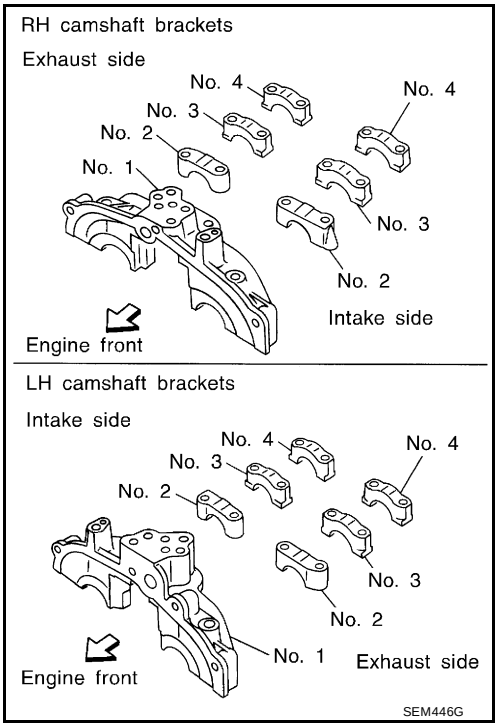

- Before installation, wipe off any protruding sealant.
- Refer to EM-102, "LIQUID GASKET APPLICATION PROCEDURE" .

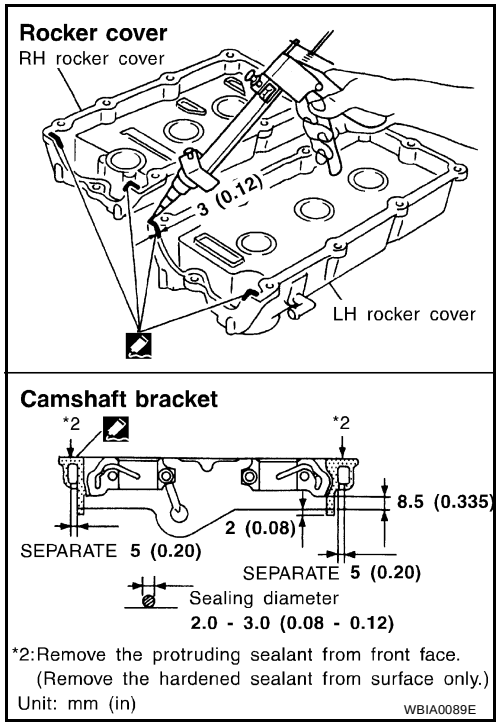

- Install camshaft brackets in their original positions and direction. Align the stamp marks as shown.
- If checking and adjusting any part of valve assembly or camshaft, check valve clearance according to the reference data. Refer to EM-141, "Valve Clearance" .

Valve clearance (cold) Intake	**: 0.26 - 0.34 mm (0.010 - 0.013 in)**
Valve clearance (cold) Exhaust	**: 0.29 - 0.37 mm (0.011 - 0.015 in)**

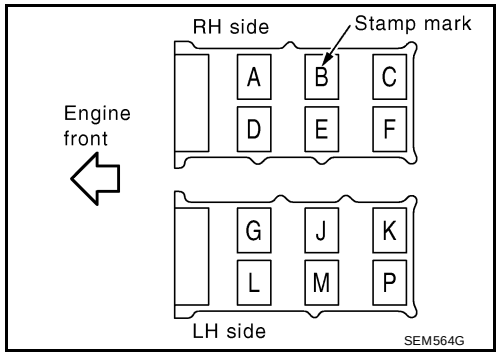

- Lubricate the threads and seat surfaces of the camshaft bracket bolts with new engine oil before installation.

- Tighten the camshaft brackets in the following steps, in numerical order as shown.

Step	Tightening torque	Tightening order
1	1.96 N·m (0.2 kg-m, 17 in-lb)	Tighten No.s 7 to 10, then tighten 1 to 6 in order as shown.
2	6 N·m (0.6 kg-m, 52 in-lb)	Tighten in numerical order as shown.
3	9.02 - 11.8 N·m (0.92 - 1.20 kg-m, 79.9 - 104.2 in-lb)	Tighten No. 1 -6 in the numerical order as shown.
4	8.30 - 10.3 N·m (0.90 - 1.00 kg-m, 74 - 91 in-lb)	Tighten No. 7 - 10 in the numerical order as shown

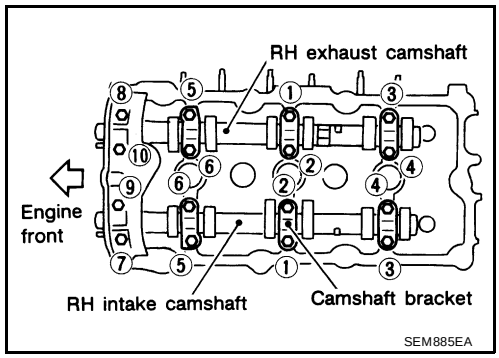

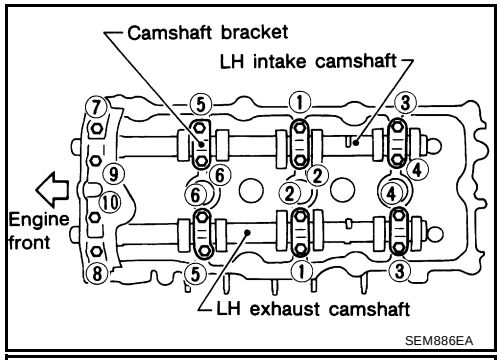

7. Install the IVTC solenoid valves with new gaskets.

IVTC solenoid valve bolts	**: 10 - 12 N·m (1.0 - 1.3 kg-m, 87 - 112 in-lb)**

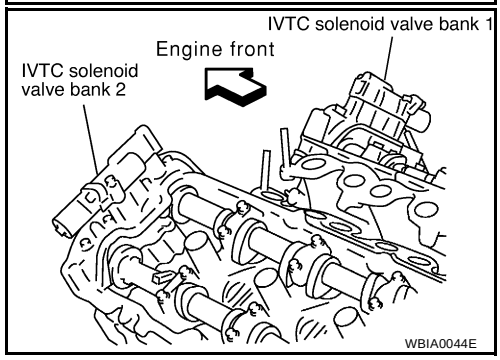

8. Install the fuel rail and injectors. Refer to EM-129, "Removal and Installation" .
9. Install the timing chains. Refer to EM-155, "Installation" .

INSPECTION AFTER REMOVAL

Camshaft Visual Check

Check camshaft for scratches, seizure and wear. Replace if necessary.

Camshaft Runout

1. Measure the camshaft runout at "A" and "B" as shown.
2. Set dial gauges vertically as shown.
3. Turn camshaft in one direction slowly by hand, measure the camshaft runout on the dial gauges.
   - Runout is the largest indicator reading after one full revolution.

Maximum runout limit	**: 0.05 mm (0.0020 in)**

4. If actual runout exceeds the limit, replace the camshaft.

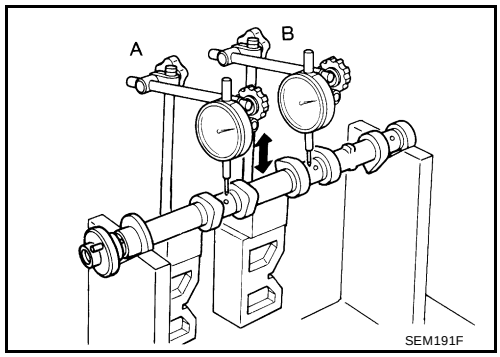

Camshaft Cam Lobe Height

1. Measure camshaft cam lobe height as shown.

Standard cam lobe height - intake and exhaust	**: 44.865 - 44.055 mm (1.7763 - 1.7738 in)**
Cam lobe wear limit	**: 0.2 mm (0.008 in)**

2. If wear has reduced the lobe height below specifications, replace the camshaft.

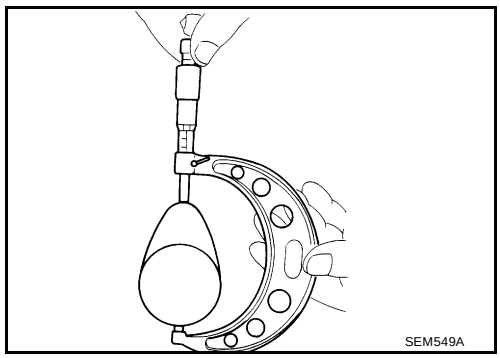

Camshaft Journal Clearance

Outer Diameter of Camshaft Journal

- Measure outer diameter of camshaft journal as shown.

Standard outer diameter, No.1	**: 25.935 - 25.955 mm (1.0211 - 1.0218 in)**
Standard outer diameter, No.2, 3, 4	**: 23.445 - 23.465 mm (0.9230 - 0.9238 in)**

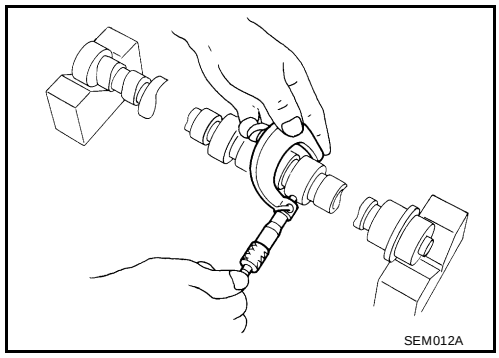

Inner Diameter of Camshaft Bracket

1. Tighten camshaft bracket bolt with specified torque.
2. Using inside micrometer, measure inner diameter "A" of camshaft bearing.

Standard inner diameter No.1	**: 26.000 - 26.021 mm (1.0236 - 1.0244 in)**
Standard inner diameter No.2, 3, 4	**: 23.500 - 23.521 mm (0.9252 - 0.9260 in)**

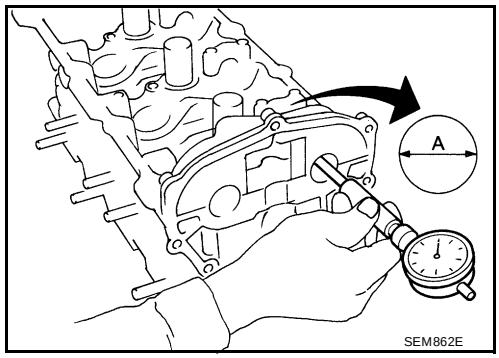

Calculation of Camshaft Journal Clearance

(Journal clearance) = (inner diameter of camshaft bracket) – (outer diameter of camshaft journal)

Standard No.1	**: 0.045 - 0.086 mm (0.0018 - 0.0034 in)**
Standard No.2, 3, 4	**: 0.035 - 0.076 mm (0.0014 - 0.0030 in)**
Limit	**: 0.15 mm (0.0059 in)**

- When out of the specified range, replace either or both camshaft and cylinder head.

  NOTE:
  Inner diameter of camshaft bracket is manufactured together with cylinder head. Replace the whole cylinder head assembly.

Camshaft End Play

1. Install the camshaft in the cylinder head.
2. Install dial gauge in thrust direction on front end of camshaft. Measure end play when camshaft is moved forward/backward (in direction to axis) as shown.

Standard	**: 0.115 - 0.188 mm (0.0045 - 0.0074 in)**
Limit	**: 0.24 mm (0.0094 in)**

   - If out of the specified range, replace with new camshaft and measure again.
   - If out of the specified range again, replace with new cylinder head.

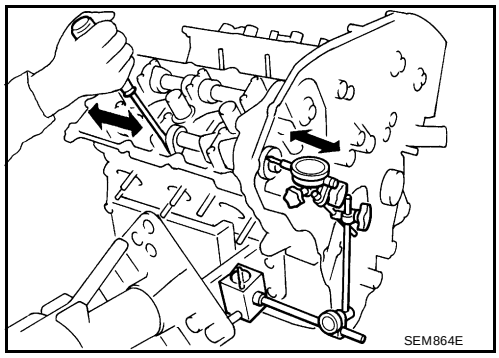

Camshaft Sprocket Runout

1. Install camshaft sprocket on camshaft.
2. Measure camshaft sprocket runout.

Runout : Less than 0.15 mm (0.0059 in)

3. If sprocket runout exceeds the limit, replace camshaft sprocket.

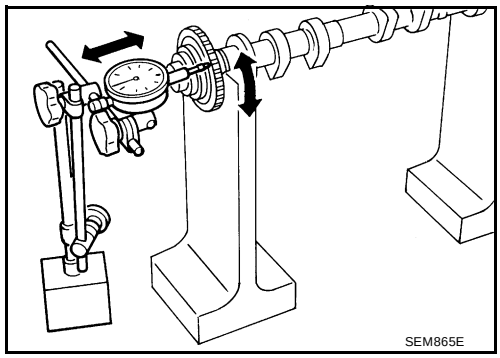

Valve Clearance

EBS007Q6

CHECKING

CAUTION:

Check valve clearance while engine is cold and not running.

1. Remove the air duct with air cleaner case, collectors, hoses, wires, harnesses, and connectors.
2. Remove the intake manifold collectors.
3. Remove the ignition coils and spark plugs.
4. Remove the rocker covers.
5. Set No.1 cylinder at TDC on its compression stroke.
   - Align pointer with TDC mark on crankshaft pulley.

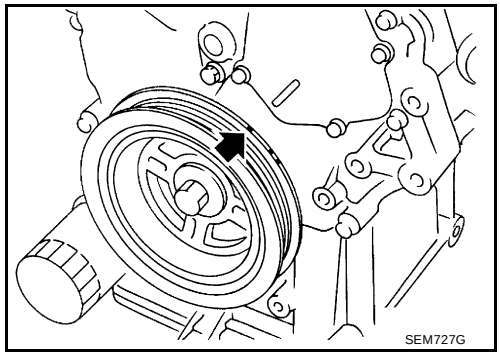

   - Check that the valve lifters on No.1 cylinder are loose and valve lifters on No.4 are tight. If not, turn the crankshaft one full revolution (360°) and align as above.

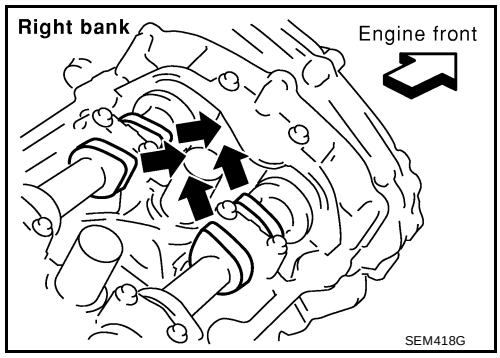

6. Check only the valves as shown.

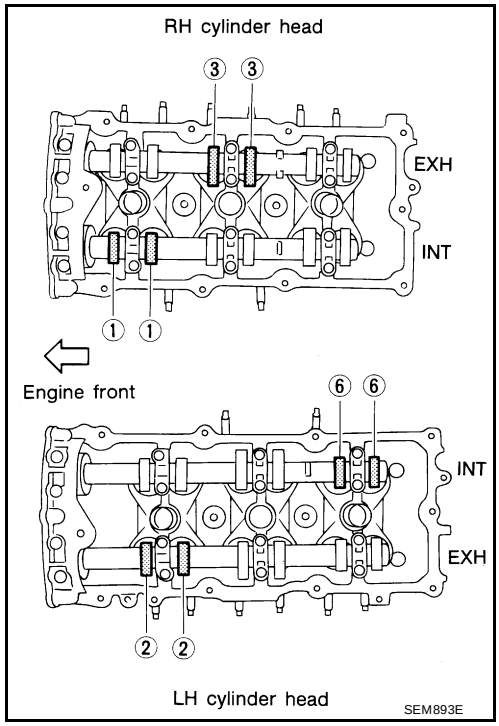

Crank Position	Valve No. 1	Valve No. 2	Valve No. 3	Valve No. 6
No. 1 TDC	Intake	Exhaust	Exhaust	Intake

- Using a feeler gauge, measure the clearance between the valve lifter and camshaft.
- Record any valve clearance measurements which are out of specification. They will be used later to determine the required replacement lifter size.

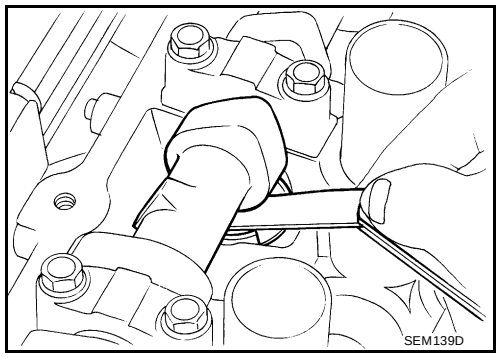

7. Turn crankshaft 240° and align as above.
8. Set No.3 cylinder at TDC on its compression stroke.

9. Check only those valves as shown.

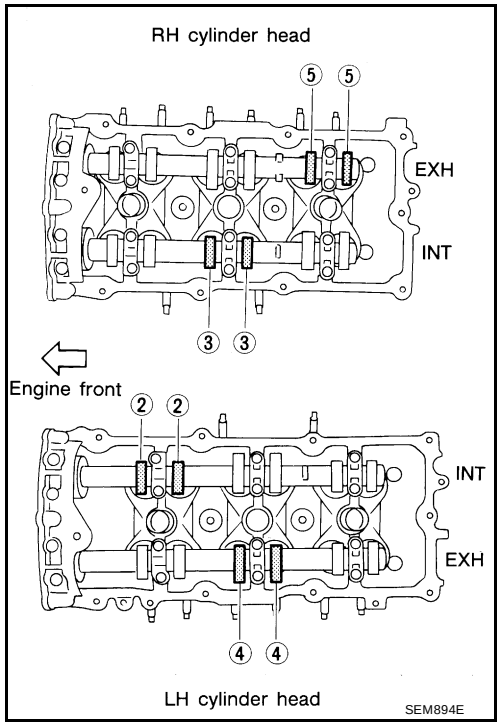

Crank Position	Valve No. 2	Valve No. 3	Valve No. 4	Valve No. 5
No. 3 TDC	Intake	Intake	Exhaust	Exhaust

10. Turn the crankshaft 240° and align as above.
11. Set No.5 cylinder at TDC on its compression stroke.
12. Check only those valves as shown.

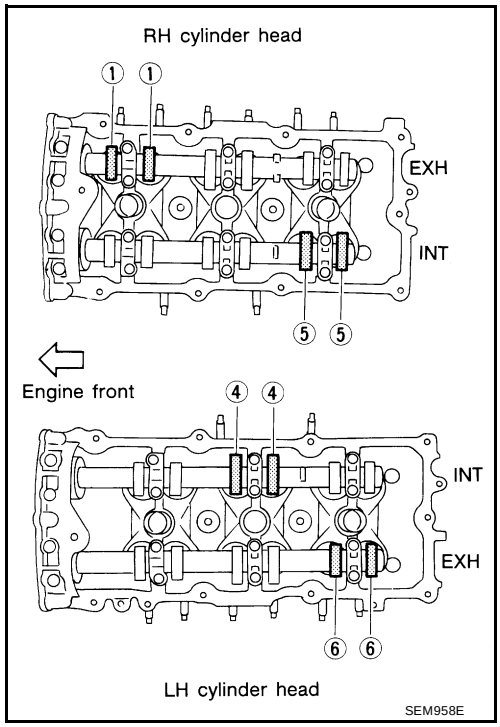

Crank Position	Valve No. 1	Valve No. 4	Valve No. 5	Valve No. 6
No. 5 TDC	Exhaust	Intake	Intake	Exhaust

13. If the valve clearances are out of specification, adjust the valve clearances.

    Valve Clearance Specification for Checking (Cold)

    Intake : 0.26 - 0.34 mm (0.010 - 0.013 in)

    Exhaust : 0.29 - 0.37 mm (0.011 - 0.015 in)

    If all valve clearances are within specification, install the following components:
    - Intake manifold collectors
    - Rocker covers
    - All spark plugs
    - All ignition coils

ADJUSTING

CAUTION:

Adjust valve clearance while engine is cold.

NOTE:

Perform adjustment by selecting the correct head thickness of the valve lifter (adjusting shims are not used).

1. Remove the camshaft.
2. Remove the valve lifter that was measured as being outside the standard specifications.
3. Measure the center thickness of the removed lifter with a micrometer, as shown.

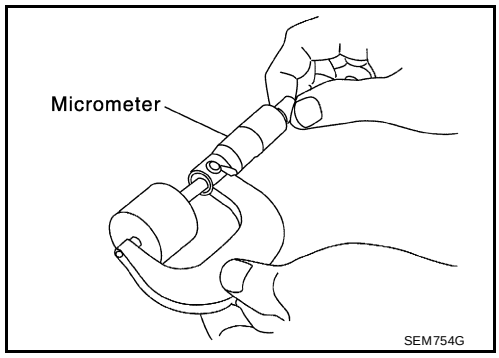

4. Use the equation below to calculate the replacement valve lifter thickness.
   Valve lifter thickness calculation equation: t = t1 + (C1 - C2)
   t = thickness of the replacement lifter
   t1 = thickness of the removed lifter
   C1 = measured valve clearance
   C2 = standard valve clearance
   - The thickness of the new valve lifter can be identified by the stamp mark on the reverse side (inside the lifter).
   - Available thickness of the valve lifter (factory setting): 7.88 - 8.36 mm (0.3102 - 0.3291 in), in 0.02 mm (0.0008 in) increments, in 25 sizes (intake / exhaust).

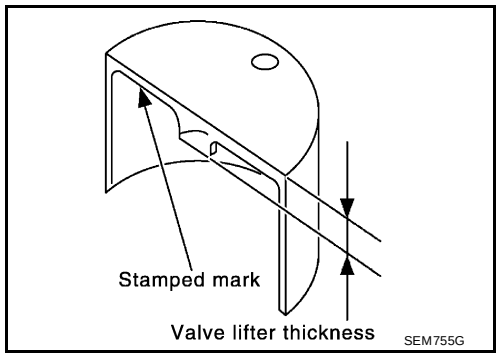

   Value lifter thickness:

   Intake : 0.30 mm (0.012 in)

   Exhaust : 0.33 mm (0.013 in)

   Valve Shims

Stamp Mark	Thickness of Valve Lifter
Starting: 788C	7.88 mm (0.3102 in)
Ending: 836C	8.36 mm (0.3291 in)

5. Install the selected replacement valve lifter.
6. Install the camshaft.
7. Rotate the crankshaft a few turns by hand.
8. Confirm that the valve clearances are within specification.

9. After the engine has been run to full operating temperature, confirm that the valve clearances are within specification.

Valve Clearance	Cold	Hot* (reference data)
Intake	0.26 - 0.34 mm (0.010 - 0.013 in)	0.32 - 0.40 mm (0.013 - 0.016 in)
Exhaust	0.29 - 0.37 mm (0.011 - 0.015 in)	0.33 - 0.41 mm (0.013 - 0.016 in)

* Approximately 80°C (176°F)

TIMING CHAIN

PFP:13028

Components

EBS007Q7

SEC. 120•130•150•210•275

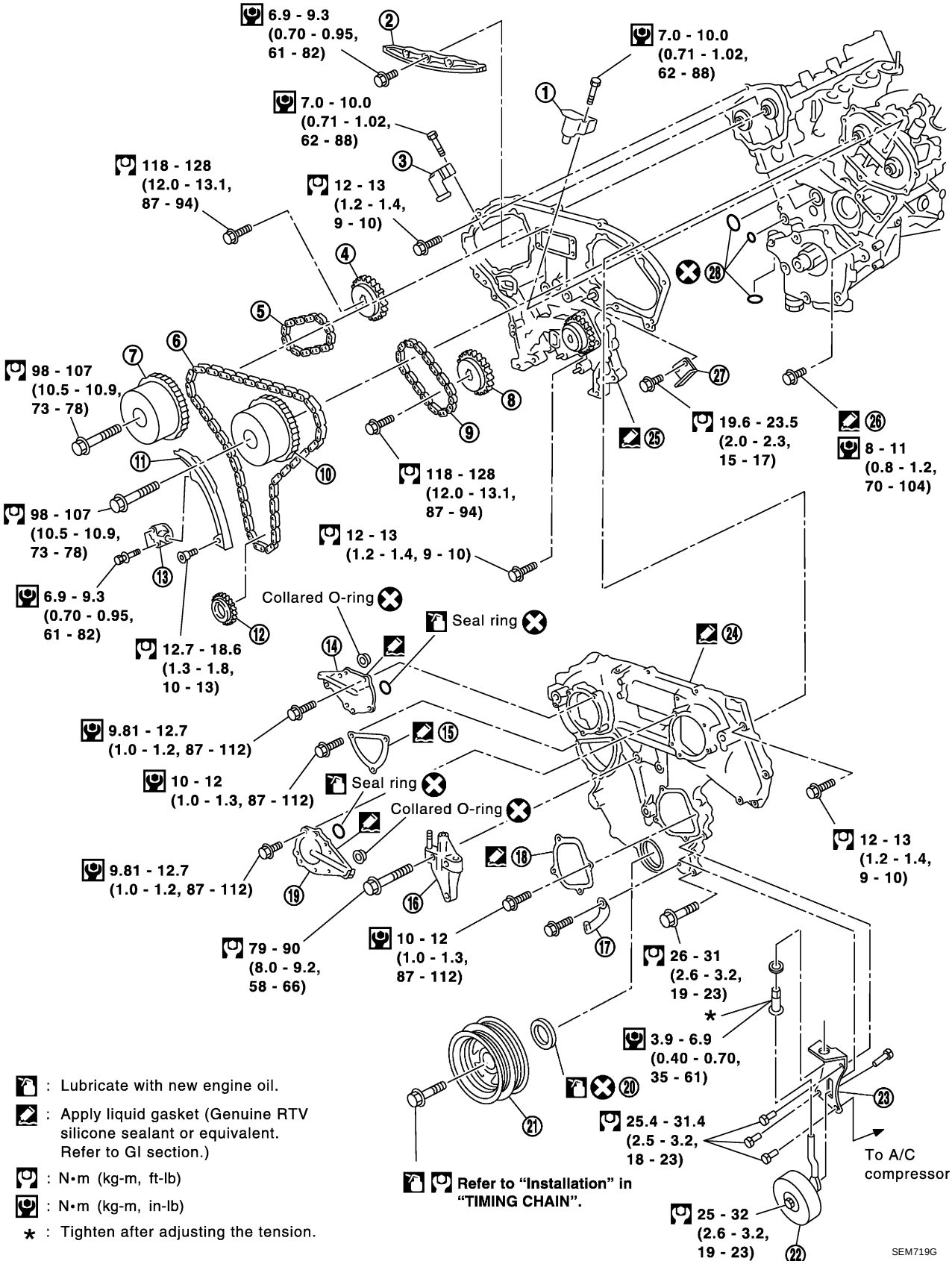

1. Timing chain tensioner
2. Internal chain guide
3. Timing chain tensioner
4. Camshaft sprocket (EXH)
5. Timing chain (secondary)
6. Timing chain (primary)
7. Camshaft sprocket (INT)
8. Camshaft sprocket (EXH)
9. Timing chain (secondary)
10. Camshaft sprocket (INT)
11. Slack guide
12. Crankshaft sprocket
13. Timing chain tensioner
14. IVTC valve cover
15. Chain tensioner cover
16. RH engine mounting bracket
17. Water hose clamp
18. Water pump cover
19. IVTC valve cover
20. Front oil seal
21. Crankshaft pulley
22. Idler pulley
23. Idler pulley bracket
24. Front timing chain case
25. Rear timing chain case
26. Water drain plug
27. Tension guide
28. O-ring

POSITION FOR APPLYING LIQUID GASKET

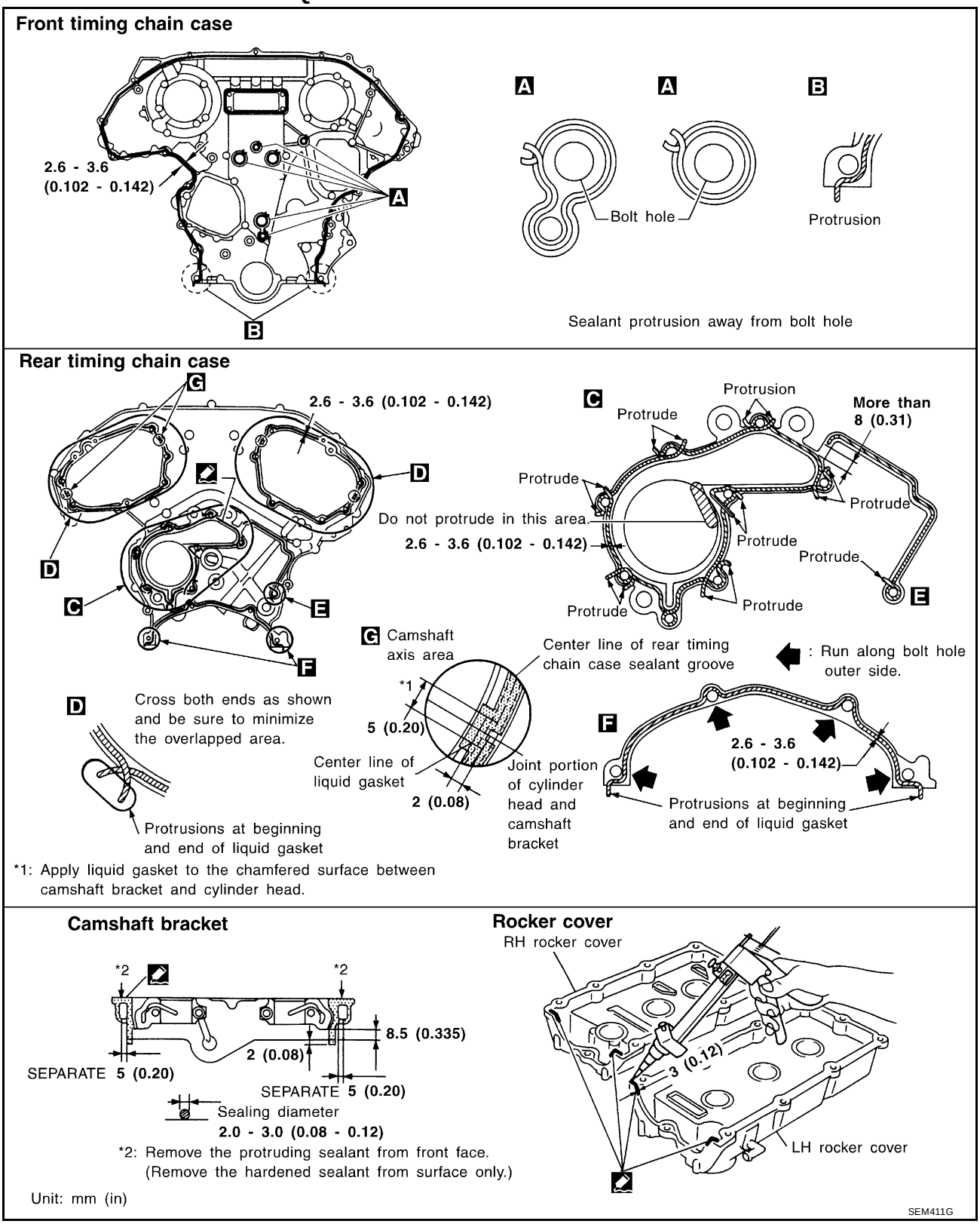

- Refer to EM-102, "Precautions for Liquid Gasket" .
- Before installation, wipe off any protruding sealant.

CAUTION:

- **After removing timing chain, do not turn the crankshaft and camshaft separately, or the valves will strike the pistons.**
- **When installing camshafts, chain tensioners, oil seals, or other sliding parts, lubricate contacting surfaces with new engine oil.**

- **Apply new engine oil to bolt threads and seat surfaces when installing camshaft sprockets, camshaft brackets, and crankshaft pulley.**
- **Before disconnecting fuel hose, release fuel pressure. Refer to EC-671, "FUEL PRESSURE RELEASE" .**
- **Before removing the upper oil pan, remove the crankshaft position sensor (POS).**
- **Be careful not to damage sensor edges.**
- **Do not spill engine oil or coolant on drive belts.**

Removal

EBS007Q8

1. Release the fuel pressure.
   Refer to EC-671, "FUEL PRESSURE RELEASE" .
2. Remove the battery.
3. Drain the engine cooling system.
   Refer to EC-1102, "Description" .
4. Drain engine oil.
   Refer to MA-24, "Changing Engine Oil" .
5. Remove engine cover with power tool.
6. Remove the intake air duct with the air cleaner case lid and mass air flow sensor.
7. Remove the engine coolant reservoir.
8. Disconnect the fuel rail quick connector at the vehicle piping side.
   Refer to EM-129, "Removal and Installation" .
9. Remove the cowl top grille and the windshield wiper assembly.
   Refer to EI-18, "Removal and Installation" .
10. Remove the front RH wheel and tire with power tool.
11. Remove the engine undercovers with power tool.
12. Remove the inner fender splash shield with power tool.
13. Remove the drive belts and idler pulley.
14. Recover the A/C system R134a and remove the A/C compressor.
    Refer to MTC-16, "REFRIGERATION SYSTEM" .
15. Dismount the power steering oil pump and reservoir tank. Tie them down with wire to reposition them out of the way.
16. Remove the lower and upper oil pans.
    Refer to EM-120, "Removal and Installation" .
17. Remove the A/C high pressure line.
    Refer to MTC-79, "REFRIGERANT LINES" .
18. Remove the alternator.
    Refer to SC-33, "Removal and Installation" .
19. Disconnect the engine harness and set aside.
20. Support the engine and remove the RH engine mount and bracket.
21. Remove the IVTC valve covers, bank 1 and bank 2. Loosen the bolts in the numerical order as shown.

    NOTE:
    The shaft in the cover is inserted into the center hole of the intake camshaft sprocket. Remove the cover by pulling straight out until the cover disengages from the camshaft sprocket.
22. Remove the starter motor. Refer to SC-23, "Removal and Installation" .

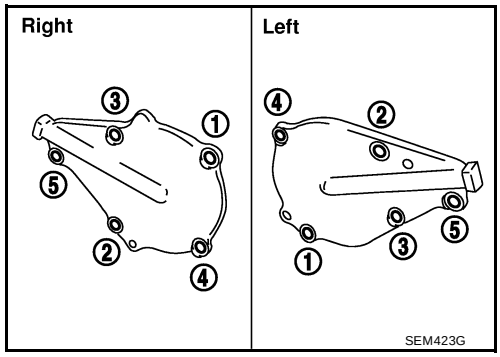

23. Set the ring gear stopper using the mounting bolt hole.

    CAUTION:
    Do not damage the ring gear teeth, or the signal plate teeth behind the ring gear, when setting the stopper.

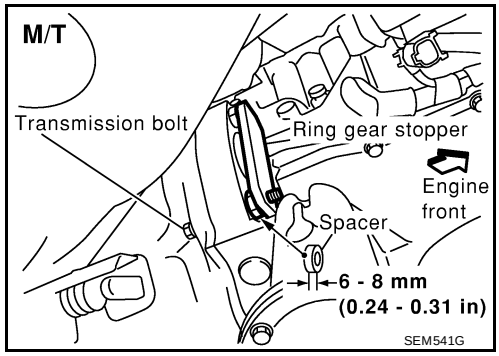

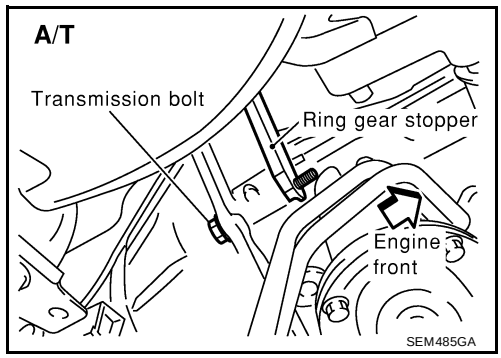

24. Remove the crankshaft pulley.
25. Remove the front timing chain case.

a. Loosen the bolts in the numerical order as shown.

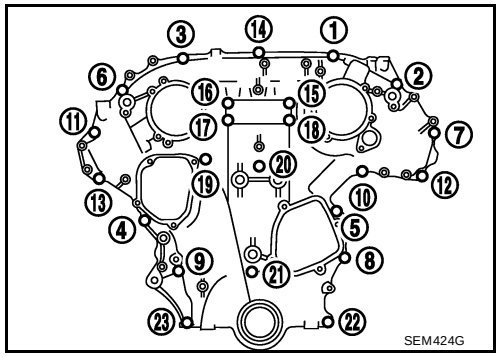

b. Insert the appropriate size tool into the notch at the top of the front timing chain case as shown (1).
c. Pry off the case by moving the tool as shown (2).

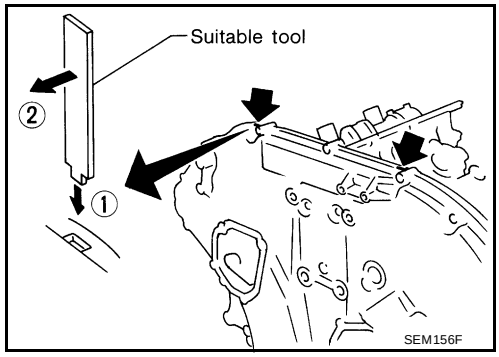

26. Disconnect the power brake booster vacuum hose.
27. Disconnect the electric throttle control actuator.
28. Disconnect the coolant hoses at the electric throttle control actuator.
29. Disconnect the PCV hose.
30. Disconnect the EVAP canister purge volume control solenoid vacuum hose.

31. Remove the intake manifold collector. Loosen the bolts and nuts in the numerical order as shown.

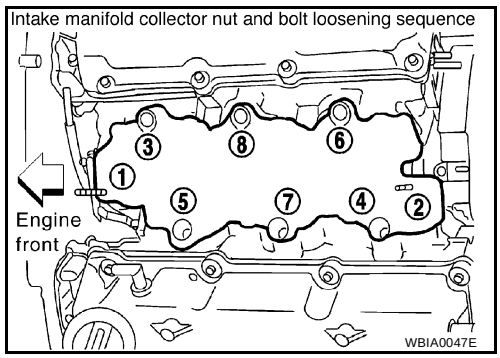

32. Remove the six ignition coils.
33. Remove the six spark plugs.
34. Remove the engine oil dipstick.

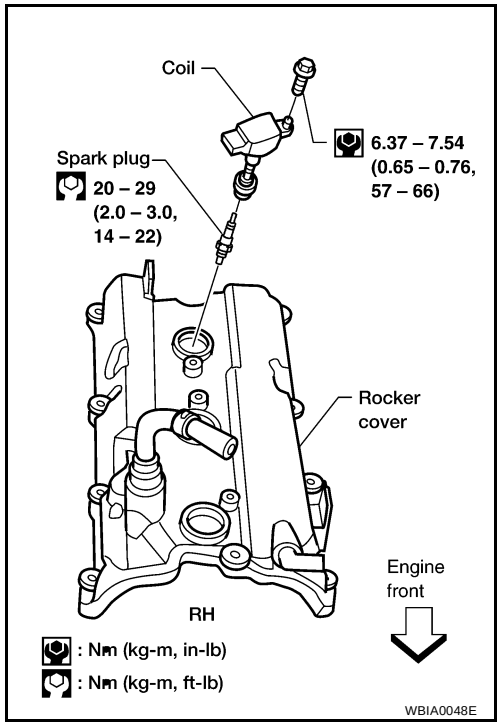

35. Remove the IVTC (intake valve timing control) solenoid valve bank 1 and bank 2.
    - Discard the gaskets and use new gaskets for installation.

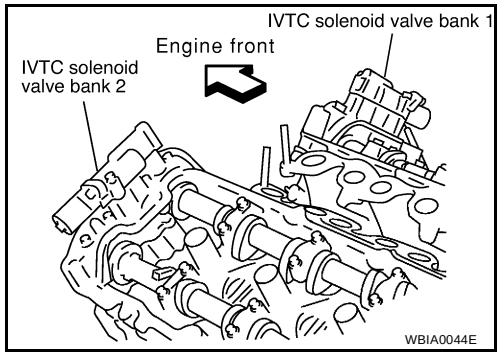

36. Remove the rocker covers. Loosen the bolts in the numerical order as shown.

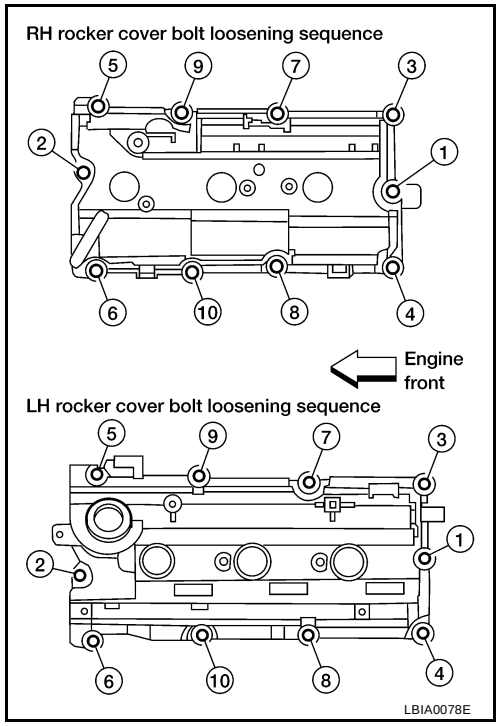

37. Remove the internal chain guide.

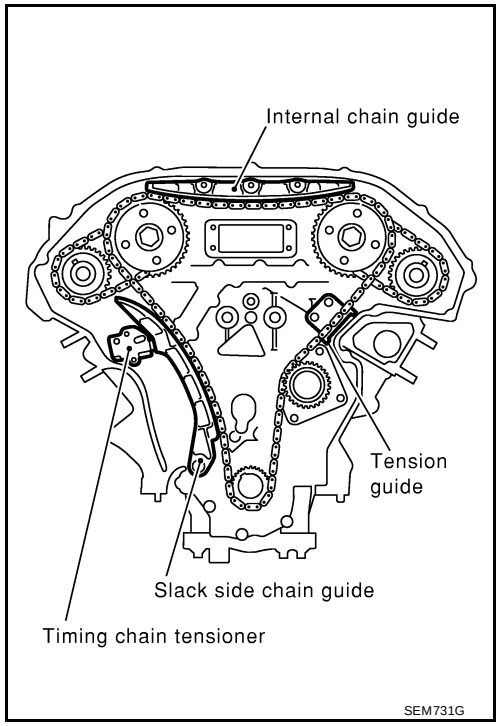

38. Remove the timing chain tensioner and slack side chain guide.
    - Place paint marks on the timing chain and sprockets to indicate the correct position of the components for installation.

a. Pull lever down and release plunger stopper tab. Plunger stopper tab can be pushed up to release (coaxial structure with lever).

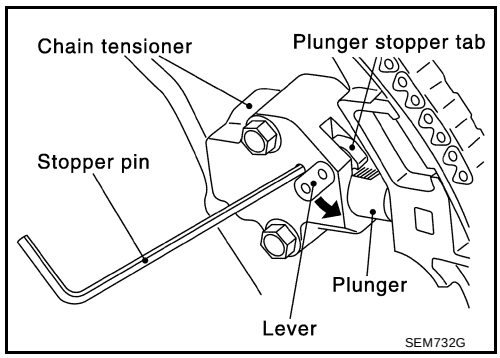

b. Insert stopper pin into tensioner body hole to hold lever, and keep the tab released. An Allen wrench [2.5 mm (0.098 in)] is used for a stopper pin as an example.

c. Insert plunger into tensioner body by pressing the slack side chain guide.

d. Keep the slack side chain guide pressed and hold it by pushing the stopper pin through the lever hole and body hole.

e. Remove the mounting bolts and remove the timing chain tensioner.

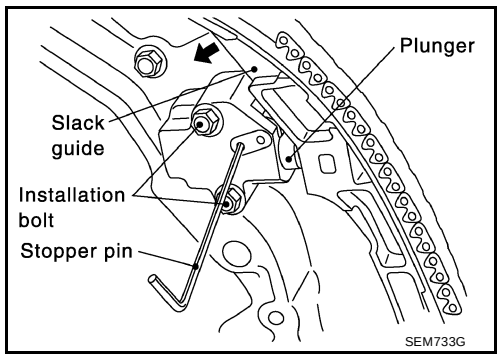

39. Attach a suitable stopper pin to the RH and LH camshaft chain tensioners (for secondary timing chains).

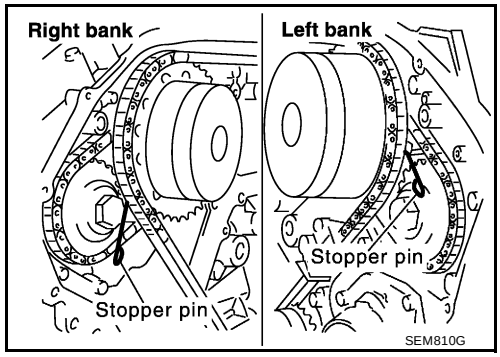

40. Remove the intake and exhaust camshaft sprocket bolts.
   - Apply paint to the timing chain and camshaft sprockets for alignment during installation.
   - Secure the hexagonal portion of the camshaft using a wrench to loosen the mounting bolts.

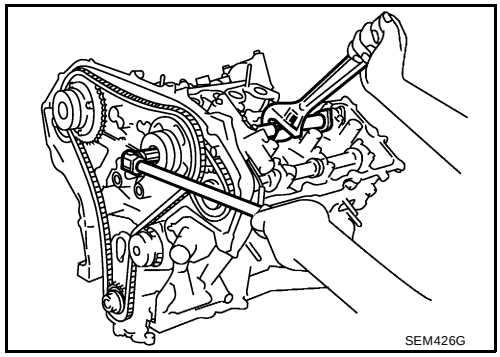

41. Remove the primary and secondary timing chains with camshaft sprockets.
   - Intake camshaft sprocket is two-for-one structure of primary and secondary sprockets.
   - Handle the intake sprockets as an assembly.

   CAUTION:
   - **Avoid impact or dropping the intake sprockets.**
   - **Do not disassemble the intake sprockets (never loosen bolts A and B as shown).**

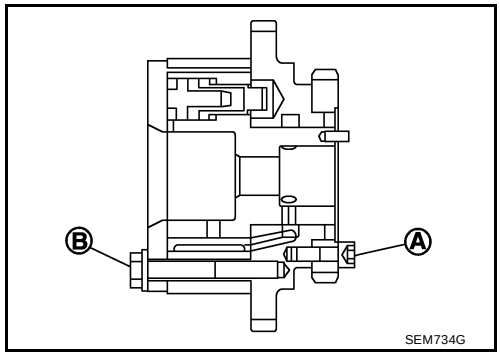

42. Remove the chain tension guide and crankshaft sprocket.
43. Remove the rear timing chain case.

CAUTION:

- **Do not remove the metal plate cover for the oil passage.**
- **After removing the chain case, do not apply any load to the case that might bend it.**

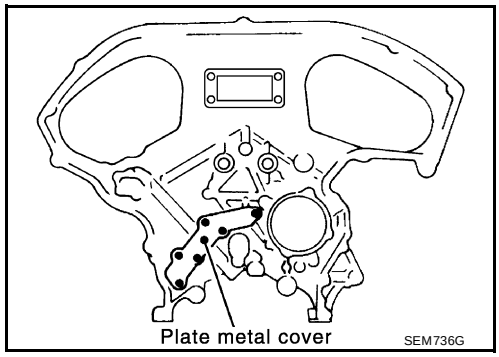

a. Loosen and remove the mounting bolts in the order shown.
b. Cut the sealant with an appropriate tool and remove the rear timing chain case.

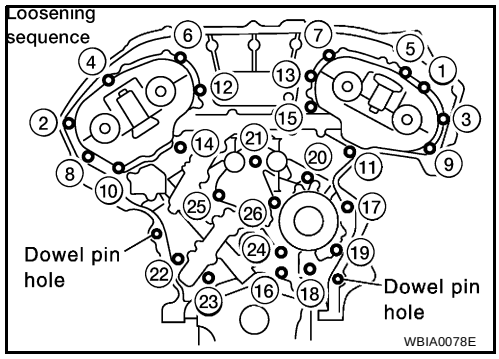

44. Use a scraper to remove all of the old RTV Silicone Sealant from the front timing chain case.

CAUTION:
Do not damage the mating surfaces.

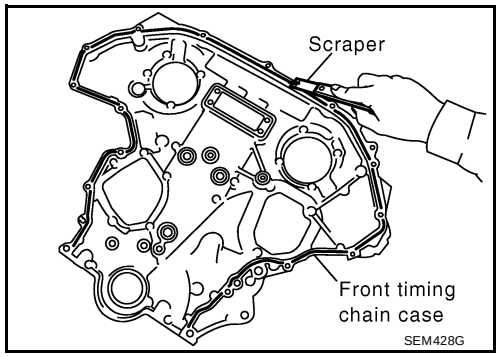

45. Remove all old RTV Silicone Sealant from all the bolt holes and bolts.

CAUTION:
Do not damage the threads or mating surfaces.

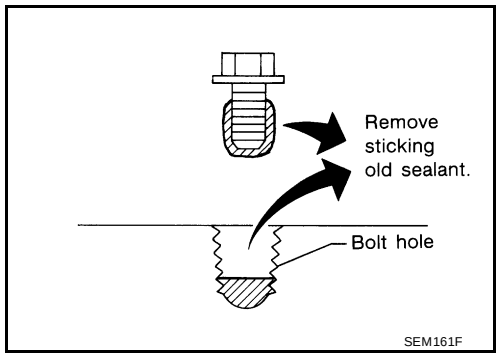

46. Use a scraper to remove all the old RTV Silicone Sealant from the water pump cover and IVTC valve covers.

CAUTION:
Do not damage the mating surfaces.

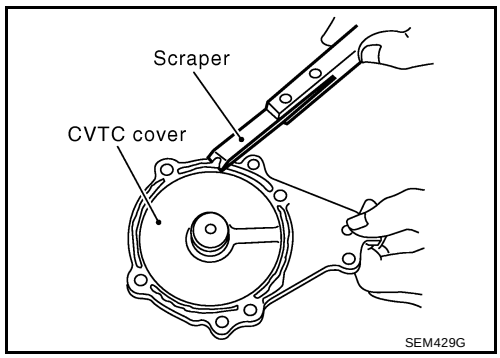

47. Remove the front oil seal from the front timing chain case using a suitable tool.

CAUTION:
Do not damage the front cover.

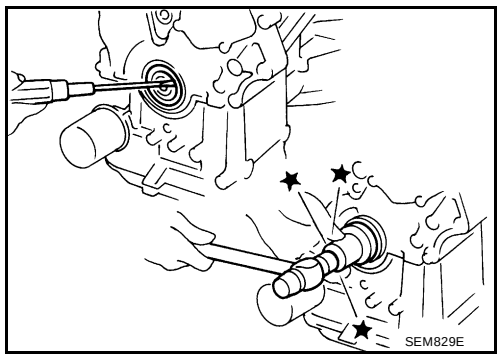

Inspection

EBS007Q9

Check for cracks and any excessive wear at the roller links of the timing chain. Replace the timing chain as necessary.

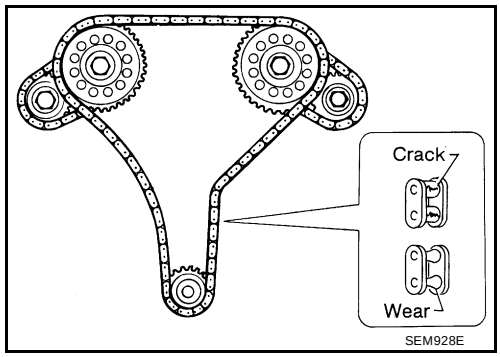

Installation

EBS007QA

1. Apply Genuine RTV Silicone Sealant or equivalent, to the rear timing chain case. Refer to EM-148, "POSITION FOR APPLYING LIQUID GASKET" .
2. Align the rear timing chain case and water pump assembly with the dowel pins (RH and LH) on the cylinder block and install the case. Make sure the O-rings stay in place during installation.

a. Tighten the mounting bolts in the numerical order as shown. There are two bolt lengths used. Follow the chart below for proper bolt length specifications.

Bolt position	Bolt length
1, 2, 3, 6, 7, 8, 9, 10	20 mm (0.79 in)
4, 5, 11 - 26	16 mm (0.63 in)

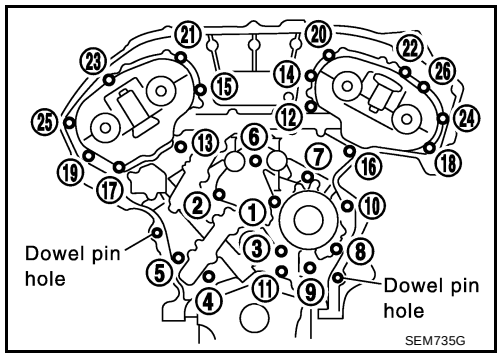

b. After all bolts are initially tightened, retighten them to the specification in the numerical order as shown.

Rear timing chain case bolts : 12 - 13 N·m (1.2 - 1.4 kg-m, 9 -10 ft-lb)

3. Install the timing chain tension guide.

4. Position the crankshaft so No. 1 piston is set at TDC on the compression stroke.
   - Make sure that the dowel pin hole, dowel pin and crankshaft key are located as shown.
     Camshaft dowel pin hole (intake side): at cylinder head upper face side in each bank.
     Camshaft dowel pin (exhaust side): at cylinder head upper face side in each bank.
     Crankshaft key: at cylinder head side of RH bank.

   CAUTION:
   Hole on small diameter side must be used for intake dowel pin. Do not misidentify (ignore big diameter side).

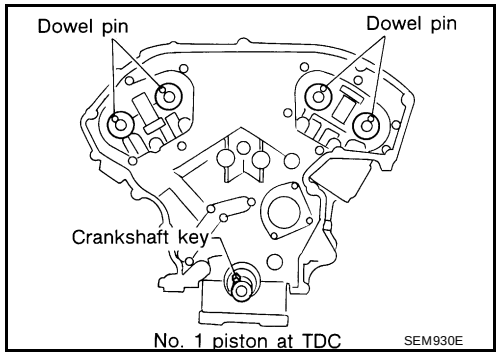

5. Install the crankshaft sprocket on the crankshaft.
   - Make sure the mating marks on the crankshaft sprocket face the front of the engine.

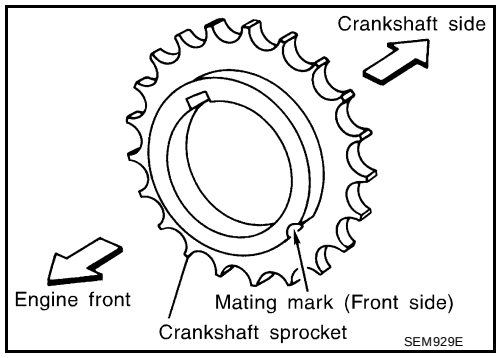

6. Install the secondary timing chains and camshaft sprockets.

   CAUTION:
   Matching marks between the timing chain and sprockets slip easily. Confirm all matching mark positions repeatedly during the installation process.

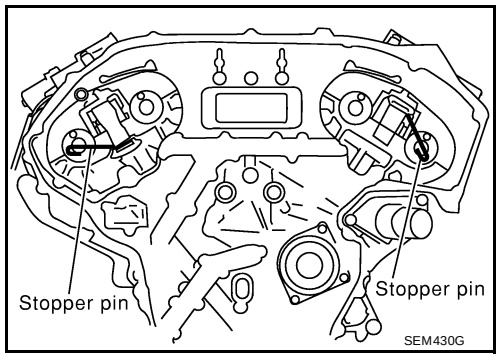

- Push the sleeve of the secondary chain tensioner and keep it pressed in with a stopper pin.

a. Align the matching marks on the secondary timing chain (gold link) with the ones on the intake and exhaust sprockets (stamped), and install them.
   - Matching marks for the intake sprocket are on the back side of the secondary sprocket.
   - There are two types of matching marks, round and oval types. They should be used for the RH and LH banks, respectively.
     RH bank: use round type.
     LH bank: use oval type.

b. Align the knock pin and pin hole on the camshaft with the groove and knock pin on the sprocket, and install them.
   - On the intake side, align the pin hole on the small diameter side of the camshaft front end with the knock pin on the back side of the camshaft sprocket, and install them.
   - On the exhaust side, align the knock pin on the camshaft front end with the pin groove on the camshaft sprocket, and install them.
   - Mounting bolts for the camshaft sprockets must be tightened in the next step. Tightening them by hand is enough to prevent the dislocation of the knock pins.

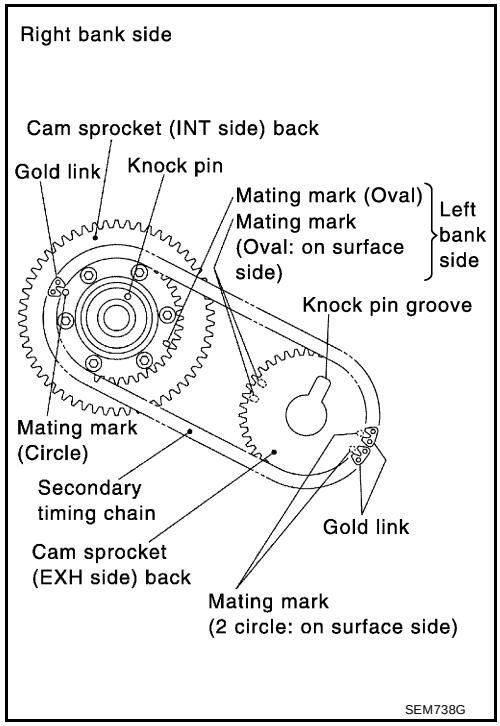

- It may be difficult to visually check the dislocation of mating marks during and after installation. To make the matching easier, make a mating mark on the sprocket teeth in advance with paint.

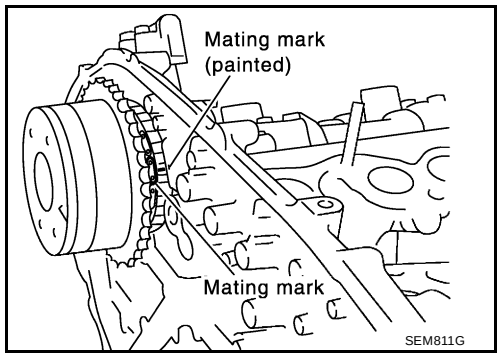

7. Install the secondary timing chain and sprocket to the other bank. Install the primary timing chain at the same time.
   - Installation of the secondary timing chain follows the procedure in step 6.
   - Install primary timing chain so the mating mark (punched) on camshaft sprocket is aligned with the yellow link on the timing chain, while the mating mark (notched) on the crankshaft sprocket is aligned with the orange one on the timing chain, as shown.
   - When it is difficult to align mating marks of the primary timing chain with each sprocket, gradually turn the camshaft using a wrench on the hexagonal portion to align it with the mating marks.
   - During alignment, be careful to prevent dislocation of mating mark alignments of the secondary timing chains.

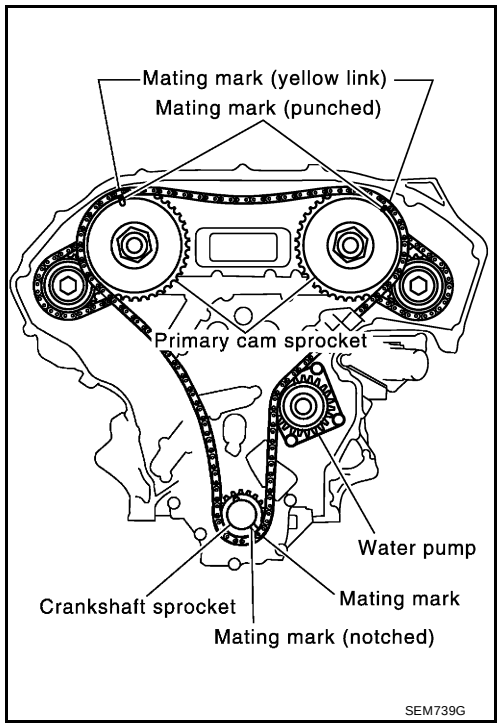

8. After confirming the mating marks are aligned, tighten the camshaft sprocket mounting bolts.
   - Secure the camshaft using a wrench at the hexagonal portion to tighten the mounting bolts.

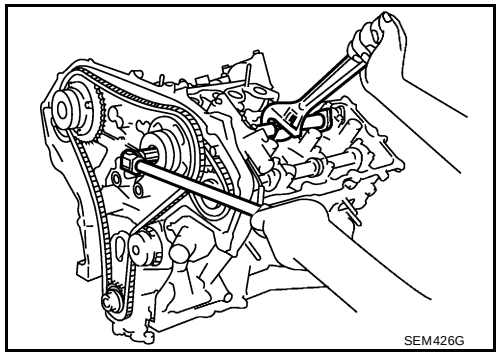

9. Pull the stopper pins out from the secondary timing chain tensioners.

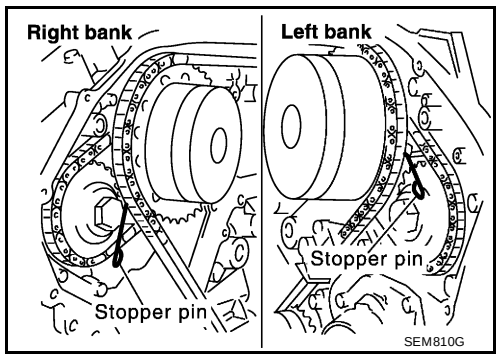

10. Install the internal chain guide.

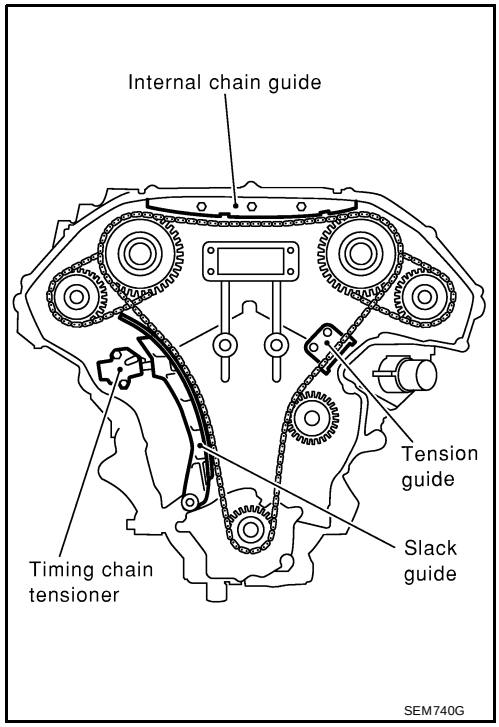

11. Install the slack guide.
   - Do not overtighten the slack guide mounting bolts. It is normal for a gap to exist under the bolt seats when the mounting bolts are tightened to specification.

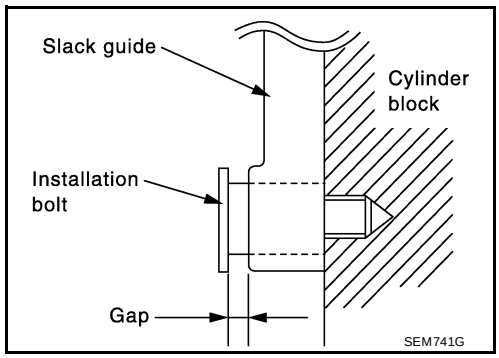

12. Install the timing chain tensioner for the slack guide.
    - When installing the chain tensioner, push in the sleeve and keep it pressed in with the stopper pin.
    - Remove any dirt and foreign materials completely from the back and the mounting surfaces of the chain tensioner.
    - After installation, pull out the stopper pin by pressing the slack guide.
13. Reconfirm that the matching marks on the sprockets and the timing chain have not slipped out of alignment.

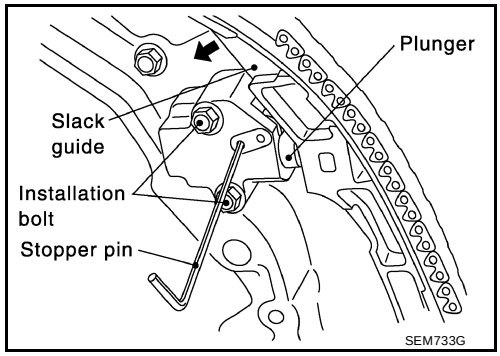

14. Install new O-rings on the rear timing chain case.

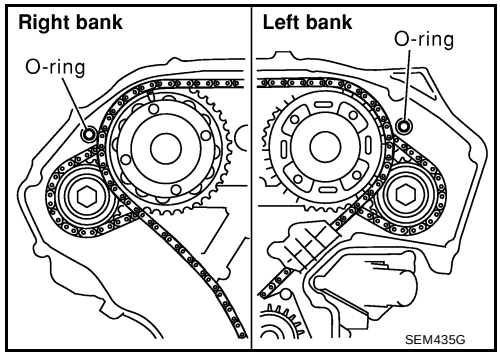

15. Install the front oil seal on the front timing chain case using a suitable tool. Apply clean engine oil to the oil seal edges.

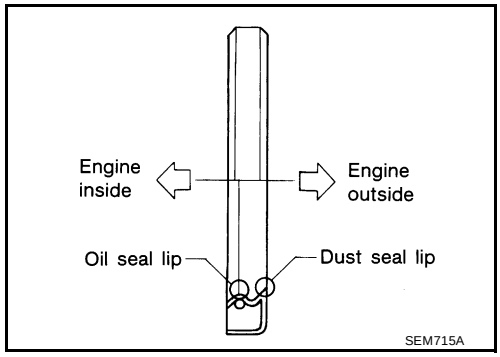

16. Apply liquid gasket to front timing chain case.
    Refer to EM-148, "POSITION FOR APPLYING LIQUID GASKET" .
    - Before installation, wipe off the protruding sealant.

17. Install the rear case pin into dowel pin hole on front timing chain case.
18. Tighten bolts to the specified torque in order shown in the figure.

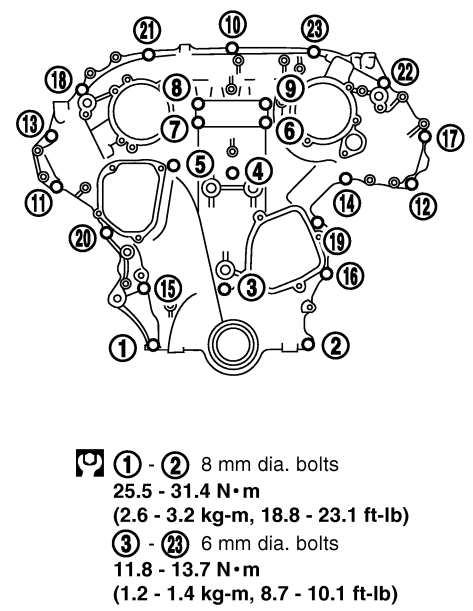

19. After installing the front timing chain case, check the surface height difference between the following parts on the oil pan mounting surface.
    - If not within specification, repeat the installation procedure.

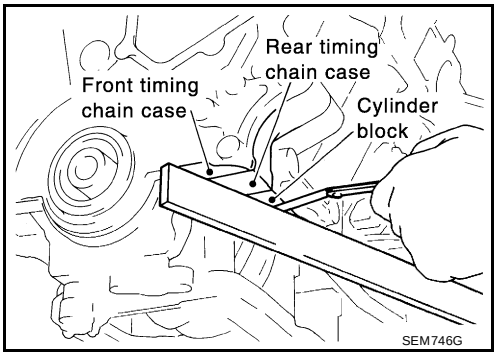

Front timing chain case to rear timing chain case	**: (–0.14) - 0.14 mm [(–0.005) - 0.0055 in]**
Oil pump to cylinder block	**: (–0.36) - (–0.10) mm [(–0.0142) - (–0.0039) in]**
Rear timing chain case to cylinder block	**: (–0.24) - 0.14 mm [(–0.0094) - 0.0055 in]**

20. Install IVTC valve covers as follows:

a. Install new O-rings on the front of the timing chain case.
b. Install new seal rings on the IVTC valve covers.
c. Apply RTV Silicone Sealant to the IVTC solenoid valve covers. Use genuine RTV Silicone Sealant, or equivalent. Refer to GI-42, "RECOMMENDED CHEMICAL PRODUCTS AND SEALANTS" .

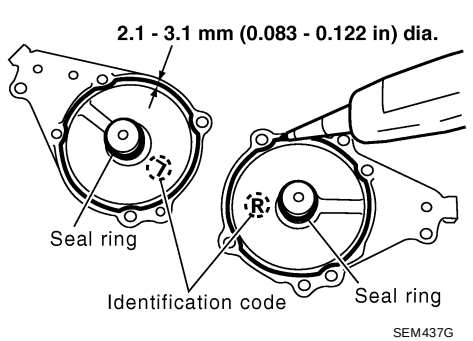

- Being careful not to move the seal ring from the installation groove, align the dowel pins on the chain case with the holes to install the IVTC solenoid valve covers.

- Tighten in the numerical order as shown.

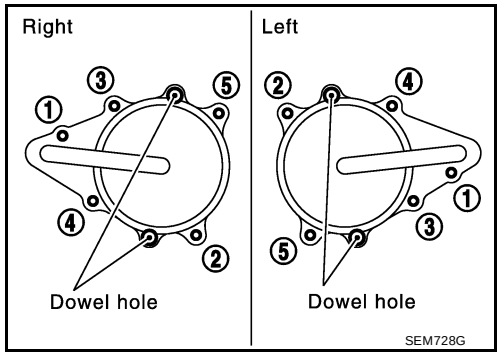

21. Install the water pump cover and the chain tensioner cover. Apply RTV Silicone Sealant or equivalent. Refer to GI-42, "RECOMMENDED CHEMICAL PRODUCTS AND SEALANTS" .

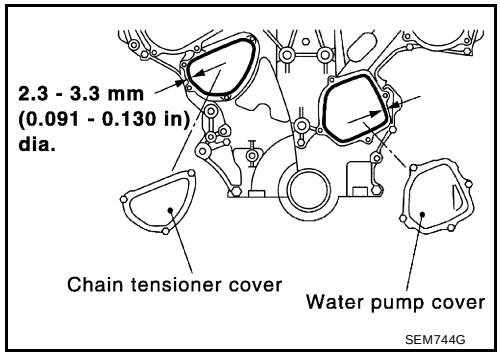

22. Install the RH and LH rocker covers.
    - Tighten the rocker cover bolts in two stages in the numerical order as shown.

    Stage 1 : 0.96 - 2.96 N·m (0.1 - 0.3 kg-m, 9 - 26 in-lb)
    Stage 2 : 7.33 - 9.33 N·m (0.75 - 0.95 kg-m, 65 - 82 in-lb)

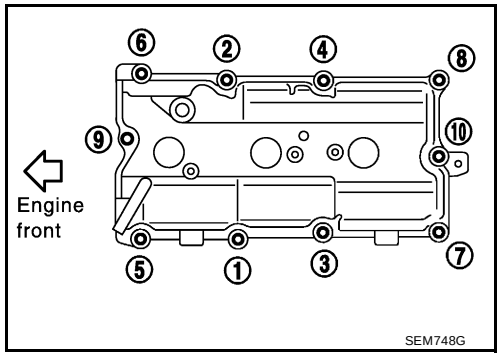

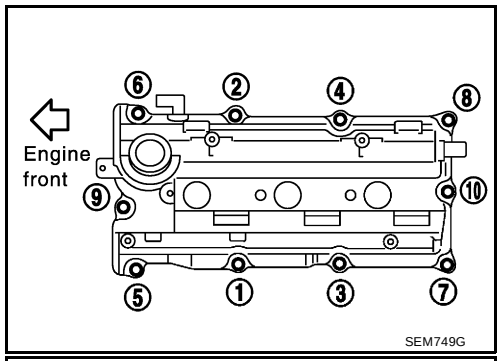

23. Install the IVTC solenoid valve bank 1 and bank 2.

    IVTC solenoid valve bolts : 10 - 12 N·m (1.0 - 1.3 kg-m, 87 - 112 in-lb)

24. Install the engine oil dipstick.

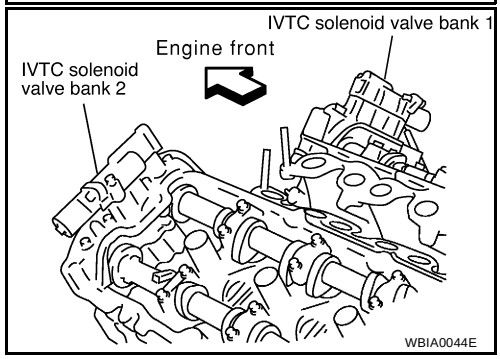

25. Install the six spark plugs to their original positions.

Spark plugs (6) : 20 - 29 N·m (2.0 - 3.0 kg-m, 14 - 22 ft-lb)

26. Install the six ignition coils to their original positions.

Ignition coils (6) : 6.37 - 7.54 N·m (0.65 - 0.76 kg-m, 57 - 66 in-lb)

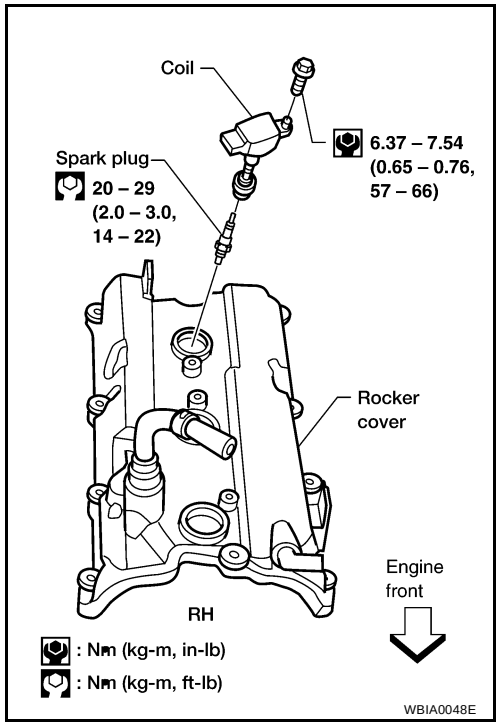

27. Install the intake manifold collector. Tighten the bolts and nuts in numerical order as shown.

Intake manifold collector bolts : 18 - 21 N·m (1.8 - 2.2 kg-lb, 13 - 15 ft-lb)

28. Connect the EVAP purge volume control solenoid hose.
29. Connect the PCV hose.
30. Connect the coolant hoses to the electric throttle control actuator.
31. Connect the power brake booster vacuum hose.
32. Connect the electric throttle control actuator harness electrical connector.

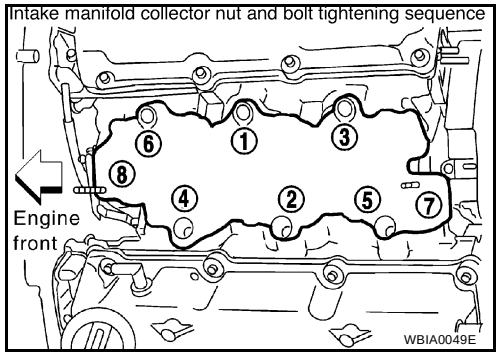

33. Install crankshaft pulley and tighten the bolt in two stages.
    - Lubricate thread and seat surface of the bolt with new engine oil.

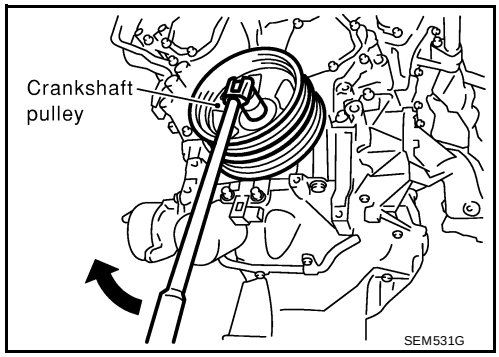

- Apply a paint mark for the second stage of angle tightening.

Stage 1 : 39 - 49 N·m (4.0 - 5.0 kg-m, 29 - 36 ft-lb)
Stage 2 : 60° - 65° degrees clockwise

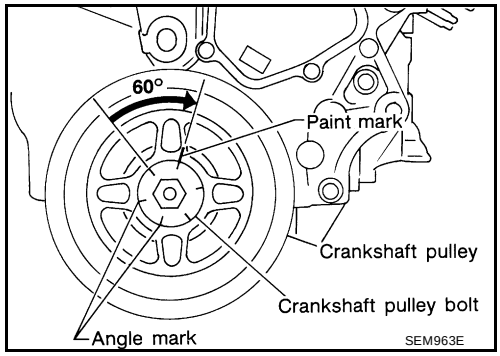

34. Remove the ring gear stopper.
35. Install the starter motor. Refer to SC-23, "Removal and Installation" .
36. Install the RH engine mount and bracket.

Engine mount to frame bolts (2)	**: 66 - 74 N·m (6.7 - 7.6 kg-m, 49 - 54 ft-lb)**
Engine mount bracket to front cover bolts (2)	**: 79 - 90 N·m (8.0 - 9.2 kg-m, 58 - 66 ft-lb)**
Engine mount bracket to front cover nut (1)	**: 10 - 15 N·m (1.0 - 1.6 kg-m, 87 - 138 in-lb)**
Engine mount to bracket nuts (2)	**: 49 - 58 N·m (5.0 - 6.0 kg-m, 37 - 43 ft-lb)**

37. Reposition and reconnect the engine harness.
38. Install the alternator.
    Refer to SC-33, "Removal and Installation" .
39. Install the upper and lower oil pans.
    Refer to EM-120, "Removal and Installation" .
40. Install the power steering pump.
    Refer to PS-20, "Removal and Installation" .
41. Install the A/C compressor and recharge the system.
    Refer to ATC-122, "Removal and Installation for Compressor" .
42. Install the idler pulley and the drive belts.
    Refer to EM-109, "Checking Drive Belts" .
43. Install the inner fender splash shield and the engine undercovers.
44. Install the RH wheel and tire.
    Refer to WT-4, "WHEEL AND TIRE ASSEMBLY" .
45. Install the windshield wiper assembly and the cowl top grille.
    Refer to EI-18, "Removal and Installation" .
46. Install the fuel hose quick connector to the fuel tube at the vehicle piping side.
    Refer to EM-129, "Removal and Installation" .
47. Install the engine coolant reservoir.
48. Install the intake air duct with the air cleaner case lid and mass air flow sensor.
49. Install engine cover.
50. Refill the engine with oil and coolant.
    Refer to MA-12, "Fluids and Lubricants" .

    CAUTION:
    Wait at least 30 minutes for the RTV Silicone Sealant to set before filling the engine with fluids to avoid leaks.
51. Install the battery.
52. Activate the fuel system. Check for any leaks when the system is repressurized and correct as necessary.
53. Start the engine and check all systems for leaks or improper operation. Correct as necessary.

    NOTE:
    After starting engine, keep idling for three minutes. Then rev engine up to 3,000 rpm under no load to purge air from the high-pressure oil chamber of the chain tensioners. The engine may produce a rattling noise. This indicates that air still remains in the chamber and is not a matter of concern.

CYLINDER HEAD

PFP:11041

On-Vehicle Service

EBS007QB

CHECKING COMPRESSION PRESSURE

1. Run the engine until it reaches normal operating temperature.
2. Turn the ignition switch to OFF.
3. Release fuel pressure and leave the fuel pump electrically disconnected.
   Refer to EC-671, "FUEL PRESSURE RELEASE" .
4. Remove all six spark plugs.
   Refer to EM-127, "Removal and Installation" .
5. Attach a compression tester to No. 1 cylinder.
6. Depress accelerator pedal fully to keep the electric throttle control actuator butterfly-valve wide open to maximize air intake flow.
7. Crank the engine and record the highest gauge indication.
8. Repeat the measurement on each cylinder (steps 5 - 7).
   - Always use a fully-charged battery to obtain specified engine speed.

Use compressor tester whose end (rubber portion) is less than 20 mm (0.79 in) dia. Otherwise, it may be caught by cylinder head during removal.

SEM387C

Engine Compression Pressure

Unit: kPa (kg/cm^2 , psi) / rpm

Standard	Minimum	Difference limit between cylinders
1,275 (13.0, 185)/300	981 (10.0, 142)/300	98 (1.0, 14)/300

9. If compression in one or more cylinders is low:

a. Pour a small amount of engine oil into cylinders through the spark plug holes.

b. Retest compression (steps 5 - 8).
   - If adding oil helps raise compression pressure, then the piston rings may be worn or damaged. If so, replace piston rings after checking piston.
   - If the pressure stays low, a valve may be sticking or is seating improperly. Inspect and repair the valve and/or valve seat. Refer to EM-207, "VALVE" . If the valve and/or valve seat is damaged excessively, replace as necessary.
   - If compression stays low in two or more cylinders that are next to each other:
     - The cylinder head gasket may be leaking.
     - Both cylinders may have valve component damage. Inspect and repair as necessary.

Removal and Installation

EBS007QC

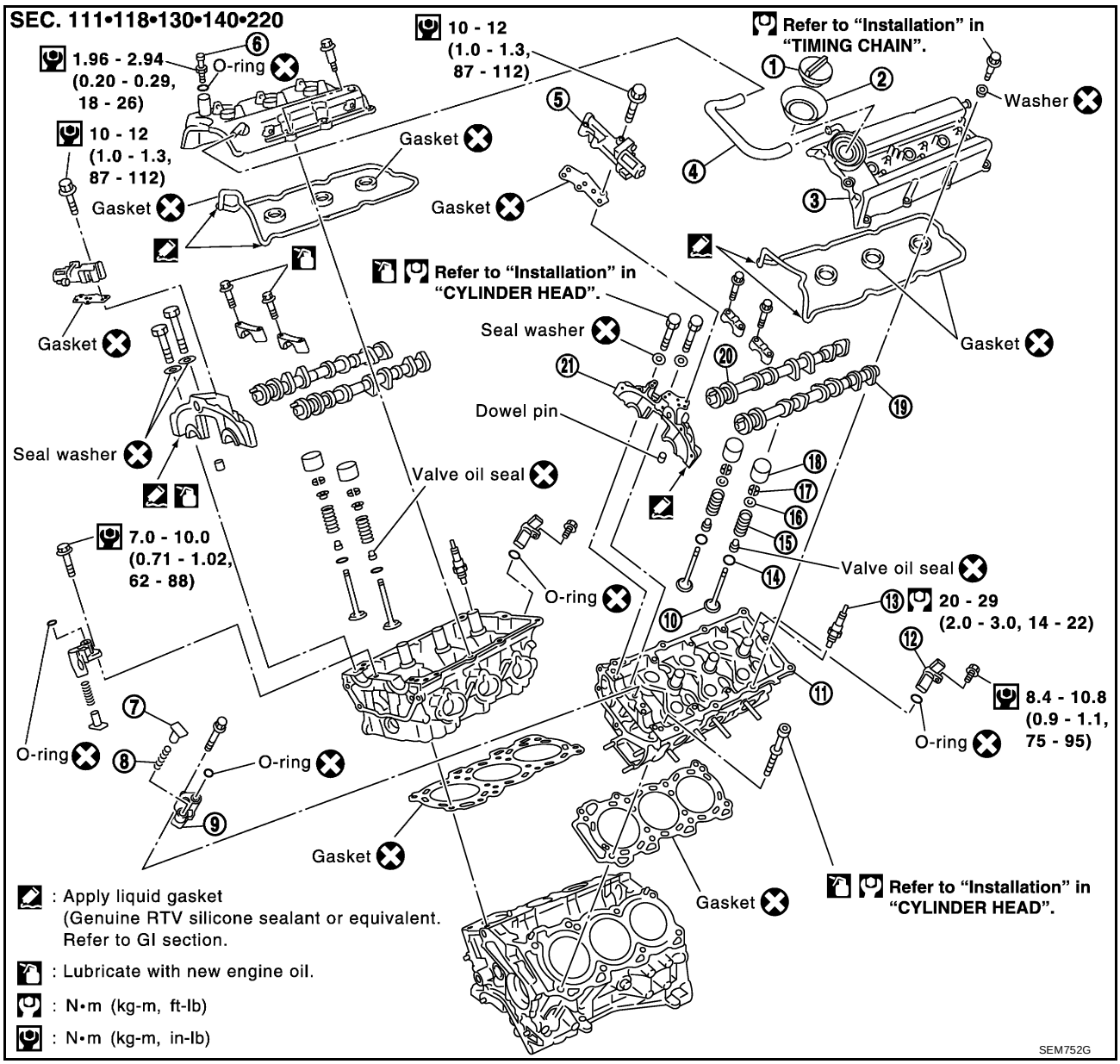

1.	Oil filler cap	2.	Oil catcher	3.	Rocker cover
4.	PCV hose	5.	IVTC solenoid valve	6.	PCV valve
7.	Chain tensioner	8.	Spring	9.	Tensioner sleeve
10.	Valve	11.	Cylinder head	12.	Camshaft position sensor (PHASE)
13.	Spark plug	14.	Valve spring seat	15.	Valve spring
16.	Valve spring retainer	17.	Valve collet	18.	Valve lifter
19.	Camshaft (EXH)	20.	Camshaft (INT)	21.	Camshaft bracket

REMOVAL

1. Remove the timing chains. Refer to EM-149, "Removal" .
2. Remove the fuel rail and injectors. Refer to EM-129, "Removal and Installation" .

3. Remove the intake manifold using power tool.
   - Loosen the bolts in the numerical order as shown.
4. Remove the coolant outlet housing.

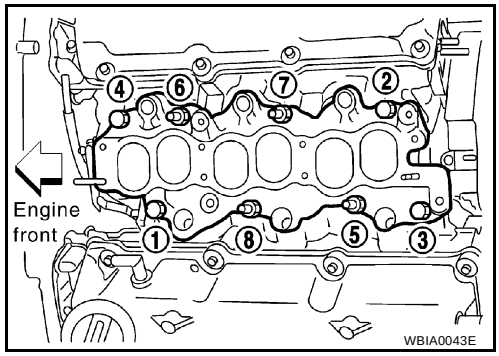

5. Remove rear timing chain case bolts using power tool.
   - Loosen the bolts in the numerical order as shown.

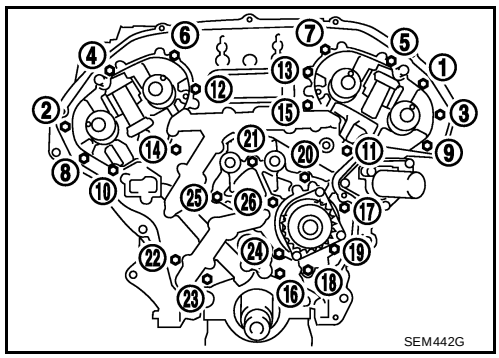

6. Remove rear timing chain case using the Tool.

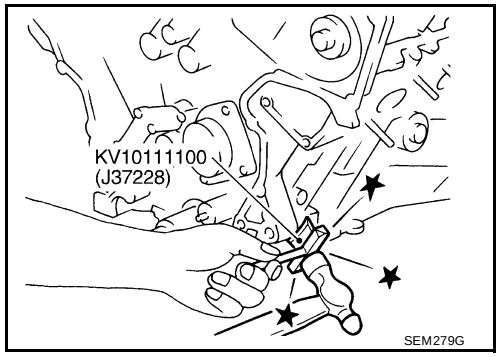

7. Remove the O-rings from the front of the cylinder heads.
   - Discard the O-rings and use new O-rings for installation.

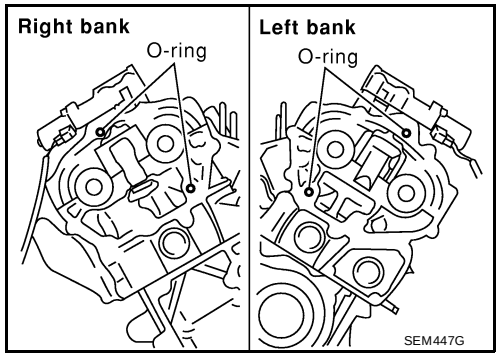

8. Remove the O-rings from the cylinder block.
   - Discard the O-rings and use new O-rings for installation.

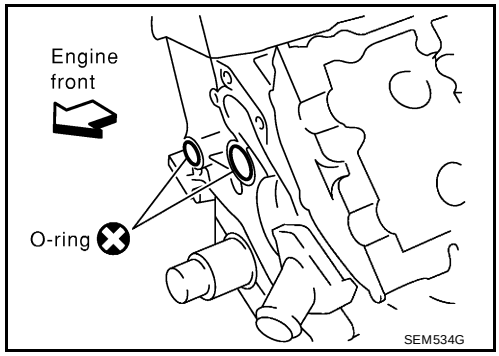

9. Remove the IVTC (intake valve timing control) valves.
   - Discard the IVTC valve gaskets and use new gaskets for installation.

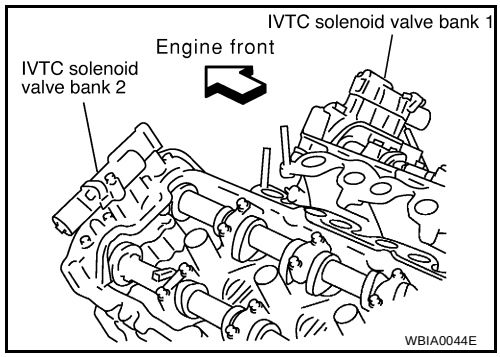

10. Remove the intake and exhaust camshafts and the camshaft brackets.
    - Mark the camshaft brackets so they are placed in the same position and direction for installation.
    - Equally loosen the camshaft bracket bolts in several steps in the numerical order shown.

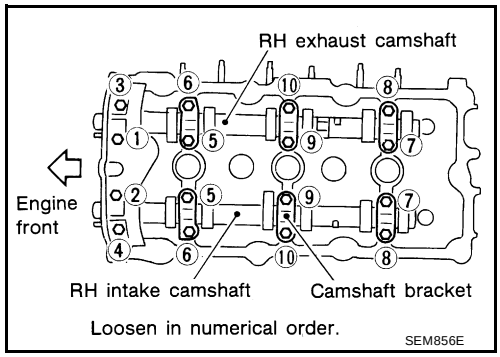

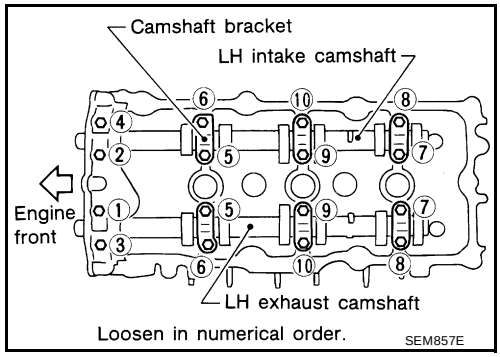

NOTE:
If replacing the oil seals only, without removing the cylinder head, follow the steps below. Use method A or Method B to hold the valve in place while removing the component parts, so the valve does not fall into the combustion chamber.

a. Method A:
   Without removing the cylinder head, set the piston being worked on to TDC to prevent the valve from falling into the combustion chamber.
   Method B:
   Without removing the cylinder head, remove the spark plug from the head, then install an air hose adapter into the spark plug hole and apply air pressure of 490 kPa (5 kg/cm2, 71 psi), as shown. The air pressure will hold the valve in place. This method will only work if the valves and valve seats are in good condition, if not, use Method A.

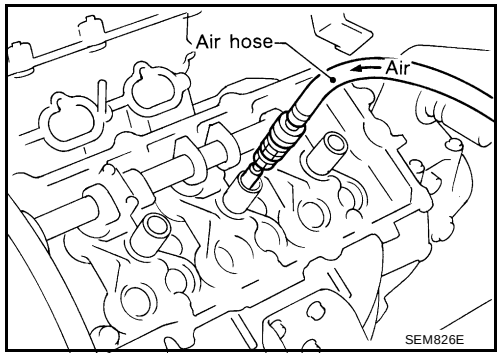

b. Remove the valve lifters. Mark the lifters so they are installed in their original position if being reused.

c. Compress the valve spring with the Tool and remove the following components:
   - Valve collet
   - Valve spring retainer
   - Valve spring
   - Valve spring seat

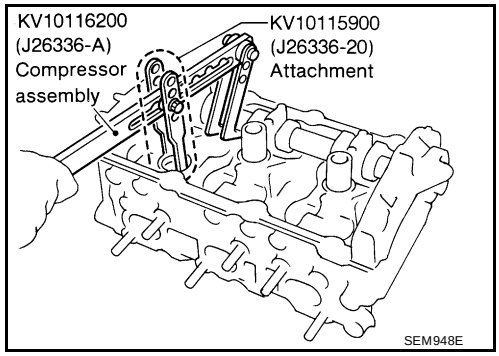

d. With suitable pliers, remove the valve oil seal and replace it.

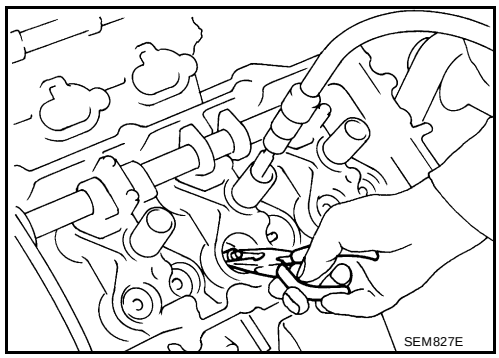

11. Remove the RH and LH cylinder head bolts, with power tool.
   - The bolts should be loosened gradually in three stages.
   - Loosen the bolts in the numerical order as shown.

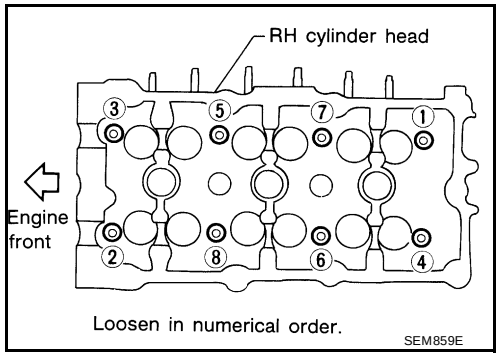

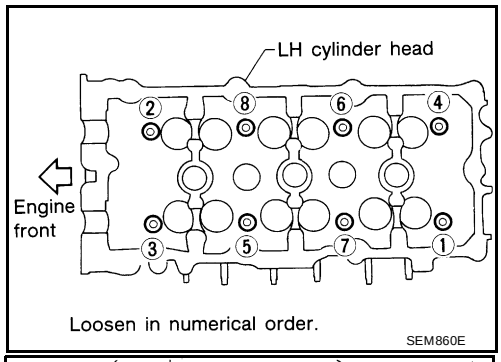

12. Remove cylinder heads and gaskets.
   - Discard the cylinder head gaskets and use new gaskets for installation.

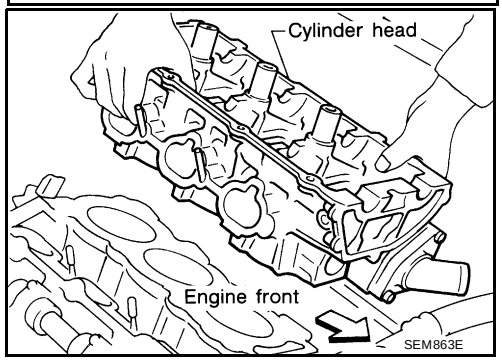

INSTALLATION

1. Before installing the rear timing chain case, remove the old RTV Silicone Sealant from mating surface using a scraper.
   - Also remove old sealant from mating surface of cylinder block.

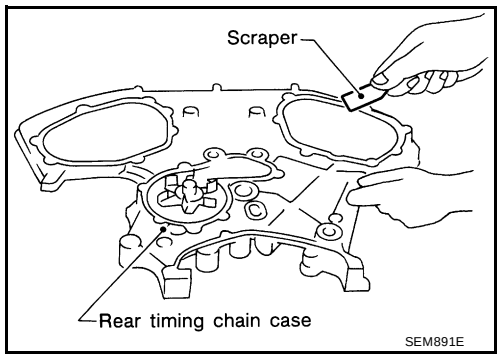

   - Remove the old RTV Silicone Sealant from the bolt hole and thread.

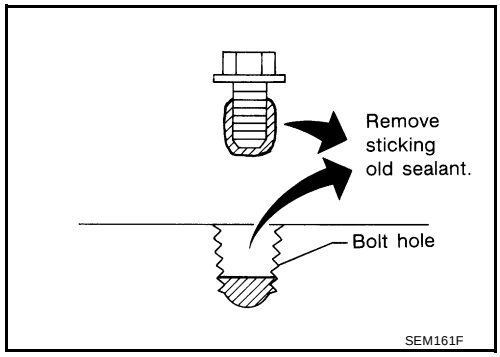

2. Before installing the front cam bracket, remove the old RTV Silicone Sealant from the mating surface using a scraper.
   - Do not scratch the mating surface.

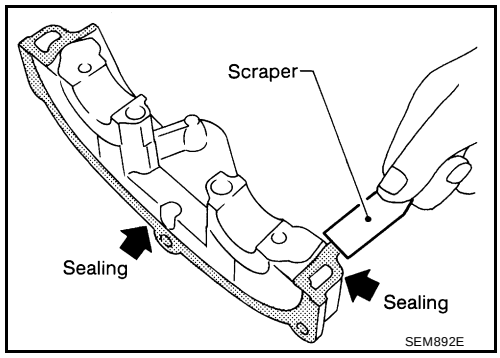

3. Turn the crankshaft until No. 1 piston is set at TDC on the compression stroke.
   - The crankshaft key should line up with the right bank cylinder center line as shown.

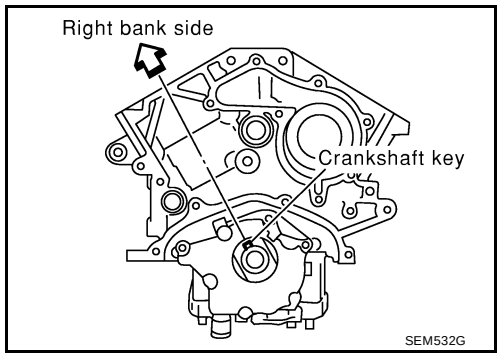

4. Install new gaskets on the cylinder heads.

CAUTION:
Do not rotate crankshaft and camshaft separately or valves will strike piston heads.

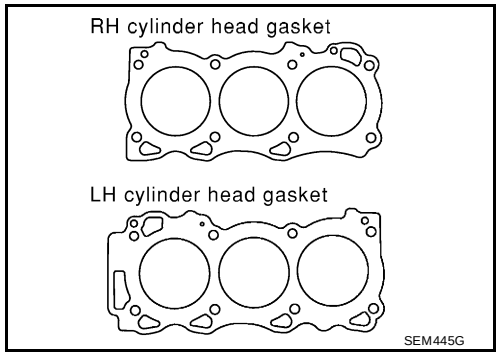

5. Inspect the cylinder head bolts before installing the cylinder heads.

CAUTION:
Cylinder head bolts are tightened by degree rotation tightening method. Whenever the size difference between d1 and d2 exceeds the limit, replace the bolts with new ones.

Limit (d1 - d2) : 0.11 mm (0.0043 in)

- Lubricate threads and seat surfaces of the bolts with new engine oil.

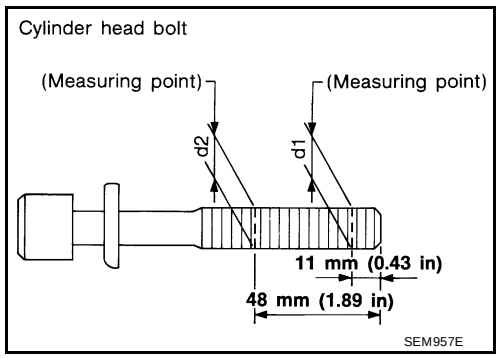

6. Install the cylinder heads on the cylinder block.
   - The cylinder head bolts must be tightened in the numerical order as shown.

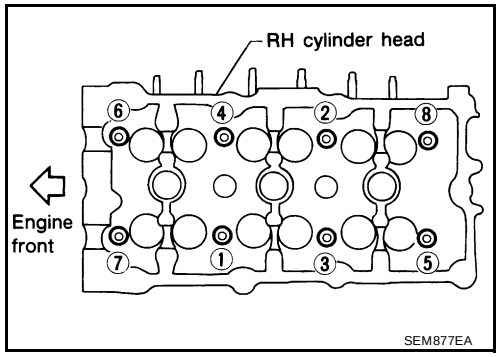

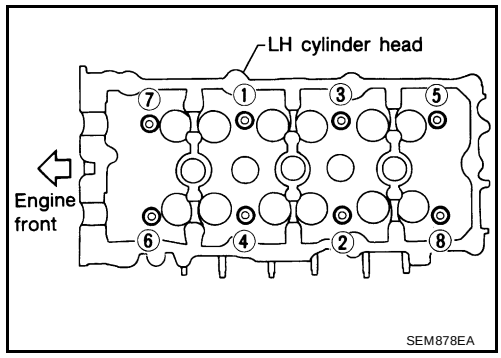

- Tightening the cylinder head bolts is a five stage procedure:

Stage a : 98 N·m (10 kg-m, 72 ft-lb) in order
Stage b : Loosen all bolts in the reverse order of tightening.
Stage c : 34.3 - 44.1 N·m (3.5 - 4.4 kg-m, 26 - 32 ft-lb)
Stage d : Turn all bolts 90° - 95° degrees clockwise
Stage e : Turn all bolts 90° - 95° degrees clockwise

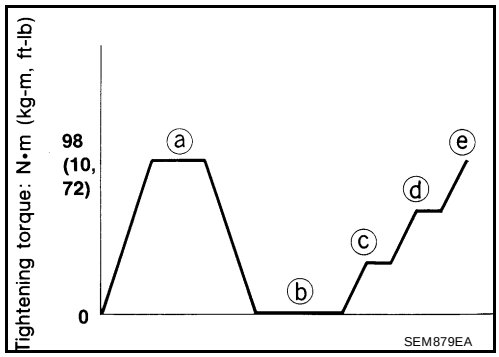

7. Install camshaft chain tensioners on both sides of cylinder head.

Camshaft chain tensioner bolts : 7 - 10 N·m (0.7 - 1.0 kg-m, 62 - 89 in-lb)

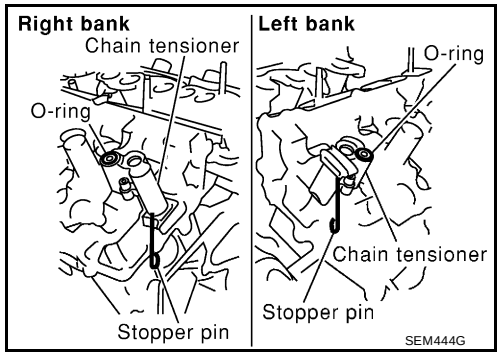

8. Install exhaust and intake camshafts and camshaft brackets.
   - Intake camshaft has a drill mark on camshaft sprocket mounting flange.

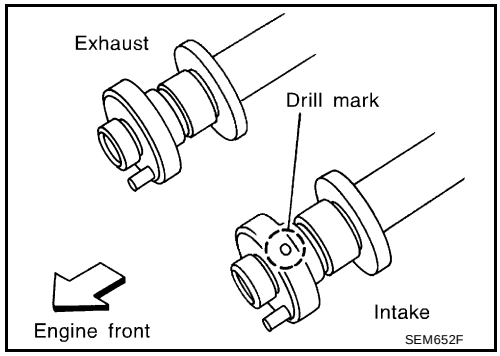

   - Follow your identification marks made during removal, or follow the identification marks that are present on the new camshaft components for proper placement.

Bank	INT/EXH	ID mark	Drill mark	Paint marks	
				M1	M2
RH	INT	RE	Yes	Yes	No
	EXH	RE	No	No	Yes
LH	INT	LH	Yes	Yes	No
	EXH	LH	No	No	Yes

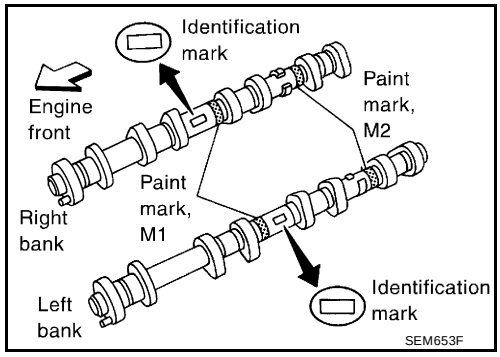

   - Position the camshafts:
     RH exhaust camshaft dowel pin at about 10 o'clock.
     LH exhaust camshaft dowel pin at about 2 o'clock.

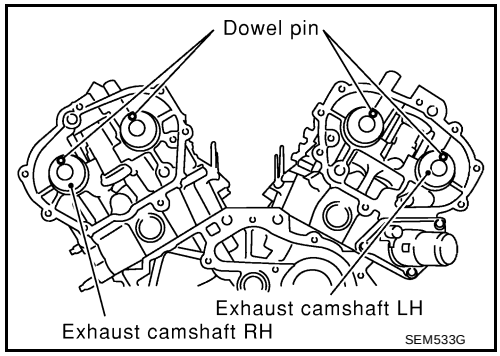

9. Before installing camshaft brackets, apply sealant to mating surface of No. 1 journal head.
   - Use Genuine RTV Silicone Sealant, or equivalent. Refer to GI-42, "RECOMMENDED CHEMICAL PRODUCTS AND SEALANTS" .
   - Refer to EM-148, "POSITION FOR APPLYING LIQUID GASKET" .

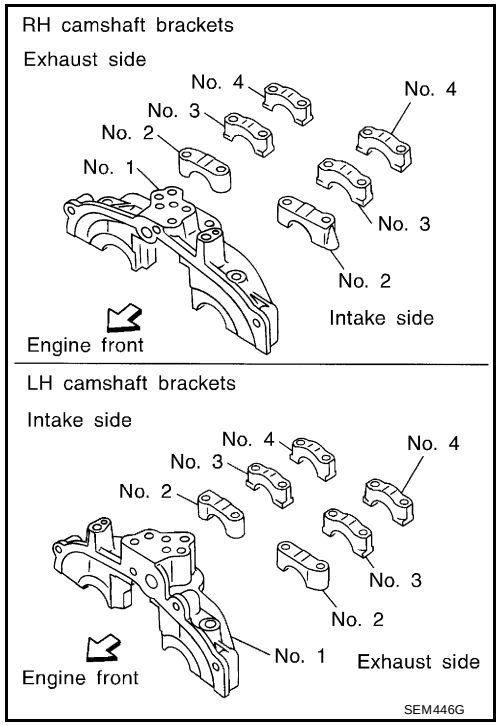

- Install camshaft brackets in their original positions and direction. Align the stamp marks as shown.
- If any part of valve assembly or camshaft is replaced, check and adjust the valve clearance. Refer to EM-141, "Valve Clearance" .

Valve clearance (cold) Intake	**: 0.26 - 0.34 mm (0.010 - 0.013 in)**
Valve clearance (cold) Exhaust	**: 0.29 - 0.37 mm (0.011 - 0.015 in)**

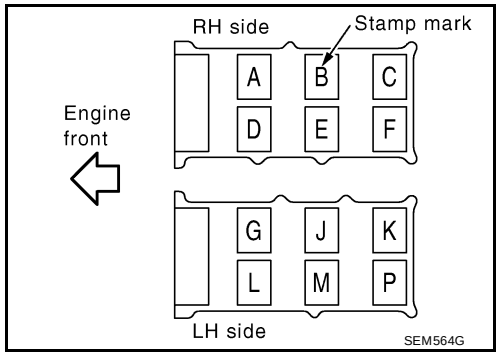

- Lubricate the threads and seat surfaces of the camshaft bracket bolts with new engine oil before installation.

- Tighten the camshaft brackets in the following four steps.

Step	Tightening torque	Tightening order
1	1.96 N·m (0.2 kg-m, 17 in-lb)	Tighten No.s 7 to 10, then tighten 1 to 6 in order as shown.
2	6 N·m (0.6 kg-m, 52 in-lb)	Tighten in numerical order as shown.
3	9.02 - 11.8 N·m (0.92 - 1.20 kg-m, 79.9 - 104.2 in-lb)	Tighten 1 - 6 in numerical order as shown.
4	8.3 - 10.3 N·m (0.9 - 1.0 kg-m, 74 - 91 in-lb)	Tighten 7 - 10 in numerical order as shown.

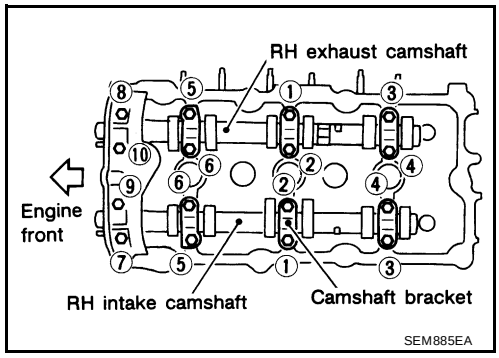

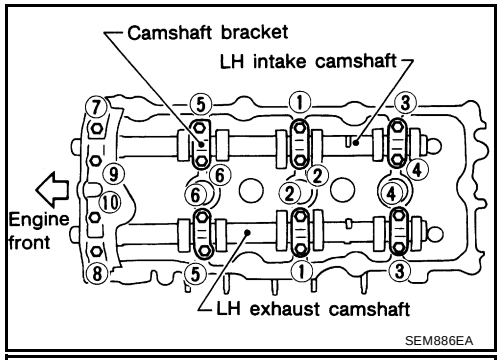

10. Install the IVTC solenoid valves with new gaskets.

IVTC solenoid valve bolts	**: 10 - 12 N·m (1.0 - 1.3 kg-m, 87 - 112 in-lb)**

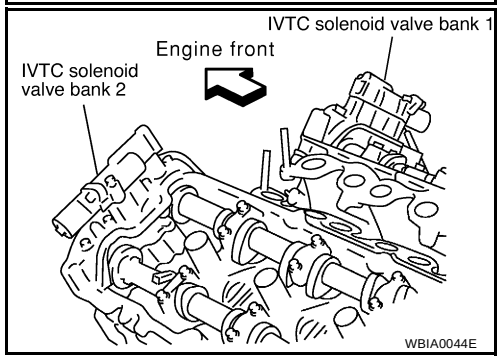

11. Install the new O-rings on the cylinder block.

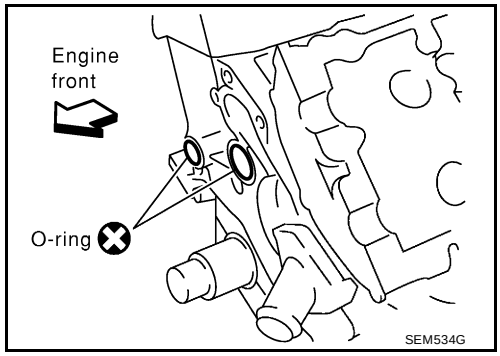

12. Install the new O-rings on the cylinder head.

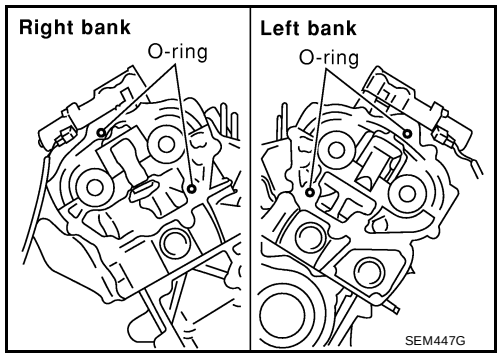

13. Apply sealant to the specified portion of the rear timing chain case. Refer to EM-102, "Precautions for Liquid Gasket" .

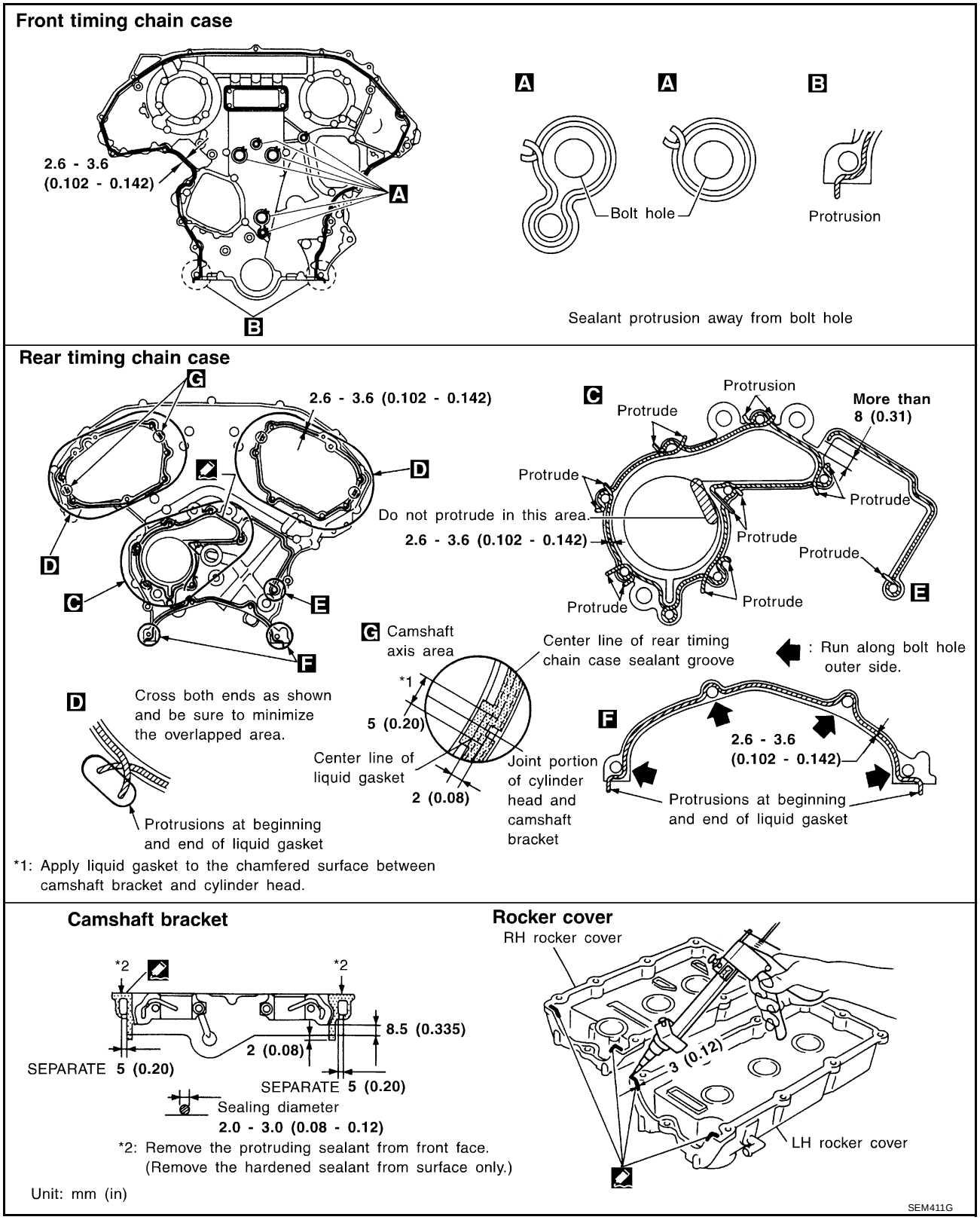

- Before installation, wipe off the protruding sealant.

14. Align rear timing chain case with dowel pins, then install on cylinder head and block.
15. Tighten rear chain case bolts in two stages.
a. Tighten bolts in numerical order shown.
b. Retighten bolts in numerical order shown.

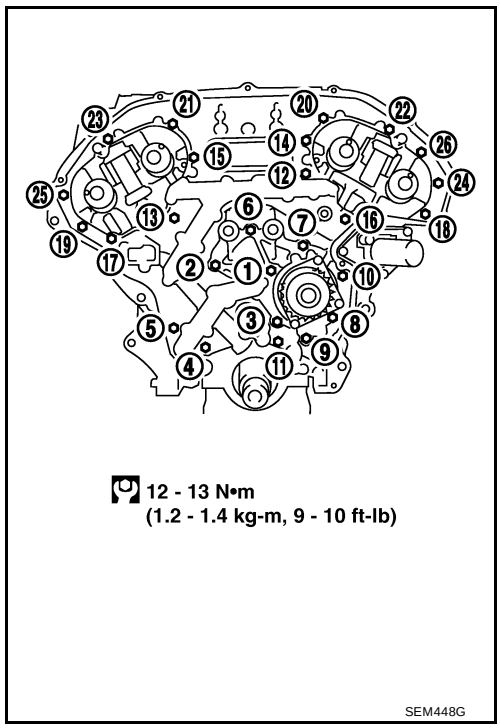

16. Install the coolant outlet housing.
17. Install the intake manifold with a new gasket.
   - Tighten the bolts in the numerical order as shown.

Stage 1 : 5 - 10 N·m (0.5 - 1.0 kg-m, 44 - 86 in-lb)
Stage 2 : 26 - 31 N·m (2.7 - 3.2 kg-m, 20 - 23 ft-lb)

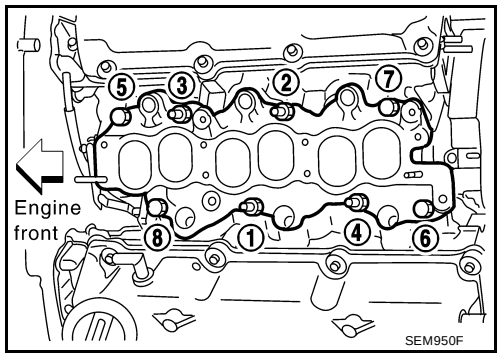

18. Install the fuel rail and injectors. Refer to EM-129, "Removal and Installation" .
19. Install the timing chains. Refer to EM-155, "Installation" .

Disassembly and Assembly

EBS007QD

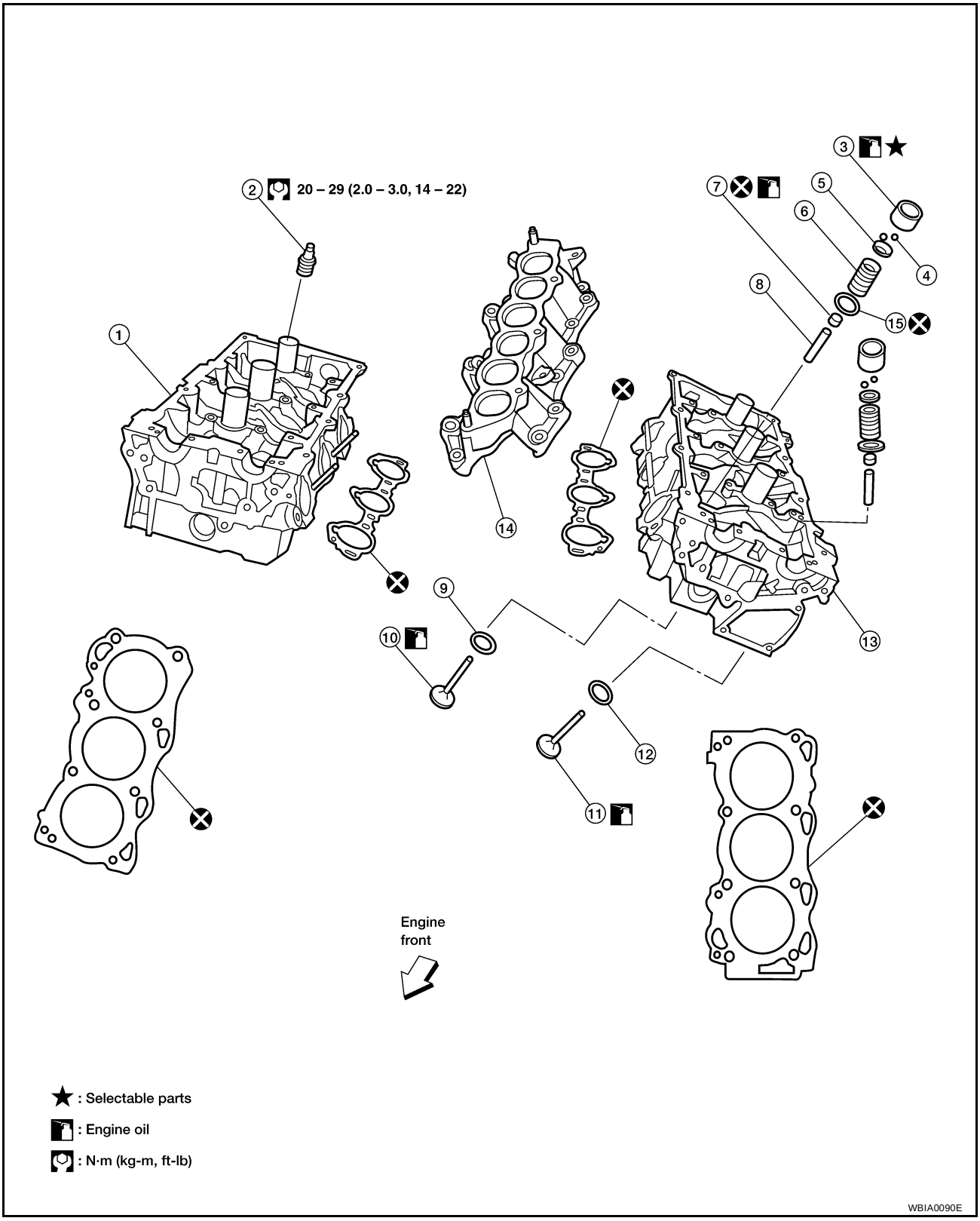

1.	Cylinder head (right bank)	2.	Spark plug	3.	Valve lifter
4.	Valve collet	5.	Valve spring retainer	6.	Valve spring
7.	Valve oil seal	8.	Valve guide	9.	Valve seat (INT)
10.	Valve (INT)	11.	Valve (EXH)	12.	Valve seat (EXH)
13.	Cylinder head (left bank)	14.	Intake manifold	15.	Valve spring seat

CAUTION:

- **When installing camshafts, chain tensioners, oil seals, or other sliding parts, lubricate contacting surfaces with new engine oil.**
- **Apply new engine oil to threads and seat surface when installing cylinder head, camshaft sprocket, crankshaft pulley, and camshaft bracket.**
- **Attach tags to valve lifters so as not to mix them up.**

DISASSEMBLY

1. Remove valve lifter.
   - Mark position for installation.
2. Remove valve collet.
   - Compress valve spring with valve spring compressor. Remove valve collet with magnet driver.
3. Remove valve spring retainer, valve spring, and valve spring seat.
4. Push valve stem to combustion chamber side, and remove valve, mark for assembly.
   - Inspect valve guide clearance before removal. Refer to EM-178, "VALVE GUIDE CLEARANCE" .
   - Confirm installation point.

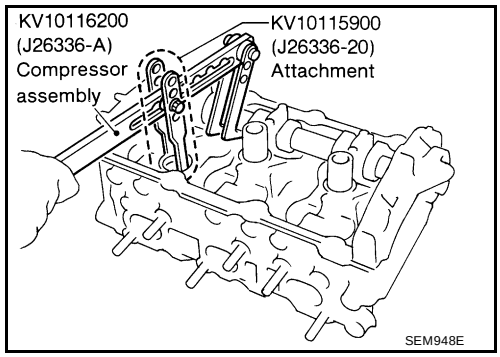

5. Remove the valve oil seals.
6. If valve seat must be replaced, refer to EM-180, "VALVE SEAT REPLACEMENT" .
7. If valve guide must be replaced, refer to EM-179, "VALVE GUIDE REPLACEMENT" .
8. Remove spark plug with spark plug wrench.

ASSEMBLY

1. Install valve guide. Refer to EM-179, "VALVE GUIDE REPLACEMENT" .
2. Install valve seat. Refer to EM-180, "VALVE SEAT REPLACEMENT" .
3. Install new valve spring seats and new valve oil seals.
   - Install with valve oil seal drift to match dimension in illustration.
4. Install the valves in their original position, as marked during disassembly.

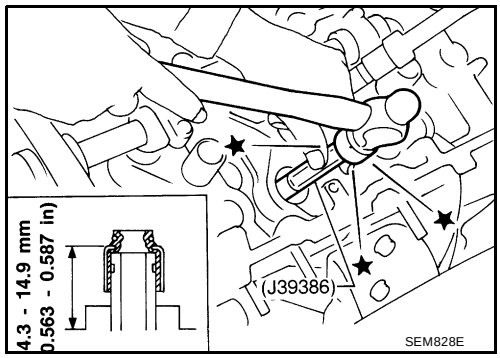

5. Install valve spring (uneven pitch type).
   - Install smaller pitch end (paint mark) to cylinder head side (valve spring seat side).
6. Install valve spring retainer.

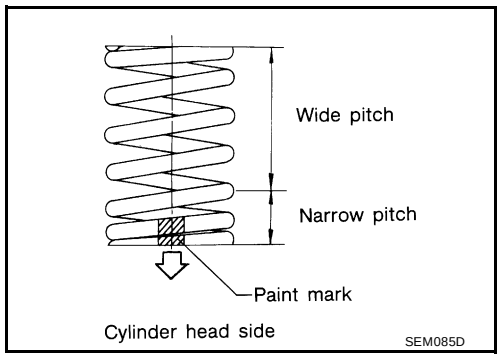

7. Install valve collet.
   - Compress valve spring with valve spring compressor. Install valve collet with magnet hand.
   - Tap stem edge lightly with plastic hammer after installation to check its installed condition.
8. Install valve lifter.
9. Install spark plug with spark plug wrench.

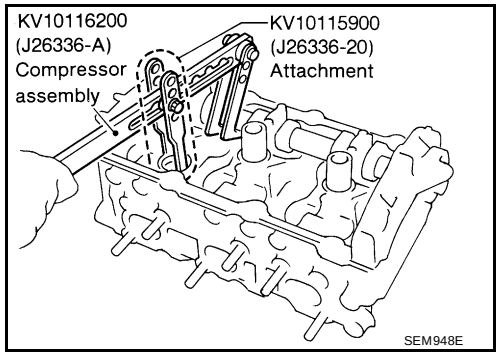

Inspection After Disassembly

EBS007QE

CYLINDER HEAD DISTORTION

1. Clean the surface of the cylinder head. Use a reliable straightedge and feeler gauge to check the flatness of cylinder head surface.
   Check along six positions as shown.

   Head surface flatness : Limit 0.1 mm (0.004 in)

2. If beyond the specified limit, resurface or replace it.
   The limit for cylinder head resurfacing is determined by the cylinder block resurfacing.

   Resurfacing Limit

   Amount of cylinder head resurfacing is "A".

   Amount of cylinder block resurfacing is "B".

   The maximum limit : A + B = 0.2 mm (0.008 in)

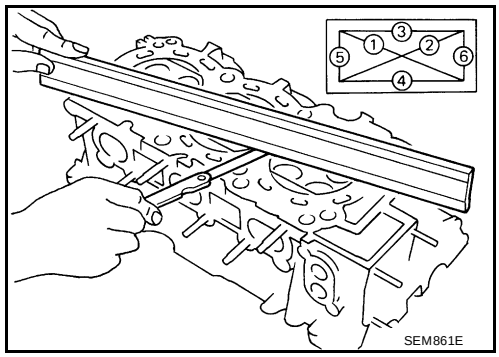

3. After resurfacing cylinder head, check that camshaft rotates freely by hand. If resistance is felt, cylinder head must be replaced.

   Nominal cylinder head height : 126.3 - 126.5 mm (4.972 - 4.980 in)

VALVE GUIDE CLEARANCE

1. Measure valve deflection as shown in the figure. (Valve and valve guide mostly wear in this direction.)

   Valve deflection limit (dial gauge reading)

   Intake : 0.24 mm (0.0094 in)

   Exhaust : 0.28 mm (0.0110 in)

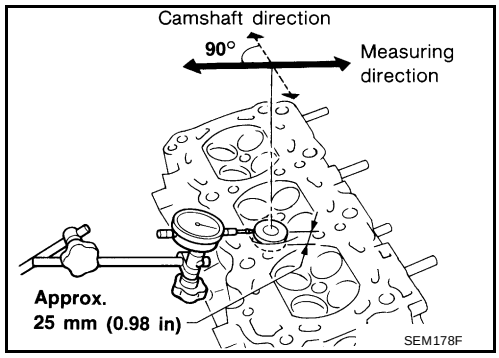

2. If it exceeds the limit, check valve to valve guide clearance.

a. Measure valve stem diameter and valve guide inner diameter.

b. Check that clearance is within specification.

   Valve to valve guide clearance limit

   Intake : 0.08 mm (0.0031 in)

   Exhaust : 0.1 mm (0.004 in)

c. If it exceeds the limit, replace valve or valve guide.

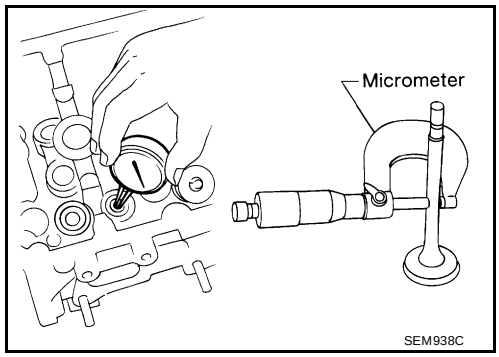

VALVE GUIDE REPLACEMENT

CAUTION:

When a valve guide is removed, replace it with an oversized [0.2 mm (0.008 in)] valve guide.

1. To remove valve guide, heat cylinder head to 110° to 130°C (230° to 266°F) by soaking in heated oil.

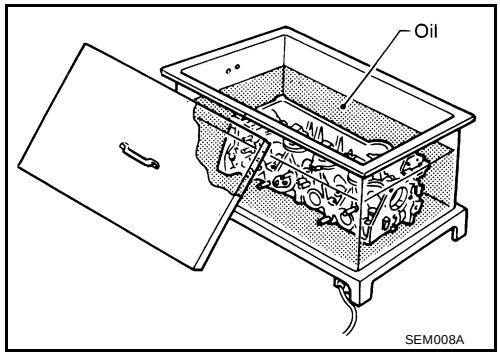

2. Drive out the valve guide with a press [under a 20 kN (2.2 US ton) pressure] or hammer and suitable tool.

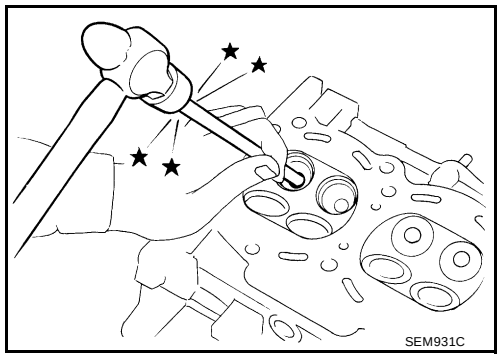

3. Ream cylinder head valve guide hole.

Valve guide hole diameter (for service parts), intake and exhaust	**: 10.175 - 10.196 mm (0.4006 - 0.4014 in)**

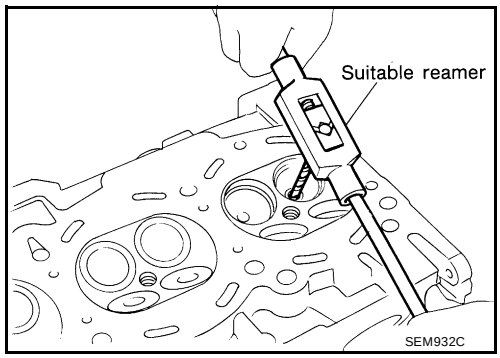

4. Heat cylinder head to 110° to 130°C (230° to 266°F) by soaking in heated oil and press new valve guide from camshaft side into the cylinder head to the dimensions as shown.

Projection "L" : 12.6 - 12.8 mm (0.496 - 0.504 in)

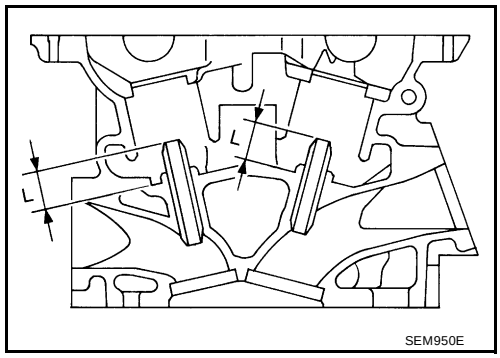

5. Using a valve guide reamer, apply a reamer finish to the valve guide.

Intake and exhaust finished size	**: 6.000 - 6.018 mm (0.2362 - 0.2369 in)**

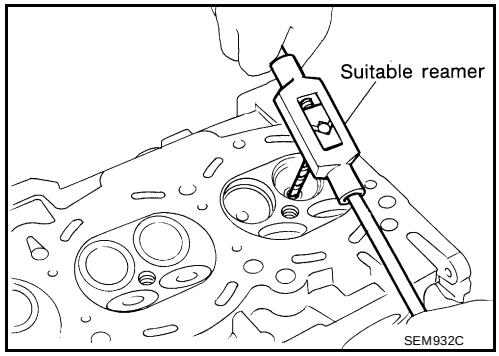

VALVE SEAT CONTACT

NOTE:

After confirming that the dimensions of valve guides and valves are within specifications, perform this procedure.

1. Apply prussian blue onto contacting surface of valve seat to check the condition of the valve contact on the surface.
2. Check if the contact area band is continuous all around the circumference.
3. If not, grind to adjust valve fitting and check again. If the contacting surface still has N.G conditions even after the re-check, replace valve seat.

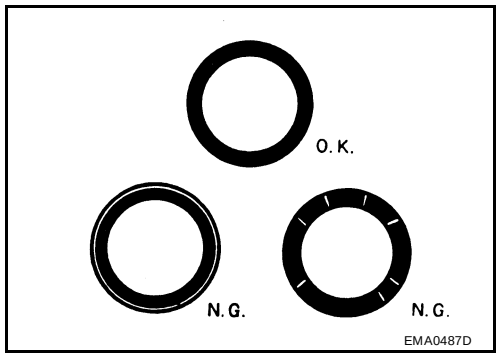

VALVE SEAT REPLACEMENT

1. Bore out old seat until it collapses. Boring should not continue beyond the bottom face of the seat recess in cylinder head. Set the machine depth stop to ensure this.
2. Ream cylinder head recess for service valve seat.

Oversize	**: 0.5 mm (0.020 in)**
Intake	**: 38.500 - 38.516 mm (1.5157 - 1.5164 in)**
Exhaust	**: 32.700 - 32.716 mm (1.2874 - 1.2880 in)**

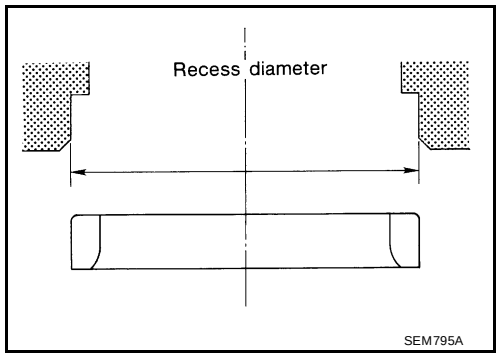

CAUTION:

Be sure to ream in circles concentric to the valve guide center. This will enable valve seat to fit correctly.

3. Heat cylinder head to 110° to 130°C (230° to 266°F) by soaking in heated oil.
4. Press fit valve seat until it seats on the bottom.
5. Cut or grind valve seat using suitable tool to the specified dimensions. Refer to EM-207, "VALVE" .
6. After cutting, lap valve seat with abrasive compound.
7. Check valve seating condition.

Seat face angle "α"	**: 45° 15' - 45° 45' degrees/minutes**
Contacting width "W" for intake	**: 1.09 - 1.31 mm (0.0429 - 0.0516 in)**
Contacting width "W" for exhaust	**: 1.29 - 1.51 mm (0.0508 - 0.0594 in)**

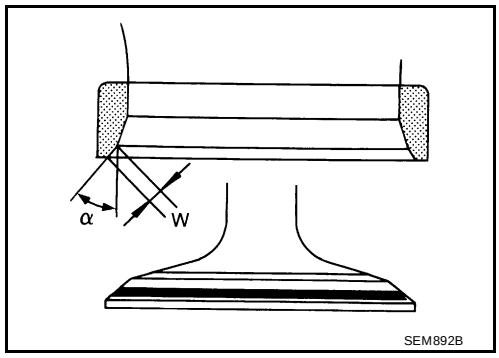

8. Use a depth gauge to measure the distance between the mounting surface of the cylinder head spring seat and the valve stem end. If the distance is shorter than specified, repeat step 5 to adjust it. If it is longer, replace the valve seat with a new one.

Valve seat resurface limit "L" intake	**: 41.07 - 41.67 mm (1.6169 - 1.6405 in)**
Valve seat resurface limit "L" exhaust	**: 41.00 - 41.60 mm (1.6142 - 1.6378 in)**

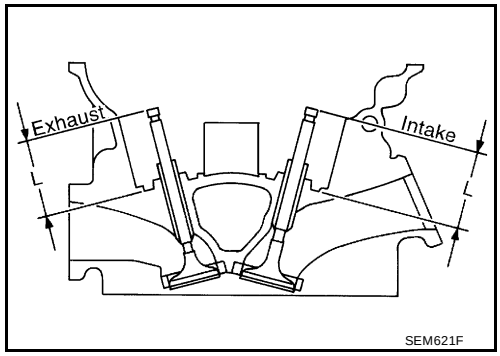

VALVE SPRING SQUARENESS

Set try square along the side of valve spring and rotate the spring. Measure the maximum clearance between the top face of spring and try square.

Out-of-square limit : Less than 2.0 mm (0.079 in)

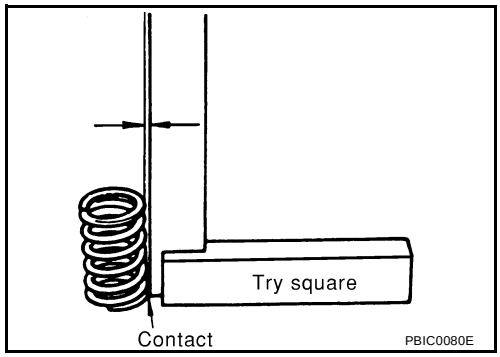

VALVE SPRING DIMENSIONS AND VALVE SPRING PRESSURE LOAD

Check valve spring pressure at specified spring height.

Standard	**: 196 N (20.0 kg, 44.1 lb) at height 37.0 mm (1.457 in)**
Limit	**: More than 433 N (44.2 kg, 97.3 lb) at height 27.8 mm (1.094 in)**

If it is not within specifications, replace the spring.

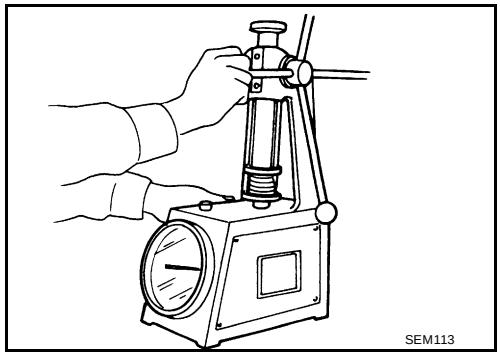

ENGINE ASSEMBLY

PFP:10001

Removal and Installation

EBS007QF

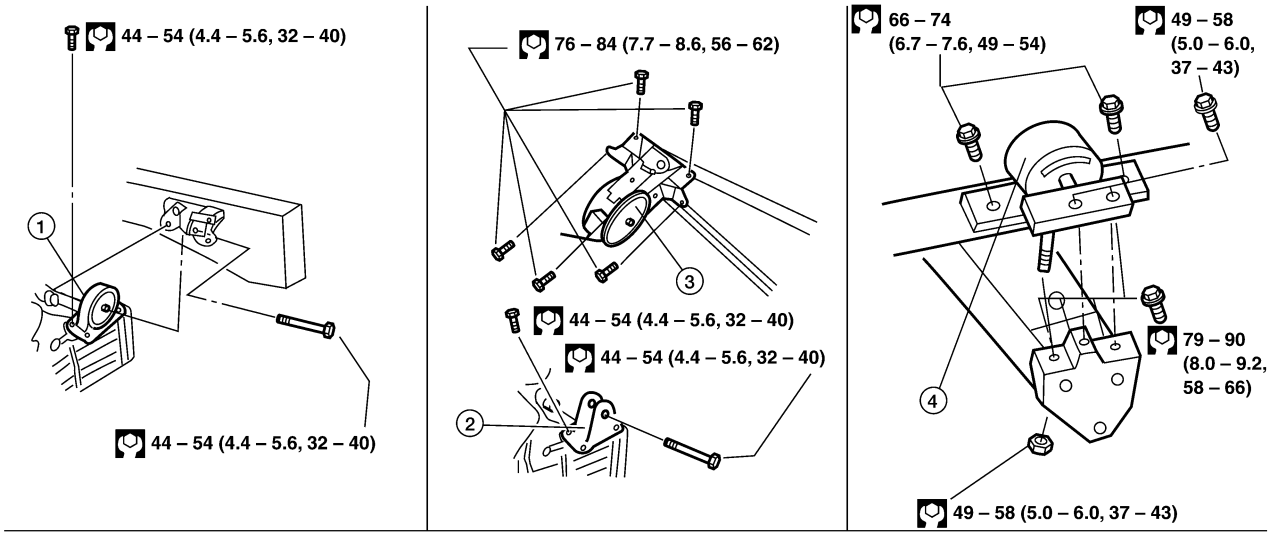

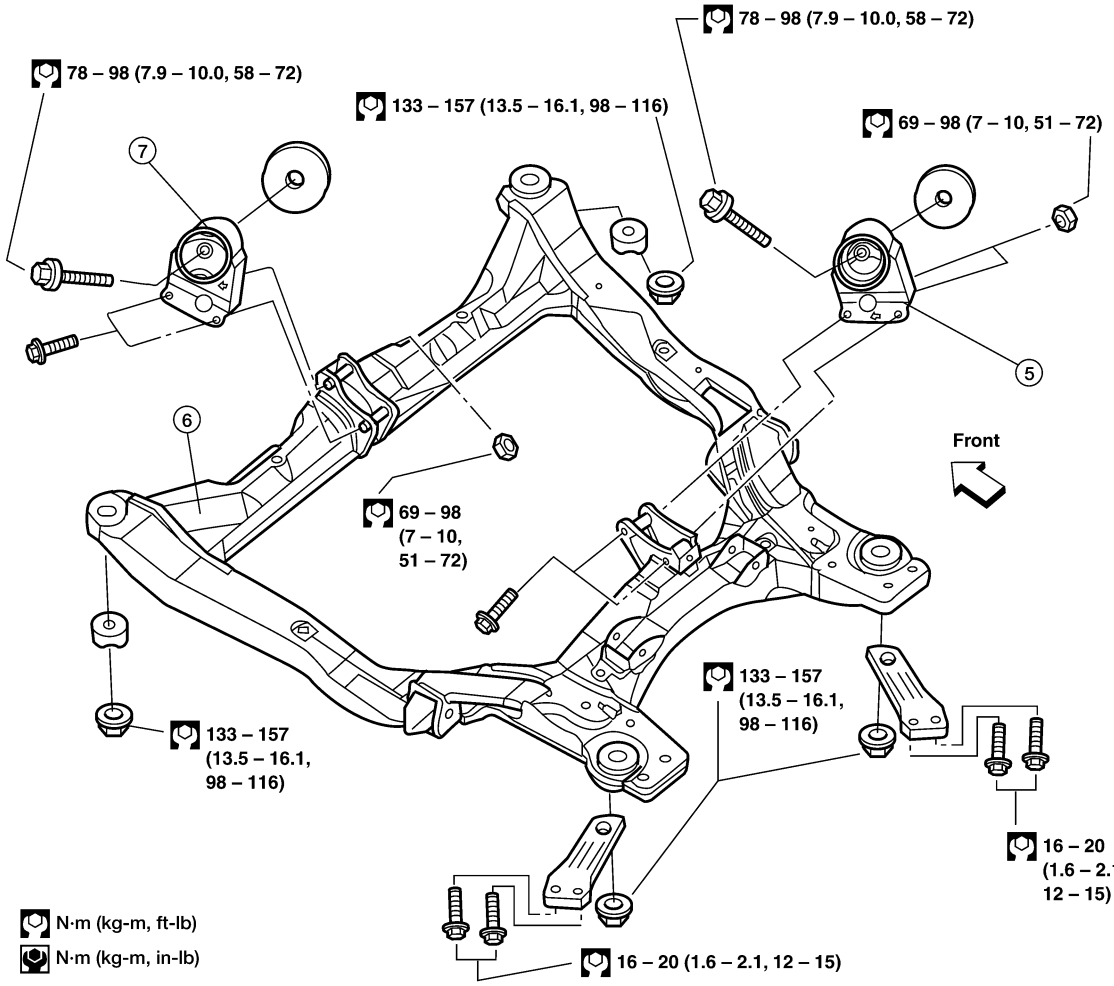

1. LH transaxle mounting insulator (A/T) 2. LH transaxle mounting bracket (M/T) 3. LH transaxle mounting bracket (M/T)

4. RH engine mounting insulator
5. Rear engine mounting insulator (electrically controlled with automatic transaxle)
6. Front suspension member
7. Front engine mounting insulator (electrically controlled with automatic transaxle)

WARNING:

- **Place chocks at the front and back of the rear wheels.**
- **For engines not equipped with engine slingers, attach the proper slingers and bolts as described in the NISSAN Parts Catalog.**

CAUTION:

- **Do not start working until exhaust system and coolant are cool.**
- **If items or work required are not covered by the engine main body section, refer to the applicable sections.**
- **Use the correct supporting points for lifting and jacking. Refer to GI-37, "LIFTING POINT" .**
- **In removing the drive shafts, be careful not to damage any transaxle grease seals.**
- **Before separating the engine and transaxle, remove the crankshaft position sensor (POS).**
- **Do not damage the edge of the crankshaft position sensor (POS) or the ring gear teeth.**

REMOVAL

1. Release fuel pressure.
   Refer to EC-671, "FUEL PRESSURE RELEASE" .
2. Remove the engine cover using power tool.
3. Drain the engine oil.
   Refer to MA-24, "Changing Engine Oil" .
4. Drain the M/T oil, refer to MA-28, "Changing M/T Oil" or A/T fluid, refer to MA-29, "Changing A/T Fluid" .
5. Disconnect engine room harness from the engine side and position it aside. Disconnect engine harness ground connections. Access the connector through the glove box opening. Refer to IP-10, "INSTRUMENT PANEL ASSEMBLY" .
6. Drain coolant.
   Refer to MA-22, "DRAINING ENGINE COOLANT" .
7. Remove and position aside the IPDM E/R and bracket and position aside.
8. Remove the following parts:
   - Hood assembly. Refer to BL-13, "Removal and Installation of Hood Assembly" .
   - Battery and tray using power tools
   - Air inlet duct, air intake duct and air cleaner case assembly with mass air flow sensor. Refer to EM-110, "Removal and Installation" .
   - Power brake booster vacuum hose
   - Drive belts.
   - Radiator assembly, coolant reservoir, and system hoses
     Refer to EC-1079, "Component Description" .
   - Top cowl grille.
     Refer to EI-18, "Removal and Installation" .
   - Front windshield wiper assembly
     Refer to WW-25, "Removal and Installation for Wiper Motor and Linkage" .
9. Disconnect heater hoses.
10. Remove the front wheel and tires.
11. Remove splash shield.
12. Remove the engine undercover using power tool.
13. Remove the front exhaust tube using power tools.
    Refer to EX-6, "Removal and Installation" .
14. Remove oil cooler pipe bolts.
15. Remove the idler pulley and idler bracket.

16. Remove the A/C compressor using power tools. Discharge and recover the R134a refrigerant.
    Refer to ATC-119, "HFC-134a (R-134a) Service Procedure" .
17. Remove the front drive shafts.
    Refer to FAX-11, "Removal and Installation" .
18. Remove the front suspension member. Refer to FSU-14, "Removal and Installation" .
19. Disconnect fuel hose quick connection at vehicle piping side.
    Refer to EM-129, "Removal and Installation" .
20. Disconnect the transaxle shift controls.
21. Remove the clutch operating cylinder without disconnecting line and position aside.
22. Disconnect the engine harness retainers and ground strap.
23. Disconnect reservoir tank for the power steering from engine compartment bracket and position it aside.
24. Disconnect the power steering pump from the engine, without disconnecting the piping, and position it aside.
25. Install engine slingers into front of left bank cylinder head and rear of right bank cylinder head.

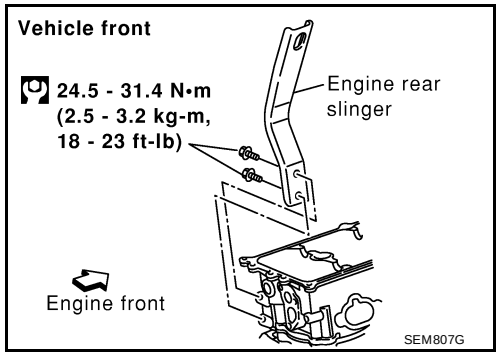

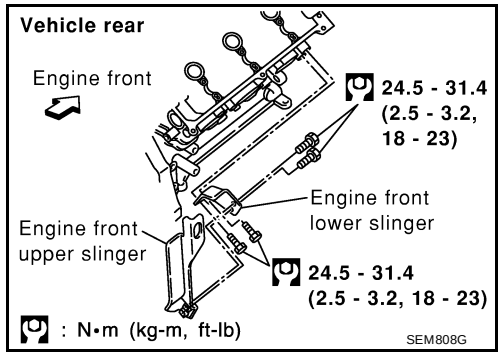

26. Support the engine and transaxle assembly with engine lifting equipment front the top with the vehicle raised on a hoist.
27. Disconnect the LH transaxle mount and the RH engine mount.
28. Carefully lower the engine and transaxle assembly, avoiding interference with the vehicle body.

    CAUTION:
    - **Before and during this procedure, always check if any harnesses are left connected.**
    - **Avoid any damage to, or any oil/grease smearing or spills onto the engine mounting insulators.**
29. Remove the starter motor. Refer to SC-23, "Removal and Installation" .
30. Remove the crankshaft position sensor (POS).
31. Separate the engine and transaxle and mount the engine on a suitable engine stand.

INSTALLATION

Installation is in the reverse order of removal.

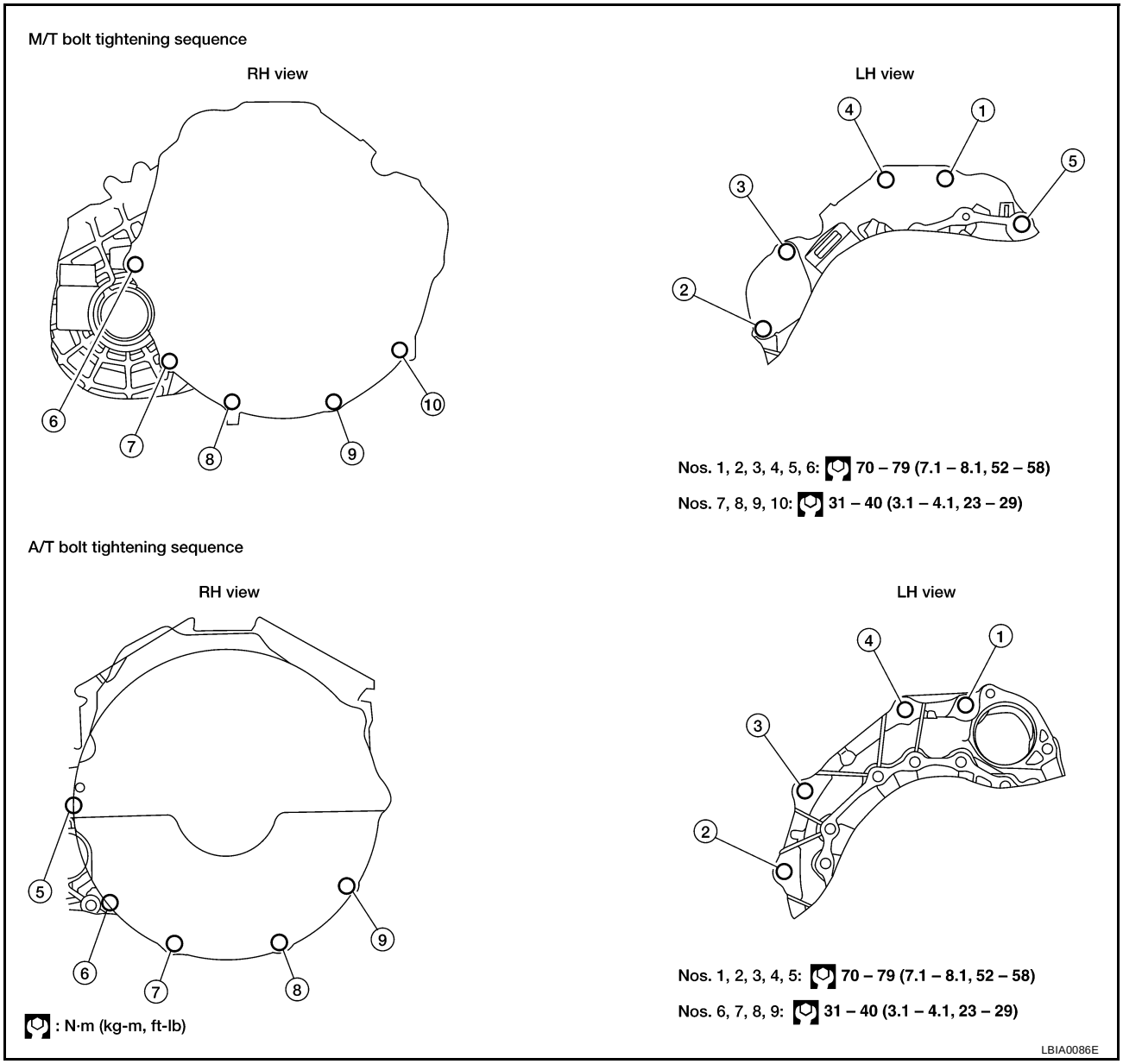

INSPECTION AFTER INSTALLATION

- Before starting engine, check the levels of coolant, lubrications, working oils, and of air conditioner refrigerant. If less than required quantity, fill to the specified level.
- Run engine to check for unusual noise and vibration.
- Warm up engine thoroughly to make sure there is no leakage of coolant, lubricants, oil, fuel, or exhaust gas.

CYLINDER BLOCK

PFP:11010

Disassembly and Assembly

EBS007QG

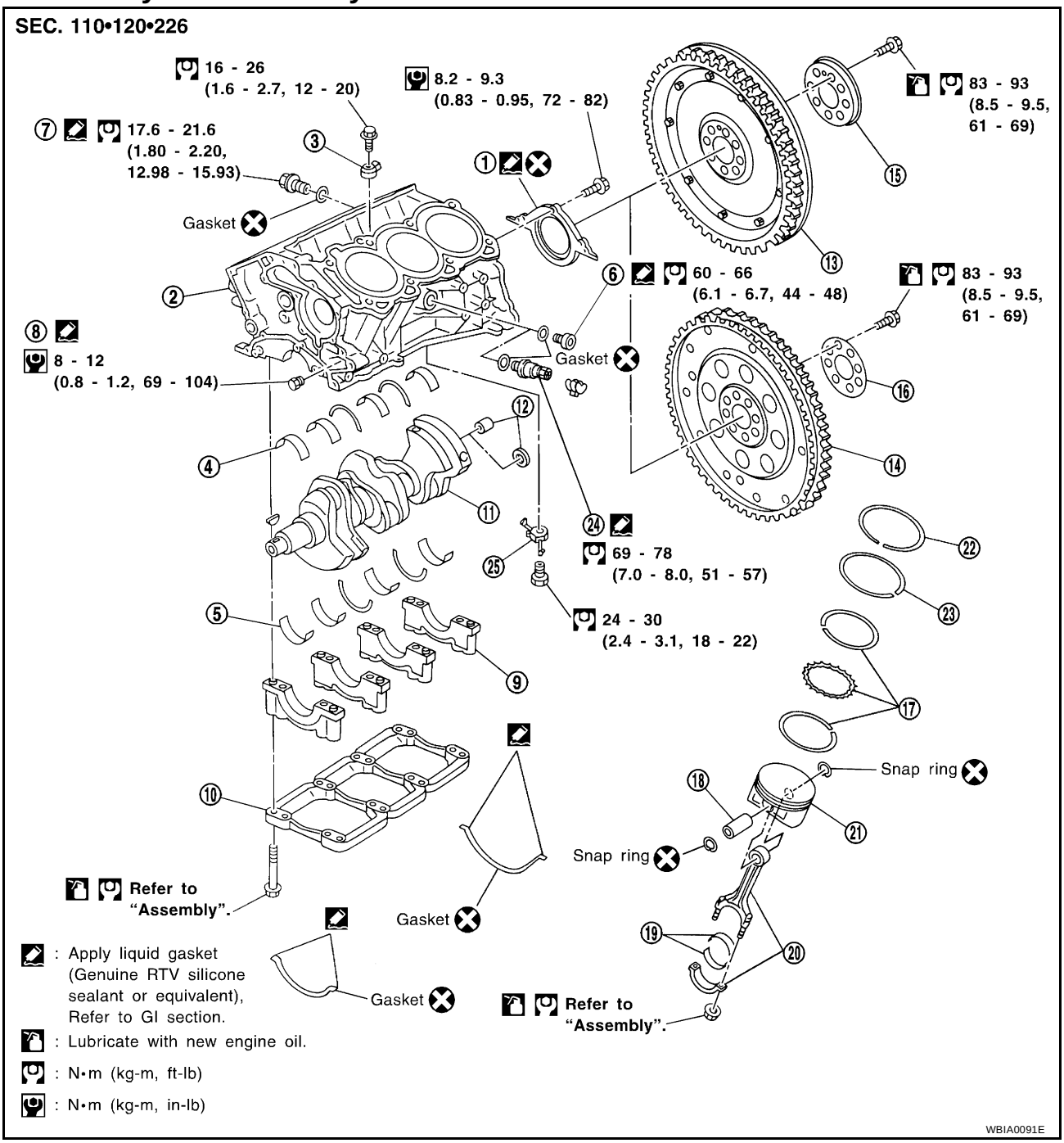

1.	Rear oil seal retainer	2.	Cylinder block	3.	Knock sensor
4.	Upper main bearing	5.	Lower main bearing	6.	Water drain plug (LH side)
7.	Water drain plug (RH side)	8.	Water drain plug (water pump side)	9.	Main bearing cap
10.	Main bearing beam	11.	Crankshaft	12.	Pilot bushing or pilot converter
13.	Flywheel with signal plate (M/T)	14.	Drive plate with signal plate (A/T)	15.	Flywheel reinforcement
16.	Drive plate reinforcement	17.	Oil ring set	18.	Piston pin
19.	Connecting rod bearing	20.	Connecting rod	21.	Piston
22.	Top ring	23.	Second ring	24.	Cylinder block heater (Canada only)
25.	Oil jet				

CAUTION:

- **Apply new engine oil to parts as marked in illustrations before installation.**
- **Place removed parts such as bearings and bearing caps in their proper order and direction.**
- **When installing the connecting rod nuts, and main bearing cap bolts, apply new engine oil to the threads and mating surfaces**
- **Do not allow any magnetic materials to contact the signal plate teeth on the drive plate.**

DISASSEMBLY

1. Remove the engine assembly. Refer to EM-182, "ENGINE ASSEMBLY" .
2. Install the engine on the engine stand.
3. Remove the knock sensor.
4. Drain the engine of all coolant and oil.
5. Remove the oil pan. Refer to EM-120, "Removal and Installation" .
6. Remove the timing chain. Refer to EM-149, "Removal" .
7. Remove the cylinder head. Refer to EM-165, "Removal and Installation" .
8. Remove the flywheel (M/T), or the drive plate (A/T) using a T55 Torx® socket.
9. Remove the piston and connecting rod assemblies.

a. Position the crankshaft pin corresponding to the connecting rod to be removed onto the bottom dead center.

b. Remove the connecting rod cap.

c. Using a hammer handle or similar tool, push the piston and connecting rod assembly out to the cylinder head side.
   - Before removing the piston and connecting rod assembly, check the connecting rod side clearance. Refer to EM-213, "CONNECTING ROD" .

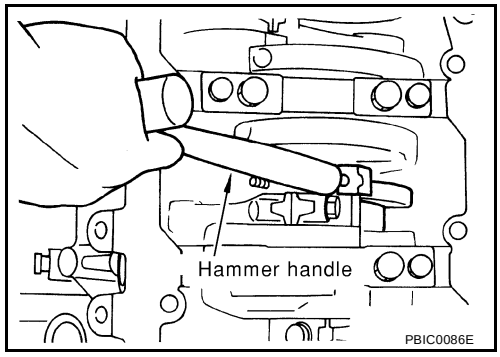

10. Remove the connecting rod bearings.

CAUTION:

- **When removing the connecting rod side bearings, note the installation position. Keep them in the correct order.**

11. Remove the piston rings from the piston using a piston ring expander.
    - Before removing the piston rings, check the piston ring side clearance. Refer to EM-195, "PISTON RING SIDE CLEARANCE" .
    - Be careful to mark the rings if they are to be reused so they are installed in their original position.

CAUTION:

- **When removing the piston rings, be careful not to damage the piston. Do not expand the rings excessively.**

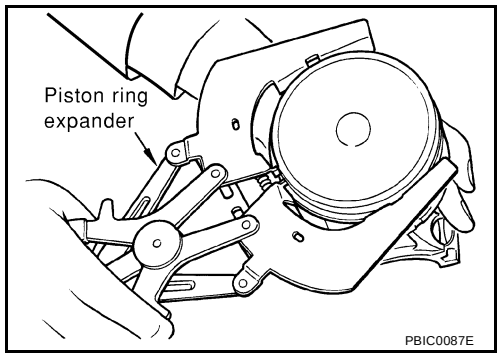

12. Remove the piston from the connecting rod as follows.

a. Using a snap ring pliers, remove the snap ring.

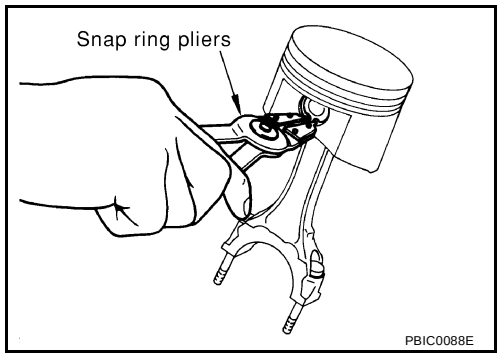

b. Heat the pistons to 60° - 70°C (140° - 158°F).

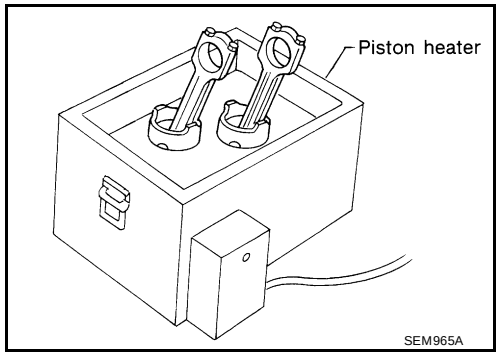

c. Push out the piston pin with a suitable tool, with an outer diameter approximately 20 mm (0.8 in).

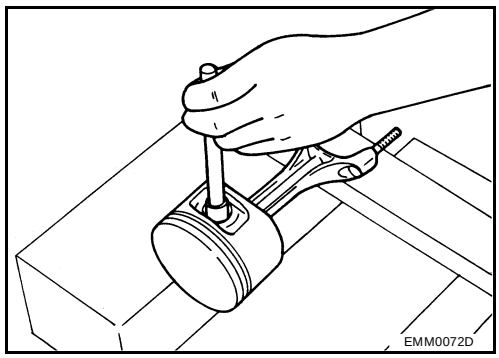

13. Remove the rear oil seal retainer from the cylinder block.
    - Insert a screwdriver or similar tool between the rear end of the crankshaft counter weight and rear oil seal retainer, and separate the liquid gasket to remove.

    CAUTION:
    Be careful not to damage the mating surface.

    NOTE:
    When replacing the rear oil seal during on-vehicle service, it is necessary to remove the oil pan. Refer to EM-120, "Removal and Installation" .

14. Loosen the bolts in the numerical order as shown and remove the main bearing beam, bearing caps and crankshaft.
    - Before loosening the main bearing cap bolts, measure the crankshaft side clearance.
      Refer to EM-199, "CRANKSHAFT" .

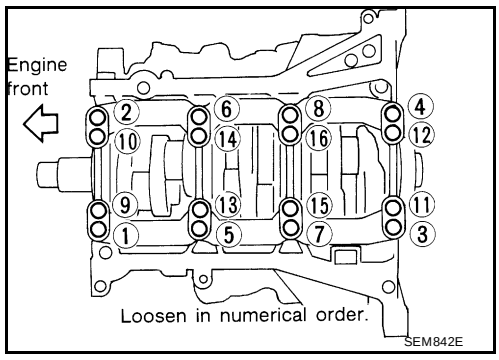

15. Remove the oil jets.
    - Note the location of the knock pins for installation.
16. Remove the main bearings and thrust bearings from the cylinder block and main bearing caps.
    - When removing them, note the direction and position. Keep them in the correct order for installation.

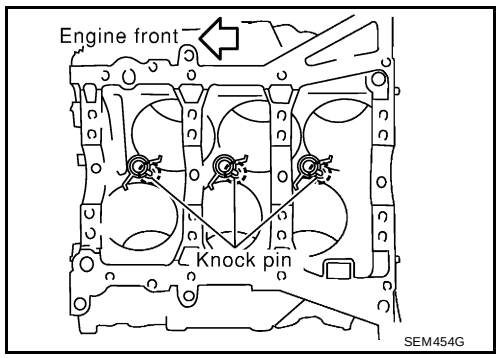

17. If the pilot bushing (M/T) or pilot converter (A/T) must be removed, remove it from the rear end of the crankshaft using a pilot bearing puller.

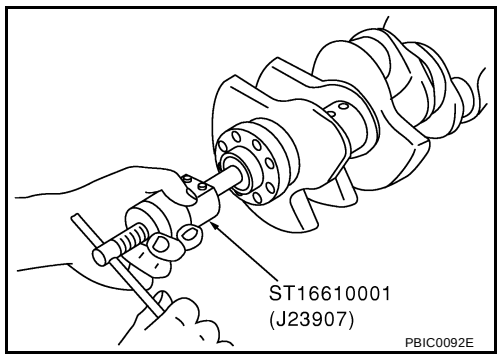

ASSEMBLY

1. Install the oil jets.
   - Insert the oil jet knock pin into the cylinder block knock pin hole, and tighten the mounting bolts.

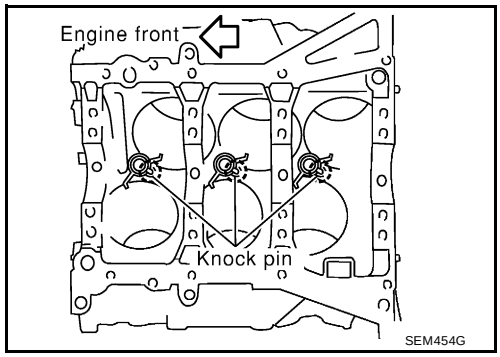

2. Set the upper main bearings in their proper positions on the cylinder block.
   - Confirm the correct main bearings are used. Refer to EM-198, "PISTON-TO-BORE CLEARANCE" .

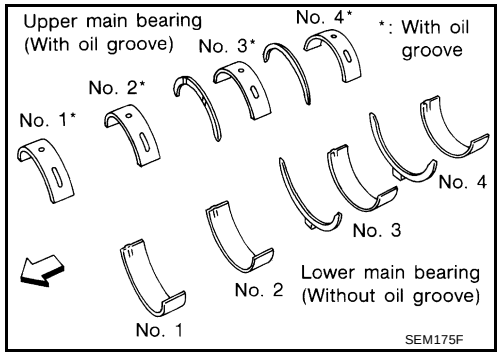

3. Instructions for the re-use of the main bearing cap bolts.
   - A plastic zone tightening method is used for tightening the main bearing cap bolts. Measure d1 and d2 as shown.
   - For d2, select the minimum diameter in the measuring area.
   - If the difference between d1 and d2 exceeds the limit, replace the bolts for assembly.

   Limit (d1 - d2) : 0.11 mm (0.0043 in)

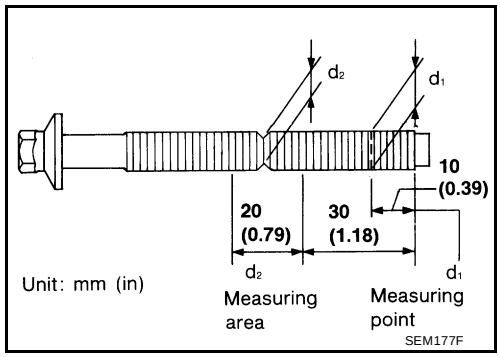

4. After installing the crankshaft, lower main bearings, main bearing caps, main bearing beam, and bearing cap bolts. Tighten the bearing cap bolts in the numerical order as shown.

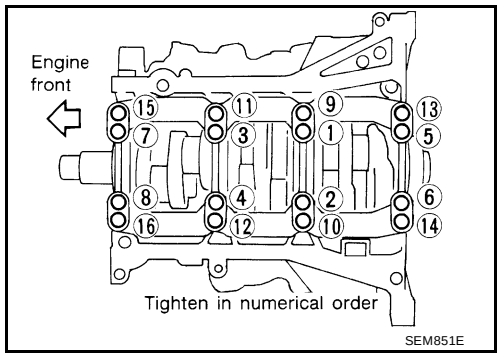

a. Make sure that the front marks on the main bearing beam faces the front of the engine.

b. Prior to tightening all the bearing cap bolts, place the bearing beam in its proper position by shifting the crankshaft in the axial position.

c. After tightening the bearing cap bolts, make sure the crankshaft turns smoothly.

d. Lubricate the threads and seat surfaces of the bolts with new engine oil.

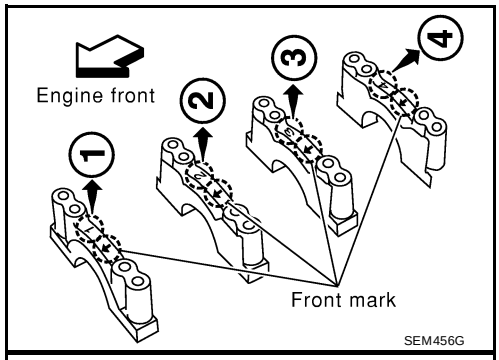

e. Tighten the bolts in two stages:

CAUTION:
Measure the tighten angle in stage 2 with an angle wrench. Do not measure visually.

Stage 1	**: 32 - 38 N·m (3.3 - 3.9 kg-m, 24 - 28 ft-lb)**
Stage 2	**: 90° - 95° degrees clockwise**

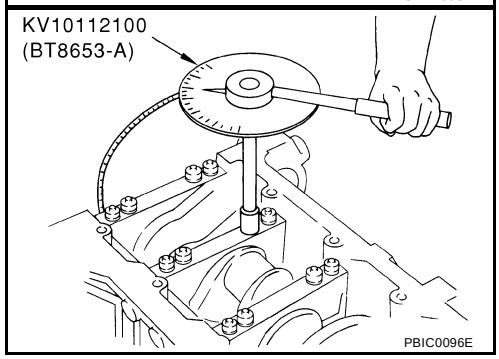

5. Measure crankshaft end play.
   - If beyond the limit, replace the bearing with a new one.

Standard	**: 0.10 - 0.25 mm (0.0039 - 0.0098 in)**
Limit	**: 0.30 mm (0.0118 in)**

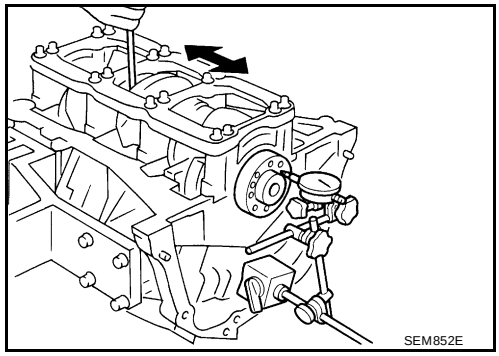

6. Install the rear oil seal retainer.
   - Apply sealant to rear oil seal retainer as shown.
     Use Genuine RTV Silicone Sealant, or equivalent. Refer to GI-42, "RECOMMENDED CHEMICAL PRODUCTS AND SEALANTS" .

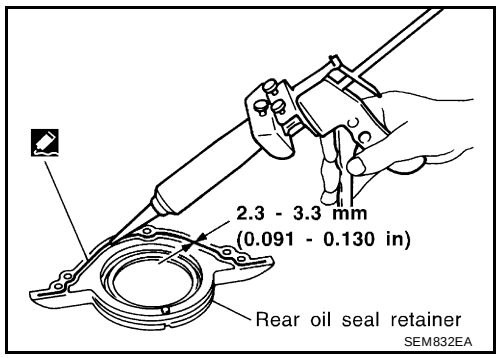

7. Install the piston to the connecting rod.

a. Using suitable snap ring pliers, install the snap ring into the pin-groove of the piston rear side.
   - Insert it fully into groove to install.

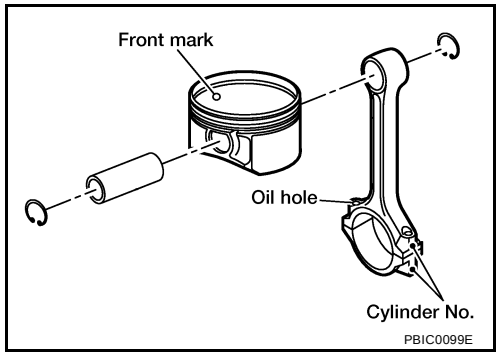

b. Install the piston to the connecting rod.
   - Heat the piston until the piston pin can be pushed in by hand without excess force [approx. 60° - 70°C (140° to 158°F)]. From the front to the rear, insert the piston pin into the piston and through the connecting rod.

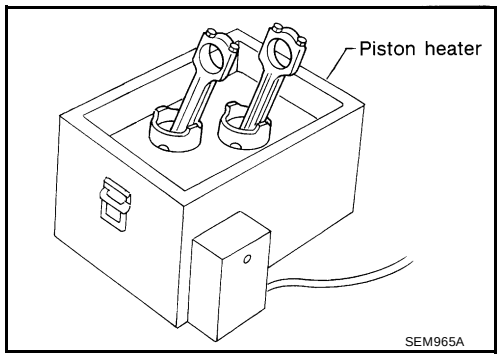

   - Assemble so that the front mark on the piston crown and the oil holes and the cylinder No. on the connecting rod are positioned as shown.

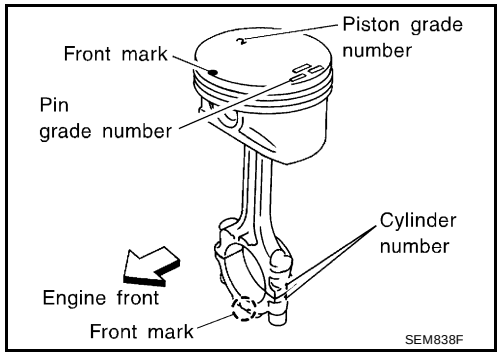

c. Install the snap ring into the front of the piston pin-groove.
   - After installing, check that the connecting rod pivots smoothly on the pin.

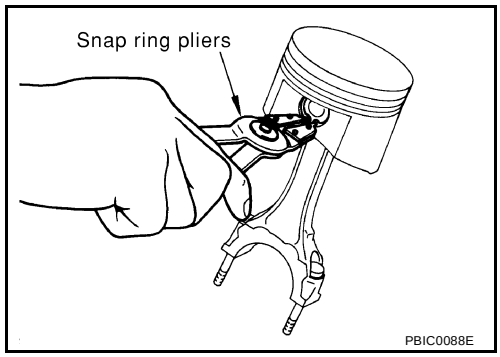

8. Using a piston ring expander, install the piston rings.
   - Install the top ring and the second ring with the stamped surface facing upward. If the ring is not stamped it can face in either direction.

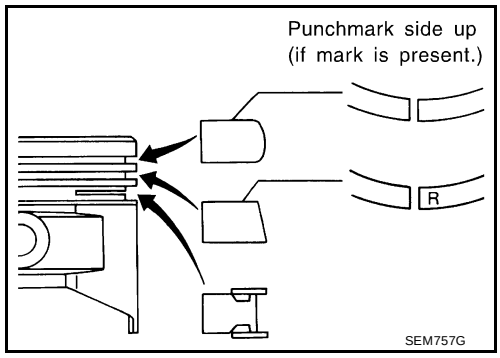

- Position each ring with the gap as shown, referring to the piston front mark.

CAUTION:

- **Be careful not to damage the piston.**
- **When the piston rings are not replaced, remount the rings in their original positions.**
- **When replacing the piston rings, those without punch-marks can be mounted either side up.**

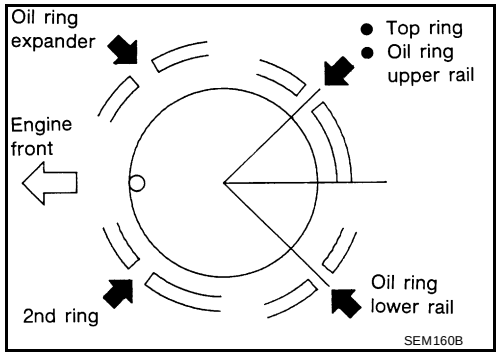

9. Install the connecting rod bearings to the connecting rod and the connecting rod cap.
   - When installing the connecting rod bearings, apply engine oil to the bearing surface (crankshaft side). Do not apply oil to the back surface (connecting rod and cap side), but thoroughly clean it.
   - When installing, align the connecting rod bearing protrusion with the notch of the connecting rod to install.
   - Check that the oil holes on the connecting rod and on the corresponding bearing are aligned.

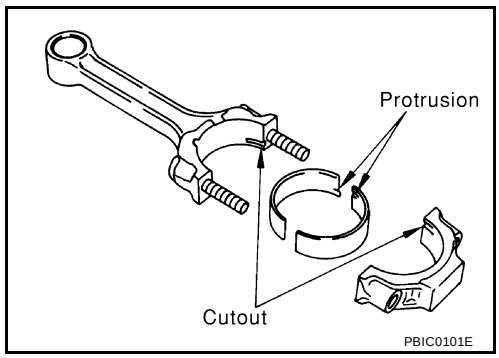

10. Install the piston and connecting rod assembly into the corresponding cylinder.
    - Position the crankshaft pin corresponding to the connecting rod to be installed onto the bottom dead center.
    - Apply engine oil sufficiently to the cylinder bore, piston, and crankshaft pin.
    - Match the cylinder position with the cylinder No. on the connecting rod to install.
    - Using a piston ring compressor, install the piston with the front mark on the piston crown facing the front of the engine.

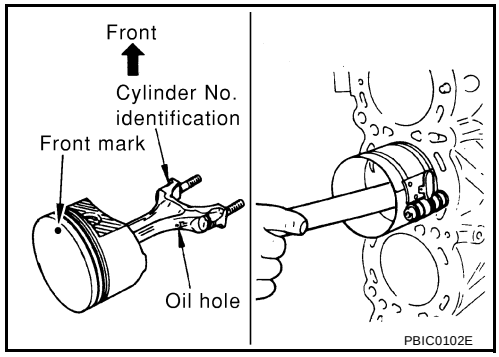

CAUTION:

Be careful not to damage the crankshaft pin and cylinder wall, resulting from an interference of the connecting rod big end.

11. Install the connecting rod cap.
    - Match the stamped cylinder number marks on the connecting rod with those on the cylinder cap for installation.
    - Install the piston connecting rod assembly and cap so that the front mark on the cap and piston are facing the front of the engine.
    - Lubricate the threads and seat surfaces with new engine oil.

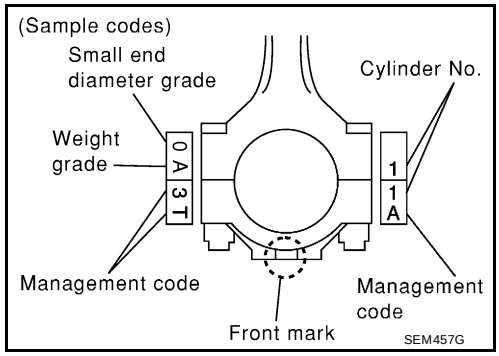

12. Check the connecting rod cap bolts before reusing, then install in their original position in the connecting rod. The bolts should screw in smoothly by hand.
    - Measure the outer diameter of the connecting rod cap bolt as shown.

Outer diameter "d" of the connecting rod bolt

Standard : 7.90 - 8.00 mm (0.3110 - 0.3150 in)

Limit : 7.75 mm (0.3051 in)

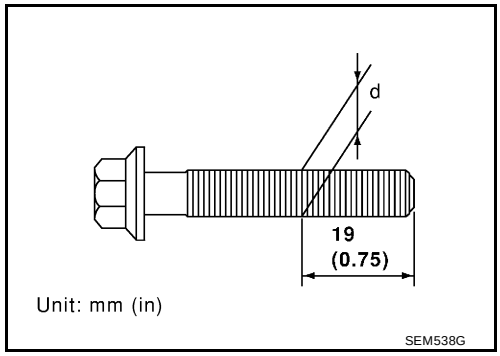

13. Tighten the connecting rod nuts in two stages:

Stage 1 : 19 - 21 N·m (1.9 - 2.1 kg-m, 14 - 15 ft-lb)

Stage 2 : 90° - 95° degrees clockwise

- Apply engine oil to the threads and seats of the connecting rod bolts and nuts.
- After tightening the nuts, make sure that the crankshaft rotates smoothly.
- Check the connecting rod side clearance. If beyond the limit, replace the connecting rod and/or crankshaft.

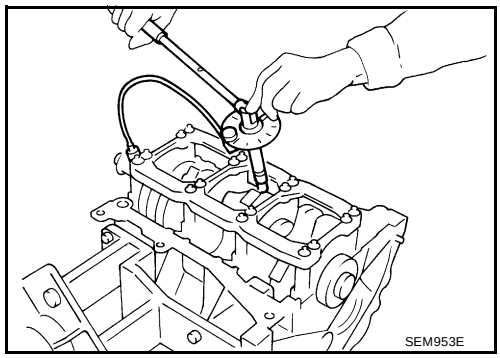

Connecting rod side clearance:

Standard : 0.20 - 0.35 mm (0.0079 - 0.0138 in)

Limit : 0.40 mm (0.0157 in)

CAUTION:

Always use either an angle wrench or protractor. Avoid tightening based on visual check alone.

14. Install the knock sensor.
    - Make sure that there is no foreign material on the cylinder block mating surface and the back surface of the knock sensor.
    - Install the knock sensor with the connector facing the rear of the engine.
    - Do not tighten the mounting bolts while holding the connector.
    - Make sure that the knock sensor does not interfere with other parts.

CAUTION:

If any impact by dropping occurs to the knock sensor, replace it with new one.

15. Install the pilot bushing (M/T) or converter (A/T) as shown.

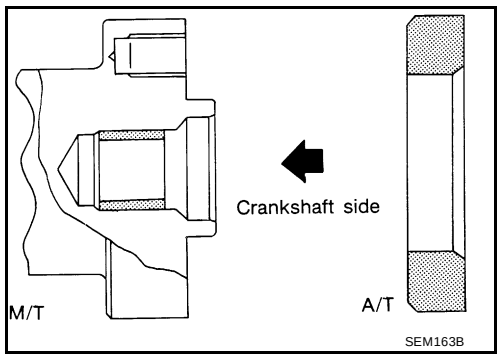

16. Install the flywheel (M/T), or the drive plate (A/T).

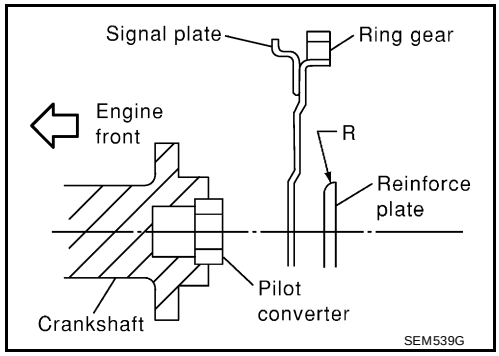

17. Install the cylinder head. Refer to EM-165, "Removal and Installation" .
18. Install the timing chain. Refer to EM-155, "Installation" .
19. Install the oil pan. Refer to EM-120, "Removal and Installation" .
20. Remove the engine from the stand and install the engine assembly into the vehicle. Refer to EM-182, "Removal and Installation" .
21. Assembly of the remaining parts is in the reverse order of disassembly.
22. Fill the engine with the specified oil and coolant. Refer to MA-12, "Fluids and Lubricants" .

    CAUTION:
    Wait at least 30 minutes for the sealant to set-up before filling the engine with fluids and running it.

Inspection

EBS007QH

PISTON AND PISTON PIN CLEARANCE

Inner Diameter of Piston Pin

- Measure the inner diameter of piston pin bore "dp".

  Standard diameter "dp"
  Grade No. 0 : 21.993 - 22.999 mm (0.8659 - 0.8661 in)
  Grade No. 1 : 21.999 - 22.005 mm (0.8661 - 0.8663 in)

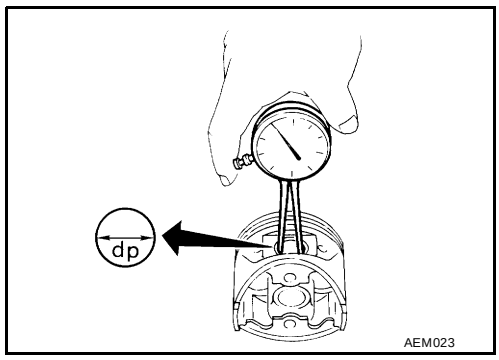

Outer Diameter of Piston Pin

- Measure outer diameter of piston pin "Dp".

  Standard diameter "Dp"
  Grade No. 0 : 21.989 - 21.995 mm (0.8657 - 0.8659 in)
  Grade No. 1 : 21.995 - 22.001 mm (0.8659 - 0.8662 in)

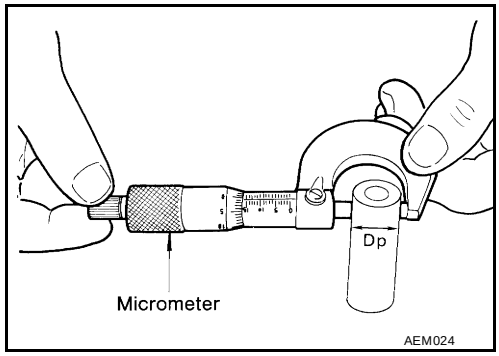

Piston and Piston Pin Interference Fit

Standard Interference Fit = "Dp" – "dp"

Standard : [0.002 mm (0.0001 in)] - [0.006 mm (0.0002 in)] = [- 0.0004 mm (-0.0001 in)]

- If clearance is exceeds specification, replace either or both of piston/piston pin assembly and connecting rod assembly with reference to specification of each part.

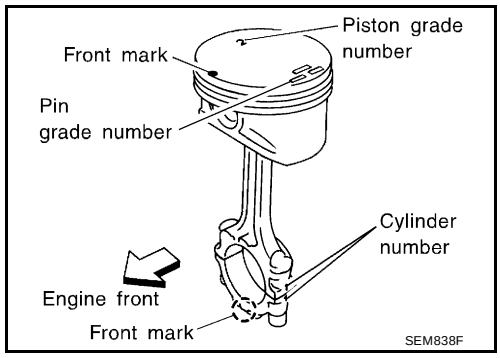

PISTON RING SIDE CLEARANCE

- Measure side clearance of piston ring and piston ring groove with feeler gauge.

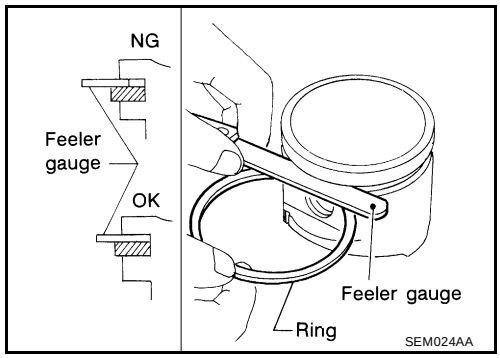

Standard Side Clearance

Top ring	**: 0.045 - 0.080 mm (0.0018 - 0.0031 in)**
2nd ring	**: 0.030 - 0.070 mm (0.0012 - 0.0028 in)**
Oil ring	**: 0.065 - 0.135 mm (0.0026 - 0.0053 in)**

Maximum Limit

Top ring	**: 0.11 mm (0.0043 in)**
2nd ring	**: 0.1 mm (0.004 in)**
Oil ring	**: —**

- If out of specification, replace piston ring assembly. If clearance exceeds maximum limit with new rings, replace piston

PISTON RING END GAP

- Insert piston ring until it is in the middle of the cylinder bore and measure the end gap.

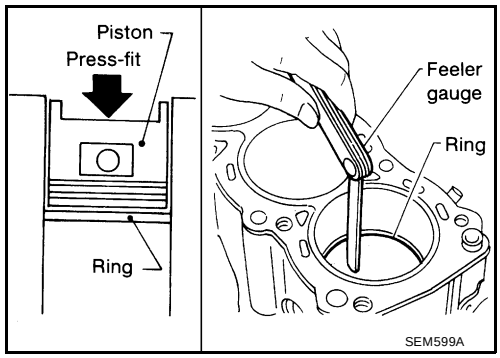

Standard

Top ring	**: 0.23 - 0.33 mm (0.0091 - 0.0130 in)**
2nd ring	**: 0.33 - 0.48 mm (0.0130 - 0.0189 in)**
Oil ring	**: 0.20 - 0.50 mm (0.0079 - 0.0197 in)**

Limit:

Top ring	**: 0.54 mm (0.0213 in)**
2nd ring	**: 0.80 mm (0.0315 in)**
Oil ring	**: 0.95 mm (0.0374 in)**

- If out of specification, replace piston ring. If gap still exceeds the limit even with a new ring, re-bore cylinder and use oversized piston and piston ring.

CONNECTING ROD BEND AND TORSION

- Measure the bend and torsion of each connecting rod as shown.

Bend : **Limit 0.15 mm (0.0059 in) per 100 mm (3.94 in) length**

Torsion : **Limit 0.30 mm (0.0118 in) per 100 mm (3.94 in) length**

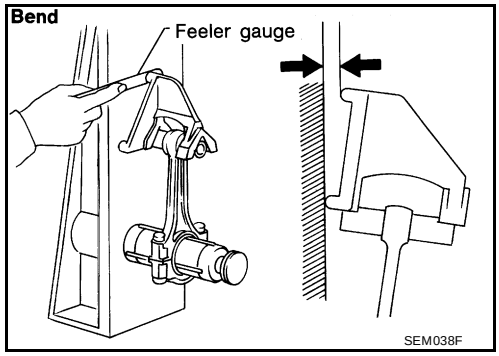

- If it exceeds the limit, replace connecting rod assembly.

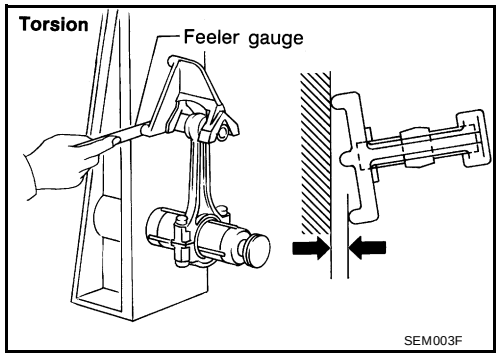

CONNECTING ROD BEARING (BIG END)

- Install the connecting rod cap without the connecting rod bearing installed. After tightening the connecting rod nut to the specified torque, measure the connecting rod large end inner diameter using an inside micrometer.

Standard : **55.000 - 55.013 mm (2.1654 - 2.1659 in)**

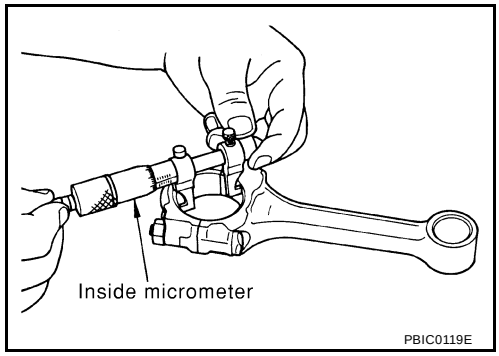

CONNECTING ROD BUSHING OIL CLEARANCE (SMALL END)

Inner Diameter of Connecting Rod (Small End)

- Measure inner diameter of bushing.

Standard

Grade No. 0 : **22.000 - 22.006 mm (0.8661 - 0.8664 in)**

Grade No. 1 : **22.006 - 22.012 mm (0.8664 - 0.8666 in)**

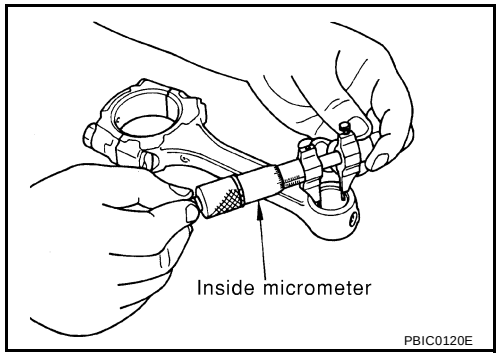

Outer Diameter of Piston Pin

- Measure outer diameter of piston pin.

Standard

Grade No. 0 : 21.989 - 21.995 mm (0.8657 - 0.8659 in)

Grade No. 1 : 21.995 - 22.001 mm (0.8659 -0.8662 in)

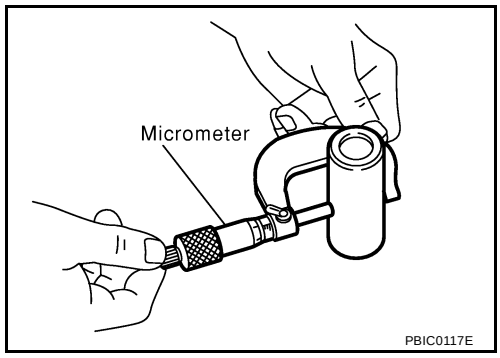

Connecting Rod Bushing Oil Clearance (Small End)

(Connecting rod small end oil clearance) = (Inner diameter of connecting rod small end) – (Outer diameter of piston pin)

Standard : 0.005 - 0.017 mm (0.0002 - 0.007 in)

Limit : 0.030 - mm (0.0012 in)

- If the measured value exceeds the standard, replace the connecting rod assembly and/or piston and piston pin assembly.
- If replacing the piston and piston pin assembly, refer to the Table for Selective Fitting for Piston to select the piston corresponding to the applicable bore grade of the cylinder block to be used. Refer to EM-198, "PISTON-TO-BORE CLEARANCE" .

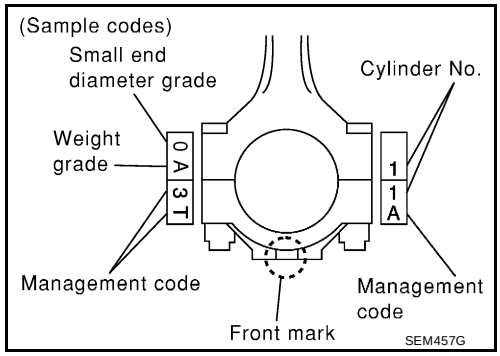

Factory installed parts grading:

NOTE:
Service parts apply only to grade 0.

Unit: mm (in)

Grade	0	1
Connecting rod small end inner diameter	22.000 - 22.006 (0.8661 - 0.8664)	22.006 - 22.012 (0.8664 - 0.8666)
Piston pin outer diameter	21.989 - 21.995 (0.8657 - 0.8659)	21.995 - 22. 001 (0.8659 - 0.8662)
Piston pin bore diameter	21.993 - 21.999 (0.8659 - 0.8661)	21.999 - 22.005 (0.8661 - 0.8663)

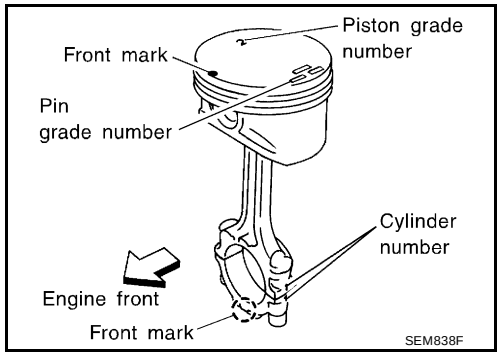

CYLINDER BLOCK DISTORTION AND WEAR

- Using a scraper, remove any old gasket material on the cylinder block surface, and remove any oil, scale, carbon, or other contamination.

CAUTION:
Be careful not to allow gasket flakes to enter the oil or coolant passages.

- Measure the distortion on the block upper face at different points in six directions.

Distortion limit : 0.10 mm (0.0039 in)

- If out of specification, resurface the cylinder block. The allowable amount of resurfacing is dependent on the amount of any cylinder head resurfacing. The resurfacing limit is [amount of cylinder block resurfacing] + [amount of cylinder head resurfacing] = 0.2 mm (0.008 in).

Cylinder block height limit : 214.95 - 215.05 mm (8.4626 - 8.4665 in)

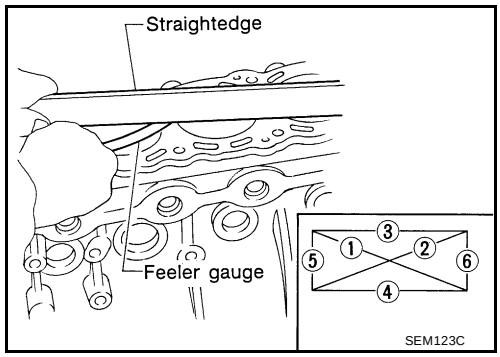

INNER DIAMETER OF MAIN BEARING HOUSING

- Install the main bearing caps with the main bearings removed, and tighten the mounting bolts to the specified torque.
- Using a bore gauge, measure the inner diameter of the main bearing housing.

  Standard : 63.993 - 64.017 mm (2.5194 - 2.5203 in)

- If out of the standard, replace the cylinder block and main bearing caps as an assembly.

  NOTE:
  These components cannot be replaced as a single unit, because they were processed together.

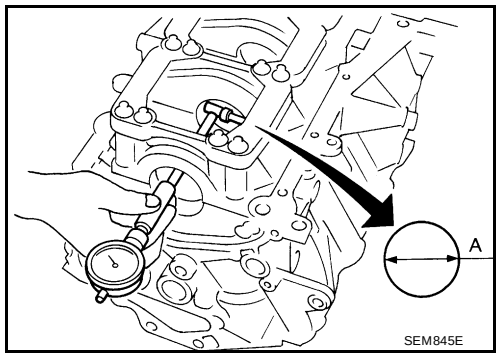

PISTON-TO-BORE CLEARANCE

1. Using a bore gauge, measure cylinder bore for wear, out-of-round and taper. The X axis is in the longitudinal direction of the engine.

   Cylinder bore inner diameter

Grade No.	Standard inner diameter	Wear limit
No. 1	95.500 - 95.510 mm (3.7598 - 3.7602 in)	0.20 mm (0.0079 in)
No. 2	95.510 - 95.520 mm (3.7602 - 3.7606 in)	
No. 3	95.520 - 95.530 mm (3.7606 - 3.7610 in)	

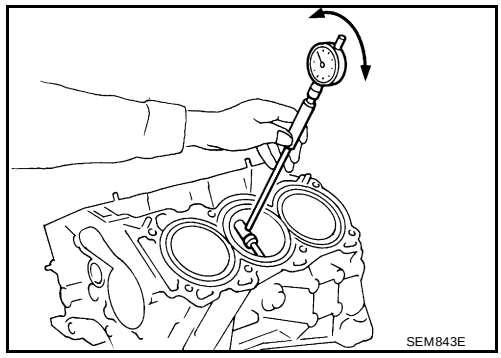

   If it exceeds the limit, rebore all cylinders. Replace cylinder block if necessary.

   Out-of-round (Y – X) : limit 0.015 mm (0.0006 in)
   Taper (C – A) : limit 0.015 mm (0.0006 in)

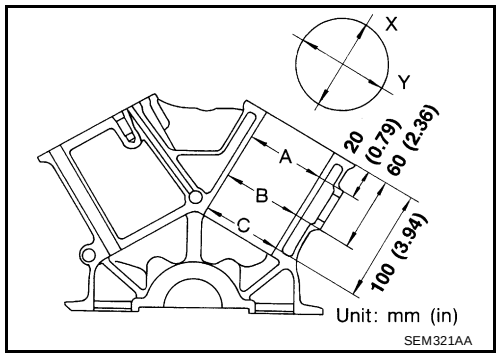

2. Check for scratches and seizure. If seizure is found, hone it.
   - If both cylinder block and piston are replaced with new ones, select piston of the same grade number punched on cylinder block rear position. These numbers are punched in either Arabic or Roman numerals.

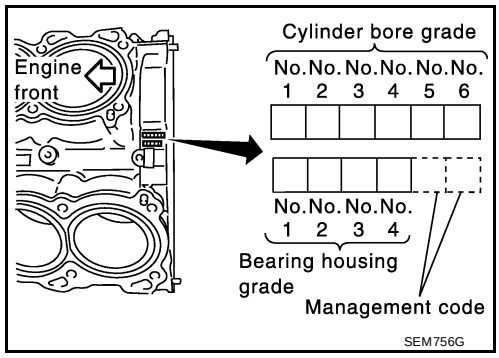

3. Measure piston skirt diameter.

Piston diameter "A"	**: Refer to EM-212, "PISTON, PISTON RING AND PISTON PIN" .**
Measuring point "a" (distance from the top)	**: 41.0 mm (1.61 in)**

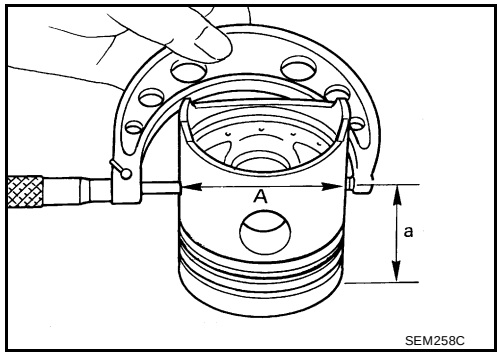

4. Check that piston-to-bore clearance is within specification.

Piston-to-bore clearance at "B"	**: 0.010 - 0.030 mm (0.0004 - 0.0012 in)**

- The piston-to-bore clearance is measured at the "B" level in the cylinder as shown.

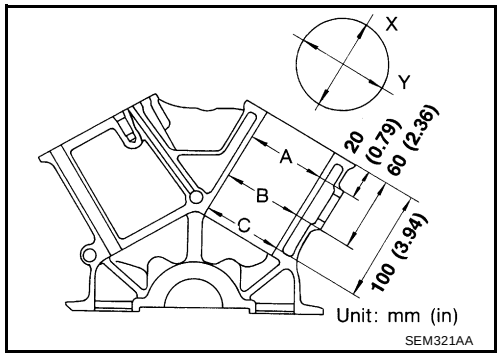

5. Determine piston oversize according to amount of cylinder wear.
Oversize pistons are available for service.
Refer to EM-212, "PISTON, PISTON RING AND PISTON PIN" .
6. Cylinder bore size is determined by adding piston-to-bore clearance to piston diameter "A".

Rebored size calculation : D = A + B – C

where,

D	**: Bored diameter**
A	**: Piston diameter as measured**
B	**: Piston-to-bore clearance**
C	**: Honing allowance 0.02 mm (0.0008 in)**

7. Install main bearing caps, and tighten to the specified torque. Otherwise, cylinder bores may be distorted in final assembly.
8. Cut cylinder bores.
   - When any cylinder needs boring, all other cylinders must also be bored.
   - Do not cut too much out of cylinder bore at a time. Cut only 0.05 mm (0.0020 in) or so in diameter at a time.
9. Hone cylinders to obtain specified piston-to-bore clearance.
10. Measure finished cylinder bore for out-of-round and taper.
    - Measurement should be done after cylinder bore cools down.

CRANKSHAFT

1. Check the crankshaft main and pin journals for scoring, wear, or cracks.

2. Measure the journals for taper and out-of-round.

Standard

Out-of-round (X - Y)	**: 0.002 mm (0.0001 in)**
Taper (A - B)	**: 0.002 mm (0.0001 in)**

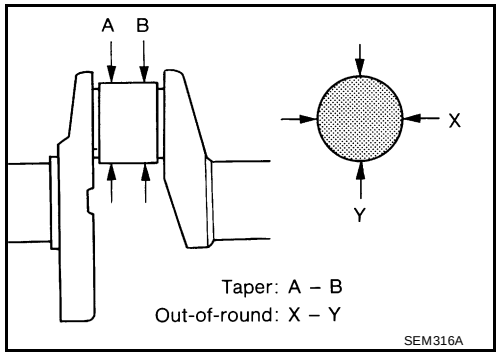

3. Measure crankshaft runout.

a. Place a V-block on a precise flat table to support the journals on the both ends of the crankshaft.

b. Place a dial gauge straight up on the No. 3 journal.

c. While rotating the crankshaft, read the movement of the pointer on the dial gauge.

Runout limit (total indicator reading)	**: 0.10 mm (0.0039 in)**

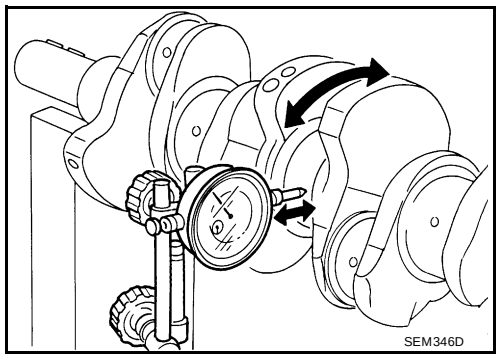

BEARING CLEARANCE

NOTE:

Use either of the following two methods, however method "A" gives more reliable results and so is the preferred method.

Method A (Using Bore Gauge and Micrometer)

Main Bearing

1. Set the main bearings in their proper positions on the cylinder block and the main bearing cap.
2. Install the main bearing caps and bearing beam to the cylinder block. Tighten all bolts in the numerical order as specified. Refer to EM-186, "Disassembly and Assembly" .

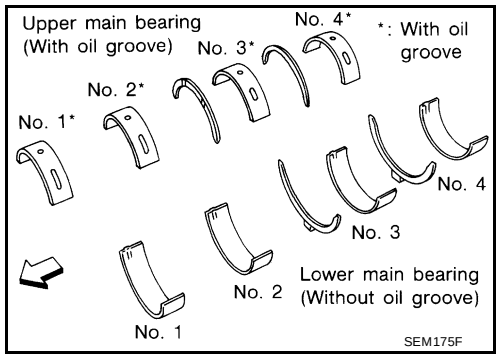

3. Measure the inner diameters "A" of each main bearing as shown.

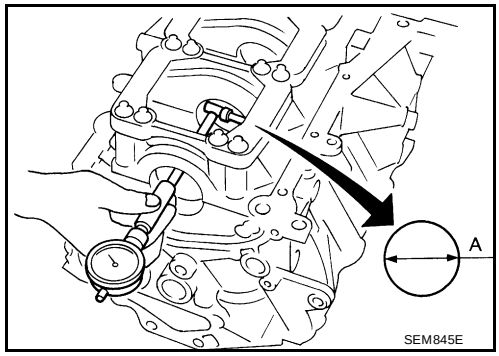

4. Measure the outer diameters "Dm" of each crankshaft main journal as shown.
5. Calculate the main bearing clearance.
   Main bearing clearance = "A" - "Dm"

   Standard : 0.035 - 0.045 mm (0.0014 - 0.0018 in)
   Limit : 0.065 mm (0.0026 in)

   - If it exceeds the limit, replace the bearing.
   - If clearance cannot be adjusted using any standard bearing grade, grind crankshaft journal and use an undersized bearing.

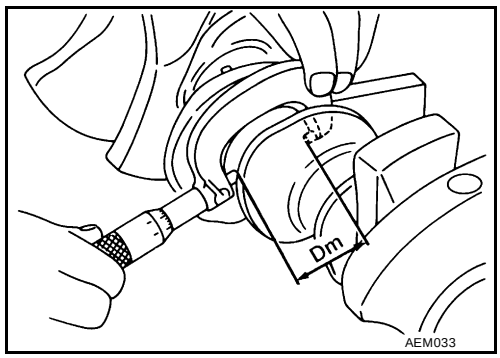

   - When grinding the crankshaft journal, confirm that the "L" dimension in the fillet role is more than the specified limit.

   "L" : 0.1 mm (0.004 in)

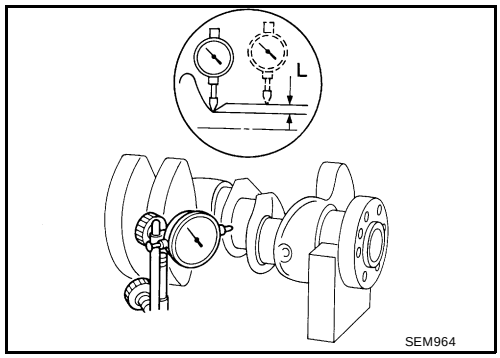

6. If the crankshaft or the cylinder block is replaced with a new one, select thickness of the main bearings as follows:

a. The grade number of each cylinder block main journal is punched on the respective cylinder block. These numbers are punched in either Arabic or Roman numerals. If measured diameter is out of the grade punched, decide suitable grade from available main bearings.

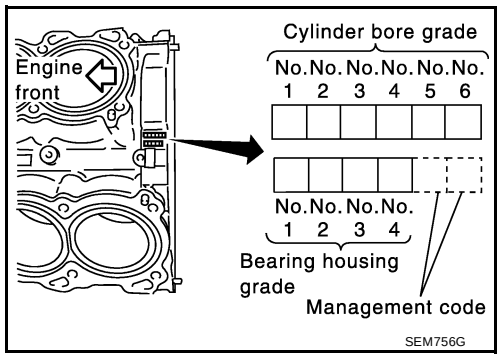

b. The grade number of each crankshaft main journal is punched on the crankshaft end. These numbers are punched in either Arabic or Roman numerals. If measured diameter is out of grade punched, decide the suitable grade from available main bearings.

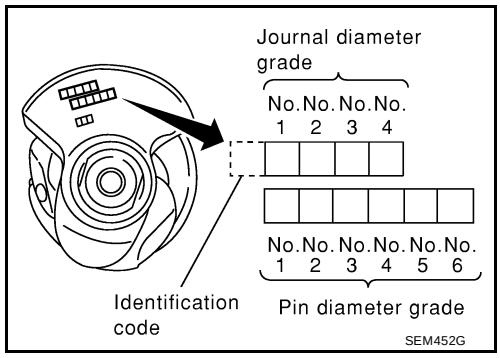

c. Select the main bearing suitable thickness according to the following table:

Main bearing selection table

Mark	Axle diameter (Crankshaft main journal mm (in))	A: 63.993 - 63.994 (2.5194 - 2.5194)	B: 63.994 - 63.995 (2.5194 - 2.5195)	C: 63.995 - 63.996 (2.5195 - 2.5195)	D: 63.996 - 63.997 (2.5195 - 2.5196)	E: 63.997 - 63.998 (2.5196 - 2.5196)	F: 63.998 - 63.999 (2.5196 - 2.5196)	G: 63.999 - 64.000 (2.5196 - 2.5197)	H: 64.000 - 64.001 (2.5197 - 2.5197)	J: 64.001 - 64.002 (2.5197 - 2.5198)	K: 64.002 - 64.003 (2.5198 - 2.5198)	L: 64.003 - 64.004 (2.5198 - 2.5198)	M: 64.004 - 64.005 (2.5198 - 2.5199)	N: 64.005 - 64.006 (2.5199 - 2.5199)	P: 64.006 - 64.007 (2.5199 - 2.5200)	R: 64.007 - 64.008 (2.5200 - 2.5200)	S: 64.008 - 64.009 (2.5200 - 2.5200)	T: 64.009 - 64.010 (2.5200 - 2.5201)	U: 64.010 - 64.011 (2.5201 - 2.5197)	V: 64.011 - 64.012 (2.5197 - 2.5202)	W: 64.012 - 64.013 (2.5202 - 2.5202)	X: 64.013 - 64.014 (2.5202 - 2.5202)	Y: 64.014 - 64.015 (2.5202 - 2.5203)	4: 64.015 - 64.016 (2.5203 - 2.5203)	7: 64.016 - 64.017 (2.5203 - 2.5203)
A	59.975 - 59.974 (2.3612 - 2.3612)	0	0	0	01	01	01	1	1	1	12	12	12	2	2	2	23	23	23	3	3	3	34	34	34
B	59.974 - 59.973 (2.3612 - 2.3611)	0	0	01	01	01	1	1	1	12	12	12	2	2	2	23	23	23	3	3	3	34	34	34	4
C	59.973 - 59.972 (2.3611 - 2.3611)	0	01	01	01	1	1	1	12	12	12	2	2	2	23	23	23	3	3	3	34	34	34	4	4
D	59.972 - 59.971 (2.3611 - 2.4005)	01	01	01	1	1	1	12	12	12	2	2	2	23	23	23	3	3	3	34	34	34	4	4	4
E	59.971 - 59.970 (2.4005 - 2.3610)	01	01	1	1	1	12	12	12	2	2	2	23	23	23	3	3	3	34	34	34	4	4	4	45
F	59.970 - 59.969 (2.3610 - 2.3610)	01	1	1	1	12	12	12	2	2	2	23	23	23	3	3	3	34	34	34	4	4	4	45	45
G	59.969 - 59.968 (2.3610 - 2.3609)	1	1	1	12	12	12	2	2	2	23	23	23	3	3	3	34	34	34	4	4	4	45	45	45
H	59.968 - 59.967 (2.3609 - 2.3609)	1	1	12	12	12	2	2	2	23	23	23	3	3	3	34	34	34	4	4	4	45	45	45	5
J	59.967 - 59.966 (2.3609 - 2.3609)	1	12	12	12	2	2	2	23	23	23	3	3	3	34	34	34	4	4	4	45	45	45	5	5
K	59.966 - 59.965 (2.3909 - 2.3608)	12	12	12	2	2	2	23	23	23	3	3	3	34	34	34	4	4	4	45	45	45	5	5	5
L	59.965 - 59.964 (2.3608 - 2.3608)	12	12	2	2	2	23	23	23	3	3	3	34	34	34	4	4	4	45	45	45	5	5	5	56
M	59.964 - 59.963 (2.3608 - 2.3607)	12	2	2	2	23	23	23	3	3	3	34	34	34	4	4	4	45	45	45	5	5	5	56	56
N	59.963 - 59.962 (2.3607 - 2.3607)	2	2	2	23	23	23	3	3	3	34	34	34	4	4	4	45	45	45	5	5	5	56	56	56
P	59.962 - 59.961 (2.3607 - 2.3607)	2	2	23	23	23	3	3	3	34	34	34	4	4	4	45	45	45	5	5	5	56	56	56	6
R	59.961 - 59.960 (2.3607 - 2.3606)	2	23	23	23	3	3	3	34	34	34	4	4	4	45	45	45	5	5	5	56	56	56	6	6
S	59.960 - 59.959 (2.3606 - 2.3606)	23	23	23	3	3	3	34	34	34	4	4	4	45	45	45	5	5	5	56	56	56	6	6	6
T	59.959 - 59.958 (2.3606 - 2.3605)	23	23	3	3	3	34	34	34	4	4	4	45	45	45	5	5	5	56	56	56	6	6	6	67
U	59.958 - 59.957 (2.3605 - 2.3605)	23	3	3	3	34	34	34	4	4	4	45	45	45	5	5	5	56	56	56	6	6	6	67	67
V	59.957 - 59.956 (2.3605 - 2.3605)	3	3	3	34	34	34	4	4	4	45	45	45	5	5	5	56	56	56	6	6	6	67	67	67
W	59.956 - 59.955 (2.3605 - 2.3604)	3	3	34	34	34	4	4	4	45	45	45	5	5	5	56	56	56	6	6	6	67	67	67	7
X	59.955 - 59.954 (2.3604 - 2.3604)	3	34	34	34	4	4	4	45	45	45	5	5	5	56	56	56	6	6	6	67	67	67	7	7
Y	59.954 - 59.953 (2.3604 - 2.3603)	34	34	34	4	4	4	45	45	45	5	5	5	56	56	56	6	6	6	67	67	67	7	7	7
4	59.953 - 59.952 (2.3603 - 2.3603)	34	34	4	4	4	45	45	45	5	5	5	56	56	56	6	6	6	67	67	67	7	7	7	╳
7	59.952 - 59.951 (2.3603 - 2.3603)	34	4	4	4	45	45	45	5	5	5	56	56	56	6	6	6	67	67	67	7	7	7	╳	╳

WBIA0092E

Connecting Rod Bearing (Big End)

1. Install the connecting rod bearing to the connecting rod and cap.
2. Install the connecting rod cap to the connecting rod. Tighten to specification. Refer to EM-186, "Disassembly and Assembly" .
3. Measure the inner diameter "C" of each connecting rod (big end) as shown.

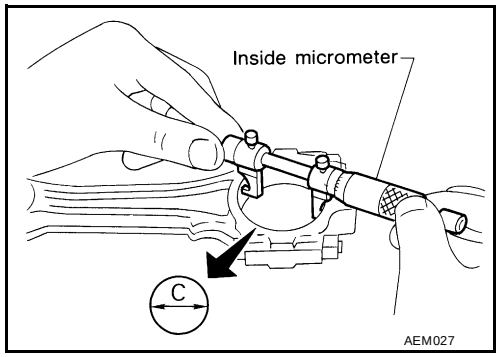

4. Measure the outer diameter "Dp" of each crankshaft pin journal.
5. Calculate the connecting rod bearing clearance.
   Connecting rod bearing clearance = C - Dp

   Standard : 0.034 - 0.059 mm (0.0013 - 0.0023 in)
   Limit : 0.070 mm (0.0028 in)

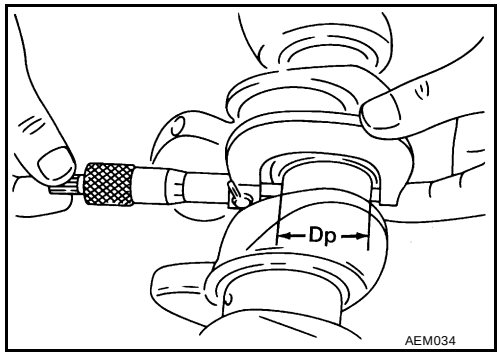

6. If the calculated clearance exceeds the specified limit, replace the bearings.
7. If the clearance cannot be adjusted within the standard of any bearing, grind the crankshaft journal and use undersized bearings.
8. If the crankshaft is replaced with a new one, select the connecting rod bearings according to the following table:
   Connecting Rod Bearing Grade Number (Identification Color)

Crankshaft pin journal grade number	Connecting rod bearing grade number
0	0 (black)
1	1 (brown)
2	2 (green)

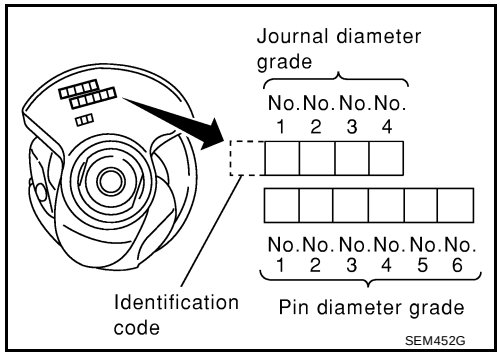

NOTE:
These numbers are punched in either Arabic or Roman numerals.

Method B (Using Plastigage)

1. Remove oil and dust on the crankshaft pin and the surfaces of each bearing completely.
2. Cut a plasticgage slightly shorter than the bearing width, and place it in crankshaft axial direction, avoiding oil holes.
3. Install the connecting rod bearings to the connecting rod cap, and tighten the connecting rod nuts to the specified torque.

   CAUTION:
   Never rotate the crankshaft.
4. Remove the connecting rod cap and bearings, and using the scale on the plasticgage bag, measure the plasticgage width.

   NOTE:
   The procedure when the measured value exceeds the repair limit is same as that described in "Method A (Using Bore Gauge and Micrometer)".

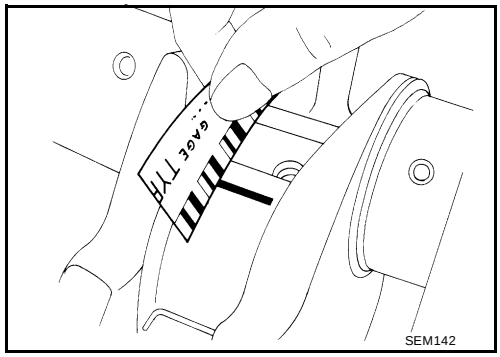

CONNECTING ROD BUSHING CLEARANCE (SMALL END)

1. Measure the inner diameter "C" of the connecting rod bushing (small end).
2. Measure the outer diameter "Dp" of the piston pin.
3. Calculate the connecting rod bushing clearance.
   Connecting Rod Bushing Clearance = "C" - "Dp"

   Standard : 0.005 - 0.017 mm (0.0002 - 0.0007 in)
   Limit : 0.030 mm (0.0012 in)

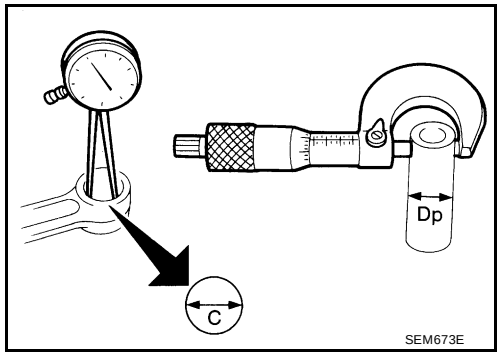

4. If the calculated clearance exceeds the limit, replace the connecting rod assembly, or the connecting rod bushing, or the piston and pin set.

DRIVE PLATE RUNOUT (A/T)

Using a dial gauge, measure the drive plate runout (Total Indicator Reading).

Drive plate runout (A/T) : less than 0.15 mm (0.0059 in) TIR

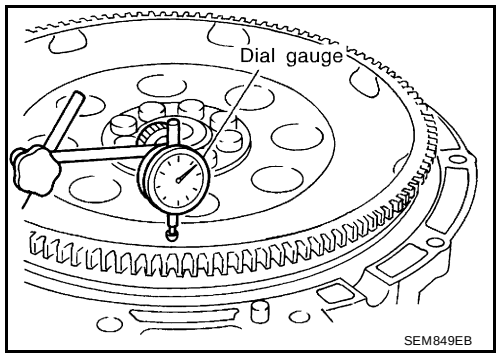

CAUTION:

- **The signal plate is built into the drive assembly. Be careful not to damage the signal plate, particularly the teeth.**
- **Check the drive plate and signal plate for deformation or damage.**
- **Keep any magnetized objects away from the signal plate, particularly the teeth.**

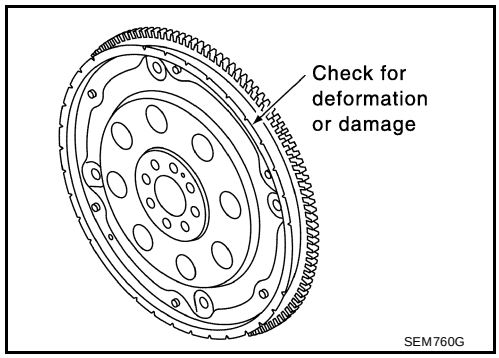

FLYWHEEL RUNOUT (M/T)

NOTE:

- This inspection is for double mass flywheel only.
- Do not disassemble the double mass flywheel.

Flywheel Deflection

- Measure the deflection of the flywheel contact surface to the clutch with a dial gauge.
- Measure the deflection at 210 mm (8.27 in) diameter.

Standard : 0.45 mm (0.0177 in) or less
Limit : 1.3 mm (0.051 in) or less

- When measured value exceeds the limit, replace the flywheel with a new one.

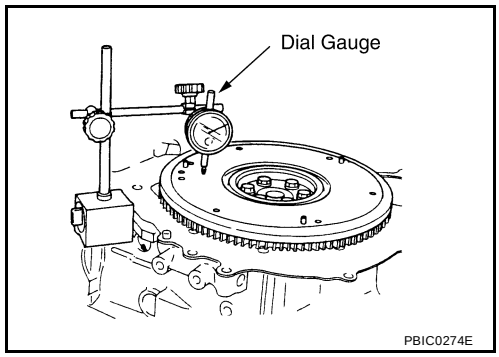

Movement Around in the Radial (rotation) Direction

Check the movement amount with the following procedure:

1. Install a bolt to clutch cover mounting hole and place a torque wrench on the extended line of the flywheel center line. Tighten the bolt at a force of 9.8 N·m (1 kg-m, 87 in-lb) to keep it from loosening.
2. Put a mating mark on the circumference of the two flywheel masses without applying any load (measurement standard points).
3. Apply a force of 9.8 N·m (1 kg-m, 87 in-lb) in each direction, and mark the movement amount on the mass on the transaxle side.

Standard : 24 mm (0.94 in) or less

4. Measure dimensions of movement amounts A and B on the circumference of the flywheel on the transaxle side.
5. When the measured value exceeds the standard, replace the flywheel.

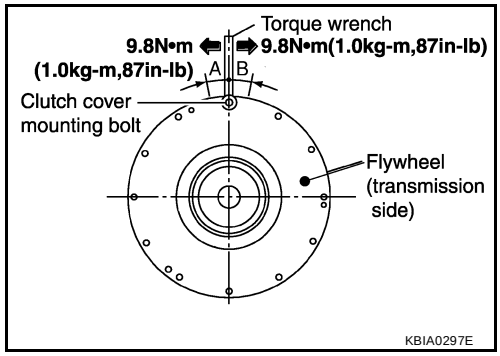

SERVICE DATA AND SPECIFICATIONS (SDS)

PFP:00100

Standard and Limit

EBS007QI

GENERAL SPECIFICATIONS

Cylinder arrangement		V-6
Displacement cm^3 (cu in)		3,498 (213.45)
Bore and stroke mm (in)		95.5 x 81.4 (3.76 x 3.205)
Valve arrangement		DOHC
Firing order		1-2-3-4-5-6
Number of piston rings	Compression	2
	Oil	1
Number of main bearings		4
Compression ratio		10.0
Compression pressure kPa (kg/cm^2 , psi)/300 rpm	Standard	1,275 (13.0, 185)
	Minimum	981 (10.0, 142)
	Differential limit between cylinders	98 (1.0, 14)
Cylinder number	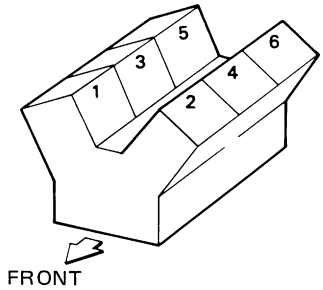 SEM713A	
Valve timing (IVTC - OFF)	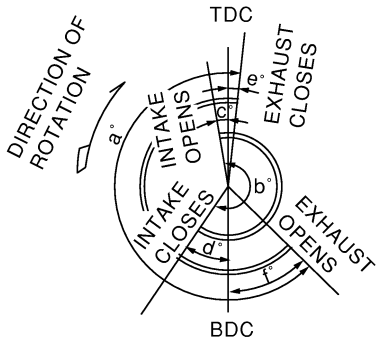 PBIC0187E	

Unit: degree

a	b	c	d	e	f
240	238	- 6	64	8	52

CYLINDER HEAD

Unit: mm (in)

	Standard	Limit
Head surface distortion	Less than 0.03 (0.0012)	0.1 (0.004)

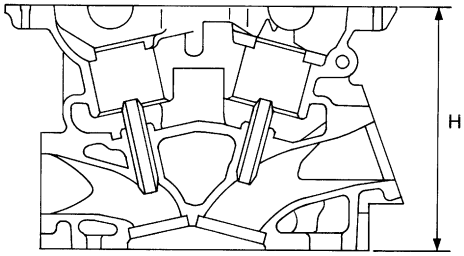

Nominal cylinder head height:
H = 126.3 - 126.5 mm (4.972 - 4.980 in)

SEM949E

VALVE

Valve Dimensions

Unit: mm (in)

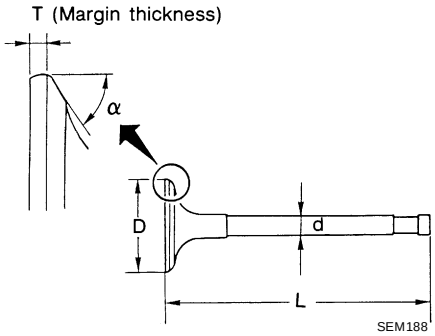

SEM188

Valve head diameter “D”	Intake	37.0 - 37.3 (1.4567 - 1.4685)
	Exhaust	31.2 - 31.5 (1.228 - 1.240)
Valve length “L”	Intake	96.12 - 96.62 (3.7842 - 3.8039)
	Exhaust	93.65 - 94.15 (3.6870 - 3.7067)
Valve stem diameter “d”	Intake	5.965 - 5.980 (0.2348 - 0.2354)
	Exhaust	5.945 - 5.960 (0.2341 - 0.2346)
Valve seat angle “α”	Intake	45°15′ - 45°45′
	Exhaust	
Valve margin “T”	Intake	1.15 - 1.45 (0.0453 - 0.0571)
	Exhaust	1.45 - 1.75 (0.0571 - 0.0689)
Valve margin “T” limit		More than 0.5 (0.020)
Valve stem end surface grinding limit		Less than 0.2 (0.008)

Valve Clearance

Unit: mm (in)

	Cold	Hot* (reference data)
Intake	0.26 - 0.34 (0.010 - 0.013)	0.304 - 0.416 (0.012 - 0.016)
Exhaust	0.29 - 0.37 (0.011 - 0.015)	0.308 - 0.432 (0.012 - 0.017)

*: Approximately 80°C (176°F)

Valve Spring

Free height mm (in)	47.10 (1.8543)

Pressure N (kg, lb) at height mm (in)	Standard	202 (20.6, 45.4) at 37.0 (1.457)
	Limit	436 (44.5, 98.1) at 28.2 (1.110)
Out-of-square mm (in)		Less than 2.0 (0.079)

Valve Lifter

Unit: mm (in)

Valve lifter outer diameter	34.960 - 34.975 (1.3764 - 1.3770)
Lifter guide inner diameter	35.000 - 35.021 (1.3780 - 1.3788)
Clearance between lifter and lifter guide	0.025 - 0.061 (0.0010 - 0.0024)

Identification Mark	Thickness mm (in)
788C	7.88 (0.3102)
790C	7.90 (0.3110)
792C	7.92 (0.3118)
794C	7.94 (0.3126)
796C	7.96 (0.3134)
798C	7.98 (0.3142)
800C	8.00 (0.3150)
802C	8.02 (03.157)
804C	8.04 (0.3165)
806C	8.06 (0.3173)
808C	8.08 (0.3181)
810C	8.10 (0.3189)
812C	8.12 (0.3197)
814C	8.14 (0.3205)
816C	8.16 (0.3213)
818C	8.18 (0.3220)
820C	8.20 (0.3228)
822C	8.22 (0.3236)
824C	8.24 (0.3244)
826C	8.26 (0.3252)
828C	8.28 (0.3260)
830C	8.30 (0.3268)
832C	8.32 (0.3276)
834C	8.34 (0.3283)
836C	8.36 (0.3291)

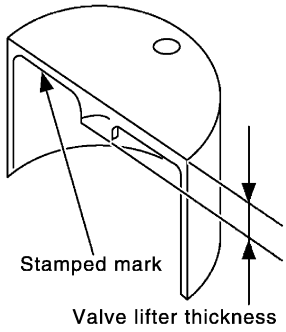

Valve Guide

Unit: mm (in)

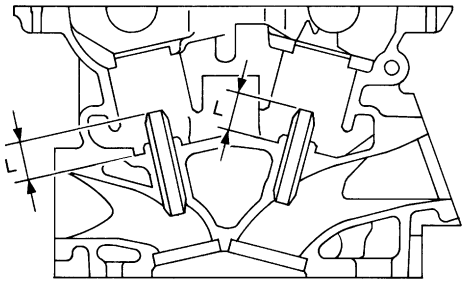

SEM950E

		Standard	Service
Valve guide	Outer diameter	10.023 - 10.034 (0.3946 - 0.3950)	10.223 - 10.234 (0.4025 - 0.4029)
Valve guide	Inner diameter (Finished size)	6.000 - 6.018 (0.2362 - 0.2369)	
Cylinder head valve guide hole diameter		9.975 - 9.996 (0.3927 - 0.3935)	10.175 - 10.196 (0.4006 - 0.4014)
Interference fit of valve guide		0.027 - 0.059 (0.0011 - 0.0023)	
		Standard	Max. tolerance
Stem to guide clearance	Intake	0.020 - 0.053 (0.0008 - 0.0021)	0.08 (0.0031)
	Exhaust	0.040 - 0.073 (0.0016 - 0.0029)	0.1 (0.004)
Valve deflection limit	Intake	—	0.24 (0.0094)
	Exhaust	—	0.28 (0.0110)
Projection length “L”		12.6 - 12.8 (0.496 - 0.504)	

Valve Seat

Unit: mm (in)

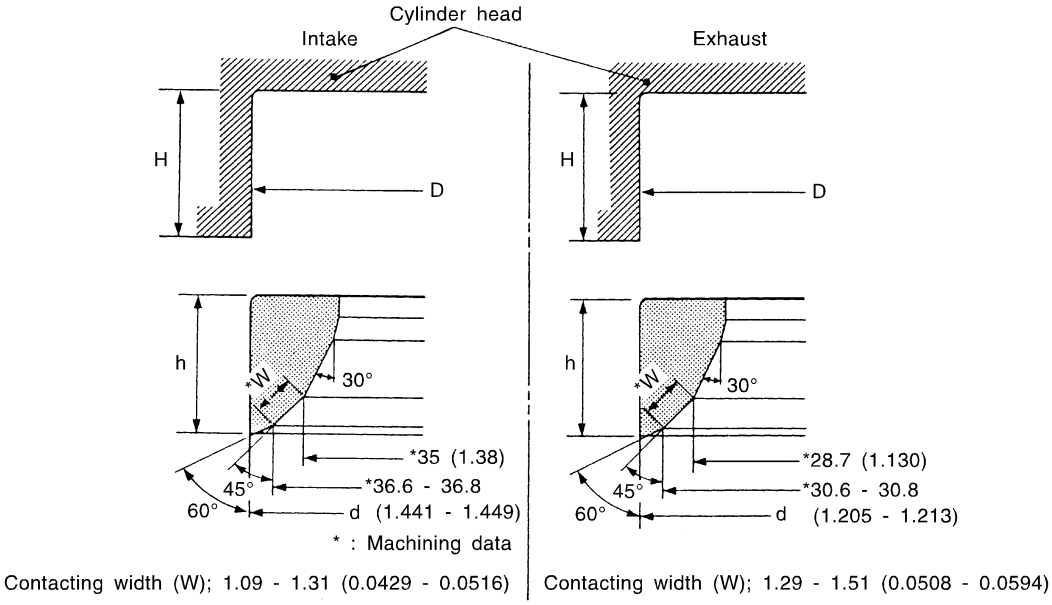

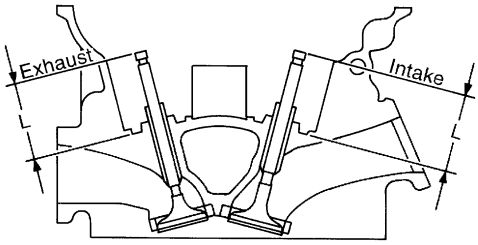

		Standard	Service
Cylinder head seat recess diameter (D)	Intake	38.000 - 38.016 (1.4961 - 1.4967)	38.500 - 38.516 (1.5157 - 1.5164)
	Exhaust	32.200 - 32.216 (1.2677 - 1.2683)	32.700 - 32.716 (1.2874 - 1.2880)
Valve seat interference fit	Intake	0.081 - 0.113 (0.0032 - 0.0044)	
	Exhaust	0.064 - 0.096 (0.0025 - 0.0038)	
Valve seat outer diameter (d)	Intake	38.097 - 38.113 (1.4999 - 1.5005)	38.597 - 38.613 (1.5196 - 1.5202)
	Exhaust	32.280 - 32.296 (1.2709 - 1.2715)	32.780 - 32.796 (1.2905 - 1.2912)
Height (h)	Intake	5.9 - 6.0 (0.232 - 0.236)	5.05 - 5.15 (0.1988 - 0.2028)
	Exhaust	5.9 - 6.0 (0.232 - 0.236)	4.95 - 5.05 (0.1949 - 0.1988)
Depth (H)		5.9 - 6.1 (0.232 - 0.240)	
Depth (L)	Intake	41.07 - 41.67 (1.6169 - 1.6405)	
	Exhaust	41.00 - 41.60 (1.6142 - 1.6378)	

CAMSHAFT AND CAMSHAFT BEARING

Unit: mm (in)

	Standard	Limit
Camshaft journal to bearing clearance	No. 1 0.045 - 0.086 (0.0018 - 0.0034) No. 2, 3, 4 0.035 - 0.076 (0.0014 - 0.0030)	0.15 (0.0059)
Inner diameter of camshaft bearing	No. 1 26.000 - 26.021 (1.0236 - 1.0244) No. 2, 3, 4 23.500 - 23.521 (0.9252 - 0.9260)	—
Outer diameter of camshaft journal	No. 1 25.935 - 25.955 (1.0211 - 1.0218) No. 2, 3, 4 23.445 - 23.465 (0.9230 - 0.9238)	—
Camshaft runout [TIR*]	Less than 0.02 (0.0008)	0.05 (0.0020)
Camshaft sprocket runout [TIR*]	Less than 0.15 (0.0059)	—
Camshaft end play	0.115 - 0.188 (0.0045 - 0.0074)	0.24 (0.0094)

*: Total indicator reading

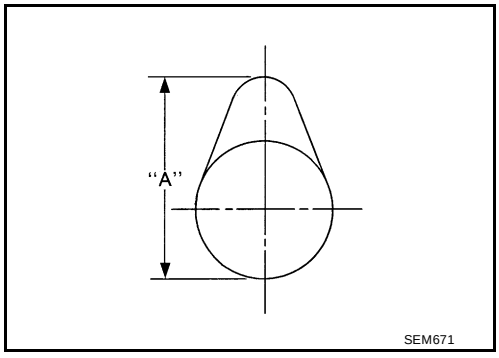

Cam height "A"	Intake and exhaust	44.465 - 44.655 (1.7506 - 1.7581)
Wear limit of cam height		0.2 (0.008)

CYLINDER BLOCK

Unit: mm (in)

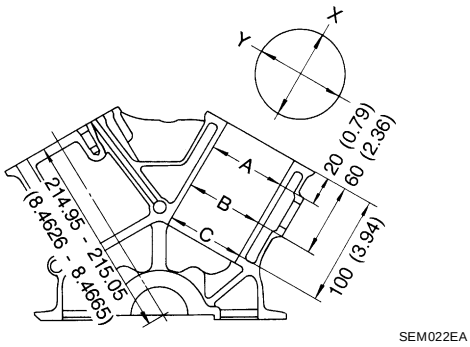

Surface flatness	Standard			Less than 0.03 (0.0012)
	Limit			0.10 (0.0039)
Cylinder bore	Inner diameter	Standard	Grade No. 1	95.500 - 95.510 (3.7598 - 3.7602)
			Grade No. 2	95.510 - 95.520 (3.7602 - 3.7606)
			Grade No. 3	95.520 - 95.530 (3.7606 - 3.7610)
		Wear limit		0.20 (0.0079)
Out-of-round (Y – X)				Less than 0.015 (0.0006)

Taper (C – A)		Less than 0.015 (0.0006)
Main journal inner diameter grade (Without bearing)	Grade No. A	63.993 - 63.994 (2.5194 - 2.5194)
	Grade No. B	63.994 - 63.995 (2.5194 - 2.5195)
	Grade No. C	63.995 - 63.996 (2.5195 - 2.5195)
	Grade No. D	63.996 - 63.997 (2.5195 - 2.5196)
	Grade No. E	63.997 - 63.998 (2.5196 - 2.5196)
	Grade No. F	63.998 - 63.999 (2.5196 - 2.5196)
	Grade No. G	63.999 - 64.000 (2.5196 - 2.5197)
	Grade No. H	64.000 - 64.001 (2.5197 - 2.5197)
	Grade No. J	64.001 - 64.002 (2.5197 - 2.5198)
	Grade No. K	64.002 - 64.003 (2.5198 - 2.5198)
	Grade No. L	64.003 - 64.004 (2.5198 - 2.5198)
	Grade No. M	64.004 - 64.005 (2.5198 - 2.5199)
	Grade No. N	64.005 - 64.006 (2.5199 - 2.5199)
	Grade No. P	64.006 - 64.007 (2.5199 - 2.5200)
	Grade No. R	64.007 - 64.008 (2.5200 - 2.5200)
	Grade No. S	64.008 - 64.009 (2.5200 - 2.5200)
	Grade No. T	64.009 - 64.010 (2.5200 - 2.5201)
	Grade No. U	64.010 - 64.011 (2.5201 - 2.5201)
	Grade No. V	64.011 - 64.012 (2.5201 - 2.5202)
	Grade No. W	64.012 - 64.013 (2.5202 - 2.5202)
	Grade No. X	64.013 - 64.014 (2.5202 - 2.5202)
	Grade No. Y	64.014 - 64.015 (2.5202 - 2.5203)
	Grade No. 4	64.015 - 64.016 (2.5203 - 2.5203)
	Grade No. 7	64.016 - 64.017 (2.5203 - 2.5203)
Difference in inner diameter between cylinders	Standard	Less than 0.03 (0.0012)

PISTON, PISTON RING AND PISTON PIN

Available Piston

Unit: mm (in)

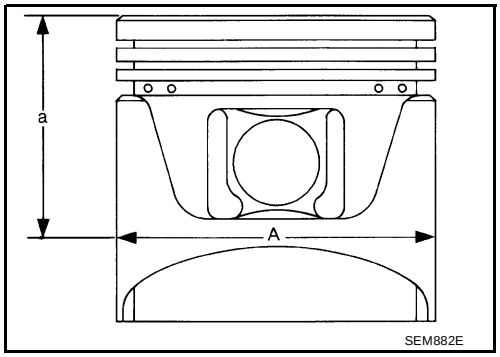

Piston skirt diameter “A”	Standard	Grade No. 1	95.480 - 95.490 (3.7590 - 3.7594)
		Grade No. 2	95.490 - 95.500 (3.7594 - 3.7598)
		Grade No. 3	95.500 - 95.510 (3.7598 - 3.7602)
		0.20 (0.0079) oversize (Service)	95.680 - 95.710 (3.7669 - 3.7681)
“a” dimension			41.0 (1.614)
Piston pin hole diameter		Grade No. 0	21.993 - 21.999 (0.8659 - 0.8661)
		Grade No. 1	21.999 - 22.005 (0.8661 - 0.8663)
Piston clearance to cylinder block			0.010 - 0.030 (0.0004 - 0.0012)

Piston Ring

Unit: mm (in)

		Standard	Limit
Side clearance	Top	0.045 - 0.080 (0.0018 - 0.0031)	0.11 (0.0043)
	2nd	0.030 - 0.070 (0.0012 - 0.0028)	0.1 (0.004)
	Oil ring	0.065 - 0.135 (0.0026 - 0.0053)	—
End gap	Top	0.23 - 0.33 (0.0091 - 0.0130)	0.54 (0.0213)
	2nd	0.33 - 0.48 (0.0130 - 0.0189)	0.80 (0.0315)
	Oil (rail ring)	0.20 - 0.50 (0.0079 - 0.0197)	0.95 (0.0374)

Piston Pin

Unit: mm (in)

Piston pin outer diameter	Grade No. 0	21.989 - 21.995 (0.8657 - 0.8659)
	Grade No. 1	21.995 - 22.001 (0.8659 - 0.8662)
Interference fit of piston pin to piston		0.002 - 0.006 (0.0001 - 0.0002)
Piston pin to connecting rod bushing clearance	Standard	0.005 - 0.017 (0.0002 - 0.0007)
	Limit	0.030 (0.0012)

*: Values measured at ambient temperature of 20°C (68°F)

CONNECTING ROD

Unit: mm (in)

Center distance		144.15 - 144.25 (5.6752 - 5.6791)
Bend [per 100 (3.94)]	Limit	0.15 (0.0059)
Torsion [per 100 (3.94)]	Limit	0.30 (0.0118)
Connecting rod small end inner diameter		23.980 - 24.000 (0.9441 - 0.9449)
Piston pin bushing inner diameter*	Grade No. 0	22.000 - 22.006 (0.8661 - 0.8664)
	Grade No. 1	22.006 - 22.012 (0.8664 - 0.8666)
Connecting rod big end inner diameter		55.000 - 55.013 (2.1654 - 2.1659)
Side clearance	Standard	0.20 - 0.35 (0.0079 - 0.0138)
	Limit	0.40 (0.0157)

*: After installing in connecting rod

CRANKSHAFT

Unit: mm (in)

Main journal dia. “Dm” grade	Grade No. A	59.975 - 59.974 (2.3612 - 2.3612)
	Grade No. B	59.974 - 59.973 (2.3612 - 2.3611)
	Grade No. C	59.973 - 59.972 (2.3611 - 2.3611)
	Grade No. D	59.972 - 59.971 (2.3611 - 2.3611)
	Grade No. E	59.971 - 59.970 (2.3611 - 2.3610)
	Grade No. F	59.970 - 59.969 (2.3610 - 2.3610)
	Grade No. G	59.969 - 59.968 (2.3610 - 2.3609)
	Grade No. H	59.968 - 59.967 (2.3609 - 2.3609)
	Grade No. J	59.967 - 59.966 (2.3609 - 2.3609)
	Grade No. K	59.966 - 59.965 (2.3609 - 2.3608)
	Grade No. L	59.965 - 59.964 (2.3608 - 2.3608)
	Grade No. M	59.964 - 59.963 (2.3608 - 2.3607)
	Grade No. N	59.963 - 59.962 (2.3607 - 2.3607)
	Grade No. P	59.962 - 59.961 (2.3607 - 2.3607)
	Grade No. R	59.961 - 59.960 (2.3607 - 2.3606)
	Grade No. S	59.960 - 59.959 (2.3606 - 2.3606)
	Grade No. T	59.959 - 59.958 (2.3606 - 2.3605)
	Grade No. U	59.958 - 59.957 (2.3605 - 2.3605)
	Grade No. V	59.957 - 59.956 (2.3605 - 2.3605)
	Grade No. W	59.956 - 59.955 (2.3605 - 2.3604)
	Grade No. X	59.955 - 59.954 (2.3604 - 2.3604)
	Grade No. Y	59.954 - 59.953 (2.3604 - 2.3603)
	Grade No. 4	59.953 - 59.952 (2.3603 - 2.3603)
	Grade No. 7	59.952 - 59.951 (2.3603 - 2.3603)
Pin journal dia. “Dp”	Grade No. 0	51.968 - 51.974 (2.0460 - 2.0462)
	Grade No. 1	51.962 - 51.968 (2.0457 - 2.0460)
	Grade No. 2	51.956 - 51.962 (2.0445 - 2.0457)
Center distance “r”		40.36 - 40.44 (1.5890 - 1.5921)
Out-of-round (X – Y)	Standard	Less than 0.002 (0.0001)
Taper (A – B)	Standard	Less than 0.002 (0.0001)
Runout [TIR*]	Limit	Less than 0.10 (0.0039)
Free end play	Standard	0.10 - 0.25 (0.0039 - 0.0098)
	Limit	0.30 (0.0118)

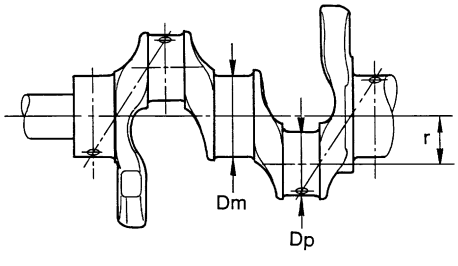

SEM645

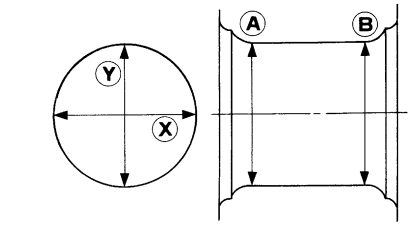

SEM715

*: Total indicator reading

AVAILABLE MAIN BEARING

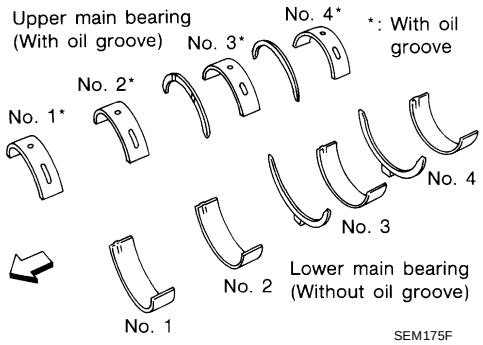

Grade number		Thickness "T" mm (in)	Width "W" mm (in)	Identification color (UPR/LWR)	Remarks
0		2.000 - 2.003 (0.0787 - 0.0789)	19.9 - 20.1 (0.783 - 0.791)	Black	Grade is the same for upper and lower bearings.
1		2.003 - 2.006 (0.0789 - 0.0790)		Brown	
2		2.006 - 2.009 (0.0790 - 0.0791)		Green	
3		2.009 - 2.012 (0.0791 - 0.0792)		Yellow	
4		2.012 - 2.015 (0.0792 - 0.0793)		Blue	
5		2.015 - 2.018 (0.0793 - 0.0794)		Pink	
6		2.018 - 2.021 (0.0794 - 0.0796)		Purple	
7		2.021 - 2.024 (0.0796 - 0.0797)		White	
01	UPP	2.003 - 2.006 (0.0789 - 0.0790)		Brown/Black	Grade is different for upper and lower bearings.
	LWR	2.000 - 2.003 (0.0787 - 0.0789)			
12	UPR	2.006 - 2.009 (0.0790 - 0.0791)		Green/Brown	
	LWR	2.003 - 2.006 (0.0789 - 0.0790)			
23	UPR	2.009 - 2.012 (0.0791 - 0.0792)		Yellow/Green	
	LWR	2.006 - 2.009 (0.0790 - 0.0791)			
34	UPR	2.012 - 2.015 (0.0792 - 0.0793)		Blue/Yellow	
	LWR	2.009 - 2.012 (0.0791 - 0.0792)			
45	UPR	2.015 - 2.018 (0.0793 - 0.0794)		Pink/Blue	
	LWR	2.012 - 2.015 (0.0792 - 0.0793)			
56	UPR	2.018 - 2.021 (0.0794 - 0.0796)		Purple/Pink	
	LWR	2.015 - 2.018 (0.0793 - 0.0794)			
67	UPR	2.021 - 2.024 (0.0796 - 0.0797)		White/Purple	
	LWR	2.018 - 2.021 (0.0794 - 0.0796)			

Undersize

Unit: mm (in)

	Thickness	Main journal diameter "Dm"
0.25 (0.0098)	2.132 - 2.140 (0.0839 - 0.0843)	Grind so that bearing clearance is the specified value.

CONNECTING ROD BEARING

Grade number	Thickness "T" mm (in)	Identification color (mark)
0	1.500 - 1.503 (0.0591 - 0.0592)	Black
1	1.503 - 1.506 (0.0592 - 0.0593)	Brown
2	1.506 - 1.509 (0.0593 - 0.0594)	Green

Undersize

Unit: mm (in)

	Thickness	Crank pin journal diameter “Dp”
0.25 (0.0098)	1.626 - 1.634 (0.0640 - 0.0643)	Grind so that bearing clearance is the specified value.

MISCELLANEOUS COMPONENTS

Unit: mm (in)

Flywheel deflection [TIR]* - Standard	Less than 0.45 (0.0177)
Flywheel deflection [TIR]* - Limit	1.3 (0.051)
Drive plate runout [TIR]*	Less than 0.15 (0.0059)
Flywheel movement in radial (rotation) direction	Less than 24 (0.94)

*: Total Indicator Reading

BEARING CLEARANCE

Unit: mm (in)

Main bearing clearance	Standard	0.035 - 0.045 (0.0014 - 0.0018)*
	Limit	0.065 (0.0026)
Connecting rod bearing clearance	Standard	0.034 - 0.059 (0.0013 - 0.0023)*
	Limit	0.070 (0.0028)

*: Actual clearance

SECTION EX
EXHAUST SYSTEM

CONTENTS

PREPARATION 2
Special Service Tool 2
Commercial Service Tools 2
EXHAUST SYSTEM (QR25DE) 3
Checking Exhaust System 3
Removal and Installation 3
Inspection After Installation 5
EXHAUST SYSTEM (VQ35DE) 6
Checking Exhaust System 6
Removal and Installation 6
Inspection After Installation 8

PREPARATION

PFP:00002

Special Service Tool

EBS008QR

The actual shapes of Kent-Moore tools may differ from those of special service tools illustrated here.

Tool number (Kent-Moore No.) Tool name		Description
KV10114400 (J-38365) Heated oxygen sensor wrench	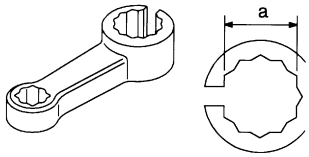 S-NT636	Loosening or tightening heated oxygen sensors: **a: 22 mm (0.87 in)**

Commercial Service Tools

EBS008QS

(Kent-Moore No.) Tool name		Description
(J-43897-18) (J-43897-12) Oxygen sensor thread cleaner	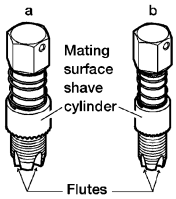 AEM488	Reconditioning the exhaust system threads before installing a new oxygen sensor (Use with anti-seize lubricant shown below): **a: J-43897-18 (18 mm dia.) for zirconia oxygen sensor** **b: J-43897-12 (12 mm dia.) for titania oxygen sensor**
Anti-seize lubricant (Permatex 133AR or equivalent meeting MIL specification MIL-A-907)	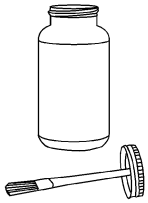 AEM489	Lubricating oxygen sensor thread cleaning tool when reconditioning exhaust system threads
Power tool	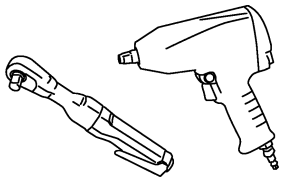 PBIC0190E	Loosening nuts and bolts

EXHAUST SYSTEM (QR25DE)

PFP:20100

Checking Exhaust System

EBS008QT

Check exhaust pipes, muffler and mounting for improper attachment, leaks, cracks, damage or deterioration.

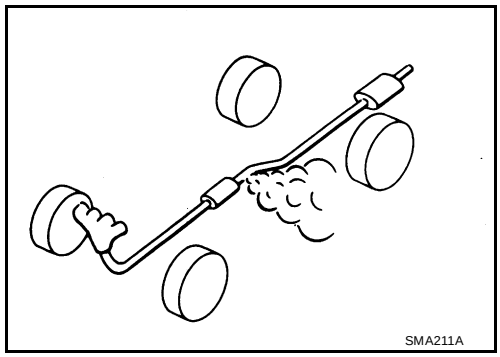

Removal and Installation

EBS008QU

CAUTION:

- **Be sure to use genuine NISSAN exhaust system parts or equivalents which are specially designed for heat resistance, corrosion resistance, and shape.**
- **Perform the operation with the exhaust system fully cooled down because the system will be hot just after the engine stops.**
- **Be careful not to cut your hand on the insulator edges.**

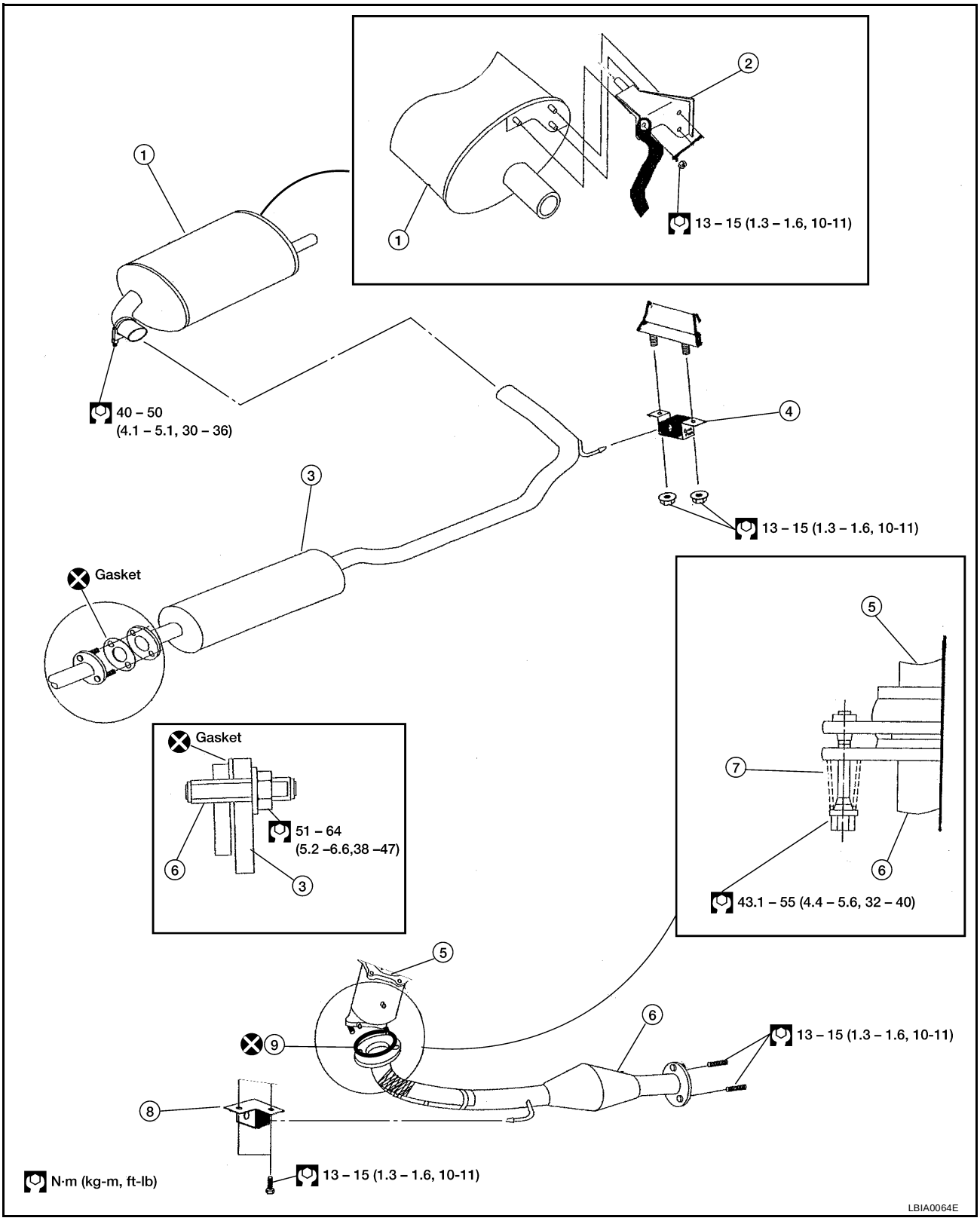

1. Rear muffler
2. Rear muffler bracket (ground strap)
3. Center exhaust tube
4. Center exhaust tube hanger
5. Exhaust manifold
6. Front exhaust tube
7. Front exhaust tube spring
8. Front exhaust tube hanger
9. Seal bearing

- If the insulator is badly deformed, repair or replace it. If deposits such as mud pile up on the insulator, remove them.
- When installing the insulator avoid large gaps or interference between the insulator and each exhaust pipe.
- Remove deposits from the sealing surface of each connection. Connect them securely to avoid gas leakage.
- Temporarily tighten the exhaust manifold side mounting nuts and the vehicle side mounting bolts. Check each part for unusual interference, and then tighten them to the specified torque.
- When installing each mounting rubber, avoid twisting or unusual extension in up/down and right/left directions.
- Insert the seal bearing in the direction as shown. Tighten the mounting bolt with the big end of the spring facing the flange.

  CAUTION:
  Tighten the mounting bolt without causing interference with the flange.

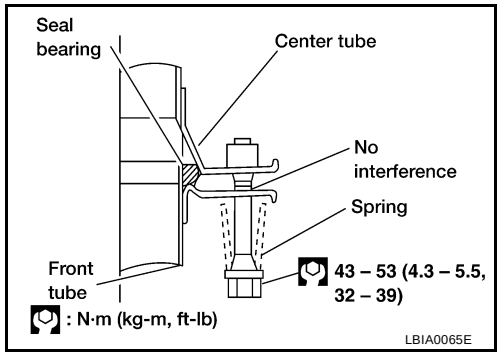

Inspection After Installation

EBS008QV

- With the engine running, check exhaust tube joints for gas leakage and abnormal noise.
- Check to ensure that mounting brackets and mounting insulators are installed properly and free from undue stress. Improper installation could result in excessive noise and vibration.

EXHAUST SYSTEM (VQ35DE)

PFP:20100

Checking Exhaust System

EBS008QW

Check exhaust pipes, muffler and mounting for improper attachment, leaks, cracks, damage or deterioration.

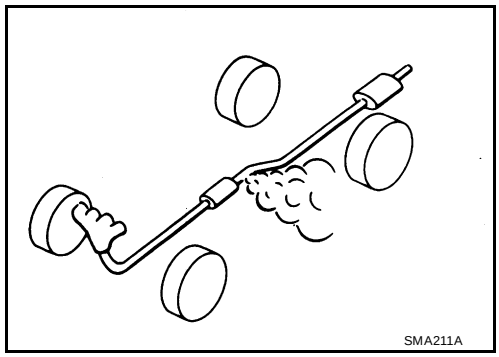

Removal and Installation

EBS008QX

CAUTION:

- **Be sure to use genuine NISSAN exhaust system parts or equivalents which are specially designed for heat resistance, corrosion resistance, and shape.**
- **Perform the operation with the exhaust system fully cooled down because the system will be hot just after the engine stops.**
- **Be careful not to cut your hand on the insulator edge.**

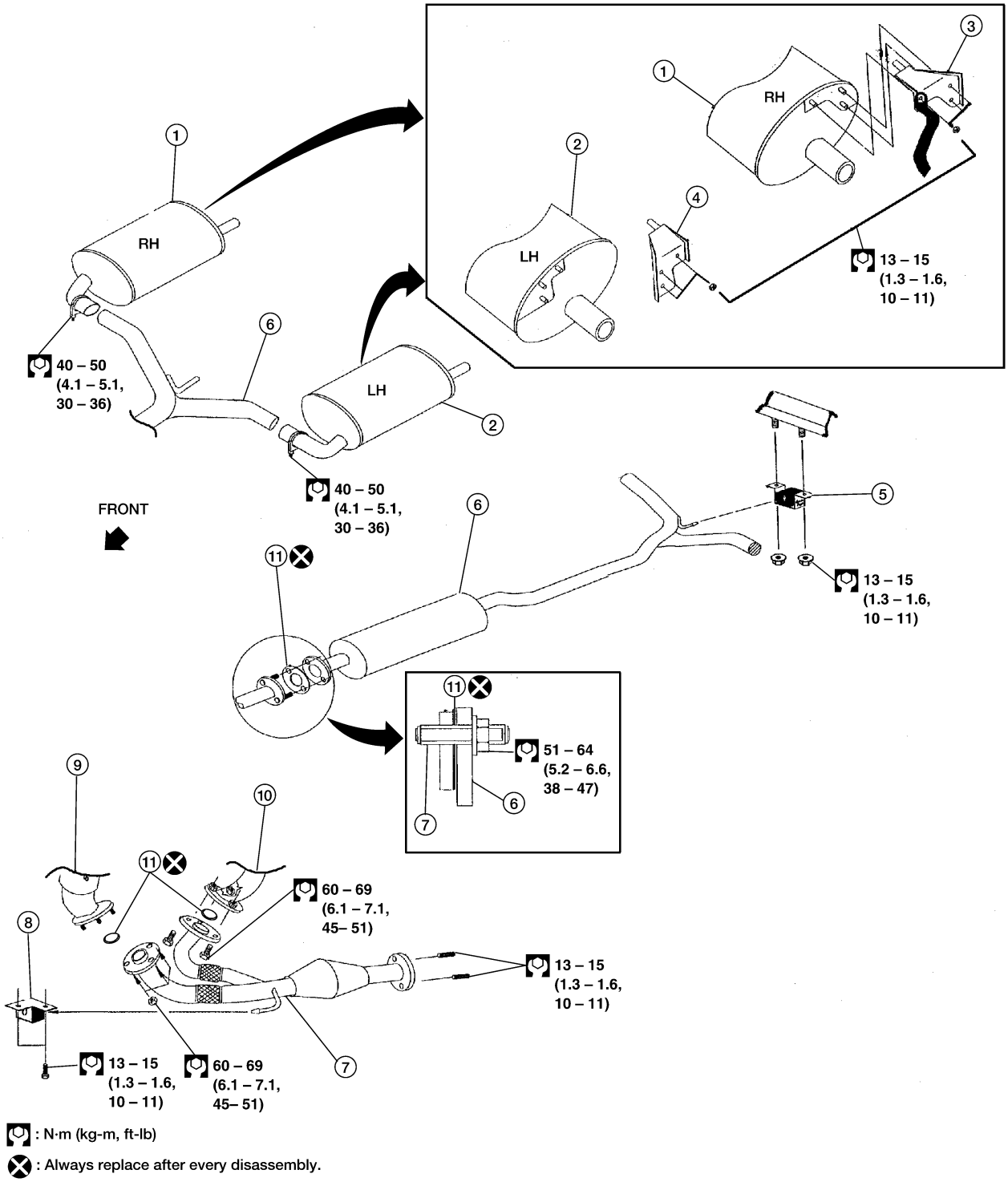

WBIA0211E

1.	RH rear muffler	2.	LH rear muffler	3.	RH rear muffler bracket with ground strap
4.	LH rear muffler bracket	5.	Center exhaust tube hanger	6.	Center exhaust tube
7.	Front exhaust tube	8.	Front exhaust tube hanger	9.	LH exhaust manifold
10.	RH exhaust manifold	11.	Gasket		

CAUTION:

- **Always replace exhaust gaskets with new ones when reassembling.**

- **If the insulator is badly deformed, repair or replace it. If deposits such as mud pile up on the insulator, remove them.**
- **When installing the insulator avoid large gaps or interference between the insulator and each exhaust pipe.**
- **Remove deposits from the sealing surface of each connection. Connect them securely to avoid gas leakage.**
- **Temporarily tighten mounting nuts on the exhaust manifold side and mounting bolts on the vehicle side. Check each part for unusual interference, and then tighten them to the specified torque.**
- **When installing each mounting rubber, avoid twisting or unusual extension in up/down and right/left directions.**

Inspection After Installation

EBS008QY

- With the engine running, check exhaust tube joints for gas leakage and unusual noises.
- Check to ensure that mounting brackets and mounting insulators are installed properly and free from undue stress. Improper installation could result in excessive noise and vibration.

SECTION FAX
FRONT AXLE

CONTENTS

PRECAUTIONS 2
Precautions 2
PREPARATION 3
Special Service Tools 3
Commercial Service Tools 3
NOISE, VIBRATION, AND HARSHNESS (NVH) TROUBLESHOOTING 4
NVH Troubleshooting Chart 4
WHEEL HUB AND KNUCKLE 5
On-vehicle Service 5
FRONT WHEEL BEARING 5
Removal and Installation 6
REMOVAL 7
INSPECTION AFTER REMOVAL 8
INSTALLATION 8
Disassembly and Assembly 8
DISASSEMBLY 8
ASSEMBLY 9
FRONT DRIVE SHAFT 11
Removal and Installation 11
REMOVAL 11
INSPECTION AFTER REMOVAL 13
INSTALLATION 13
Disassembly and Assembly 15
DISASSEMBLY 16
INSPECTION AFTER DISASSEMBLY 18
ASSEMBLY 18
SERVICE DATA AND SPECIFICATIONS (SDS) 23
Drive Shaft 23
Wheel Bearing (Front) 23

PRECAUTIONS

PFP:00001

Precautions

EDS00092

- **When installing rubber parts, final tightening must be carried out under unladen condition* with tires on ground.**
  ***: Fuel, radiator coolant and engine oil full. Spare tire, jack, hand tools and mats in designated positions.**
- **After installing removed suspension parts, check wheel alignment and adjust if necessary.**
- **Use flare nut wrench when removing or installing brake tubes.**
- **Always torque brake lines when installing.**

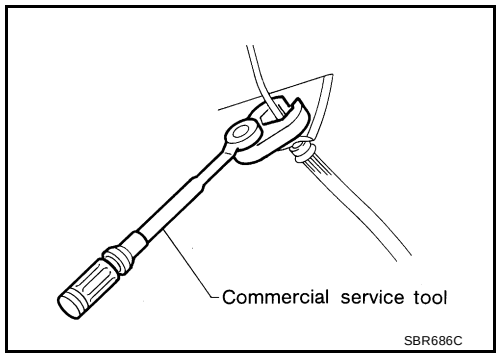

PREPARATION

PFP:00002

Special Service Tools

EDS00093

The actual shapes of Kent-Moore tools may differ from those of special service tools illustrated here.

Tool number (Kent-Moore No.) Tool name		Description
HT72520000 (J25730-B) Ball joint remover	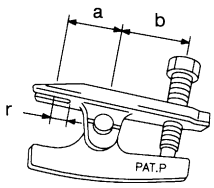 NT546	Removing tie-rod outer end and lower ball joint **a: 33 mm (1.30 in)** **b: 50 mm (1.97 in)** **r: R11.5 mm (0.453 in)**
KV38106700 (J34296) KV38106800 (J34297) Differential side oil seal protector	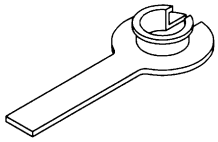 NT147	Installing drive shaft LH: KV38106700 (J34296) RH: KV38106800 (J34297)

Commercial Service Tools

EDS00094

Tool name		Description
1 Flare nut crowfoot 2 Torque wrench	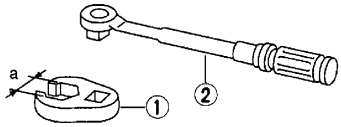 NT360	Removing and installing each brake piping **a: 10 mm (0.39 in)**
Power tool	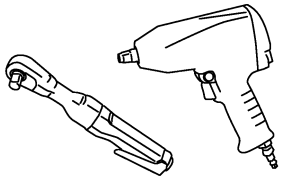 PBIC0190E	Loosening bolts and nuts

NOISE, VIBRATION, AND HARSHNESS (NVH) TROUBLESHOOTING

PFP:00003

NVH Troubleshooting Chart

EDS00095

Use the chart below to help you find the cause of the symptom. If necessary, repair or replace these parts.

Reference page			—	FAX-15	—	FAX-6	—	FAX-5	Refer to DRIVE SHAFT in this chart.	Refer to AXLE in this chart.	FSU-4, "NVH Troubleshooting Chart"	WT-2, "NVH Troubleshooting Chart"	WT-2, "NVH Troubleshooting Chart"	BR-5, "NVH Troubleshooting Chart"	PS-5, "NVH Troubleshooting Chart"
Possible cause and SUSPECTED PARTS			Excessive joint angle	Joint sliding resistance	Imbalance	Improper installation, looseness	Parts interference	Wheel bearing damage	DRIVE SHAFT	AXLE	SUSPENSION	TIRES	ROAD WHEEL	BRAKES	STEERING
Symptom	DRIVE SHAFT	Noise, Vibration	×	×						×	×	×	×	×	×
		Shake	×		×					×	×	×	×	×	×
	AXLE	Noise				×	×		×		×	×	×	×	×
		Shake				×	×		×		×	×	×	×	×
		Vibration				×	×		×		×	×			×
		Shimmy				×	×				×	×	×	×	×
		Judder				×					×	×	×	×	×
		Poor quality ride or handling				×	×	×			×	×	×		

×: Applicable

WHEEL HUB AND KNUCKLE

PFP:40202

On-vehicle Service

EDS00096

Check front axle and front suspension parts for excessive play, cracks, wear or other damage.

- Shake each front wheel to check for excessive play.
- Make sure that cotter pin is inserted.
- Retighten all axle and suspension nuts and bolts to the specified torque.

Tightening torque	**: Refer to FSU-5, "Components"**

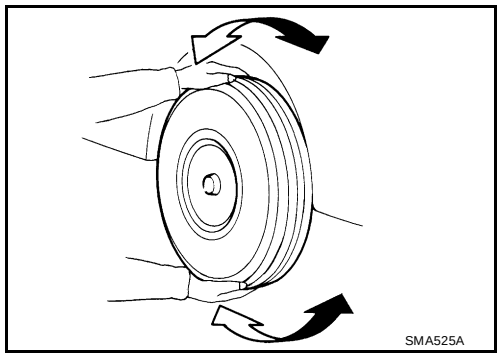

FRONT WHEEL BEARING

- Check that wheel bearings operate smoothly.
- Check axial end play.

Axial end play	**: 0.07 mm (0.0030 in) or less**

If out of specification or wheel bearing does not turn smoothly, replace wheel bearing assembly.
Refer to FAX-6, "Removal and Installation" .

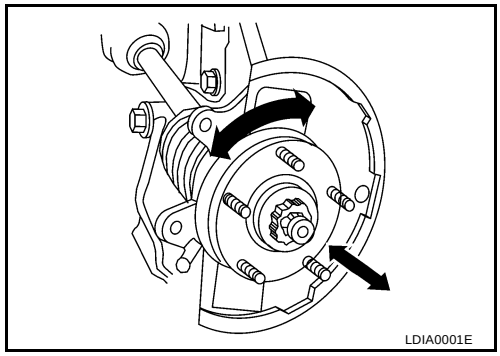

Removal and Installation

EDS00097

SEC. 400

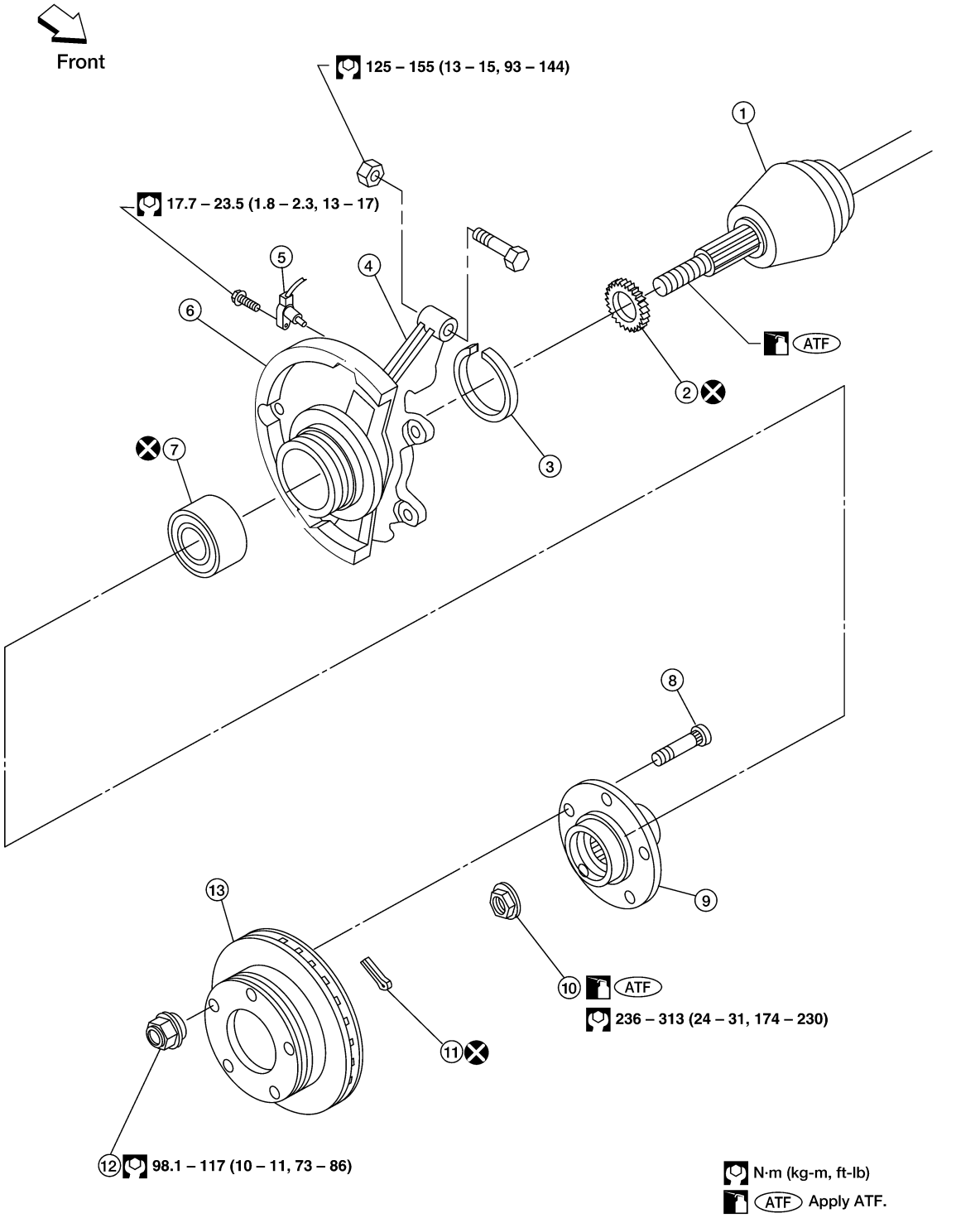

1. Drive shaft
2. Sensor rotor, if equipped
3. Snap ring
4. Knuckle
5. Wheel sensor, if equipped
6. Baffle plate
7. Wheel bearing assembly
8. Hub bolt
9. Wheel hub
10. Wheel bearing lock nut
11. Cotter pin
12. Wheel nut
13. Disc rotor

REMOVAL

CAUTION:

Before removing the front axle assembly, remove the wheel sensor from the assembly. Then move it away from the front axle assembly area.
Failure to do so may result in damage to the sensor wires and the wheel sensor becoming inoperative.

1. Remove wheel and tire assembly.
2. Remove wheel bearing lock nut using power tool.
3. Remove brake caliper assembly and rotor using power tool.
   Brake hose need not be disconnected from brake caliper. In this case, suspend caliper assembly with wire so as not to stretch brake hose. Be careful not to depress brake pedal, or piston will pop out.

   CAUTION:
   Make sure brake hose is not twisted.
4. Remove wheel sensor, if equipped.

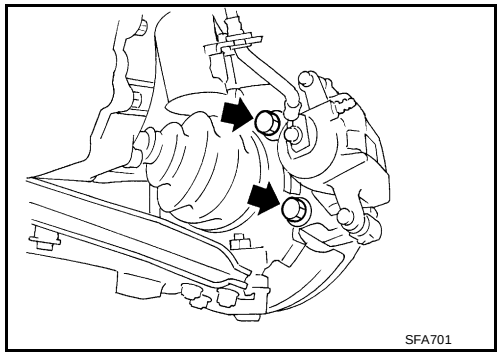

5. Separate tie rod from knuckle with Tool.
   Install stud nut on stud bolt to prevent damage to stud bolt.

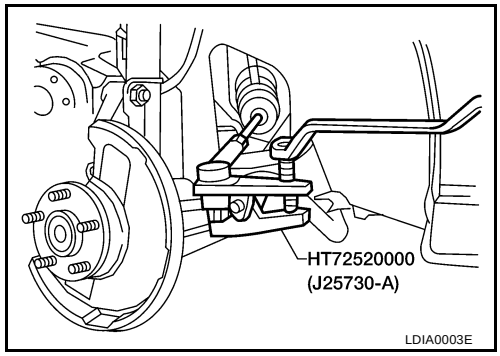

6. Separate drive shaft from knuckle by lightly tapping it. If it is hard to remove, use a puller.
   Cover boots with shop towel so as not to damage them when removing drive shaft.

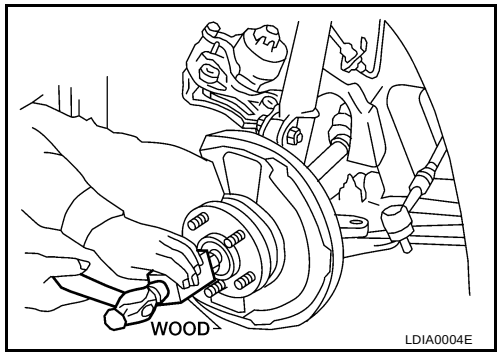

7. Remove lower strut mounting bolts.

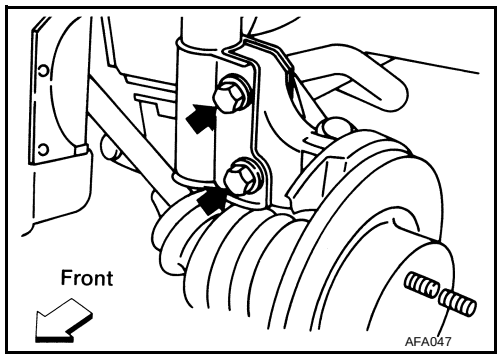

8. Loosen lower ball joint tightening nut.
9. Separate knuckle from lower ball joint stud with Tool.
10. Remove lower ball joint tightening nut and knuckle from transverse link.

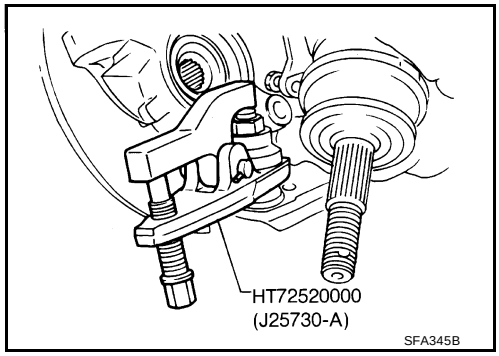

INSPECTION AFTER REMOVAL

Wheel Hub

- Check wheel hub for cracks by a magnetic exploration or dying test, and replace if cracked.

Knuckle

- Check for deformity, cracks (by magnetic exploration or dying test) and damage on steering knuckle, replace if necessary.

Snap Ring

- Check for wear and damage on snap ring, replace if necessary.

INSTALLATION

- To install, reverse the removal procedure. For tightening torques, refer to FAX-6, "Removal and Installation" .

Disassembly and Assembly

EDS00098

DISASSEMBLY

CAUTION:

- **When removing wheel hub or wheel bearing from knuckle, replace wheel bearing assembly (outer race, inner races and grease seals) with a new one.**
- **When replacing wheel bearing, replace complete wheel bearing assembly (inner races and outer race).**

1. Press out wheel hub from knuckle with a suitable tool.

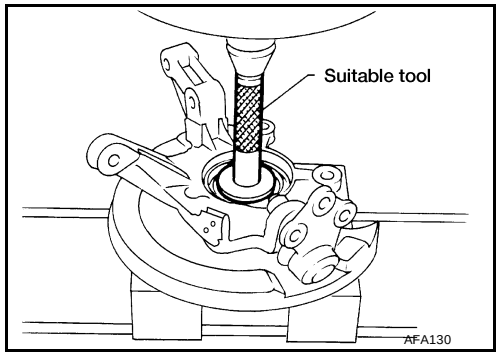

2. Remove snap rings.

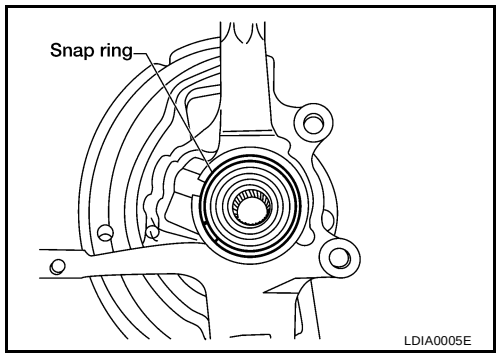

3. Press out wheel bearing from knuckle.

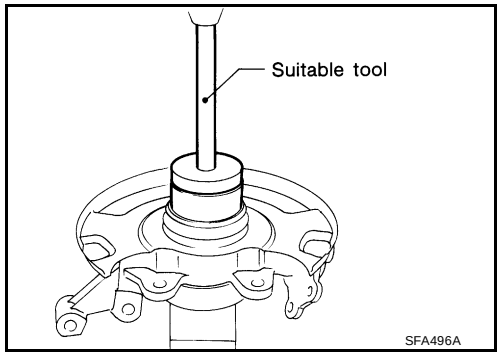

ASSEMBLY

1. Install inner snap ring into groove of knuckle.
2. Press new wheel bearing assembly into knuckle until it contacts snap ring.

   Maximum load P **: 50 kN (5.1 ton, 5.6 US ton, 5.02 Imp ton)**

   CAUTION:
   - **Do not press inner race of wheel bearing assembly.**
   - **Do not apply oil or grease to mating surfaces of wheel bearing outer race and knuckle.**

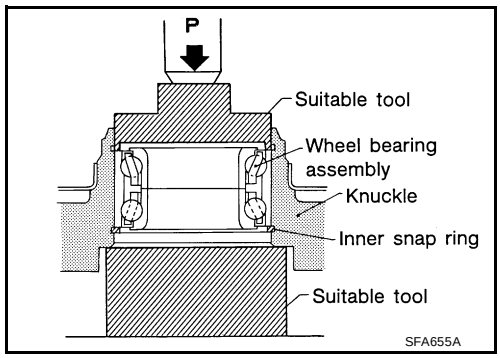

3. Install outer snap ring into groove of knuckle.
4. Press wheel hub into knuckle.

   Maximum load P **:50 kN (5.1 ton, 5.6 US ton, 5.02 Imp ton)**

5. Check bearing operation.

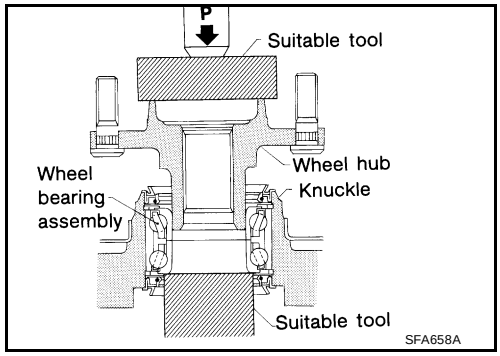

a. Add load P with press.

   Load P **: 35-50 kN (3.6 - 5.1 ton, 3.9 - 5.6 US ton, 3.51 - 5.02 Imp ton)**

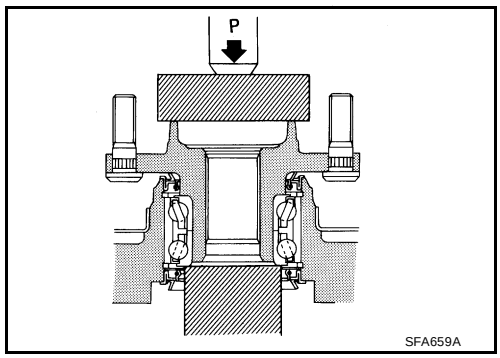

b. Spin knuckle several turns in both directions.

c. Make sure that wheel bearings operate smoothly.

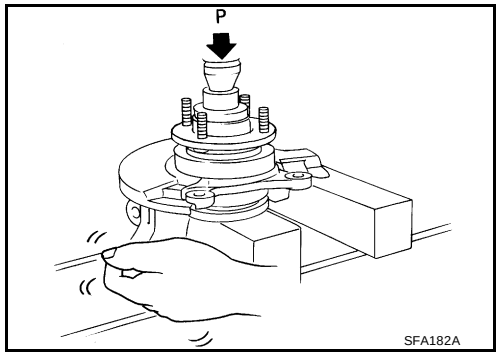

FRONT DRIVE SHAFT

PFP:39100

Removal and Installation

EDS00099

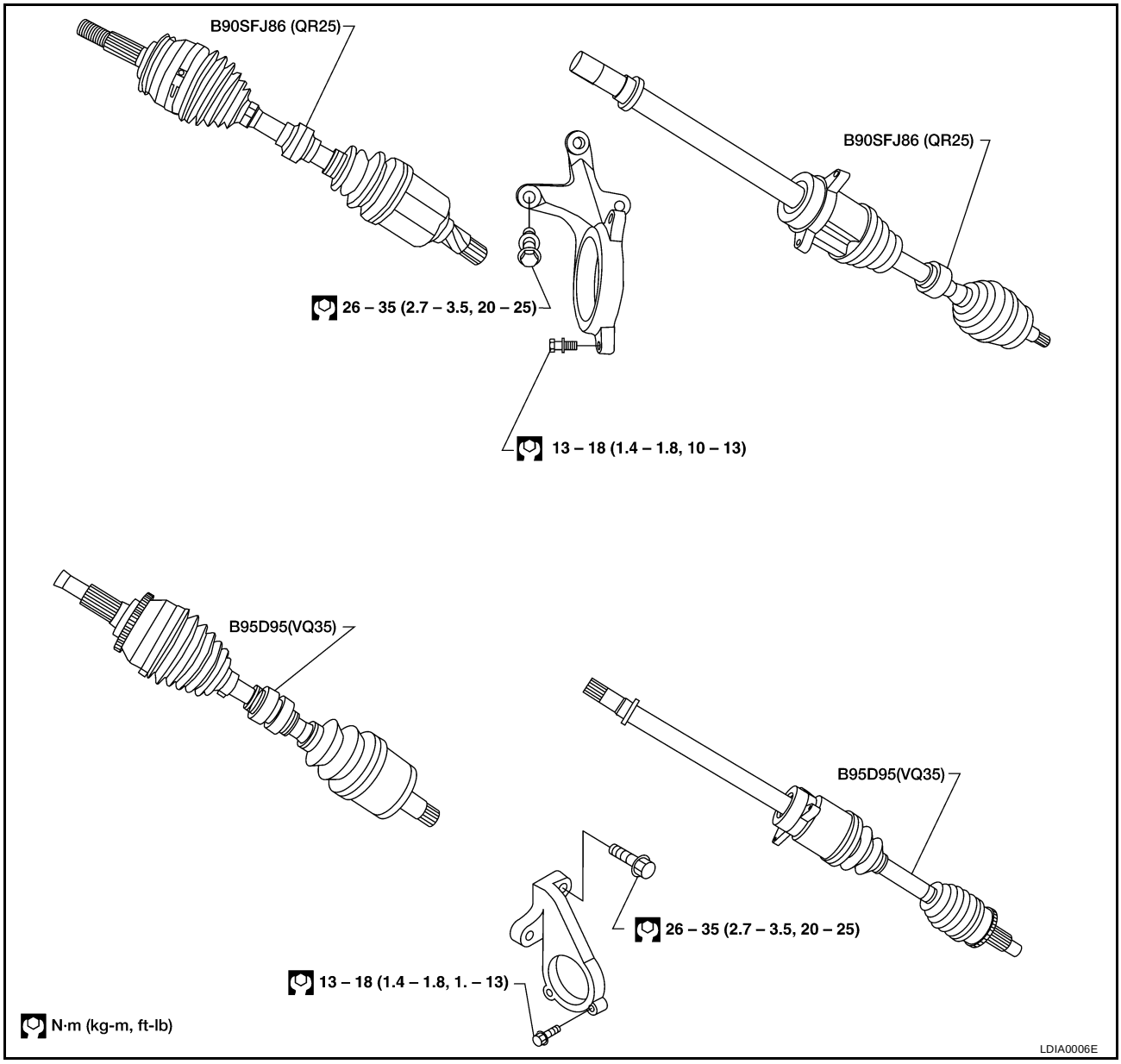

REMOVAL

1. Remove the wheel and tire.
2. Remove wheel bearing lock nut using power tool.

   NOTE:
   Brake caliper need not be disconnected.

   CAUTION:
   Do not twist or stretch brake hose when moving components.
3. Remove the splash shield.
4. Loosen the lower ball joint tightening nut and separate the lower ball joint front transverse link using Tool.

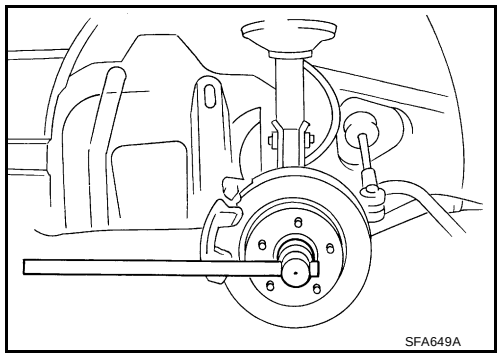

5. Disconnect the connecting rod from the strut.
6. Separate drive shaft from knuckle by lightly tapping it. If it is hard to remove, use a puller.

   CAUTION:
   Cover boots with shop towel so as not to damage them when removing drive shaft.

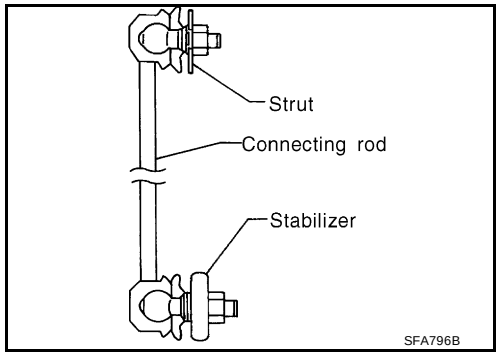

7. Remove support bearing bolts using power tool, and pull drive shaft from transaxle.
8. Remove left drive shaft from transaxle.

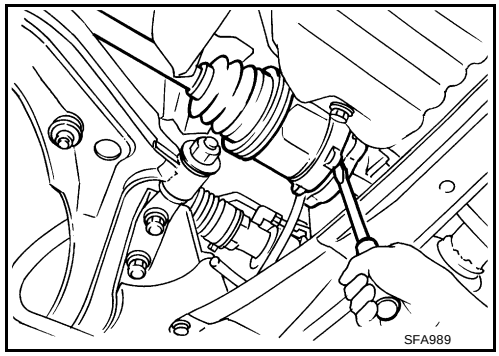

— For M/T models —

- Pry off drive shaft from transaxle as shown.

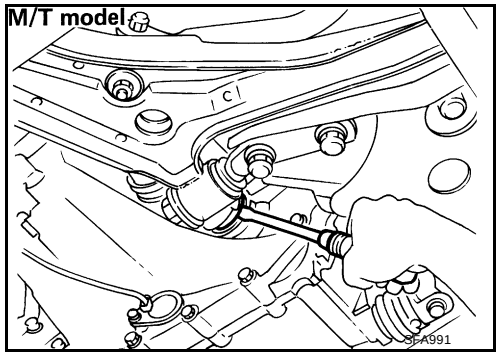

— For A/T models —

- Insert screwdriver into transaxle opening for right drive shaft and strike with a hammer.
- Be careful not to damage pinion mate shaft and side gear.

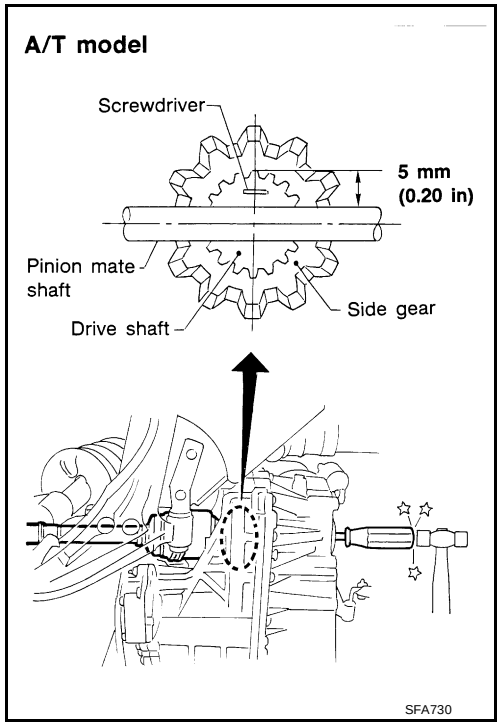

INSPECTION AFTER REMOVAL

- Check for halting movement or a noticeable rattle by moving a joint part vertically, horizontally and to axial direction.
- Check for crack damage and grease leak of boot.

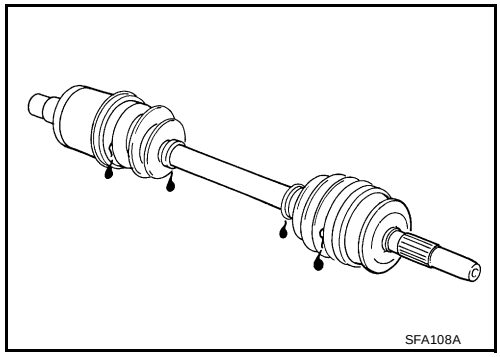

INSTALLATION

Transaxle Side

1. Drive a new oil seal into transaxle case. Refer to MT-11, "SIDE OIL SEAL" or AT-258, "Differential Side Oil Seal Replacement" .
2. Set Tool along the inner circumference of oil seal.

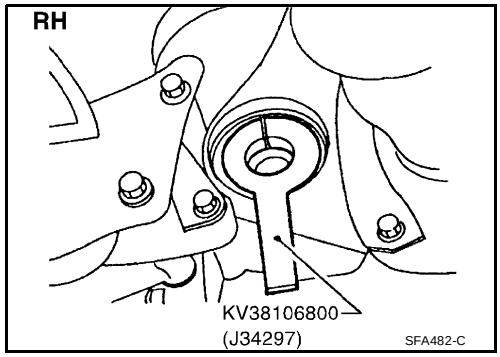

3. Insert drive shaft into transaxle. Be sure to properly align the serrations and then withdraw Tool.
4. Push drive shaft, then press-fit circular clip on the drive shaft into circular clip groove of side gear.
5. After its insertion, try to pull the flange out of the slide joint by hand. If it pulls out, the circular clip is not properly meshed with the side gear.

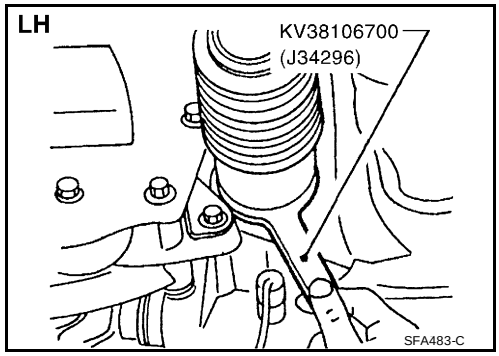

Wheel Side

Install drive shaft into knuckle.

- Tighten support bearing bolts. Refer to FAX-11, "Removal and Installation" .
- Tighten lower ball joint tightening nut and connecting rod nut, wheel bearing lock nut. Refer to FSU-5, "Components" .

Disassembly and Assembly

EDS0009A

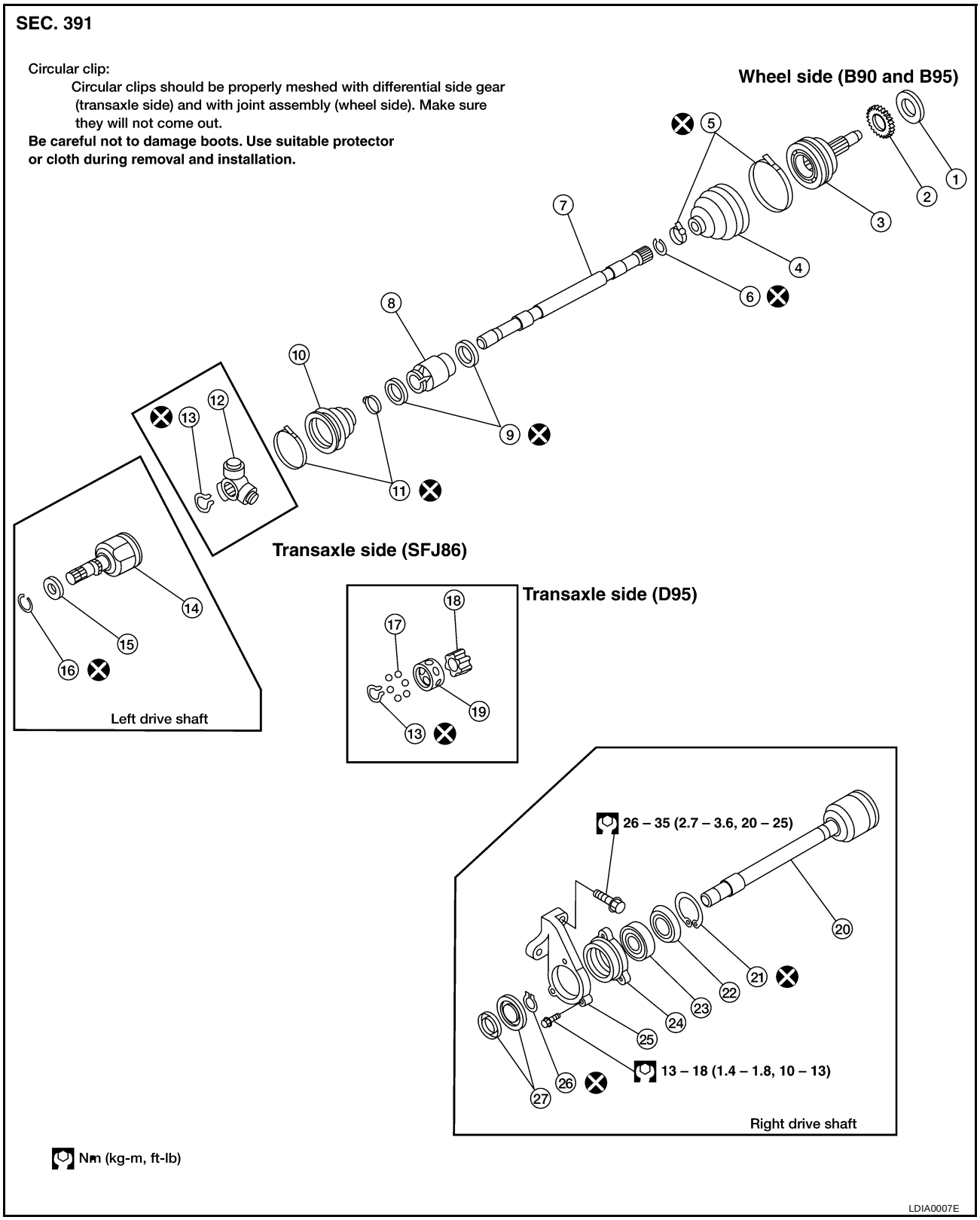

1.	Dust shield	2.	Sensor rotor, if equipped	3.	Joint assembly
4.	Boot	5.	Boot band	6.	Circular clip
7.	Drive shaft	8.	Dynamic damper	9.	Dynamic damper band
10.	Boot	11.	Boot band	12.	Spider assembly
13.	Snap ring	14.	Slide joint assembly	15.	Dust shield
16.	Circular clip	17.	Ball	18.	Inner race

19. Cage	20. Slide joint housing with extension shaft	21. Snap ring
22. Dust shield	23. Support bearing	24. Support bearing retainer
25. Bracket	26. Snap ring	27. Dust shield

DISASSEMBLY

Transaxle Side (D95 type)

1. Remove boot bands.
2. Put matching marks on slide joint housing and inner race, before separating joint assembly.
3. Remove stopper ring with a screwdriver, and pull out slide joint housing.
4. Put matching marks on inner race and drive shaft.

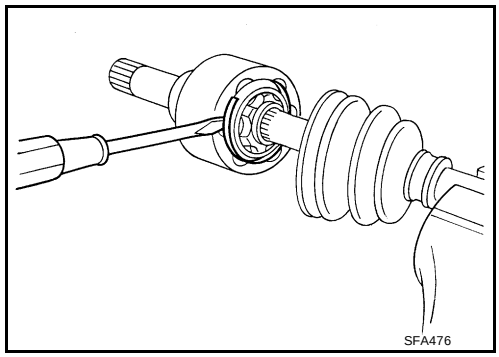

5. Remove snap ring, then remove ball cage, inner race and balls as a unit.
6. Draw out boot.
   Cover drive shaft serrations with tape so as not to damage the boot.

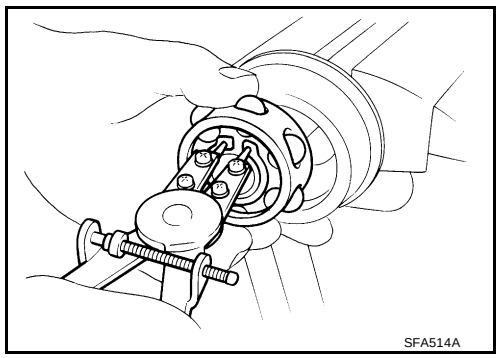

Transaxle Side (SFJ86 type)

1. Remove boot bands.
2. Put matching marks on slide joint housing and drive shaft before separating joint assembly.
3. Put matching marks on spider assembly and drive shaft.

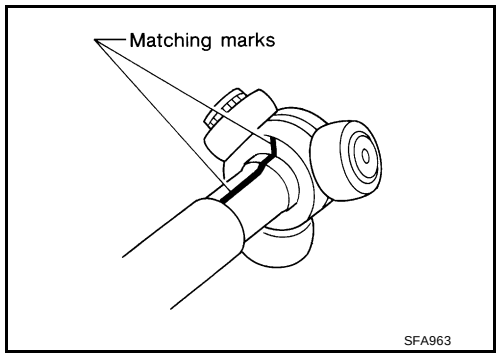

4. Remove snap ring, then remove spider assembly.
   - **CAUTION:**
     Do not disassemble spider assembly.
5. Draw out boot.
   Cover drive shaft serration with tape to prevent damage to the boot.

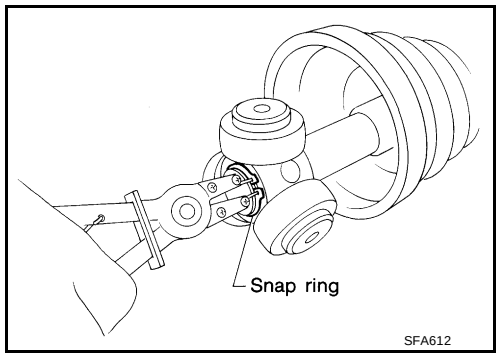

Wheel Side (B90 and B95 type)

CAUTION:

The joint on the wheel side cannot be disassembled.

1. Before separating joint assembly, put matching marks on drive shaft and joint assembly.
2. Separate joint assembly with a suitable tool.
   Be careful not to damage threads on drive shaft.
3. Remove boot bands.
4. Draw out boot.

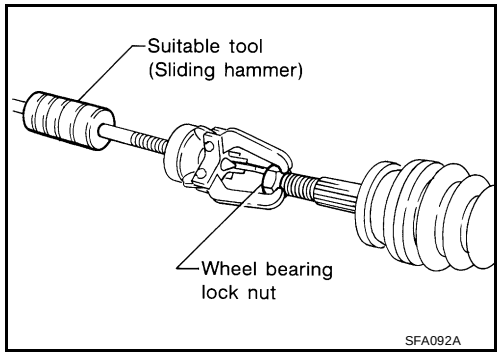

Support Bearing

1. Remove dust shield.

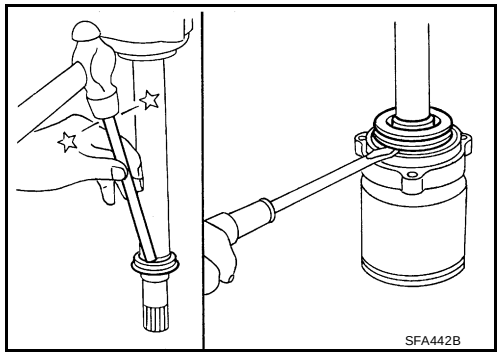

2. Remove snap ring.

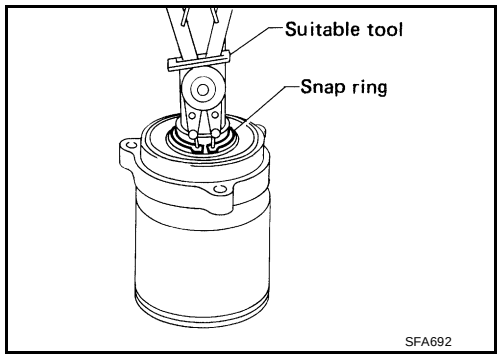

3. Press support bearing assembly off drive shaft.

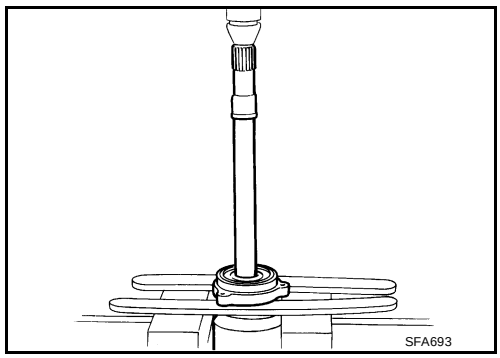

4. Separate support bearing from retainer.

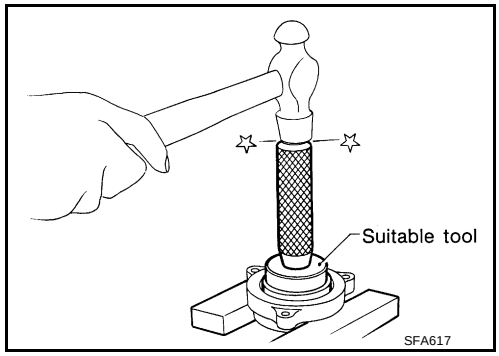

INSPECTION AFTER DISASSEMBLY

Thoroughly clean all parts in cleaning solvent, and dry with compressed air. Check parts for evidence of deformation or other damage.

Shaft

Replace drive shaft if it is twisted or cracked.

Boot and Boot Band

Check boot for fatigue, cracks or wear. Replace boot with new boot bands.

Joint Assembly (Transaxle side)

- Check spider assembly for needle bearing and washer damage. Replace if necessary. (TS83 type)
- Check roller surfaces for scratches, wear or other damage. Replace if necessary. (TS83 type)
- Replace any parts of double offset joint which show signs of scorching, rust, wear or excessive play. (DS90 type)
- Check serration for deformation. Replace if necessary.
- Check slide joint housing for any damage. Replace if necessary.

Joint Assembly (Wheel side)

Replace joint assembly if it is deformed or damaged.

Housing (D type slide joint)

- Check for damage or abnormal wear on ball rolling surface.
- Check for wear on shaft bolts.
- Check for deformity on boot install part.

Ball cage

- Check for damage or abnormality on sliding surface.

Steel ball

- Check for damage or abnormal wear.

Inner race

- Check for damage or abnormality on ball rolling surface.
- Check for damage on serration part.

Support Bearing

Make sure wheel bearing rolls freely and is free from noise, cracks, pitting or wear.

ASSEMBLY

CAUTION:

- **After drive shaft has been assembled, ensure that it moves smoothly over its entire range without binding.**
- **Use NISSAN Genuine Grease or equivalent after every overhaul.**

Transaxle Side (D95 type)

1. Install boot and new small boot band on drive shaft.
   Cover drive shaft serration with tape so as not to damage boot during installation.

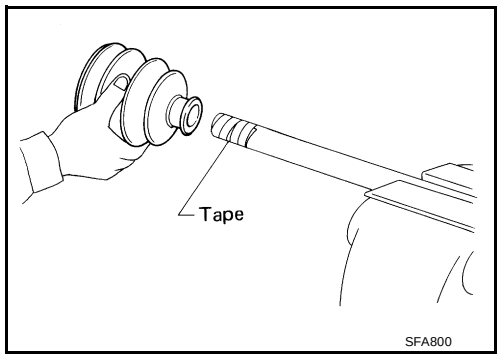

2. Install ball cage, inner race and balls as a unit, making sure the marks which were made during disassembly are properly aligned.
3. Install new snap ring.
4. Pack drive shaft with specified amount of grease.

Capacity:
Unit: g (oz)

Grease Capacity	Transaxle side	
	165 - 185 (5.82 - 6.52)	
	Wheel side	
	B90	120 - 140 (4.23 - 4.94)
	B95	145 - 165 (5.11 - 5.82)

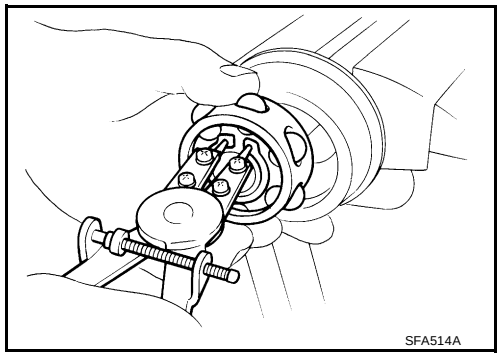

5. Install slide joint housing, then install new snap ring.

6. Make sure that boot is properly installed on the drive shaft groove.
   Set boot so that it does not swell and deform when its length is “L2”.

   Length “L2” : 95.1 - 97.9 mm (3.74 - 3.85 in)

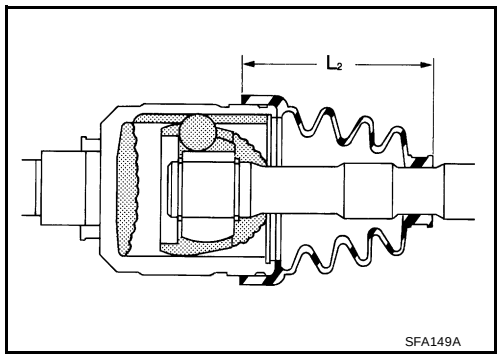

7. Lock new larger and smaller boot bands securely with a suitable tool.

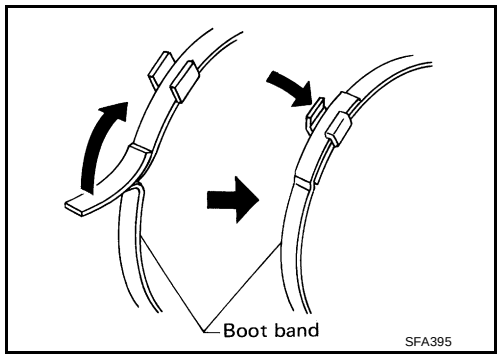

Transaxle Side (SFJ86 type)

1. Install boot and new small boot band on drive shaft.
   Cover drive shaft serration with tape to prevent damage to boot during installation.

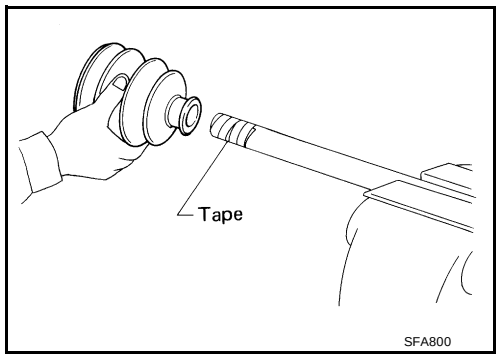

2. Install spider assembly securely, making sure the marks which were made during disassembly are properly aligned.
3. Install new snap ring.
4. Pack drive shaft with specified amount of grease.

Capacity:
Unit: g (oz)

Grease Capacity	Transaxle side	
	165 - 185 (5.82 - 6.52)	
	Wheel side	
	B90	120 - 140 (4.23 - 4.94)
	B95	145 - 165 (5.11 - 5.82)

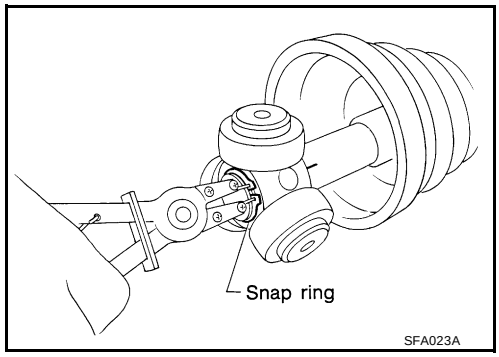

5. Install slide joint housing.

6. Set boot so that it does not swell and deform when its length is “L2”.

   Length “L2” : 96.9 - 99.7 mm (3.81 - 3.93 in)

   Make sure that boot is properly installed on the drive shaft groove.

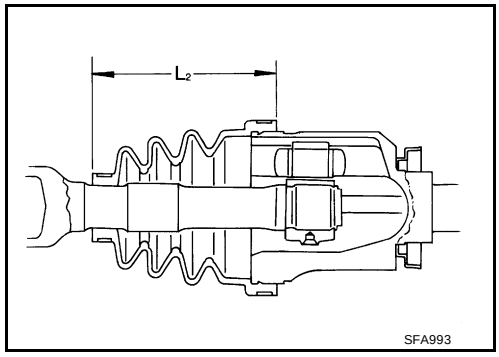

7. Lock new larger and smaller boot bands securely with a suitable tool.

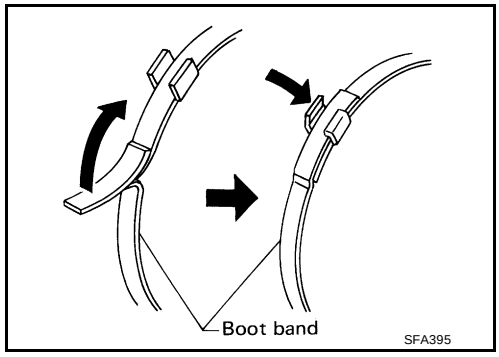

- Install snap ring.

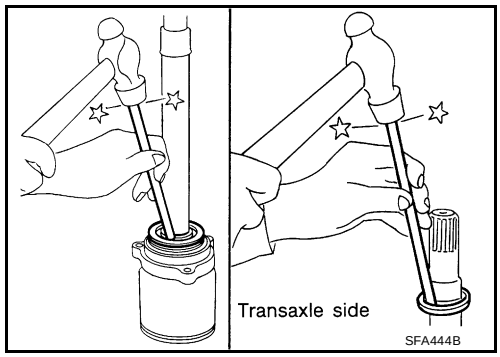

- Install new dust shield.

Wheel Side (B90 and B95 type)

1. Press in sensor rotor to joint sub-assembly using drift (special service tool).

   CAUTION:
   Always use new sensor rotor.

2. Install boot and new small boot band on drive shaft.
   Cover drive shaft serration with tape so as not to damage boot during installation.

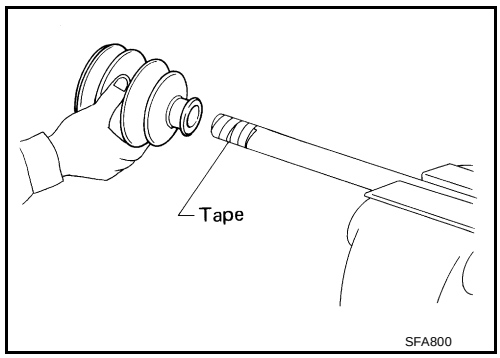

3. Set joint assembly onto drive shaft by lightly tapping it.
   Install joint assembly securely, ensuring marks which were made during disassembly are properly aligned.
4. Pack drive shaft with specified amount of grease.

Capacity:
Unit: g (oz)

Grease Capacity	Transaxle side	
	165 - 185 (5.82 - 6.52)	
	Wheel side	
	B90	120 - 140 (4.23 - 4.94)
	B95	145 - 165 (5.11 - 5.82)

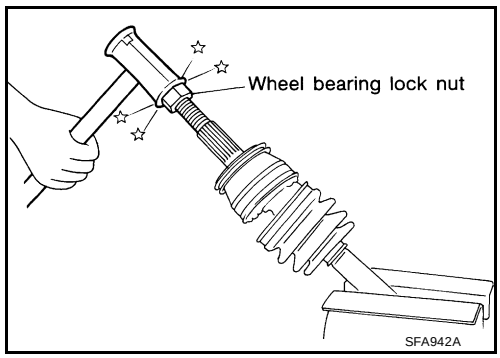

5. Make sure that boot is properly installed on the drive shaft groove.
   Set boot so that it does not swell and deform when its length is “L1”.

   Length “L1” **: QR25 114.3 - 117.1 mm (4.50 - 4.61 in)**
   : VQ35 126.7 - 129.9 mm (4.99 - 5.11 in)

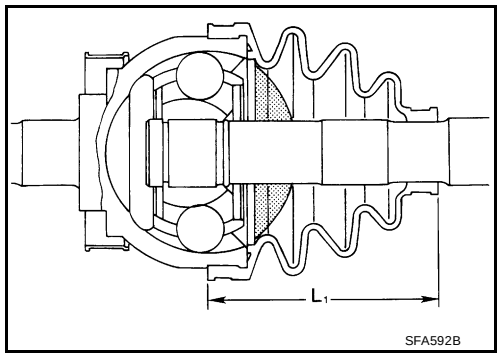

6. Lock new larger and smaller boot bands securely with a suitable tool.

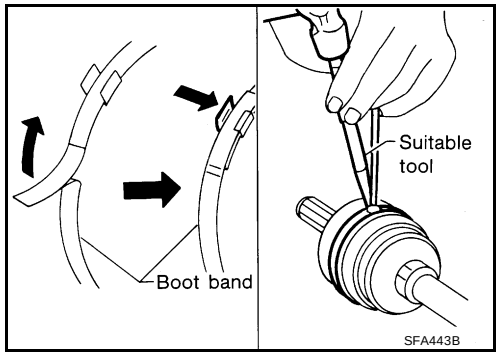

Dynamic Damper

1. Use new damper bands when installing.
2. Install dynamic damper from stationary-joint side while holding it securely.

Length:
Unit: mm (in)

Applied model	RH		LH	
Engine	QR25	VQ35	QR25	VQ35
"A"	207 - 213 (8.1 - 8.4)	—	207 - 213 (8.1 - 8.4)	207 - 213 (8.1 - 8.4)
“B”	50 (2.0)	—	50 (2.0)	50 (2.0)

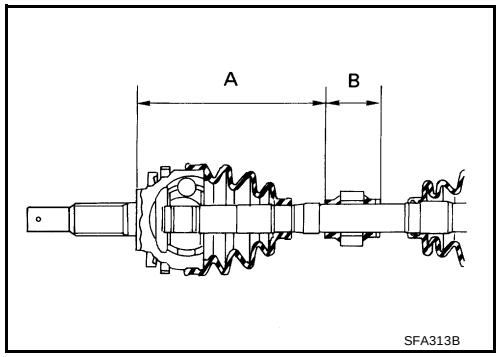

Support Bearing

- Press bearing into retainer.

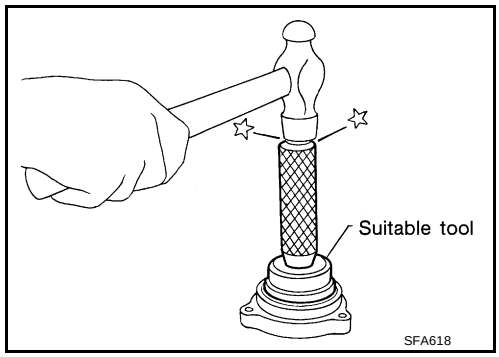

- Press drive shaft into bearing.

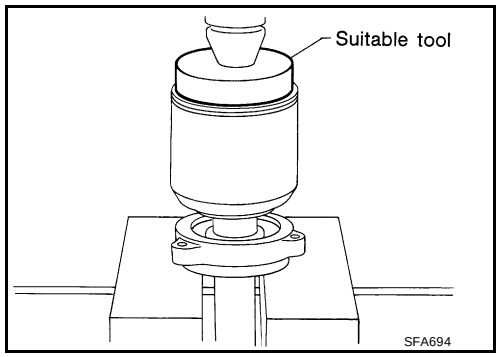

SERVICE DATA AND SPECIFICATIONS (SDS)

PFP:00030

Drive Shaft

EDS0009B

Applied model			QR25	VQ35
Joint type	Transaxle side		SFJ86	D95
	Wheel side		B90	B95
Grease	Quality		NISSAN Genuine Grease or equivalent	
	Capacity g (oz)	Transaxle side	165 - 185 (5.82 - 6.52)	
		Wheel side	120 - 140 (4.23 - 4.94)	145 - 165 (5.11 - 5.82)
Boot length mm (in)	Transaxle side “L_2”		SFJ86	D95
			96.9 - 99.7 (3.81 - 3.93)	95.1 - 97.9 mm (3.74 - 3.85 in)
	Wheel side “L_1”		B90	B95
			114.3 - 117.1 (4.50 - 4.61)	126.7 - 129.9 (4.99 - 5.11)

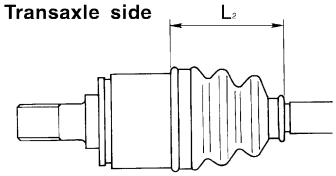

SFA961AA

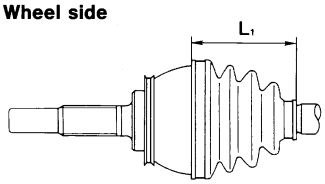

SFA962A

Wheel Bearing (Front)

EDS0009C

Wheel bearing axial end play limit	0.07 mm (0.0030 in)
Wheel bearing lock nut tightening torque	236 - 313 N·m (24 - 31 kg-m, 174 - 224 ft-lb)

SECTION FL
FUEL SYSTEM

CONTENTS

PREPARATION 2
Commercial Service Tools 2
FUEL SYSTEM 3
Checking Fuel Lines 3
General Precautions 3
FUEL LEVEL SENSOR UNIT, FUEL FILTER AND FUEL PUMP ASSEMBLY 5
Removal and Installation 5
REMOVAL 5
INSPECTION AFTER REMOVAL 6
INSTALLATION 7
INSPECTION AFTER INSTALLATION 7
FUEL TANK 8
Removal and Installation 8
REMOVAL 8
INSTALLATION 9
Inspection After Installation 9
SERVICE DATA AND SPECIFICATIONS (SDS) 10
Standard and Limit 10
QR25DE 10
VQ35DE 10

PREPARATION

PFP:00002

Commercial Service Tools

EBS008QK

Tool name	Description
Power tool 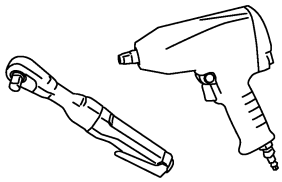 PBIC0190E	Loosening bolts and nuts

FUEL SYSTEM

PFP:17503

Checking Fuel Lines

EBS008QL

Inspect fuel lines, filler cap and tank for improper attachment, leaks, cracks, damage, loose connections, chafing or deterioration.
If necessary, repair or replace faulty parts.

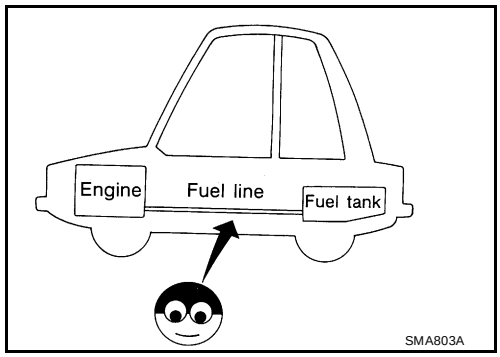

General Precautions

EBS008QM

WARNING:

When replacing fuel line parts, be sure to observe the following.

- **Put a “CAUTION: FLAMMABLE” sign in the work area.**
- **Be sure to work in a well ventilated area and have a CO^2 fire extinguisher.**
- **Do not smoke while working on the fuel system. Keep open flames and sparks away from the work area.**

CAUTION:

- **Before removing fuel line parts, carry out the following procedures:**
  - **Put drained fuel in an explosion-proof container and put the lid on securely. Keep the container in safe area.**
  - **Release fuel pressure from the fuel lines. Refer to EC-671, "FUEL PRESSURE RELEASE" .**
  - **Disconnect the battery ground cable.**
- **Always replace O-rings and clamps with new ones.**
- **Do not kink or twist tubes when they are being installed.**
- **Do not tighten hose clamps excessively to avoid damaging hoses.**
  Tighten high-pressure rubber hose clamp so that clamp end is 3 mm (0.12 in) from hose end.
  Tightening torque specifications are the same for all rubber hose clamps.
  Ensure that screw does not contact adjacent parts.

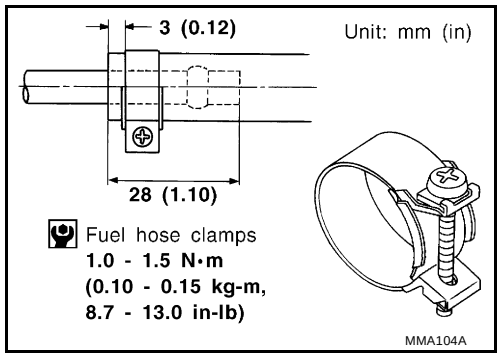

- **After connecting the fuel tube quick connectors, make sure the quick connectors are secure.**
  Ensure that the connector and resin tube do not contact any adjacent parts.
- **After installing tubes, run engine and check for fuel leaks at connections.**
- **Use only a genuine NISSAN fuel filler cap as a replacement. If an incorrect fuel filler cap is used, the MIL may come on.**
- **For servicing "Evaporative Emission System" parts, refer to** **EC-1272, "EVAPORATIVE EMISSION SYSTEM"** **.**
- **For servicing "On Board Refueling Vapor Recovery (ORVR)" parts, refer to** **EC-1278, "ON BOARD REFUELING VAPOR RECOVERY (ORVR)"** **.**

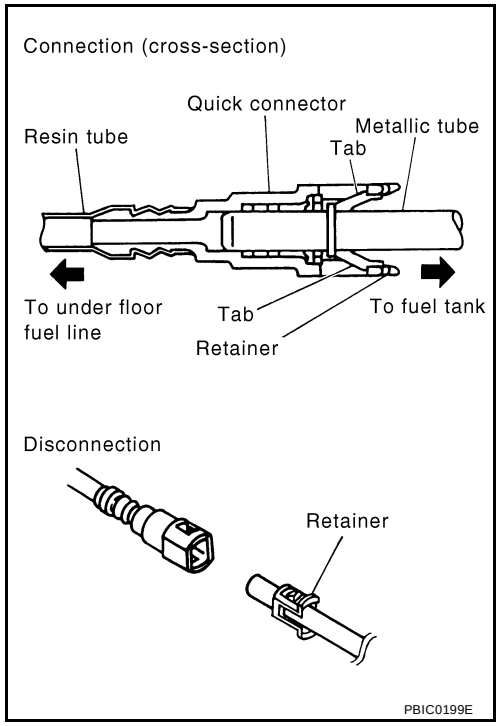

FUEL LEVEL SENSOR UNIT, FUEL FILTER AND FUEL PUMP ASSEMBLY PFP:17042

Removal and Installation

EBS008QN

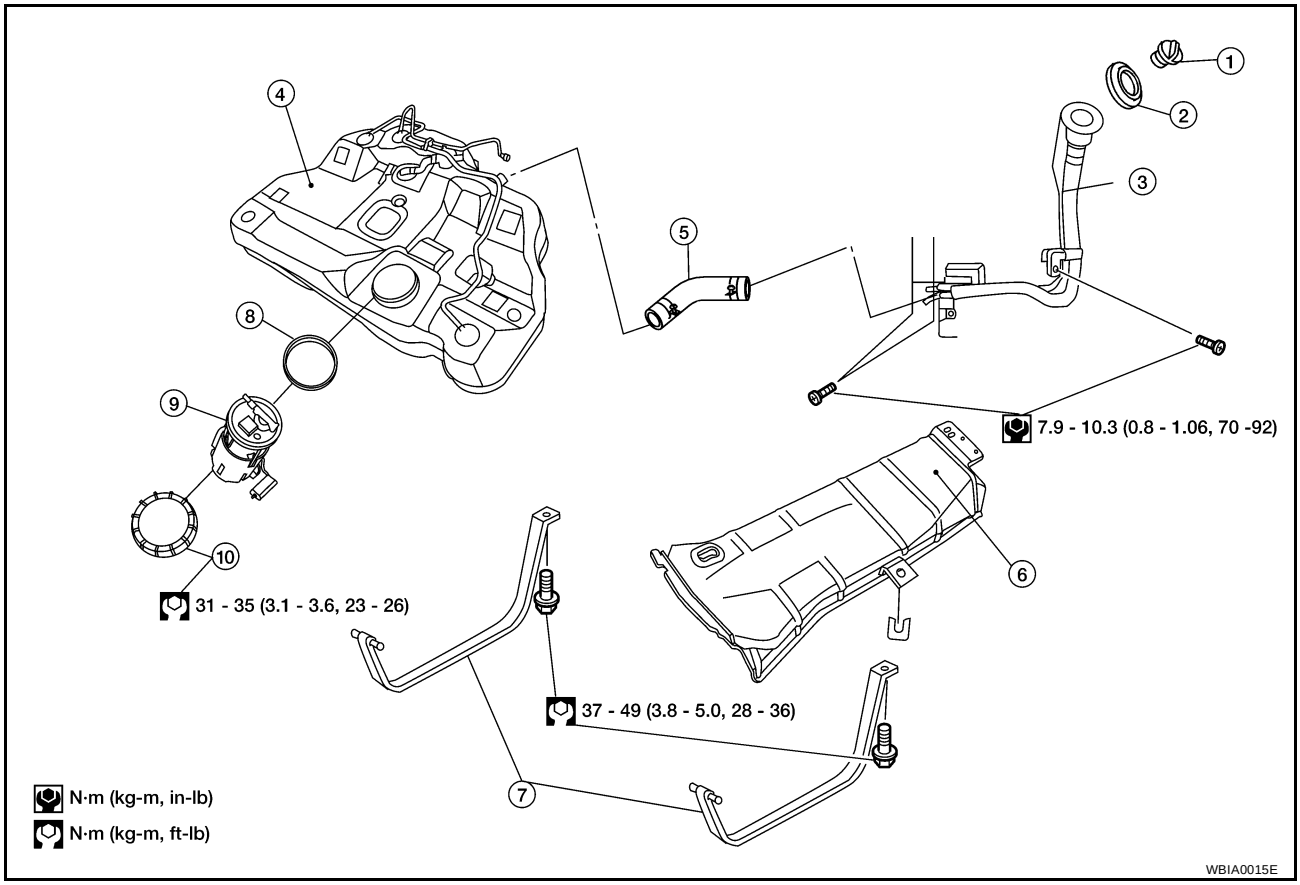

1.	Fuel filler cap	2.	Grommet	3.	Fuel filler tube
4.	Fuel tank	5.	Fuel filler hose	6.	Fuel tank protector
7.	Fuel tank mounting straps	8.	Ring seal	9.	Fuel pump assembly
10.	Fuel pump locking ring				

REMOVAL

WARNING:

Read “General Precautions” before working on the fuel system.
Refer to FL-3, "General Precautions" .

1. Unscrew the fuel filler cap to release the pressure inside the fuel tank.
2. Release the fuel pressure from the fuel lines. Refer to EC-671, "FUEL PRESSURE RELEASE" .
3. Remove the rear seat bottom. Refer to SE-19, "Removal and Installation" .
4. Remove the fuel pump inspection hole cover.
5. Disconnect the harness connector, and fuel feed hose from the fuel pump assembly.

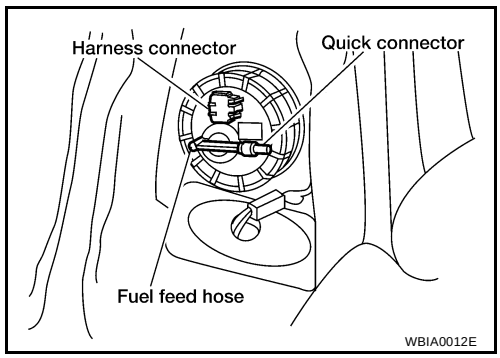

Remove the quick connector as follows:

- Hold the sides of the connector, push in tubs and pull out the tube.
- If the connector and the tube are stuck together, push and pull several times until they start to move. Then disconnect them by pulling.

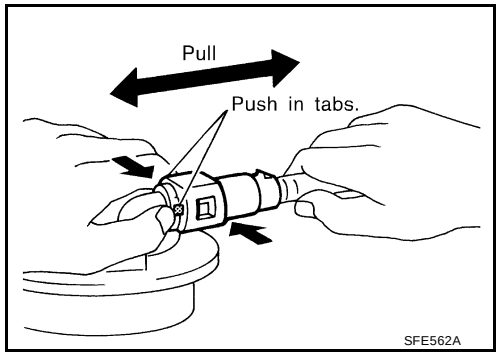

CAUTION:

- **The tube can be removed when the tabs are completely depressed. Do not twist it more than necessary.**
- **Do not use any tools to remove the quick connector.**
- **Keep the resin tube away from heat. Be especially careful when welding near the tube.**
- **Prevent acid liquid such as battery electrolyte, etc. from getting on the resin tube.**
- **Do not bend or twist the tube during installation and removal.**
- **Only when the tube is replaced, remove the remaining retainer on the tube or fuel pump assembly.**
- **When the tube or fuel pump assembly is replaced, also replace the retainer with a new one (green colored retainer).**
- **To keep the connecting portion clean and to avoid damage and foreign materials, cover them completely with plastic bags or something similar.**

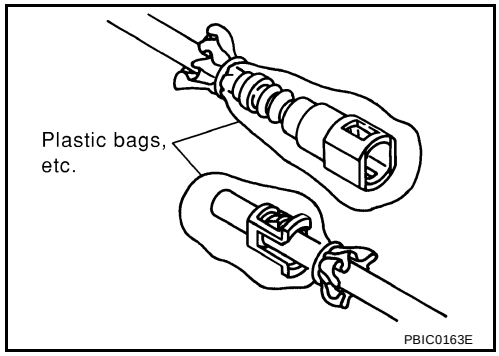

6. Using a lock ring wrench, remove the lock ring.

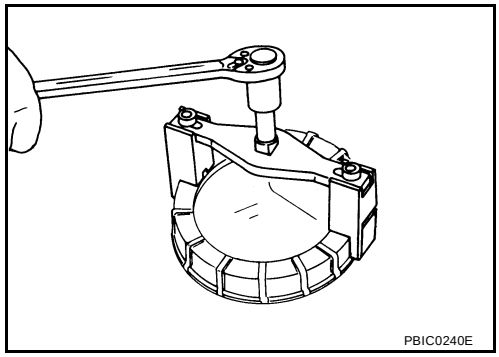

7. Remove the fuel pump assembly.

CAUTION:

- **Do not bend the float arm during removal.**

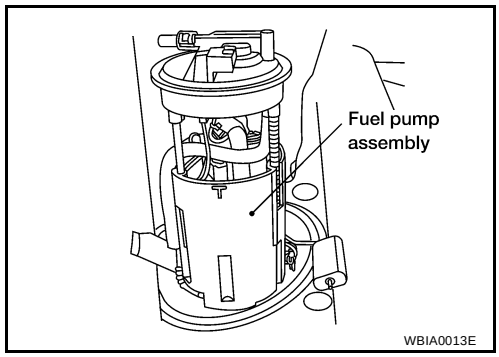

INSPECTION AFTER REMOVAL

Make sure the fuel pump is free from defects and foreign materials.

INSTALLATION

Installation is in the reverse order of removal.

- Install the fuel pump assembly with the front mark (arrow) facing the front of the vehicle.

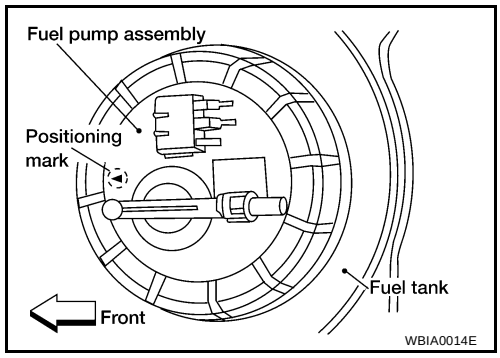

- Connect the quick connector as follows:

1. Check the connection for damage or any foreign materials.
2. Align the connector with the tube, then insert the connector straight into the tube until a click is heard.
3. Pull the tube and the connector to make sure they are securely connected.

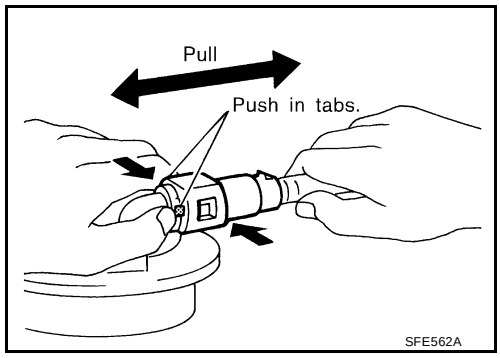

- Visually confirm that the two retainer tabs are connected to the connector.

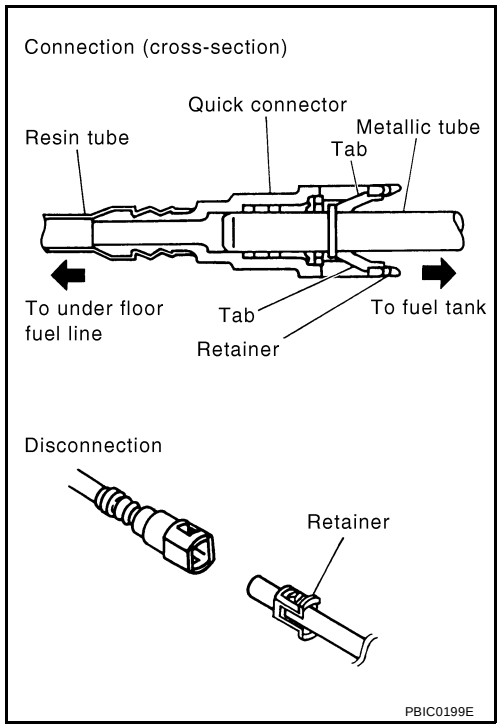

INSPECTION AFTER INSTALLATION

- Start the engine and let it idle and make sure there are no fuel leaks at the fuel system connections.

FUEL TANK

PFP:17202

Removal and Installation

EBS008QO

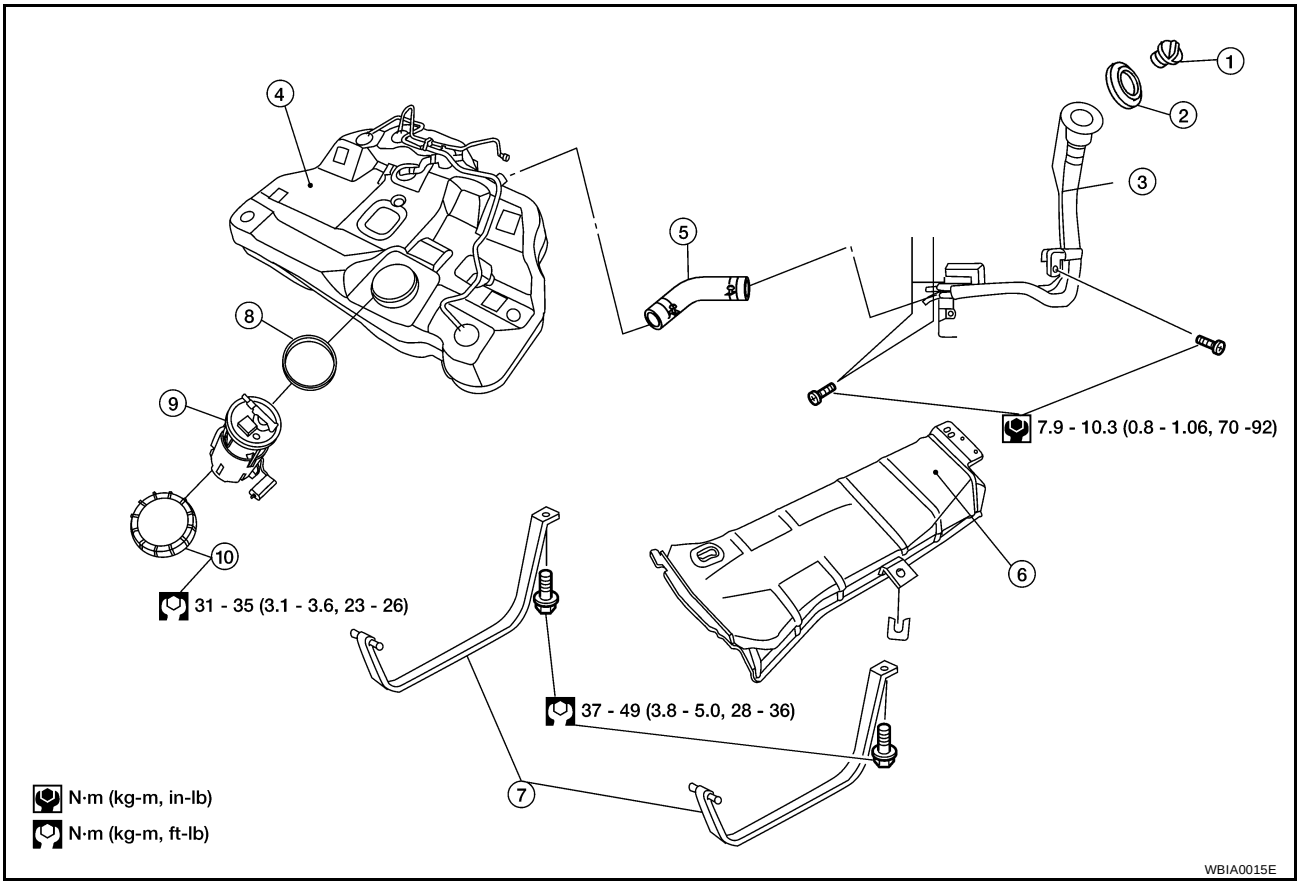

1.	Fuel filler cap	2.	Grommet	3.	Fuel filler tube
4.	Fuel tank	5.	Fuel filler hose	6.	Fuel tank protector
7.	Fuel tank mounting straps	8.	Ring seal	9.	Fuel pump assembly
10.	Fuel pump locking ring				

REMOVAL

WARNING:

Read “General Precautions” before working on the fuel system.
Refer to FL-3, "General Precautions" .

1. Release fuel pressure from fuel line, Refer to EC-51, "FUEL PRESSURE RELEASE" (QR25DE), EC-671, "FUEL PRESSURE RELEASE" (VQ35DE).
2. Open the fuel filler cap to release the pressure inside the fuel tank.
3. Remove rear seat bottom. Refer to SE-19, "Removal and Installation" .
4. Remove the inspection hole cover, harness connector and fuel feed hose quick connector. Refer to FL-5, "Removal and Installation" .
5. Remove the center exhaust tube, with muffler(s). Refer to EX-6, "Removal and Installation" .

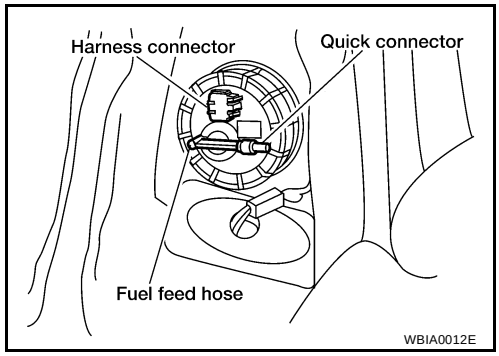

6. Disconnect the fuel filler hose, recirculation hose and signal hose at the fuel tank side.
7. Disconnect the three parking brake cable mounting brackets on each cable and position the cables out of the way. Refer to PB-2, "Components" .
8. Remove the fuel tank protector.
9. Disconnect the fuel tank mounting straps while supporting the fuel tank.
10. Remove the fuel tank.

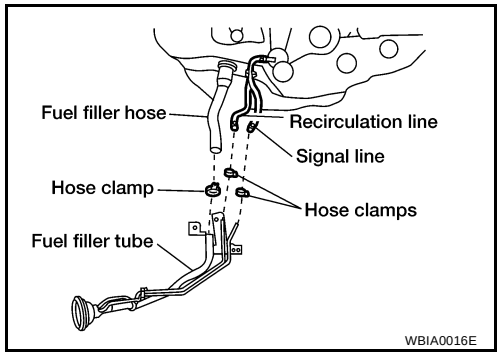

INSTALLATION

1. Installation is in the reverse order of removal.
   - Before tightening the fuel tank mounting straps, temporarily install the filler hose, recirculation hose, and signal hose. Tighten all fasteners to specification.
   - To connect the quick connector, refer to FL-5, "Removal and Installation" .

Inspection After Installation

EBS008QP

Run the engine and check for fuel leaks at the fuel system tube and hose connections.

SERVICE DATA AND SPECIFICATIONS (SDS)

PFP:00030

Standard and Limit

EBS008QQ

QR25DE

Fuel tank capacity	75.5 ℓ (20 gal)

VQ35DE

Fuel tank capacity	75.5 ℓ (20 gal)

SECTION FSU
FRONT SUSPENSION

CONTENTS

PRECAUTIONS 2
Precautions 2
PREPARATION 3
Special Service Tools 3
Commercial Service Tools 3
NOISE, VIBRATION, AND HARSHNESS (NVH) TROUBLESHOOTING 4
NVH Troubleshooting Chart 4
FRONT SUSPENSION ASSEMBLY 5
Components 5
On-vehicle Service 6
FRONT SUSPENSION PARTS 6
Front Wheel Alignment 6
DESCRIPTION 6
PRELIMINARY INSPECTION 6
CAMBER, CASTER AND KINGPIN INCLINATION 7
TOE-IN 7
FRONT WHEEL TURNING ANGLE 8
COIL SPRING AND SHOCK ABSORBER 9
Removal and Installation 9
Disassembly 9
Inspection 9
SHOCK ABSORBER ASSEMBLY 9
MOUNTING INSULATOR AND RUBBER PARTS 10
THRUST BEARING 10
COIL SPRING 10
Assembly 10
STABILIZER BAR 11
Removal and Installation 11
Inspection 12
TRANSVERSE LINK 13
Removal and Installation 13
REMOVAL 13
INSPECTION AFTER REMOVAL 13
INSTALLATION 13
FRONT SUSPENSION MEMBER 14
Removal and Installation 14
REMOVAL 14
INSTALLATION 14
SERVICE DATA AND SPECIFICATIONS (SDS) 15
General Specifications (Front) 15
Front Wheel Alignment (Unladen*1) 15
Lower Ball Joint 15
Wheelarch Height (Unladen*) 16

PRECAUTIONS

PFP:00001

Precautions

EES000D0

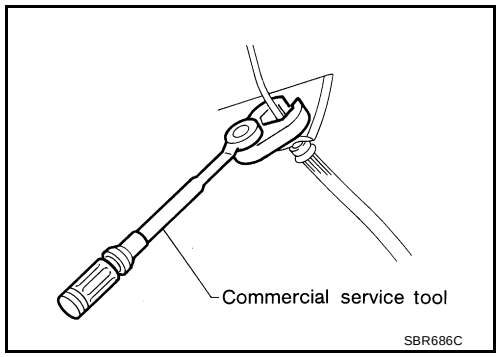

- **When installing rubber parts, final tightening must be carried out under unladen condition* with tires on ground.**
  Oil will shorten the life of rubber bushes. Be sure to wipe off any spilled oil.
  ***: Fuel, radiator coolant and engine oil full. Spare tire, jack, hand tools and mats in designated positions.**
- **After installing removed suspension parts, check wheel alignment and adjust if necessary.**
- **Use flare nut wrench when removing or installing brake tubes.**
- **Always torque brake lines when installing.**
- **Lock nuts are unreusable parts; always use new ones.**
  When replacing, do not wipe the oil off the new lock nut before tightening.

PREPARATION

PFP:00002

Special Service Tools

EES000D1

The actual shapes of Kent-Moore tools may differ from those of special service tools illustrated here.

Tool number (Kent-Moore No.) Tool name	Description
HT72520000 (J25730-A) Ball joint remover 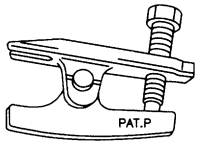 NT146	Removing tie-rod outer end and lower ball joint

Commercial Service Tools

EES000D2

Tool name	Description
Attachment Wheel alignment 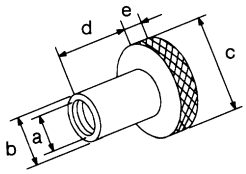 NT148	Measure wheel alignment **a: Screw M24 x 1.5 pitch** **b: 35 mm (1.38 in) dia.** **c: 65 mm (2.56 in) dia.** **d: 56 mm (2.20 in)** **e: 12 mm (0.47 in)**
1 Flare nut crowfoot 2 Torque wrench 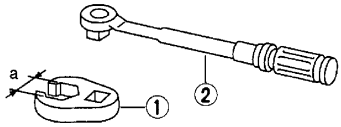 NT360	Removing and installing each brake piping **a: 10 mm (0.39 in)**
Spring compressor 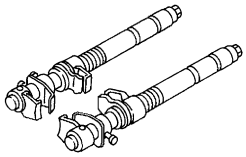 NT717	Removing and installing coil spring
Power tool 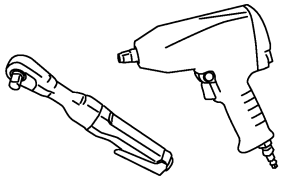 PBIC0190E	Loosening bolts and nuts

NOISE, VIBRATION, AND HARSHNESS (NVH) TROUBLESHOOTING

PFP:00003

NVH Troubleshooting Chart

EES000D3

Use the following chart to help you find the cause of the symptom. If necessary, repair or replace these parts.

		Reference page	FSU-5	FSU-9	FSU-10	—	FSU-10	FSU-5	FSU-6	FSU-11	WT-3	WT-4	WT-6	—	—	—	WT-6	FAX-4	FAX-4	Refer to SUSPENSION in this chart.	Refer to TIRES in this chart.	Refer to ROAD WHEEL in this chart.	BR-5	PS-5
		Possible Cause and SUSPECTED PARTS	Improper installation, looseness	Shock absorber deformation, damage or deflection	Bushing or mounting	Parts interference	Spring fatigue	Suspension looseness	Incorrect wheel alignment	Stabilizer bar fatigue	Out-of-round	Imbalance	Incorrect air pressure	Uneven tire wear	Deformation or damage	Non-uniformity	Incorrect tire size	DRIVE SHAFT	AXLE	SUSPENSION	TIRES	ROAD WHEEL	BRAKES	STEERING
Symptom	SUSPENSION	Noise	×	×	×	×	×	×										×	×		×	×	×	×
		Shake	×	×	×	×		×										×	×		×	×	×	×
		Vibration	×	×	×	×	×											×	×		×			×
		Shimmy	×	×	×	×			×										×		×	×	×	×
		Judder	×	×	×														×		×	×	×	×
		Poor quality ride or handling	×	×	×	×	×		×	×									×		×	×		
	TIRES	Noise	×								×	×	×	×	×	×		×	×	×		×	×	×
		Shake	×								×	×	×	×	×		×	×	×	×		×	×	×
		Vibration											×				×	×	×	×				×
		Shimmy	×								×	×	×	×	×	×	×		×	×		×	×	×
		Judder	×								×	×	×	×	×		×		×	×		×	×	×
		Poor quality ride or handling	×								×	×	×	×	×		×		×	×		×		
	ROAD WHEEL	Noise	×								×	×			×			×	×	×	×		×	×
		Shake	×								×	×			×			×	×	×	×		×	×
		Shimmy, Judder	×								×	×			×				×	×	×		×	×
		Poor quality ride or handling	×								×	×			×				×	×	×			

×: Applicable

FRONT SUSPENSION ASSEMBLY

PFP:54010

Components

EES000D4

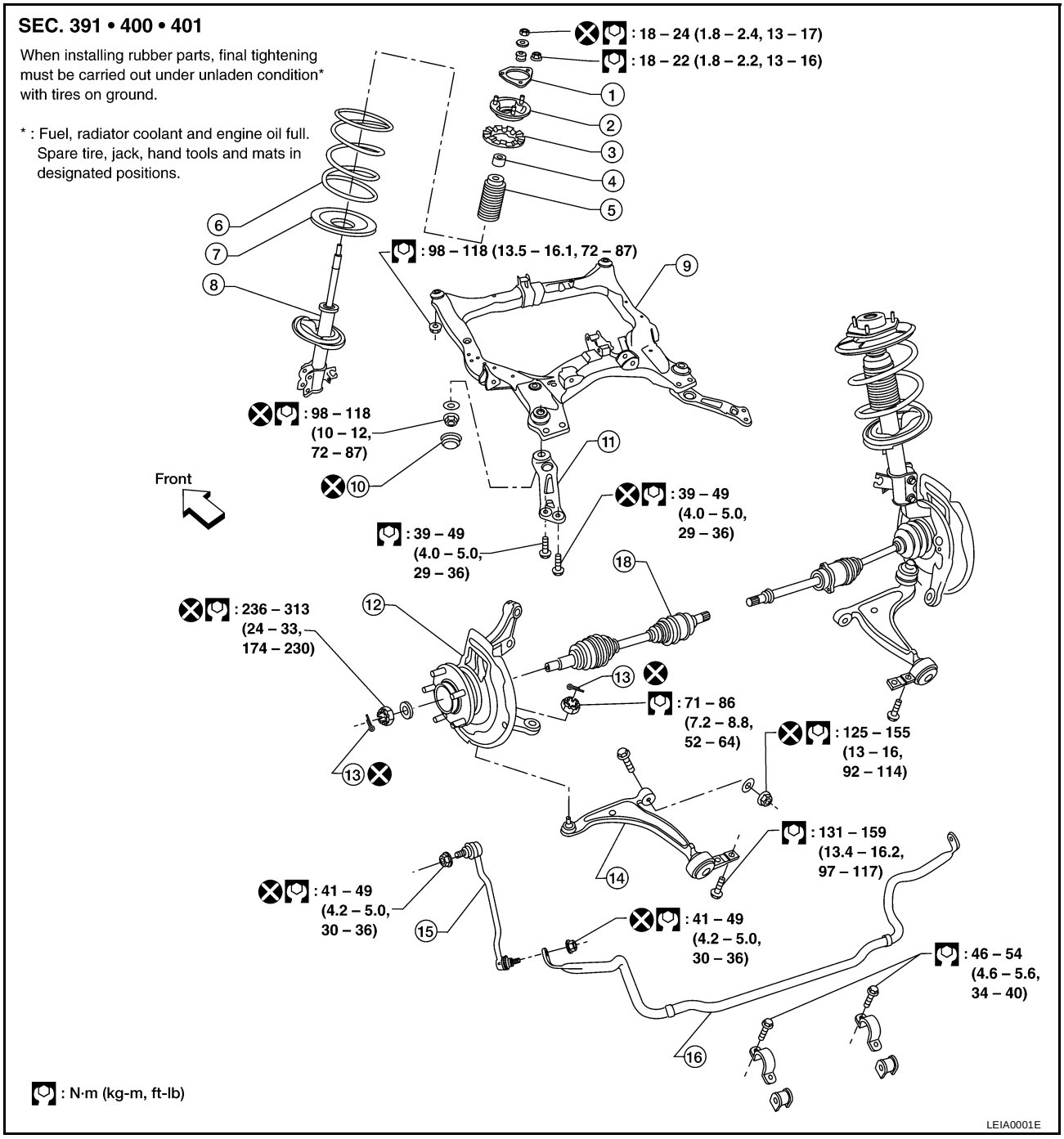

1.	Gasket	2.	Shock absorber mounting insulator	3.	Upper rubber seat
4.	Shock absorber bushing	5.	Dust cover	6.	Coil spring
7.	Lower rubber seat	8.	Shock absorber	9.	Front suspension member
10.	Cap	11.	Member pin stay	12.	Wheel hub and steering knuckle assembly
13.	Cotter pin	14.	Transverse link	15.	Connecting rod
16.	Stabilizer bar				

On-vehicle Service

EES000D5

FRONT SUSPENSION PARTS

Check front axle and front suspension parts for excessive play, cracks, wear or other damage.

- Shake each front wheel to check for excessive play.
- Make sure that cotter pin is inserted.
- Retighten all axle and suspension nuts and bolts to the specified torque.

Tightening torque : Refer to FSU-5, "Components" .

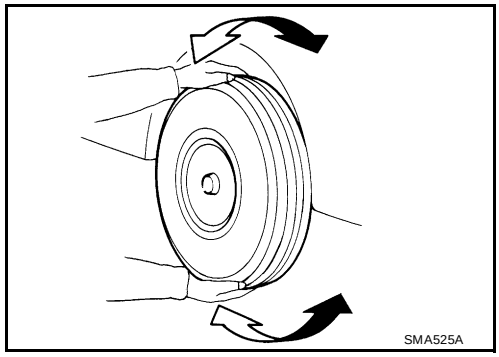

- Check strut (shock absorber) for oil leakage or other damage.
- Check suspension ball joint for grease leakage and ball joint dust cover for cracks or other damage.
  If ball joint dust cover is cracked or damaged, replace transverse link.

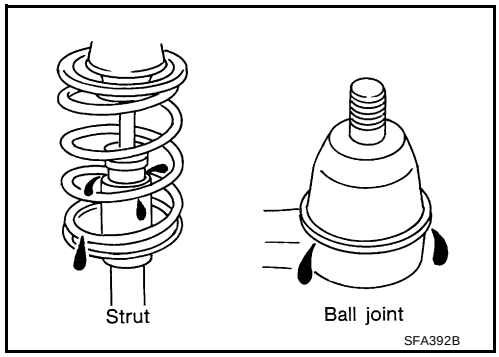

- Check spring height from top of wheelarch to the ground.
  - Vehicle must be unladen*, parked on a level surface, and tires checked for proper inflation and wear (tread wear indicator must not be showing).
    *: Fuel, radiator coolant and engine oil full. Spare tire, jack, hand tools and mats in designated positions.
  - Bounce vehicle up and down several times before measuring.

Standard height : Refer to FSU-16, "Wheelarch Height (Unladen*)" .

  - Spring height is not adjustable. If out of specification, check for worn springs or suspension parts.

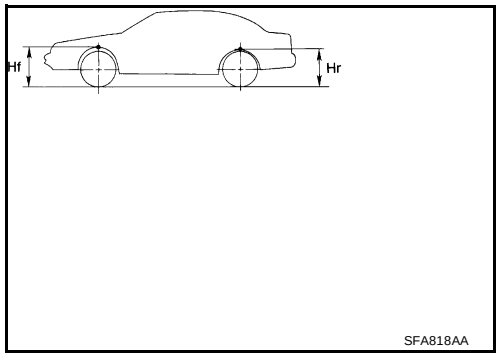

Front Wheel Alignment

EES000D6

DESCRIPTION

Before checking front wheel alignment, be sure to make a preliminary inspection (Unladen*).
*: Fuel, radiator coolant and engine oil full. Spare tire, jack, hand tools and mats in designated positions.

PRELIMINARY INSPECTION

- Check tires for wear and improper inflation.
- Check wheel runout.

Wheel runout : Refer to WT-3, "Inspection" .

- Check front wheel bearings for looseness.
- Check front suspension for looseness.
- Check steering linkage for looseness.
- Check that front shock absorbers work properly.
- Check vehicle posture (Unladen).

CAMBER, CASTER AND KINGPIN INCLINATION

Camber, caster and kingpin inclination are preset at factory and cannot be adjusted.

1. Measure camber, caster and kingpin inclination of both right and left wheels with a suitable alignment gauge.

   Camber, caster and kingpin inclination : **Refer to FSU-15, "Front Wheel Alignment (Unladen*1)"** .

2. If camber, caster or kingpin inclination is not within specification, inspect front suspension parts. Replace damaged or worn out parts.

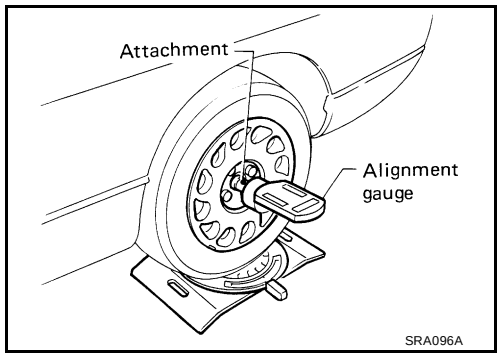

TOE-IN

Measure toe-in using the following procedure.

WARNING:

- **Always perform the following procedure on a flat surface.**
- **Make sure that no person is in front of the vehicle before pushing it.**

1. Bounce front of vehicle up and down to stabilize the posture.
2. Push the vehicle straight ahead about 5 m (16 ft).
3. Put a mark on base line of tread (rear side) of both tires at the same height as hub center. These are measuring points.

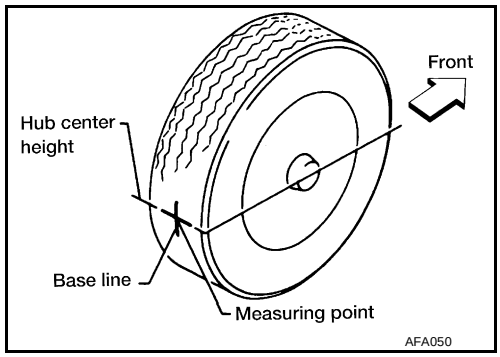

4. Measure distance “A” (rear side).
5. Push the vehicle slowly ahead to rotate the wheels 180 degrees (1/2 turn).
   If the wheels have rotated more than 180 degrees (1/2 turn), try the above procedure again from the beginning. Never push vehicle backward.
6. Measure distance “B” (front side).

   Total toe-in : **Refer to FSU-15, "Front Wheel Alignment (Unladen*1)"** .

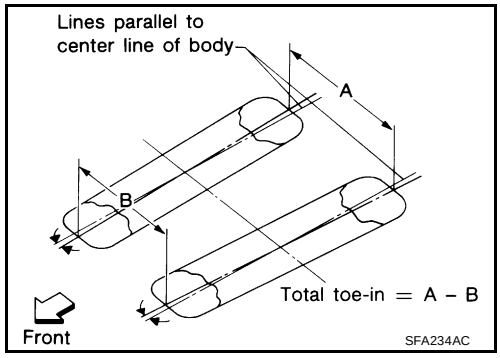

7. Adjust toe-in by varying the length of steering tie-rods.

a. Loosen lock nuts.

b. Adjust toe-in by screwing tie-rods in and out.

   Standard length “L” : **Refer to PS-27, "Steering Gear and Linkage"** .

c. Tighten lock nuts to specified torque.

   Lock nut tightening torque : **Refer to PS-13, "Removal and Installation"** .

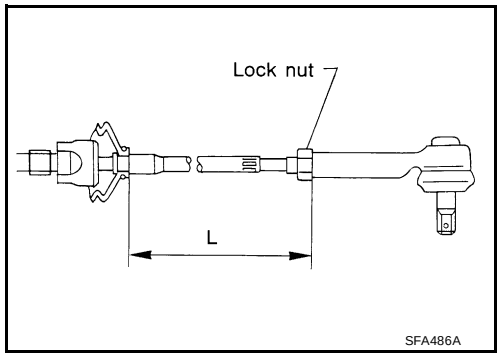

FRONT WHEEL TURNING ANGLE

1. Set wheels in straight-ahead position. Then move vehicle forward until front wheels rest on turning radius gauge properly.
2. Rotate steering wheel all the way right and left; measure turning angle.

Wheel turning angle (Full turn)	**: Refer to FSU-15, "Front Wheel Alignment (Unladen*1)" .**

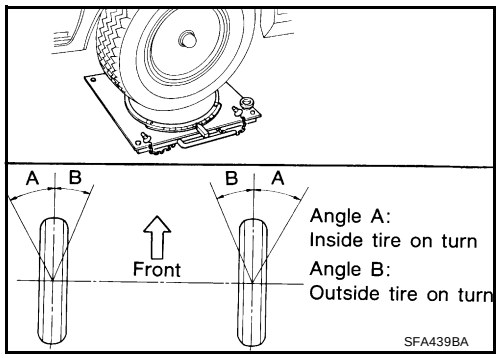

COIL SPRING AND SHOCK ABSORBER

PFP:56210

Removal and Installation

EES000D7

- Remove shock absorber fixing bolts and nuts, using power tool.
- **Do not remove piston rod lock nut on vehicle.**

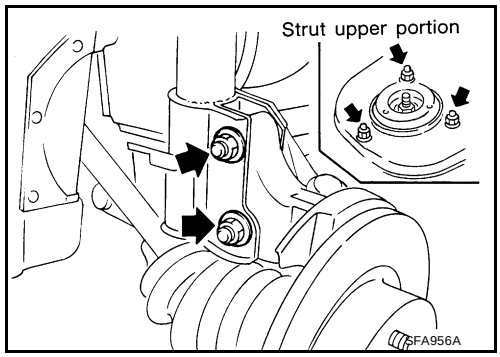

- When installing strut spacer, it must be positioned as shown.

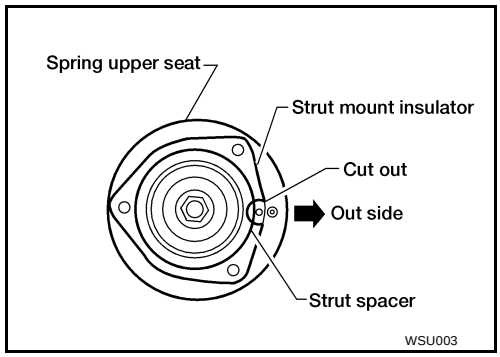

Disassembly

EES000D8

1. Set shock absorber on vise, then **loosen** piston rod lock nut.
   - **Do not remove piston rod lock nut at this time.**
2. Compress spring with Tool so that shock absorber mounting insulator can be turned by hand.

   WARNING:
   Make sure that the pawls of the two spring compressors are firmly hooked on the spring. The spring compressors must be tightened alternately so as not to tilt the spring.

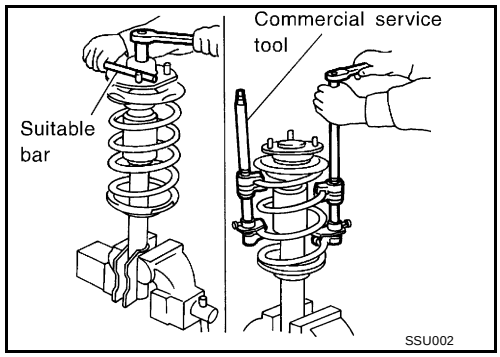

3. Remove piston rod lock nut.

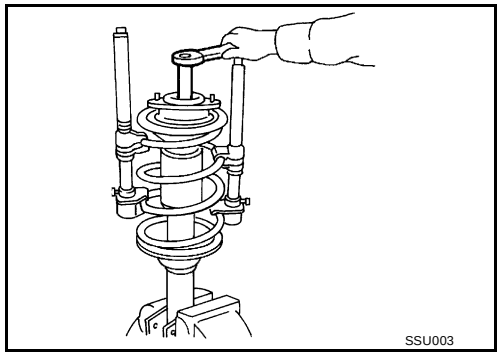

Inspection

EES000D9

SHOCK ABSORBER ASSEMBLY

- Check for smooth operation through a full stroke, both compression and extension.
- Check for oil leakage on welded or gland packing portions.
- Check piston rod for cracks, deformation or other damage and replace if necessary.

MOUNTING INSULATOR AND RUBBER PARTS

- Check cemented rubber-to-metal portion for separation or cracks. Check rubber parts for deterioration and replace if necessary.

THRUST BEARING

- Check thrust bearing parts for abnormal noise or excessive rattle in axial direction and replace if necessary.

COIL SPRING

- Check for cracks, deformation or other damage and replace if necessary.

Assembly

EES000DA

- When installing coil spring on strut, it must be positioned as shown.

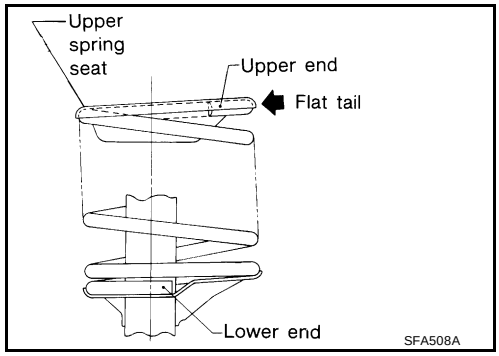

- Install upper spring seat with alignment mark facing the outer side of vehicle, in line with strut-to-knuckle attachment points.
- **Replace strut lower mounting nuts.**
- **When installing strut to knuckle, be sure to hold bolts and tighten nuts.**

  : 126 - 155 N·m (12.8 - 15.8 kg-m, 93 - 114 ft-lb)

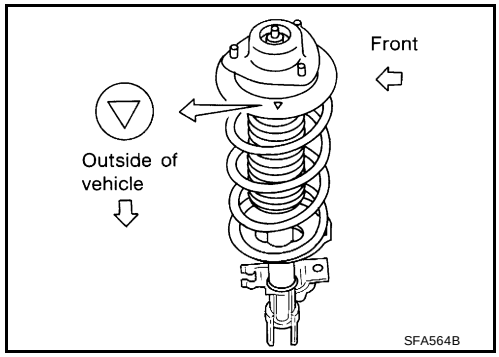

STABILIZER BAR

PFP:54611

Removal and Installation

EES000DB

- Remove stabilizer bar, using power tool.
  - Prevent the stabilizer connecting rod from turning by inserting a hex wrench into the end of the ball stud, then remove nut.

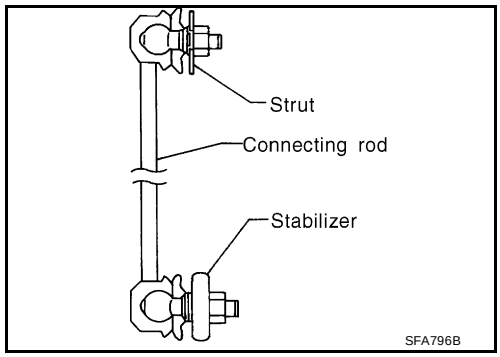

- When installing stabilizer, make sure that the clamps are facing in the correct direction as shown.

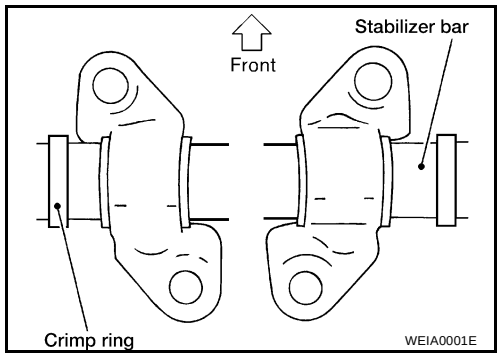

- Make sure that slit in bushing is in the position as shown.

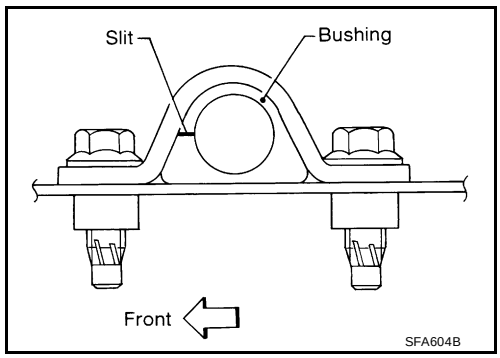

- Install stabilizer bar with ball joint socket properly placed.

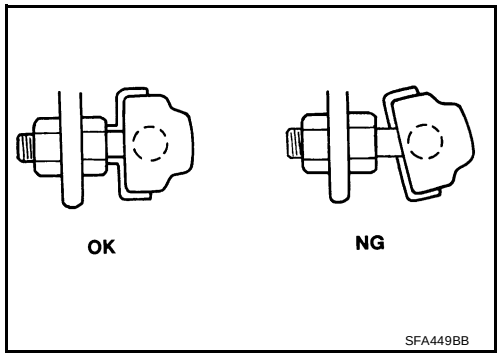

Inspection

EES000DC

- Check stabilizer for deformation or cracks and replace if necessary.
- Check rubber bushings for deterioration or cracks. Replace if necessary.
- Check ball joint can rotate in all directions. If movement is not smooth and free, replace stabilizer bar connecting rod.

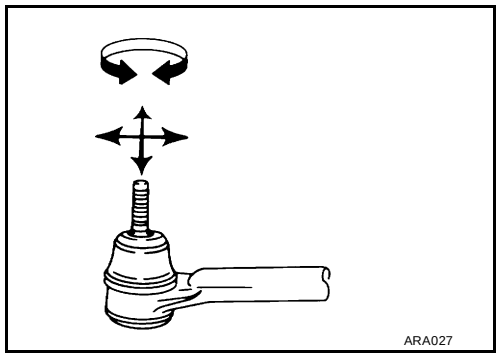

TRANSVERSE LINK

PFP:54500

Removal and Installation

EES000DD

REMOVAL

1. Remove the steering knuckle from the transverse link, using power tool.
   Refer to FAX-6, "Removal and Installation" .
2. Remove the mounting nuts using power tool, and washer and bushing from the lower side of the stabilizer connecting rod.
3. Loosen the transverse link mounting bolts a little, using power tool.
4. Remove mounting bolts from the compression rod bracket, using power tool.
5. Remove the mounting bolts and nuts from the transverse link, then remove it from the suspension member.

INSPECTION AFTER REMOVAL

Visual Check

- Check transverse link for damage, cracks or deformation. Replace it if necessary.
- Check rubber bushing for damage, cracks and deformation. Replace transverse link if necessary.

Lower Ball Joint

- Check ball joint for excessive play. Replace transverse link assembly if any of the following exists:
- Ball stud is worn.
- Joint is hard to swing.
- Play in axial direction is excessive.

  NOTE:
  Before checking, turn ball joint at least 10 revolutions so that ball joint is properly broken in.

Swinging Force

Swinging force “A” (measuring from cotter pin hole of ball stud)	**: 7.8 - 54.9 N (0.8 - 5.6 kg-f, 1.8 - 12.3 lb-f)**

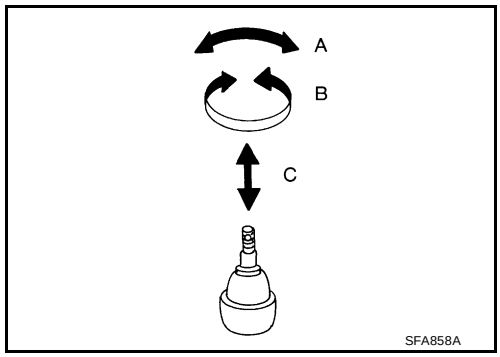

Turning Force

Turning torque “B”	**: 0.49 - 3.43 N·m (5.0 - 35.0 kg-cm, 4.3 - 30.4 in-lb)**

Vertical End Play

Vertical end play “C”	**: 0 mm (0 in)**

- Check dust cover for damage. Replace it and cover clamp if necessary.

INSTALLATION

- Tighten transverse link mounting bolts to specified torque, refer to FSU-5, "Components" . During installation, final tightening must be carried out at curb weight with tires on ground.
- After installation, check wheel alignment. Refer to FSU-6, "Front Wheel Alignment" .

FRONT SUSPENSION MEMBER

PFP:54401

Removal and Installation

EES000DE

REMOVAL

1. Remove the engine under cover and splash shields using power tools.
2. Remove the transverse link from the front suspension member using power tools. Refer to FSU-13, "Removal and Installation" .
3. Remove the front exhaust tube from the vehicle using power tool. Refer to EX-3, "Removal and Installation" (QR25DE) or EX-6, "Removal and Installation" (VQ35DE).
4. Remove the power steering line bracket from the suspension member.
5. Remove the mounting bolts on the lower side of the steering gear.
6. Set a transmission jack on the suspension member, then remove mounting nuts from the suspension member using power tool.
7. Remove the mounting bolts from the front suspension member pin stay on the vehicle body side using power tool.
8. Remove the through bolts from the front and rear engine mounts.
9. Lower the transmission jack slowly, then remove the suspension member from the vehicle.
   - If necessary, remove the exhaust hanger bracket from the front suspension member.

INSTALLATION

Installation is in the reverse order of removal.

- Tighten the stabilizer bar and connecting rod nuts and bolts to specifications. Refer to FSU-5, "Components" .

  CAUTION:
  Tighten each part with vehicle on ground under complete curb condition.
- Install the stabilizer bar bushings and brackets in the specified orientation. Refer to FSU-11, "Removal and Installation" .
- Tighten the steering gear mounting bolts to specification. Refer to PS-13, "Removal and Installation" .
- Check the wheel alignment. Refer to FSU-6, "Front Wheel Alignment" .

SERVICE DATA AND SPECIFICATIONS (SDS)

PFP:00030

General Specifications (Front)

EES000DF

Suspension type	Independent MacPherson strut
Shock absorber type	Double-acting hydraulic
Stabilizer bar	Standard equipment

Front Wheel Alignment (Unladen*1)

EES000DG

Tire size			205/65R16	215/55R17
Camber Degree minute (Decimal degree)		Minimum	–1°00′ (–1.00°)	
		Nominal	–0°15′ (–0.25°)	
		Maximum	0°30′ (0.50°)	
		Left and right difference	45′ (0.75°) or less	
Caster Degree minute (Decimal degree)		Minimum	2°05′ (2.08°)	
		Nominal	2°50′ (2.83°)	
		Maximum	3°35′ (3.58°)	
		Left and right difference	45′ (0.75°) or less	
Kingpin inclination Degree minute (Decimal degree)		Minimum	13°50′ (13.83°)	
		Nominal	14°35′ (14.58°)	
		Maximum	15°20′ (15.33°)	
Total toe-in	Distance (A – B) mm (in)	Minimum	–0.5 (–0.02)	
		Nominal	0.5 (0.02)	
		Maximum	1.5 (0.06)	
	Angle (left plus right) Degree minute (Decimal degree)	Minimum	–4′ (–0.07°)	
		Nominal	2′ (0.03°)	
		Maximum	8′ (0.13°)	
Wheel turning angle Full turn*2	Inside Degree minute (Decimal degree)	Minimum	34°30′ (34.5°)	32°00′ (32.0°)
		Nominal	38°00′ (38.0°)	35°30′ (35.5°)
		Maximum	39°00′ (39.0°)	36°30′ (36.5°)
	Outside Degree minute (Decimal degree)	Nominal	30°30′ (30.5°)	29°00′ (29.0°)

*1: Fuel, radiator coolant and engine oil full. Spare tire, jack, hand tools and mats in designated positions.
*2: On power steering models, wheel turning force (at circumference of steering wheel) of 98 to 147 N (10 to 15 kg, 22 to 33 lb) with engine idle.

Lower Ball Joint

EES000DH

Swinging force “A” (Measuring point: cotter pin hole of ball stud) N (kg-f, lb-f)	7.8 - 54.9 (0.8 - 5.6, 1.8 - 12.3)
Turning torque “B” N·m (kg-cm, in-lb)	0.49 - 3.43 (5.0 - 35.0, 4.3 - 30.4)
Vertical end play “C” mm (in)	0 (0)

Wheelarch Height (Unladen*)

EES000DI

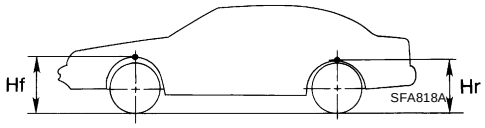

Engine	QR25DE	VQ35DE
Tire	205/65R16	215/55R17
Front (Hf) mm (in)	731 (28.78)	726 (28.58)
Rear (Hr) mm (in)	705 (27.75)	700 (27.56)

*: Fuel, radiator coolant and engine oil full. Spare tire, jack, hand tools and mats in designated positions.

Edition: September 2001
Revision: November 2002
Publication No. SM2E-1L31U2

NISSAN ALTIMA

MODEL L31 SERIES

QUICK REFERENCE INDEX

A	GENERAL INFORMATION	GI	General Information
B	ENGINE	EM	Engine Mechanical
		LU	Engine Lubrication System
		CO	Engine Cooling System
		EC	Engine Control System
		FL	Fuel System
		EX	Exhaust System
		ACC	Accelerator Control System
C	TRANSMISSION/ TRANSAXLE	CL	Clutch
		MT	Manual Transaxle
		AT	Automatic Transaxle
D	DRIVELINE/AXLE	FAX	Front Axle
		RAX	Rear Axle
E	SUSPENSION	FSU	Front Suspension
		RSU	Rear Suspension
		WT	Road Wheels & Tires
F	BRAKES	BR	Brake System
		PB	Parking Brake System
		BRC	Brake Control System
G	STEERING	PS	Power Steering System
H	RESTRAINTS	SB	Seat Belts
		SRS	Supplemental Restraint System (SRS)
I	BODY	BL	Body, Lock & Security System
		GW	Glasses, Window System & Mirrors
		RF	Roof
		EI	Exterior & Interior
		IP	Instrument Panel
		SE	Seat
J	AIR CONDITIONER	ATC	Automatic Air Conditioner
		MTC	Manual Air Conditioner
K	ELECTRICAL	SC	Starting & Charging System
		LT	Lighting System
		DI	Driver Information System
		WW	Wiper, Washer & Horn
		BCS	Body Control System
		LAN	LAN System
		AV	Audio Visual & Telephone System
		ACS	Auto Cruise Control System
		PG	Power Supply, Ground & Circuit Elements
L	MAINTENANCE	MA	Maintenance
M	INDEX	IDX	Alphabetical Index

© 2002 NISSAN NORTH AMERICA, INC.
All rights reserved. No part of this Service Manual may be reproduced or stored in a retrieval system, or transmitted in any form, or by any means, electronic, mechanical, photo-copying, recording or otherwise, without the prior written permission of Nissan North America, Inc., Gardena, California.

FOREWORD

This manual contains maintenance and repair procedures for the 2002 NISSAN ALTIMA.

In order to assure your safety and the efficient functioning of the vehicle, this manual should be read thoroughly. It is especially important that the PRECAUTIONS in the GI section be completely understood before starting any repair task.

All information in this manual is based on the latest product information at the time of publication. The right is reserved to make changes in specifications and methods at any time without notice.

IMPORTANT SAFETY NOTICE

The proper performance of service is essential for both the safety of the technician and the efficient functioning of the vehicle.
The service methods in this Service Manual are described in such a manner that the service may be performed safely and accurately.
Service varies with the procedures used, the skills of the technician and the tools and parts available. Accordingly, anyone using service procedures, tools or parts which are not specifically recommended by NISSAN must first be completely satisfied that neither personal safety nor the vehicle's safety will be jeopardized by the service method selected.

NISSAN NORTH AMERICA, INC.
Technical Publications Department
Gardena, California

PLEASE HELP MAKE THIS SERVICE MANUAL BETTER!

Your comments are important to NISSAN and will help us to improve our Service Manuals.

Use this form to report any issues or comments you may have regarding our Service Manuals.

Please print this form and type or write your comments below. Mail or fax to:

Nissan North America, Inc.
Technical Service Information
39001 Sunrise Drive, P.O. Box 9200
Farmington Hills, MI USA 48331
FAX: (248) 488-3910

SERVICE MANUAL: Model: _____ **Year:** _____

PUBLICATION NO. (Please photocopy back cover): _____

VEHICLE INFORMATION VIN: _____ **Production Date:** _____

Please describe any issues or problems in detail:

Page number(s) _____ *Note: Please include a copy of each page, marked with your comments.*

_____

_____

_____

_____

_____

_____

Are the trouble diagnosis procedures logical and easy to use? (circle your answer) YES NO

If no, what page number(s)?_____*Note: Please include a copy of each page, marked with your comments.*

Please describe the issue or problem in detail: _____

_____

_____

_____

Is the organization of the manual clear and easy to follow? (circle your answer) YES NO

Please comment: _____

_____

_____

_____

_____

What information should be included in NISSAN Service Manuals to better support you in servicing or repairing customer vehicles?

_____

_____

_____

_____

DATE: _____ YOUR NAME: _____ POSITION: _____

DEALER: _____ DEALER NO.: _____ ADDRESS: _____

CITY:_____ STATE/PROV./COUNTRY: _____ ZIP/POSTAL CODE: _____

QUICK REFERENCE CHART: ALTIMA (EQUIPPED WITH 2.5L QR ENGINE)

PFP:00000

Engine Tune-Up Data

ELS000ME

Cylinder arrangement		In-line 4
Displacement cm^3 (cu in)		2,488 (151.82)
Bore and stroke mm (in)		89.0 x 100 (3.50 - 3.94)
Valve arrangement		DOHC
Firing order		1-3-4-2
Number of piston rings	Compression	2
	Oil	1
Compression ratio		9.5:1
Compression pressure kPa (kg/cm^2 , psi) / 250 rpm	Standard	1,250 (12.8, 182)
	Minimum	1,060 (10.8, 154)
	Differential limit between cylinders	98 (1.0, 14)
Idle speed rpm A/T (in neutral)		700 ± 50
Ignition timing (BTDC at idle speed)		15° ± 5°
CO% at idle		0.3 – 9.5% and engine runs smoothly
Radiator cap relief pressure kPa (kg/cm^2 , psi)	Standard	79 – 98 (0.8 – 1.0, 11 – 14)
	Limit	59 (0.6, 9)
Cooling system leakage testing pressure kPa (kg/cm^2 , psi)		157 (1.6, 23)

Drive Belt Deflection and Tension

Tension of drive belts	Auto adjustment by auto-tensioner

Spark Plugs (Double Platinum Tipped)

Type	Standard	PLFR5A-11
	Hot	PLFR4A-11
	Cold	PLFR6A-11
Plug gap		Nominal: 1.1 mm (0.043 in)

Front Wheel Alignment (Unladen*1)

ELS000MF

Tire size		205/65R16	215/55R17
Camber Degree minute (Decimal degree)	Minimum	–1°00′ (–1.00°)	
	Nominal	–0°15′ (–0.25°)	
	Maximum	0°30′ (0.50°)	
	Left and right difference	45′ (0.75°) or less	
Caster Degree minute (Decimal degree)	Minimum	2°05′ (2.08°)	
	Nominal	2°50′ (2.83°)	
	Maximum	3°35′ (3.58°)	
	Left and right difference	45′ (0.75°) or less	
Kingpin inclination Degree minute (Decimal degree)	Minimum	13°50′ (13.83°)	
	Nominal	14°35′ (14.58°)	
	Maximum	15°20′ (15.33°)	

QUICK REFERENCE CHART: ALTIMA (EQUIPPED WITH 2.5L QR ENGINE)

2002

Tire size			205/65R16	215/55R17
Total toe-in	Distance (A – B) mm (in)	Minimum	–0.5 (–0.02)	
		Nominal	0.5 (0.02)	
		Maximum	1.5 (0.06)	
	Angle (left plus right) Degree minute (Decimal degree)	Minimum	–4′ (–0.07°)	
		Nominal	2′ (0.03°)	
		Maximum	8′ (0.13°)	
Wheel turning angle Full turn*2	Inside Degree minute (Decimal degree)	Minimum	34°30′ (34.5°)	32°00′ (32.0°)
		Nominal	38°00′ (38.0°)	35°30′ (35.5°)
		Maximum	39°00′ (39.0°)	36°30′ (36.5°)
	Outside Degree minute (Decimal degree)	Nominal	30°30′ (30.5°)	29°00′ (29.0°)

*1: Fuel, radiator coolant and engine oil full. Spare tire, jack, hand tools and mats in designated positions.
*2: On power steering models, wheel turning force (at circumference of steering wheel) of 98 to 147 N (10 to 15 kg, 22 to 33 lb) with engine idle.

Rear Wheel Alignment (Unladen*)

ELS000MG

Camber Degree minute (Decimal degree)		Minimum	–0°04′ (–0.07°)
		Nominal	–0°34′ (–0.57°)
		Maximum	0°64′ (-1.07°)
Total toe-in	Distance (A – B) mm (in)	Minimum	2.4 (0.09)
		Nominal	3.9 (0.15)
		Maximum	5.4 (0.21)
	Angle (left plus right) Degree minute (Decimal degree)	Minimum	6′ (0.1°)
		Nominal	10′ (0.167°)
		Maximum	14′ (0.233°)

*: Fuel, radiator coolant and engine oil full. Spare tire, jack, hand tools and mats in designated positions.

Brake

ELS000MH

Unit: mm (in)

Front brake	Brake model		CLZ25VD disc brake
	Cylinder bore diameter		57.2 (2.252)
	Pad Length × width × thickness		125.6 × 46 × 11 (4.94 × 1.81 × 0.43)
	Rotor outer diameter × thickness		296 × 26 (11.65 × 1.02)
Rear brake	Brake model		AD9V disc brake
	Cylinder bore diameter		34.9 (1.3740)
	Pad Length × width × thickness		89.1 × 39.5 × 10 (3.508 × 1.555 × 0.31)
	Rotor outer diameter × thickness		292 × 9 (11.50 × 0.35)
Master cylinder	Cylinder bore diameter		23.81 (15/16)
Control valve	Screw in type		30 × 0.4 (1.18 × 0.02)
Brake booster	Booster model		M215T
	Diaphragm diameter	Primary	230 (9.06)
		Secondary	205 (8.07)
Recommended brake fluid			DOT 3

QUICK REFERENCE CHART: ALTIMA (EQUIPPED WITH 2.5L QR ENGINE)

2002

Disc Brake - Repair Limits

Unit: mm (in)

Brake model		CLZ25VD (Front)	AD9V (Rear)
Pad wear limit	Minimum thickness	2.0 (0.079)	1.5 (0.059)
Rotor repair limit	Maximum runout	0.07 (0.0028)	0.07 (0.0028)
	Minimum thickness	22.0 (0.866)	8.0 (0.31)

Brake Pedal

Unit: mm (in)

Free height “H”*	M/T	164.1 - 174.1 (6.46 - 6.85)
	A/T	173.1 - 183.1 (6.81 - 7.21)
Clearance “C” between pedal stopper and threaded end of stop lamp switch or ASCD switch		0.74 - 1.96 (0.0291 - 0.0772)

*: Measured from surface of dash reinforcement panel to surface of pedal pad

Refill Capacities

ELS000MI

Engine Coolant Capacity (Approximate)

Unit: ℓ (US qt)

Drain and refill (without reservoir)	6.9 (7 1/4)
Reservoir tank (at MAX level)	0.7 (3/4)

Engine Oil Capacity (Approximate)

Unit: ℓ (US qt)

Drain and refill	With oil filter change	4.2 (4 1/2)
	Without oil filter change	4.0 (4 1/4)
Dry engine (engine overhaul)		4.6 (4 7/8)

Miscellaneous Capacity (Approximate)

System description		Metric measurement	US measurement
Fuel tank		75.5 ℓ	20 gal
Power steering system		1.0 ℓ	2 1/8 pt
Transaxle	M/T (RS5F51A)	2.3 ℓ	2 3/8 qt
	A/T (RE4F04B)	9.2 ℓ	9 3/4 qt
Air conditioning system	Refrigerant	0.475 - 0.525 kg	1.045 - 1.155 lb
	Compressor oil	150 ml	5.03 fl oz

QUICK REFERENCE CHART: ALTIMA (EQUIPPED WITH 3.5L, VQ ENGINE)

PFP:00027

Engine Tune-Up Data

ELS000MJ

Cylinder arrangement		V-6
Displacement cm^3 (cu in)		3,498 (213.45)
Bore and stroke mm (in)		95.5 x 81.4 (3.76 - 3.205)
Valve arrangement		DOHC
Firing order		1-2-3-4-5-6
Number of piston rings	Compression	2
	Oil	1
Number of main bearings		4
Compression ratio		10.0:1
Compression pressure kPa (kg/cm^2 , psi) / 250 rpm	Standard	1,275 (13.0, 185)
	Minimum	981 (10.0, 142)
	Differential limit between cylinders	98 (1.0, 14)
Idle speed rpm No-load*1 (in “P” or N” position)		700 ± 50
Ignition timing (BTDC at idle speed)		15° ± 5°
CO% at idle		0.7 – 9.9% and engine runs smoothly
Radiator cap relief pressure kPa (kg/cm^2 , psi)	Standard	79 – 98 (0.8 – 1.0, 11 – 14)
	Limit	59 (0.6, 9)
Cooling system leakage testing pressure kPa (kg/cm^2 , psi)		157 (1.6, 23)

*1: Under the following conditions:

- Air conditioner switch: OFF
- Electric load: OFF (Lights, heater fan & rear window defogger)
- Steering wheel: Kept in straight-ahead position

QUICK REFERENCE CHART: ALTIMA (EQUIPPED WITH 3.5L, VQ ENGINE)

2002

Drive Belt Deflection and Tension

	Deflection adjustment		Unit: mm (in)	Tension adjustment		Unit: N (kg, lb)
	Used belt		New belt	Used belt		New belt
	Limit	After adjustment		Limit	After adjustment	
Alternator, Air conditioner compressor	7.0 (0.28)	4.2 - 4.6 (0.17 - 0.18)	3.7 - 4.1 (0.15 - 0.16)	294 (30, 66)	730 - 818 (74.5 - 83.5, 164 - 184)	838 - 926 (85.5 - 94.5, 188 - 208)
Power steering oil pump	11.0 (0.43)	7.3 - 8.0 (0.29 - 0.32)	6.5 - 7.2 (0.26 - 0.28)	196 (20, 44)	495 - 583 (50.5 - 59.5, 111.3 - 131.1)	603 - 691 (61.5 - 70.5, 135.6 - 155.4)

Spark Plugs (Double Platinum Tipped)

Type	Standard	PLFR5A-11
	Hot	PLFR4A-11
	Cold	PLFR6A-11
Plug gap		Nominal: 1.1 mm (0.043 in)

Front Wheel Alignment (Unladen*1)

ELS000MK

Tire size			205/65R16	215/55R17
Camber Degree minute (Decimal degree)		Minimum	–1°00′ (–1.00°)	
		Nominal	–0°15′ (–0.25°)	
		Maximum	0°30′ (0.50°)	
		Left and right difference	45′ (0.75°) or less	
Caster Degree minute (Decimal degree)		Minimum	2°05′ (2.08°)	
		Nominal	2°50′ (2.83°)	
		Maximum	3°35′ (3.58°)	
		Left and right difference	45′ (0.75°) or less	
Kingpin inclination Degree minute (Decimal degree)		Minimum	13°50′ (13.83°)	
		Nominal	14°35′ (14.58°)	
		Maximum	15°20′ (15.33°)	
Total toe-in	Distance (A – B) mm (in)	Minimum	–0.5 (–0.02)	
		Nominal	0.5 (0.02)	
		Maximum	1.5 (0.06)	
	Angle (left plus right) Degree minute (Decimal degree)	Minimum	–4′ (–0.07°)	
		Nominal	2′ (0.03°)	
		Maximum	8′ (0.13°)	
Wheel turning angle Full turn*2	Inside Degree minute (Decimal degree)	Minimum	34°30′ (34.5°)	32°00′ (32.0°)
		Nominal	38°00′ (38.0°)	35°30′ (35.5°)
		Maximum	39°00′ (39.0°)	36°30′ (36.5°)
	Outside Degree minute (Decimal degree)	Nominal	30°30′ (30.5°)	29°00′ (29.0°)

*1: Fuel, radiator coolant and engine oil full. Spare tire, jack, hand tools and mats in designated positions.

*2: On power steering models, wheel turning force (at circumference of steering wheel) of 98 to 147 N (10 to 15 kg, 22 to 33 lb) with engine idle.

QUICK REFERENCE CHART: ALTIMA (EQUIPPED WITH 3.5L, VQ ENGINE)

2002

Rear Wheel Alignment (Unladen*)

ELS000ML

Camber Degree minute (Decimal degree)		Minimum	–0°10′ (–0.17°)
		Nominal	–0°40′ (–0.67°)
		Maximum	-0°70′ (-1.17°)
Total toe-in	Distance (A – B) mm (in)	Minimum	2.5 (0.10)
		Nominal	4.0 (0.16)
		Maximum	5.5 (0.22)
	Angle (left plus right) Degree minute (Decimal degree)	Minimum	6′ (0.1°)
		Nominal	10′ (0.167°)
		Maximum	14′ (0.233°)

*: Fuel, radiator coolant and engine oil full. Spare tire, jack, hand tools and mats in designated positions.

Brake

ELS000MM

Unit: mm (in)

Front brake	Brake model		CLZ25VD disc brake
	Cylinder bore diameter		57.2 (2.252)
	Pad Length × width × thickness		125.6 × 46 × 11 (4.94 × 1.81 × 0.43)
	Rotor outer diameter × thickness		296 × 26 (11.65 × 1.02)
Rear brake	Brake model		AD9V disc brake
	Cylinder bore diameter		34.9 (1.3740)
	Pad Length × width × thickness		89.1 × 39.5 × 10 (3.508 × 1.555 × 0.31)
	Rotor outer diameter × thickness		292 × 9 (11.50 × 0.35)
Master cylinder	Cylinder bore diameter		23.81 (15/16)
Control valve	Screw in type		30 × 0.4 (1.18 × 0.02)
Brake booster	Booster model		M215T
	Diaphragm diameter	Primary	230 (9.06)
		Secondary	205 (8.07)
Recommended brake fluid			DOT 3

Disc Brake - Repair Limits

Unit: mm (in)

Brake model		CLZ25VD (Front)	AD9V (Rear)
Pad wear limit	Minimum thickness	2.0 (0.079)	1.5 (0.059)
Rotor repair limit	Maximum runout	0.07 (0.0028)	0.07 (0.0028)
	Minimum thickness	22.0 (0.866)	8.0 (0.31)

Brake Pedal

Unit: mm (in)

Free height “H”*	M/T	164.1 - 174.1 (6.46 - 6.85)
	A/T	173.1 - 183.1 (6.81 - 7.21)
Clearance “C” between pedal stopper and threaded end of stop lamp switch or ASCD switch		0.74 - 1.96 (0.0291 - 0.0772)

*: Measured from surface of dash reinforcement panel to surface of pedal pad

QUICK REFERENCE CHART: ALTIMA (EQUIPPED WITH 3.5L, VQ ENGINE)

2002

Refill Capacities

ELS000MN

Engine Coolant Capacity (Approximate)

Unit: ℓ (US qt)

Drain and refill (without reservoir)	7.5 (7 7/8)
Reservoir tank (at MAX level)	0.7 (3/4)

Engine Oil Capacity (Approximate)

Unit: ℓ (US qt)

Drain and refill	With oil filter change	4.0 (4 1/4)
	Without oil filter change	3.7 (3 7/8)
Dry engine (engine overhaul)		5.0 (5 1/4)

Miscellaneous Capacity (Approximate)

System description		Metric measurement	US measurement
Fuel tank		75.5 ℓ	20 gal
Power steering system		1.0 ℓ	2 1/8 pt
Transaxle	M/T (RS5F51A)	2.3 ℓ	2 3/8 qt
	A/T (RE4F04B)	9.2 ℓ	9 3/4 qt
Air conditioning system	Refrigerant	0.475 - 0.525 kg	1.045 - 1.155 lb
	Compressor oil	150 ml	5.03 fl oz

TEST VALUE AND TEST LIMIT (GST ONLY — NOT APPLICABLE TO CONSULT-II)

The following is the information specified in Mode 6 of SAE J1979.
The test value is a parameter used to determine whether a system/circuit diagnostic test is “OK” or “NG” while being monitored by the ECM during self-diagnosis. The test limit is a reference value which is specified as the maximum or minimum value and is compared with the test value being monitored.
Items for which these data (test value and test limit) are displayed are the same as SRT code items.
These data (test value and test limit) are specified by Test ID (TID) and Component ID (CID) and can be displayed on the GST screen.

: Applicable ·: Not applicable

SRT item	Self-diagnostic test item	DTC	Test value (GST display)		Te s t limit	Application	Unit
			TID	CID			
CATALYST	Three way catalyst function (Bank 1)	P0420	01H	01H	Max.	X	–
		P0420	02H	81H	Min.	X	–
EVAP SYSTEM	EVAP control system (Small leak)	P0442	05H	03H	Max.	X	–
		P1442	05H	03H	Max.	X	–
	EVAP control system purge flow monitoring	P0441	06H	83H	Min.	X	mV
	EVAP control system (Very small leak)	P0456	07H	03H	Max.	X	–
		P1456	07H	03H	Max.	X	–
HO2S	Heated oxygen sensor 1	P0133	09H	04H	Max.	X	ms
		P1143	0AH	84H	Min.	X	mV
		P1144	0BH	04H	Max.	X	mV
		P0132	0CH	04H	Max.	X	mV
		P0134	0DH	04H	Max.	X	s
	Heated oxygen sensor 2	P0139	19H	86H	Min.	X	mV/500ms
		P1147	1AH	86H	Min.	X	mV
		P1146	1BH	06H	Max.	X	mV
		P0138	1CH	06H	Max.	X	mV
HO2S HTR	Heated oxygen sensor 1 heater	P0032	29H	08H	Max.	X	mV
		P0031	2AH	88H	Min.	X	mV
	Heated oxygen sensor 2 heater	P0038	2DH	0AH	Max.	X	mV
		P0037	2EH	8AH	Min.	X	mV
EGR SYSTEM*1	EGR function	P0400	31H	8CH	Min.	X	°C
		P0400	32H	8CH	Min.	X	°C
		P0400	33H	8CH	Min.	X	°C
		P0400	34H	8CH	Min.	X	°C
		P1402	35H	0CH	Max.	X	°C
	EGRC-BPT valve function	P0402	36H	0CH	Max.	X	–
		P0402	37H	8CH	Min.	X	–

*1 : Except models L31 QR25DE engine 2002MY and L31 QR25DE engine 2003MY.

TEST VALUE AND TEST LIMIT (GST ONLY — NOT APPLICABLE TO CONSULT-II)

The following is the information specified in Mode 6 of SAE J1979.
The test value is a parameter used to determine whether a system/circuit diagnostic test is “OK” or “NG” while being monitored by the ECM during self-diagnosis. The test limit is a reference value which is specified as the maximum or minimum value and is compared with the test value being monitored.
Items for which these data (test value and test limit) are displayed are the same as SRT code items.
These data (test value and test limit) are specified by Test ID (TID) and Component ID (CID) and can be displayed on the GST screen.

: Applicable ·: Not applicable

SRT item	Self-diagnostic test item	DTC	Test value (GST display)		Te s t limit	Application	Unit
			TID	CID			
CATALYST	Three way catalyst function (Bank 1)	P0420	01H	01H	Max.	X	–
		P0420	02H	81H	Min.	X	–
	Three way catalyst function (Bank 2)	P0430	03H	02H	Max.	X	–
		P0430	04H	82H	Min.	X	–
EVAP SYSTEM	EVAP control system (Small leak)	P0442	05H	03H	Max.	X	–
		P1442	05H	03H	Max.	X	–
	EVAP control system purge flow monitoring	P0441	06H	83H	Min.	X	mV
	EVAP control system (Very small leak)	P0456	07H	03H	Max.	X	–
		P1456	07H	03H	Max.	X	–
HO2S	Heated oxygen sensor 1(Bank 1)	P0133	09H	04H	Max.	X	ms
		P1143	0AH	84H	Min.	X	mV
		P1144	0BH	04H	Max.	X	mV
		P0132	0CH	04H	Max.	X	mV
		P0134	0DH	04H	Max.	X	s
	Heated oxygen sensor 1(Bank 2)	P0153	11H	05H	Max.	X	ms
		P1163	12H	85H	Min.	X	mV
		P1164	13H	05H	Max.	X	mV
		P0152	14H	05H	Max.	X	mV
		P0154	15H	05H	Max.	X	s
	Heated oxygen sensor 2(Bank 1)	P0139	19H	86H	Min.	X	mV/500ms
		P1147	1AH	86H	Min.	X	mV
		P1146	1BH	06H	Max.	X	mV
		P0138	1CH	06H	Max.	X	mV
	Heated oxygen sensor 2(Bank 2)	P0159	21H	87H	Min.	X	mV/500ms
		P1167	22H	87H	Min.	X	mV
		P1166	23H	07H	Max.	X	mV
		P0158	24H	07H	Max.	X	mV
HO2S HTR	Heated oxygen sensor 1 heater(Bank 1)	P0032	29H	08H	Max.	X	mV
		P0031	2AH	88H	Min.	X	mV
	Heated oxygen sensor 2 heater(Bank 2)	P0052	2BH	09H	Max.	X	mV
		P0051	2CH	89H	Min.	X	mV
	Heated oxygen sensor 2 heater(Bank 1)	P0038	2DH	0AH	Max.	X	mV
		P0037	2EH	8AH	Min.	X	mV
	Heated oxygen sensor 2 heater(Bank 2)	P0058	2FH	0BH	Max.	X	mV
		P0057	30H	8BH	Min.	X	mV
EGR SYSTEM*1	EGR function	P0400	31H	8CH	Min.	X	℃
		P0400	32H	8CH	Min.	X	℃
		P0400	33H	8CH	Min.	X	℃
		P0400	34H	8CH	Min.	X	℃
		P1402	35H	0CH	Max.	X	℃
	EGRC-BPT valve function	P0402	36H	0CH	Max.	X	–
		P0402	37H	8CH	Min.	X	–

*1 : Except models L31 VQ35DE engine, F50 VK45DE engine, Y34 VK45DE engine 2

SECTION GI
GENERAL INFORMATION

CONTENTS

PRECAUTIONS 3
Description 3
Precautions for Supplemental Restraint System (SRS) “AIR BAG” and “SEAT BELT PRE-TENSIONER” 3
General Precautions 3
Precautions for Three Way Catalyst 5
Precautions for Fuel (Unleaded Premium Gasoline Required) 5
Precautions for Multiport Fuel Injection System or Engine Control System 5
Precautions for Hoses 6
HOSE REMOVAL AND INSTALLATION 6
HOSE CLAMPING 6
Precautions for Engine Oils 6
HEALTH PROTECTION PRECAUTIONS 6
ENVIRONMENTAL PROTECTION PRECAUTIONS 7
Precautions for Air Conditioning 7
HOW TO USE THIS MANUAL 8
Description 8
Terms 8
Units 8
Contents 8
Components 8
SYMBOLS 9
How to Follow Trouble Diagnoses 9
DESCRIPTION 9
HOW TO FOLLOW TEST GROUPS IN TROUBLE DIAGNOSES 10
REFERENCE INFORMATION 11
KEY TO SYMBOLS SIGNIFYING MEASUREMENTS OR PROCEDURES 11
How to Read Wiring Diagrams 12
CONNECTOR SYMBOLS 12
SAMPLE/WIRING DIAGRAM - EXAMPL - 14
DESCRIPTION 15
Abbreviations 20
SERVICE INFORMATION FOR ELECTRICAL INCIDENT 22
How to Check Terminal 22
CONNECTOR AND TERMINAL PIN KIT 22
HOW TO PROBE CONNECTORS 22
How to Perform Efficient Diagnosis for an Electrical Incident 25
WORK FLOW 25
INCIDENT SIMULATION TESTS 25
CIRCUIT INSPECTION 28
Control Units and Electrical Parts 33
PRECAUTIONS 33
SMJ INSTALLATION 34
CONSULT-II CHECKING SYSTEM 35
Description 35
Function and System Application 35
Nickel Metal Hydride Battery Replacement 35
Checking Equipment 35
CONSULT-II Data Link Connector (DLC) Circuit 36
INSPECTION PROCEDURE 36
LIFTING POINT 37
Special Service Tools 37
Garage Jack and Safety Stand 37
2-pole Lift 39
Board-on Lift 39
TOW TRUCK TOWING 40
Tow Truck Towing 40
Vehicle Recovery (Freeing a stuck vehicle) 40
TIGHTENING TORQUE OF STANDARD BOLTS 41
Tightening Torque Table 41
RECOMMENDED CHEMICAL PRODUCTS AND SEALANTS 42
Recommended Chemical Products and Sealants 42
IDENTIFICATION INFORMATION 43
Model Variation 43
IDENTIFICATION NUMBER 44
IDENTIFICATION PLATE 45
ENGINE SERIAL NUMBER 45
AUTOMATIC TRANSAXLE NUMBER 45
MANUAL TRANSAXLE NUMBER 46
Dimensions 46
Wheels & Tires 46

TERMINOLOGY 47
SAE J1930 Terminology List 47

PRECAUTIONS

PFP:00001

GI

Description

EAS000OW

Observe the following precautions to ensure safe and proper servicing. These precautions are not described in each individual section.

Precautions for Supplemental Restraint System (SRS) “AIR BAG” and “SEAT BELT PRE-TENSIONER”

EAS000OX

The Supplemental Restraint System such as “AIR BAG” and “SEAT BELT PRE-TENSIONER”, used along with a front seat belt, helps to reduce the risk or severity of injury to the driver and front passenger for certain types of collision. Information necessary to service the system safely is included in the SRS and SB section of this Service Manual.

WARNING:

- **To avoid rendering the SRS inoperative, which could increase the risk of personal injury or death in the event of a collision which would result in air bag inflation, all maintenance must be performed by an authorized NISSAN/INFINITI dealer.**
- **Improper maintenance, including incorrect removal and installation of the SRS, can lead to personal injury caused by unintentional activation of the system. For removal of Spiral Cable and Air Bag Module, see the SRS section.**
- **Do not use electrical test equipment on any circuit related to the SRS unless instructed to in this Service Manual. SRS wiring harnesses can be identified by yellow and/or orange harness connectors.**

General Precautions

EAS000OY

- Do not operate the engine for an extended period of time without proper exhaust ventilation.
  Keep the work area well ventilated and free of any inflammable materials. Special care should be taken when handling any inflammable or poisonous materials, such as gasoline, refrigerant gas, etc. When working in a pit or other enclosed area, be sure to properly ventilate the area before working with hazardous materials.
  Do not smoke while working on the vehicle.

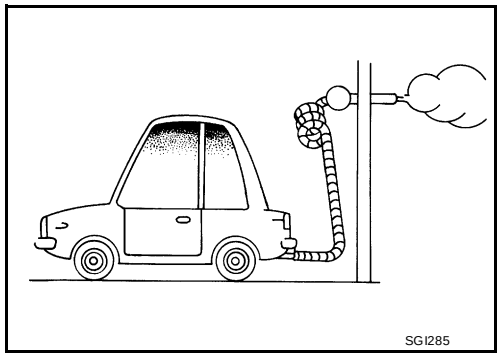

- Before jacking up the vehicle, apply wheel chocks or other tire blocks to the wheels to prevent the vehicle from moving. After jacking up the vehicle, support the vehicle weight with safety stands at the points designated for proper lifting before working on the vehicle.
  These operations should be done on a level surface.
- When removing a heavy component such as the engine or transaxle/transmission, be careful not to lose your balance and drop them. Also, do not allow them to strike adjacent parts, especially the brake tubes and master cylinder.

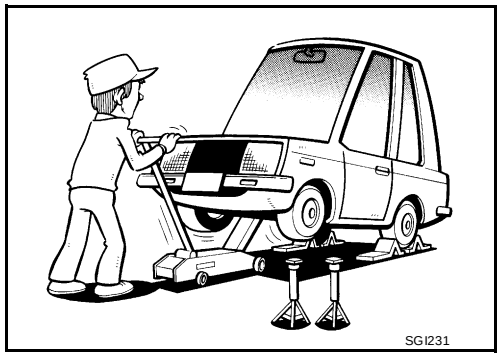

B C D E F G H I J K L M

- Before starting repairs which do not require battery power:
  Turn off ignition switch.
  Disconnect the negative battery terminal.
- If the battery terminals are disconnected, recorded memory of radio and each control unit is erased.

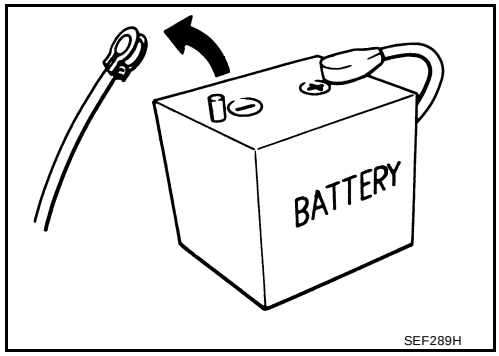

- To prevent serious burns:
  Avoid contact with hot metal parts.
  Do not remove the radiator cap when the engine is hot.
- Dispose of drained oil or the solvent used for cleaning parts in an appropriate manner.
- Do not attempt to top off the fuel tank after the fuel pump nozzle shuts off automatically.
  Continued refueling may cause fuel overflow, resulting in fuel spray and possibly a fire.
- Clean all disassembled parts in the designated liquid or solvent prior to inspection or assembly.

- Replace oil seals, gaskets, packings, O-rings, locking washers, cotter pins, self-locking nuts, etc. with new ones.
- Replace inner and outer races of tapered roller bearings and needle bearings as a set.
- Arrange the disassembled parts in accordance with their assembled locations and sequence.
- Do not touch the terminals of electrical components which use microcomputers (such as ECM).
  Static electricity may damage internal electronic components.
- After disconnecting vacuum or air hoses, attach a tag to indicate the proper connection.
- Use only the fluids and lubricants specified in this manual.
- Use approved bonding agent, sealants or their equivalents when required.
- Use hand tools, power tools (disassembly only) and recommended special tools where specified for safe and efficient service repairs.
- When repairing the fuel, oil, water, vacuum or exhaust systems, check all affected lines for leaks.

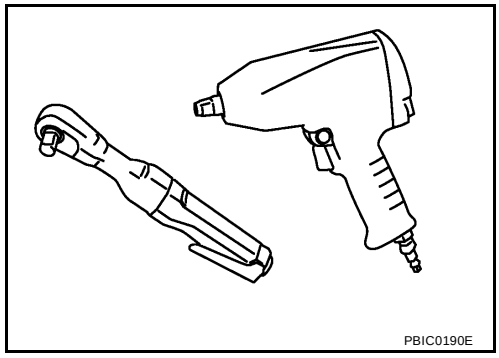

- Before servicing the vehicle:
  Protect fenders, upholstery and carpeting with appropriate covers.
  Take caution that keys, buckles or buttons do not scratch paint.

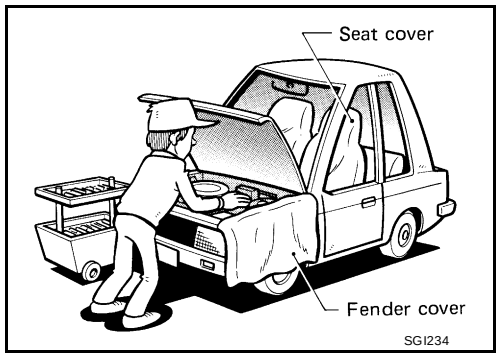

WARNING:
To prevent ECM from storing the diagnostic trouble codes, do not carelessly disconnect the harness connectors which are related to the engine control system and TCM (transmission control module) system. The connectors should be disconnected only when working according to the WORK FLOW of TROUBLE DIAGNOSES in EC and AT sections.

Precautions for Three Way Catalyst

EAS000OZ

If a large amount of unburned fuel flows into the catalyst, the catalyst temperature will be excessively high. To prevent this, follow the instructions.

- Use unleaded gasoline only. Leaded gasoline will seriously damage the three way catalyst.
- When checking for ignition spark or measuring engine compression, make tests quickly and only when necessary.
- Do not run engine when the fuel tank level is low, otherwise the engine may misfire, causing damage to the catalyst.

Do not place the vehicle on flammable material. Keep flammable material off the exhaust pipe and the three way catalyst.

Precautions for Fuel (Unleaded Premium Gasoline Required)

EAS000P0

Use unleaded premium gasoline with an octane rating of at least 91 AKI (Anti-Knock Index) number (Research octane number 96).

If unleaded premium gasoline is not available, unleaded regular gasoline with an octane rating of at least 87 AKI number (Research octane number 91) can be used, but only under the following precautions:

- have the fuel tank filled only partially with unleaded regular gasoline, and fill up with unleaded premium gasoline as soon as possible.
- avoid full throttle driving and abrupt acceleration.

However, for maximum vehicle performance, the use of unleaded premium gasoline is recommended.

CAUTION:
Do not use leaded gasoline. Using leaded gasoline will damage the three way catalyst. Using a fuel other than that specified could adversely affect the emission control devices and systems, and could also affect the warranty coverage validity.

Precautions for Multiport Fuel Injection System or Engine Control System

EAS000P1

- Before connecting or disconnecting any harness connector for the multiport fuel injection system or ECM:
  Turn ignition switch to “OFF” position.
  Disconnect negative battery terminal.
  Otherwise, there may be damage to ECM.
- Before disconnecting pressurized fuel line from fuel pump to injectors, be sure to release fuel pressure.
- Be careful not to jar components such as ECM and mass air flow sensor.

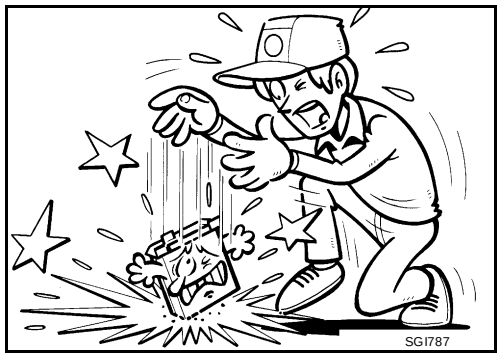

Precautions for Hoses

EAS000P2

HOSE REMOVAL AND INSTALLATION

- To prevent damage to rubber hose, do not pry off rubber hose with tapered tool or screwdriver.

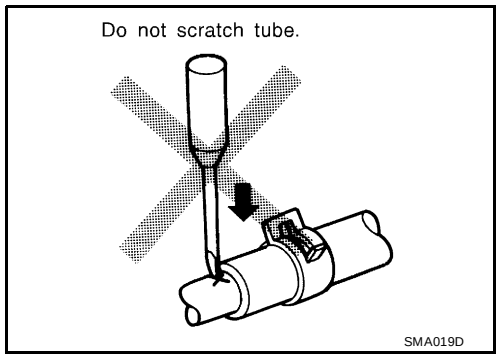

- To reinstall the rubber hose securely, make sure that hose insertion length and orientation is correct. (If tube is equipped with hose stopper, insert rubber hose into tube until it butts up against hose stopper.)

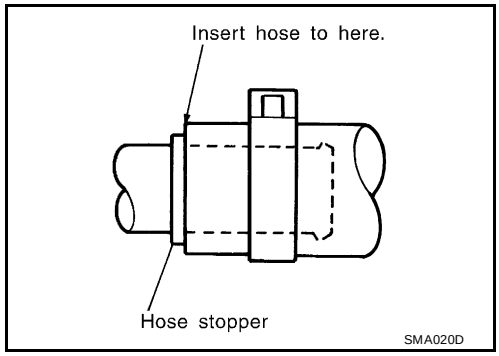

HOSE CLAMPING

- If old rubber hose is re-used, install hose clamp in its original position (at the indentation where the old clamp was). If there is a trace of tube bulging left on the old rubber hose, align rubber hose at that position.
- Discard old clamps; replace with new ones.

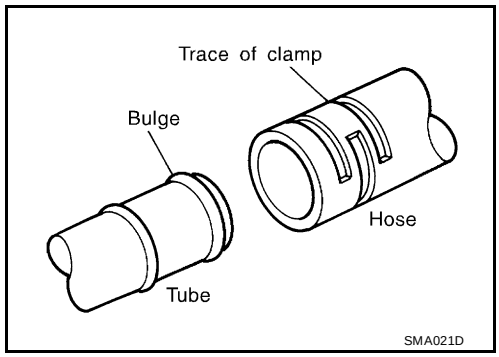

- After installing plate clamps, apply force to them in the direction of the arrow, tightening rubber hose equally all around.

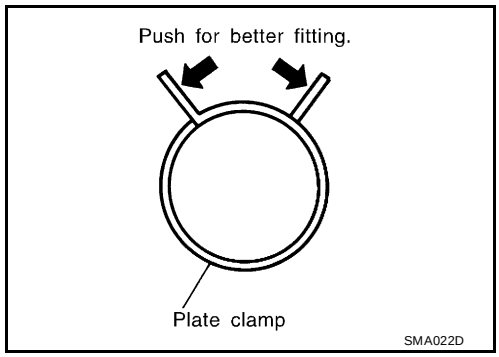

Precautions for Engine Oils

EAS000P3

Prolonged and repeated contact with used engine oil may cause skin cancer. Try to avoid direct skin contact with used oil.
If skin contact is made, wash thoroughly with soap or hand cleaner as soon as possible.

HEALTH PROTECTION PRECAUTIONS

- Avoid prolonged and repeated contact with oils, particularly used engine oils.

- Wear protective clothing, including impervious gloves where practicable.
- Do not put oily rags in pockets.
- Avoid contaminating clothes, particularly underpants, with oil.
- Heavily soiled clothing and oil-impregnated footwear should not be worn. Overalls must be cleaned regularly.
- First aid treatment should be obtained immediately for open cuts and wounds.
- Use barrier creams, applying them before each work period, to help the removal of oil from the skin.
- Wash with soap and water to ensure all oil is removed (skin cleansers and nail brushes will help). Preparations containing lanolin replace the natural skin oils which have been removed.
- Do not use gasoline, kerosene, diesel fuel, gas oil, thinners or solvents for cleaning skin.
- If skin disorders develop, obtain medical advice without delay.
- Where practical, degrease components prior to handling.
- Where there is a risk of eye contact, eye protection should be worn, for example, chemical goggles or face shields; in addition an eye wash facility should be provided.

ENVIRONMENTAL PROTECTION PRECAUTIONS

Dispose of used oil and used oil filters through authorized waste disposal contractors to licensed waste disposal sites, or to the waste oil reclamation trade. If in doubt, contact the local authority for advice on disposal facilities.
It is illegal to pour used oil on to the ground, down sewers or drains, or into water sources.
The regulations concerning pollution vary between regions.

Precautions for Air Conditioning

EAS000P4

Use an approved refrigerant recovery unit any time the air conditioning system must be discharged. Refer to ATC/MTC section “HFC-134a (R-134a) Service Procedure”, “REFRIGERANT LINES” for specific instructions.

HOW TO USE THIS MANUAL

PFP:00008

Description

EAS000P5

This volume explains “Removal, Disassembly, Installation, Inspection and Adjustment” and “Trouble Diagnoses”.

Terms

EAS000P6

- The captions **WARNING** and **CAUTION** warn you of steps that must be followed to prevent personal injury and/or damage to some part of the vehicle.
  WARNING indicates the possibility of personal injury if instructions are not followed.
  CAUTION indicates the possibility of component damage if instructions are not followed.
  BOLD TYPED STATEMENTS except **WARNING** and **CAUTION** give you helpful information.
  Standard value:Tolerance at inspection and adjustment.
  Limit value:The maximum or minimum limit value that should not be exceeded at inspection and adjustment.

Units

EAS000P7

- The **UNITS** given in this manual are primarily expressed as the SI UNIT (International System of Unit), and alternatively expressed in the metric system and in the yard/pound system.
  “Example”

  Outer Socket Lock Nut : 59 - 78 N-m (6.0 - 8.0 kg-m, 43 - 58 ft-lb)

Contents

EAS000P8

- **ALPHABETICAL INDEX** is provided at the end of this manual so that you can rapidly find the item and page you are searching for.
- **A QUICK REFERENCE INDEX**, a black tab (e.g. BR) is provided on the first page. You can quickly find the first page of each section by matching it to the section's black tab.
- **THE CONTENTS** are listed on the first page of each section.
- **THE TITLE** is indicated on the upper portion of each page and shows the part or system.
- **THE PAGE NUMBER** of each section consists of two or three letters which designate the particular section and a number (e.g. “BR-5”).
- **THE SMALL ILLUSTRATIONS** show the important steps such as inspection, use of special tools, knacks of work and hidden or tricky steps which are not shown in the previous large illustrations.
  Assembly, inspection and adjustment procedures for the complicated units such as the automatic transaxle or transmission, etc. are presented in a step-by-step format where necessary.

Components

EAS000P9

- **THE LARGE ILLUSTRATIONS** are exploded views (See the following) and contain tightening torques, lubrication points, section number of the **PARTS CATALOG** (e.g. SEC. 440) and other information necessary to perform repairs.

The illustrations should be used in reference to service matters only. When ordering parts, refer to the appropriate **PARTS CATALOG** .

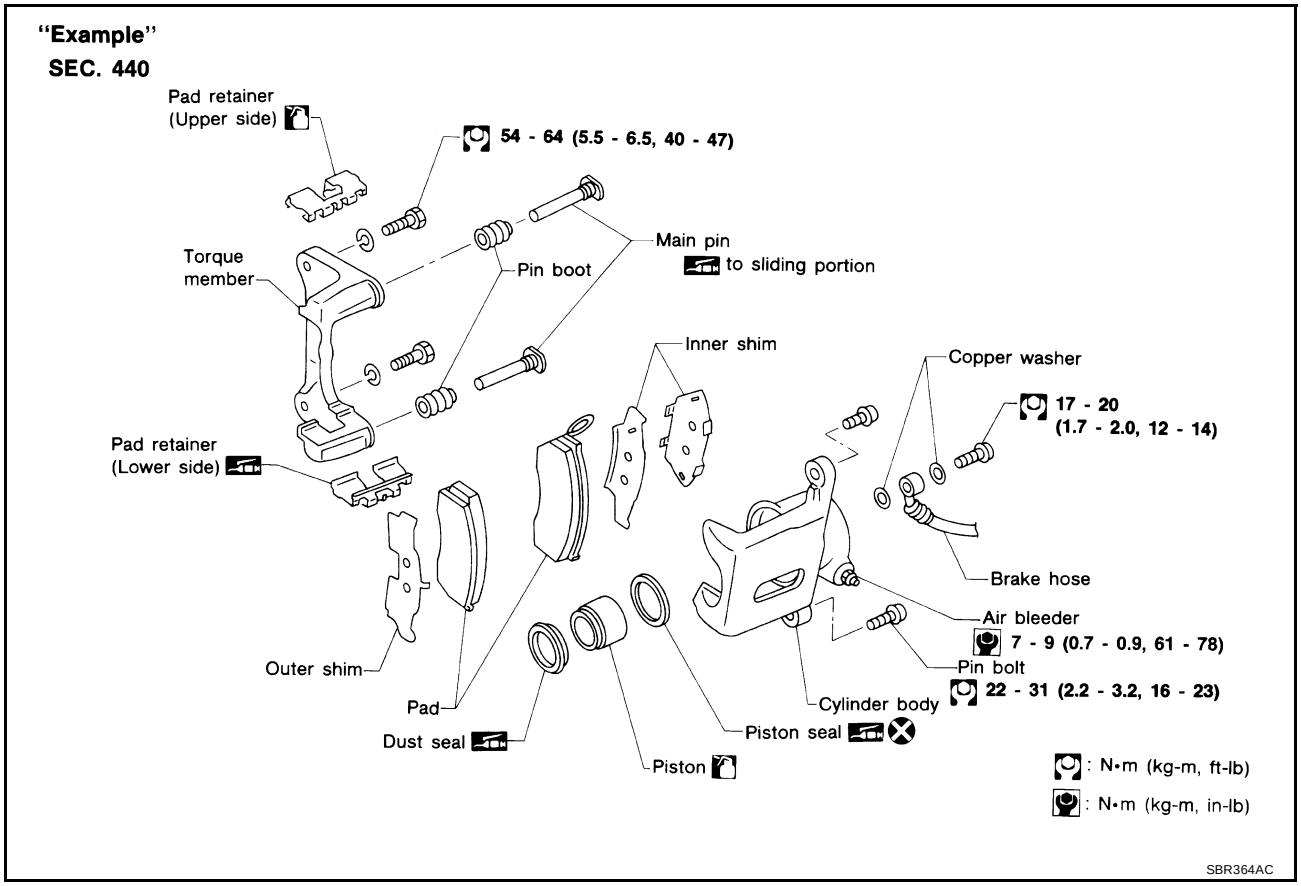

SYMBOLS

SYMBOL	DESCRIPTION
	Tightening torque
	Should be lubricated with grease. Unless otherwise indicated, use recommended multi-purpose grease.
	Should be lubricated with oil.
	Sealing point
	Checking point
	Always replace after every disassembly.
P	Apply petroleum jelly.
ATF	Apply ATF.
★	Select with proper thickness.
☆	Adjustment is required.

How to Follow Trouble Diagnoses

EAS000PA

DESCRIPTION

NOTICE:

Trouble diagnoses indicate work procedures required to diagnose problems effectively. Observe the following instructions before diagnosing.

1. **Before performing trouble diagnoses, read the "Preliminary Check", the "Symptom Chart" or the "Work Flow".**
2. **After repairs, re-check that the problem has been completely eliminated.**
3. **Refer to Component Parts and Harness Connector Location for the Systems described in each section for identification/location of components and harness connectors.**
4. **Refer to the Circuit Diagram for quick pinpoint check.**
   If you need to check circuit continuity between harness connectors in more detail, such as when a sub-harness is used, refer to Wiring Diagram in each individual section and Harness Layout in PG section for identification of harness connectors.
5. **When checking circuit continuity, ignition switch should be OFF.**
6. **Before checking voltage at connectors, check battery voltage.**
7. **After accomplishing the Diagnostic Procedures and Electrical Components Inspection, make sure that all harness connectors are reconnected as they were.**

HOW TO FOLLOW TEST GROUPS IN TROUBLE DIAGNOSES

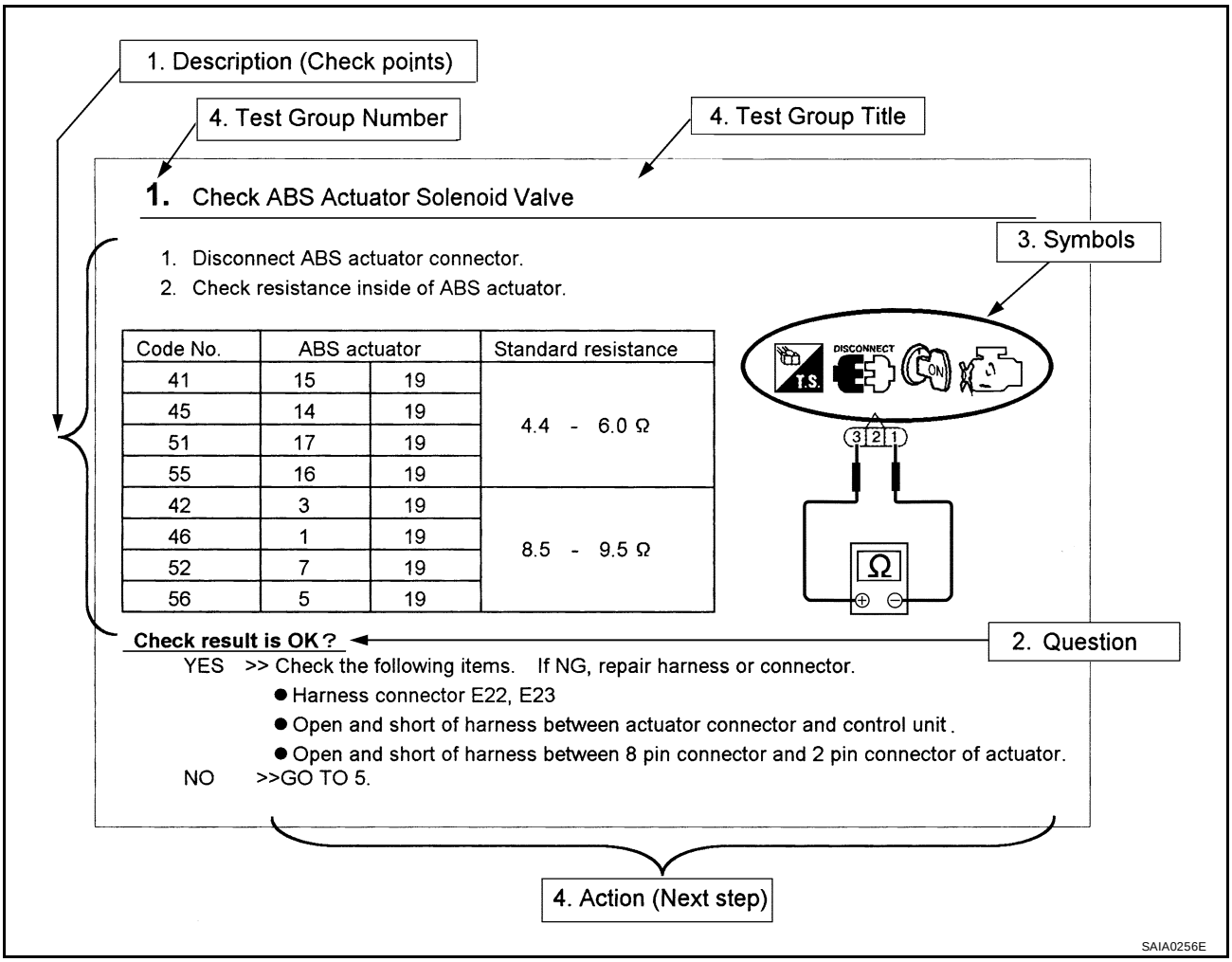

1. **Work and diagnostic procedure**
   Start to diagnose a problem using procedures indicated in enclosed test groups.
2. **Questions and required results**
   Questions and required results are indicated in bold type in test group.
   The meaning of are as follows:

   a. Battery voltage → 11 - 14V or approximately 12V

   b. Voltage : Approximately 0V → Less than 1V
3. **Symbol used in illustration**

Symbols included in illustrations refer to measurements or procedures. Before diagnosing a problem, familiarize yourself with each symbol. Refer to "Connector Symbols" in GI Section and "KEY TO SYMBOLS SIGNIFYING MEASUREMENTS OR PROCEDURES" below.

4. **Action items**
   Next action for each test group is indicated based on result of each question. Test group number is shown in the left upper portion of each test group.

REFERENCE INFORMATION

1. GI-8, "Components"

KEY TO SYMBOLS SIGNIFYING MEASUREMENTS OR PROCEDURES

Symbol	Symbol explanation	Symbol	Symbol explanation
DISCONNECT	Check after disconnecting the connector to be measured.	GST	Procedure with Generic Scan Tool (GST, OBD-II scan tool)
CONNECT	Check after connecting the connector to be measured.	NO TOOLS	Procedure without CONSULT, CONSULT-II or GST
	Insert key into ignition switch.	A/C	A/C switch is “OFF”.
	Remove key from ignition switch.	A/C	A/C switch is “ON”.
OFF	Turn ignition switch to “OFF” position.		REC switch is “ON”.
ON	Turn ignition switch to “ON” position.		REC switch is “OFF”.
ST	Turn ignition switch to “START” position.		Fan switch is “ON”. (At any position except for “OFF” position)
OFF→ACC	Turn ignition switch from “OFF” to “ACC” position.		Fan switch is “OFF”.
ACC→OFF	Turn ignition switch from “ACC” to “OFF” position.	FUSE BAT	Apply positive voltage from battery with fuse directly to components.
OFF→ON	Turn ignition switch from “OFF” to “ON” position.		Drive vehicle.
ON→OFF	Turn ignition switch from “ON” to “OFF” position.	BAT	Disconnect battery negative cable.
	Do not start engine, or check with engine stopped.		Depress brake pedal.
	Start engine, or check with engine running.		Release brake pedal.
	Apply parking brake.		Depress accelerator pedal.
	Release parking brake.		Release accelerator pedal.

Symbol	Symbol explanation	Symbol	Symbol explanation
C H	Check after engine is warmed up sufficiently.	TCM CONN or ECM CONN 8 1 2 3 4 5 6 7 8 9 10 11 12 V	Pin terminal check for SMJ type ECM and TCM connectors. **For details regarding the terminal arrangement, refer to the "ELECTRICAL UNITS" electrical reference page at the end of the manual.**
V	Voltage should be measured with a voltmeter.		
Ω Ω	Circuit resistance should be measured with an ohmmeter.		
A	Current should be measured with an ammeter.		
	Procedure with CONSULT-II		
	Procedure without CONSULT-II		

How to Read Wiring Diagrams

EAS000PB

CONNECTOR SYMBOLS

Most of connector symbols in wiring diagrams are shown from the terminal side.

- Connector symbols shown from the terminal side are enclosed by a single line and followed by the direction mark.
- Connector symbols shown from the harness side are enclosed by a double line and followed by the direction mark.
- Certain systems and components, especially those related to OBD, may use a new style slide-locking type harness connector. For description and how to disconnect, refer to PG section, "Description", "HARNESS CONNECTOR".

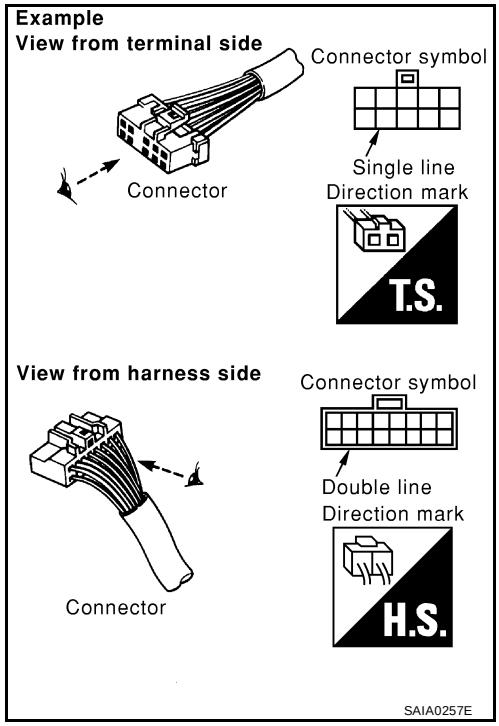

- Male and female terminals
  Connector guides for male terminals are shown in black and female terminals in white in wiring diagrams.

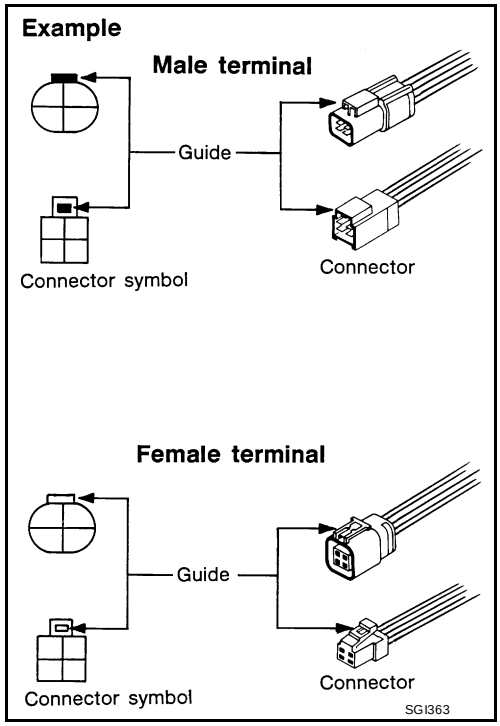

SAMPLE/WIRING DIAGRAM - EXAMPL -

- For detail, refer to following "DESCRIPTION".

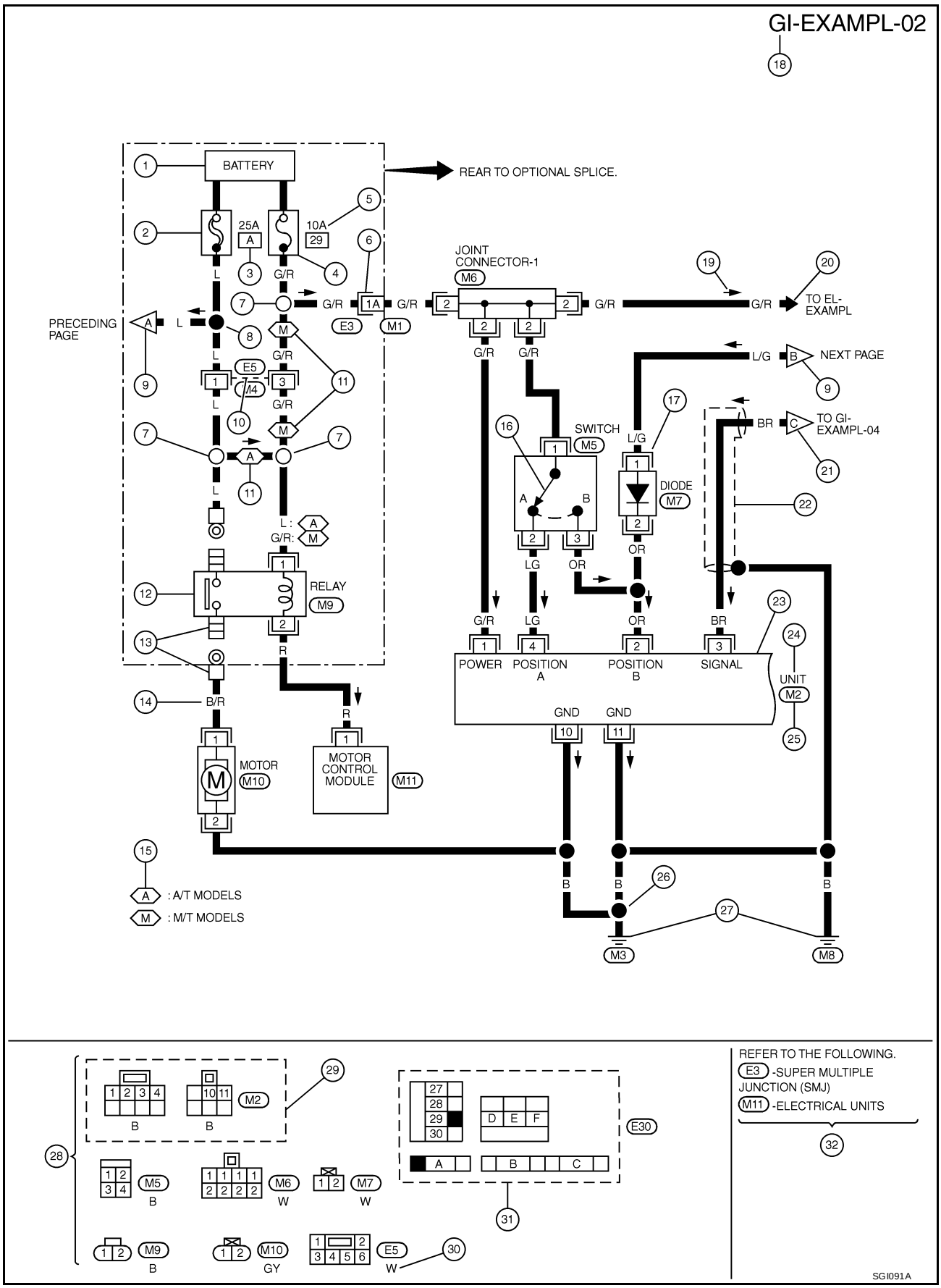

Optional Splice

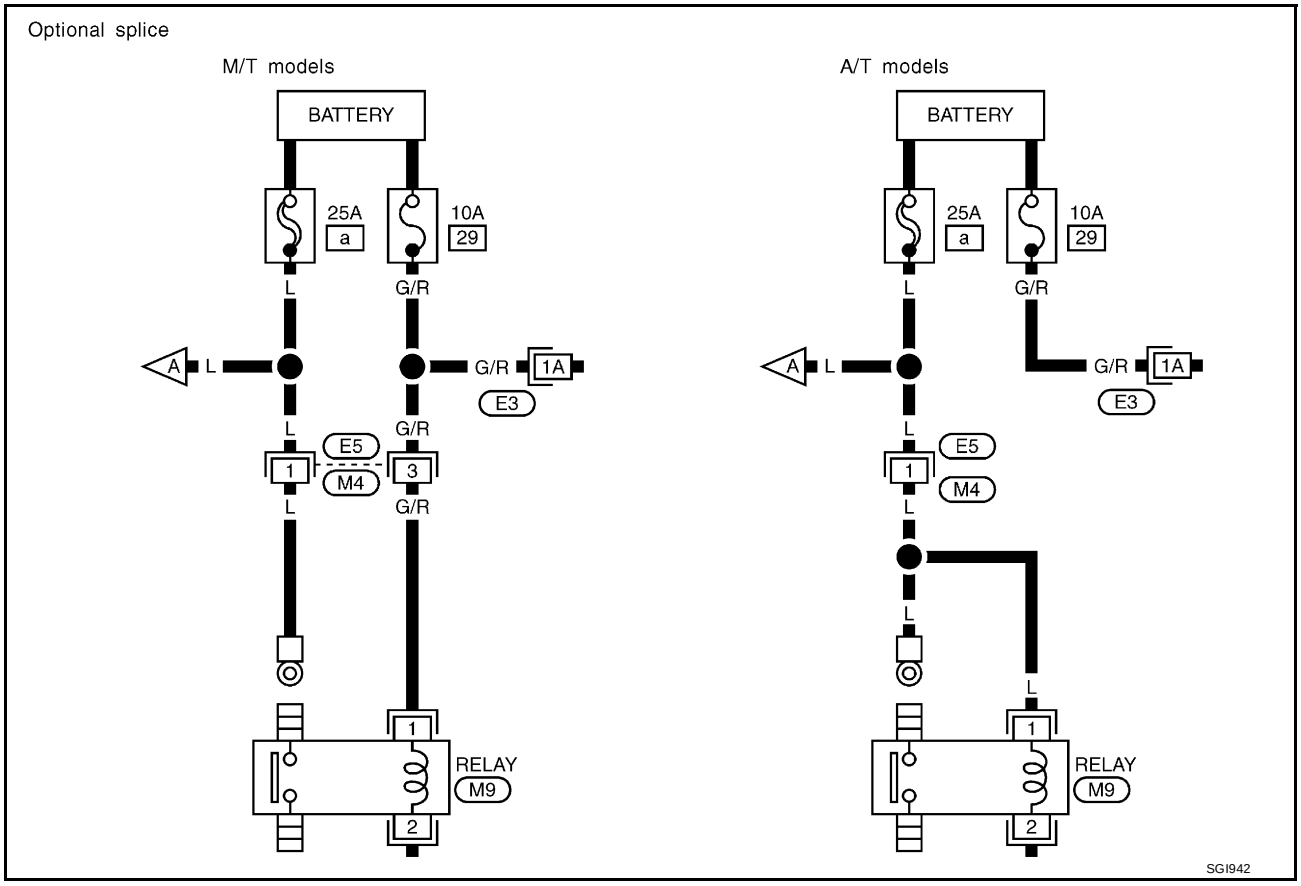

DESCRIPTION

Number	Item	Description
1	Power condition	● This shows the condition when the system receives battery positive voltage (can be operated).
2	Fusible link	● The double line shows that this is a fusible link. ● The open circle shows current flow in, and the shaded circle shows current flow out.
3	Fusible link/fuse location	● This shows the location of the fusible link or fuse in the fusible link or fuse box. For arrangement, refer to PG section, POWER SUPPLY ROUTING.
4	Fuse	● The single line shows that this is a fuse. ● The open circle shows current flow in, and the shaded circle shows current flow out.
5	Current rating	● This shows the current rating of the fusible link or fuse.
6	Connectors	● This shows that connector E3 is female and connector M1 is male. ● The G/R wire is located in the 1A terminal of both connectors. ● Terminal number with an alphabet (1A, 5B, etc.) indicates that the connector is SMJ connector. Refer to PG section, SMJ (SUPER MULTIPLE JUNCTION).
7	Optional splice	● The open circle shows that the splice is optional depending on vehicle application.
8	Splice	● The shaded circle shows that the splice is always on the vehicle.
9	Page crossing	● This arrow shows that the circuit continues to an adjacent page. ● The A will match with the A on the preceding or next page.
10	Common connector	● The dotted lines between terminals show that these terminals are part of the same connector.
11	Option abbreviation	● This shows that the circuit is optional depending on vehicle application.
12	Relay	● This shows an internal representation of the relay. For details, refer to PG section, STANDARDIZED RELAY.
13	Connectors	● This shows that the connector is connected to the body or a terminal with bolt or nut.

Number	Item	Description
14	Wire color	● This shows a code for the color of the wire.
		B = Black W = White R = Red G = Green L = Blue Y = Yellow LG = Light Green BR = Brown OR = Orange P = Pink PU = Purple GY = Gray SB = Sky Blue CH = Dark Brown DG = Dark Green
		When the wire color is striped, the base color is given first, followed by the stripe color as shown below: Example: L/W = Blue with White Stripe
15	Option description	● This shows a description of the option abbreviation used on the page.
16	Switch	● This shows that continuity exists between terminals 1 and 2 when the switch is in the A position. Continuity exists between terminals 1 and 3 when the switch is in the B position.
17	Assembly parts	● Connector terminal in component shows that it is a harness incorporated assembly.
18	Cell code	● This identifies each page of the wiring diagram by section, system and wiring diagram page number.
19	Current flow arrow	● Arrow indicates electric current flow, especially where the direction of standard flow (vertically downward or horizontally from left to right) is difficult to follow. ● A double arrow " ↔ " shows that current can flow in either direction depending on circuit operation.
20	System branch	● This shows that the system branches to another system identified by cell code (section and system).
21	Page crossing	● This arrow shows that the circuit continues to another page identified by cell code. ● The C will match with the C on another page within the system other than the next or preceding pages.
22	Shielded line	● The line enclosed by broken line circle shows shield wire.
23	Component box in wave line	● This shows that another part of the component is also shown on another page (indicated by wave line) within the system.
24	Component name	● This shows the name of a component.
25	Connector number	● This shows the connector number. ● The letter shows which harness the connector is located in. ● Example: **M** : main harness. For detail and to locate the connector, refer to PG section "Main Harness", "Harness Layout". A coordinate grid is included for complex harnesses to aid in locating connectors.
26	Ground (GND)	● The line spliced and grounded under wire color shows that ground line is spliced at the grounded connector.
27	Ground (GND)	● This shows the ground connection. For detailed ground distribution information, refer to "Ground Distribution" in PG section.
28	Connector views	● This area shows the connector faces of the components in the wiring diagram on the page.
29	Common component	● Connectors enclosed in broken line show that these connectors belong to the same component.
30	Connector color	● This shows a code for the color of the connector. For code meaning, refer to wire color codes, Number 14 of this chart.
31	Fusible link and fuse box	● This shows the arrangement of fusible link(s) and fuse(s), used for connector views of "POWER SUPPLY ROUTING" in PG section. The open square shows current flow in, and the shaded square shows current flow out.
32	Reference area	● This shows that more information on the Super Multiple Junction (SMJ) and Joint Connectors (J/C) exists on the PG section. Refer to "Reference Area" for details.

Harness Indication

- Letter designations next to test meter probe indicate harness (connector) wire color.
- Connector numbers in a single circle M33 indicate harness connectors.

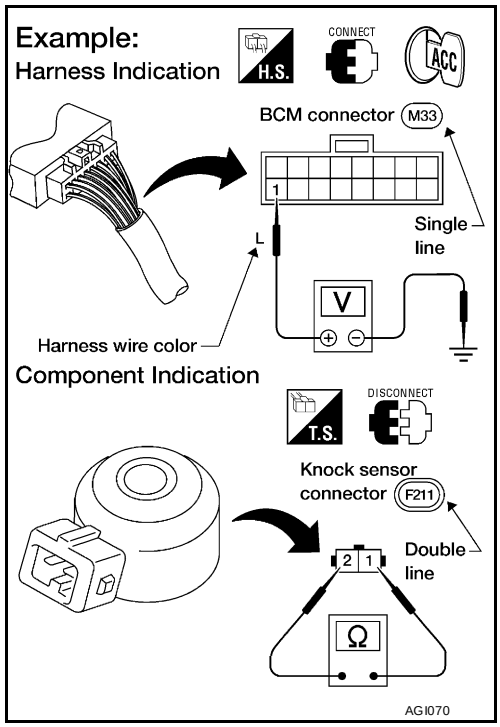

Component Indication

Connector numbers in a double circle F211 indicate component connectors.

Switch Positions

Switches are shown in wiring diagrams as if the vehicle is in the “normal” condition.
A vehicle is in the “normal” condition when:

- ignition switch is “OFF”,
- doors, hood and trunk lid/back door are closed,
- pedals are not depressed, and
- parking brake is released.

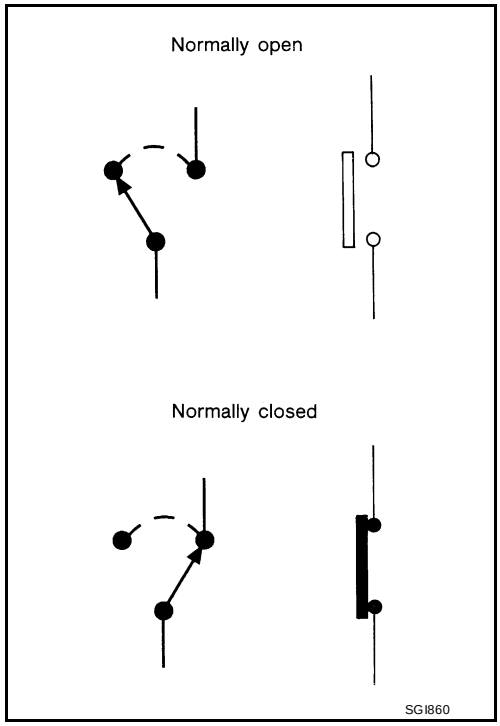

Detectable Lines and Non-Detectable Lines

In some wiring diagrams, two kinds of lines, representing wires, with different weight are used.

- A line with regular weight (wider line) represents a “detectable line for DTC (Diagnostic Trouble Code)”. A “detectable line for DTC” is a circuit in which ECM can detect its malfunctions with the on board diagnostic system.
- A line with less weight (thinner line) represents a “non-detectable line for DTC”. A “non-detectable line for DTC” is a circuit in which ECM cannot detect its malfunctions with the on board diagnostic system.

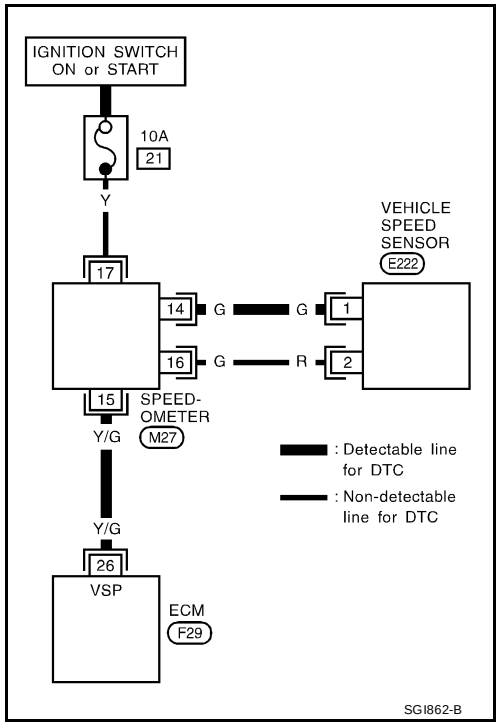

Multiple Switch

The continuity of multiple switch is described in two ways as shown below.

- The switch chart is used in schematic diagrams.

- The switch diagram is used in wiring diagrams.

Example

(SWITCH CHART)

WIPER SWITCH

	OFF	INT	LO	HI	WASH
1					○
2				○	
3	○	○	○		
4	○	○			
5		○			
6		○	○	○	○

(SWITCH DIAGRAM)

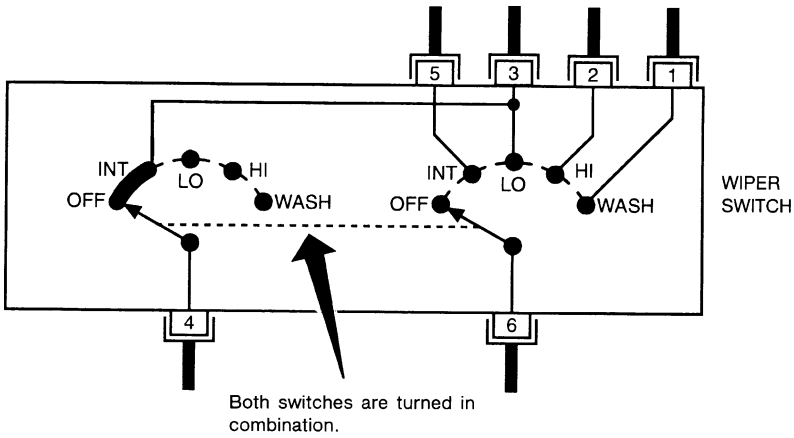

Continuity circuit of wiper switch

SWITCH POSITION	CONTINUITY CIRCUIT
OFF	3-4
INT	3-4, 5-6
LO	3-6
HI	2-6
WASH	1-6

SGI875

Reference Area

The Reference Area of the wiring diagram contains references to additional electrical reference pages at the end of the manual. If connector numbers and titles are shown in the Reference Area of the wiring diagram, these connector symbols are not shown in the Connector Area.

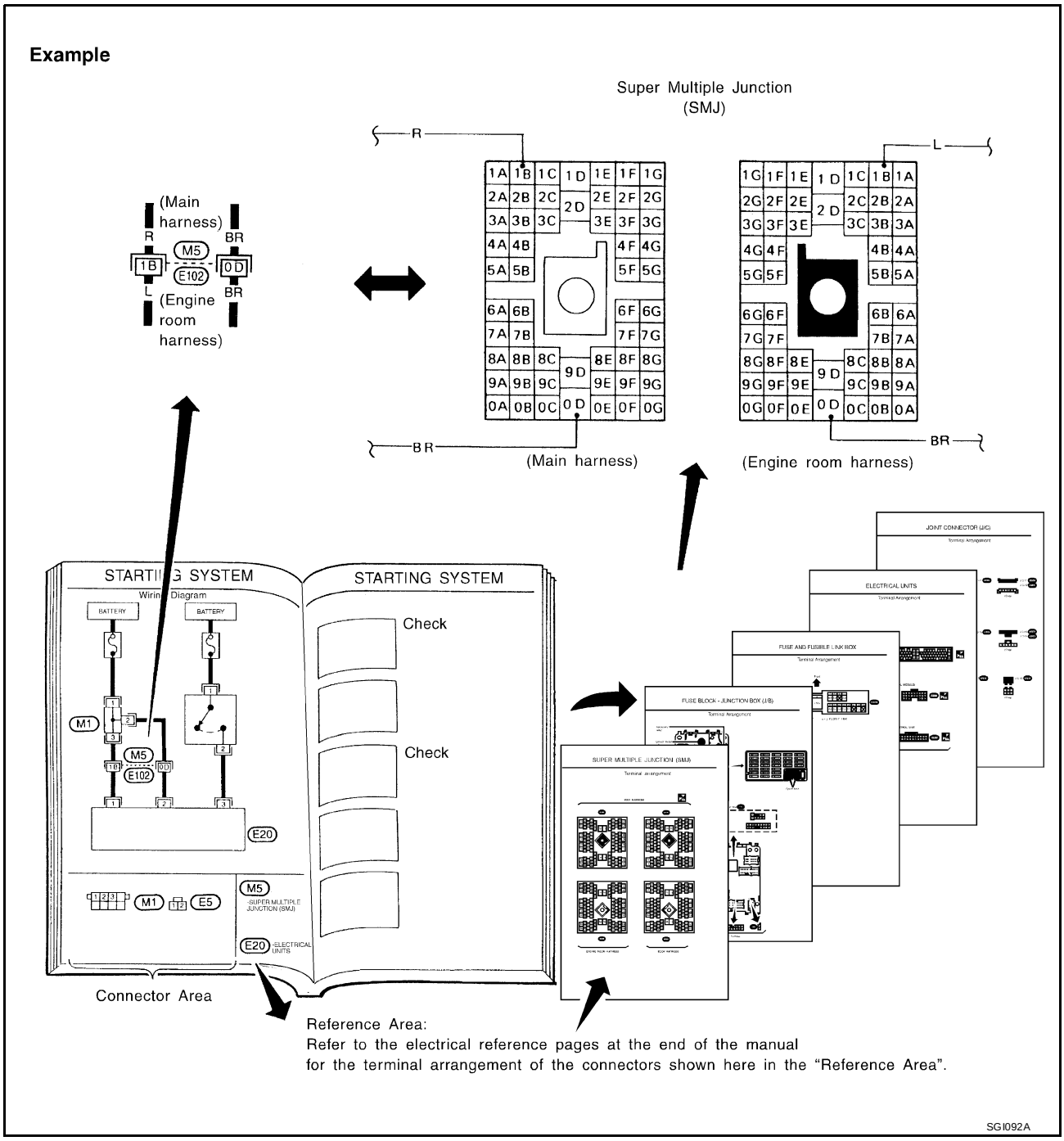

Abbreviations

EAS000PC

The following **ABBREVIATIONS** are used:

ABBREVIATION	DESCRIPTION
A/C	Air Conditioner
A/T	Automatic Transaxle/Transmission
ATF	Automatic Transmission Fluid
D_1	Drive range 1st gear
D_2	Drive range 2nd gear

ABBREVIATION	DESCRIPTION
D_3	Drive range 3rd gear
D_4	Drive range 4th gear
FR, RR	Front, Rear
LH, RH	Left-Hand, Right-Hand
M/T	Manual Transaxle/Transmission
OD	Overdrive
P/S	Power Steering
SAE	Society of Automotive Engineers, Inc.
SDS	Service Data and Specifications
SST	Special Service Tools
2WD	2-Wheel Drive
2_2	2nd range 2nd gear
2_1	2nd range 1st gear
1_2	1st range 2nd gear
1_1	1st range 1st gear

SERVICE INFORMATION FOR ELECTRICAL INCIDENT

PFP:00000

How to Check Terminal

EAS000PD

CONNECTOR AND TERMINAL PIN KIT

Use the connector and terminal pin kits listed below when replacing connectors or terminals.
The connector and terminal pin kits contain some of the most commonly used NISSAN/INFINITI connectors and terminals. For detailed connector and terminal pin replacement procedures, refer to the latest NISSAN/INFINITI CONNECTOR AND TERMINAL PIN SERVICE MANUAL.

Tool number (Kent-Moore No.) Tool name	Description
- (J38751-95NI) Connector and terminal pin kit (NISSAN) - (J38751-95INF) Connector and terminal pin kit (INFINITI) - (J42992-98KIT) OBD and terminal repair kit - (J42992-2000UPD) OBD-II Connector Kit Update	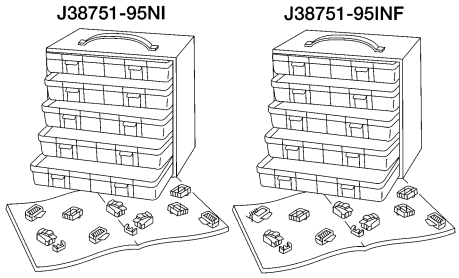 WAIA0004E 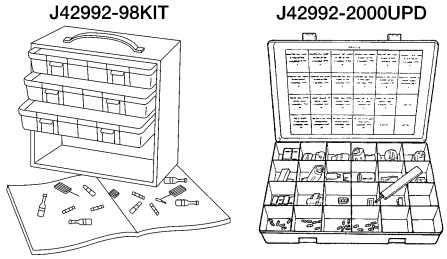 WAIA0005E

HOW TO PROBE CONNECTORS

Connector damage and an intermittent connection can result from improperly probing of the connector during circuit checks.
The probe of a digital multimeter (DMM) may not correctly fit the connector cavity. To correctly probe the connector, follow the procedures below using a “T” pin. For the best contact grasp the “T” pin using an alligator clip.

Probing from Harness Side

Standard type (not waterproof type) connector should be probed from harness side with “T” pin.

- If the connector has a rear cover such as a ECM connector, remove the rear cover before probing the terminal.
- Do not probe waterproof connector from harness side. Damage to the seal between wire and connector may result.

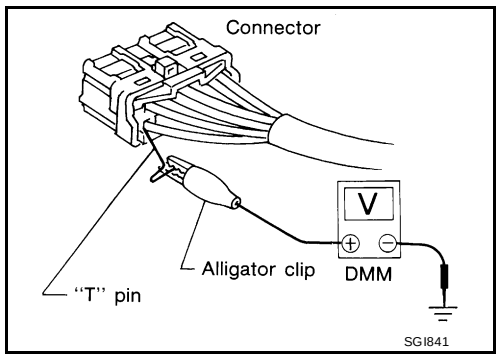

Probing from Terminal Side

FEMALE TERMINAL

- There is a small notch above each female terminal. Probe each terminal with the “T” pin through the notch.
  Do not insert any object other than the same type male terminal into female terminal.

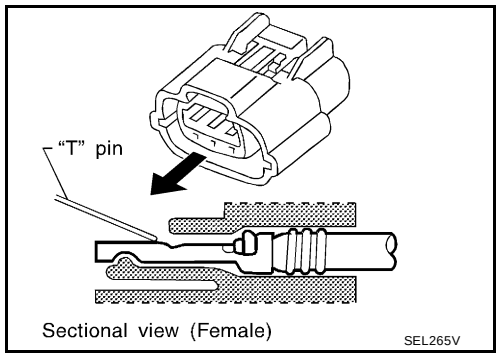

- Some connectors do not have a notch above each terminal. To probe each terminal, remove the connector retainer to make contact space for probing.

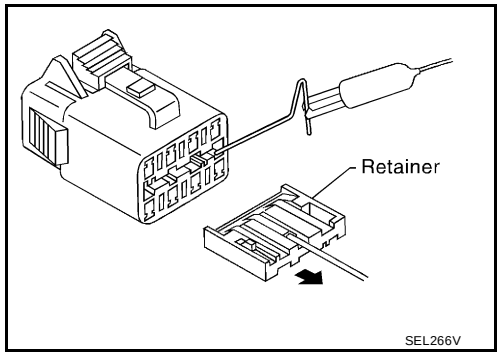

MALE TERMINAL
Carefully probe the contact surface of each terminal using a “T” pin.
Do not bend terminal.

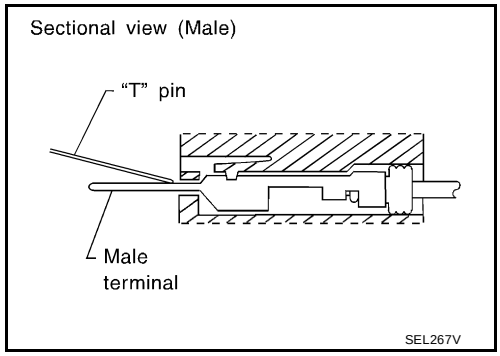

How to Check Enlarged Contact Spring of Terminal

An enlarged contact spring of a terminal may create intermittent signals in the circuit.
If the intermittent open circuit occurs, follow the procedure below to inspect for open wires and enlarged contact spring of female terminal.

1. Assemble a male terminal and approx. 10 cm (3.9 in) of wire.
   Use a male terminal which matches the female terminal.
2. Disconnect the suspected faulty connector and hold it terminal side up.

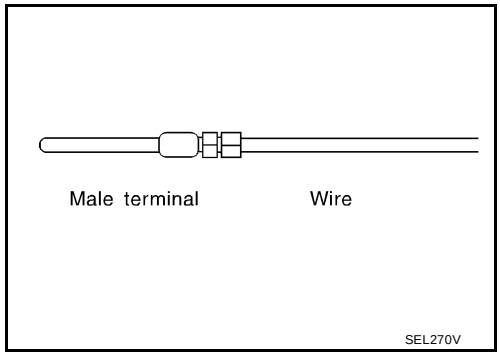

3. While holding the wire of the male terminal, try to insert the male terminal into the female terminal.
   Do not force the male terminal into the female terminal with your hands.

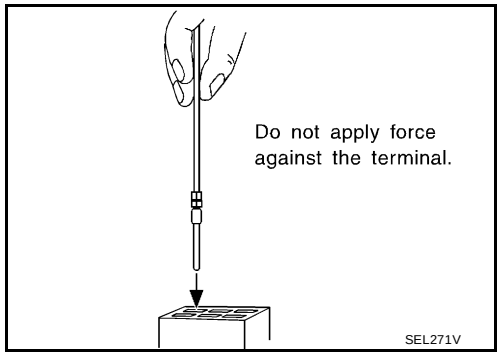

4. While moving the connector, check whether the male terminal can be easily inserted or not.

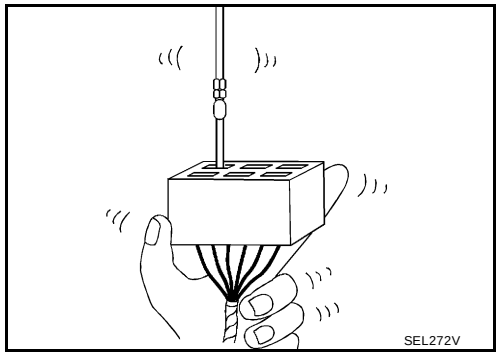

- If the male terminal can be easily inserted into the female terminal, replace the female terminal.

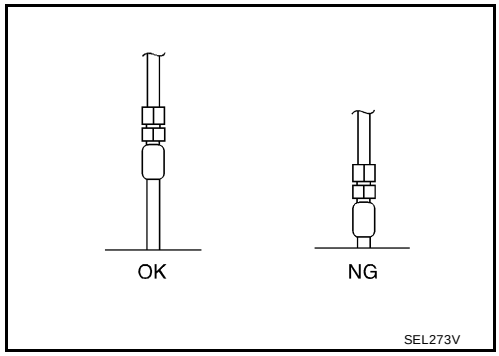

Waterproof Connector Inspection

If water enters the connector, it can short interior circuits. This may lead to intermittent problems. Check the following items to maintain the original waterproof characteristics.

RUBBER SEAL INSPECTION

- Most waterproof connectors are provided with a rubber seal between the male and female connectors. If the seal is missing, the waterproof performance may not meet specifications.
- The rubber seal may come off when connectors are disconnected. Whenever connectors are reconnected, make sure the rubber seal is properly installed on either side of male or female connector.

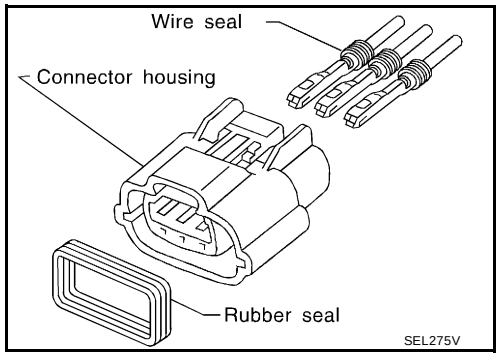

WIRE SEAL INSPECTION

The wire seal must be installed on the wire insertion area of a waterproof connector. Be sure that the seal is installed properly.

Terminal Lock Inspection

Check for unlocked terminals by pulling wire at the end of connector. An unlocked terminal may create intermittent signals in the circuit.

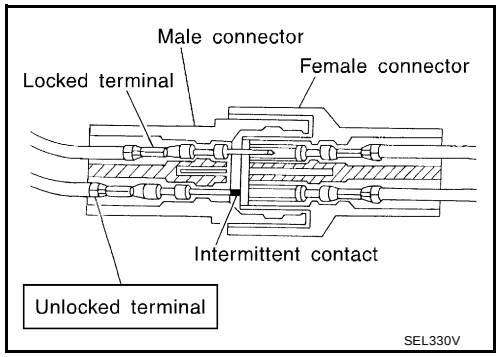

How to Perform Efficient Diagnosis for an Electrical Incident

EAS000PE

WORK FLOW

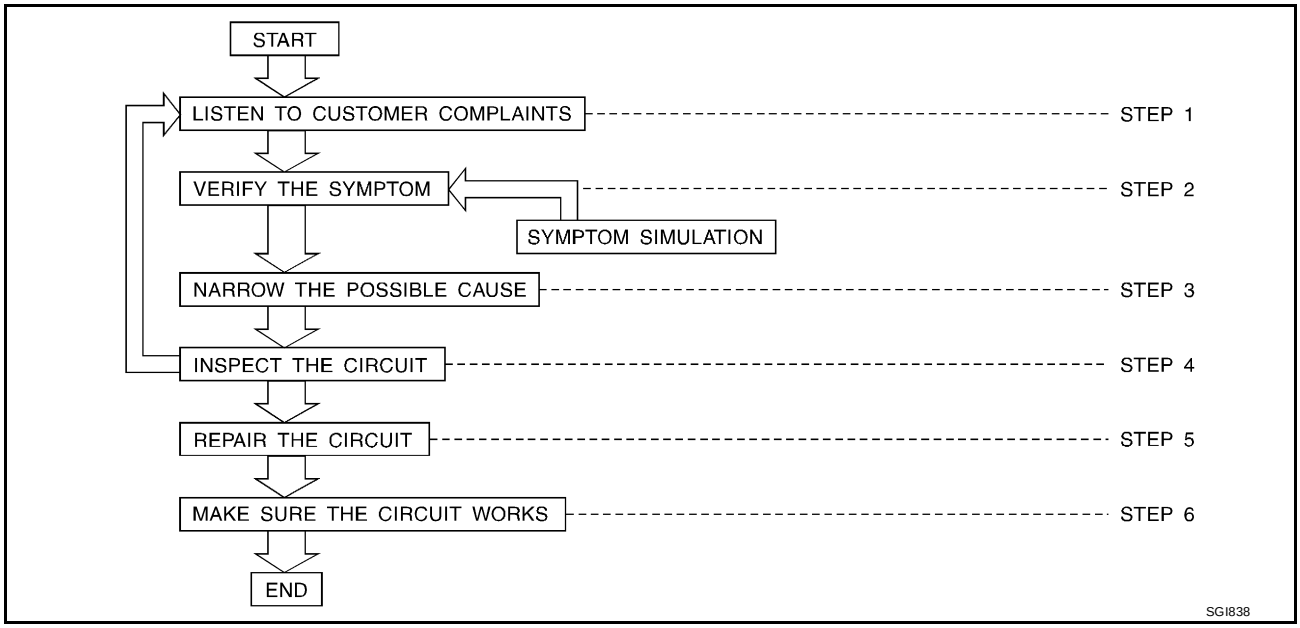

STEP	DESCRIPTION	
STEP 1	Get detailed information about the conditions and the environment when the incident occurred. The following are key pieces of information required to make a good analysis:	
	WHAT	Vehicle Model, Engine, Transmission/Transaxle and the System (i.e. Radio).
	WHEN	Date, Time of Day, Weather Conditions, Frequency.
	WHERE	Road Conditions, Altitude and Traffic Situation.
	HOW	System Symptoms, Operating Conditions (Other Components Interaction). Service History and if any After Market Accessories have been installed.
STEP 2	Operate the system, road test if necessary. Verify the parameter of the incident. If the problem cannot be duplicated, refer to “Incident Simulation Tests”.	
STEP 3	Get the proper diagnosis materials together including: ● Power Supply Routing ● System Operation Descriptions ● Applicable Service Manual Sections ● Check for any Service Bulletins Identify where to begin diagnosis based upon your knowledge of the system operation and the customer comments.	
STEP 4	Inspect the system for mechanical binding, loose connectors or wiring damage. Determine which circuits and components are involved and diagnose using the Power Supply Routing and Harness Layouts.	
STEP 5	Repair or replace the incident circuit or component.	
STEP 6	Operate the system in all modes. Verify the system works properly under all conditions. Make sure you have not inadvertently created a new incident during your diagnosis or repair steps.	

INCIDENT SIMULATION TESTS

Introduction

Sometimes the symptom is not present when the vehicle is brought in for service. If possible, re-create the conditions present at the time of the incident. Doing so may help avoid a No Trouble Found Diagnosis. The following section illustrates ways to simulate the conditions/environment under which the owner experiences an electrical incident.

The section is broken into the six following topics:

- Vehicle vibration
- Heat sensitive

- Freezing
- Water intrusion
- Electrical load
- Cold or hot start up

Get a thorough description of the incident from the customer. It is important for simulating the conditions of the problem.

Vehicle Vibration

The problem may occur or become worse while driving on a rough road or when engine is vibrating (idle with A/C on). In such a case, you will want to check for a vibration related condition. Refer to the following illustration.

CONNECTORS & HARNESS

Determine which connectors and wiring harness would affect the electrical system you are inspecting. Gently shake each connector and harness while monitoring the system for the incident you are trying to duplicate. This test may indicate a loose or poor electrical connection.

HINT

Connectors can be exposed to moisture. It is possible to get a thin film of corrosion on the connector terminals. A visual inspection may not reveal this without disconnecting the connector. If the problem occurs intermittently, perhaps the problem is caused by corrosion. It is a good idea to disconnect, inspect and clean the terminals on related connectors in the system.

SENSORS & RELAYS

Gently apply a slight vibration to sensors and relays in the system you are inspecting.
This test may indicate a loose or poorly mounted sensor or relay.

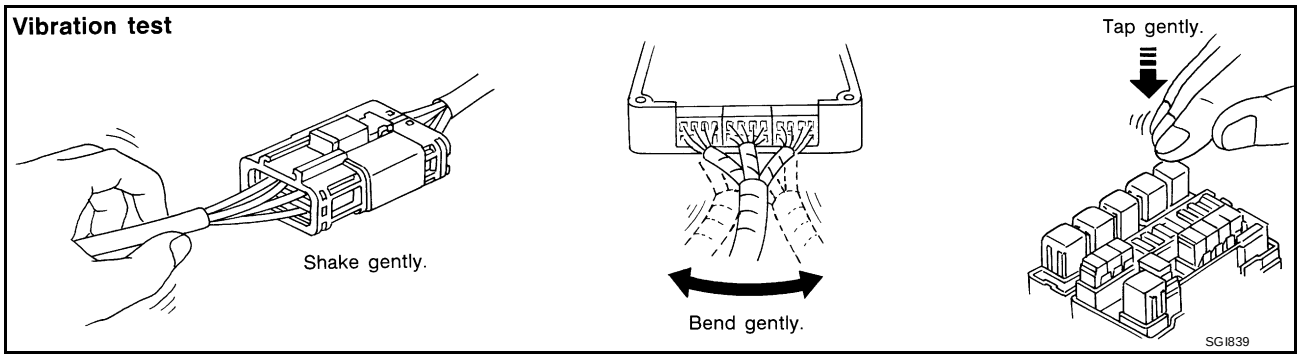

ENGINE COMPARTMENT

There are several reasons a vehicle or engine vibration could cause an electrical complaint. Some of the things to check for are:

- Connectors not fully seated.
- Wiring harness not long enough and is being stressed due to engine vibrations or rocking.
- Wires laying across brackets or moving components.
- Loose, dirty or corroded ground wires.
- Wires routed too close to hot components.

To inspect components under the hood, start by verifying the integrity of ground connections. (Refer to Ground Inspection described later.) First check that the system is properly grounded. Then check for loose connection by gently shaking the wiring or components as previously explained. Using the wiring diagrams inspect the wiring for continuity.

BEHIND THE INSTRUMENT PANEL

An improperly routed or improperly clamped harness can become pinched during accessory installation. Vehicle vibration can aggravate a harness which is routed along a bracket or near a screw.

UNDER SEATING AREAS

An unclamped or loose harness can cause wiring to be pinched by seat components (such as slide guides) during vehicle vibration. If the wiring runs under seating areas, inspect wire routing for possible damage or pinching.

Heat Sensitive

The customer's concern may occur during hot weather or after car has sat for a short time. In such cases you will want to check for a heat sensitive condition.
To determine if an electrical component is heat sensitive, heat the component with a heat gun or equivalent.
Do not heat components above 60°C (140°F). If incident occurs while heating the unit, either replace or properly insulate the component.

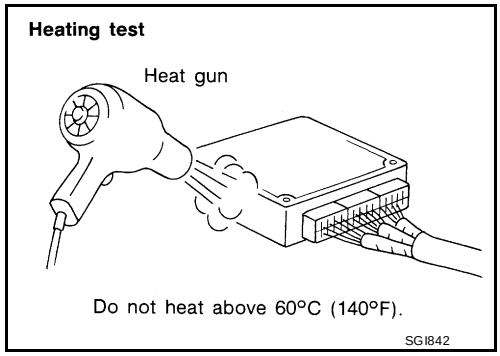

Freezing

The customer may indicate the incident goes away after the car warms up (winter time). The cause could be related to water freezing somewhere in the wiring/electrical system.
There are two methods to check for this. The first is to arrange for the owner to leave his car overnight. Make sure it will get cold enough to demonstrate his complaint. Leave the car parked outside overnight. In the morning, do a quick and thorough diagnosis of those electrical components which could be affected.
The second method is to put the suspect component into a freezer long enough for any water to freeze. Reinstall the part into the car and check for the reoccurrence of the incident. If it occurs, repair or replace the component.

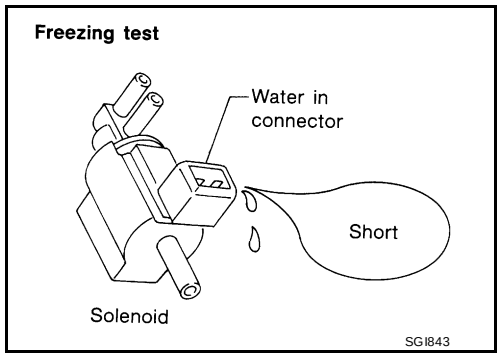

Water Intrusion

The incident may occur only during high humidity or in rainy/snowy weather. In such cases the incident could be caused by water intrusion on an electrical part. This can be simulated by soaking the car or running it through a car wash.
Do not spray water directly on any electrical components.

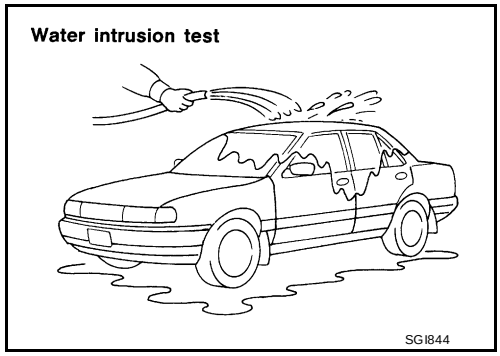

Electrical Load

The incident may be electrical load sensitive. Perform diagnosis with all accessories (including A/C, rear window defogger, radio, fog lamps) turned on.

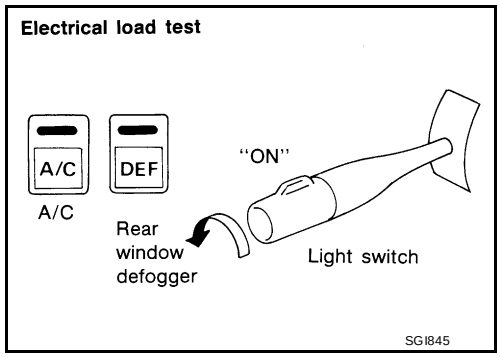

Cold or Hot Start Up

On some occasions an electrical incident may occur only when the car is started cold, or it may occur when the car is restarted hot shortly after being turned off. In these cases you may have to keep the car overnight to make a proper diagnosis.

CIRCUIT INSPECTION

Introduction

In general, testing electrical circuits is an easy task if it is approached in a logical and organized method. Before beginning it is important to have all available information on the system to be tested. Also, get a thorough understanding of system operation. Then you will be able to use the appropriate equipment and follow the correct test procedure.
You may have to simulate vehicle vibrations while testing electrical components. Gently shake the wiring harness or electrical component to do this.

OPEN	A circuit is open when there is no continuity through a section of the circuit.	
SHORT	There are two types of shorts.	
	● SHORT CIRCUIT	When a circuit contacts another circuit and causes the normal resistance to change.
	● SHORT TO GROUND	When a circuit contacts a ground source and grounds the circuit.

NOTE:
Refer to “How to Check Terminal” to probe or check terminal.

Testing for “Opens” in the Circuit

Before you begin to diagnose and test the system, you should rough sketch a schematic of the system. This will help you to logically walk through the diagnosis process. Drawing the sketch will also reinforce your working knowledge of the system.

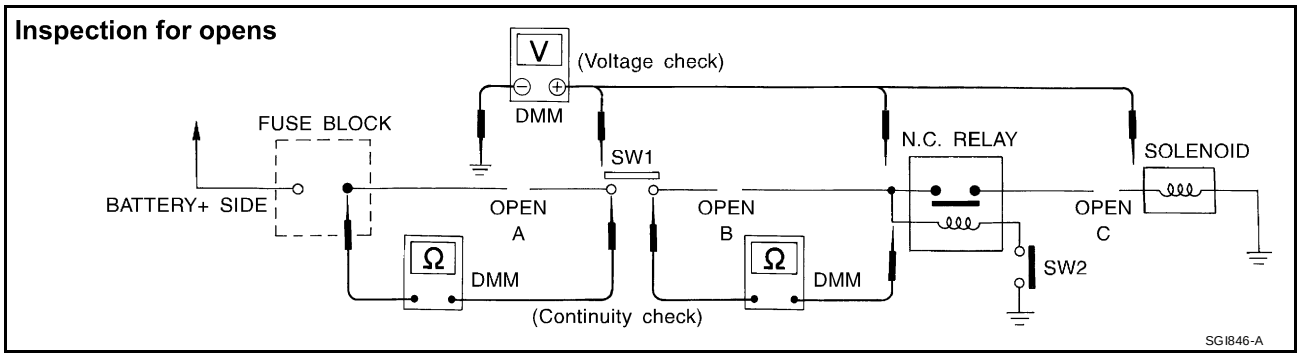

CONTINUITY CHECK METHOD

The continuity check is used to find an open in the circuit. The digital multimeter (DMM) set on the resistance function will indicate an open circuit as over limit (no beep tone or no ohms symbol). Make sure to always start with the DMM at the highest resistance level.
To help in understanding the diagnosis of open circuits, please refer to the previous schematic.

- Disconnect the battery negative cable.
- Start at one end of the circuit and work your way to the other end. (At the fuse block in this example)
- Connect one probe of the DMM to the fuse block terminal on the load side.
- Connect the other probe to the fuse block (power) side of SW1. Little or no resistance will indicate that portion of the circuit has good continuity. If there were an open in the circuit, the DMM would indicate an over limit or infinite resistance condition. (point A)
- Connect the probes between SW1 and the relay. Little or no resistance will indicate that portion of the circuit has good continuity. If there were an open in the circuit, the DMM would indicate an over limit or infinite resistance condition. (point B)
- Connect the probes between the relay and the solenoid. Little or no resistance will indicate that portion of the circuit has good continuity. If there were an open in the circuit, the DMM would indicate an over limit or infinite resistance condition. (point C)

Any circuit can be diagnosed using the approach in the previous example.

VOLTAGE CHECK METHOD

To help in understanding the diagnosis of open circuits please refer to the previous schematic.
In any powered circuit, an open can be found by methodically checking the system for the presence of voltage. This is done by switching the DMM to the voltage function.

- Connect one probe of the DMM to a known good ground.
- Begin probing at one end of the circuit and work your way to the other end.
- With SW1 open, probe at SW1 to check for voltage.
  voltage; open is further down the circuit than SW1.
  no voltage; open is between fuse block and SW1 (point A).
- Close SW1 and probe at relay.
  voltage; open is further down the circuit than the relay.
  no voltage; open is between SW1 and relay (point B).
- Close the relay and probe at the solenoid.
  voltage; open is further down the circuit than the solenoid.
  no voltage; open is between relay and solenoid (point C).

Any powered circuit can be diagnosed using the approach in the previous example.

Testing for “Shorts” in the Circuit

To simplify the discussion of shorts in the system, please refer to the following schematic.

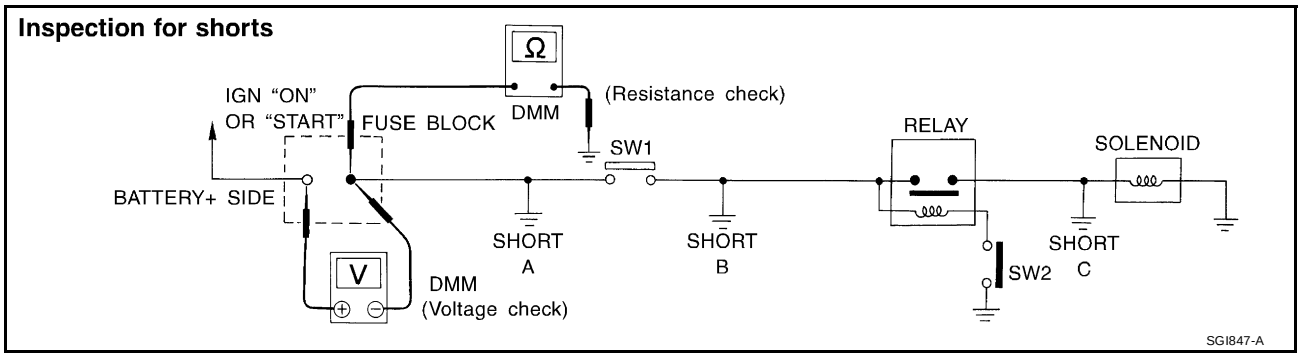

RESISTANCE CHECK METHOD

- Disconnect the battery negative cable and remove the blown fuse.
- Disconnect all loads (SW1 open, relay disconnected and solenoid disconnected) powered through the fuse.
- Connect one probe of the DMM to the load side of the fuse terminal. Connect the other probe to a known good ground.
- With SW1 open, check for continuity.
  continuity; short is between fuse terminal and SW1 (point A).
  no continuity; short is further down the circuit than SW1.
- Close SW1 and disconnect the relay. Put probes at the load side of fuse terminal and a known good ground. Then, check for continuity.
  continuity; short is between SW1 and the relay (point B).
  no continuity; short is further down the circuit than the relay.
- Close SW1 and jump the relay contacts with jumper wire. Put probes at the load side of fuse terminal and a known good ground. Then, check for continuity.
  continuity; short is between relay and solenoid (point C).
  no continuity; check solenoid, retrace steps.

VOLTAGE CHECK METHOD

- Remove the blown fuse and disconnect all loads (i.e. SW1 open, relay disconnected and solenoid disconnected) powered through the fuse.
- Turn the ignition key to the ON or START position. Verify battery voltage at the battery + side of the fuse terminal (one lead on the battery + terminal side of the fuse block and one lead on a known good ground).
- With SW1 open and the DMM leads across both fuse terminals, check for voltage.
  voltage; short is between fuse block and SW1 (point A).
  no voltage; short is further down the circuit than SW1.
- With SW1 closed, relay and solenoid disconnected and the DMM leads across both fuse terminals, check for voltage.
  voltage; short is between SW1 and the relay (point B).

no voltage; short is further down the circuit than the relay.

- With SW1 closed, relay contacts jumped with fused jumper wire check for voltage.
  voltage; short is down the circuit of the relay or between the relay and the disconnected solenoid (point C).
  no voltage; retrace steps and check power to fuse block.

Ground Inspection

Ground connections are very important to the proper operation of electrical and electronic circuits. Ground connections are often exposed to moisture, dirt and other corrosive elements. The corrosion (rust) can become an unwanted resistance. This unwanted resistance can change the way a circuit works.
Electronically controlled circuits are very sensitive to proper grounding. A loose or corroded ground can drastically affect an electronically controlled circuit. A poor or corroded ground can easily affect the circuit. Even when the ground connection looks clean, there can be a thin film of rust on the surface.
When inspecting a ground connection follow these rules:

- Remove the ground bolt or screw.
- Inspect all mating surfaces for tarnish, dirt, rust, etc.
- Clean as required to assure good contact.
- Reinstall bolt or screw securely.
- Inspect for “add-on” accessories which may be interfering with the ground circuit.
- If several wires are crimped into one ground eyelet terminal, check for proper crimps. Make sure all of the wires are clean, securely fastened and providing a good ground path. If multiple wires are cased in one eyelet make sure no ground wires have excess wire insulation.

For detailed ground distribution information, refer to “Ground Distribution” in PG section.

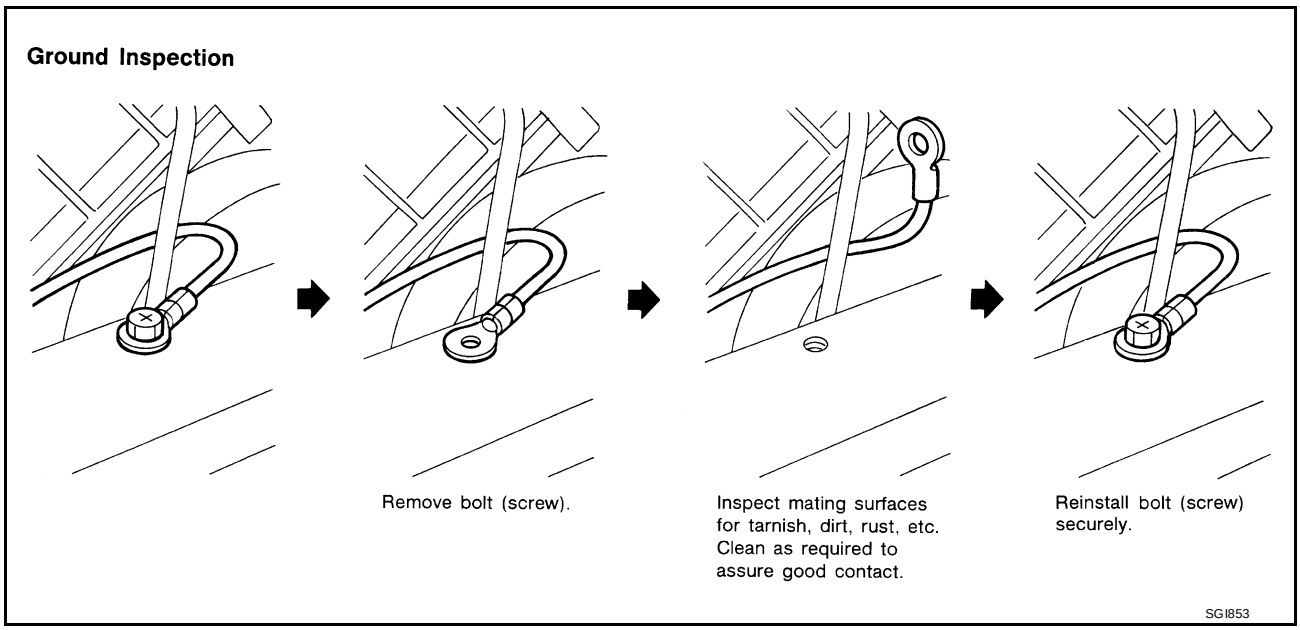

Voltage Drop Tests

Voltage drop tests are often used to find components or circuits which have excessive resistance. A voltage drop in a circuit is caused by a resistance when the circuit is in operation.
Check the wire in the illustration. When measuring resistance with DMM, contact by a single strand of wire will give reading of 0 ohms. This would indicate a good circuit. When the circuit operates, this single strand of wire is not able to carry the current. The single strand will have a high resistance to the current. This will be picked up as a slight voltage drop.
Unwanted resistance can be caused by many situations as follows:

- Undersized wiring (single strand example)
- Corrosion on switch contacts
- Loose wire connections or splices.

If repairs are needed always use wire that is of the same or larger gauge.

MEASURING VOLTAGE DROP — ACCUMULATED METHOD

- Connect the DMM across the connector or part of the circuit you want to check. The positive lead of the DMM should be closer to power and the negative lead closer to ground.
- Operate the circuit.
- The DMM will indicate how many volts are being used to “push” current through that part of the circuit.

Note in the illustration that there is an excessive 4.1 volt drop between the battery and the bulb.

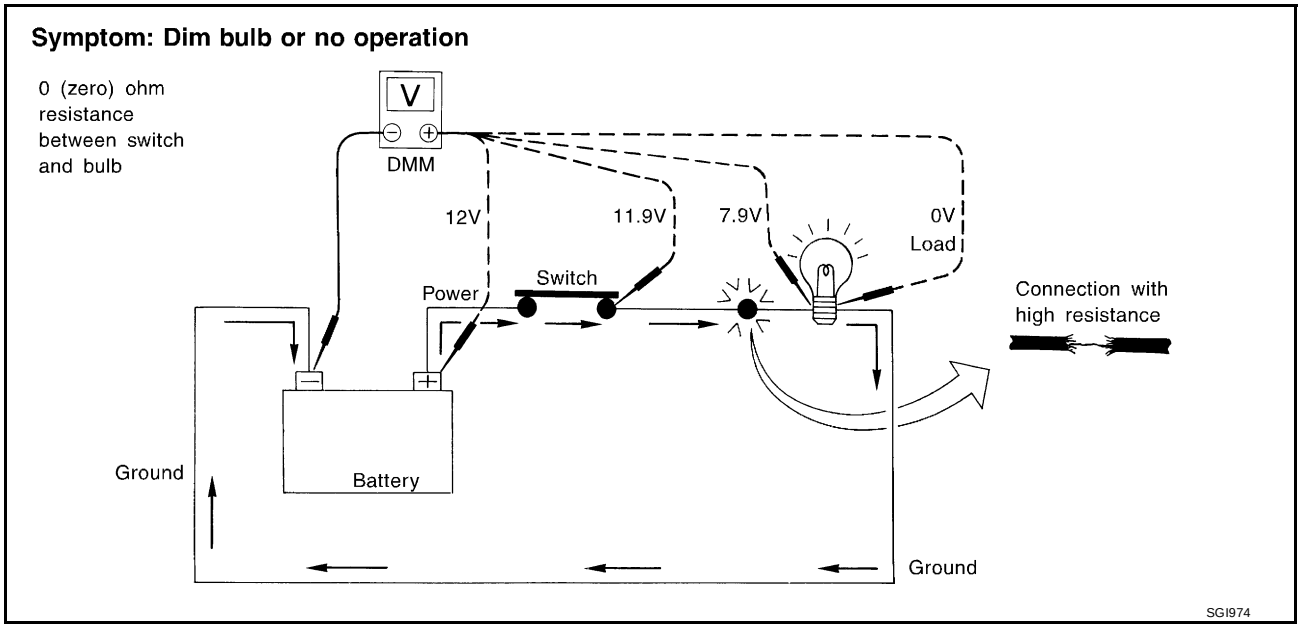

MEASURING VOLTAGE DROP — STEP-BY-STEP

The step-by-step method is most useful for isolating excessive drops in low voltage systems (such as those in “Computer Controlled Systems”).

Circuits in the “Computer Controlled System” operate on very low amperage.

The (Computer Controlled) system operations can be adversely affected by any variation in resistance in the system. Such resistance variation may be caused by poor connection, improper installation, improper wire gauge or corrosion.

The step by step voltage drop test can identify a component or wire with too much resistance.

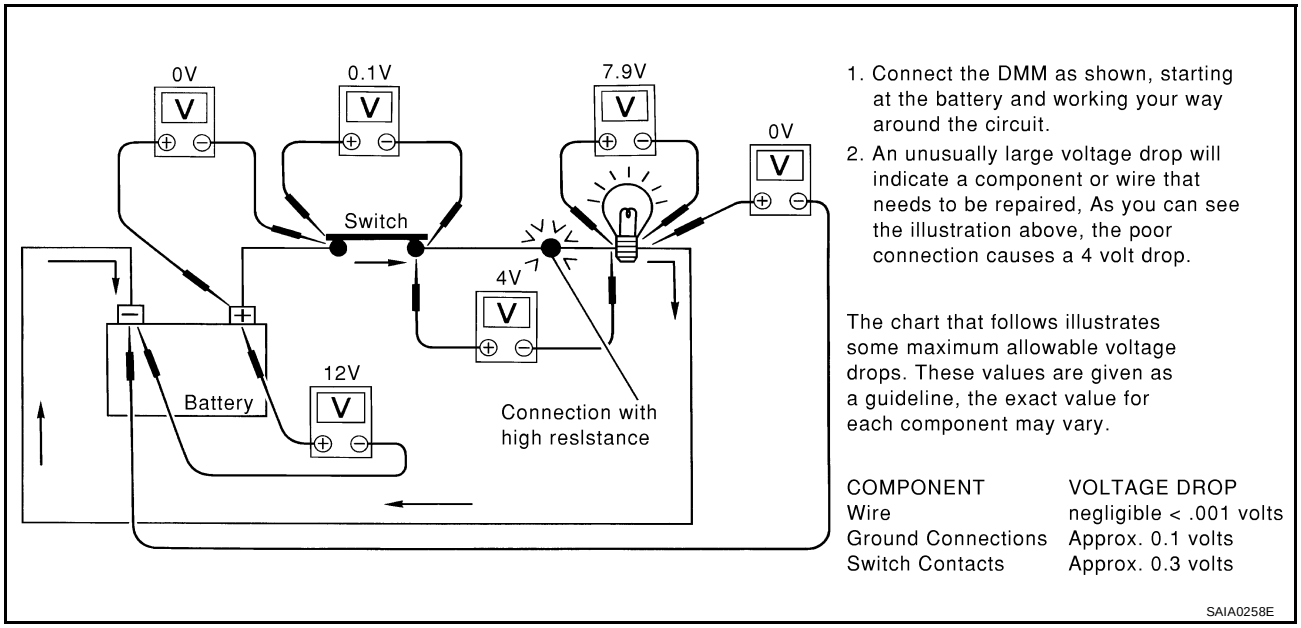

Control Unit Circuit Test

System Description:When the switch is ON, the control unit lights up the lamp.

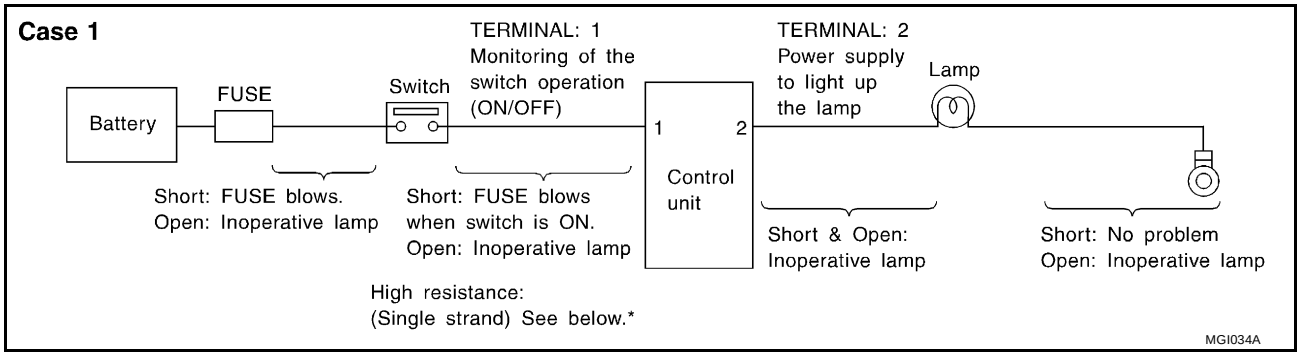

INPUT-OUTPUT VOLTAGE CHART

Pin No.	Item	Condition	Voltage value [V]	In case of high resistance such as single strand [V] *
1	Switch	Switch ON	Battery voltage	Lower than battery voltage Approx. 8 (Example)
		Switch OFF	Approx. 0	Approx. 0
2	Lamp	Switch ON	Battery voltage	Approx. 0 (Inoperative lamp)
		Switch OFF	Approx. 0	Approx. 0

The voltage value is based on the body ground.

*:If high resistance exists in the switch side circuit (caused by a single strand), terminal 1 does not detect battery voltage. Control unit does not detect the switch is ON even if the switch does not turn ON. Therefore, the control unit does not supply power to light up the lamp.

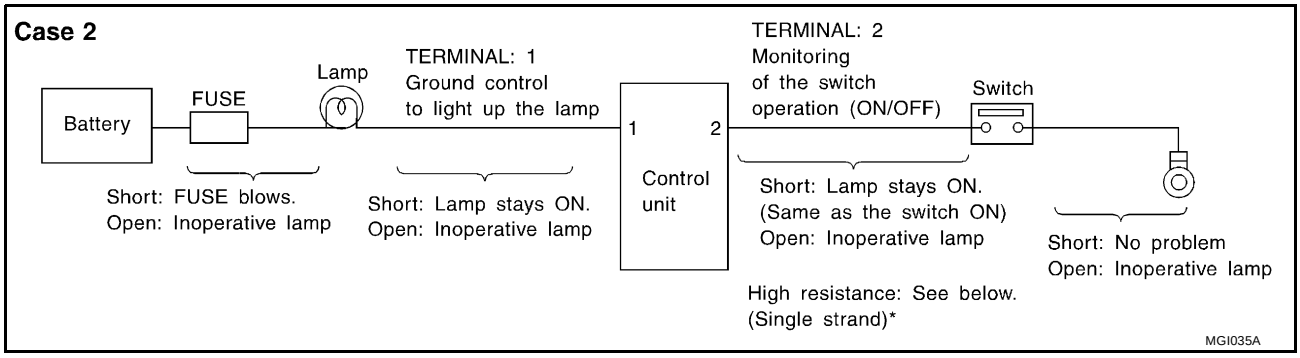

INPUT-OUTPUT VOLTAGE CHART

Pin No.	Item	Condition	Voltage value [V]	In case of high resistance such as single strand [V] *
1	Lamp	Switch ON	Approx. 0	Battery voltage (Inoperative lamp)
		Switch OFF	Battery voltage	Battery voltage
2	Switch	Switch ON	Approx. 0	Higher than 0 Approx. 4 (Example)
		Switch OFF	Approx. 5	Approx. 5

The voltage value is based on the body ground.

*:If high resistance exists in the switch side circuit (caused by a single strand), terminal 2 does not detect approx. 0V. Control unit does not detect the switch is ON even if the switch does not turn ON. Therefore, the control unit does not control ground to light up the lamp.

Control Units and Electrical Parts

EAS000PF

PRECAUTIONS

- Never reverse polarity of battery terminals.
- Install only parts specified for a vehicle.
- Before replacing the control unit, check the input and output and functions of the component parts.
- Do not apply excessive force when disconnecting a connector.
- If a connector is installed by tightening bolts, loosen bolt mounting it, then take it out by hand.

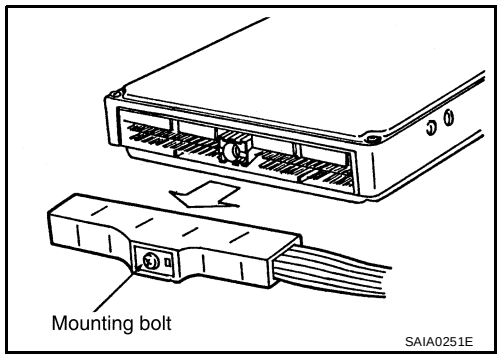

- Before installing a connector, make sure the terminal is not bent or damaged, and then correctly connect it.
  When installing a connector by tightening bolts, fix it by tightening the mounting bolt until the painted projection of the connector becomes even with the surface.

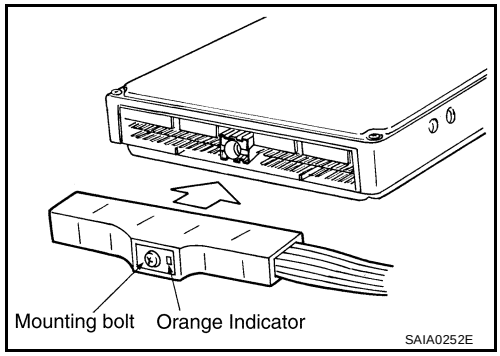

- For removal of the lever type connector, pull the lever up to the direction pointed to by the arrow A in the figure, and then remove the connector.

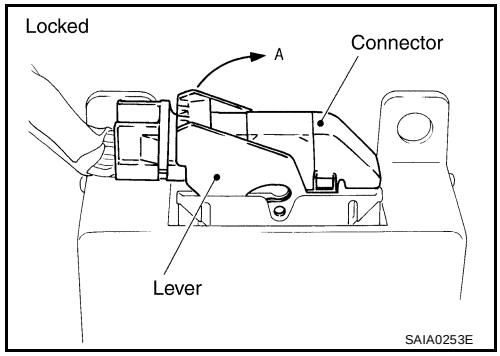

- For installation of the lever type connector, pull down the lever to the direction pointed by the arrow B in the figure, and then push the connector until a clicking noise is heard.

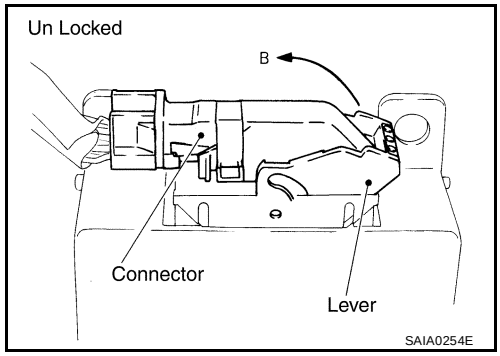

- Do not apply excessive shock to the control unit by dropping or hitting it.
- Be careful to prevent condensation in the control unit due to rapid temperature changes and do not let water or rain get on it. If water is found in the control unit, dry it fully and then install it in the vehicle.
- Be careful not to let oil to get on the control unit connector.
- Avoid cleaning the control unit with volatile oil.
- Do not disassemble the control unit, and do not remove the upper and lower covers.

- When using a DMM, be careful not to let test probes get close to each other to prevent the power transistor in the control unit from damaging battery voltage because of short circuiting.
- When checking input and output signals of the control unit, use the specified check adapter.

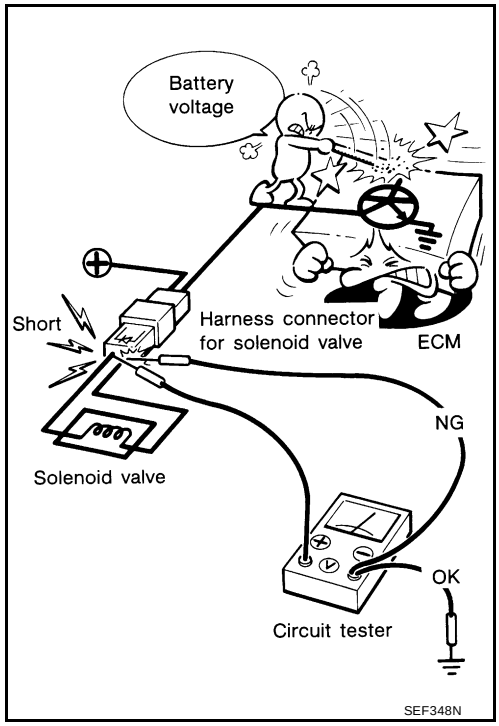

SMJ INSTALLATION

To install SMJ, tighten bolts until orange “fulltight” mark appears and then retighten to specified torque as required.

SMJ :3 - 5 N-m (0.3 - 0.5 kg-m, 26 - 43 in-lb)

CAUTION:
Do not overtighten bolts, otherwise, they may be damaged.

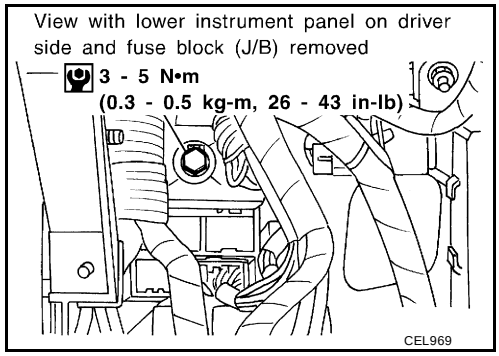

CONSULT-II CHECKING SYSTEM

PFP:00000

Description

EAS000PG

- CONSULT-II is a hand-held type tester. When it is connected with a diagnostic connector equipped on the vehicle side, it will communicate with the control unit equipped in the vehicle and then enable various kinds of diagnostic tests.
- Refer to “CONSULT Operator's Manual” for more information.

Function and System Application

EAS000PH

Diagnostic test mode	Function	ENGINE	A/T	AIR BAG	ABS/ TCS	BCM
Work support	This mode enables a technician to adjust some devices faster and more accurately by following the indications on CONSULT-II.	x	-	-	x	x
DTC work support	Select the operating condition to confirm Diagnosis Trouble Codes.	-	x	-	-	-
Self-diagnostic results	Self-diagnostic results can be read and erased quickly.	x	x	x	x	x
Trouble diagnostic record	Current self-diagnostic results and all trouble diagnostic records previously stored can be read.	-	-	x	-	-
ECU discriminated No.	Classification number of a replacement ECU can be read to prevent an incorrect ECU from being installed.	-	-	x	-	-
Data monitor	Input/Output data in the ECM can be read.	x	x	-	x	x
Active test	Diagnostic Test Mode in which CONSULT-II drives some actuators apart from the ECMs and also shifts some parameters in a specified range.	x	-	-	x	x
DTC confirmation	The results of SRT (System Readiness Test) and the self-diagnosis status/result can be confirmed.	x	-	-	-	-
ECM part number	ECM part number can be read.	x	-	-	x	-
Function test	Conducted by CONSULT-II instead of a technician to determine whether each system is “OK” or “NG”.	x	-	-	-	-
Control unit initialization	All registered ignition key IDs in NATS components can be initialized and new IDs can be registered.	-	-	-	-	-
Self-function check	ECM checks its own NATS communication interface.	-	-	-	-	-

x:Applicable

Nickel Metal Hydride Battery Replacement

EAS000PI

CONSULT-II contains a nickel metal hydride battery. When replacing the battery obey the following:

WARNING:

Replace the nickel metal hydride battery with Genuine CONSULT-II battery only. Use of another battery may present a risk of fire or explosion. The battery may present a fire or chemical burn hazard if mistreated. Do not recharge, disassemble or dispose of in fire.

Keep the battery out of reach of children and discard used battery conforming to the local regulations.

Checking Equipment

EAS000PJ

When ordering the following equipment, contact your NISSAN distributor.

Tool name	Description
NISSAN CONSULT-II 1. CONSULT-II unit (Tester internal soft: Resident version 3.3.0) and accessories 2. Program card AED02C and AEN02B To confirm the best combination of these softwares, refer to CONSULT-II Operation Manual.	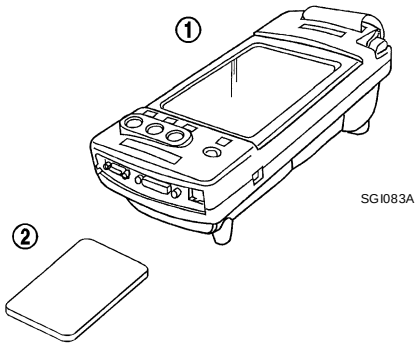

CONSULT-II Data Link Connector (DLC) Circuit

EAS000PK

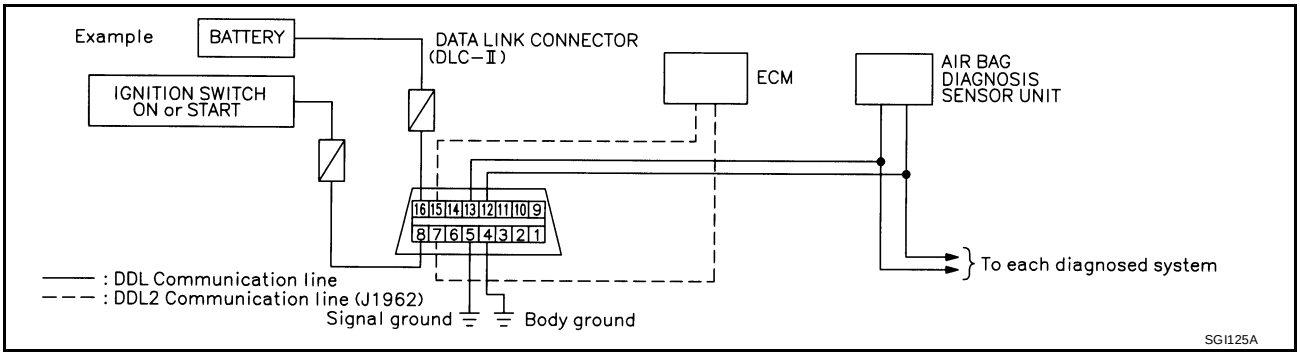

INSPECTION PROCEDURE

If the CONSULT-II cannot diagnose the system properly, check the following items.

Symptom	Check item
CONSULT-II cannot access any system.	● CONSULT-II DLC power supply circuit (Terminal 8) and ground circuit (Terminal 4) (For detailed circuit, refer to “MIL & Data Link Connectors Wiring Diagram” in EC section.) ● CONSULT-II DLC cable
CONSULT-II cannot access individual system. (Other systems can be accessed.)	● CONSULT-II program card (Check the appropriate CONSULT-II program card for the system. Refer to "Checking Equipment".) ● Power supply and ground circuit for the control unit of the system (For detailed circuit, refer to wiring diagram for each system.) ● Open or short circuit between the system and CONSULT-II DLC (For detailed circuit, refer to wiring diagram for each system.)

NOTE:
The DDL1 and DDL2 circuits from DLC pins 12, 13, 14 and 15 may be connected to more than one system. A short in a DDL circuit connected to a control unit in one system may affect CONSULT-II access to other systems.

LIFTING POINT

PFP:00000

GI

Special Service Tools

EAS000PL

The actual shapes of Kent-Moore tools may differ from those of special service tools illustrated here.

Tool number (Kent-Moore No.) Tool name	Description
LM4086-0200 (-) Board on attachment	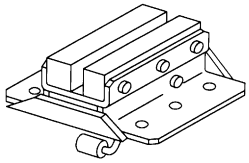 S-NT001
LM4519-0000 (-) Safety stand attachment	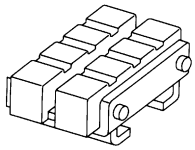 S-NT002

CAUTION:

- **Every time the vehicle is lifted up, maintain the complete vehicle curb condition.**
- **Since the vehicle's center of gravity changes when removing main parts on the front side (engine, transmission, suspension etc.), support a jack up point on the rear side garage jack with a transmission jack or equivalent.**
- **Since the vehicle's center of gravity changes when removing main parts on the rear side (rear axle, suspension, etc.), support a jack up point on the front side garage jack with a transmission jack or equivalent.**
- **Be careful not to smash or do anything that would affect piping parts.**

Garage Jack and Safety Stand

EAS000PM

WARNING:

- **Park the vehicle on a level surface when using the jack. Make sure to avoid damaging pipes, tubes, etc. under the vehicle.**
- **Never get under the vehicle while it is supported only by the jack. Always use safety stands when you have to get under the vehicle.**

B C D E F G H I J K L M

- **Place wheel chocks at both front and back of the wheels on the ground.**

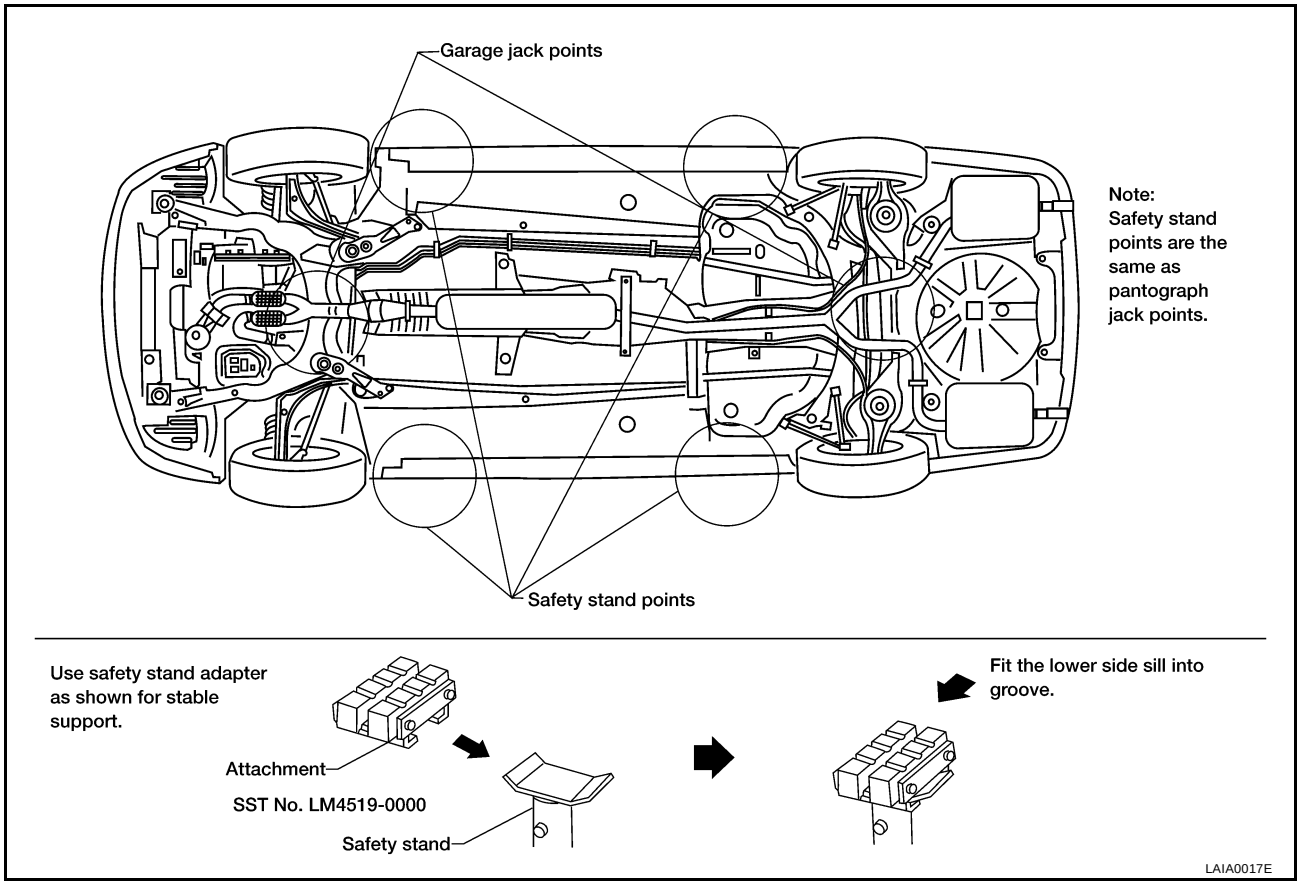

2-pole Lift

EAS000PN

WARNING:

When lifting the vehicle, open the lift arms as wide as possible and ensure that the front and rear of the vehicle are well balanced.

When setting the lift arm, do not allow the arm to contact the brake tubes, brake cable, fuel lines and sill spoiler.

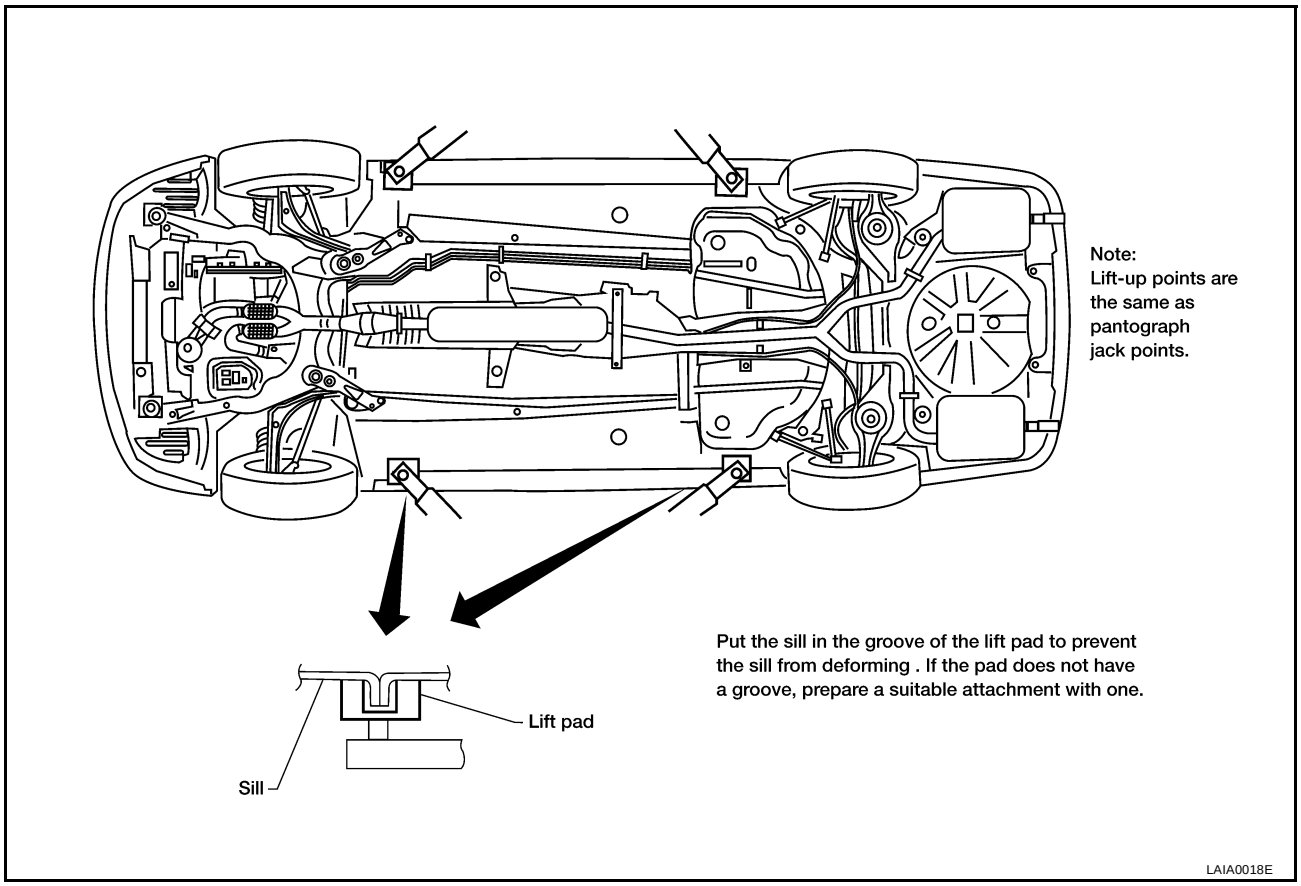

Board-on Lift

EAS000PO

CAUTION:

Make sure vehicle is empty when lifting.

- **The board-on lift attachment (LM4086-0200) set at front end of vehicle should be set on the front of the sill under the front door opening.**
- **Position attachments at front and rear ends of board-on lift.**

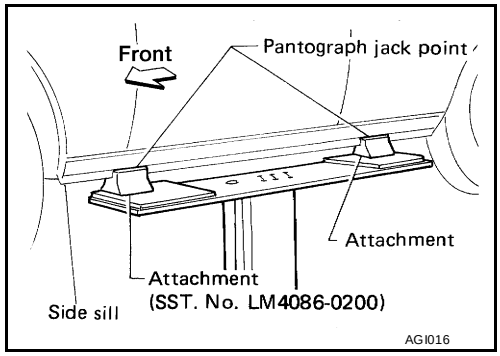

TOW TRUCK TOWING

PFP:00000

Tow Truck Towing

EAS000PP

CAUTION:

- **Never tow an automatic transaxle model with the rear wheels raised and the front wheels on the ground. This may cause serious and expensive damage to the transaxle. If it is necessary to tow the vehicle with the rear wheels raised, always use towing dollies under the front wheels.**
- **Never tow an automatic transmission model from the rear (that is backward) with four wheels on the ground. This may cause serious and expensive damage to the transmission.**

NISSAN recommends that the vehicle be towed with the driving (front) wheels off the ground as illustrated.

CAUTION:

- **Always release the parking brake when towing the vehicle with the front wheels raised with the rear wheels on the ground.**
- **When towing manual transaxle models with the front wheels on the ground (if a towing dolly is not used), turn the ignition key to the OFF position, and secure the steering wheel in the straight-ahead position with a rope or similar device. Never place the ignition key in the LOCK position. This will result in damage to the steering lock mechanism. Move the shift lever to the N (Neutral) position.**

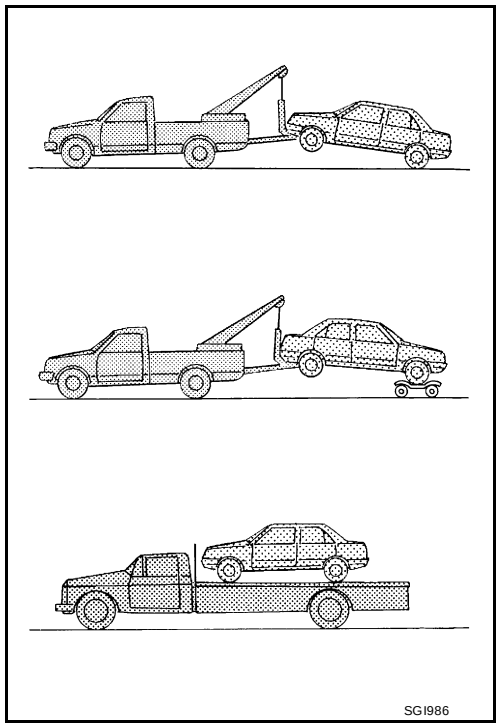

Vehicle Recovery (Freeing a stuck vehicle)

EAS000PQ

Front

- Use the towing hook only, not other parts of the vehicle. Otherwise, the vehicle body will be damaged.
- Use the towing hook only to free a vehicle stuck in sand, snow, mud, etc. Never tow the vehicle for a long distance using only the towing hook.
- The towing hook is under tremendous force when used to free a stuck vehicle. Always pull the cable straight out from the front or rear of the vehicle. Never pull on the hook at an angle.
- Stand clear of a stuck vehicle.

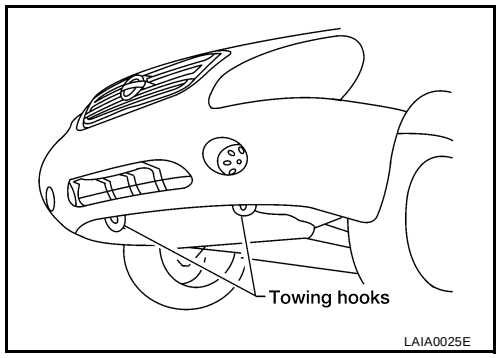

Rear

- Tow chains or cables must be attached only to the main structural members of the vehicle.
- Pulling devices should be routed so they do not touch any part of the suspension, steering, brake or cooling systems.
- Always pull the cable straight out from the front or rear of the vehicle. Never pull on the vehicle at an angle.
- Pulling devices such as ropes or canvas straps are not recommended for use in vehicle towing or recovery.

TIGHTENING TORQUE OF STANDARD BOLTS

PFP:00000

Tightening Torque Table

EAS000PR

Grade	Bolt size	Bolt diameter * mm	Pitch mm	Tightening torque (Without lubricant)							
				Hexagon head bolt				Hexagon flange bolt			
				N-m	kg-m	ft-lb	in-lb	N-m	kg-m	ft-lb	in-lb
4T	M6	6.0	1.0	5.1	0.52	3.8	45.1	6.1	0.62	4.5	53.8
	M8	8.0	1.25	13	1.3	9	—	15	1.5	11	—
			1.0	13	1.3	9	—	16	1.6	12	—
	M10	10.0	1.5	25	2.5	18	—	29	3.0	22	—
			1.25	25	2.6	19	—	30	3.1	22	—
	M12	12.0	1.75	42	4.3	31	—	51	5.2	38	—
			1.25	46	4.7	34	—	56	5.7	41	—
	M14	14.0	1.5	74	7.5	54	—	88	9.0	65	—
7T	M6	6.0	1.0	8.4	0.86	6.2	74.6	10	1.0	7	87
	M8	8.0	1.25	21	2.1	15	—	25	2.5	18	—
			1.0	22	2.2	16	—	26	2.7	20	—
	M10	10.0	1.5	41	4.2	30	—	48	4.9	35	—
			1.25	43	4.4	32	—	51	5.2	38	—
	M12	12.0	1.75	71	7.2	52	—	84	8.6	62	—
			1.25	77	7.9	57	—	92	9.4	68	—
	M14	14.0	1.5	127	13.0	94	—	147	15.0	108	—
9T	M6	6.0	1.0	12	1.2	9	—	15	1.5	11	—
	M8	8.0	1.25	29	3.0	22	—	35	3.6	26	—
			1.0	31	3.2	23	—	37	3.8	27	—
	M10	10.0	1.5	59	6.0	43	—	70	7.1	51	—
			1.25	62	6.3	46	—	74	7.5	54	—
	M12	12.0	1.75	98	10.0	72	—	118	12.0	87	—
			1.25	108	11.0	80	—	137	14.0	101	—
	M14	14.0	1.5	177	18.0	130	—	206	21.0	152	—

*: Nominal diameter

1. **Special parts are excluded.**
2. **This standard is applicable to bolts having the following marks embossed on the bolt head.**

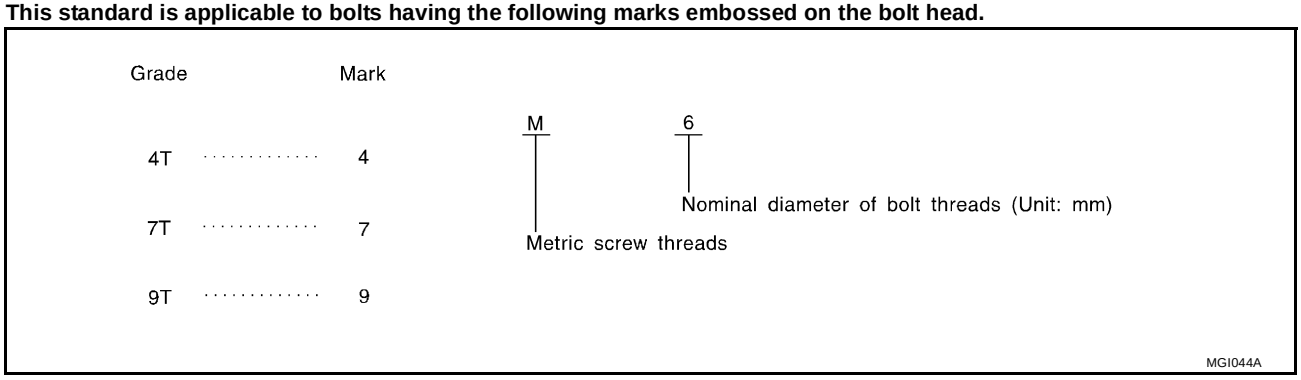

RECOMMENDED CHEMICAL PRODUCTS AND SEALANTS

PFP:00000

Recommended Chemical Products and Sealants

EAS000PS

Refer to the following chart for help in selecting the appropriate chemical product or sealant.

	Product Description	Purpose	Nissan North America Part No. (USA)	Nissan Canada Part No. (Canada)	Aftermarket Cross Reference Part Nos.
1	Rear View Mirror Adhesive	Used to permanently remount rear view mirrors to windows.	999MP-AM000P	99998-50505	Permatex 81844
2	Anaerobic Liquid Gasket	For metal-to-metal flange sealing. Can fill a 0.38 mm (0.015 inch) gap and provide instant sealing for most powertrain applications.	999MP-AM001P	99998-50503	Three Bond 1215; Permatex 51813 and 51817
3	High Performance Thread Sealant	Provides instant sealing on any threaded straight or parallel threaded fitting. (Thread sealant only, no locking ability.) ● Do not use on plastic.	999MP-AM002P	999MP-AM002P	Permatex 56521
4	Silicone RTV	Gasket Maker	999MP-AM003P (Ultra Grey)	99998-50506 (Ultra Grey)	Permatex Ultra Grey 82194; Three Bond 1207 and 1216; Nissan RTV Part No. 999MP-A7007
5	High Temperature, High Strength Thread Locking Sealant (Red)	Threadlocker	999MP-AM004P	999MP-AM004P	Permatex 27200; Three Bond 1360, 1360N, 1305 N&P, 1307N, 1335, 1335B, 1363B, 1377C, 1386B, D&E and 1388
6	Medium Strength Thread Locking Sealant (Blue)	Threadlocker (service tool removable)	999MP-AM005P	999MP-AM005P	Permatex 24200, 24206, 24240, 24283 and 09178; Three Bond 1322, 1322N, 1324 D&N, 1333D, 1361C, 1364D, 1370C and 1374

IDENTIFICATION INFORMATION

PFP:00010

GI

Model Variation

EAS000PT

Body	Engine	Transmission	Grade	Destination	
				USA	Canada
Sedan	QR25DE	M/T	Base	BDBALAF-EUA	BDBALAF-ENA
		A/T	Base	BDBALAA-EUA	BDBALAA-ENA
		M/T	S	BDBALBF-EUA	BDBALBF-ENA
		A/T	S	BDBALBA-EUA	BDBALBA-ENA
		M/T	SL	BDBALBF-EUA	BDBALBF-ENA
		A/T	SL	BDBALBA-EUA	BDBALBA-ENA
	VQ35DE	M/T	SE	BLJALBF-EUA	BLJALBF-ENA
		A/T	SE	BLJALBA-EUA	BLJALBA-ENA

Prefix and suffix designations:

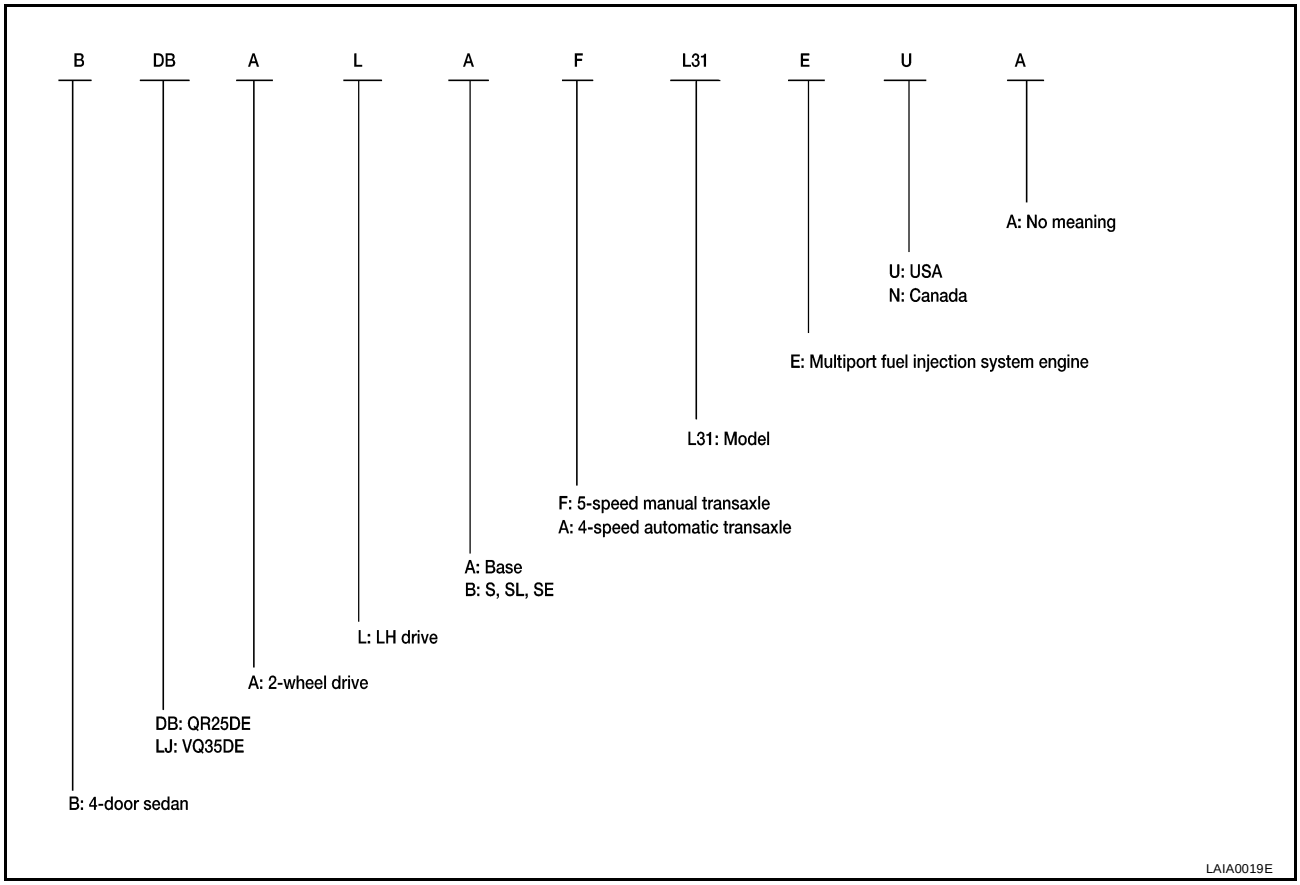

IDENTIFICATION NUMBER

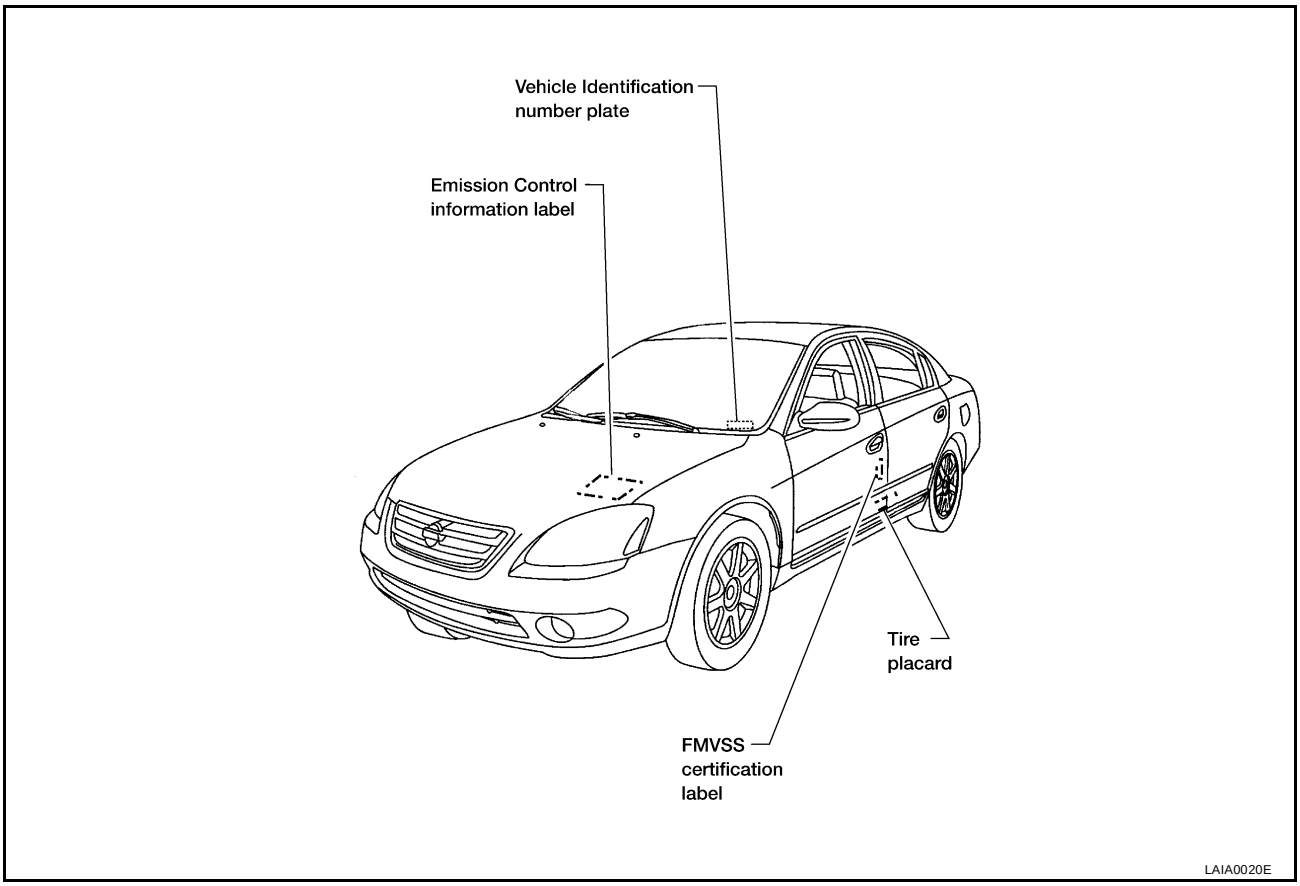

Vehicle Identification Number Arrangement

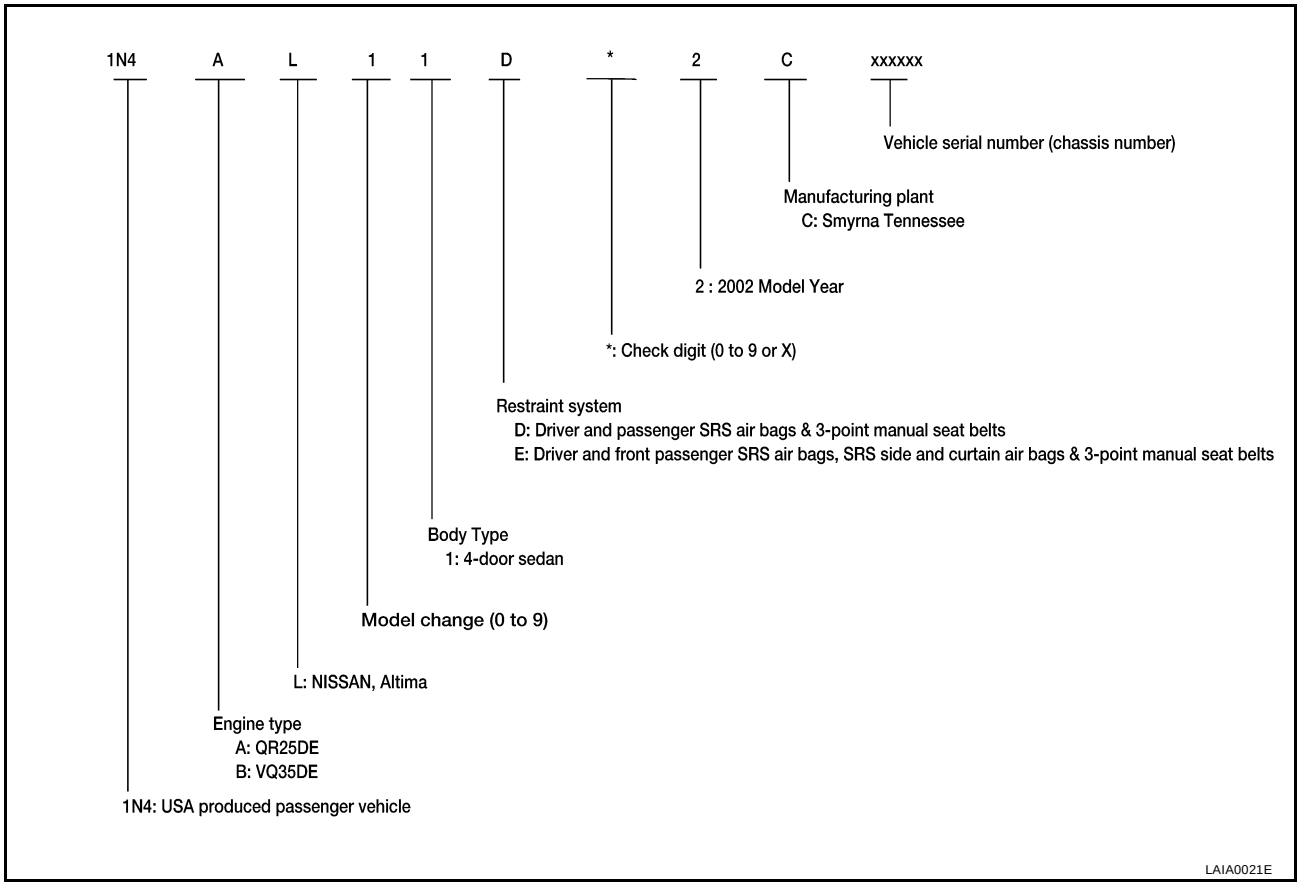

IDENTIFICATION PLATE

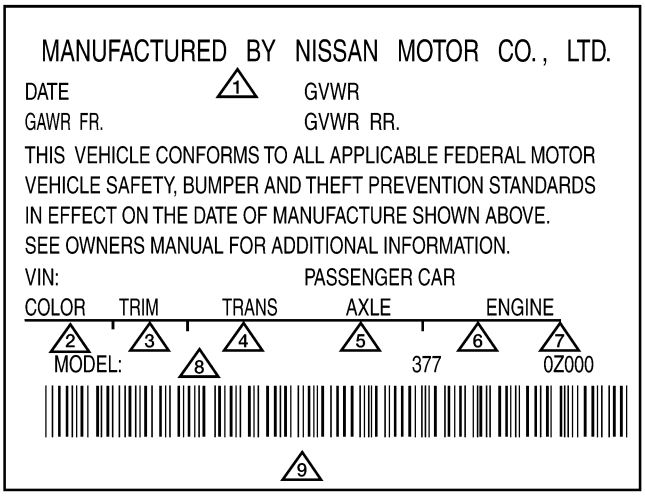

1. Date of manufacture
2. Body color code
3. Trim color code
4. Transmission model
5. Axle model
6. Engine model
7. Engine displacement
8. Model
9. Vehicle identification number (Chassis number)

LAIA0027E

ENGINE SERIAL NUMBER

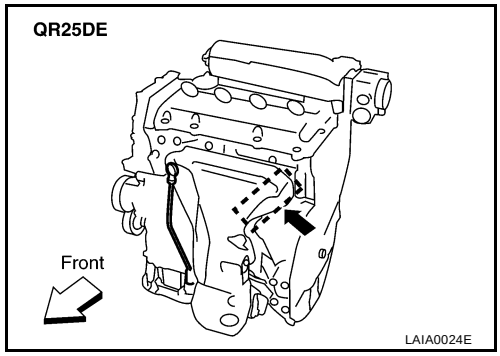

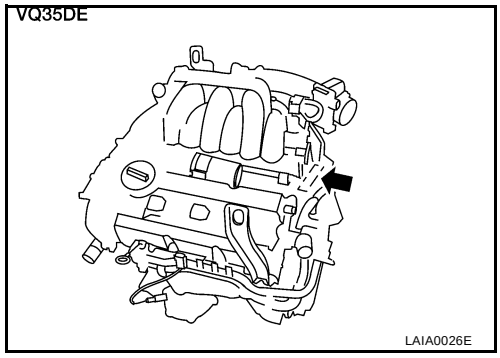

AUTOMATIC TRANSAXLE NUMBER

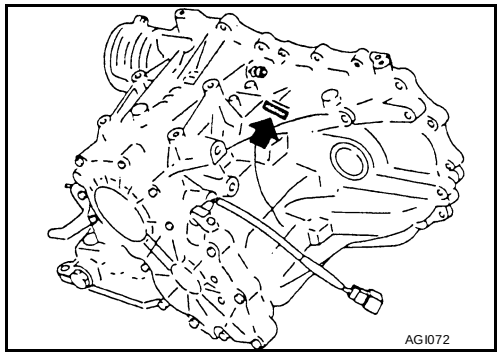

MANUAL TRANSAXLE NUMBER

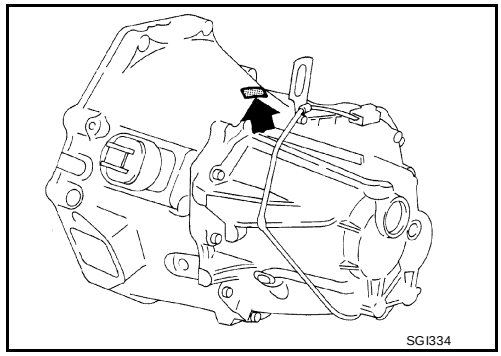

Dimensions

EAS000PU

Unit:mm (in)

Overall length	4,864 (191.5)
Overall width	1,788 (70.4)
Overall height	1,471 (57.9)
Front tread	1,594 (61.0)
Rear tread	1,554 (61.2)
Wheelbase	2,799 (110.2)

Wheels & Tires

EAS000PV

	Conventional	Spare
Road wheel/offset mm (in)	16 X 6.5JJ Steel/1.57 (40) 17 X 7JJ Aluminum/1.57 (40)	16 X 4t
Tire size	205/65R16 215/55R17	T135/70R16 T135/90*16

*: D or R, depending on manufacturer.

TERMINOLOGY

PFP:00011

GI

SAE J1930 Terminology List

EAS000PW

All emission related terms used in this publication in accordance with SAE J1930 are listed. Accordingly, new terms, new acronyms/abbreviations and old terms are listed in the following chart.

NEW TERM	NEW ACRONYM / ABBREVIATION	OLD TERM
Air cleaner	ACL	Air cleaner
Barometric pressure	BARO	***
Barometric pressure sensor-BCDD	BAROS-BCDD	BCDD
Camshaft position	CMP	***
Camshaft position sensor	CMPS	Crank angle sensor
Canister	***	Canister
Carburetor	CARB	Carburetor
Charge air cooler	CAC	Intercooler
Closed loop	CL	Closed loop
Closed throttle position switch	CTP switch	Idle switch
Clutch pedal position switch	CPP switch	Clutch switch
Continuous fuel injection system	CFI system	***
Continuous trap oxidizer system	CTOX system	***
Crankshaft position	CKP	***
Crankshaft position sensor	CKPS	***
Data link connector	DLC	***
Data link connector for CONSULT-II	DLC for CONSULT-II	Diagnostic connector for CONSULT-II
Diagnostic test mode	DTM	Diagnostic mode
Diagnostic test mode selector	DTM selector	Diagnostic mode selector
Diagnostic test mode I	DTM I	Mode I
Diagnostic test mode II	DTM II	Mode II
Diagnostic trouble code	DTC	Malfunction code
Direct fuel injection system	DFI system	***
Distributor ignition system	DI system	Ignition timing control
Early fuel evaporation-mixture heater	EFE-mixture heater	Mixture heater
Early fuel evaporation system	EFE system	Mixture heater control
Electrically erasable programmable read only memory	EEPROM	***
Electronic ignition system	EI system	Ignition timing control
Engine control	EC	***
Engine control module	ECM	ECCS control unit
Engine coolant temperature	ECT	Engine temperature
Engine coolant temperature sensor	ECTS	Engine temperature sensor
Engine modification	EM	***
Engine speed	RPM	Engine speed
Erasable programmable read only memory	EPROM	***
Evaporative emission canister	EVAP canister	Canister
Evaporative emission system	EVAP system	Canister control solenoid valve
Exhaust gas recirculation valve	EGR valve	EGR valve

NEW TERM	NEW ACRONYM / ABBREVIATION	OLD TERM
Exhaust gas recirculation control-BPT valve	EGRC-BPT valve	BPT valve
Exhaust gas recirculation control-solenoid valve	EGRC-solenoid valve	EGR control solenoid valve
Exhaust gas recirculation temperature sensor	EGRT sensor	Exhaust gas temperature sensor
EGR temperature sensor		
Flash electrically erasable programmable read only memory	FEEPROM	***
Flash erasable programmable read only memory	FEPROM	***
Flexible fuel sensor	FFS	***
Flexible fuel system	FF system	***
Fuel pressure regulator	***	Pressure regulator
Fuel pressure regulator control solenoid valve	***	PRVR control solenoid valve
Fuel trim	FT	***
Heated Oxygen sensor	HO2S	Exhaust gas sensor
Idle air control system	IAC system	Idle speed control
Idle air control valve-air regulator	IACV-air regulator	Air regulator
Idle air control valve-auxiliary air control valve	IACV-AAC valve	Auxiliary air control (AAC) valve
Idle air control valve-FICD solenoid valve	IACV-FICD solenoid valve	FICD solenoid valve
Idle air control valve-idle up control solenoid valve	IACV-idle up control solenoid valve	Idle up control solenoid valve
Idle speed control-FI pot	ISC-FI pot	FI pot
Idle speed control system	ISC system	***
Ignition control	IC	***
Ignition control module	ICM	***
Indirect fuel injection system	IFI system	***
Intake air	IA	Air
Intake air temperature sensor	IAT sensor	Air temperature sensor
Knock	***	Detonation
Knock sensor	KS	Detonation sensor
Malfunction indicator lamp	MIL	Check engine light
Manifold absolute pressure	MAP	***
Manifold absolute pressure sensor	MAPS	***
Manifold differential pressure	MDP	***
Manifold differential pressure sensor	MDPS	***
Manifold surface temperature	MST	***
Manifold surface temperature sensor	MSTS	***
Manifold vacuum zone	MVZ	***
Manifold vacuum zone sensor	MVZS	***
Mass air flow sensor	MAFS	Air flow meter
Mixture control solenoid valve	MC solenoid valve	Air-fuel ratio control solenoid valve
Multiport fuel injection System	MFI system	Fuel injection control

NEW TERM	NEW ACRONYM / ABBREVIATION	OLD TERM
Nonvolatile random access memory	NVRAM	***
On board diagnostic system	OBD system	Self-diagnosis
Open loop	OL	Open loop
Oxidation catalyst	OC	Catalyst
Oxidation catalytic converter system	OC system	***
Oxygen sensor	O2S	Exhaust gas sensor
Park position switch	***	Park switch
Park/neutral position switch	PNP switch	Park/neutral switch Inhibitor switch Neutral position switch
Periodic trap oxidizer system	PTOX system	***
Positive crankcase ventilation	PCV	Positive crankcase ventilation
Positive crankcase ventilation valve	PCV valve	PCV valve
Powertrain control module	PCM	***
Programmable read only memory	PROM	***
Pulsed secondary air injection control solenoid valve	PAIRC solenoid valve	AIV control solenoid valve
Pulsed secondary air injection system	PAIR system	Air induction valve (AIV) control
Pulsed secondary air injection valve	PAIR valve	Air induction valve
Random access memory	RAM	***
Read only memory	ROM	***
Scan tool	ST	***
Secondary air injection pump	AIR pump	***
Secondary air injection system	AIR system	***
Sequential multiport fuel injection system	SFI system	Sequential fuel injection
Service reminder indicator	SRI	***
Simultaneous multiport fuel injection system	***	Simultaneous fuel injection
Smoke puff limiter system	SPL system	***
Supercharger	SC	***
Supercharger bypass	SCB	***
System readiness test	SRT	***
Thermal vacuum valve	TVV	Thermal vacuum valve
Three way catalyst	TWC	Catalyst
Three way catalytic converter system	TWC system	***
Three way + oxidation catalyst	TWC + OC	Catalyst
Three way + oxidation catalytic converter system	TWC + OC system	***
Throttle body	TB	Throttle chamber SPI body
Throttle body fuel injection system	TBI system	Fuel injection control
Throttle position	TP	Throttle position
Throttle position sensor	TPS	Throttle sensor
Throttle position switch	TP switch	Throttle switch
Torque converter clutch solenoid valve	TCC solenoid valve	Lock-up cancel solenoid Lock-up solenoid

NEW TERM	NEW ACRONYM / ABBREVIATION	OLD TERM
Transmission control module	TCM	A/T control unit
Turbocharger	TC	Turbocharger
Vehicle speed sensor	VSS	Vehicle speed sensor
Volume air flow sensor	VAFS	Air flow meter
Warm up oxidation catalyst	WU-OC	Catalyst
Warm up oxidation catalytic converter system	WU-OC system	***
Warm up three way catalyst	WU-TWC	Catalyst
Warm up three way catalytic converter system	WU-TWC system	***
Wide open throttle position switch	WOTP switch	Full switch

***: Not applicable

SECTION GW

GLASSES, WINDOW SYSTEM & MIRRORS

CONTENTS

PRECAUTIONS 3
Precautions for Supplemental Restraint System (SRS) “AIR BAG” and “SEAT BELT PRE-TENSIONER” 3
Handling for Adhesive and Primer 3
Trouble Diagnosis Precaution 3
PREPARATION 4
Special service tool 4
Commercial Service Tool 4
SQUEAK AND RATTLE TROUBLE DIAGNOSES..... 5
Work Flow 5
CUSTOMER INTERVIEW 5
DUPLICATE THE NOISE AND TEST DRIVE 6
CHECK RELATED SERVICE BULLETINS 6
LOCATE THE NOISE AND IDENTIFY THE ROOT CAUSE 6
REPAIR THE CAUSE 6
CONFIRM THE REPAIR 7
Generic Squeak and Rattle Troubleshooting 7
INSTRUMENT PANEL 7
CENTER CONSOLE 7
DOORS 7
TRUNK 8
SUNROOF/HEADLINING 8
SEATS 8
UNDERHOOD 8
Diagnostic Worksheet 9
WINDSHIELD GLASS 11
Removal and Installation 11
REMOVAL 11
INSTALLATION 11
REAR WINDOW GLASS AND MOLDING 13
Removal and Installation 13
REMOVAL 13
INSTALLATION 13
POWER WINDOW SYSTEM 15
Component Parts and Harness Connector Location... 15
System Description 15
AUTO OPERATION 15
POWER WINDOW LOCK 15
DELAYED POWER OPERATION 16
ANTI-PINCH DETECTION FUNCTION 16
Schematic (With Left Front Only Power Window Anti-pinch System) 17
Wiring Diagram – WINDOW – (With Left Front Only Power Window Anti-pinch System) 18
Terminal and Reference Value for Power Window Main Switch 22
Schematic (With Left and Right Front Power Window Anti-pinch System) 23
Wiring Diagram – WINDOW – (With Left and Right Front Power Window Anti-pinch System) 24
Terminal and Reference Value for Power Window Main Switch 28
CONSULT-II Inspection Procedure 28
ACTIVE TEST 30
Trouble Diagnoses 30
Encoder and Limit Switch Check (Driver side) 31
Encoder and Limit Switch Check (Passenger side).. 32
FRONT DOOR GLASS AND REGULATOR 34
Removal and Installation 34
REMOVAL 34
INSTALLATION 35
INSPECTION AFTER REMOVAL 35
DISASSEMBLY AND ASSEMBLY 35
FITTING INSPECTION 35
SETTING AFTER INSTALLATION 35
REAR DOOR GLASS AND REGULATOR 37
Removal and Installation 37
REMOVAL 37
INSTALLATION 38
INSPECTION AFTER REMOVAL 38
FITTING INSPECTION 38
INSIDE MIRROR 39
Wiring Diagram –I/MIRR– 39
Removal and Installation 40
INSIDE MIRROR 40
REAR WINDOW DEFOGGER 41
Component Parts and Harness Connector Location... 41
System Description 41

SYSTEM DIAGRAM 42
CAN Communication System Description 42
FOR TCS MODELS 42
FOR A/T MODELS 44
FOR M/T MODELS 45
Wiring Diagram – DEF – WITH MANUAL A/C 47
Wiring Diagram – DEF – WITH AUTO A/C 48
Wiring Diagram – H/MIRR – 49
Terminal and Reference Value for BCM 51
Terminal and Reference Value for IPDM E/R 51
Work Flow 51
Preliminary Check 52
FUSE CHECK 52
CONSULT–II Function 52
CONSULT–II BASIC OPERATION PROCE-DURE 52
DATA MONITOR 53
ACTIVE TEST 53
Trouble Diagnosis 54
Filament Check 57
Filament Repair 58
REPAIR EQUIPMENT 58
REPAIRING PROCEDURE 58
DOOR MIRROR 60
Wring Diagram –MIRROR– 60
Removal and Installation 61

PRECAUTIONS

PFP:00001

Precautions for Supplemental Restraint System (SRS) “AIR BAG” and “SEAT BELT PRE-TENSIONER”

EIS000S9

The Supplemental Restraint System such as “AIR BAG” and “SEAT BELT PRE-TENSIONER”, used along with a front seat belt, helps to reduce the risk or severity of injury to the driver and front passenger for certain types of collision. Information necessary to service the system safely is included in the SRS and SB section of this Service Manual.

WARNING:

- **To avoid rendering the SRS inoperative, which could increase the risk of personal injury or death in the event of a collision which would result in air bag inflation, all maintenance must be performed by an authorized NISSAN/INFINITI dealer.**
- **Improper maintenance, including incorrect removal and installation of the SRS, can lead to personal injury caused by unintentional activation of the system. For removal of Spiral Cable and Air Bag Module, see the SRS section.**
- **Do not use electrical test equipment on any circuit related to the SRS unless instructed to in this Service Manual. SRS wiring harnesses can be identified by yellow and/or orange harness connectors.**

Handling for Adhesive and Primer

EIS000SA

- Do not use an adhesive which is past its usable date. Shelf life of this product is limited to six months after the date of manufacture. Carefully adhere to the expiration or manufacture date printed on the box.
- Keep primers and adhesive in a cool, dry place. Ideally, they should be stored in a refrigerator.
- Open the seal of the primer and adhesive just before application. Discard the remainder.
- Before application, be sure to shake the primer container to stir the contents. If any floating material is found, do not use it.
- If any primer or adhesive contacts the skin, wipe it off with gasoline or equivalent and wash the skin with soap.
- When using primer and adhesive, always observe the precautions in the instruction manual.

Trouble Diagnosis Precaution

EIS000SB

When you read wiring diagrams, refer to the following:

- GI-12, "How to Read Wiring Diagrams"
- PG-3, "POWER SUPPLY ROUTING CIRCUIT"

When you perform trouble diagnosis, refer to the following:

- GI-10, "HOW TO FOLLOW TEST GROUPS IN TROUBLE DIAGNOSES"
- GI-25, "How to Perform Efficient Diagnosis for an Electrical Incident"

Check for any service bulletins before servicing the vehicle.

PREPARATION

PFP:00002

Special service tool

EIS000SC

The actual shapes of Kent-Moore tools may differ from those of special service tools illustrated here.

Tool number (Kent-Moore No.) Tool name	Description
(J-39570) Chasis ear 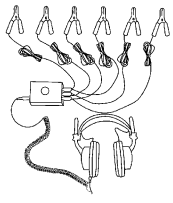 SIIA0993E	Locating the noise
(J-43980) NISSAN Squeak and Rattle Kit 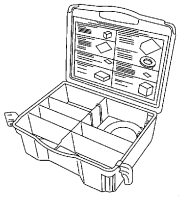 SIIA0994E	Repairing the cause of noise

Commercial Service Tool

EIS000SD

Tool name	Description
Engine ear 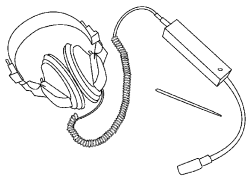 SIIA0995E	Locating the noise

SQUEAK AND RATTLE TROUBLE DIAGNOSES

PFP:00000

Work Flow

EIS000SE

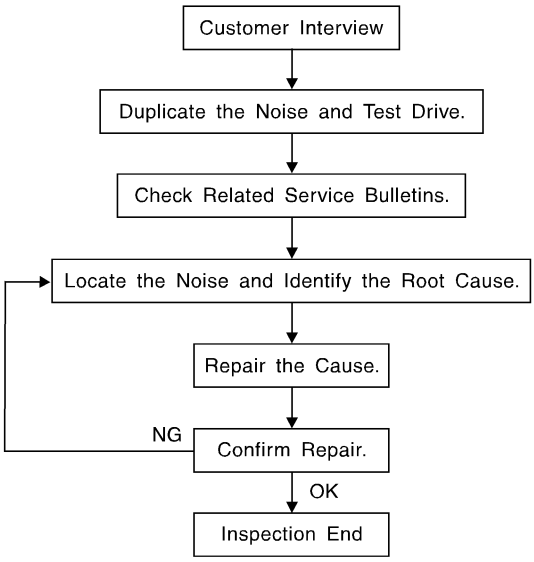

SBT842

CUSTOMER INTERVIEW

Interview the customer if possible, to determine the conditions that exist when the noise occurs. Use the Diagnostic Worksheet during the interview to document the facts and conditions when the noise occurs and any customer's comments; refer to GW-9, "Diagnostic Worksheet" . This information is necessary to duplicate the conditions that exist when the noise occurs.

- The customer may not be able to provide a detailed description or the location of the noise. Attempt to obtain all the facts and conditions that exist when the noise occurs (or does not occur).
- If there is more than one noise in the vehicle, be sure to diagnose and repair the noise that the customer is concerned about. This can be accomplished by test driving the vehicle with the customer.
- After identifying the type of noise, isolate the noise in terms of its characteristics. The noise characteristics are provided so the customer, service adviser and technician are all speaking the same language when defining the noise.
- Squeak —(Like tennis shoes on a clean floor)
  Squeak characteristics include the light contact/fast movement/brought on by road conditions/hard surfaces=higher pitch noise/softer surfaces=lower pitch noises/edge to surface=chirping
- Creak—(Like walking on an old wooden floor)
  Creak characteristics include firm contact/slow movement/twisting with a rotational movement/pitch dependent on materials/often brought on by activity.
- Rattle—(Like shaking a baby rattle)
  Rattle characteristics include the fast repeated contact/vibration or similar movement/loose parts/missing clip or fastener/incorrect clearance.
- Knock —(Like a knock on a door)
  Knock characteristics include hollow sounding/sometimes repeating/often brought on by driver action.
- Tick—(Like a clock second hand)
  Tick characteristics include gentle contacting of light materials/loose components/can be caused by driver action or road conditions.
- Thump—(Heavy, muffled knock noise)
  Thump characteristics include softer knock/dead sound often brought on by activity.
- Buzz—(Like a bumble bee)
  Buzz characteristics include high frequency rattle/firm contact.
- Often the degree of acceptable noise level will vary depending upon the person. A noise that you may judge as acceptable may be very irritating to the customer.
- Weather conditions, especially humidity and temperature, may have a great effect on noise level.

DUPLICATE THE NOISE AND TEST DRIVE

If possible, drive the vehicle with the customer until the noise is duplicated. Note any additional information on the Diagnostic Worksheet regarding the conditions or location of the noise. This information can be used to duplicate the same conditions when you confirm the repair.
If the noise can be duplicated easily during the test drive, to help identify the source of the noise, try to duplicate the noise with the vehicle stopped by doing one or all of the following:

1) Close a door.
2) Tap or push/pull around the area where the noise appears to be coming from.
3) Rev the engine.
4) Use a floor jack to recreate vehicle “twist”.
5) At idle, apply engine load (electrical load, half-clutch on M/T model, drive position on A/T model).
6) Raise the vehicle on a hoist and hit a tire with a rubber hammer.

- Drive the vehicle and attempt to duplicate the conditions the customer states exist when the noise occurs.
- If it is difficult to duplicate the noise, drive the vehicle slowly on an undulating or rough road to stress the vehicle body.

CHECK RELATED SERVICE BULLETINS

After verifying the customer concern or symptom, check ASIST for Technical Service Bulletins (TSBs) related to that concern or symptom.
If a TSB relates to the symptom, follow the procedure to repair the noise.

LOCATE THE NOISE AND IDENTIFY THE ROOT CAUSE

1. Narrow down the noise to a general area.To help pinpoint the source of the noise, use a listening tool (Chassis Ear: J-39570, Engine Ear: J-39565 and mechanic's stethoscope).
2. Narrow down the noise to a more specific area and identify the cause of the noise by:

- removing the components in the area that you suspect the noise is coming from.
  Do not use too much force when removing clips and fasteners, otherwise clips and fasteners can be broken or lost during the repair, resulting in the creation of new noise.
- tapping or pushing/pulling the component that you suspect is causing the noise.
  Do not tap or push/pull the component with excessive force, otherwise the noise will be eliminated only temporarily.
- feeling for a vibration with your hand by touching the component(s) that you suspect is (are) causing the noise.
- placing a piece of paper between components that you suspect are causing the noise.
- looking for loose components and contact marks.
  Refer to GW-7, "Generic Squeak and Rattle Troubleshooting" .

REPAIR THE CAUSE

- If the cause is a loose component, tighten the component securely.
- If the cause is insufficient clearance between components:
  - separate components by repositioning or loosening and retightening the component, if possible.
  - insulate components with a suitable insulator such as urethane pads, foam blocks, felt cloth tape or urethane tape. A NISSAN Squeak and Rattle Kit (J-43980) is available through your authorized Nissan Parts Department.

CAUTION:
Do not use excessive force as many components are constructed of plastic and may be damaged.
Always check with the Parts Department for the latest parts information.
The following materials are contained in the NISSAN Squeak and Rattle Kit (J-43980). Each item can be ordered separately as needed.
URETHANE PADS [1.5 mm (0.059 in) thick]
Insulates connectors, harness, etc.
76268-9E005: 100×135 mm (3.94×5.31 in)/76884-71L01: 60×85 mm (2.36×3.35 in)/76884-71L02: 15×25 mm (0.59×0.98 in)
INSULATOR (Foam blocks)
Insulates components from contact.Can be used to fill space behind a panel.
73982-9E000: 45 mm (1.77 in) thick, 50×50 mm (1.97×1.97 in)/73982-50Y00: 10 mm (0.39 in) thick, 50×50 mm (1.97×1.97 in)
INSULATOR (Light foam block)

80845-71L00: 30 mm (1.18 in) thick, 30×50 mm (1.18×1.97 in)
FELT CLOTH TAPE
Used to insulate where movement does not occur. Ideal for instrument panel applications.
68370-4B000: 15×25 mm (0.59×0.98 in) pad/68239-13E00: 5 mm (0.20 in) wide tape roll. The following materials not found in the kit can also be used to repair squeaks and rattles.
UHMW(TEFLON) TAPE
Insulates where slight movement is present. Ideal for instrument panel applications.
SILICONE GREASE
Used instead of UHMW tape that will be visible or not fit.
Note: Will only last a few months.
SILICONE SPRAY
Use when grease cannot be applied.
DUCT TAPE
Use to eliminate movement.

CONFIRM THE REPAIR

Confirm that the cause of a noise is repaired by test driving the vehicle. Operate the vehicle under the same conditions as when the noise originally occurred. Refer to the notes on the Diagnostic Worksheet.

Generic Squeak and Rattle Troubleshooting

EIS000SF

Refer to Table of Contents for specific component removal and installation information.

INSTRUMENT PANEL

Most incidents are caused by contact and movement between:

1. The cluster lid A and instrument panel
2. Acrylic lens and combination meter housing
3. Instrument panel to front pillar garnish
4. Instrument panel to windshield
5. Instrument panel mounting pins
6. Wiring harnesses behind the combination meter
7. A/C defroster duct and duct joint

These incidents can usually be located by tapping or moving the components to duplicate the noise or by pressing on the components while driving to stop the noise. Most of these incidents can be repaired by applying felt cloth tape or silicone spray (in hard to reach areas). Urethane pads can be used to insulate wiring harness.

CAUTION:
Do not use silicone spray to isolate a squeak or rattle. If you saturate the area with silicone, you will not be able to recheck the repair.

CENTER CONSOLE

Components to pay attention to include:

1. Shifter assembly cover to finisher
2. A/C control unit and cluster lid C
3. Wiring harnesses behind audio and A/C control unit

The instrument panel repair and isolation procedures also apply to the center console.

DOORS

Pay attention to the:

1. Finisher and inner panel making a slapping noise
2. Inside handle escutcheon to door finisher
3. Wiring harnesses tapping
4. Door striker out of alignment causing a popping noise on starts and stops

Tapping or moving the components or pressing on them while driving to duplicate the conditions can isolate many of these incidents. You can usually insulate the areas with felt cloth tape or insulator foam blocks from the NISSAN Squeak and Rattle Kit (J-43980) to repair the noise.

TRUNK

Trunk noises are often caused by a loose jack or loose items put into the trunk by the owner.
In addition look for:

1. Trunk lid bumpers out of adjustment
2. Trunk lid striker out of adjustment
3. The trunk lid torsion bars knocking together
4. A loose license plate or bracket

Most of these incidents can be repaired by adjusting, securing or insulating the item(s) or component(s) causing the noise.

SUNROOF/HEADLINING

Noises in the sunroof/headlining area can often be traced to one of the following:

1. Sunroof lid, rail, linkage or seals making a rattle or light knocking noise
2. Sun visor shaft shaking in the holder
3. Front or rear windshield touching headliner and squeaking

Again, pressing on the components to stop the noise while duplicating the conditions can isolate most of these incidents. Repairs usually consist of insulating with felt cloth tape.

SEATS

When isolating seat noise it's important to note the position the seat is in and the load placed on the seat when the noise is present. These conditions should be duplicated when verifying and isolating the cause of the noise.
Cause of seat noise include:

1. Headrest rods and holder
2. A squeak between the seat pad cushion and frame
3. The rear seatback lock and bracket

These noises can be isolated by moving or pressing on the suspected components while duplicating the conditions under which the noise occurs. Most of these incidents can be repaired by repositioning the component or applying urethane tape to the contact area.

UNDERHOOD

Some interior noise may be caused by components under the hood or on the engine wall. The noise is then transmitted into the passenger compartment.
Causes of transmitted underhood noise include:

1. Any component mounted to the engine wall
2. Components that pass through the engine wall
3. Engine wall mounts and connectors
4. Loose radiator mounting pins
5. Hood bumpers out of adjustment
6. Hood striker out of adjustment

These noises can be difficult to isolate since they cannot be reached from the interior of the vehicle. The best method is to secure, move or insulate one component at a time and test drive the vehicle. Also, engine RPM or load can be changed to isolate the noise. Repairs can usually be made by moving, adjusting, securing, or insulating the component causing the noise.

Diagnostic Worksheet

EIS000SG

SQUEAK & RATTLE DIAGNOSTIC WORKSHEET

Dear Nissan Customer:
We are concerned about your satisfaction with your Nissan vehicle. Repairing a squeak or rattle sometimes can be very difficult. To help us fix your Nissan right the first time, please take a moment to note the area of the vehicle where the squeak or rattle occurs and under what conditions. You may be asked to take a test drive with a service advisor or technician to ensure we confirm the noise you are hearing.

I. WHERE DOESTHE NOISE COME FROM? (circle the area of the vehicle)
The illustrations are for reference only, and may not reflect the actual configuration of your vehicle.

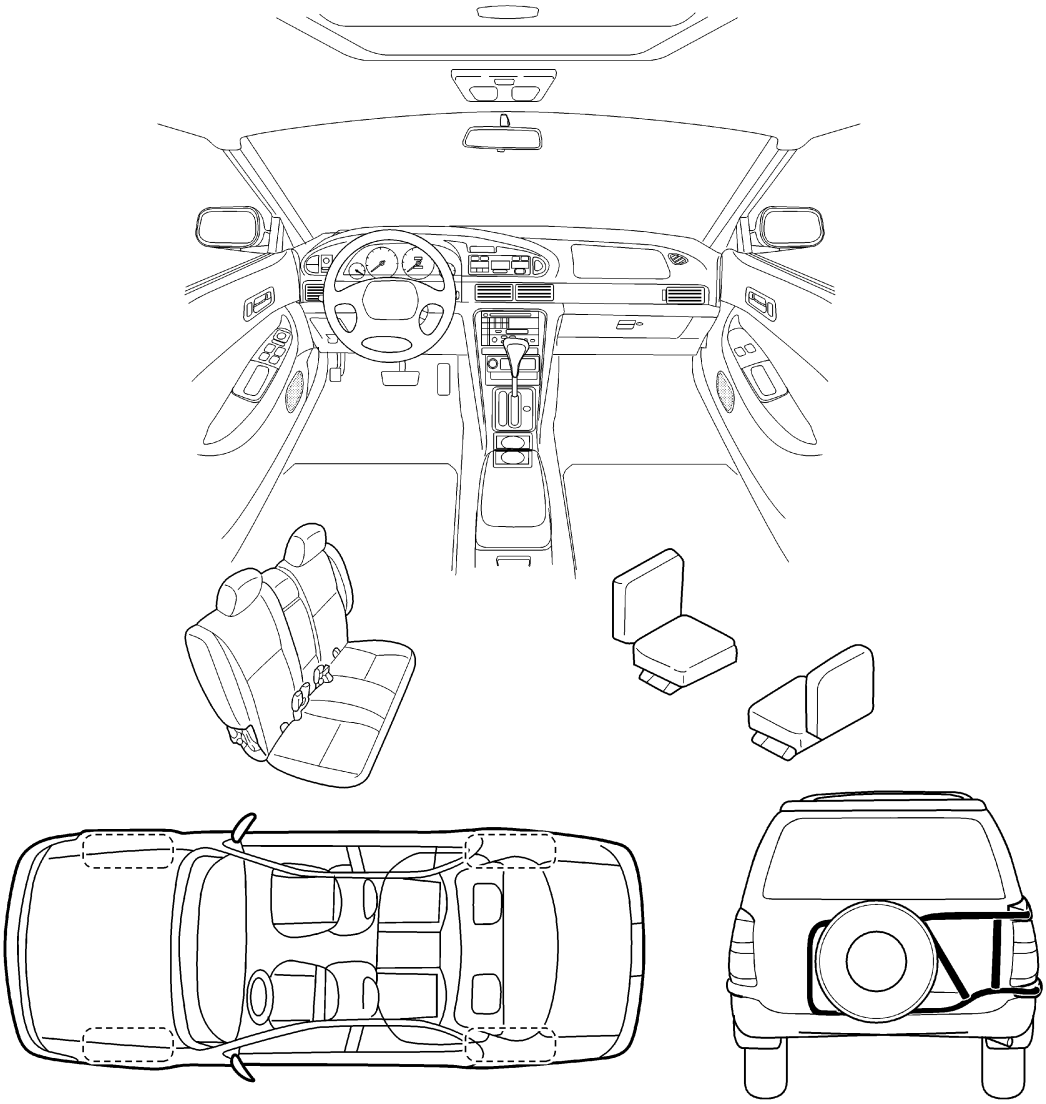

Continue to the back of the worksheet and briefly describe the location of the noise or rattle. In addition, please indicate the conditions which are present when the noise occurs.

ABT468

SQUEAK & RATTLE DIAGNOSTIC WORKSHEET- page 2

Briefly describe the location where the noise occurs:

_____

_____

II. WHEN DOES IT OCCUR? (check the boxes that apply)

❑ anytime
❑ 1st time in the morning
❑ only when it is cold outside
❑ only when it is hot outside
❑ after sitting out in the sun
❑ when it is raining or wet
❑ dry or dusty conditions
❑ other: _____

III. WHEN DRIVING:

❑ through driveways
❑ over rough roads
❑ over speed bumps
❑ only at about ____ mph
❑ on acceleration
❑ coming to a stop
❑ on turns : left, right or either (circle)
❑ with passengers or cargo
❑ other: _____
❑ after driving ____ miles or ____ minutes

IV. WHAT TYPE OF NOISE?

❑ squeak (like tennis shoes on a clean floor)
❑ creak (like walking on an old wooden floor)
❑ rattle (like shaking a baby rattle)
❑ knock (like a knock on a door)
❑ tick (like a clock second hand)
❑ thump (heavy, muffled knock noise)
❑ buzz (like a bumble bee)

TO BE COMPLETED BY DEALERSHIP PERSONNEL
Test Drive Notes:

_____

_____

	YES	NO	Initials of person performing
Vehicle test driven with customer	❑	❑	_____
- Noise verified on test drive	❑	❑	
- Noise source located and repaired	❑	❑	_____
- Follow up test drive performed to confirm repair	❑	❑	_____

VIN: _____ Customer Name: _____

W.O. #: _____ Date: _____

SBT844

This form must be attached to Work Order

WINDSHIELD GLASS

PFP:72712

Removal and Installation

EIS000SH

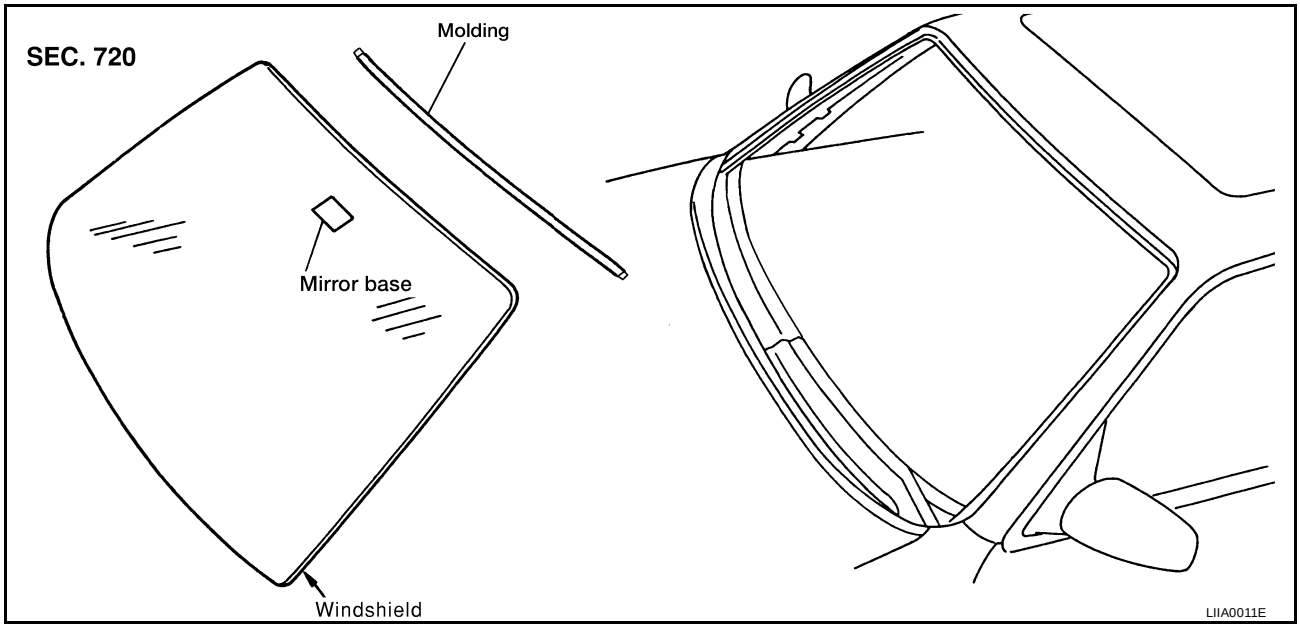

REMOVAL

1. Remove the front pillar garnish. Refer to EI-29, "BODY SIDE TRIM" .
2. Partially remove the headlining (front edge). Refer to EI-33, "HEADLINING" .
3. Remove the front wiper arms. Refer to WW-24, "Removal and Installation for Front Wiper Arms, Adjustment for Wiper Arms Stop Location" .
4. Remove drip molding. Refer to EI-23, "DRIP MOLDING" .
5. Apply a protective tape around the windshield glass to protect the painted surface from damage.

After removing moldings, remove glass using piano wire or power cutting tool and an inflatable pump bag.

- If a windshield glass is to be reused, mark the body and the glass with mating marks.

WARNING:

When cutting the glass from the vehicle, always wear safety glasses and heavy gloves to help prevent glass splinters from entering your eyes or cutting your hands.

CAUTION:

When a windshield glass is to be reused, do not use a cutting knife or power cutting tool.

NOTE:

- Be careful not to scratch the glass when removing.
- Do not set or stand the glass on its edge. Small chips may develop into cracks.

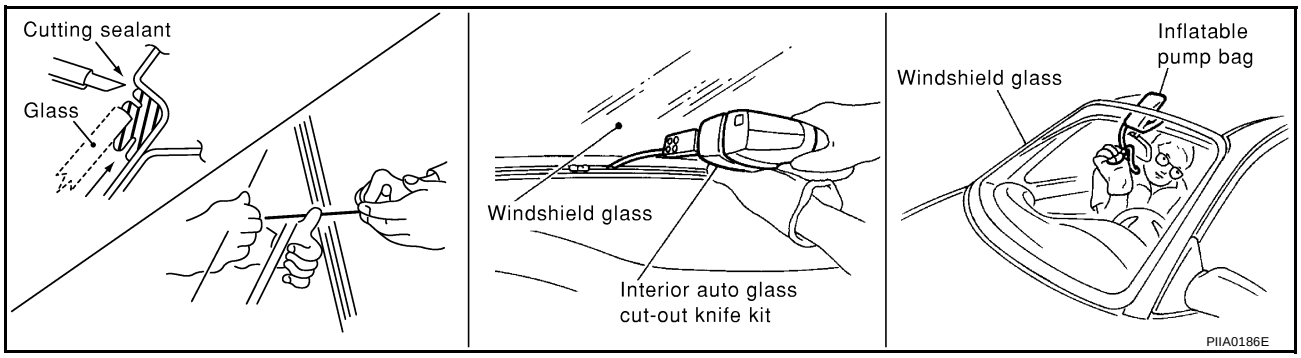

INSTALLATION

- Use a genuine Nissan Urethane Adhesive Kit or equivalent and follow the instructions furnished with it.
- While the urethane adhesive is curing, open a door window. This will prevent the glass from being forced out by passenger compartment air pressure when a door is closed.
- The molding must be installed securely so that it is in position and leaves no gap.

- Inform the customer that the vehicle should remain stationary until the urethane adhesive has completely cured (preferably 24 hours). Curing time varies with temperature and humidity.

WARNING:

- **Keep heat and open flames away as primers and adhesive are flammable.**
- **The materials contained in the kit are harmful if swallowed, and may irritate skin and eyes. Avoid contact with the skin and eyes.**
- **Use in an open, well ventilated location. Avoid breathing the vapors. They can be harmful if inhaled. If affected by vapor inhalation, immediately move to an area with fresh air.**
- **Driving the vehicle before the urethane adhesive has completely cured may affect the performance of the windshield in case of an accident.**

CAUTION:

- **Do not use an adhesive which is past its usable term. Shelf life of this product is limited to six months after the date of manufacture. Carefully adhere to the expiration or manufacture date printed on the box.**
- **Keep primers and adhesive in a cool, dry place. Ideally, they should be stored in a refrigerator.**
- **Do not leave primers or adhesive cartridge unattended with their caps open or off.**
- **The vehicle should not be driven for at least 24 hours or until the urethane adhesive has completely cured. Curing time varies depending on temperature and humidities. The curing time will increase under higher temperatures and lower humidities.**

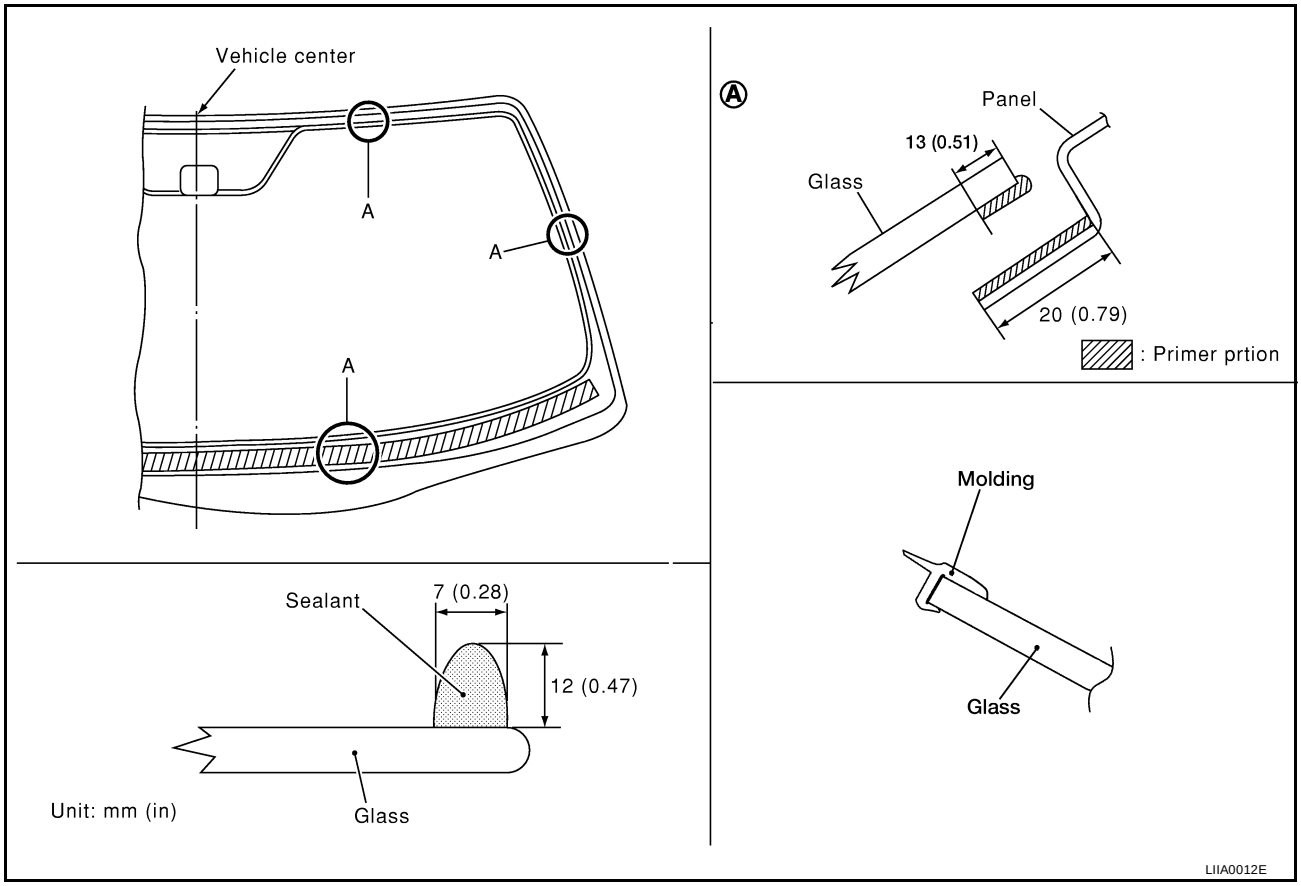

Repairing Water Leaks for Windshield

Leaks can be repaired without removing and reinstalling glass.
If water is leaking between the urethane adhesive material and body or glass, determine the extent of leakage. This can be done by applying water to the windshield area while pushing glass outward.
To stop the leak, apply primer (if necessary) and then urethane adhesive to the leak point.

REAR WINDOW GLASS AND MOLDING

PFP:79712

Removal and Installation

EIS000SI

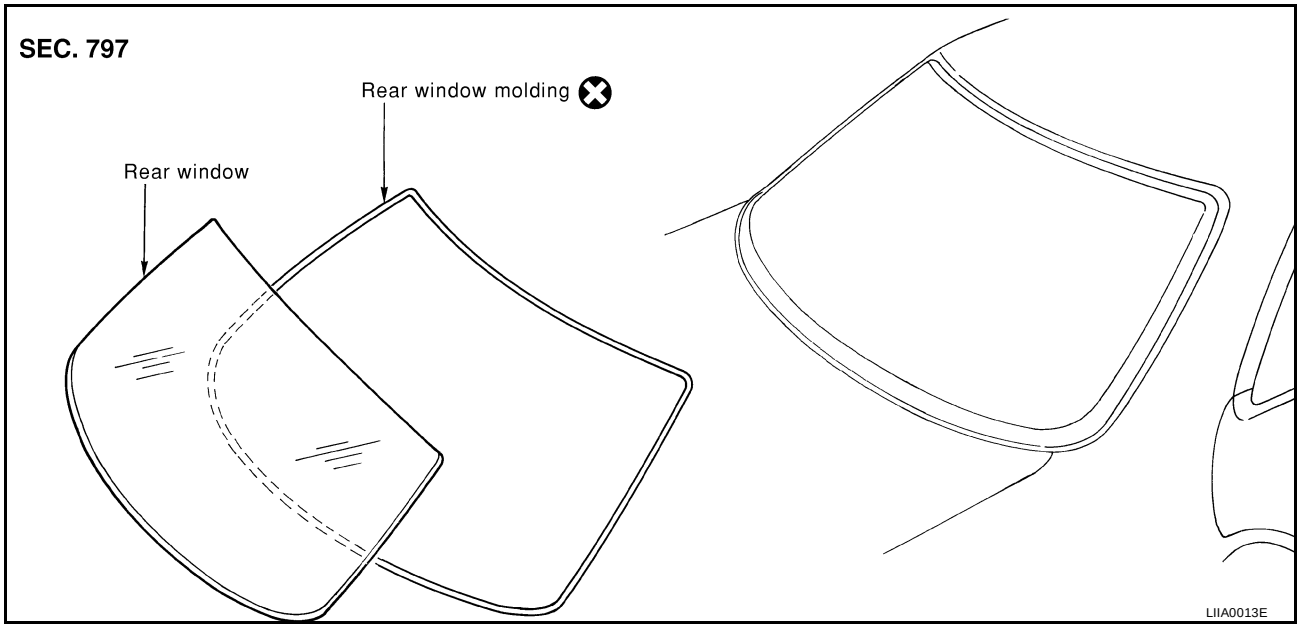

REMOVAL

1. Remove the rear of the headliner. Refer to EI-33, "HEADLINING" .
2. Remove the rear pillar garnish. Refer to EI-29, "BODY SIDE TRIM" .
3. Remove the rear parcel shelf finisher. Refer to EI-31, "REAR PARCEL SHELF FINISHER" .
4. Remove the connectors and grounds for the rear window defogger and printed antenna.

- After removing moldings, remove glass using piano wire or power cutting tool and an inflatable pump bag.
- If a windshield glass is to be reused, mark the body and the glass with mating marks.

WARNING:

When cutting the glass from the vehicle, always wear safety glasses and heavy gloves to help prevent glass splinters from entering your eyes or cutting your hands.

CAUTION:

- **When a windshield glass is to be reused, do not use a cutting knife or power cutting tool.**
- **Be careful not to scratch the glass when removing.**
- **Do not set or stand the glass on its edge. Small chips may develop into cracks.**

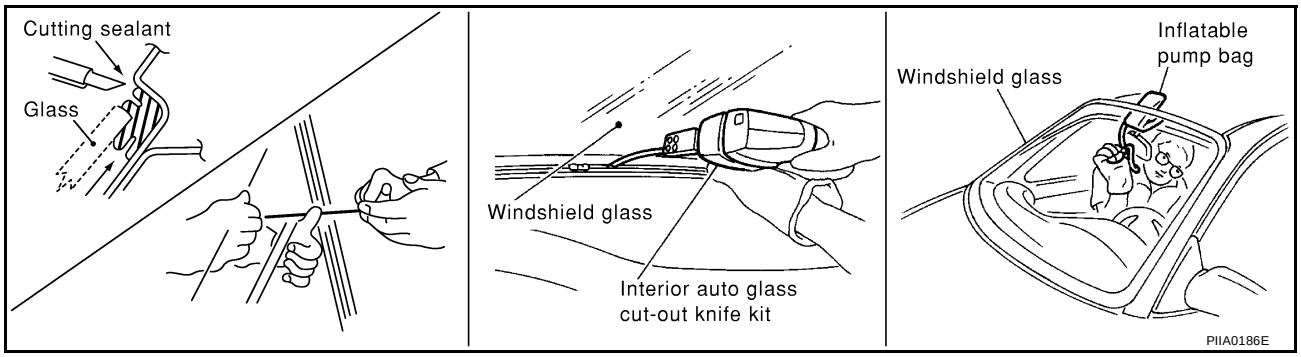

INSTALLATION

- Use a genuine Nissan Urethane Adhesive Kit or equivalent and follow the instructions furnished with it.
- While the urethane adhesive is curing, open a door window. This will prevent the glass from being forced out by passenger compartment air pressure when a door is closed.
- The molding must be installed securely so that it is in position and leaves no gap.
- Inform the customer that the vehicle should remain stationary until the urethane adhesive has completely cured (preferably 24 hours). Curing time varies with temperature and humidity.

WARNING:

- **Keep heat and open flames away as primers and adhesive are flammable.**
- **The materials contained in the kit are harmful if swallowed, and may irritate skin and eyes. Avoid contact with the skin and eyes.**
- **Use in an open, well ventilated location. Avoid breathing the vapors. They can be harmful if inhaled. If affected by vapor inhalation, immediately move to an area with fresh air.**
- **Driving the vehicle before the urethane adhesive has completely cured may affect the performance of the windshield in case of an accident.**

CAUTION:

- **Do not use an adhesive which is past its usable term. Shelf life of this product is limited to six months after the date of manufacture. Carefully adhere to the expiration or manufacture date printed on the box.**
- **Keep primers and adhesive in a cool, dry place. Ideally, they should be stored in a refrigerator.**
- **Do not leave primers or adhesive cartridge unattended with their caps open or off.**
- **The vehicle should not be driven for at least 24 hours or until the urethane adhesive has completely cured. Curing time varies depending on temperature and humidity. The curing time will increase under higher temperatures and lower humidities.**

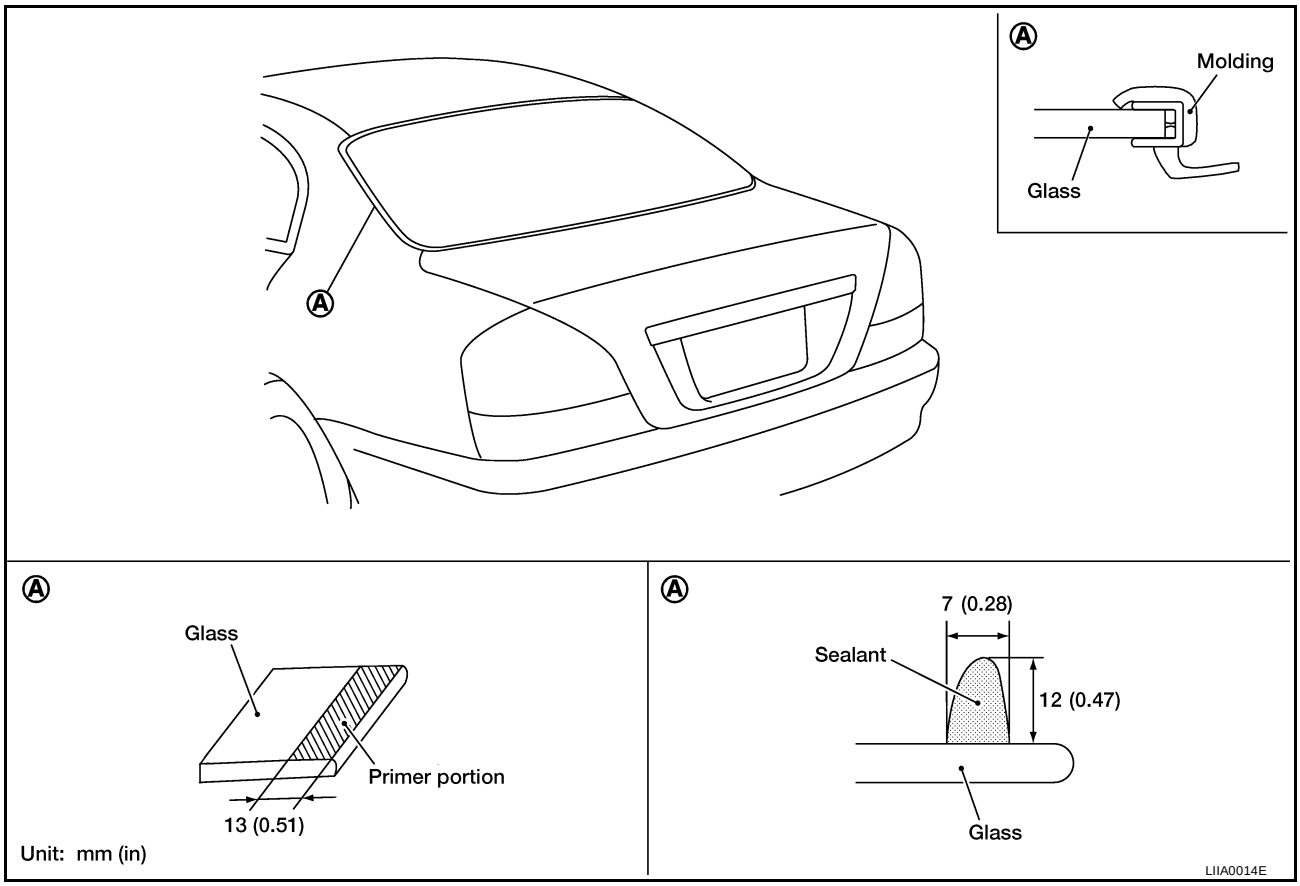

POWER WINDOW SYSTEM

PFP:25401

Component Parts and Harness Connector Location

EIS000SJ

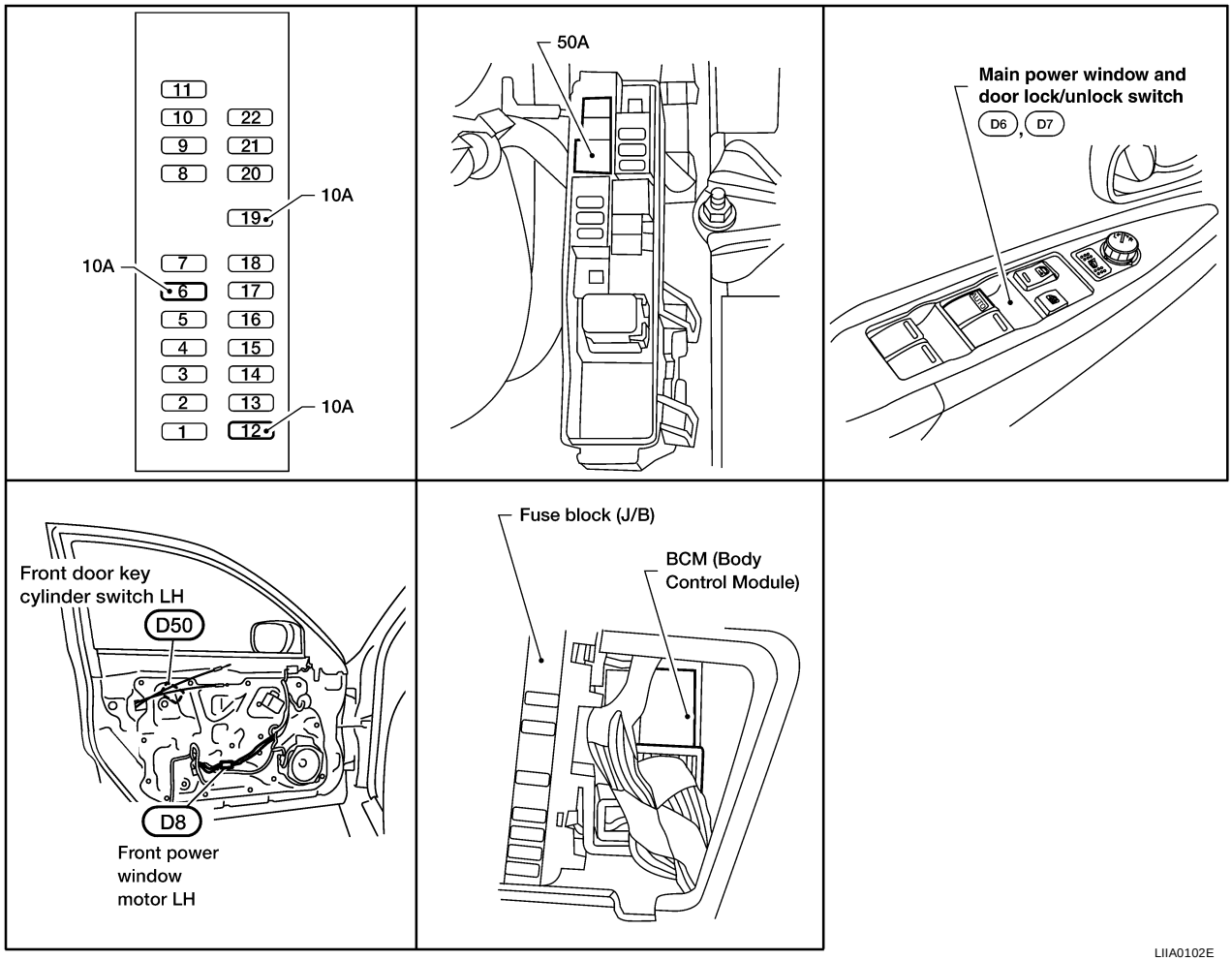

LIIA0102E

System Description

EIS000SK

Power is supplied at all times

- through BCM terminal 28
- to main power window and door lock/unlock switch terminal 5(16).

With ignition switch in ON or START position, power is supplied

- through BCM terminal 29
- to main power window and door lock/unlock switch terminal 12 (17),
- to front power window switch RH terminal 5(13),
- to rear power window switch LH and RH terminal 5.

( ): with left and right front power window anti-pinch system.

AUTO OPERATION

The power window AUTO feature enables the driver (driver and passenger) to open or close the window without holding the window switch in the down or up position.
( ): with left and right front power window anti-pinch system.

POWER WINDOW LOCK

The power window lock is designed to lock operation of all windows except for driver's window.
When the lock switch is pressed to pressed to lock position, ground of the sub-switches in the power window main switch is disconnected. This prevents the power window motors from operating.

DELAYED POWER OPERATION

When the ignition switch is turned to the OFF position, the power window will still operate for up to approximately 45 seconds unless the driver side or passenger side door is opened.

ANTI-PINCH DETECTION FUNCTION

During raising operation of driver or passenger power window (if equipped), if door control module detects that foreign object is pinched, power window lowers approximately 150 mm (5.91 in).

NOTE:
Depending on environment and driving conditions, if a similar impact or load is applied to power window, it may lower.

Operation Conditions

- Driver and passenger door window is between fully-open and just before fully-closed position (when the limit switch is ON).
- During automatic operation when ignition switch is turned ON.
- During automatic or manual operation when ignition switch is other than ON position (when the timer operates).

Schematic (With Left Front Only Power Window Anti-pinch System)

EIS000SL

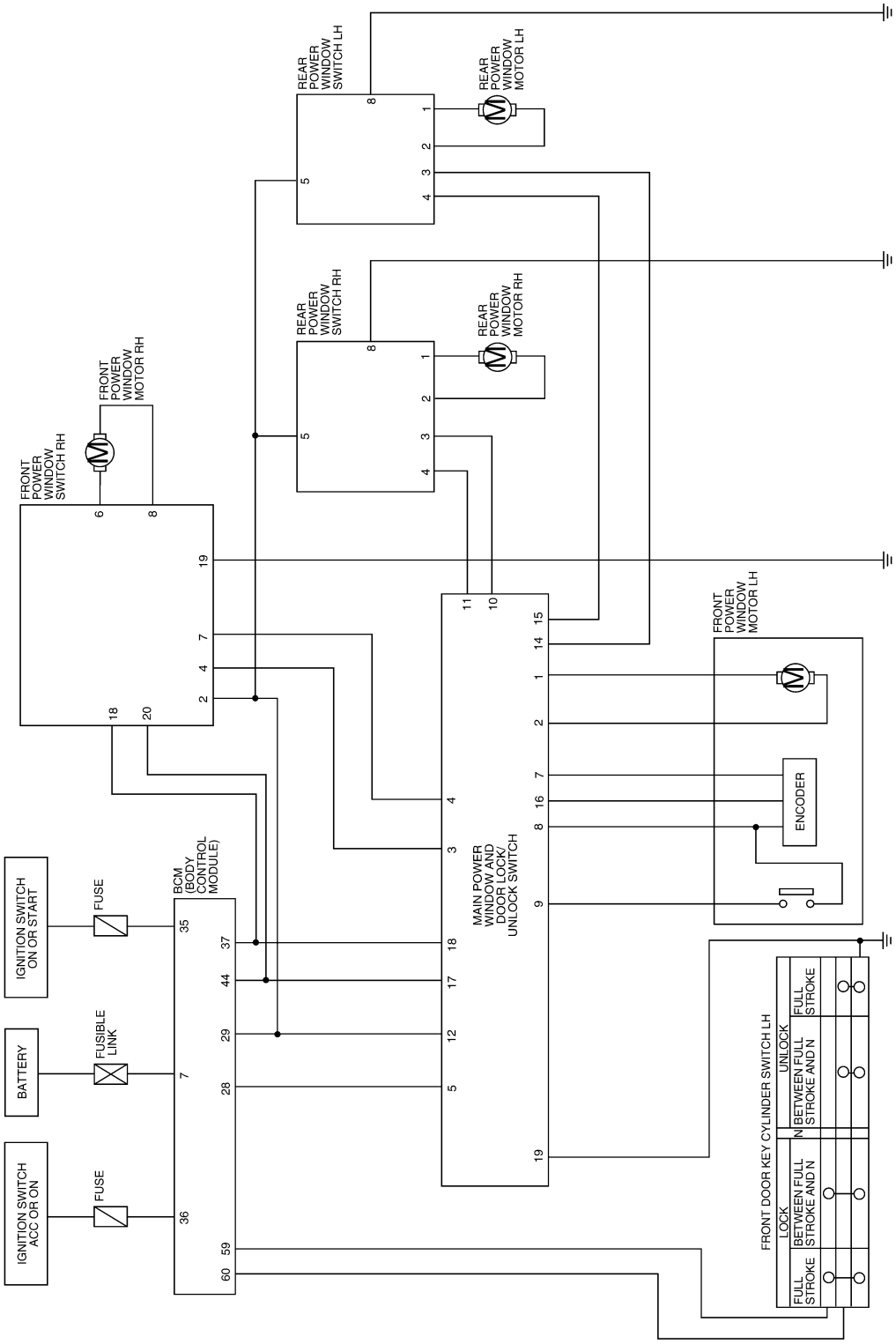

WIWA0143E

Wiring Diagram – WINDOW – (With Left Front Only Power Window Anti-pinch System)

EIS000SM

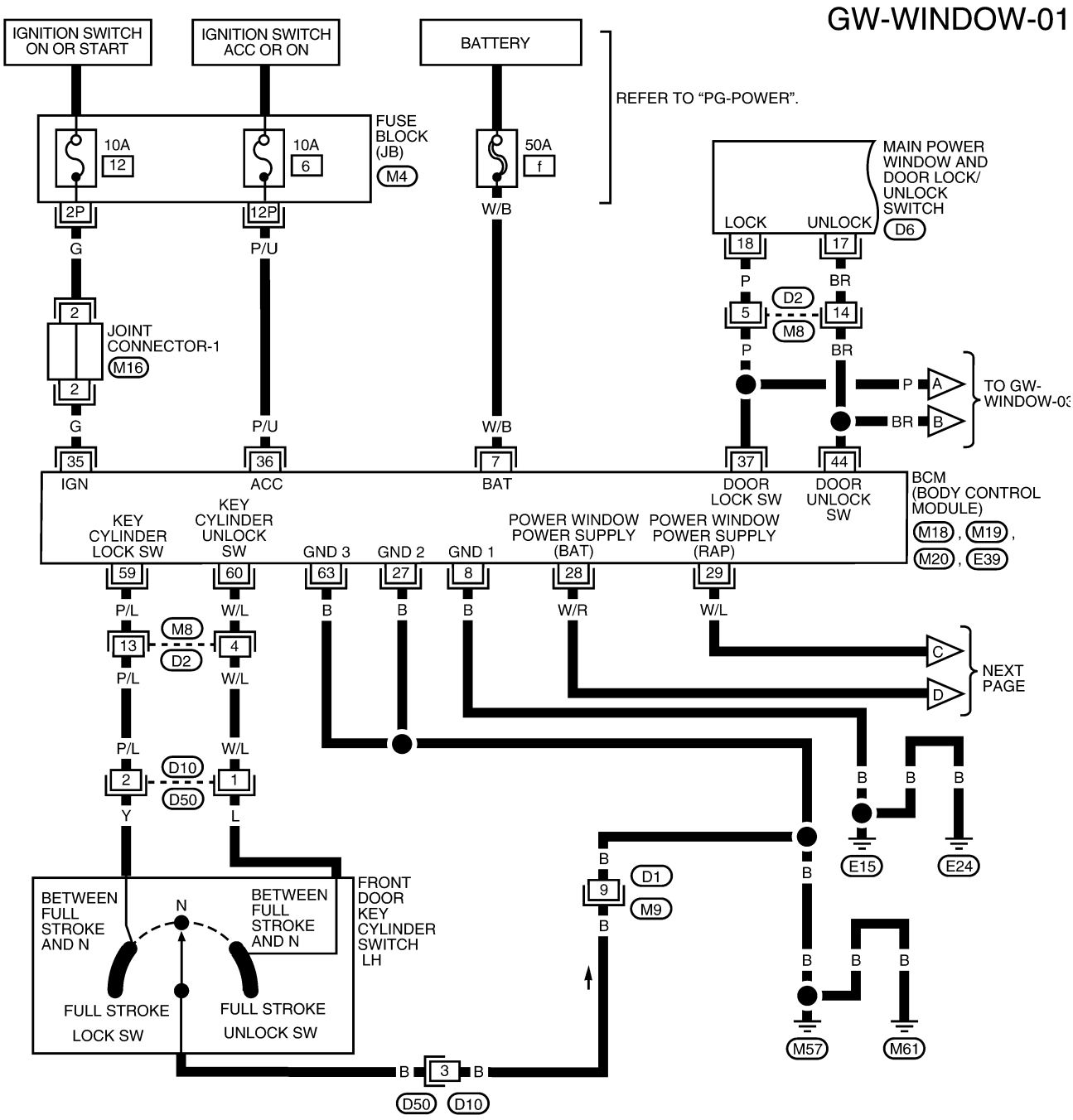

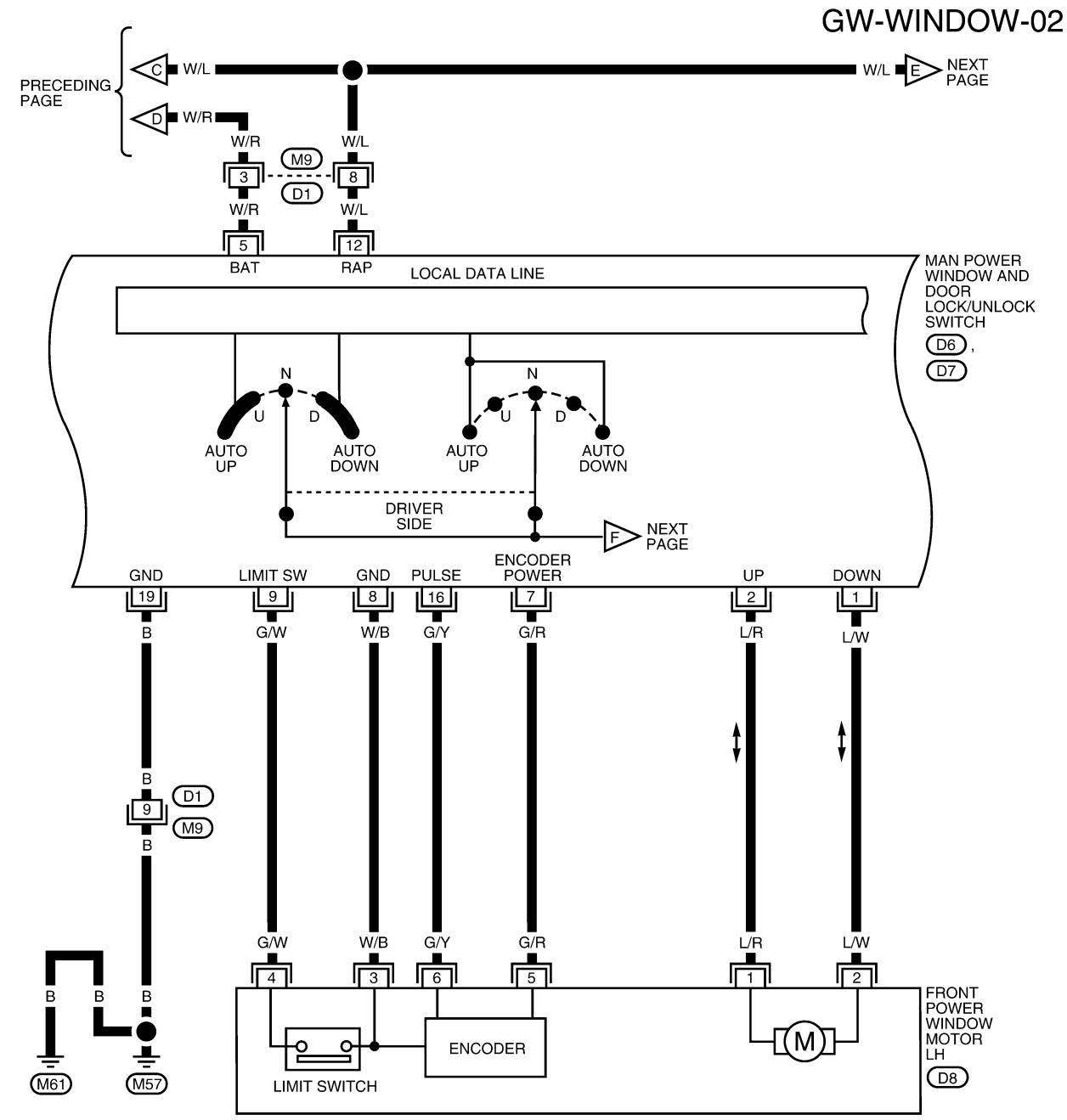
GW-WINDOW-02
PRECEDING PAGE
C
W/L
D
W/R
W/L
E
NEXT PAGE
W/R
W/L
M9
3
8
D1
W/R
W/L
5
12
BAT
RAP
LOCAL DATA LINE
MAN POWER WINDOW AND DOOR LOCK/UNLOCK SWITCH
D6
D7
N
U
D
AUTO UP
AUTO DOWN
DRIVER SIDE
F
NEXT PAGE
ENCODER POWER
GND
LIMIT SW
GND
PULSE
UP
DOWN
19
9
8
16
7
2
1
B
G/W
W/B
G/Y
G/R
L/R
L/W
D1
M9
4
3
6
5
1
2
M61
M57
LIMIT SWITCH
ENCODER
M
FRONT POWER WINDOW MOTOR LH
D8

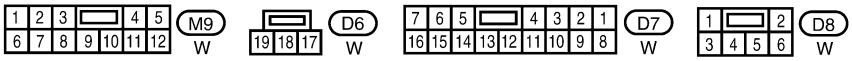
M9
W
D6
W
D7
W
D8
W

LIWA0006E

GW-WINDOW-03

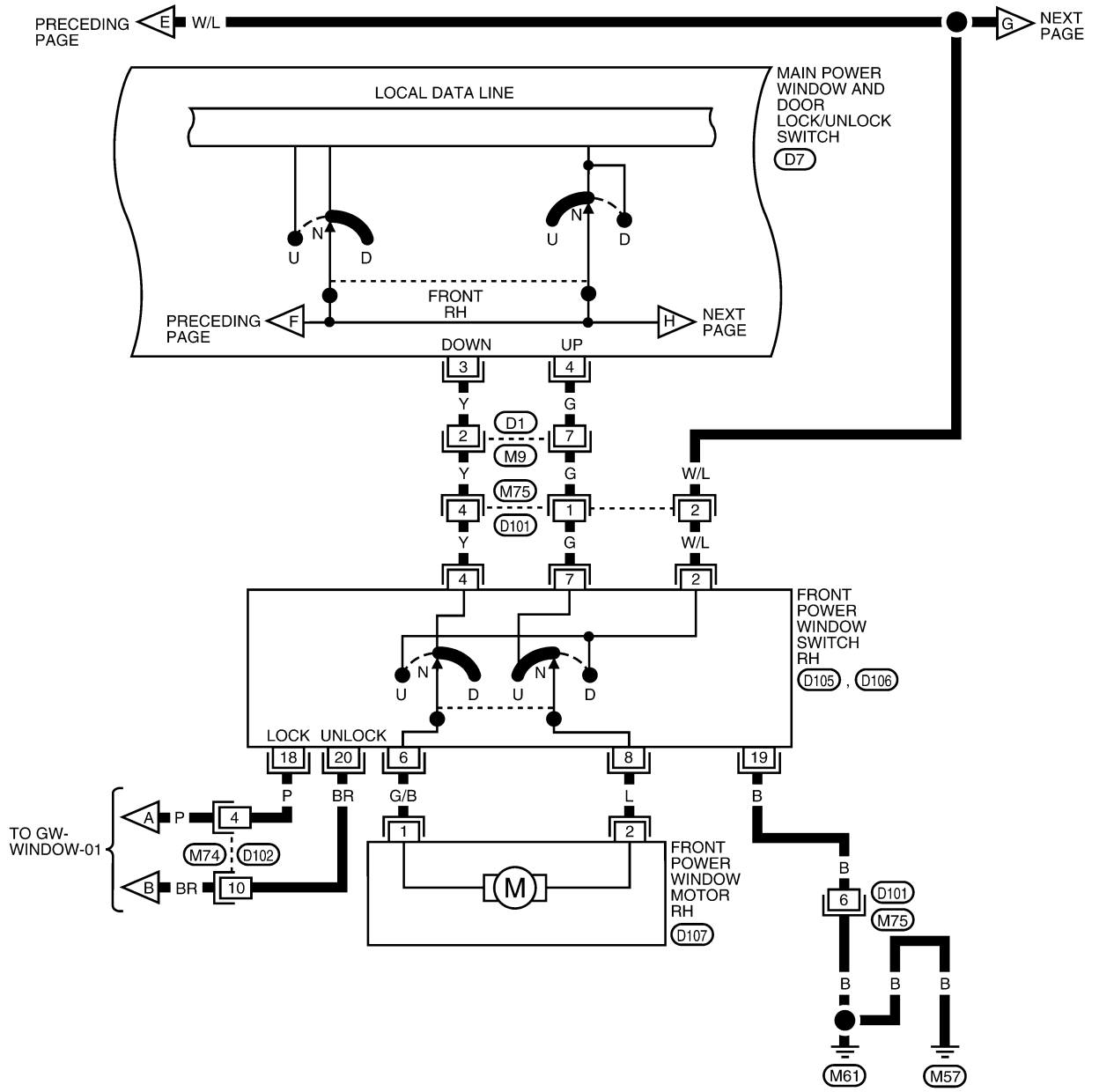

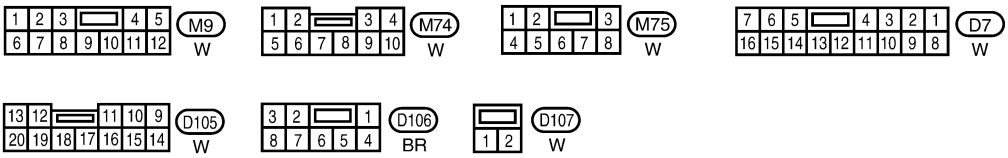

LIWA0007E

GW-WINDOW-04

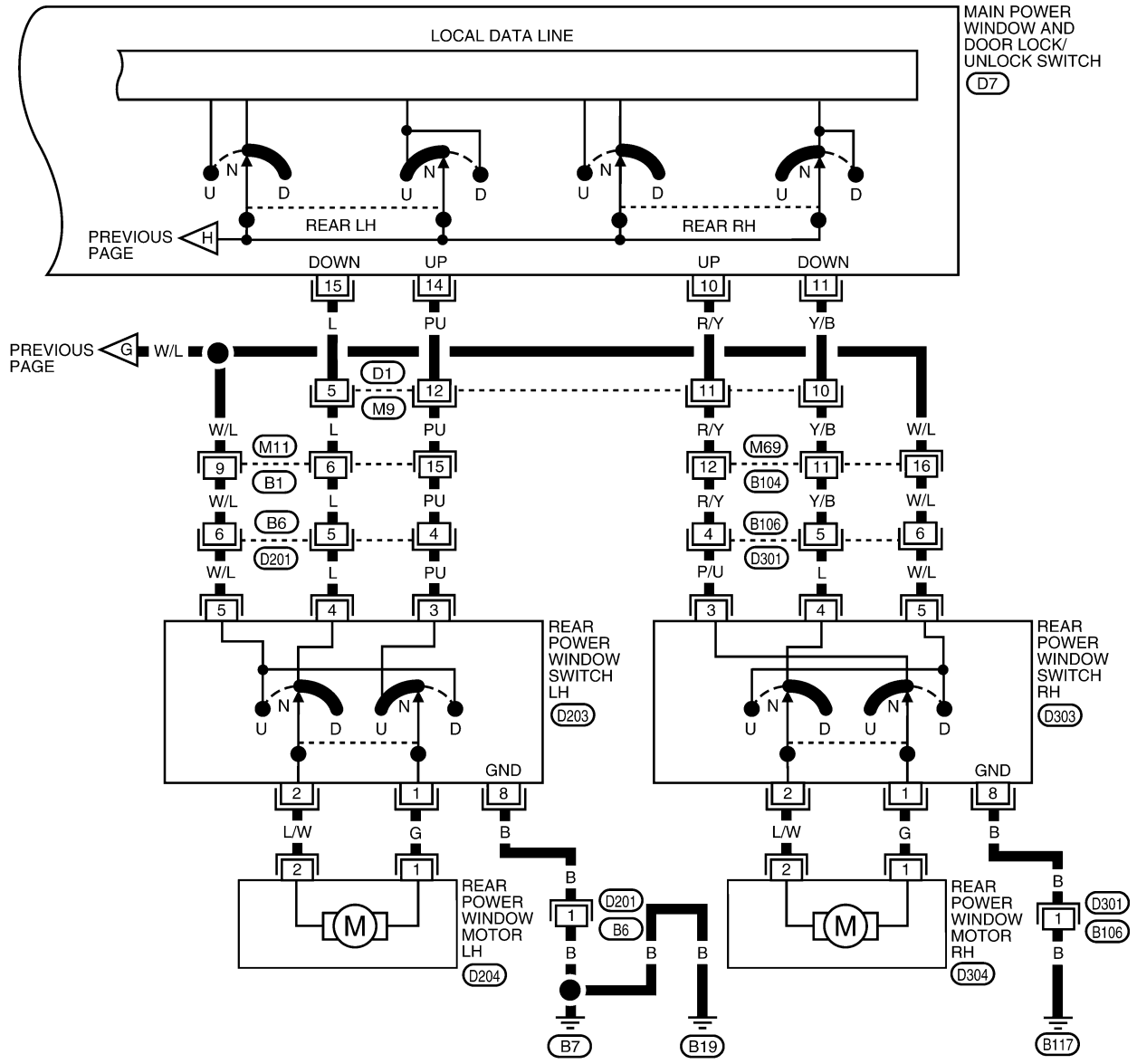

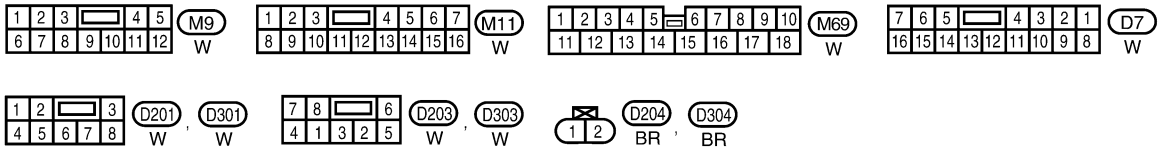

LIWA0008E

Terminal and Reference Value for Power Window Main Switch

EIS000SN

With left front only power window anti-pinch system.

TERMINAL	WIRE COLOR	ITEM	CONDITION	VOLTAGE (V) (Approx.)
1	L/W	Driver power window motor DOWN signal	When DOWN operation.	0 → Battery voltage
2	L/R	Driver power window motor UP signal	When UP operation.	0 → Battery voltage
3	Y	Passenger power window DOWN signal	Main switch passenger switch DOWN operation.	0 → Battery voltage
4	G	Passenger power window UP signal	Main switch passenger switch up operation.	0 → Battery voltage
5	W/R	BAT power supply	—	Battery voltage
7	G/R	Encoder power supply	—	5 – Battery voltage
8	W/B	Limit switch encoder ground	—	0
9	G/W	Limit switch signal	Driver door window is between fully-open and just before fully-closed position (ON).	0
			Driver door window is between just before fully-closed position and fully-closed position (OFF).	5
10	R/Y	Rear RH power window UP signal	Main switch rear RH switch UP operation.	0 → Battery voltage
11	Y/B	Rear RH power window DOWN signal	Main switch rear RH switch DOWN operation.	0 → Battery voltage
12	W/L	Rap signal	—	Battery voltage
14	PU	Rear LH power window UP signal	Main switch rear LH switch UP operation.	Battery voltage
15	L	Rear LH power window DOWN signal	Main switch rear LH switch DOWN operation.	Battery voltage
16	G/Y	Encoder pulse signal	When power window motor operates.	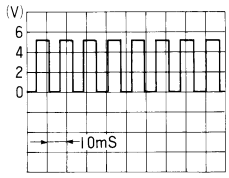 OCC3383D
19	B	Ground	—	Approx. 0

Schematic (With Left and Right Front Power Window Anti-pinch System)

EIS000SO

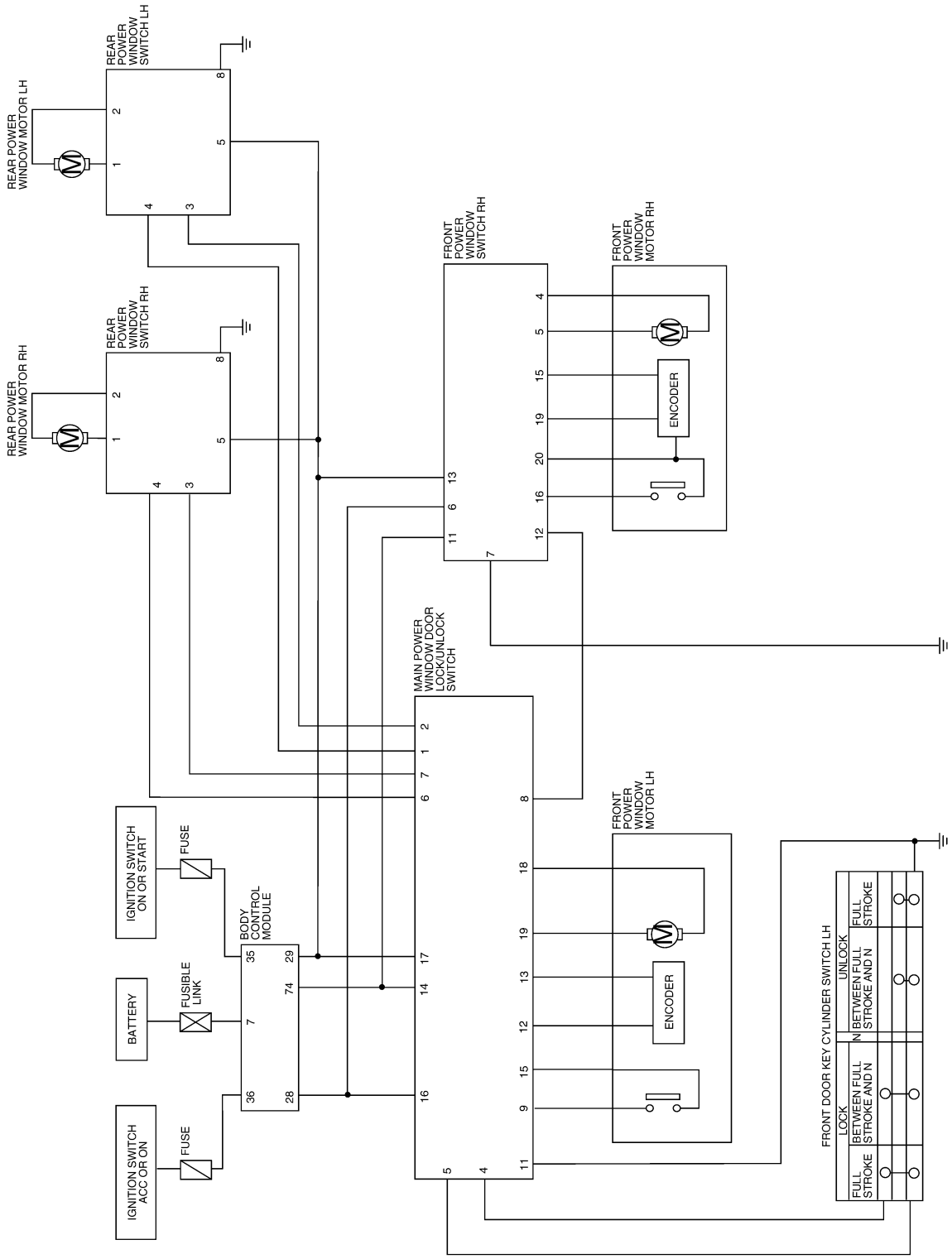

LIWA0014E

Wiring Diagram – WINDOW – (With Left and Right Front Power Window Anti-pinch System)

EIS000SP

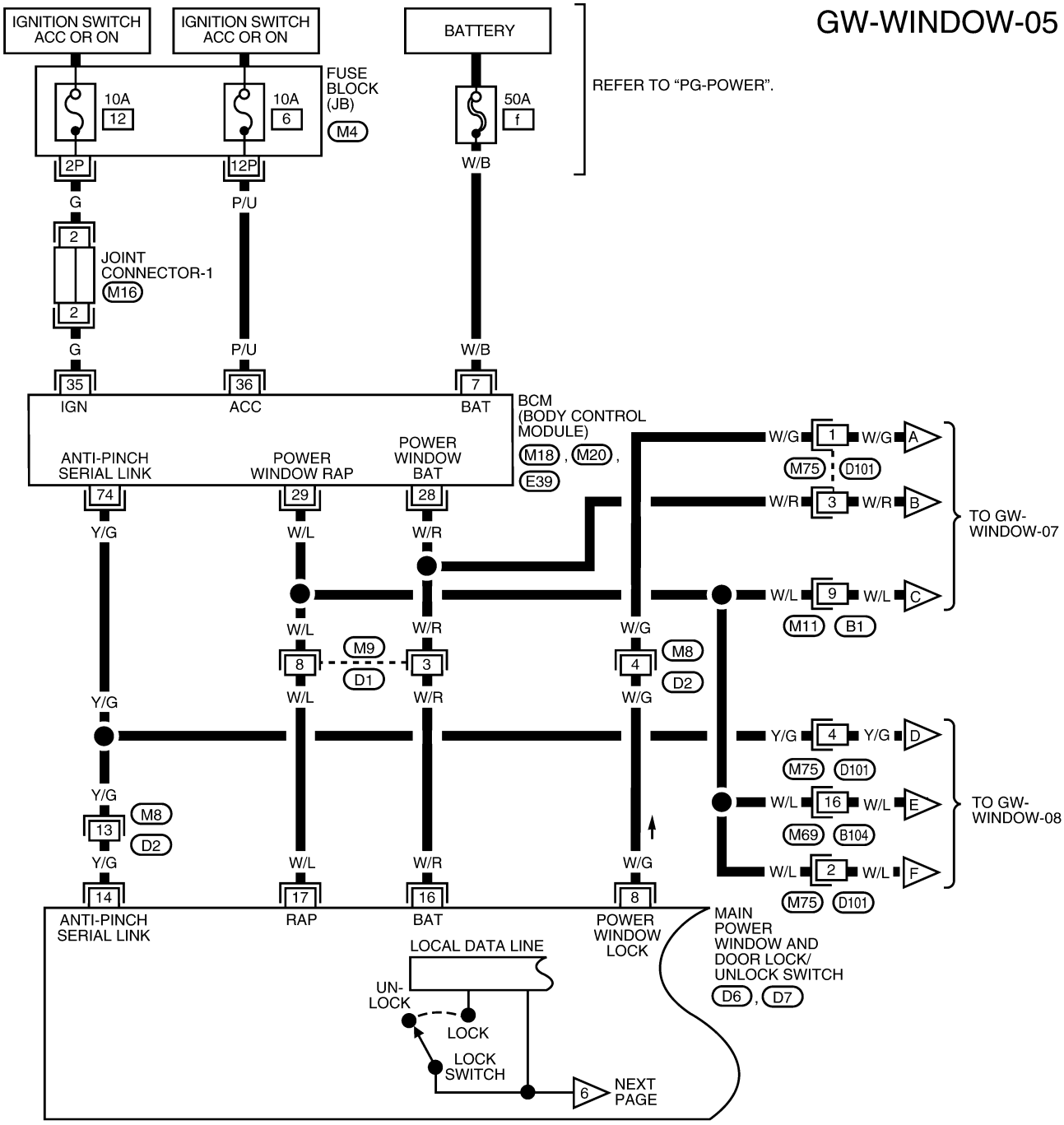

GW-WINDOW-06

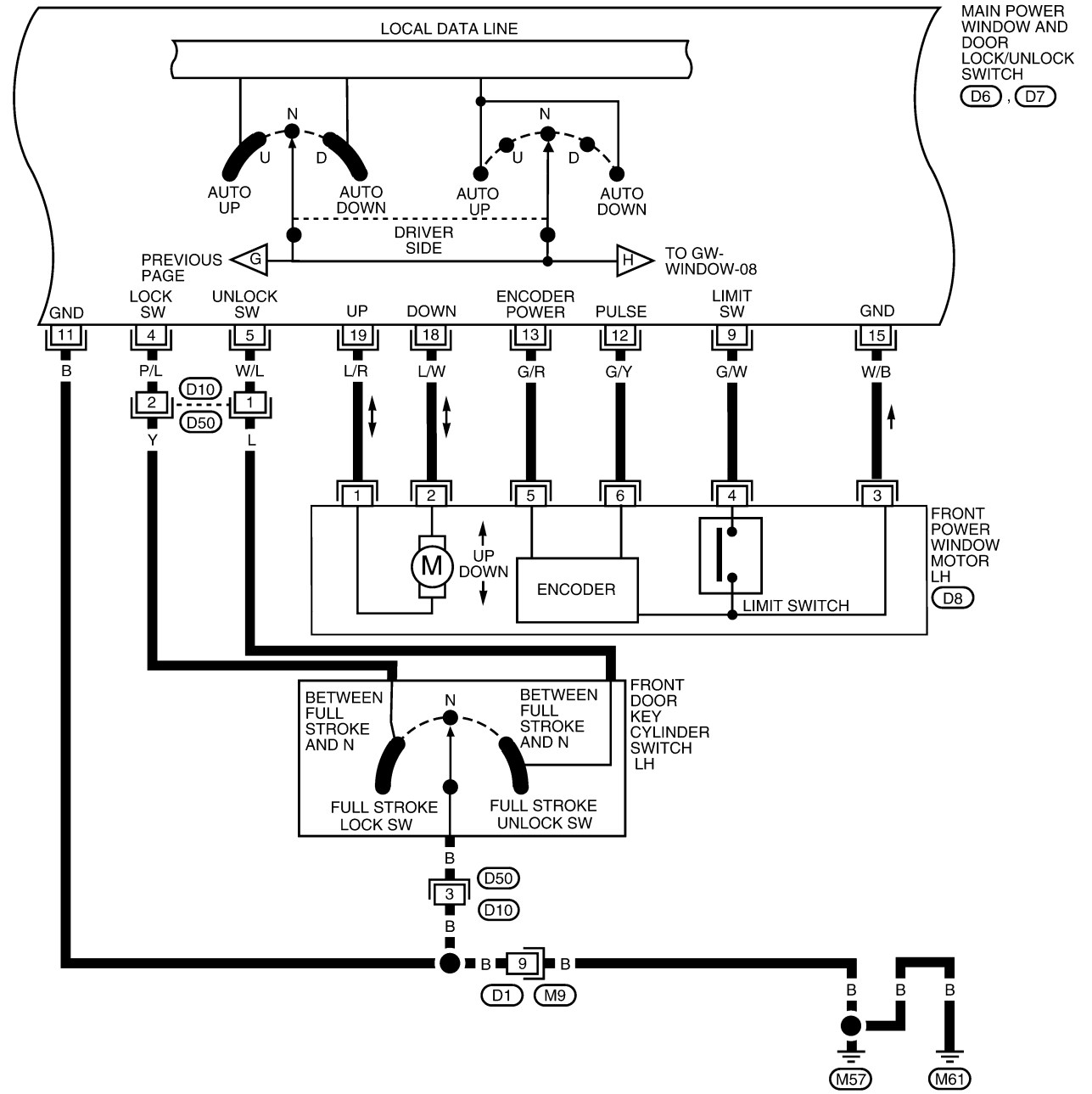

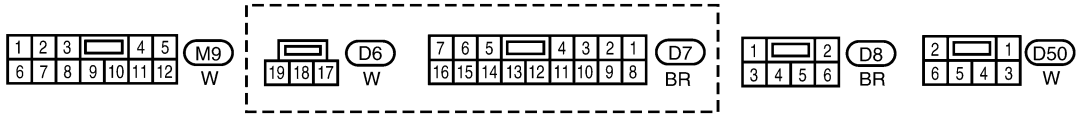

LIWA0010E

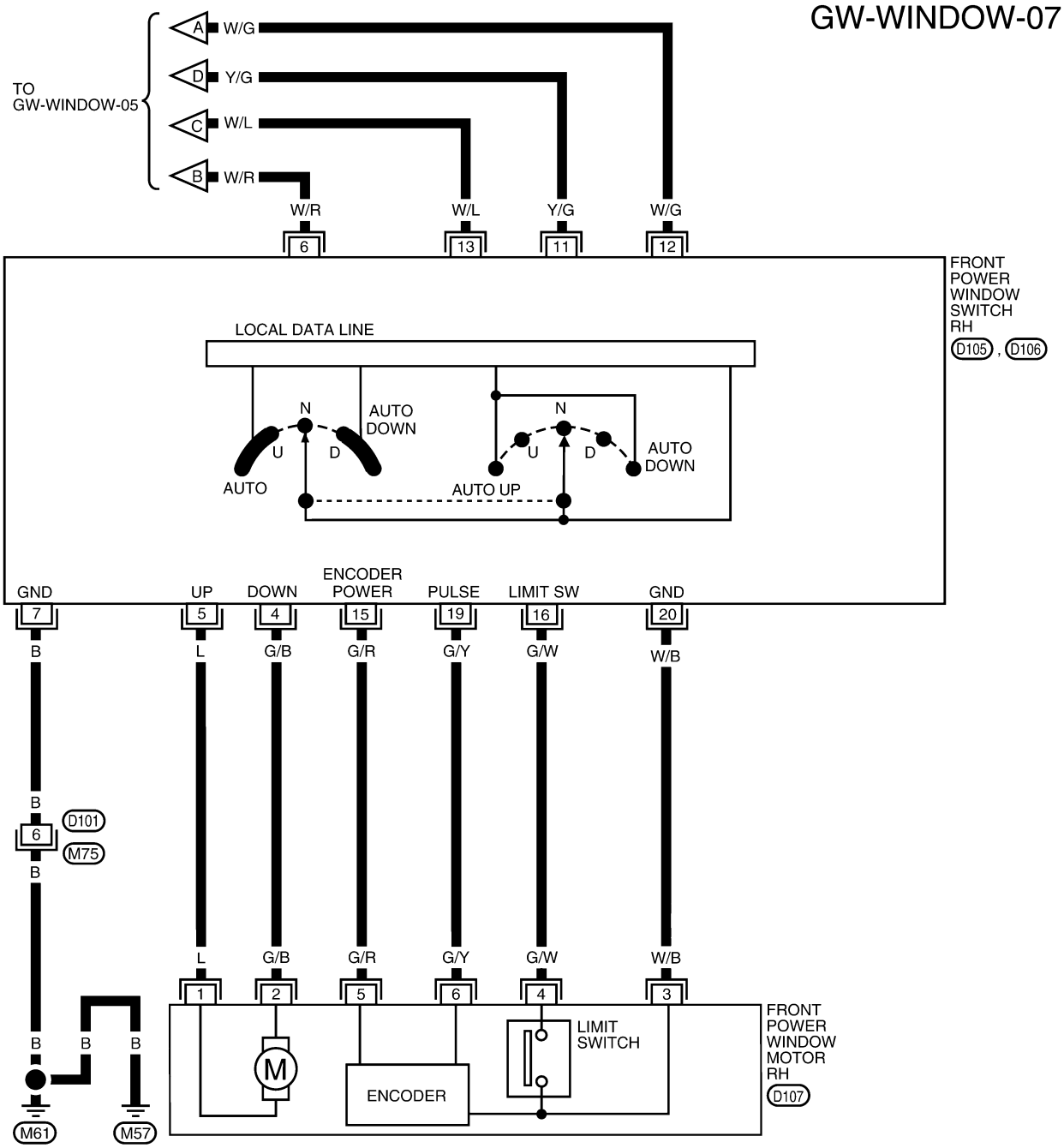
GW-WINDOW-07
TO
GW-WINDOW-05
A
W/G
D
Y/G
C
W/L
B
W/R
W/R
W/L
Y/G
W/G
6
13
11
12
FRONT
POWER
WINDOW
SWITCH
RH
D105 , D106
LOCAL DATA LINE
N
AUTO
DOWN
U
D
AUTO
N
U
D
AUTO
DOWN
AUTO UP
GND
UP
DOWN
ENCODER
POWER
PULSE
LIMIT SW
GND
7
5
4
15
19
16
20
B
L
G/B
G/R
G/Y
G/W
W/B
B
6
D101
M75
B
L
G/B
G/R
G/Y
G/W
W/B
1
2
5
6
4
3
B
B
B
M
ENCODER
LIMIT
SWITCH
FRONT
POWER
WINDOW
MOTOR
RH
D107
M61
M57

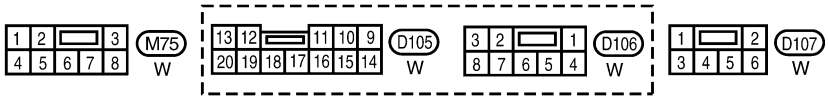
M75
W
D105
W
D106
W
D107
W

LIWA0011E

GW-WINDOW-08

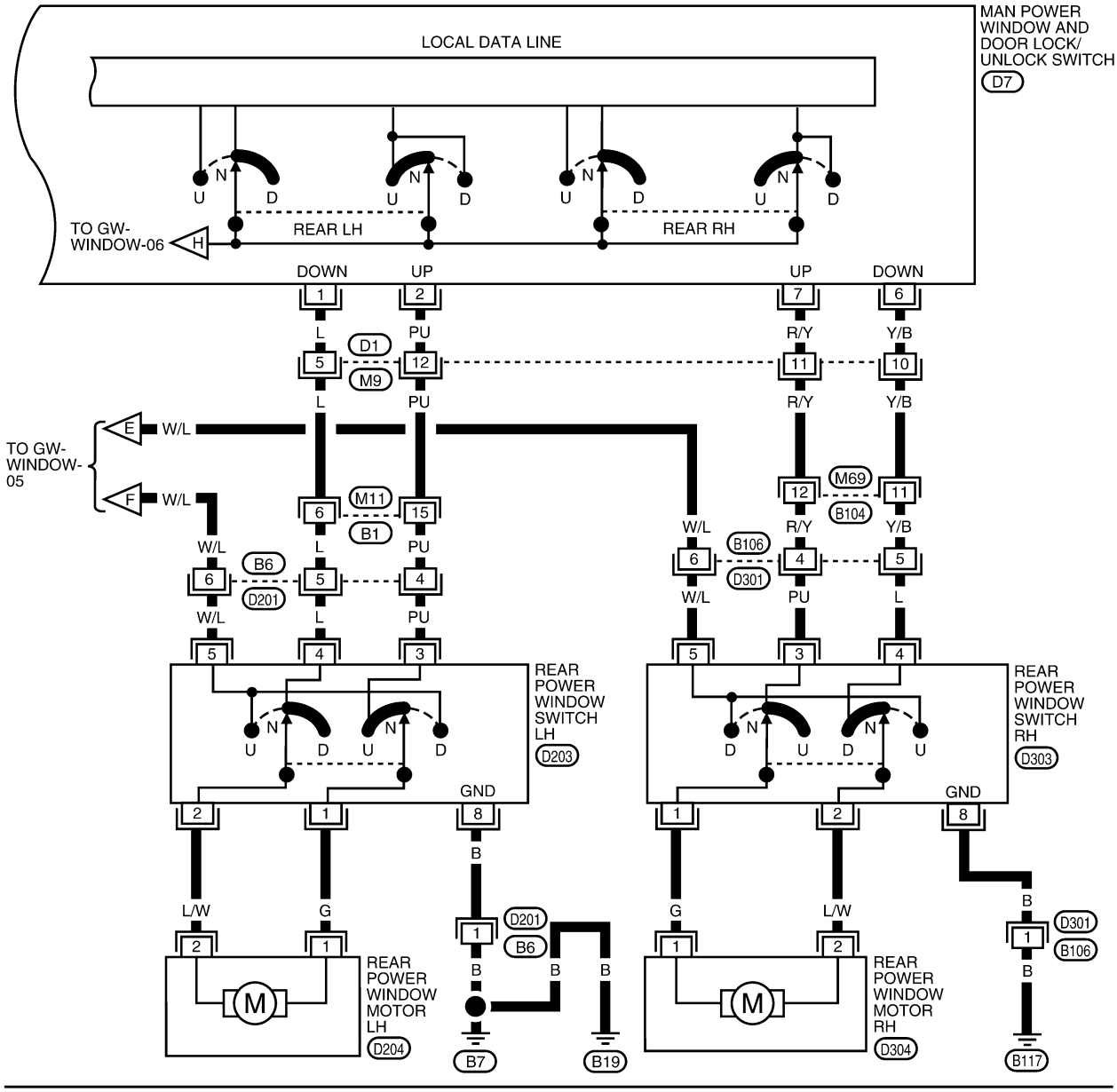

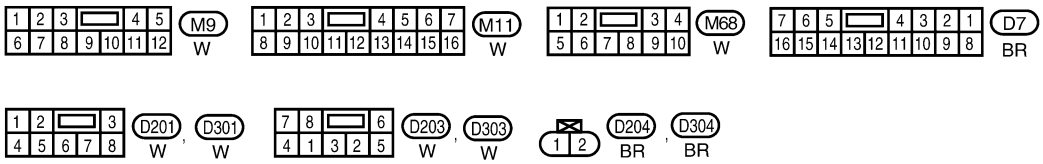

LIWA0012E

Terminal and Reference Value for Power Window Main Switch

EIS000SQ

With left and right front power window anti-pinch system.

TERMINAL	WIRE COLOR	ITEM	CONDITION	VOLTAGE (V) (Approx.)
1	L	Rear LH power window DOWN signal	Main switch rear LH switch DOWN operation.	Battery voltage
2	PU	Rear LH power window UP signal	Main switch rear LH switch UP operation.	Battery voltage
4	P/L	Key cylinder switch lock signal	Key position (Neutral → Locked)	5 → 0
5	W/L	Key cylinder switch unlock signal	Key position (Neutral → Unlocked)	5 → 0
6	Y/B	Rear RH power window DOWN signal	Main switch rear RH switch DOWN operation.	0 → Battery voltage
7	R/Y	Rear RH power window UP signal	Main switch rear RH switch UP operation.	0 → Battery voltage
8	W/G	Power window lock	Power window lock switch operation (Unlocked → Locked)	0 → Battery voltage
9	G/W	Limit switch signal	Driver door window is between fully-open and just before fully-closed position (ON).	0
			Driver door window is between just before fully-closed position and fully-closed position (OFF).	5
11	B	Ground	—	0
12	G/Y	Encoder pulse signal	When power window motor operates.	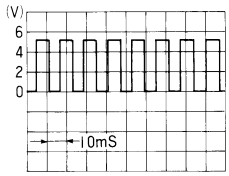 OCC3383D
13	G/R	Encoder power supply	—	5 → Battery voltage
14	Y/G	Anti-pinch serial link	—	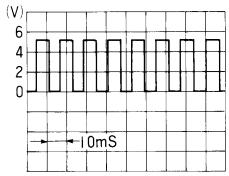 OCC3383D
15	W/B	Limit switch encoder ground	—	Approx. 0
16	W/R	BAT power supply	—	Battery voltage
17	W/L	Rap signal	—	Battery voltage
18	L/W	Driver power window motor DOWN signal	When DOWN operation.	Approx. 0 → Battery voltage
19	L/R	Driver power window motor UP signal	When UP operation.	Approx. 0 → Battery voltage

CONSULT-II Inspection Procedure

EIS000SR

"RETAINED PWR"

1. Turn ignition switch "ON".
2. Connect "CONSULT-II" to the data link connector.

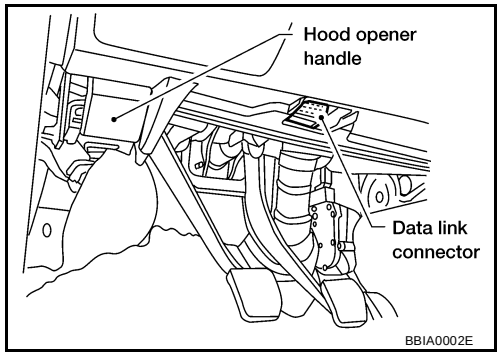

3. Turn ignition switch "ON".
4. Touch "START".

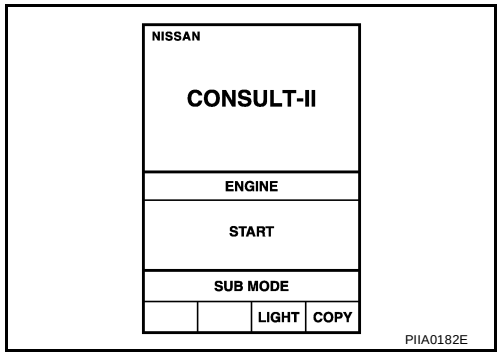

5. Touch "BCM".

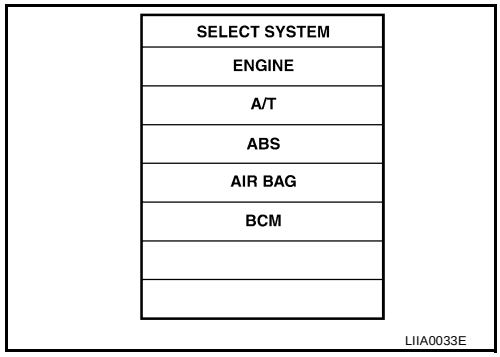

6. Touch "RETAINED PWR".

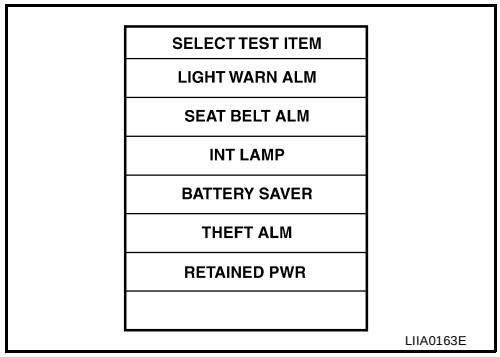

7. Select diagnosis mode.
   "ACTIVE TEST" is available for the power window.

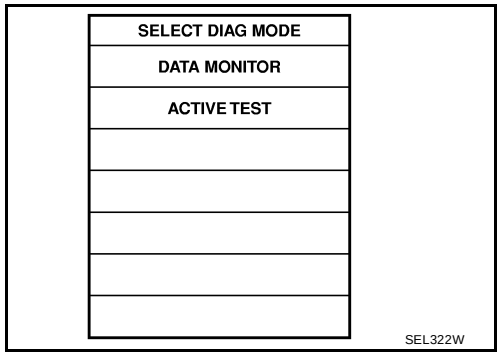

ACTIVE TEST

Test Item	Description
RETAINED PWR	This test is able to supply RAP signal (power) from BCM (body control module) to power window system and power sunroof system (if equipped). Those systems can be operated when turning on "RETAINED PWR" on CONSULT-II screen even if the ignition switch is turned OFF. **NOTE:** During this test, CONSULT-II can be operated with ignition switch in "OFF" position. "RETAINED PWR" should be turned "ON" or "OFF" on CONSULT-II screen when ignition switch is ON. Then turn ignition switch OFF to check retained power operation. CONSULT-II might be stuck if "RETAINED PWR" is turned "ON" or "OFF" on CONSULT-II screen when ignition switch is OFF.

Trouble Diagnoses

EIS000SS

Symptom	Possible cause	Repair order
None of the power windows can be operated using any switch.	1. Power source BAT or RAP	1. Check the following – Check harness between BCM and main power window and door lock/unlock switch for open or short. – Check harness between BCM and front power window switch RH and rear power window switch LH and RH for open or short.
Driver side power window cannot be operated but other windows can be operated.	1. Power source BAT or RAP 2. Front power window LH circuit 3. Front power window motor LH and regulator 4. Main power window and door lock/unlock switch	1. Check harness between BCM and main power window and door lock/unlock switch for open or short. 2. Check harness between main power window and door lock/unlock switch and front power window motor LH for open or short circuit. 3. Check front power window motor LH and regulator. 4. Check main power window and door lock/unlock switch.
One or more power windows except driver's side window cannot be operated.	1. Power source RAP 2. Power window sub-switches 3. Power window motors and regulators 4. Main power window and door lock/unlock switch 5. Power window circuit	1. Check harness between BCM and power window sub-switches for open or short circuit. 2. Check front power window switch RH and rear power window switch LH and RH. 3. Check power window motors and regulators. 4. Check main power window and door lock/unlock switch. 5. Check harnesses between front power window switch RH, rear power window switch LH and RH and power window motors for open/short circuit.
Power windows except driver's side window cannot be operated using main power window and door lock/unlock switch but can be operated by power window sub-switch.	1. Main power window and door lock/unlock switch	1. Check main power window and door lock/unlock switch.
Driver side power window automatic operation does not function properly.	1. Main power window and door lock/unlock switch 2. Encoder and limit switch	1. Check main power window and door lock/unlock switch. 2. Check encoder and limit switch. Refer to GW-31, "Encoder and Limit Switch Check (Driver side)" .
Passenger side power window automatic operation does not function properly.	1. Front power window switch RH 2. Encoder and limit switch	1. Check front power widow switch RH. 2. Check encoder and limit switch. Refer to GW-32, "Encoder and Limit Switch Check (Passenger side)" .

Encoder and Limit Switch Check (Driver side)

EIS000ST

1. CHECK DOOR WINDOW SLIDE MECHANISM

Check the following.

- Obstacles in window, glass molding, etc.
- Worn or deformed glass molding.
- Door sash tilted too far inward or outward.
- Door window regulator.

OK or NG

OK >> GO TO 2.
NG >> Remove obstacles or repair door window slide mechanism.

2. CHECK LIMIT SWITCH OPERATION

Check voltage between main power window and door lock/unlock switch connector D7 terminal 9 (G/OR) and ground.

Terminals			Condition	Voltage (Approx.)
(+)		(–)		
Connector	Terminal			
D7	9 (G/OR)	Ground	Driver door window is between fully-open and just before fully-closed position (ON)	0V
			Driver door window is between just before fully-closed position and fully-closed position (OFF)	5V

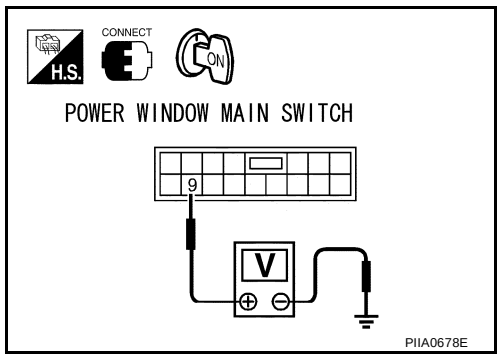

OK or NG

OK >> GO TO 3.
NG >> Check harness between main power window and door lock/unlock switch and front power window motor LH.

- OK: Replace front power window motor LH.
- NG: Replace or repair harness between main power window and door lock/unlock switch and front power window motor LH.

3. CHECK ENCODER

Measure voltage between main power window and door lock/unlock switch connector D7 terminal 16 (12) G/Y and ground with oscilloscope when power window is in automatic closing operation.

Terminals			Condition	Voltage
	(+)	(–)		
D7	16 (G/Y), 12 (G/Y)	Ground	When power window motor (driver side) operates.	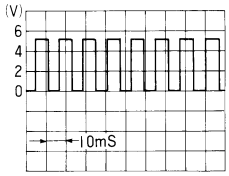 OCC3383D

( ): with left and right front power window anti-pinch system

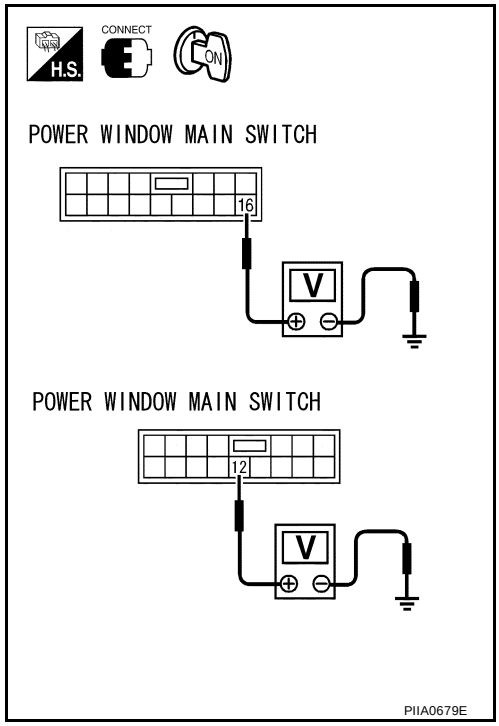

OK or NG

OK >> Replace main power window and door lock/unlock switch.

NG >> Replace front power window motor LH.

Encoder and Limit Switch Check (Passenger side)

EIS000SU

1. CHECK DOOR WINDOW SLIDE MECHANISM

Check the following.

- Obstacles in window, glass molding, etc.
- Worn or deformed glass molding.
- Door sash tilted too far inward or outward.
- Door window regulator.

OK or NG

OK >> GO TO 2.

NG >> Remove obstacles or repair door window slide mechanism.

2. CHECK LIMIT SWITCH OPERATION

Check voltage between front power window switch RH connector D105 terminal 16 (G/W) and ground.

Terminals			Condition	Voltage (Approx.)
(+)		(–)		
Connector	Terminal			
D105	16 (G/W)	Ground	Passenger door window is between fully-open and just before fully-closed position (ON)	0V
			Passenger door window is between just before fully-closed position and fully-closed position (OFF)	5V

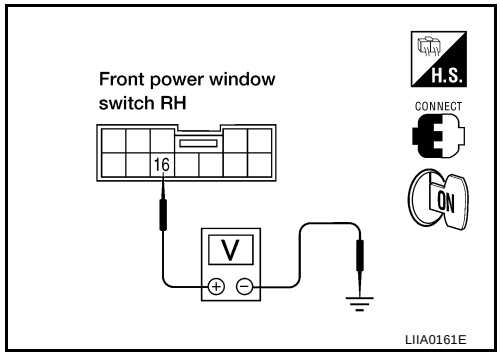

OK or NG

OK >> GO TO 3.

NG >> Check harness between main power window and door lock/unlock switch and front power window motor RH.

- OK: Replace power window regulator motor (front passenger side).
- NG: Replace or repair harness between power window main switch and window regulator motor (front passenger side).

3. CHECK ENCODER

Measure voltage between passenger power window switch terminal 19 (G/Y) and ground with oscilloscope when power window is in automatic closing operation.

Terminals			Condition	Voltage
(+)		(–)		
D	19 (G/Y)	Ground	When power window motor (passenger side) operates.	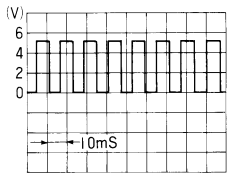

OCC3383D

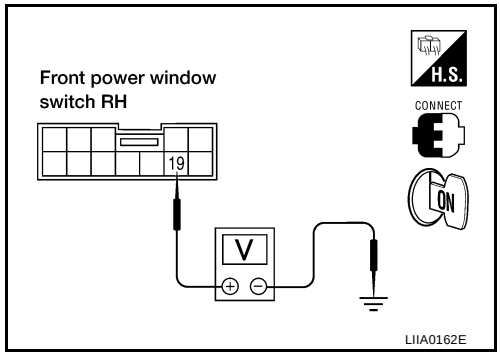

OK or NG

OK >> Replace passenger power window switch.

NG >> Replace power window regulator motor (front passenger side).

FRONT DOOR GLASS AND REGULATOR

PFP:80300

Removal and Installation

EIS000SV

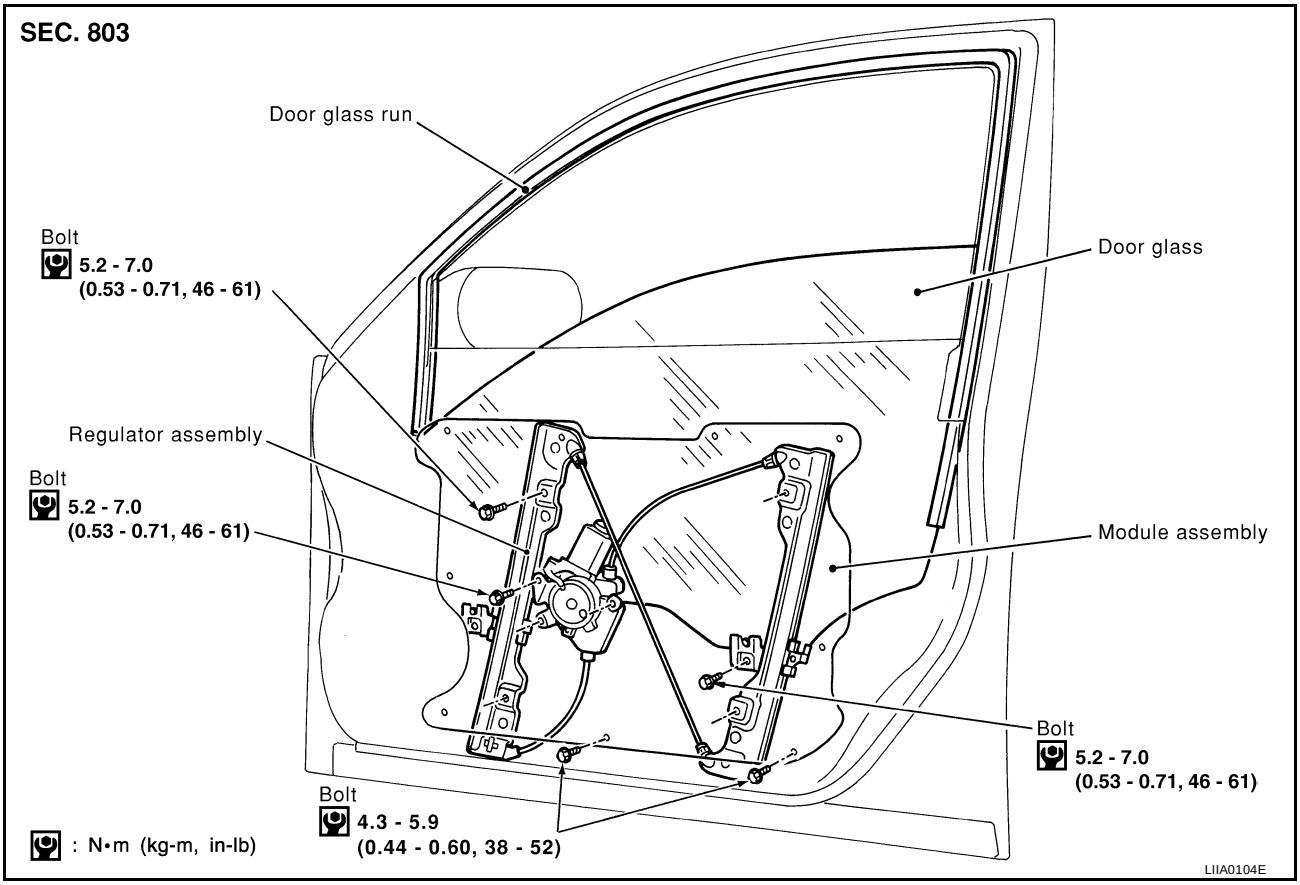

REMOVAL

1. Remove the front door finisher. Refer to EI-27, "Front Door" .
2. Remove the door speaker. Refer to AV-22, "DOOR SPEAKER" .
3. Operate the power window main switch to raise/lower the door window until the glass mounting bolts can be seen.
4. Remove the glass mounting bolts.

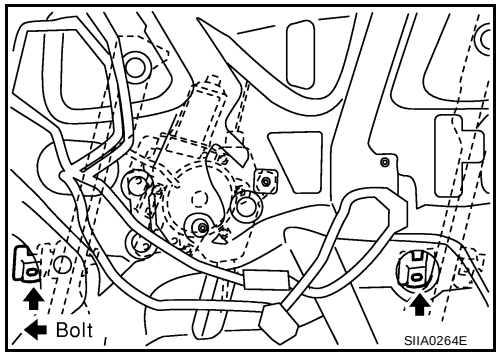

5. While holding the door window, raise it at the rear end to pull the glass out of the sash toward the outside of the door.

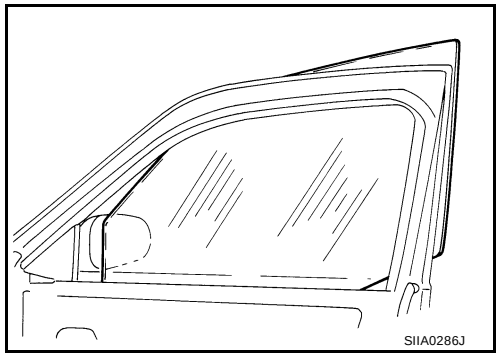

6. Remove the mounting bolts, and remove the module assembly.
7. Disconnect the harness connector for the module assembly, and unclip the harness from the back.

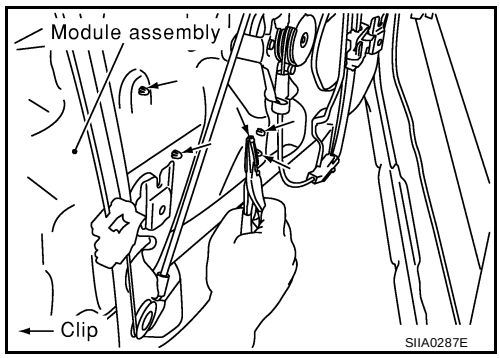

INSTALLATION

Install in the reverse order of removal.

INSPECTION AFTER REMOVAL

Check the regulator assembly for the following items. If a malfunction is detected, replace or grease it.

- Wire wear
- Regulator deformation
- Grease condition for each sliding part

The arrows in the figure show the application points of the body grease.

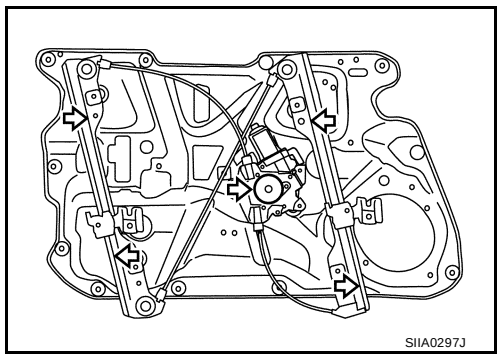

DISASSEMBLY AND ASSEMBLY

Remove the regulator motor and guide rail from the module assembly.

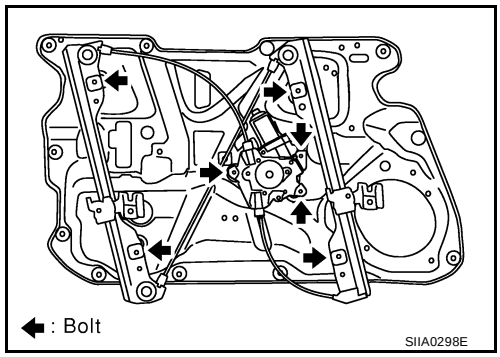

FITTING INSPECTION

- Check that the glass is securely fit into the glass run groove.
- Lower the glass slightly [approx. 10 to 20 mm (0.39 to 0.79 in)] and check that the clearance to the sash is parallel. If the clearance between the glass and sash is not parallel, loosen the regulator mounting bolts, guide rail mounting bolts, and glass and guide rail mounting bolts to correct the glass position.

SETTING AFTER INSTALLATION

Setting of Limit Switch

If any of the following work has been done, set the limit switch (integrated in the motor).

- Removal and installation of the regulator.
- Removal and installation of the motor from the regulator.
- Removal and installation of the glass.
- Removal and installation of the glass run.

Resetting

After installing each component to the vehicle, perform the following procedure to reset the limit switch.

1. Raise the glass to the top dead center position.
2. While pressing and holding the reset switch, lower the glass to the bottom dead center position.
3. Release the reset switch. Verify that the reset switch returns to the original position, and then raises the glass to the top dead center position.

CAUTION:
Do not operate the glass automatically to raise the glass to the top dead center position.

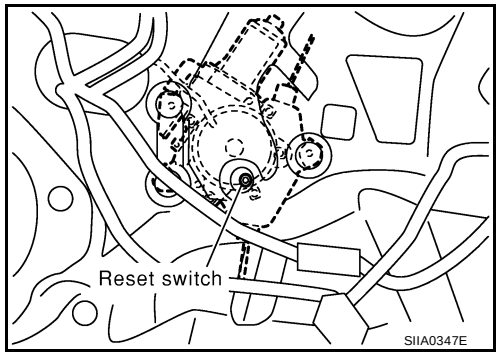

REAR DOOR GLASS AND REGULATOR

PFP:82300

Removal and Installation

EIS000SW

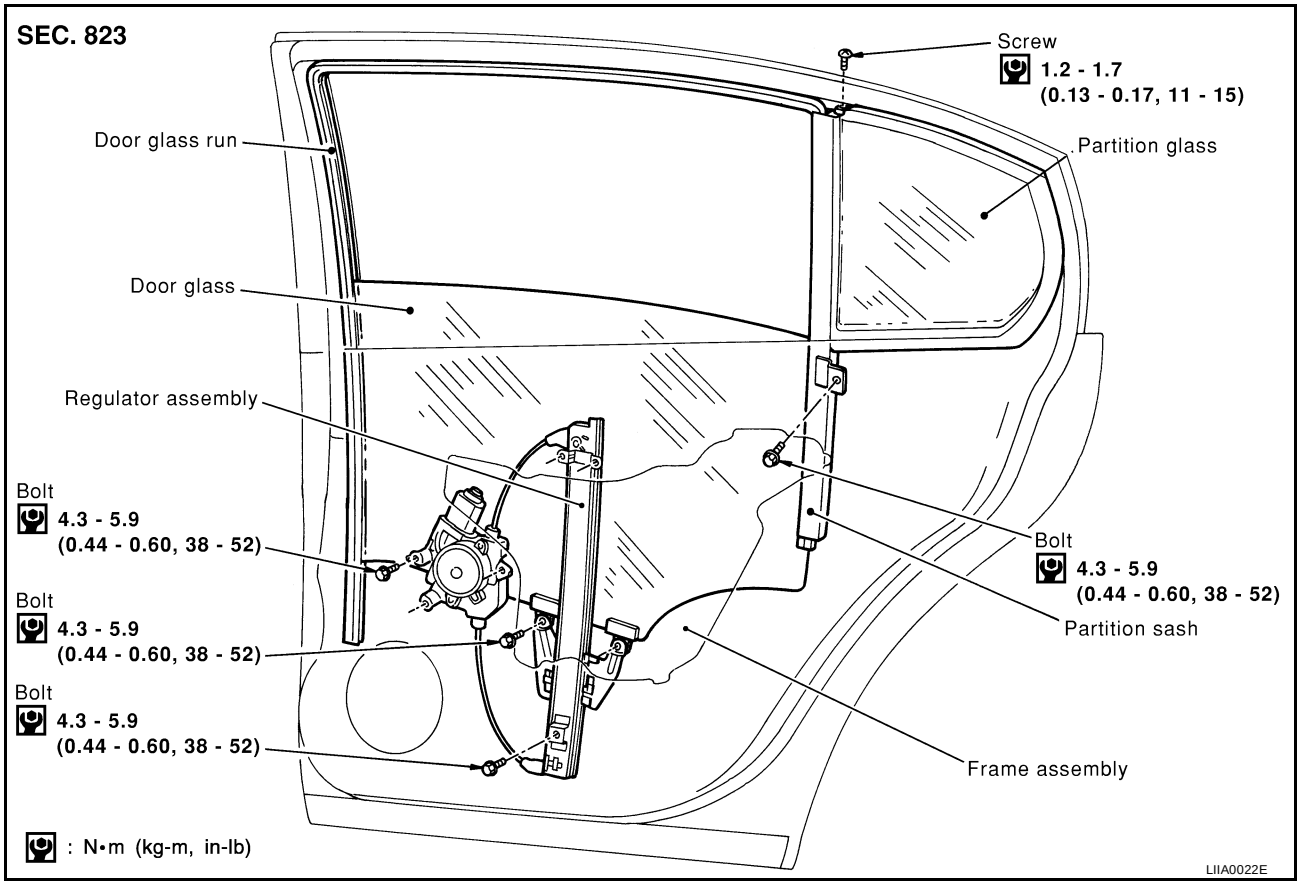

REMOVAL

1. Remove the rear door finisher. Refer to EI-28, "Rear Door" .
2. Remove the inside seal.
3. Operate the power window switch to raise/lower the door window until the glass mounting bolts can be seen.
4. Remove the glass mounting bolts, and place the glass on the inner bottom of the panel.

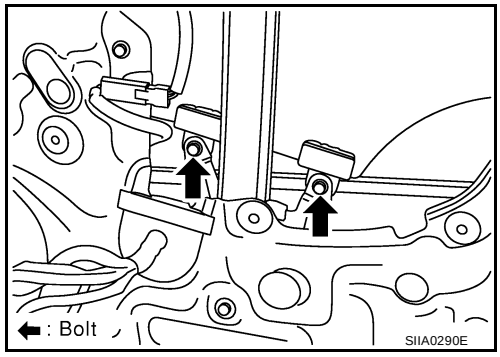

5. Remove the mounting bolts, and remove the regulator and guide channel from the panel.
6. Disconnect the connector for the regulator assembly.

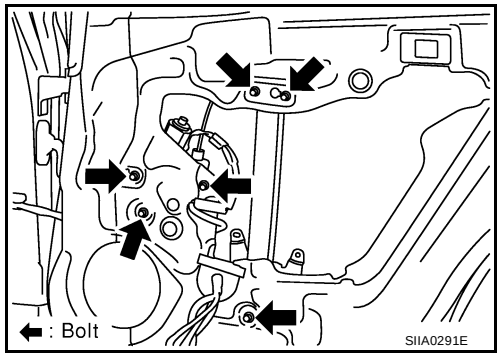

7. Remove the partition sash from the glass run.
8. Remove the partition sash mounting bolt (lower) and screw (upper) to remove the sash.
9. Remove the glass from the inside of the panel.

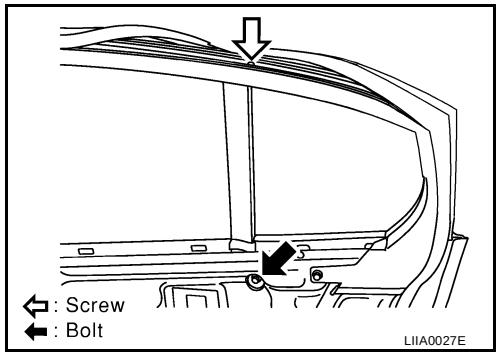

10. Remove the partition glass from the panel.

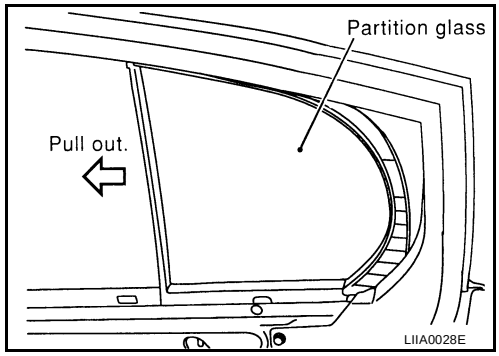

INSTALLATION

Install in the reverse order of removal.

INSPECTION AFTER REMOVAL

Check the regulator assembly for the following items. If a malfunction is detected, replace or grease it.

- Gear wear
- Regulator deformation
- Spring damage
- Grease condition for each sliding part

The arrows in the figure show the application points of the grease "Dow Corning Moly Coat SK 623".

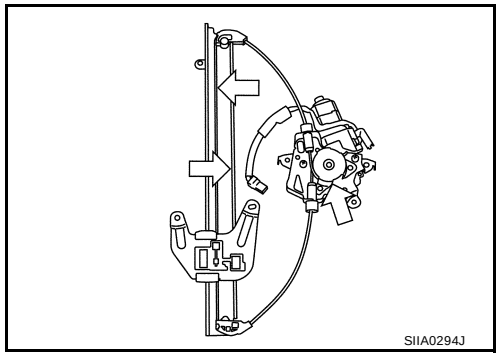

FITTING INSPECTION

- Check that the glass is securely fit into the glass run groove.
- Lower the glass slightly [approx. 10 to 20 mm (0.39 to 0.79 in)], and check that the clearance to the sash is parallel. If the clearance between the glass and sash is not parallel, loosen the regulator mounting bolts, guide rail mounting bolts, and glass and carrier plate mounting bolts to correct the glass position.

INSIDE MIRROR

PFP:96321

Wiring Diagram –I/MIRR–

EIS000SX

GW-I/MIRR-01

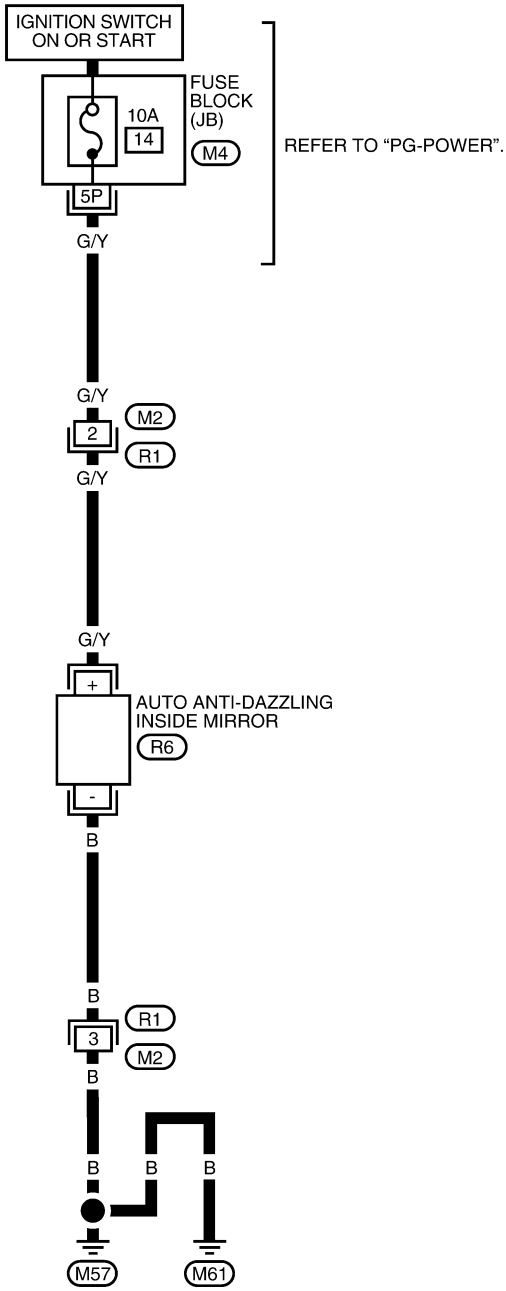

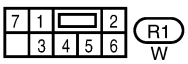

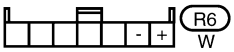

REFER TO THE FOLLOWING.

M4 - FUSE BLOCK
JUNCTION BOX (J/B)

LIWA0018E

Removal and Installation

EIS000SY

INSIDE MIRROR

1. Remove connector cover (if equipped).
2. Slide the mirror upward to remove.
3. Disconnect the connector (if equipped).

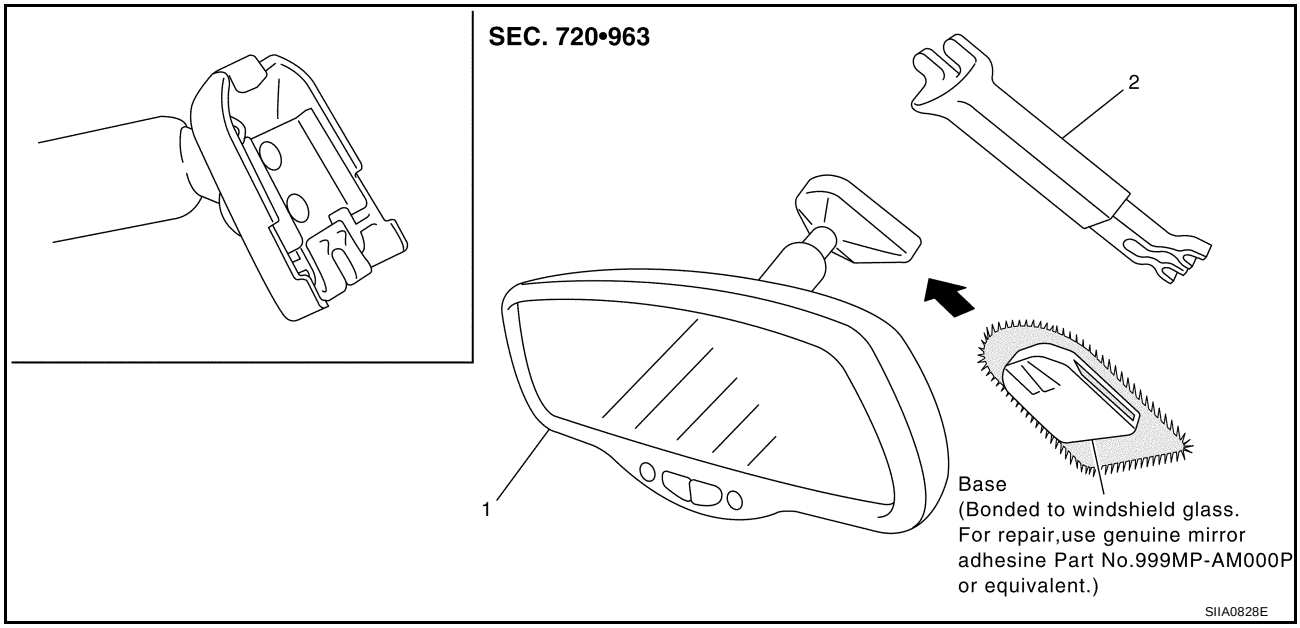

1. Inside mirror
2. Inside mirror finisher (if equipped)

REAR WINDOW DEFOGGER

PFP:25350

Component Parts and Harness Connector Location

EIS000SZ

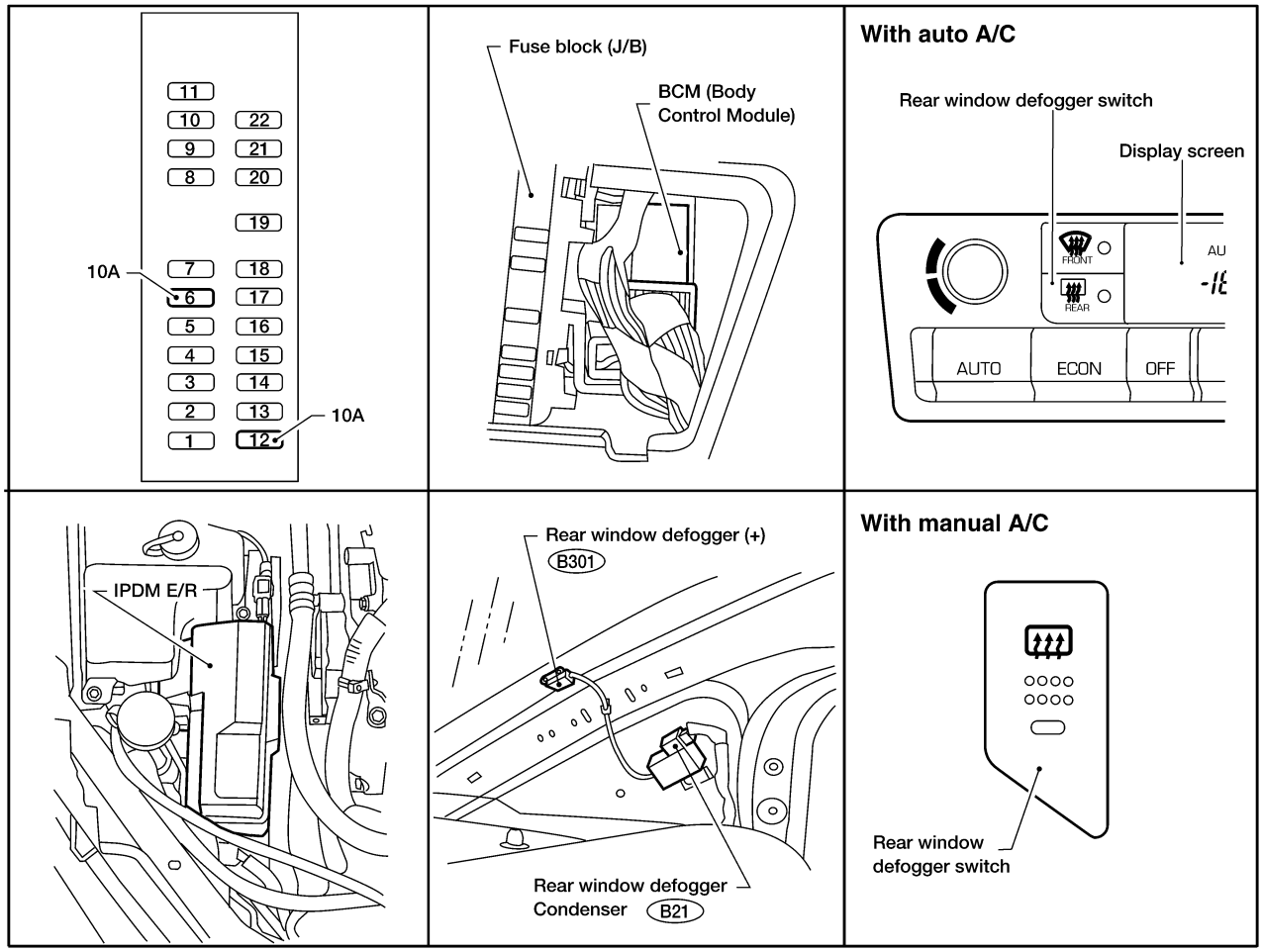

LIIA0103E

System Description

EIS000T0

The rear window defogger system is controlled by BCM (Body Control Module) and rear window defogger relay is controlled by IPDM E/R (Intelligent Power Distribution Module Engine Room). The rear window defogger operates only for approximately 15 minutes.
Power is supplied at all times

- to rear window defogger relay terminal 3 and 6
- through 20A fuse (No. 35 and 36, located in the IPDM E/R)
- to BCM terminal 7
- through 50A fusible link (letter **f** , located in the fuse and fusible link box).

With the ignition switch in the ACC or ON position, power is supplied

- to BCM terminal 36
- through 10A fuse [No. 6, located in the fuse block (J/B)].

With the ignition switch in the ON or START position, power is supplied

- through 10A fuse [No.12, located in the fuse block (J/B)]
- to rear defogger relay terminal 1 and
- to BCM terminal 35.

Ground is supplied to terminal 2 of rear window defogger switch through body ground M57 and M61(with manual A/C) or terminal 8, 27 and 63 of BCM through body ground E15, E24, M57 and M61 (with auto A/C).
BCM is connected to IPDM E/R as DATA LINE (CAN H line and CAN L line).
When the rear window defogger switch is turned ON, ground is supplied

- through terminal 1 of the rear window defogger switch

- to BCM terminal 69 (with auto A/C)
- through terminal 1 of the rear window defogger switch
- to rear window defogger switch terminal 2 (with manual A/C).

BCM output to IPDM E/R for rear window defogger switch signal as DATA LINE (CAN H line and CAN L line).
Terminal 2 of rear window defogger relay then supplies ground to IPDM E/R terminal 54.
With power and ground supplied, the rear window defogger relay is energized.
Power is supplied

- through terminals 5 and 7 of the rear window defogger relay
- to the rear window defogger.

The rear window defogger has an independent ground.
With power and ground supplied, the rear window defogger filaments heat and defog the rear window.
When the system is activated, the rear window defogger indicator illuminates in the rear window defogger switch.
Power is supplied

- to terminal 3 of the rear window defogger switch
- from terminal 5 and 7 of rear window defogger relay.

Terminal 3 of the rear window defogger switch is grounded through rear window defogger ground B202 (with auto A/C) or terminal 4 of the rear window defogger switch is grounded through body ground M57 and M61 (with manual A/C).

SYSTEM DIAGRAM

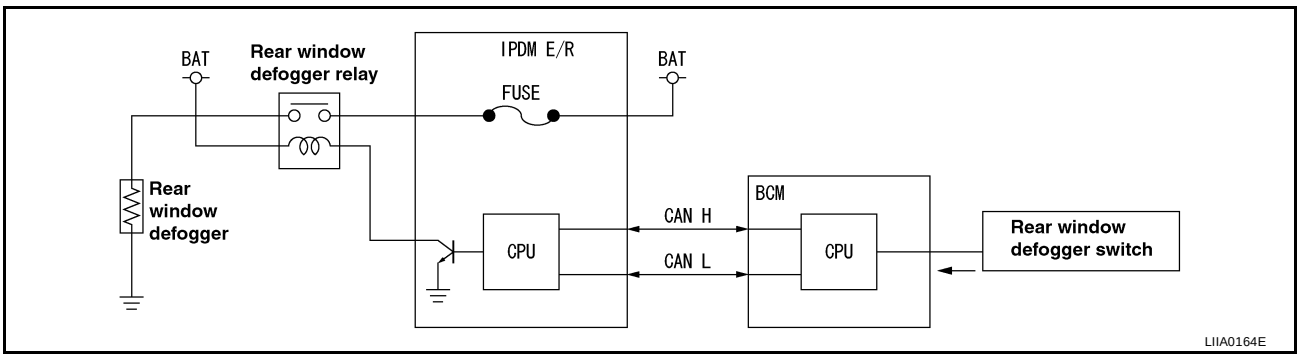

CAN Communication System Description

EIS000T1

CAN (Controller Area Network) is a serial communication line for real time application. It is an on-vehicle multiplex communication line with high data communication speed and excellent error detection ability. Many electronic control units are equipped onto a vehicle, and each control unit shares information and links with other control units during operation (not independent). In CAN communication, control units are connected with 2 communication lines (CAN H line, CAN L line) allowing a high rate of information transmission with less wiring. Each control unit transmits/receives data but selectively reads required data only.

FOR TCS MODELS

System Diagram

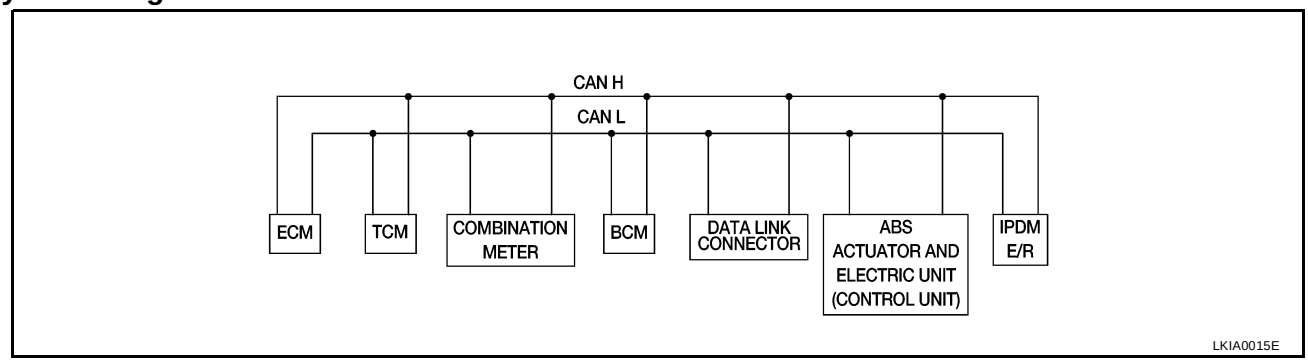

Input/Output Signal Chart

T: Transmit R: Receive

Signals	ECM	TCM	COMBINA-TION METER	BCM	ABS/TCS control unit	IPDM E/R
Engine speed signal	T		R		R	
Engine coolant temperature signal	T		R			
Accelerator pedal position signal	T					
Fuel consumption monitor signal	T		R			
A/T warning lamp signal		T	R			
A/T position indicator signal	R	T	R	R(R range only)	R	
ABS operation signal	R				T	
TCS operation signal	R	R			T	
Air conditioner switch signal	R			T		
Air conditioner compressor signal	R					T
A/C compressor request signal	T					R
Cooling fan motor operation signal	R					T
Cooling fan speed request signal	T					R
Position lights request			R	T		R
Position lights status				R		T
Low beam request				T		R
Low beam status	R			R		T
High beam request			R	T		R
High beam status	R			R		T
Front fog lights request				T		R
Front fog light status				R		T
OD cancel switch signal		R	T			R
Brake switch signal		R	T			
Vehicle speed signal	R		T			
	R		T	R		
Oil pressure switch			R			T
Sleep request1			R	T		
Sleep request2				T		R
N range switch signal		R	T			
P range switch signal		R	T			
Seat belt buckle switch signal			T	R		
Door switch signal			R	T		R
Tail lamp request			R	T		R
Turn indicator signal			R	T		
Buzzer output signal			R	T		
Trunk switch signal			R	T		
ASCD main switch signal	T		R			
ASCD cruise signal	T		R			
Wiper operation				R		T
Wiper stop position signal				R		T

Signals	ECM	TCM	COMBINATION METER	BCM	ABS/TCS control unit	IPDM E/R
Rear window defogger switch signal				T		R
Rear window defogger control signal	R			R		T

FOR A/T MODELS

System Diagram

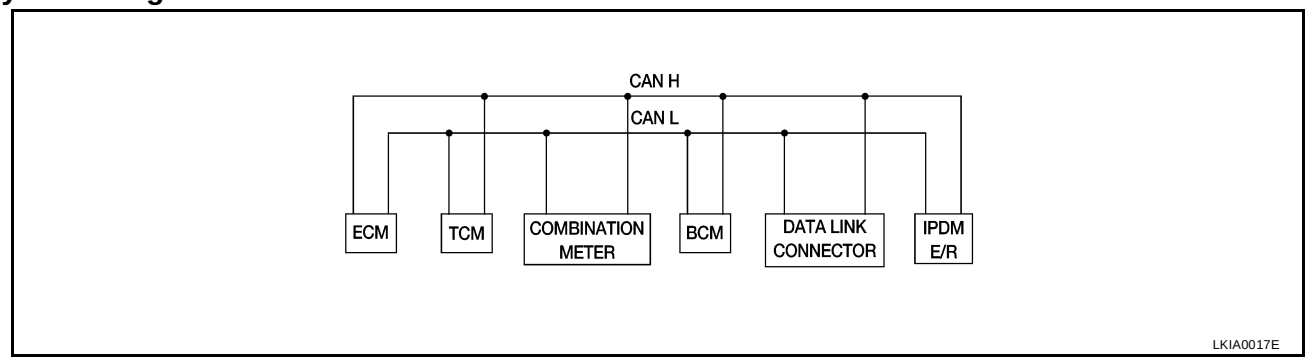

Input/Output Signal Chart

T: Transmit R: Receive

Signals	ECM	TCM	COMBINATION METER	BCM	IPDM E/R
Engine speed signal	T		R		
Engine coolant temperature signal	T		R		
Accelerator pedal position signal	T				R
Fuel consumption monitor signal	T		R		
A/T warning lamp signal		T	R		
A/T position indicator signal	R	T	R	R(R range only)	
Air conditioner switch signal	R			T	
Air conditioner compressor signal	R				T
A/C compressor request signal	T				R
Blower fan switch signal	R(QR25DE)			T	
Cooling fan motor operation signal	R			T	
Cooling fan speed request signal	T				R
Position lights request			R	T	R
Position lights status				R	T
Low beam request				T	R
Low beam status	R			R	T
High beam request			R	T	R
High beam status	R			R	T
Front fog lights request				T	R
Front fog light status				R	T
OD cancel switch signal		R	T		R
Brake switch signal		R	T		
Vehicle speed signal	R		T		
	R		T	R	
Oil pressure switch			R		T
Sleep request1			R	T	

Signals	ECM	TCM	COMBINATION METER	BCM	IPDM E/R
Sleep request2				T	R
N range switch signal		R	T		
P range switch signal		R	T		
Seat belt buckle switch signal			T	R	
Door switch signal			R	T	R
Tail lamp request			R	T	R
Turn indicator signal			R	T	
Buzzer output signal			R	T	
Trunk switch signal			R	T	
ASCD main switch signal	T		R		
ASCD cruise signal	T		R		
Wiper operation				R	T
Wiper stop position signal				R	T
Rear window defogger switch signal				T	R
Rear window defogger control signal	R			R	T

FOR M/T MODELS

System Diagram

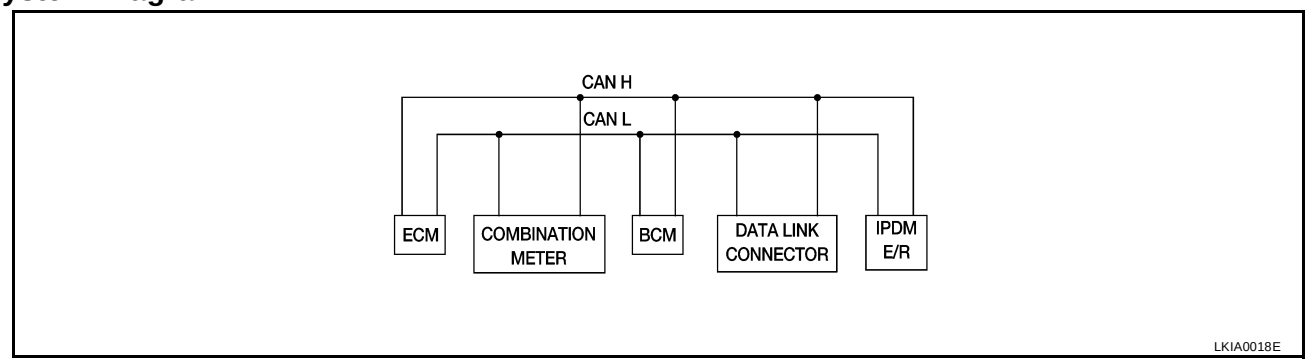

Input/Output Signal Chart

T: Transmit R: Receive

Signals	ECM	COMBINATION METER	BCM	IPDM E/R
Engine speed signal	T			
Engine coolant temperature signal	T			
Fuel consumption monitor signal	T			
Air conditioner switch signal	R		T	
Air conditioner compressor signal	R			T
A/C compressor request signal	T			R
Blower fan switch signal	R(QR25DE)		T	
Cooling fan motor operation signal	R			T
Cooling fan speed request signal	T			R
Position lights request		R	T	R
Position lights status			R	T
Low beam request			T	R
Low beam status	R		R	T
High beam request		R	T	R

Signals	ECM	COMBINATION METER	BCM	IPDM E/R
High beam status	R		R	T
Front fog lights request			T	R
Front fog light status			R	T
Vehicle speed signal	R	T		
Oil pressure switch		R		T
Sleep request1		R	T	
Sleep request2			T	R
Seat belt buckle switch signal		T	R	
Door switch signal		R	T	R
Tail lamp request		R	T	R
Turn indicator signal		R	T	
Buzzer output signal		R	T	
Trunk switch signal		R	T	
ASCD main switch signal	T	R		
ASCD cruise signal	T	R		
Wiper operation			R	T
Wiper stop position signal			R	T
Rear window defogger switch signal			T	R
Rear window defogger control signal	R		R	T

Wiring Diagram – DEF – WITH MANUAL A/C

EIS000T2

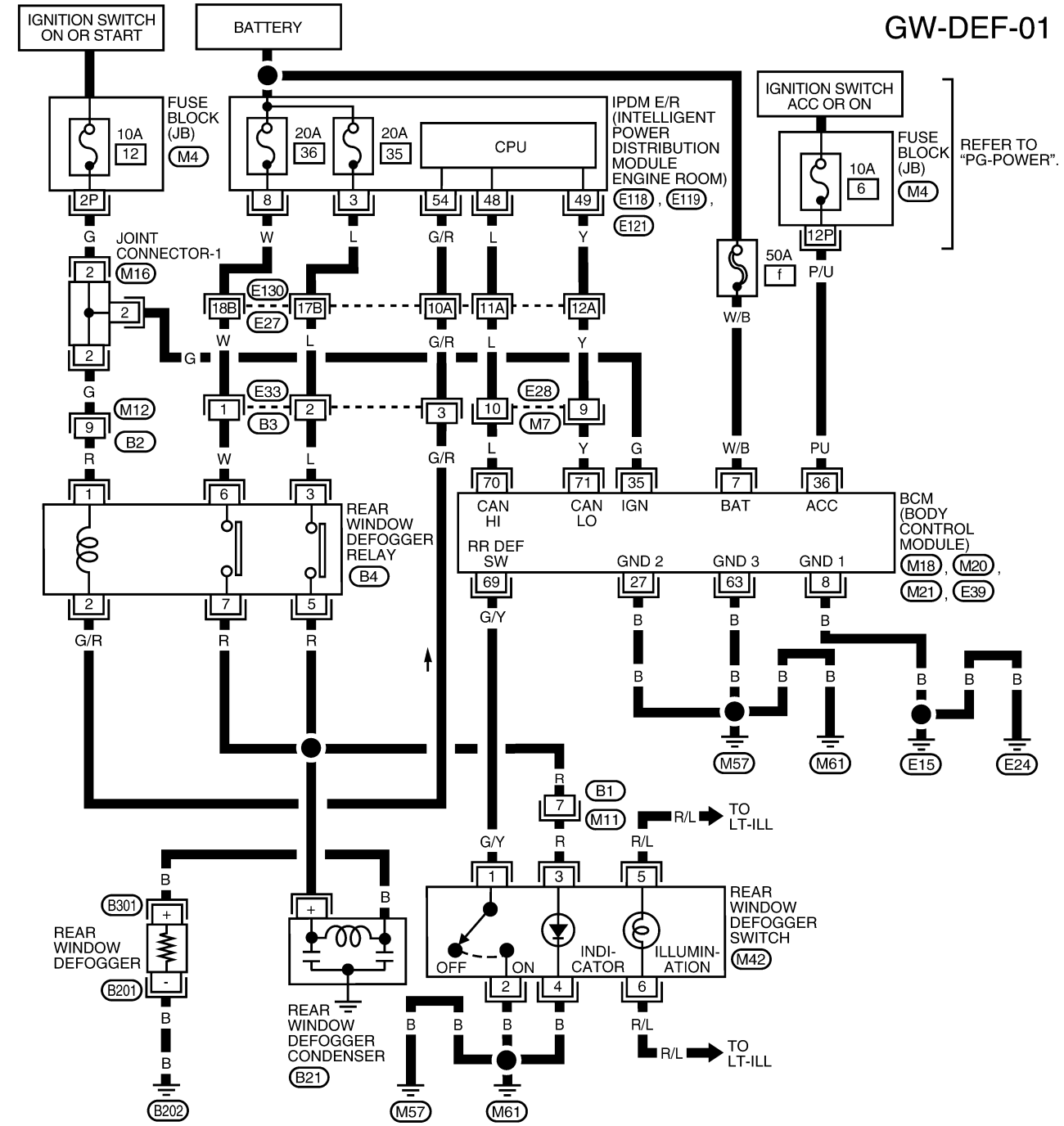

Wiring Diagram – DEF – WITH AUTO A/C

EIS000T3

GW-DEF-02

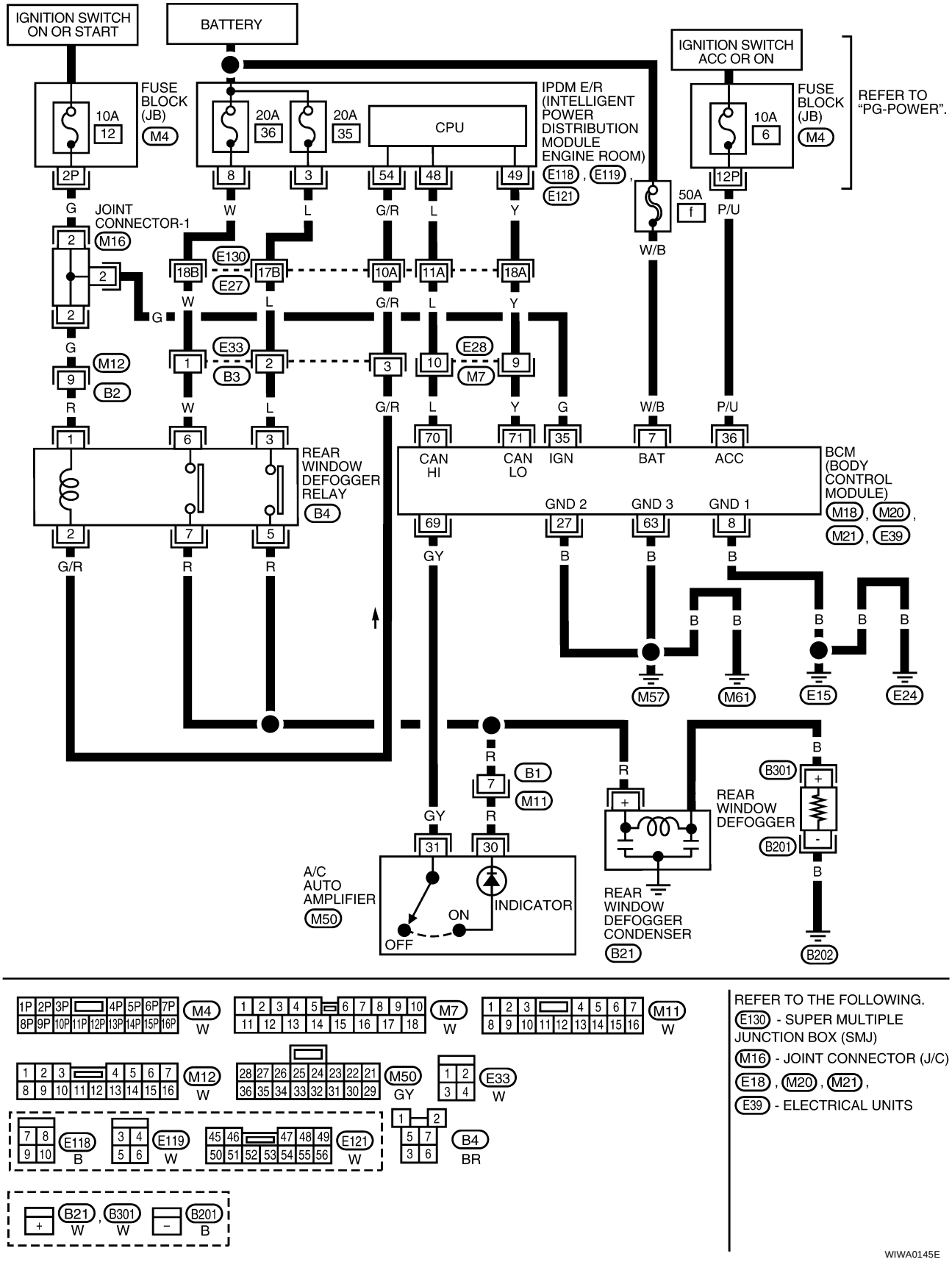

REFER TO THE FOLLOWING.
E130 - SUPER MULTIPLE JUNCTION BOX (SMJ)
M16 - JOINT CONNECTOR (J/C)
E18, M20, M21, E39 - ELECTRICAL UNITS

WIWA0145E

Wiring Diagram – H/MIRR –

EIS000T4

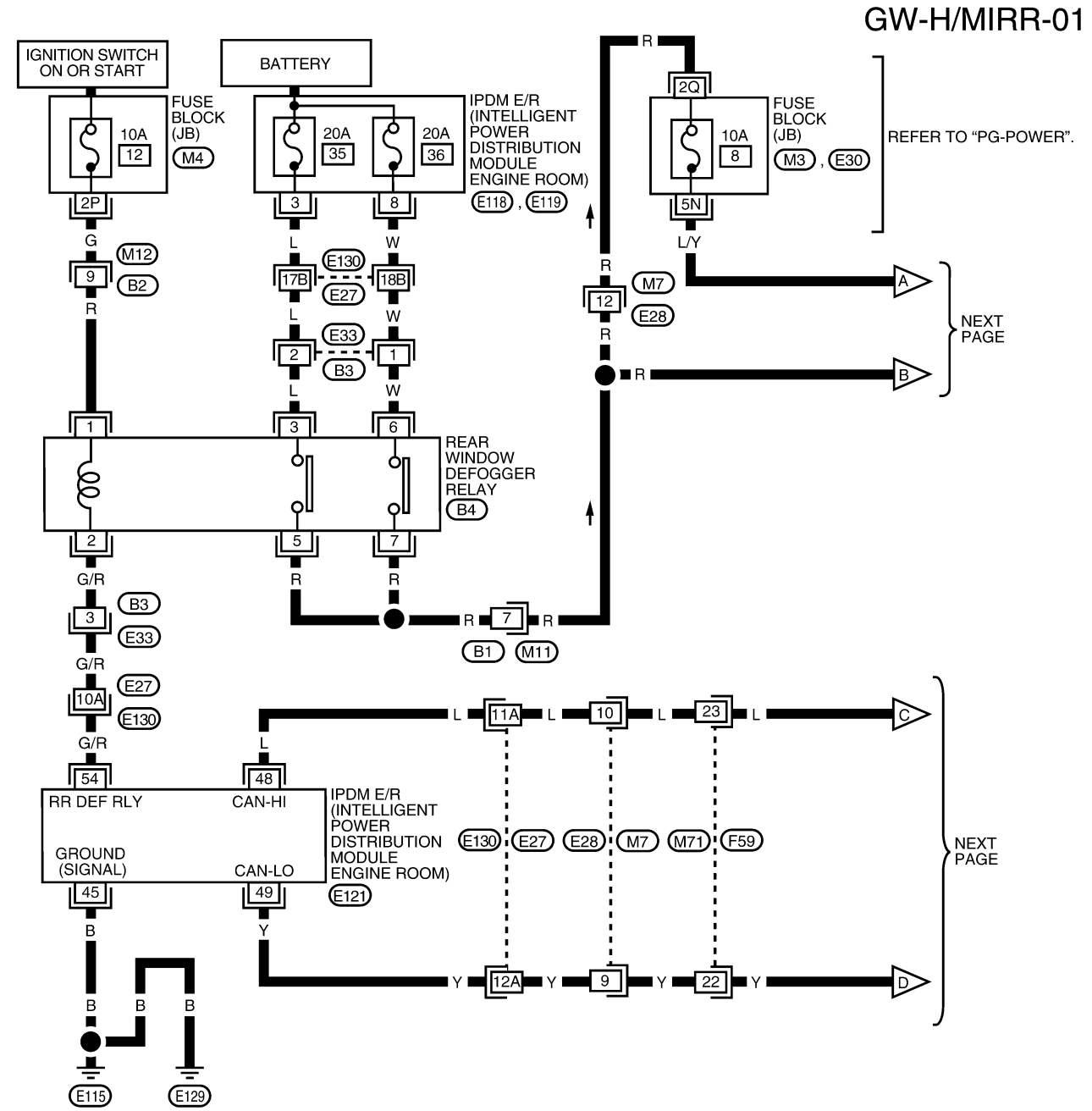

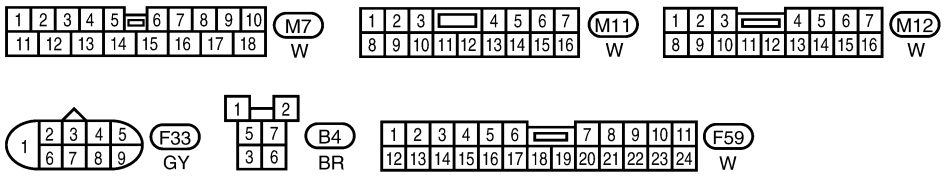

REFER TO THE FOLLOWING.
E130 - SUPER MULTIPLE JUNCTION BOX (SMJ)
M3 , M4 , E30 - FUSE BLOCK JUNCTION BOX (J/B)
E118 , E119 ,
E121 - ELECTRICAL UNITS

WIWA0142E

GW-H/MIRR-02

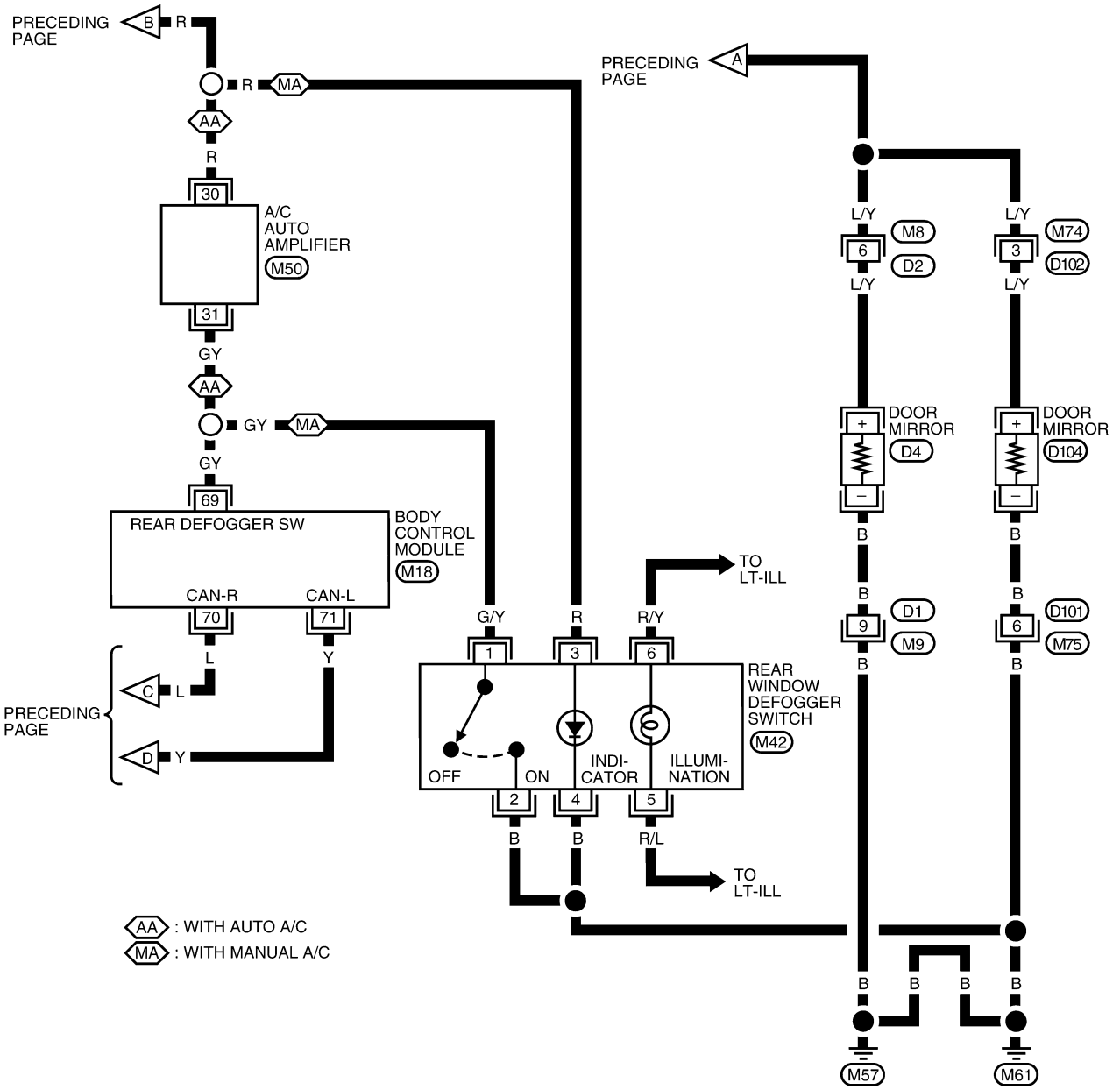

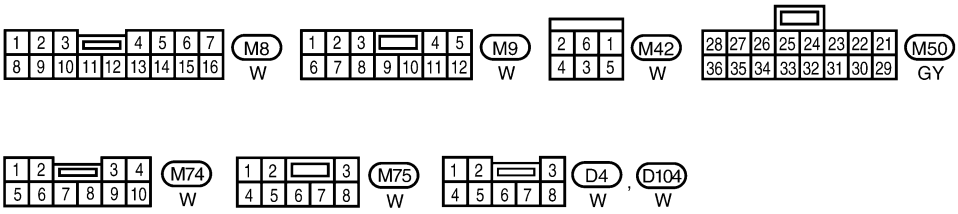

REFER TO THE FOLLOWING.
M18 - ELECTRICAL UNITS

LIWA0017E

Terminal and Reference Value for BCM

EIS000T5

TERMINAL	WIRE COLOR	ITEM	CONDITION	VOLTAGE (V) (Approx.)
7	W/B	BAT power supply	—	Battery voltage
8	B	Ground	—	0
27	B	Ground	—	0
35	G	IGN power supply	—	Battery voltage
36	P/U	ACC power supply	—	Battery voltage
63	B	Ground	—	0
69	GY	Rear window defogger switch signal	When rear window defogger switch is pressed.	0
			When rear window defogger switch is OFF.	5
70	L	DATA LINE (CAN HI)	—	—
71	Y	DATA LINE (CAN LO)	—	—

Terminal and Reference Value for IPDM E/R

EIS000T6

TERMINAL	WIRE COLOR	ITEM	CONDITION	VOLTAGE (V) (Approx.)
3	L	Rear window defogger power supply	—	Battery voltage
8	W	Rear window defogger power supply	—	Battery voltage
48	L	DATA LINE (CAN HI)	—	—
49	Y	DATA LINE (CAN LO)	—	—
54	G/R	Rear window defogger relay control signal	When rear window defogger switch is ON.	0
			When rear window defogger switch is OFF.	Battery voltage

Work Flow

EIS000T7

1. Check the symptom and customer's requests.
2. Understand the outline of system. Refer to GW-41, "System Description" .
3. The preliminary check. Refer to GW-52, "Preliminary Check" .
4. According to the trouble diagnosis chart, repair or replace the cause of the malfunction. Refer to GW-54, "Trouble Diagnosis" .
5. Does rear window defogger operate normally? OK: GO TO 6, NG: GO TO 4
6. INSPECTION END.

Preliminary Check

EIS000T8

FUSE CHECK

1. FUSE INSPECTION

- Check if any of the following fuses for BCM and IPDM E/R are blown.

COMPONENT PARTS	TERMINAL NO. (SIGNAL)	AMPERE	FUSE NO.
BCM	35 (IGN power supply)	10A	#12
	36 (ACC power supply)	10A	#6
IPDM E/R	3 (BAT supply)	20A	#35
	8 (BAT power supply)	20A	#36

NOTE:
Refer to GW-41, "Component Parts and Harness Connector Location" .

OK or NG

OK >> INSPECTION END.
NG >> If fuse is blown, be sure to eliminate cause of problem before installing new fuse, refer to PG-3, "POWER SUPPLY ROUTING CIRCUIT" .

CONSULT–II Function

EIS000T9

- The following functions are executed by combining data received and command transmitted via the communication line from the BCM.

BCM diagnosis position	Inspection items and diagnosis mode		Description
BCM C/U*	SELF DIAG RESULTS		Carries out the self-diagnosis.
	DATA MONITOR	CAN DIAG SUPPORT MNTR	Displays CAN communication system diagnosis, disabled transmission status, and communication status of each unit communicated with BCM.
		SELECTION FROM MENU	Displays the input data to BCM on real-time basis.
REAR DEFOGGER	DATA MONITOR		Displays the input rear window defogger data to BCM on real-time basis.
	ACTIVE TEST		Gives a drive to a load to check the operation.

*:Refer to LAN-4, "CAN COMMUNICATION" .

CONSULT–II BASIC OPERATION PROCEDURE

1. With ignition switch OFF, connect CONSULT–II to data link connector on vehicle, and turn ON ignition switch.
2. Touch “START”.

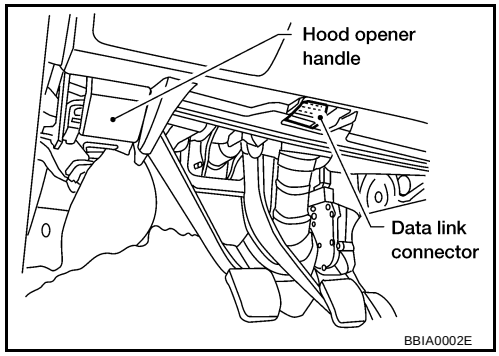

3. Touch “BCM” on “SELECT SYSTEM” screen.

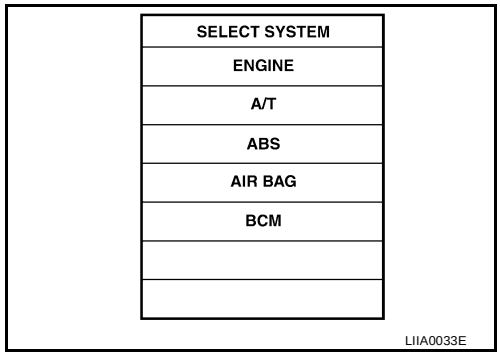

4. Select item to be diagnosed on “SELECT TEST ITEM” screen.

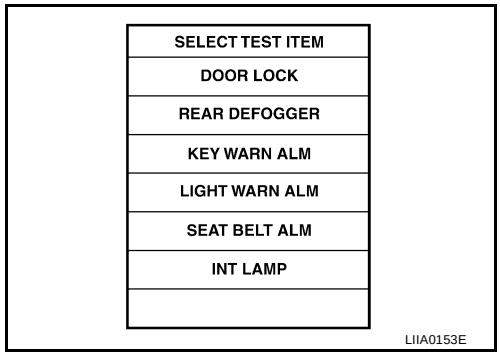

DATA MONITOR

Operation Procedure

1. Touch "REAR DEFOGGER" on the "SELECT TEST ITEM" screen.
2. Touch "DATA MONITOR" on the "SELECT DIAG MODE" screen.
3. Touch either "ALL SIGNALS" or "SELECTION FROM MENU" on the "DATA MONITOR" screen.

ALL SIGNALS	Monitor all items.
SELECTION FROM MENU	Select and monitor the item.

4. Touch "START".
5. If "SELECTION FROM MENU" is selected, touch the desired monitor item. If "ALL SIGNALS" is selected, all the items are monitored.
6. During monitoring, touching "COPY" can start recording the monitor item status.

Display Item List

Monitor item "OPERATION"		Content
REAR DEF SW	"ON/OFF"	Displays "Press (ON)/others (OFF)" status determined with the rear window defogger switch.
IGN ON SW	"ON/OFF"	Displays "IGN (ON)/OFF, ACC (OFF)" status determined with the ignition switch signal.

ACTIVE TEST

Operation Procedure

1. Touch "REAR DEFOGGER" on the "SELECT TEST ITEM" screen.
2. Touch "ACTIVE TEST" on the "SELECT DIAG MODE" screen.
3. Touch the item to be tested, and check the operation.
4. During the operation check, touching "OFF" deactivates the operation.

Display Item List

Test item	Content
REAR DEFOGGER	Gives a drive signal to the rear window defogger to activate it.

Trouble Diagnosis

EIS000TA

Rear window defogger does not activate.

1. SELF-DIAGNOSTIC RESULT CHECK

With CONSULT–II

- Select “BCM” on “SELECT SYSTEM” screen.
- Select “BCM C/U” on “SELECT TEST ITEM” screen, and select “SELF-DIAG RESULTS”.
- Check display content in self-diagnostic results.

CONSULT-II display code	Diagnosis item
U1000	CAN COMM
	CAN CIRC 1
	CAN CIRC 2
	CAN CIRC 3
	CAN CIRC 4

Contents displayed

No malfunction>> GO TO 3.
Malfunction in CAN communication system>> GO TO 2.

2. SYMPTOM CHECK

With CONSULT–II

- Select “CAN DIAG SUPPORT MNTR” in "DATA MONITOR".
- Select “START” and check display content.

Diagnosis item	Self-diagnostic result content	
	Normal	Not normal (Example)
CAN COMM	OK	NG
CAN CIRC 1	OK	UNKWN
CAN CIRC 2	OK	UNKWN
CAN CIRC 3	OK	UNKWN
CAN CIRC 4	OK	UNKWN

>> After printing the monitor items, go to “CAN System”. Refer to LAN-4, "CAN COMMUNICATION" .

3. REAR DEFOGGER OPERATES INSPECTION BY ACTIVE TEST

With CONSULT–II

- Using "REAR DEFOGGER" in the ACTIVE TEST. Refer to GW-53, "ACTIVE TEST" .

Dose rear window defogger operate normally?

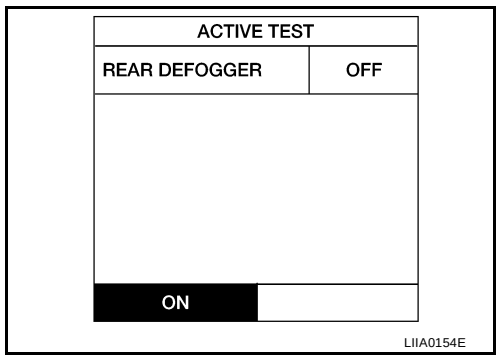

OK or NG

OK >> GO TO 4.
NG >> GO TO 6.

4. REAR WINDOW DEFOGGER SWITCH OPERATION INSPECTION BY DATA MONITOR

With CONSULT–II

- Using "REAR DEF SW" in the DATA MONITOR". Refer to GW-53, "DATA MONITOR" .

Dose rear window defogger switch operate normally?

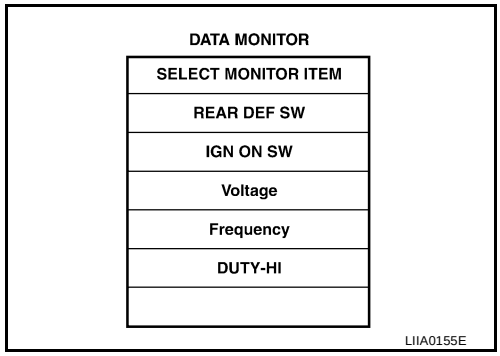

OK or NG

OK >> Replace BCM.
NG >> GO TO 5.

5. REAR WINDOW DEFOGGER SWITCH HARNESS CONTINUITY INSPECTION

Check continuity between BCM harness connector M18 terminal 69 (GY) and rear window defogger switch harness connector M50 (with auto A/C) terminal 31 (GY) or M42 (with manual A/C) terminal 1 (GY), and between BCM connector M18 terminal 69 (GY) and body ground.

Terminals				Continuity
(+)		(–)		
Connector	Terminal	Connector	Terminal	
M18	69 (GY)	M42 (with manual A/C)	1 (GY)	Should exist
	69 (GY)		Ground	Should not exist
M18	69 (GY)	M50 (with auto A/C)	31 (GY)	Should exist
	69 (GY)		Ground	Should not exist

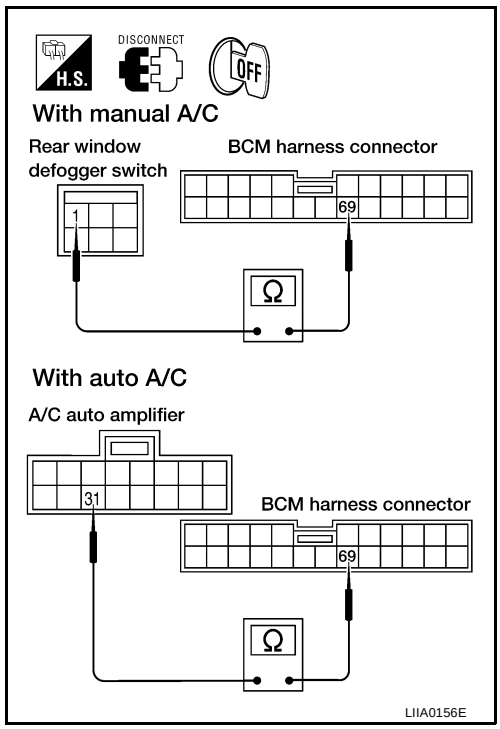

OK or NG

OK >> Replace rear window defogger switch.
NG >> Repair or replace harness.

6. REAR WINDOW DEFOGGER RELAY POWER SUPPLY CIRCUIT INSPECTION

- Turn the ignition switch OFF.
- Check voltage between rear window defogger relay harness connector B4 terminal 1 (R) and body ground.

1 (R) – Ground :Battery voltage

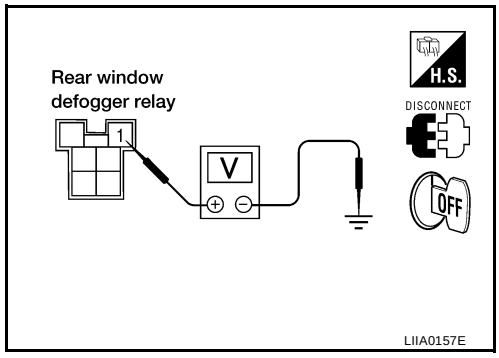

OK or NG

OK >> GO TO 7.
NG >> Repair or replace harness.

7. REAR WINDOW DEFOGGER RELAY INSPECTION

- Remove rear window defogger relay.
- Check continuity between terminals 3 and 5, 6 and 7.

Terminal (+) Terminal	Terminal (–) Terminal	Condition	Continuity
3	5	12V direct current supply between terminals 1 to 2	YES
		No current supply	NO
6	7	12V direct current supply between terminals 1 to 2	YES
		No current supply	NO

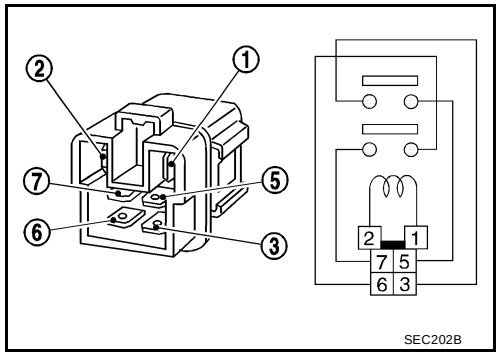

OK or NG

OK >> GO TO 8.
NG >> Replace rear window defogger relay.

8. REAR WINDOW DEFOGGER FILAMENT CHECK

Check rear window defogger filament. Refer to GW-57, "Filament Check" .

OK or NG

OK >> GO TO 9.
NG >> Repair rear window defogger filament. Refer to GW-58, "Filament Repair" .

9. REAR WINDOW DEFOGGER GROUND HARNESS INSPECTION

Check continuity between rear window defogger connector B201 terminal (–) (B) and body harness.

– (B) – Ground :Continuity should exist

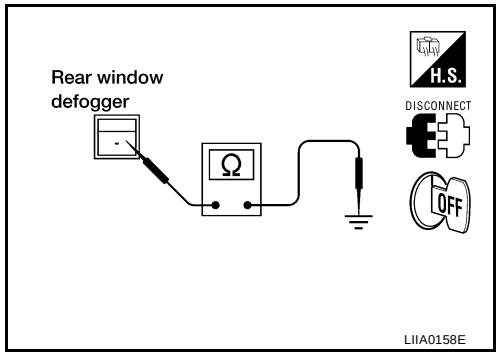

OK or NG

OK >> GO TO 10.
NG >> Repair or replace harness.

10. REAR WINDOW DEFOGGER HARNESS INSPECTION

Check continuity between rear window defogger relay harness connector B4 terminal 5 (R) and 7 (R) and rear window defogger.

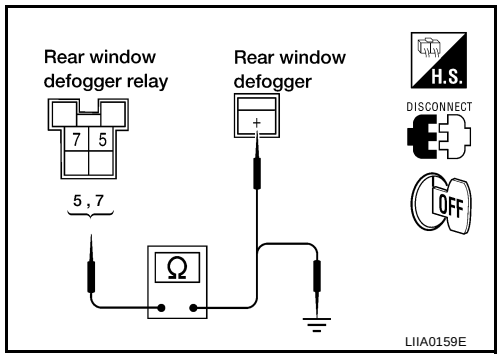

Terminals				Continuity
(+)		(–)		
Connector	Terminal	Connector	Terminal	
B4	5 (R)	B21	+ (R)	Should exist
	5 (R)	Ground		Should not exist

OK or NG

OK >> GO TO 11.
NG >> Repair or replace harness.

11. IPDM E/R HARNESS INSPECTION

Check continuity between IPDM E/R harness connector E118 and E119 terminal 3 (L) and 8 (W) and rear window defogger relay connector B4 terminal 3 (L) and 6 (W), and IPDM E/R harness connector E118, E119 terminal 3 (L), 8 (W) and body ground.

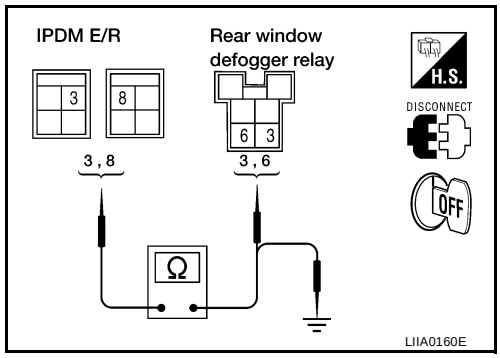

Terminals				Continuity
(+)		(–)		
Connector	Terminal	Connector	Terminal	
E119	3 (L)	B4	3 (L)	Should exist
E118	8 (W)		6 (W)	Should exist
E118, E119	3 (L), 8 (W)	Ground		Should not exist

OK or NG

OK >> Replace IPDM E/R.
NG >> Repair or replace harness.

Filament Check

EIS000TB

1. When measuring voltage, wrap tin foil around the top of the negative probe. Then press the foil against the wire with your finger.

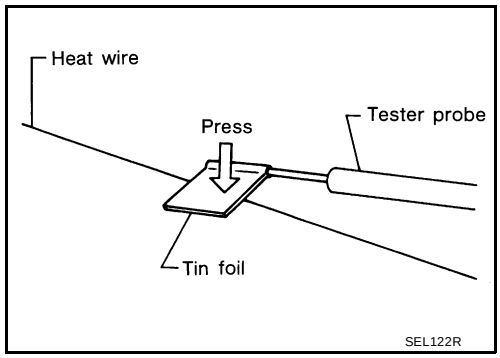

2. Attach probe circuit tester (in Volt range) to middle portion of each filament.

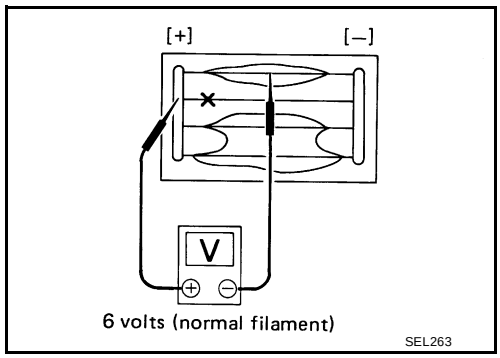

3. If a filament is burned out, circuit tester registers 0 or battery voltage.
4. To locate burned out point, move probe to left and right along filament. Test needle will swing abruptly when probe passes the point.

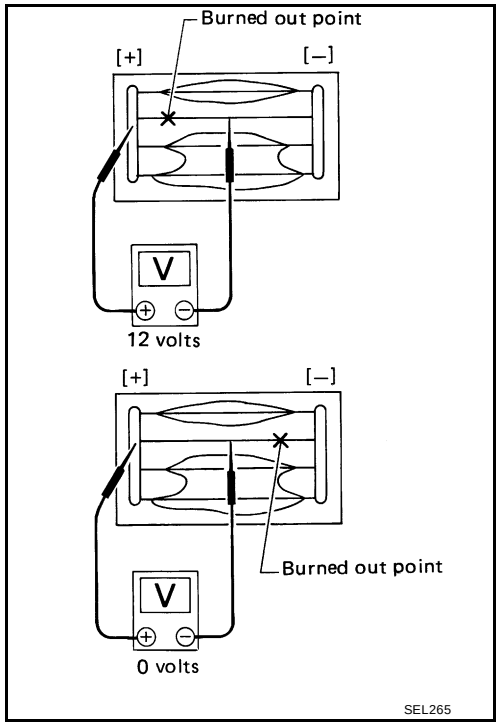

Filament Repair

EIS000TC

REPAIR EQUIPMENT

- Conductive silver composition (DuPont No. 4817 or equivalent)
- Ruler 30 cm (11.8 in) long
- Drawing pen
- Heat gun
- Alcohol
- Cloth

REPAIRING PROCEDURE

1. Wipe broken heat wire and its surrounding area clean with a cloth dampened in alcohol.
2. Apply a small amount of conductive silver composition to tip of drawing pen.
   Shake silver composition container before use.
3. Place ruler on glass along broken line. Deposit conductive silver composition on break with drawing pen. Slightly overlap existing heat wire on both sides [preferably 5 mm (0.20 in)] of the break.

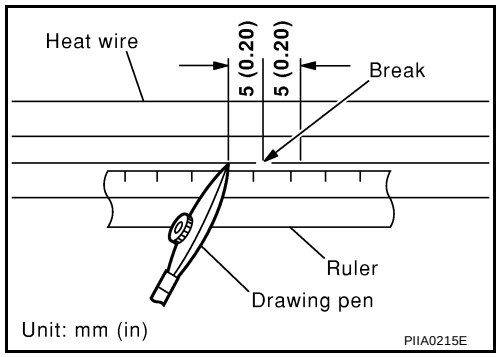

4. After repair has been completed, check repaired wire for continuity. This check should be conducted 10 minutes after silver composition is deposited.
   Do not touch repaired area while test is being conducted.

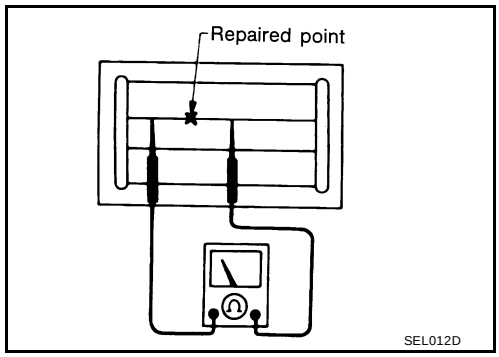

5. Apply a constant stream of hot air directly to the repaired area for approximately 20 minutes with a heat gun. A minimum distance of 3 cm (1.2 in) should be kept between repaired area and hot air outlet.
   If a heat gun is not available, let the repaired area dry for 24 hours.

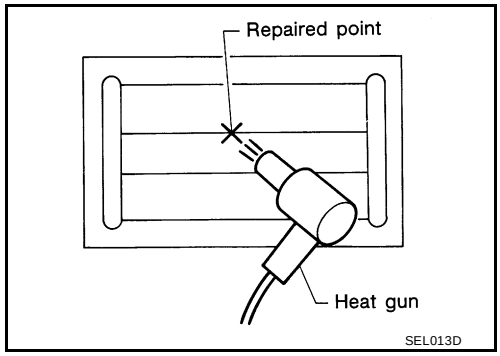

DOOR MIRROR

PFP:96301

Wring Diagram –MIRROR–

EIS000TD

GW-MIRROR-01

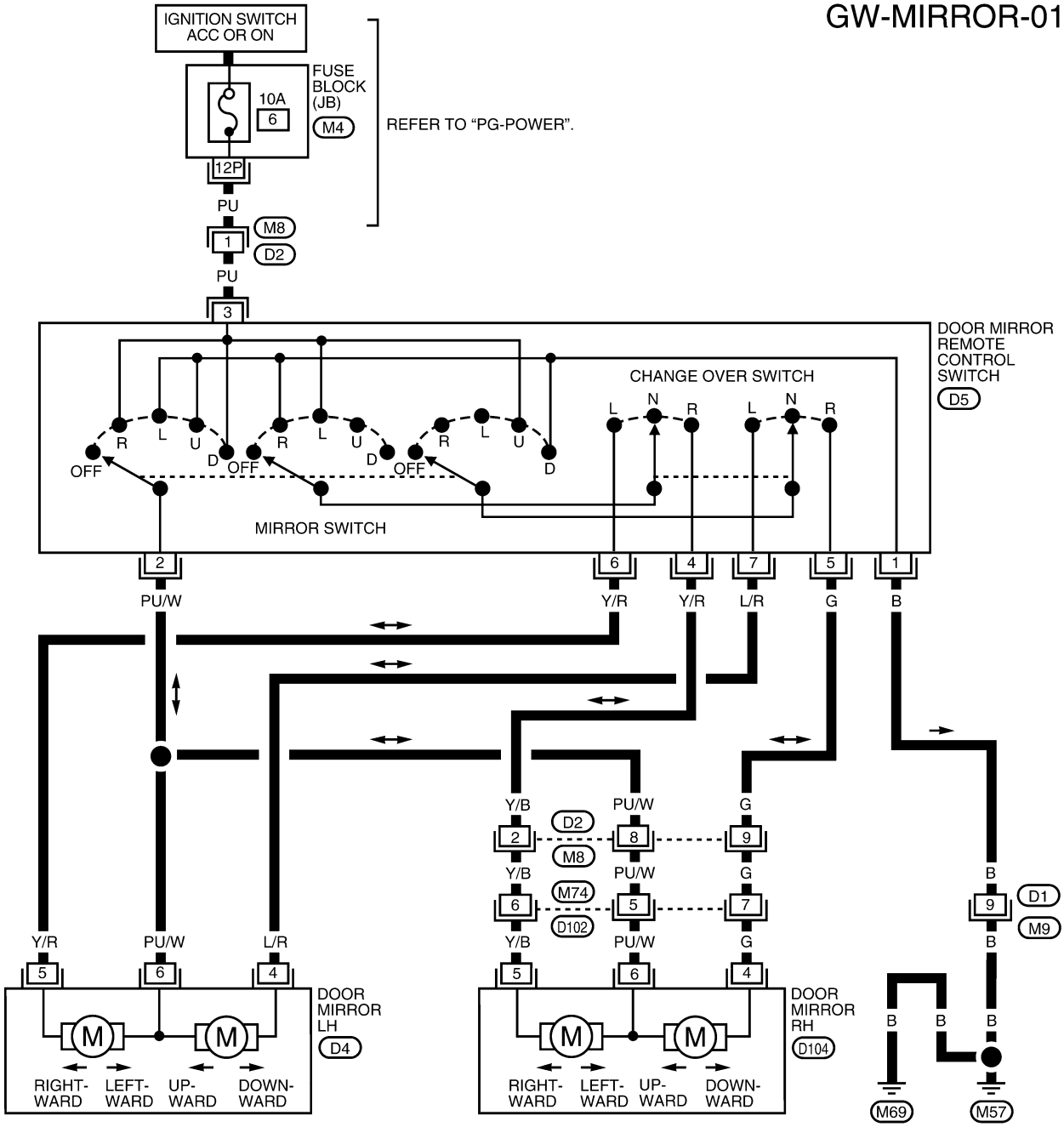

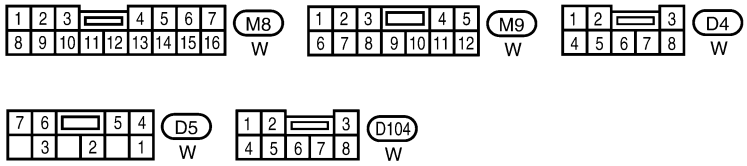

REFER TO THE FOLLOWING.
M4 - FUSE BLOCK-JUNCTION BOX (J/B)

LIWA0015E

Removal and Installation

EIS000TE

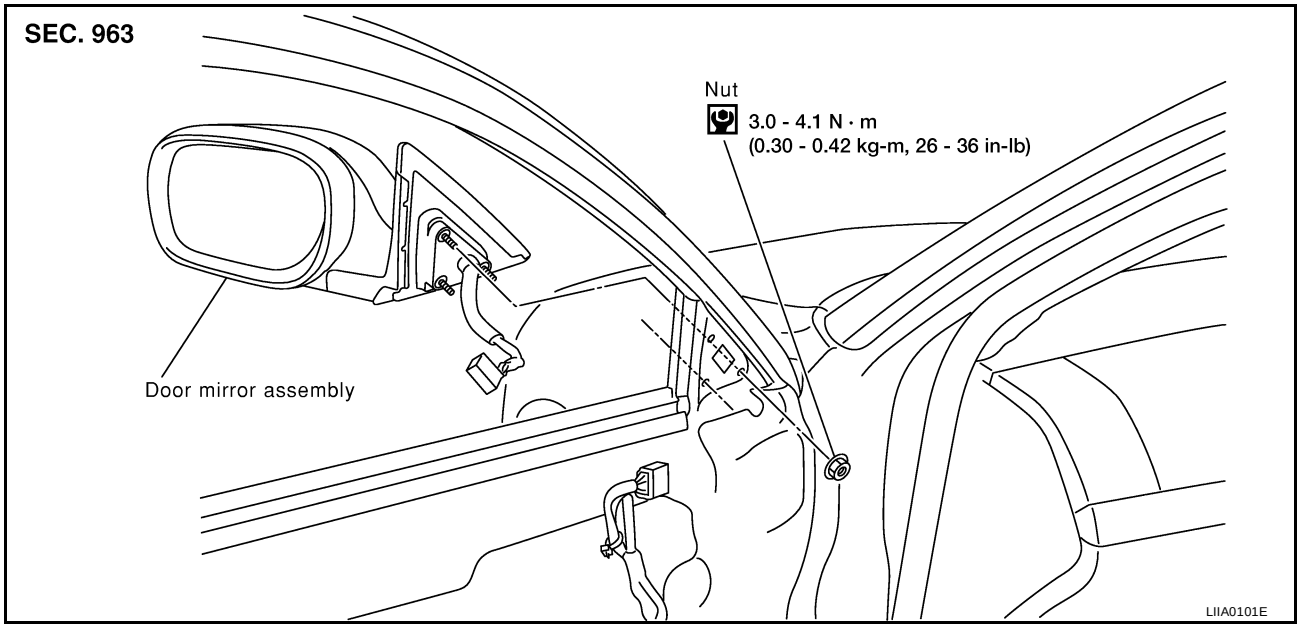

NOTE:
Be careful not to damage the mirror bodies.

1. Remove the front door sash cover. Refer to EI-27, "Front Door" .
2. Remove the door mirror harness connector.
3. Remove the door mirror mounting nuts, and remove the door mirror assembly.

Install in the reverse order of removal.

SECTION IDX

ALPHABETICAL INDEX

A

A/C - Wiring diagram ATC-35, MTC-35
A/C air flow MTC-22
A/C component layout MTC-17
A/C compressor clutch removal and installation .. ATC-123, MTC-85
A/C compressor description MTC-16
A/C compressor mounting ATC-122, MTC-83, MTC-84
A/C compressor precaution ATC-9, MTC-9
A/C compressor special service tool . ATC-12, MTC-12
A/C diagnostic work flow (auto A/C) ATC-31
A/C diagnostic work flow (manual A/C) MTC-28
A/C evaporator ATC-128, MTC-90
A/C HFC134a (R134a) system identification ATC-5, MTC-4
A/C HFC134a (R134a) system introduction ... MTC-16
A/C HFC134a (R134a) system precaution ATC-4, MTC-3
A/C HFC134a (R134a) system service procedure ATC-119, MTC-79
A/C HFC134a (R134a) system service tools .. ATC-12, MTC-12
A/C HFC134a system service equipment precaution ... ATC-9, MTC-9
A/C lubricant (R134a) ATC-18, MTC-18
A/C lubrication oil ATC-18, MTC-18
A/C operational check ATC-49, MTC-38
A/C performance chart ATC-82, MTC-59
A/C performance test diagnoses ATC-79, MTC-58
A/C self-diagnoses (auto A/C) ATC-41
A/C service data specification ATC-133
A/C switch MTC-21
A/C symptom chart (auto A/C) ATC-31
A/C symptom chart (manual A/C) MTC-28
A/C trouble diagnoses (auto A/C) ATC-31
A/C trouble diagnoses (manual A/C) MTC-28
A/C, A - Wiring diagram ATC-35
A/C, M - Wiring diagram MTC-35
A/T - Wiring diagram AT-16
A/T - Wiring diagram - AT - FTS AT-111
A/T - Wiring diagram - AT - MAIN AT-100
A/T - Wiring diagram - AT - PNP/SW AT-105
A/T - Wiring diagram - AT - VSS A/T AT-117
A/T fluid temperature sensor AT-109
A/T IND - Wiring diagram DI-41
A/T indicator DI-41
A/T self-diagnoses AT-40, AT-50, AT-51
A/T shift lock system AT-247
A/T shift lock system - Wiring diagram AT-248
A/T Wiring diagram - AT - ENG SS AT-121
A/T Wiring diagram AT - 1ST AT-126
A/T Wiring diagram AT - 2ND AT-131
A/T Wiring diagram AT - 3RD AT-136
A/T Wiring diagram AT - 4TH AT-141
A/T Wiring diagram AT - BA/FTS AT-191
A/T Wiring diagram AT - CAN AT-187
A/T Wiring diagram AT - LPSV AT-161
A/T Wiring diagram AT - NONDTC AT-209
A/T Wiring diagram AT - OVRCSV AT-182
A/T Wiring diagram AT - SSV/A AT-167
A/T Wiring diagram AT - SSV/B AT-172
A/T Wiring diagram AT - TCCSIG AT-153
A/T Wiring diagram AT - TCV AT-148
A/T Wiring diagram AT - TPS AT-177
A/T Wiring diagrawm AT - VSSMTR .. AT-198, AT-202
ABS - Wiring diagram BRC-12
Absolute pressure sensor EC-804
Accelerator control system ACC-2
Accelerator pedal position (APP) sensor EC-263, EC-269, EC-465, EC-915, EC-922, EC-1125
Accelerator pedal released position learning .. EC-668
Active damper suspension system - Wiring diagram FSU-4
Aiming adjustment LT-23
Air bag SRS-3
Air bag disposal SRS-54
Air bag precautions GI-3
Air bleeding (hydraulic clutch)Air bleeding (hydraulic clutch) CL-7
Air bleeding for brake systemAir bleeding for brake system BR-9
Air cleaner and air duct EM-14, EM-110
Air cleaner filter replacement MA-17, MA-24
Air conditioner - Wiring diagram ATC-35, MTC-35
Air conditioner cut control EC-34, EC-652
Air conditioning - See A/C MTC-16
Air flow meter - See Mass air flow sensor EC-154, EC-161, EC-387, EC-790, EC-798, EC-1041
Air mix door control linkage adjustment ATC-63
Alternator SC-33
Ambient sensor ATC-103
Angular tightening application EM-4, EM-101
Antenna AV-26
Anti-lock brake system - Wiring diagram BRC-12
APPS1 - Wiring diagram EC-271, EC-924
APPS2 - Wiring diagram EC-467, EC-1127
APPS3 - Wiring diagram EC-265, EC-917
ASC/BS - Wiring diagram EC-535, EC-1183
ASC/SW - Wiring diagram EC-528, EC-1176
ASCBOF - Wiring diagram EC-603, EC-1259
ASCD EC-628
ASCD (automatic speed control device) EC-1286, ACS-2
ASCIND - Wiring diagram EC-611, EC-1269
Audio AV-4
AUDIO - Wiring diagram AV-4, AV-8
Auto air conditioner - Wiring diagram ATC-35
Auto anti-dazzling inside mirror GW-39, GW-40
Automatic amplifier ATC-39, ATC-52
Automatic transaxle number GI-43
Automatic transmission fluid replacement MA-29

B

Back door trim EI-27
BACK/L - Wiring diagram LT-107
Back-up lamp switch (M/T)Back-up lamp switch MT-12

Basic inspection EC-84, EC-705
Battery SC-4
Battery/Starting/Charging System Tester SC-6, SC-16, SC-27
Baulk ring (M/T) MT-20
BCM(Body control module) BCS-3
Block heater EM-67, EM-186
Blower motor ATC-67, ATC-109, MTC-49, MTC-70
Blower resistor MTC-76
Blower unit ATC-108, MTC-69
Board-on lift GI-37
Body alignment BL-150
Body component parts BL-139
Body construction BL-149
Body exterior paint color BL-138
Body repair BL-138
Body sealing BL-146
Brake boosterBrake booster BR-17
Brake control valve (Proportioning valve)Brake control valve (Proportioning valve) BR-31
Brake fluid changeBrake fluid change BR-9
Brake fluid level MA-32
Brake fluid level and line checkBrake fluid level and line check BR-9
Brake hydraulic lineBake hydraulic line BR-10
Brake inspection MA-32
Brake lines and cables inspection MA-32
Brake master cylinderBrake master cylinder BR-13
Brake pedalBrake pedal BR-6
Brake switch EC-549, EC-1205
BRK/SW - Wiring diagram EC-550, EC-1206
Bulb specifications LT-146
Bumper, front EI-13
Bumper, rear EI-15
BYPS/V - Wiring diagram . EC-512, EC-520, EC-1162, EC-1169

C

Camshaft EM-34, EM-134
Camshaft inspection EM-36, EM-139
Camshaft position sensor (PHASE) .. EC-291, EC-945
CAN - Wiring diagram . EC-139, EC-764, LAN-9, LAN-28, LAN-44
CAN (Controller Area Network) LAN-4, LAN-8, LAN-27, LAN-43
CAN communication EC-34, EC-138, EC-653, EC-763, AT-185, BRC-71, LAN-4, LAN-8, LAN-27, LAN-43
Canister-See EVAP canister EC-617, EC-1275
CHARGE - Wiring diagram SC-26
Charging system SC-25
Chassis and body maintenance MA-28
Chassis and body maintenanceSchedule 1 ..... MA-9
Chassis and body maintenanceSchedule 2 ..... MA-11
CHIME - Wiring diagram DI-49
CIGAR - Wiring diagram WW-28
Cigarette lighter WW-28
Circuit breaker PG-63
Clearance lamp LT-109
Closed loop control EC-32, EC-442, EC-650
Closed loop control (Bank 1) EC-1099
Closed loop control (Bank 2) EC-1099
Clutch coverClutch cover CL-15
Clutch discClutch disc CL-15
Clutch fluid level MA-28
Clutch master cylinderClutch master cylinder CL-8
Clutch operating cylinderClutch operating cylinder CL-10
Clutch pedalClutch pedal CL-5
Clutch release mechanismClutch release mechanism . CL-13
Coil spring (front) FSU-9
Coil spring (rear)Coil spring RSU-9
Collision diagnosis SRS-61
Combination lamp, front, removal and installation .. LT-25
Combination lamp, rear, removal and installation .. LT-122
Combination meter DI-4
Component Location (auto A/C) ATC-32
Component Location (manual A/C) MTC-29
Compressor clutch removal and installation . ATC-123, MTC-85
Compressor mounting ATC-122, MTC-83, MTC-84
Compressor precaution ATC-9, MTC-9
Compressor special service tool ATC-12, MTC-12
Condenser ATC-126, MTC-88
Connector inspection GI-22
Console box - See Instrument panel IP-10
CONSULT for engine EC-106, EC-730
CONSULT for TCS BRC-58
CONSULT general information GI-35
Contaminated refrigerant MTC-3
Control unit ATC-102, MTC-67
Control units (terminal arrangement) PG-67
Controller Area Network (CAN) LAN-4, LAN-8, LAN-27, LAN-43
Converter housing installation AT-357
COOL/F - Wiring diagram .. EC-242, EC-447, EC-1106
Coolant mixture ratio MA-13
Coolant overtemperarute enrichment photection .. EC-238
Coolant replacement CO-6, CO-28, MA-14
Coolant replacementVQ35DE MA-22
Cooling circuit (engine) CO-31
Cooling fan motor EC-249, EC-454, EC-1113
Cooling unit (A/C evaporator) ATC-112, ATC-128, MTC-73, MTC-90
Corrosion protection BL-143
Coupling sleeve (M/T) MT-20
Crankcase ventilation system - See Positive crankcase ventilation EC-626, EC-1284
Crankshaft EM-68
Crankshaft position sensor (POS) EC-284, EC-938
Crash zone sensor SRS-50
Cylinder block EM-67, EM-186
Cylinder block boring EM-87
Cylinder head EM-53, EM-164

Cylinder head bolt tightening EM-170

D

Data link connector EC-613, EC-1271
Data link connector for Consult EC-108, EC-732
Daytime light system LT-28
Daytime running light - See Daytime light system .. LT-28
Diagnosis sensor unit SRS-53
Diagnostic trouble code (DTC) for OBD system EC-15, EC-58, EC-632, EC-677
Diagnostic trouble code (DTC) inspection priority chart EC-81, EC-701
Differential gear (FF M/T) MT-23
Dimensions GI-43
DLC - Wiring diagram EC-613, EC-1271
Door glass GW-34, GW-37
Door glass Fitting Adjustment(Front) GW-35
Door glass Fitting Adjustment(Rear) GW-38
Door mirror GW-61
Door trim EI-27
Door, front BL-75, GW-34
Door, rear BL-75, GW-37
Drive belt EM-12
Drive belt inspectionQR25DE MA-14
Drive belt inspectionVQ35DE MA-21
Drive shaft (front) FAX-11
Driver air bag SRS-39
Dropping resistor (A/T) AT-159
DTC work support EC-117, EC-742
DTRL - Wiring diagram LT-38
Duct and grilles ATC-117, MTC-77

E

ECM input/output signal EC-99, EC-722
ECM power supply EC-131, EC-383, EC-757, EC-1037
ECM/PW - Wiring diagram EC-384
ECTS - Wiring diagram EC-174, EC-813, EC-818
Electric sun roof RF-10
Electric throttle control actuator EC-397, EC-399, EC-411, EC-1047, EC-1049, EC-1061
Electrical diagnoses GI-22
Electrical load signal circuit EC-601, EC-1257
Electronic ignition (EI) system EC-33, EC-651
EMNT - Wiring diagram EC-1248
Engine control circuit diagram EC-97, EC-720
Engine control component parts location ... EC-93, EC-714
Engine control module (ECM) EC-376, EC-1030
Engine control system diagram and chart . EC-28, EC-646
Engine coolant CO-32
Engine coolant temperature sensor (ECTS) ... EC-172, EC-177, EC-811, EC-816
Engine fail-safe system EC-82, EC-703
Engine mounting control (Front) EC-1247
Engine oil LU-17
Engine oil filter replacementQR25DE ... MA-18, MA-25
Engine oil precautions GI-3, GI-6
Engine oil replacementQR25DE MA-17, MA-24
Engine removal EM-63, EM-182
Engine serial number GI-43
ETC1 - Wiring diagram EC-400, EC-1050
ETC2 - Wiring diagram EC-408, EC-1058
ETC3 - Wiring diagram EC-412, EC-1062
EVAP canister EC-1275
EVAP canister purge volume control solenoid valve EC-315, EC-477, EC-617, EC-972, EC-1135, EC-1275
EVAP canister vent control valve EC-321, EC-485, EC-491, EC-978, EC-1143, EC-1149
EVAP control system (small leak) diagnosis .. EC-307, EC-341, EC-349, EC-475, EC-498, EC-963, EC-998
EVAP control system pressure sensor ... EC-328, EC-334, EC-985, EC-991
EVAP control system purge flow monitoring diagnosis . EC-301, EC-957
EVAP vapor lines inspection MA-20, MA-27
Evaporative emission (EVAP) system EC-614, EC-617, EC-1272
Evaporator ATC-128, MTC-90
Exhaust manifold EM-116
Exhaust system EX-3, EX-6
Exhaust system inspection EX-3, EX-6, MA-28
Expansion valve ATC-129, MTC-91

F

F/PUMP - Wiring diagram EC-585, EC-1241
Fan control amp. ATC-116
Fan switch MTC-21
Final drive (FF M/T) MT-23
Flow charts GI-25
FLS1 - Wiring diagram EC-359, EC-1008
FLS2 - Wiring diagram EC-366, EC-1015
FLS3 - Wiring diagram EC-508, EC-1158
Fluid temperature sensor (A/T) AT-109
Fluids MA-12
Fluorescent leak detector ATC-129, MTC-91
Flywheel (clutch)Flywheel (clutch) CL-15
Fork rod (M/T) MT-22
Freeze frame data EC-59, EC-678
Front bumper EI-13
Front combination lamp removal and installation LT-25
Front disc brakeFront disc brake BR-20
Front door BL-75, GW-34
Front Door Trim EI-27
Front passenger air bag SRS-43
Front seat SE-14
Front seat belt SB-3
Front seat belt pre-tensioner SB-2, SRS-3, SRS-52
Front side air bag SRS-47
FTTS - Wiring diagram EC-235, EC-894, EC-898
FUEL - Wiring diagram EC-222, EC-228
Fuel cut control (at no load high engine speed) EC-34, EC-652
Fuel gauge DI-4

Fuel injection system EC-220, EC-226
Fuel injection system (Bank 1) EC-877, EC-885
Fuel injection system (Bank 2) EC-877, EC-885
Fuel injector and fuel tube EM-29, EM-129
Fuel level sensor .. EC-358, EC-363, EC-365, EC-507, EC-1007, EC-1012, EC-1014, EC-1157
Fuel line inspection FL-3, MA-17, MA-24
Fuel precautions GI-3, GI-5
Fuel pressure check EC-51, EC-671
Fuel pressure release EC-51, EC-671
Fuel pump EC-584, EC-1240
Fuel system FL-3
Fuel systemCommercial Service Tools FL-2
Fuel systemPREPARATION FL-2
Fuel tank temperature sensor ... EC-232, EC-234, EC-892, EC-897
Fuel tank vacuum relief valve EC-1275
FUELB1 - Wiring diagram EC-879, EC-887
FUELB2 - Wiring diagram EC-880, EC-888
Fuse PG-63, PG-72
Fuse block PG-71
Fusible link PG-63, PG-72

G

Garage jack and safety stand GI-37
Gear components (M/T) MT-20
Generator SC-33
Generator - See Alternator SC-33
Generic scan tool (GST) EC-119, EC-743
Glass GW-11, GW-13, GW-34, GW-37
Glove box lamp LT-142
Grease MA-12
Ground distribution PG-26

H

H/LAMP - Wiring diagram LT-12
Handling precautions for plastics BL-161
Harness connector PG-64
Harness connector inspection GI-22
Harness layout PG-37
Hazard warning lamp LT-80
Headlamp LT-5
Headlamp removal and installation LT-25
Heated oxygen sensor 1 .... EC-185, EC-191, EC-200, EC-416, EC-422
Heated oxygen sensor 1 (bank 1) EC-827, EC-836, EC-847, EC-1066, EC-1072
Heated oxygen sensor 1 (bank 2) EC-827, EC-836, EC-847, EC-1066, EC-1072
Heated oxygen sensor 1 heater EC-144
Heated oxygen sensor 1 heater (bank 1) EC-774
Heated oxygen sensor 1 heater (bank 2) EC-774
Heated oxygen sensor 2 .... EC-207, EC-213, EC-428, EC-435
Heated oxygen sensor 2 (bank 1) EC-857, EC-867, EC-1079, EC-1089
Heated oxygen sensor 2 (bank 2) EC-857, EC-867, EC-1079, EC-1089
Heated oxygen sensor 2 heater EC-149
Heated oxygen sensor 2 heater (bank 1) EC-782
Heated oxygen sensor 2 heater (bank 2) EC-782
Heated seat SE-12
HEATER - Wiring diagram MTC-33
Heater and cooling unit (Heater core) ATC-112, ATC-113, MTC-73, MTC-74
Heater system - Wiring diagram MTC-33
Heater unit (heater core) ATC-112, ATC-113, MTC-73, MTC-74
Height (Dimensions) GI-43
HFC134a (R134a) system identification ATC-5, MTC-4
HFC134a (R134a) system introduction MTC-16
HFC134a (R134a) system precaution .. ATC-4, MTC-3
HFC134a (R134a) system service procedure ATC-119, MTC-79
HFC134a (R134a) system service tools ATC-12, MTC-12
HFC134a system service equipment precaution . ATC-9, MTC-9
HO2S1 - Wiring diaram EC-187, EC-194, EC-203
HO2S1H - Wiring diagram EC-146
HO2S2 - Wiring diagram EC-209, EC-215, EC-430, EC-437
HO2S2H - Wiring diagram EC-151
Horn WW-32
HORN - Wiring diagram WW-32
How to erase DTC for OBD system EC-67, EC-687
HSEAT - Wiring diagram SE-13

I

IATS - Wiring diagram EC-169, EC-808, EC-822
Identification MTC-4
Identification plate GI-43
Idle air volume learning EC-49, EC-669
Idle mixture ratio EC-39, EC-658
Idle speed EC-39, EC-84, EC-658, EC-705
Idle speed control (ISC) EC-372, EC-374, EC-1021, EC-1023
Ignition coil EM-26, EM-126, EC-554, EC-1210
Ignition control system EC-554, EC-1210
Ignition key hole illumination LT-130
Ignition timing EC-39, EC-84, EC-658, EC-705
IGNSYS - Wiring diagram EC-555, EC-1211
ILL - Wiring diagram LT-138
Illumination LT-131
Illumination control LT-142
In vehicle sensor ATC-104
INJECT - Wiring diagram EC-575, EC-1231
Injector EC-574, EC-1230
Input shaft (FF M/T) MT-20
Instrument panel IP-10
INT/L - Wiring diagram LT-143
Intake air temparature sensor EC-167, EC-180, EC-806, EC-820
Intake door control linkage adjustment . ATC-66, MTC-48

Intake door motor ATC-66, ATC-110, MTC-47, MTC-71
Intake manifold EM-16, EM-112
Intake sensor ATC-99, ATC-106, MTC-65, MTC-68
Intake valve timing control EC-141
Intake valve timing control (Bank 1) EC-766
Intake valve timing control (Bank 2) EC-766
Intake valve timing control solenoid valve EC-393
Interior EI-29
Interior lamp LT-123
IPDM(Intelligent power distribution module engine room) PG-14
IVC - Wiring diagram EC-394
IVCB1 - Wiring diagram EC-768
IVCB2 - Wiring diagram EC-770

J

Jacking points GI-37
Junction box (J/B) PG-71

K

Keyless entry system - See Multi-remote control system BL-43
Knock sensor (KS) EC-280, EC-934
KS - Wiring diagram EC-281, EC-935

L

LAN system circuit ATC-55
Length (Dimensions) GI-43
License lamp LT-109
Lifting points GI-37
Line pressure solenoid valve AT-159
Line pressure test (A/T) AT-65
Liquid gasket application EM-5
Location of electrical units PG-60
Lubricant (R134a) A/C ATC-18, MTC-18
Lubricants MA-12
Lubrication circuit (engine) LU-15
Lubrication oil A/C ATC-18, MTC-18
Lubrication-locks, hinges and hood latches MA-35
Luggage compartment trim EI-35

M

M/T major overhaul MT-23
M/T oil replacementM/T oil replacement MT-10
M/T removal and installationM/T removal and installation MT-16
MAFS - Wiring diagram EC-157, EC-163, EC-389, EC-793, EC-800, EC-1043
Magnet clutch ATC-123, MTC-85
MAIN - Wiring diagram EC-131, EC-757
Mainshaft (M/T) MT-20
Maintenance MA-5
Maintenance (engine)QR25DE MA-14
Maintenance (engine)VQ35DE MA-21
Malfunction indicator lamp (MIL) . EC-69, EC-379, EC-689, EC-1033
Manual air conditioner - Wiring diagram MTC-35
Manual transaxle number GI-43
Manual transmission oil replacement MA-28
Mass air flow sensor (MAFS) EC-154, EC-161, EC-387, EC-790, EC-798, EC-1041
Master cylinder (brake)Master cylinder (brake) BR-13
Master cylinder (clutch)Master cylinder (clutch) ... CL-8
METER - Wiring diagram DI-12, DI-65
MIL - Wiring diagram EC-380, EC-1034
Mirror, door GW-61
Mirror, out side GW-61
Misfire EC-275, EC-928
Mode door control linkage adjustment . ATC-60, MTC-44
Mode door motor ATC-114, MTC-75
Model variation GI-43
Multiport fuel injection (MFI) system ... EC-31, EC-649
Multiport fuel injection precautions GI-3, GI-5
Multi-remote control system BL-43

N

NATS - Wiring diagram BL-118
NVH troubleshooting (BR)NVH troubleshooting (BR) ... BR-5
NVH troubleshooting (CL)NVH troubleshooting (CL) CL-4
NVH troubleshooting (EM) EM-10, EM-107
NVH troubleshooting (FA) FAX-4
NVH troubleshooting (RA) RAX-4
NVH troubleshooting (RSU)NVH Troubleshooting (RSU) RSU-4
NVH troubleshooting (ST) PS-5
NVH troubleshooting (WT)NVH troubleshooting (WT) .. WT-2

O

O2H1B1 - Wiring diagram EC-776
O2H1B2 - Wiring diagram EC-778
O2H2B1 - Wiring diagram EC-784
O2H2B2 - Wiring diagram EC-786
O2S1B1 - Wiring diagram ... EC-829, EC-839, EC-850
O2S1B2 - Wiring diagram ... EC-831, EC-841, EC-852
O2S2B1 - Wiring diagram EC-859, EC-869, EC-1081, EC-1091
O2S2B2 - Wiring diagram EC-861, EC-871, EC-1083, EC-1093
Oil change (capacity)QR25DE MA-12
Oil change (capacity)VQ35DE MA-12
Oil filter LU-19
Oil pan (engine) EM-23, EM-120
Oil pump (engine) LU-9, LU-20
On board diagnostic system EC-54, EC-673
Operating cylinder (clutch)Operating cylinder (clutch) .. CL-10
ORVR (On-board Refueling Vapor Recovery) EC-620, EC-1278

Out side mirror GW-61
Overdrive control switch AT-242
Overheat EC-1103
Overrun clutch solenoid valve AT-180

P

Park/Neutral position switch EC-545, EC-1194
Park/neutral position switch (A/T) AT-103
Park/neutral position switch (M/T)Park/neutral position switch (M/T) MT-12
Parking brake controlParking brake control PB-2
Parking drum brakeParking drum brake PB-5
Parking lamp LT-109
PCV (positive crankcase ventilation) EC-626, EC-1284
Periodic maintenance MA-7
Personal lamp LT-129
PGC/V - Wiring diagram EC-317, EC-479, EC-974, EC-1137
PHASE - Wiring diagram EC-292
PHSB1 - Wiring diagram EC-946
PHSB2 - Wiring diagram EC-948
Piston ring inspection EM-195
Piston to bore clearance EM-86
PNP/SW - Wiring diagram EC-547, EC-1196
POS - Wiring diagram EC-286, EC-940
POWER - Wiring diagram EC-1038, PG-5
Power seat SE-10
Power steering fluid level MA-33
Power steering oil pressure switch EC-591
Power steering pressure (PSP) sensor EC-1025
Power supply routing PG-3
Power window GW-15
PRE/SE - Wiring diagram ... EC-330, EC-336, EC-987, EC-993
Precations for Leak detection dye MTC-4
Precautions (General) GI-3
Precautions in repairing high strength steel BL-164
Pressure test (A/T) AT-65
PS/SEN - Wiring diagram EC-1026
PST/SW - Wiring diagram EC-592

R

R134a - See HFC134a MTC-3
Radiator CO-34
Rear bumper EI-15
Rear combination lamp removal and installation ... LT-122
Rear disc brakeRear disc brake BR-26
Rear door BL-75, GW-37
Rear seat SE-18
Rear seat belt SB-4
Rear suspensionRear suspension RSU-5
Rear window GW-13
Rear window defogger GW-41
Refrigerant connection precaution ATC-6, MTC-5
Refrigerant discharging evacuating charging ATC-119, MTC-79
Refrigerant general precaution ATC-5, MTC-4
Refrigerant lines ATC-119, MTC-79
Refrigerant pressure sensor . EC-596, EC-1252, ATC-126, MTC-57, MTC-88
Refrigeration cycle MTC-16
Remote keyless entry system BL-43
Reverse idler shaft (M/T) MT-20
Reverse main gear (M/T) MT-20
Revolution sensor (A/T) AT-115
Road wheel size GI-43
Rocker cover EM-32, EM-132
Room lamp LT-123, LT-129
Room lamp - See Interior lamp LT-123
ROOM/L - Wiring diagram LT-125
RP/SEN - Wiring diagram EC-597, EC-1253

S

S/SIG - Wiring diagram EC-581, EC-1237
SAE J1930 terminology list GI-47
SAE J1979 - Mode 1 - 7 ..... EC-54, EC-673
SEAT - Wiring diagram SE-10
Seat belt inspection SB-5, MA-36
Seat belt pre-tensioner disposal SRS-54
Seat belt, front SB-3
Seat belt, rear SB-4
Seat, front SE-14
Seat, rear SE-18
SEN/PW - Wiring diagram EC-472, EC-1132
SHIFT - Wiring diagram AT-248
Shift control components (M/T) MT-22
Shift control components (M/T)Shift control components (M/T) MT-13
Shift fork (M/T) MT-22
Shift lock system AT-247
Shift schedule AT-364
Shift solenoid valve A (A/T) AT-165
Shift solenoid valve B (A/T) AT-170
Shock absorber (front) FSU-9
Shock absorber (rear)Shock absorber (rear) RSU-8
Side air bag (satellite) sensor SRS-51
Side curtain air bag SRS-48
Side trim EI-29
SMJ (super multiple junction) PG-68
Spare tire size GI-43
Spark plug EM-127
Spark plug replacementQR25DE MA-19, MA-26
Specification value EC-126, EC-752
Speedometer DI-4
Spiral cable SRS-41
Spot lamp LT-129
SROOF - Wiring diagram RF-11
SRS - See Supplemental Restraint System SRS-5
SRS - Wiring diagram SRS-12
SRS Trouble diagnoses SRS-8
Stabilizer bar (front) FSU-11
Stall test (A/T) AT-61
Standardized relay PG-69
START - Wiring diagram SC-14

Start signal EC-580, EC-1236
Starter SC-20
Starting system SC-9
Steering gear and linkage inspection MA-33
Steering knuckle FAX-6
STEP/L - Wiring diagram LT-104
Stop lamp switch EC-549, EC-1205
STOP/L - Wiring diagram LT-100
Strut (front) FSU-9
Sun roof, electric RF-10
Sunload sensor ATC-105
Sunroof RF-15
Supplemental Restraint System SRS-5
Supplemental restraint system - Wiring diagram SRS-12
Symbols and abbreviations GI-8, GI-9, GI-20
Symptom matrix chart EC-89, EC-710
Synchronizer (M/T) MT-20
System readiness test (SRT) code EC-59, EC-679

T

Tachometer DI-4
Tail lamp LT-109
TAIL/L - Wiring diagram LT-116
TCM circuit diagram AT-16
TCM inspection table AT-93
TCS - Wiring diagram BRC-54
TCS component parts and connector location BRC-53
TCS control unit BRC-47
TCS self-diagnosis BRC-64
TCS wheel sensors BRC-53
Thermo control amp ATC-107
Thermostat CO-20
Three way catalyst EM-116
Three way catalyst function EC-297
Three way catalyst function (Bank 1) EC-953
Three way catalyst function (Bank 2) EC-953
Three way catalyst precautions GI-3, GI-5
Throttle control motor relay EC-406, EC-1056
Throttle position sensor (TPS) .. EC-250, EC-257, EC-455, EC-461, EC-463, EC-901, EC-908, EC-1114, EC-1121, EC-1123
Throttle position switch AT-242
Tightening torque of standard bolts GI-41
Timing chain EM-45, EM-146
Tire rotation MA-31
Tire size GI-43
Torque converter installation AT-261, AT-357
Torque convertor clutch solenoid valve AT-146
Tow truck towing GI-40
Towing point GI-40
TPS1 - Wiring diagram EC-259, EC-910
TPS2 - Wiring diagram EC-457, EC-1116
TPS3 - Wiring diagram EC-252, EC-903
Traction control system - Wiring diagram BRC-54
Transaxle serial number GI-43
Transmission case (M/T) MT-19
TRANSMT - Wiring diagram BL-135
Tread-FR0R (Dimensions) GI-43
Trim EI-29
Trouble diagnoses GI-9
Trunk lid trim EI-35
Trunk room lamp LT-143
Trunk room trim EI-35
TURN - Wiring diagram LT-87
Turn signal lamp LT-80
Two trip detection logic EC-54, EC-673
Two-pole lift GI-37

V

Vacuum cut valve EC-617, EC-1173, EC-1275
Vacuum cut valve bypass valve EC-510, EC-517, EC-617, EC-1160, EC-1166, EC-1275
Vacuum hose (brake system)Vacuum hose (brake system) BR-19
Vacuum hose drawing (Engine control) EC-29, EC-647
Valve clearance EM-41, EM-141
Valve guide EM-59, EM-178, EM-179
Valve seat EM-60, EM-180
Valve spring EM-62, EM-181
Vanity mirror lamp LT-143
Variable induction air control system (VIAS) .. EC-565, EC-1199, EC-1222
Vehicle identification number GI-43
Vehicle recovery (freeing a stuck vehicle) GI-40
Vehicle speed sensor (VSS) EC-370, EC-1019
VENT/V - Wiring diagram ... EC-323, EC-487, EC-494, EC-980, EC-1145, EC-1152
VIAS - Wiring diagram EC-567, EC-1224
VIAS/V - Wiring diagram EC-1201
Viscosity number (SAE) MA-13

W

W/ANT - Wiring diagram AV-27
WARN - Wiring diagram DI-30
Warning chime DI-43
Warning lamps DI-22
Water pump CO-41
Water temperature gauge DI-4
Wheel alignment (rear)Wheel alignment (rear) . RSU-6
Wheel balance MA-30
Wheel bearing (front axle) FAX-5
Wheel bearing (rear) RAX-5
Wheel hub (front) FAX-5, FAX-6
Wheel hub (rear) RAX-5
Wheel size GI-43
Wheelarch heightWheelarch height RSU-11
Wheelbase (Dimensions) GI-43
Width (Dimensions) GI-43
WINDOW - Wiring diagram GW-18
Window, door GW-34, GW-37
Window, rear GW-13
Windshield GW-11
Wiper and washer WW-3
Wiring Diagram (Cell code) list PG-57

Wiring diagrams GI-8, GI-12

SECTION IP
INSTRUMENT PANEL

CONTENTS

PRECAUTIONS 2
Precautions for Supplemental Restraint System (SRS) “AIR BAG” and “SEAT BELT PRE-TENSIONER” 2
PREPARATION 3
Special Service Tools 3
Commercial Service Tools 3
SQUEAK AND RATTLE TROUBLE DIAGNOSIS 4
Work Flow 4
CUSTOMER INTERVIEW 4
DUPLICATE THE NOISE AND TEST DRIVE 5
CHECK RELATED SERVICE BULLETINS 5
LOCATE THE NOISE AND IDENTIFY THE ROOT CAUSE 5
REPAIR THE CAUSE 5
CONFIRM THE REPAIR 6
Generic Squeak and Rattle Troubleshooting 6
INSTRUMENT PANEL 6
CENTER CONSOLE 6
DOORS 6
TRUNK 7
SUNROOF/HEADLINER 7
SEATS 7
UNDERHOOD 7
Diagnostic Worksheet 8
INSTRUMENT PANEL ASSEMBLY 10
Removal and Installation 10
REMOVAL AND INSTALLATION 12
Disassembly and Assembly 16
CENTER CONSOLE 16

PRECAUTIONS

PFP:00001

Precautions for Supplemental Restraint System (SRS) “AIR BAG” and “SEAT BELT PRE-TENSIONER”

EIS000UN

The Supplemental Restraint System such as “AIR BAG” and “SEAT BELT PRE-TENSIONER”, used along with a front seat belt, helps to reduce the risk or severity of injury to the driver and front passenger for certain types of collision. Information necessary to service the system safely is included in the SRS and SB section of this Service Manual.

WARNING:

- **To avoid rendering the SRS inoperative, which could increase the risk of personal injury or death in the event of a collision which would result in air bag inflation, all maintenance must be performed by an authorized NISSAN/INFINITI dealer.**
- **Improper maintenance, including incorrect removal and installation of the SRS, can lead to personal injury caused by unintentional activation of the system. For removal of Spiral Cable and Air Bag Module, see the SRS section.**
- **Do not use electrical test equipment on any circuit related to the SRS unless instructed to in this Service Manual. SRS wiring harnesses can be identified by yellow and/or orange harness connectors.**

PREPARATION

PFP:00002

Special Service Tools

EIS000UO

The actual shapes of Kent-Moore tools may differ from those of special service tools illustrated here.

Tool number (Kent-Moore No.) Tool name	Description
— (J-39570) Chassis ear 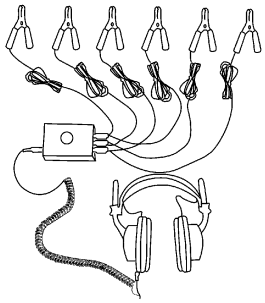 SBT839	Locating the noise
— (J-43980) NISSAN Squeak and Rattle kit 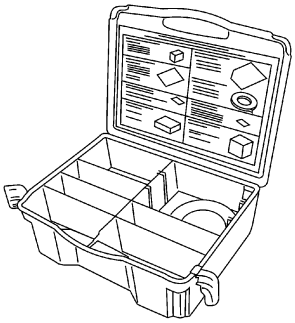 SBT840	Repairing the cause of noise

Commercial Service Tools

EIS000UP

Tool name	Description
Engine ear 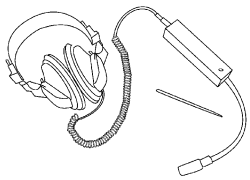 SIIA0995E	Locating the noise
Power Tool 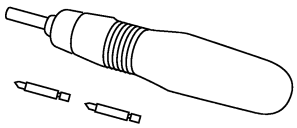 PBIC0191E	Loosening bolts and nuts

SQUEAK AND RATTLE TROUBLE DIAGNOSIS

PFP:00000

Work Flow

EIS000UQ

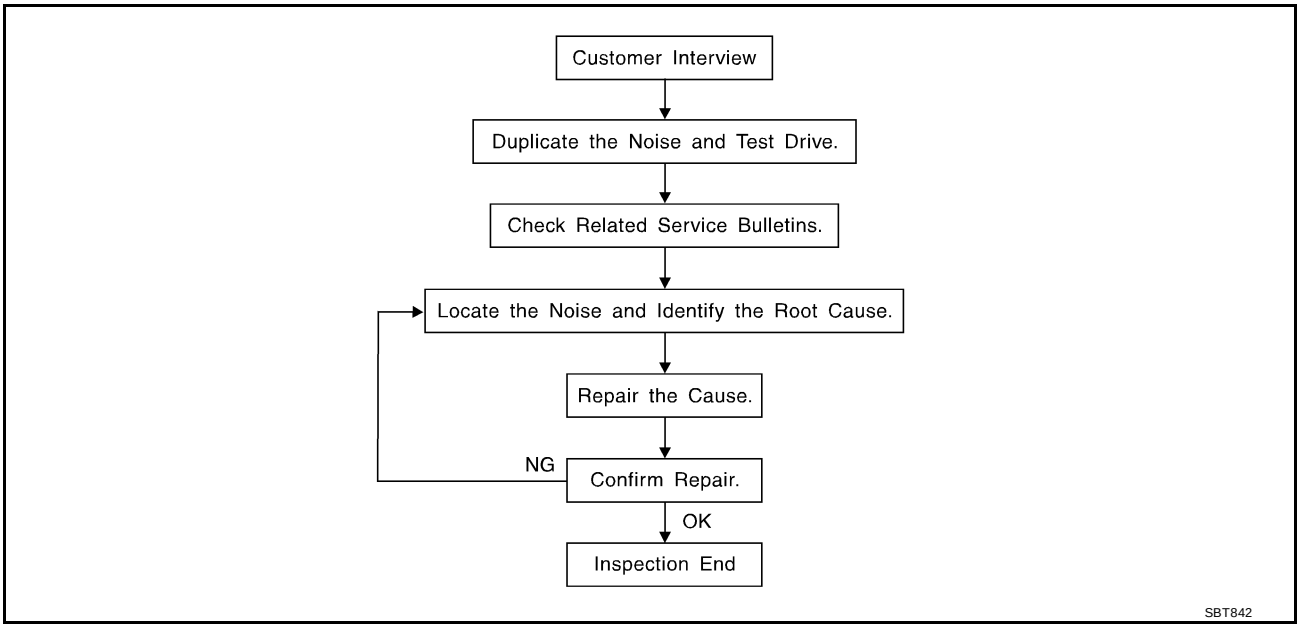

CUSTOMER INTERVIEW

Interview the customer, if possible, to determine the conditions that exist when the noise occurs. Use the Diagnostic Worksheet during the interview to document the facts and conditions when the noise occurs and any customer's comments; refer to IP-8, "Diagnostic Worksheet" . This information is necessary to duplicate the conditions that exist when the noise occurs.

- The customer may not be able to provide a detailed description or the location of the noise. Attempt to obtain all the facts and conditions that exist when the noise occurs (or does not occur).
- If there is more than one noise in the vehicle, be sure to diagnose and repair the noise that the customer is concerned about. This can be accomplished by test driving the vehicle with the customer.
- After identifying the type of noise, isolate the noise in terms of its characteristics. The noise characteristics are provided so the customer, service adviser and technician are all speaking the same language when defining the noise.
  - Squeak — (Like tennis shoes on a clean floor)
    Squeak characteristics include the light contact/fast movement/brought on by road conditions/hard surfaces = higher pitch noise/softer surfaces = lower pitch noises/edge to surface = chirping.
  - Creak — (Like walking on an old wooden floor)
    Creak characteristics include firm contact/slow movement/twisting with a rotational movement/pitch dependent on materials/often brought on by activity.
  - Rattle — (Like shaking a baby rattle)
    Rattle characteristics include the fast repeated contact/vibration or similar movement/loose parts/missing clip or fastener/incorrect clearance.
  - Knock — (Like a knock on a door)
    Knock characteristics include hollow sounding/sometimes repeating/often brought on by driver action.
  - Tick — (Like a clock second hand)
    Tick characteristics include gentle contacting of light materials/loose components/can be caused by driver action or road conditions.
  - Thump — (Heavy, muffled knock noise)
    Thump characteristics include softer knock/dead sound often brought on by activity.
  - Buzz — (Like a bumblebee)
    Buzz characteristics include high frequency rattle/firm contact.
- Often the degree of acceptable noise level will vary depending upon the person. A noise that you may judge as acceptable may be very irritating to the customer.
- Weather conditions, especially humidity and temperature, may have a great effect on noise level.

DUPLICATE THE NOISE AND TEST DRIVE

If possible, drive the vehicle with the customer until the noise is duplicated. Note any additional information on the Diagnostic Worksheet regarding the conditions or location of the noise. This information can be used to duplicate the same conditions when you confirm the repair.
If the noise can be duplicated easily during the test drive, to help identify the source of the noise, try to duplicate the noise with the vehicle stopped by doing one or all of the following:

1. Close a door.
2. Tap or push/pull around the area where the noise appears to be coming from.
3. Rev the engine.
4. Use a floor jack to recreate vehicle “twist”.
5. At idle, apply engine load (electrical load, half-clutch on M/T model, drive position on A/T model).
6. Raise the vehicle on a hoist and hit a tire with a rubber hammer.

- Drive the vehicle and attempt to duplicate the conditions the customer states exist when the noise occurs.
- If it is difficult to duplicate the noise, drive the vehicle slowly on an undulating or rough road to stress the vehicle body.

CHECK RELATED SERVICE BULLETINS

After verifying the customer concern or symptom, check ASIST for Technical Service Bulletins (TSBs) related to that concern or symptom.
If a TSB relates to the symptom, follow the procedure to repair the noise.

LOCATE THE NOISE AND IDENTIFY THE ROOT CAUSE

1. Narrow down the noise to a general area. To help pinpoint the source of the noise, use a listening tool (Chassis Ear: J-39570, Engine Ear and mechanics stethoscope).
2. Narrow down the noise to a more specific area and identify the cause of the noise by:
   - Removing the components in the area that you suspect the noise is coming from.
     Do not use too much force when removing clips and fasteners, otherwise clips and fasteners can be broken or lost during the repair, resulting in the creation of new noise.
   - Tapping or pushing/pulling the component that you suspect is causing the noise.
     Do not tap or push/pull the component with excessive force, otherwise the noise will be eliminated only temporarily.
   - Feeling for a vibration with your hand by touching the component(s) that you suspect is (are) causing the noise.
   - Placing a piece of paper between components that you suspect are causing the noise.
   - Looking for loose components and contact marks.

   Refer to IP-6, "Generic Squeak and Rattle Troubleshooting" .

REPAIR THE CAUSE

- If the cause is a loose component, tighten the component securely.
- If the cause is insufficient clearance between components:
  - Separate components by repositioning or loosening and retightening the component, if possible.
  - Insulate components with a suitable insulator such as urethane pads, foam blocks, felt cloth tape or urethane tape. A NISSAN Squeak and Rattle Kit (J-43980) is available through your authorized NISSAN Parts Department.

CAUTION:
Do not use excessive force as many components are constructed of plastic and may be damaged.
Always check with the Parts Department for the latest parts information.
The following materials are contained in the NISSAN Squeak and Rattle Kit (J-43980). Each item can be ordered separately as needed.
URETHANE PADS [1.5 mm (0.059 in) thick]
Insulates connectors, harness, etc.
76268-9E005: 100 x 135 mm (3.94 x 5.31 in)/76884-71L01: 60 x 85 mm (2.36 x 3.35 in)/76884-71L02: 15 x 25 mm (0.59 x 0.98 in)
INSULATOR (Foam blocks)
Insulates components from contact. Can be used to fill space behind a panel.

73982-9E000: 45 mm (1.77 in) thick, 50 x 50 mm (1.97 x 1.97 in)/73982-50Y00: 10 mm (0.39 in) thick, 50 x 50 mm (1.97 x 1.97 in)
INSULATOR (Light foam block)
80845-71L00: 30 mm (1.18 in) thick, 30 x 50 mm (1.18 x 1.97 in)
FELT CLOTH TAPE
Used to insulate where movement does not occur. Ideal for instrument panel applications.
68370-4B000: 15 x 25 mm (0.59 x 0.98 in) pad/68239-13E00: 5 mm (0.20 in) wide tape roll
The following materials, not found in the kit, can also be used to repair squeaks and rattles.
UHMW (TEFLON) TAPE
Insulates where slight movement is present. Ideal for instrument panel applications.
SILICONE GREASE
Used in place of UHMW tape that will be visible or not fit.
Note: Will only last a few months.
SILICONE SPRAY
Use when grease cannot be applied.
DUCT TAPE
Use to eliminate movement.

CONFIRM THE REPAIR

Confirm that the cause of a noise is repaired by test driving the vehicle. Operate the vehicle under the same conditions as when the noise originally occurred. Refer to the notes on the Diagnostic Worksheet.

Generic Squeak and Rattle Troubleshooting

EIS000UR

Refer to Table of Contents for specific component removal and installation information.

INSTRUMENT PANEL

Most incidents are caused by contact and movement between:

1. The cluster lid A and instrument panel
2. Acrylic lens and combination meter housing
3. Instrument panel to front pillar garnish
4. Instrument panel to windshield
5. Instrument panel mounting pins
6. Wiring harnesses behind the combination meter
7. A/C defroster duct and duct joint

These incidents can usually be located by tapping or moving the components to duplicate the noise or by pressing on the components while driving to stop the noise. Most of these incidents can be repaired by applying felt cloth tape or silicone spray (in hard to reach areas). Urethane pads can be used to insulate wiring harness.

CAUTION:
Do not use silicone spray to isolate a squeak or rattle. If you saturate the area with silicone, you will not be able to recheck the repair.

CENTER CONSOLE

Components to pay attention to include:

1. Shifter assembly cover to finisher
2. A/C control unit and upper/lower cluster lid C
3. Wiring harnesses behind audio and A/C control unit

The instrument panel repair and isolation procedures also apply to the center console.

DOORS

Pay attention to the:

1. Finisher and inner panel making a slapping noise
2. Inside handle escutcheon to door finisher
3. Wiring harnesses tapping
4. Door striker out of alignment causing a popping noise on starts and stops

Tapping or moving the components or pressing on them while driving to duplicate the conditions can isolate many of these incidents. You can usually insulate the areas with felt cloth tape or insulator foam blocks from the NISSAN Squeak and Rattle Kit (J-43980) to repair the noise.

TRUNK

Trunk noises are often caused by a loose jack or loose items put into the trunk by the owner.
In addition look for:

1. Trunk lid bumpers out of adjustment
2. Trunk lid striker out of adjustment
3. The trunk lid torsion bars knocking together
4. A loose license plate or bracket

Most of these incidents can be repaired by adjusting, securing or insulating the item(s) or component(s) causing the noise.

SUNROOF/HEADLINER

Noises in the sunroof/headliner area can often be traced to one of the following:

1. Sunroof lid, rail, linkage or seals making a rattle or light knocking noise
2. Sunvisor shaft shaking in the holder
3. Front or rear windshield touching headliner and squeaking

Again, pressing on the components to stop the noise while duplicating the conditions can isolate most of these incidents. Repairs usually consist of insulating with felt cloth tape.

SEATS

When isolating seat noises it is important to note the position the seat is in and the load placed on the seat when the noise is present. These conditions should be duplicated when verifying and isolating the cause of the noise.
Cause of seat noise include:

1. Headrest rods and holders
2. A squeak between the seat pad cushion and frame
3. The rear seat back lock and bracket

These noises can be isolated by moving or pressing on the suspected components while duplicating the conditions under which the noise occurs. Most of these incidents can be repaired by repositioning the component or applying urethane tape to the contact area.

UNDERHOOD

Some interior noises may be caused by components under the hood or on the engine wall. The noise is then transmitted into the passenger compartment.
Causes of transmitted underhood noises include:

1. Any component mounted to the engine wall
2. Components that pass through the engine wall
3. Engine wall mounts and connectors
4. Loose radiator mounting pins
5. Hood bumpers out of adjustment
6. Hood striker out of adjustment

These noises can be difficult to isolate since they cannot be reached from the interior of the vehicle. The best method is to secure, move or insulate one component at a time and test drive the vehicle. Also, engine RPM or load can be changed to isolate the noise. Repairs can usually be made by moving, adjusting, securing, or insulating the component causing the noise.

Diagnostic Worksheet

EIS000US

SQUEAK & RATTLE DIAGNOSTIC WORKSHEET

Dear Nissan Customer:
We are concerned about your satisfaction with your Nissan vehicle. Repairing a squeak or rattle sometimes can be very difficult. To help us fix your Nissan right the first time, please take a moment to note the area of the vehicle where the squeak or rattle occurs and under what conditions. You may be asked to take a test drive with a service advisor or technician to ensure we confirm the noise you are hearing.

I. WHERE DOES THE NOISE COME FROM? (circle the area of the vehicle)
The illustrations are for reference only, and may not reflect the actual configuration of your vehicle.

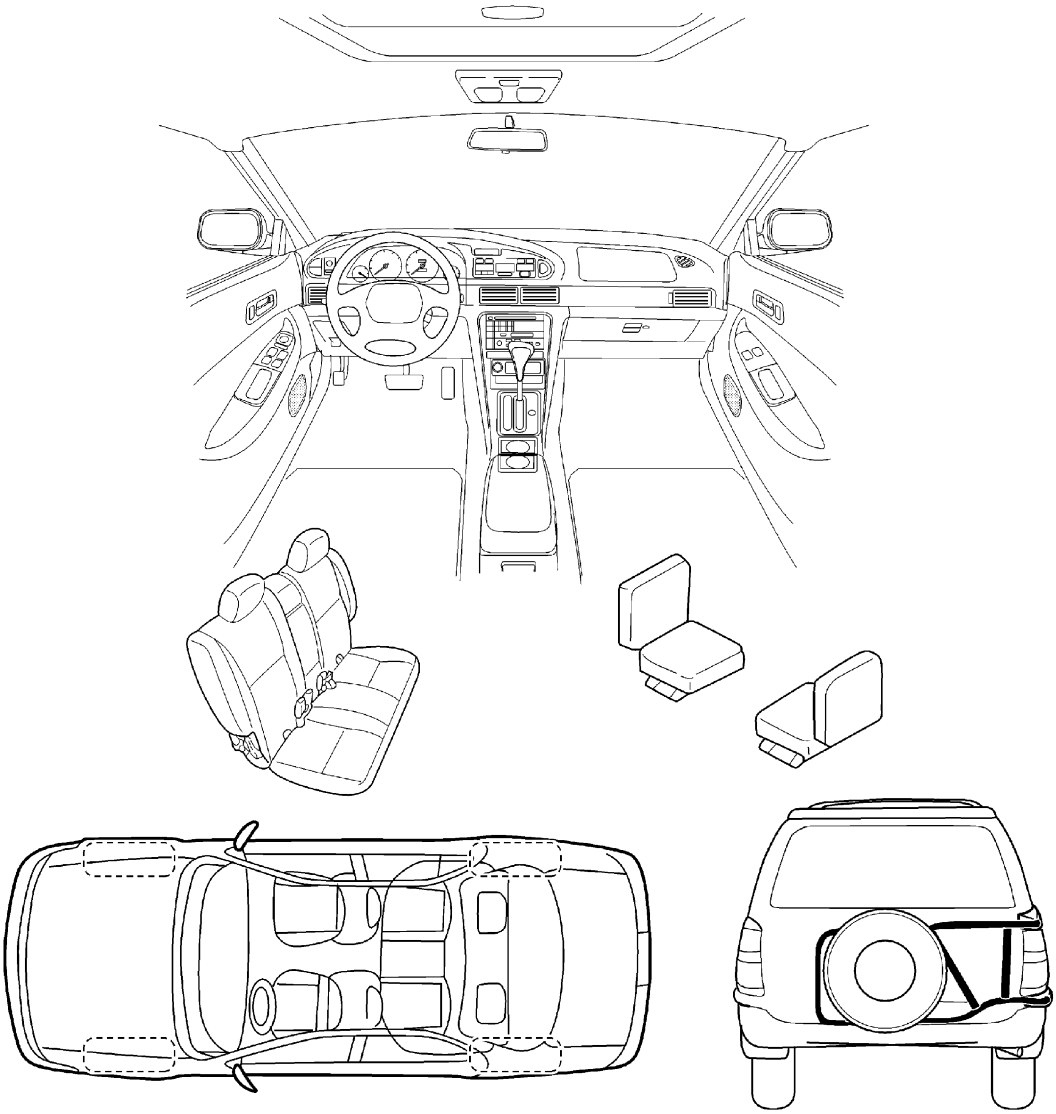

Continue to the back of the worksheet and briefly describe the location of the noise or rattle. In addition, please indicate the conditions which are present when the noise occurs.

SBT843

SQUEAK & RATTLE DIAGNOSTIC WORKSHEET- page 2

Briefly describe the location where the noise occurs:

_____

_____

II. WHEN DOES IT OCCUR? (check the boxes that apply)

- ❑ anytime
- ❑ 1st time in the morning
- ❑ only when it is cold outside
- ❑ only when it is hot outside
- ❑ after sitting out in the sun
- ❑ when it is raining or wet
- ❑ dry or dusty conditions
- ❑ other: _____

III. WHEN DRIVING:

- ❑ through driveways
- ❑ over rough roads
- ❑ over speed bumps
- ❑ only at about ____ mph
- ❑ on acceleration
- ❑ coming to a stop
- ❑ on turns : left, right or either (circle)
- ❑ with passengers or cargo
- ❑ other: _____
- ❑ after driving ____ miles or ____ minutes

IV. WHAT TYPE OF NOISE?

- ❑ squeak (like tennis shoes on a clean floor)
- ❑ creak (like walking on an old wooden floor)
- ❑ rattle (like shaking a baby rattle)
- ❑ knock (like a knock on a door)
- ❑ tick (like a clock second hand)
- ❑ thump (heavy, muffled knock noise)
- ❑ buzz (like a bumble bee)

TO BE COMPLETED BY DEALERSHIP PERSONNEL
Test Drive Notes:

_____

_____

	YES	NO	Initials of person performing
Vehicle test driven with customer	❑	❑	_____
- Noise verified on test drive	❑	❑	
- Noise source located and repaired	❑	❑	_____
- Follow up test drive performed to confirm repair	❑	❑	_____

VIN: _____ Customer Name: _____

W.O. #: _____ Date: _____

This form must be attached to Work Order

SBT844

INSTRUMENT PANEL ASSEMBLY

PFP:68200

Removal and Installation

EIS000UT

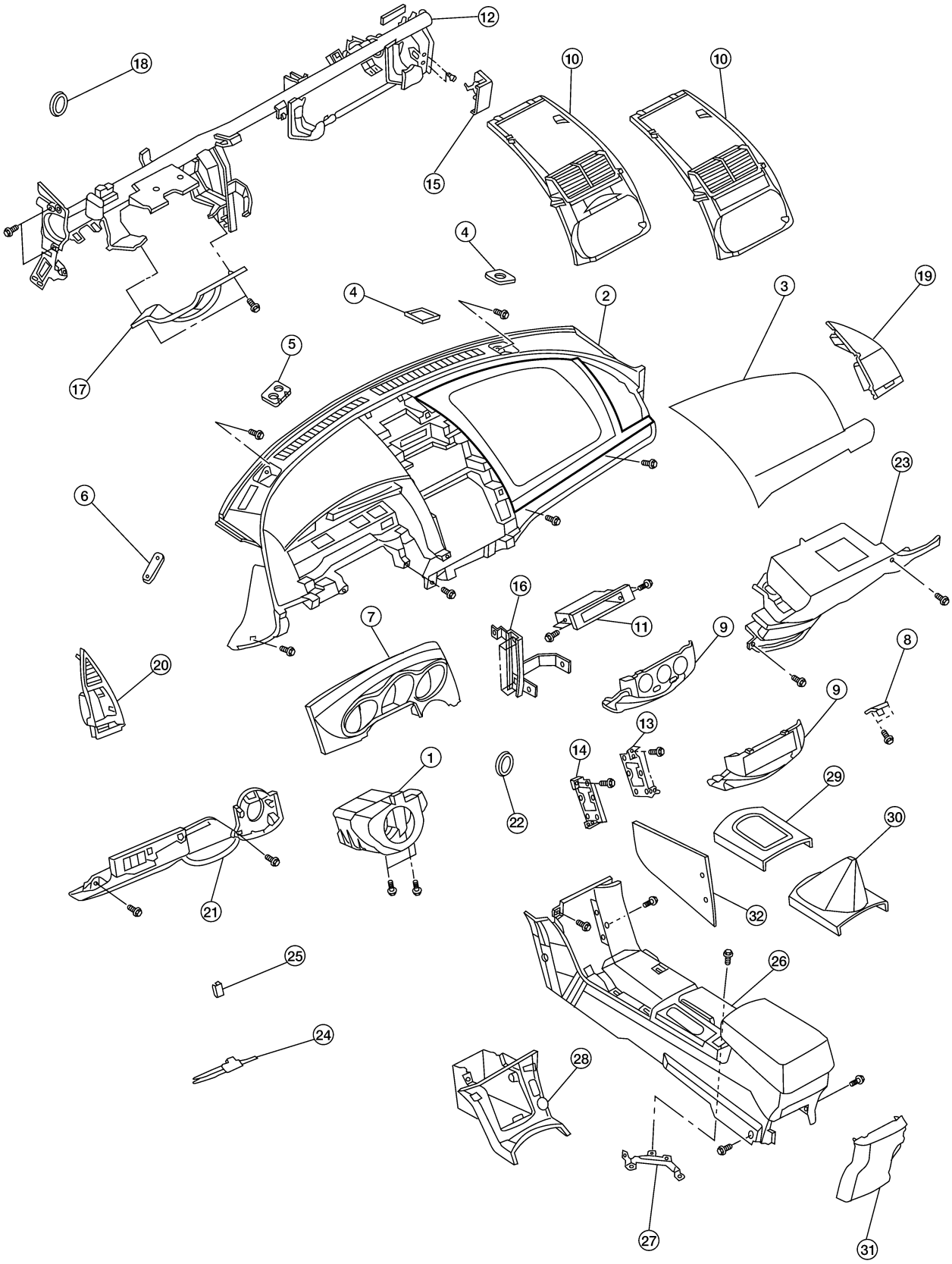

LIIA0030E

INSTRUMENT PANEL ASSEMBLY

1. Steering column cover.
2. Instrument panel assembly.
3. Passenger side air bag.
4. RH instrument mask.
5. LH instrument mask.
6. Vehicle identification plate.
7. Cluster lid A.
8. Glove box striker.
9. Cluster lid C.
10. Cluster lid D.
11. Deck pocket.
12. Steering member assembly.
13. RH audio bracket.
14. LH audio bracket.
15. RH instrument member bracket.
16. Driver instrument stay.
17. LH lower knee protector.
18. Bolt cap.
19. Side ventilator grille RH.
20. Side ventilator grille LH.
21. Lower driver instrument panel.
22. Steering lock escutcheon.
23. Glove box assembly.
24. Fuse block cover.
25. Switch mask.
26. Center console assembly.
27. Front console bracket.
28. Front console box assembly.
29. A/T console finisher.
30. Console boot manual transmission.
31. Console finisher rear.
32. Console front side panel RH.

REMOVAL AND INSTALLATION

Work Steps

When removing instrument panel and pad, combination meter, console assembly, or steering member take steps in the order shown by the numbers below.

Parts	Instrument panel and pad	Combination meter	Steering member	Console assembly
Cluster lid C	1		1	1
Cluster lid D	2		2	
Glove box assembly	3		3	2
Steering lock escutcheon	4		4	
Cluster lid A	5	1	5	
Combination meter	6	2	6	
Fuse block cover	7		7	
Lower driver instrument panel	8		8	3
Console front side panel RH	9		9	4
Audio unit	10		10	
Climate control unit	11		11	
A/T finisher or M/T boot	12		12	5
Storage bin	13		13	
Front console box assembly	14		14	6
Console finisher	15		15	7
Center console assembly	16		16	8
Driver lower dash side trim	17		17	
Side ventilator grille LH	18		18	
Assistant lower dash side trim	19		19	
Side ventilator grille RH	20		20	
Passenger side air bag	21		21	
RH and LH instrument masks	22		22	
Instrument panel and pad	23		23	
Steering column covers			24	
Steering column, place aside			25	
RH and LH audio brackets			26	
RH bolt caps			27	
Steering member			28	

Number indicates step in removal procedures

Cluster Lid C

1. Pull lid toward rear of vehicle.
   - Disconnect electrical connectors.

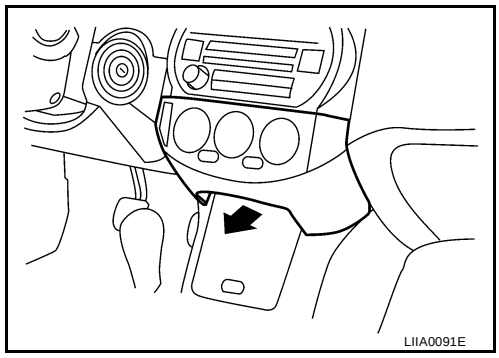

Cluster Lid D

1. Remove cluster lid C. Refer to IP-12, "Cluster Lid C" .
2. Remove cluster lid D.
   1. Remove screw using power tool.
   2. Pull lid toward rear of vehicle to release clips.

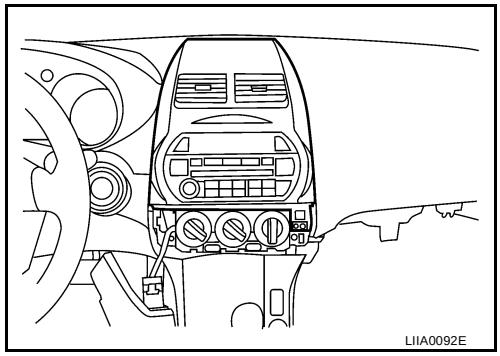

Driver Lower Instrument Panel

1. Remove cluster lid C. Refer to IP-12, "Cluster Lid C" .
2. Remove fuse box cover.

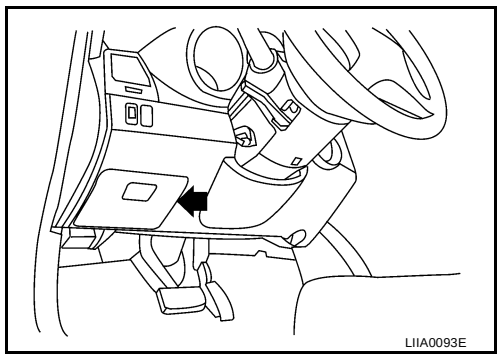

3. Remove screws using power tool, and lower instrument cover.
   - Pull to disconnect clips.
   - Disconnect auto air temp sensor hose (if equipped).

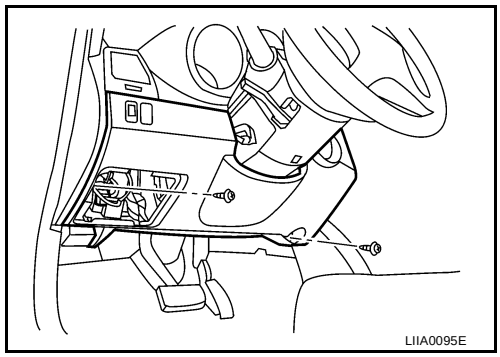

Cluster Lid A

1. Remove driver lower instrument panel. Refer to IP-13, "Driver Lower Instrument Panel" .
2. Pull toward rear of vehicle to release clips.
   - Disconnect indicator lamp sockets.

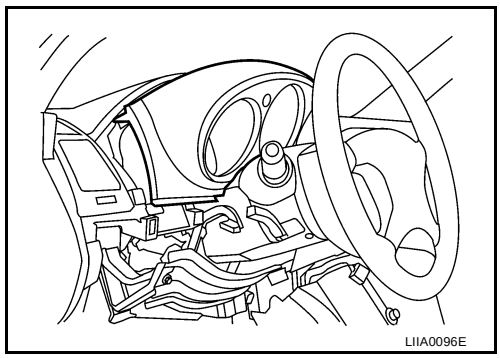

Combination Meter

1. Remove cluster lid A. Refer to IP-13, "Cluster Lid A" .
2. Remove screws using power tool, pull from opening, disconnect electrical connectors and remove combination meter.

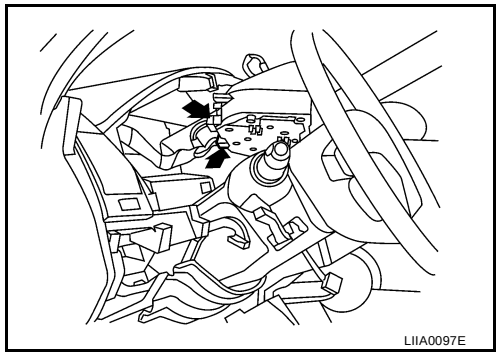

A/T Finisher

1. Pull up to release clips.

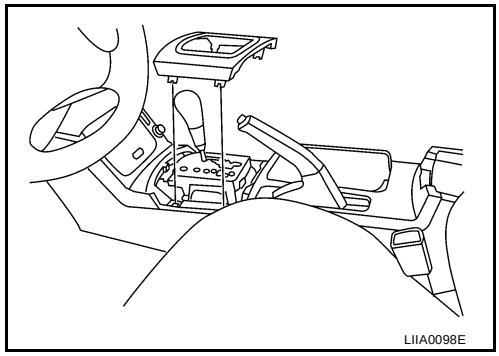

M/T Finisher

1. Remove shifter knob.
2. Pull up to release clips.

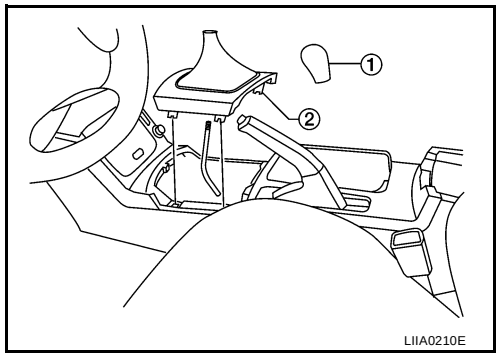

Cup Holder

1. Open storage bin B.
2. Remove console finisher.
3. Remove screw cover, screw using power tool and cup holder.
   - Pull up to release clips.

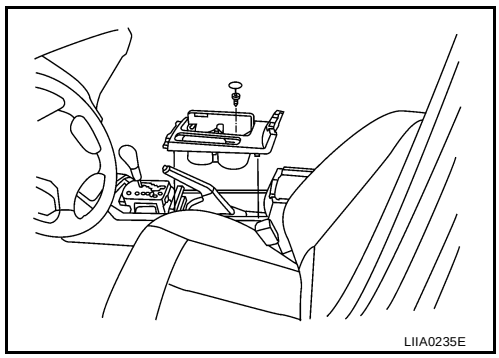

Glove Box

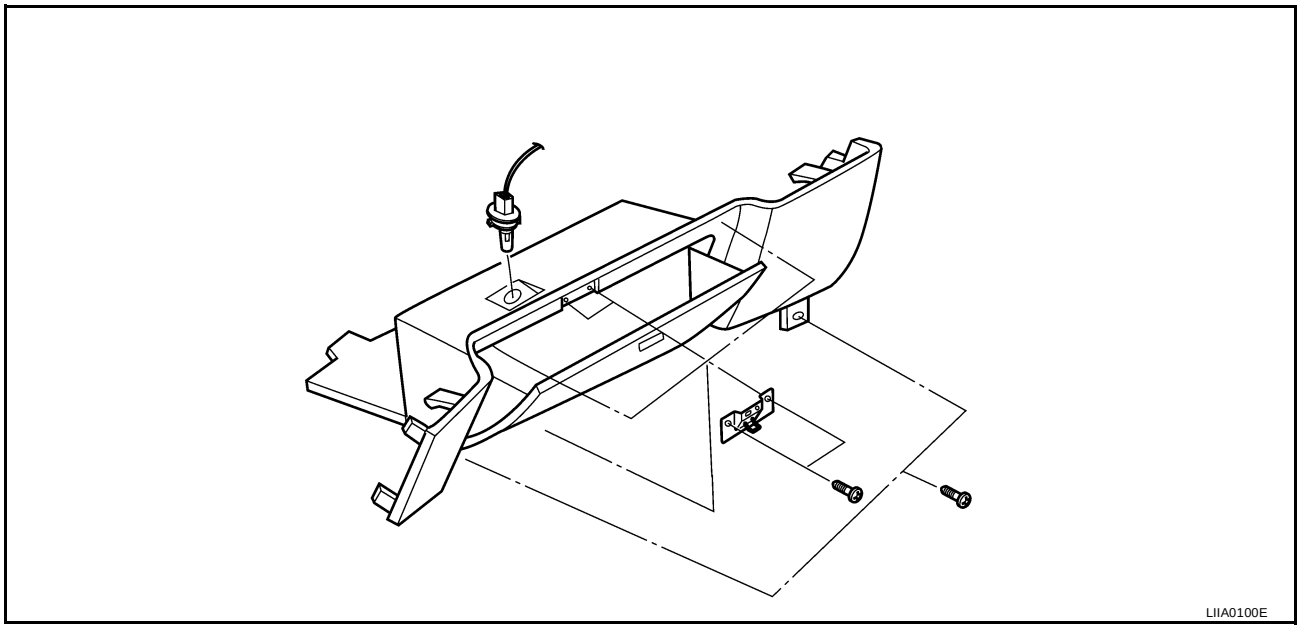

1. Remove glove box striker.
2. Remove screws using power tool.
3. Pull towards rear of car to release clips, disconnect lamp socket, and remove glove box.

Disassembly and Assembly

EIS000UU

CENTER CONSOLE

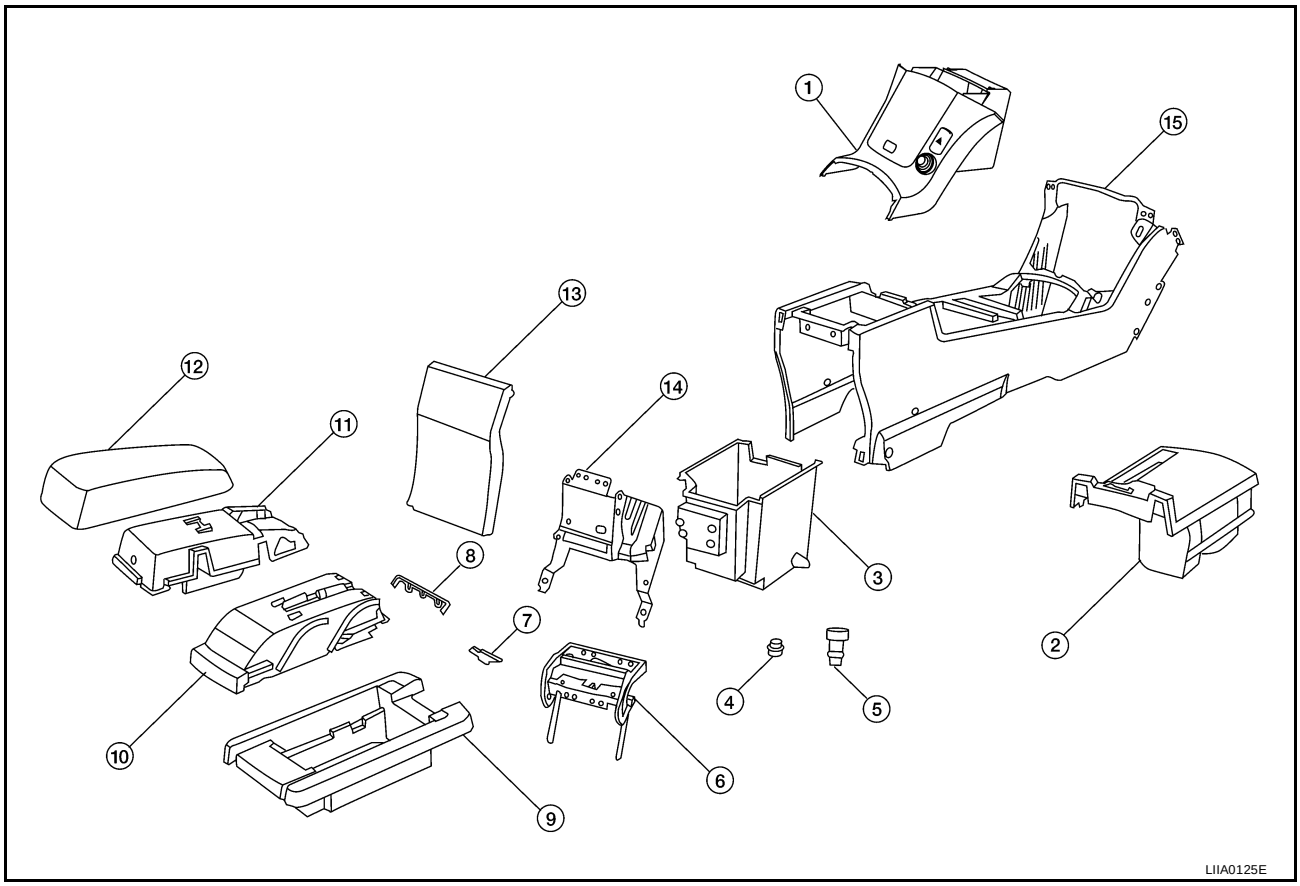

1.	Console finisher.	2.	Cup holder assembly.	3.	Storage bin B.
4.	Power point cover.	5.	Power point assembly.	6.	Hinge assembly.
7.	Latch.	8.	Adjustable armrest stop reinforcement.	9.	Storage bin A.
10.	Adjustable armrest track.	11.	Adjustable armrest slide.	12.	Adjustable armrest trim cover.
13.	Console rear cover.	14.	Hinge reinforcement.	15.	Console base.

1. Remove center console assembly. Refer to IP-12, "Work Steps" .
2. Remove cup holder.
3. Remove armrest assembly.
4. Remove adjustable armrest track.
5. Separate adjustable armrest slide from adjustable armrest track.
6. Separate adjustable armrest trim cover from adjustable armrest slide.
7. Remove storage bin A.
8. Remove hinge assembly.
9. Remove hinge reinforcement and storage bin B.
10. Separate hinge reinforcement from storage bin B.
11. Remove power point from storage bin B.
12. Assembly is the reverse order of disassembly.

SECTION LAN

LAN SYSTEM

CONTENTS

CAN

PRECAUTIONS 3
Precautions for Supplemental Restraint System (SRS) “AIR BAG” and “SEAT BELT PRE-TENSIONER” 3
Precautions For Trouble Diagnosis 3
CAN SYSTEM 3
Precautions For Harness Repair 3
CAN SYSTEM 3
CAN COMMUNICATION 4
System Description 4
FOR TCS MODELS 4
FOR A/T MODELS 5
FOR M/T MODELS 6
CAN SYSTEM (FOR TCS MODELS) 8
System Description 8
Component Parts and Harness Connector Location 8
Wiring Diagram — CAN — 9
Work Flow 11
CHECK SHEET 12
CHECK SHEET RESULTS (EXAMPLE) 13
INSPECTION 15
Circuit Check Between TCM and Combination Meter 16
Circuit Check Between Combination Meter and BCM 17
Circuit Check Between BCM and ABS Actuator and Electric Unit (Control Unit) 18
ECM Circuit Check 20
TCM Circuit Check 20
Combination Meter Circuit Check 21
BCM Circuit Check 21
ABS Actuator and Electric Unit (Control Unit) Circuit Check 22
IPDM E/R Circuit Check 22
CAN Communication Circuit Check 23
IPDM E/R Ignition Relay Circuit Check 26
Component Inspection 26
ECM/IPDM E/R INTERNAL CIRCUIT INSPECTION 26
CAN SYSTEM (FOR A/T MODELS) 27
System Description 27
Component Parts and Harness Connector Location 27
Wiring Diagram — CAN — 28
Work Flow 30
CHECK SHEET 31
CHECK SHEET RESULTS (EXAMPLE) 32
INSPECTION 33
Circuit Check Between TCM and Combination Meter 34
Circuit Check Between Combination Meter and BCM 35
ECM Circuit Check 36
TCM Circuit Check 37
Combination Meter Circuit Check 37
BCM Circuit Check 38
IPDM E/R Circuit Check 38
CAN Communication Circuit Check 39
IPDM E/R Ignition Relay Circuit Check 42
IPDM E/R Check 42
Component Inspection 42
ECM/IPDM E/R INTERNAL CIRCUIT INSPECTION 42
CAN SYSTEM (FOR M/T MODELS) 43
System Description 43
Component Parts and Harness Connector Location 43
Wiring Diagram — CAN — 44
Work Flow 46
CHECK SHEET 47
CHECK SHEET RESULTS (EXAMPLE) 48
INSPECTION 48
Circuit Check Between Combination Meter and BCM 49
ECM Circuit Check 50
Combination Meter Circuit Check 50
BCM Circuit Check 51
IPDM E/R Circuit Check 51
CAN Communication Circuit Check 52
Component Inspection 55
ECM/IPDM E/R INTERNAL CIRCUIT INSPEC-

TION 55

PRECAUTIONS

PFP:00001

Precautions for Supplemental Restraint System (SRS) “AIR BAG” and “SEAT BELT PRE-TENSIONER”

EKS002JG

The Supplemental Restraint System such as “AIR BAG” and “SEAT BELT PRE-TENSIONER”, used along with a front seat belt, helps to reduce the risk or severity of injury to the driver and front passenger for certain types of collision. Information necessary to service the system safely is included in the SRS and SB section of this Service Manual.

WARNING:

- **To avoid rendering the SRS inoperative, which could increase the risk of personal injury or death in the event of a collision which would result in air bag inflation, all maintenance must be performed by an authorized NISSAN/INFINITI dealer.**
- **Improper maintenance, including incorrect removal and installation of the SRS, can lead to personal injury caused by unintentional activation of the system. For removal of Spiral Cable and Air Bag Module, see the SRS section.**
- **Do not use electrical test equipment on any circuit related to the SRS unless instructed to in this Service Manual. SRS wiring harnesses can be identified by yellow and/or orange harness connectors.**

Precautions For Trouble Diagnosis

EKS002JH

CAN SYSTEM

- Do not apply voltage of 7.0V or higher to the measurement terminals.
- Use the tester with its open terminal voltage being 7.0V or less.
- Be sure to turn ignition switch off and disconnect negative battery terminal before checking the circuit.

Precautions For Harness Repair

EKS002JI

CAN SYSTEM

- Solder the repaired parts, and wrap with tape. [Frays of twisted line must be within 110 mm (4.33 in)]

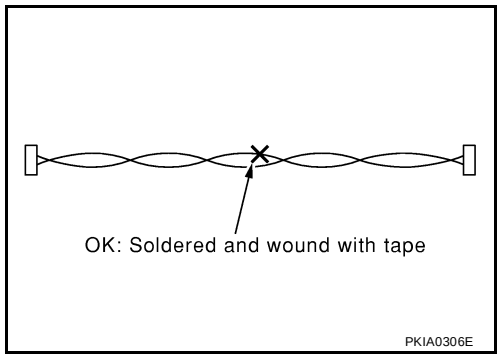

- Do not perform bypass wire connections for the repair parts. (The spliced wire will become separated and the characteristics of twisted line will be lost.)

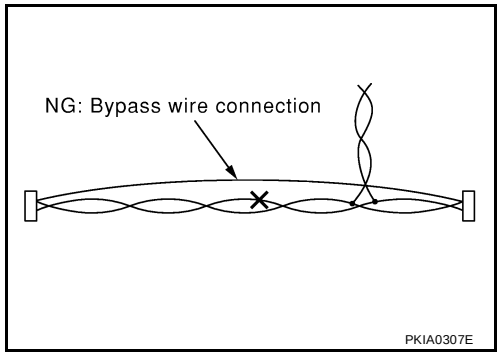

CAN COMMUNICATION

PFP:23710

System Description

EKS003ZH

CAN (Controller Area Network) is a serial communication line for real time application. It is an on-vehicle multiplex communication line with high data communication speed and excellent error detection ability. Many electronic control units are equipped onto a vehicle, and each control unit shares information and links with other control units during operation (not independent). In CAN communication, control units are connected with 2 communication lines (CAN H line, CAN L line) allowing a high rate of information transmission with less wiring. Each control unit transmits/receives data but selectively reads required data only.

FOR TCS MODELS

System diagram

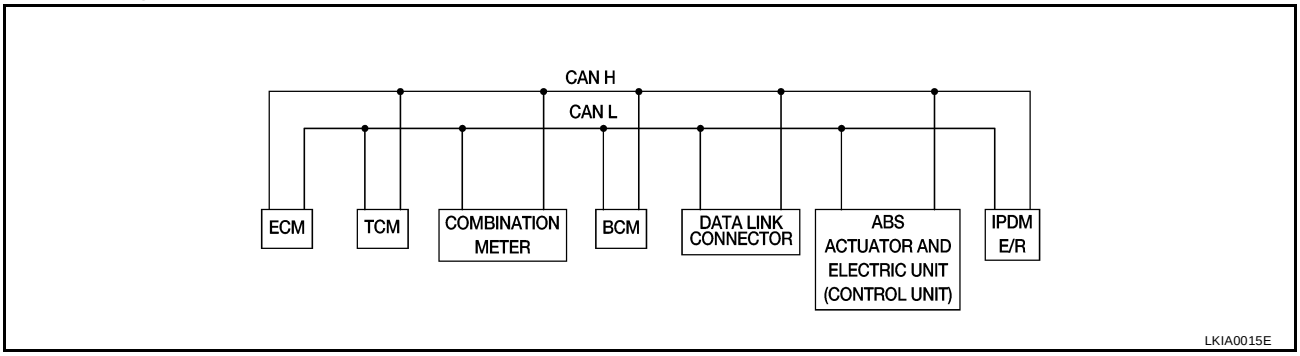

Input/output signal chart

T: Transmit R: Receive

Signals	ECM	TCM	COMBINATION METER	BCM	ABS/TCS control unit	IPDM E/R
Engine speed signal	T		R		R	
Engine coolant temperature signal	T		R			
Accelerator pedal position signal	T					
Fuel consumption monitor signal	T		R			
A/T warning lamp signal		T	R			
A/T position indicator signal	R	T	R	R(R range only)	R	
ABS operation signal	R				T	
TCS operation signal	R	R			T	
Air conditioner switch signal	R			T		
Air conditioner compressor signal	R					T
A/C compressor request signal	T					R
Cooling fan motor operation signal	R					T
Cooling fan speed request signal	T					R
Position lights request			R	T		R
Position lights status				R		T
Low beam request				T		R
Low beam status	R			R		T
High beam request			R	T		R
High beam status	R			R		T
Front fog lights request				T		R
Front fog light status				R		T
OD cancel switch signal		R	T			R
Brake switch signal		R	T			

Signals	ECM	TCM	COMBINATION METER	BCM	ABS/TCS control unit	IPDM E/R
Vehicle speed signal	R		T			
	R		T	R		
Oil pressure switch			R			T
Sleep request1			R	T		
Sleep request2				T		R
N range switch signal		R	T			
P range switch signal		R	T			
Seat belt buckle switch signal			T	R		
Door switch signal			R	T		R
Tail lamp request			R	T		R
Turn indicator signal			R	T		
Buzzer output signal			R	T		
Trunk switch signal			R	T		
ASCD main switch signal	T		R			
ASCD cruise signal	T		R			
Wiper operation				R		T
Wiper stop position signal				R		T
Rear window defogger switch signal				T		R
Rear window defogger control signal	R			R		T

FOR A/T MODELS

System diagram

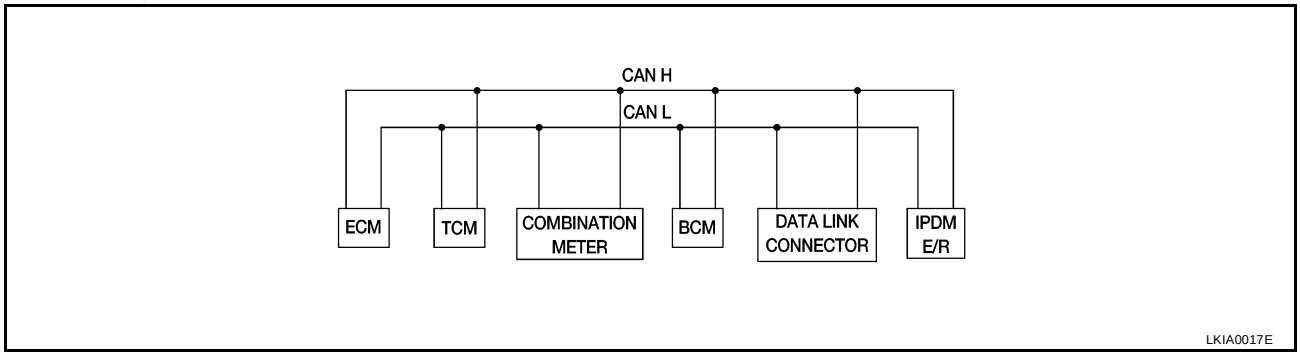

Input/output signal chart

T: Transmit R: Receive

Signals	ECM	TCM	COMBINATION METER	BCM	IPDM E/R
Engine speed signal	T		R		
Engine coolant temperature signal	T		R		
Accelerator pedal position signal	T				R
Fuel consumption monitor signal	T		R		
A/T warning lamp signal		T	R		
A/T position indicator signal	R	T	R	R(R range only)	
Air conditioner switch signal	R			T	
Air conditioner compressor signal	R				T
A/C compressor request signal	T				R

Signals	ECM	TCM	COMBINATION METER	BCM	IPDM E/R
Blower fan switch signal	R(QR25DE)			T	
Cooling fan motor operation signal	R			T	
Cooling fan speed request signal	T				R
Position lights request			R	T	R
Position lights status				R	T
Low beam request				T	R
Low beam status	R			R	T
High beam request			R	T	R
High beam status	R			R	T
Front fog lights request				T	R
Front fog light status				R	T
OD cancel switch signal		R	T		R
Brake switch signal		R	T		
Vehicle speed signal	R		T		
	R		T	R	
Oil pressure switch			R		T
Sleep request1			R	T	
Sleep request2				T	R
N range switch signal		R	T		
P range switch signal		R	T		
Seat belt buckle switch signal			T	R	
Door switch signal			R	T	R
Tail lamp request			R	T	R
Turn indicator signal			R	T	
Buzzer output signal			R	T	
Trunk switch signal			R	T	
ASCD main switch signal	T		R		
ASCD cruise signal	T		R		
Wiper operation				R	T
Wiper stop position signal				R	T
Rear window defogger switch signal				T	R
Rear window defogger control signal	R			R	T

FOR M/T MODELS

System diagram

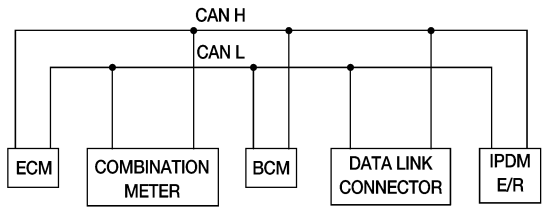

LKIA0018E

Input/output signal chart

T: Transmit R: Receive

Signals	ECM	COMBINATION METER	BCM	IPDM E/R
Engine speed signal	T			
Engine coolant temperature signal	T			
Fuel consumption monitor signal	T			
Air conditioner switch signal	R		T	
Air conditioner compressor signal	R			T
A/C compressor request signal	T			R
Blower fan switch signal	R(QR25DE)		T	
Cooling fan motor operation signal	R			T
Cooling fan speed request signal	T			R
Position lights request		R	T	R
Position lights status			R	T
Low beam request			T	R
Low beam status	R		R	T
High beam request		R	T	R
High beam status	R		R	T
Front fog lights request			T	R
Front fog light status			R	T
Vehicle speed signal	R	T		
Oil pressure switch		R		T
Sleep request1		R	T	
Sleep request2			T	R
Seat belt buckle switch signal		T	R	
Door switch signal		R	T	R
Tail lamp request		R	T	R
Turn indicator signal		R	T	
Buzzer output signal		R	T	
Trunk switch signal		R	T	
ASCD main switch signal	T	R		
ASCD cruise signal	T	R		
Wiper operation			R	T
Wiper stop position signal			R	T
Rear window defogger switch signal			T	R
Rear window defogger control signal	R		R	T

CAN SYSTEM (FOR TCS MODELS)

PFP:23710

System Description

EKS003ZI

CAN (Controller Area Network) is a serial communication line for real time application. It is an on-vehicle multiplex communication line with high data communication speed and excellent error detection ability. Many electronic control units are equipped onto a vehicle, and each control unit shares information and links with other control units during operation (not independent). In CAN communication, control units are connected with 2 communication lines (CAN H line, CAN L line) allowing a high rate of information transmission with less wiring. Each control unit transmits/receives data but selectively reads required data only.

Component Parts and Harness Connector Location

EKS003ZJ

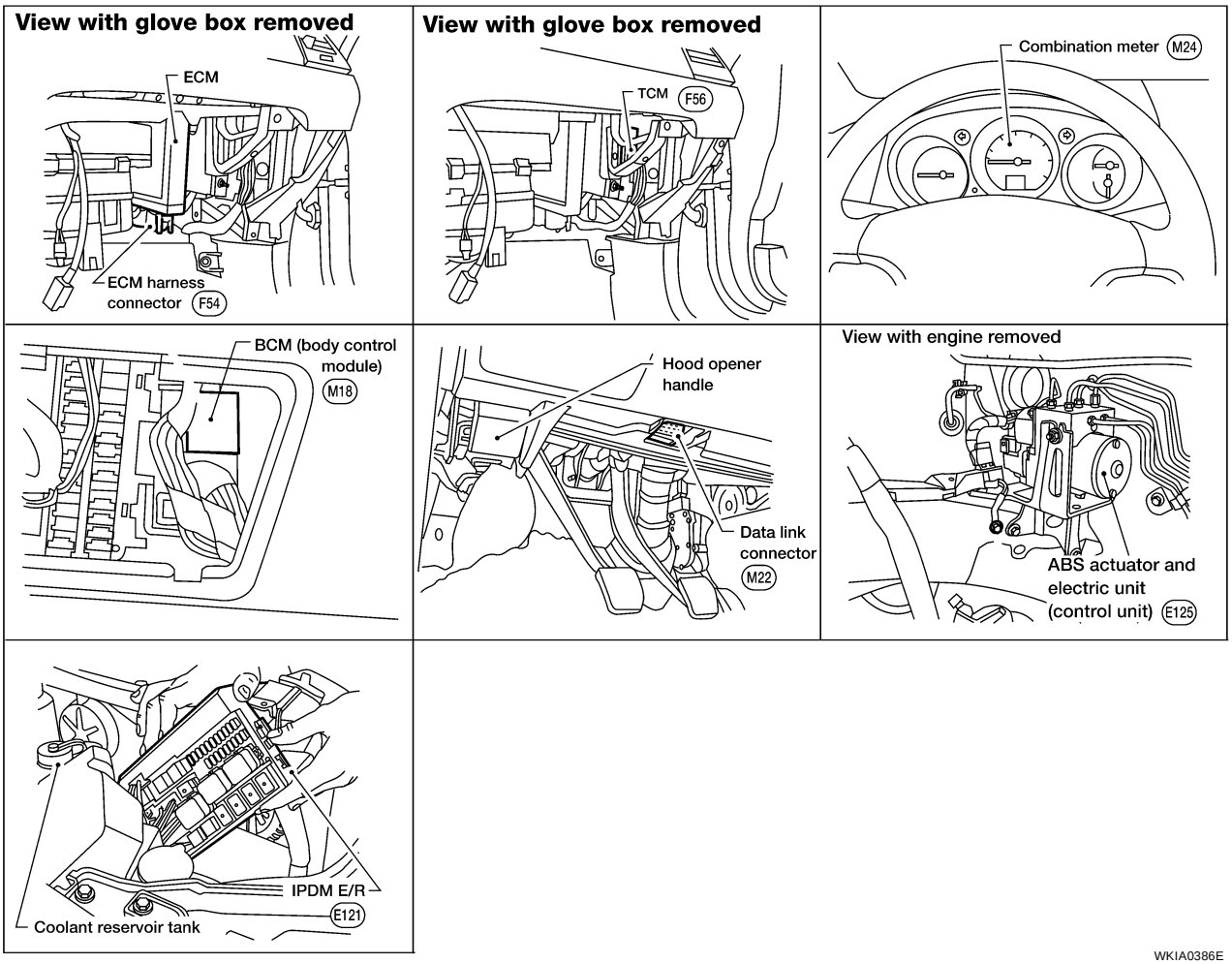

WKIA0386E

Wiring Diagram — CAN —

EKS003ZK

LAN-CAN-01

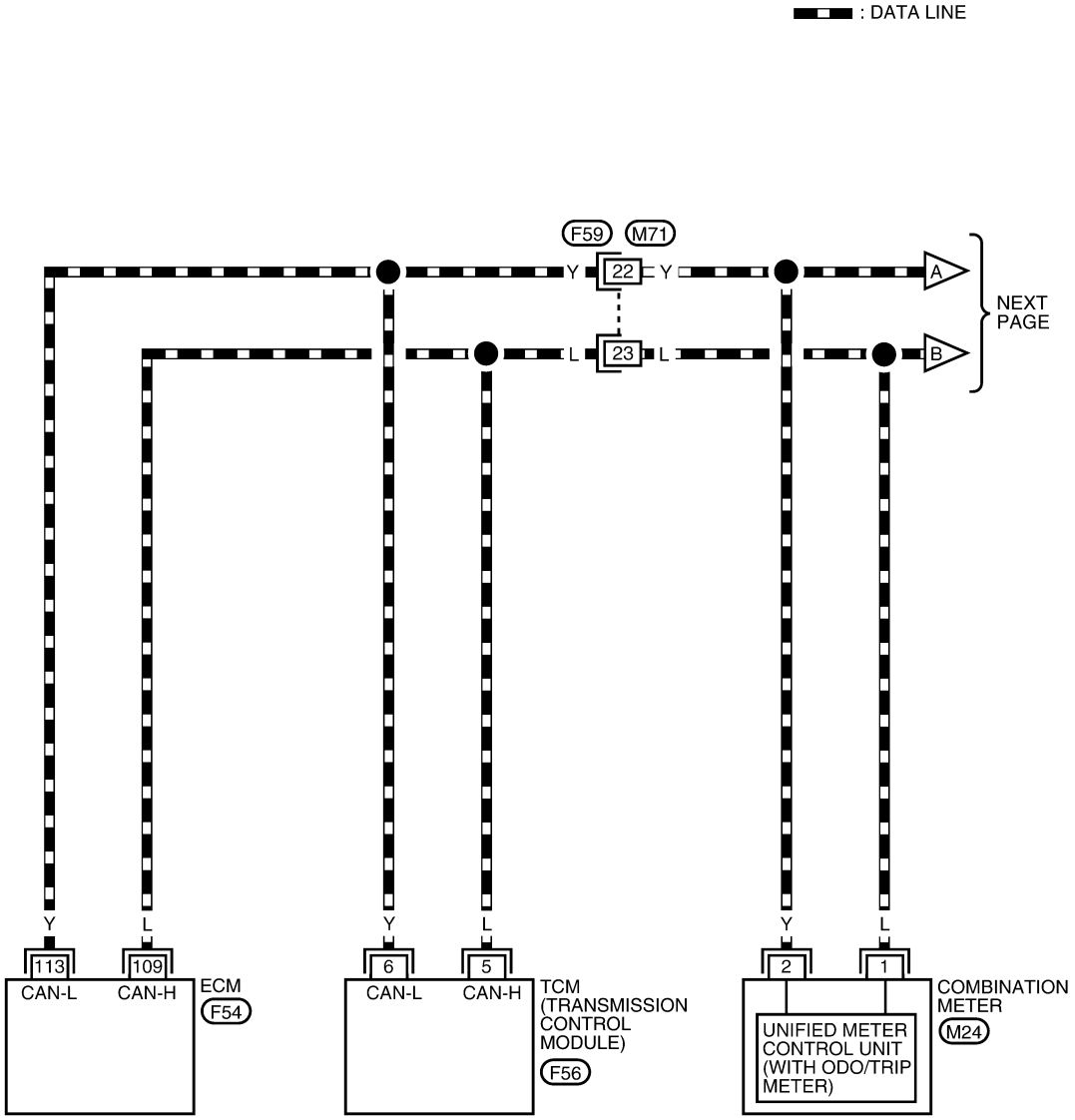

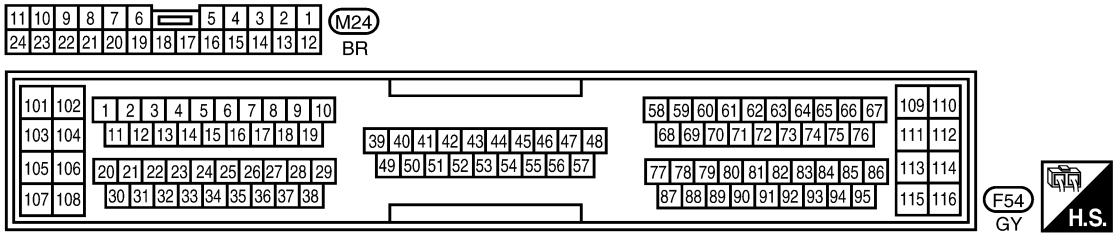

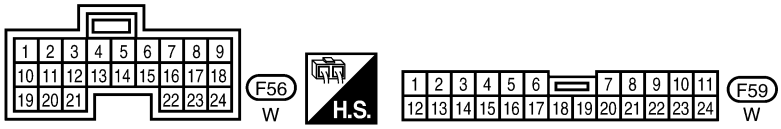

WKWA0298E

LAN-CAN-02

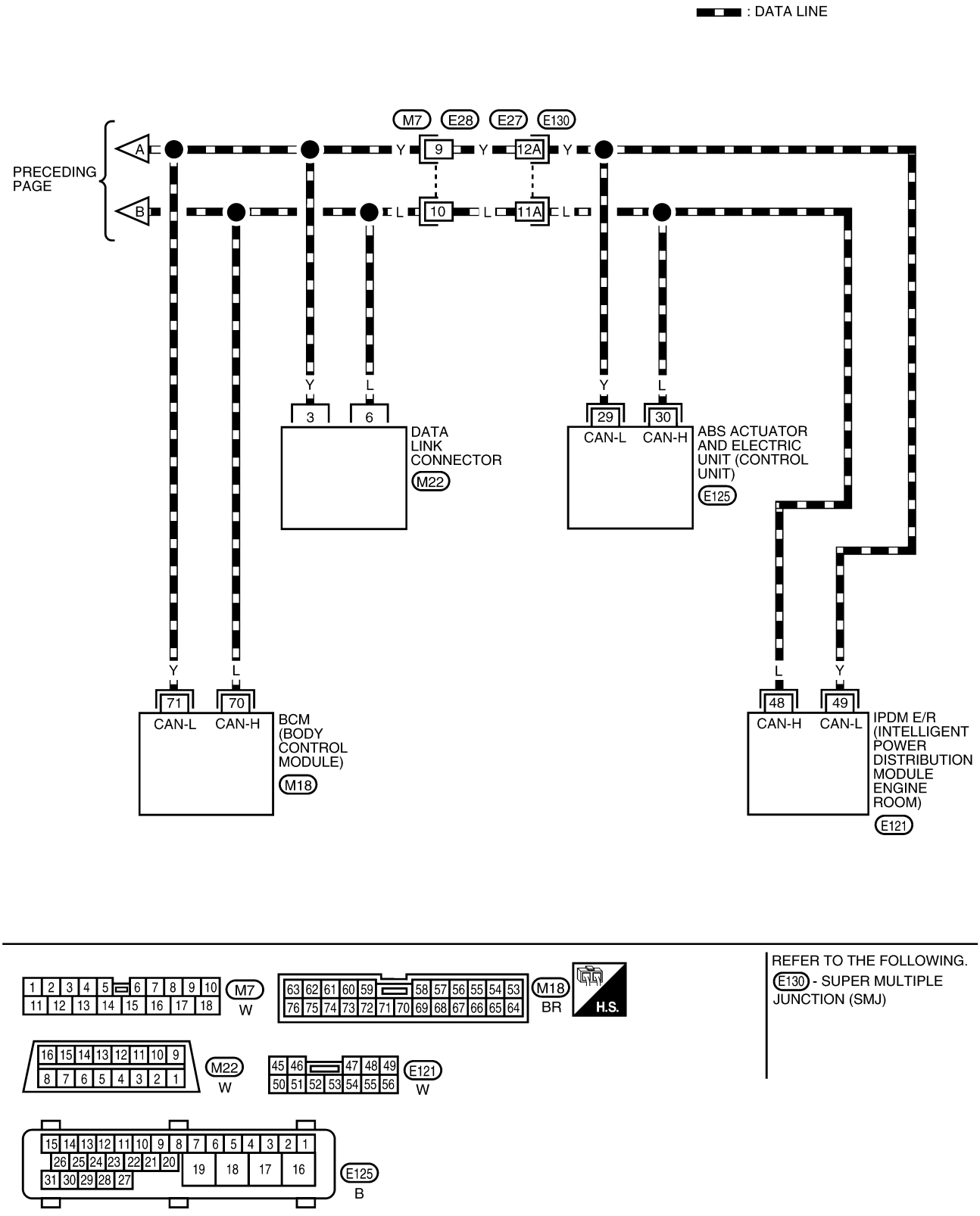
: DATA LINE
PRECEDING PAGE
A
B
M7
E28
E27
E130
9
10
12A
11A
Y
L
3
6
DATA LINK CONNECTOR
M22
29
30
CAN-L
CAN-H
ABS ACTUATOR AND ELECTRIC UNIT (CONTROL UNIT)
E125
71
70
BCM (BODY CONTROL MODULE)
M18
48
49
IPDM E/R (INTELLIGENT POWER DISTRIBUTION MODULE ENGINE ROOM)
E121
M7
W
M18
BR
H.S.
M22
W
E121
W
E125
B
REFER TO THE FOLLOWING.
E130 - SUPER MULTIPLE JUNCTION (SMJ)
LKWA0065E

Work Flow

EKS003ZL

1. Print all the data of “SELF-DIAG RESULTS” and “DATA MONITOR” for “ENGINE”, “A/T”, “BCM”, and “ABS” displayed on CONSULT-II. Refer to EC-730 for “ENGINE” and AT-40 for “A/T”. Refer to BCS-14 for “BCM”. Refer to BRC-15 for “ABS”.
2. Attach the printed sheet of “SELF-DIAG RESULTS” and “DATA MONITOR” onto the check sheet. Refer to LAN-12, "CHECK SHEET" .
3. Based on the data monitor results, put check marks onto the items with “UNKWN” or “NG” in the check sheet table. Refer to LAN-12, "CHECK SHEET" .

   NOTE:
   If “NG” is displayed on “CAN COMM” for the diagnosed control unit, replace the control unit.
4. According to the check sheet results (example), start inspection. Refer to LAN-13, "CHECK SHEET RESULTS (EXAMPLE)" .

CHECK SHEET

Check sheet table

ENGINE	CAN COMM	CAN CIRC 1	–	CAN CIRC 2	CAN CIRC 4	CAN CIRC 6	CAN CIRC 3	CAN CIRC 7
A/T	CAN COMM	CAN CIRC 1	CAN CIRC 2	–	CAN CIRC 4	–	CAN CIRC 3	–
BCM	CAN COMM	CAN CIRC 1	CAN CIRC 2	–	CAN CIRC 4	–	–	CAN CIRC 3
ABS	CAN COMM	CAN CIRC 1	CAN CIRC 2	CAN CIRC 3	–	–	–	–

Symptoms:

Attach copy of ENGINE SELF-DIAG RESULTS

Attach copy of A/T SELF-DIAG RESULTS

Attach copy of BCM SELF-DIAG RESULTS

Attach copy of ABS SELF-DIAG RESULTS

Attach copy of ENGINE DATA MONITOR

Attach copy of A/T DATA MONITOR

Attach copy of BCM DATA MONITOR

Attach copy of ABS DATA MONITOR

LKIA0040E

CHECK SHEET RESULTS (EXAMPLE)

Case 1: Replace ECM

ENGINE	CAN COMM ✓	CAN CIRC 1	–	CAN CIRC 2	CAN CIRC 4	CAN CIRC 6	CAN CIRC 3	CAN CIRC 7
A/T	CAN COMM	CAN CIRC 1	CAN CIRC 2	–	CAN CIRC 4	–	CAN CIRC 3	–
BCM	CAN COMM	CAN CIRC 1	CAN CIRC 2	–	CAN CIRC 4	–	–	CAN CIRC 3
ABS	CAN COMM	CAN CIRC 1	CAN CIRC 2	CAN CIRC 3	–	–	–	–

ENGINE	CAN COMM	CAN CIRC 1 ✓	–	CAN CIRC 2 ✓	CAN CIRC 4 ✓	CAN CIRC 6 ✓	CAN CIRC 3 ✓	CAN CIRC 7 ✓
A/T	CAN COMM	CAN CIRC 1	CAN CIRC 2 ✓	–	CAN CIRC 4	–	CAN CIRC 3	–
BCM	CAN COMM	CAN CIRC 1	CAN CIRC 2	–	CAN CIRC 4	–	–	CAN CIRC 3
ABS	CAN COMM	CAN CIRC 1	CAN CIRC 2	CAN CIRC 3 ✓	–	–	–	–

Case 2: Replace TCM

ENGINE	CAN COMM	CAN CIRC 1	–	CAN CIRC 2 ✓	CAN CIRC 4	CAN CIRC 6	CAN CIRC 3	CAN CIRC 7
A/T	CAN COMM ✓	CAN CIRC 1	CAN CIRC 2	–	CAN CIRC 4	–	CAN CIRC 3	–
BCM	CAN COMM	CAN CIRC 1	CAN CIRC 2	–	CAN CIRC 4	–	–	CAN CIRC 3
ABS	CAN COMM	CAN CIRC 1	CAN CIRC 2	CAN CIRC 3 ✓	–	–	–	–

ENGINE	CAN COMM	CAN CIRC 1 ✓	–	CAN CIRC 2	CAN CIRC 4	CAN CIRC 6	CAN CIRC 3	CAN CIRC 7
A/T	CAN COMM	CAN CIRC 1	CAN CIRC 2 ✓	–	CAN CIRC 4 ✓	–	CAN CIRC 3 ✓	–
BCM	CAN COMM	CAN CIRC 1	CAN CIRC 2	–	CAN CIRC 4	–	–	CAN CIRC 3
ABS	CAN COMM	CAN CIRC 1	CAN CIRC 2	CAN CIRC 3	–	–	–	–

Case 3: Replace BCM

ENGINE	CAN COMM	CAN CIRC 1	–	CAN CIRC 2	CAN CIRC 4	CAN CIRC 6	CAN CIRC 3	CAN CIRC 7
A/T	CAN COMM	CAN CIRC 1	CAN CIRC 2	–	CAN CIRC 4	–	CAN CIRC 3	–
BCM	CAN COMM ✓	CAN CIRC 1	CAN CIRC 2	–	CAN CIRC 4	–	–	CAN CIRC 3
ABS	CAN COMM	CAN CIRC 1	CAN CIRC 2	CAN CIRC 3	–	–	–	–

ENGINE	CAN COMM	CAN CIRC 1	–	CAN CIRC 2	CAN CIRC 4	CAN CIRC 6	CAN CIRC 3	CAN CIRC 7
A/T	CAN COMM	CAN CIRC 1	CAN CIRC 2	–	CAN CIRC 4	–	CAN CIRC 3	–
BCM	CAN COMM	CAN CIRC 1	CAN CIRC 2 ✓	–	CAN CIRC 4 ✓	–	–	CAN CIRC 3 ✓
ABS	CAN COMM	CAN CIRC 1	CAN CIRC 2	CAN CIRC 3	–	–	–	–

Case 4: Replace ABS actuator and electric unit (control unit)

ENGINE	CAN COMM	CAN CIRC 1	–	CAN CIRC 2	CAN CIRC 4	CAN CIRC 6	CAN CIRC 3 ✓	CAN CIRC 7
A/T	CAN COMM	CAN CIRC 1	CAN CIRC 2	–	CAN CIRC 4	–	CAN CIRC 3 ✓	–
BCM	CAN COMM	CAN CIRC 1	CAN CIRC 2	–	CAN CIRC 4	–	–	CAN CIRC 3
ABS	CAN COMM ✓	CAN CIRC 1	CAN CIRC 2	CAN CIRC 3	–	–	–	–

ENGINE	CAN COMM	CAN CIRC 1	–	CAN CIRC 2	CAN CIRC 4	CAN CIRC 6	CAN CIRC 3	CAN CIRC 7
A/T	CAN COMM	CAN CIRC 1	CAN CIRC 2	–	CAN CIRC 4	–	CAN CIRC 3	–
BCM	CAN COMM	CAN CIRC 1	CAN CIRC 2	–	CAN CIRC 4	–	–	CAN CIRC 3
ABS	CAN COMM	CAN CIRC 1	CAN CIRC 2 ✓	CAN CIRC 3 ✓	–	–	–	–

LKIA0041E

Case 5

ENGINE	CAN COMM	CAN CIRC 1	–	CAN CIRC 2	CAN CIRC 4	CAN CIRC 6	CAN CIRC 3	CAN CIRC 7
A/T	CAN COMM	CAN CIRC 1	CAN CIRC 2	–	CAN CIRC 4	–	CAN CIRC 3	–
BCM	CAN COMM	CAN CIRC 1	CAN CIRC 2	–	CAN CIRC 4	–	–	CAN CIRC 3
ABS	CAN COMM	CAN CIRC 1	CAN CIRC 2	CAN CIRC 3	–	–	–	–

Case 6

ENGINE	CAN COMM	CAN CIRC 1	–	CAN CIRC 2	CAN CIRC 4	CAN CIRC 6	CAN CIRC 3	CAN CIRC 7
A/T	CAN COMM	CAN CIRC 1	CAN CIRC 2	–	CAN CIRC 4	–	CAN CIRC 3	–
BCM	CAN COMM	CAN CIRC 1	CAN CIRC 2	–	CAN CIRC 4	–	–	CAN CIRC 3
ABS	CAN COMM	CAN CIRC 1	CAN CIRC 2	CAN CIRC 3	–	–	–	–

Case 7

ENGINE	CAN COMM	CAN CIRC 1	–	CAN CIRC 2	CAN CIRC 4	CAN CIRC 6	CAN CIRC 3	CAN CIRC 7
A/T	CAN COMM	CAN CIRC 1	CAN CIRC 2	–	CAN CIRC 4	–	CAN CIRC 3	–
BCM	CAN COMM	CAN CIRC 1	CAN CIRC 2	–	CAN CIRC 4	–	–	CAN CIRC 3
ABS	CAN COMM	CAN CIRC 1	CAN CIRC 2	CAN CIRC 3	–	–	–	–

Case 8

ENGINE	CAN COMM	CAN CIRC 1	–	CAN CIRC 2	CAN CIRC 4	CAN CIRC 6	CAN CIRC 3	CAN CIRC 7
A/T	CAN COMM	CAN CIRC 1	CAN CIRC 2	–	CAN CIRC 4	–	CAN CIRC 3	–
BCM	CAN COMM	CAN CIRC 1	CAN CIRC 2	–	CAN CIRC 4	–	–	CAN CIRC 3
ABS	CAN COMM	CAN CIRC 1	CAN CIRC 2	CAN CIRC 3	–	–	–	–

Case 9

ENGINE	CAN COMM	CAN CIRC 1	–	CAN CIRC 2	CAN CIRC 4	CAN CIRC 6	CAN CIRC 3	CAN CIRC 7
A/T	CAN COMM	CAN CIRC 1	CAN CIRC 2	–	CAN CIRC 4	–	CAN CIRC 3	–
BCM	CAN COMM	CAN CIRC 1	CAN CIRC 2	–	CAN CIRC 4	–	–	CAN CIRC 3
ABS	CAN COMM	CAN CIRC 1	CAN CIRC 2	CAN CIRC 3	–	–	–	–

Case 10

ENGINE	CAN COMM	CAN CIRC 1	–	CAN CIRC 2	CAN CIRC 4	CAN CIRC 6	CAN CIRC 3	CAN CIRC 7
A/T	CAN COMM	CAN CIRC 1	CAN CIRC 2	–	CAN CIRC 4	–	CAN CIRC 3	–
BCM	CAN COMM	CAN CIRC 1	CAN CIRC 2	–	CAN CIRC 4	–	–	CAN CIRC 3
ABS	CAN COMM	CAN CIRC 1	CAN CIRC 2	CAN CIRC 3	–	–	–	–

Case 11

ENGINE	CAN COMM	CAN CIRC 1	–	CAN CIRC 2	CAN CIRC 4	CAN CIRC 6	CAN CIRC 3	CAN CIRC 7
A/T	CAN COMM	CAN CIRC 1	CAN CIRC 2	–	CAN CIRC 4	–	CAN CIRC 3	–
BCM	CAN COMM	CAN CIRC 1	CAN CIRC 2	–	CAN CIRC 4	–	–	CAN CIRC 3
ABS	CAN COMM	CAN CIRC 1	CAN CIRC 2	CAN CIRC 3	–	–	–	–

LKIA0042E

Case 12

ENGINE	CAN COMM	CAN CIRC 1	–	CAN CIRC 2	CAN CIRC 4	CAN CIRC 6	CAN CIRC 3 ✓	CAN CIRC 7
A/T	CAN COMM	CAN CIRC 1	CAN CIRC 2	–	CAN CIRC 4	–	CAN CIRC 3 ✓	–
BCM	CAN COMM	CAN CIRC 1	CAN CIRC 2	–	CAN CIRC 4	–	–	CAN CIRC 3
ABS	CAN COMM	CAN CIRC 1 ✓	CAN CIRC 2	CAN CIRC 3	–	–	–	–

Case 13

ENGINE	CAN COMM	CAN CIRC 1	–	CAN CIRC 2	CAN CIRC 4	CAN CIRC 6	CAN CIRC 3	CAN CIRC 7 ✓
A/T	CAN COMM	CAN CIRC 1	CAN CIRC 2	–	CAN CIRC 4	–	CAN CIRC 3	–
BCM	CAN COMM	CAN CIRC 1	CAN CIRC 2	–	CAN CIRC 4	–	–	CAN CIRC 3 ✓
ABS	CAN COMM	CAN CIRC 1	CAN CIRC 2	CAN CIRC 3	–	–	–	–

Case 14

ENGINE	CAN COMM	CAN CIRC 1 ✓	–	CAN CIRC 2 ✓	CAN CIRC 4 ✓	CAN CIRC 6 ✓	CAN CIRC 3 ✓	CAN CIRC 7 ✓
A/T	CAN COMM	CAN CIRC 1 ✓	CAN CIRC 2 ✓	–	CAN CIRC 4 ✓	–	CAN CIRC 3 ✓	–
BCM	CAN COMM	CAN CIRC 1 ✓	CAN CIRC 2 ✓	–	CAN CIRC 4 ✓	–	–	CAN CIRC 3 ✓
ABS	CAN COMM	CAN CIRC 1 ✓	CAN CIRC 2	CAN CIRC 3	–	–	–	–

Case 15

ENGINE	CAN COMM	CAN CIRC 1	–	CAN CIRC 2 ✓	CAN CIRC 4	CAN CIRC 6	CAN CIRC 3 ✓	CAN CIRC 7
A/T	CAN COMM	CAN CIRC 1	CAN CIRC 2	–	CAN CIRC 4	–	CAN CIRC 3	–
BCM	CAN COMM	CAN CIRC 1	CAN CIRC 2	–	CAN CIRC 4	–	–	CAN CIRC 3
ABS	CAN COMM	CAN CIRC 1	CAN CIRC 2	CAN CIRC 3	–	–	–	–

ENGINE	CAN COMM	CAN CIRC 1	–	CAN CIRC 2	CAN CIRC 4	CAN CIRC 6	CAN CIRC 3	CAN CIRC 7
A/T	CAN COMM	CAN CIRC 1	CAN CIRC 2 ✓	–	CAN CIRC 4 ✓	–	CAN CIRC 3	–
BCM	CAN COMM	CAN CIRC 1	CAN CIRC 2	–	CAN CIRC 4	–	–	CAN CIRC 3
ABS	CAN COMM	CAN CIRC 1	CAN CIRC 2 ✓	CAN CIRC 3	–	–	–	–

LKIA0043E

NOTE:
If “NG” is displayed on “CAN COMM” for the diagnosed control unit, replace the control unit.

INSPECTION

Proceed trouble diagnosis according to the check sheet results (example).
Case 1: Replace ECM.
Case 2: Replace TCM.
Case 3: Replace BCM.
Case 4: Replace ABS actuator and electric unit (control unit). Refer to BRC-90, "Removal and Installation" .
Case 5: Check harness between TCM and combination meter. Refer to LAN-16, "Circuit Check Between TCM and Combination Meter" .
Case 6: Check harness between combination meter and BCM. Refer to LAN-17, "Circuit Check Between Combination Meter and BCM" .
Case 7: Check harness between BCM and ABS actuator and electric unit (control unit). Refer to LAN-18, "Circuit Check Between BCM and ABS Actuator and Electric Unit (Control Unit)" .
Case 8: Check ECM circuit. Refer to LAN-20, "ECM Circuit Check" .
Case 9: Check TCM circuit. Refer to LAN-20, "TCM Circuit Check" .
Case 10: Check combination meter circuit. Refer to LAN-21, "Combination Meter Circuit Check" .
Case 11: Check BCM circuit. Refer to LAN-21, "BCM Circuit Check" .
Case 12: Check ABS actuator and electric unit (control unit) circuit. Refer to LAN-22, "ABS Actuator and Electric Unit (Control Unit) Circuit Check" .
Case 13: Check IPDM E/R circuit. Refer to LAN-22, "IPDM E/R Circuit Check" .
Case 14: Check CAN communication circuit. Refer to LAN-23, "CAN Communication Circuit Check" .
Case 15: Check IPDM E/R ignition relay circuit. Refer to LAN-26, "IPDM E/R Ignition Relay Circuit Check" .

Circuit Check Between TCM and Combination Meter

EKS003ZM

1. CHECK CONNECTOR

1. Turn ignition switch OFF.
2. Disconnect the negative battery terminal.
3. Check following terminals and connector for damage, bent or loose connection (control module-side, meter-side and harness-side).

- TCM.
- Combination meter.
- Between TCM and combination meter.

OK or NG

OK >> GO TO 2.
NG >> Repair terminal or connector.

2. CHECK HARNESS FOR OPEN CIRCUIT

1. Disconnect TCM connector and harness connector F59.
2. Check continuity between TCM harness connector F56 terminals 5 (L), 6 (Y) and harness connector F59 terminals 23 (L), 22 (Y).

5 (L) – 23 (L) : Continuity should exist.
6 (Y) – 22 (Y) : Continuity should exist.

OK or NG

OK >> GO TO 3.
NG >> Repair harness.

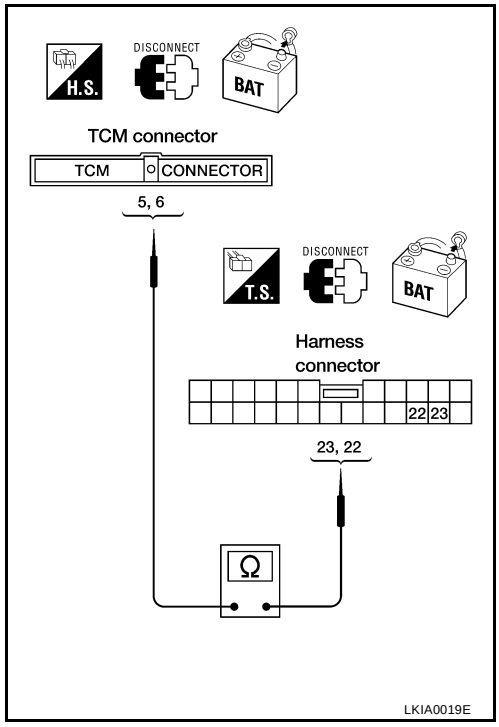

3. CHECK HARNESS FOR OPEN CIRCUIT

1. Disconnect combination meter connector.
2. Check continuity between harness connector M71 terminals 23 (L), 22 (Y) and combination meter harness connector M24 terminals 1 (L), 2 (Y).

23 (L) – 1 (L) : Continuity should exist.
22 (Y) – 2 (Y) : Continuity should exist.

OK or NG

OK >> Reconnect all connectors to perform "SELF-DIAG RESULTS" and "DATA MONITOR" for "ENGINE", "A/T", "BCM", and "ABS". Refer to EC-730 for "ENGINE" and AT-40 for "A/T". Refer to BCS-14 for "BCM". Refer to BRC-58 for "ABS".

NG >> Repair harness.

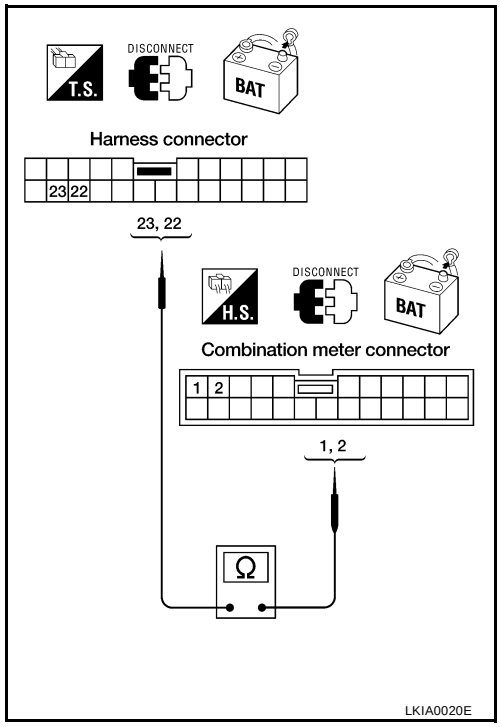

Circuit Check Between Combination Meter and BCM

EKS003ZN

1. CHECK CONNECTOR

1. Turn ignition switch OFF.
2. Disconnect the negative battery terminal.
3. Check following terminals and connector for damage, bent or loose connection (meter-side, control module-side and harness-side).

- Combination meter.
- BCM.

OK or NG

OK >> GO TO 2.

NG >> Repair terminal or connector.

2. CHECK HARNESS FOR OPEN CIRCUIT

1. Disconnect combination meter connector and BCM connector.
2. Check continuity between combination meter harness connector M24 terminals 1 (L), 2 (Y) and BCM harness connector M18 terminals 70 (L), 71 (Y).

1 (L) – 70 (L) : Continuity should exist.

2 (Y) – 71 (Y) : Continuity should exist.

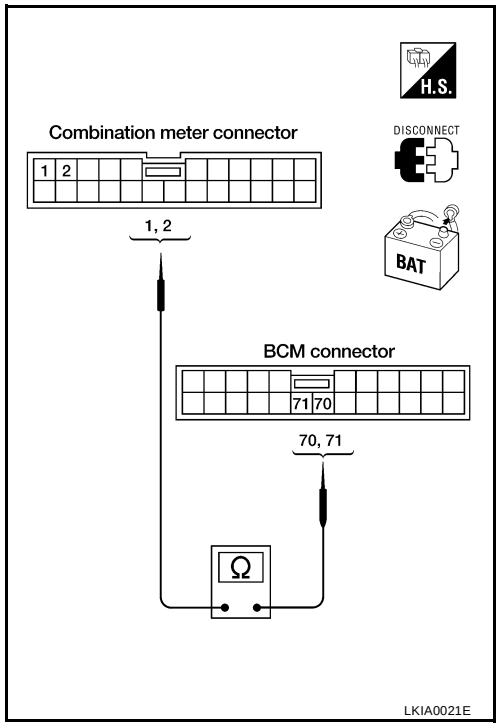

OK or NG

OK >> Reconnect all connectors to perform "SELF-DIAG RESULTS" and "DATA MONITOR" for "ENGINE", "A/T", "BCM", and "ABS". Refer to EC-730 for "ENGINE" and AT-40 for "A/T". Refer to BCS-14 for "BCM". Refer to BRC-58 for "ABS".

NG >> Repair harness.

Circuit Check Between BCM and ABS Actuator and Electric Unit (Control Unit)

EKS003ZO

1. CHECK CONNECOTR

1. Turn ignition switch OFF.
2. Disconnect the negative battery terminal.
3. Check following terminals and connector for damage, bent or loose connection (control module-side, control unit-side and harness-side).

- BCM.
- ABS actuator and electric unit (control unit).
- Between BCM and ABS actuator and electric unit (control unit).

OK or NG

OK >> GO TO 2.

NG >> Repair terminal or connector.

2. CHECK HARNESS FOR OPEN CIRCUIT

1. Disconnect BCM connector and harness connector M7.
2. Check continuity between BCM harness connector M18 terminals 70 (L), 71 (Y) and harness connector M7 terminals 10 (L), 9 (Y).

70 (L) – 10 (L) : Continuity should exist.

71 (Y) – 9 (Y) : Continuity should exist.

OK or NG

OK >> GO TO 3.
NG >> Repair harness.

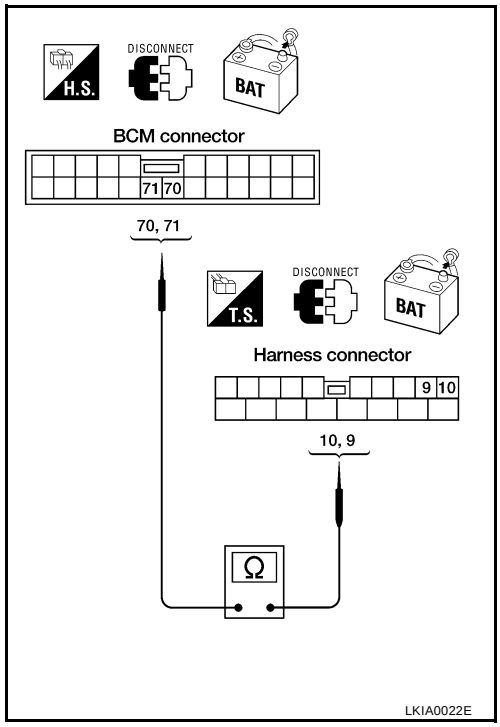

3. CHECK HARNESS FOR OPEN CIRCUITT

1. Disconnect harness connector E27.
2. Check continuity between harness connector E28 terminals 10 (L), 9 (Y) and harness connector E27 terminals 11A (L), 12A (Y).

10 (L) – 11A (L) : Continuity should exist.

9 (Y) – 12A (Y) : Continuity should exist.

OK or NG

OK >> GO TO 4.
NG >> Repair harness.

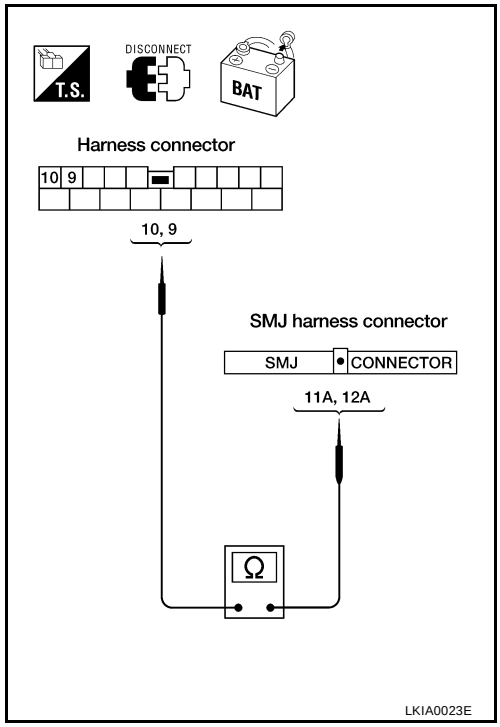

4. CHECK HARNESS FOR OPEN CIRCUIT

1. Disconnect ABS actuator and electric unit (control unit) connector.
2. Check continuity between harness connector E130 terminals 11A (L), 12A (Y) and ABS actuator and electric unit (control unit) connector harness connector E125 terminals 30 (L), 29 (Y).

11A (L) – 30 (L) : Continuity should exist.

12A (Y) – 29 (Y) : Continuity should exist.

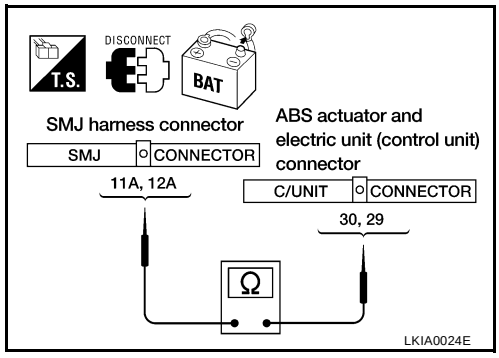

OK or NG

OK >> Reconnect all connectors to perform "SELF-DIAG RESULTS" and "DATA MONITOR" for "ENGINE", "A/T", "BCM", and "ABS". Refer to EC-730 for "ENGINE" and AT-40 for "A/T". Refer to BCS-14 for "BCM". Refer to BRC-58 for "ABS".

NG >> Repair harness.

ECM Circuit Check

EKS003ZP

1. CHECK CONNECTOR

1. Turn ignition switch OFF.
2. Disconnect the negative battery terminal.
3. Check the terminals and connector of ECM for damage, bent or loose connection (control module-side and harness-side).

OK or NG

OK >> GO TO 2.

NG >> Repair terminal or connector.

2. CHECK HARNESS FOR OPEN CIRCUIT

1. Disconnect ECM connector.
2. Check resistance between ECM harness connector F54 terminals 109 (L) and 113 (Y).

109 (L) – 113 (Y) : Approx. 108 – 132Ω

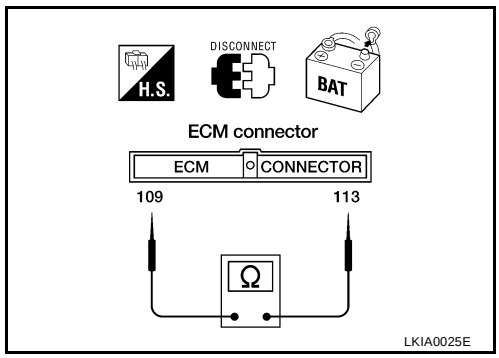

OK or NG

OK >> Replace ECM.

NG >> Repair harness between harness connector F59 and ECM.

TCM Circuit Check

EKS003ZQ

1. CHECK CONNECTOR

1. Turn ignition switch OFF.
2. Disconnect the negative battery terminal.
3. Check the terminals and connector of TCM for damage, bent or loose connection (control module-side and harness-side).

OK or NG

OK >> GO TO 2.

NG >> Repair terminal or connector.

2. CHECK HARNESS FOR OPEN CIRCUIT

1. Disconnect TCM connector.
2. Check resistance between TCM harness connector F56 terminals 5 (L) and 6 (Y).

5 (L) – 6 (Y) : Approx. 54 – 66Ω

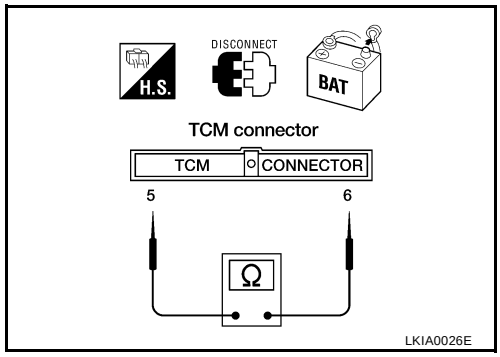

OK or NG

OK >> Replace TCM.
NG >> Repair harness between harness connector F59 and TCM.

Combination Meter Circuit Check

EKS003ZR

1. CHECK CONNECTOR

1. Turn ignition switch OFF.
2. Disconnect the negative battery terminal.
3. Check terminals and connector of combination meter for damage, bent or loose connection (meter-side and harness-side).

OK or NG

OK >> GO TO 2.
NG >> Repair terminal or connector.

2. CHECK HARNESS FOR OPEN CIRCUIT

1. Disconnect combination meter connector.
2. Check resistance between combination meter harness connector M24 terminals 1 (L) and 2 (Y).

1 (L) – 2 (Y) : Approx. 54 – 66Ω

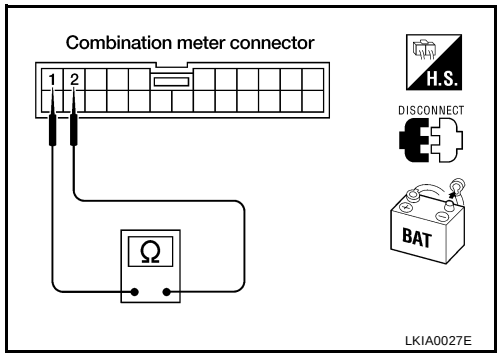

OK or NG

OK >> Replace combination meter.
NG >> Repair harness between harness connector M71 and combination meter.

BCM Circuit Check

EKS003ZS

1. CHECK CONNECTOR

1. Turn ignition switch OFF.
2. Disconnect the negative battery terminal.
3. Check the terminals and connector of BCM for damage, bent or loose connection (control module-side and harness-side).

OK or NG

OK >> GO TO 2.
NG >> Repair terminal or connector.

2. CHECK HARNESS FOR OPEN CIRCUIT

1. Disconnect BCM connector.
2. Check resistance between BCM harness connector M18 terminals 70 (L) and 71 (Y).

70 (L) – 71 (Y) : Approx. 54 – 66Ω

OK or NG

OK >> Replace BCM.
NG >> Repair harness between harness connector M7 and BCM.

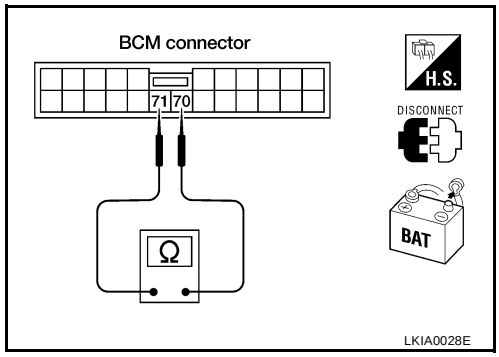

ABS Actuator and Electric Unit (Control Unit) Circuit Check

EKS003ZT

1. CHECK CONNECTOR

1. Turn ignition switch OFF.
2. Disconnect the negative battery terminal.
3. Check the terminals and connector of ABS actuator and electric unit (control unit) for damage, bent or loose connection (control unit-side and harness-side).

OK or NG

OK >> GO TO 2.
NG >> Repair terminal or connector.

2. CHECK HARNESS FOR OPEN CIRCUIT

1. Disconnect ABS actuator and electric unit (control unit) connector.
2. Check resistance between ABS actuator and electric unit (control unit) harness connector E125 terminals 30 (L) and 29 (Y).

30 (L) – 29 (Y) : Approx. 54 – 66Ω

OK or NG

OK >> Replace ABS actuator and electric unit (control unit).
NG >> Repair harness between harness connector E130 and ABS actuator and electric unit (control unit). Refer to BRC-90, "Removal and Installation" .

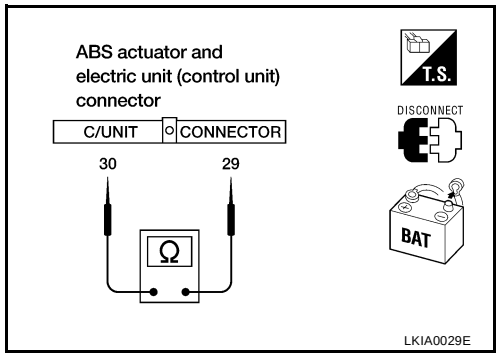

IPDM E/R Circuit Check

EKS003ZU

1. CHECK CONNECTOR

1. Turn ignition switch OFF.
2. Disconnect the negative battery terminal.
3. Check the terminals and connector of IPDM E/R for damage, bent or loose connection (control module-side and harness-side).

OK or NG

OK >> GO TO 2.
NG >> Repair terminal or connector.

2. CHECK HARNESS FOR OPEN CIRCUIT

1. Disconnect IPDM E/R connector.
2. Check resistance between IPDM E/R harness connector E121 terminals 48 (L) and 49 (Y).

48 (L) – 49 (Y) : Approx. 108 – 132Ω

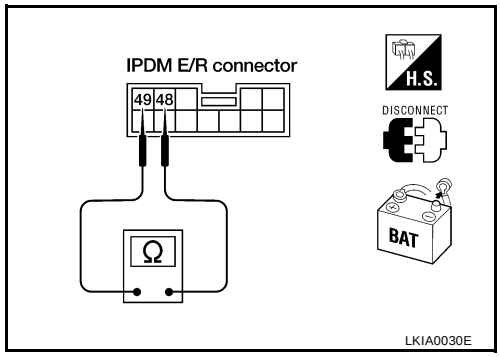

OK or NG

OK >> Replace IPDM E/R. Refer to PG-24, "Removal and Installation of IPDM E/R" .

NG >> Repair harness between harness connector E130 and IPDM E/R.

CAN Communication Circuit Check

EKS003ZV

1. CHECK CONNECTOR

1. Turn ignition switch OFF.
2. Disconnect the negative battery terminal.
3. Check following terminals and connector for damage, bent or loose connection (control module-side, control unit-side, meter-side and harness-side).

- ECM.
- TCM.
- Combination meter.
- BCM.
- ABS actuator and electric unit (control unit).
- IPDM E/R.
- Between ECM and IPDM E/R.

OK or NG

OK >> GO TO 2.

NG >> Repair terminal or connector.

2. CHECK HARNESS FOR SHORT CIRCUIT

1. Disconnect ECM connector, TCM connector and harness connector F59.
2. Check continuity between ECM harness connector F54 terminals 109 (L) and 113 (Y).

109 (L) – 113 (Y) : Continuity should not exist.

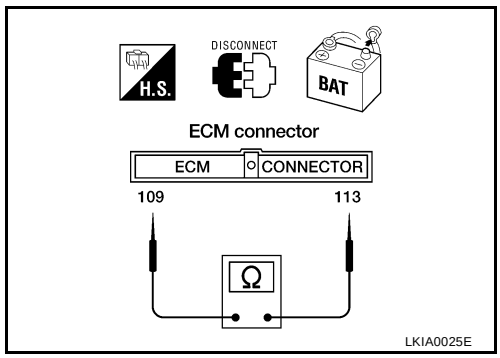

OK or NG

OK >> GO TO 3.

NG >>
- Repair harness between ECM and harness connector F59.
- Repair harness between TCM and harness connector F59.

3. CHECK HARNESS FOR SHORT CIRCUIT

Check continuity between ECM harness connector F54 terminals 109 (L), 113 (Y) and ground.

109 (L) – ground : Continuity should not exist.

113 (Y) – ground : Continuity should not exist.

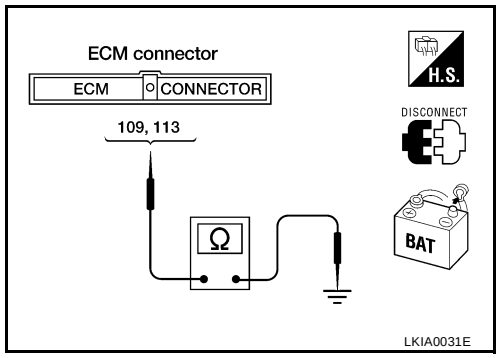

OK or NG

OK >> GO TO 4.

NG >>
- Repair harness between ECM and harness connector F59.
- Repair harness between TCM and harness connector F59.

4. CHECK HARNESS FOR SHORT CIRCUIT

1. Disconnect combination meter connector, BCM connector and harness connector M7.
2. Check continuity between data link connector M22 terminals 6 (L) and 3 (Y).

6 (L) – 3 (Y) : Continuity should not exist.

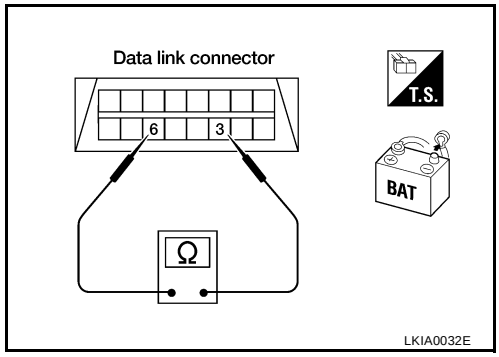

OK or NG

OK >> GO TO 5.

NG >>
- Repair harness between harness connector M71 and harness connector M7.
- Repair harness between harness connector M71 and combination meter.
- Repair harness between harness connector M71 and data link connector.
- Repair harness between harness connector M71 and BCM.

5. CHECK HARNESS FOR SHORT CIRCUIT

Check continuity between data link connector M22 terminals 6 (L), 3 (Y) and ground.

6 (L) – ground : Continuity should not exist.

3 (Y) – ground : Continuity should not exist.

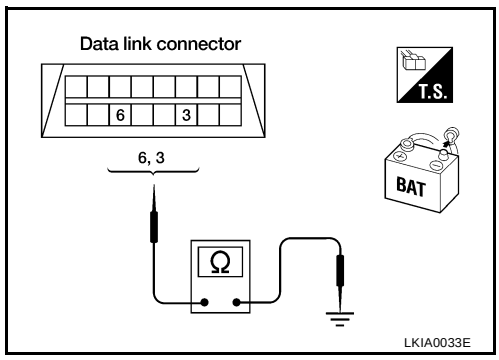

OK or NG

OK >> GO TO 6.

NG >>
- Repair harness between harness connector M71 and harness connector M7.
- Repair harness between harness connector M71 and combination meter.
- Repair harness between harness connector M71 and data link connector.
- Repair harness between harness connector M71 and BCM.

6. CHECK HARNESS FOR SHORT CIRCUIT

1. Disconnect harness connector E27.
2. Check continuity between harness connector E28 terminals 10 (L) and 9 (Y).

10 (L) – 9 (Y) : Continuity should not exist.

OK or NG

OK >> GO TO 7.
NG >> Repair harness between harness connector E28 and harness connector E27.

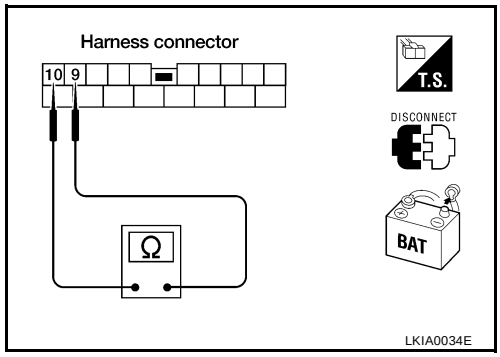

7. CHECK HARNESS FOR SHORT CIRCUIT

Check continuity between harness connector E28 terminals 10 (L), 9 (Y) and ground.

10 (L) – ground : Continuity should not exist.
9 (Y) – ground : Continuity should not exist.

OK or NG

OK >> GO TO 8.
NG >> Repair harness between harness connector E28 and harness connector E27.

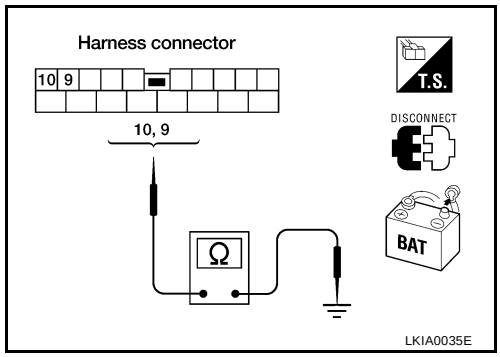

8. CHECK HARNESS FOR SHORT CIRCUIT

1. Disconnect ABS actuator and electric unit (control unit) connector and IPDM E/R connector.
2. Check continuity between IPDM E/R harness connector E121 terminals 48 (L) and 49 (Y).

48 (L) – 49 (Y) : Continuity should not exist.

OK or NG

OK >> GO TO 9.
NG >>
- Repair harness between harness connector E130 and ABS actuator and electric unit (control unit).
- Repair harness between harness connector E130 and IPDM E/R.

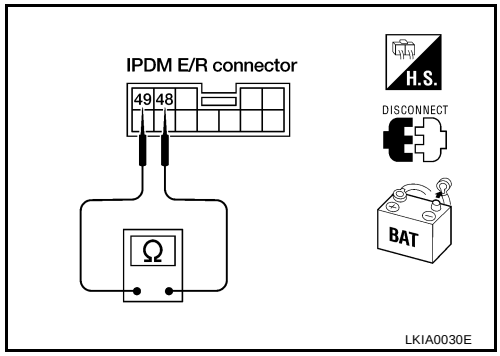

9. CHECK HARNESS FOR SHORT CIRCUIT

Check continuity between IPDM E/R harness connector E121 terminals 48 (L), 49 (Y) and ground.

48 (L) – ground : Continuity should not exist.
49 (Y) – ground : Continuity should not exist.

OK or NG

OK >> GO TO 10.
NG >>
- Repair harness between harness connector E130 and ABS actuator and electric unit (control unit).
- Repair harness between harness connector E130 and IPDM E/R.

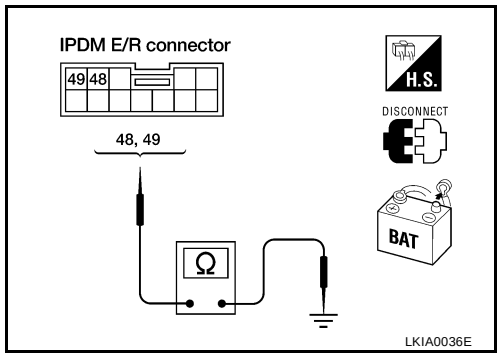

10. ECM/IPDM E/R INTERNAL CIRCUIT INSPECTION

Perform components inspection. Refer to LAN-26, "ECM/IPDM E/R INTERNAL CIRCUIT INSPECTION"

OK or NG

OK >> Reconnect all connectors to perform “SELF-DIAG RESULTS” and “DATA MONITOR” for “ENGINE”, “A/T”, “BCM”, and “ABS”. Refer to EC-730 for “ENGINE” and Refer to AT-40 for “A/T”. Refer to BCS-14 for “BCM”. Refer to BRC-58 for “ABS”.

NG >> Replace ECM and/or IPDM E/R.

IPDM E/R Ignition Relay Circuit Check

EKS003ZW

Check the following. If no problem is found, replace the IPDM E/R. Refer to PG-24, "Removal and Installation of IPDM E/R" .

- IPDM E/R Power Circuit. Refer to PG-23, "IPDM E/R Power/Ground Circuit Inspection" .
- Ignition Power Supply Circuit. Refer to PG-10, "IGNITION POWER SUPPLY — IGNITION SW. IN ON" .

Component Inspection

EKS003ZX

ECM/IPDM E/R INTERNAL CIRCUIT INSPECTION

- Remove ECM and IPDM E/R from vehicle. Refer to PG-24, "Removal and Installation of IPDM E/R" .
- Check resistance between ECM terminals 109 and 113.
- Check resistance between IPDM E/R terminals 48 and 49.

Unit	Terminal	Resistance value (Ω) (Approx.)
ECM	109 – 113	108 - 132
IPDM E/R	48 – 49	

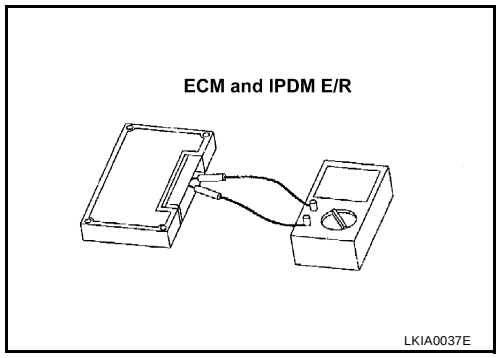

CAN SYSTEM (FOR A/T MODELS)

PFP:23710

System Description

EKS003ZY

CAN (Controller Area Network) is a serial communication line for real time application. It is an on-vehicle multiplex communication line with high data communication speed and excellent error detection ability. Many electronic control units are equipped onto a vehicle, and each control unit shares information and links with other control units during operation (not independent). In CAN communication, control units are connected with 2 communication lines (CAN H line, CAN L line) allowing a high rate of information transmission with less wiring. Each control unit transmits/receives data but selectively reads required data only.

Component Parts and Harness Connector Location

EKS003ZZ

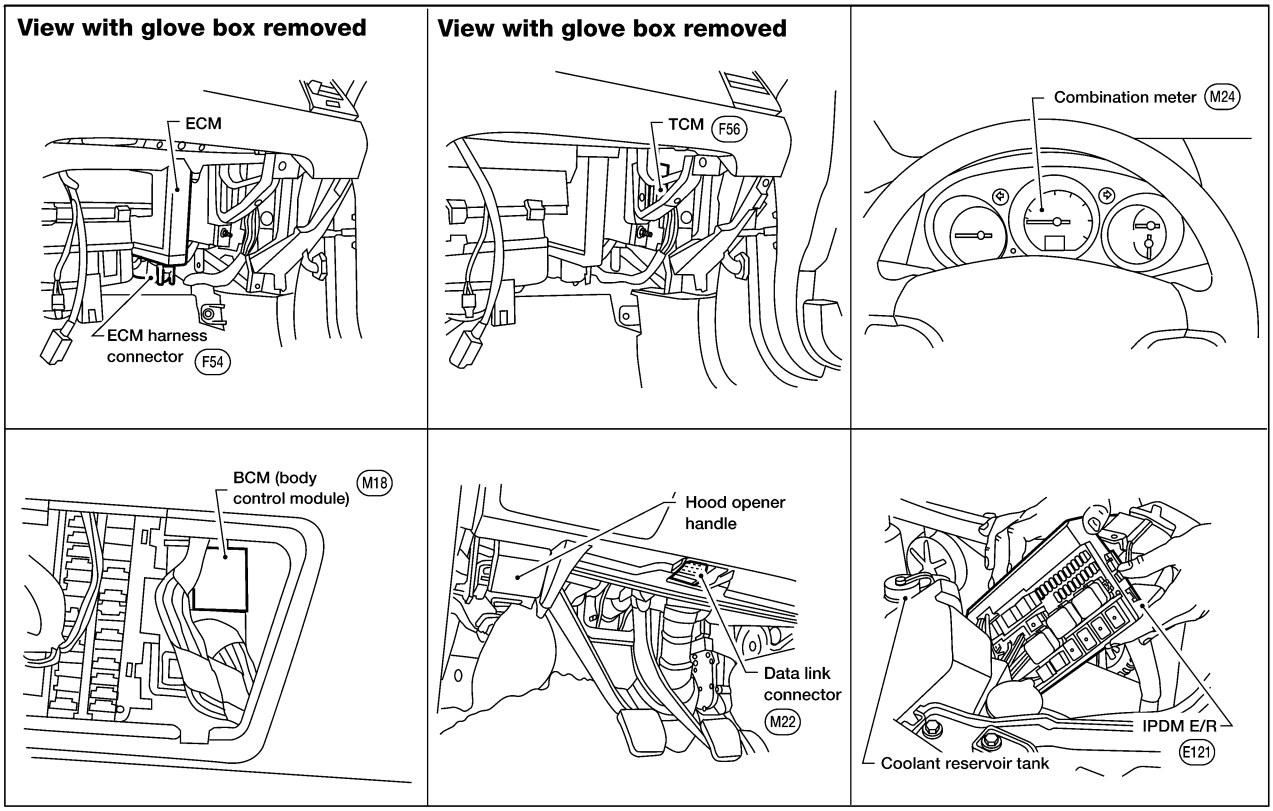

WKIA0387E

Wiring Diagram — CAN —

EKS00400

LAN-CAN-03

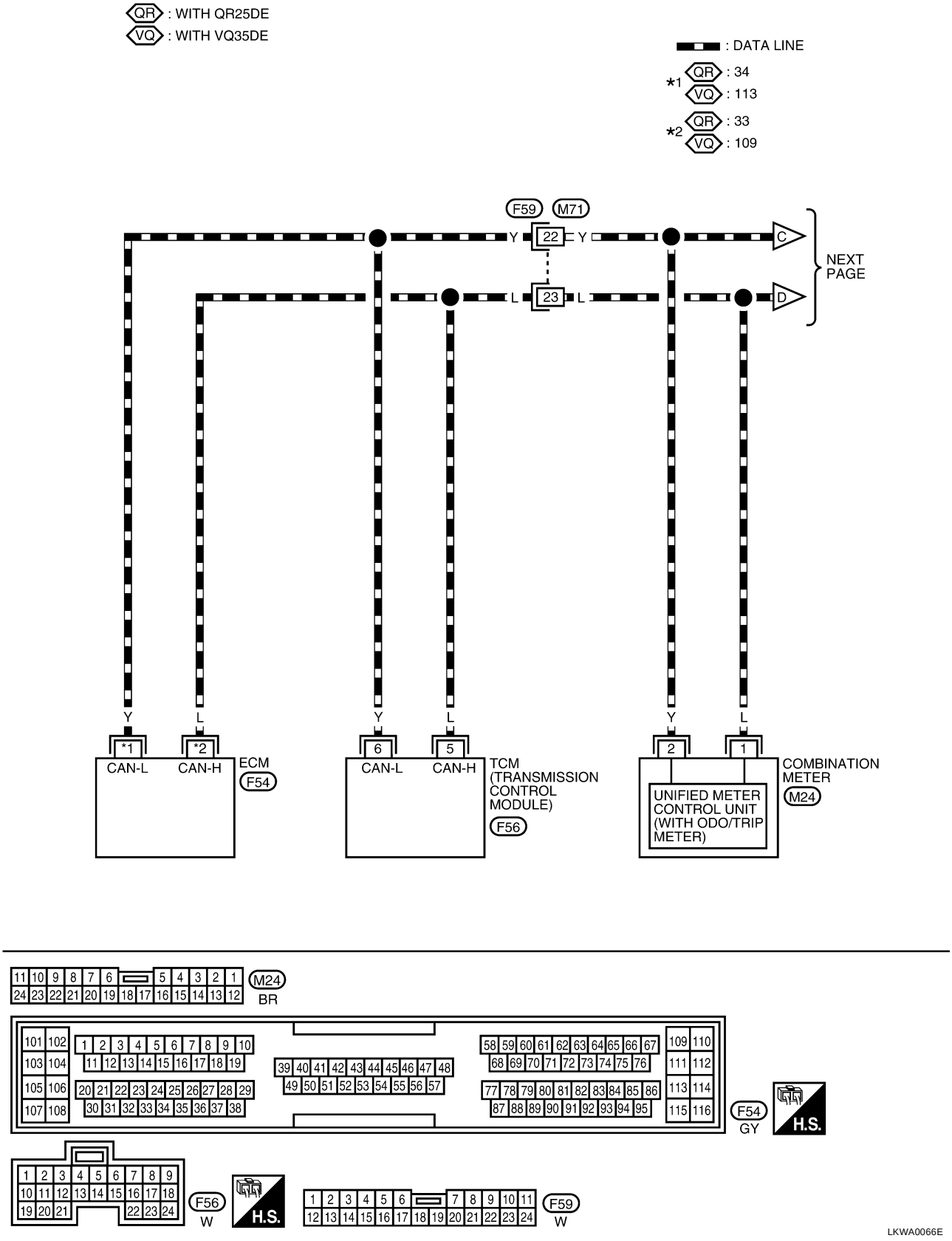

LAN-CAN-04

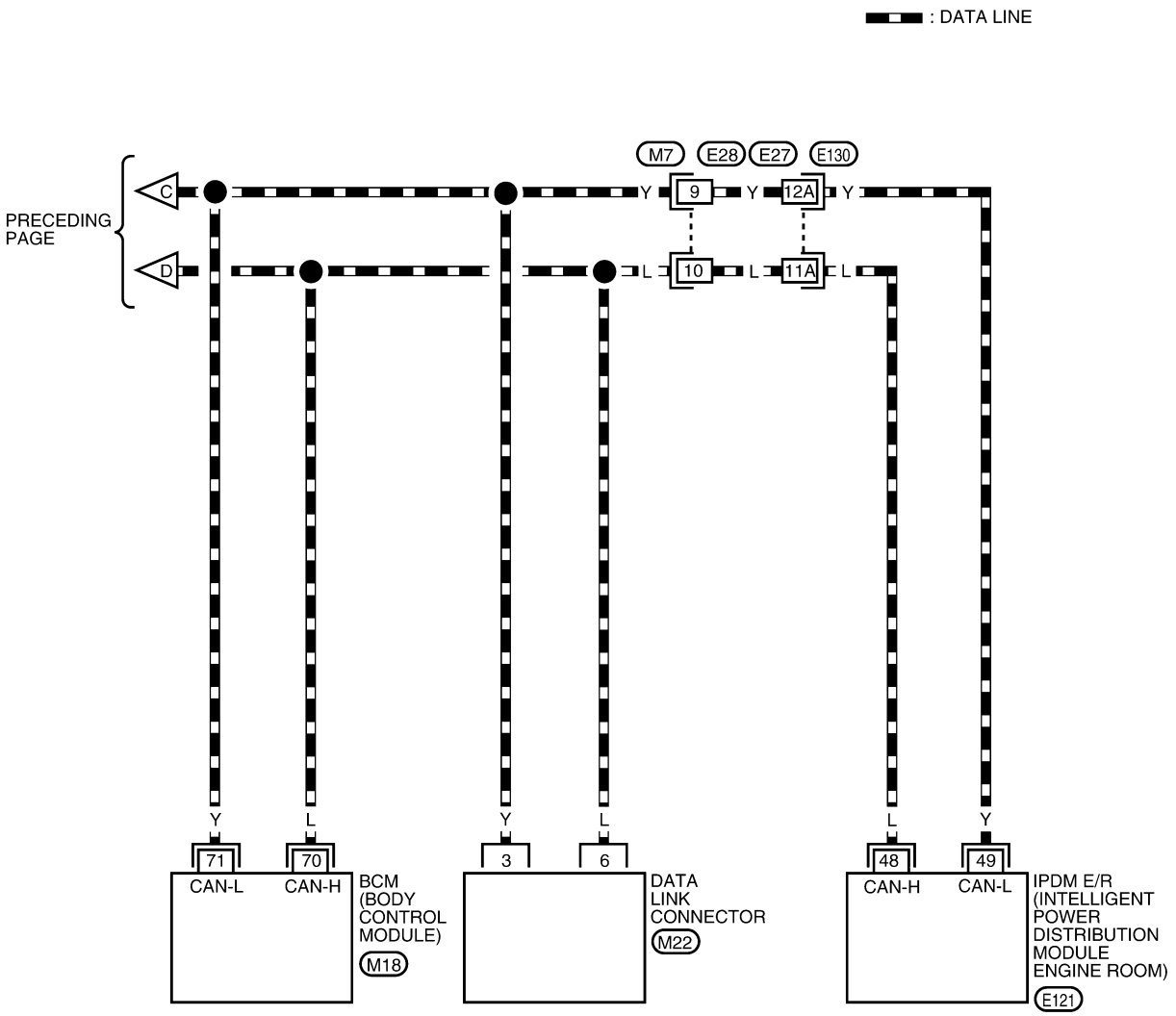

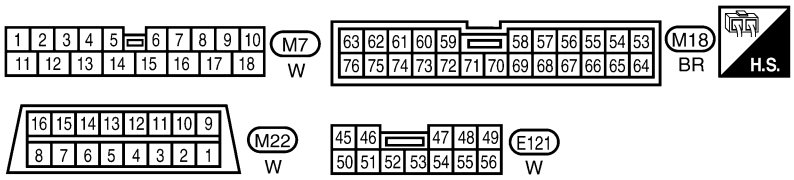

REFER TO THE FOLLOWING.
E130 - SUPER MULTIPLE JUNCTION (SMJ)

LKWA0067E

Work Flow

EKS00401

1. Print all the data of “SELF-DIAG RESULTS” and “DATA MONITOR” for “ENGINE”, “A/T” and “BCM” displayed on CONSULT-II. Refer to EC-106 (QR25DE engine models), EC-730 (VQ35DE engine models) for “ENGINE” and AT-40 for “A/T”. Refer to BCS-14 for “BCM”.
2. Attach the printed sheet of “SELF-DIAG RESULTS” and “DATA MONITOR” onto the check sheet. Refer to LAN-31, "CHECK SHEET" .
3. Based on the data monitor results, put check marks onto the items with “UNKWN” or “NG” in the check sheet table. Refer to LAN-31, "CHECK SHEET" .

   NOTE:
   If “NG” is displayed on “CAN COMM” for the diagnosed control unit, replace the control unit.
4. According to the check sheet results (example), start inspection. Refer to LAN-32, "CHECK SHEET RESULTS (EXAMPLE)" .

CHECK SHEET

Check sheet table

ENGINE	CAN COMM	CAN CIRC 1	–	CAN CIRC 2	CAN CIRC 4	CAN CIRC 6	CAN CIRC 7
A/T	CAN COMM	CAN CIRC 1	CAN CIRC 2	–	CAN CIRC 4	–	–
BCM	CAN COMM	CAN CIRC 1	CAN CIRC 2	–	CAN CIRC 4	–	CAN CIRC 3

Symptoms:

Attach copy of ENGINE SELF-DIAG RESULTS

Attach copy of A/T SELF-DIAG RESULTS

Attach copy of BCM SELF-DIAG RESULTS

Attach copy of ENGINE DATA MONITOR

Attach copy of A/T DATA MONITOR

Attach copy of BCM DATA MONITOR

LKIA0044E

CHECK SHEET RESULTS (EXAMPLE)

Case 1: Replace ECM

ENGINE	CAN COMM ✓	CAN CIRC 1	–	CAN CIRC 2	CAN CIRC 4	CAN CIRC 6	CAN CIRC 7
A/T	CAN COMM	CAN CIRC 1	CAN CIRC 2	–	CAN CIRC 4	–	–
BCM	CAN COMM	CAN CIRC 1	CAN CIRC 2	–	CAN CIRC 4	–	CAN CIRC 3

ENGINE	CAN COMM	CAN CIRC 1	–	CAN CIRC 2 ✓	CAN CIRC 4 ✓	CAN CIRC 6 ✓	CAN CIRC 7 ✓
A/T	CAN COMM	CAN CIRC 1	CAN CIRC 2	–	CAN CIRC 4	–	–
BCM	CAN COMM	CAN CIRC 1	CAN CIRC 2	–	CAN CIRC 4	–	CAN CIRC 3

Case 2: Replace TCM

ENGINE	CAN COMM	CAN CIRC 1	–	CAN CIRC 2 ✓	CAN CIRC 4	CAN CIRC 6	CAN CIRC 7
A/T	CAN COMM ✓	CAN CIRC 1	CAN CIRC 2	–	CAN CIRC 4	–	–
BCM	CAN COMM	CAN CIRC 1	CAN CIRC 2	–	CAN CIRC 4	–	CAN CIRC 3

Case 3: Replace BCM

ENGINE	CAN COMM	CAN CIRC 1	–	CAN CIRC 2	CAN CIRC 4	CAN CIRC 6	CAN CIRC 7
A/T	CAN COMM	CAN CIRC 1	CAN CIRC 2	–	CAN CIRC 4	–	–
BCM	CAN COMM ✓	CAN CIRC 1	CAN CIRC 2	–	CAN CIRC 4	–	CAN CIRC 3

ENGINE	CAN COMM	CAN CIRC 1	–	CAN CIRC 2	CAN CIRC 4	CAN CIRC 6	CAN CIRC 7
A/T	CAN COMM	CAN CIRC 1	CAN CIRC 2	–	CAN CIRC 4	–	–
BCM	CAN COMM	CAN CIRC 1	CAN CIRC 2 ✓	–	CAN CIRC 4 ✓	–	CAN CIRC 3 ✓

Case 4

ENGINE	CAN COMM	CAN CIRC 1	–	CAN CIRC 2	CAN CIRC 4 ✓	CAN CIRC 6 ✓	CAN CIRC 7 ✓
A/T	CAN COMM	CAN CIRC 1	CAN CIRC 2	–	CAN CIRC 4 ✓	–	–
BCM	CAN COMM	CAN CIRC 1	CAN CIRC 2 ✓	–	CAN CIRC 4	–	CAN CIRC 3

Case 5

ENGINE	CAN COMM	CAN CIRC 1	–	CAN CIRC 2	CAN CIRC 4	CAN CIRC 6 ✓	CAN CIRC 7 ✓
A/T	CAN COMM	CAN CIRC 1	CAN CIRC 2	–	CAN CIRC 4	–	–
BCM	CAN COMM	CAN CIRC 1	CAN CIRC 2 ✓	–	CAN CIRC 4 ✓	–	CAN CIRC 3

Case 6

ENGINE	CAN COMM	CAN CIRC 1 ✓	–	CAN CIRC 2 ✓	CAN CIRC 4 ✓	CAN CIRC 6 ✓	CAN CIRC 7 ✓
A/T	CAN COMM	CAN CIRC 1	CAN CIRC 2 ✓	–	CAN CIRC 4	–	–
BCM	CAN COMM	CAN CIRC 1	CAN CIRC 2 ✓	–	CAN CIRC 4	–	CAN CIRC 3

LKIA0045E

Case 7

ENGINE	CAN COMM	CAN CIRC 1	–	CAN CIRC 2 ✓	CAN CIRC 4	CAN CIRC 6	CAN CIRC 7
A/T	CAN COMM	CAN CIRC 1 ✓	CAN CIRC 2 ✓	–	CAN CIRC 4 ✓	–	–
BCM	CAN COMM	CAN CIRC 1	CAN CIRC 2	–	CAN CIRC 4	–	CAN CIRC 3

Case 8

ENGINE	CAN COMM	CAN CIRC 1	–	CAN CIRC 2	CAN CIRC 4 ✓	CAN CIRC 6	CAN CIRC 7
A/T	CAN COMM	CAN CIRC 1	CAN CIRC 2	–	CAN CIRC 4 ✓	–	–
BCM	CAN COMM	CAN CIRC 1	CAN CIRC 2	–	CAN CIRC 4 ✓	–	CAN CIRC 3

Case 9

ENGINE	CAN COMM	CAN CIRC 1	–	CAN CIRC 2	CAN CIRC 4	CAN CIRC 6 ✓	CAN CIRC 7
A/T	CAN COMM	CAN CIRC 1	CAN CIRC 2	–	CAN CIRC 4	–	–
BCM	CAN COMM	CAN CIRC 1 ✓	CAN CIRC 2 ✓	–	CAN CIRC 4 ✓	–	CAN CIRC 3 ✓

Case 10

ENGINE	CAN COMM	CAN CIRC 1	–	CAN CIRC 2	CAN CIRC 4	CAN CIRC 6	CAN CIRC 7 ✓
A/T	CAN COMM	CAN CIRC 1	CAN CIRC 2	–	CAN CIRC 4	–	–
BCM	CAN COMM	CAN CIRC 1	CAN CIRC 2	–	CAN CIRC 4	–	CAN CIRC 3 ✓

Case 11

ENGINE	CAN COMM	CAN CIRC 1 ✓	–	CAN CIRC 2 ✓	CAN CIRC 4 ✓	CAN CIRC 6 ✓	CAN CIRC 7 ✓
A/T	CAN COMM	CAN CIRC 1 ✓	CAN CIRC 2 ✓	–	CAN CIRC 4 ✓	–	–
BCM	CAN COMM	CAN CIRC 1 ✓	CAN CIRC 2 ✓	–	CAN CIRC 4 ✓	–	CAN CIRC 3 ✓

Case 12

ENGINE	CAN COMM	CAN CIRC 1	–	CAN CIRC 2 ✓	CAN CIRC 4	CAN CIRC 6	CAN CIRC 7
A/T	CAN COMM	CAN CIRC 1	CAN CIRC 2	–	CAN CIRC 4	–	–
BCM	CAN COMM	CAN CIRC 1	CAN CIRC 2	–	CAN CIRC 4	–	CAN CIRC 3

Case 13

ENGINE	CAN COMM	CAN CIRC 1	–	CAN CIRC 2	CAN CIRC 4	CAN CIRC 6	CAN CIRC 7
A/T	CAN COMM	CAN CIRC 1	CAN CIRC 2 ✓	–	CAN CIRC 4 ✓	–	–
BCM	CAN COMM	CAN CIRC 1	CAN CIRC 2	–	CAN CIRC 4	–	CAN CIRC 3

LKIA0046E

NOTE:
If “NG” is displayed on “CAN COMM” for the diagnosed control unit, replace the control unit.

INSPECTION

Proceed trouble diagnosis according to the check sheet results (example).
Case 1: Replace ECM.
Case 2: Replace TCM.
Case 3: Replace BCM.
Case 4: Check harness between TCM and combination meter. Refer to LAN-34, "Circuit Check Between TCM and Combination Meter" .
Case 5: Check Harness between combination meter and BCM. Refer to LAN-35, "Circuit Check Between Combination Meter and BCM" .
Case 6: Check ECM circuit. Refer to LAN-36, "ECM Circuit Check" .
Case 7: Check TCM circuit. Refer to LAN-37, "TCM Circuit Check" .
Case 8: Check combination meter circuit. Refer to LAN-37, "Combination Meter Circuit Check" .
Case 9: Check BCM circuit. Refer to LAN-38, "BCM Circuit Check" .
Case 10: Check IPDM E/R circuit. Refer to LAN-38, "IPDM E/R Circuit Check" .
Case 11: Check CAN communication circuit. Refer to LAN-39, "CAN Communication Circuit Check" .
Case 12: Check IPDM E/R ignition relay circuit. Refer to LAN-42, "IPDM E/R Ignition Relay Circuit Check" .
Case 13: Check IPDM E/R. Refer to LAN-42, "IPDM E/R Check" .

Circuit Check Between TCM and Combination Meter

EKS00402

1. CHECK CONNECTOR

1. Turn ignition switch OFF.
2. Disconnect the negative battery terminal.
3. Check following terminals and connector for damage, bent or loose connection (control module-side, meter-side and harness-side).

- TCM.
- Combination meter.
- Between TCM and combination meter.

OK or NG

OK >> GO TO 2.
NG >> Repair terminal or connector.

2. CHECK HARNESS FOR OPEN CIRCUIT

1. Disconnect TCM connector and harness connector F59.
2. Check continuity between TCM harness connector F56 terminals 5 (L), 6 (Y) and harness connector F59 terminals 23 (L), 22 (Y).

5 (L) – 23 (L) : Continuity should exist.
6 (Y) – 22 (Y) : Continuity should exist.

OK or NG

OK >> GO TO 3.
NG >> Repair harness.

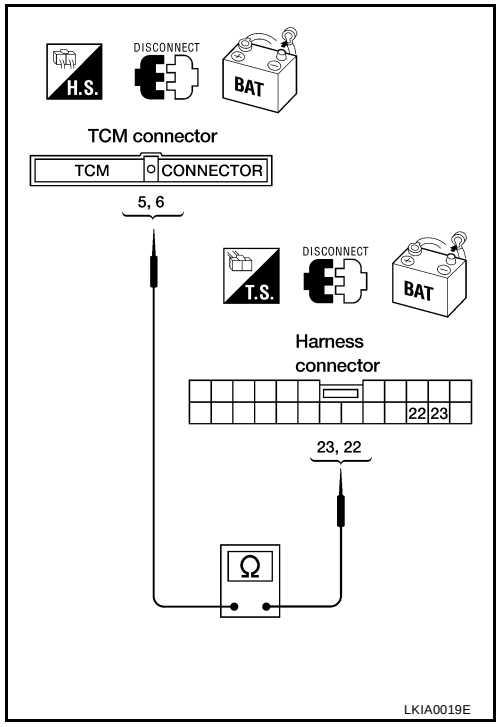

3. CHECK HARNESS FOR OPEN CIRCUIT

1. Disconnect combination meter connector.
2. Check continuity between harness connector M71 terminals 23 (L), 22 (Y) and combination meter harness connector M24 terminals 1 (L), 2 (Y).

23 (L) – 1 (L) : Continuity should exist.
22 (Y) – 2 (Y) : Continuity should exist.

OK or NG

OK >> Reconnect all connectors to perform "SELF-DIAG RESULTS" and "DATA MONITOR" for "ENGINE", "A/T" and "BCM". Refer to EC-106 (QR25DE engine models), EC-730 (VQ35DE engine models) for "ENGINE" and AT-40 for "A/T". Refer to BCS-14 for "BCM".

NG >> Repair harness.

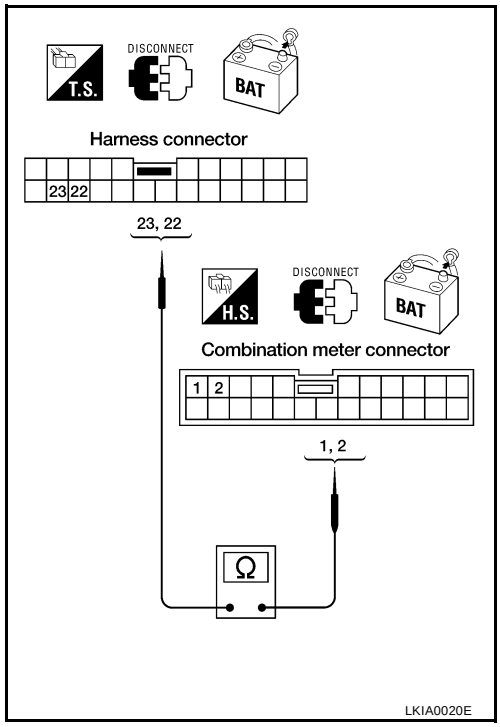

Circuit Check Between Combination Meter and BCM

EKS00403

1. CHECK CONNECTOR

1. Turn ignition switch OFF.
2. Disconnect the negative battery terminal.
3. Check following terminals and connector for damage, bent or loose connection (meter-side, control module-side and harness-side).

- Combination meter.
- BCM.

OK or NG

OK >> GO TO 2.
NG >> Repair terminal or connector.

2. CHECK HARNESS FOR OPEN CIRCUIT

1. Disconnect combination meter connector and BCM connector.
2. Check continuity between combination meter harness connector M24 terminals 1 (L), 2 (Y) and BCM harness connector M18 terminals 70 (L), 71 (Y).

1 (L) – 70 (L) : Continuity should exist.

2 (Y) – 71 (Y) : Continuity should exist.

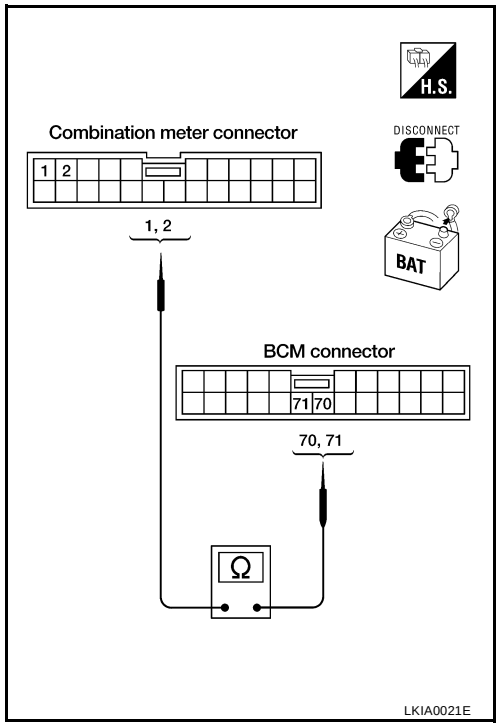

OK or NG

OK >> Reconnect all connectors to perform "SELF-DIAG RESULTS" and "DATA MONITOR" for "ENGINE", "A/T" and "BCM". Refer to EC-106 (QR25DE engine models), EC-730 (VQ35DE engine models) for "ENGINE" and AT-40 for "A/T". Refer to BCS-14 for "BCM".

NG >> Repair harness.

ECM Circuit Check

EKS00404

1. CHECK CONNECTOR

1. Turn ignition switch OFF.
2. Disconnect the negative battery terminal.
3. Check the terminals and connector of ECM for damage, bent or loose connection. (control module-side and harness-side)

OK or NG

OK >> GO TO 2.

NG >> Repair terminal or connector.

2. CHECK HARNESS FOR OPEN CIRCUIT

1. Disconnect ECM connector.
2. Check the following.

- Resistance between ECM harness connector F54 terminals 33 (L) and 34 (Y) (QR25DE models).
- Resistance between ECM harness connector F54 terminals 109 (L) and 113 (Y) (VQ35DE models).

33 (L) – 34 (Y) (QR25DE models) : Approx. 108 – 132Ω

109 (L) – 113 (Y) (VQ35DE models) : Approx. 108 – 132Ω

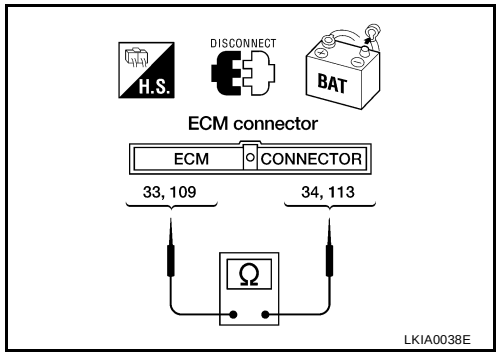

OK or NG

OK >> Replace ECM.

NG >> Repair harness between harness connector F59 and ECM.

TCM Circuit Check

EKS00405

1. CHECK CONNECTOR

1. Turn ignition switch OFF.
2. Disconnect the negative battery terminal.
3. Check the terminals and connector of TCM for damage, bent or loose connection (control module-side and harness-side).

OK or NG

OK >> GO TO 2.
NG >> Repair terminal or connector.

2. CHECK HARNESS FOR OPEN CIRCUIT

1. Disconnect TCM connector.
2. Check resistance between TCM harness connector F56 terminals 5 (L) and 6 (Y).

5 (L) – 6 (Y) : Approx. 54 – 66Ω

OK or NG

OK >> Replace TCM.
NG >> Repair harness between harness connector F59 and TCM.

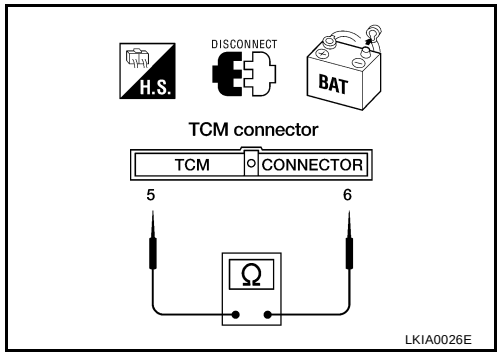

Combination Meter Circuit Check

EKS00406

1. CHECK CONNECTOR

1. Turn ignition switch OFF.
2. Disconnect the negative battery terminal.
3. Check terminals and connector of combination meter for damage, bent or loose connection (meter-side and harness-side).

OK or NG

OK >> GO TO 2.
NG >> Repair terminal or connector.

2. CHECK HARNESS FOR OPEN CIRCUIT

1. Disconnect combination meter connector.
2. Check resistance between combination meter harness connector M24 terminals 1 (L) and 2 (Y).

1 (L) – 2 (Y) : Approx. 54 – 66Ω

OK or NG

OK >> Replace combination meter. Refer to DI-21, "Removal and Installation" .
NG >> Repair harness between harness connector M71 and combination meter.

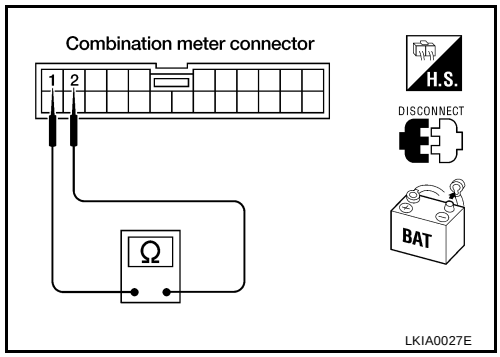

BCM Circuit Check

EKS00407

1. CHECK CONNECTOR

1. Turn ignition switch OFF.
2. Disconnect the negative battery terminal.
3. Check the terminals and connector of BCM for damage, bent or loose connection (control module-side and harness-side).

OK or NG

OK >> GO TO 2.
NG >> Repair terminal or connector.

2. CHECK HARNESS FOR OPEN CIRCUIT

1. Disconnect BCM connector.
2. Check resistance between BCM harness connector M18 terminals 70 (L) and 71 (Y).

70 (L) – 71 (Y) : Approx. 54 – 66Ω

OK or NG

OK >> Replace BCM.
NG >> Repair harness between harness connector M7 and BCM.

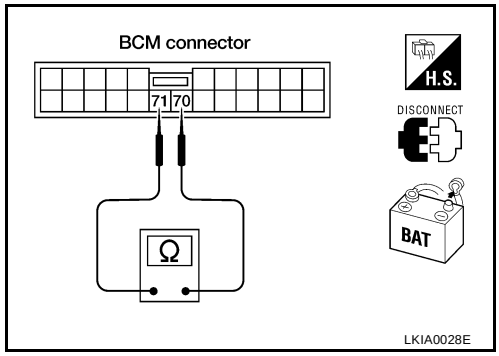

IPDM E/R Circuit Check

EKS00408

1. CHECK CONNECTOR

1. Turn ignition switch OFF.
2. Disconnect the negative battery terminal.
3. Check the terminals and connector of IPDM E/R for damage, bent or loose connection (control module-side and harness-side).

OK or NG

OK >> GO TO 2.
NG >> Repair terminal or connector.

2. CHECK HARNESS FOR OPEN CIRCUIT

1. Disconnect IPDM E/R connector.
2. Check resistance between IPDM E/R harness connector E121 terminals 48 (L) and 49 (Y).

48 (L) – 49 (Y) : Approx. 108 – 132Ω

OK or NG

OK >> Replace IPDM E/R.
NG >> Repair harness between data link connector and IPDM E/R.

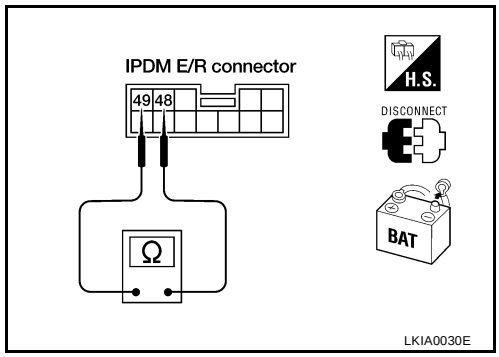

CAN Communication Circuit Check

EKS00409

1. CHECK CONNECTOR

1. Turn ignition switch OFF.
2. Disconnect the negative battery terminal.
3. Check following terminals and connector for damage, bent or loose connection (control module-side, meter-side and harness-side).

- ECM.
- TCM.
- Combination meter.
- BCM.
- IPDM E/R.
- Between ECM and IPDM E/R.

OK or NG

OK >> GO TO 2.
NG >> Repair terminal or connector.

2. CHECK HARNESS FOR SHORT CIRCUIT

1. Disconnect ECM connector, TCM connector and harness connector F59.
2. Check the following.

- Continuity between ECM harness connector F54 terminals 33 (L) and 34 (Y) (QR25DE models).
- Continuity between ECM harness connector F54 terminals 109 (L) and 113 (Y) (VQ35DE models).

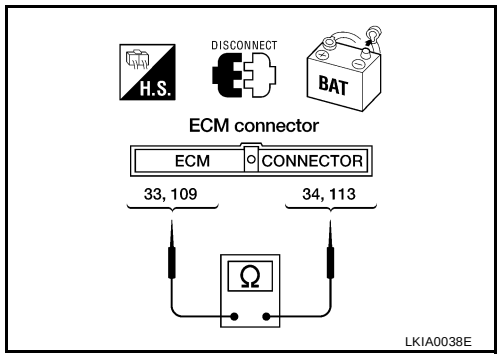

33 (L) – 34 (Y) (QR25DE models) **: Continuity should not exist.**

109 (L) – 113 (Y) (VQ35DE models) **: Continuity should not exist.**

OK or NG

OK >> GO TO 3.
NG >> ● Repair harness between ECM and harness connector F59.
● Repair harness between TCM and harness connector F59.

3. CHECK HARNESS FOR SHORT CIRCUIT

1. Check the following.

- Continuity between ECM harness connector F54 terminals 33 (L), 34 (Y) and ground. (QR25DE models)
- Continuity between ECM harness connector F54 terminals 109 (L), 113 (Y) and ground. (VQ35DE models)

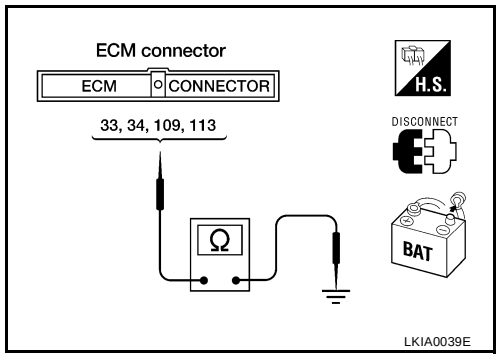

33 (L) – ground (QR25DE models)	**: Continuity should not exist.**
34 (Y) – ground (QR25DE models)	**: Continuity should not exist.**
109 (L) – ground (VQ35DE models)	**: Continuity should not exist.**
113 (Y) – ground (VQ35DE models)	**: Continuity should not exist.**

OK or NG

OK >> GO TO 4.

NG >>
- Repair harness between ECM and harness connector F59.
- Repair harness between TCM and harness connector F59.

4. CHECK HARNESS FOR SHORT CIRCUIT

1. Disconnect combination meter connector, BCM connector and harness connector M7.
2. Check continuity between data link connector M22 terminals 6 (L) and 3 (Y).

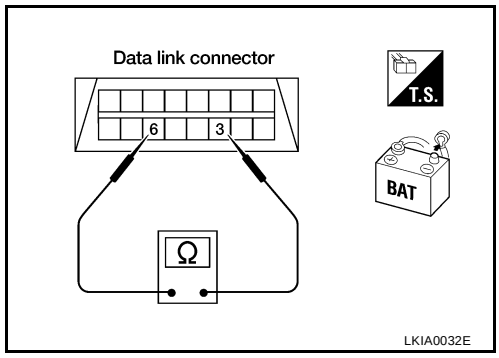

6 (L) – 3 (Y) **: Continuity should not exist.**

OK or NG

OK >> GO TO 5.

NG >>
- Repair harness between harness connector M71 and harness connector M7.
- Repair harness between harness connector M71 and combination meter.
- Repair harness between harness connector M71 and data link connector.
- Repair harness between harness connector M71 and BCM.

5. CHECK HARNESS FOR SHORT CIRCUIT

Check continuity between data link connector M22 terminals 6 (L), 3 (Y) and ground.

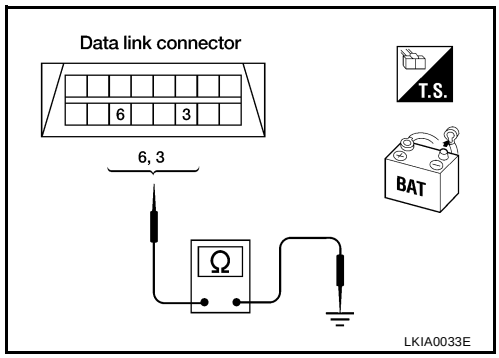

6 (L) – ground	**: Continuity should not exist.**
3 (Y) – ground	**: Continuity should not exist.**

OK or NG

OK >> GO TO 6.

NG >>
- Repair harness between harness connector M71 and harness connector M7.
- Repair harness between harness connector M71 and combination meter.
- Repair harness between harness connector M71 and data link connector.
- Repair harness between harness connector M71 and BCM.

6. CHECK HARNESS FOR SHORT CIRCUIT

1. Disconnect harness connector E27.
2. Check continuity between harness connector E28 terminals 10 (L) and 9 (Y).

10 (L) – 9 (Y) : Continuity should not exist.

OK or NG

OK >> GO TO 7.
NG >> Repair harness between harness connector E28 and harness connector E27.

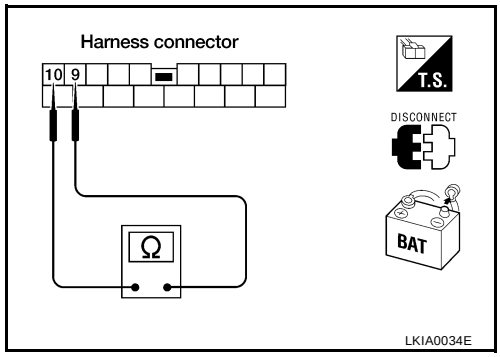

7. CHECK HARNESS FOR SHORT CIRCUIT

Check continuity between harness connector E28 terminals 10 (L), 9 (Y) and ground.

10 (L) – ground : Continuity should not exist.
9 (Y) – ground : Continuity should not exist.

OK or NG

OK >> GO TO 8.
NG >> Repair harness between harness connector E28 and harness connector E27.

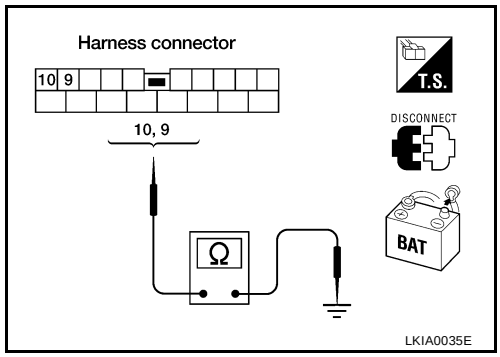

8. CHECK HARNESS FOR SHORT CIRCUIT

1. Disconnect IPDM E/R connector.
2. Check continuity between IPDM E/R harness connector E121 terminals 48 (L) and 49 (Y).

48 (L) – 49 (Y) : Continuity should not exist.

OK or NG

OK >> GO TO 9.
NG >> Repair harness between harness connector E130 and IPDM E/R .

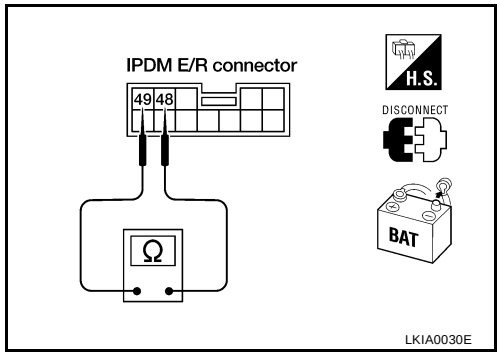

9. CHECK HARNESS FOR SHORT CIRCUIT

Check continuity between IPDM E/R harness connector E121 terminals 48 (L), 49 (Y) and ground.

48 (L) – ground : Continuity should not exist.
49 (Y) – ground : Continuity should not exist.

OK or NG

OK >> GO TO 10.
NG >> Repair harness between harness connector E130 and IPDM E/R.

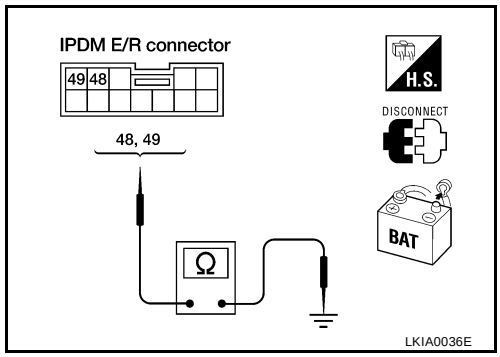

10. ECM/IPDM E/R INTERNAL CIRCUIT INSPECTION

Perform components inspection. Refer to LAN-42, "ECM/IPDM E/R INTERNAL CIRCUIT INSPECTION" .

OK or NG

OK >> Reconnect all connectors to perform “SELF-DIAG RESULTS” and “DATA MONITOR” for “ENGINE”, “A/T” and “BCM”. Refer to EC-106 (QR25DE engine models), EC-730 (VQ35DE engine models) for “ENGINE” and AT-40 for “A/T”. Refer to BCS-14 for “BCM”.

NG >> Replace ECM and/or IPDM E/R. Refer to PG-24, "Removal and Installation of IPDM E/R" .

IPDM E/R Ignition Relay Circuit Check

EKS0040A

Check the following. If no problem is found, replace the IPDM E/R. Refer to PG-24, "Removal and Installation of IPDM E/R" .

- IPDM E/R Power Circuit. Refer to PG-23, "IPDM E/R Power/Ground Circuit Inspection" .
- Ignition Power Supply Circuit. Refer to PG-10, "IGNITION POWER SUPPLY — IGNITION SW. IN ON" .

IPDM E/R Check

EKS0040B

1. CHECK IPDM E/R

1. Turn ignition switch ON and then OFF.
2. Check for illuminated parking lamps and tail lamps.

Parking lamps and tail lamps should not illuminate.

OK or NG

OK >> Replace the TCM.

NG >> Replace the IPDM E/R. Refer to PG-24, "Removal and Installation of IPDM E/R" .

Component Inspection

EKS0040C

ECM/IPDM E/R INTERNAL CIRCUIT INSPECTION

- Remove ECM and IPDM E/R from vehicle. Refer to PG-24, "Removal and Installation of IPDM E/R" .
- Check resistance between ECM terminals 33 and 34 (QR25DE models).
- Check resistance between ECM terminals 109 and 113 (VQ35DE models).
- Check resistance between IPDM E/R terminals 48 and 49.

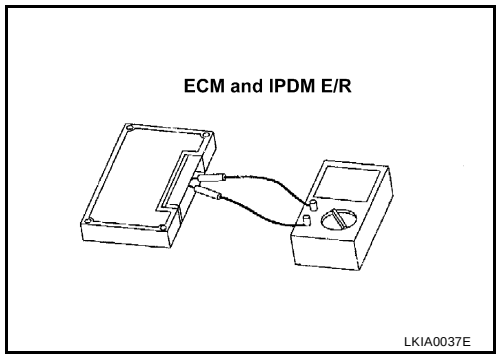

Unit	Terminal	Resistance value (Ω) (Approx.)
ECM (QR25DE models)	33 – 34	108 - 132
ECM (VQ35DE models)	109 – 113	
IPDM E/R	48 – 49	

CAN SYSTEM (FOR M/T MODELS)

PFP:23710

System Description

EKS0040D

CAN (Controller Area Network) is a serial communication line for real time application. It is an on-vehicle multiplex communication line with high data communication speed and excellent error detection ability. Many electronic control units are equipped onto a vehicle, and each control unit shares information and links with other control units during operation (not independent). In CAN communication, control units are connected with 2 communication lines (CAN H line, CAN L line) allowing a high rate of information transmission with less wiring. Each control unit transmits/receives data but selectively reads required data only.

Component Parts and Harness Connector Location

EKS0040E

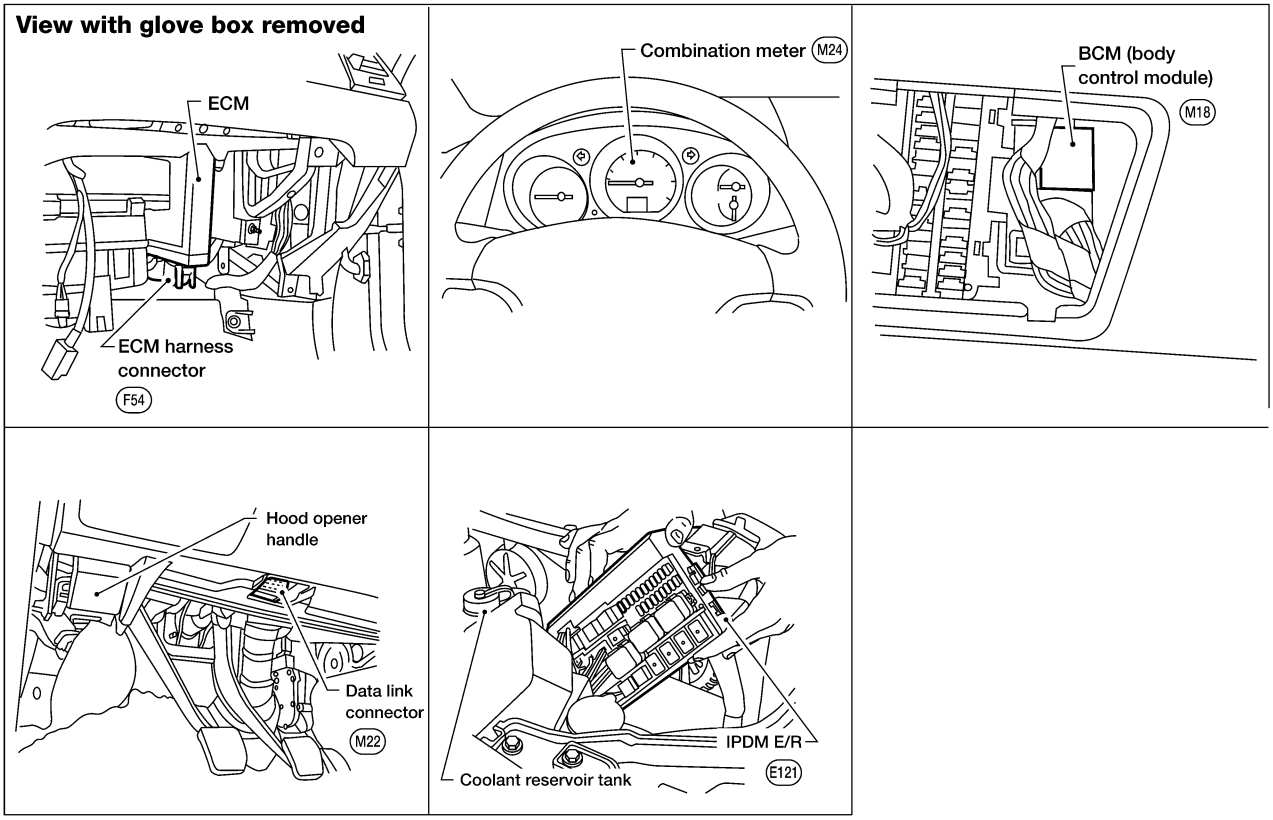

WKIA0388E

Wiring Diagram — CAN —

EKS0040F

LAN-CAN-05

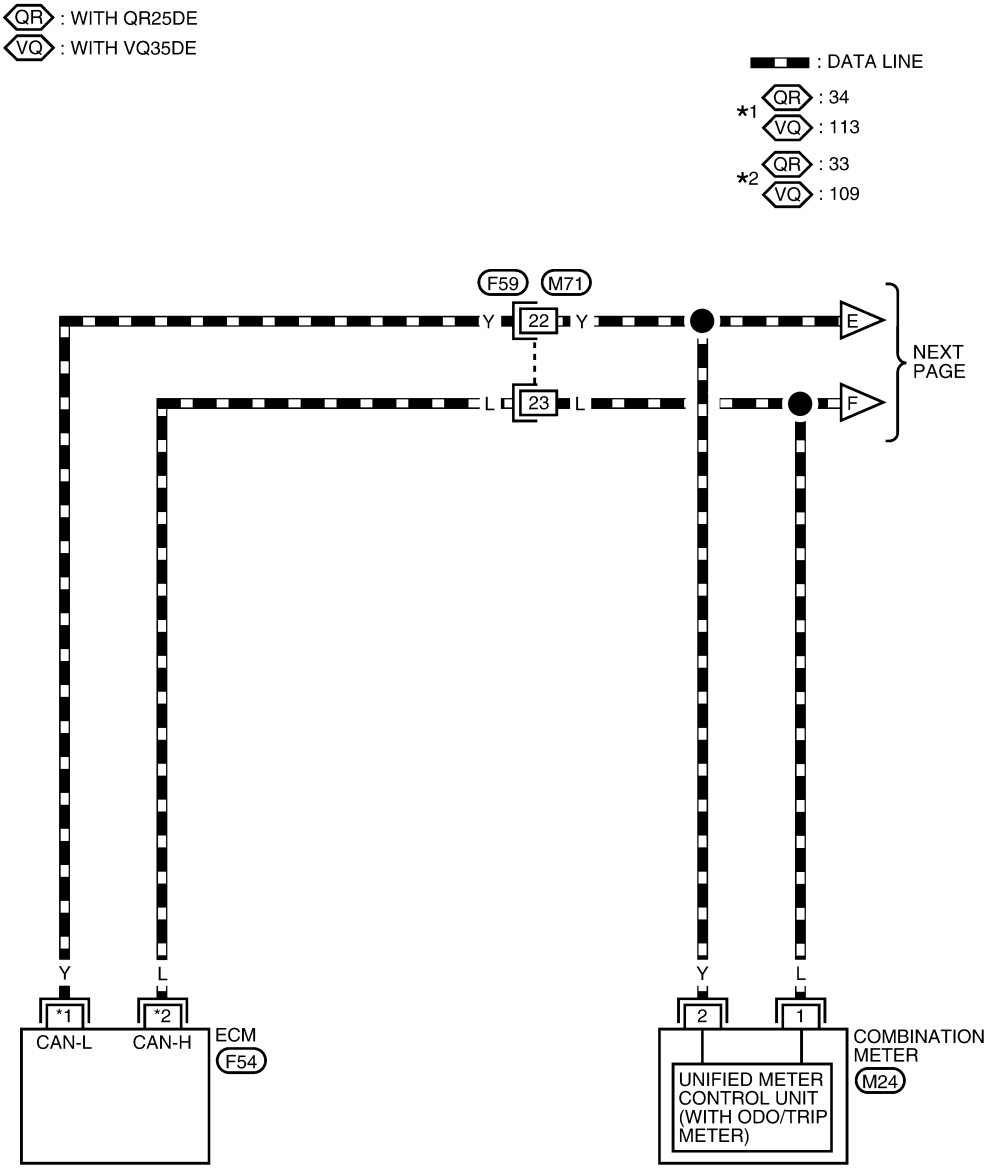

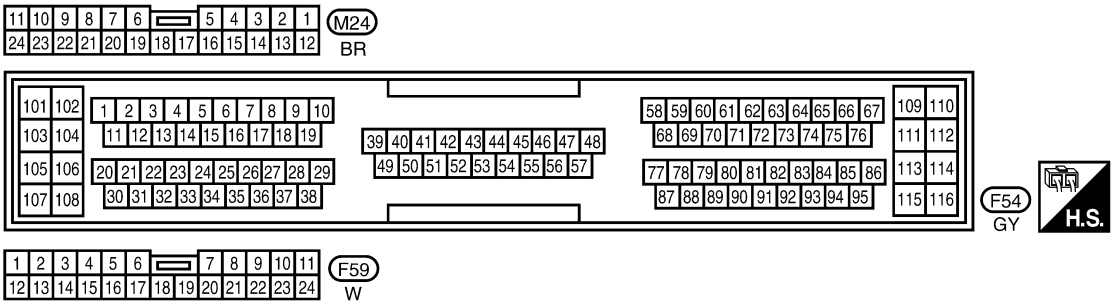

LKWA0068E

LAN-CAN-06

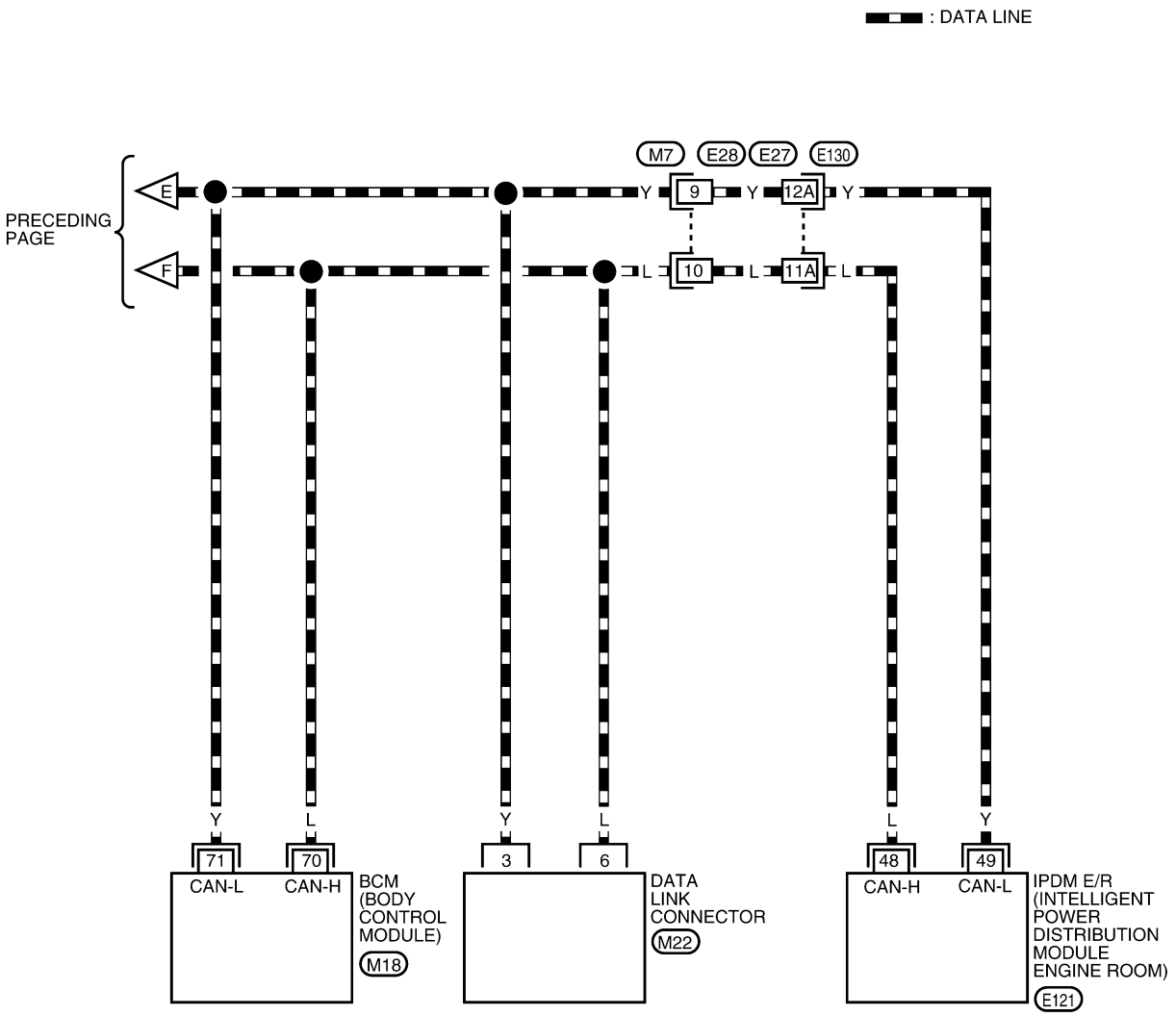

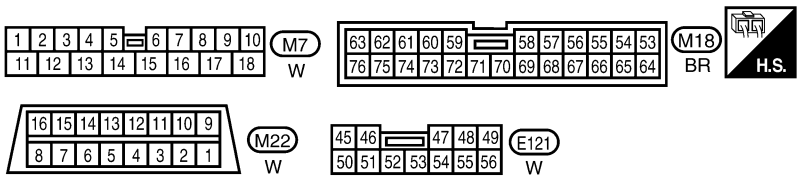

REFER TO THE FOLLOWING.
E130 - SUPER MULTIPLE JUNCTION (SMJ)

LKWA0069E

Work Flow

EKS0040G

1. Print all the data of “SELF-DIAG RESULTS” and “DATA MONITOR” for “ENGINE” and “BCM” displayed on CONSULT-II. Refer to EC-106 (QR25DE engine models), EC-730 (VQ35DE engine models) for “ENGINE” and BCS-14 for “BCM”.
2. Attach the printed sheet of “SELF-DIAG RESULTS” and “DATA MONITOR” onto the check sheet. Refer to LAN-47, "CHECK SHEET" .
3. Based on the data monitor results, put check marks onto the items with “UNKWN” or “NG” in the check sheet table. Refer to LAN-47, "CHECK SHEET" .

   NOTE:
   If “NG” is displayed on “CAN COMM” for the diagnosed control unit, replace the control unit.
4. According to the check sheet results (example), start inspection. Refer to LAN-48, "CHECK SHEET RESULTS (EXAMPLE)" .

CHECK SHEET

Check sheet table

ENGINE	CAN COMM	CAN CIRC 1	–	CAN CIRC 4	CAN CIRC 6	CAN CIRC 7
BCM	CAN COMM	CAN CIRC 1	CAN CIRC 2	CAN CIRC 4	–	CAN CIRC 3

Symptoms:

Attach copy of
ENGINE SELF-DIAG
RESULTS

Attach copy of
BCM SELF-DIAG
RESULTS

Attach copy of
ENGINE DATA MONITOR

Attach copy of
BCM DATA MONITOR

LKIA0047E

CHECK SHEET RESULTS (EXAMPLE)

Case 1: Replace ECM

ENGINE	CAN COMM ✓	CAN CIRC 1	–	CAN CIRC 4	CAN CIRC 6	CAN CIRC 7
BCM	CAN COMM	CAN CIRC 1	CAN CIRC 2	CAN CIRC 4	–	CAN CIRC 3

ENGINE	CAN COMM	CAN CIRC 1	–	CAN CIRC 4 ✓	CAN CIRC 6 ✓	CAN CIRC 7 ✓
BCM	CAN COMM	CAN CIRC 1	CAN CIRC 2	CAN CIRC 4	–	CAN CIRC 3

Case 2: Replace BCM

ENGINE	CAN COMM	CAN CIRC 1	–	CAN CIRC 4	CAN CIRC 6	CAN CIRC 7
BCM	CAN COMM ✓	CAN CIRC 1	CAN CIRC 2	CAN CIRC 4	–	CAN CIRC 3

ENGINE	CAN COMM	CAN CIRC 1	–	CAN CIRC 4	CAN CIRC 6	CAN CIRC 7
BCM	CAN COMM	CAN CIRC 1	CAN CIRC 2 ✓	CAN CIRC 4 ✓	–	CAN CIRC 3 ✓

Case 3

ENGINE	CAN COMM	CAN CIRC 1	–	CAN CIRC 4	CAN CIRC 6 ✓	CAN CIRC 7 ✓
BCM	CAN COMM	CAN CIRC 1	CAN CIRC 2 ✓	CAN CIRC 4 ✓	–	CAN CIRC 3

Case 4

ENGINE	CAN COMM	CAN CIRC 1 ✓	–	CAN CIRC 4 ✓	CAN CIRC 6 ✓	CAN CIRC 7 ✓
BCM	CAN COMM	CAN CIRC 1	CAN CIRC 2 ✓	CAN CIRC 4	–	CAN CIRC 3

Case 5

ENGINE	CAN COMM	CAN CIRC 1	–	CAN CIRC 4 ✓	CAN CIRC 6	CAN CIRC 7
BCM	CAN COMM	CAN CIRC 1	CAN CIRC 2	CAN CIRC 4 ✓	–	CAN CIRC 3

Case 6

ENGINE	CAN COMM	CAN CIRC 1	–	CAN CIRC 4	CAN CIRC 6 ✓	CAN CIRC 7
BCM	CAN COMM	CAN CIRC 1 ✓	CAN CIRC 2 ✓	CAN CIRC 4 ✓	–	CAN CIRC 3 ✓

Case 7

ENGINE	CAN COMM	CAN CIRC 1	–	CAN CIRC 4	CAN CIRC 6	CAN CIRC 7 ✓
BCM	CAN COMM	CAN CIRC 1	CAN CIRC 2	CAN CIRC 4	–	CAN CIRC 3 ✓

Case 8

ENGINE	CAN COMM	CAN CIRC 1 ✓	–	CAN CIRC 4 ✓	CAN CIRC 6 ✓	CAN CIRC 7 ✓
BCM	CAN COMM	CAN CIRC 1 ✓	CAN CIRC 2 ✓	CAN CIRC 4 ✓	–	CAN CIRC 3 ✓

LKIA0048E

NOTE:
If “NG” is displayed on “CAN COMM” for the diagnosed control unit, replace the control unit.

INSPECTION

Proceed trouble diagnosis according to the check sheet results (example).
Case 1: Replace ECM.
Case 2: Replace BCM.

Case 3: Check harness between combination meter and BCM. Refer to LAN-49, "Circuit Check Between Combination Meter and BCM" .
Case 4: Check ECM circuit. Refer to LAN-50, "ECM Circuit Check" .
Case 5: Check combination meter circuit. Refer to LAN-50, "Combination Meter Circuit Check"
Case 6: Check BCM circuit. Refer to LAN-51, "BCM Circuit Check" .
Case 7: Check IPDM E/R circuit. Refer to LAN-51, "IPDM E/R Circuit Check" .
Case 8: Check CAN communication circuit. Refer to LAN-52, "CAN Communication Circuit Check" .

Circuit Check Between Combination Meter and BCM

EKS0040H

1. CHECK CONNECTOR

1. Turn ignition switch OFF.
2. Disconnect the negative battery terminal.
3. Check following terminals and connector for damage, bent or loose connection (meter-side, control module-side and harness-side).

- Combination meter.
- BCM.

OK or NG

OK >> GO TO 2.
NG >> Repair terminal or connector.

2. CHECK HARNESS FOR OPEN CIRCUIT

1. Disconnect combination meter connector and BCM connector.
2. Check continuity between combination meter harness connector M24 terminals 1 (L), 2 (Y) and BCM harness connector M18 terminals 70 (L), 71 (Y).

1 (L) – 70 (L) : Continuity should exist.
2 (Y) – 71 (Y) : Continuity should exist.

OK or NG

OK >> Reconnect all connectors to perform “SELF-DIAG RESULTS” and “DATA MONITOR” for “ENGINE” and “BCM”. Refer to EC-106 (QR25DE engine models), EC-730 (VQ35DE engine models) for “ENGINE” and BCS-14 for “BCM”.
NG >> Repair harness.

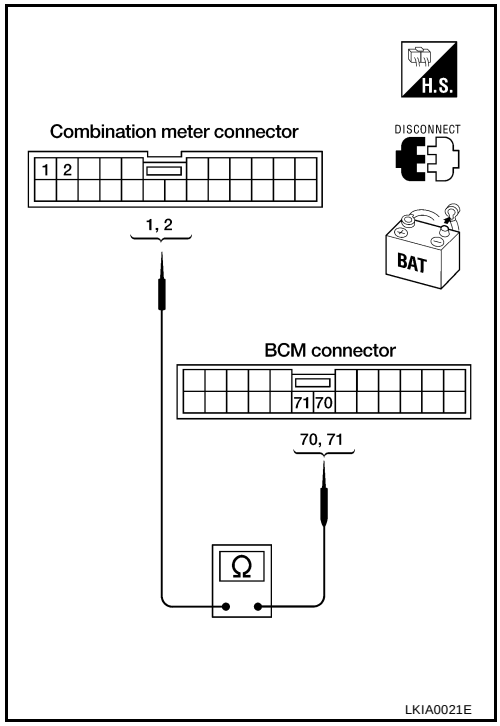

ECM Circuit Check

EKS0040I

1. CHECK CONNECTOR

1. Turn ignition switch OFF.
2. Disconnect the negative battery terminal.
3. Check following terminals and connector for damage, bent or loose connection (control module-side and harness-side).

- ECM.
- Harness connector F59.
- Harness connector M71.

OK or NG

OK >> GO TO 2.
NG >> Repair terminal or connector.

2. CHECK HARNESS FOR OPEN CIRCUIT

1. Disconnect ECM connector.
2. Check the following.

- Resistance between ECM harness connector F54 terminals 33 (L) and 34 (Y) (QR25DE models).
- Resistance between ECM harness connector F54 terminals 109 (L) and 113 (Y) (VQ35DE models).

33 (L) – 34 (Y) (QR25DE models)	**: Approx. 108 – 132Ω**
109 (L) – 113 (Y) (VQ35DE models)	**: Approx. 108 – 132Ω**

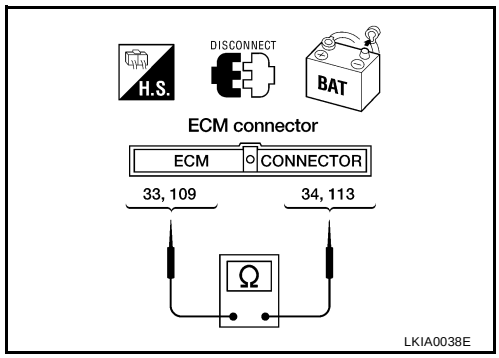

OK or NG

OK >> Replace ECM.
NG >> Repair harness between harness connector M7 and ECM.

Combination Meter Circuit Check

EKS0040J

1. CHECK CONNECTOR

1. Turn ignition switch OFF.
2. Disconnect the negative battery terminal.
3. Check terminals and connector of combination meter for damage, bent or loose connection (meter-side and harness-side).

OK or NG

OK >> GO TO 2.
NG >> Repair terminal or connector.

2. CHECK HARNESS FOR OPEN CIRCUIT

1. Disconnect combination meter connector.
2. Check resistance between combination meter harness connector M24 terminals 1 (L) and 2 (Y).

1 (L) – 2 (Y)	**: Approx. 54 – 66Ω**

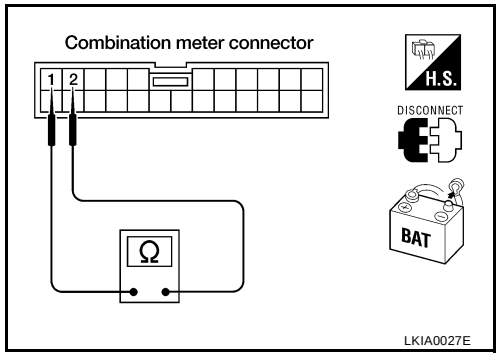

OK or NG

OK >> Replace combination meter. Refer to DI-21, "Removal and Installation" .
NG >> Repair harness between harness connector M71 and combination meter.

BCM Circuit Check

EKS0040K

1. CHECK CONNECTOR

1. Turn ignition switch OFF.
2. Disconnect the negative battery terminal.
3. Check the terminals and connector of BCM for damage, bent or loose connection (control module-side and harness-side).

OK or NG

OK >> GO TO 2.
NG >> Repair terminal or connector.

2. CHECK HARNESS FOR OPEN CIRCUIT

1. Disconnect BCM connector.
2. Check resistance between BCM harness connector M18 terminals 70 (L) and 71 (Y).

70 (L) – 71 (Y) : Approx. 54 – 66Ω

OK or NG

OK >> Replace BCM.
NG >> Repair harness between harness connector M7 and BCM.

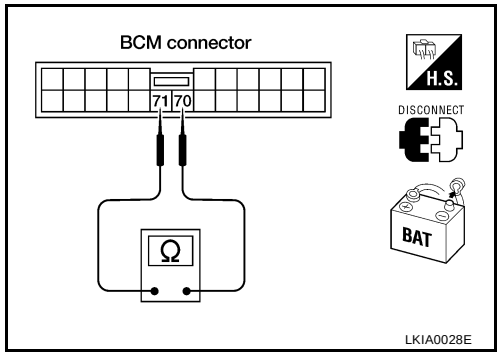

IPDM E/R Circuit Check

EKS0040L

1. CHECK CONNECTOR

1. Turn ignition switch OFF.
2. Disconnect the negative battery terminal.
3. Check following terminals and connector for damage, bend and loose connection (control module-side and harness-side).

- IPDM E/R.
- Harness connector E130.
- Harness connector E27.
- Harness connector E28.
- Harness connector M7.

OK or NG

OK >> GO TO 2.
NG >> Repair terminal or connector.

2. CHECK HARNESS FOR OPEN CIRCUIT

1. Disconnect IPDM E/R connector.
2. Check resistance between IPDM E/R harness connector E121 terminals 48 (L) and 49 (Y).

48 (L) – 49 (Y) : Approx. 108 – 132Ω

OK or NG

OK >> Replace IPDM E/R. Refer to PG-24, "Removal and Installation of IPDM E/R" .
NG >> Repair harness between data link connector and IPDM E/R.

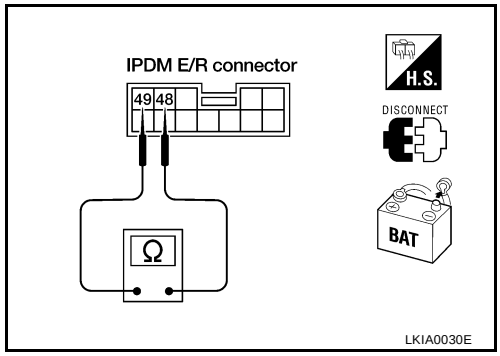

CAN Communication Circuit Check

EKS0040M

1. CHECK CONNECTOR

1. Turn ignition switch OFF.
2. Disconnect the negative battery terminal.
3. Check following terminals and connector for damage, bent or loose connection (control module-side, meter-side and harness-side).

- ECM.
- Combination meter.
- BCM.
- IPDM E/R.
- Between ECM and IPDM E/R.

OK or NG

OK >> GO TO 2.
NG >> Repair terminal or connector.

2. CHECK HARNESS FOR SHORT CIRCUIT

1. Disconnect ECM connector and harness connector F59.
2. Check the following.

- Continuity between ECM harness connector F54 terminals 33 (L) and 34 (Y) (QR25DE models)
- Continuity between ECM harness connector F54 terminals 109 (L) and 113 (Y) (VQ35DE models).

33 (L) – 34 (Y) (QR25DE models) : Continuity should not exist.

109 (L) – 113 (Y) (VQ35DE models) : Continuity should not exist.

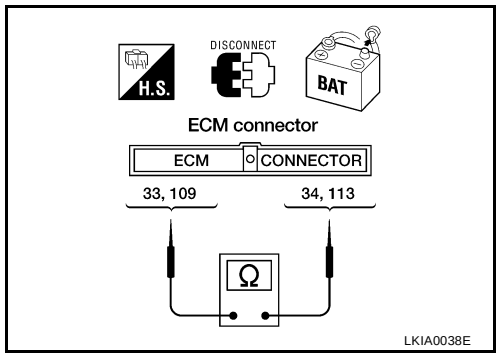

OK or NG

OK >> GO TO 3.
NG >> Repair harness between ECM and harness connector F59.

3. CHECK HARNESS FOR SHORT CIRCUIT

1. Check the following.

- Continuity between ECM harness connector F54 terminals 33 (L), 34 (Y) and ground (QR25DE models).
- Continuity between ECM harness connector F54 terminals 109 (L), 113 (Y) and ground (VQ35DE models).

33 (L) – ground (QR25DE models) : Continuity should not exist.

34 (Y) – ground (QR25DE models) : Continuity should not exist.

109 (L) – ground (VQ35DE models) : Continuity should not exist.

113 (Y) – ground (VQ35DE models) : Continuity should not exist.

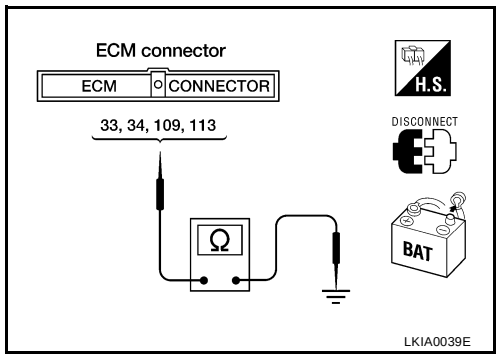

OK or NG

OK >> GO TO 4.
NG >> Repair harness between ECM and harness connector F59.

4. CHECK HARNESS FOR SHORT CIRCUIT

1. Disconnect combination meter connector, BCM connector and harness connector M7.
2. Check continuity between data link connector M22 terminals 6 (L) and 3 (Y).

6 (L) – 3 (Y) : Continuity should not exist.

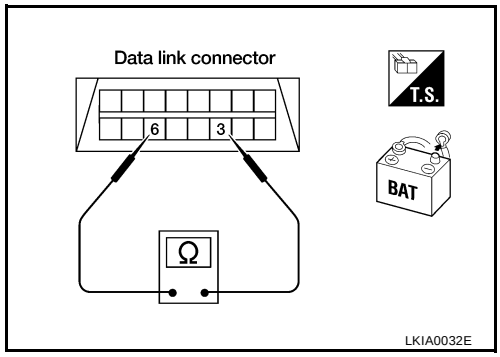

OK or NG

OK >> GO TO 5.

NG >>
- Repair harness between harness connector M71 and harness connector M7.
- Repair harness between harness connector M71 and combination meter.
- Repair harness between harness connector M71 and data link connector.
- Repair harness between harness connector M71 and BCM.

5. CHECK HARNESS FOR SHORT CIRCUIT

Check continuity between data link connector M22 terminals 6 (L), 3 (Y) and ground.

6 (L) – ground : Continuity should not exist.

3 (Y) – ground : Continuity should not exist.

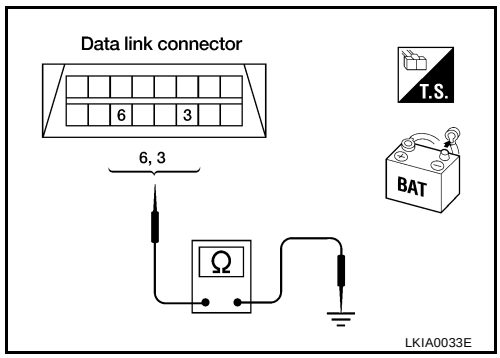

OK or NG

OK >> GO TO 6.

NG >>
- Repair harness between harness connector M71 and harness connector M7.
- Repair harness between harness connector M71 and combination meter.
- Repair harness between harness connector M71 and data link connector.
- Repair harness between harness connector M71 and BCM.

6. CHECK HARNESS FOR SHORT CIRCUIT

1. Disconnect harness connector E27.
2. Check continuity between harness connector E28 terminals 10 (L) and 9 (Y).

10 (L) – 9 (Y) : Continuity should not exist.

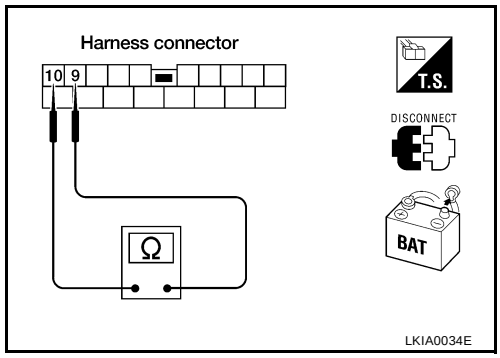

OK or NG

OK >> GO TO 7.

NG >> Repair harness between harness connector E28 and harness connector E27.

7. CHECK HARNESS FOR SHORT CIRCUIT

Check continuity between harness connector E28 terminals 10 (L), 9 (Y) and ground.

10 (L) – ground : Continuity should not exist.

9 (Y) – ground : Continuity should not exist.

OK or NG

OK >> GO TO 8.

NG >> Repair harness between harness connector E28 and harness connector E27.

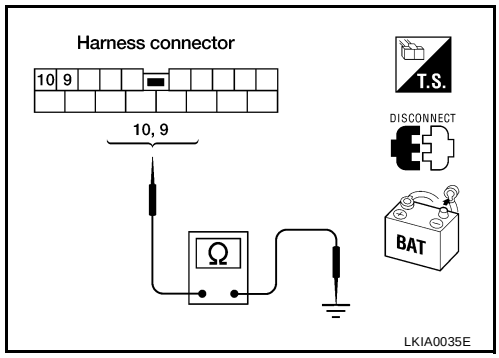

8. CHECK HARNESS FOR SHORT CIRCUIT

1. Disconnect IPDM E/R connector.
2. Check continuity between IPDM E/R harness connector E121 terminals 48 (L) and 49 (Y).

48 (L) – 49 (Y) : Continuity should not exist.

OK or NG

OK >> GO TO 9.

NG >> Repair harness between harness connector E130 and IPDM E/R.

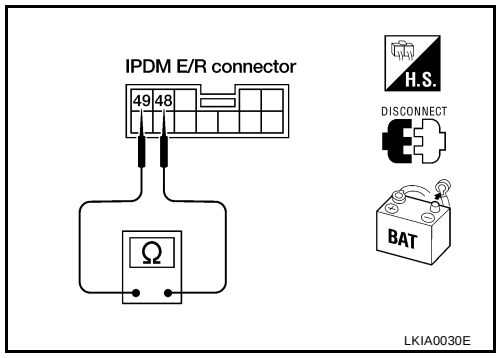

9. CHECK HARNESS FOR SHORT CIRCUIT

Check continuity between IPDM E/R harness connector E121 terminals 48 (L), 49 (Y) and ground.

48 (L) – ground : Continuity should not exist.

49 (Y) – ground : Continuity should not exist.

OK or NG

OK >> GO TO 10.

NG >> Repair harness between harness connector E130 and IPDM E/R.

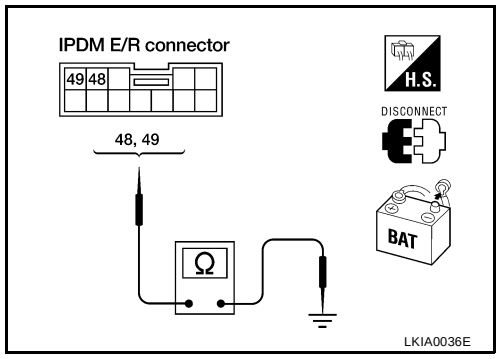

10. ECM/IPDM E/R INTERNAL CIRCUIT INSPECTION

Perform components inspection. Refer to LAN-55, "ECM/IPDM E/R INTERNAL CIRCUIT INSPECTION" .

OK or NG

OK >> Reconnect all connectors to perform “SELF-DIAG RESULTS” and “DATA MONITOR” for “ENGINE” and “BCM”. Refer to EC-106 (QR25DE engine models), EC-730 (VQ35DE engine models) for “ENGINE” and BCS-14 for “BCM”.

NG >> Replace ECM and/or IPDM E/R. Refer to PG-24, "Removal and Installation of IPDM E/R" .

Component Inspection

EKS0040N

ECM/IPDM E/R INTERNAL CIRCUIT INSPECTION

- Remove ECM and IPDM E/R from vehicle. Refer to PG-24, "Removal and Installation of IPDM E/R" .
- Check resistance between ECM terminals 33 and 34 (QR25DE models).
- Check resistance between ECM terminals 109 and 113 (VQ35DE models).
- Check resistance between IPDM E/R terminals 48 and 49.

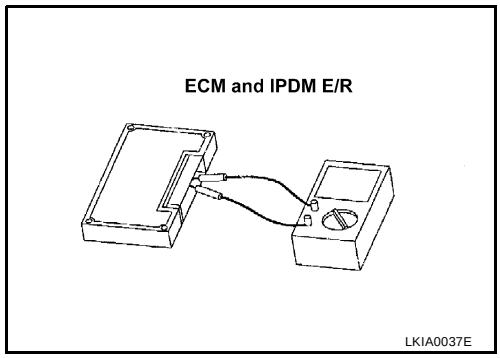

Unit	Terminal	Resistance value (Ω) (Approx.)
ECM (QR25DE models)	33 – 34	108 - 132
ECM (VQ35DE models)	109 – 113	
IPDM E/R	48 – 49	

SECTION LT
LIGHTING SYSTEM

CONTENTS

PRECAUTIONS 4
Precautions for Supplemental Restraint System (SRS) “AIR BAG” and “SEAT BELT PRE-TENSIONER” 4
General precautions for service operations 4
Wiring Diagrams and Trouble Diagnosis 4
HEADLAMP (FOR USA) 5
Component Parts and Harness Connector Location 5
System Description 5
OUTLINE 5
BATTERY SAVER CONTROL 6
AUTO LIGHT OPERATION 6
VEHICLE SECURITY SYSTEM 6
XENON HEADLAMP (IF EQUIPPED) 6
CAN Communication System Description 7
FOR TCS MODELS 7
FOR A/T MODELS 8
FOR M/T MODELS 10
Wiring Diagram — H/LAMP — 12
HALOGEN 12
XENON 14
Terminals and Reference Value for BCM 16
CONSULT-II Function 16
CONSULT-II BASIC OPERATION 16
DATA MONITOR 17
ACTIVE TEST 18
Headlamp HI Does Not Illuminate (Both Sides) 18
Headlamp HI Does Not Illuminate (One Side) 20
High-Beam Indicator Lamp Does Not Illuminate 20
Headlamp LO Does Not Illuminate (Both Sides) 20
Headlamp LO Does Not Illuminate (One Side) 21
Headlamps Do Not Turn OFF 22
One Xenon Headlamp Does Not Illuminate At Full Brightness 23
One Xenon Headlamp Flickers 23
Aiming Adjustment 23
LOW BEAM AND HIGH BEAM 24
Bulb Replacement 24
HEADLAMP (OUTER SIDE), FOR LOW BEAM (XENON) 24
HEADLAMP (OUTER SIDE), FOR LOW BEAM (HALOGEN) 24
HEADLAMP (INNER SIDE), FOR HIGH BEAM 25
FRONT TURN SIGNAL LAMP 25
Removal and Installation 25
REMOVAL 25
INSTALLATION 25
Disassembly and Assembly 26
DISASSEMBLY 26
ASSEMBLY 27
HEADLAMP (FOR CANADA) - DAYTIME LIGHT SYSTEM - 28
Component Parts and Harness Connector Location 28
System Description 28
HEADLAMP OPERATION 29
BATTERY SAVER CONTROL 30
AUTO LIGHT OPERATION 30
DAYTIME LIGHT OPERATION 30
XENON HEADLAMP (IF EQUIPPED) 30
OPERATION 30
CAN Communication System Description 31
FOR TCS MODELS 31
FOR A/T MODELS 32
FOR M/T MODELS 34
Schematic 36
HALOGEN 36
XENON 37
Wiring Diagram — DTRL — 38
HALOGEN 38
XENON 41
Terminals and Reference Value for Daytime Light Control Unit 44
Aiming Adjustment 45
Bulb Replacement 45
Removal and Installation 45
Disassembly and Assembly 45
AUTO LIGHT SYSTEM 46
Component Parts and Harness Connector Location 46
System Description 46
OUTLINE 46

BATTERY SAVER CONTROL 47
SHUT OFF DELAY 47
CAN Communication System Description 47
FOR TCS MODELS 47
FOR A/T MODELS 48
FOR M/T MODELS 50
Major Components and Functions 51
Schematic 52
HALOGEN (WITH DAYTIME LIGHT SYSTEM)... 52
XENON (WITH DAYTIME LIGHT SYSTEM) 53
Wiring Diagram — AUTO/L — 54
HALOGEN (USA) 54
XENON (USA) 56
HALOGEN (CANADA) 58
XENON (CANADA) 61
Terminals and Reference Value for BCM 64
How to Proceed With Trouble Diagnosis 64
Inspection Before Diagnosis 64
SETTING CHANGE FUNCTIONS 64
BCM POWER/GROUND CIRCUIT INSPECTION 64
CONSULT-II Function 65
CONSULT-II BASIC OPERATION 65
WORK SUPPORT 66
DATA MONITOR 67
ACTIVE TEST 68
Trouble Diagnosis Chart by Symptom 68
Light Switch Inspection 68
Auto Light Sensor System Inspection 69
FRONT FOG LAMP 71
System Description 71
OUTLINE 71
BATTERY SAVER CONTROL 71
CAN Communication System Description 71
FOR TCS MODELS 72
FOR A/T MODELS 73
FOR M/T MODELS 74
Wiring Diagram — F/FOG — 76
Front Fog Lamps Do Not Illuminate (Both Sides)... 77
Front Fog Lamp Does Not Illuminate (One Side) ... 78
Aiming Adjustment 78
Removal and Installation 79
TURN SIGNAL AND HAZARD WARNING LAMPS... 80
System Description 80
TURN SIGNAL OPERATION 80
HAZARD LAMP OPERATION 80
REMOTE KEYLESS ENTRY SYSTEM OPERATION 81
CAN Communication System Description 81
FOR TCS MODELS 82
FOR A/T MODELS 83
FOR M/T MODELS 84
Schematic 86
Wiring Diagram — TURN — 87
Terminals and Reference Value for BCM 90
CONSULT-II Function 90
CONSULT-II BASIC OPERATION 91
DATA MONITOR 91
ACTIVE TEST 92
Turn Signal Lamp Does Not Operate 92
Hazard Lamp Does Not Operate 93
Turn Signal Indicator Lamp Does Not Operate 95
Bulb Replacement 95
FRONT TURN SIGNAL LAMP 95
REAR TURN SIGNAL LAMP 95
Removal and Installation 95
FRONT TURN SIGNAL LAMP 95
REAR TURN SIGNAL LAMP 95
LIGHTING AND TURN SIGNAL SWITCH 96
Removal and Installation 96
Switch Circuit Inspection 96
HAZARD SWITCH 97
Removal and Installation 97
COMBINATION SWITCH 98
Combination Switch Reading Function 98
CONSULT-II Function 98
CONSULT-II BASIC OPERATION 98
DATA MONITOR 98
Removal and Installation 99
Switch Circuit Inspection 99
STOP LAMP 100
Wiring Diagram — STOP/L — 100
Bulb Replacement for High-mounted Stop Lamp . 102
WITH REAR SPOILER 102
WITHOUT REAR SPOILER 102
Bulb Replacement for Rear Combination Lamp .. 102
Removal and Installation for High-mounted Stop Lamp 102
WITH REAR SPOILER 102
WITHOUT SPOILER 102
Removal and Installation for Rear Combination Lamp 102
STEP LAMP 103
System Description 103
Wiring Diagram — STEP/L — 104
Terminals and Reference Value for BCM 105
Step Lamp Does Not Operate 105
Bulb Replacement 106
Removal and Installation 106
BACK-UP LAMP 107
Wiring Diagram — BACK/L — 107
Bulb Replacement 108
Removal and Installation 108
PARKING, LICENSE PLATE AND TAIL LAMPS ... 109
System Description 109
OPERATION BY LIGHTING SWITCH 109
BATTERY SAVER CONTROL 110
CAN Communication System Description 110
FOR TCS MODELS 110
FOR A/T MODELS 111
FOR M/T MODELS 113
Schematic 115
Wiring Diagram — TAIL/L — 116
Parking, License Plate and Tail Lamps Do Not Illuminate 119
Parking, License Plate and Tail Lamps Do Not Turn OFF (After Approx. 10 Minutes) 121
Bulb Replacement 121

LICENSE PLATE LAMP 121
FRONT TURN SIGNAL (PARKING) LAMP 121
TAIL LAMP 121
Removal and Installation 122
LICENSE PLATE LAMP 122
FRONT TURN SIGNAL (PARKING) LAMP 122
REAR COMBINATION LAMP 122
INTERIOR ROOM LAMP 123
System Description 123
INTERIOR LAMP TIMER OPERATION 123
BATTERY SAVER 123
Component Parts and Harness Connector Location 124
Wiring Diagram — ROOM/L — 125
Terminals and Reference Value for BCM 126
CONSULT-II Function 126
CONSULT-II BASIC OPERATION 126
WORK SUPPORT 127
DATA MONITOR 127
ACTIVE TEST 128
Interior Lamp Control Does Not Operate 128
Bulb Replacement 129
MAP LAMP AND CONSOLE LAMP 129
PERSONAL LAMP 129
Removal and Installation 130
ROOM LAMP 130
IGNITION KEY HOLE ILLUMINATION LAMP . 130
ILLUMINATION 131
System Description 131
ILLUMINATION OPERATION BY LIGHTING SWITCH 131
BATTERY SAVER CONTROL 132
CAN Communication System Description 132
FOR TCS MODELS 133
FOR A/T MODELS 134
FOR M/T MODELS 135
Schematic 137
Wiring Diagram — ILL — 138
Removal and Installation 142
ILLUMINATION CONTROL SWITCH 142
GLOVE BOX LAMP 142
VANITY MIRROR AND TRUNK ROOM LAMPS ... 143
Wiring Diagram — INT/L — 143
Bulb Replacement for Vanity Mirror Lamp 145
Bulb Replacement, Removal and Installation for Trunk Room Lamp 145
BULB SPECIFICATIONS 146
Headlamp 146
Exterior Lamp 146
Interior Lamp/Illumination 146

PRECAUTIONS

PFP:00011

Precautions for Supplemental Restraint System (SRS) “AIR BAG” and “SEAT BELT PRE-TENSIONER”

EKS0040O

The Supplemental Restraint System such as “AIR BAG” and “SEAT BELT PRE-TENSIONER”, used along with a front seat belt, helps to reduce the risk or severity of injury to the driver and front passenger for certain types of collision. Information necessary to service the system safely is included in the SRS and SB section of this Service Manual.

WARNING:

- **To avoid rendering the SRS inoperative, which could increase the risk of personal injury or death in the event of a collision which would result in air bag inflation, all maintenance must be performed by an authorized NISSAN/INFINITI dealer.**
- **Improper maintenance, including incorrect removal and installation of the SRS, can lead to personal injury caused by unintentional activation of the system. For removal of Spiral Cable and Air Bag Module, see the SRS section.**
- **Do not use electrical test equipment on any circuit related to the SRS unless instructed to in this Service Manual. SRS wiring harnesses can be identified by yellow and/or orange harness connectors.**

General precautions for service operations

EKS0040P

- Never work with wet hands.
- The xenon headlamp system includes a high voltage generating part. Be sure to disconnect battery negative cable (negative terminal) or power fuse before removing, installing, or touching the xenon headlamp (including lamp bulb).
- Turn the lighting switch OFF before disconnecting and connecting the connector.
- When turning the xenon headlamp on and while it is illuminated, never touch the harness, bulb, and socket of the headlamp.
- When checking the headlamp on/off operation, check it on vehicle and with the power connected to the vehicle-side connector.

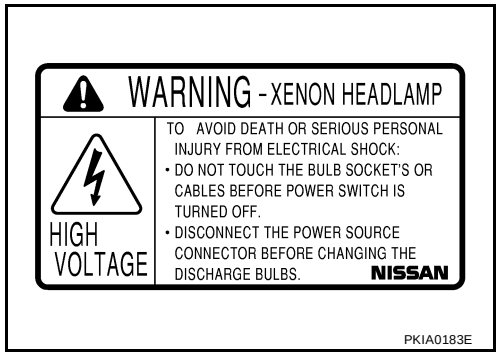

- Do not touch the headlamp bulb glass surface with bare hands or allow oil or grease to get on it. Do not touch the headlamp bulb just after the headlamp is turned off, because it is very hot.
- Install the xenon headlamp bulb socket correctly. If it is installed improperly, high-voltage leak or corona discharge may occur that can melt the bulb, connector, and housing. Do not illuminate the xenon headlamp bulb out of the headlamp housing. Doing so can cause fire and harm your eyes.
- When the bulb has burned out, wrap it in a thick vinyl bag and discard. Do not break the bulb.
- Leaving the bulb removed from the headlamp housing for a long period of time can deteriorate the performance of the lens and reflector (dirt, clouding). Always prepare a new bulb and have it on hand when replacing the bulb.

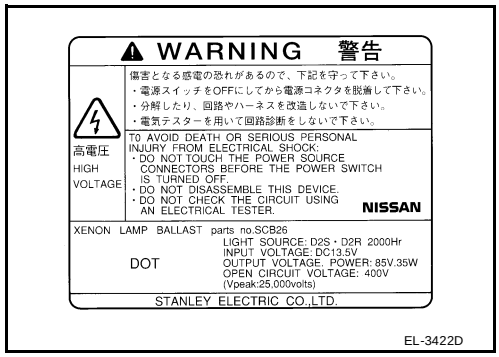

- When adjusting the headlamp aiming, turn the aiming adjustment screw only in the tightening direction. (If it is necessary to loosen the screw, first fully loosen the screw, and then turn it in the tightening direction.)
- Do not use organic solvent (paint thinner or gasoline) to clean lamps and to remove old sealant.

Wiring Diagrams and Trouble Diagnosis

EKS0040Q

When you read wiring diagrams, refer to the following:

- GI-12, "How to Read Wiring Diagrams"
- PG-3, "POWER SUPPLY ROUTING CIRCUIT"

When you perform trouble diagnosis, refer to the following:

- GI-10, "HOW TO FOLLOW TEST GROUPS IN TROUBLE DIAGNOSES"
- GI-25, "How to Perform Efficient Diagnosis for an Electrical Incident"

HEADLAMP (FOR USA)

PFP:26010

Component Parts and Harness Connector Location

EKS0040R

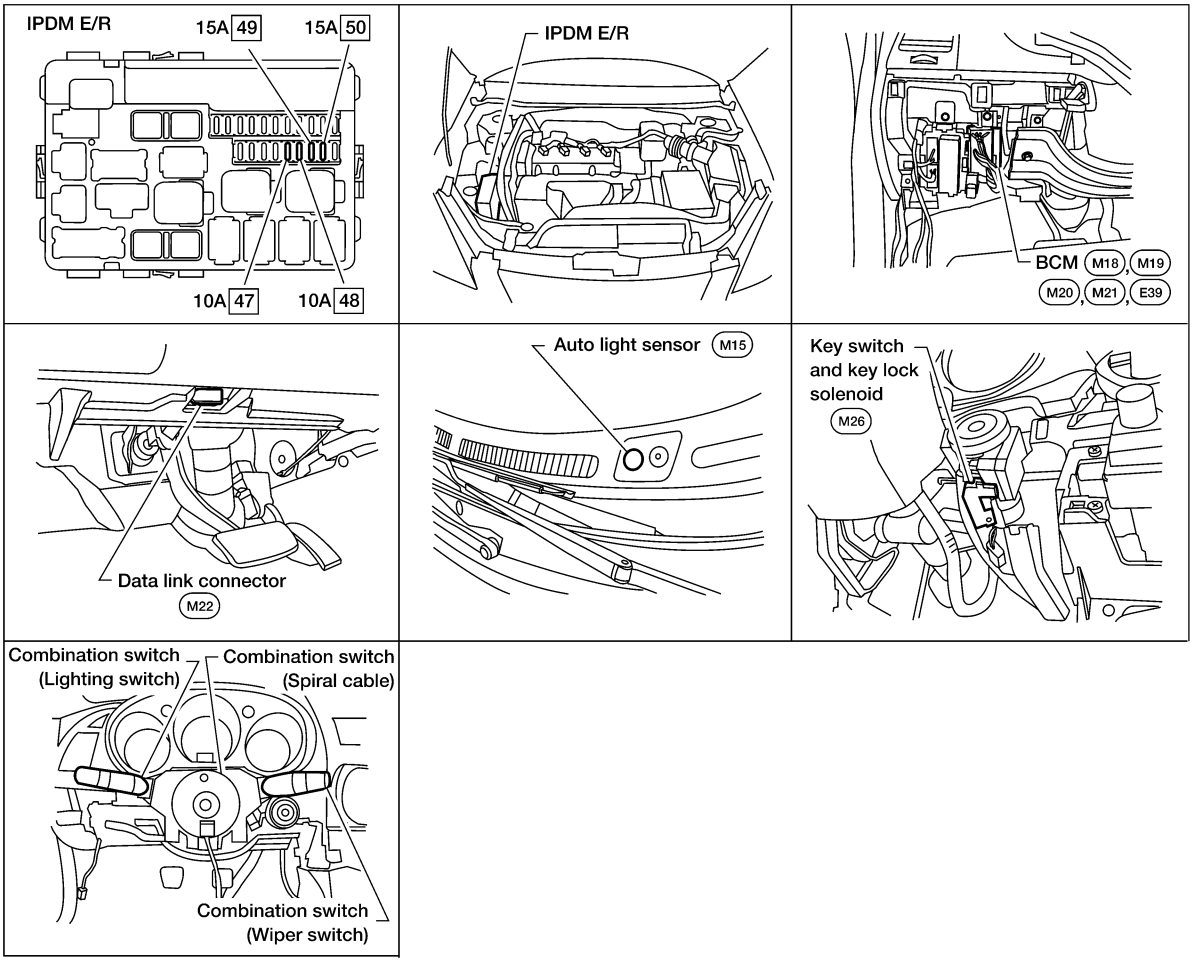

WKIA0054E

System Description

EKS0040S

Control of the headlamp system operation is dependent upon the position of the combination switch (lighting switch). When the lighting switch is placed in the 2ND position, the BCM receives input requesting the headlamps (and tail lamps) illuminate. This input is communicated to the IPDM E/R (intelligent power distribution module engine room) across the CAN communication lines. The central processing unit of the IPDM E/R controls the headlamp high and headlamp low relay coils. When energized, these relays direct power to the respective headlamps, which then illuminate.

OUTLINE

Power is supplied at all times

- to headlamp high relay, located in the IPDM E/R (intelligent power distribution module engine room), and
- to headlamp low relay, located in the IPDM E/R (intelligent power distribution module engine room), and
- to BCM (body control module) terminal 7
- through 50A fusible link [letter **f** , located in the fuse and fusible link box].

With the ignition switch in the ON or START position, power is supplied

- to BCM (body control module) terminal 35
- through 10A fuse [No. 12, located in the fuse block (J/B)].

With the ignition switch in the ACC or ON position, power is supplied

- to BCM (body control module) terminal 36
- through 10A fuse [No. 6, located in the fuse block (J/B)].

Ground is supplied

- to BCM (body control module) terminals 8, 27, and 63
- through body grounds M57, M61, E15, and E24.

Low Beam Operation

With the lighting switch in 2ND position, the BCM (body control module) receives input requesting the headlamps to illuminate. This input is communicated to the IPDM E/R (intelligent power distribution module engine room) across the CAN communication lines. The central processing unit of the IPDM E/R controls the headlamp low relay coil. When energized, this relay directs power

- to 15A fuse [No. 50, located in the IPDM E/R]
- through terminal 27 of the IPDM E/R
- to terminal 1 of headlamp RH, and
- to 15A fuse [No. 49, located in the IPDM E/R]
- through terminal 21 of the IPDM E/R
- to terminal 1 of headlamp LH.

Ground is supplied at all times

- to terminal 2 of headlamp RH
- through body grounds E15 and E24, and
- to terminal 2 of headlamp LH
- through body grounds E15 and E24.

With power and ground supplied, low beam headlamps illuminate.

High Beam Operation/Flash-to-Pass Operation

With the lighting switch in 2ND position and placed in HIGH or PASS position, the BCM (body control module) receives input requesting the headlamp high beams to illuminate. This input is communicated to the IPDM E/R (intelligent power distribution module engine room) across the CAN communication lines. The central processing unit of the IPDM E/R controls the headlamp high relay coil. When energized, this relay directs power

- to 10A fuse [No. 47, located in the IPDM]
- through terminal 24 of the IPDM
- to terminal 1 of headlamp RH, and
- to 10A fuse [No. 48, located in the IPDM]
- through terminal 22 of the IPDM
- to terminal 1 of headlamp LH.

Ground is supplied

- to terminal 2 of headlamp RH
- through body grounds E15 and E24, and
- to terminal 2 of headlamp LH
- through body grounds E15 and E24.

With power and ground supplied, the high beam headlamps and the HIGH BEAM indicator illuminate.

BATTERY SAVER CONTROL

When the combination switch (lighting switch) is in the 2ND position (ON), and the ignition switch is turned from ON or ACC to OFF, the battery saver control feature is activated.
Under this condition, the headlamps remain illuminated for 5 minutes, unless the combination switch (lighting switch) position is changed. If the combination switch (lighting switch) position is changed, then the headlamps are turned off.

AUTO LIGHT OPERATION

Refer to LT-46, "System Description" for auto light operation.

VEHICLE SECURITY SYSTEM

The vehicle security system will flash the high beams if the system is triggered. Refer to BL-87, "VEHICLE SECURITY (THEFT WARNING) SYSTEM" .

XENON HEADLAMP (IF EQUIPPED)

The low beam headlamps may be equipped with xenon type bulbs. Xenon bulbs do not use a filament. Instead, they produce light when a high voltage current is passed between two tungsten electrodes through a

mixture of xenon (an inert gas) and certain other metal halides. In addition to added lighting power, electronic control of the power supply gives the headlamps stable quality and tone color.
Following are some of the advantages of the xenon type headlamp.

- The light produced by the headlamps is a white color comparable to sunlight that is easy on the eyes.
- Light output is nearly double that of halogen headlamps, affording increased area of illumination.
- The light features a high relative spectral distribution at wavelengths to which the human eye is most sensitive. This means that even in the rain, more light is reflected back from the road surface toward the vehicle, for added visibility.
- Power consumption is approximately 25 percent less than halogen headlamps, reducing battery load.

CAN Communication System Description

EKS0040T

CAN (Controller Area Network) is a serial communication line for real time application. It is an on-vehicle multiplex communication line with high data communication speed and excellent error detection ability. Many electronic control units are equipped onto a vehicle, and each control unit shares information and links with other control units during operation (not independent). In CAN communication, control units are connected with 2 communication lines (CAN H line, CAN L line) allowing a high rate of information transmission with less wiring. Each control unit transmits/receives data but selectively reads required data only.

FOR TCS MODELS

System diagram

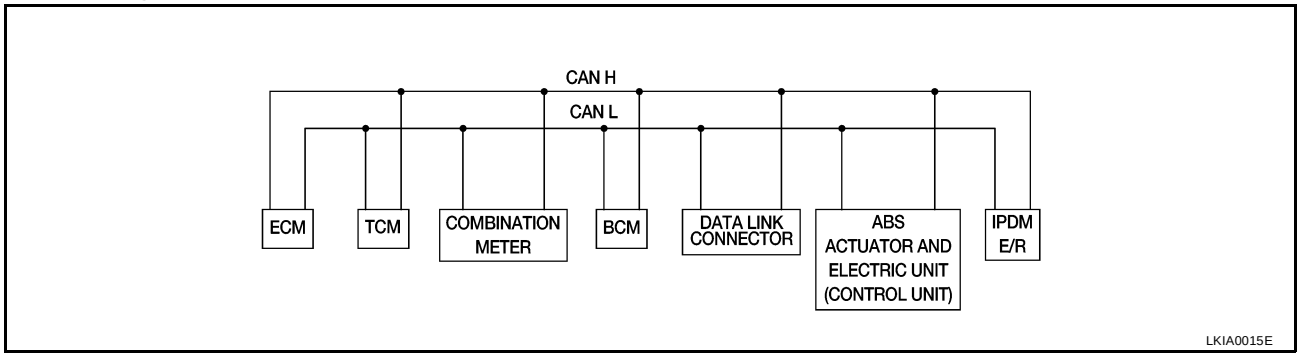

Input/output signal chart

T: Transmit R: Receive

Signals	ECM	TCM	COMBINATION METER	BCM	ABS/TCS control unit	IPDM E/R
Engine speed signal	T		R		R	
Engine coolant temperature signal	T		R			
Accelerator pedal position signal	T					
Fuel consumption monitor signal	T		R			
A/T warning lamp signal		T	R			
A/T position indicator signal	R	T	R	R(R range only)	R	
ABS operation signal	R				T	
TCS operation signal	R	R			T	
Air conditioner switch signal	R			T		
Air conditioner compressor signal	R					T
A/C compressor request signal	T					R
Cooling fan motor operation signal	R					T
Cooling fan speed request signal	T					R
Position lights request			R	T		R
Position lights status				R		T
Low beam request				T		R
Low beam status	R			R		T

Signals	ECM	TCM	COMBINA-TION METER	BCM	ABS/TCS control unit	IPDM E/R
High beam request			R	T		R
High beam status	R			R		T
Front fog lights request				T		R
Front fog light status				R		T
OD cancel switch signal		R	T			R
Brake switch signal		R	T			
Vehicle speed signal	R		T			
	R		T	R		
Oil pressure switch			R			T
Sleep request1			R	T		
Sleep request2				T		R
N range switch signal		R	T			
P range switch signal		R	T			
Seat belt buckle switch signal			T	R		
Door switch signal			R	T		R
Tail lamp request			R	T		R
Turn indicator signal			R	T		
Buzzer output signal			R	T		
Trunk switch signal			R	T		
ASCD main switch signal	T		R			
ASCD cruise signal	T		R			
Wiper operation				R		T
Wiper stop position signal				R		T
Rear window defogger switch signal				T		R
Rear window defogger control signal	R			R		T

FOR A/T MODELS

System diagram

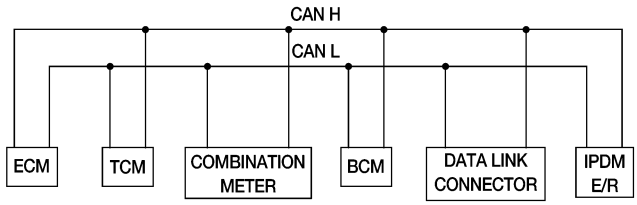

LKIA0017E

Input/output signal chart

T: Transmit R: Receive

Signals	ECM	TCM	COMBINATION METER	BCM	IPDM E/R
Engine speed signal	T		R		
Engine coolant temperature signal	T		R		
Accelerator pedal position signal	T				R

Signals	ECM	TCM	COMBINATION METER	BCM	IPDM E/R
Fuel consumption monitor signal	T		R		
A/T warning lamp signal		T	R		
A/T position indicator signal	R	T	R	R(R range only)	
Air conditioner switch signal	R			T	
Air conditioner compressor signal	R				T
A/C compressor request signal	T				R
Blower fan switch signal	R(QR25DE)			T	
Cooling fan motor operation signal	R			T	
Cooling fan speed request signal	T				R
Position lights request			R	T	R
Position lights status				R	T
Low beam request				T	R
Low beam status	R			R	T
High beam request			R	T	R
High beam status	R			R	T
Front fog lights request				T	R
Front fog light status				R	T
OD cancel switch signal		R	T		R
Brake switch signal		R	T		
Vehicle speed signal	R		T		
	R		T	R	
Oil pressure switch			R		T
Sleep request1			R	T	
Sleep request2				T	R
N range switch signal		R	T		
P range switch signal		R	T		
Seat belt buckle switch signal			T	R	
Door switch signal			R	T	R
Tail lamp request			R	T	R
Turn indicator signal			R	T	
Buzzer output signal			R	T	
Trunk switch signal			R	T	
ASCD main switch signal	T		R		
ASCD cruise signal	T		R		
Wiper operation				R	T
Wiper stop position signal				R	T
Rear window defogger switch signal				T	R
Rear window defogger control signal	R			R	T

FOR M/T MODELS

System diagram

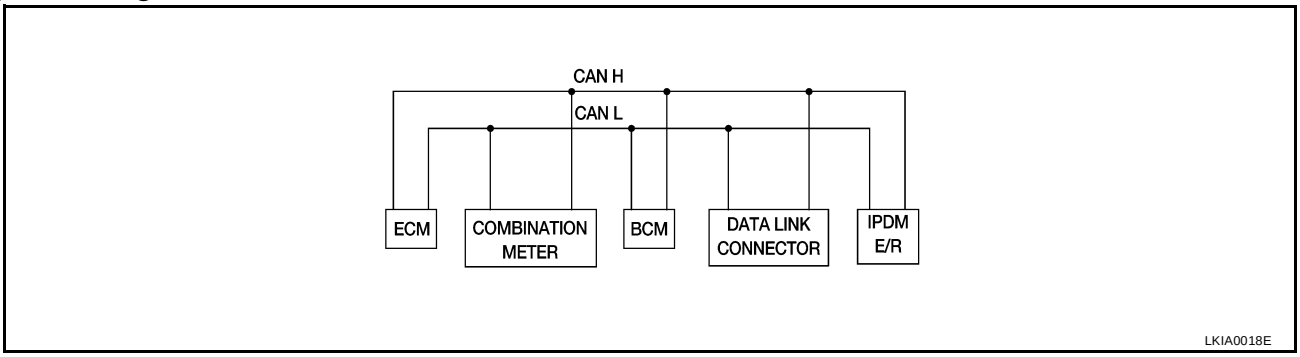

Input/output signal chart

T: Transmit R: Receive

Signals	ECM	COMBINATION METER	BCM	IPDM E/R
Engine speed signal	T			
Engine coolant temperature signal	T			
Fuel consumption monitor signal	T			
Air conditioner switch signal	R		T	
Air conditioner compressor signal	R			T
A/C compressor request signal	T			R
Blower fan switch signal	R(QR25DE)		T	
Cooling fan motor operation signal	R			T
Cooling fan speed request signal	T			R
Position lights request		R	T	R
Position lights status			R	T
Low beam request			T	R
Low beam status	R		R	T
High beam request		R	T	R
High beam status	R		R	T
Front fog lights request			T	R
Front fog light status			R	T
Vehicle speed signal	R	T		
Oil pressure switch		R		T
Sleep request1		R	T	
Sleep request2			T	R
Seat belt buckle switch signal		T	R	
Door switch signal		R	T	R
Tail lamp request		R	T	R
Turn indicator signal		R	T	
Buzzer output signal		R	T	
Trunk switch signal		R	T	
ASCD main switch signal	T	R		
ASCD cruise signal	T	R		
Wiper operation			R	T
Wiper stop position signal			R	T

Signals	ECM	COMBINATION METER	BCM	IPDM E/R
Rear window defogger switch signal			T	R
Rear window defogger control signal	R		R	T

Wiring Diagram — H/LAMP —
HALOGEN

EKS0040U

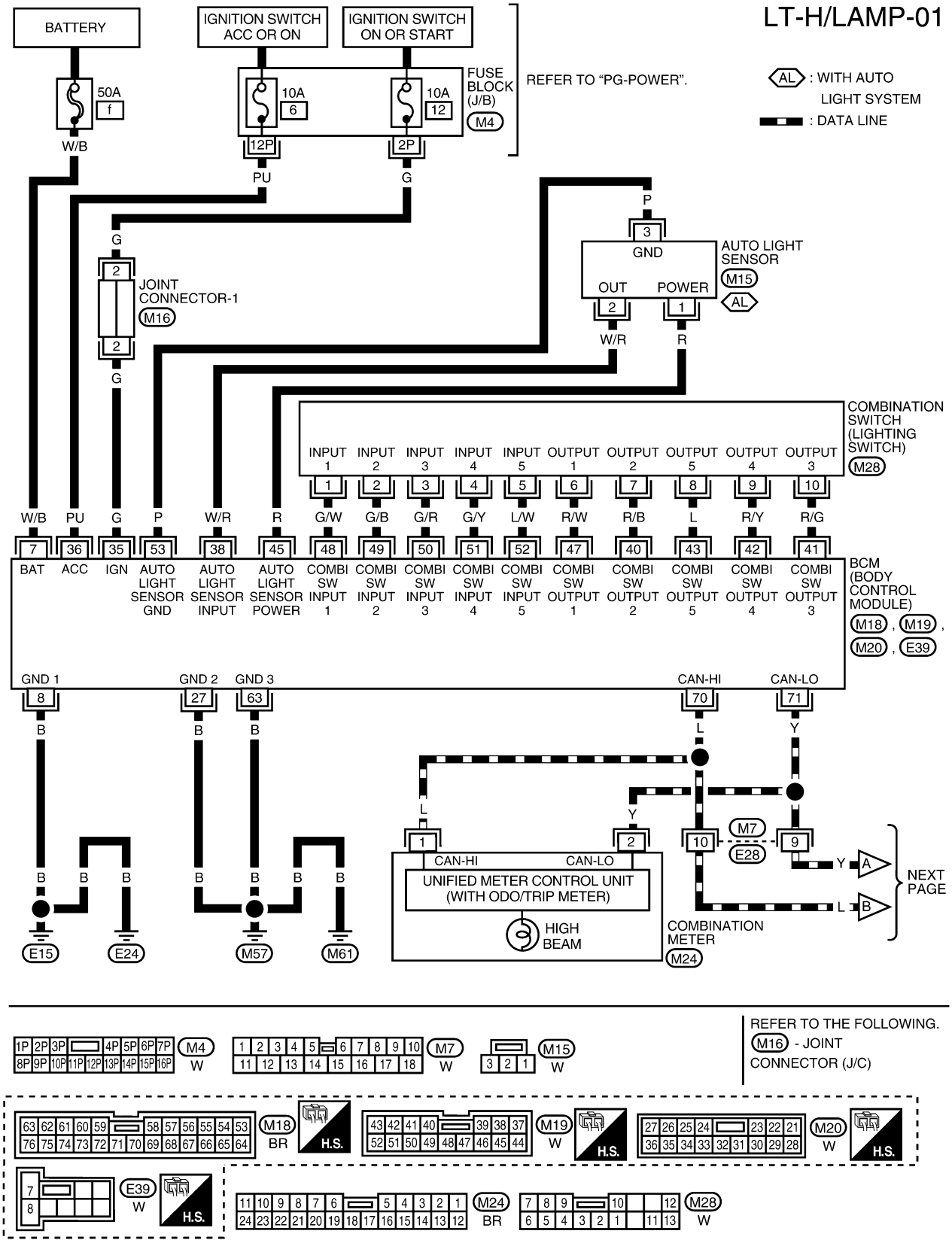

LT-H/LAMP-02

: DATA LINE

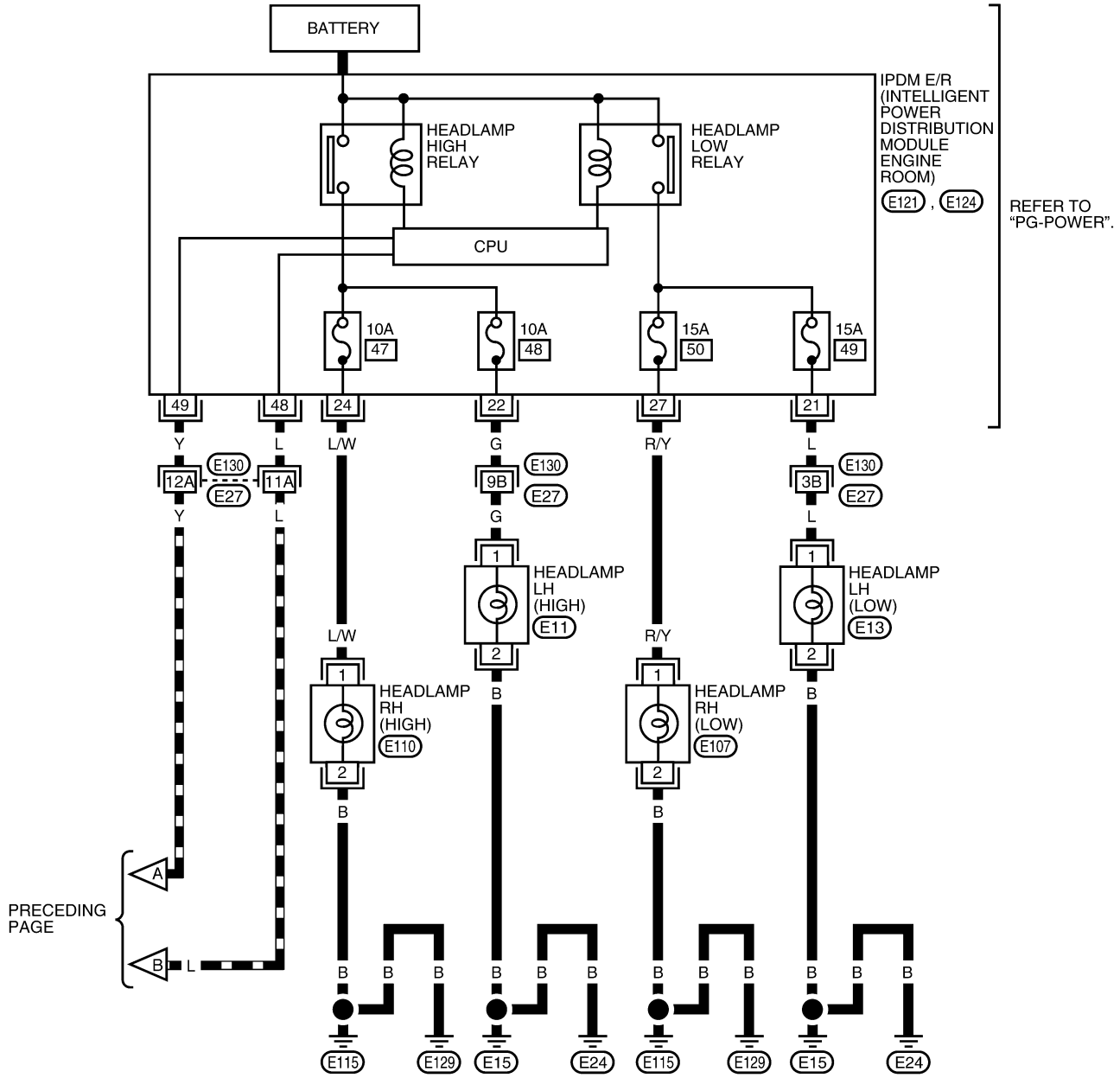

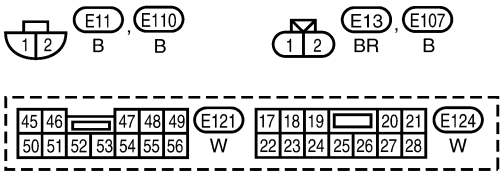

REFER TO THE FOLLOWING.
E130 - SUPER MULTIPLE JUNCTION (SMJ)

LKWA0020E

XENON

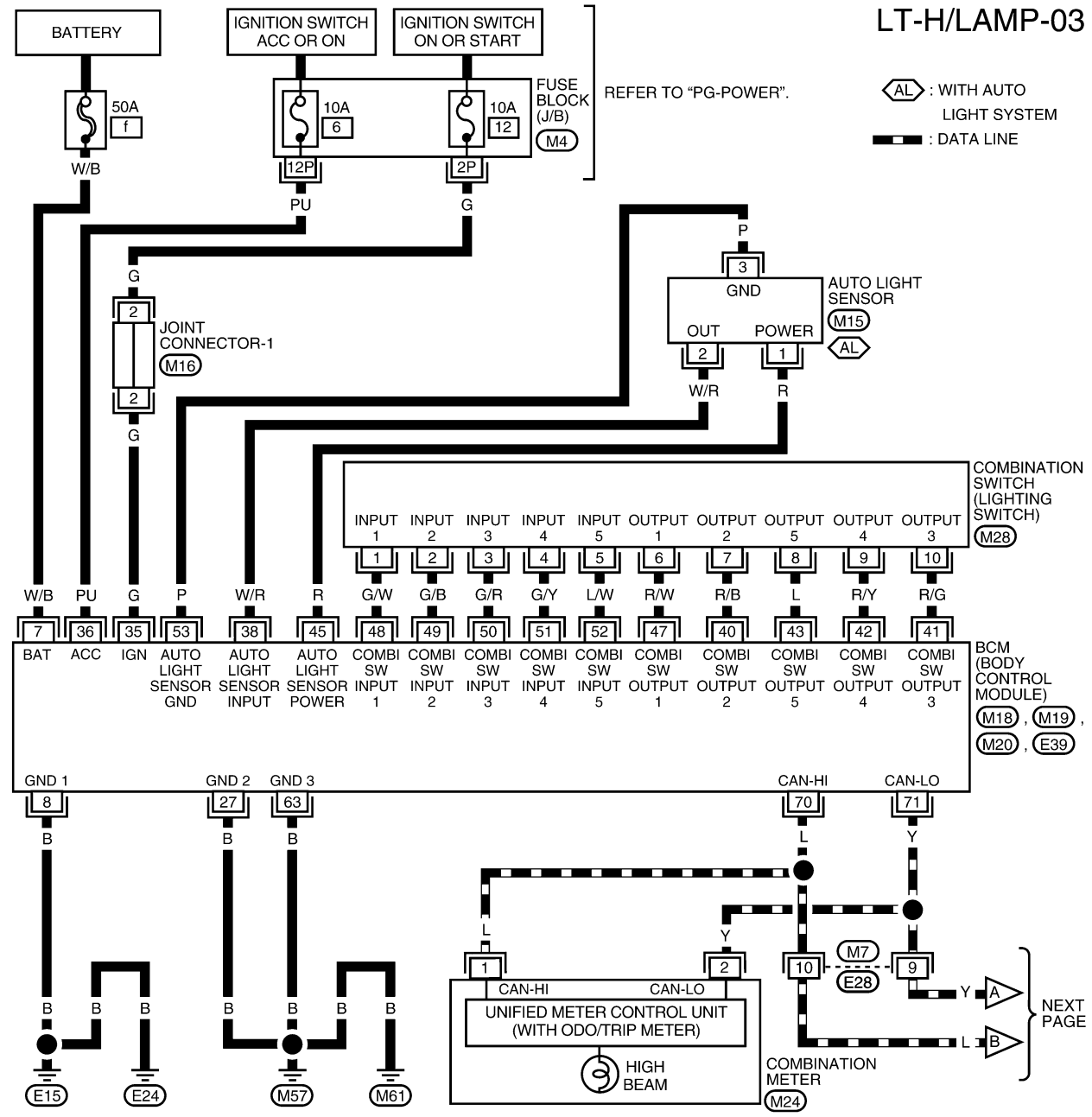
LT-H/LAMP-03
BATTERY
IGNITION SWITCH ACC OR ON
IGNITION SWITCH ON OR START
FUSE BLOCK (J/B)
M4
REFER TO "PG-POWER".
AL : WITH AUTO LIGHT SYSTEM
: DATA LINE
50A
f
W/B
10A
6
10A
12
12P
2P
PU
G
P
3
GND
AUTO LIGHT SENSOR
M15
OUT
POWER
2
1
AL
W/R
R
JOINT CONNECTOR-1
M16
COMBINATION SWITCH (LIGHTING SWITCH)
M28
INPUT 1
INPUT 2
INPUT 3
INPUT 4
INPUT 5
OUTPUT 1
OUTPUT 2
OUTPUT 5
OUTPUT 4
OUTPUT 3
W/B PU G P W/R R G/W G/B G/R G/Y L/W R/W R/B L R/Y R/G
7 36 35 53 38 45 48 49 50 51 52 47 40 43 42 41
BAT ACC IGN AUTO LIGHT SENSOR GND AUTO LIGHT SENSOR INPUT AUTO LIGHT SENSOR POWER COMBI SW INPUT 1 COMBI SW INPUT 2 COMBI SW INPUT 3 COMBI SW INPUT 4 COMBI SW INPUT 5 COMBI SW OUTPUT 1 COMBI SW OUTPUT 2 COMBI SW OUTPUT 5 COMBI SW OUTPUT 4 COMBI SW OUTPUT 3
BCM (BODY CONTROL MODULE)
M18 , M19 , M20 , E39
GND 1
GND 2
GND 3
CAN-HI
CAN-LO
8 27 63 70 71
B B B L Y
L Y
1 2 10 9
M7
E28
CAN-HI CAN-LO
UNIFIED METER CONTROL UNIT (WITH ODO/TRIP METER)
HIGH BEAM
COMBINATION METER
M24
NEXT PAGE
E15 E24 M57 M61
REFER TO THE FOLLOWING.
M16 - JOINT CONNECTOR (J/C)
M4 W
M7 W
M15 W
M18 BR
M19 W
M20 W
E39 W
M24 BR
M28 W
H.S.
LKWA0021E

LT-H/LAMP-04

: DATA LINE

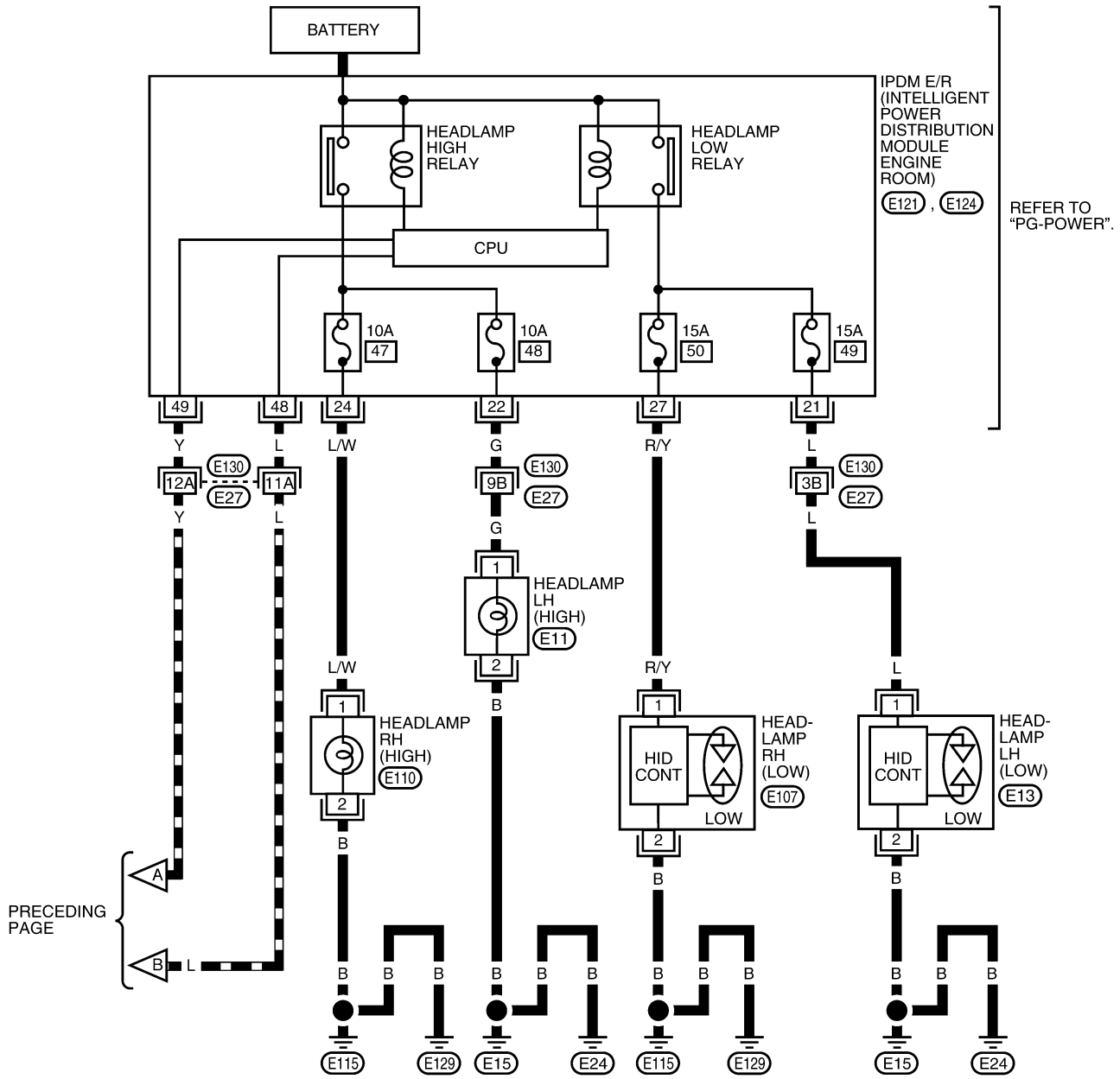

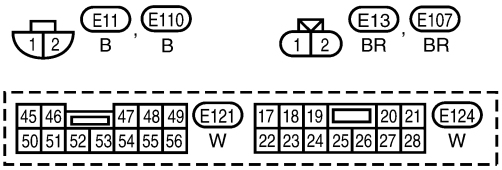

REFER TO THE FOLLOWING.
E130 - SUPER MULTIPLE JUNCTION (SMJ)

LKWA0022E

Terminals and Reference Value for BCM

EKS0040V

Terminal No.	Wire color	Item	Measuring condition		Voltage (Approx.)
			Ignition switch	Operation or condition	
7	W/B	Battery power supply	OFF	—	Battery voltage
8	B	Ground	—	—	—
27	B	Ground	—	—	—
35	G	Ignition power supply	ON	—	Battery voltage
36	PU	Ignition power supply	ACC	—	Battery voltage
38	W/R	Auto light sensor input	ON	Headlamps illuminate by auto light control	0V → 3V
40	R/B	Combination switch output 2	—	—	2V → 10V
41	R/G	Combination switch output 3	—	—	2V → 10V
42	R/Y	Combination switch output 4	—	—	2V → 10V
43	L	Combination switch output 5	—	—	2V → 10V
45	R	Auto light sensor power	—	Ignition switch OFF → ON	0V → 5V
47	R/W	Combination switch output 1	—	—	2V → 10V
48	G/W	Combination switch input 1	—	—	1.5V → 10V
49	G/B	Combination switch input 2	—	—	1.5V → 10V
50	G/R	Combination switch input 3	—	—	1.5V → 10V
51	G/Y	Combination switch input 4	—	—	1.5V → 10V
52	L/W	Combination switch input 5	—	—	1.5V → 10V
53	P	Auto light sensor ground	—	—	—
63	B	Ground	—	—	—
70	L	Communication signal (CAN-H)	—	—	1V → 3V
71	Y	Communication signal (CAN-L)	—	—	1V → 3V

CONSULT-II Function

EKS0040W

CONSULT-II has a display function for work support, self-diagnosis, data monitor, and active test for each part by combining data receiving and sending via the communication line from BCM.

BCM diagnosis part	Check item, diagnosis mode	Description
Headlamp	Work support	Changes the setting for each function.
	Data monitor	Displays BCM input data in real time.
	Active test	Operation of electrical loads can be checked by sending driving signal to them.

CONSULT-II BASIC OPERATION

1. With the ignition switch OFF, connect CONSULT-II to the vehicle-side data link connector, then turn ignition switch ON.
2. Touch “START”.

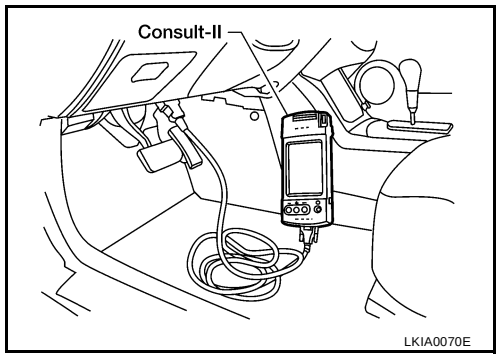

3. Touch “BCM” on “SELECT SYSTEM” screen.

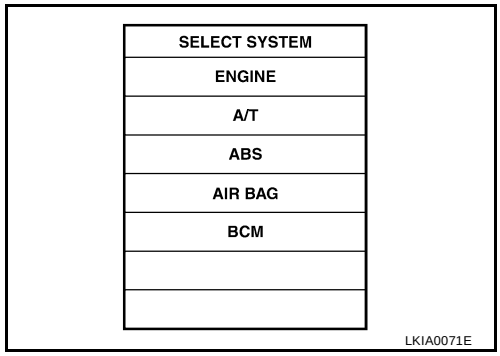

4. Select the desired part to be diagnosed on the “SELECT TEST ITEM” screen.

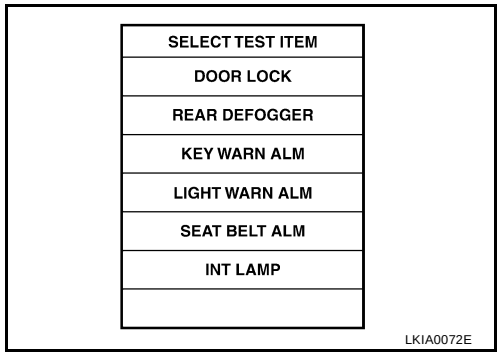

DATA MONITOR

Operation Procedure

1. Touch “HEAD LAMP” on "SELECT TEST ITEM” screen.
2. Touch “DATA MONITOR” on "SELECT DIAG MODE” screen.
3. Touch either “ALL SIGNALS” or "SELECTION FROM MENU” on the “DATA MONITOR” screen.

All signals	Monitors all the signals.
Selection from menu	Selects and monitors individual signal.

4. Touch “START”.
5. When "SELECTION FROM MENU” is selected, touch individual items to be monitored. When “ALL SIGNALS" is selected, all the items will be monitored.
6. Touch “RECORD” while monitoring, then the status of the monitored item can be recorded. To stop recording, touch “STOP”.

Display Item List

Monitor item name “OPERATION OR UNIT”		Contents
IGN ON SW	“ON/OFF”	“IGN position (ON)/OFF, ACC position (OFF)” judged from the ignition switch signal is displayed.
ACC ON SW	“ON/OFF”	Displays “ACC (ON)/OFF, Ignition OFF (OFF)” status judged from ignition switch signal.
AUTO LIGHT SW[Note]	“ON/OFF”	Displays status of the lighting switch as judged from the lighting switch signal. (AUTO position: ON/Other than AUTO position: OFF)
TAIL LAMP SW	“ON/OFF”	Displays status (lighting switch 1st position: ON/Others: OFF) of light switch judged from lighting switch signal.
HEAD LAMP SW	“ON/OFF”	Displays status (headlamp switch: ON/Others: OFF) of headlamp switch judged from lighting switch signal.
HI BEAM SW	“ON/OFF”	Displays status (high beam switch: ON/Others: OFF) of high beam switch judged from lighting switch signal.
PASSING SW	“ON/OFF”	Displays status (flash-to-pass switch: ON/Others: OFF) of flash-to-pass switch judged from lighting switch signal.

Monitor item name “OPERATION OR UNIT”		Contents
FR FOG SW	“ON/OFF”	Displays status (front fog switch: ON/Others: OFF) of front fog switch judged from lighting switch signal.
DOOR SW - DR	“ON/OFF”	Displays status of the driver door as judged from the driver door switch signal. (Door is open: ON/Door is closed: OFF)
DOOR SW - AS	“ON/OFF”	Displays status of the passenger door as judged from the passenger door switch signal. (Door is open: ON/Door is closed: OFF)
DOOR SW - RR	“ON/OFF”	Displays status of the rear doors as judged from the rear door switch signal. (Door is open: ON/Door is closed: OFF)
HEAD LAMP SW 2	“ON/OFF”	Displays status (headlamp switch 2: ON/Others: OFF) of headlamp switch 2 judged from lighting switch signal.
OPTICAL SENSOR	[0 - 5V]	Displays “ambient light (close to 5V when light/close to 0V when dark)” judged from auto light sensor signal.

NOTE:
Vehicles without auto light system display this item, but cannot monitor it.

ACTIVE TEST

Operation Procedure

1. Touch “HEAD LAMP” on “SELECT TEST ITEM” screen.
2. Touch “ACTIVE TEST” on “SELECT DIAG MODE” screen.
3. Touch item to be tested and check operation of the selected item.
4. During the operation check, touching “BACK” deactivates the operation.

Display Item List

Test item	Display on CONSULT-II screen	Description
Tail light relay output	TAIL LAMP	Allows tail light relay to operate by switching ON–OFF at your option.
Headlamp relay output	HEAD LAMP (LOW)	Allows headlamp relay to operate by switching ON–OFF at your option.
Headlamp relay output	HEAD LAMP (HI)	Allows headlamp relay to operate by switching ON–OFF at your option.
Front fog lamp relay output	FR FOG LAMP	Allows fog lamp relay to operate by switching ON–OFF at your option.

Headlamp HI Does Not Illuminate (Both Sides)

EKS0040X

1. INSPECTION 1 BETWEEN IPDM E/R AND HEADLAMPS

1. Start active test. Refer to LT-18, "ACTIVE TEST" .
2. Check operation of HI headlamps.

OK or NG

OK >> GO TO 4.
NG >> GO TO 2.

2. INSPECTION 2 BETWEEN IPDM E/R AND HEADLAMPS

1. Disconnect IPDM E/R connector and left/right headlamp connectors.
2. Check continuity between harness connector terminals of IPDM E/R and connector terminals of left/right headlamps.

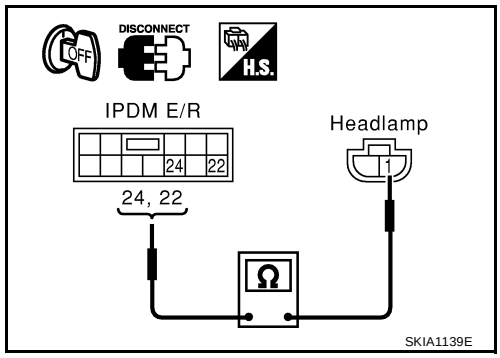

Terminals					Continuity
IPDM E/R		Headlamp			
Connector	Terminal (wire color)	Connector		Terminal (wire color)	
E124	24 (L/W)	Right	E110	1 (L/W)	Yes
	22 (G)	Left	E11	1 (G)	

OK or NG

OK >> Connect electrical connectors. GO TO 3.

NG >> Check for short circuit or open circuit in harness between IPDM E/R and right/left headlamps. Repair as necessary.

3. IPDM E/R INSPECTION

Start active test. Refer to LT-18, "ACTIVE TEST" . When headlamp HI is operating, check voltage between connector terminals left/right headlamps and body ground.

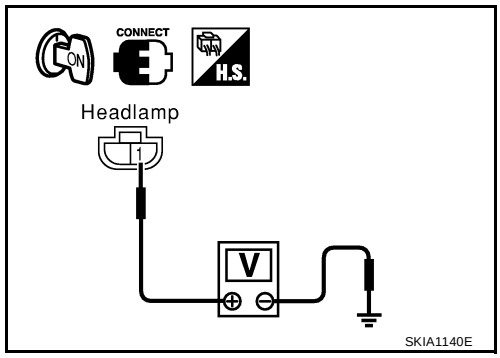

Terminals				Voltage (Approx.)
Headlamp			Body ground (–)	12
Connector		Terminal (wire color)		
Right	E110	1 (L/W)		
Left	E11	1 (G)		

OK or NG

OK >> Check headlamp bulbs and replace as necessary.

NG >> Replace IPDM E/R. Refer to PG-24, "Removal and Installation of IPDM E/R" .

4. INSPECTION 1 BETWEEN COMBINATION SWITCH AND BCM

Select BCM on CONSULT-II. Carry out “BCM C/U” self-diagnosis.

Displayed results of self-diagnosis

No malfunction detected>> GO TO 5.

CAN communications or CAN system>> Inspect the BCM CAN communications system. Refer to BCS-15, "CAN Communication Inspection Using CONSULT-II (Self-Diagnosis)" .

OPEN DETECT 1 - 5>> Combination switch system malfunction. Refer to BCS-16, "Combination Switch Inspection According to Self-Diagnostic Results" .

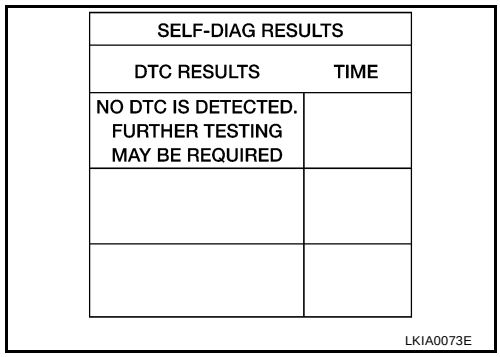

SELF-DIAG RESULTS	
DTC RESULTS	TIME
NO DTC IS DETECTED. FURTHER TESTING MAY BE REQUIRED	

LKIA0073E

5. INSPECTION 2 BETWEEN COMBINATION SWITCH AND BCM

Select BCM on CONSULT-II. With “HEADLAMP” data monitor, check that “HI BEAM SW” turns ON-OFF linked with operation of lighting switch.

DATA MONITOR	
MONITOR	
IGN ON SW	ON
ACC ON SW	ON
AUTO LIGHT SW	OFF
TAIL LAMP SW	OFF
HEAD LAMP SW	OFF
HI BEAM SW	OFF
PASSING SW	OFF
FR FOG SW	OFF
DOOR SW-DR	OFF

LKIA0074E

OK or NG

OK >> Replace BCM.
NG >> Replace lighting switch. Refer to LT-96, "Removal and Installation" .

Headlamp HI Does Not Illuminate (One Side)

EKS0040Y

1. BULB INSPECTION

Inspect inoperative lamp bulb.

OK or NG

OK >> GO TO 2.
NG >> Replace headlamp bulb. Refer to LT-25, "HEADLAMP (INNER SIDE), FOR HIGH BEAM" .

2. INSPECTION BETWEEN IPDM E/R AND HEADLAMPS

1. Disconnect IPDM E/R connector and headlamp connector.
2. Check continuity between harness connector terminals of IPDM E/R and harness connector terminals of inoperative headlamp.

Terminals					Continuity
IPDM E/R		Headlamp			
Connector	Terminal (wire color)	Connector		Terminal (wire color)	
E124	24 (L/W)	Right	E110	1 (L/W)	Yes
	22 (G)	Left	E11	1 (G)	

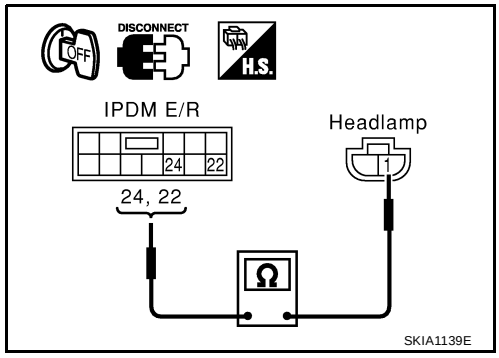

SKIA1139E

OK or NG

OK >> Replace IPDM E/R. Refer to PG-24, "Removal and Installation of IPDM E/R" .
NG >> Check for short circuits and open circuits in harness between IPDM E/R and headlamps. Repair as necessary.

High-Beam Indicator Lamp Does Not Illuminate

EKS0040Z

1. BULB INSPECTION

Inspect high-beam indicator lamp bulb.

OK or NG

OK >> Replace combination meter. Refer to DI-21, "Removal and Installation" .
NG >> Replace indicator bulb.

Headlamp LO Does Not Illuminate (Both Sides)

EKS00410

1. CHECK IPDM E/R OUTPUT TO HEADLAMPS

1. Start active test. Refer to LT-18, "ACTIVE TEST" .
2. Check operation of low beam headlamps.

OK or NG

OK >> GO TO 2.
NG >> Replace IPDM E/R. Refer to PG-24, "Removal and Installation of IPDM E/R" .

2. PERFORM BCM SELF-TEST

Select BCM on CONSULT-II. Carry out “BCM C/U” self-diagnosis.

Displayed results of self-diagnosis

No malfunction detected>> GO TO 3.

CAN communications or CAN system>> Inspect the BCM CAN communications system. Refer to BCS-15, "CAN Communication Inspection Using CONSULT-II (Self-Diagnosis)" .

OPEN DETECT 1 - 5>> Combination Switch System malfunction. Refer to BCS-16, "Combination Switch Inspection According to Self-Diagnostic Results" .

HEAD LAMP 1 SW or HEAD LAMP 2 SW>> Replace lighting switch. Refer to LT-96, "Removal and Installation" .

SELF-DIAG RESULTS	
DTC RESULTS	TIME
NO DTC IS DETECTED. FURTHER TESTING MAY BE REQUIRED	

LKIA0073E

3. CHECK COMBINATION SWITCH INPUTS TO BCM

Select BCM on CONSULT-II. With “HEADLAMP” data monitor, check that “HEAD LAMP SW” and “HEAD LAMP SW 2” turn ON-OFF with operation of lighting switch.

OK or NG

OK >> Replace BCM.

NG >> Replace lighting switch. Refer to LT-96, "Removal and Installation" .

DATA MONITOR	
MONITOR	
IGN ON SW	ON
ACC ON SW	ON
AUTO LIGHT SW	OFF
TAIL LAMP SW	ON
HEAD LAMP SW	ON
HI BEAM SW	OFF
PASSING SW	OFF
FR FOG SW	OFF
DOOR SW-DR	OFF

LKIA0078E

Headlamp LO Does Not Illuminate (One Side)

EKS00411

1. CHECK POWER TO HEADLAMP

1. Disconnect inoperative headlamp connector.
2. Turn the low beam headlamps ON.
3. Check voltage between inoperative headlamp connector terminal and ground.

Terminals				Voltage
(+)			(-)	
Connector		Terminal		
Right	E107	1 (R/Y)	Ground	Yes
Left	E13	1 (L)		

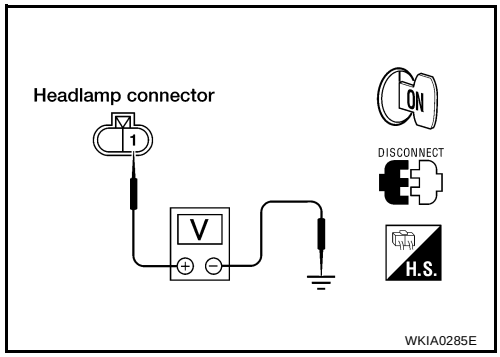

OK or NG

OK >> GO TO 2.

NG >> GO TO 4.

2. CHECK HEADLAMP GROUND

1. Turn the low beam headlamps OFF.
2. Check continuity between inoperative headlamp connector terminal and ground.

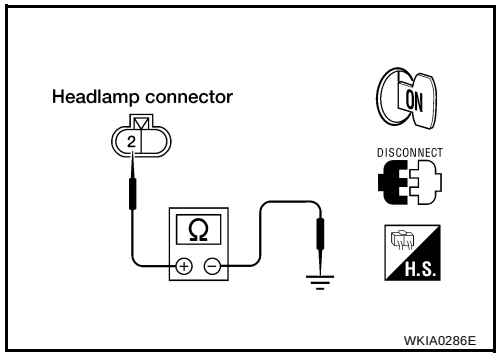

Terminals				Continuity
(+)			(-)	
Connector		Terminal		
Right	E107	2 (B)	Ground	Yes
Left	E13	2 (B)		

OK or NG

OK >> GO TO 3.
NG >> Repair open circuit in harness between inoperative headlamp and ground.

3. HEADLAMP SUBHARNESS INSPECTION

1. Check the inoperative headlamp subharness for open or short circuits.

OK or NG

OK (with halogen headlamps)>> Replace headlamp bulb. Refer to LT-24, "Bulb Replacement" .
OK (with xenon headlamps)>> Replace headlamp bulb. Refer to LT-24, "Bulb Replacement" . Check operation of headlamp. If headlamp is still inoperative, replace ballast and check operation. If headlamp is still inoperative, replace igniter.
NG (with halogen headlamps)>> Repair open or short circuit in headlamp subharness.
NG (with xenon headlamps)>> Replace headlamp subharness.

4. CHECK CIRCUIT BETWEEN IPDM E/R AND INOPERATIVE HEADLAMP

1. Turn the low beam headlamps OFF.
2. Check continuity between inoperative headlamp connector terminal and IPDM E/R connector terminal.

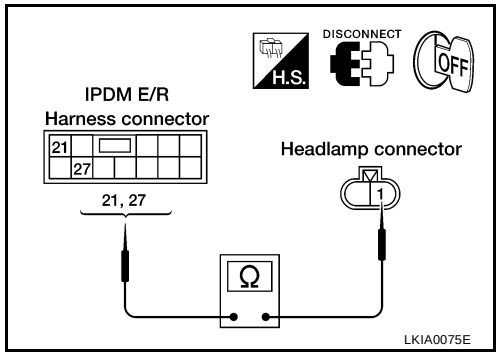

Terminals					Continuity
Headlamp	(+)		(-)		
	Connector	Terminal	Connector	Terminal	
Right	E107	1 (R/Y)	E124	27 (R/Y)	Yes
Left	E13	1 (L)	E124	21 (L)	

OK or NG

OK >> Replace IPDM E/R. Refer to PG-24, "Removal and Installation of IPDM E/R" .
NG >> Repair open or short circuit between IPDM E/R and inoperative headlamp.

Headlamps Do Not Turn OFF

EKS00412

1. CHECK CAN COMMUNICATIONS BETWEEN BCM AND IPDM E/R

- IPDM E/R detects CAN communication malfunction and activates fail-safe operation. Refer to BCS-15, "CAN Communication Inspection Using CONSULT-II (Self-Diagnosis)" and inspect CAN system.

OK or NG

OK >> Replace IPDM E/R. Refer to PG-24, "Removal and Installation of IPDM E/R" .
NG >> Repair or replace malfunctioning part.

One Xenon Headlamp Does Not Illuminate At Full Brightness

EKS00413

1. COMPONENT INSPECTION

1. Check the inoperative headlamp subharness for open or short circuits.

OK or NG

OK >> Replace headlamp bulb. Refer to LT-24, "Bulb Replacement" . Check operation of headlamp. If headlamp still does not illuminate at full brightness, replace ballast and check operation. If headlamp still does not illuminate at full brightness, replace igniter.

NG >> Replace headlamp subharness.

One Xenon Headlamp Flickers

EKS00414

1. CHECK SYSTEM OPERATION

1. Turn the low beam headlamps ON and check operation.

NOTE:
Xenon headlamps may flicker momentarily when the headlamps are turned ON. This is normal and does not indicate a fault. Diagnosis of flickering headlamps should only be performed if the headlamps continue to flicker for more than 3 seconds after turning headlamps ON.

OK or NG

OK >> System is operating correctly.

NG >> GO TO 2.

2. COMPONENT INSPECTION

1. Check the inoperative headlamp subharness for open or short circuits.

OK or NG

OK >> Replace ballast. Check operation of headlamp. If headlamp still flickers, replace igniter and check operation. If headlamp still flickers, replace headlamp bulb. Refer to LT-24, "Bulb Replacement" .

NG >> Replace headlamp subharness.

Aiming Adjustment

EKS00415

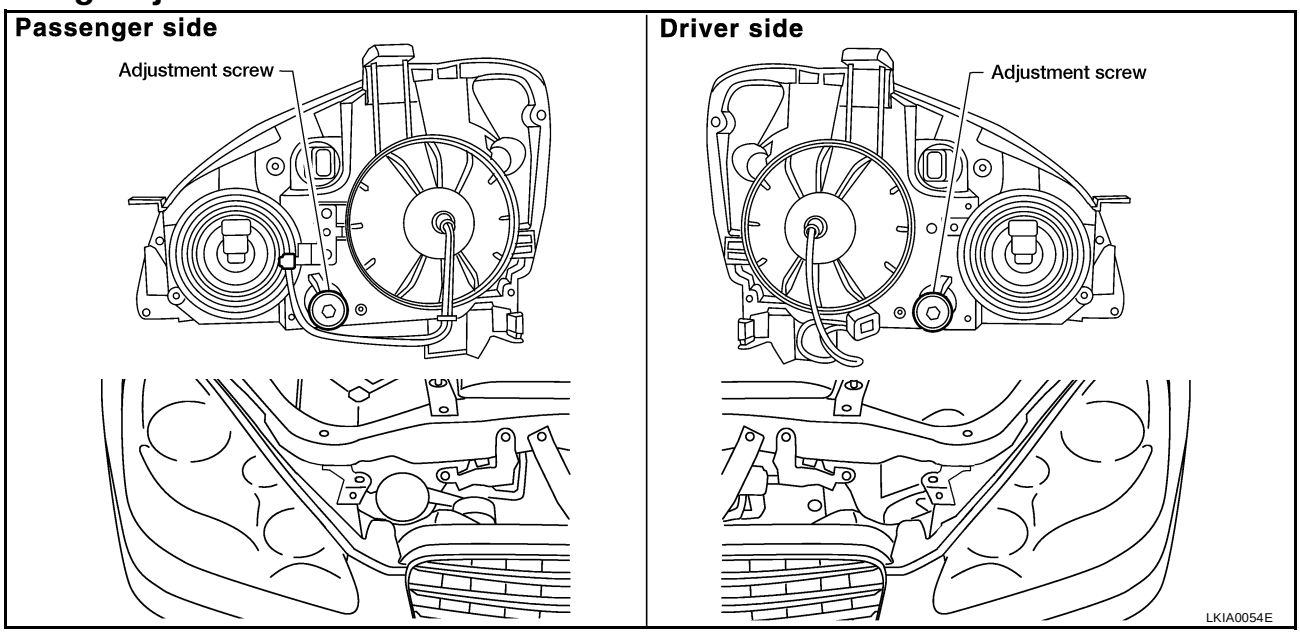

For details, refer to the regulations in your state.
Before performing aiming adjustment, check the following.

1. Ensure all tires are inflated to correct pressure.
2. Place vehicle on flat surface.

3. Ensure there is no load in vehicle other than the driver (or equivalent weight placed in driver's position). Coolant and engine oil filled to correct level, and fuel tank full.

LOW BEAM AND HIGH BEAM

1. Turn headlamp low beam on.
2. Use adjusting screws to perform aiming adjustment.
   - **First loosen the adjusting screw all the way and then make adjustment by tightening the screw.**

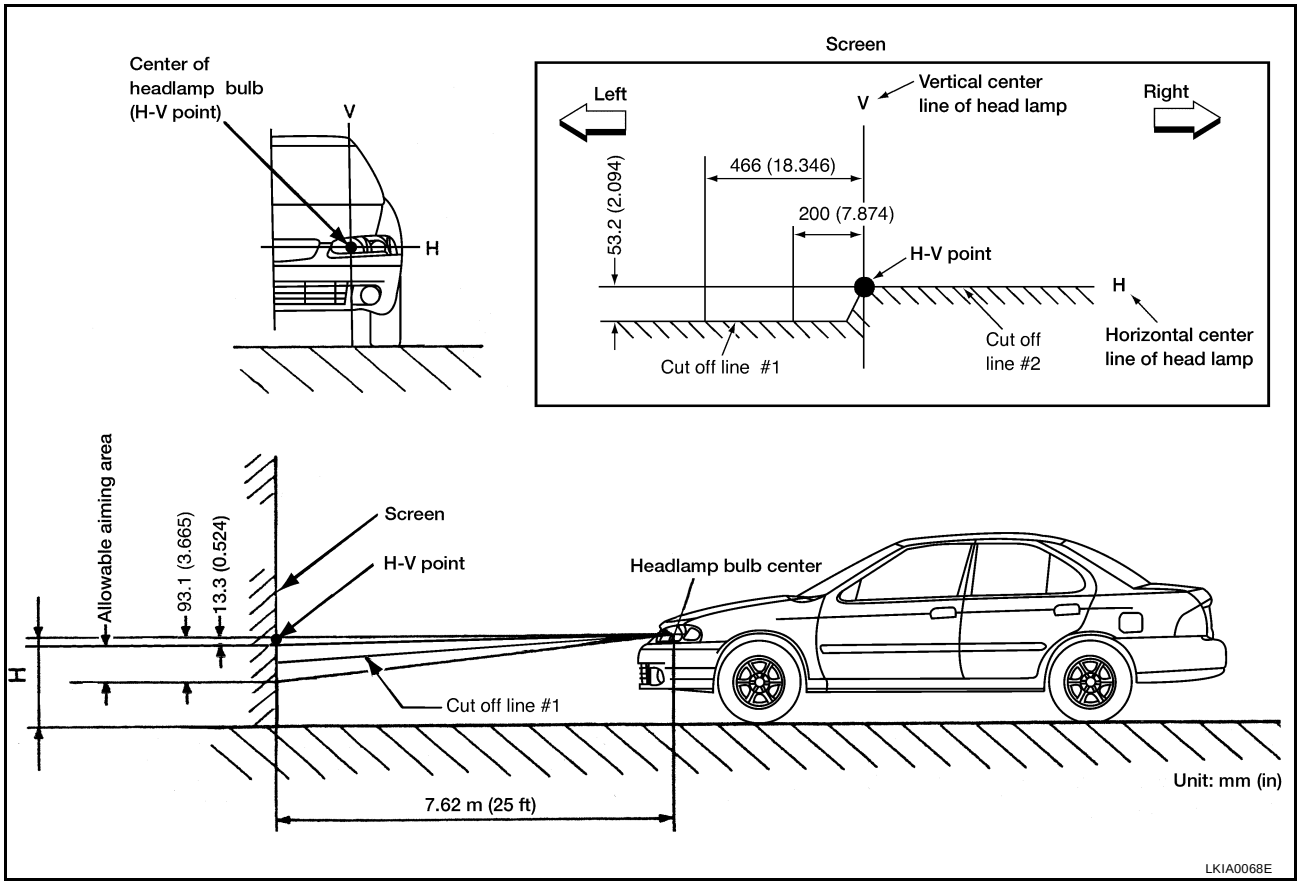

If the vehicle front body has been repaired and/or the headlamp assembly has been replaced, check aiming. Use the aiming chart shown in the figure.

- **Basic illuminating area for adjustment should be within the range shown on the aiming chart. Adjust headlamps accordingly.**

Bulb Replacement

EKS00416

HEADLAMP (OUTER SIDE), FOR LOW BEAM (XENON)

1. Disconnect negative battery cable.
2. Turn the plastic cap counterclockwise to unlock it from the headlamp.
3. Turn the bulb socket counterclockwise to unlock it.
4. Unlock the retaining spring and remove the bulb from the headlamp.
5. Install in reverse order of removal.

CAUTION:

After installing the bulb, be sure to install the plastic cap securely to ensure watertightness.

HEADLAMP (OUTER SIDE), FOR LOW BEAM (HALOGEN)

1. Disconnect negative battery cable.
2. Turn the plastic cap counterclockwise to unlock it from the headlamp.
3. Disconnect the electrical connectors from the bulb terminals.
4. Unlock the retaining spring and remove the bulb from the headlamp.
5. Install in reverse order of removal.

CAUTION:
After installing the bulb, be sure to install the plastic cap securely to ensure watertightness.

HEADLAMP (INNER SIDE), FOR HIGH BEAM

1. Turn the bulb counterclockwise to remove it.
2. Installation is reverse order of removal.

FRONT TURN SIGNAL LAMP

1. Remove the headlamp. Refer to LT-25, "Removal and Installation" .
2. Turn the bulb socket counterclockwise to unlock it.
3. Push and turn the bulb counterclockwise to remove it.
4. Installation is reverse order of removal.

Headlamp (outer side), for low beam (Halogen)	**: 12V 55W (H1)**
Headlamp (outer side), for low beam (Xenon)	**: 12V 35W (D2R)**
Headlamp (inner side), for high beam	**: 12V 60W (HB3)**
Front turn signal lamp	**: 12V 27W/8W (amber)**

CAUTION:
After installing the bulb, be sure to install the bulb socket securely to ensure watertightness.

Removal and Installation

EKS00417

REMOVAL

1. Remove the front fascia. Refer to EI-13, "Removal and Installation" .
2. Ensure lighting switch is OFF.
3. Disconnect the negative battery cable.
4. Remove the headlamp mounting bolts.
5. Pull the headlamp toward the front of the vehicle, disconnect connectors, and remove from vehicle.

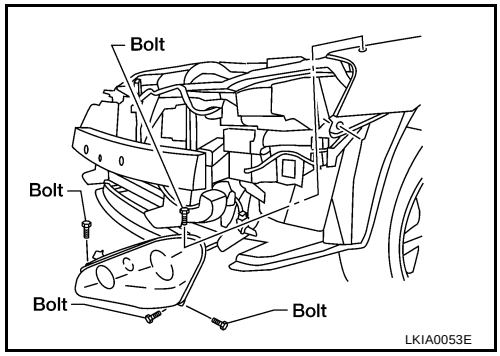

INSTALLATION

Install in the reverse order of removal.

Headlamp mounting bolts:

: 4.4 - 6.4 N·m (0.45 - 0.65 kg-m, 39 - 56 in-lb)

Disassembly and Assembly

EKS00418

DISASSEMBLY

Xenon

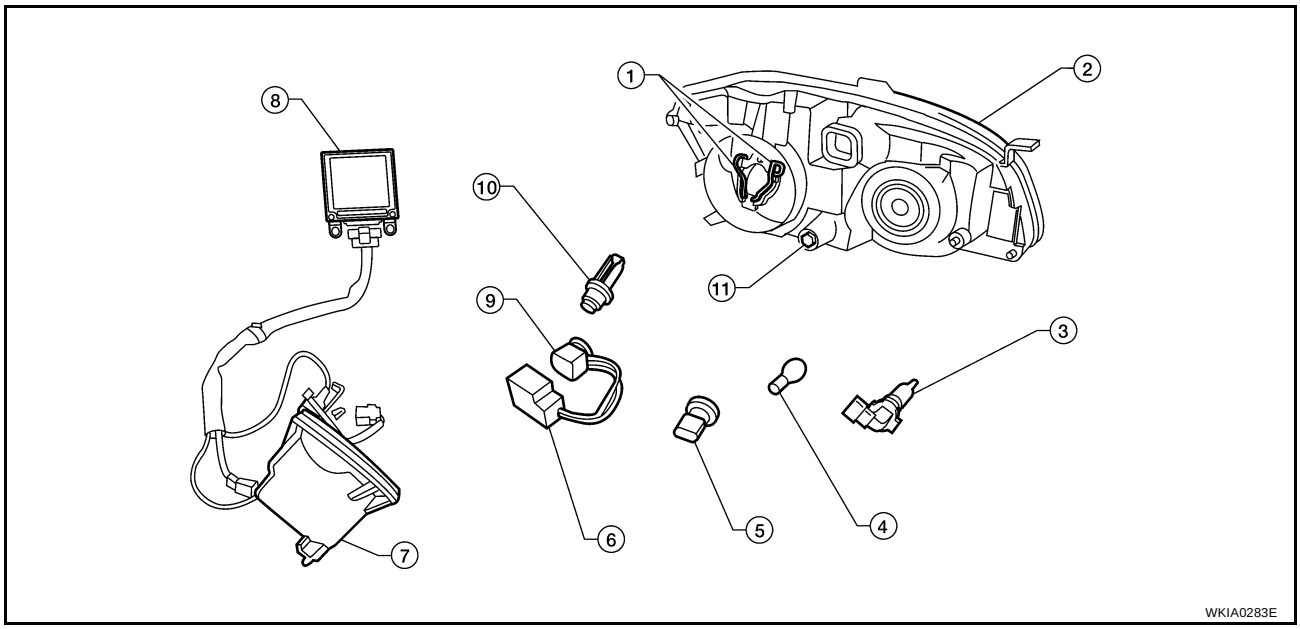

1. Retaining springs	2. Headlamp assembly	3. Halogen bulb (high beam)
4. Front turn signal lamp bulb	5. Front turn signal bulb socket	6. Ignitor
7. Plastic cap	8. Ballast	9. Xenon bulb socket
10. Xenon bulb (low beam)	11. Aiming adjustment screw	

Halogen

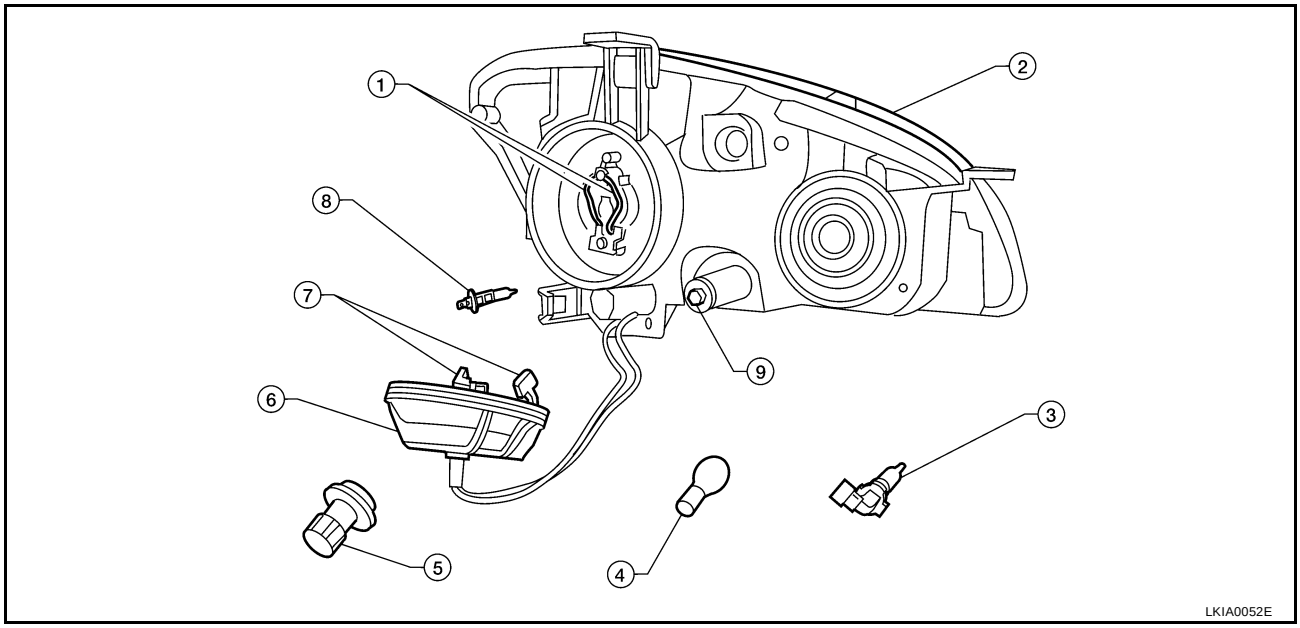

1. Retaining springs	2. Headlamp assembly	3. Halogen bulb (high beam)
4. Front turn signal lamp bulb	5. Front turn signal bulb socket	6. Plastic cap
7. Bulb terminal electrical connectors	8. Halogen bulb (low beam)	9. Aiming adjustment screw

1. Turn the low beam plastic cap counterclockwise to unlock and remove it.
2. Turn the bulb socket counterclockwise to unlock and remove it (xenon).
3. Disconnect the electrical connectors from the bulb terminals (halogen).
4. Unlock the retaining springs and remove the low beam bulb.
5. Release the ignitor and remove from the plastic cap (xenon).

6. Turn the high beam lamp socket counterclockwise to unlock and remove it.
7. Turn the front turn signal lamp bulb socket counterclockwise and unlock it.
8. Remove the front turn signal lamp bulb from its socket.

ASSEMBLY

Assemble in the reverse order of disassembly.

CAUTION:

- **After installing the xenon bulb, be sure to install the bulb socket and plastic cap securely to ensure watertightness.**

HEADLAMP (FOR CANADA) - DAYTIME LIGHT SYSTEM -

PFP:26010

Component Parts and Harness Connector Location

EKS00419

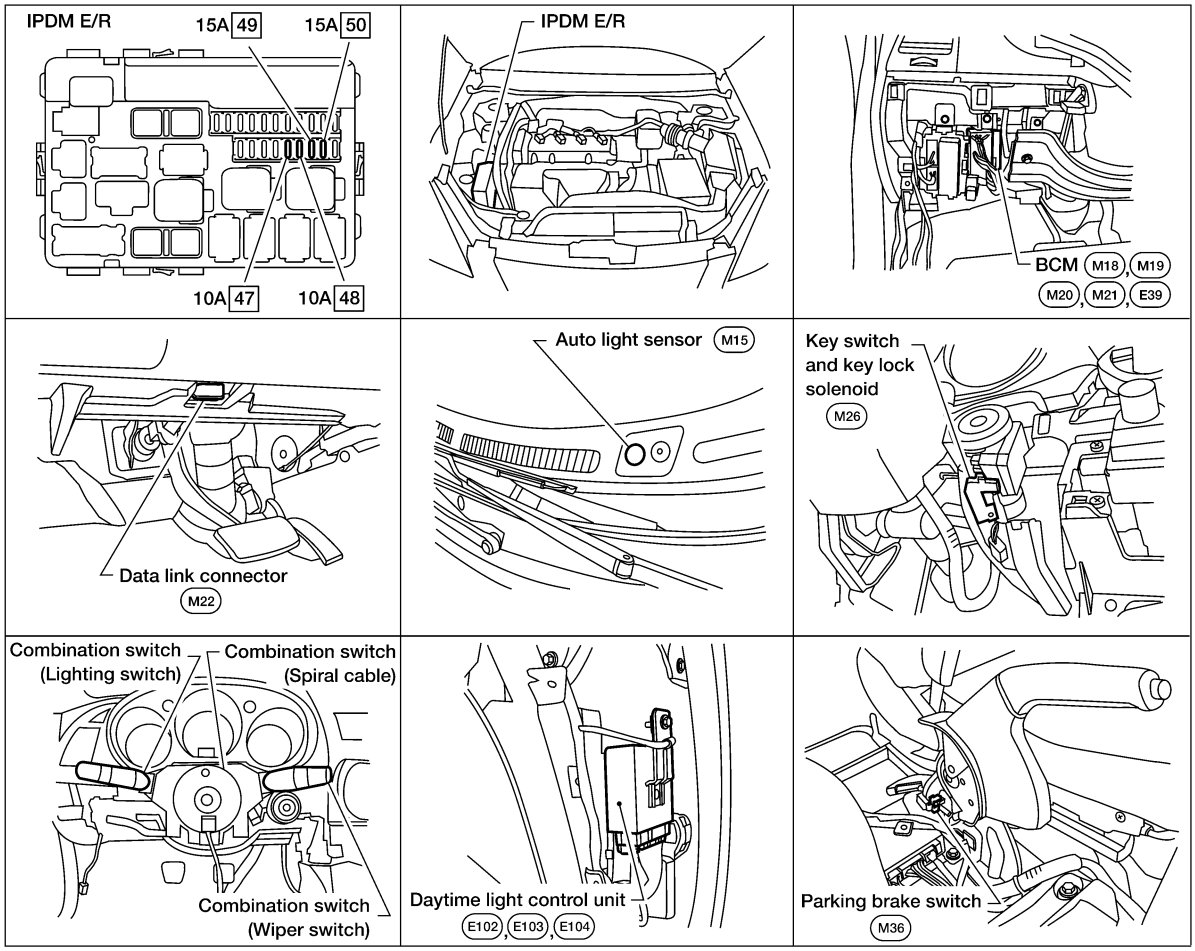

WKIA0079E

System Description

EKS0041A

The headlamp system for Canada vehicles is equipped with a daytime light control unit that activates the high beam headlamps at approximately half illumination whenever the engine is running. If the parking brake is applied before the engine is started the daytime lights will not be illuminated. The daytime lights will illuminate once the parking brake is released. Thereafter, the daytime lights will continue to operate when the parking brake is applied.

Battery saver system is controlled by the BCM.

Power is supplied at all times

- to headlamp high relay located in the IPDM E/R (intelligent power distribution module engine room).

Power is also supplied at all times

- to BCM (body control module) terminal 7
- through 50A fusible link [letter **f** , located in the fuse and fusible link box].

With the ignition switch in the ON or START position, power is supplied

- to daytime light control unit terminal 3
- through 10A fuse [No. 12, located in the fuse block (J/B)], and
- to BCM (body control module) terminal 35
- through 10A fuse [No. 12, located in the fuse block (J/B)].

With the ignition switch in the ACC or ON position, power is supplied

- to BCM (body control module) terminal 36
- through 10A fuse [No. 6, located in the fuse block (J/B)].

With the ignition switch in the START position, power is supplied

- to daytime light control unit terminal 2
- through 10A fuse [No. 9, located in the fuse block (J/B)].

Ground is supplied

- to daytime light control unit terminals 13, 14, and 16
- through body grounds E15 and E24, and
- to BCM (body control module) terminals 8, 27, and 63
- through body grounds M57, M61, E15, and E24.

HEADLAMP OPERATION

Low Beam Operation

With the lighting switch in 2ND position, the BCM (body control module) receives input requesting the headlamps to illuminate. This input is communicated to the IPDM E/R (intelligent power distribution module engine room) across the CAN communication lines. The central processing unit of the IPDM E/R controls the headlamp low relay coil. When energized, this relay directs power

- to 15A fuse [No. 50, located in the IPDM E/R]
- through terminal 27 of the IPDM E/R
- to terminal 1 of headlamp RH, and
- to 15A fuse [No. 49, located in the IPDM E/R]
- through terminal 21 of the IPDM E/R
- to terminal 1 of headlamp LH.

Ground is supplied at all times

- to terminal 2 of headlamp RH
- through body grounds E15 and E24, and
- to terminal 2 of headlamp LH
- through body grounds E15 and E24.

With power and ground supplied, low beam headlamps illuminate.

High Beam Operation/Flash-to-Pass Operation

With the lighting switch in 2ND position and placed in HIGH or PASS position, the BCM (body control module) receives input requesting the headlamp high beams to illuminate. This input is communicated to the IPDM E/R (intelligent power distribution module engine room) across the CAN communication lines. The central processing unit of the IPDM E/R controls the headlamp high relay coil. When energized, this relay directs power

- to 10A fuse [No. 47, located in the IPDM E/R]
- through terminal 24 of the IPDM E/R
- to terminal 4 of the daytime light control unit
- through terminal 7 of the daytime light control unit
- to terminal 1 of headlamp RH, and
- to 10A fuse [No. 48, located in the IPDM E/R]
- through terminal 22 of the IPDM E/R
- to terminal 5 of the daytime light control unit
- through terminal 6 of the daytime light control unit
- to terminal 1 of headlamp LH.

Ground is supplied

- to terminal 2 of headlamp RH
- to terminal 9 of the daytime light control unit
- through terminal 14 of the daytime light control unit
- through body grounds E15 and E24, and
- to terminal 2 of headlamp LH
- to terminal 10 of the daytime light control unit
- through terminals 13 of the daytime light control unit
- through body grounds E15 and E24.

With power and ground supplied, the high beam headlamps and the HIGH BEAM indicator illuminate.

BATTERY SAVER CONTROL

With the combination switch (lighting switch) is in the 2ND position (ON), and the ignition switch is turned from ON or ACC to OFF, the battery saver control feature is activated.
Under this condition, the headlamps remain illuminated for 5 minutes, unless the combination switch (lighting switch) position is changed. If the combination switch (lighting switch) position is changed, then the headlamps are turned off.

AUTO LIGHT OPERATION

For auto light operation, refer to LT-46, "System Description" .

DAYTIME LIGHT OPERATION

With the engine running, the lighting switch in the OFF or 1ST position and parking brake released, power is supplied

- through daytime light control unit terminal 7
- to terminal 1 of RH headlamp
- through terminal 2 of RH headlamp
- to daytime light control unit terminal 9
- through daytime light control unit terminal 6
- to terminal 1 of LH headlamp
- through terminal 2 of LH headlamp
- to daytime light control unit terminal 10.

Ground is supplied

- to daytime light control unit terminals 13, 14, and 16
- through body grounds E15 and E24.

Because the high beam headlamps are now wired in series, they operate at half illumination.

XENON HEADLAMP (IF EQUIPPED)

The low beam headlamps may be equipped with xenon type bulbs. Xenon bulbs do not use a filament. Instead, they produce light when a high voltage current is passed between two tungsten electrodes through a mixture of xenon (an inert gas) and certain other metal halides. In addition to added lighting power, electronic control of the power supply gives the headlamps stable quality and tone color.
Following are some of the advantages of the xenon type headlamp.

- The light produced by the headlamps is a white color comparable to sunlight that is easy on the eyes.
- Light output is nearly double that of halogen headlamps, affording increased area of illumination.
- The light features a high relative spectral distribution at wavelengths to which the human eye is most sensitive. This means that even in the rain, more light is reflected back from the road surface toward the vehicle, for added visibility.
- Power consumption is approximately 25 percent less than halogen headlamps, reducing battery load.

OPERATION

After starting the engine with the lighting switch in the “OFF” or 1ST position, the headlamp high beam automatically turns on. Lighting switch operations other than the above are the same as conventional light systems.

Engine		With engine stopped									With engine running								
Lighting switch		OFF			1ST			2ND			OFF			1ST			2ND		
		Hi	Lo	P	Hi	Lo	P	Hi	Lo	P	Hi	Lo	P	Hi	Lo	P	Hi	Lo	P
Headlamp	High beam	–	–	–	–	–	×	×	–	×	●*	●*	×	●*	●*	×	×	–	×
	Low beam	–	–	–	–	–	×	×	×	×	–	–	×	–	–	×	×	×	×
Tail lamp		–	–	–	×	×	×	×	×	×	–	–	–	×	×	×	×	×	×
License and instrument illumination lamp		–	–	–	×	×	×	×	×	×	–	–	–	×	×	×	×	×	×

- Hi: “HIGH BEAM” position
- Lo: “LOW BEAM” position

- P: “FLASH TO PASS” position
- ×: Lamp “ON”
- –: Lamp “OFF”
- ●: Lamp dims. (Added functions)
- *: When starting the engine with the parking brake released, the daytime lights will operate.
  When starting the engine with the parking brake pulled, the daytime lights will not operate.

CAN Communication System Description

EKS0041B

CAN (Controller Area Network) is a serial communication line for real time application. It is an on-vehicle multiplex communication line with high data communication speed and excellent error detection ability. Many electronic control units are equipped onto a vehicle, and each control unit shares information and links with other control units during operation (not independent). In CAN communication, control units are connected with 2 communication lines (CAN H line, CAN L line) allowing a high rate of information transmission with less wiring. Each control unit transmits/receives data but selectively reads required data only.

FOR TCS MODELS

System diagram

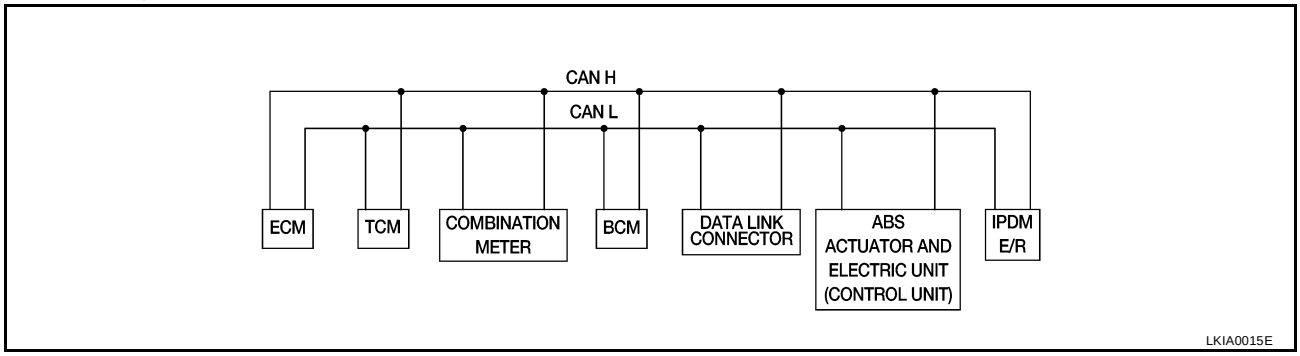

Input/output signal chart

T: Transmit R: Receive

Signals	ECM	TCM	COMBINATION METER	BCM	ABS/TCS control unit	IPDM E/R
Engine speed signal	T		R		R	
Engine coolant temperature signal	T		R			
Accelerator pedal position signal	T					
Fuel consumption monitor signal	T		R			
A/T warning lamp signal		T	R			
A/T position indicator signal	R	T	R	R(R range only)	R	
ABS operation signal	R				T	
TCS operation signal	R	R			T	
Air conditioner switch signal	R			T		
Air conditioner compressor signal	R					T
A/C compressor request signal	T					R
Cooling fan motor operation signal	R					T
Cooling fan speed request signal	T					R
Position lights request			R	T		R
Position lights status				R		T
Low beam request				T		R
Low beam status	R			R		T
High beam request			R	T		R
High beam status	R			R		T

Signals	ECM	TCM	COMBINA-TION METER	BCM	ABS/TCS control unit	IPDM E/R
Front fog lights request				T		R
Front fog light status				R		T
OD cancel switch signal		R	T			R
Brake switch signal		R	T			
Vehicle speed signal	R		T			
	R		T	R		
Oil pressure switch			R			T
Sleep request1			R	T		
Sleep request2				T		R
N range switch signal		R	T			
P range switch signal		R	T			
Seat belt buckle switch signal			T	R		
Door switch signal			R	T		R
Tail lamp request			R	T		R
Turn indicator signal			R	T		
Buzzer output signal			R	T		
Trunk switch signal			R	T		
ASCD main switch signal	T		R			
ASCD cruise signal	T		R			
Wiper operation				R		T
Wiper stop position signal				R		T
Rear window defogger switch signal				T		R
Rear window defogger control sig-nal	R			R		T

FOR A/T MODELS

System diagram

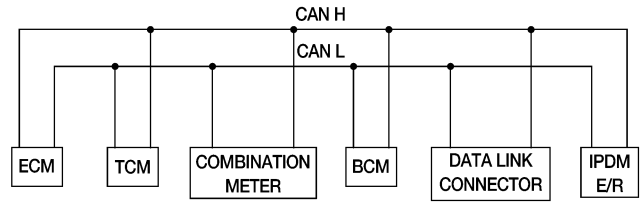

Input/output signal chart

T: Transmit R: Receive

Signals	ECM	TCM	COMBINATION METER	BCM	IPDM E/R
Engine speed signal	T		R		
Engine coolant temperature signal	T		R		
Accelerator pedal position signal	T				R
Fuel consumption monitor signal	T		R		
A/T warning lamp signal		T	R		

Signals	ECM	TCM	COMBINATION METER	BCM	IPDM E/R
A/T position indicator signal	R	T	R	R(R range only)	
Air conditioner switch signal	R			T	
Air conditioner compressor signal	R				T
A/C compressor request signal	T				R
Blower fan switch signal	R(QR25DE)			T	
Cooling fan motor operation signal	R			T	
Cooling fan speed request signal	T				R
Position lights request			R	T	R
Position lights status				R	T
Low beam request				T	R
Low beam status	R			R	T
High beam request			R	T	R
High beam status	R			R	T
Front fog lights request				T	R
Front fog light status				R	T
OD cancel switch signal		R	T		R
Brake switch signal		R	T		
Vehicle speed signal	R		T		
	R		T	R	
Oil pressure switch			R		T
Sleep request1			R	T	
Sleep request2				T	R
N range switch signal		R	T		
P range switch signal		R	T		
Seat belt buckle switch signal			T	R	
Door switch signal			R	T	R
Tail lamp request			R	T	R
Turn indicator signal			R	T	
Buzzer output signal			R	T	
Trunk switch signal			R	T	
ASCD main switch signal	T		R		
ASCD cruise signal	T		R		
Wiper operation				R	T
Wiper stop position signal				R	T
Rear window defogger switch signal				T	R
Rear window defogger control signal	R			R	T

FOR M/T MODELS

System diagram

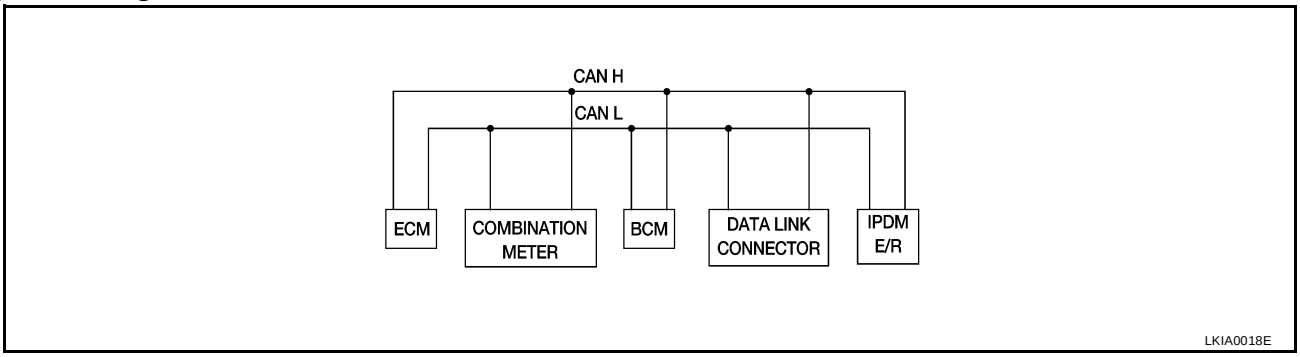

Input/output signal chart

T: Transmit R: Receive

Signals	ECM	COMBINATION METER	BCM	IPDM E/R
Engine speed signal	T			
Engine coolant temperature signal	T			
Fuel consumption monitor signal	T			
Air conditioner switch signal	R		T	
Air conditioner compressor signal	R			T
A/C compressor request signal	T			R
Blower fan switch signal	R(QR25DE)		T	
Cooling fan motor operation signal	R			T
Cooling fan speed request signal	T			R
Position lights request		R	T	R
Position lights status			R	T
Low beam request			T	R
Low beam status	R		R	T
High beam request		R	T	R
High beam status	R		R	T
Front fog lights request			T	R
Front fog light status			R	T
Vehicle speed signal	R	T		
Oil pressure switch		R		T
Sleep request1		R	T	
Sleep request2			T	R
Seat belt buckle switch signal		T	R	
Door switch signal		R	T	R
Tail lamp request		R	T	R
Turn indicator signal		R	T	
Buzzer output signal		R	T	
Trunk switch signal		R	T	
ASCD main switch signal	T	R		
ASCD cruise signal	T	R		
Wiper operation			R	T
Wiper stop position signal			R	T

Signals	ECM	COMBINATION METER	BCM	IPDM E/R
Rear window defogger switch signal			T	R
Rear window defogger control signal	R		R	T

Schematic

EKS0041C

HALOGEN

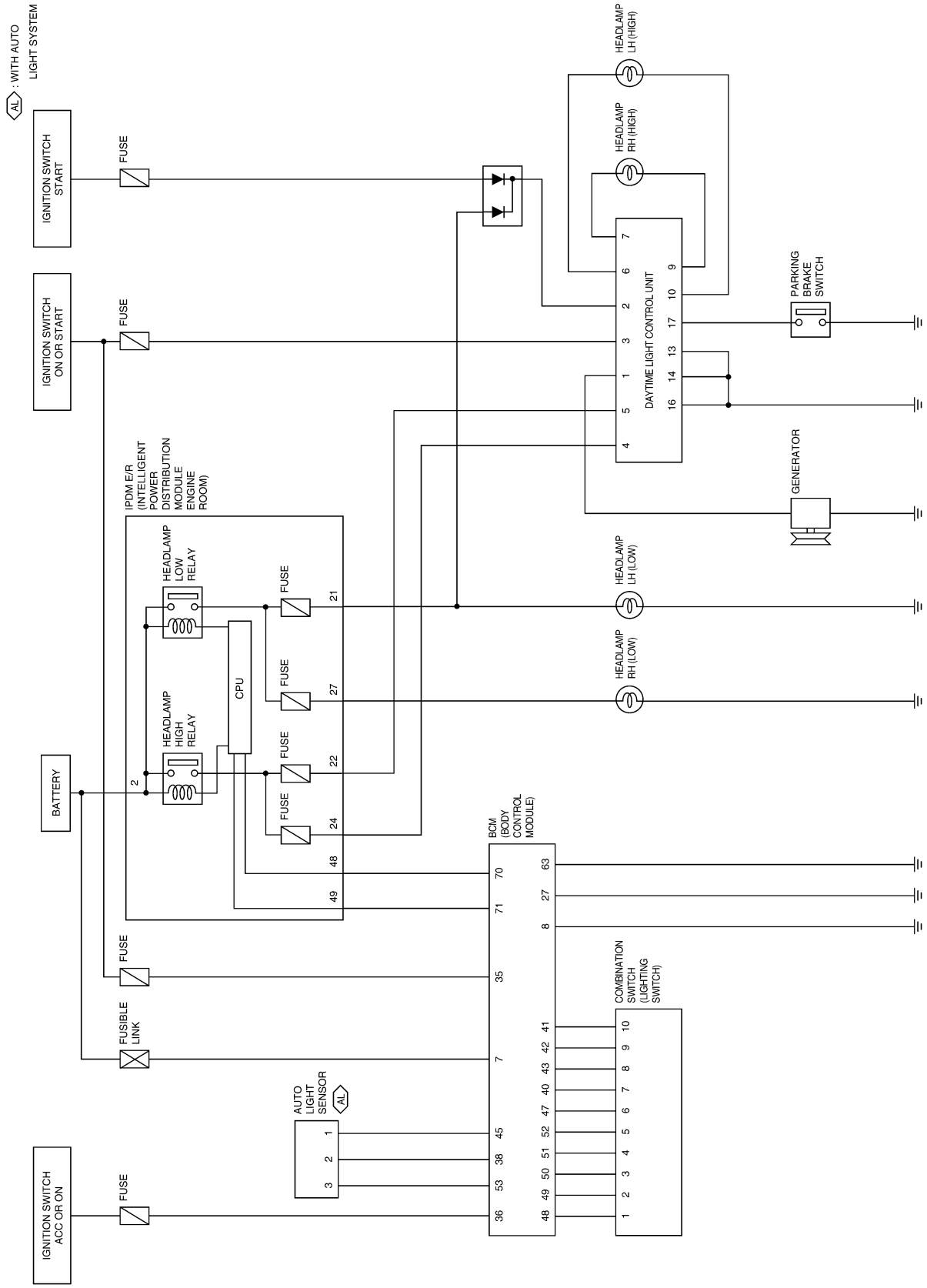

LKWA0023E

XENON

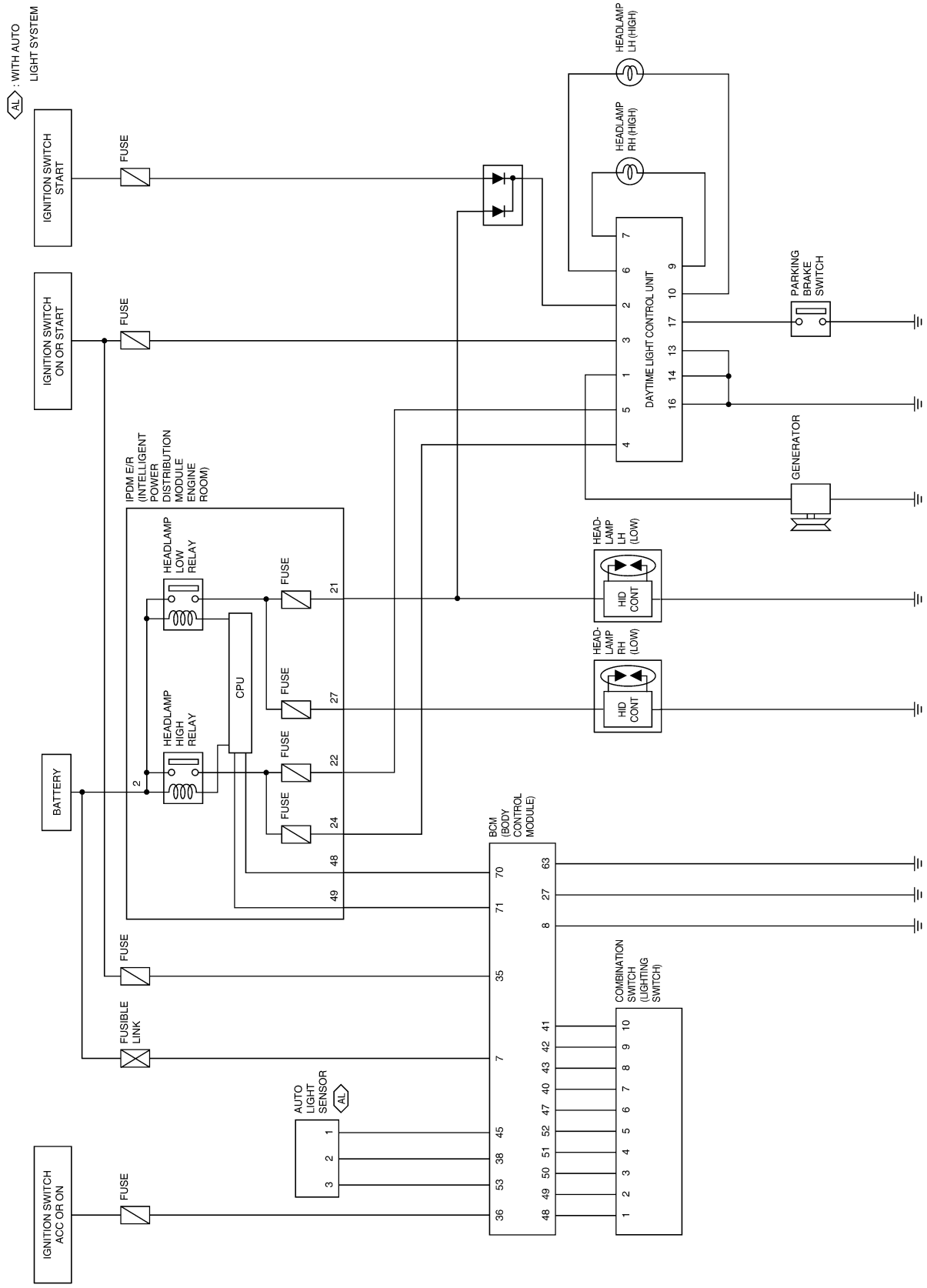

LKWA0024E

Wiring Diagram — DTRL —
HALOGEN

EKS0041D

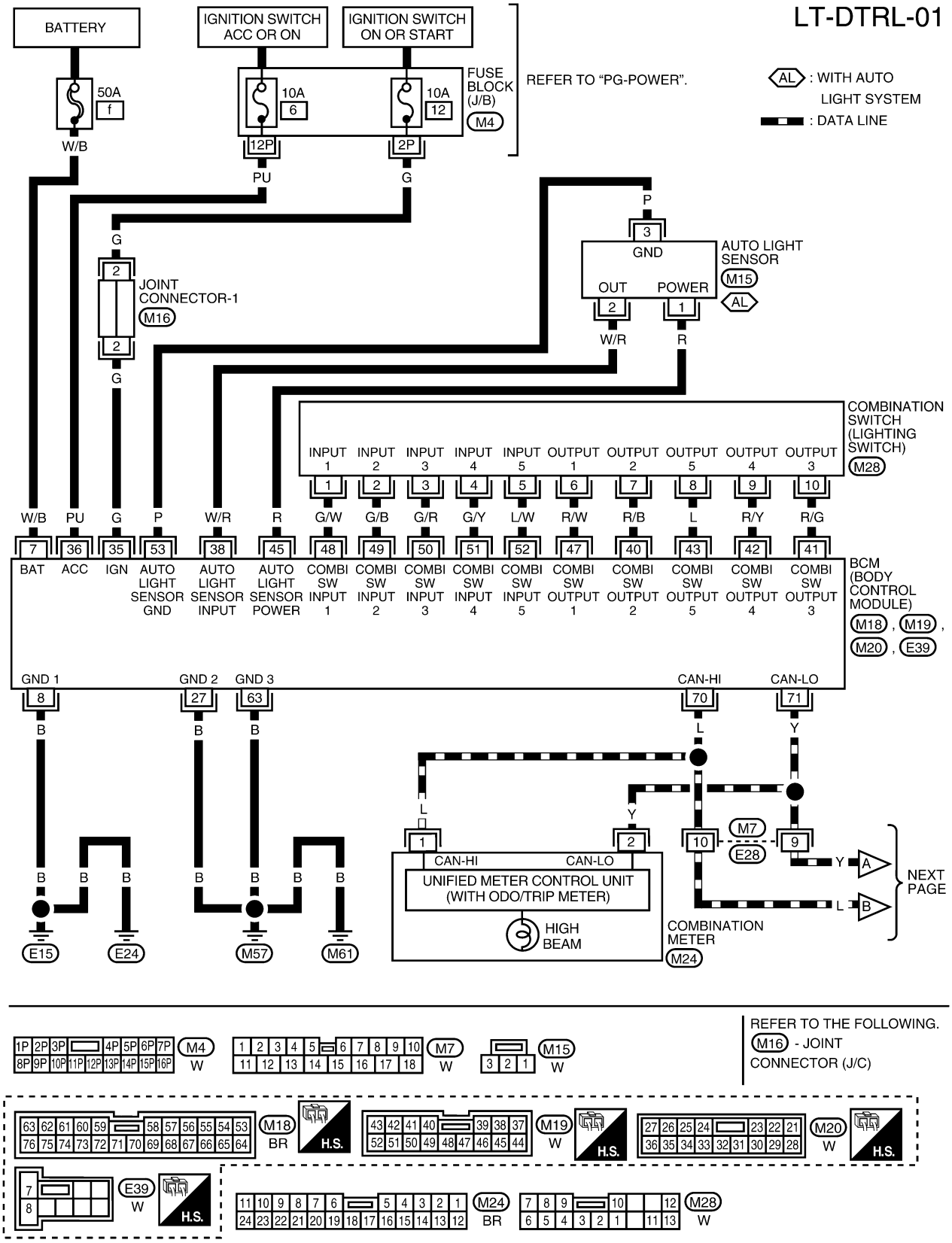

LKWA0025E

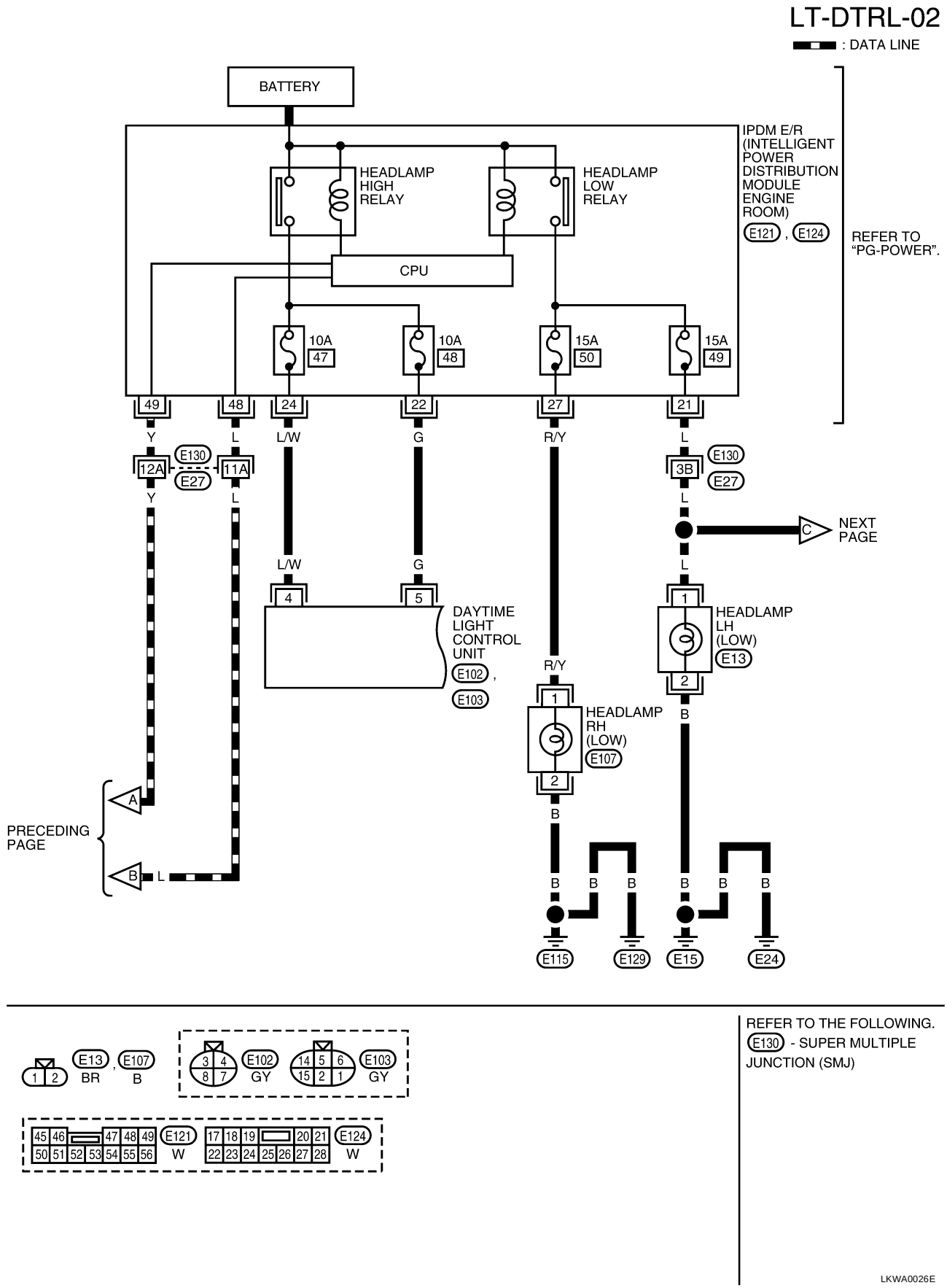

REFER TO THE FOLLOWING.
E130 - SUPER MULTIPLE JUNCTION (SMJ)

LKWA0026E

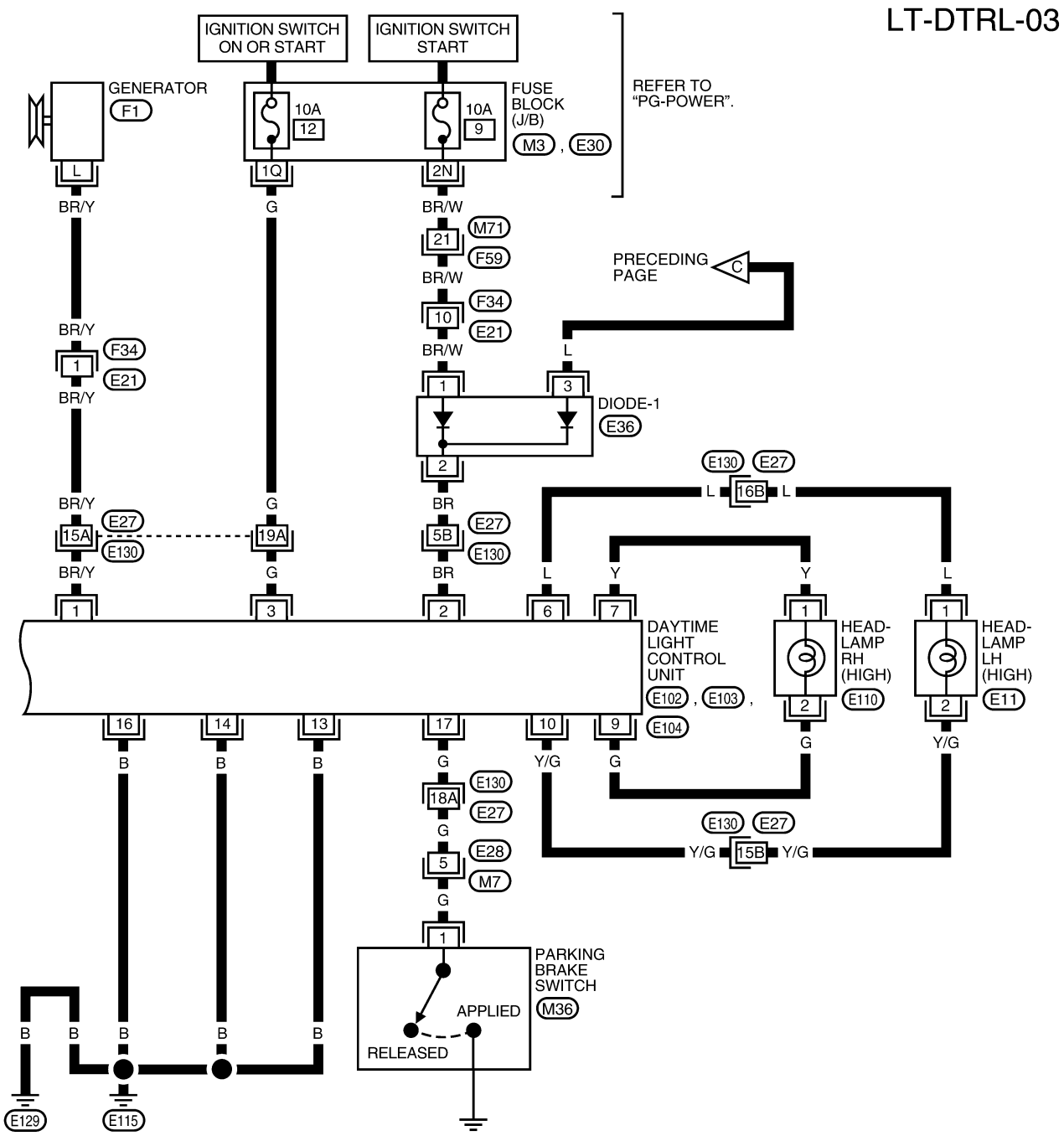
LT-DTRL-03
IGNITION SWITCH ON OR START
IGNITION SWITCH START
GENERATOR
F1
10A
12
10A
9
FUSE BLOCK (J/B)
M3 , E30
REFER TO "PG-POWER".
L
1Q
2N
BR/Y
G
BR/W
M71
21
F59
BR/W
F34
10
E21
PRECEDING PAGE
C
BR/Y
F34
1
E21
BR/Y
BR/W
L
1
3
DIODE-1
E36
2
E130 E27
L 16B L
BR/Y
E27
15A
E130
G
19A
BR
E27
5B
E130
BR/Y
G
BR
L
Y
Y
L
1
3
2
6
7
DAYTIME LIGHT CONTROL UNIT
E102 , E103 ,
E104
HEAD-LAMP RH (HIGH)
E110
HEAD-LAMP LH (HIGH)
E11
16
14
13
17
10
9
B
B
B
G
Y/G
G
G
Y/G
E130
18A
E27
G
E28
5
M7
G
E130 E27
Y/G 15B Y/G
1
PARKING BRAKE SWITCH
M36
APPLIED
RELEASED
B B B B B
E129
E115
REFER TO THE FOLLOWING.
E130 - SUPER MULTIPLE JUNCTION (SMJ)
M3 W
E30 W
M7 W
M36 B
E11 B , E110 B
E36
E102 GY
E103 GY
E104 GY
F1 W
F34 GY
F59 W
LKWA0027E

XENON

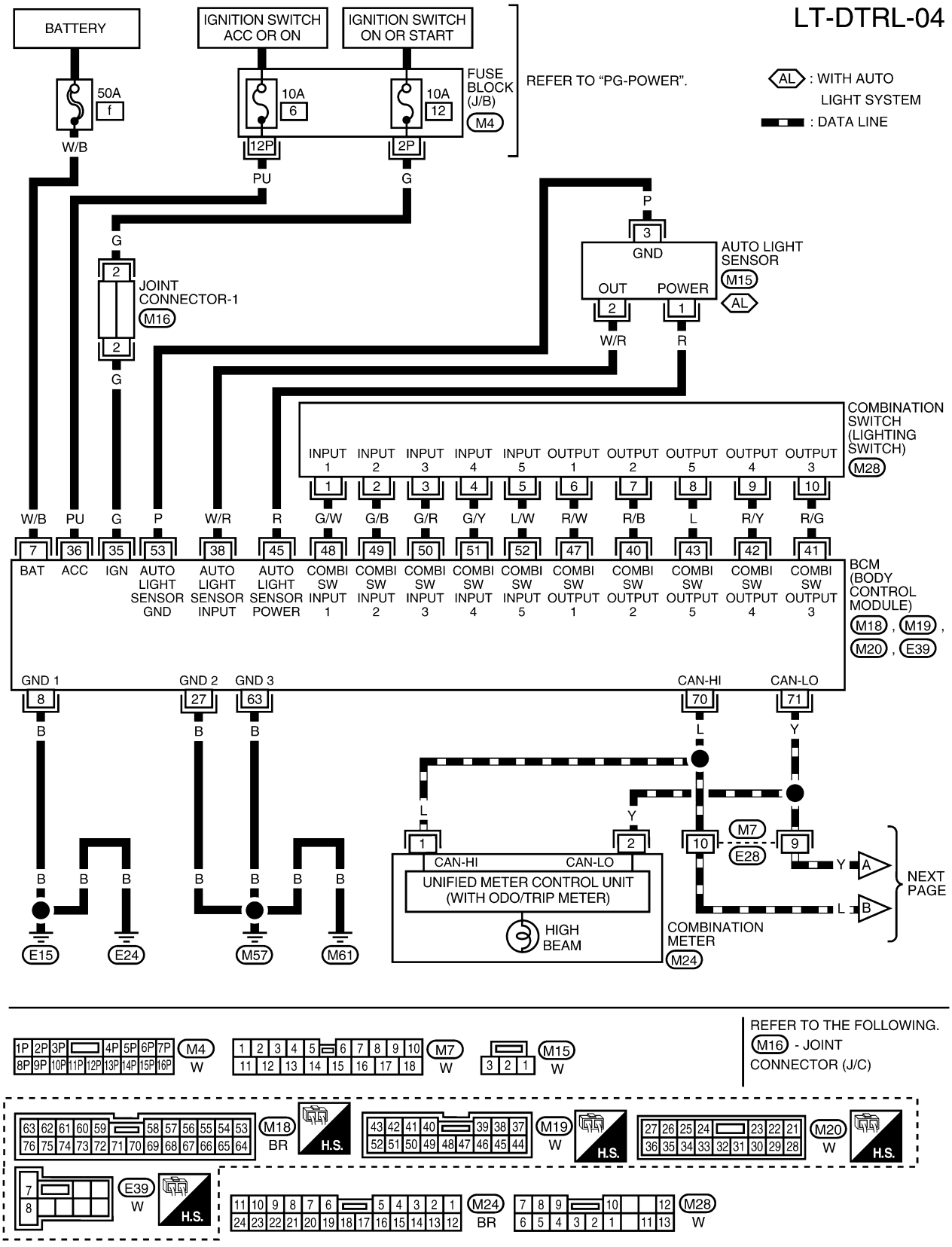

LKWA0028E

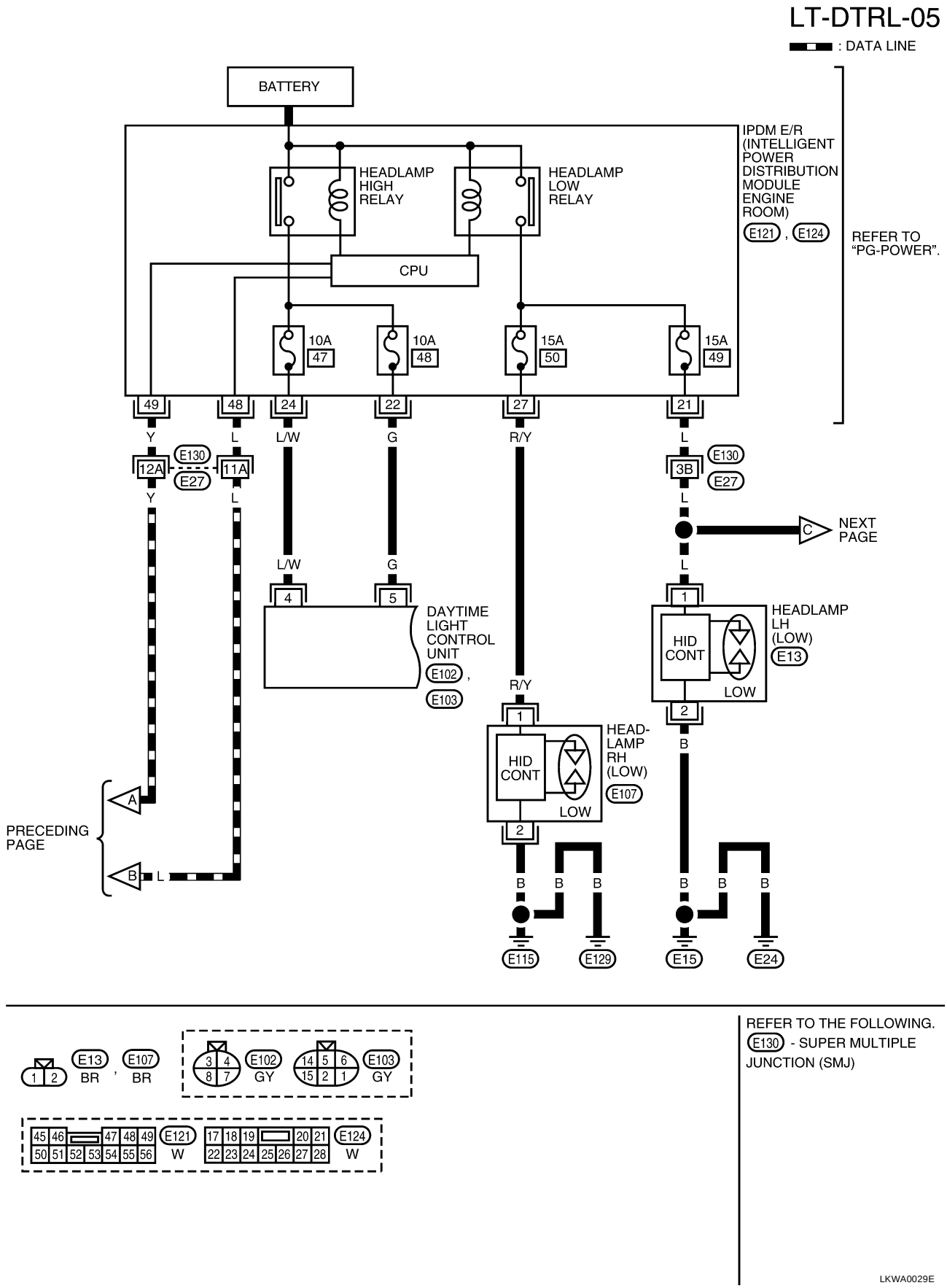
LT-DTRL-05
: DATA LINE
BATTERY
IPDM E/R (INTELLIGENT POWER DISTRIBUTION MODULE ENGINE ROOM)
E121 , E124
REFER TO "PG-POWER".
HEADLAMP HIGH RELAY
HEADLAMP LOW RELAY
CPU
10A 47
10A 48
15A 50
15A 49
49 48 24 22 27 21
Y L L/W G R/Y L
E130
12A 11A
E27
3B
NEXT PAGE
C
L/W G
4 5
DAYTIME LIGHT CONTROL UNIT
E102 , E103
HEADLAMP LH (LOW)
E13
HID CONT
LOW
R/Y
HEAD-LAMP RH (LOW)
E107
PRECEDING PAGE
A
B
B B B
E115 E129 E15 E24
E13 BR , E107 BR
E102 GY
E103 GY
E121 W
E124 W
REFER TO THE FOLLOWING.
E130 - SUPER MULTIPLE JUNCTION (SMJ)
LKWA0029E

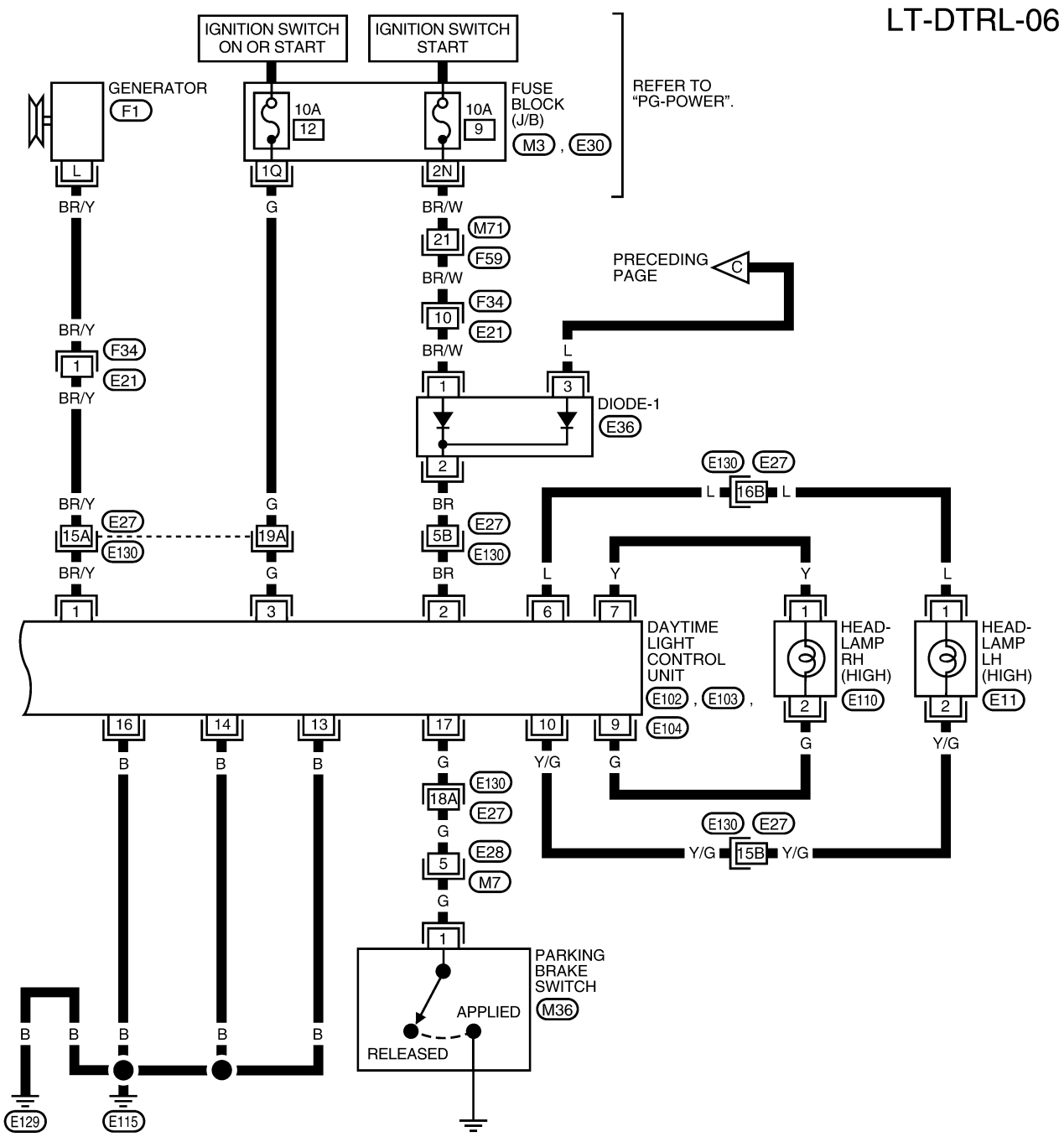

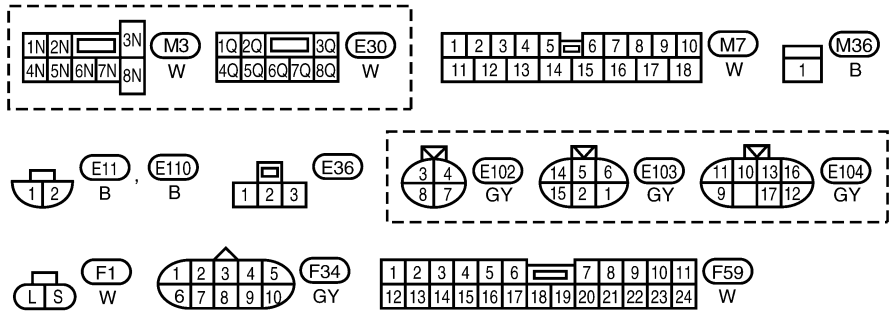

REFER TO THE FOLLOWING.
E130 - SUPER MULTIPLE JUNCTION (SMJ)

LKWA0030E

Terminals and Reference Value for Daytime Light Control Unit

EKS0041E

Terminal No.	Wire color	Item	Condition	Voltage (Approx.)
1	BR/Y	Generator	When turning ignition switch to “ON”	Less than 1V
			When engine is running	Battery voltage
			When turning ignition switch to “OFF”	Less than 1V
2	BR	Start signal	When turning ignition switch to “START”	Battery voltage
			When turning ignition switch to “ON” from “START”	Less than 1V
			When turning ignition switch to “OFF”	Less than 1V
3	G	Power source	When turning ignition switch to “ON”	Battery voltage
			When turning ignition switch to “START”	Battery voltage
			When turning ignition switch to “OFF”	Less than 1V
4	L/W	LH light fuse	When lighting switch is turned to the 2ND position with “HI BEAM” or “FLASH TO PASS” position	Battery voltage
			When lighting switch is turned to “FLASH TO PASS” position with ignition switch “ON” position	Battery voltage
5	G	RH light fuse	When lighting switch is turned to the 2ND position with “HI BEAM” or “FLASH TO PASS” position	Battery voltage
			When lighting switch is turned to “FLASH TO PASS” position with ignition switch “ON” position	Battery voltage
6	L	LH HI beam	When lighting switch is turned to the 2ND position with “HI BEAM” or “FLASH TO PASS” position	Battery voltage
			When releasing parking brake with engine running and turning lighting switch to “OFF” (daytime light operation) **CAUTION:** **Block wheels and ensure selector lever is in N or P position.**	Half battery voltage
7	Y	RH HI beam	When lighting switch is turned to the 2ND position with “HI BEAM” or “FLASH TO PASS” position	Battery voltage
			When releasing parking brake with engine running and turning lighting switch to “OFF” (daytime light operation) **CAUTION:** **Block wheels and ensure selector lever is in N or P position.**	Battery voltage
9	G	RH HI beam (ground)	When turning lighting switch to the 2ND position with “HI BEAM“ or “FLASH TO PASS” position	Less than 1V
			When releasing parking brake with engine running and turning lighting switch to “OFF” (daytime light operation) **CAUTION:** **Block wheels and ensure selector lever is in N or P position.**	Half battery voltage
10	Y/G	LH HI beam (ground)	When turning lighting switch to the 2ND position with “HI BEAM” or “FLASH TO PASS” position	Less than 1V
			When releasing parking brake with engine running and turning lighting switch to “OFF” (daytime light operation) **CAUTION:** **Block wheels and ensure selector lever is in N or P position.**	Less than 1V
13	B	Ground	—	—
14	B	Ground	—	—
16	B	Ground	—	—

Terminal No.	Wire color	Item	Condition	Voltage (Approx.)
17	G	Parking brake switch	When parking brake is released	Battery voltage
			When parking brake is set	Less than 1.7V

Aiming Adjustment

EKS0041F

Refer to LT-23, "Aiming Adjustment" .

Bulb Replacement

EKS0041G

Refer to LT-24, "Bulb Replacement" .

Removal and Installation

EKS0041H

Refer to LT-25, "Removal and Installation" .

Disassembly and Assembly

EKS0041I

Refer to LT-26, "Disassembly and Assembly" .

AUTO LIGHT SYSTEM

PFP:28491

Component Parts and Harness Connector Location

EKS0041J

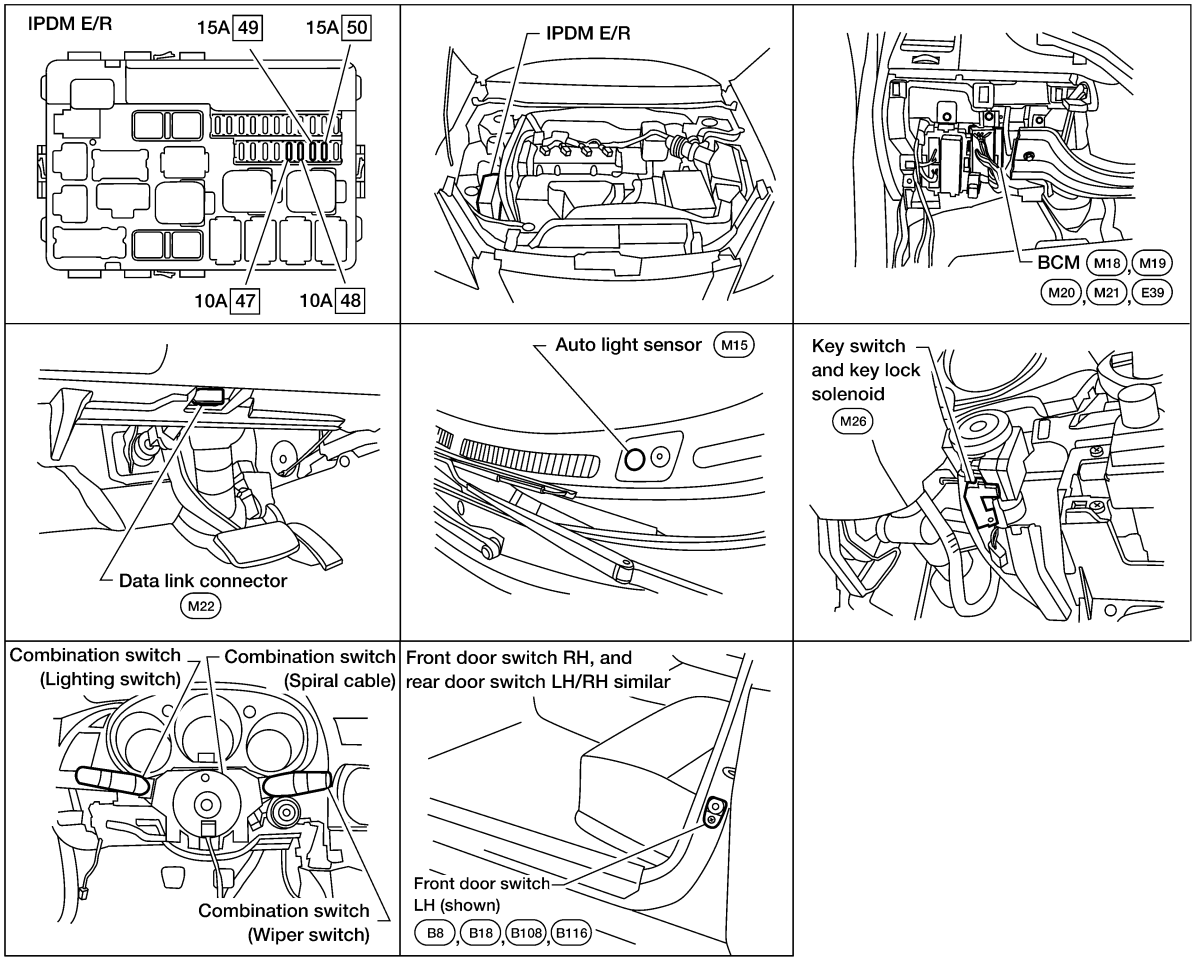

WKIA0147E

System Description

EKS0041K

This system automatically turns the parking lamps and the headlamps on and off in accordance with ambient light.
Timing for when the lamps turn on/off can be selected using four modes.

OUTLINE

The auto light control system uses an optical sensor that detects the brightness of outside light.
When the lighting switch is in AUTO position, it automatically turns on/off the parking lamps and the headlamps (and fog lamps, if equipped) in accordance with the ambient light. Sensitivity can be adjusted in four steps. For the details of the setting, refer to LT-64, "SETTING CHANGE FUNCTIONS" .
When the lighting switch is in "AUTO" position, power is supplied

- from BCM (body control module) terminal 45
- to auto light sensor terminal 1.

When lighting switch is in “AUTO” position, ground is supplied

- from BCM (body control module) terminal 53
- to auto light sensor terminal 3.

When ignition switch is turn to "ON” or ”START” position, and
when outside brightness is darker than prescribed level, input is supplied

- to BCM (body control module) terminal 38
- from auto light sensor terminal 2.

The headlamps will then illuminate. For a description of headlamp operation, refer to LT-5, "System Description" (USA), or LT-28, "System Description" (Canada).

BATTERY SAVER CONTROL

When the combination switch (lighting switch) is in the AUTO position, and the ignition switch is turned from ON or ACC to OFF, and one of the doors is opened, the battery saver feature is activated.
Under this condition, the headlamps remain illuminated for 5 minutes, unless the combination switch (lighting switch position is changed. If the combination switch (lighting switch) position is changed, then the headlamps are turned off.

SHUT OFF DELAY

When the ignition switch is turned from ON to OFF while the auto light system is activated and the headlamps are illuminated, the shut off delay feature is activated. Under this condition, the BCM no longer receives a voltage signal at terminal 35, and this starts the auto light shut off delay timer. The shut off delay timer is active until one of the doors is opened, or the combination switch (lighting switch) position is changed. If one of the doors is opened, the shut off delay feature is deactivated, and the battery saver control feature is activated. If the combinations switch (lighting switch) position is changed, the headlamps are turned off.

CAN Communication System Description

EKS0041L

CAN (Controller Area Network) is a serial communication line for real time application. It is an on-vehicle multiplex communication line with high data communication speed and excellent error detection ability. Many electronic control units are equipped onto a vehicle, and each control unit shares information and links with other control units during operation (not independent). In CAN communication, control units are connected with 2 communication lines (CAN H line, CAN L line) allowing a high rate of information transmission with less wiring. Each control unit transmits/receives data but selectively reads required data only.

FOR TCS MODELS

System diagram

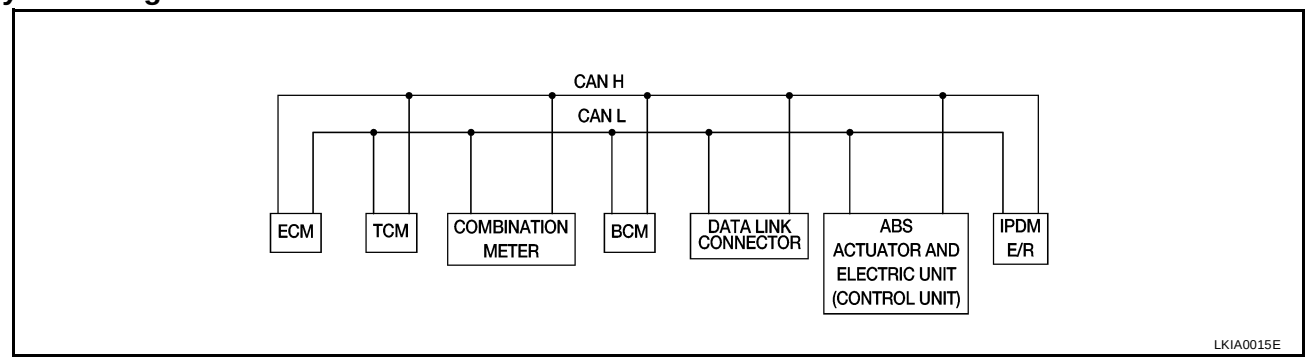

Input/output signal chart

T: Transmit R: Receive

Signals	ECM	TCM	COMBINATION METER	BCM	ABS/TCS control unit	IPDM E/R
Engine speed signal	T		R		R	
Engine coolant temperature signal	T		R			
Accelerator pedal position signal	T					
Fuel consumption monitor signal	T		R			
A/T warning lamp signal		T	R			
A/T position indicator signal	R	T	R	R(R range only)	R	
ABS operation signal	R				T	
TCS operation signal	R	R			T	
Air conditioner switch signal	R			T		
Air conditioner compressor signal	R					T
A/C compressor request signal	T					R
Cooling fan motor operation signal	R					T
Cooling fan speed request signal	T					R
Position lights request			R	T		R

Signals	ECM	TCM	COMBINA-TION METER	BCM	ABS/TCS control unit	IPDM E/R
Position lights status				R		T
Low beam request				T		R
Low beam status	R			R		T
High beam request			R	T		R
High beam status	R			R		T
Front fog lights request				T		R
Front fog light status				R		T
OD cancel switch signal		R	T			R
Brake switch signal		R	T			
Vehicle speed signal	R		T			
	R		T	R		
Oil pressure switch			R			T
Sleep request1			R	T		
Sleep request2				T		R
N range switch signal		R	T			
P range switch signal		R	T			
Seat belt buckle switch signal			T	R		
Door switch signal			R	T		R
Tail lamp request			R	T		R
Turn indicator signal			R	T		
Buzzer output signal			R	T		
Trunk switch signal			R	T		
ASCD main switch signal	T		R			
ASCD cruise signal	T		R			
Wiper operation				R		T
Wiper stop position signal				R		T
Rear window defogger switch signal				T		R
Rear window defogger control signal	R			R		T

FOR A/T MODELS

System diagram

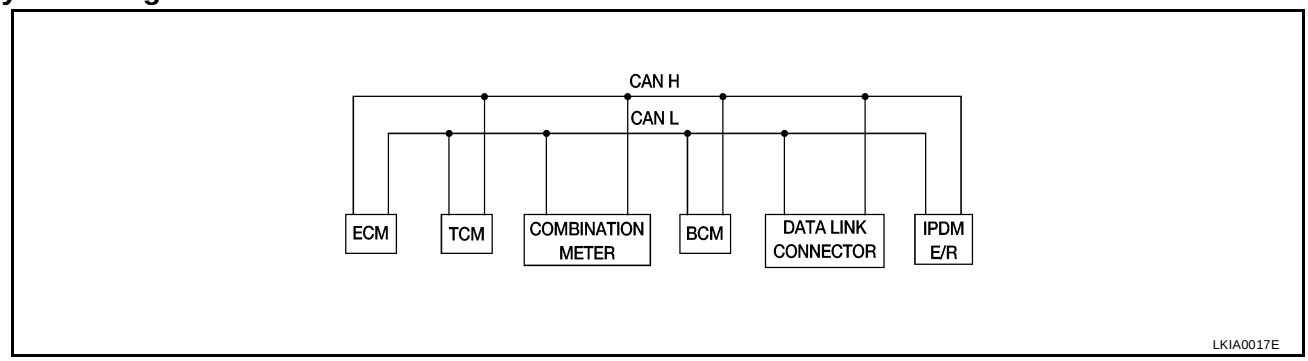

Input/output signal chart

T: Transmit R: Receive

Signals	ECM	TCM	COMBINATION METER	BCM	IPDM E/R
Engine speed signal	T		R		
Engine coolant temperature signal	T		R		
Accelerator pedal position signal	T				R
Fuel consumption monitor signal	T		R		
A/T warning lamp signal		T	R		
A/T position indicator signal	R	T	R	R(R range only)	
Air conditioner switch signal	R			T	
Air conditioner compressor signal	R				T
A/C compressor request signal	T				R
Blower fan switch signal	R(QR25DE)			T	
Cooling fan motor operation signal	R			T	
Cooling fan speed request signal	T				R
Position lights request			R	T	R
Position lights status				R	T
Low beam request				T	R
Low beam status	R			R	T
High beam request			R	T	R
High beam status	R			R	T
Front fog lights request				T	R
Front fog light status				R	T
OD cancel switch signal		R	T		R
Brake switch signal		R	T		
Vehicle speed signal	R		T		
	R		T	R	
Oil pressure switch			R		T
Sleep request1			R	T	
Sleep request2				T	R
N range switch signal		R	T		
P range switch signal		R	T		
Seat belt buckle switch signal			T	R	
Door switch signal			R	T	R
Tail lamp request			R	T	R
Turn indicator signal			R	T	
Buzzer output signal			R	T	
Trunk switch signal			R	T	
ASCD main switch signal	T		R		
ASCD cruise signal	T		R		
Wiper operation				R	T
Wiper stop position signal				R	T
Rear window defogger switch signal				T	R
Rear window defogger control signal	R			R	T

FOR M/T MODELS

System diagram

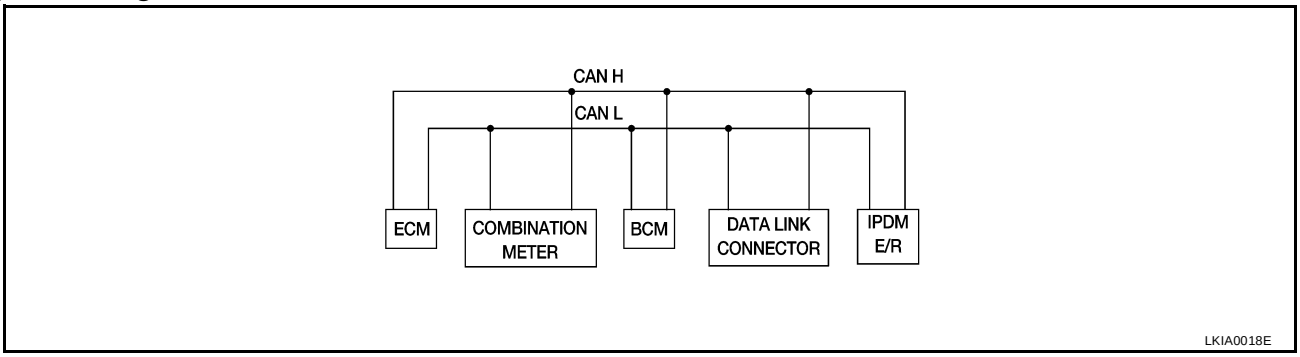

Input/output signal chart

T: Transmit R: Receive

Signals	ECM	COMBINATION METER	BCM	IPDM E/R
Engine speed signal	T			
Engine coolant temperature signal	T			
Fuel consumption monitor signal	T			
Air conditioner switch signal	R		T	
Air conditioner compressor signal	R			T
A/C compressor request signal	T			R
Blower fan switch signal	R(QR25DE)		T	
Cooling fan motor operation signal	R			T
Cooling fan speed request signal	T			R
Position lights request		R	T	R
Position lights status			R	T
Low beam request			T	R
Low beam status	R		R	T
High beam request		R	T	R
High beam status	R		R	T
Front fog lights request			T	R
Front fog light status			R	T
Vehicle speed signal	R	T		
Oil pressure switch		R		T
Sleep request1		R	T	
Sleep request2			T	R
Seat belt buckle switch signal		T	R	
Door switch signal		R	T	R
Tail lamp request		R	T	R
Turn indicator signal		R	T	
Buzzer output signal		R	T	
Trunk switch signal		R	T	
ASCD main switch signal	T	R		
ASCD cruise signal	T	R		
Wiper operation			R	T
Wiper stop position signal			R	T

Signals	ECM	COMBINATION METER	BCM	IPDM E/R
Rear window defogger switch signal			T	R
Rear window defogger control signal	R		R	T

Major Components and Functions

EKS0041M

Components	Functions
BCM	● Turns on/off circuits of tail light and headlamp according to signals from light sensor, lighting switch (AUTO), driver door switch, and ignition switch (ON, OFF), and vehicle signal from combination meter.
Auto light sensor	● Converts ambient light (lux) to voltage, and sends it to BCM. (Detects light from 50 to 1,300 lux)
Combination meter	● Sends vehicle signal to BCM via CAN communication line.

Schematic

EKS0041N

HALOGEN (WITH DAYTIME LIGHT SYSTEM)

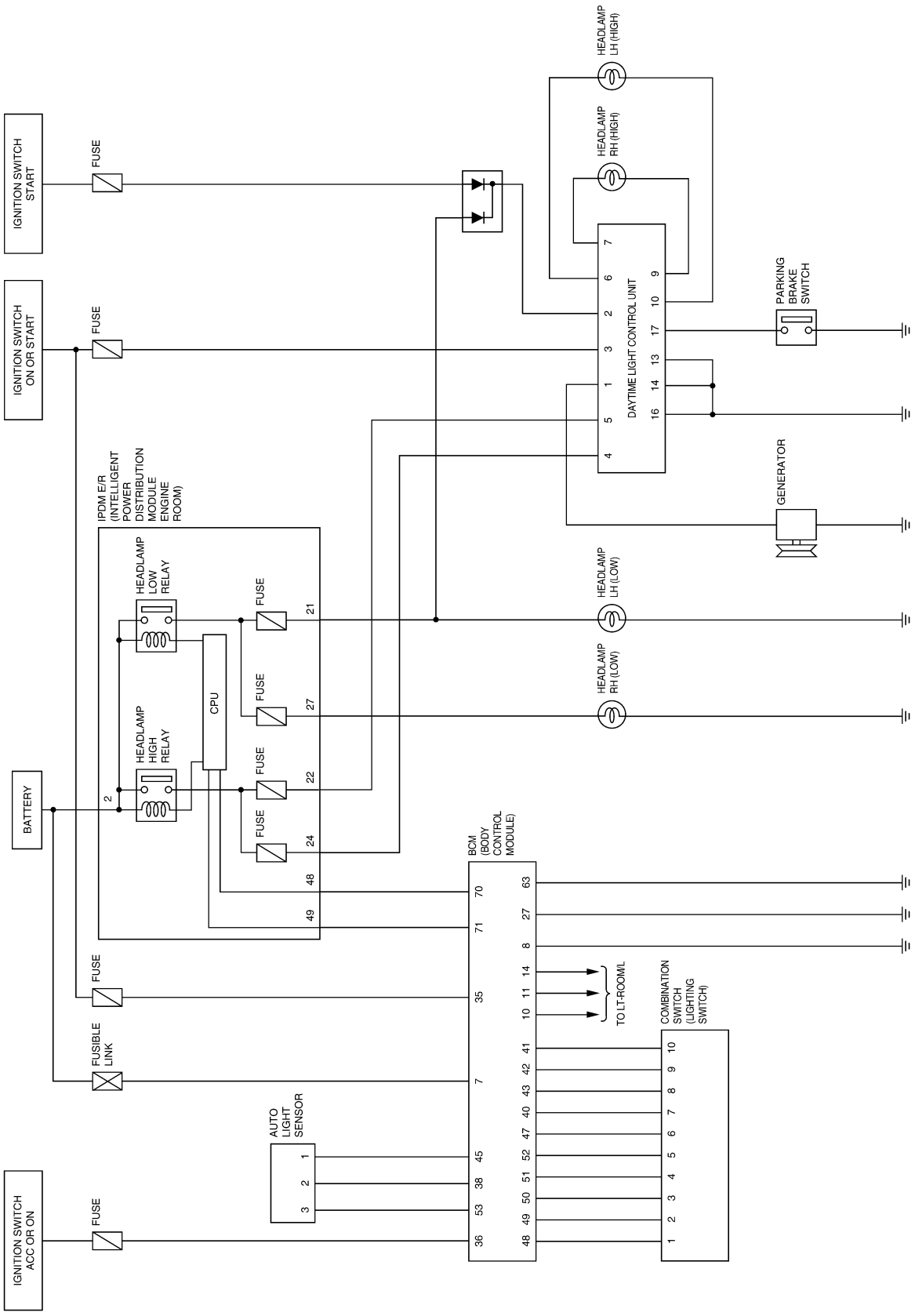

WKWA0098E

XENON (WITH DAYTIME LIGHT SYSTEM)

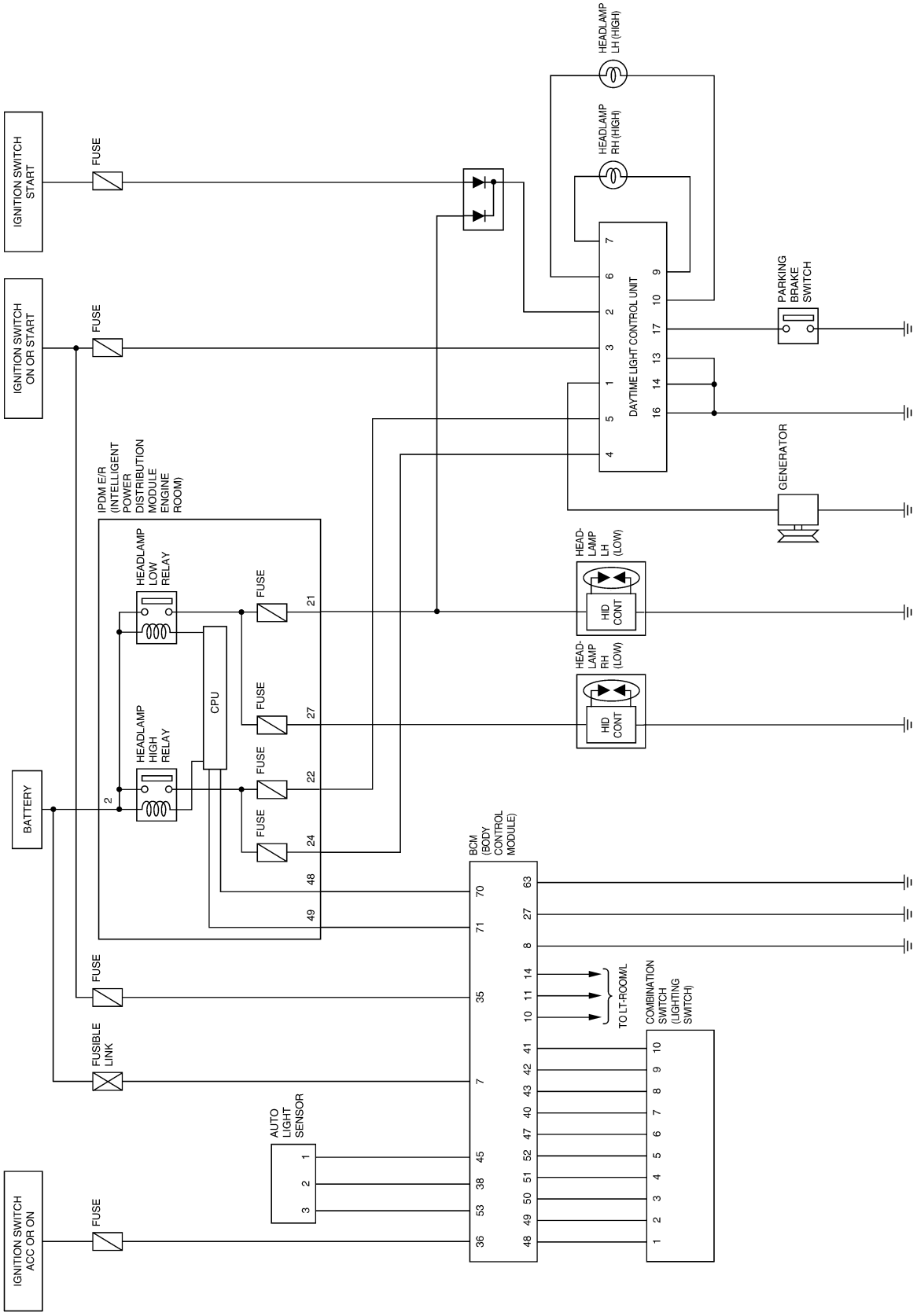

WKWA0099E

Wiring Diagram — AUTO/L —
HALOGEN (USA)

EKS0041O

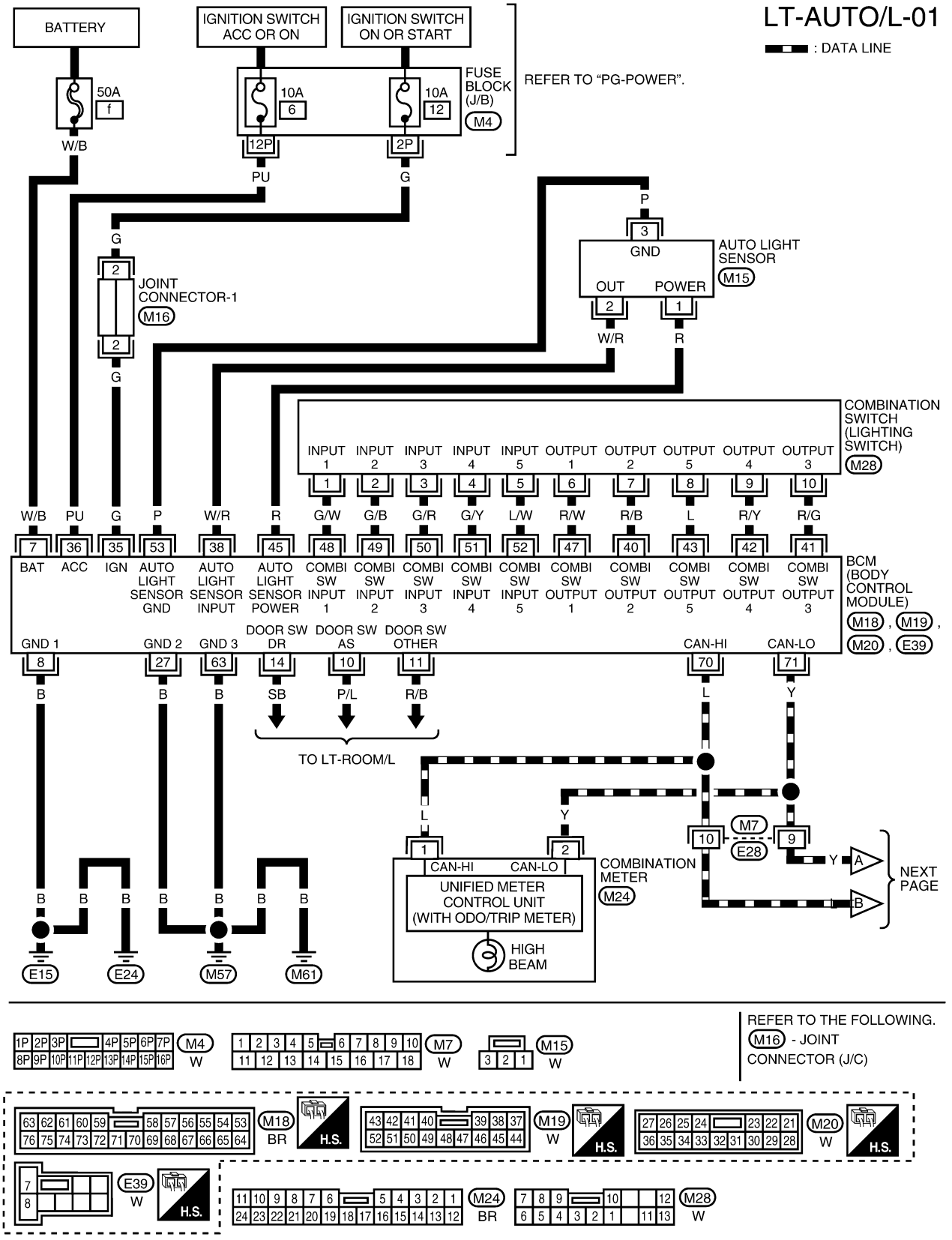

LT-AUTO/L-02

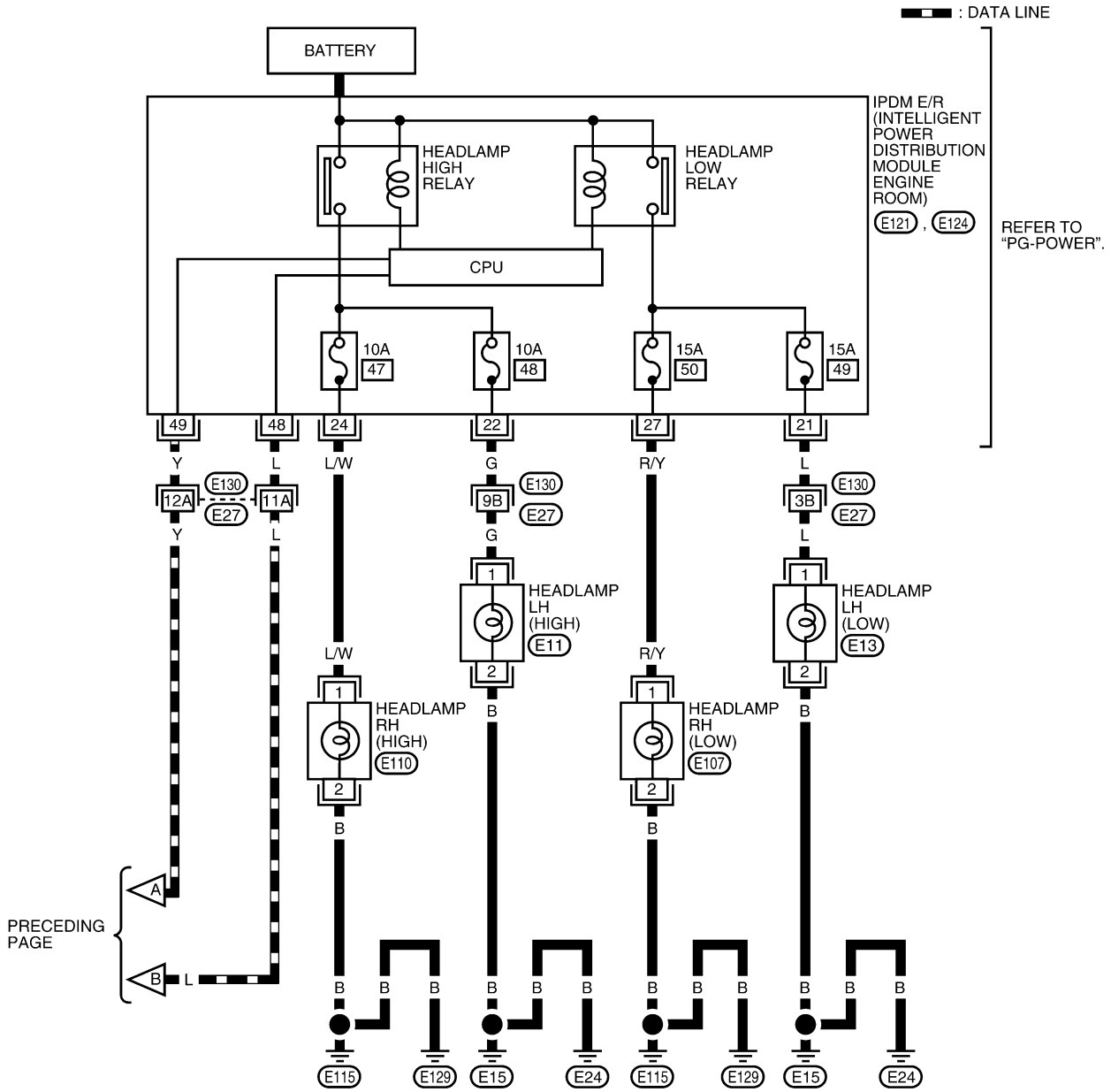

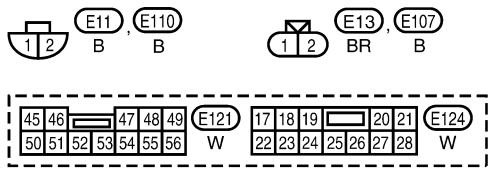

REFER TO THE FOLLOWING.
E130 - SUPER MULTIPLE JUNCTION (SMJ)

WKWA0101E

XENON (USA)

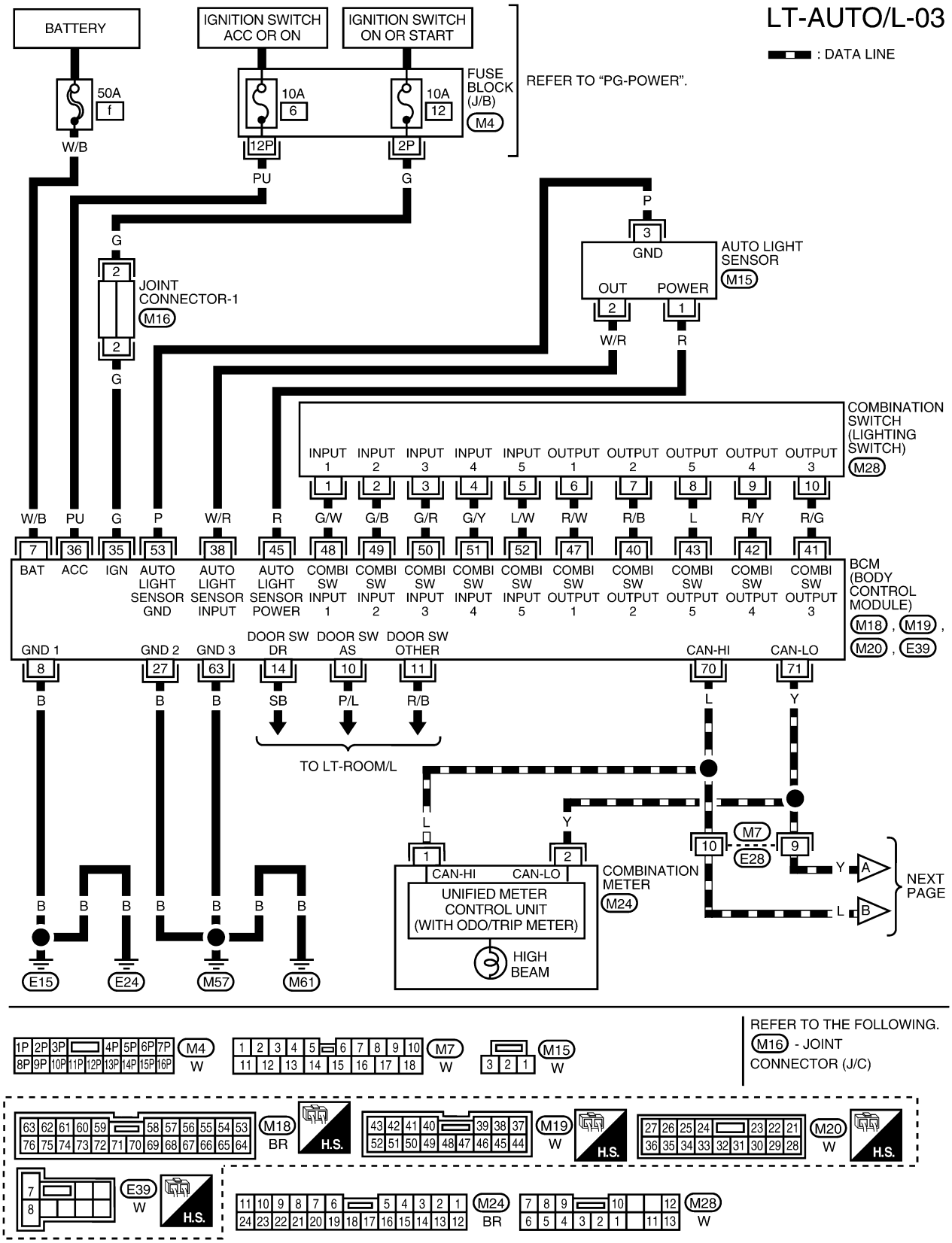

WKWA0102E

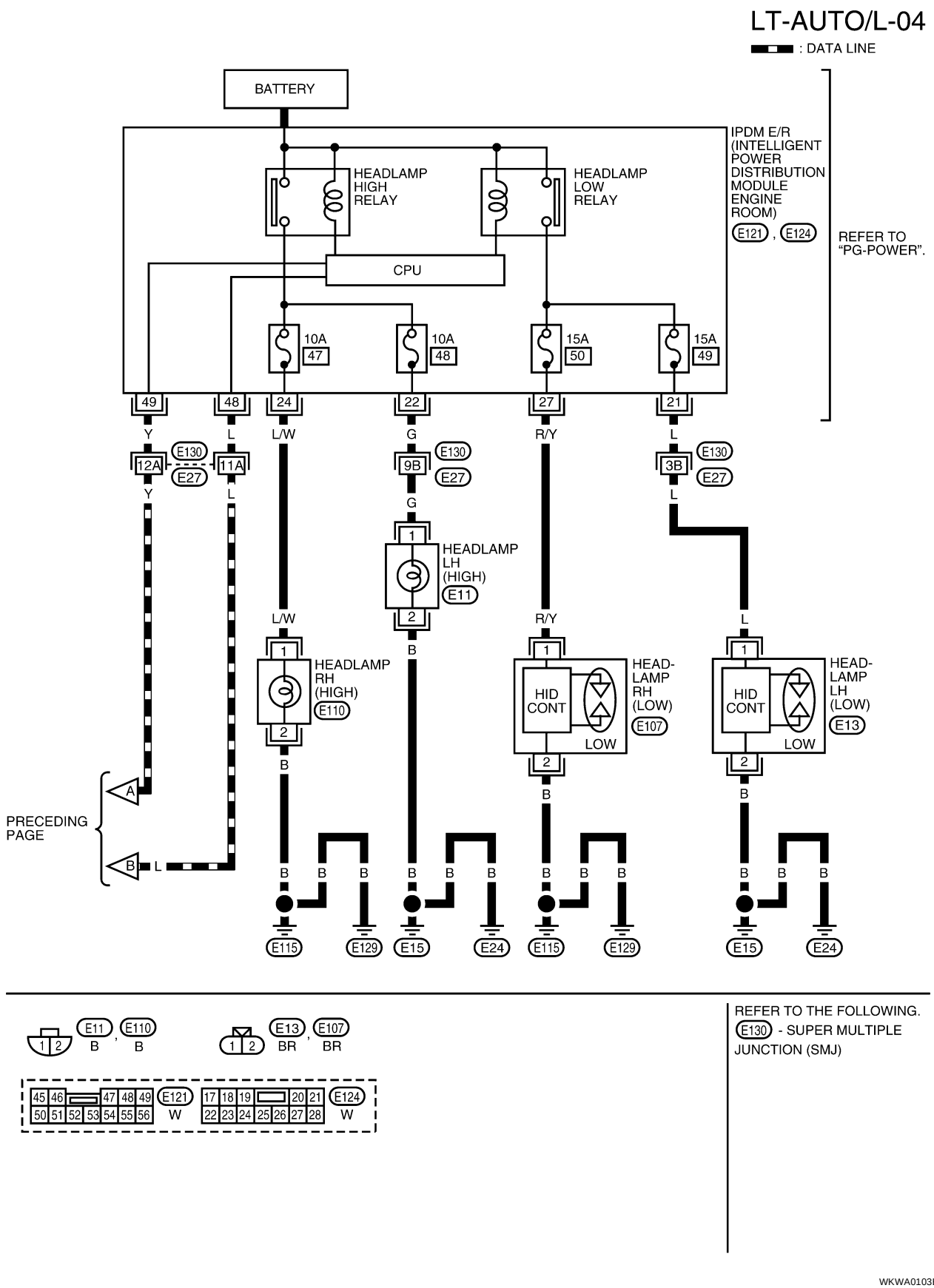
LT-AUTO/L-04
: DATA LINE
BATTERY
IPDM E/R (INTELLIGENT POWER DISTRIBUTION MODULE ENGINE ROOM)
E121 , E124
REFER TO "PG-POWER".
HEADLAMP HIGH RELAY
HEADLAMP LOW RELAY
CPU
10A 47
10A 48
15A 50
15A 49
49 48 24 22 27 21
Y L L/W G R/Y L
E130 E27
12A 11A 9B 3B
HEADLAMP LH (HIGH) E11
HEADLAMP RH (HIGH) E110
HID CONT
HEAD-LAMP RH (LOW) E107
HEAD-LAMP LH (LOW) E13
LOW
PRECEDING PAGE
A B
E115 E129 E15 E24
E11 , E110 B B
E13 , E107 BR BR
45 46 47 48 49 50 51 52 53 54 55 56 E121 W
17 18 19 20 21 22 23 24 25 26 27 28 E124 W
REFER TO THE FOLLOWING.
E130 - SUPER MULTIPLE JUNCTION (SMJ)
WKWA0103E

HALOGEN (CANADA)

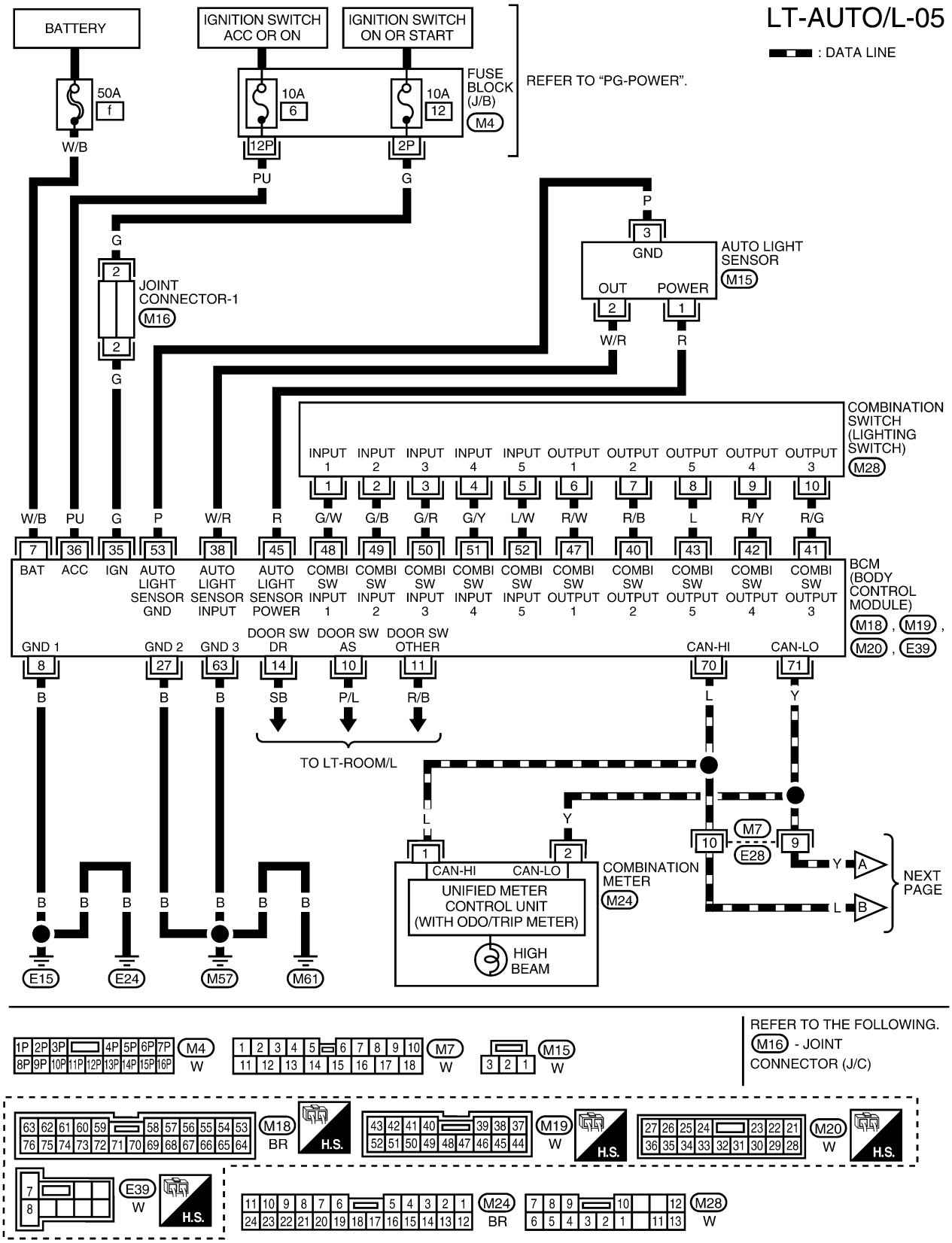

WKWA0104E

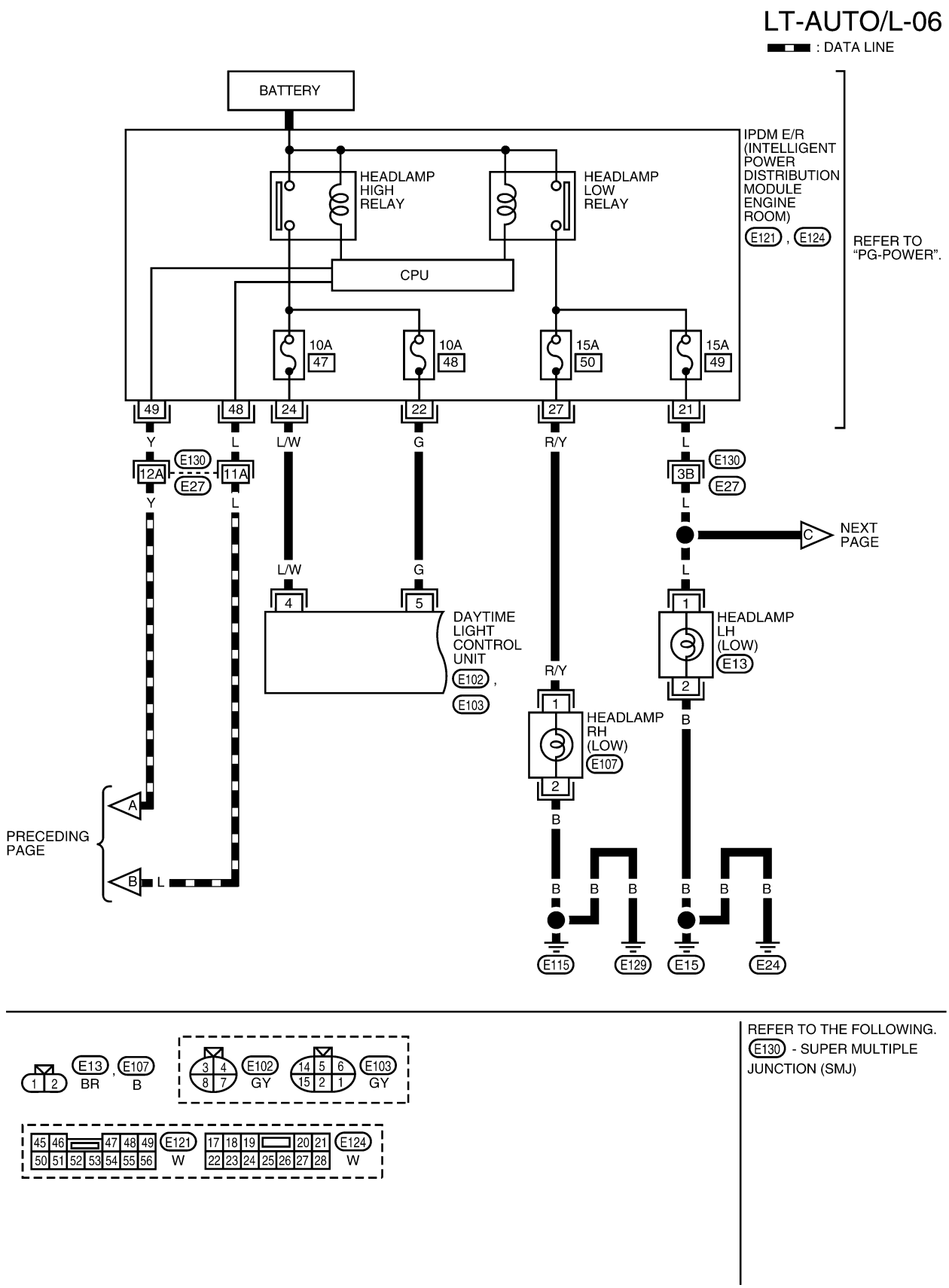
LT-AUTO/L-06
: DATA LINE
BATTERY
IPDM E/R (INTELLIGENT POWER DISTRIBUTION MODULE ENGINE ROOM)
E121 , E124
REFER TO "PG-POWER".
HEADLAMP HIGH RELAY
HEADLAMP LOW RELAY
CPU
10A 47
10A 48
15A 50
15A 49
49 48 24 22 27 21
Y L L/W G R/Y L
E130
12A 11A
E27
3B
NEXT PAGE
C
L/W G
4 5
DAYTIME LIGHT CONTROL UNIT
E102 , E103
R/Y
1 2
HEADLAMP LH (LOW)
E13
HEADLAMP RH (LOW)
E107
B
PRECEDING PAGE
A
B L
E115 E129 E15 E24
E13 , E107
BR B
E102 GY
E103 GY
E121 W
E124 W
REFER TO THE FOLLOWING.
E130 - SUPER MULTIPLE JUNCTION (SMJ)
WKWA0105E

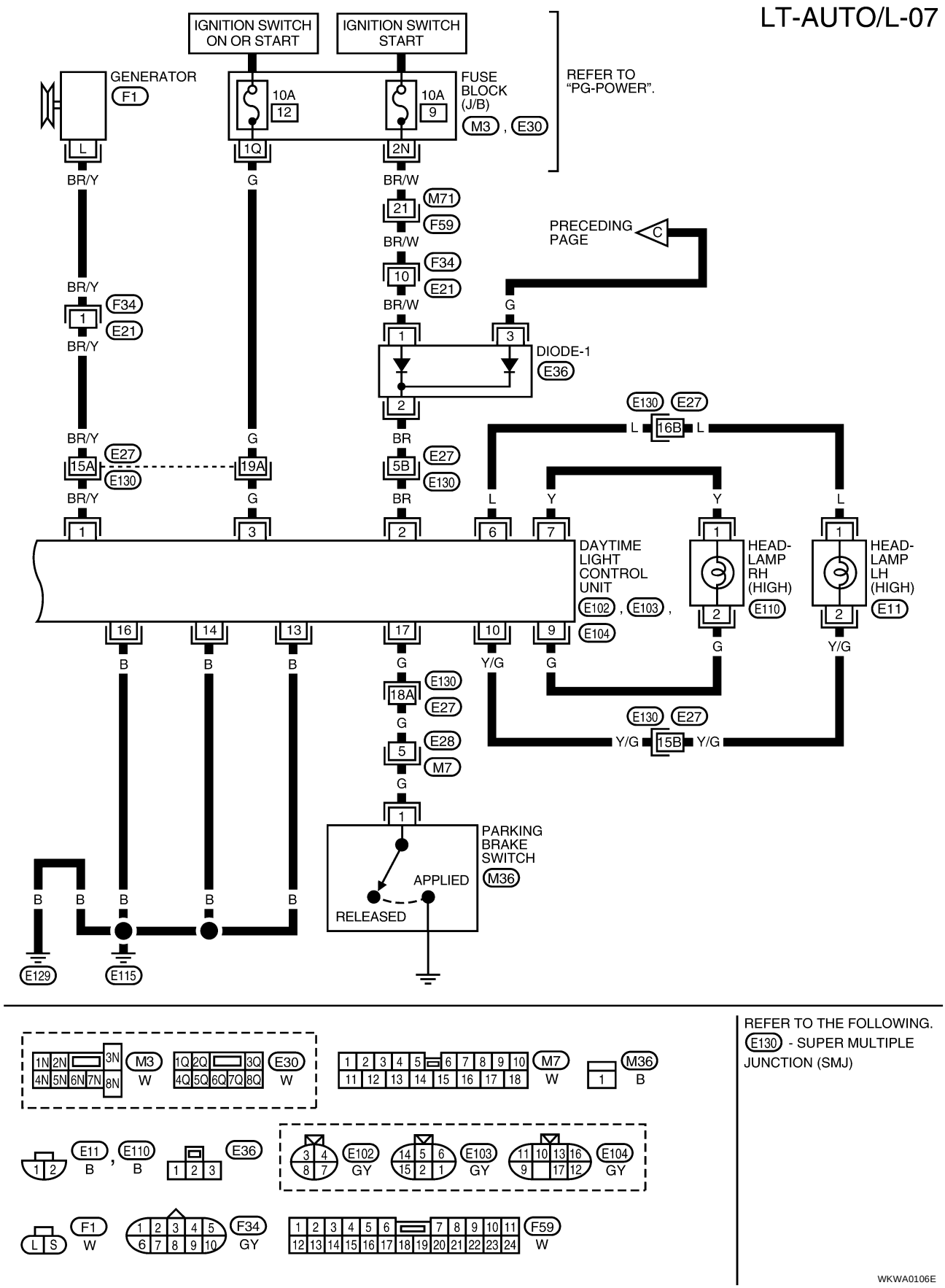
LT-AUTO/L-07
IGNITION SWITCH ON OR START
IGNITION SWITCH START
GENERATOR
F1
10A
12
10A
9
FUSE BLOCK (J/B)
M3 , E30
REFER TO "PG-POWER".
L
1Q
2N
BR/Y
G
BR/W
M71
21
F59
BR/W
F34
10
E21
PRECEDING PAGE
C
BR/Y
F34
1
E21
BR/Y
BR/W
G
1
3
DIODE-1
E36
2
E130 E27
L 16B L
BR/Y
E27
15A
E130
G
19A
BR
E27
5B
E130
L
Y
Y
L
BR/Y
G
BR
1
3
2
6
7
1
1
DAYTIME LIGHT CONTROL UNIT
E102 , E103 , E104
HEAD-LAMP RH (HIGH)
E110
HEAD-LAMP LH (HIGH)
E11
16
14
13
17
10
9
2
2
B
B
B
G
Y/G
G
G
Y/G
E130
18A
E27
G
E28
5
M7
G
E130 E27
Y/G 15B Y/G
1
PARKING BRAKE SWITCH
M36
APPLIED
RELEASED
B B B B B
E129
E115
REFER TO THE FOLLOWING.
E130 - SUPER MULTIPLE JUNCTION (SMJ)
1N 2N 3N 4N 5N 6N 7N 8N
M3
W
1Q 2Q 3Q 4Q 5Q 6Q 7Q 8Q
E30
W
1 2 3 4 5 6 7 8 9 10 11 12 13 14 15 16 17 18
M7
W
M36
B
E11 , E110
B B
E36
E102
GY
E103
GY
E104
GY
F1
W
F34
GY
F59
W
WKWA0106E

XENON (CANADA)

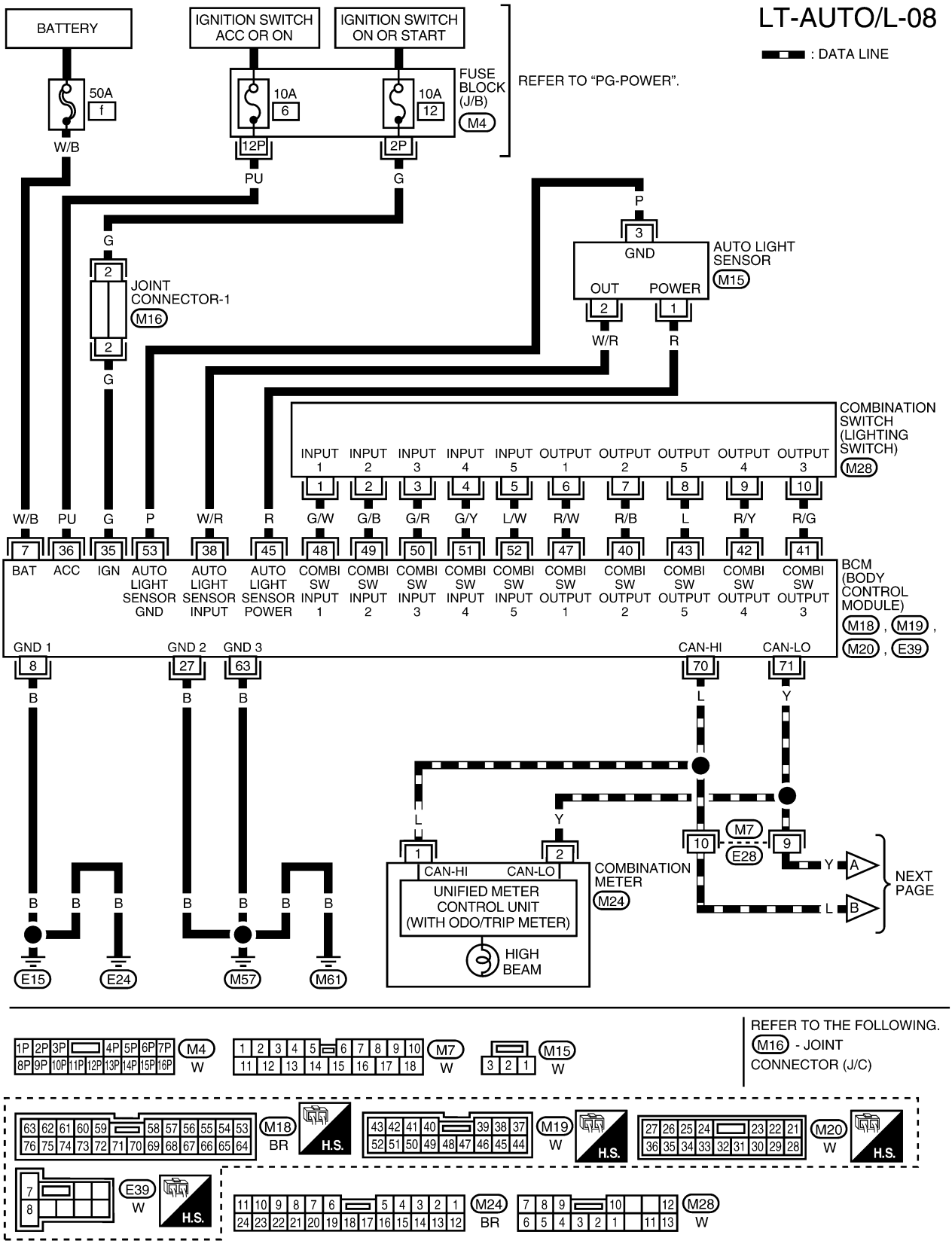

WKWA0107E

LT-AUTO/L-09

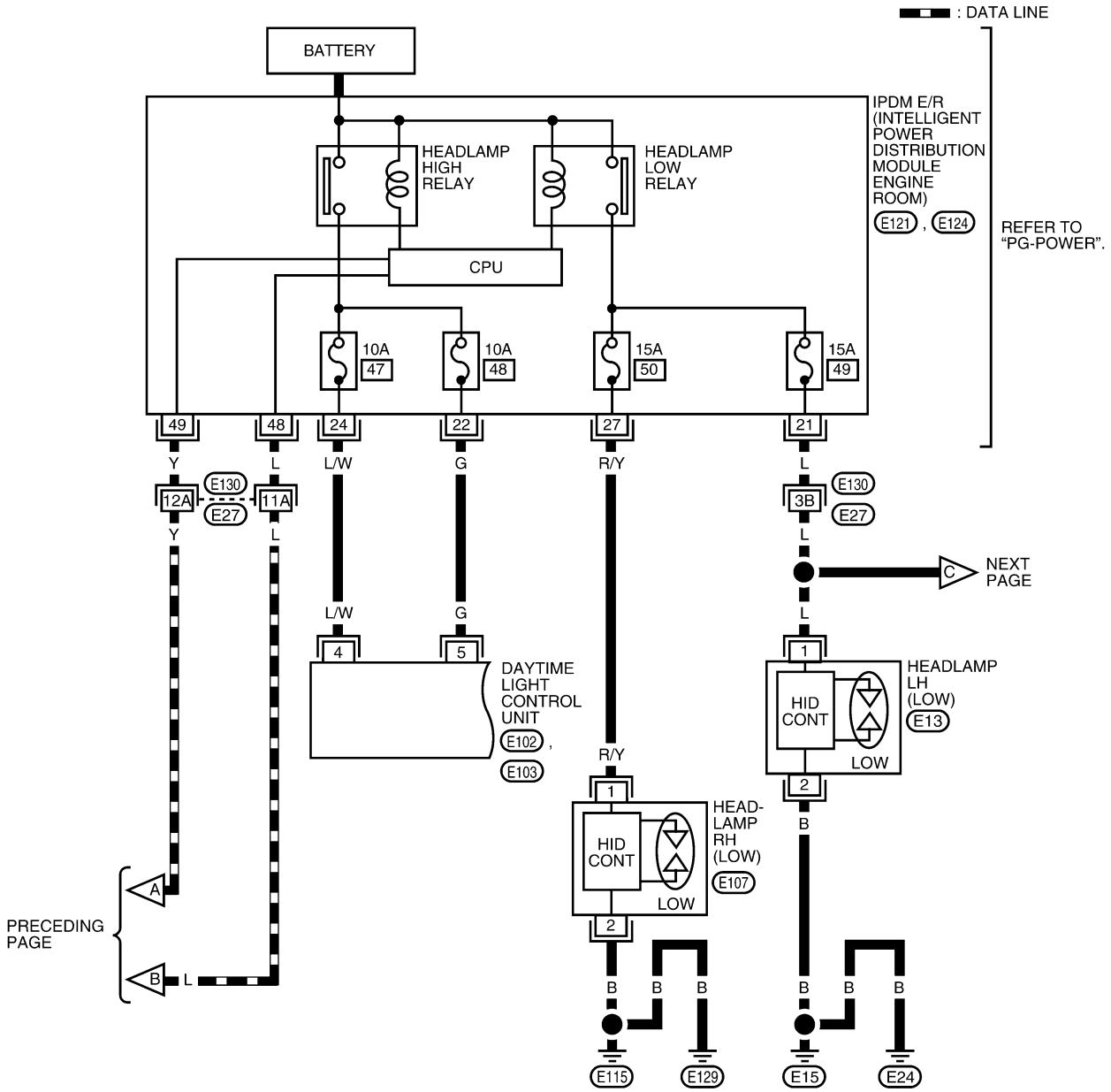

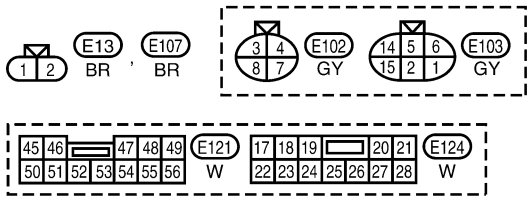

REFER TO THE FOLLOWING.
E130 - SUPER MULTIPLE JUNCTION (SMJ)

WKWA0108E

LT-AUTO/L-10

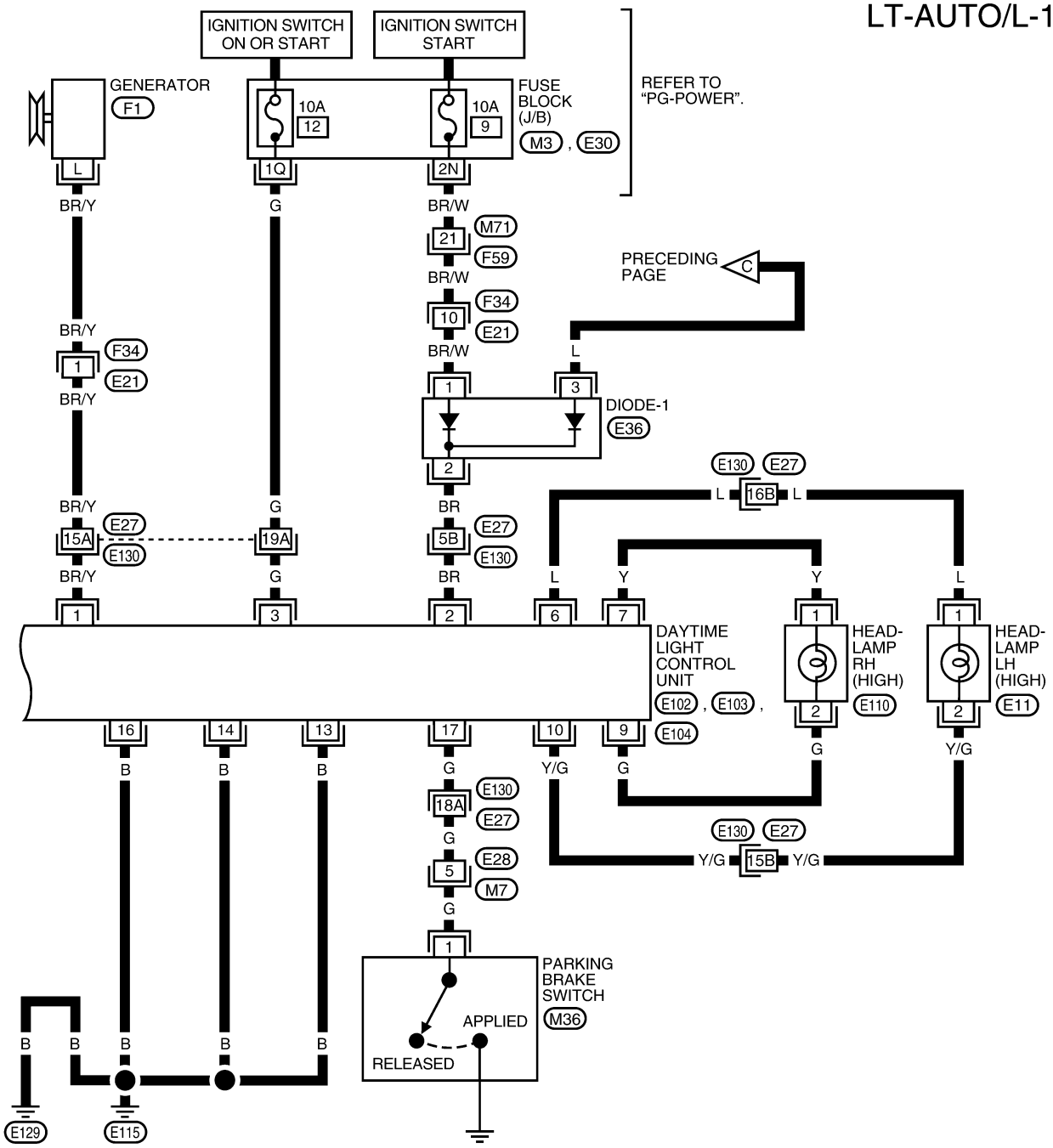

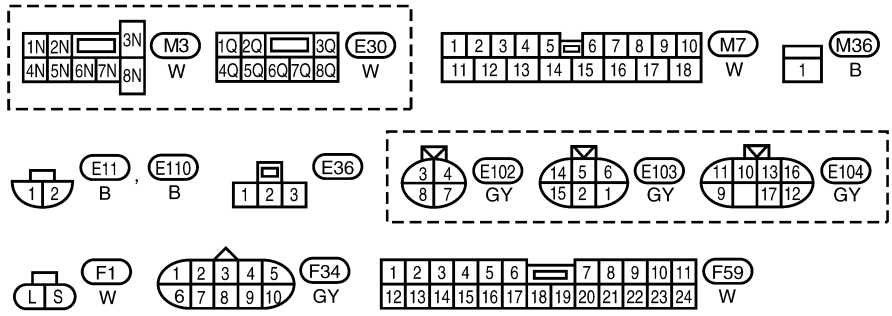

REFER TO THE FOLLOWING.
E130 - SUPER MULTIPLE JUNCTION (SMJ)

WKWA0109E

Terminals and Reference Value for BCM

EKS0041P

Terminal No.	Wire color	Signal name	Measuring condition			Standard (V) (Approx.)
			Ignition switch	Operation or condition		
7	W/B	Battery power supply	OFF	—		12V
8	B	Ground	ON	—		0
14	SB	Driver door switch signal	OFF	Driver door switch	ON (open)	0
					OFF (closed)	12V
27	B	Ground	ON	—		0
35	G	IGN power	ON	—		12V
36	PU	ACC power	ACC	—		12V
38	W/R	Auto light sensor signal	ON	When auto light sensor is illuminated		3.1V or more[Note] (Reference value)
				When auto light sensor is not illuminated		0.6 or less (Reference value)
45	R	Auto light sensor power source	ON	—		5
53	P	Sensor ground	ON	—		0
63	B	Ground	ON	—		0

NOTE:
If the auto light sensor is insufficiently illuminated, the measured value may not satisfy the standard.

How to Proceed With Trouble Diagnosis

EKS0041Q

1. Confirm the malfunction symptom or customer complaint.
2. Understand system description. Refer to LT-46, "System Description" .
3. Conduct pre-inspection. Refer to LT-64, "Inspection Before Diagnosis" .
4. Find cause of malfunction by following the symptoms in the trouble diagnosis chart and repair or replace as necessary. Refer to LT-68, "Trouble Diagnosis Chart by Symptom" .
5. Does automatic light system operate normally? If it operates normally, go to 6. If it does not operate normally, go to 4.
6. End.

Inspection Before Diagnosis

EKS0041R

SETTING CHANGE FUNCTIONS

- Sensitivity of automatic light system can be adjusted using CONSULT-II. Refer to LT-66, "WORK SUPPORT" .

BCM POWER/GROUND CIRCUIT INSPECTION

1. FUSE/FUSIBLE LINK INSPECTION

- Check the following BCM fuses and fusible links.

Terminal	Ignition switch position	Fuse/fusible link
7	Battery power	f
35	ON or START	12
36	ACC or ON	6

OK or NG

OK >> GO TO 2.
NG >> Replace fuse or fusible link.

2. POWER SUPPLY CIRCUIT INSPECTION

Disconnect BCM connector and measure voltage between each terminal in table below and ground.

Terminal No.	Signal name	Ignition switch	Standard voltage (V) (Approx.)
7	Battery power	OFF	12V
35	IGN power	ON	12V
36	ACC power	ACC	12V

OK or NG

OK >> GO TO 3.
NG >> Repair or replace BCM power circuit harness.

3. GROUND CIRCUIT INSPECTION

Check continuity between the following vehicle-side connector terminals and body ground.

Terminal No.	Signal name	Ignition switch	Continuity
8	Ground	OFF	Yes
27		OFF	Yes
63		OFF	Yes

OK or NG

OK >> Power and ground are OK.
NG >> Repair or replace BCM ground circuit harness.

CONSULT-II Function

EKS0041S

CONSULT-II has a display function for work support, self-diagnosis, data monitor, and active test for each part by combining data receiving and sending via the communication line from BCM.

BCM diagnosis part	Check item, diagnosis mode	Description
Headlamp	Work support	Changes the setting for each function.
	Data monitor	Displays BCM input data in real time.
	Active test	Operation of electrical loads can be checked by sending driving signal to them.

CONSULT-II BASIC OPERATION

1. With the ignition switch OFF, connect CONSULT-II to the vehicle-side data link connector, then turn ignition switch ON.
2. Touch “START”.

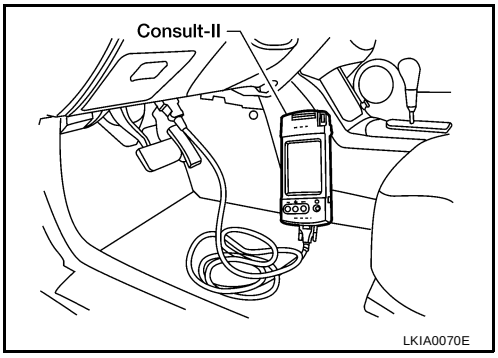

3. Touch “BCM” on “SELECT SYSTEM” screen.

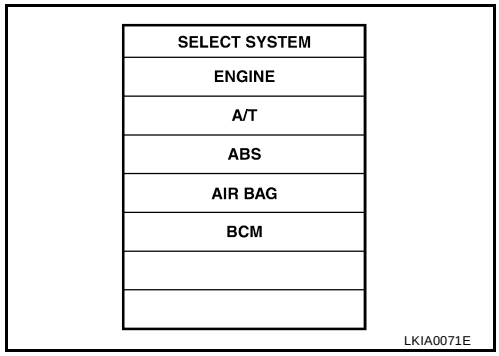

4. Select the desired part to be diagnosed on the “SELECT TEST ITEM” screen.

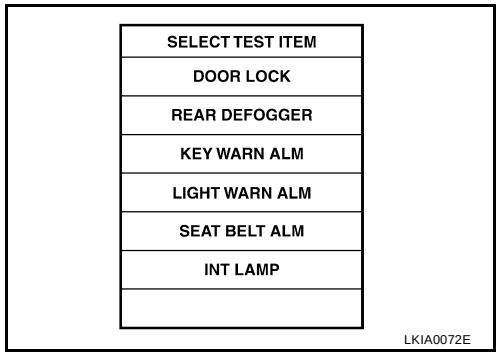

WORK SUPPORT

Operation Procedure

1. Touch “HEAD LAMP” on “SELECT TEST ITEM” screen.
2. Touch “WORK SUPPORT” on “SELECT DIAG MODE” screen.
3. Touch item setting to be changed on “SELECT WORK ITEM” screen.
4. Touch “START”.
5. Touch the item setting desired.
6. Touch “SETTING CHANGE”.
7. The setting will be changed and “CUSTOMIZING COMPLETED” will be displayed.
8. Touch “END”.

Work Support Setting Item

Work Support item	Description	Mode	Setting status
AUTO LIGHT SET	Sensitivity of auto light can be selected and set from four modes.	Normal	Factory setting
		Mode 2	More sensitive setting compared to factory setting (The time required for lamp light-up is shorter than “Normal”.)
		Mode 3	Less sensitive setting compared to factory setting (The time required for lamp light-up is longer than “Normal”.)
		Mode 4	Less sensitive setting compared to Mode 3 (The time required for lamp light-up is longer than Mode 3.)
BATTERY SAVER SET	Function is not enabled, battery saver operation cannot be changed.	On	Function is not enabled, battery saver operation cannot be changed.
		Off	

Work Support item	Description	Mode	Setting status
ILL DELAY SET	The timer that turns off the headlamps (and fog lamps, if turned on) after the last door is closed can be selected and set from 8 modes.	Mode 1	45 seconds (Factory setting)
		Mode 2	0 seconds (immediate shutoff)
		Mode 3	30 seconds
		Mode 4	60 seconds
		Mode 5	90 seconds
		Mode 6	120 seconds
		Mode 7	150 seconds
		Mode 8	180 seconds

DATA MONITOR

Operation Procedure

1. Touch “HEADLAMP” on “SELECT TEST ITEM” screen.
2. Touch “DATA MONITOR” on “SELECT DIAG MODE” screen.
3. Touch either “ALL SIGNALS” or “SELECTION FROM MENU”.

All signals	Monitors all the signals.
Selection from menu	Selects and monitors individual signal.

4. Touch “START”.
5. When “SELECTION FROM MENU” is selected, touch items to be monitored. When “ALL SIGNALS” is selected, all the signals will be monitored.
6. Touch “RECORD” while monitoring, then the status of the monitored item can be recorded. To stop recording, touch “STOP”.

Display Item List

Monitor item name “OPERATION OR UNIT”		Contents
IGN ON SW	“ON/OFF”	“IGN position (ON)/OFF, ACC position (OFF)” judged from the ignition switch signal is displayed.
ACC ON SW	“ON/OFF”	Displays “ACC (ON)/OFF, Ignition OFF (OFF)” status judged from ignition switch signal.
AUTO LIGHT SW	“ON/OFF”	Displays status of the lighting switch as judged from the lighting switch signal. (AUTO position: ON/Other than AUTO position: OFF)
TAIL LAMP SW	“ON/OFF”	Displays status (lighting switch 1st position: ON/Others: OFF) of light switch judged from lighting switch signal.
HEAD LAMP SW	“ON/OFF”	Displays status (headlamp switch: ON/Others: OFF) of headlamp switch judged from lighting switch signal.
HI BEAM SW	“ON/OFF”	Displays status (high beam switch: ON/Others: OFF) of high beam switch judged from lighting switch signal.
PASSING SW	“ON/OFF”	Displays status (flash-to-pass switch: ON/Others: OFF) of flash-to-pass switch judged from lighting switch signal.
FR FOG SW	“ON/OFF”	Displays status (front fog switch: ON/Others: OFF) of front fog switch judged from lighting switch signal.
DOOR SW - DR	“ON/OFF”	Displays status of the driver door as judged from the driver door switch signal. (Door is open: ON/Door is closed: OFF)
DOOR SW - AS	“ON/OFF”	Displays status of the passenger door as judged from the passenger door switch signal. (Door is open: ON/Door is closed: OFF)
DOOR SW - RR	“ON/OFF”	Displays status of the rear doors as judged from the rear door switch signal. (Door is open: ON/Door is closed: OFF)
HEAD LAMP SW 2	“ON/OFF”	Displays status (headlamp switch 2: ON/Others: OFF) of headlamp switch 2 judged from lighting switch signal.
OPTICAL SENSOR	[0 - 5V]	Displays “ambient light (close to 5V when light/close to 0V when dark)” judged from auto light sensor signal.

ACTIVE TEST

Operation Procedure

1. Touch “HEADLAMP” on “SELECT TEST ITEM” screen.
2. Touch “ACTIVE TEST” on “SELECT DIAG MODE” screen.
3. Touch item to be tested and check operation of the selected item.
4. During the operation check, touching “BACK” deactivates the operation.

Display Item List

Test item	Display on CONSULT-II screen	Description
Tail light relay output	TAIL LAMP	Allows tail light relay to operate by switching ON–OFF at your option.
Headlamp relay output	HEAD LAMP (LOW)	Allows headlamp relay to operate by switching ON–OFF at your option.
Headlamp relay output	HEAD LAMP (HI)	Allows headlamp relay to operate by switching ON–OFF at your option.
Front fog lamp relay output	FR FOG LAMP	Allows fog lamp relay to operate by switching ON–OFF at your option.

Trouble Diagnosis Chart by Symptom

EKS0041T

Trouble phenomenon	Malfunction system and reference
● Parking lamps and headlamps will not illuminate when outside of the vehicle becomes dark. (Lighting switch 1st position and 2nd position operate normally.) ● Parking lamps and headlamp will not go out when outside of the vehicle becomes light. (Lighting switch 1st position and 2nd position operate normally.) ● Headlamps go out when outside of the vehicle becomes light, but parking lamps stay on.	● Refer to LT-66, "WORK SUPPORT" . ● Refer to LT-68, "Light Switch Inspection" . ● Refer to LT-69, "Auto Light Sensor System Inspection" . If above systems are normal, replace BCM.
Parking lamps illuminate when outside of the vehicle becomes dark, but headlamps stay off. (Lighting switch 1st position and 2nd position operate normally.)	● Refer to LT-66, "WORK SUPPORT" . ● Refer to LT-69, "Auto Light Sensor System Inspection" . If above systems are normal, replace BCM.
Auto light adjustment system will not operate. (Lighting switch AUTO, 1st position and 2nd position operate normally.)	● Refer to LT-69, "Auto Light Sensor System Inspection" . If above system is normal, replace BCM.
Auto light adjustment system of combination meter will not operate.	● CAN communication line inspection between BCM and combination meter. Refer to BCS-15, "CAN Communication Inspection Using CONSULT-II (Self-Diagnosis)" .

Light Switch Inspection

EKS0041U

1. LIGHT SWITCH INSPECTION

Select “BCM” in CONSULT-II. Operate lighting switch via “AUTO LIGHT SW” on data monitor screen, and check that light turns on and off as commanded.

Lighting switch AUTO : ON

Lighting switch OFF : OFF

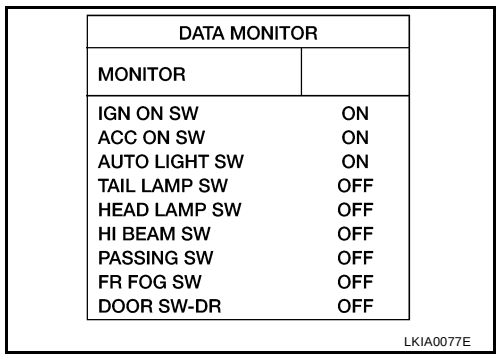

DATA MONITOR	
MONITOR	
IGN ON SW	ON
ACC ON SW	ON
AUTO LIGHT SW	ON
TAIL LAMP SW	OFF
HEAD LAMP SW	OFF
HI BEAM SW	OFF
PASSING SW	OFF
FR FOG SW	OFF
DOOR SW-DR	OFF

LKIA0077E

OK or NG

OK >> Normal.

NG >> Replace lighting switch. Refer to LT-96, "Removal and Installation" .

Auto Light Sensor System Inspection

EKS0041V

1. OUTPUT SIGNAL INSPECTION

Select “BCM” in CONSULT-II. Using “OPTICAL SENSOR” data from "DATA MONITOR", check difference in the voltage when the auto light sensor is illuminated and not illuminated.

Illuminated

Light sensor : 3.1V or more

Not illuminated

Light sensor : 0.6V or less

NOTE:
If the auto light sensor is insufficiently illuminated, the measured value may not satisfy the standard.

DATA MONITOR	
MONITOR	
IGN ON SW	ON
ACC ON SW	ON
AUTO LIGHT SW	OFF
TAIL LAMP SW	ON
HEAD LAMP SW	ON
HI BEAM SW	OFF
PASSING SW	OFF
FR FOG SW	OFF
DOOR SW-DR	OFF

LKIA0078E

OK or NG

OK >> Normal.
NG >> GO TO 2.

2. POWER SUPPLY CIRUIT CONTINUITY INSPECTION

1. Disconnect connectors of BCM and auto light sensor.
2. Check harness continuity between BCM vehicle-side connector terminal 45 (R) and vehicle-side connector terminal 1 (R) of auto light sensor.

   Continuity should exist.

3. Check continuity between BCM vehicle-side connector terminal 45 (R) and body ground.

   Continuity should not exist.

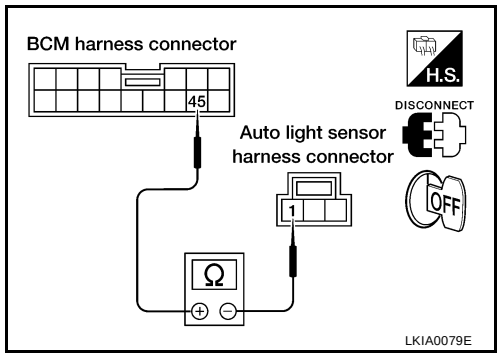

OK or NG

OK >> GO TO 3.
NG >> Malfunction in harness between BCM and auto light sensor. Repair or replace as required.

3. OUTPUT CIRCUIT CONTINUITY INSPECTION

1. Check harness continuity between BCM vehicle-side connector terminal 38 (W/R) and vehicle-side connector terminal 2 (W/R) of auto light sensor.

   Continuity should exist.

2. Check continuity between BCM vehicle-side connector terminal 38 (W/R) and body ground.

   Continuity should not exist.

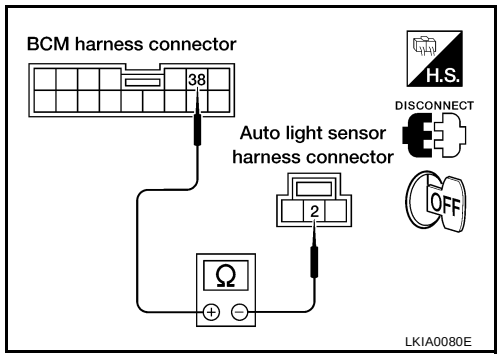

OK or NG

OK >> GO TO 4.
NG >> Malfunction in harness between BCM and auto light sensor. Repair or replace as required.

4. GROUND CIRCUIT CONTINUITY INSPECTION

1. Check harness continuity between BCM vehicle-side connector terminal 53 (P) and vehicle-side connector terminal 3 (P) of auto light sensor.

   Continuity should not exist.

2. Check continuity between BCM vehicle-side connector terminal 53 (P) and body ground.

   Continuity should not exist.

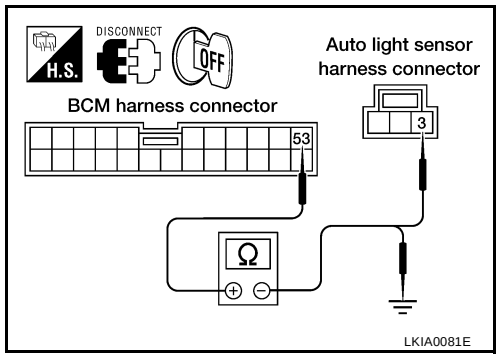

OK or NG

OK >> GO TO 5.
NG >> Malfunction in harness between BCM and auto light sensor. Repair or replace as required.

5. SENSOR VOLTAGE INSPECTION

1. Connect BCM connector.
2. Check voltage between BCM terminal 45 (R) and body ground.

   Approx. 5V

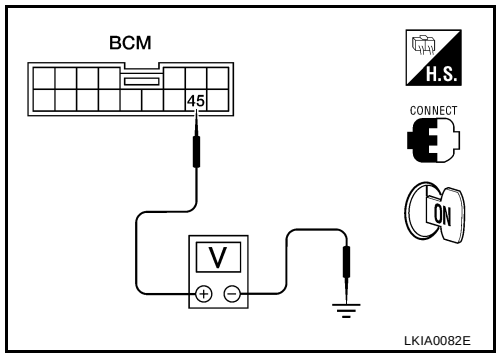

OK or NG

OK >> Replace the auto light sensor.
NG >> Replace BCM.

FRONT FOG LAMP

PFP:26150

System Description

EKS0041W

Control of the fog lamps is dependent upon the position of the combination switch (lighting switch). When the lighting switch is placed in the fog lamp position, the BCM receives input requesting the fog lamps to illuminate. This input is communicated to the IPDM E/R (intelligent power distribution module engine room) across the CAN communication lines. The central processing unit of the IPDM E/R controls the front fog lamp relay coil. When energized, this relay directs power to the front fog lamps.

OUTLINE

Power is supplied at all times

- through 15A fuse [No. 41, located in the IPDM E/R (intelligent power distribution module engine/room)]
- to front fog lamp relay, located in the IPDM E/R, and

Power is also supplied at all times

- to terminal 7 of the BCM (body control module).

When the ignition switch is in ON or START position, power is supplied

- to terminal 35 of the BCM.

When the ignition switch is in ACC or ON position, power is supplied

- to terminal 36 of the BCM.

Ground is supplied

- to BCM terminals 8, 27, and 63
- through body grounds M57, M61, E15, and E24.

FOG LAMP OPERATION

The fog lamp switch is built into the combination switch. The lighting switch can be in any position (except pass or high beam) and the fog lamp switch must be ON for fog lamp operation.
With the fog lamp switch in the ON position, the central processing unit of the IPDM E/R (intelligent power distribution module engine room) grounds the coil side of the fog lamp relay. The fog lamp relay then directs power

- to front fog lamp LH terminal 1
- through IPDM E/R terminal 32, and
- to front fog lamp RH terminal 1
- through IPDM E/R terminal 29.

Ground is supplied

- to front fog lamp LH terminal 2
- through body grounds E15 and E24, and
- to front fog lamp RH terminal 2
- through body grounds E15 and E24.

With power and grounds supplied, the front fog lamps illuminate.

BATTERY SAVER CONTROL

When the fog lamp switch is ON and the ignition switch is turned from ON to ACC or OFF, or if the ignition switch is in the OFF position when the fog lamp switch is turned ON, the battery saver control feature is activated.
Under this condition, the fog lamps (and headlamps) remain illuminated for 5 minutes, unless the combination switch (lighting switch) position is changed. If the combination switch (lighting switch) position is changed, then the fog lamps (and headlamps) are turned off.

CAN Communication System Description

EKS0041X

CAN (Controller Area Network) is a serial communication line for real time application. It is an on-vehicle multiplex communication line with high data communication speed and excellent error detection ability. Many electronic control units are equipped onto a vehicle, and each control unit shares information and links with other control units during operation (not independent). In CAN communication, control units are connected with 2 communication lines (CAN H line, CAN L line) allowing a high rate of information transmission with less wiring. Each control unit transmits/receives data but selectively reads required data only.

FOR TCS MODELS

System diagram

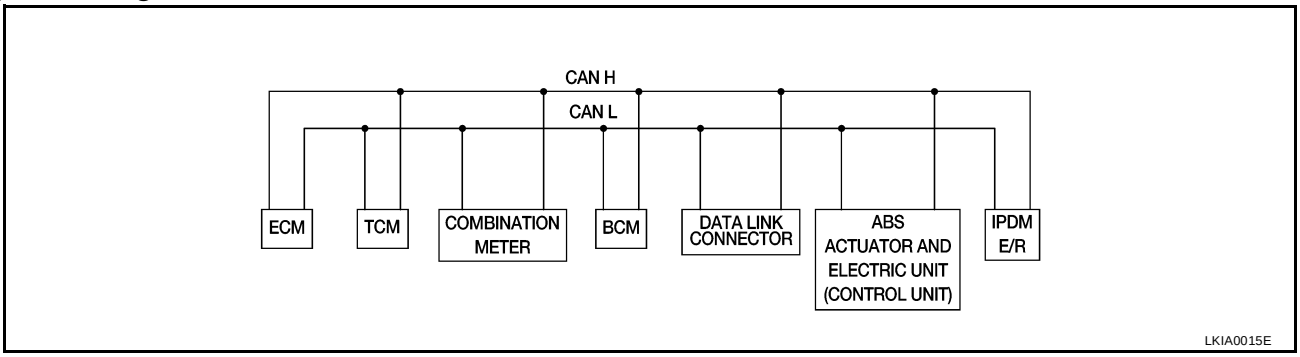

Input/output signal chart

T: Transmit R: Receive

Signals	ECM	TCM	COMBINA-TION METER	BCM	ABS/TCS control unit	IPDM E/R
Engine speed signal	T		R		R	
Engine coolant temperature signal	T		R			
Accelerator pedal position signal	T					
Fuel consumption monitor signal	T		R			
A/T warning lamp signal		T	R			
A/T position indicator signal	R	T	R	R(R range only)	R	
ABS operation signal	R				T	
TCS operation signal	R	R			T	
Air conditioner switch signal	R			T		
Air conditioner compressor signal	R					T
A/C compressor request signal	T					R
Cooling fan motor operation signal	R					T
Cooling fan speed request signal	T					R
Position lights request			R	T		R
Position lights status				R		T
Low beam request				T		R
Low beam status	R			R		T
High beam request			R	T		R
High beam status	R			R		T
Front fog lights request				T		R
Front fog light status				R		T
OD cancel switch signal		R	T			R
Brake switch signal		R	T			
Vehicle speed signal	R		T			
	R		T	R		
Oil pressure switch			R			T
Sleep request1			R	T		
Sleep request2				T		R
N range switch signal		R	T			
P range switch signal		R	T			
Seat belt buckle switch signal			T	R		

Signals	ECM	TCM	COMBINATION METER	BCM	ABS/TCS control unit	IPDM E/R
Door switch signal			R	T		R
Tail lamp request			R	T		R
Turn indicator signal			R	T		
Buzzer output signal			R	T		
Trunk switch signal			R	T		
ASCD main switch signal	T		R			
ASCD cruise signal	T		R			
Wiper operation				R		T
Wiper stop position signal				R		T
Rear window defogger switch signal				T		R
Rear window defogger control signal	R			R		T

FOR A/T MODELS

System diagram

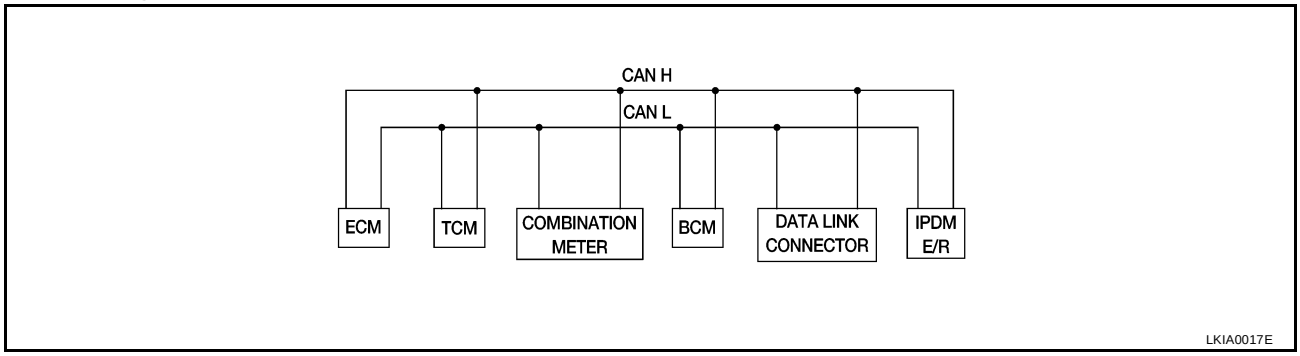

Input/output signal chart

T: Transmit R: Receive

Signals	ECM	TCM	COMBINATION METER	BCM	IPDM E/R
Engine speed signal	T		R		
Engine coolant temperature signal	T		R		
Accelerator pedal position signal	T				R
Fuel consumption monitor signal	T		R		
A/T warning lamp signal		T	R		
A/T position indicator signal	R	T	R	R(R range only)	
Air conditioner switch signal	R			T	
Air conditioner compressor signal	R				T
A/C compressor request signal	T				R
Blower fan switch signal	R(QR25DE)			T	
Cooling fan motor operation signal	R			T	
Cooling fan speed request signal	T				R
Position lights request			R	T	R
Position lights status				R	T
Low beam request				T	R
Low beam status	R			R	T
High beam request			R	T	R

Signals	ECM	TCM	COMBINATION METER	BCM	IPDM E/R
High beam status	R			R	T
Front fog lights request				T	R
Front fog light status				R	T
OD cancel switch signal		R	T		R
Brake switch signal		R	T		
Vehicle speed signal	R		T		
	R		T	R	
Oil pressure switch			R		T
Sleep request1			R	T	
Sleep request2				T	R
N range switch signal		R	T		
P range switch signal		R	T		
Seat belt buckle switch signal			T	R	
Door switch signal			R	T	R
Tail lamp request			R	T	R
Turn indicator signal			R	T	
Buzzer output signal			R	T	
Trunk switch signal			R	T	
ASCD main switch signal	T		R		
ASCD cruise signal	T		R		
Wiper operation				R	T
Wiper stop position signal				R	T
Rear window defogger switch signal				T	R
Rear window defogger control signal	R			R	T

FOR M/T MODELS

System diagram

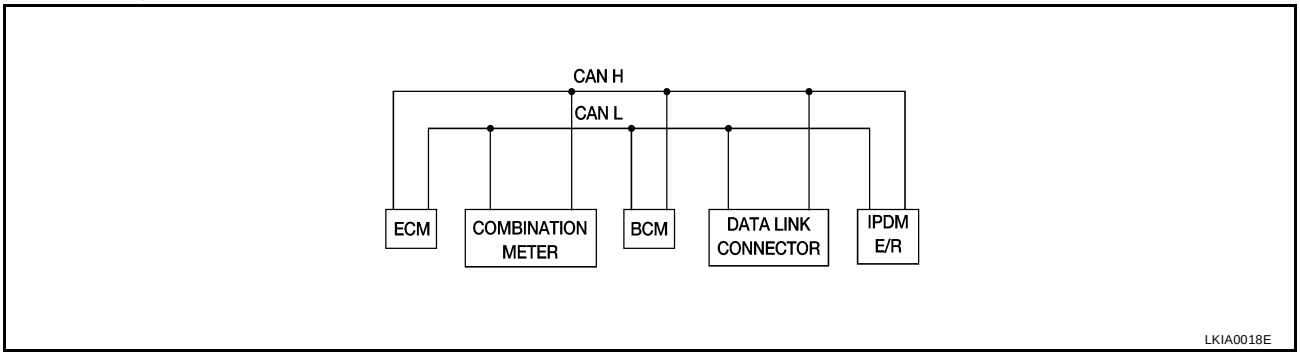

Input/output signal chart

T: Transmit R: Receive

Signals	ECM	COMBINATION METER	BCM	IPDM E/R
Engine speed signal	T			
Engine coolant temperature signal	T			
Fuel consumption monitor signal	T			
Air conditioner switch signal	R		T	
Air conditioner compressor signal	R			T
A/C compressor request signal	T			R

Signals	ECM	COMBINATION METER	BCM	IPDM E/R
Blower fan switch signal	R(QR25DE)		T	
Cooling fan motor operation signal	R			T
Cooling fan speed request signal	T			R
Position lights request		R	T	R
Position lights status			R	T
Low beam request			T	R
Low beam status	R		R	T
High beam request		R	T	R
High beam status	R		R	T
Front fog lights request			T	R
Front fog light status			R	T
Vehicle speed signal	R	T		
Oil pressure switch		R		T
Sleep request1		R	T	
Sleep request2			T	R
Seat belt buckle switch signal		T	R	
Door switch signal		R	T	R
Tail lamp request		R	T	R
Turn indicator signal		R	T	
Buzzer output signal		R	T	
Trunk switch signal		R	T	
ASCD main switch signal	T	R		
ASCD cruise signal	T	R		
Wiper operation			R	T
Wiper stop position signal			R	T
Rear window defogger switch signal			T	R
Rear window defogger control signal	R		R	T

Wiring Diagram — F/FOG —

EKS0041Y

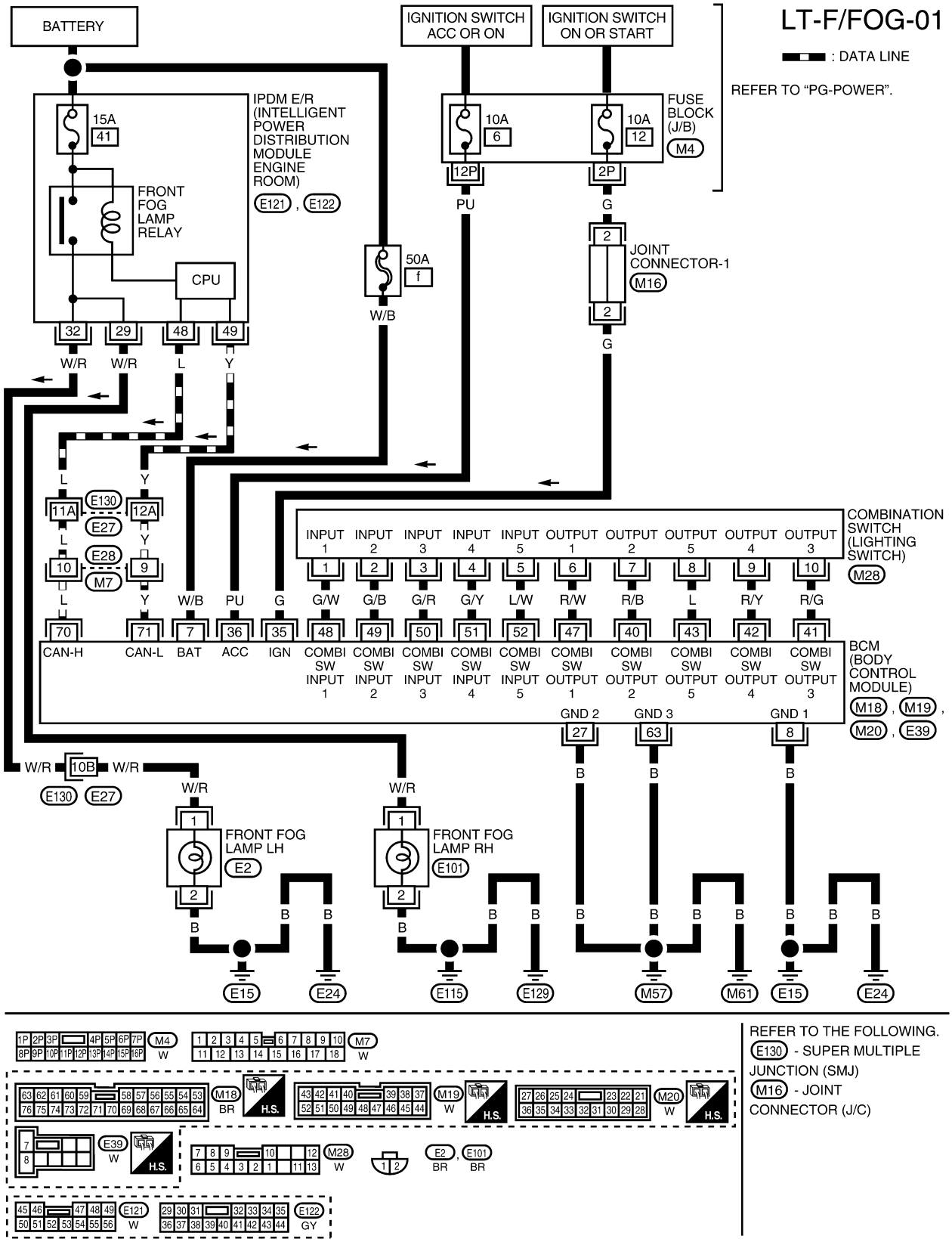

LKWA0047E

Front Fog Lamps Do Not Illuminate (Both Sides)

EKS0041Z

1. INSPECTION 1 BETWEEN IPDM E/R AND FRONT FOG LAMPS

1. Start active test. Refer to LT-18, "ACTIVE TEST" .
2. Check operation of the front fog lamps.

OK or NG

OK >> GO TO 4.
NG >> GO TO 2.

2. INSPECTION 2 BETWEEN IPDM E/R AND FRONT FOG LAMPS

1. Disconnect IPDM E/R connector and left/right front fog lamp connectors.
2. Check continuity between harness connector terminals of IPDM E/R and harness connector terminals of left/right front fog lamps.

Terminals					Continuity
IPDM E/R		Front fog lamp			
Connector	Terminal (wire color)	Connector		Terminal (wire color)	
E122	29 (W/R)	Right	E101	1 (W/R)	Yes
	32 (W/R)	Left	E2	1 (W/R)	

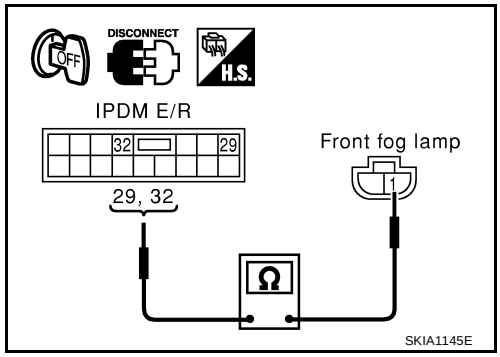

OK or NG

OK >> Connect electrical connectors. GO TO 3.
NG >> Check for short circuits and open circuits in harness between IPDM E/R and headlamps and repair as necessary.

3. IPDM E/R INSPECTION

Start active test. Refer to LT-18, "ACTIVE TEST" . When front fog lamp relay is operating, check voltage between left/right front fog lamp connector terminals and body ground.

Terminals				Voltage (Approx.)
Front fog lamp			Body ground (–)	12
Connector		Terminal (wire color)		
Right	E101	1 (W/R)		
Left	E2	1 (W/R)		

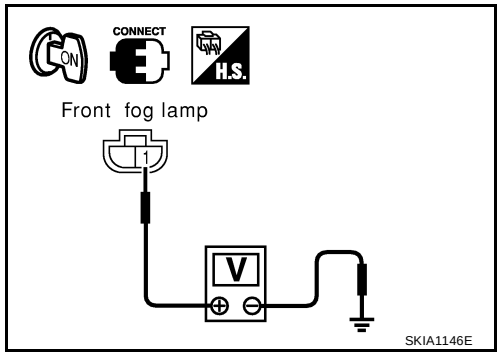

OK or NG

OK >> Check front fog lamp bulbs and replace as necessary.
NG >> Replace IPDM E/R. Refer to PG-24, "Removal and Installation of IPDM E/R" .

4. INSPECTION 1 BETWEEN COMBINATION SWITCH AND BCM

Select BCM on CONSULT-II. Carry out “BCM C/U” self-diagnosis.

Displayed results of self-diagnosis

No malfunction detected>> GO TO 5.
CAN communications or CAN system>> Inspect the BCM CAN communications system. Refer to BCS-15, "CAN Communication Inspection Using CONSULT-II (Self-Diagnosis)" .
OPEN DETECT 1 - 5>> Combination switch system malfunction. Refer to BCS-16, "Combination Switch Inspection According to Self-Diagnostic Results" .

SELF-DIAG RESULTS	
DTC RESULTS	TIME
NO DTC IS DETECTED. FURTHER TESTING MAY BE REQUIRED	

LKIA0073E

5. INSPECTION 2 BETWEEN COMBINATION SWITCH AND BCM

Select “BCM” on CONSULT-II. Use “HEADLAMP” data monitor to check that “FR FOG SW” turns ON-OFF linked with operation of fog lamp switch.

DATA MONITOR	
MONITOR	
IGN ON SW	ON
ACC ON SW	ON
AUTO LIGHT SW	OFF
TAIL LAMP SW	OFF
HEAD LAMP SW	OFF
HI BEAM SW	OFF
PASSING SW	OFF
FR FOG SW	ON
DOOR SW-DR	OFF

LKIA0094E

OK or NG

OK >> Replace BCM.
NG >> Replace lighting switch. Refer to LT-96, "Removal and Installation" .

Front Fog Lamp Does Not Illuminate (One Side)

EKS00420

1. BULB INSPECTION

Inspect bulbs of lamps which do not illuminate.

OK or NG

OK >> GO TO 2.
NG >> Replace lamp bulb.

2. INSPECTION BETWEEN IPDM E/R AND FRONT FOG LAMPS

1. Disconnect IPDM E/R connector and inoperative front fog lamp connector.
2. Check continuity between harness connector terminals of IPDM E/R and harness connector terminal of front fog lamps.

Terminals					Continuity
IPDM E/R		Front fog lamp			
Connector	Terminal (wire color)	Connector		Terminal (wire color)	
E122	29 (W/R)	Right	E101	1 (W/R)	Yes
	32 (W/R)	Left	E2	1 (W/R)	

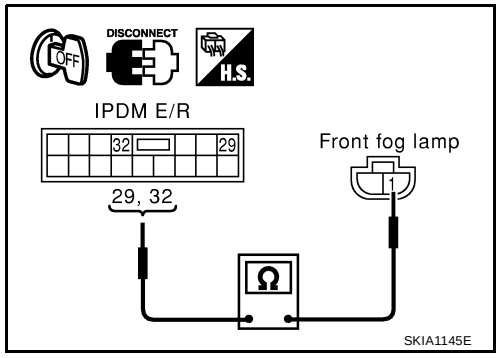

SKIA1145E

OK or NG

OK >> Replace IPDM E/R. Refer to PG-24, "Removal and Installation of IPDM E/R" .
NG >> Check for short circuits and open circuits in harness between IPDM E/R and front fog lamps.

Aiming Adjustment

EKS00421

The fog lamp is a semi-sealed beam type which uses a replaceable halogen bulb. Before performing aiming adjustment, make sure of the following.

- Keep all tires inflated to correct pressure.
- Place vehicle on level ground.
- See that vehicle is unloaded (except for full levels of coolant, engine oil and fuel, and spare tire, jack, and tools). Have the driver or equivalent weight placed in driver seat.

Adjust aiming in the vertical direction by turning the adjusting screw.

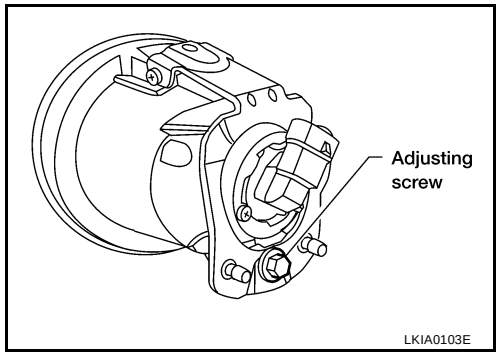

LKIA0103E

1. Set the distance between the screen and the center of the fog lamp lens as shown.
2. Turn front fog lamps ON.

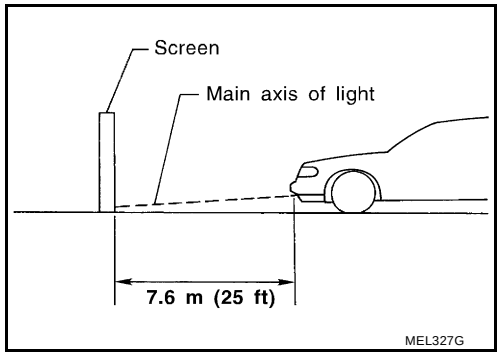

3. Adjust front fog lamps using adjusting screw so that the top edge of the high intensity zone is 100 mm (4 in) below the height of the fog lamp centers as shown.

- When performing adjustment, if necessary, cover the headlamps and opposite fog lamp.

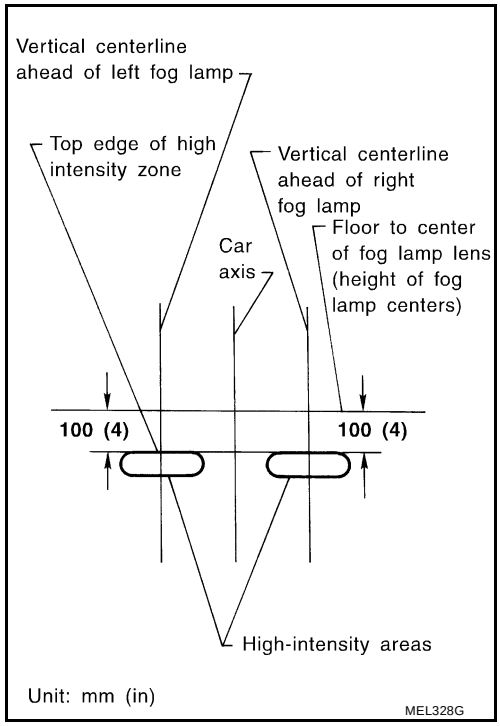

Removal and Installation

EKS00422

The fog lamp is a semi-sealed beam type which uses a replaceable halogen bulb.

CAUTION:

- **Do not leave fog lamp assembly without bulb for a long period of time. Dust, moisture, smoke, etc. entering the fog lamp body may affect the performance. Remove the bulb from the headlamp assembly just before replacement bulb is installed.**
- **Grasp only the plastic base when handling the bulb. Never touch the glass envelope. Touching the glass could significantly affect the bulb life and/or fog lamp performance.**

1. Remove the fender protector. Refer to EI-20, "Removal and Installation" .
2. Disconnect electrical connector.
3. Remove bolt, and slide fog lamp out of front fascia.

Install in the reverse order of removal.

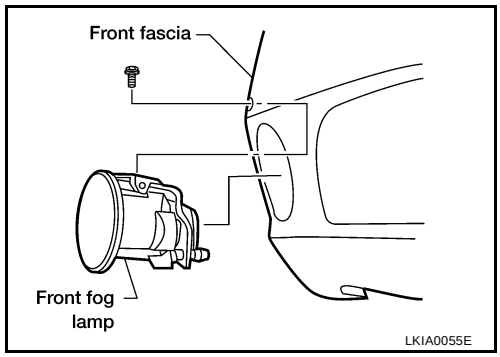

TURN SIGNAL AND HAZARD WARNING LAMPS

PFP:26120

System Description

EKS00423

TURN SIGNAL OPERATION

When the ignition switch is in the ON or START position, power is supplied

- through 10A fuse [No. 12, located in the fuse block (J/B)]
- to BCM (body control module) terminal 35, and
- through 10A fuse [No. 14, located in the fuse block (J/B)]
- to terminals 17 and 18 of the combination meter.

Ground is supplied

- to BCM (body control module) terminals 8, 27, and 63
- through body grounds M57, E15, and E24, and
- to combination meter terminals 6 and 39
- through body grounds M57 and M61.

LH Turn

When the turn signal switch (combination switch) is moved to the L position, the BCM (body control module) receives input requesting the left turn signals to flash. The BCM then supplies power

- to front turn signal lamp LH terminal 3
- to rear turn signal lamp LH (part of the rear combination lamp LH) terminal 3.

Ground is supplied to the front turn signal lamp LH terminal 2 through body grounds E15 and E24.
Ground is supplied to the rear turn signal lamp LH (part of the rear combination lamp) terminal 5 through body grounds B7and B19.
The BCM also supplies ground to combination meter terminals 1 and 2 across the CAN communication lines. This input is processed by the central processing unit of the combination meter, which in turn supplies ground to the left turn signal indicator lamp.
With power and ground supplied, the BCM controls the flashing of the LH turn signal lamps.

RH Turn

When the turn signal switch (combination switch) is moved to the R position, the BCM (body control module) receives input requesting the right turn signals to flash. The BCM then supplies power

- to front turn signal lamp RH terminal 3
- to rear turn signal lamp RH (part of the rear combination lamp RH) terminal 3.

Ground is supplied to the front turn signal lamp RH terminal 2 through body grounds E15 and E24.
Ground is supplied to the rear turn signal lamp RH (part of the rear combination lamp RH) terminal 5 through body grounds B7and B19.
The BCM also supplies ground to combination meter terminals 1 and 2 across the CAN communication lines. This input is processed by the central processing unit of the combination meter, which in turn supplies ground to the right turn signal indicator lamp.
With power and ground supplied, the BCM controls the flashing of the RH turn signal lamps.

HAZARD LAMP OPERATION

Power is supplied at all times

- to BCM (body control module) terminal 7
- through 50A fusible link [letter **f** , located in the fuse and fusible link box], and
- to combination meter terminal 5
- through 10A fuse [No. 19, located in the fuse block (J/B)].

Ground is supplied

- to hazard switch terminal 3
- through body grounds M57 and M61,
- to BCM terminals 8, 27, and 63,
- through body grounds M57, M61, E15, and E24, and
- to combination meter terminals 6 and 39
- through body grounds M57 and M61.

When the hazard switch is depressed, ground is supplied

- to BCM terminal 61
- through hazard lamp switch terminal 1.

The BCM then supplies power

- to front turn signal lamp LH terminal 3
- to front turn signal lamp RH terminal 3
- to rear turn signal lamp LH (part of the rear combination lamp LH) terminal 3
- to rear turn signal lamp RH (part of the rear combination lamp RH) terminal 5.

Ground is supplied

- to the front turn signal lamp LH terminal 2 through body grounds E15 and E24
- to the front turn signal lamp RH terminal 2 through body grounds E15 and E24
- to the rear turn signal lamp LH (part of the rear combination lamp) terminal 5 through body grounds B7 and B19
- to the rear turn signal lamp RH (part of the rear combination lamp RH) terminal 5 through body grounds B7 and B19.

The BCM also supplies input to combination meter terminals 1 and 2 across the CAN communication lines. This input is processed by the central processing unit of the combination meter, which in turn supplies ground to the left and right turn signal indicator lamps.
With power and ground supplied, the BCM controls the flashing of the hazard warning lamps.

REMOTE KEYLESS ENTRY SYSTEM OPERATION

Power is supplied at all times

- to BCM (body control module) terminal 7
- through 50A fusible link [letter **f** , located in the fuse and fusible link box], and
- to combination meter terminal 5
- through 10A fuse [No. 19, located in the fuse block (J/B)].

Ground is supplied

- to BCM terminals 8, 27, and 63,
- through body grounds M57, M61, E15, and E24, and
- to combination meter terminals 6 and 39
- through body grounds M57 and M61.

When the remote keyless entry system is triggered by input from the keyfob, the BCM supplies power

- to front turn signal lamp LH terminal 3
- to front turn signal lamp RH terminal 3
- to rear turn signal lamp LH (part of the rear combination lamp LH) terminal 3
- to rear turn signal lamp RH (part of the rear combination lamp RH) terminal 3.

Ground is supplied

- to the front turn signal lamp LH terminal 2 through body grounds E15 and E24
- to the front turn signal lamp RH terminal 2 through body grounds E15 and E24
- to the rear turn signal lamp LH (part of the rear combination lamp) terminal 5 through body grounds B7 and B19
- to the rear turn signal lamp RH (part of the rear combination lamp RH) terminal 5 through body grounds B7 and B19.

The BCM also supplies input to combination meter terminals 1 and 2 across the CAN communication lines. This input is processed by the central processing unit of the combination meter, which in turn supplies ground to the left and right turn signal indicator lamps.
With power and ground supplied, the BCM controls the flashing of the hazard warning lamps when keyfob is used to activate the remote keyless entry system.

CAN Communication System Description

EKS00424

CAN (Controller Area Network) is a serial communication line for real time application. It is an on-vehicle multiplex communication line with high data communication speed and excellent error detection ability. Many electronic control units are equipped onto a vehicle, and each control unit shares information and links with other control units during operation (not independent). In CAN communication, control units are connected with 2

communication lines (CAN H line, CAN L line) allowing a high rate of information transmission with less wiring. Each control unit transmits/receives data but selectively reads required data only.

FOR TCS MODELS

System diagram

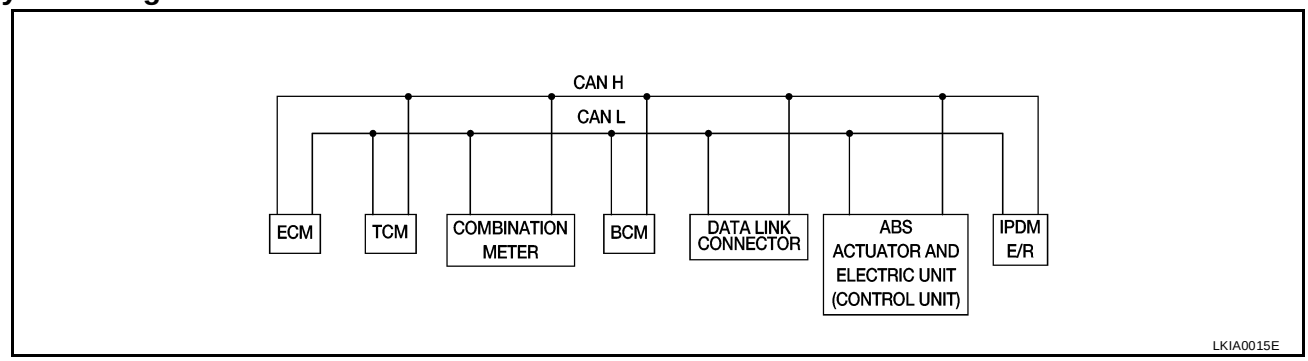

Input/output signal chart

T: Transmit R: Receive

Signals	ECM	TCM	COMBINA-TION METER	BCM	ABS/TCS control unit	IPDM E/R
Engine speed signal	T		R		R	
Engine coolant temperature signal	T		R			
Accelerator pedal position signal	T					
Fuel consumption monitor signal	T		R			
A/T warning lamp signal		T	R			
A/T position indicator signal	R	T	R	R(R range only)	R	
ABS operation signal	R				T	
TCS operation signal	R	R			T	
Air conditioner switch signal	R			T		
Air conditioner compressor signal	R					T
A/C compressor request signal	T					R
Cooling fan motor operation signal	R					T
Cooling fan speed request signal	T					R
Position lights request			R	T		R
Position lights status				R		T
Low beam request				T		R
Low beam status	R			R		T
High beam request			R	T		R
High beam status	R			R		T
Front fog lights request				T		R
Front fog light status				R		T
OD cancel switch signal		R	T			R
Brake switch signal		R	T			
Vehicle speed signal	R		T			
	R		T	R		
Oil pressure switch			R			T
Sleep request1			R	T		
Sleep request2				T		R
N range switch signal		R	T			

Signals	ECM	TCM	COMBINA-TION METER	BCM	ABS/TCS control unit	IPDM E/R
P range switch signal		R	T			
Seat belt buckle switch signal			T	R		
Door switch signal			R	T		R
Tail lamp request			R	T		R
Turn indicator signal			R	T		
Buzzer output signal			R	T		
Trunk switch signal			R	T		
ASCD main switch signal	T		R			
ASCD cruise signal	T		R			
Wiper operation				R		T
Wiper stop position signal				R		T
Rear window defogger switch signal				T		R
Rear window defogger control signal	R			R		T

FOR A/T MODELS

System diagram

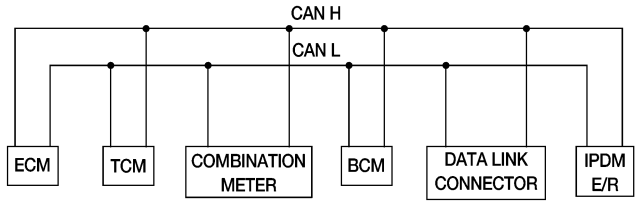

LKIA0017E

Input/output signal chart

T: Transmit R: Receive

Signals	ECM	TCM	COMBINATION METER	BCM	IPDM E/R
Engine speed signal	T		R		
Engine coolant temperature signal	T		R		
Accelerator pedal position signal	T				R
Fuel consumption monitor signal	T		R		
A/T warning lamp signal		T	R		
A/T position indicator signal	R	T	R	R(R range only)	
Air conditioner switch signal	R			T	
Air conditioner compressor signal	R				T
A/C compressor request signal	T				R
Blower fan switch signal	R(QR25DE)			T	
Cooling fan motor operation signal	R			T	
Cooling fan speed request signal	T				R
Position lights request			R	T	R
Position lights status				R	T
Low beam request				T	R

Signals	ECM	TCM	COMBINATION METER	BCM	IPDM E/R
Low beam status	R			R	T
High beam request			R	T	R
High beam status	R			R	T
Front fog lights request				T	R
Front fog light status				R	T
OD cancel switch signal		R	T		R
Brake switch signal		R	T		
Vehicle speed signal	R		T		
	R		T	R	
Oil pressure switch			R		T
Sleep request1			R	T	
Sleep request2				T	R
N range switch signal		R	T		
P range switch signal		R	T		
Seat belt buckle switch signal			T	R	
Door switch signal			R	T	R
Tail lamp request			R	T	R
Turn indicator signal			R	T	
Buzzer output signal			R	T	
Trunk switch signal			R	T	
ASCD main switch signal	T		R		
ASCD cruise signal	T		R		
Wiper operation				R	T
Wiper stop position signal				R	T
Rear window defogger switch signal				T	R
Rear window defogger control signal	R			R	T

FOR M/T MODELS

System diagram

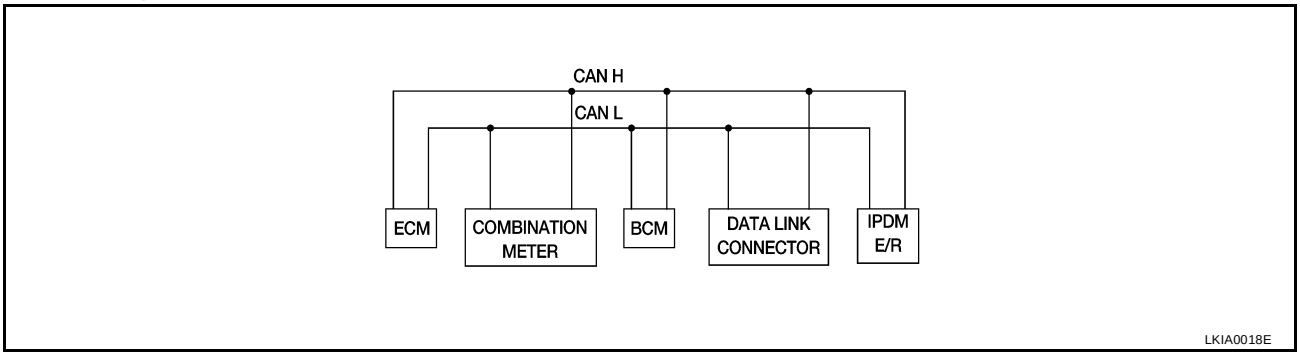

Input/output signal chart

T: Transmit R: Receive

Signals	ECM	COMBINATION METER	BCM	IPDM E/R
Engine speed signal	T			
Engine coolant temperature signal	T			
Fuel consumption monitor signal	T			
Air conditioner switch signal	R		T	

Signals	ECM	COMBINATION METER	BCM	IPDM E/R
Air conditioner compressor signal	R			T
A/C compressor request signal	T			R
Blower fan switch signal	R(QR25DE)		T	
Cooling fan motor operation signal	R			T
Cooling fan speed request signal	T			R
Position lights request		R	T	R
Position lights status			R	T
Low beam request			T	R
Low beam status	R		R	T
High beam request		R	T	R
High beam status	R		R	T
Front fog lights request			T	R
Front fog light status			R	T
Vehicle speed signal	R	T		
Oil pressure switch		R		T
Sleep request1		R	T	
Sleep request2			T	R
Seat belt buckle switch signal		T	R	
Door switch signal		R	T	R
Tail lamp request		R	T	R
Turn indicator signal		R	T	
Buzzer output signal		R	T	
Trunk switch signal		R	T	
ASCD main switch signal	T	R		
ASCD cruise signal	T	R		
Wiper operation			R	T
Wiper stop position signal			R	T
Rear window defogger switch signal			T	R
Rear window defogger control signal	R		R	T

Schematic

EKS00425

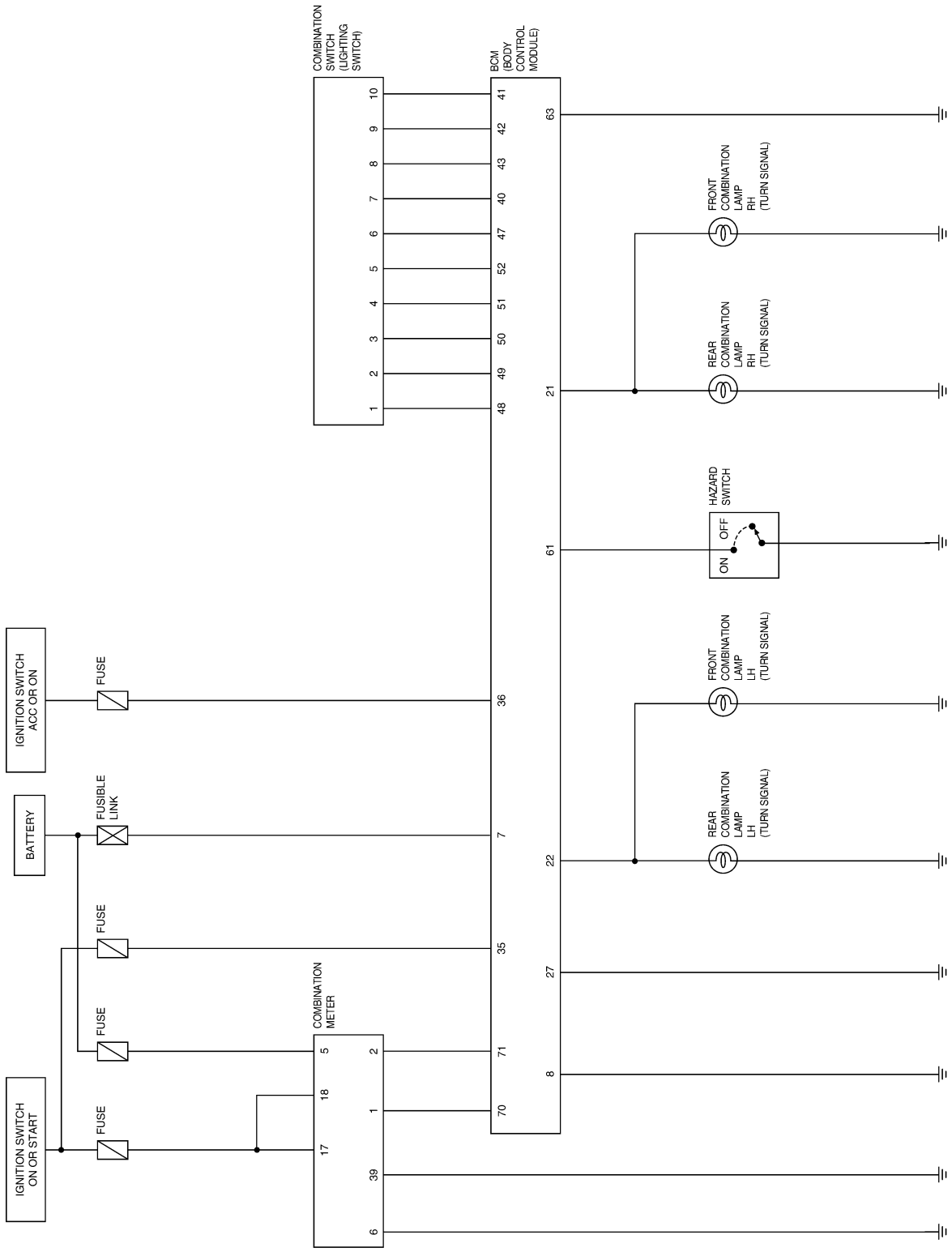

WKWA0399E

Wiring Diagram — TURN —

EKS00426

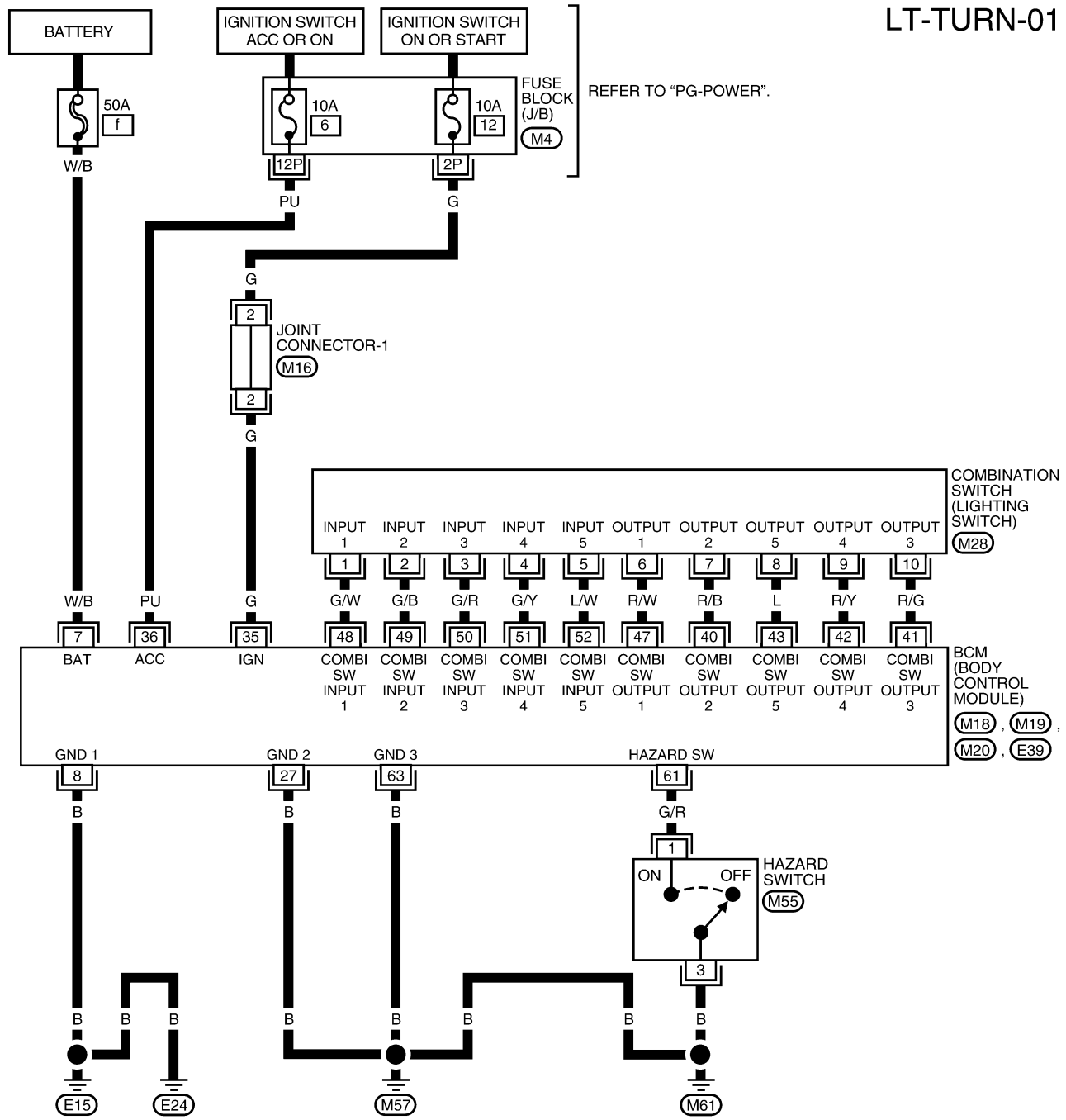

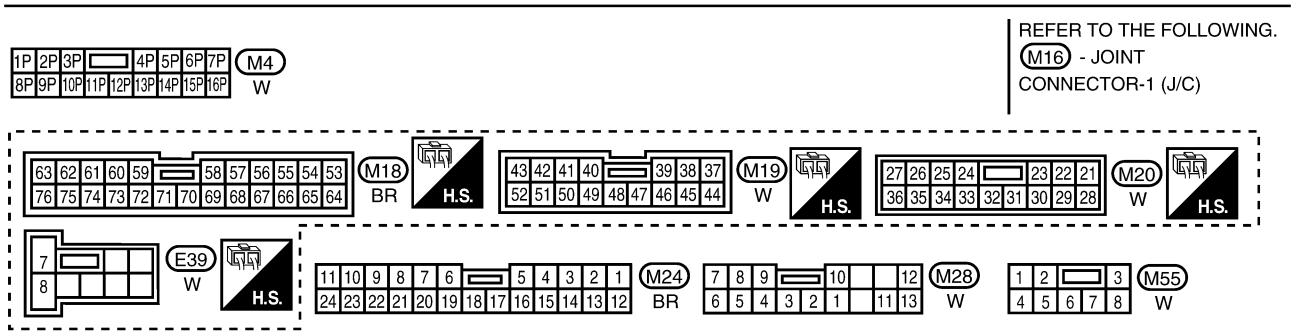

LKWA0031E

LT-TURN-02

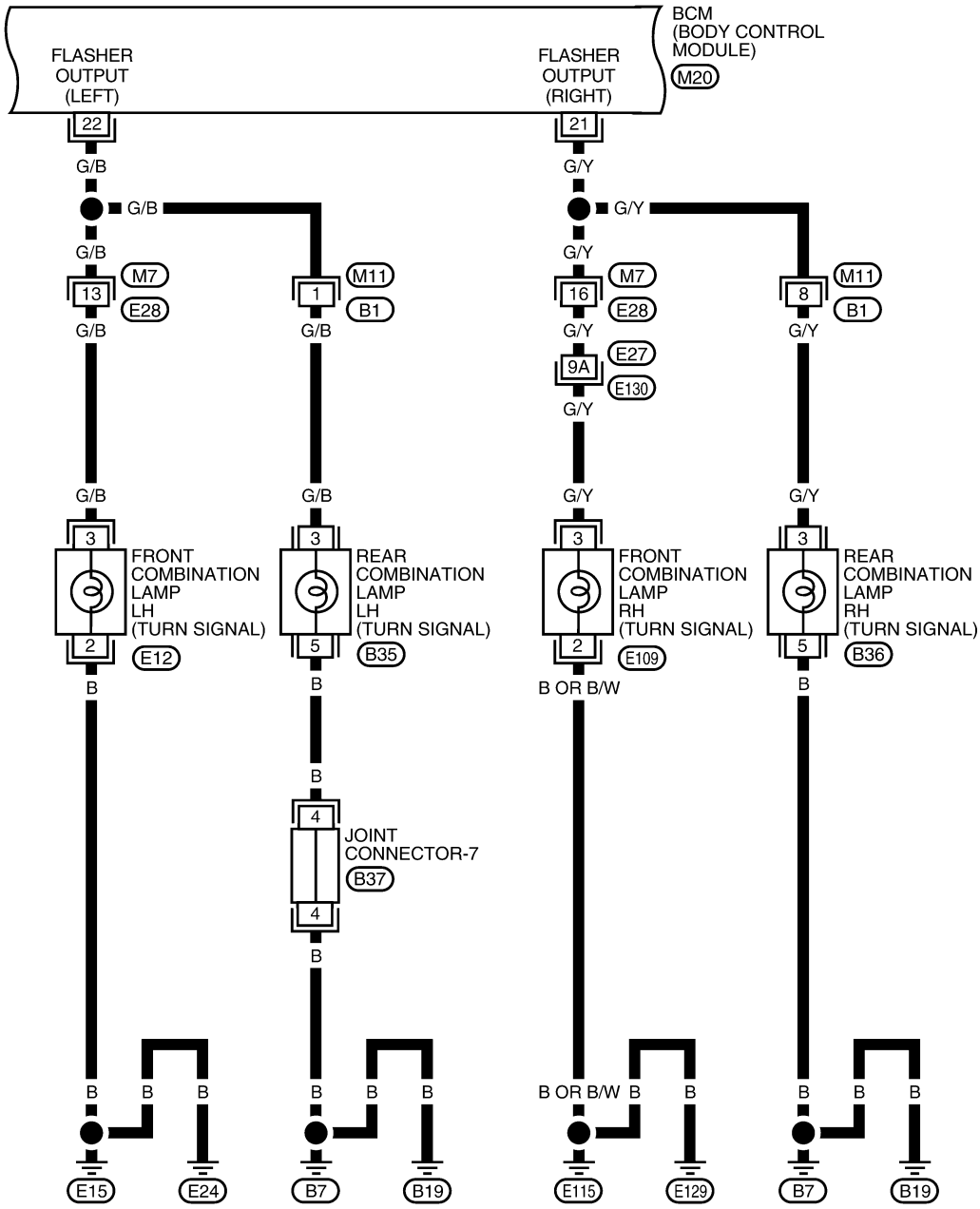

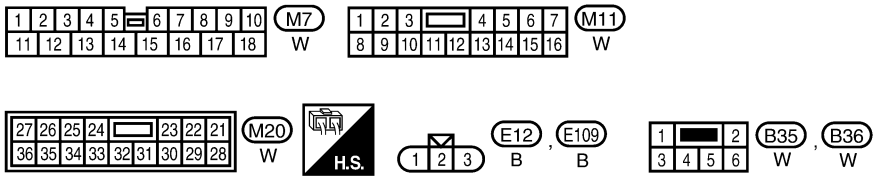

REFER TO THE FOLLOWING.
E130 - SUPER MULTIPLE JUNCTION (SMJ)
B37 - JOINT CONNECTOR (J/C)

WKWA0400E

LT-TURN-03

: DATA LINE

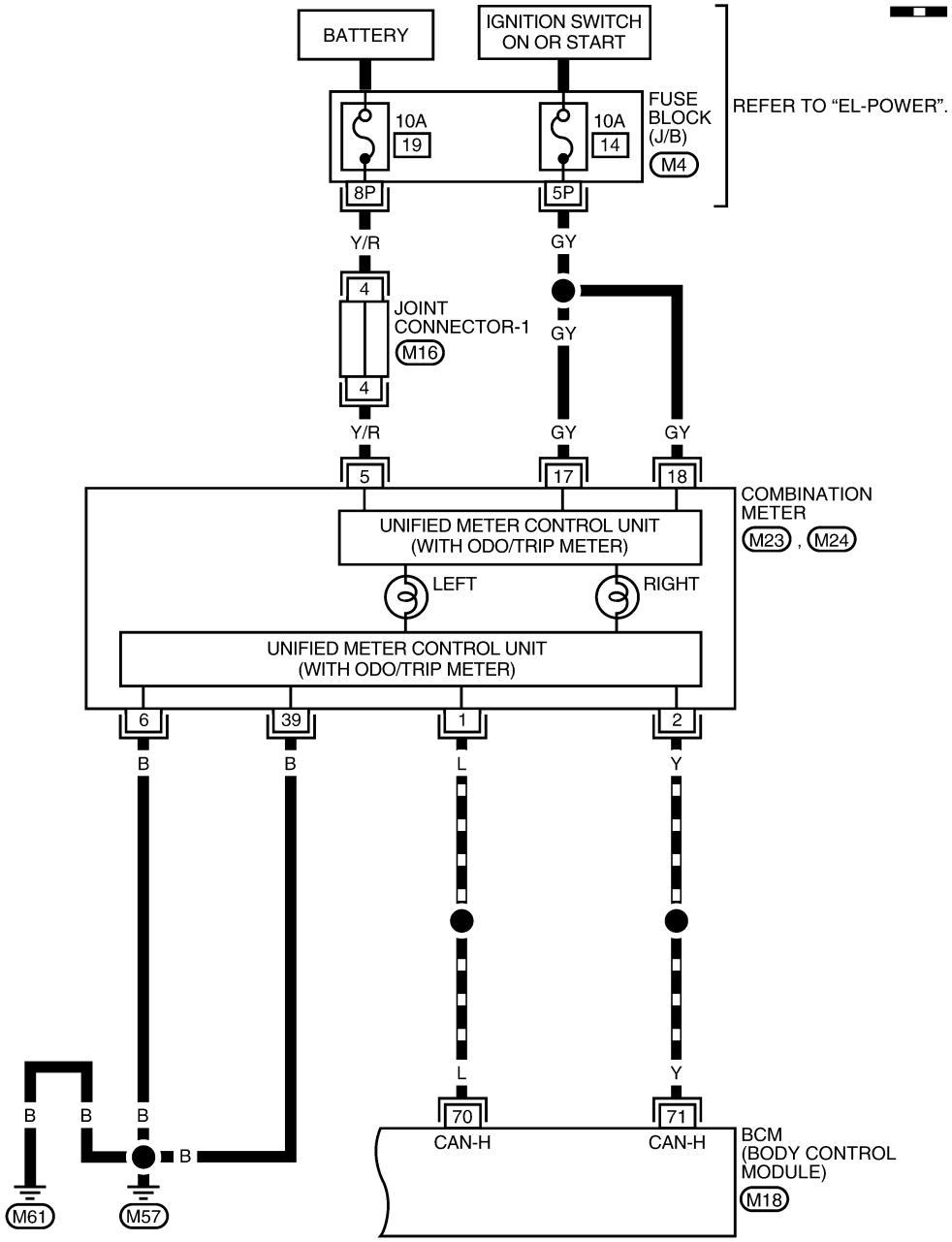

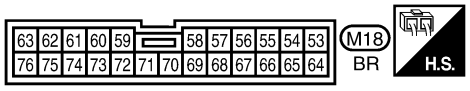

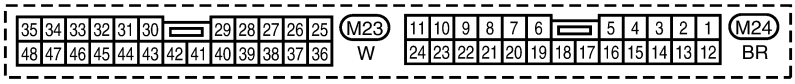

REFER TO THE FOLLOWING.
M4 - FUSE BLOCK - JUNCTION BOX (J/B)
M16 - JOINT CONNECTOR (J/C)

LKWA0033E

Terminals and Reference Value for BCM

EKS00427

Terminal No.	Wire color	Signal name	Measuring condition			Reference value (V) or waveform
			Ignition switch	Operation or condition		
7	W/B	Battery power supply	OFF	—		Approx. 12V
8	B	Ground	ON	—		Approx. 0V
21	G/Y	Turn signal (right)	ON	Combination switch	Turn right ON	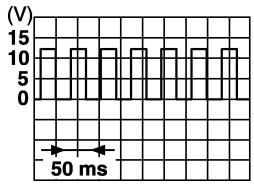 SKIA1120J
22	G/B	Turn signal (left)	ON	Combination switch	Turn left ON	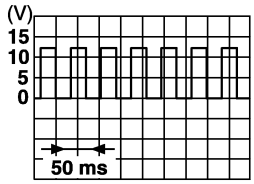 SKIA1120J
35	G	IGN power	ON	—		Approx. 12V
42	R/Y	Combination switch OUTPUT 4	ON	Lighting, turn, wiper OFF		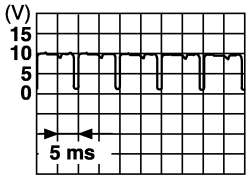 SKIA1119J
43	L	Combination switch OUTPUT 5	ON	Lighting, turn, wiper OFF		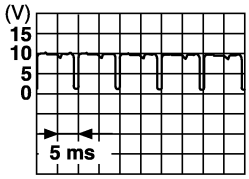 SKIA1119J
48	G/W	Combination switch INPUT 1	ON	Lighting, turn, wiper OFF		Approx. 0V
61	G/R	Hazard	OFF	Hazard switch	ON	Approx. 0V
					OFF	Approx. 5V

CONSULT-II Function

EKS00428

CONSULT-II has a display function for work support, self-diagnosis, data monitor, and active test for each part by combining data receiving and sending via the communication line from BCM.

BCM diagnosis part	Check item, diagnosis mode	Description
Flasher	Data monitor	Displays BCM input data in real time.
	Active test	Operation of electrical loads can be checked by sending driving signal to them.

CONSULT-II BASIC OPERATION

1. With the ignition switch OFF, connect CONSULT-II to the vehicle-side data link connector, then turn ignition switch ON.
2. Touch “START”.

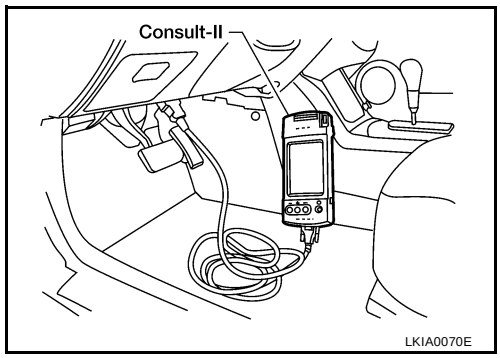

3. Touch “BCM” on “SELECT SYSTEM” screen.

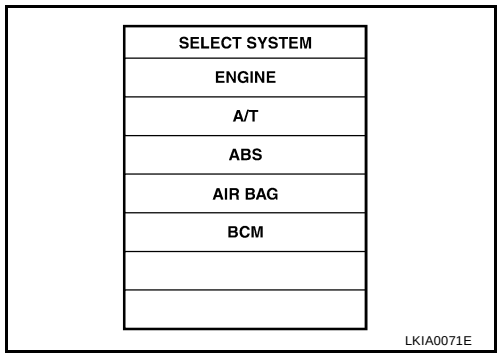

4. Select the desired part to be diagnosed on the “SELECT TEST ITEM” screen.

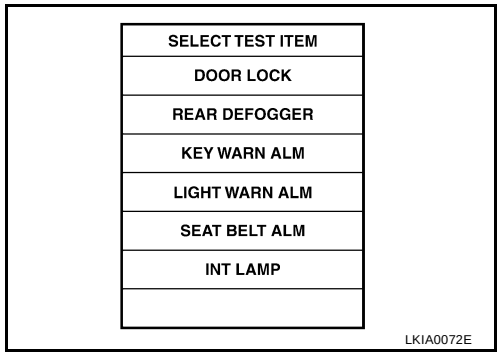

DATA MONITOR

Operation Procedure

1. Touch “FLASHER” on “SELECT TEST ITEM” screen.
2. Touch “DATA MONITOR” on “SELECT DIAG MODE” screen.
3. Touch either “ALL SIGNALS” or “SELECTION FROM MENU” on the “DATA MONITOR” screen.

All signals	Monitors all the signals.
Selection from menu	Selects and monitors the individual signal.

4. Touch “START”.
5. When “SELECTION FROM MENU” is selected, touch items to be monitored. When “ALL SIGNALS” is selected, all the items will be monitored.
6. Touch “RECORD” while monitoring, then the status of the monitored item can be recorded. To stop recording, touch “STOP”.

Display Item List

Monitor item name “OPERATION OR UNIT”		Contents
IGN ON SW	“ON/OFF”	“IGN position (ON)/OFF, ACC position (OFF)” judged from the ignition switch signal is displayed.
HAZARD SW	“ON/OFF”	Displays “Hazard ON (ON)/Hazard OFF (OFF)” status, determined from hazard switch signal.
TURN SIGNAL R	“ON/OFF”	Displays “Turn right (ON)/Other (OFF)” status, determined from lighting switch signal.
TURN SIGNAL L	“ON/OFF”	Displays “Turn left (ON)/Other (OFF)” status, determined from lighting switch signal.

ACTIVE TEST

Operation Procedure

1. Touch “FLASHER” on “SELECT TEST ITEM” screen.
2. Touch “ACTIVE TEST” on “SELECT DIAG MODE” screen.
3. Touch item to be tested and check operation of the selected item.
4. During the operation check, touching “BACK” deactivates the operation.

Display Item List

Test item	Display on CONSULT-II screen	Description
Turn signal lamp (right) output	FLASHER (RIGHT)	Turn signal lamp (right) can be operated by any ON-OFF operations.
Turn signal lamp (left) output	FLASHER (LEFT)	Turn signal lamp (left) can be operated by any ON-OFF operations.
Turn signal lamp (right) indicator signal output	FLASHER (RIGHT) (CAN)	Turn signal lamp (right) indicator signal can be output by CAN communication line to gauges by any ON-OFF operations.
Turn signal lamp (left) indicator signal output	FLASHER (LEFT) (CAN)	Turn signal lamp (left) indicator signal can be output by CAN communication line to gauges by any ON-OFF operations.

Turn Signal Lamp Does Not Operate

EKS00429

1. BULB INSPECTION

Check each turn signal lamp bulb to make sure correct bulbs are installed.

OK or NG

OK >> GO TO 2.
NG >> Replace bulb.

2. INSPECTION 1 BETWEEN COMBINATION SWITCH AND BCM

Select BCM on CONSULT-II. Carry out “BCM C/U” self-diagnosis.

Displayed results of self-diagnosis

Diagnosis system 1 - 5>> Combination switch system malfunction. Refer to BCS-16, "Combination Switch Inspection According to Self-Diagnostic Results" .

No malfunction detected>> GO TO 3.

SELF-DIAG RESULTS	
DTC RESULTS	TIME
NO DTC IS DETECTED. FURTHER TESTING MAY BE REQUIRED	

LKIA0073E

3. INSPECTION 2 BETWEEN COMBINATION SWITCH AND BCM

Select “BCM” on CONSULT-II. With “FLASHER” data monitor, check that “TURN SIGNAL R” and “TURN SIGNAL L” turn ON-OFF according to operation of turn signal switch.

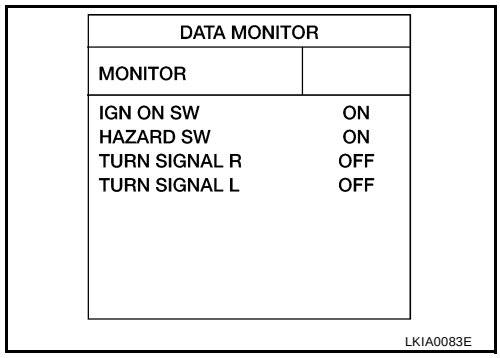

DATA MONITOR	
MONITOR	
IGN ON SW	ON
HAZARD SW	ON
TURN SIGNAL R	OFF
TURN SIGNAL L	OFF

LKIA0083E

OK or NG

OK >> GO TO 4.
NG >> Replace lighting switch. Refer to LT-96, "Removal and Installation" .

4. INSPECTION 1 BETWEEN BCM AND TURN SIGNAL LAMPS

1. Select “BCM” on CONSULT-II. Select “FLASHER” active test.
2. Check that “FLASHER RIGHT” and “FLASHER LEFT” operate.

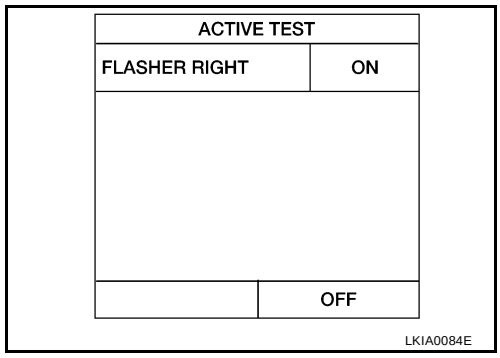

ACTIVE TEST	
FLASHER RIGHT	ON
	OFF

LKIA0084E

OK or NG

OK >> Replace BCM.
NG >> GO TO 5.

5. INSPECTION 2 BETWEEN BCM AND TURN SIGNAL LAMPS

1. Disconnect BCM connector and all turn signal lamp connectors.
2. Check continuity between harness connectors of BCM and body ground.

Terminals				Continuity
BCM			Body ground	No
Connector		Terminal (wire color)		
Right	M20	21 (G/Y)		
Left	M20	22 (G/B)		

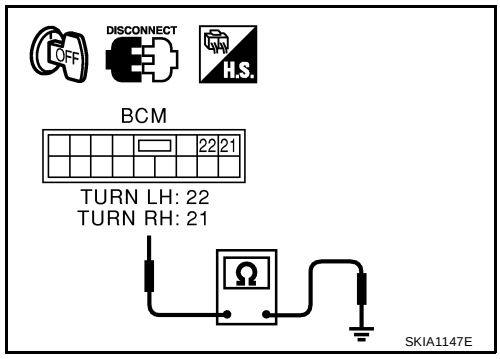

OK or NG

OK >> Replace BCM.
NG >> Check for short circuit in harnesses between BCM and each turn signal and repair as necessary.

Hazard Lamp Does Not Operate

EKS0042A

1. BULB INSPECTION

Check each turn signal lamp bulb to make sure correct bulbs are installed.

OK or NG

OK >> GO TO 2.
NG >> Replace bulb.

2. INSPECTION 1 BETWEEN HAZARD SWITCH AND BCM

Select “BCM” on CONSULT-II. Use “FLASHER” data monitor to verify that “HAZARD SW” turns ON-OFF according to operation of hazard switch.

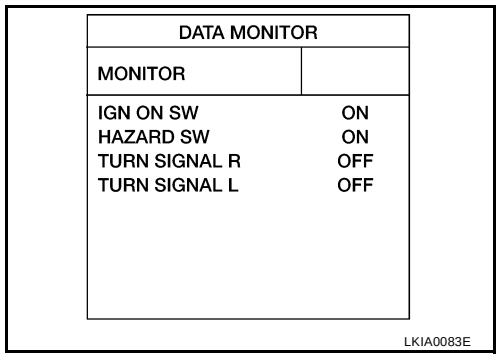

OK or NG

OK >> GO TO 5.
NG >> GO TO 3.

3. INSPECTION 2 BETWEEN HAZARD SWITCH AND BCM

1. Disconnect BCM connector and hazard switch connector.
2. Check continuity between harness connector terminal of BCM and harness connector terminal of hazard switch.

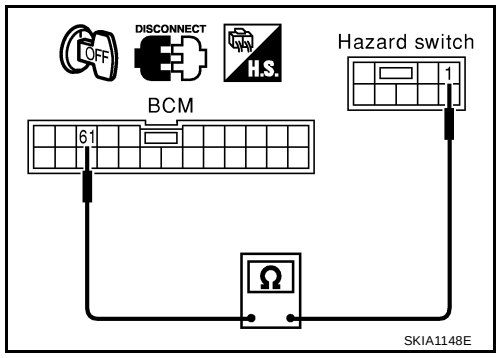

Terminals				Continuity
BCM		Hazard switch		
Connector	Terminal (wire color)	Connector	Terminal (wire color)	
M18	61 (G/R)	M55	1 (G/R)	Yes

OK or NG

OK >> Connect connectors. GO TO 4.
NG >> Check for short circuit or open circuit in harness between BCM and hazard switch. Repair as necessary.

4. INSPECTION BCM

Check voltage between BCM terminal and body ground.

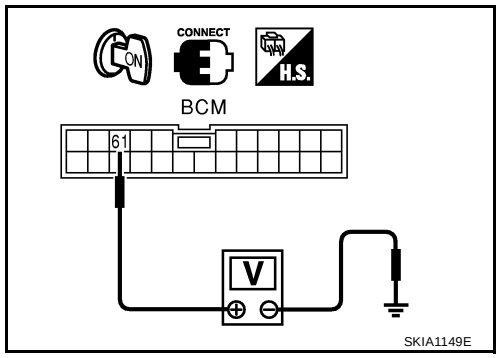

Terminals			Voltage
BCM (+)		Body ground (–)	1.6V or more
Connector	Terminal (wire color)		
M18	61 (G/R)		

OK or NG

OK >> Replace hazard switch. Refer to LT-97, "Removal and Installation" .
NG >> Replace BCM.

5. INSPECTION 1 BETWEEN BCM AND TURN SIGNAL LAMPS

1. Select “BCM” on CONSULT-II. Select “FLASHER” active test.
2. Check that “FLASHER RIGHT” and “FLASHER LEFT” operate.

OK or NG

OK >> Replace BCM.
NG >> GO TO 6.

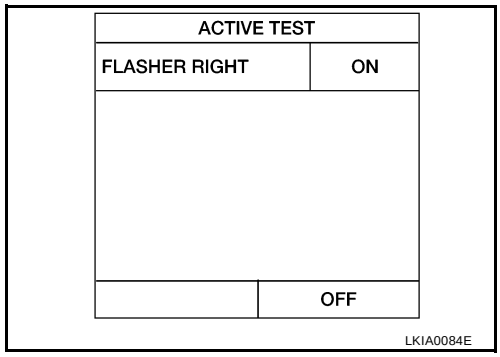

6. INSPECTION 2 BETWEEN BCM AND TURN SIGNAL LAMPS

1. Disconnect BCM connector and all turn signal lamp connectors.
2. Check continuity between harness connectors of BCM and body ground.

Terminals				Continuity
BCM			Body ground	No
Connector		Terminal (wire color)		
Right	M20	21 (G/Y)		
Left	M20	22 (G/B)		

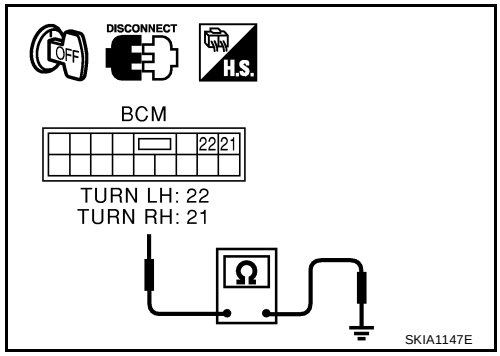

OK or NG

OK >> Replace BCM.
NG >> Check for short circuit in harnesses between BCM and each turn signal. Repair as necessary.

Turn Signal Indicator Lamp Does Not Operate

EKS0042B

1. BULB INSPECTION

Inspect turn signal indicator lamp bulb.

OK or NG

OK >> Replace combination meter. Refer to DI-21, "Removal and Installation" .
NG >> Replace indicator bulb.

Bulb Replacement

EKS0042C

FRONT TURN SIGNAL LAMP

Refer to LT-24, "Bulb Replacement" .

REAR TURN SIGNAL LAMP

Refer to LT-121, "TAIL LAMP" .

Removal and Installation

EKS0042D

FRONT TURN SIGNAL LAMP

Refer to LT-25, "Removal and Installation" .

REAR TURN SIGNAL LAMP

Refer to LT-122, "REAR COMBINATION LAMP" .

LIGHTING AND TURN SIGNAL SWITCH

PFP:25540

Removal and Installation

EKS0042E

1. Remove the steering column cover. Refer to PS-10, "Removal and installation" .
2. Pinch tabs and slide out lighting and turn signal switch (combination switch).

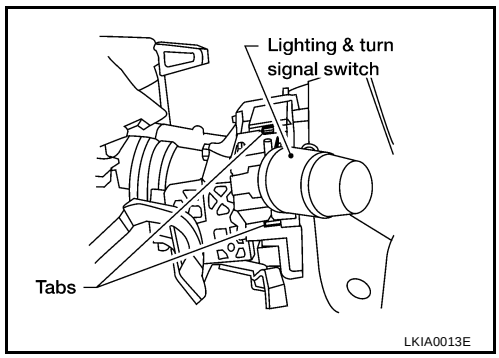

Switch Circuit Inspection

EKS0042F

Refer to BCS-16, "Combination Switch Inspection According to Self-Diagnostic Results" .

HAZARD SWITCH

PFP:25290

Removal and Installation

EKS0042G

1. Remove center console storage compartment. Refer to IP-12, "Removal and Installation" .
2. Depress hazard switch tab, and remove hazard switch.

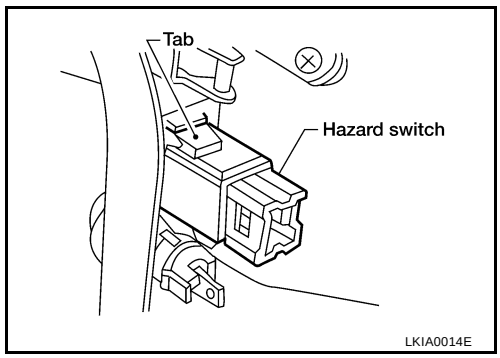

COMBINATION SWITCH

PFP:25567

Combination Switch Reading Function

EKS0042H

Refer to BCS-3, "Combination Switch Reading Function" .

CONSULT-II Function

EKS0042I

CONSULT-II has a display function for work support, self-diagnosis, data monitor, and active test for each part by combining data receiving and sending via the communication line from BCM.

BCM diagnosis part	Check item, diagnosis mode	Description
Combination switch	Data monitor	Displays BCM input data in real time.

CONSULT-II BASIC OPERATION

1. With the ignition switch OFF, connect CONSULT-II to the vehicle-side data link connector, then turn ignition switch ON.
2. Touch “START”.

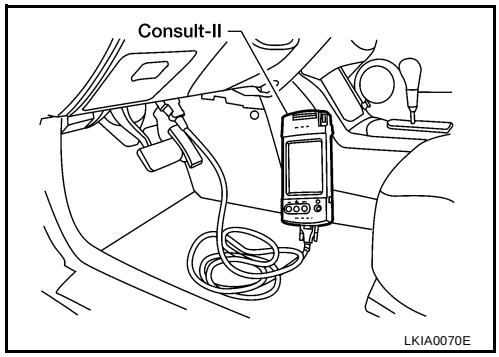

3. Touch “BCM” on “SELECT SYSTEM” screen.

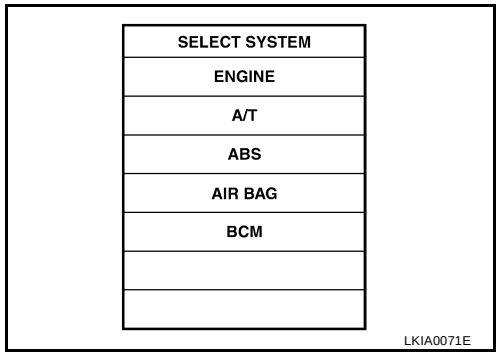

4. Select the desired part to be diagnosed on the “SELECT TEST ITEM” screen.

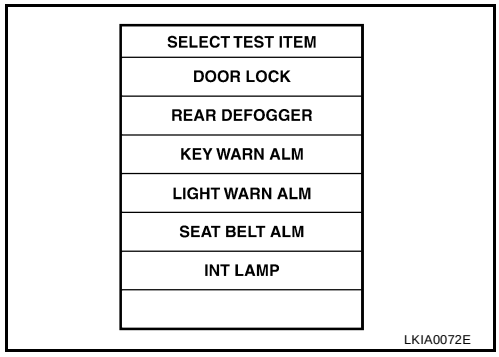

DATA MONITOR

Operation Procedure

1. Touch “COMB SW” on “SELECT TEST ITEM” screen.
2. Touch “DATA MONITOR” on “SELECT DIAG MODE” screen.
3. Touch either “ALL SIGNALS” or “SELECTION FROM MENU” on “DATA MONITOR” screen.

All signals	Monitors all the signals.
Selection from menu	Selects and monitors individual signal.

4. Touch “START”.
5. When “SELECTION FROM MENU” is selected, touch items to be monitored. When “ALL SIGNALS” is selected, all the signals will be monitored.
6. Touch “RECORD” while monitoring, then the status of the monitored item can be recorded. To stop recording, touch “STOP”.

Display Item List

Monitor item name “OPERATION OR UNIT”		Contents
TAIL LAMP SW	“ON/OFF”	Displays status (lighting switch 1st position: ON/Others: OFF) of lighting switch judged from lighting switch signal.
HEAD LAMP SW 1	“ON/OFF”	Displays “Headlamp Switch 1 (ON)/Other (OFF)” status, determined from lighting switch signal.
HEAD LAMP SW 2	“ON/OFF”	Displays status (headlamp switch 2: ON/Others: OFF) of headlamp switch 2 judged from lighting switch signal.
HI BEAM SW	“ON/OFF”	Displays status (high beam switch: ON/Others: OFF) of high beam switch judged from lighting switch signal.
PASSING SW	“ON/OFF”	Displays status (flash-to-pass switch: ON/Others: OFF) of flash-to-pass switch judged from lighting switch signal.
AUTO LIGHT SW[Note]	“ON/OFF”	Displays status of the lighting switch as judged from the lighting switch signal. (AUTO position: ON/Other than AUTO position: OFF)
FR FOG SW	“ON/OFF”	Displays status (front fog switch: ON/Others: OFF) of front fog switch judged from lighting switch signal.
FR WIPER HI	“ON/OFF”	Displays “Front Wiper HI (ON)/Other (OFF)” status, determined from wiper switch signal.
FR WIPER LO	“ON/OFF”	Displays “Front Wiper LOW (ON)/Other (OFF)” status, determined from wiper switch signal.
FR WIPER INT	“ON/OFF”	Displays “Front Wiper INT (ON)/Other (OFF)” status, determined from wiper switch signal.
INT VOLUME	[1 - 7]	Displays intermittent operation knob setting (1 - 7), determined from wiper switch signal.
FR WASHER SW	“ON/OFF”	Displays “Front Washer Switch (ON)/Other (OFF)” status, determined from wiper switch signal.
TURN SIGNAL R	“ON/OFF”	Displays “Turn Right (ON)/Other (OFF)” status, determined from lighting switch signal.
TURN SIGNAL L	“ON/OFF”	Displays “Turn Left (ON)/Other (OFF)” status, determined from lighting switch signal.

NOTE:
For vehicles without auto light, item will be displayed but monitoring is not possible.

Removal and Installation

EKS0042J

For details, refer to LT-96, "Removal and Installation" .

Switch Circuit Inspection

EKS0042K

For details, refer to BCS-16, "Combination Switch Inspection According to Self-Diagnostic Results" .

STOP LAMP

PFP:26550

Wiring Diagram — STOP/L —

EKS0042L

LT-STOP/L-01

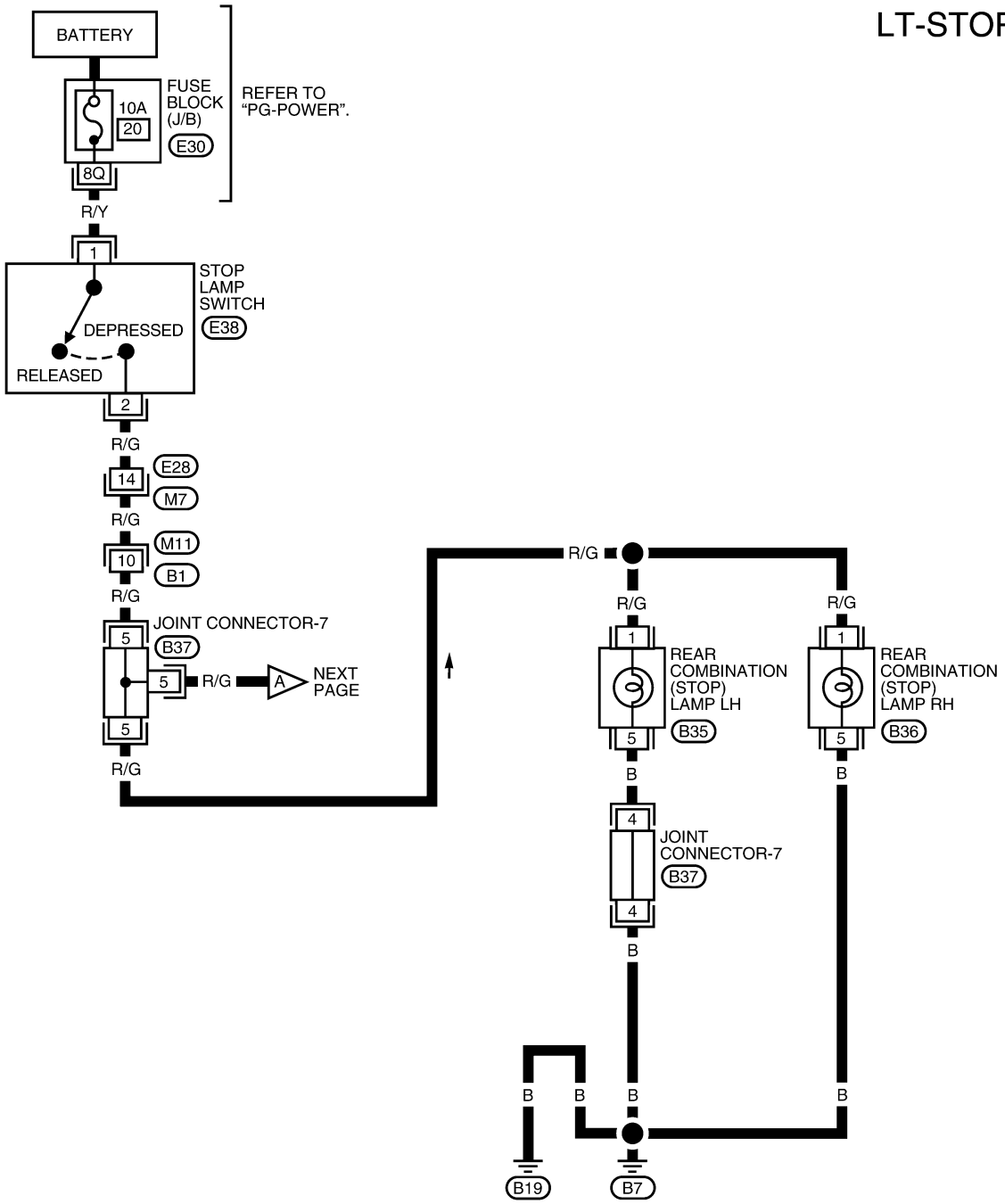

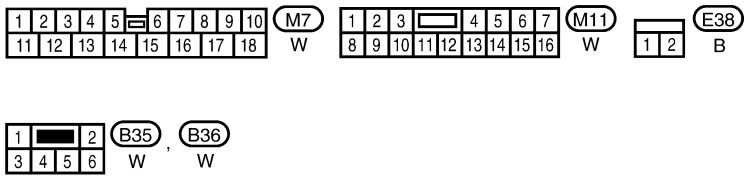

REFER TO THE FOLLOWING.
E30 - FUSE BLOCK-JUNCTION BOX (J/B)
B37 - JOINT CONNECTOR (J/C)

LKWA0034E

LT-STOP/L-02

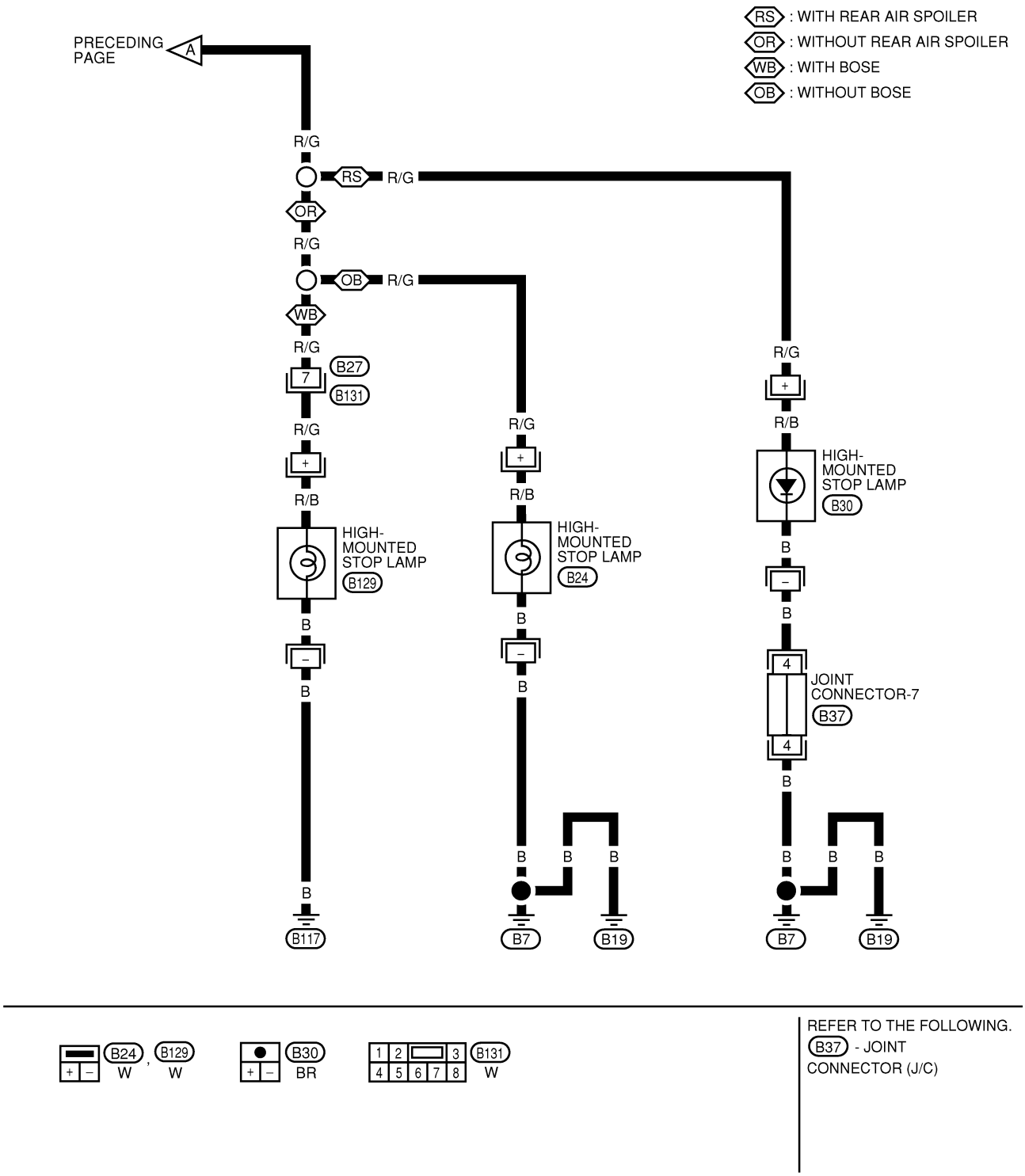

LKWA0035E

Bulb Replacement for High-mounted Stop Lamp

EKS0042M

WITH REAR SPOILER

When this vehicle is equipped with a rear spoiler, the high-mounted stop lamp uses an LED circuit board instead of a bulb. The LED circuit board is not serviceable, and must be replaced as an assembly.

WITHOUT REAR SPOILER

1. Remove high-mounted stop lamp assembly. Refer to LT-102, "Removal and Installation for High-mounted Stop Lamp" .
2. Turn bulb socket counterclockwise to unlock and remove from lamp assembly.
3. Turn bulb counterclockwise to remove from socket.

Installation is the reverse order of removal.

Bulb Replacement for Rear Combination Lamp

EKS0042N

1. Remove rear combination lamp. Refer to LT-102, "Removal and Installation for Rear Combination Lamp" .
2. Turn bulb socket counterclockwise to unlock, and remove from combination lamp assembly.
3. Turn bulb counterclockwise to remove from bulb socket.

Installation is the reverse order of removal.

Removal and Installation for High-mounted Stop Lamp

EKS0042O

WITH REAR SPOILER

When this vehicle is equipped with a rear spoiler, the high-mounted stop lamp uses an LED circuit board instead of a bulb. The LED circuit board is not serviceable, and must be replaced as an assembly.

1. From trunk, disconnect electrical connector.
2. Remove screws, and high-mounted stop lamp assembly.

Installation is the reverse order of removal.

WITHOUT SPOILER

1. Slide high-mounted stop lamp assembly rearward on parcel shelf to give clearance to front tabs.
2. Lift front of lamp assembly up and bring forward to give clearance to rear tabs.
3. Disconnect connector, and remove from vehicle.

Installation is the reverse order of removal.

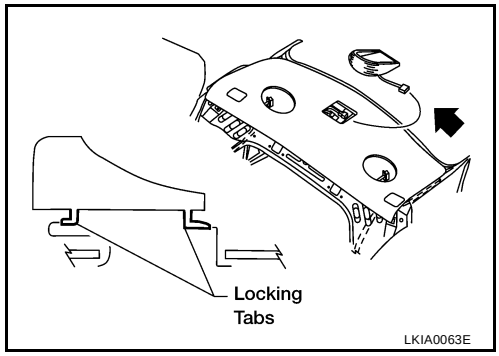

Removal and Installation for Rear Combination Lamp

EKS0042P

1. Displace trunk room trim as needed. Refer to EI-35, "Removal and Installation" .
2. From trunk, remove nuts securing rear combination lamp assembly.
3. Disconnect connectors and remove assembly.

Installation is reverse order of removal.

Rear combination lamp mounting nut:

: 2.5 - 3.7 N·m (0.25 - 0.38 kg-m, 22 - 33 in-lb)

STEP LAMP

PFP:26420

System Description

EKS0042Q

Step lamp turns ON at time when driver door, passenger door, RH rear door, or LH rear door is opened (door switch ON). Lamp turns OFF when all doors are closed (all door switches OFF).

Wiring Diagram — STEP/L —

EKS0042R

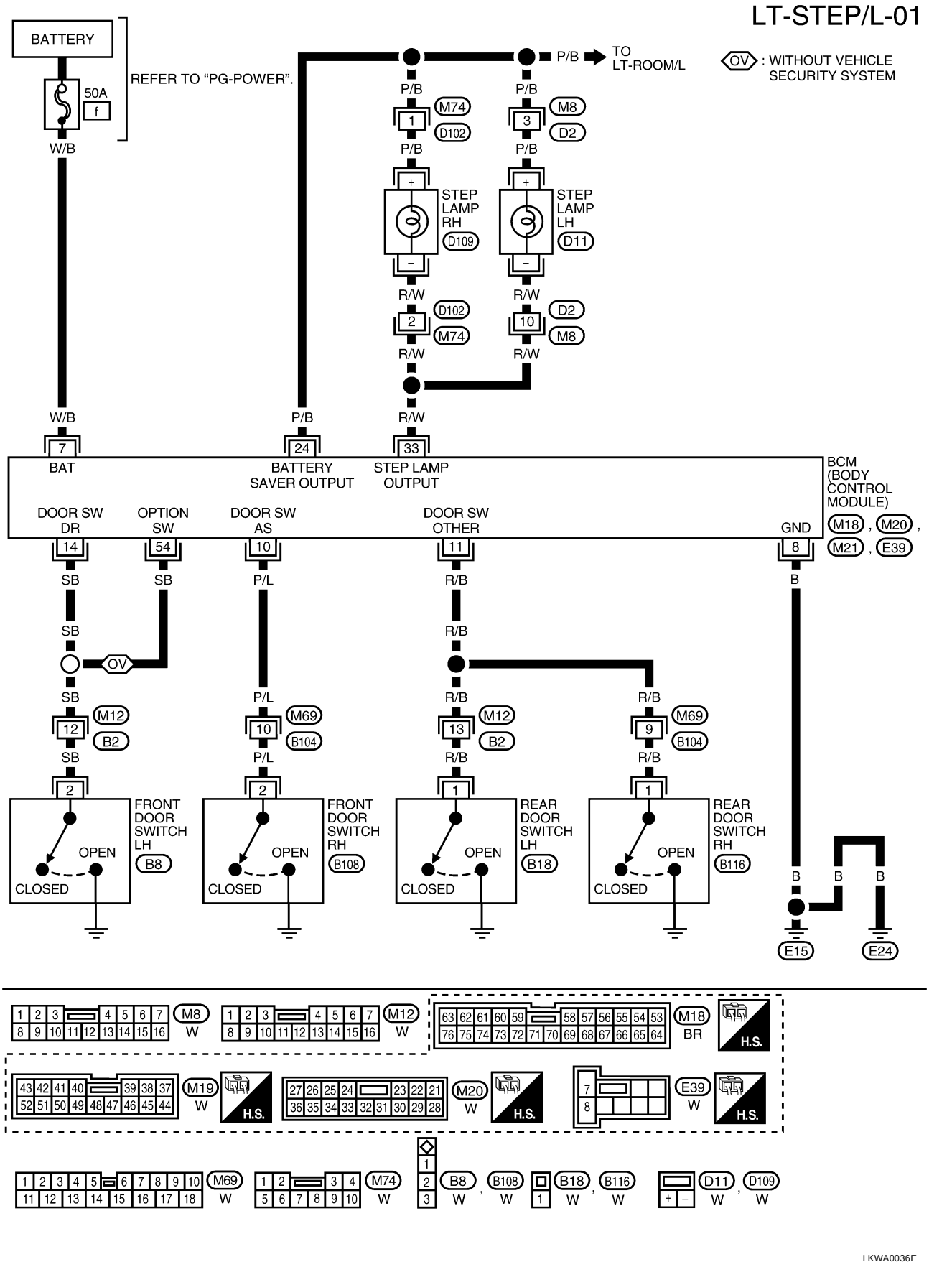

Terminals and Reference Value for BCM

EKS0042S

Terminal No.	Wire color	Signal name	Measuring condition			Standard (V) (Approx.)
			Ignition switch	Operation or condition		
7	W/B	Battery power supply	OFF	—		12
8	B	Ground	ON	—		0
10	P/L	Front door switch RH signal	OFF	Front door switch RH	ON (open)	0
					OFF (closed)	12
11	R/B	Rear door switch (LH and RH) signal	OFF	Rear door switch (LH and RH)	ON (open)	0
					OFF (closed)	12
14	SB	Front door switch LH signal	OFF	Front door switch LH	ON (open)	0
					OFF (closed)	12V
24	P/B	Battery saver output signal	OFF	Any door switch	ON (open)	0[Note]
					OFF (closed)	12V
33	R/W	Step lamp signal	OFF	Any door is open (ON)		0
				All doors are closed (OFF)		12

Note: Becomes battery voltage approximately 30 seconds after any door is opened.

Step Lamp Does Not Operate

EKS0042T

1. INSPECTION 1 BETWEEN EACH DOOR SWITCH AND BCM

Select BCM on CONSULT-II. Use “INT LAMP” data monitor to check that switches listed below turn ON-OFF according to switch operation.

Switch name	CONSULT screen
Driver door switch	DOOR SW - DR
Each door switch	DOOR SW - AS

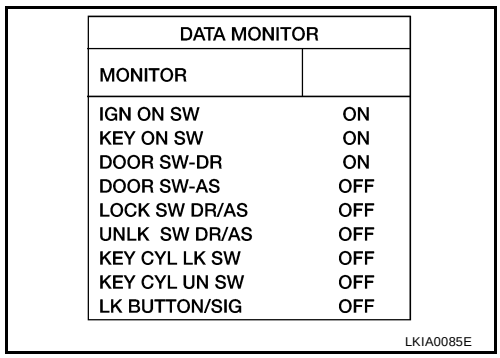

DATA MONITOR	
MONITOR	
IGN ON SW	ON
KEY ON SW	ON
DOOR SW-DR	ON
DOOR SW-AS	OFF
LOCK SW DR/AS	OFF
UNLK SW DR/AS	OFF
KEY CYL LK SW	OFF
KEY CYL UN SW	OFF
LK BUTTON/SIG	OFF

LKIA0085E

OK or NG

OK >> GO TO 2.

NG >> Inspect malfunctioning switch system. Repair as necessary.

2. INSPECTION 1 BETWEEN BCM AND STEP LAMP

1. Disconnect BCM connector and left/right step lamp connectors.
2. Check continuity between harness connector terminal of BCM and harness connector terminal of left/right step lamps.

Terminals				Continuity
BCM		Step lamp		
Connector	Terminal (wire color)	Connector	Terminal (wire color)	
M20	33 (R/W)	D109	– (R/W)	Yes
M20	33 (R/W)	D11	– (R/W)	Yes

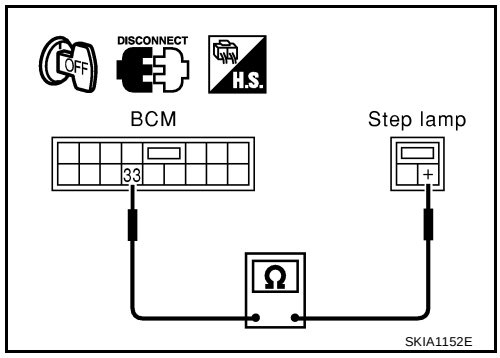

SKIA1152E

OK or NG

OK >> Connect step lamp electrical connector. GO TO 4.

NG >> Check for short circuit or open circuit in harness between BCM and interior lamp. Repair as necessary.

3. INSPECTION 2 BETWEEN BCM AND STEP LAMP

Check voltage between harness connector terminal of BCM and body ground.

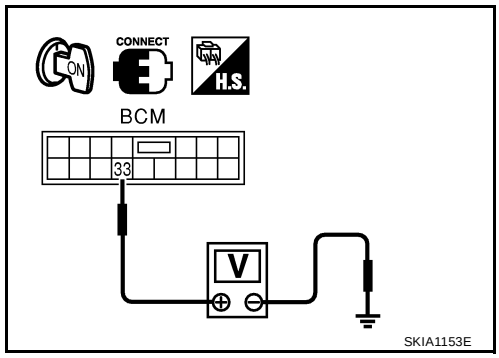

Terminals			Voltage (Approx.)
BCM (+)		Body ground (–)	12
Connector	Terminal (wire color)		
M20	33 (R/W)		

OK or NG

OK >> Replace BCM.
NG >> Replace step lamp.

Bulb Replacement

EKS0042U

1. Pry lens cover from lamp assembly.
2. Push and turn bulb to remove.

Installation is reverse order of removal.

Removal and Installation

EKS0042V

1. Carefully pry lens from door finisher.
2. Disconnect electrical connector.

Installation is reverse order of removal.

BACK-UP LAMP

PFP:26550

Wiring Diagram — BACK/L —

EKS0042W

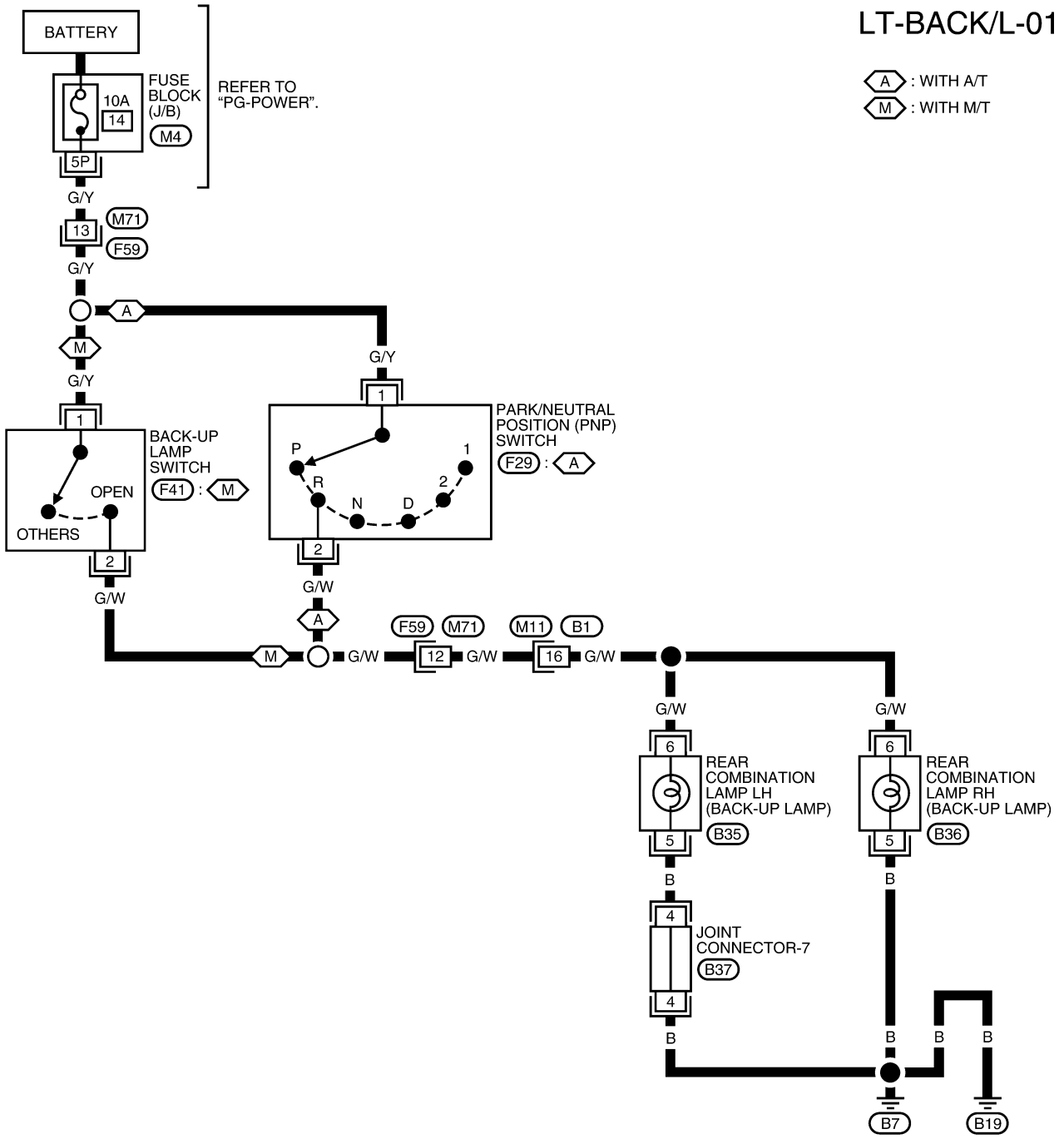

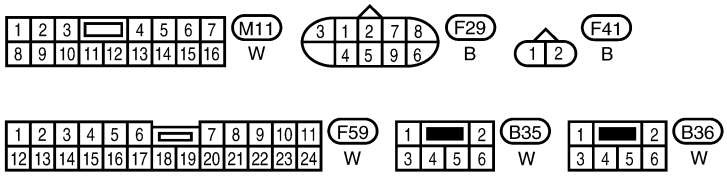

REFER TO THE FOLLOWING.
M4 - FUSE BLOCK - JUNCTION BOX (J/B)
B37 - JOINT CONNECTOR (J/C)

LKWA0037E

Bulb Replacement

EKS0042X

1. Remove rear combination lamp. Refer to LT-102, "Removal and Installation for Rear Combination Lamp" .
2. Turn bulb socket counterclockwise to unlock and remove.
3. Pull bulb from socket to remove.

Installation is reverse order of removal.

Removal and Installation

EKS0042Y

The back-up lamp is part of the rear combination lamp assembly. For removal and installation, refer to LT-102, "Removal and Installation for Rear Combination Lamp" .

PARKING, LICENSE PLATE AND TAIL LAMPS

PFP:26550

System Description

EKS0042Z

Control of the parking, license plate, and tail lamp operation is dependent upon the position of the lighting switch (combination switch). When the lighting switch is placed in the 1ST position, the BCM receives input requesting the parking, license plate, and tail lamps to illuminate. This input is communicated to the IPDM E/R (intelligent power distribution module engine room) across the CAN communication lines. The central processing unit of the IPDM E/R controls the tail lamp relay coil. When energized, this relay directs power to the parking, license plate, and tail lamps, which then illuminate.

Power is supplied at all times

- to tail lamp relay, located in the IPDM E/R (intelligent power distribution module engine room)
- through 10A fuse [No. 38, located in the IPDM E/R (intelligent power distribution module engine room)].

Power is also supplied at all times

- to BCM (body control module) terminal 7
- through 50A fusible link (letter **f** , located in the fuse and fusible link box).

With the ignition switch in the ON or START position, power is supplied

- to BCM (body control module) terminal 35
- through 10A fuse [No. 12, located in the fuse block (J/B)].

With the ignition switch in the ACC or ON position, power is supplied

- to BCM (body control module) terminal 36
- through 10A fuse [No. 6, located in the fuse block (J/B)].

Ground is supplied

- to BCM (body control module) terminals 8, 27, and 63
- through body grounds M57, M61, E15, and E24.

OPERATION BY LIGHTING SWITCH

With the lighting switch in the 1st or 2nd position (or if the auto light system is activated), the BCM (body control module) receives input requesting the parking, license plate, and tail lamps to illuminate. This input is communicated to the IPDM E/R (intelligent power distribution module engine room) across the CAN communication lines. The central processing unit of the IPDM E/R controls the tail lamp relay coil. When energized, this relay directs power

- through terminal 37 of the IPDM E/R
- to front turn signal lamp LH terminal 1,
- to front turn signal lamp RH terminal 1,
- to rear combination lamp LH terminal 2,
- to rear combination lamp RH terminal 2,
- to license lamp LH terminal +, and
- to license lamp RH terminal +.

Ground is supplied at all times

- to front turn signal lamp LH terminal 2,
- through body grounds E15 and E24, and
- to front turn signal lamp RH terminal 2,
- through body grounds E15 and E24, and
- to rear combination lamp LH terminal 5
- through body grounds B7 and B19, and
- to rear combination lamp RH terminal 5
- through body grounds B7 and B19, and
- to license lamp LH terminal –,
- through body grounds B7 and B19, and
- to license lamp RH terminal –
- through body grounds B7 and B19.

With power and ground supplied, the parking, license and tail lamps illuminate.

BATTERY SAVER CONTROL

When the combination switch (lighting switch) is in the 1ST (or 2ND) position, and the ignition switch is turned from ON or ACC to OFF, the battery saver control feature is activated.
Under this condition, the parking, license plate, and tail lamps remain illuminated for 5 minutes, unless the combination switch (lighting switch) position is changed. If the combination switch (lighting switch) position is changed, then the parking, license plate, and tail lamps are turned off.

CAN Communication System Description

EKS00430

CAN (Controller Area Network) is a serial communication line for real time application. It is an on-vehicle multiplex communication line with high data communication speed and excellent error detection ability. Many electronic control units are equipped onto a vehicle, and each control unit shares information and links with other control units during operation (not independent). In CAN communication, control units are connected with 2 communication lines (CAN H line, CAN L line) allowing a high rate of information transmission with less wiring. Each control unit transmits/receives data but selectively reads required data only.

FOR TCS MODELS

System diagram

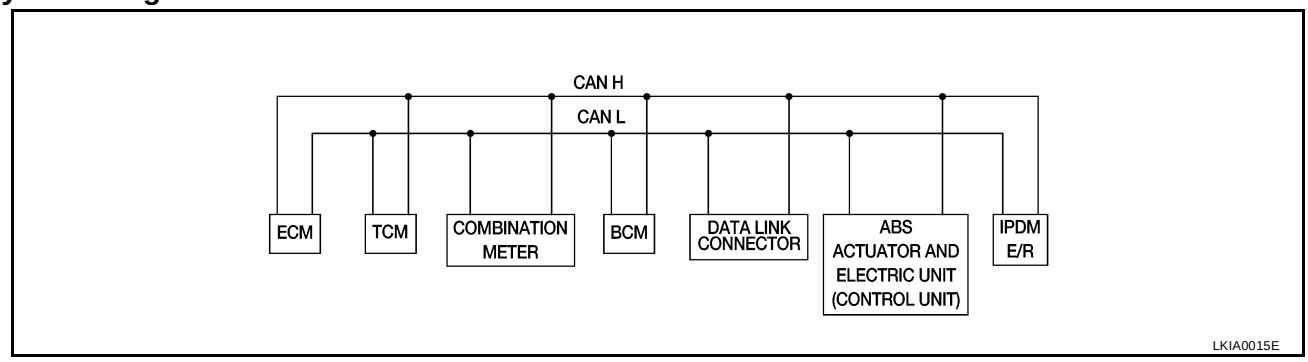

Input/output signal chart

T: Transmit R: Receive

Signals	ECM	TCM	COMBINATION METER	BCM	ABS/TCS control unit	IPDM E/R
Engine speed signal	T		R		R	
Engine coolant temperature signal	T		R			
Accelerator pedal position signal	T					
Fuel consumption monitor signal	T		R			
A/T warning lamp signal		T	R			
A/T position indicator signal	R	T	R	R(R range only)	R	
ABS operation signal	R				T	
TCS operation signal	R	R			T	
Air conditioner switch signal	R			T		
Air conditioner compressor signal	R					T
A/C compressor request signal	T					R
Cooling fan motor operation signal	R					T
Cooling fan speed request signal	T					R
Position lights request			R	T		R
Position lights status				R		T
Low beam request				T		R
Low beam status	R			R		T
High beam request			R	T		R
High beam status	R			R		T
Front fog lights request				T		R

Signals	ECM	TCM	COMBINATION METER	BCM	ABS/TCS control unit	IPDM E/R
Front fog light status				R		T
OD cancel switch signal		R	T			R
Brake switch signal		R	T			
Vehicle speed signal	R		T			
	R		T	R		
Oil pressure switch			R			T
Sleep request1			R	T		
Sleep request2				T		R
N range switch signal		R	T			
P range switch signal		R	T			
Seat belt buckle switch signal			T	R		
Door switch signal			R	T		R
Tail lamp request			R	T		R
Turn indicator signal			R	T		
Buzzer output signal			R	T		
Trunk switch signal			R	T		
ASCD main switch signal	T		R			
ASCD cruise signal	T		R			
Wiper operation				R		T
Wiper stop position signal				R		T
Rear window defogger switch signal				T		R
Rear window defogger control signal	R			R		T

FOR A/T MODELS

System diagram

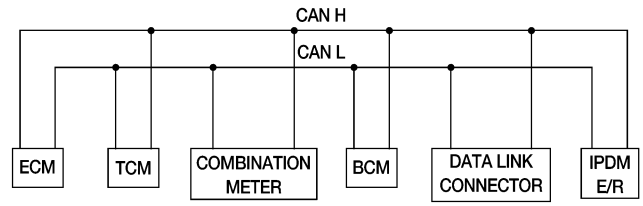

LKIA0017E

Input/output signal chart

T: Transmit R: Receive

Signals	ECM	TCM	COMBINATION METER	BCM	IPDM E/R
Engine speed signal	T		R		
Engine coolant temperature signal	T		R		
Accelerator pedal position signal	T				R
Fuel consumption monitor signal	T		R		
A/T warning lamp signal		T	R		
A/T position indicator signal	R	T	R	R(R range only)	

Signals	ECM	TCM	COMBINATION METER	BCM	IPDM E/R
Air conditioner switch signal	R			T	
Air conditioner compressor signal	R				T
A/C compressor request signal	T				R
Blower fan switch signal	R(QR25DE)			T	
Cooling fan motor operation signal	R			T	
Cooling fan speed request signal	T				R
Position lights request			R	T	R
Position lights status				R	T
Low beam request				T	R
Low beam status	R			R	T
High beam request			R	T	R
High beam status	R			R	T
Front fog lights request				T	R
Front fog light status				R	T
OD cancel switch signal		R	T		R
Brake switch signal		R	T		
Vehicle speed signal	R		T		
	R		T	R	
Oil pressure switch			R		T
Sleep request1			R	T	
Sleep request2				T	R
N range switch signal		R	T		
P range switch signal		R	T		
Seat belt buckle switch signal			T	R	
Door switch signal			R	T	R
Tail lamp request			R	T	R
Turn indicator signal			R	T	
Buzzer output signal			R	T	
Trunk switch signal			R	T	
ASCD main switch signal	T		R		
ASCD cruise signal	T		R		
Wiper operation				R	T
Wiper stop position signal				R	T
Rear window defogger switch signal				T	R
Rear window defogger control signal	R			R	T

FOR M/T MODELS

System diagram

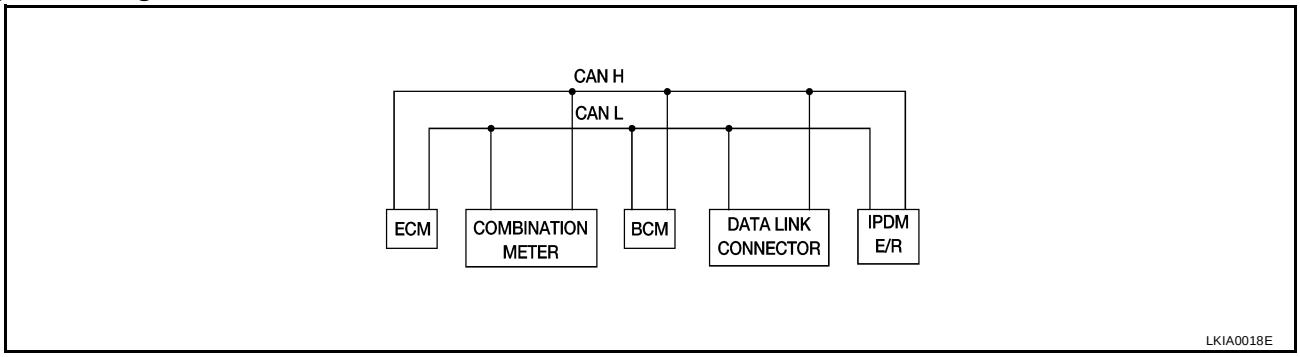

Input/output signal chart

T: Transmit R: Receive

Signals	ECM	COMBINATION METER	BCM	IPDM E/R
Engine speed signal	T			
Engine coolant temperature signal	T			
Fuel consumption monitor signal	T			
Air conditioner switch signal	R		T	
Air conditioner compressor signal	R			T
A/C compressor request signal	T			R
Blower fan switch signal	R(QR25DE)		T	
Cooling fan motor operation signal	R			T
Cooling fan speed request signal	T			R
Position lights request		R	T	R
Position lights status			R	T
Low beam request			T	R
Low beam status	R		R	T
High beam request		R	T	R
High beam status	R		R	T
Front fog lights request			T	R
Front fog light status			R	T
Vehicle speed signal	R	T		
Oil pressure switch		R		T
Sleep request1		R	T	
Sleep request2			T	R
Seat belt buckle switch signal		T	R	
Door switch signal		R	T	R
Tail lamp request		R	T	R
Turn indicator signal		R	T	
Buzzer output signal		R	T	
Trunk switch signal		R	T	
ASCD main switch signal	T	R		
ASCD cruise signal	T	R		
Wiper operation			R	T
Wiper stop position signal			R	T

Signals	ECM	COMBINATION METER	BCM	IPDM E/R
Rear window defogger switch signal			T	R
Rear window defogger control signal	R		R	T

Schematic

EKS00431

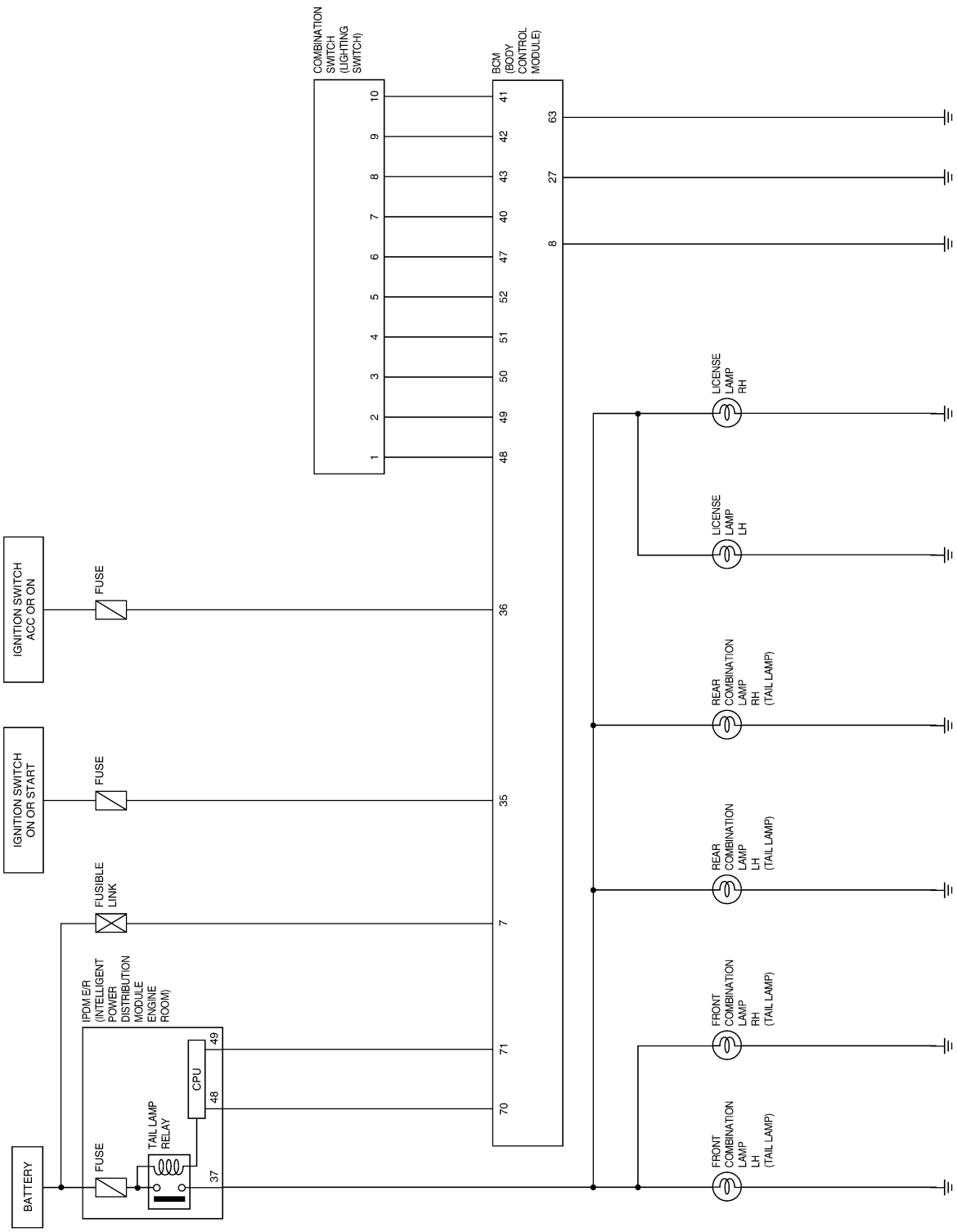

WKWA0411E

Wiring Diagram — TAIL/L —

EKS00432

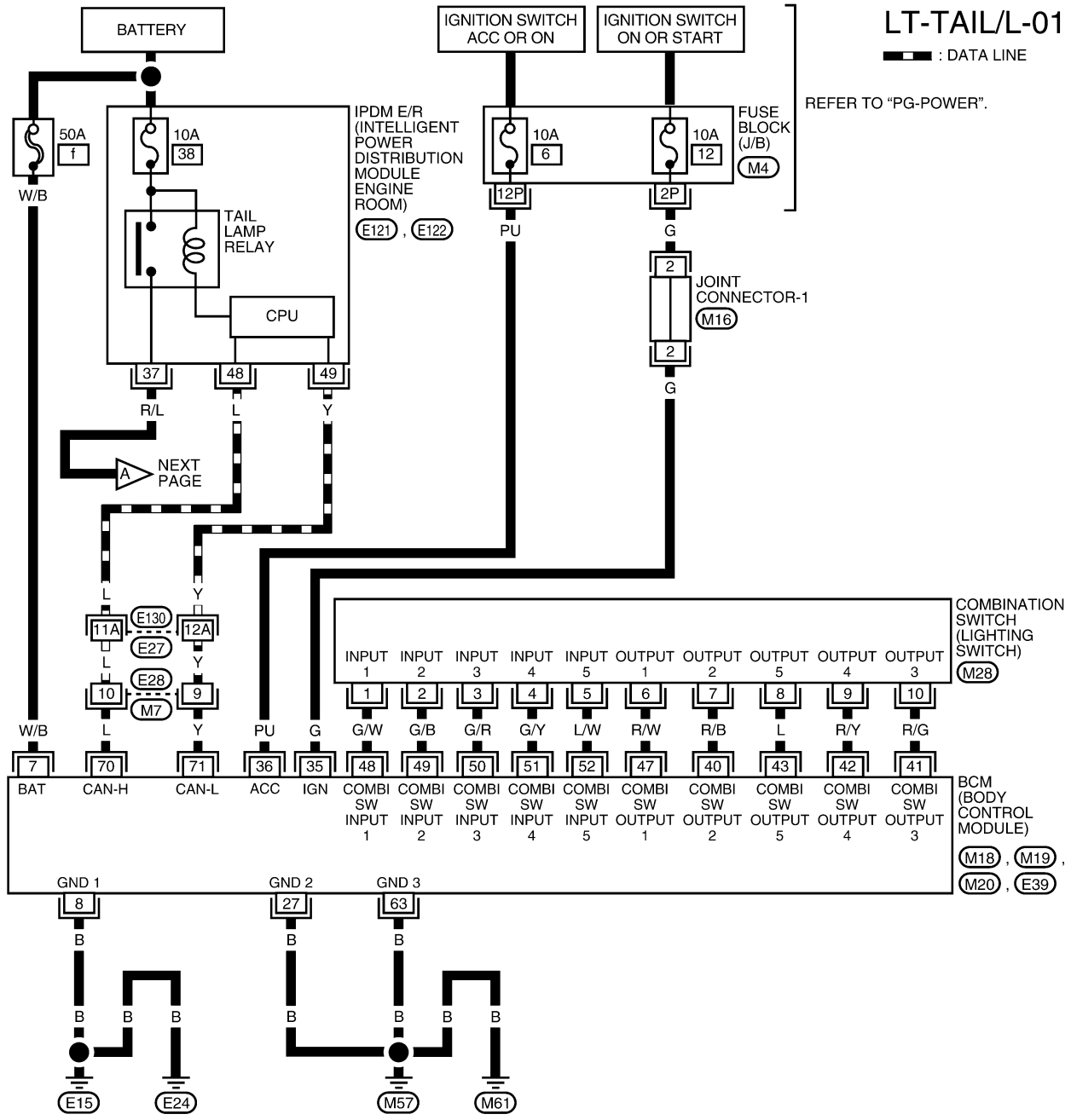

LKWA0038E

LT-TAIL/L-02

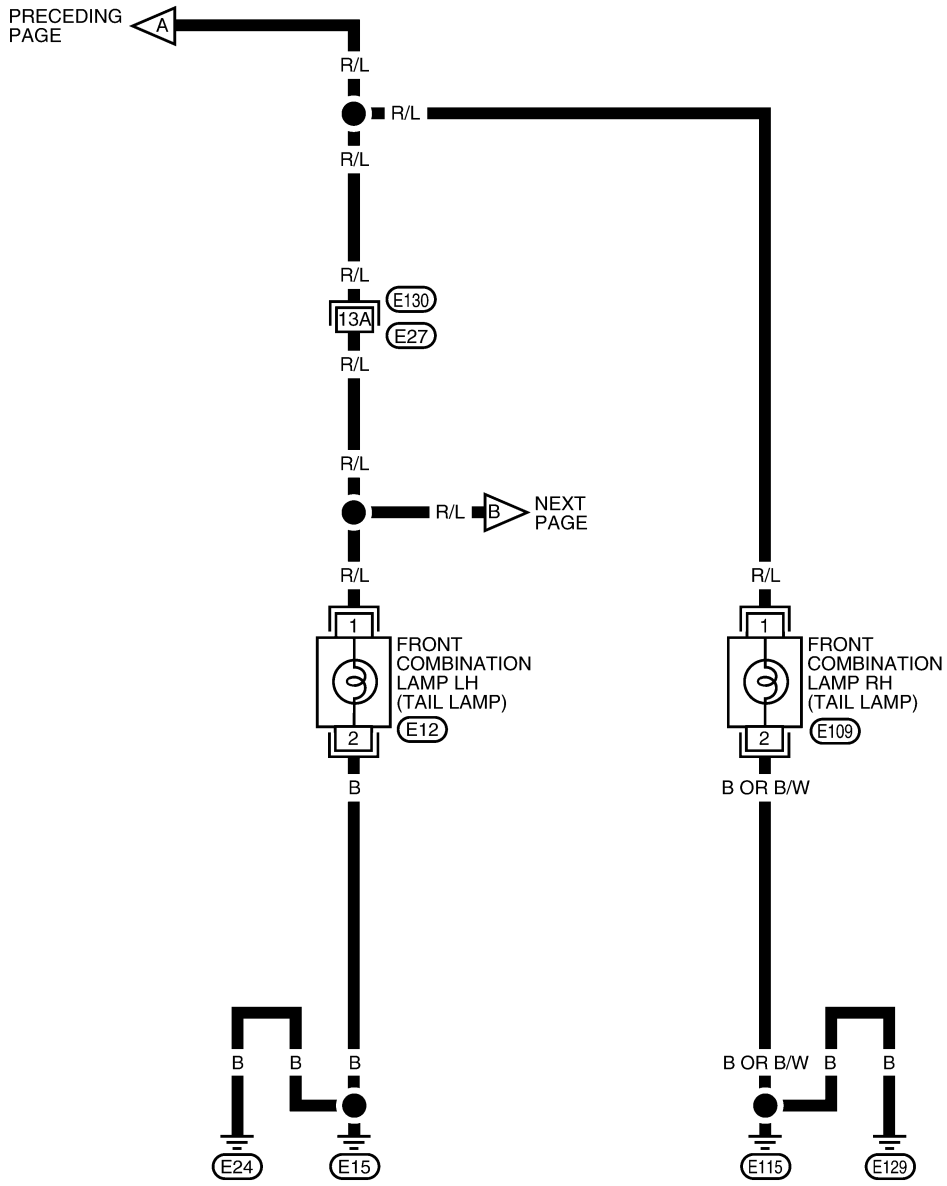

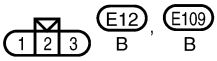

REFER TO THE FOLLOWING.
E130 - SUPER MULTIPLE JUNCTION (SMJ)

WKWA0412E

LT-TAIL/L-03

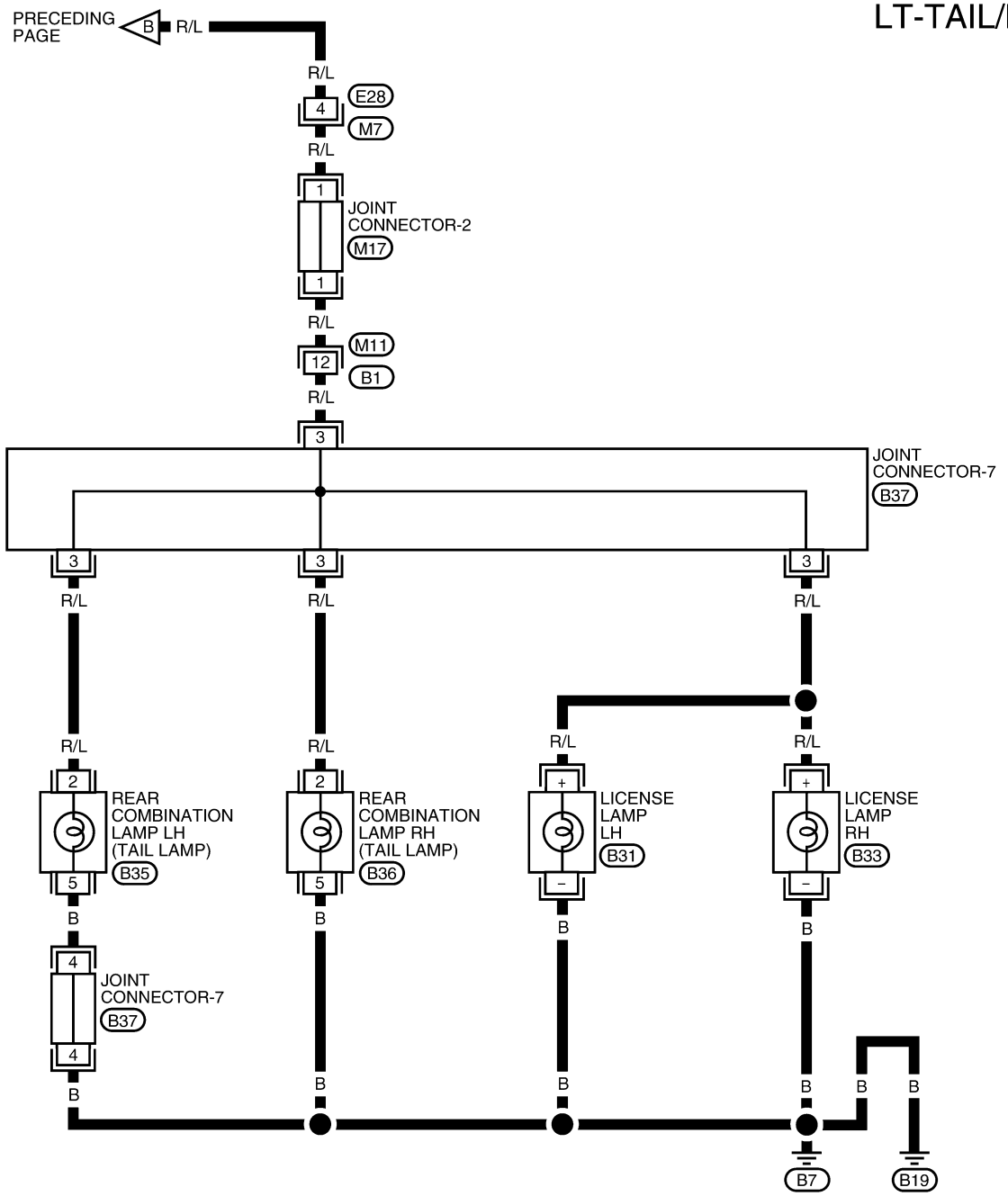

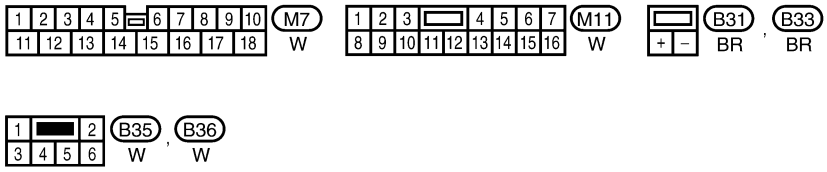

REFER TO THE FOLLOWING.
M17 , B37 - JOINT CONNECTOR (J/C)

WKWA0413E

Parking, License Plate and Tail Lamps Do Not Illuminate

EKS00433

1. INSPECTION 1 BETWEEN IPDM E/R AND PARKING, LICENSE PLATE AND TAIL LAMPS

1. Start active test. Refer to LT-18, "ACTIVE TEST" .
2. Check operation of the parking lamps, license plate lamps and tail lamps.

OK or NG

OK >> GO TO 4.
NG >> GO TO 2.

2. INSPECTION 2 BETWEEN IPDM E/R AND PARKING, LICENSE PLATE AND TAIL LAMP

1. Disconnect IPDM E/R connector, turn signal lamp connector, license plate lamp connector and combination lamp connectors.
2. Check continuity between harness connector terminal of IPDM E/R and harness connector terminals of turn signal lamp, license plate lamp and combination lamp.

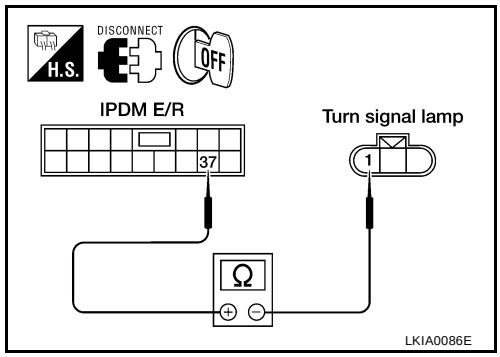

Terminals					Continuity
IPDM E/R		Turn signal lamp			
Connector	Terminal (wire color)	Connector		Terminal (wire color)	
E122	37 (R/L)	Right	E109	1 (R/L)	Yes
		Left	E12	1 (R/L)	

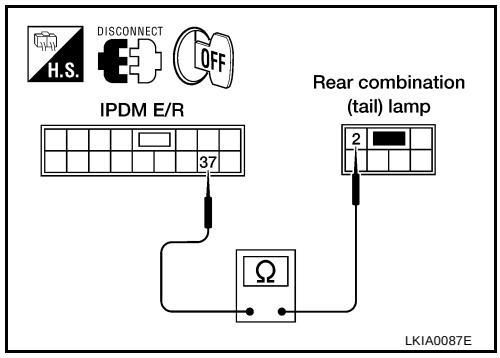

Terminals					Continuity
IPDM E/R		Rear combination lamp			
Connector	Terminal (wire color)	Connector		Terminal (wire color)	
E122	37 (R/L)	Right	B36	2 (R/L)	Yes
		Left	B35	2 (R/L)	

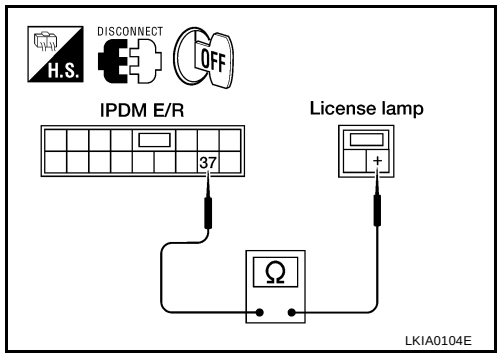

Terminals					Continuity
IPDM E/R		License lamp			
Connector	Terminal (wire color)	Connector		Terminal (wire color)	
E122	37 (R/L)	Right	B33	+ (R/L)	Yes
		Left	B31	+ (R/L)	

OK or NG

OK >> Connect electrical connectors. GO TO 3.
NG >> Check for short circuit or open circuit in harnesses between IPDM E/R and turn signal lamp, between IPDM E/R and rear combination (tail and side marker) lamp, and between IPDM E/R and license lamp.

3. IPDM E/R INSPECTION

Start active test. Refer to LT-18, "ACTIVE TEST" .

1. When tail lamp relay is operating, check voltage between turn signal connector terminal 1 and ground.

Terminals				Voltage (Approx.)
(+)			(–)	12
Connector		Terminal (wire color)	Ground	
Right	E109	1 (R/L)		
Left	E12			

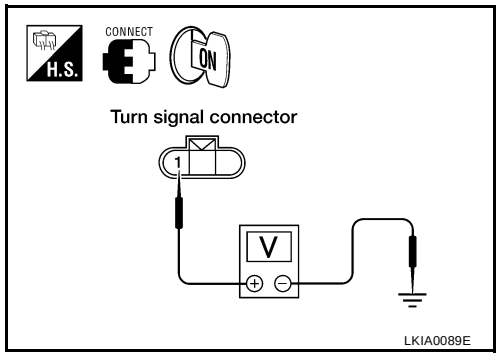

2. When tail lamp relay is operating, check voltage between rear combination (tail) lamp terminal 2 and ground.

Terminals				Voltage (Approx.)
(+)			(–)	12
Connector		Terminal (wire color)	Ground	
Right	B36	2 (R/L)		
Left	B35			

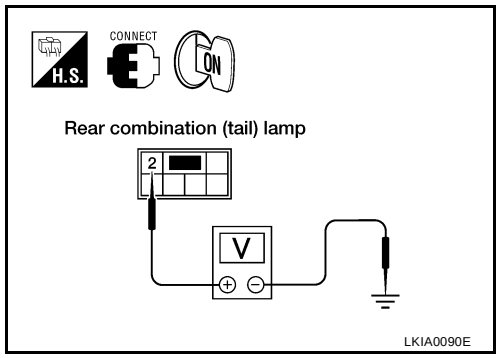

3. When tail lamp relay is operating, check voltage between license lamp terminal + and ground.

Terminals				Voltage (Approx.)
(+)			(–)	12
Connector		Terminal (wire color)	Ground	
Right	B33	+ (R/L)		
Left	B31			

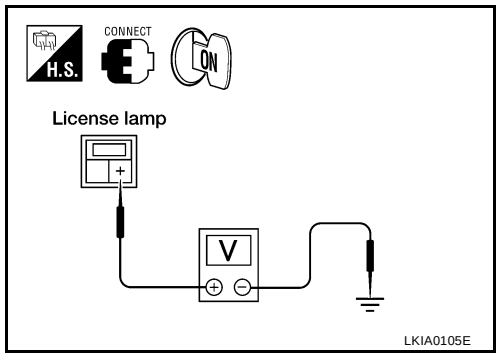

OK or NG

OK >> Inspect turn signal harness, connectors, and rear combination lamp sub-harness.
NG >> Replace IPDM E/R. Refer to PG-24, "Removal and Installation of IPDM E/R" .

4. INSPECTION 1 BETWEEN COMBINATION SWITCH AND BCM

Select BCM on CONSULT-II. Carry out “BCM C/U” self-diagnosis.

Displayed results of self-diagnosis

No malfunction detected>> GO TO 5.
CAN communications or CAN system>> Inspect the BCM CAN communications system. Refer to BCS-15, "CAN Communication Inspection Using CONSULT-II (Self-Diagnosis)" .
OPEN DETECT 1 - 5>> Combination switch system malfunction. Refer to BCS-16, "Combination Switch Inspection According to Self-Diagnostic Results" .

SELF-DIAG RESULTS	
DTC RESULTS	TIME
NO DTC IS DETECTED. FURTHER TESTING MAY BE REQUIRED	

LKIA0073E

5. INSPECTION 2 BETWEEN COMBINATION SWITCH AND BCM

Select BCM on CONSULT-II. With “HEADLAMP” data monitor, check that “TAIL LAMP SW” turns ON-OFF linked with operation of lighting switch.

OK or NG

OK >> Replace BCM.
NG >> Replace lighting switch.

DATA MONITOR	
MONITOR	
IGN ON SW	ON
ACC ON SW	ON
AUTO LIGHT SW	ON
TAIL LAMP SW	OFF
HEAD LAMP SW	OFF
HI BEAM SW	OFF
PASSING SW	OFF
FR FOG SW	OFF
DOOR SW-DR	OFF

LKIA0077E

Parking, License Plate and Tail Lamps Do Not Turn OFF (After Approx. 10 Minutes)

EKS00434

1. IPDM E/R INSPECTION

1. Turn the ignition switch ON. Place the combination switch (lighting switch) in the ON position. Turn the ignition switch OFF.
2. Verify that the parking, license plate, and tail lamps turn OFF after approximately 10 minutes.

OK or NG

OK >> Normal.
NG >> Ignition relay malfunction. Refer to PG-19, "Function of Detecting Ignition Relay Malfunction" .

Bulb Replacement

EKS00435

LICENSE PLATE LAMP

1. From trunk, turn bulb socket counterclockwise to unlock and remove.
2. Pull bulb to remove from socket.

License plate lamp : 12V 5W

SEC. 266

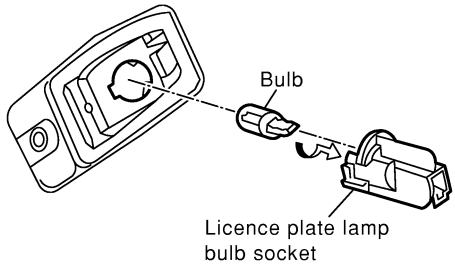

PKIA0058E

FRONT TURN SIGNAL (PARKING) LAMP

For bulb replacement, refer to LT-25, "FRONT TURN SIGNAL LAMP" .

TAIL LAMP

1. Remove rear combination lamp. Refer to LT-102, "Removal and Installation for Rear Combination Lamp" .
2. Turn bulb socket counterclockwise to unlock and remove.
3. Pull bulb to remove from socket.

Tail lamp : 12V 8W

Removal and Installation

EKS00436

LICENSE PLATE LAMP

Removal

1. Remove the license lamp finisher. Refer to EI-22, "Removal and Installation" .
2. Disconnect the license plate lamp connector.
3. Remove the license plate lamp mounting screw and remove the license plate lamp from the vehicle.

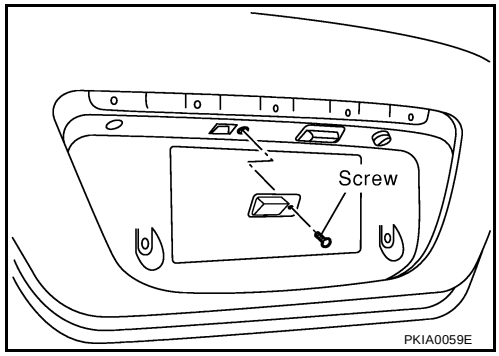

Installation

Install in the reverse order of removal.

License plate lamp mounting screw:

: 1.3 - 1.8 N·m (0.13 - 0.18 kg-m, 11 - 16 in-lb)

FRONT TURN SIGNAL (PARKING) LAMP

For front turn signal (parking) lamp removal and installation procedures, refer to LT-25, "Removal and Installation" .

REAR COMBINATION LAMP

Removal

For rear combination lamp removal and installation procedures, refer to LT-102, "Removal and Installation for Rear Combination Lamp" .

INTERIOR ROOM LAMP

PFP:26410

System Description

EKS00437

When room lamp switch is in DOOR position, room lamp ON/OFF is controlled by timer according to signals from switches including key detection switch, driver door switch, driver door lock switch.
When room lamp turns ON, there is a gradual brightening over 1 second. When room lamp turns OFF, there is a gradual dimming over 1 second
The interior room lamp timer is controlled by the BCM.
Interior room lamp timer control settings can be changed with CONSULT-II.

INTERIOR LAMP TIMER OPERATION

When room lamp switch is in DOOR position, and when all conditions below are met, BCM performs timer control (maximum 30 seconds) for interior lamp ON/OFF.
In addition, when lamp turns ON or OFF there is gradual brightening or dimming over 1 second.
Power is supplied

- to 10A fuse [No. 19 (located in the fuse block (J/B)]
- through joint connector -1 terminal 4
- to key switch and key lock solenoid terminal 3.

When all doors are closed (all door switches OFF) and key is removed from key cylinder (key detection switch OFF), power will not be supplied to BCM terminal 62.
When driver door lock switch is turned ON (unlocked),
Ground is supplied

- from BCM terminal 30
- to front door lock actuator LH terminal 1.

At this time, BCM detects that driver door is unlocked. It determines that interior lamp timer operation conditions are met, and turns the interior lamp ON for 30 seconds.
When all doors are closed (all door switches OFF) and key is in key cylinder (key detection switch ON),
Power is supplied

- through key switch and key lock solenoid terminal 4
- to BCM terminal 62.

When key is removed from key switch and key lock solenoid (key detection switch OFF), power supply to BCM terminal 62 is terminated. BCM detects that key has been removed, determines that interior lamp timer conditions are met, and turns the interior lamp ON for 30 seconds.
When driver door closes, and the key is not inserted in the key switch and key lock solenoid (key detection switch OFF), BCM terminal 14 or 54 changes from 0V (door open) to 12V (door closed). The BCM determines that conditions for interior lamp operation are met and turns the interior lamp ON for 30 seconds.
Timer control is canceled under the following conditions.

- Driver door is locked (driver door lock switch turns OFF)
- Driver door is opened (driver door switch turns ON)
- Ignition switch ON.

BATTERY SAVER

If the interior room lamp remains illuminated by the door switch open signal, or if the room lamp switch is in the ON position for more than 30 minutes after the ignition switch is turned to the OFF position, the BCM will automatically turn off the interior room lamp(s).

Component Parts and Harness Connector Location

EKS00438

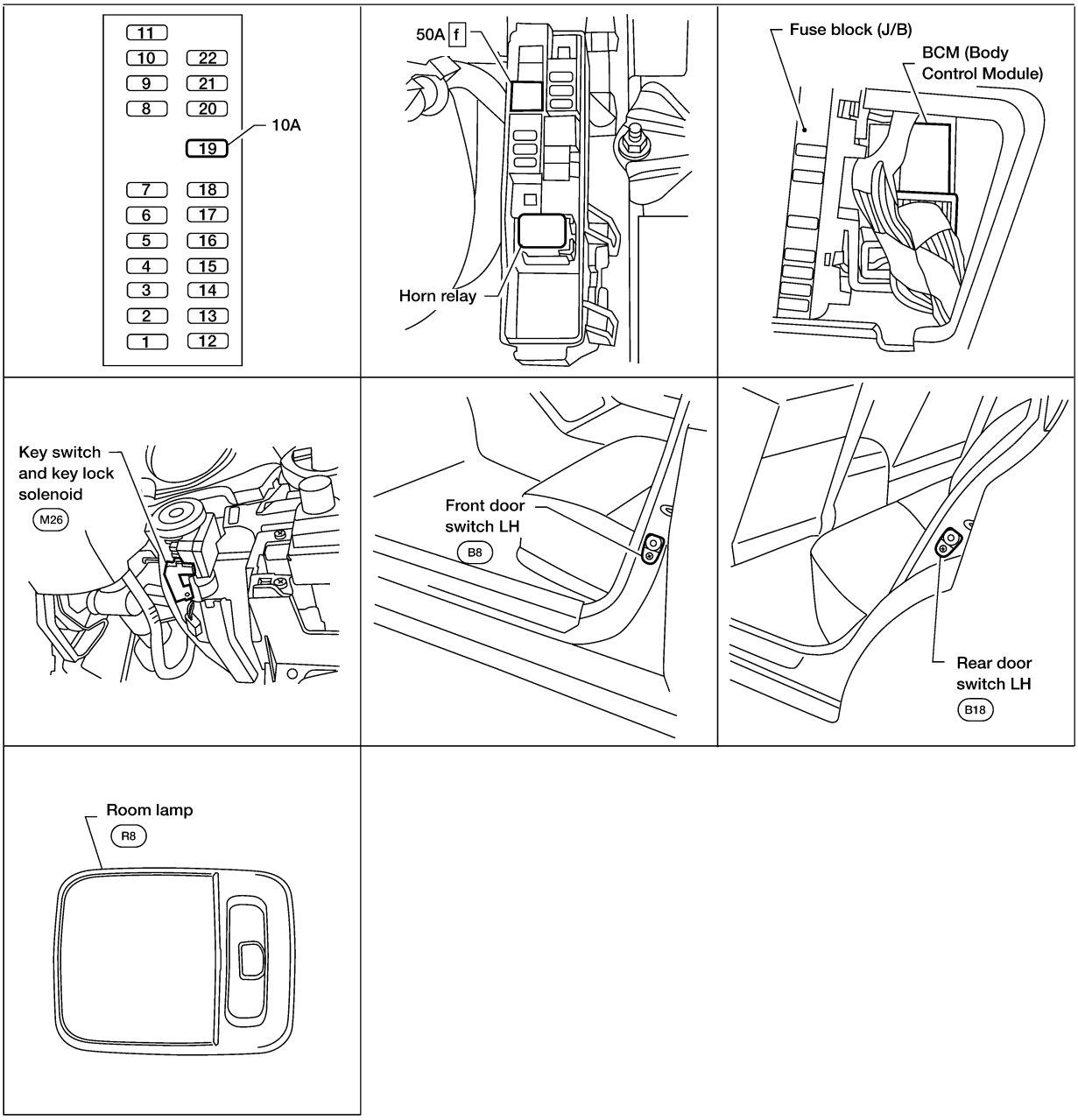

WKIA0288E

Wiring Diagram — ROOM/L —

EKS00439

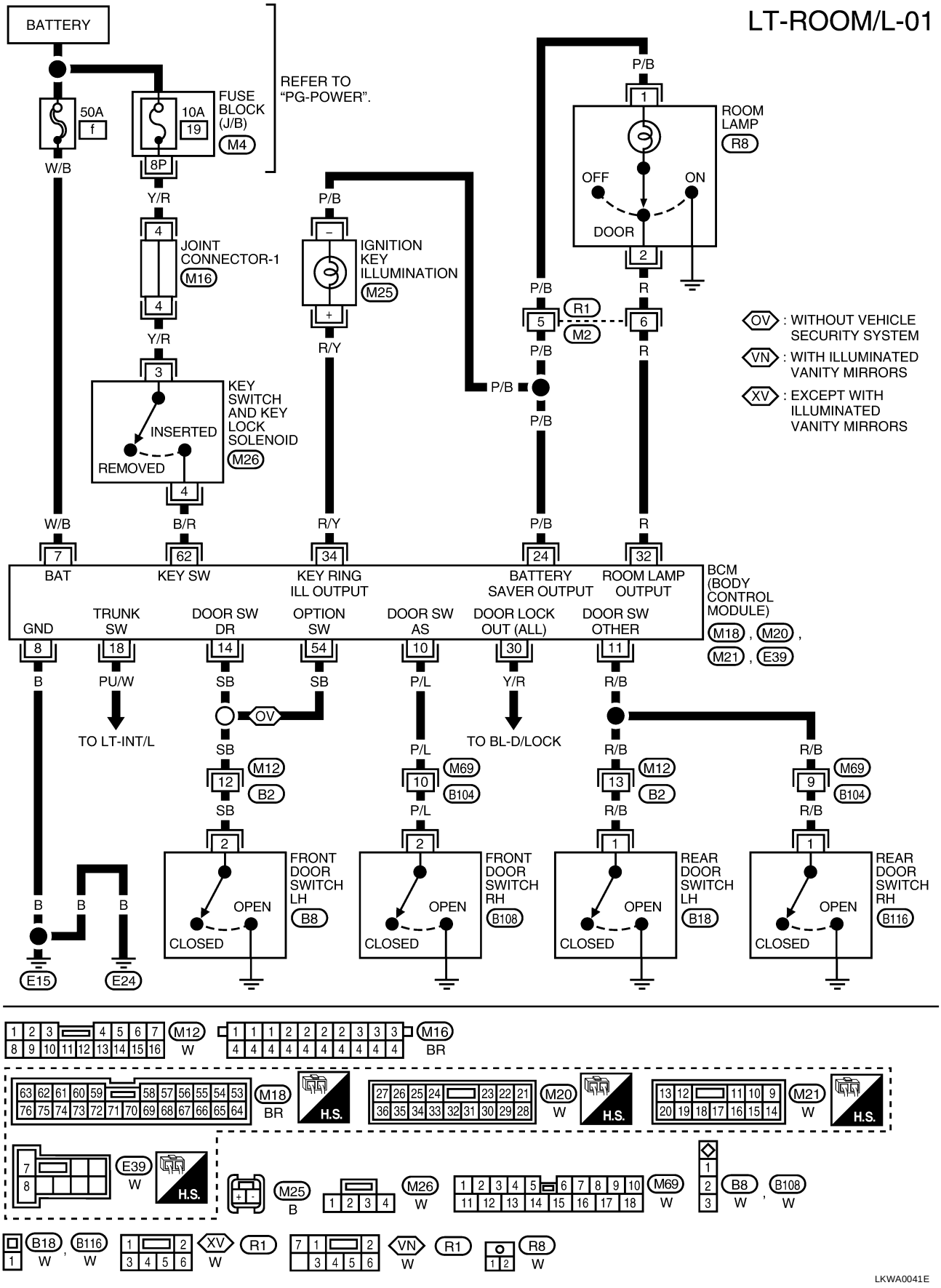

Terminals and Reference Value for BCM

EKS0043A

Terminal No.	Wire color	Signal name	Measuring condition					Standard (V) (Approx.)
			Ignition switch	Operation or condition				
7	W/B	Battery power supply	OFF	—				12
8	B	Ground	ON	—				0
10	P/L	Front door switch RH signal	OFF	Front door switch RH		ON (open)		0
						OFF (closed)		12
11	R/B	Rear door switch (LH and RH) signal	OFF	Rear door switch (LH and RH)		ON (open)		0
						OFF (closed)		12
14	SB	Front door switch LH signal	OFF	Front door switch LH		ON (open)		0
						OFF (closed)		12
32	R	Interior lamp signal	OFF	Interior lamp switch: DOOR position	Key is inserted.	Any door switch	ON (open)	0
							OFF (closed)	12
			—	Interior lamp switch: DOOR position	All doors are closed.	Vehicle key is removed after being fully inserted.		0 Note
						Turn ignition switch to ON.		12
30	Y/R	Driver door lock signal	OFF	Door is unlocked. (SW ON)				0
				Door is locked. (SW OFF)				5
62	B/R	Key detection switch signal	OFF	Vehicle key is removed.				0
				Vehicle key is inserted.				12

Note: Becomes approximately 12V approximately 30 seconds after key is removed.

CONSULT-II Function

EKS0043B

CONSULT-II has a display function for work support, self-diagnosis, data monitor, and active test for each part by combining data receiving and sending via the communication line from BCM.

BCM diagnosis part	Check item, diagnosis mode	Description
INTERIOR LAMP	Work support	Changes the setting for each function.
	Data monitor	Displays BCM input data in real time.
	Active test	Operation of electrical loads can be checked by sending driving signal to them.

CONSULT-II BASIC OPERATION

1. With the ignition switch OFF, connect CONSULT-II to the vehicle-side data link connector, then turn ignition switch ON.
2. Touch “START”.

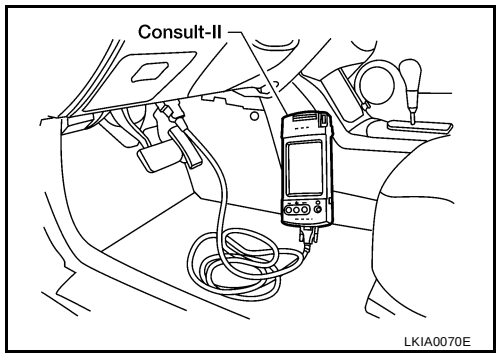

3. Touch “BCM” on “SELECT SYSTEM” screen.

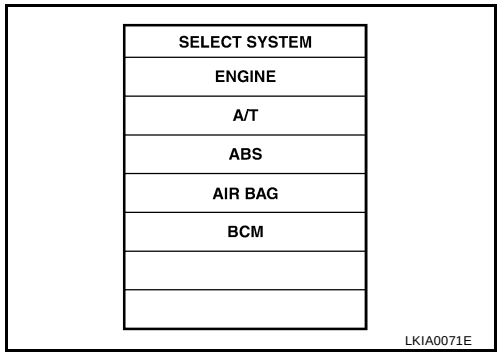

4. Select the desired part to be diagnosed on “SELECT TEST ITEM” screen.

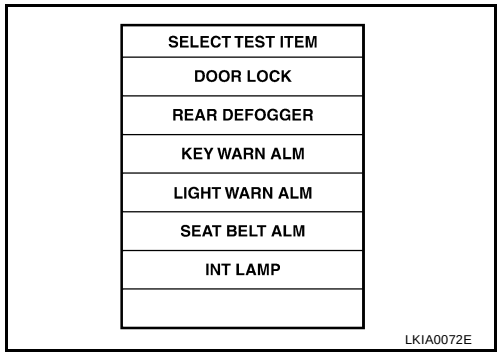

WORK SUPPORT

Operation Procedure

1. Touch “INT LAMP” on “SELECT TEST ITEM” screen.
2. Touch “WORK SUPPORT” on “SELECT DIAG MODE” screen.
3. Touch “ROOM LAMP TIMER SET” on “SELECT WORK ITEM” screen.
4. Touch “START”.
5. Touch “CHANGE SETT”.
6. The setting will be changed and “CUSTOMIZING COMPLETED ” will be displayed.
7. Touch “END”.

Display Item List

Item	Description	CONSULT-II	Factory setting
Room lamp timer setting	Interior lamp ON/OFF can be selected for when driver door lock is released (unlocked).	ON	❍
		OFF	—

DATA MONITOR

Operation Procedure

1. Touch “INT LAMP” on “SELECT TEST ITEM” screen.
2. Touch “DATA MONITOR” on “SELECT DIAG MODE” screen.
3. Touch either “ALL SIGNALS” or “SELECTION FROM MENU” on “DATA MONITOR” screen.

All signals	Monitors all the signals.
Selection from menu	Selects and monitors the individual signal.

4. Touch “START”.
5. When “SELECTION FROM MENU” is selected, touch items to be monitored. When “ALL SIGNALS” is selected, all the items will be monitored.
6. Touch “RECORD” while monitoring, then the status of the monitored item can be recorded. To stop recording, touch “STOP”.

Display Item List

Monitor item name “OPERATION OR UNIT”		Contents
IG ON SW	“ON/OFF”	“IGN position (ON)/OFF, ACC position (OFF)” judged from the ignition switch signal is displayed.
KEY ON SW	“ON/OFF”	Displays “Key inserted (ON)/key removed (OFF)” status judged from the key reminder detection switch signal.
DOOR SW - DR	“ON/OFF”	Displays status of the driver door as judged from the driver door switch signal. (Door is open: ON/Door is closed: OFF)
DOOR SW - AS	“ON/OFF”	Displays “Door open (ON)/Door closed (OFF)” status, determined from passenger door switch signal.
LOCK SW DR/AS	“ON/OFF”	Displays “Door locked (ON)/Door unlocked (OFF) status, determined from locking detection switch in driver door.
KEY CYL LK SW	“ON/OFF”	Displays “Door locked (ON) status, determined from key cylinder lock switch in driver door.
KEY CYL UN SW	“ON/OFF”	Displays “Door unlocked (OFF) status, determined from key cylinder lock switch in driver door.
LK BUTTON/SIG	“ON/OFF”	Displays “Locked (ON)/Other (OFF)” status, determined from lock signal.
UN BUTTON/SIG	“ON/OFF”	Displays “Unlocked (ON)/Other (OFF)” status, determined from unlock signal.
DOOR SW - RR	“ON/OFF”	Displays “Door open (ON)/Door closed (OFF)” status, determined from rear door switch signals.

ACTIVE TEST

Operation Procedure

1. Touch “INT LAMP” on “SELECT TEST ITEM” screen.
2. Touch “ACTIVE TEST” on “SELECT DIAG MODE” screen.
3. Touch item to be tested and check operation of the selected item.
4. During the operation check, touching “BACK” deactivates the operation.

Display Item List

Test item	Display on CONSULT-II screen	Description
Interior lamp output	INT LAMP	Interior lamp can be operated by any ON-OFF operations.

Interior Lamp Control Does Not Operate

EKS0043C

1. INSPECTION 1 BETWEEN EACH SWITCH AND BCM

Select BCM on CONSULT-II. Use “INT LAMP” data monitor to check that switches listed in display item list turn ON-OFF linked with switch operation. Refer to LT-128, "Display Item List" for switches and their functions.

OK or NG

OK >> GO TO 2.
NG >> Inspect malfunctioning switch system and repair as necessary.

DATA MONITOR	
MONITOR	
IGN ON SW	ON
KEY ON SW	ON
DOOR SW-DR	ON
DOOR SW-AS	OFF
LOCK SW DR/AS	OFF
UNLK SW DR/AS	OFF
KEY CYL LK SW	OFF
KEY CYL UN SW	OFF
LK BUTTON/SIG	OFF

LKIA0085E

2. INSPECTION 1 BETWEEN BCM AND ROOM LAMP

1. Select “BCM” on CONSULT-II. Select “INT LAMP” active test.
2. When room lamp switch is in DOOR position, use active test to verify that room lamp operates.

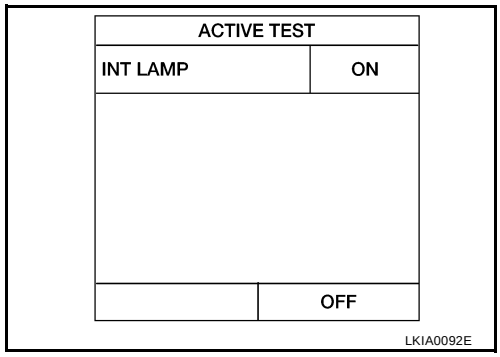

OK or NG

OK >> Replace BCM.
NG >> GO TO 3.

3. INSPECTION 2 BETWEEN BCM AND ROOM LAMP

1. Disconnect BCM connector and room lamp connector.
2. Check for continuity in wiring harness between BCM and room lamp.

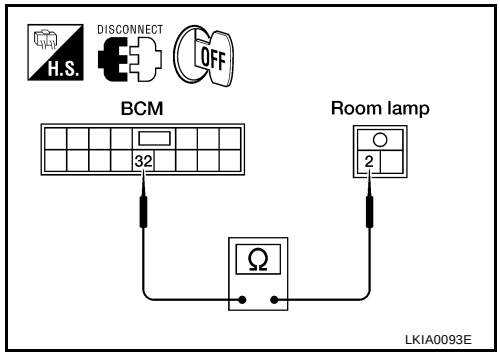

Terminals				Continuity
(+)		(–)		
Connector	Terminal (wire color)	Connector	Terminal (wire color)	
M20	32 (R)	R8	2 (R)	Yes

OK or NG

OK >> Connect room lamp connector. GO TO 4.
NG >> Check for short circuit or open circuit in harness between BCM and room lamp. Repair as necessary.

4. INSPECTION 3 BETWEEN BCM AND ROOM LAMP

When room lamp switch is in “DOOR” position, check voltage between BCM harness connector and body ground.

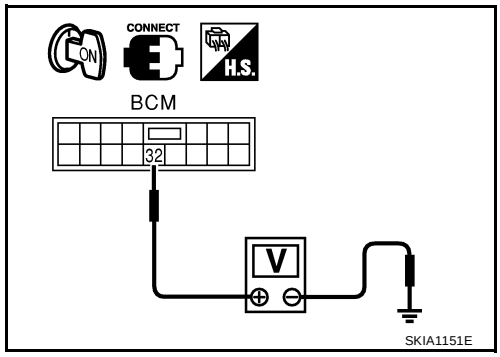

Terminals			Voltage (Approx.)
(+)		(–)	
Connector	Terminal (wire color)	Body ground	12
M20	32 (R)		

OK or NG

OK >> Replace BCM.
NG >> Replace room lamp. Refer to LT-130, "ROOM LAMP" .

Bulb Replacement

EKS0043D

MAP LAMP AND CONSOLE LAMP

Map Lamp

1. Insert a thin screwdriver in the notch and remove the lens.
2. Remove the screw and remove the shade.
3. Remove the bulb.

Map lamp : 12V 10W

PERSONAL LAMP

1. Insert a thin screwdriver in the notch and remove the lens.

2. Remove the screw and cover plate.
3. Push and turn bulb counterclockwise to remove.

Personal lamp : 12V 8W

Removal and Installation

EKS0043E

ROOM LAMP

1. Open the front interior lamp box and remove the screw.
2. Insert a clip driver or a suitable tool and disengage the metal clip fittings of the front interior lamp.
3. Disconnect the connector and remove the front interior lamp.

Room lamp mounting screw:

: 2.5 - 3.4 N·m (0.25 - 0.35 kg-m, 22 - 30 in-lb)

IGNITION KEY HOLE ILLUMINATION LAMP

1. Remove the lower instrument panel (driver side). Refer to IP-13, "Driver Lower Instrument Panel" .
2. Turn the bulb socket counterclockwise and unlock it.

Ignition key hole illumination lamp : 12V 1.4W

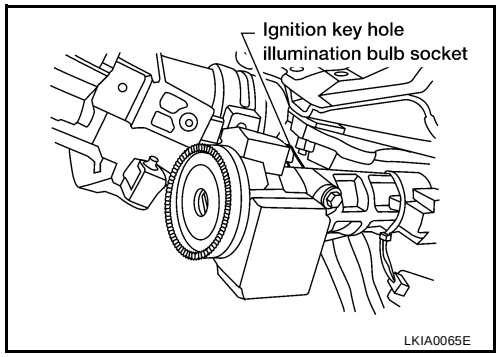

ILLUMINATION

PFP:27545

System Description

EKS0043F

Control of the illumination lamps operation is dependent upon the position of the lighting switch (combination switch). When the lighting switch is placed in the 1ST or 2ND position (or if the auto light system is activated) the BCM receives input requesting the illumination lamps to illuminate. This input is communicated to the IPDM E/R (intelligent power distribution module engine room) across the CAN communication lines. The central processing unit of the IPDM E/R controls the tail lamp relay coil. When energized, this relay directs power to the illumination lamps, which then illuminate.

Power is supplied at all times

- to tail lamp relay, located in the IPDM E/R (intelligent power distribution module engine room)
- through 10A fuse [No. 38, located in the IPDM E/R (intelligent power distribution module engine room)].

Power is also supplied at all times

- to BCM (body control module) terminal 7
- through 50A fusible link (letter **f** , located in the fuse and fusible link box).

With the ignition switch in the ON or START position, power is supplied

- to BCM (body control module) terminal 35
- through 10A fuse [No. 12, located in the fuse block (J/B)].

With the ignition switch in the ACC or ON position, power is supplied

- to BCM (body control module) terminal 36
- through 10A fuse [No. 6, located in the fuse block (J/B)].

Ground is supplied

- to BCM (body control module) terminals 8, 27, and 63
- through body grounds M57, M61, E15, and E24.

ILLUMINATION OPERATION BY LIGHTING SWITCH

With the lighting switch in the 1ST or 2ND position (or if the auto light system is activated), the BCM (body control module) receives input requesting the illumination lamps to illuminate. This input is communicated to the IPDM E/R (intelligent power distribution module engine room) across the CAN communication lines. The central processing unit of the IPDM E/R controls the tail lamp relay coil, which when energized, directs power

- through terminal 37 of the IPDM E/R
- to illumination control switch terminal 1,
- to A/T device terminal 3,
- to TCS switch terminal 3,
- to audio unit terminal 8,
- to CD player terminal 23,
- to hazard switch terminal 5,
- to rear window defogger switch terminal 5,
- to heated seat switch LH terminal 2,
- to heated seat switch RH terminal 2,
- to A/C control unit terminal 7,
- to A/C auto amplifier terminal 24,
- to combination meter terminal 48, and
- to glove box lamp terminal +.

With the ignition switch in ON or START, power is supplied

- to auto anti-dazzling inside mirror terminal +,
- through 10A fuse [No. 14, located in the fuse block (J/B)], and
- to BCM (body control module) terminal 35,
- through 10A fuse [No. 12, located in the fuse block (J/B)].

With the ignition switch in ON or START, power is also supplied

- to main power window and door lock/unlock switch terminal 12 (with left front only power window anti-pinch system) or terminal 17 (with left and right front power window anti-pinch system),

- to front power window switch RH terminal 5 (with left front only power window anti-pinch system) or terminal 13 (with left and right front power window anti-pinch system),
- to rear power window switch RH terminal 5,
- to rear power window switch LH terminal 5,
- through BCM terminal 29.

Ground is supplied at all times

- to illumination control switch terminal 3,
- to glove box lamp terminal –, and
- to auto anti-dazzling inside mirror terminal –
- through body grounds M57 and M61, and
- to rear power window switch RH terminal 8,
- through body ground B117, and,
- to rear power window switch LH terminal 8,
- through body grounds B7 and B19.

The main power window and door lock/unlock switch and the front power window switch RH illumination circuits are case grounded.
Controlled ground is supplied

- to A/T device terminal 4,
- to TCS switch terminal 4,
- to audio unit terminal 7,
- to CD player terminal 25,
- to hazard switch terminal 4,
- to rear window defogger switch terminal 6,
- to heated seat switch LH terminal 1,
- to heated seat switch RH terminal 1,
- to A/C control unit terminal 8,
- to A/C auto amplifier terminal 25, and
- to combination meter terminal 47
- from illumination control switch terminal 2.

With power and ground supplied, illumination lamps illuminate.

BATTERY SAVER CONTROL

When the combination switch (lighting switch) is in the 1ST or 2ND position (or if auto light system is activated), and the ignition switch is turned from ON or ACC to OFF, the battery saver control feature is activated. Under this condition, the illumination lamps remain illuminated for 30 minutes, unless the combination switch (lighting switch) position is changed. If the combination switch (lighting switch) position is changed, then the illumination lamps are turned off after a 30 second delay.
When the lighting switch is turned from OFF to 1ST or 2ND position (or if auto light system is activated) after illumination lamps have been turned off by the battery saver control, the illumination lamps illuminate again.

CAN Communication System Description

EKS0043G

CAN (Controller Area Network) is a serial communication line for real time application. It is an on-vehicle multiplex communication line with high data communication speed and excellent error detection ability. Many electronic control units are equipped onto a vehicle, and each control unit shares information and links with other control units during operation (not independent). In CAN communication, control units are connected with 2 communication lines (CAN H line, CAN L line) allowing a high rate of information transmission with less wiring. Each control unit transmits/receives data but selectively reads required data only.

FOR TCS MODELS

System diagram

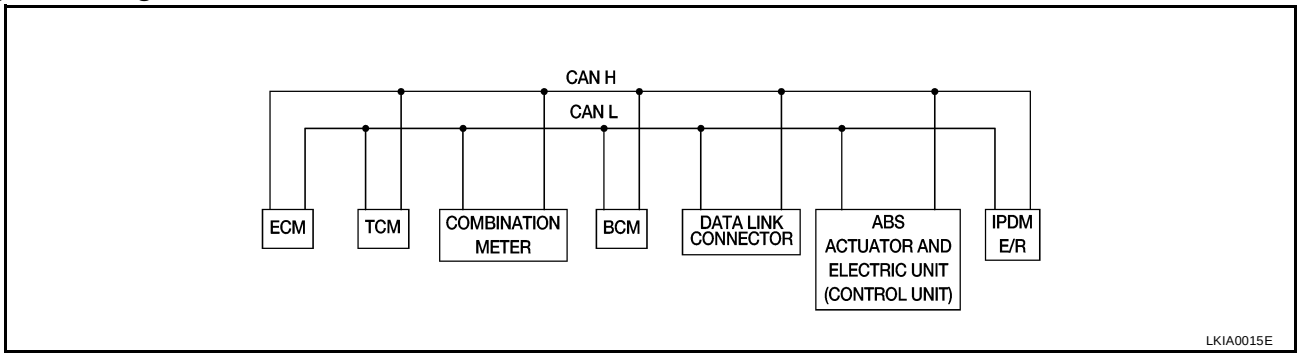

Input/output signal chart

T: Transmit R: Receive

Signals	ECM	TCM	COMBINA-TION METER	BCM	ABS/TCS control unit	IPDM E/R
Engine speed signal	T		R		R	
Engine coolant temperature signal	T		R			
Accelerator pedal position signal	T					
Fuel consumption monitor signal	T		R			
A/T warning lamp signal		T	R			
A/T position indicator signal	R	T	R	R(R range only)	R	
ABS operation signal	R				T	
TCS operation signal	R	R			T	
Air conditioner switch signal	R			T		
Air conditioner compressor signal	R					T
A/C compressor request signal	T					R
Cooling fan motor operation signal	R					T
Cooling fan speed request signal	T					R
Position lights request			R	T		R
Position lights status				R		T
Low beam request				T		R
Low beam status	R			R		T
High beam request			R	T		R
High beam status	R			R		T
Front fog lights request				T		R
Front fog light status				R		T
OD cancel switch signal		R	T			R
Brake switch signal		R	T			
Vehicle speed signal	R		T			
	R		T	R		
Oil pressure switch			R			T
Sleep request1			R	T		
Sleep request2				T		R
N range switch signal		R	T			
P range switch signal		R	T			
Seat belt buckle switch signal			T	R		

Signals	ECM	TCM	COMBINA-TION METER	BCM	ABS/TCS control unit	IPDM E/R
Door switch signal			R	T		R
Tail lamp request			R	T		R
Turn indicator signal			R	T		
Buzzer output signal			R	T		
Trunk switch signal			R	T		
ASCD main switch signal	T		R			
ASCD cruise signal	T		R			
Wiper operation				R		T
Wiper stop position signal				R		T
Rear window defogger switch signal				T		R
Rear window defogger control signal	R			R		T

FOR A/T MODELS

System diagram

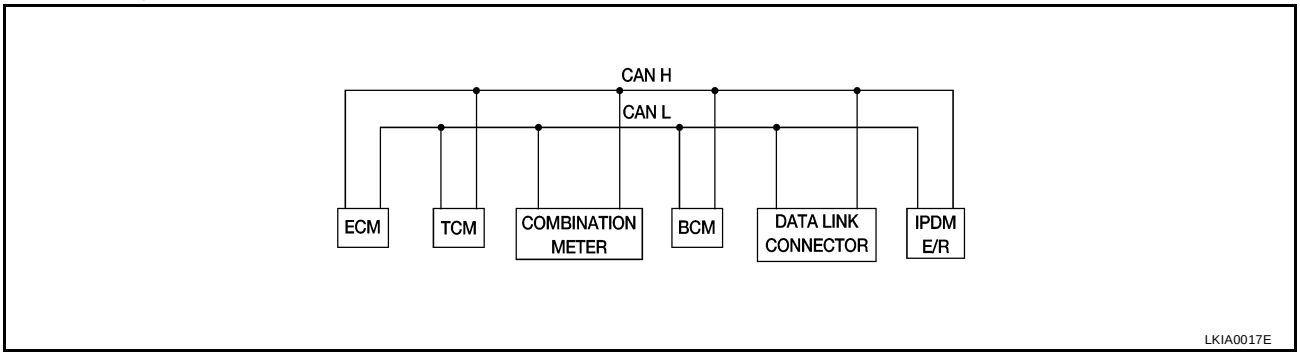

Input/output signal chart

T: Transmit R: Receive

Signals	ECM	TCM	COMBINATION METER	BCM	IPDM E/R
Engine speed signal	T		R		
Engine coolant temperature signal	T		R		
Accelerator pedal position signal	T				R
Fuel consumption monitor signal	T		R		
A/T warning lamp signal		T	R		
A/T position indicator signal	R	T	R	R(R range only)	
Air conditioner switch signal	R			T	
Air conditioner compressor signal	R				T
A/C compressor request signal	T				R
Blower fan switch signal	R(QR25DE)			T	
Cooling fan motor operation signal	R			T	
Cooling fan speed request signal	T				R
Position lights request			R	T	R
Position lights status				R	T
Low beam request				T	R
Low beam status	R			R	T
High beam request			R	T	R

Signals	ECM	TCM	COMBINATION METER	BCM	IPDM E/R
High beam status	R			R	T
Front fog lights request				T	R
Front fog light status				R	T
OD cancel switch signal		R	T		R
Brake switch signal		R	T		
Vehicle speed signal	R		T		
	R		T	R	
Oil pressure switch			R		T
Sleep request1			R	T	
Sleep request2				T	R
N range switch signal		R	T		
P range switch signal		R	T		
Seat belt buckle switch signal			T	R	
Door switch signal			R	T	R
Tail lamp request			R	T	R
Turn indicator signal			R	T	
Buzzer output signal			R	T	
Trunk switch signal			R	T	
ASCD main switch signal	T		R		
ASCD cruise signal	T		R		
Wiper operation				R	T
Wiper stop position signal				R	T
Rear window defogger switch signal				T	R
Rear window defogger control signal	R			R	T

FOR M/T MODELS

System diagram

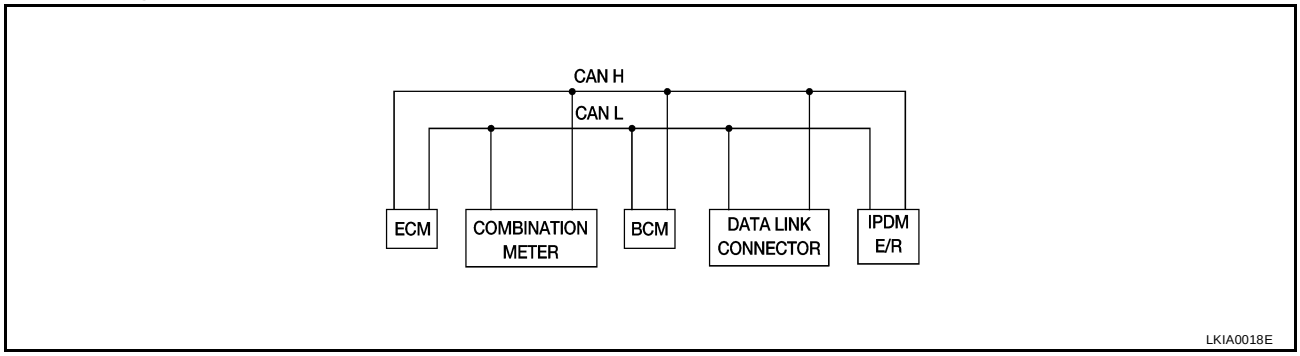

Input/output signal chart

T: Transmit R: Receive

Signals	ECM	COMBINATION METER	BCM	IPDM E/R
Engine speed signal	T			
Engine coolant temperature signal	T			
Fuel consumption monitor signal	T			
Air conditioner switch signal	R		T	
Air conditioner compressor signal	R			T
A/C compressor request signal	T			R

Signals	ECM	COMBINATION METER	BCM	IPDM E/R
Blower fan switch signal	R(QR25DE)		T	
Cooling fan motor operation signal	R			T
Cooling fan speed request signal	T			R
Position lights request		R	T	R
Position lights status			R	T
Low beam request			T	R
Low beam status	R		R	T
High beam request		R	T	R
High beam status	R		R	T
Front fog lights request			T	R
Front fog light status			R	T
Vehicle speed signal	R	T		
Oil pressure switch		R		T
Sleep request1		R	T	
Sleep request2			T	R
Seat belt buckle switch signal		T	R	
Door switch signal		R	T	R
Tail lamp request		R	T	R
Turn indicator signal		R	T	
Buzzer output signal		R	T	
Trunk switch signal		R	T	
ASCD main switch signal	T	R		
ASCD cruise signal	T	R		
Wiper operation			R	T
Wiper stop position signal			R	T
Rear window defogger switch signal			T	R
Rear window defogger control signal	R		R	T

Schematic

EKS0043H

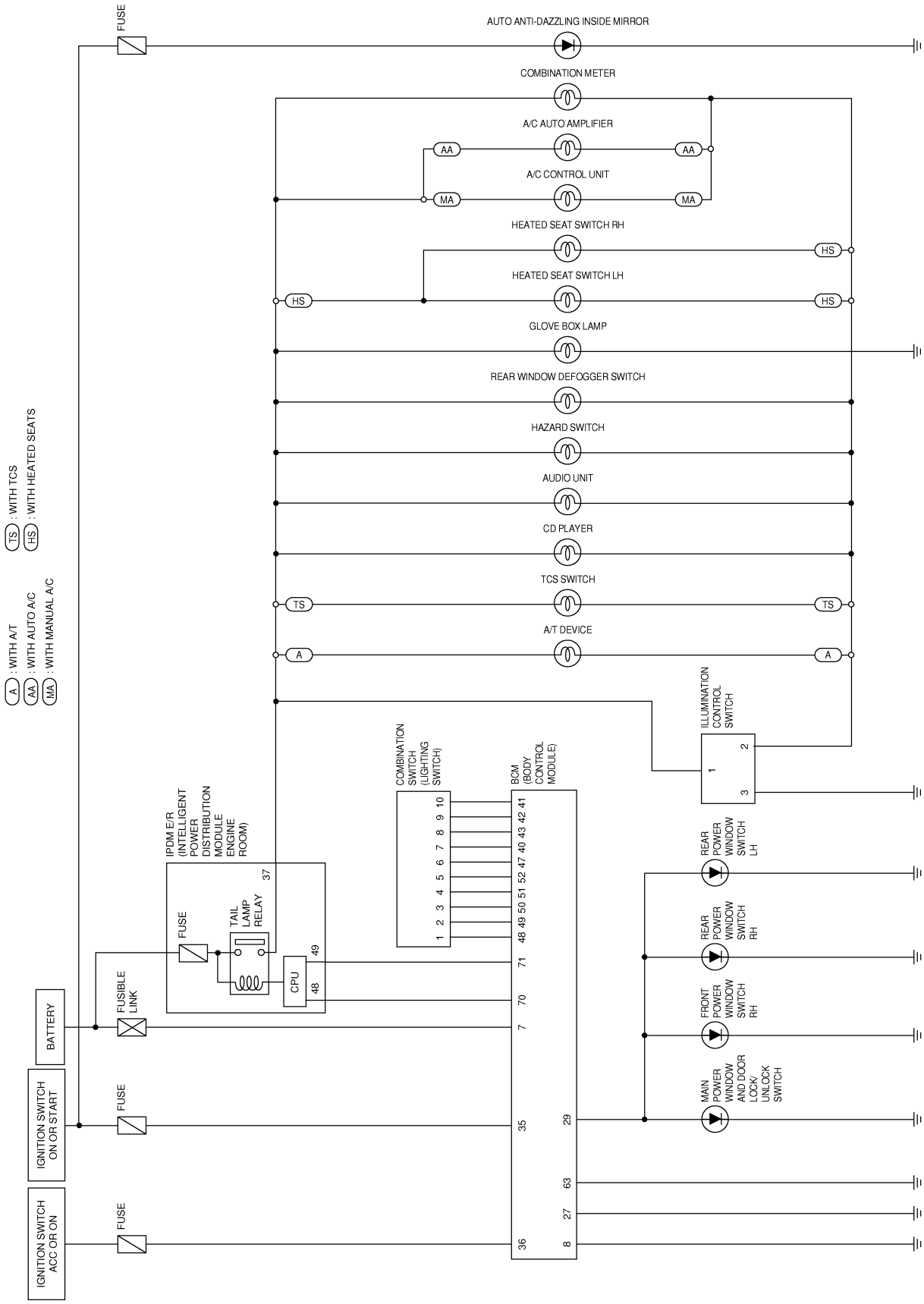

LKWA0063E

Wiring Diagram — ILL —

EKS0043I

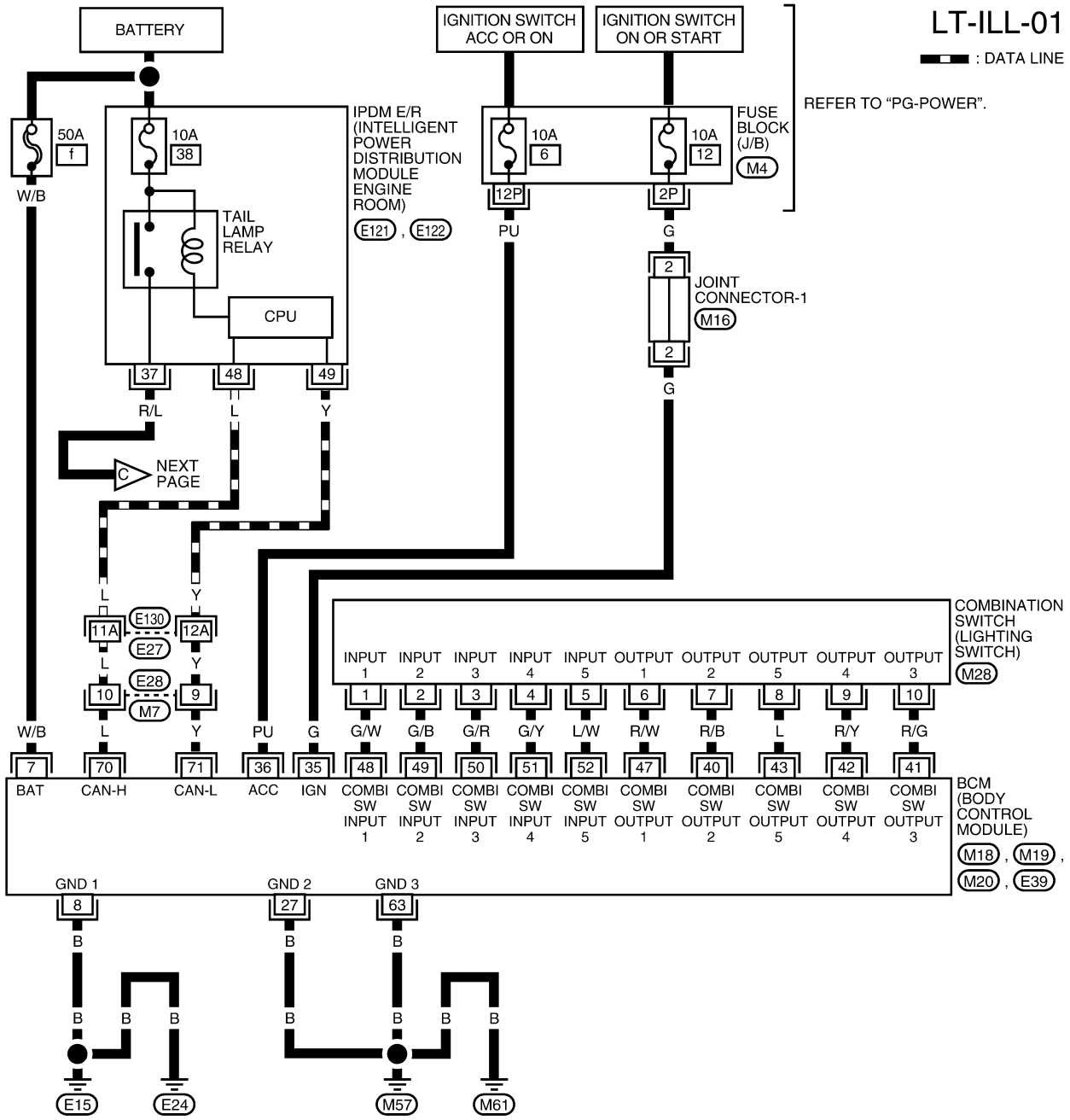

LT-ILL-02

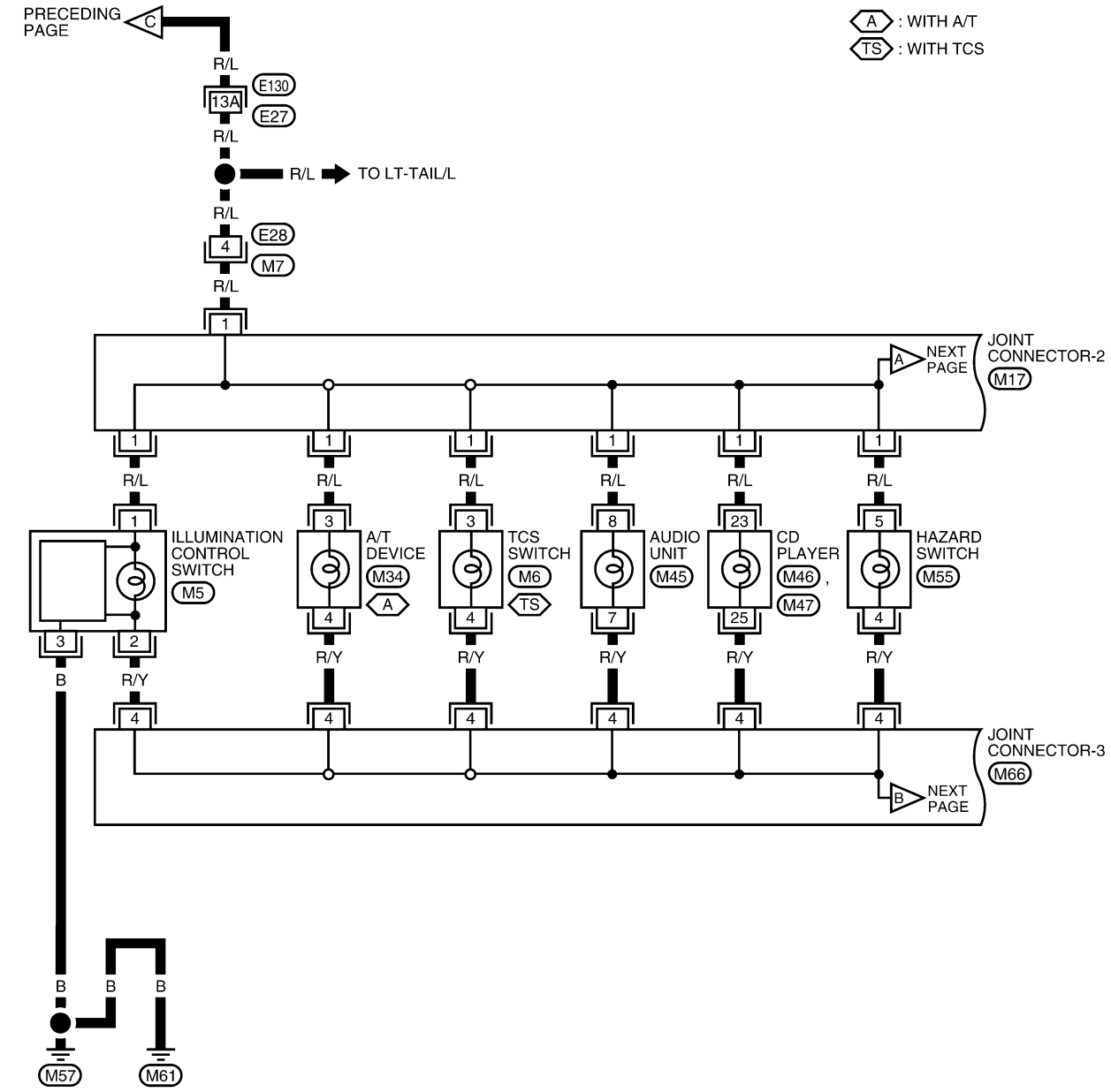

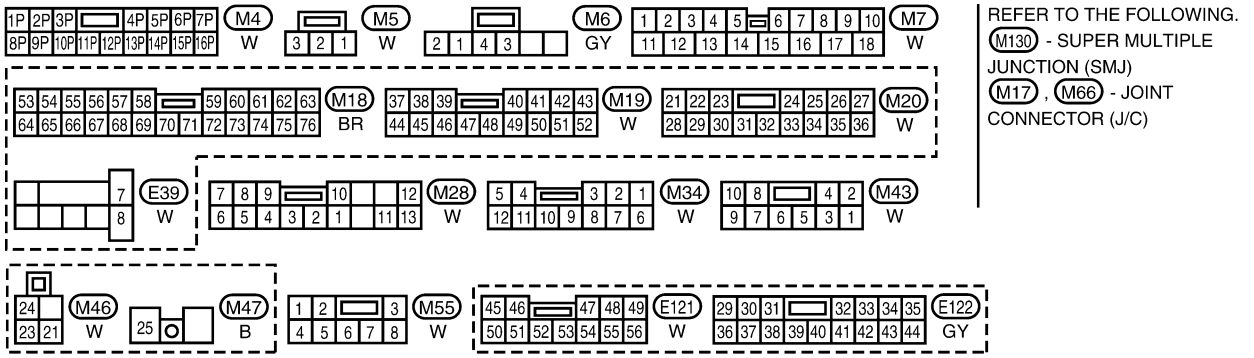

REFER TO THE FOLLOWING.
M130 - SUPER MULTIPLE JUNCTION (SMJ)
M17 , M66 - JOINT CONNECTOR (J/C)

LKWA0075E

LT-ILL-03

MA : WITH MANUAL A/C
AA : WITH AUTO A/C
HS : WITH HEATED SEATS

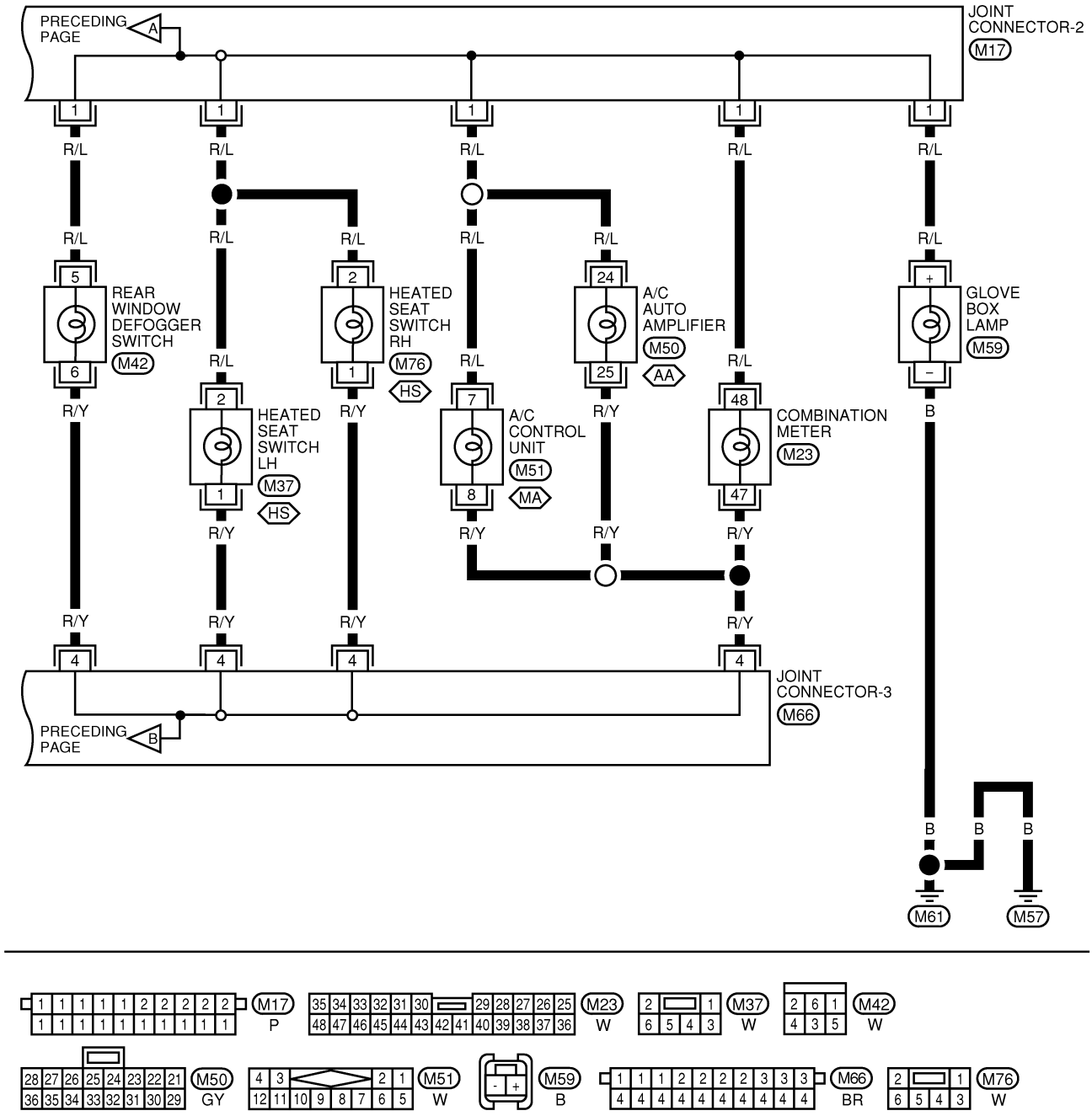

LKWA0043E

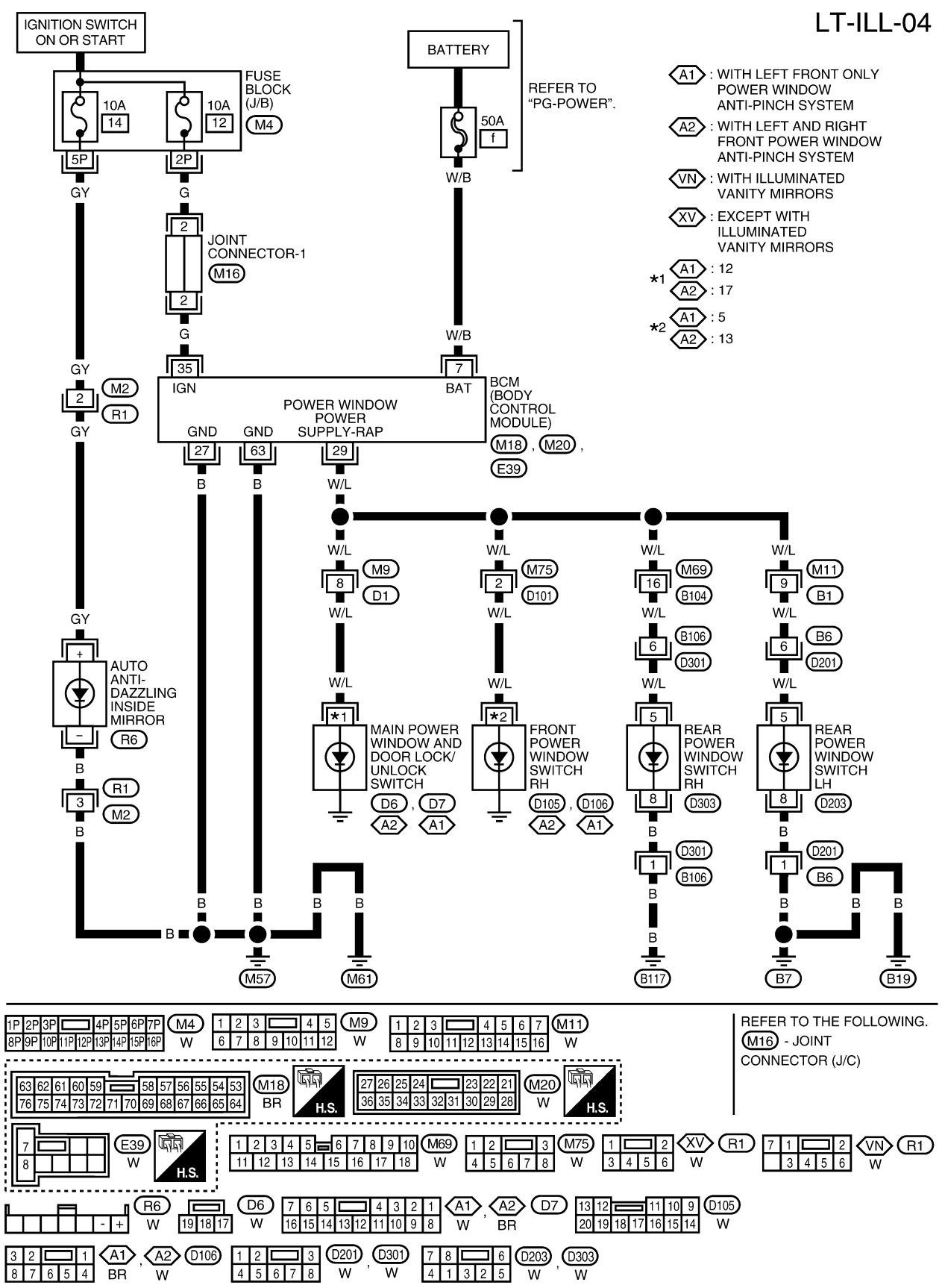
LT-ILL-04
IGNITION SWITCH ON OR START
FUSE BLOCK (J/B)
M4
10A 14
10A 12
5P
2P
GY
G
JOINT CONNECTOR-1
M16
BATTERY
50A f
W/B
REFER TO "PG-POWER".
A1 : WITH LEFT FRONT ONLY POWER WINDOW ANTI-PINCH SYSTEM
A2 : WITH LEFT AND RIGHT FRONT POWER WINDOW ANTI-PINCH SYSTEM
VN : WITH ILLUMINATED VANITY MIRRORS
XV : EXCEPT WITH ILLUMINATED VANITY MIRRORS
*1 A1 : 12
A2 : 17
*2 A1 : 5
A2 : 13
35 IGN
7 BAT
BCM (BODY CONTROL MODULE)
M18 , M20 , E39
POWER WINDOW POWER SUPPLY-RAP
GND 27
GND 63
29
B
W/L
M2
R1
M9 D1
M75 D101
M69 B104
M11 B1
B106 D301
B6 D201
AUTO ANTI-DAZZLING INSIDE MIRROR
R6
MAIN POWER WINDOW AND DOOR LOCK/ UNLOCK SWITCH
D6 , D7
A2 A1
FRONT POWER WINDOW SWITCH RH
D105 , D106
REAR POWER WINDOW SWITCH RH
D303
REAR POWER WINDOW SWITCH LH
D203
M57
M61
B117
B7
B19
M18 BR
M20 W
E39 W
M69 W
M75 W
XV W
VN W
R6 W
D6 W
A1 W , A2 BR
D7
D105 W
A1 BR , A2 W
D106
D201 W , D301 W
D203 W , D303 W
H.S.
REFER TO THE FOLLOWING.
M16 - JOINT CONNECTOR (J/C)

LKWA0044E

Removal and Installation

EKS0043J

ILLUMINATION CONTROL SWITCH

1. Remove driver lower instrument panel. Refer to IP-13, "Driver Lower Instrument Panel" .
2. Press the illumination control switch retaining tabs and remove the unit from the driver lower instrument panel.

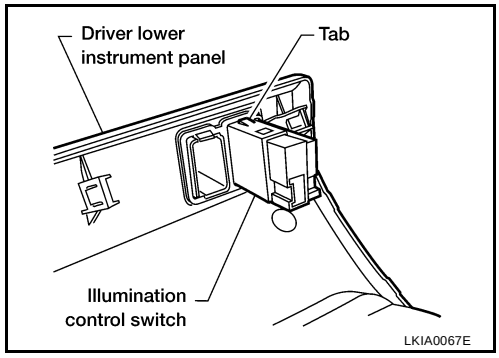

GLOVE BOX LAMP

1. Through the passenger air bag connector access in the top of the glove box, remove bulb socket by turning counterclockwise.
2. Pull the bulb from the socket to remove.

Glove box lamp : 12V 3.4W

VANITY MIRROR AND TRUNK ROOM LAMPS

PFP:26470

Wiring Diagram — INT/L —

EKS0043K

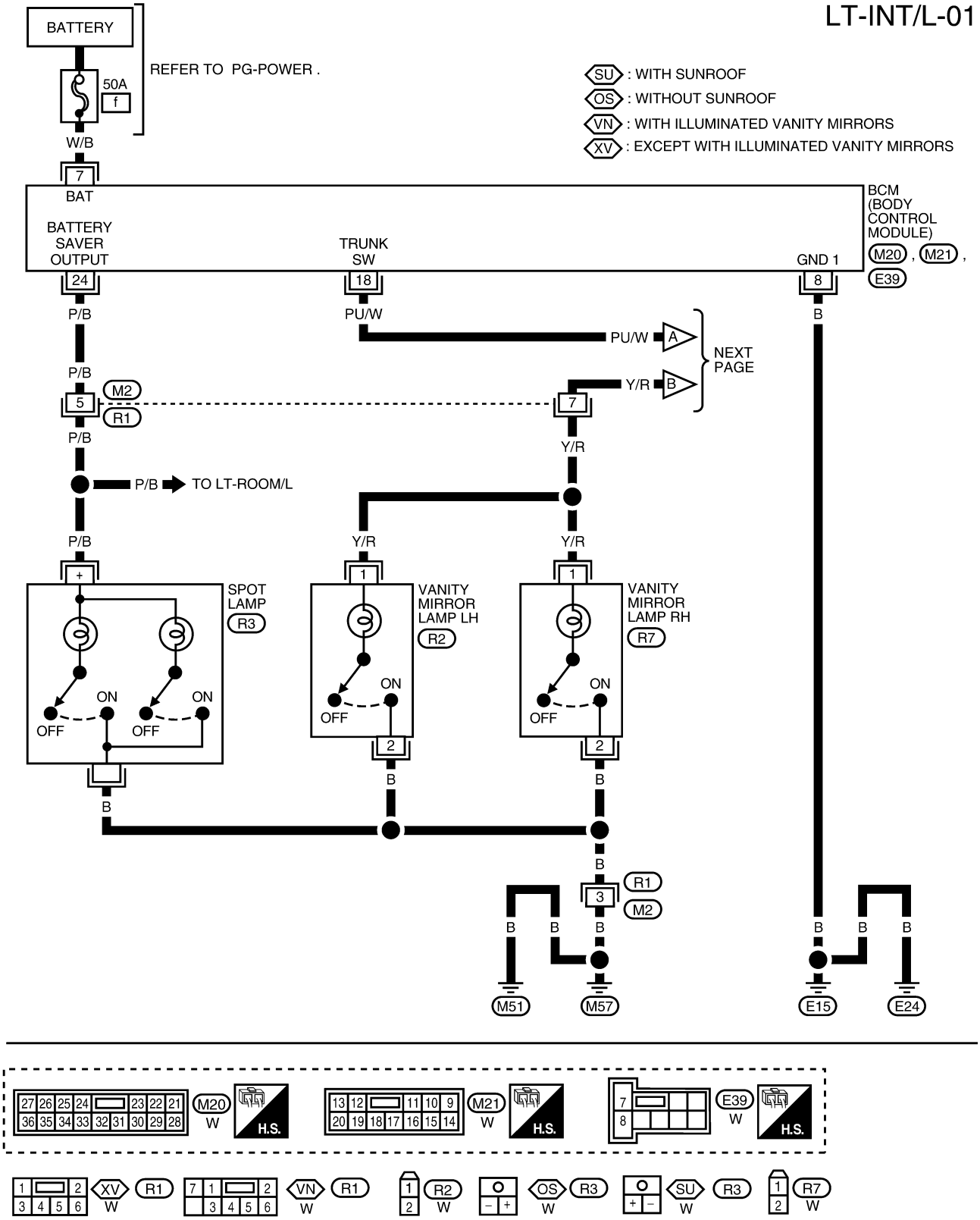

WKWA0198E

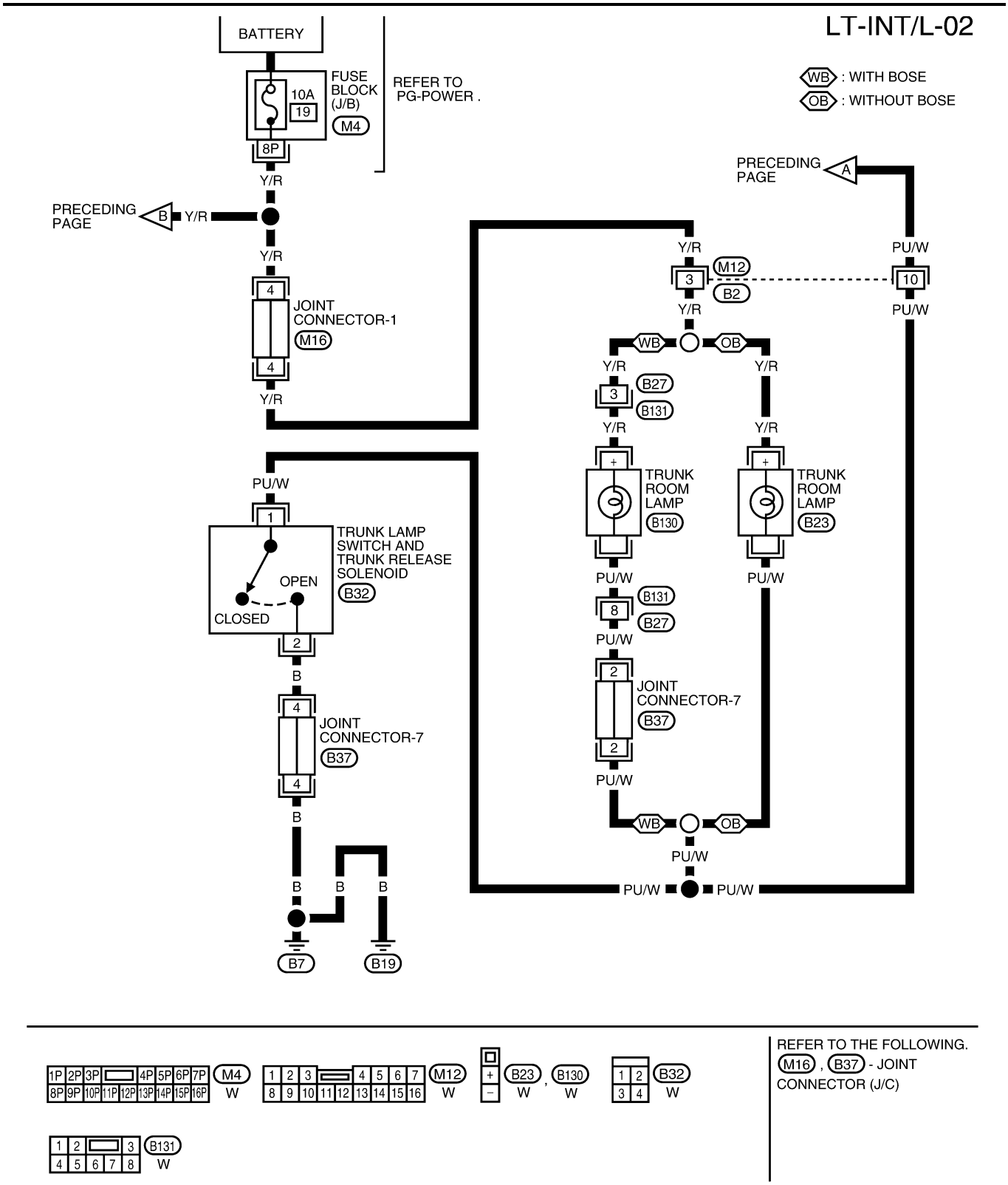
LT-INT/L-02
BATTERY
FUSE BLOCK (J/B)
10A
19
M4
8P
REFER TO PG-POWER .
WB : WITH BOSE
OB : WITHOUT BOSE
PRECEDING PAGE
A
B
Y/R
PU/W
JOINT CONNECTOR-1
M16
M12
B2
3
10
WB
OB
B27
B131
TRUNK ROOM LAMP
B130
B23
TRUNK LAMP SWITCH AND TRUNK RELEASE SOLENOID
B32
OPEN
CLOSED
1
2
8
JOINT CONNECTOR-7
B37
B
B7
B19
REFER TO THE FOLLOWING.
M16 , B37 - JOINT CONNECTOR (J/C)
WKWA0199E

Bulb Replacement for Vanity Mirror Lamp

EKS0043L

1. Insert a thin screwdriver in the notch and remove the lens.
2. Remove the bulb.

Vanity mirror lamp : 14V 1.8W

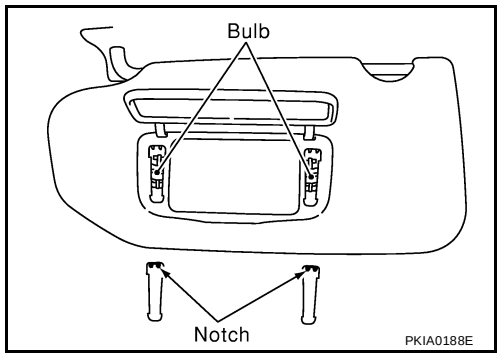

Bulb Replacement, Removal and Installation for Trunk Room Lamp

EKS0043M

1. Unfold tab A and remove the lens.
2. Remove the trunk room lamp while pressing tab B in the direction of the arrow.
3. Disconnect the trunk room lamp connector.
4. Pull bulb from socket to remove.

Trunk room lamp : 12V 3.4W

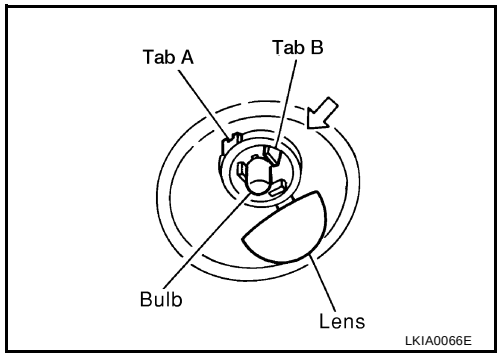

BULB SPECIFICATIONS

PFP:26297

Headlamp

EKS0043N

Item	Wattage (W)
Low (halogen)	55 (H1)
Low (xenon)	35 (D2R)
High	60W (HB3)

Exterior Lamp

EKS0043O

Item		Wattage (W)
Front combination lamp	Turn signal lamp/parking lamp	27/8 (amber)
Rear combination lamp	Stop/Tail lamp	27/8
	Turn signal lamp	27
	Back-up lamp	13
	Side marker lamp	5
Fog lamp		51
License plate lamp		5
High-mounted stop lamp (parcel shelf mount)		18

Interior Lamp/Illumination

EKS0043P

Item	Wattage (W)
Glove box lamp	3.4
Ignition key hole illumination lamp	0.74
Map lamp	10
Room lamp	8
Spot lamp	8
Step lamp	3.4
Trunk room lamp	3.4
Vanity mirror lamp	1.4

*: Always check with the Parts Department for the latest parts information.

SECTION LU

ENGINE LUBRICATION SYSTEM

CONTENTS

QR25DE

PRECAUTIONS 2
Precautions for Liquid Gasket 2
REMOVAL OF LIQUID GASKET 2
LIQUID GASKET APPLICATION PROCEDURE..... 2
PREPARATION 3
Special Service Tools 3
Commercial Service Tools 3
LUBRICATION SYSTEM 4
Lubrication Circuit 4
System Drawing 5
ENGINE OIL 6
Inspection 6
OIL LEVEL AND MUDDINESS 6
OIL LEAKAGE 6
OIL PRESSURE CHECK 6
Changing Engine Oil 7
OIL FILTER 8
Removal and Installation 8
REMOVAL 8
INSTALLATION 8
OIL PUMP 9
Removal and Installation 9
Disassembly and Assembly 9
DISASSEMBLY 9
INSPECTION AFTER DISASSEMBLY 9
ASSEMBLY 11
SERVICE DATA AND SPECIFICATIONS (SDS) 12
Oil Pressure 12
Oil Pump 12
Regulator Valve 12
Oil Capacity 12

VQ35DE

PRECAUTIONS 13
Precautions for Liquid Gasket 13
REMOVAL OF LIQUID GASKET 13
LIQUID GASKET APPLICATION PROCEDURE.. 13
PREPARATION 14
Special Service Tools 14
Commercial Service Tool 14
LUBRICATION SYSTEM 15
Lubrication Circuit 15
System Drawing 16
ENGINE OIL 17
Inspection 17
OIL LEVEL 17
OIL APPEARANCE 17
OIL LEAKAGE 17
OIL PRESSURE CHECK 17
Changing Engine Oil 18
OIL FILTER 19
Removal and Installation 19
REMOVAL 19
INSTALLATION 19
OIL PUMP 20
Removal and Installation 20
REMOVAL 20
INSTALLATION 20
Disassembly and Assembly 20
INSPECTION AFTER DISASSEMBLY 20
ASSEMBLY 22
OIL COOLER 23
Removal and Installation 23
REMOVAL 23
INSPECTION AFTER REMOVAL 24
INSTALLATION 24
INSPECTION AFTER INSTALLATION 24
SERVICE DATA AND SPECIFICATIONS (SDS) 25
Oil Pressure 25
Regulator Valve 25
Oil Pump 25
Oil Capacity 25

PRECAUTIONS

PFP:00001

Precautions for Liquid Gasket

EBS00F16

REMOVAL OF LIQUID GASKET

- After removing the mounting bolts and nuts, separate the mating surface using a seal cutter and remove the sealant.

CAUTION:
Be careful not to damage the mating surfaces.

- In areas where the cutter is difficult to use, use a plastic hammer to lightly tap the areas where the sealant is applied.

CAUTION:
If for some unavoidable reason a tool such as a flat-bladed screwdriver is used, be careful not to damage the mating surfaces.

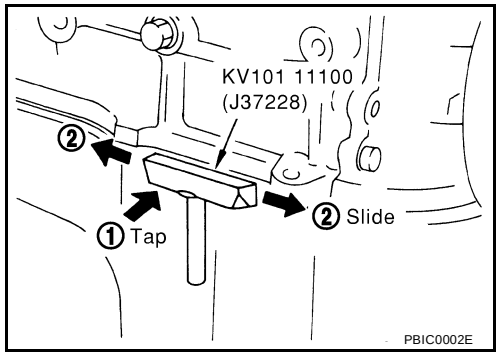

LIQUID GASKET APPLICATION PROCEDURE

1. Using a scraper, remove the old sealant adhering to the mating surface.

- Remove the sealant completely from the groove, mounting bolts, and bolt holes.

2. Clean the mating surface thoroughly to remove adhering moisture, grease and foreign materials.
3. Install the sealant tube into the tube presser.
   Use Genuine RTV Silicone Sealant or equivalent. Refer to GI-42, "Recommended Chemical Products and Sealants" .

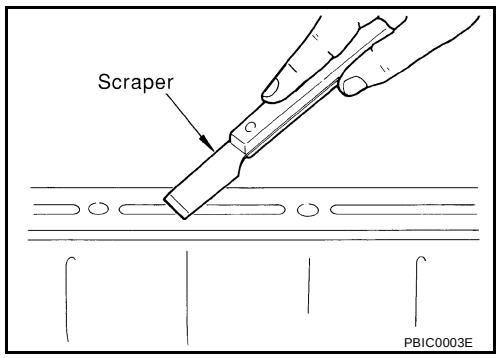

4. Apply the sealant without breaks to the specified area with the specified dimensions.

- If there is a groove for the sealant application, apply the sealant to the groove.

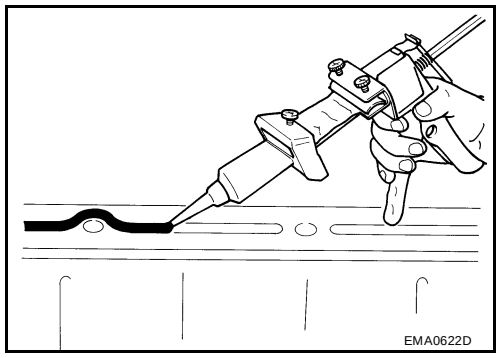

- As for the bolt holes, normally apply the sealant inside the holes. If specified, it should be applied outside the holes. Make sure to read the instructions in this manual.
- Within five minutes of sealant application, install the mating component.
- If the sealant protrudes, wipe it off immediately.
- Do not retighten after the installation.
- After 30 minutes or more have passed from the installation, fill the engine with the correct oil and coolant. Refer to GI-42, "Recommended Chemical Products and Sealants" .

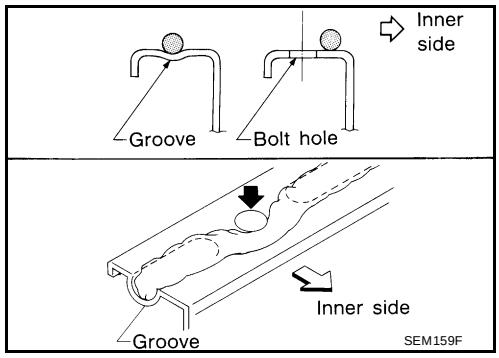

CAUTION:
If there are specific instructions in the service manual, observe them.

PREPARATION

PFP:00002

Special Service Tools

EBS007QK

The actual shape of the Kent-Moore tools may differ from those tools illustrated here.

Tool number (Kent Moore No.) Tool name	Description
ST25051001 (J25695-1) Oil pressure gauge 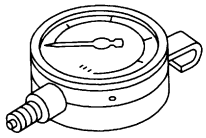 S-NT050	Measuring oil pressure **Maximum measuring range:** **2,452 kPa (25 kg/cm^2 , 356 psi)**
ST25052000 (J25695-2) Hose 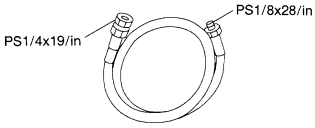 S-NT559	Adapting oil pressure gauge to cylinder block
KV10115801 (J38956) Oil filter wrench 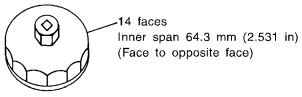 S-NT772	Removing and installing oil filter
WS39930000 (—) Tube presser 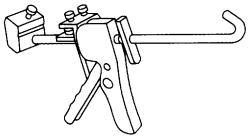 S-NT052	Pressing the tube of liquid gasket

Commercial Service Tools

EBS007QL

Tool name	Description
Power tool 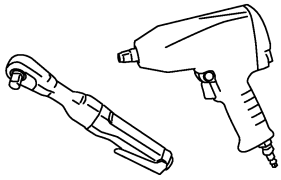 PBIC0190E	Loosening bolts and nuts
Deep socket 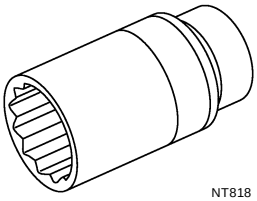 NT818	Removing and installing oil pressure switch Deep socket26 mm, 3/8 drive

LUBRICATION SYSTEM

PFP:15010

Lubrication Circuit

EBS007QM

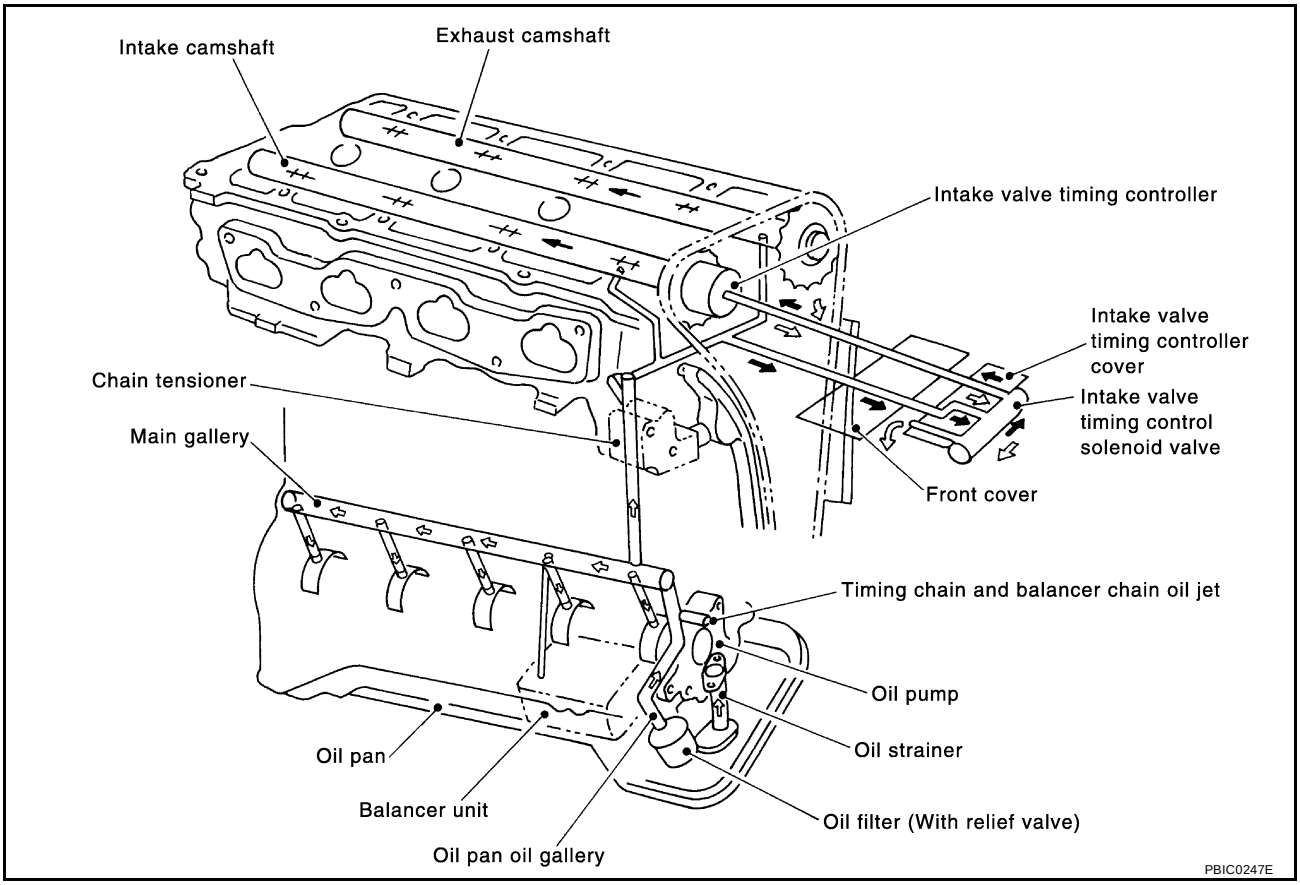

System Drawing

EBS007QN

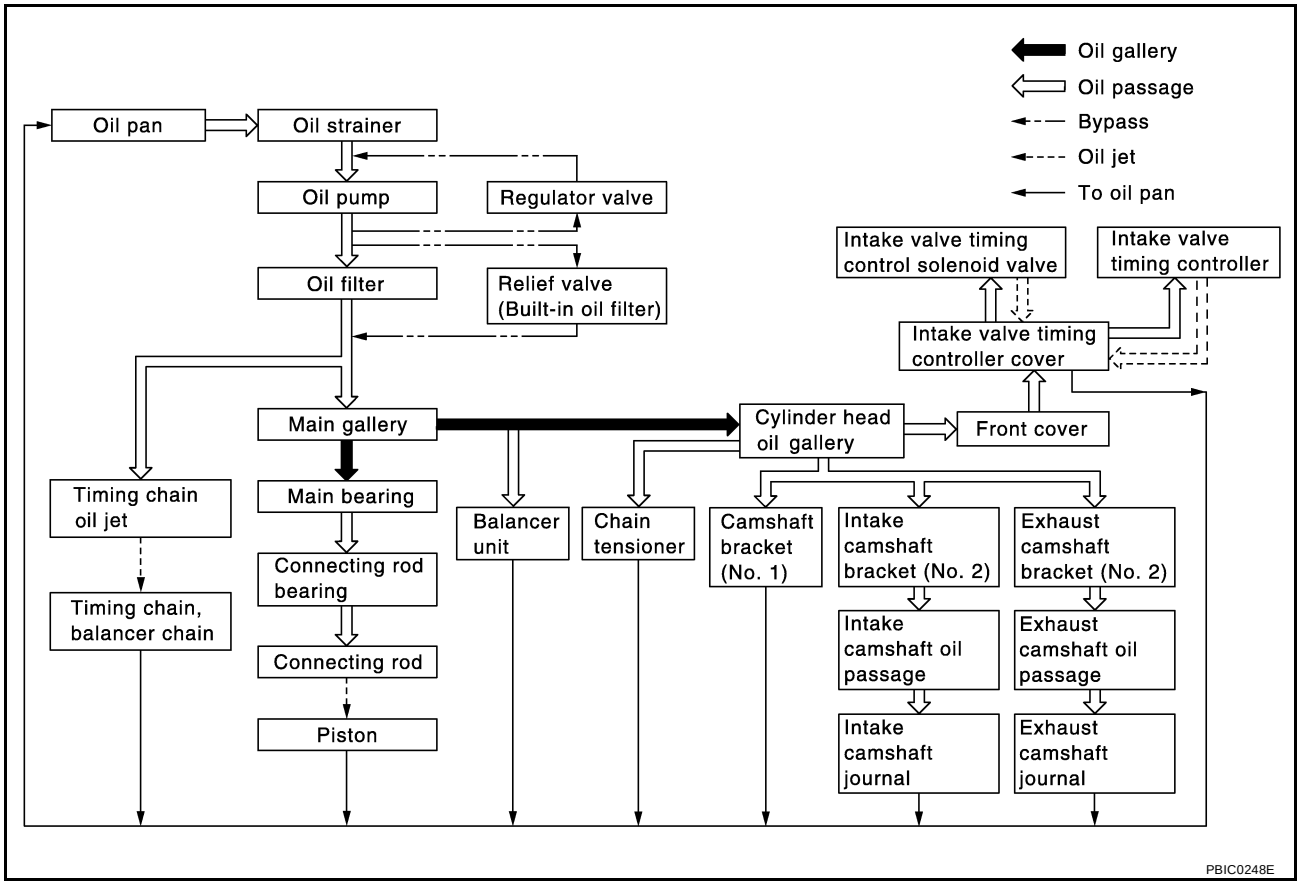

ENGINE OIL

PFP:KLA92

Inspection

EBS007QO

OIL LEVEL AND MUDDINESS

- Before starting the engine, check the oil level. If the engine is already started, stop it and allow 10 minutes before checking.
- Check that the oil level is within the range on the dipstick.
- If it is out of range, add oil as necessary. Refer to MA-12, "RECOMMENDED FLUIDS AND LUBRICANTS" .
- Check the oil for white turbidity or heavy contamination.
- If the oil becomes turbid and white, it is highly probable that it is contaminated with coolant. Determine the cause and correct as necessary.

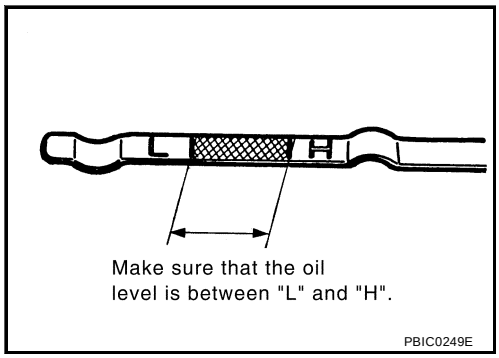

OIL LEAKAGE

Check for oil leakage around the following areas:

- Oil pan
- Oil pan drain plug
- Oil pressure switch
- Oil filter
- IVTC cover
- Front cover
- Mating surface between cylinder block and cylinder head
- Mating surface between cylinder head and rocker cover
- Crankshaft oil seal

OIL PRESSURE CHECK

WARNING:

- **Be careful not to burn yourself, as the engine oil may be hot.**
- **For M/T models, put the gearshift lever in the Neutral "N" position. For A/T models, put the selector lever in the Park “P” position.**

1. Check the oil level.
2. Remove the under cover, using power tools.
3. Remove the oil pressure switch to connect the oil pressure gauge.
4. After warming up the engine, check that oil pressure corresponding to the engine speed is produced.

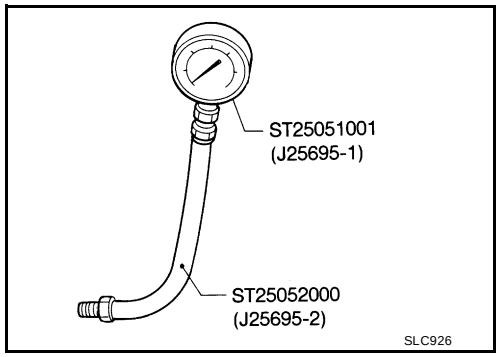

Engine oil pressure [Oil temperature is 80 °C (176 °F)]

Engine speed (rpm)	Idle speed	2,000	6,000
Engine pressure kPa (bar.kg/cm^2 , psi)	Approx. 98 (0.98,1.0, 14) or more	Approx. 294 (2.9, 3.0, 43) or more	Approx. 392 (3.9, 4.0, 57) or more

5. After checking, install the oil pressure switch as follows.

a. Remove old sealant adhering to the switch and engine.

b. Apply High Performance Thread Sealant.
Use Genuine High Performance Thread Sealant or equivalent. Refer to GI-42, "RECOMMENDED CHEMICAL PRODUCTS AND SEALANTS" .

Oilpressureswitch : 12.3 - 17.2 N·m (1.25 - 1.75 kg-m, 10 - 12 ft-lb)

Changing Engine Oil

EBS007QP

WARNING:

- **Be careful not to burn yourself, as the engine oil may be hot.**
- **Prolonged and repeated contact with used engine oil may cause skin cancer: try to avoid direct skin contact with used oil. If skin contact is made, wash thoroughly with soap or hand cleaner as soon as possible.**

1. Warm up engine, and check for oil leakage from engine components.
2. Stop engine and wait for 10 minutes.
3. Remove drain plug and oil filler cap.
4. Drain oil and refill with new engine oil.
   Oil specification and viscosity
   - Refer to MA-12, "RECOMMENDED FLUIDS AND LUBRICANTS" .

   Oil capacity (Approximate):

Unit: ℓ (qt.)

Drain and refill	With oil filter change	4.2 (4 1/2)
	Without oil filter change	4.0 (4 1/4)
Dry engine (engine overhaul)		4.6 (4 7/8)

CAUTION:

- **Be sure to clean the drain plug and install using a new washer.**

Oil pan drain plug : 29.4 - 39 N·m (3.0 - 4.0 kg-m, 22 - 28 ft-lb)

- **The refill capacity depends on the oil temperature and drain time. Use these specifications for reference only. Always use the dipstick to determine when the proper amount of oil is in the engine.**

5. Warm up the engine and check the area around the drain plug and oil filter for oil leakage.
6. Stop the engine and wait for 10 minutes.
7. Check the oil level using the dipstick.

OIL FILTER

PFP:15208

Removal and Installation

EBS007QQ

REMOVAL

1. Using an oil filter wrench, remove the oil filter.

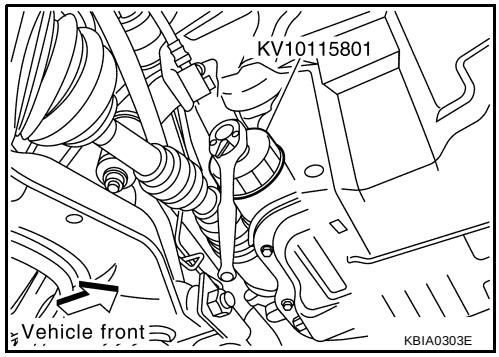

CAUTION:

- **Be careful not to get burned when the engine and engine oil are hot.**
- **The oil filter has a built in pressure relief valve. Use a genuine NISSAN oil filter or equivalent**
- **When removing, prepare a shop cloth to absorb any oil leakage or spillage.**
- **Do not allow engine oil to adhere to the drive belts.**
- **Completely wipe off any oil that adheres to the engine and the vehicle.**

INSTALLATION

1. Clean off any foreign materials adhering to the oil filter installation surface.
2. Apply engine oil to the oil seal surface of the new oil filter.

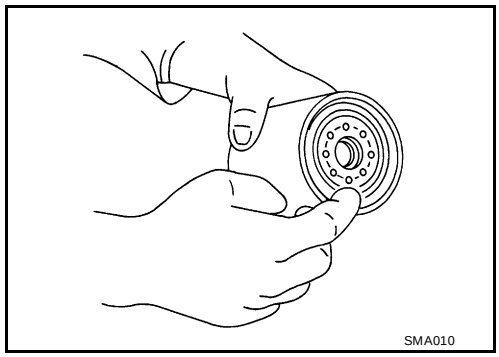

3. Screw the oil filter manually until it touches the installation surface, then tighten it by 2/3 turn. Or tighten to specification below.

Oil filter : 14.7 - 20.5 N·m (1.5 - 2.1 kg-m, 11 - 15 ft-lb)

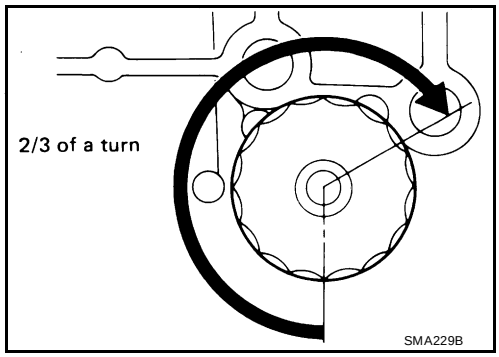

4. After warming up the engine, check for oil leaks.
5. Check oil level and add engine oil as necessary. Refer to LU-6, "ENGINE OIL" .

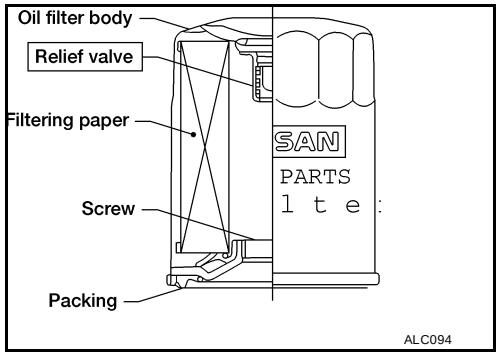

OIL PUMP

PFP:15010

Removal and Installation

EBS007QR

- Remove the front cover.

Disassembly and Assembly

EBS007QS

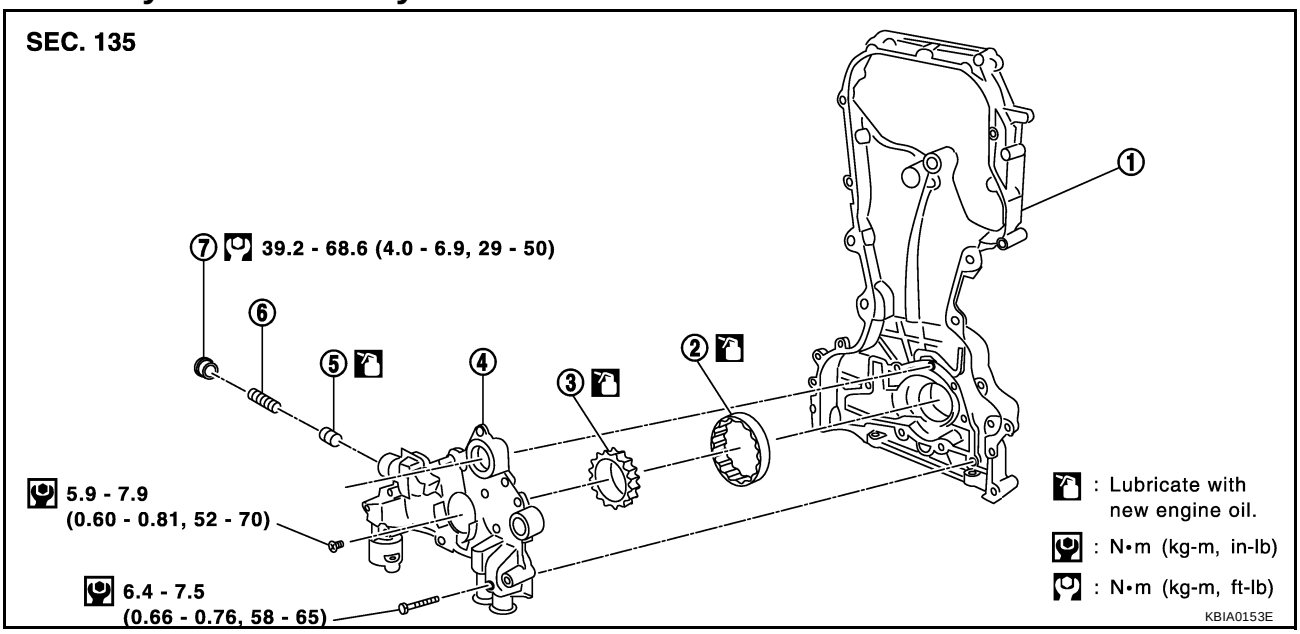

1. Front cover
2. Outer rotor
3. Inner rotor
4. Oil pump cover
5. Regulator valve
6. Spring
7. Regulator plug

CAUTION:

Before installation, apply new engine oil to the parts as instructed in the figure above.

DISASSEMBLY

1. Remove the oil pump cover.
2. Remove inner rotor and outer rotor from front cover.
3. After removing regulator plug, remove regulator spring and regulator valve.

INSPECTION AFTER DISASSEMBLY

Measure the clearance of the oil pump parts.

- Measure clearance with feeler gauge.
- Clearance between outer rotor and oil pump body (position 1).

  Standard : 0.114 - 0.179 mm (0.0045 - 0.0070 in)

- Tip clearance between inner rotor and outer rotor (position 2).

  Standard : Below 0.220 mm (0.0087 in)

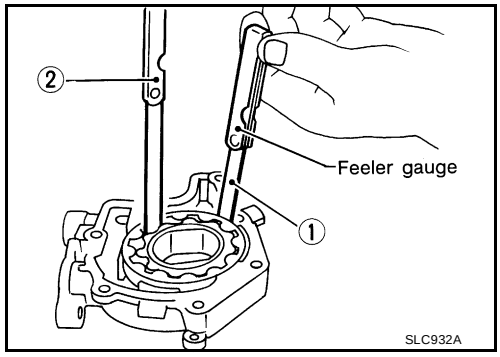

- Measure clearance with feeler gauge and straightedge.
- Side clearance between inner rotor and oil pump body (position 3).

  Standard : 0.030 - 0.070 mm (0.0012 - 0.0028 in)

- Side clearance between outer rotor and oil pump body (position 4).

  Standard : 0.060 - 0.110 mm (0.0024 - 0.0043 in)

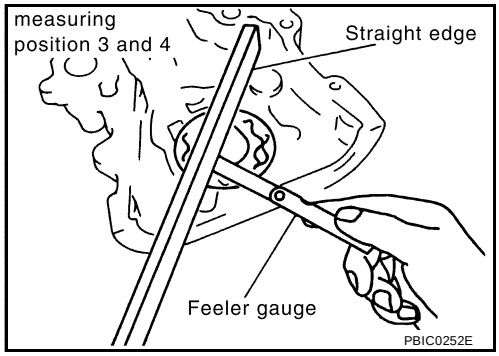

- Calculate the clearance between inner rotor and oil pump body as follows:

1. Measure the outer diameter of protruded portion of inner rotor (Position 5).

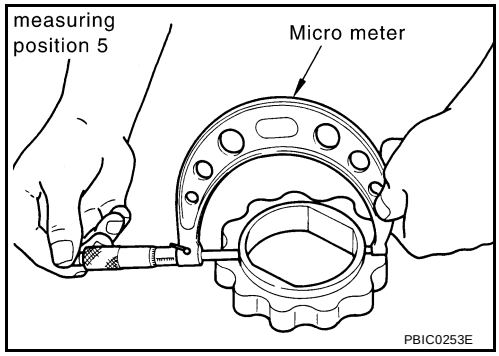

2. Measure the inner diameter of oil pump body with inside micrometer (Position 6).
   (Clearance) = (Inner diameter of oil pump body) – (Outer diameter of inner rotor).

   Standard : 0.035 - 0.070 mm (0.0014 - 0.0028 in)

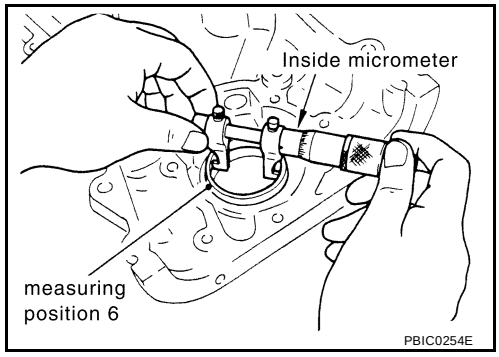

- Regulator valve clearance:
  (Clearance) = D1(Valve hole diameter) – D2 (Outer diameter of valve)

  Standard : 0.040 - 0.097 mm (0.0016 - 0.0038 in)

  CAUTION:
  Coat regulator valve with engine oil.
  Check that it falls smoothly into the valve hole by its own weight.

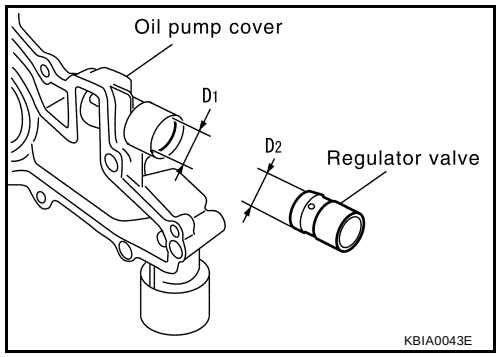

ASSEMBLY

- Assembly is in the reverse order of disassembly.
- Install the inner rotor and outer rotor with the punched marks on the oil pump cover side.

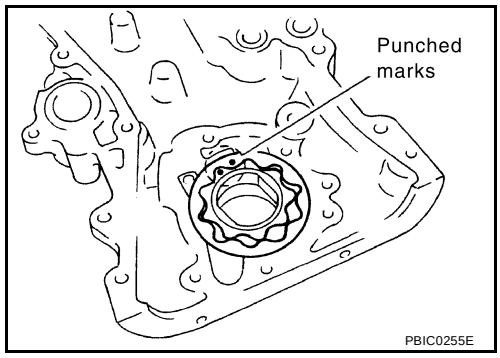

SERVICE DATA AND SPECIFICATIONS (SDS)

PFP:00030

Oil Pressure

EBS007QT

Engine speed rpm	Approximate discharge pressure kPa (bar. kg/cm^2 , psi)
Idle speed	More than 98 (0.98,1.0, 14)
2,000	294 (2.9, 3.0, 43)
6,000	392 (3.9, 4.0, 57)

Oil Pump

EBS007QU

Unit: mm (in)

Body to outer rotor radial clearance	0.114 - 0.179 (0.0045 - 0.0070)
Inner rotor to outer rotor tip clearance	Below 0.220 (0.0087)
Body to inner rotor axial clearance	0.030 - 0.070 (0.0012 - 0.0028)
Body to outer rotor axial clearance	0.060 - 0.110 (0.0024 - 0.0043)
Inner rotor to brazed portion of housing clearance	0.035 - 0.070 (0.0014 - 0.0028)

Regulator Valve

EBS007QV

Unit: mm (in)

Regulator valve to oil pump cover clearance	0.040 - 0.097 (0.0016 - 0.0038)

Oil Capacity

EBS007QW

Unit: ℓ (qt.)

Drain and refill	With oil filter change	Approximately 4.2 (4 1/2)
	Without oil filter change	Approximately 4.0 (4 1/4)
Dry engine (engine overhaul)		Approximately 4.6 (4 7/8)

PRECAUTIONS

PFP:00001

Precautions for Liquid Gasket

EBS00F17

REMOVAL OF LIQUID GASKET

- After removing the mounting bolts and nuts, separate the mating surface using a seal cutter and remove the sealant.

CAUTION:
Be careful not to damage the mating surfaces.

- In areas where the cutter is difficult to use, use a plastic hammer to lightly tap the areas where the sealant is applied.

CAUTION:
If for some unavoidable reason a tool such as a flat-bladed screwdriver is used, be careful not to damage the mating surfaces.

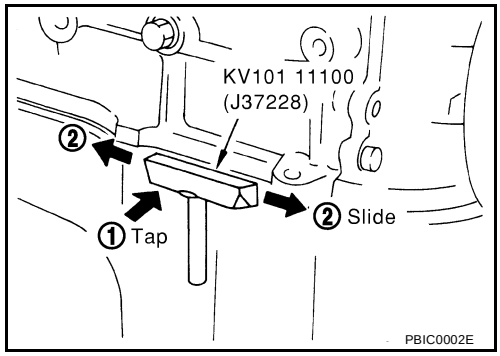

LIQUID GASKET APPLICATION PROCEDURE

1. Using a scraper, remove the old sealant adhering to the mating surface.

- Remove the sealant completely from the groove, mounting bolts, and bolt holes.

2. Clean the mating surface thoroughly to remove adhering moisture, grease and foreign materials.
3. Install the sealant tube into the tube presser.
   Use Genuine RTV Silicone Sealant or equivalent. Refer to GI-42, "Recommended Chemical Products and Sealants" .

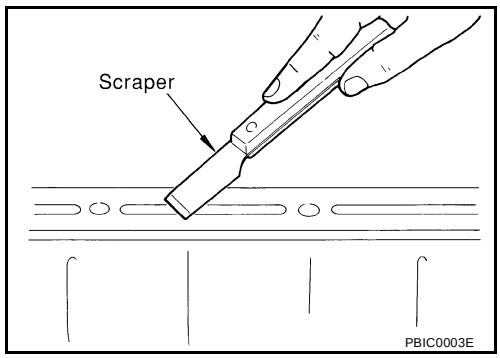

4. Apply the sealant without breaks to the specified area with the specified dimensions.

- If there is a groove for the sealant application, apply the sealant to the groove.

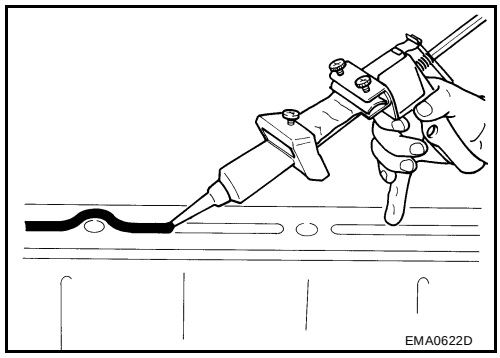

- As for the bolt holes, normally apply the sealant inside the holes. If specified, it should be applied outside the holes. Make sure to read the instructions in this manual.
- Within five minutes of sealant application, install the mating component.
- If the sealant protrudes, wipe it off immediately.
- Do not retighten after the installation.
- After 30 minutes or more have passed from the installation, fill the engine with the correct oil and coolant. Refer to GI-42, "Recommended Chemical Products and Sealants" .

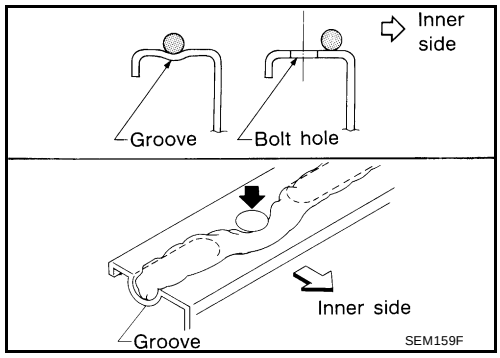

CAUTION:
If there are specific instructions in the service manual, observe them.

PREPARATION

PFP:00002

Special Service Tools

EBS007QY

The actual shapes of Kent-Moore tools may differ from those of special service tools illustrated here.

Tool number (Kent-Moore No.) Tool name		Description
ST25051001 (J25695-1) Oil pressure gauge	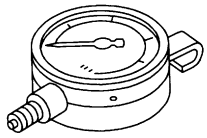 NT050	Measuring oil pressure **Maximum measuring range: 2,452 kPa (25 kg-cm^2 , 356 psi)**
ST25052000 (J25695-2) Hose	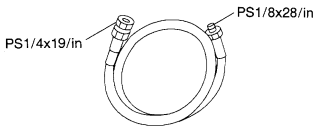 S-NT559	Adapting oil pressure gauge to upper oil pan
KV10115801 (J38956) Oil filter wrench	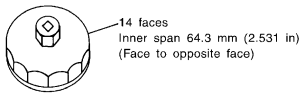 S-NT772	Removing and installing oil filter
WS39930000 (　　—　　) Tube presser	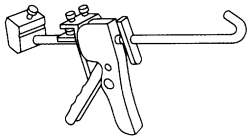 NT052	Pressing the tube of liquid gasket

Commercial Service Tool

EBS007QZ

Tool name		Description
Deep socket	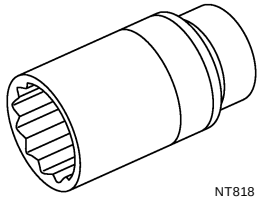 NT818	Removing and installing oil pressure switch Deep socket 26 mm, 3/8 drive
Power tools	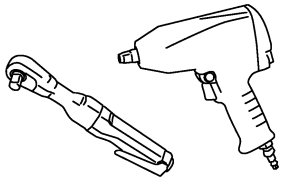 PBIC0190E	Loosening nuts and bolts

LUBRICATION SYSTEM

PFP:15010

Lubrication Circuit

EBS007R0

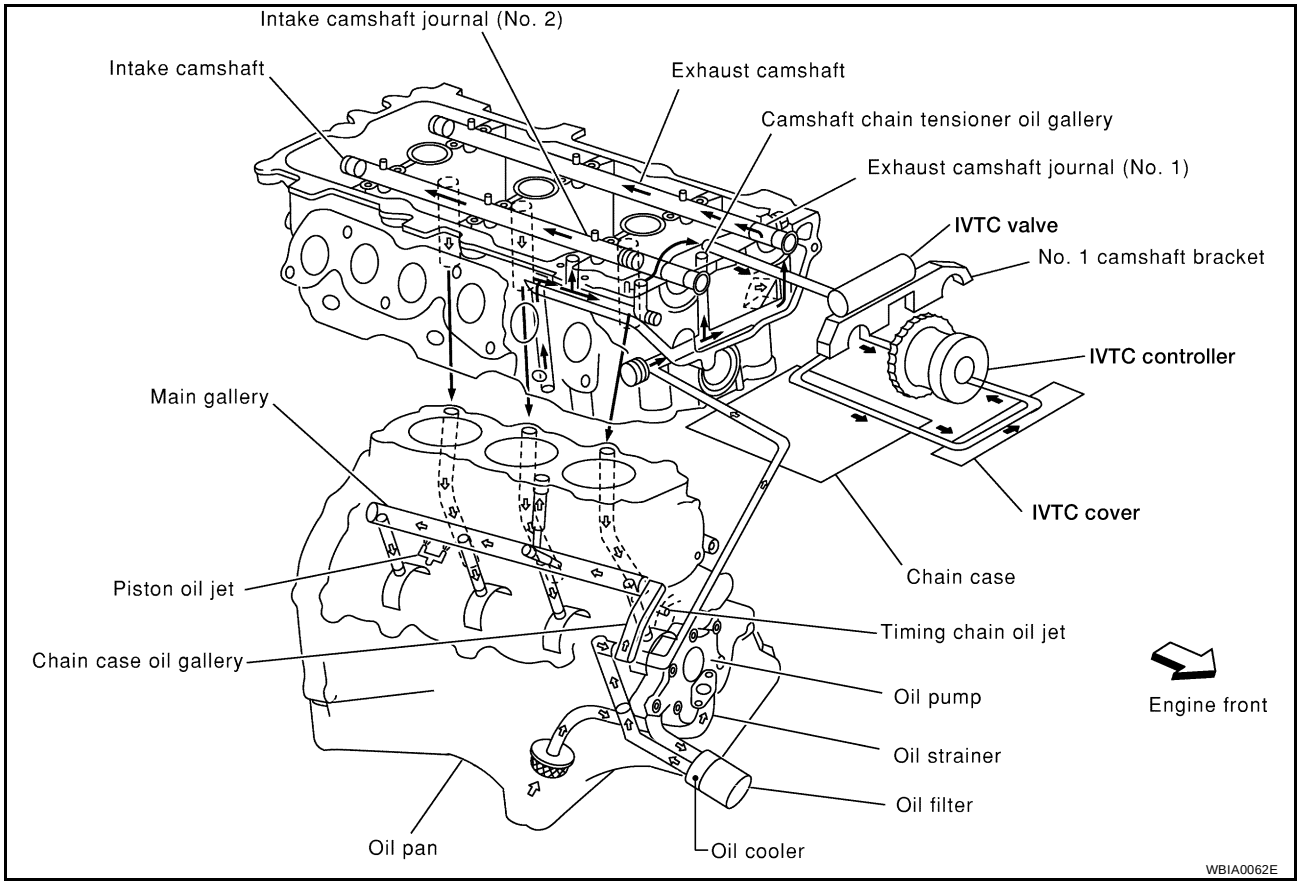

System Drawing

EBS007R1

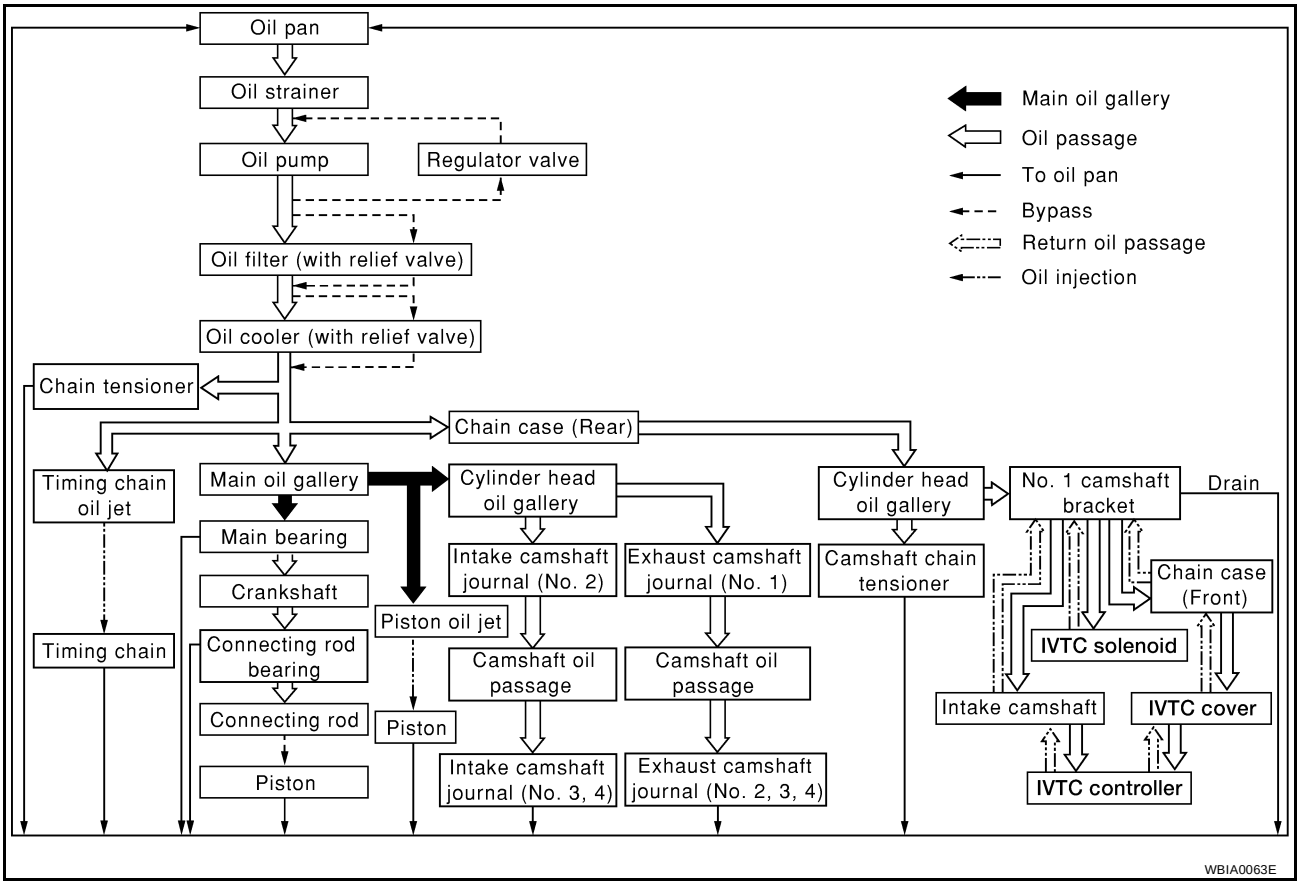

ENGINE OIL

PFP:KLA92

Inspection

EBS007R2

OIL LEVEL

NOTE:

- Before starting the engine, check the oil level. If the engine is already started, stop it and allow 10 minutes before checking.
- Check that the oil level is within the range as indicated on the dipstick.
- If it is out of range, add oil as necessary.

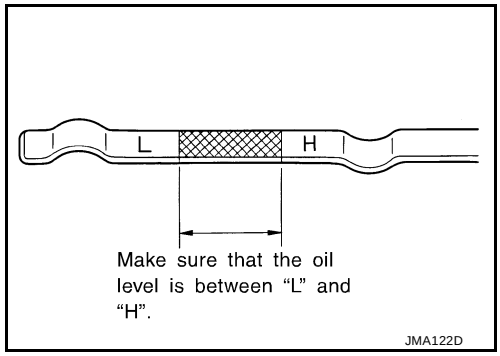

OIL APPEARANCE

- Check the oil for white turbidity or heavy contamination.
- If the oil becomes turbid and white, it is highly probable that it is contaminated with coolant.

OIL LEAKAGE

Check for oil leakage around the following areas:

- Oil pan
- Oil pan drain plug
- Oil pressure switch
- Oil filter
- Oil cooler
- IVTC cover
- Intake valve timing control cover
- Front cover
- Mating surface between cylinder block and cylinder head
- Mating surface between cylinder head and rocker cover
- Crank oil seal (front and rear)

OIL PRESSURE CHECK

WARNING:

- **Be careful not to burn yourself, as engine oil may be hot.**
- **For M/T models, put the gearshift lever in the Neutral "N" position. For A/T models, put the selector lever in the Park “P” position.**

1. Check the oil level.
2. Disconnect oil pressure switch harness connector.
3. Remove oil pressure switch.
4. Install the pressure gauge.
5. Start the engine and warm it up to normal operating temperature.
6. Check oil pressure with engine running under no-load.

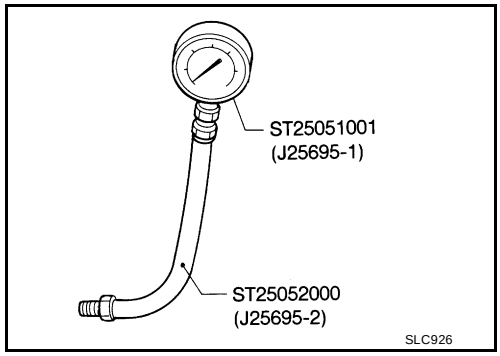

Engine speed rpm	Approximate discharge pressure kPa (kg/cm^2 , psi)
Idle speed	More than 98 (1.0, 14)
2,000	294 (3.0, 43)

If difference is extreme, check oil passage and oil pump for oil leaks.

7. After the inspections, install the oil pressure switch as follows:
a. Remove the old sealant adhering to switch and engine.
b. Apply thread sealant and tighten the oil pressure switch to specification.
Use Genuine High Performance Thread Sealant, or equivalent. Refer to GI-42, "RECOMMENDED CHEMICAL PRODUCTS AND SEALANTS" .

Oil pressure switch : 13 - 17 N·m (1.25 - 1.75 kg-m, 9 - 12 ft-lb)

Changing Engine Oil

EBS007R3

WARNING:
- **Be careful not to burn yourself, as the engine oil may be hot.**
- **Prolonged and repeated contact with used engine oil may cause skin cancer; try to avoid direct skin contact with used oil. If skin contact is made, wash thoroughly with soap or hand cleaner as soon as possible.**

1. Warm up engine, and check for oil leakage from engine components.
2. Stop engine and wait for 10 minutes.
3. Remove drain plug and oil filler cap.
4. Drain oil.
5. Install drain plug and refill with new engine oil.
   - Refer to MA-12, "RECOMMENDED FLUIDS AND LUBRICANTS" .

   Oil capacity (Approximate):

Unit: ℓ (qt.)

Drain and refill	With oil filter change	Approximately 4.0 (4 1/4)
	Without oil filter change	Approximately 3.7 (3 7/8)
Dry engine (engine overhaul)		Approximately 5.0 (5 1/4)

CAUTION:
- **Be sure to clean drain plug and install with new washer.**

Oil pan drain plug : 29 - 39 N·m (3.0 - 4.0 kg-m, 22 - 29 ft-lb)

- **The refill capacity depends on the oil temperature and drain time. Use these specifications for reference only.**
- **Always use the dipstick to determine when the proper amount of oil is in the engine.**

6. Warm up engine and check area around drain plug and oil filter for oil leakage.
7. Stop engine and wait for 10 minutes.
8. Check oil level.

OIL FILTER

PFP:15208

Removal and Installation

EBS007R4

REMOVAL

1. Using an oil filter wrench, remove the oil filter.

CAUTION:

- **The oil filter is provided with a relief valve.**
  Use genuine NISSAN oil filter or equivalent.
- **Be careful not to get burned, the engine oil may be hot.**
- **When removing, prepare a shop cloth to absorb any oil leakage or spillage.**
- **Do not allow engine oil to adhere to the drive belts.**
- **Completely wipe off any oil that adheres to the engine and the vehicle.**

INSTALLATION

1. Remove foreign materials adhering to the oil filter installation surface.
2. Apply engine oil to the oil seal contact surface of the new oil filter.

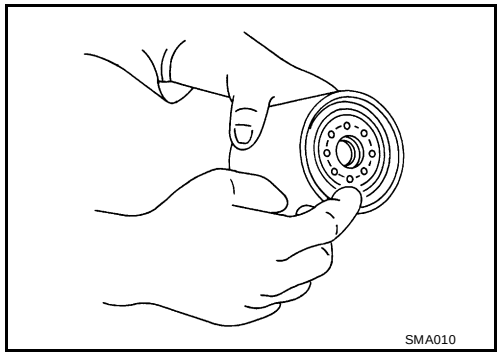

3. Screw the oil filter manually until it touches the installation surface, then tighten it by 2/3 turn. Or tighten to specification.

   Oil filter : 14.7 - 20.5 N·m (1.5 - 2.1 kg-m, 11 - 15 ft-lb)

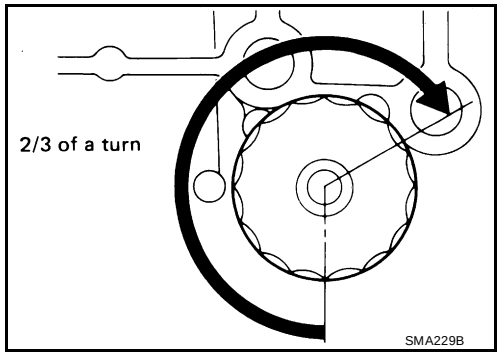

4. After warming up the engine, check for engine oil leakage.
5. Check oil level and add engine oil. Refer to LU-17, "ENGINE OIL" .

OIL PUMP

PFP:15010

Removal and Installation

EBS007R5

REMOVAL

1. Remove the timing chain. Refer to EC-1288, "Engine Coolant Temperature Sensor" .
2. Remove oil pump assembly.

INSTALLATION

- Installation is in the reverse order of removal.

Disassembly and Assembly

EBS007R6

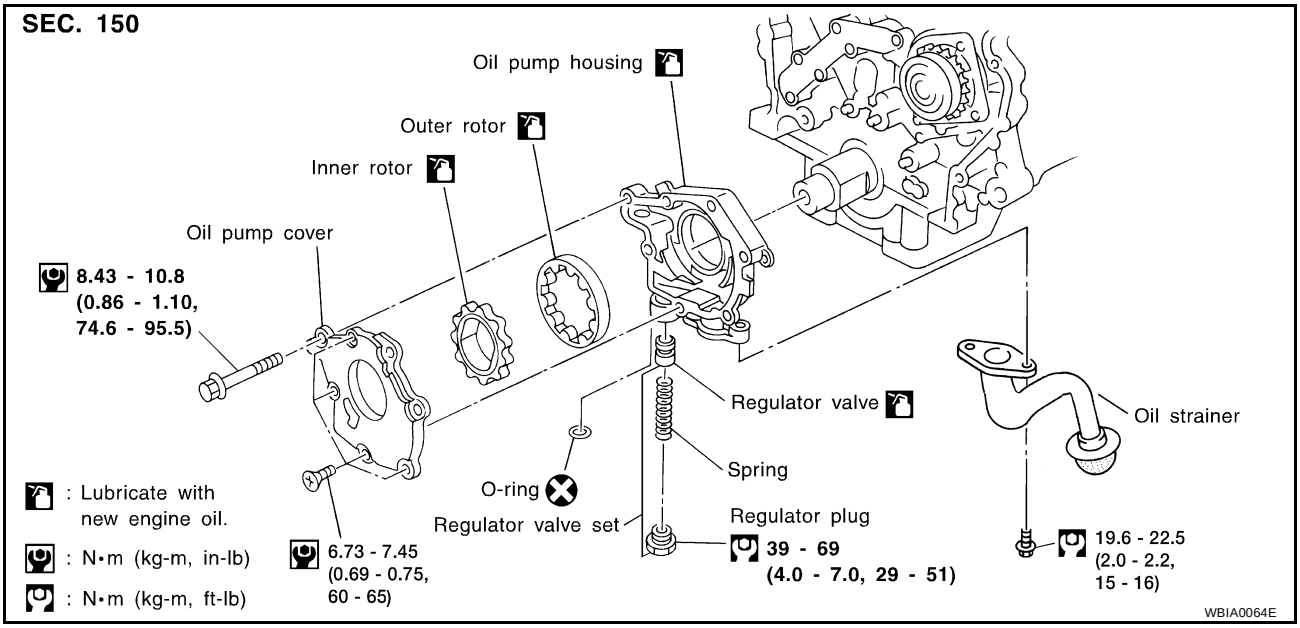

- **Disassemble as shown.**
- **Assembly is in the reverse order of Disassembly. When assembling the oil pump, apply engine oil to the rotors.**

INSPECTION AFTER DISASSEMBLY

Clearance of Oil Pump Parts

- Measure clearance with feeler gauge.
  Clearance between outer rotor and oil pump body (position 1)

  Standard : 0.114 - 0.200 mm (0.0045 - 0.0079 in)

  Tip clearance between inner rotor and outer rotor (position 2)

  Standard : Below 0.180 mm (0.0071 in)

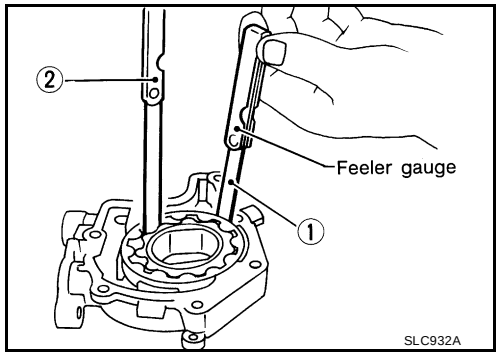

- Measure clearance with feeler gauge and straightedge.
  Side clearance between inner rotor and oil pump body (position 3).

  Standard : 0.030 - 0.070 mm (0.0012 - 0.0028 in)

  Side clearance between outer rotor and oil pump body (position 4).

  Standard : 0.050 - 0.110 mm (0.0020 - 0.0043 in)

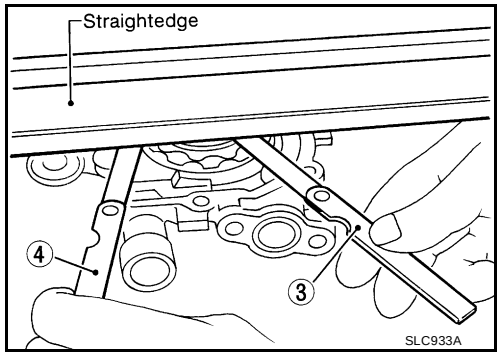

- Calculate the clearance between inner rotor and oil pump body as follows.

1. Measure the outer diameter of protruded portion of inner rotor (position A).
2. Measure the inner diameter of oil pump body with inside micrometer (position B).
   (clearance 5) = (inner diameter of oil pump body B) – (outer diameter of inner rotor A)

   Standard : 0.045 - 0.091 mm (0.0018 - 0.0036 in)

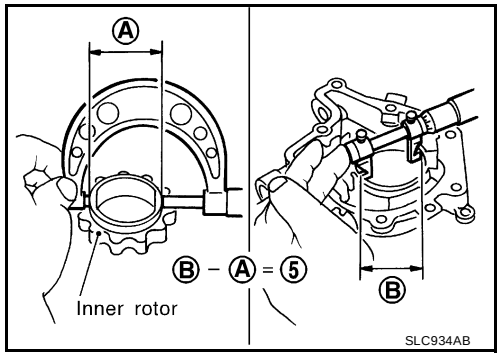

Regulator Valve

1. Visually inspect components for wear and damage.
2. Check oil pressure regulator valve sliding surface and valve spring.
3. Coat regulator valve with engine oil. Check that it falls smoothly into the valve hole by its own weight.

If damaged, replace regulator valve set or oil pump body.

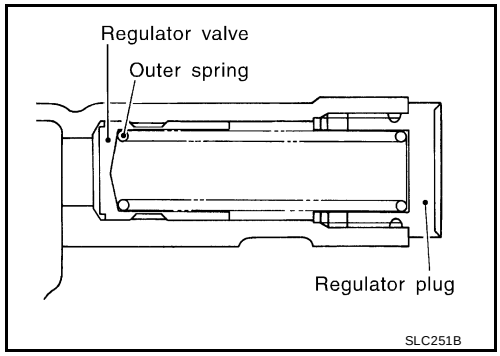

Regulator Valve Clearance

(Clearance 6) = D (Valve hole diameter) – E (Outer diameter of valve)

Standard : 0.040 - 0.097 mm (0.0016 - 0.0038 in)

If it exceeds the standard, replace the oil pump body.

CAUTION:
Coat regulator valve with engine oil.
Check that it falls smoothly into the valve hole by its own weight.

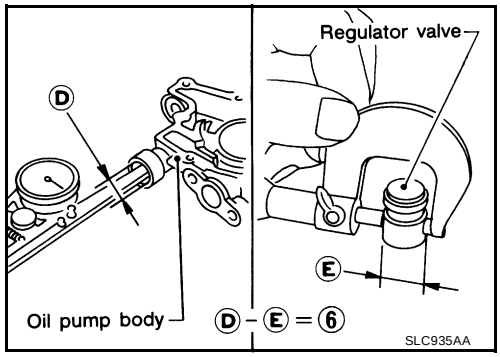

ASSEMBLY

- Assembly is in the reverse order of Disassembly.
- Assemble the inner rotor and outer rotor with the punched marks on the oil pump cover side.

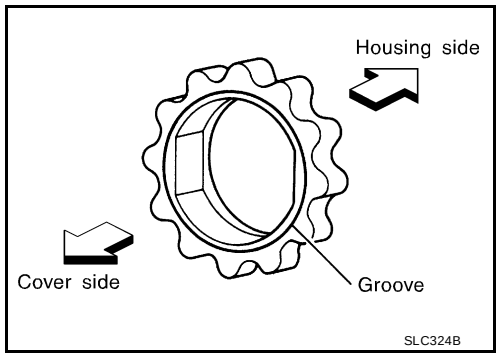

OIL COOLER

PFP:21305

Removal and Installation

EBS007R7

SEC. 110 • 150 • 213 • 221 • 251

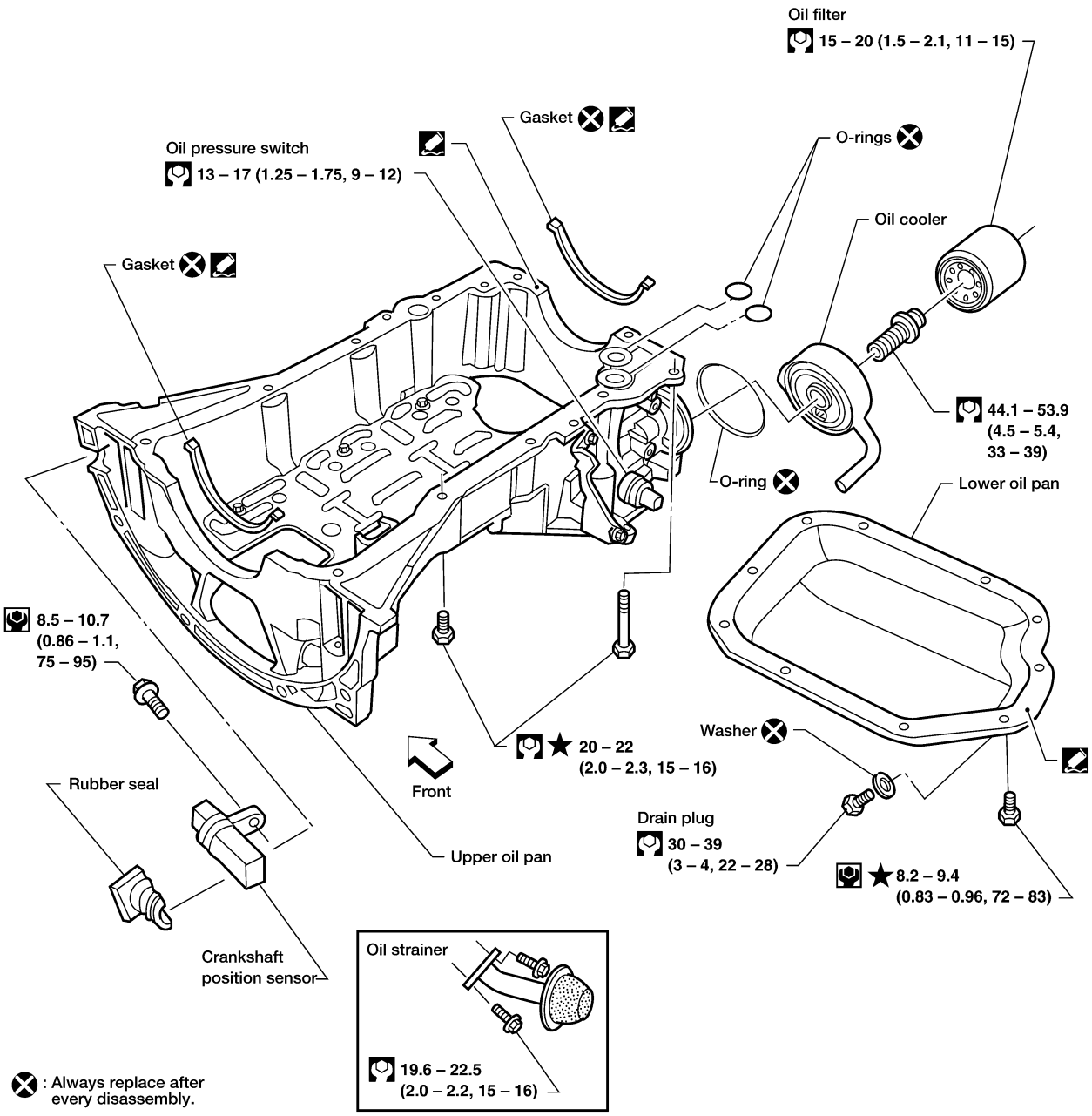

: Always replace after every disassembly.

: N·m (kg-m, in-lb)

: N·m (kg-m, ft-lb)

: Apply Genuine RTV Silicone Sealant or equivalent. Refer to "GI Section".

★ : Follow the numerical tightening sequence. Refer to "INSTALLATION".

WBIA0142E

REMOVAL

1. Drain engine oil. Refer to LU-18, "Changing Engine Oil" .
2. Drain engine coolant. Refer to MA-22, "DRAINING ENGINE COOLANT" .
   - **Do not spill coolant on the drive belt.**

3. Remove the oil filter and the oil cooler.

INSPECTION AFTER REMOVAL

1. Check oil cooler for cracks.
2. Check oil cooler for clogging by blowing through coolant inlet. If necessary, replace oil cooler assembly.

Oil Pressure Relief Valve

Inspect oil pressure relief valve for movement, cracks and breaks by pushing the ball. If replacement is necessary, remove valve by prying it out with a suitable tool. Install a new valve in place by tapping it.

INSTALLATION

- Installation is in reverse order of removal.
- **When installing the oil cooler, align the oil cooler stopper with the stopper of the oil pan.**

INSPECTION AFTER INSTALLATION

Start engine and check there are no leaks of engine oil or coolant.

SERVICE DATA AND SPECIFICATIONS (SDS)

PFP:00100

Oil Pressure

EBS007R8

Engine speed rpm	Approximate discharge pressure kPa (kg/cm^2 , psi)
Idle speed	More than 98 (1.0, 14)
2,000	294 (3.0, 43)

Regulator Valve

EBS007R9

Unit: mm (in)

Regulator valve to oil pump cover clearance	0.040 - 0.097 (0.0016 - 0.0038)

Oil Pump

EBS007RA

Unit: mm (in)

Body to outer rotor radial clearance	0.114 - 0.260 (0.0045 - 0.0102)
Inner rotor to outer rotor tip clearance	Below 0.18 (0.0071)
Body to inner rotor axial clearance	0.030 - 0.070 (0.0012 - 0.0028)
Body to outer rotor axial clearance	0.050 - 0.110 (0.0020 - 0.0043)
Inner rotor to brazed portion of housing clearance	0.045 - 0.091 (0.0018 - 0.0036)

Oil Capacity

EBS00F15

Unit: ℓ (qt.)

Drain and refill	With oil filter change	Approximately 4.0 (4 1/4)
	Without oil filter change	Approximately 3.7 (3 7/8)
Dry engine (engine overhaul)		Approximately 5.0 (5 1/4)

SECTION MA
MAINTENANCE

CONTENTS

PRECAUTIONS 3
Precautions for Supplemental Restraint System (SRS) “AIR BAG” and “SEAT BELT PRE-TENSIONER” 3
PREPARATION 4
Special Service Tool 4
Commercial Service Tool 4
GENERAL MAINTENANCE 5
Explanation of General Maintenance 5
PERIODIC MAINTENANCE 7
Introduction of Periodic Maintenance 7
SCHEDULE 1 7
EMISSION CONTROL SYSTEM MAINTENANCE 7
CHASSIS AND BODY MAINTENANCE 9
SCHEDULE 2 10
EMISSION CONTROL SYSTEM MAINTENANCE 10
CHASSIS AND BODY MAINTENANCE 11
RECOMMENDED FLUIDS AND LUBRICANTS 12
Fluids and Lubricants 12
QR25DE 12
VQ35DE 12
SAE Viscosity Number 13
GASOLINE ENGINE OIL 13
ANTI-FREEZE COOLANT MIXTURE RATIO 13
ENGINE MAINTENANCE (QR25DE ENGINE) 14
Checking Drive Belts 14
Changing Engine Coolant 14
DRAINING ENGINE COOLANT 14
REFILLING ENGINE COOLANT 15
FLUSHING COOLING SYSTEM 16
Checking Fuel Lines 17
Changing Air Cleaner Filter 17
VISCOUS PAPER TYPE 17
Changing Engine Oil 17
Changing Oil Filter 18
Changing Spark Plugs (Platinum - Tipped Type) ... 19
Checking EVAP Vapor Lines 20
ENGINE MAINTENANCE (VQ35DE ENGINE) 21
Checking Drive Belts 21
Changing Engine Coolant 22
DRAINING ENGINE COOLANT 22
REFILLING ENGINE COOLANT 22
FLUSHING COOLING SYSTEM 23
Checking Fuel Lines 24
Changing Air Cleaner Filter 24
VISCOUS PAPER TYPE 24
Changing Engine Oil 24
Changing Oil Filter 25
Changing Spark Plugs (Platinum - Tipped Type) ... 26
Checking EVAP Vapor Lines 27
CHASSIS AND BODY MAINTENANCE 28
Checking Exhaust System 28
Checking Clutch Fluid Level and Leaks 28
Checking M/T Oil 28
Changing M/T Oil 28
Checking A/T Fluid 29
Changing A/T Fluid 29
Balancing Wheels (Bonding Weight Type) 30
REMOVAL 30
WHEEL BALANCE ADJUSTMENT 30
Tire Rotation 31
Checking Brake Fluid Level and Leaks 32
Checking Brake Lines and Cables 32
Checking Disc Brake 32
ROTOR 32
CALIPER 32
PAD 33
Checking Steering Gear and Linkage 33
STEERING GEAR 33
STEERING LINKAGE 33
Checking Power Steering Fluid and Lines 33
Axle and Suspension Parts 34
Drive Shaft 35
Lubricating Locks, Hinges and Hood Latch 35
Checking Seat Belts, Buckles, Retractors, Anchors and Adjusters 36
SERVICE DATA AND SPECIFICATIONS (SDS) 37
Engine Maintenance (QR25DE) 37

SPARK PLUGS (PLATINUM-TIPPED TYPE) 37
BELT DEFLECTION AND TENSION 37
Engine Maintenance (VQ35DE) 37
SPARK PLUGS (PLATINUM-TIPPED TYPE) 37
BELT DEFLECTION AND TENSION 37
Chassis and Body Maintenance 37
WHEEL BALANCE 37

PRECAUTIONS

PFP:00001

Precautions for Supplemental Restraint System (SRS) “AIR BAG” and “SEAT BELT PRE-TENSIONER”

ELS000AK

The Supplemental Restraint System such as “AIR BAG” and “SEAT BELT PRE-TENSIONER”, used along with a front seat belt, helps to reduce the risk or severity of injury to the driver and front passenger for certain types of collision. Information necessary to service the system safely is included in the SRS and SB section of this Service Manual.

WARNING:

- **To avoid rendering the SRS inoperative, which could increase the risk of personal injury or death in the event of a collision which would result in air bag inflation, all maintenance must be performed by an authorized NISSAN/INFINITI dealer.**
- **Improper maintenance, including incorrect removal and installation of the SRS, can lead to personal injury caused by unintentional activation of the system. For removal of Spiral Cable and Air Bag Module, see the SRS section.**
- **Do not use electrical test equipment on any circuit related to the SRS unless instructed to in this Service Manual. SRS wiring harnesses can be identified by yellow and/or orange harness connectors.**

PREPARATION

PFP:00002

Special Service Tool

ELS000AL

The actual shapes of Kent-Moore tools may differ from those of special service tools illustrated here.

Tool number (Kent-Moore No.) Tool name		Description
KV10115801 (J-38956) Oil filter cap wrench	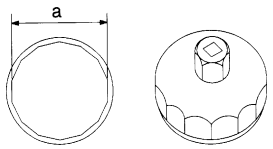 NT375	Removing oil filter **a: 64.3 mm (2.531 in)**

Commercial Service Tool

ELS000AM

Tool name (Kent-Moore No.)		Description
Belt tension gauge (BT-3373-F)	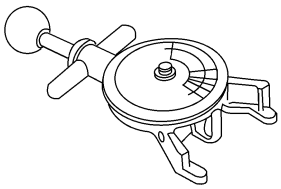 AMA126	Checking drive belt tension
Spark plug wrench	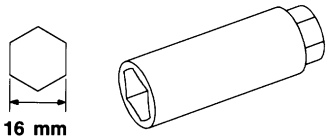 S-NT047	Removing and installing spark plugs
Coolant refill tool (J-45695)	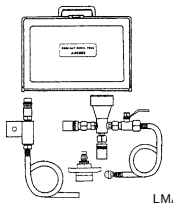 LMA053	For refilling the engine cooling system
Power Tools	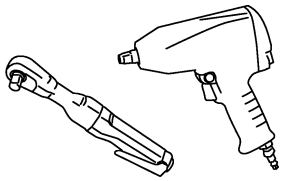 PBIC0190E	Loosening bolts and nuts

GENERAL MAINTENANCE

PFP:00000

Explanation of General Maintenance

ELS000AO

General maintenance includes those items which should be checked during the normal day-to-day operation of the vehicle. They are essential if the vehicle is to continue operating properly. The owners can perform checks and inspections themselves or have their NISSAN dealers do them.

OUTSIDE THE VEHICLE

The maintenance items listed here should be performed from time to time, unless otherwise specified.

Item		Reference page
Tires	Check the pressure including the spare, at least once a month and always prior to a long distance trip with a gauge. Adjust to the specified pressure if necessary. Check carefully for damage, cuts or excessive wear.	—
Wheel nuts	When checking the tires, make sure no nuts are missing, and check for any loose nuts. Tighten if necessary.	—
Windshield	Clean the windshield on a regular basis. Check windshield at least every six months for cracks or other damage. Repair as necessary.	—
Tire rotation	Tires should be rotated every 12,000 km (7,500 miles).	MA-31
Wheel alignment and balance	If the vehicle pulls to either side while driving on a straight and level road, or if you detect uneven or abnormal tire wear, there may be a need for wheel alignment. If the steering wheel or seat vibrates at normal highway speeds, wheel balancing may be needed.	FSU-6, "Front Wheel Alignment" and MA-30, "Balancing Wheels (Bonding Weight Type)"
Windshield wiper blades	Check for cracks or wear if they do not wipe properly.	—
Doors and engine hood	Check that all doors and the engine hood operate smoothly as well as the trunk lid and back hatch. Also make sure that all latches lock securely. Lubricate if necessary. Make sure that the secondary latch keeps the hood from opening when the primary latch is released. When driving in areas using road salt or other corrosive materials, check lubrication frequently.	MA-35
Lamps	Make sure that the headlamps, stop lamps, tail lamps, turn signal lamps, and other lamps are all operating properly and installed securely. Also check headlamp aim. Clean the headlamps on a regular basis.	—

INSIDE THE VEHICLE

The maintenance items listed here should be checked on a regular basis, such as when performing periodic maintenance, cleaning the vehicle, etc.

Item		Reference page
Warning lamps and chimes	Make sure that all warning lamps and chimes are operating properly.	—
Windshield wiper and washer	Check that the wipers and washer operate properly and that the wipers do not streak.	—
Windshield defroster	Check that the air comes out of the defroster outlets properly and in sufficient quantity when operating the heater or air conditioner.	—
Steering wheel	Check that it has the specified play. Be sure to check for changes in the steering condition, such as excessive play, hard steering or strange noises. **Free play: Less than 35 mm (1.38 in)**	—
Seats	Check seat position controls such as seat adjusters, seatback recliner, etc. to make sure they operate smoothly and that all latches lock securely in every position. Check that the head restraints move up and down smoothly and that the locks (if equipped) hold securely in all latched positions. Check that the latches lock securely for folding-down rear seatbacks.	—
Seat belts	Check that all parts of the seat belt system (e.g. buckles, anchors, adjusters and retractors) operate properly and smoothly, and are installed securely. Check the belt webbing for cuts, fraying, wear or damage.	MA-36
Clutch pedal	Make sure the pedal operates smoothly and check that it has proper free play.	—
Accelerator pedal	Check the pedal for smooth operation and make sure the pedal does not catch or require uneven effort. Keep the floor mats away from the pedal.	—

Item		Reference page
Brakes	Check that the brake does not pull the vehicle to one side when applied.	—
Brake pedal and booster	Check the pedal for smooth operation and make sure it has the proper distance under it when depressed fully. Check the brake booster function. Be sure to keep the floor mats away from the pedal.	BR-6, "BRAKE PEDAL" and BR-17, "BRAKE BOOSTER"
Parking brake	Check that the lever has the proper travel and make sure that the vehicle is held securely on a fairly steep hill when only the parking brake is applied.	PB-3, "Inspection"
Automatic transaxle "Park" mechanism	Check that the lock release button on the selector lever operates properly and smoothly. On a fairly steep hill check that the vehicle is held securely with the selector lever in the "P" position without applying any brakes.	—

UNDER THE HOOD AND VEHICLE

The maintenance items listed here should be checked periodically (e.g. each time you check the engine oil or refuel).

Item		Reference page
Windshield washer fluid	Check that there is adequate fluid in the tank.	—
Engine coolant level	Check the coolant level when the engine is cold.	MA-15 QR25DE or MA-22 VQ35DE
Radiator and hoses	Check the front of the radiator and clean off any dirt, insects, leaves, etc., that may have accumulated. Make sure the hoses have no cracks, deformation, deterioration or loose connections.	—
Brake and clutch fluid levels	Make sure that the brake and clutch fluid levels are between the "MAX" and "MIN" lines on the reservoirs.	MA-32 (brakes), MA-28 (clutch)
Battery	Check the fluid level in each cell. It should be between the "MAX" and "MIN" lines. Vehicles operated in high temperatures or under severe conditions require frequent checks of the battery fluid level.	—
Engine drive belts	Make sure that no belt is frayed, worn, cracked or oily.	MA-14 QR25DE or MA-21 VQ35DE
Engine oil level	Check the level on the dipstick after parking the vehicle on a level spot and turning off the engine.	MA-17 QR25DE or MA-24 VQ35DE
Power steering fluid level and lines	Check the level on the dipstick with the engine off. Check the lines for improper attachment, leaks, cracks, etc.	MA-33
Automatic transaxle fluid level	Check the level on the dipstick after putting the selector lever in "P" with the engine idling.	—
Exhaust system	Make sure there are no loose supports, cracks or holes. If the sound of the exhaust seems unusual or there is a smell of exhaust fumes, immediately locate the trouble and correct it.	MA-28
Underbody	The underbody is frequently exposed to corrosive substances such as those used on icy roads or to control dust. It is very important to remove these substances, otherwise rust will form on the floor pan, frame, fuel lines and around the exhaust system. At the end of winter, the underbody should be thoroughly flushed with plain water, being careful to clean those areas where mud and dirt can easily accumulate.	—
Fluid leaks	Check under the vehicle for fuel, oil, water or other fluid leaks after the vehicle has been parked for a while. Water dripping from the air conditioner after use is normal. If you should notice any leaks or gasoline fumes are evident, check for the cause and correct it immediately.	—

PERIODIC MAINTENANCE

PFP:00026

Introduction of Periodic Maintenance

ELS000AP

Two different maintenance schedules are provided, and should be used, depending upon the conditions in which the vehicle is mainly operated. **After 60,000 miles (96,000 km) or 48 months, continue the periodic maintenance at the same mileage/time intervals.**

Schedule 1	Follow Periodic Maintenance Schedule 1 if the driving habits frequently include one or more of the following driving conditions: ● Repeated short trips of less than 5 miles (8 km). ● Repeated short trips of less than 10 miles (16 km) with outside temperatures remaining below freezing. ● Operating in hot weather in stop-and-go “rush hour” traffic. ● Extensive idling and/or low speed driving for long distances, such as police, taxi or door-to-door delivery use. ● Driving in dusty conditions. ● Driving on rough, muddy, or salt spread roads. ● Towing a trailer, using a camper or a car-top carrier.	Emission Control System Maintenance	MA-7
		Chassis and Body Maintenance	MA-9
Schedule 2	Follow Periodic Maintenance Schedule 2 if none of driving conditions shown in Schedule 1 apply to the driving habits.	Emission Control System Maintenance	MA-10
		Chassis and Body Maintenance	MA-11

SCHEDULE 1

ELS000AQ

EMISSION CONTROL SYSTEM MAINTENANCE

Abbreviations: R = Replace. I = Inspect. Correct or replace if necessary. [ ]: At the mileage intervals only

MAINTENANCE OPERATION		MAINTENANCE INTERVAL								Reference Section - Page or - Content Title
Perform at number of miles, kilometers or months, whichever comes first.	Miles x 1,000 (km x 1,000) Months	3.75 (6) 3	7.50 (12) 6	11.25 (18) 9	15 (24) 12	18.75 (30) 15	22.5 (36) 18	26.25 (42) 21	30 (48) 24	
Drive belts	NOTE (1)									MA-14(QR25DE) or MA-21 (VQ35DE)
Air cleaner filter	NOTE (2)								[R]	MA-17(QR25DE) or MA-24 (VQ35DE)
EVAP vapor lines									I*	MA-20 (QR25DE) or MA-27 (VQ35DE)
Fuel lines									I*	MA-17(QR25DE) or MA-24 (VQ35DE)
Fuel filter	NOTE (3)									-

MAINTENANCE OPERATION		MAINTENANCE INTERVAL								Reference Section - Page or - Content Title
Perform at number of miles, kilometers or months, whichever comes first.	Miles x 1,000 (km x 1,000) Months	3.75 (6) 3	7.50 (12) 6	11.25 (18) 9	15 (24) 12	18.75 (30) 15	22.5 (36) 18	26.25 (42) 21	30 (48) 24	
Engine coolant	NOTE (4)									MA-14(QR25DE) or MA-22 (VQ35DE)
Engine oil		R	R	R	R	R	R	R	R	MA-17 (QR25DE) or MA-24 (VQ35DE)
Engine oil filter (Use part No. 15208 9E000 (for QR25DE engine), 15208 65F01 (for VQ35DE engine) or equivalent.)		R	R	R	R	R	R	R	R	MA-18 (QR25DE) or MA-25 (VQ35DE)
Spark plugs (PLATINUM-TIPPED type)		Replace every 105,000 miles (169,000 km).								MA-19 (QR25DE) or MA-26 (VQ35DE)
Intake & exhaust valve clearance*	NOTE (5)									EM-92, "Valve Clearance" (QR25DE) or EM-207, "Valve Clearance" (VQ35DE)

MAINTENANCE OPERATION		MAINTENANCE INTERVAL								Reference Section - Page or - Content Title
Perform at number of miles, kilometers or months, whichever comes first.	Miles x 1,000 (km x 1,000) Months	33.75 (54) 27	37.5 (60) 30	41.25 (66) 33	45 (72) 36	48.75 (78) 39	52.5 (84) 42	56.25 (90) 45	60 (96) 48	
Drive belts	NOTE (1)								I*	MA-14 (QR25DE) or MA-21 (VQ35DE)
Air cleaner filter	NOTE (2)								[R]	MA-17 (QR25DE) or MA-24 (VQ35DE)
EVAP vapor lines									I*	MA-20 (QR25DE) or MA-27 (VQ35DE)
Fuel lines									I*	MA-17 (QR25DE) or MA-24 (VQ35DE)
Fuel filter	NOTE (3)									-
Engine coolant	NOTE (4)								R*	MA-14 (QR25DE) or MA-22 (VQ35DE)
Engine oil		R	R	R	R	R	R	R	R	MA-17 (QR25DE) or MA-24 (VQ35DE)

MAINTENANCE OPERATION		MAINTENANCE INTERVAL								Reference Section - Page or - Content Title
Perform at number of miles, kilometers or months, whichever comes first.	Miles x 1,000 (km x 1,000) Months	33.75 (54) 27	37.5 (60) 30	41.25 (66) 33	45 (72) 36	48.75 (78) 39	52.5 (84) 42	56.25 (90) 45	60 (96) 48	
Engine oil filter (Use part No. 15208-9E000 (for QR25DE engine), 15208 65F01 (for VQ35DE engine) or equivalent.		R	R	R	R	R	R	R	R	MA-18 (QR25DE) or MA-25 (VQ35DE)
Spark plugs (PLATINUM-TIPPED type)		Replace every 105,000 miles (169,000 km).								MA-19 (QR25DE) or MA-26 (VQ35DE)
Intake & exhaust valve clearance*	NOTE (5)									EM-92, "Valve Clearance" (QR25DE) or EM-207, "Valve Clearance" (VQ35DE)

NOTE:
(1) After 60,000 miles (96,000 km) or 48 months, inspect every 15,000 miles (24,000 km) or 12 months. Replace the drive belts if found damaged or if the auto belt tensioner reading of QR25DE engine reaches the maximum limit.
(2) If operating mainly in dusty conditions, more frequent maintenance may be required.
(3) Maintenance-free item. For service procedures, refer to FL section.
(4) After 60,000 miles (96,000 km) or 48 months, replace every 30,000 miles (48,000 km) or 24 months.
(5) If valve noise increases, inspect valve clearance.
* Maintenance items and intervals with "*" are recommended by NISSAN for reliable vehicle operation. The owner need not perform such maintenance in order to maintain the emission warranty or manufacturer recall liability. Other maintenance items and intervals are required.

CHASSIS AND BODY MAINTENANCE

Abbreviations: R = Replace. I = Inspect. Correct or replace if necessary.

MAINTENANCE OPERATION		MAINTENANCE INTERVAL								Reference Section - Page or - Content Title
Perform at number of miles, kilometers or months, whichever comes first.	Miles x 1,000 (km x 1,000) Months	3.75 (6) 3	7.50 (12) 6	11.25 (18) 9	15 (24) 12	18.75 (30) 15	22.5 (36) 18	26.25 (42) 21	30 (48) 24	
Brake lines & cables					I				I	MA-32
Brake pads & rotors			I		I		I		I	MA-32
Automatic transaxle fluid & manual transaxle gear oil	NOTE (1)				I				I	MA-29 (A/T) or MA-28 (M/T)
Steering gear & linkage, axle & suspension parts			I		I		I		I	MA-33, MA-34
Tire rotation	NOTE (2)									MA-31
Exhaust system			I		I		I		I	MA-28
Front drive shaft boot			I		I		I		I	MA-35
In-Cabin Microfilter					R				R	ATC-111 (ATC), MTC-72 (MTC)

MAINTENANCE OPERATION		MAINTENANCE INTERVAL								Reference Section - Page or - Content Title
Perform at number of miles, kilometers or months, whichever comes first.	Miles x 1,000 (km x 1,000) Months	33.75 (54) 27	37.5 (60) 30	41.25 (66) 33	45 (72) 36	48.75 (78) 39	52.5 (84) 42	56.25 (90) 45	60 (96) 48	
Brake lines & cables					I				I	MA-32
Brake pads & rotors			I		I		I		I	MA-32
Automatic transaxle fluid & manual transaxle gear oil	NOTE (1)				I				I	MA-29 (A/T) or MA-28 (M/T)
Steering gear & linkage, axle & suspension parts			I		I		I		I	MA-33 , MA-34
Tire rotation	NOTE (2)									MA-31
Exhaust system			I		I		I		I	MA-28
Front drive shaft boots			I		I		I		I	MA-35
In-Cabin Microfilter					R				R	ATC-111 (ATC), MTC-72 (MTC)

NOTE:

(1) If towing a trailer, using a camper or a car-top carrier, or driving on rough or muddy roads, change (not just inspect) oil at every 30,000 miles (48,000 km) or 24 months.

(2) Refer to MA-5, "GENERAL MAINTENANCE" .

SCHEDULE 2

ELS000AR

EMISSION CONTROL SYSTEM MAINTENANCE

Abbreviations: R = Replace. I = Inspect. Correct or replace if necessary. [ ]: At the mileage intervals only

MAINTENANCE OPERATION		MAINTENANCE INTERVAL								Reference Section - Page or - Content Title
Perform at number of miles, kilometers or months, whichever comes first.	Miles x 1,000 (km x 1,000) Months	7.5 (12) 6	15 (24) 12	22.5 (36) 18	30 (48) 24	37.5 (60) 30	45 (72) 36	52.5 (84) 42	60 (96) 48	
Drive belts	NOTE (1)								I*	MA-14 (QR25DE) or MA-21 (VQ35DE)
Air cleaner filter					[R]				[R]	MA-17 (QR25DE) or MA-24 (VQ35DE)
EVAP vapor lines					I*				I*	MA-20 (QR25DE) or MA-27 (VQ35DE)
Fuel lines					I*				I*	MA-17 (QR25DE) or MA-24 (VQ35DE)
Fuel filter	NOTE (2)									-
Engine coolant	NOTE (3)								R*	MA-14 (QR25DE) or MA-22 (VQ35DE)

MAINTENANCE OPERATION		MAINTENANCE INTERVAL								Reference Section - Page or - Content Title
Perform at number of miles, kilometers or months, whichever comes first.	Miles x 1,000 (km x 1,000) Months	7.5 (12) 6	15 (24) 12	22.5 (36) 18	30 (48) 24	37.5 (60) 30	45 (72) 36	52.5 (84) 42	60 (96) 48	
Engine oil		R	R	R	R	R	R	R	R	MA-17 (QR25DE) or MA-24 (VQ35DE)
Engine oil filter (Use part No. 15208-9E000 (for QR25DE engine), 15208 65F01 (for VQ35DE engine) or equivalent.		R	R	R	R	R	R	R	R	MA-18 (QR225DE) or MA-25 (VQ35DE)
Spark plugs (PLATINUM-TIPPED type)		Replace every 105,000 miles (169,000 km).								MA-19 (QR25DE) or MA-26 (VQ35DE)
Intake & exhaust valve clearance*	NOTE (4)									EM-92, "CYLINDER HEAD" (QR25DE) or EM-207, "CYLINDER HEAD" (VQ35DE)

NOTE:
(1) After 60,000 miles (96,000 km) or 48 months, inspect every 15,000 miles (24,000 km) or 12 months. Replace the drive belts if found damaged or if the auto belt tensioner reading of QR25DE engine reaches the maximum limit.
(2) Maintenance-free item. For service procedures, refer to FL section.
(3) After 60,000 miles (96,000 km) or 48 months, replace every 30,000 miles (48,000 km) or 24 months.
(4) If valve noise increases, inspect valve clearance.
* Maintenance items and intervals with "*" are recommended by NISSAN for reliable vehicle operation. The owner need not perform such maintenance in order to maintain the emission warranty or manufacturer recall liability. Other maintenance items and intervals are required.

CHASSIS AND BODY MAINTENANCE

Abbreviations: R = Replace. I = Inspect. Correct or replace if necessary.

MAINTENANCE OPERATION		MAINTENANCE INTERVAL								Reference Section - Page or - Content Title
Perform at number of miles, kilometers or months, whichever comes first.	Miles x 1,000 (km x 1,000) Months	7.5 (12) 6	15 (24) 12	22.5 (36) 18	30 (48) 24	37.5 (60) 30	45 (72) 36	52.5 (84) 42	60 (96) 48	
Brake lines & cables			I		I		I		I	MA-32
Brake pads & rotors			I		I		I		I	MA-32
Automatic transaxle fluid & manual transaxle gear oil			I		I		I		I	MA-29 (A/T) or MA-28 (M/T)
Steering gear & linkage, axle & suspension parts					I				I	MA-33 , MA-34
Tire rotation	NOTE (1)									MA-31
Exhaust system					I				I	MA-28
Front drive shaft boots			I		I		I		I	MA-35
In-Cabin Microfilter			R		R		R		R	ATC-111 (ATC), MTC-72 (MTC)

NOTE:
(1) Refer to MA-5, "GENERAL MAINTENANCE"

RECOMMENDED FLUIDS AND LUBRICANTS

PFP:00000

Fluids and Lubricants

ELS000AS

QR25DE

		Capacity (approximate)			Recommended fluids/lubricants
		US measure	Imp measure	Liter	
Engine oil Drain and refill	With oil filter change	4 1/2 qt	3 3/4 qt	4.2	● API Certification Mark*1 ● API grade SG/SH, Energy Conserving II or API grade SJ or SL, Energy Conserving*1 ● ILSAC grade GF-II & GF-III*1
	Without oil filter change	4 1/4 qt	3 1/2 qt	4.0	
Dry engine (engine overhaul)		4 7/8 qt	4 qt	4.6	
Cooling system	With reservoir	7 1/4 qt	6 1/8 qt	6.9	Genuine NISSAN Anti-freeze coolant or equivalent
	Reservoir	3/4 qt	5/8 qt	0.7	
Manual transaxle gear oil		4 7/8 pt	4 pt	2.3	API GL4, Viscosity SAE 75W-90 or 75W-85
Automatic transaxle fluid		9 3/4 qt	8 1/8 qt	9.2	NISSAN Matic "D" (Continental US and Alaska) or Canada NISSAN Automatic Transmission Fluid *2
Power steering fluid		2 1/8 pt	1 3/4 pt	1.0	Genuine NISSAN PSF II or equivalent*3
Brake and clutch fluids		—	—	—	Genuine NISSAN Brake Fluid*4 or equivalent DOT 3 (US FMVSS No. 116)
Multi-purpose grease		—	—	—	NLGI No. 2 (Lithium soap base)

*1: For further details, see “SAE Viscosity Number”.

*2: Dexron™ III/Mercon ™ or equivalent may also be used. Outside the continental United States and Alaska contact a NISSAN dealership for more information regarding suitable fluids, including recommended brand(s) of Dexron™ III/Mercon ™ Automatic Transmission Fluid.

*3: Genuine NISSAN PSF, Canada NISSAN Automatic Transmission Fluid, Dexron™ III/Mercon™ , or equivalent ATF may also be used.

*4: Available in mainland U.S.A. through your NISSAN dealer.

VQ35DE

		Capacity (Approximate)			Recommended Fluids/Lubricants
		US measure	Imp measure	Liter	
Engine oil Drain and refill	With oil filter change	4 1/4 qt	3 1/2 qt	4.0	● API Certification Mark*1 ● API grade SG/SH, Energy Conserving II or API grade SJ or SL, Energy Conserving*1 ● ILSAC grade GF-II & GF-III*1
	Without oil filter change	3 7/8 qt	3 1/4 qt	3.7	
Dry engine (engine overhaul)		5 1/4 qt	4 3/8 qt	5.0	
Cooling system	With reservoir	7 7/8 qt	6 5/8 qt	7.5	Genuine NISSAN Anti-freeze coolant or equivalent
	Reservoir	3/4 qt	5/8 qt	0.7	
Manual transaxle gear oil		4 7/8 pt	4 pt	2.3	API GL4, Viscosity SAE 75W-90 or 75W-85
Automatic transaxle fluid		9 3/4 qt	8 1/8 qt	9.2	NISSAN Matic "D" (Continental US and Alaska) or Canada NISSAN Automatic Transmission Fluid *2
Power steering fluid		2 1/8 pt	1 3/4 pt	1.0	Genuine NISSAN PSF II or equivalent*3
Brake and clutch fluids		—	—	—	Genuine NISSAN Brake Fluid*4 or equivalent DOT 3 (US FMVSS No. 116)
Multi-purpose grease		—	—	—	NLGI No. 2 (Lithium soap base)

*1: For further details, see “SAE Viscosity Number”.

*2: Dexron™ III/Mercon ™ or equivalent may also be used. Outside the continental United States and Alaska contact a NISSAN dealership for more information regarding suitable fluids, including recommended brand(s) of Dexron™ III/Mercon ™ Automatic Transmission Fluid.

*3: Genuine NISSAN PSF, Canada NISSAN Automatic Transmission Fluid, Dexron™ III/Mercon™ , or equivalent ATF may also be used.

*4: Available in mainland U.S.A. through your NISSAN dealer.

SAE Viscosity Number

ELS000AT

GASOLINE ENGINE OIL

SAE 5W-30 viscosity oil is preferred for all temperatures. SAE 10W-30 and 10W-40 viscosity oil may be used if the ambient temperature is above -18°C(0°F)

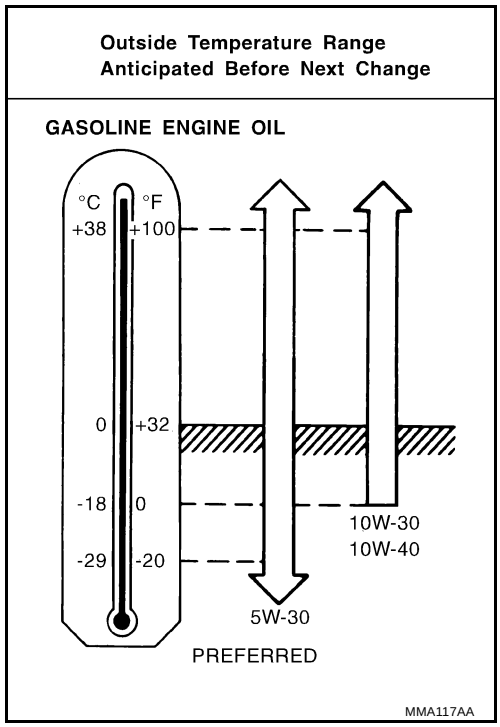

ANTI-FREEZE COOLANT MIXTURE RATIO

The engine cooling system is filled at the factory with a high-quality, year-round, anti-freeze coolant solution. The anti-freeze solution contains rust and corrosion inhibitors. Therefore, additional cooling system additives are not necessary.

CAUTION:

When adding or replacing coolant, be sure to use only Genuine NISSAN anti-freeze coolant or equivalent with the proper mixture ratio of 50% anti-freeze and 50% demineralized water/distilled water.

Other types of coolant solutions may damage your cooling system.

Outside temperature down to		Anti-freeze	Demineralized water or distilled water
°C	°F		
–35	–30	50%	50%

SMA947CA

ENGINE MAINTENANCE (QR25DE ENGINE)

PFP:10001

Checking Drive Belts

ELS000AU

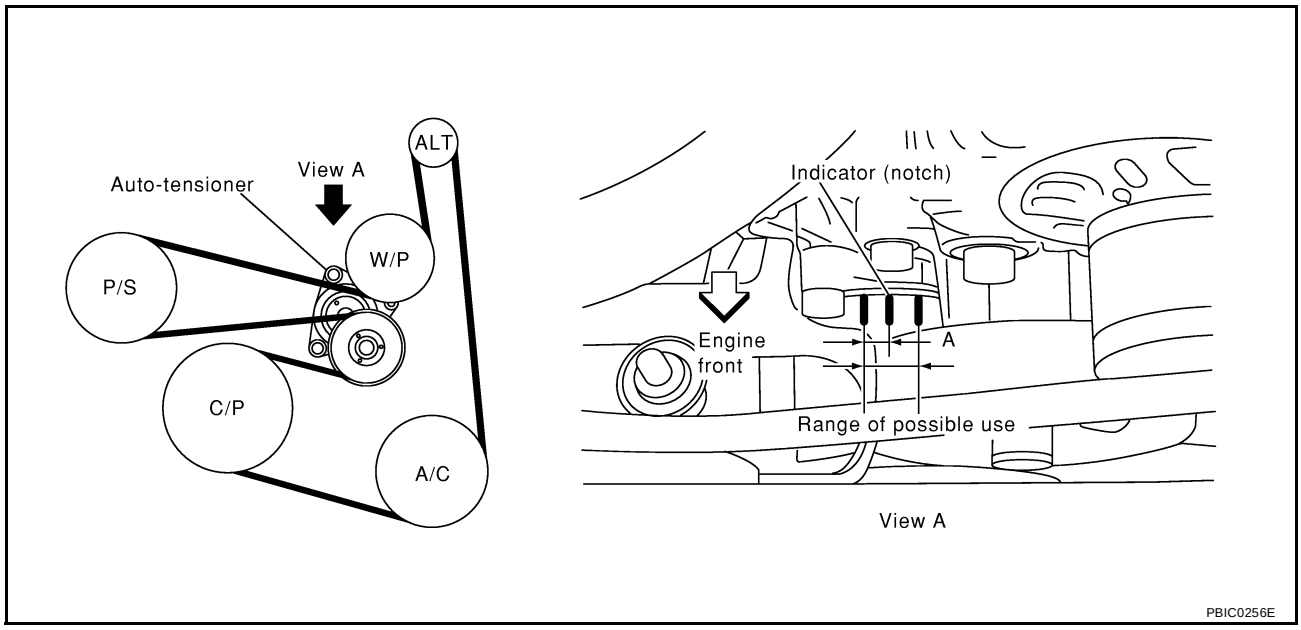

NOTE:
On vehicles not equipped with A/C, there is an idler pulley in the position for the drive belt routing.

WARNING:
Be sure to perform when the engine is stopped.

- Remove under cover (with power tool) when inspecting power steering pump belt.
- Make sure that indicator (single line notch) of each automatic tensioner is within the allowable working range (between three line notches).

  NOTE:
  - Check the automatic tensioner indicator when the engine is cold.
  - When the new drive belt is installed, the range should be A.
  - The indicator notch is located on the moving side of the tensioner for alternator, water pump, and A/C compressor belt, while it is found on the fixed side for power steering pump belt.
- Visually check entire belt for wear, damage or cracks.
- If the indicator is out of allowable working range or belt is damaged, replace the belt. Refer to EM-12, "Removal and Installation" .
- Belt tensioning is not necessary, as it is automatically adjusted by auto belt tensioner.

Changing Engine Coolant

ELS000AV

WARNING:
- **To avoid being scalded, never change the coolant when the engine is hot.**
- **Wrap a thick cloth around cap and carefully remove the cap. First, turn the cap a quarter of a turn to release built-up pressure. Then turn the cap all the way.**

CAUTION:
Do not open the radiator cap while changing engine coolant. Fill the radiator only from the filler cap above the radiator upper hose with radiator cap closed.

DRAINING ENGINE COOLANT

1. Remove engine undercover, using power tools.

2. Open radiator drain plug at the bottom of radiator, and remove radiator filler cap when draining all the coolant in the system.
   - Be careful not to allow coolant to contact drive belts.
3. Follow this step for heater core removal/replacement only. Disconnect the upper heater hose at the engine side and apply moderate air pressure [103.46 kPa (15 psi, 1.055 kg/cm^2) maximum] into the hose for 30 seconds to blow out excess coolant from the heater core.
4. Remove the reservoir tank, drain the coolant and then clean the tank before installing.

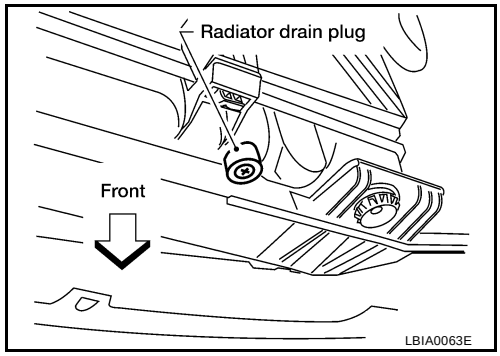

5. When draining all of the coolant in the system for engine removal or repair, open the drain plug on the cylinder block.
6. Check drained coolant for contaminants such as rust, corrosion or discoloration.
   If contaminated, flush engine cooling system. Refer to MA-16, "FLUSHING COOLING SYSTEM" .

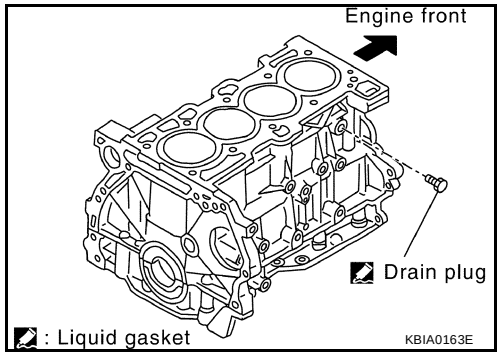

REFILLING ENGINE COOLANT

1. Install the radiator drain plug. Install the reservoir tank and cylinder block drain plug, if removed for a total system drain or for engine removal or repair.
   - **The radiator must be completely empty of coolant and water.**
   - **Apply sealant to the threads of the cylinder block drain plugs. Use Genuine High Performance Thread Sealant or equivalent. Refer to GI-42, "RECOMMENDED CHEMICAL PRODUCTS AND SEALANTS" .**

Radiator drain plug	**: 7.8 - 11.8 N·m (0.8 - 1.2 kg-m , 69 - 104 in-lb)**
Cylinder block drain plug	**: 34 - 44 N·m (3.5 - 4.5 kg-m, 25 - 33 ft-lb)**

2. If disconnected, reattach the upper radiator hose at the engine side.
3. Set the vehicle heater controls to the full HOT and heater ON position. Turn the vehicle ignition ON with the engine OFF as necessary to activate the heater mode.

4. Install the Tool by installing the radiator cap adapter onto the radiator neck opening. Then attach the gauge body assembly with the refill tube and the venturi assembly to the radiator cap adapter.
5. Insert the refill hose into the coolant mixture container that is placed at floor level. Make sure the ball valve is in the closed position.
   - Use Genuine NISSAN Anti-Freeze Coolant or equivalent, mixed 50/50 with distilled water or demineralized water. Refer to MA-13, "ANTI-FREEZE COOLANT MIXTURE RATIO" .

Engine coolant capacity (without reservoir tank)	**: 6.9 ℓ (7 1/4 US qt, 6 1/8 Imp qt)**
Reservoir tank	**: 0.7 ℓ (3/4 US qt, 5/8 Imp qt)**

6. Install an air hose to the venturi assembly, the air pressure must be within specification.

Compressed air supply pressure	**: 5.7 - 8.5 kPa (5.6 - 8.4 kg/cm^2 , 80 - 120 psi)**

CAUTION:
The compressed air supply must be equipped with an air dryer.

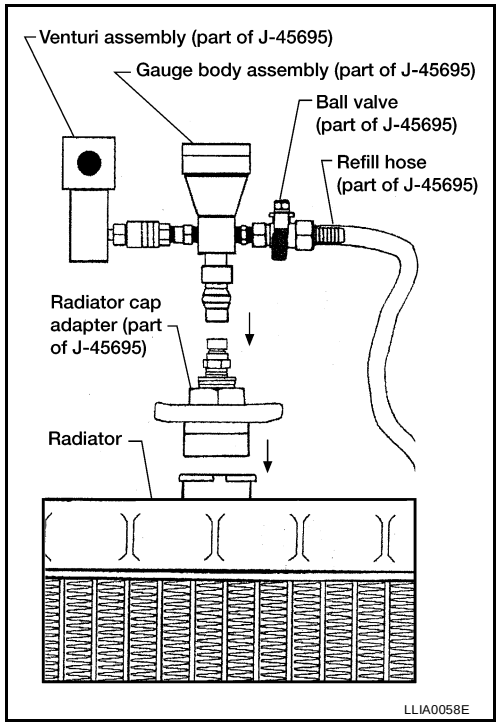

7. The vacuum gauge will begin to rise and there will be an audible hissing noise. During this process open the ball valve on the refill hose slightly. Coolant will be visible rising in the refill hose. Once the refill hose is full of coolant, close the ball valve. This will purge any air trapped in the refill hose.
8. Continue to draw the vacuum until the gauge reaches 28 inches of vacuum. The gauge may not reach 28 inches in high altitude locations, refer to the vacuum specifications based on the altitude above sea level.

Altitude above sea level	Vacuum gauge reading
0 - 100 m (328 ft)	**: 28 inches of vacuum**
300 m (984 ft)	**: 27 inches of vacuum**
500 m (1,641 ft)	**: 26 inches of vacuum**
1,000 m (3,281 ft)	**: 24 - 25 inches of vacuum**

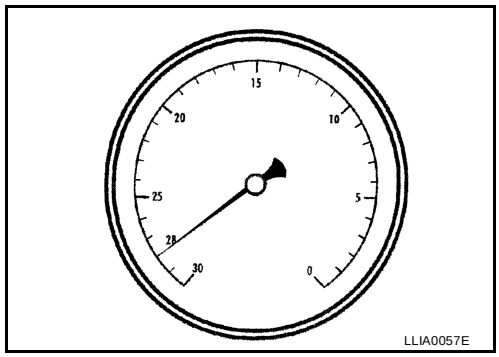

9. When the vacuum gauge has reached the specified amount, disconnect the air hose and wait 20 seconds to see if the system loses any vacuum. If the vacuum level drops, perform any necessary repairs to the system and repeat steps 6 - 8 to bring the vacuum to the specified amount. Recheck for any leaks.
10. Place the coolant container (with the refill hose inserted) at the same level as the top of the radiator. Then open the ball valve on the refill hose so the coolant will be drawn up to fill the cooling system. The cooling system is full when the vacuum gauge reads zero.

    CAUTION:
    Do not allow the coolant container to get too low when filling, to avoid air from being drawn into the cooling system.
11. Remove the Tool from the radiator neck opening.
12. Fill the cooling system reservoir tank to the specified level. Run the engine to warm up the cooling system and top up the system as necessary before installing the radiator cap.

FLUSHING COOLING SYSTEM

1. Fill radiator from filler cap above radiator upper hose and reservoir tank with water and reinstall filler cap above radiator upper hose.
2. Run engine and warm it up to normal operating temperature.
3. Rev engine two or three times under no-load.
4. Stop engine and wait until it cools down.

5. Drain water.
6. Repeat steps 1 through 5 until clear water begins to drain from radiator.

Checking Fuel Lines

ELS000AW

Inspect fuel lines and tank for improper attachment, leaks, cracks, damage, loose connections, chafing or deterioration. If necessary, repair or replace faulty parts.

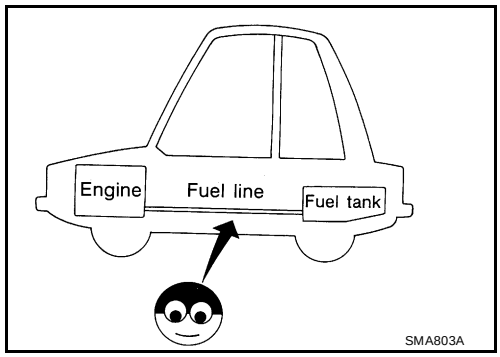

After connecting fuel tubes, make sure the connector is secure. Make sure the connector and resin tube do not contact adjacent parts.

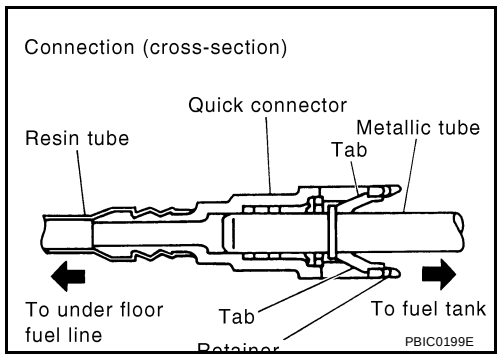

Changing Air Cleaner Filter

VISCOUS PAPER TYPE

ELS000AX

The viscous paper type filter does not need cleaning.

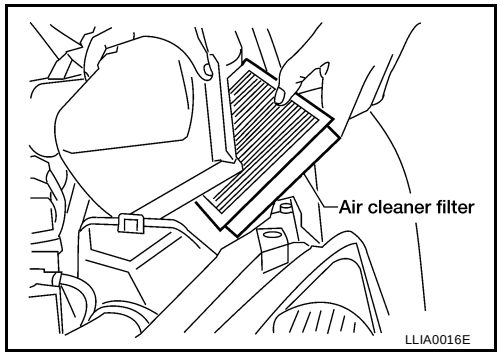

Changing Engine Oil

ELS000AY

WARNING:

- **Be careful not to burn yourself, as the engine oil is hot.**
- **Prolonged and repeated contact with used engine oil may cause skin cancer; try to avoid direct skin contact with used oil. If skin contact is made, wash thoroughly with soap or hand cleaner as soon as possible.**

1. Warm up engine, and check for oil leakage from engine components.
2. Stop engine and wait more than 10 minutes.
3. Remove drain plug and oil filler cap.
4. Drain oil.
5. Install drain plug and refill with new engine oil.
   Oil specification and viscosity
   - API Certification Mark

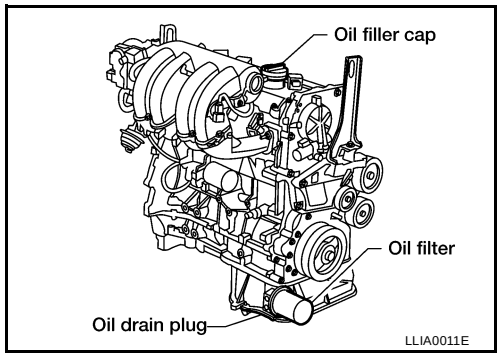

- API grade SG/SH, Energy Conserving II or API grade SJ or SL, Energy Conserving
- ILSAC grade GF-II & GF-III
- Refer to MA-13, "Gasoline engine oil" .

Oil capacity (approximate)

Unit: ℓ (US qt, Imp qt)

Drain and refill	With oil filter change	Approximately 4.2 (4 1/2, 3 3/4)
	Without oil filter change	Approximately 4.0 (4 1/4, 3 1/2)
Dry engine (engine overhaul)		Approximately 4.6 (4 7/8, 4.0)

CAUTION:
- **Be sure to clean drain plug and install with new washer.**

Oil pan drain plug : 29 - 39 N·m (3.0 - 4.0 kg-m, 22 - 29 ft-lb)

- **The refill capacity depends on the oil temperature and drain time. Use these specifications for reference only.**
- **Always use the dipstick to determine when the proper amount of oil is in the engine.**

6. Warm up engine and check area around drain plug and oil filter for oil leakage.
7. Stop engine and wait more than 10 minutes.
8. Check oil level.

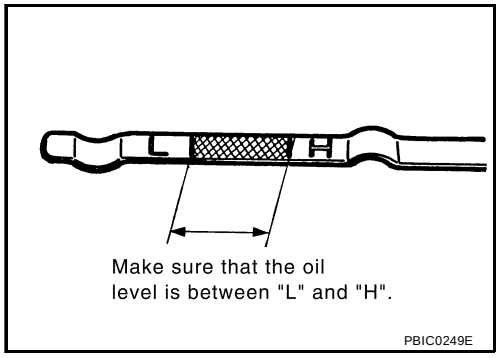

Changing Oil Filter

ELS000AZ

1. Using an oil filter wrench, remove the oil filter.

CAUTION:
- **The oil filter is provided with a relief valve.**
  Use genuine NISSAN oil filter.
- **BE careful not to get burned when the engine and engine oil are hot.**
- **When removing, prepare a shop cloth to absorb any oil leakage or spillage.**
- **Do not allow engine oil to adhere to the drive belts.**
- **Completely wipe off any oil that adheres to the engine and the vehicle.**

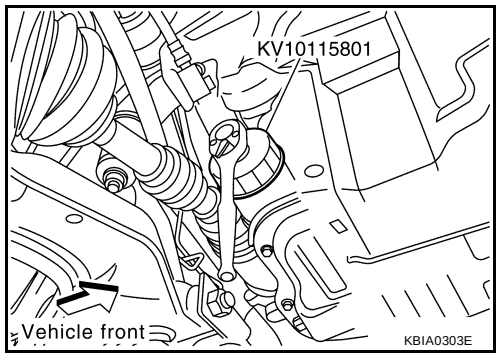

2. Clean oil filter mounting surface on cylinder block.
   Coat rubber seal of new oil filter with engine oil.

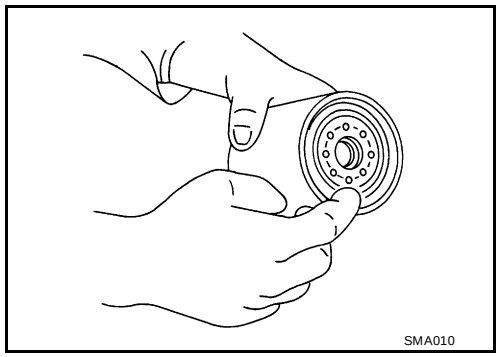

3. Screw the oil filter manually until it touches the installation surface, then tighten it by 2/3 turn.

   Oil filter : 14.7 - 20.5 N·m (1.5 - 2.1 kg-m, 11 - 15 ft-lb)

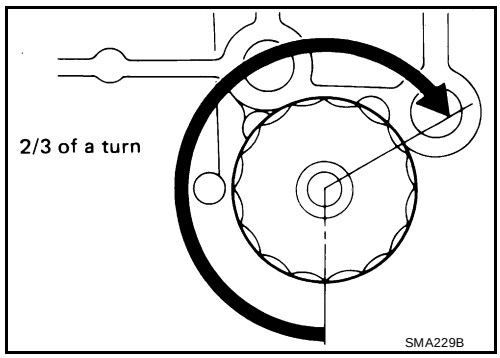

4. Check oil level and add engine oil. Refer to MA-13, "Gasoline engine oil" .
5. After warming up the engine, check for engine oil leakage.

Changing Spark Plugs (Platinum - Tipped Type)

ELS000B0

1. Remove the engine cover using power tool.
2. Remove ignition coils. Refer to EM-26, "Removal and Installation" .

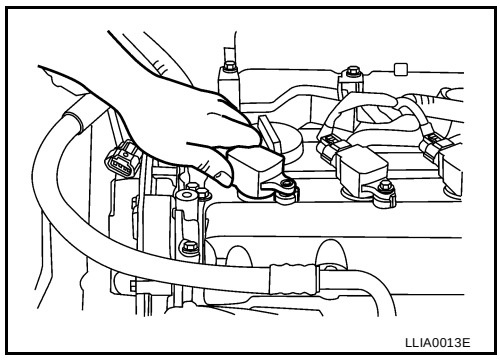

3. Remove the spark plugs.
4. Install the spark plugs.

Spark plug:

Standard type	PLFR5A-11
Hot type	PLFR4A-11
Cold type	PLFR6A-11

Spark plug : 20 - 29 N-m (2.0 - 3.0 kg-m, 14 - 22 ft-lb)

Gap (nominal) : 1.1 mm (0.043 in)

Use standard type spark plug for normal condition.
The hot type spark plug is suitable when fouling occurs with the standard type spark plug under conditions such as:

- frequent engine starts
- low ambient temperatures

The cold type spark plug is suitable when spark knock occurs with the standard type spark plug under conditions such as:

- extended highway driving
- frequent high engine revolution

Do not use a wire brush for cleaning.

- If plug tip is covered with carbon, spark plug cleaner may be used.

Cleaner air pressure	**: less than 588 kPa (6 kg/cm^2 , 85 psi)**
Cleaning time	**: less than 20 seconds**

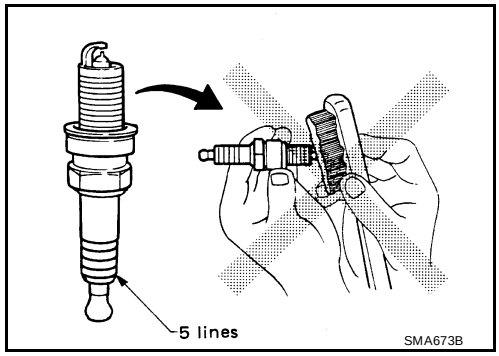

- Checking and adjusting plug gap is not required between change intervals.

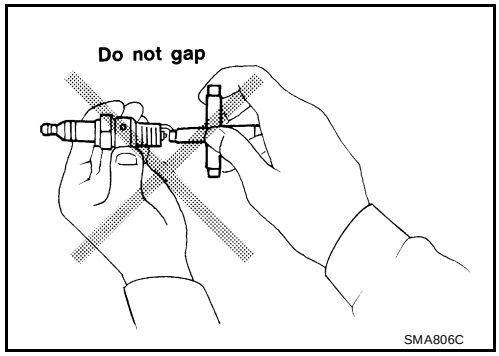

5. Install the ignition coils. Refer to EM-26, "Removal and Installation" .

Ignition coil bolt	**: 5.4 - 7.3 N·m (0.55 -0.75 kg·m, 48 - 65 in-lb)**

Checking EVAP Vapor Lines

ELS000B1

1. Visually inspect EVAP vapor lines for improper attachment and for cracks, damage, loose connections, chafing and deterioration.
2. Inspect fuel tank filler cap vacuum relief valve for clogging, sticking, etc.
   Refer to EC-614, "EVAPORATIVE EMISSION SYSTEM" .

ENGINE MAINTENANCE (VQ35DE ENGINE)

PFP:10001

Checking Drive Belts

ELS000B2

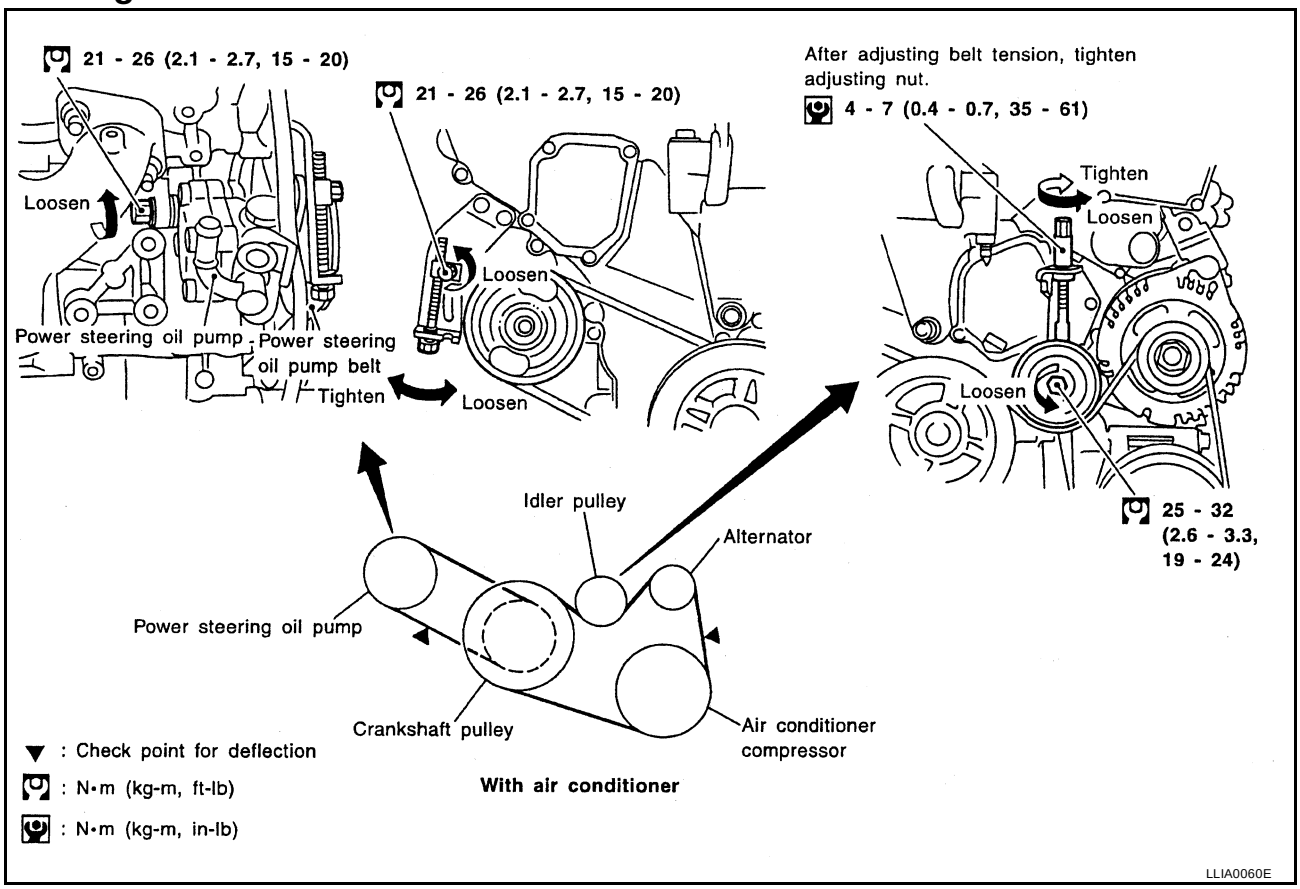

WARNING:

Inspect and check the drive belts with the engine off.

1. Inspect belt for cracks, fraying, wear or oil adhesion. If necessary, replace with a new one.
2. Inspect drive belt deflections by pushing on the belt midway between pulleys.
3. Check belt tension using belt tension gauge (BT3373-F or equivalent).

   CAUTION:
   - **Inspect drive belt deflection or tension when engine is cold.**
   - **Adjust if belt deflections exceed the limit or if belt tension is not within specifications.**

Belt Deflection and Tension

	Deflection adjustment		Unit: mm (in)	Tension adjustment*		Unit: N (kg, lb)
	Used belt		New belt	Used belt		New belt
	Limit	After adjustment		Limit	After adjustment	
Alternator, Air conditioner compressor oil pump	7.0 (0.28)	4.2 - 4.6 (0.17 - 0.18)	3.7 - 4.1 (0.15 - 0.16)	294 (30, 66)	730 -818 (74.5 - 83.5, 164 - 184)	838 - 926 (85.5 - 94.5, 188 - 208)
Power steering oil pump	11.0 (0.43)	7.3 - 8.0 (0.29 - 0.32)	6.5 - 7.2 0.26 - 0.28)	196 (20, 44)	495 - 583 (50.5 - 59.5, 111.3 - 131.1)	603 - 691 (61.5 - 70.5, 135.6 - 155.4)
Applied pushing force	98 N (10 kg, 22 lb)			—		

*: If belt tension gauge cannot be installed at check points shown, check drive belt tension at different location on the belt.

Changing Engine Coolant

ELS000B3

WARNING:

- **To avoid being scalded, never change the coolant when the engine is hot.**
- **Wrap a thick cloth around cap and carefully remove the cap. First, turn the cap a quarter of a turn to release built-up pressure. Then turn the cap all the way.**

DRAINING ENGINE COOLANT

1. Remove engine undercover, using power tools.
2. Open radiator drain plug at the bottom of radiator and remove the radiator filler cap.
3. If removing the heater core, remove the upper heater hose from the engine coolant outlet and apply moderate air pressure of 15 psi (103.46 kPa, 1.055 kg-cm^2) maximum for 30 seconds into the hose to blow out excess coolant from the core.
4. Remove the reservoir tank, drain the coolant and clean the tank before installing.
   - Be careful not to allow coolant to contact the drive belts.
5. When draining all of the coolant for engine removal or repair, open the drain plugs on the engine-front side and engine-right side.

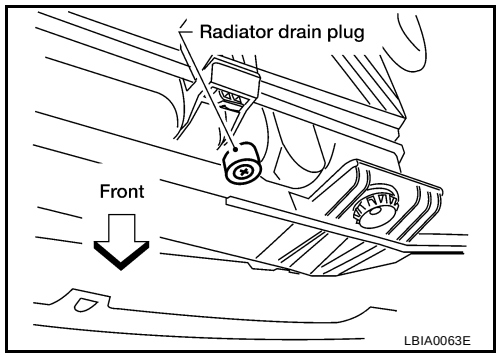

6. Check drained coolant for contaminants such as rust, corrosion or discoloration.
   If contaminated, flush the engine cooling system. Refer to EC-1102, "Description" .

REFILLING ENGINE COOLANT

1. Install the radiator drain plug. If the cooling system was drained completely, install the reservoir tank and the cylinder block drain plugs.
   - The radiator must be completely empty of coolant and water.
   - Apply sealant to the threads of the cylinder block drain plugs. Use Genuine High Performance Thread Sealant or equivalent. Refer to GI-42, "RECOMMENDED CHEMICAL PRODUCTS AND SEALANTS" .

Radiator drain plug	**: 7.8 - 11.8 N·m (0.8 - 1.2 kg-m , 69 - 104 in-lb)**
Cylinder block front drain plug	**: 8 - 11 N·m (0.8 - 1.2 kg-m, 70 - 104 in-lb)**
Cylinder block RH drain plug	**: 18 - 21 N·m (1.8 - 2.2 kg-m, 13 - 15 ft-lb)**

2. If disconnected, reattach the upper radiator hose at the engine side.
3. Set the vehicle heater controls to the full HOT and heater ON position. Turn the vehicle ignition ON with the engine OFF as necessary to activate the heater mode.

4. Install the Tool by installing the radiator cap adapter onto the radiator neck opening. Then attach the gauge body assembly with the refill tube and the venturi assembly to the radiator cap adapter.
5. Insert the refill hose into the coolant mixture container that is placed at floor level. Make sure the ball valve is in the closed position.
   - Use Genuine NISSAN Anti-Freeze Coolant or equivalent, mixed 50/50 with distilled water or demineralized water. Refer to MA-13, "ANTI-FREEZE COOLANT MIXTURE RATIO" .

Engine coolant capacity (without reservoir tank)	**: 7.5 ℓ (7 7/8 US qt, 6 5/8 Imp qt)**
Reservoir tank	**: 0.7 ℓ (3/4 US qt, 5/8 Imp qt)**

6. Install an air hose to the venturi assembly, the air pressure must be within specification.

Compressed air supply pressure	**: 5.7 - 8.5 kPa (5.6 - 8.4 kg/cm^2 , 80 - 120 psi)**

CAUTION:
The compressed air supply must be equipped with an air dryer.

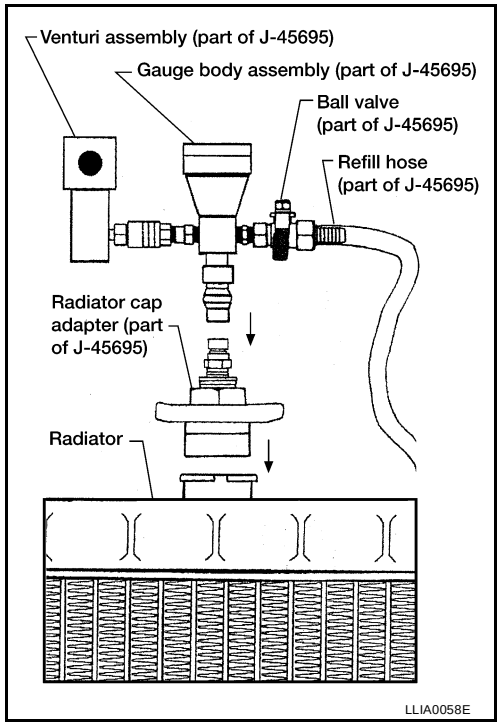

7. The vacuum gauge will begin to rise and there will be an audible hissing noise. During this process open the ball valve on the refill hose slightly. Coolant will be visible rising in the refill hose. Once the refill hose is full of coolant, close the ball valve. This will purge any air trapped in the refill hose.
8. Continue to draw the vacuum until the gauge reaches 28 inches of vacuum. The gauge may not reach 28 inches in high altitude locations, refer to the vacuum specifications based on the altitude above sea level.

Altitude above sea level	Vacuum gauge reading
0 - 100 m (328 ft)	**: 28 inches of vacuum**
300 m (984 ft)	**: 27 inches of vacuum**
500 m (1,641 ft)	**: 26 inches of vacuum**
1,000 m (3,281 ft)	**: 24 - 25 inches of vacuum**

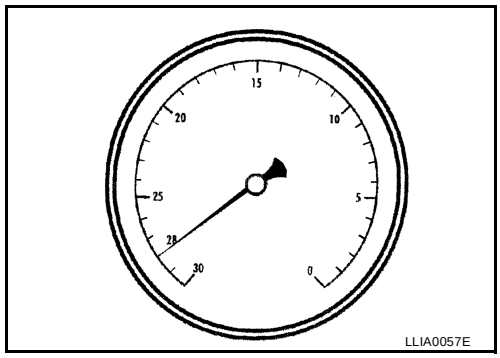

9. When the vacuum gauge has reached the specified amount, disconnect the air hose and wait 20 seconds to see if the system loses any vacuum. If the vacuum level drops, perform any necessary repairs to the system and repeat steps 6 - 8 to bring the vacuum to the specified amount. Recheck for any leaks.
10. Place the coolant container (with the refill hose inserted) at the same level as the top of the radiator. Then open the ball valve on the refill hose so the coolant will be drawn up to fill the cooling system. The cooling system is full when the vacuum gauge reads zero.

    CAUTION:
    Do not allow the coolant container to get too low when filling, to avoid air from being drawn into the cooling system.
11. Remove the Tool from the radiator neck opening.
12. Fill the cooling system reservoir tank to the specified level. Run the engine to warm up the cooling system and top up the system as necessary before installing the radiator cap.

FLUSHING COOLING SYSTEM

1. Fill the radiator from the filler neck above the radiator upper hose and reservoir tank with clean water and reinstall radiator filler cap.
2. Run the engine and warm it up to normal operating temperature.
3. Rev the engine two or three times under no-load.
4. Stop the engine and wait until it cools down.

5. Drain the coolant from the system. Refer to MA-14, "DRAINING ENGINE COOLANT" .
6. Repeat steps 1 through 5 until clear water begins to drain from the radiator.

Checking Fuel Lines

ELS000B4

Inspect fuel lines and tank for improper attachment, leaks, cracks, damage, loose connections, chafing or deterioration. If necessary, repair or replace faulty parts.

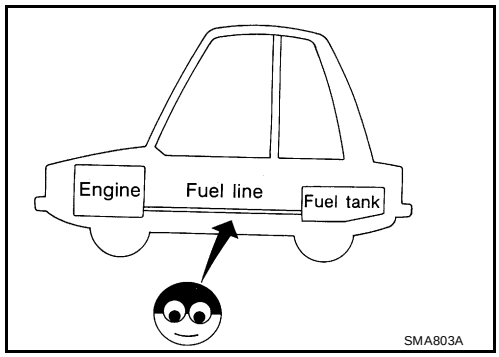

After connecting fuel tubes, make sure the connector is secure. Make sure the connector and resin tube do not contact adjacent parts.

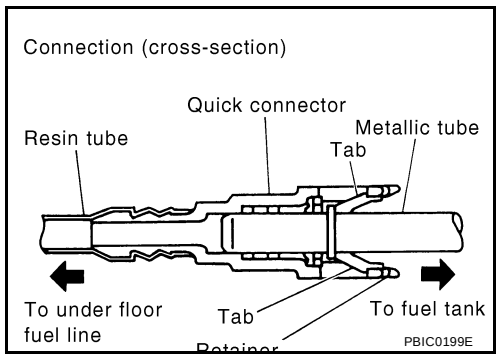

Changing Air Cleaner Filter

ELS000B5

VISCOUS PAPER TYPE

The viscous paper type filter does not need cleaning. Replace the air filter as necessary.

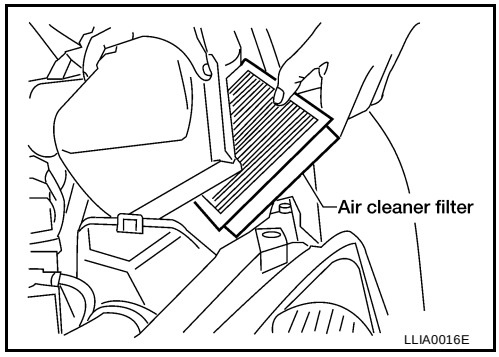

Changing Engine Oil

ELS000B6

WARNING:

- **Be careful not to burn yourself, as the engine oil is hot.**
- **Prolonged and repeated contact with used engine oil may cause skin cancer; try to avoid direct skin contact with used oil. If skin contact is made, wash thoroughly with soap or hand cleaner as soon as possible.**

1. Warm up engine, and check for oil leakage from engine components.
2. Stop engine and wait more than 10 minutes.

3. Remove drain plug and oil filler cap.
4. Drain oil.
5. Install drain plug and refill with new engine oil.
   Oil specification and viscosity
   - API Certification Mark
   - API grade SG/SH, Energy Conserving II or API grade SJ or SL, Energy Conserving
   - ILSAC grade GF-II & GF-III
   - Refer to MA-13, "Gasoline engine oil" .

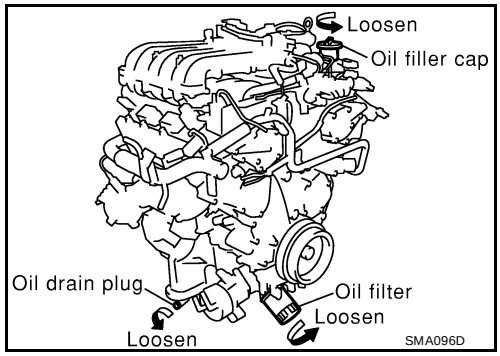

Oil Capacity

Unit: ℓ (US qt, Imp qt)

Drain and refill	With oil filter change	Approximately 4.0 (4 1/4, 3 1/2)
	Without oil filter change	Approximately 3.7 (3 7/8, 3 1/4)
Dry engine (engine overhaul)		Approximately 5.0 (5 1/4, 4 3/8)

CAUTION:
- **Be sure to clean drain plug and install with new washer.**

  Oil pan drain plug : 29 - 39 N·m (3.0 - 4.0 kg-m, 22 - 29 ft-lb)
- **The refill capacity depends on the oil temperature and drain time. Use these specifications for reference only.**
- **Always use the dipstick to determine when the proper amount of oil is in the engine.**

6. Warm up engine and check area around drain plug and oil filter for oil leakage.
7. Stop engine and wait more than 10 minutes.
8. Check the engine oil level using the dipstick as shown.

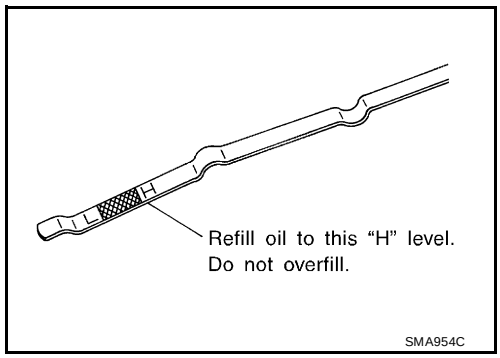

Changing Oil Filter

ELS000B7

1. Using an oil filter wrench, remove the oil filter.

   CAUTION:
   - **The oil filter is provided with a relief valve.**
     Use genuine NISSAN oil filter.
   - **BE careful not to get burned when the engine and engine oil are hot.**
   - **When removing, prepare a shop cloth to absorb any oil leakage or spillage.**
   - **Do not allow engine oil to adhere to the drive belts.**
   - **Completely wipe off any oil that adheres to the engine and the vehicle.**

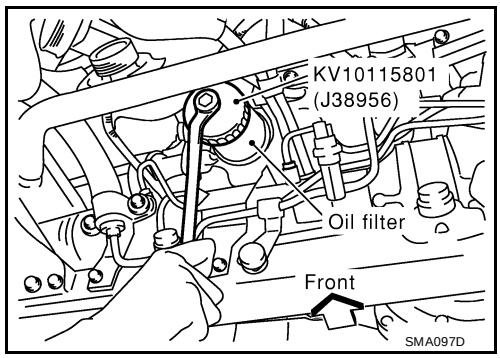

2. Clean oil filter mounting surface on cylinder block.

Coat rubber seal of new oil filter with engine oil.

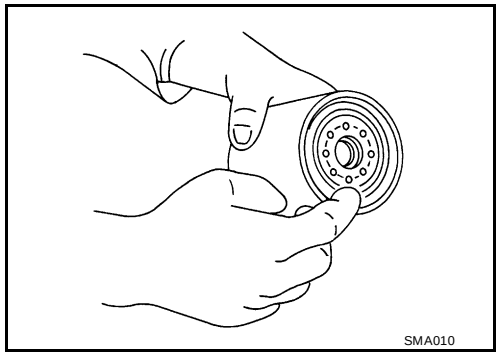

3. Screw the oil filter manually until it touches the installation surface, then tighten it by 2/3 turn.

   Oil filter : 14.7 - 20.5 N·m (1.5 - 2.1 kg-m, 11 - 15 ft-lb)

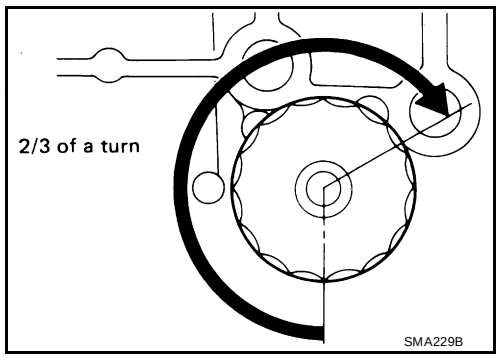

4. Check oil level and add engine oil. Refer to MA-13, "Gasoline engine oil" .
5. After warming up the engine, check for engine oil leakage.

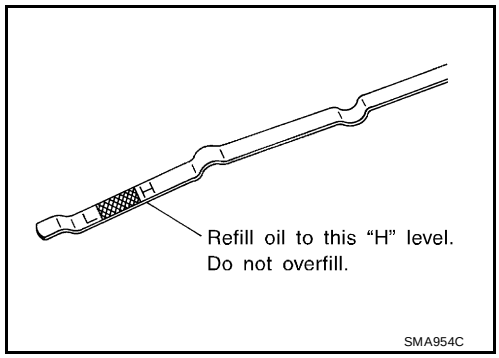

Changing Spark Plugs (Platinum - Tipped Type)

ELS000B8

1. Remove engine cover.
2. Remove intake manifold collector. Refer to EM-113, "REMOVAL" steps 1 to 13.
3. Remove ignition coils. Refer to EM-126, "Removal and Installation" .
4. Remove spark plugs.
5. Install spark plugs.

   Gap (nominal) : 1.1 mm (0.043 in)

   Spark plug : 20 - 29 N-m (2.0 - 3.0 kg-m, 14 - 22 ft-lb)

Spark plug:

Standard type	PLFR5A-11
Hot type	PLFR4A-11
Cold type	PLFR6A-11

Use standard type spark plug for normal condition.
The hot type spark plug is suitable when fouling occurs with the standard type spark plug under conditions such as:

- frequent engine starts
- low ambient temperatures

The cold type spark plug is suitable when spark knock occurs with the standard type spark plug under conditions such as:

- extended highway driving
- frequent high engine revolution
- Do not use a wire brush for cleaning.
- If plug tip is covered with carbon, spark plug cleaner may be used.

Cleaner air pressure	**: less than 588 kPa (6 kg/cm^2 , 85 psi)**
Cleaning time	**: less than 20 seconds**

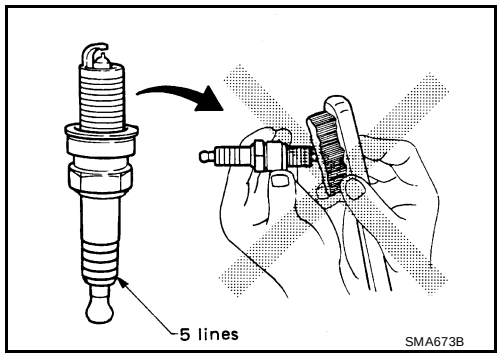

- Checking and adjusting plug gap is not required between change intervals.

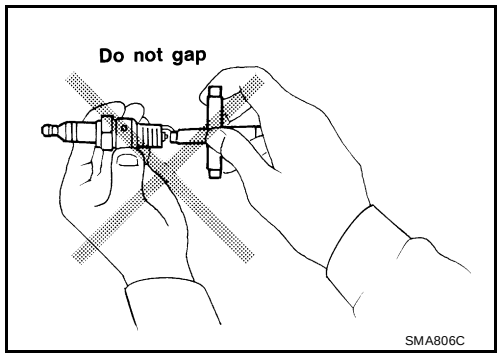

6. Install the ignition coils. Refer to EM-126, "Removal and Installation" .

Ignition coil bolt : 6.37 - 7.54 N·m (0.65 - 0.77 kg-m, 56 - 67 in-lb)

Checking EVAP Vapor Lines

ELS000B9

1. Visually inspect EVAP vapor lines for improper attachment and for cracks, damage, loose connections, chafing and deterioration.
2. Inspect fuel tank filler cap vacuum relief valve for clogging, sticking, etc.
   Refer to EC-1272, "EVAPORATIVE EMISSION SYSTEM" .

CHASSIS AND BODY MAINTENANCE

PFP:00100

Checking Exhaust System

ELS000BA

Check exhaust pipes, muffler and mounting for improper attachment, leaks, cracks, damage, chafing or deterioration.

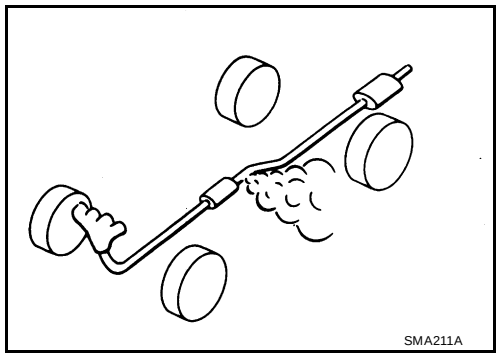

Checking Clutch Fluid Level and Leaks

ELS000BB

If fluid level is extremely low, check clutch system for leaks.

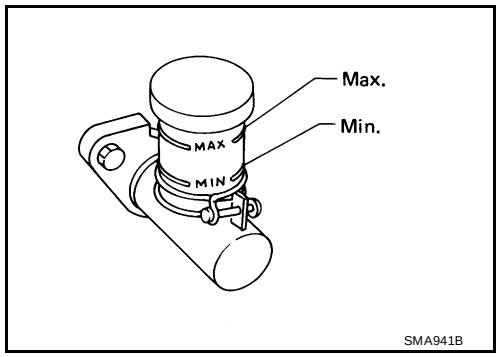

Checking M/T Oil

ELS000BC

Check for oil leakage and oil level.

Filler plug : 30 - 39 N·m (3.1 - 4.0 kg·m, 23 - 28 ft-lb)

CAUTION:
Never start engine while checking oil level.

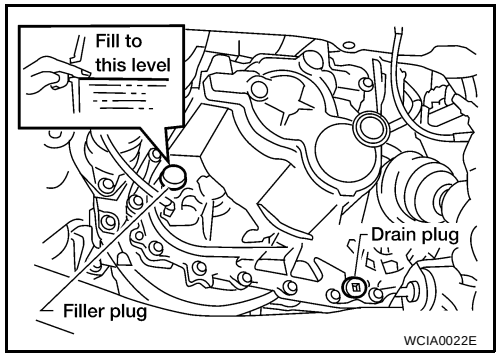

Changing M/T Oil

ELS000BD

1. Drain the M/T oil from the drain plug and refill the M/T with new specified gear oil.

Oil grade	**: API GL-4**
Viscosity	**: Refer to MA-13, "SAE Viscosity Number" .**
Capacity (RS5F51A)	**: 2.3 ℓ (4 7/8 US pt, 4 Imp pt)**
Drain plug	**: 30 - 39 N·m (3.1 - 4.0 kg-m, 23 - 28 ft-lb)**

2. Check oil level as shown.

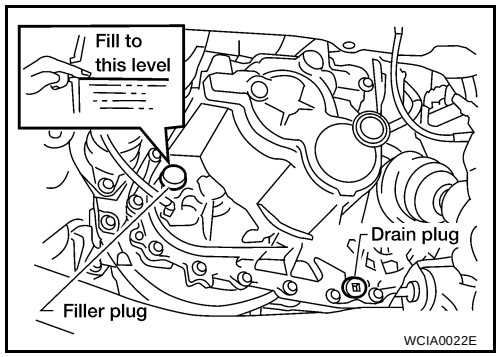

Checking A/T Fluid

ELS000BE

1. Warm up engine.
2. Check for fluid leakage.
3. Before driving, fluid level can be checked at fluid temperatures of 30 to 50°C (86 to 122°F) using “COLD” range on A/T fluid level gauge.

a. Park vehicle on level surface and set parking brake.

b. Start engine and move selector lever through each gear position. Leave selector lever in “P” position.

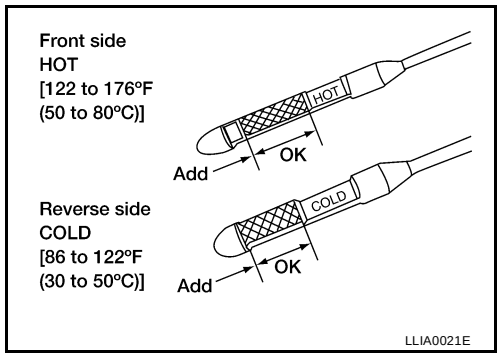

c. Check fluid level with engine idling.

d. Remove A/T fluid level gauge and wipe clean with lint-free paper.

e. Re-insert A/T fluid level gauge into charging pipe as far as it will go.

f. Remove A/T fluid level gauge and note reading. If reading is at low side of range, add fluid to the charging pipe.

CAUTION:
Do not overfill.

4. Drive vehicle for approximately 5 minutes in urban areas.
5. Re-check fluid level at fluid temperatures of 50 to 80°C (122 to 176°F) using “HOT” range on A/T fluid level gauge.

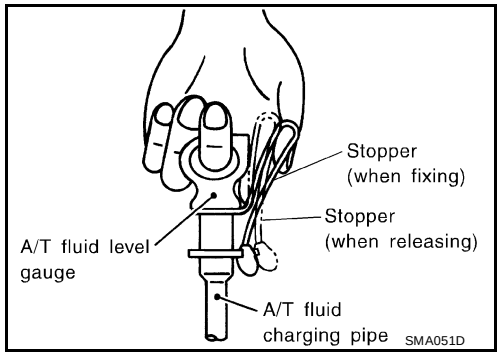

CAUTION:
Firmly fix the A/T fluid level gauge to the A/T fluid charging pipe using the attached stopper.

6. Check fluid condition.
   - If fluid is very dark or smells burned, refer to AT section for checking operation of A/T. Flush cooling system after repair of A/T.
   - If A/T fluid contains frictional material (clutches, bands, etc.), replace radiator and flush cooler line using cleaning solvent and compressed air after repair of A/T. Refer to CO-34, "RADIATOR" .

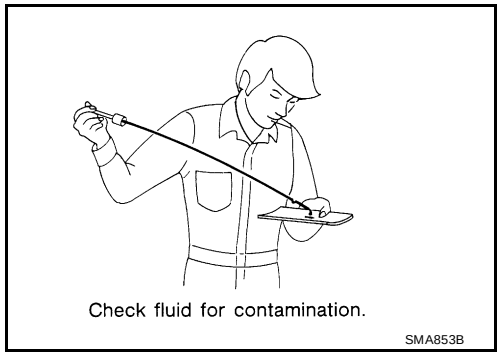

Changing A/T Fluid

ELS000BF

1. Start the engine and run at idle speed for five minutes to warm up the A/T fluid.
2. Stop the engine.
3. Drain the A/T fluid from drain plug and refill the transaxle with new A/T fluid. Always refill with the same volume that was drained from the transaxle.

Fluid capacity (with torque converter)	
RE4F04B/RE4F04W	**: 9.2 ℓ (9 3/4 US qt, 8 1/8 Imp qt)**
Drain plug	**: 29 - 39 N·m (3.0 - 4.0 kg-m, 22 - 29 ft-lb)**
Fluid grade	**:NISSAN Matic “D” (Continental U.S. and Alaska) or Canada NISSAN Automatic Transmission Fluid Refer to MA-12, "RECOMMENDED FLUIDS AND LUBRICANTS" .**

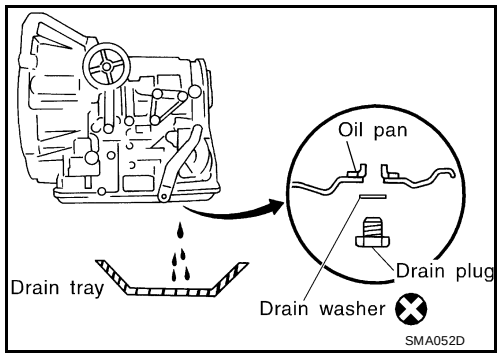

4. Start the engine and run at idle speed for five minutes.
5. Check fluid level and condition. Refer to MA-29, "Checking A/T Fluid" . If fluid is still dirty, repeat this procedure.

Balancing Wheels (Bonding Weight Type)

ELS000BG

REMOVAL

1. Remove inner and outer balance weights from the road wheel.

   CAUTION:
   Be careful not to scratch the road wheel during removal procedures.
2. Using releasing agent, remove double-faced adhesive tape from the road wheel.

   CAUTION:
   - **Be careful not to scratch the road wheel during removal.**
   - **After removing double-faced adhesive tape, wipe clean traces of releasing agent from the road wheel.**

WHEEL BALANCE ADJUSTMENT

NOTE:
If a tire balance machine has adhesion balance weight mode settings and drive-in weight mode setting, select and adjust a drive-in weight mode suitable for road wheels.

1. Set road wheel on wheel balancer using the center hole as a guide. Start the tire balance machine.
2. When inner and outer unbalance values are shown on the wheel balancer indicator, multiply outer unbalance value by 1.6 to determine balance weight that should be used. Select the outer balance weight with a value closest to the calculated value above and install it to the designated outer position of, or at the designated angle in relation to the road wheel.

   CAUTION:
   - **Do not install the inner balance weight before installing the outer balance weight.**
   - **Before installing the balance weight, be sure to clean the mating surface of the road wheel.**

   Indicated unbalance value × 1.6 = balance weight to be installed
   Calculation example:
   23 g (0.81 oz) × 1.6 = 38.33 g (1.35 oz) = 40 g (1.41 oz) balance weight (closer to calculated balance weight value)
   Note that balance weight value must be closer to the calculated balance weight value.
   Example:
   37.4 = 35 g (1.23 oz)
   37.5 = 40 g (1.41 oz)

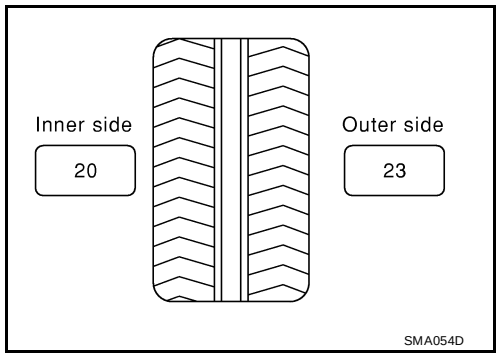

a. Install balance weight in the position shown.

b. When installing balance weight to road wheels, set it into the grooved area on the inner wall of the road wheel as shown so that the balance weight center is aligned with the wheel balancer indication position (angle).

CAUTION:
- **Always use genuine NISSAN adhesion balance weights.**
- **Balance weights are not reusable; always replace with new ones.**
- **Do not install more than three sheets of balance weight.**

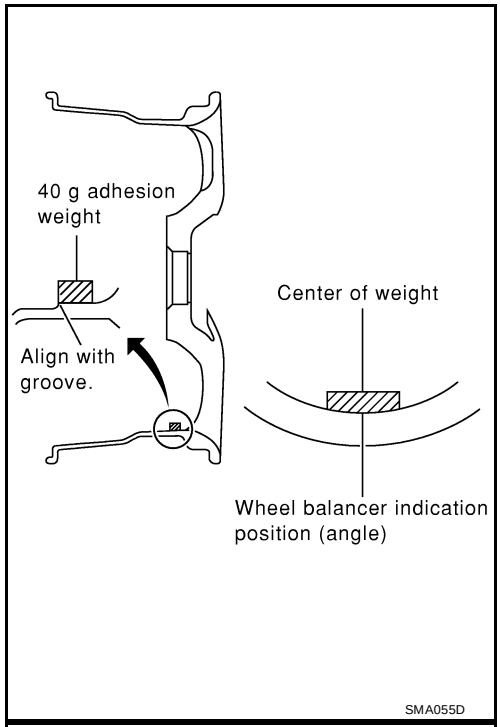

c. If calculated balance weight value exceeds 50 g (1.76 oz), install two balance weight sheets in line with each other.

CAUTION:
Do not install one balance weight sheet on top of another.

3. Start wheel balancer again.

4. Install drive-in balance weight on inner side of road wheel in the wheel balancer indication position (angle).

CAUTION:
Do not install more than two balance weights.

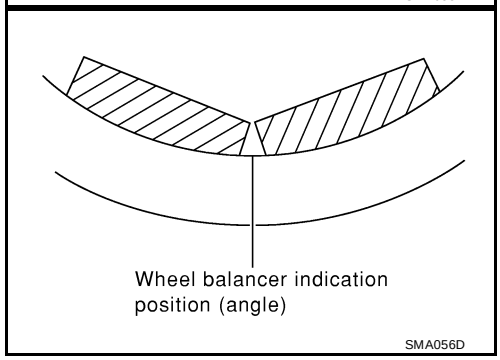

5. Start wheel balancer. Make sure that inner and outer residual unbalance values are 10 g (0.35 oz) each or below.
   - If either residual unbalance value exceeds 10 g (0.35 oz), repeat installation procedures.

Wheel Balance (Maximum Allowable Unbalance)

Maximum allowable unbalance	Dynamic (At rim flange)	10 g (0.35 oz) (one side)
	Static	20 g (0.71 oz)

Tire Rotation

ELS000BH

- After rotating the tires, adjust the tire pressure.
- Retighten the wheel nuts when the vehicle has been driven for the first 1,000 km (600 miles) (also in cases of a flat tire, etc.).

Wheel nuts : 98 - 117 N·m (10 - 12 kg-m, 73 - 86 ft-lb)

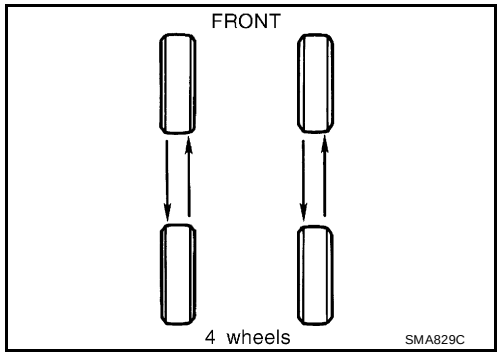

Checking Brake Fluid Level and Leaks

ELS000BI

- Check fluid level in reservoir tank. It should be between MAX and MIN lines on reservoir tank.
- If fluid level is extremely low, check brake system for leaks.
- Release parking brake lever and see if brake warning lamp goes off. If not, check brake system for leaks.

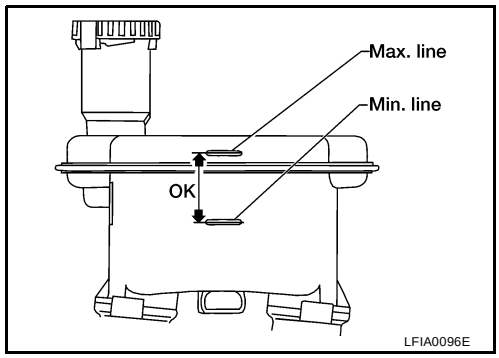

Checking Brake Lines and Cables

ELS000BJ

Check brake fluid lines and parking brake cables for improper attachment, leaks, chafing, abrasions, deterioration, etc.

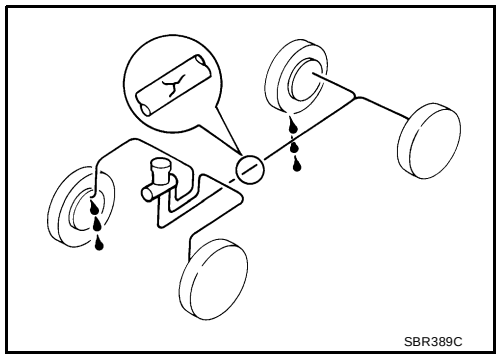

Checking Disc Brake

ELS000BK

ROTOR

Check condition and thickness.

Unit: mm (in)

	Front	Rear
Brake model	CLZ25VD	AD9V
Standard thickness	26 (1.02)	9 (0.35)
Maximum runout	0.07 (0.0028)	0.07 (0.0028)
Minimum thickness (Wear limit)	22.0 (0.866)	8.0 (0.315)

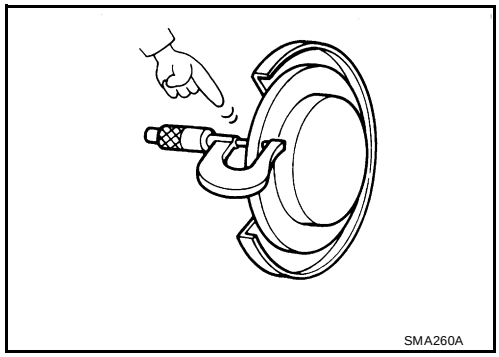

CALIPER

Check for leakage.

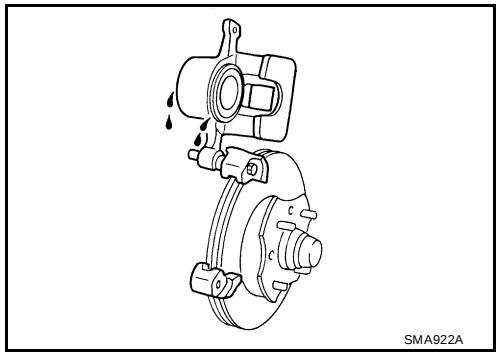

PAD

Check for wear or damage.

Unit: mm (in)

	Front	Rear
Brake model	CLZ25VD	AD9V
Standard thickness	11 (0.43)	10 (0.39)
Minimum thickness (Wear limit)	2.0 (0.079)	1.5 (0.059)

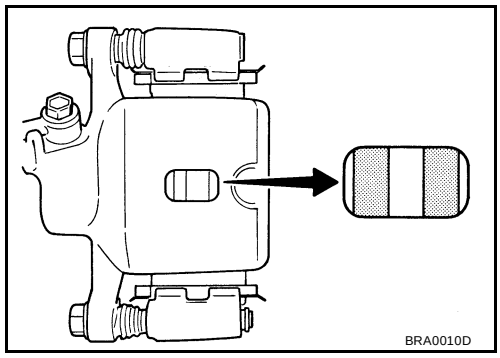

Checking Steering Gear and Linkage

ELS000BL

STEERING GEAR

- Check gear housing and boots for looseness, damage and grease leakage.
- Check connection with steering column for looseness.

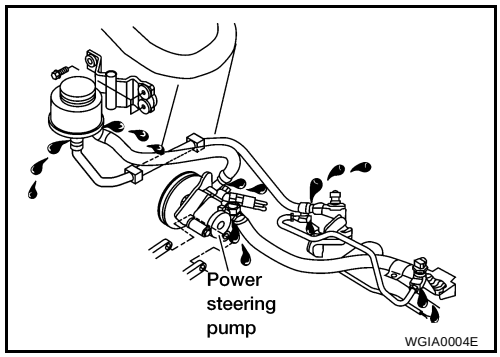

STEERING LINKAGE

Check ball joint, dust cover and other component parts for looseness, wear, damage and grease leakage.

Checking Power Steering Fluid and Lines

ELS000BM

Check fluid level in reservoir tank with engine off.
Use “HOT” range at fluid temperatures of 50° to 80°C (122° to 176°F) or “COLD” range at fluid temperatures of 0° to 30°C (32° to 86°F).

CAUTION:

- **Do not overfill.**
- **Recommended fluid is Genuine NISSAN PSF II or equivalent.**
  Refer to **MA-12, "RECOMMENDED FLUIDS AND LUBRICANTS"** **.**

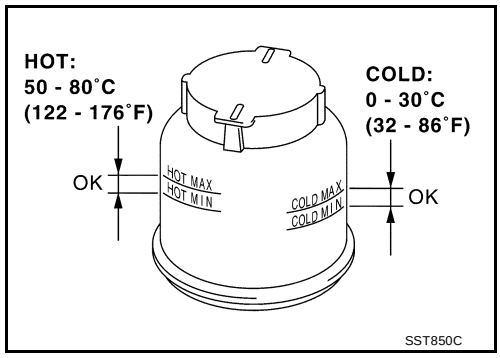

- Check lines for improper attachment, leaks, cracks, damage, loose connections, chafing and deterioration.
- Check rack boots for accumulation of power steering fluid.

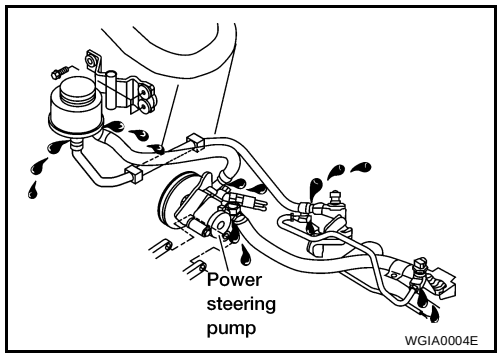

Axle and Suspension Parts

ELS000BN

Check front and rear axle and suspension parts for excessive play, cracks, wear, or other damage.

- Shake each wheel to check for excessive play.
- Rotate each wheel to check for abnormal noise.

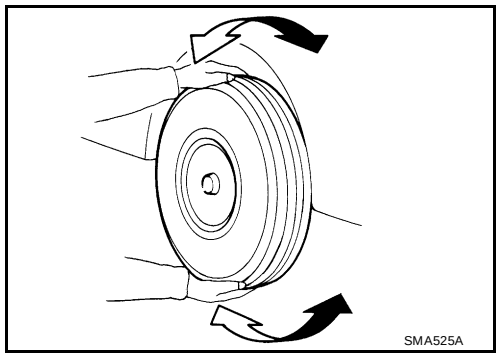

- Check axle and suspension nuts and bolts for looseness.

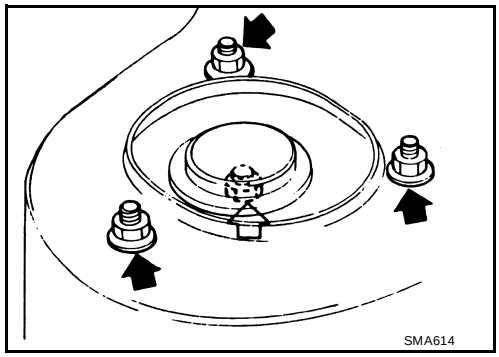

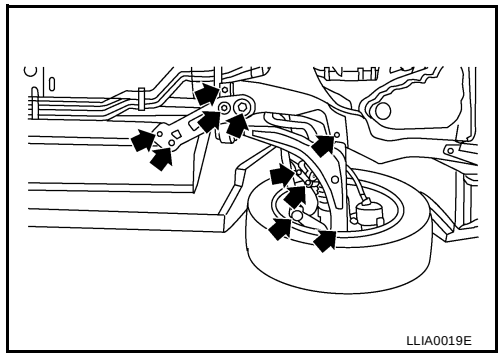

- Check strut (shock absorber) for oil leakage or other damage.
- Check suspension ball joint for grease leakage and ball joint dust cover for cracks or other damage.

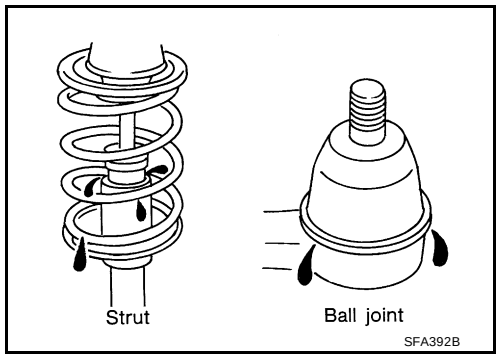

Drive Shaft

ELS000BO

- Check boot and drive shaft for cracks, wear, damage and grease leakage.

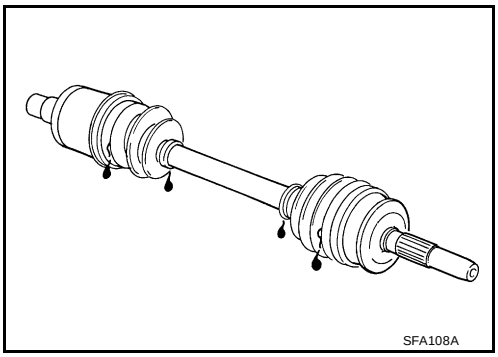

Lubricating Locks, Hinges and Hood Latch

ELS000BP

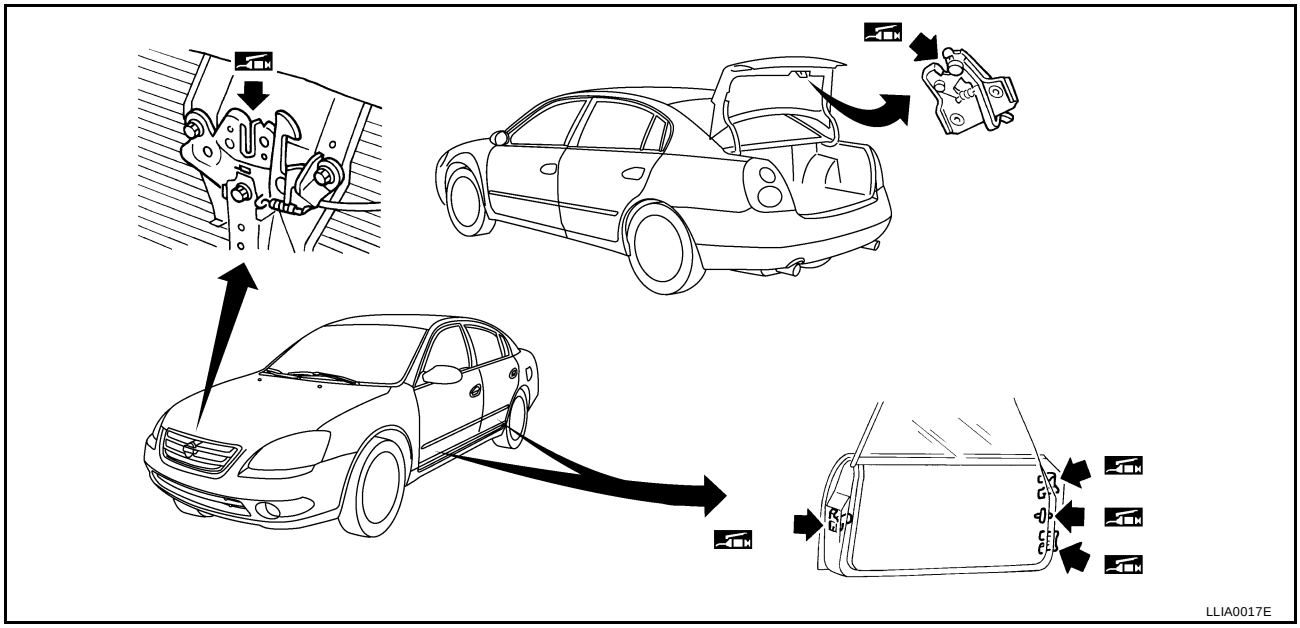

Checking Seat Belts, Buckles, Retractors, Anchors and Adjusters

ELS000BQ

CAUTION:

- **After any collision, inspect all seat belt assemblies, including retractors and other attached hardwares (i.e. anchor bolt, guide rail set). Nissan recommends to replace all seat belt assemblies in use during a collision, unless not damaged and properly operating after minor collision.**
  Also inspect seat belt assemblies not in use during a collision, and replace if damaged or improperly operating.
  Seat belt pre-tensioner should be replaced even if the seat belts are not in use during a frontal collision where the driver and passenger air bags are deployed.
- **If any component of seat belt assembly is questionable, do not repair. Replace as seat belt assembly.**
- **If webbing is cut, frayed, or damaged, replace belt assembly.**
- **Never oil tongue and buckle.**
- **Use a genuine NISSAN seat belt assembly.**

For details, refer to "Seat Belt Inspection" in SB section.

Anchor bolt

43.1 – 54.9 (4.4 – 5.5, 32 – 40)

N·m (kg–m, ft–lb)

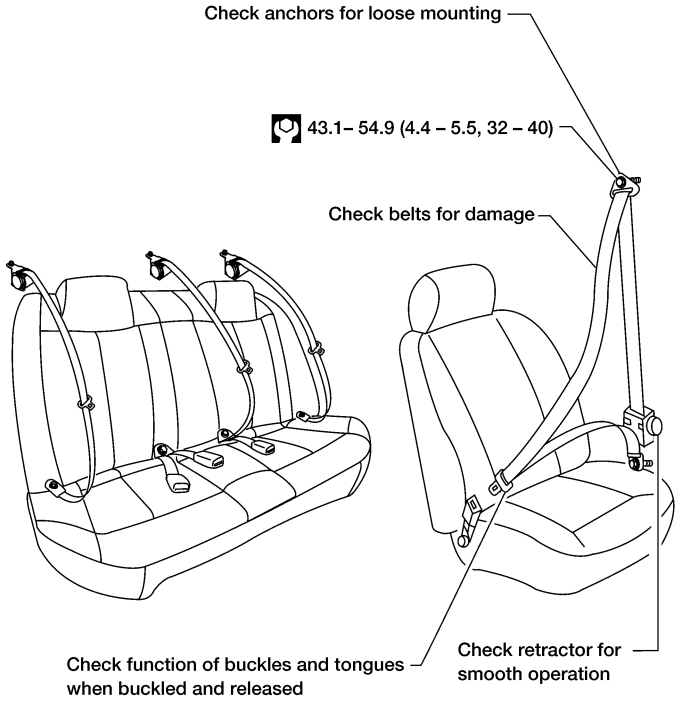

LLIA0022E

SERVICE DATA AND SPECIFICATIONS (SDS)

PFP:00030

Engine Maintenance (QR25DE)

ELS000BR

SPARK PLUGS (PLATINUM-TIPPED TYPE)

Type	Standard	PLFR5A-11
	Hot	PLFR4A-11
	Cold	PLFR6A-11
Plug gap		Nominal: 1.1 mm (0.043 in)

BELT DEFLECTION AND TENSION

Tension of drive belts	Auto-adjustment by auto tensioner

Engine Maintenance (VQ35DE)

ELS000BS

SPARK PLUGS (PLATINUM-TIPPED TYPE)

Type	Standard	PLFR5A-11
	Hot	PLFR4A-11
	Cold	PLFR6A-11
Plug gap		Nominal: 1.1 mm (0.043 in)

BELT DEFLECTION AND TENSION

	Deflection adjustment		Unit: mm (in)	Tension adjustment		Unit: N (kg, lb)
	Used belt		New belt	Used belt		New belt
	Limit	After adjustment		Limit	After adjustment	
Alternator, Air conditioner compressor oil pump	7.0 (0.28)	4.2 - 4.6 (0.17 - 0.18)	3.7 - 4.1 (0.15 - 0.16)	294 (30, 66)	730 - 818 (74.5 - 83.5, 164 - 184)	838 -926 (85.5 - 94.5, 188 - 208)
Power steering oil pump	11.0 (0.43)	7.3 - 8.0 (0.29 - 0.32)	6.5 - 7.2 (0.26 - 0.28)	196 (20, 44)	495 - 583 (50.5 - 59.5, 111.3 - 131.1)	603 -691 (61.5 - 70.5, 135.6 - 155.4)

Chassis and Body Maintenance

ELS000BT

WHEEL BALANCE

Maximum allowable unbalance	Dynamic (At rim flange) g (oz)	10 (0.35) (one side)
	Static g (oz)	20 (0.71)

SECTION MT
MANUAL TRANSAXLE

CONTENTS

PRECAUTIONS 3
Caution 3
PREPARATION 4
Special Service Tools 4
Commercial Service Tools 6
NOISE, VIBRATION, AND HARSHNESS (NVH) TROUBLESHOOTING 7
NVH Troubleshooting Chart 7
MANUAL TRANSAXLE 7
DESCRIPTION 8
Cross-sectional View 8
DOUBLE-CONE SYNCHRONIZER 9
REVERSE GEAR 9
M/T OIL 10
Replacement 10
DRAINING 10
FILLING 10
Checking 10
OIL LEAKAGE AND OIL LEVEL 10
SIDE OIL SEAL 11
Removal and Installation 11
REMOVAL 11
INSTALLATION 11
POSITION SWITCH 12
Checking 12
BACK-UP LAMP SWITCH 12
PARK/NEUTRAL POSITION SWITCH 12
CONTROL LINKAGE 13
Removal and Installation of Control Device and Cable 13
AIR BREATHER HOSE 15
Removal and Installation 15
TRANSAXLE ASSEMBLY 16
Removal and Installation 16
REMOVAL 16
INSTALLATION 17
Component Parts 19
CASE AND HOUSING COMPONENTS 19
GEAR COMPONENTS 20
SHIFT CONTROL COMPONENTS 22
FINAL DRIVE COMPONENTS 23
Disassembly and Assembly 23
DISASSEMBLY 23
ASSEMBLY 26
Adjustment 31
INPUTSHAFT END PLAY 31
DIFFERENTIAL SIDE BEARING PRELOAD 32
MAINSHAFT END PLAY 33
REVERSE IDLER GEAR END PLAY 34
INPUT SHAFT AND GEARS 36
Disassembly and Assembly 36
DISASSEMBLY 36
INSPECTION AFTER DISASSEMBLY 37
ASSEMBLY 38
MAINSHAFT AND GEARS 44
Disassembly and Assembly 44
DISASSEMBLY 44
INSPECTION AFTER DISASSEMBLY 45
ASSEMBLY 47
REVERSE IDLER SHAFT AND GEARS 52
Disassembly and Assembly 52
DISASSEMBLY 52
INSPECTION AFTER DISASSEMBLY 52
ASSEMBLY 53
FINAL DRIVE 54
Disassembly and Assembly 54
PRE-INSPECTION 54
DISASSEMBLY 54
INSPECTION AFTER DISASSEMBLY 55
ASSEMBLY 55
SHIFT CONTROL 58
Inspection 58
SHIFT FORK 58
SERVICE DATA AND SPECIFICATIONS (SDS) 59
General Specifications 59
TRANSAXLE 59
FINAL GEAR 59
Gear End Play 60
Clearance Between Baulk Ring and Gear 60
3RD,4TH,5TH & REVERSE BAULK RING 60

1ST AND 2ND DOUBLE BAULK RING 60
Available Snap Rings 60
INPUT SHAFT SPACER 60
5TH MAIN GEAR 60
Available C-rings 61
MAINSHAFT C-RING 61
Available Thrust Washer 61
INPUT SHAFT THRUST WASHER 61
DIFFERENTIAL SIDE GEAR THRUST WASHER ... 61
Available Adjusting Shims 62
MAINSHAFT ADJUSTING SHIM 62
INPUT SAFT REAR BEARING ADJUSTING SHIM 62
MAINSAFT REAR BEARING ADJUSTING SHIM..62
REVERASE IDLER GEAR ADJUSTING SHIM ...63
Available Shims 63
BEARING PRELOAD 63
DIFFERENTIAL SIDE BEARING ADJUSTING SHIM(S) 63

PRECAUTIONS

PFP:00001

Caution

ECS004PV

- Do not reuse transaxle oil, once it has been drained.
- Check oil level or replace oil with vehicle on level ground.
- During removal or installation, keep inside of transaxle clear of dust or dirt.
- Check for the correct installation status prior to removal or disassembly. If mating marks are required, be certain they do not interfere with the function of the parts they are applied to.
- In principle, tighten bolts or nuts gradually in several steps working diagonally from inside to outside. If tightening sequence is specified, observe it.
- Be careful not to damage sliding surfaces and mating surfaces.

PREPARATION

PFP:00002

Special Service Tools

ECS004PW

Tool number (Kent-More No.) Tool name		Description
KV381054S0 (J34286) Puller	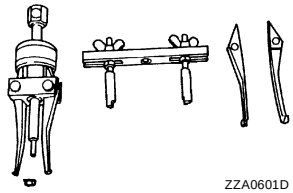	● Side bearing outer race removal
ST35321000 (—) Drift a: 49 mm (1.93 in) dia. b: 41 mm (1.61 in) dia.	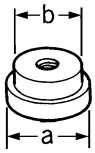	● Input shaft oil seal installation ● Reverse main gear installation ● 1st bushing installation ● 1st-2nd synchronizer hub installation ● 2nd bushing installation ● 3rd main gear installation
ST30720000 (J25405) Drift a: 77 mm (3.03 in) dia. b: 55.5 mm (2.185 in) dia.	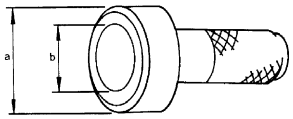	● Differential oil seal installation ● Differential side bearing outer race installation ● Mainshaft rear bearing installation ● Differential side bearing installation
ST33200000 (J26082) Drift a: 60 mm (2.36 in) dia. b: 44.5 mm (1.752 in) dia.	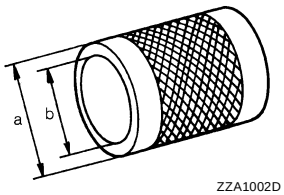	● Mainshaft front bearing installation ● 4th main gear installation ● 5th main gear installation
ST33061000 (J8107-2) Drift a: 38 mm (1.50 in) dia. b: 28.5 mm (1.122 in) dia.	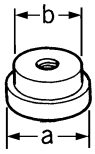	● Bore plug installation ● Differential side bearing removal
ST33052000 (—) Drift a: 22 mm (0.87 in) dia. b: 28 mm (1.10 in) dia.	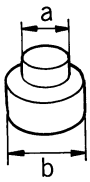	● Input shaft rear bearing removal and installation ● Input shaft bearing spacer and 5th stopper removal ● 5th bushing, thrust washer, 4th input gear, 4th gear bushing, 3rd-4th synchronizer hub and 3rd input gear removal ● Input shaft front bearing installation ● Mainshaft rear bearing removal ● 4th main gear and 5th main gear removal

Tool number (Kent-More No.) Tool name		Description
KV40105020 (—) Drift a: 39.7 mm (1.563 in) dia. b: 35 mm (1.38 in) dia. c: 15 mm (0.59 in).	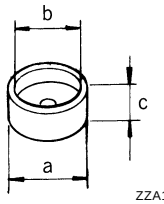 ZZA1133D	● 5th input gear and synchronizer hub removal ● 3rd main gear, 2nd main gear, 2nd bushing, 1st-2nd synchronizer hub, 1st main gear, reverse main gear and 1st bushing removal
KV40105710 (—) Press stand a: 46 mm (1.81 in) dia. b: 41 mm (1.61 in).	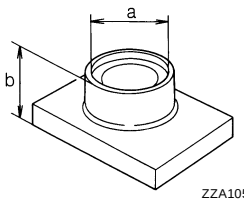 ZZA1058D	● 3rd-4th synchronizer hub installation ● 4th bushing installation ● 5th bushing installation ● 5th synchronizer hub installation ● 2nd bushing installation ● 3rd main gear installation
ST38220000 (—) Press stand a: 63 mm (2.48 in) dia. b: 65 mm (2.56 in).	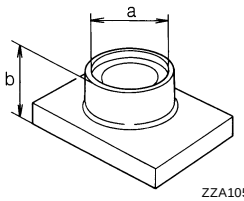 ZZA1058D	● Reverse main gear installation ● 1st bushing installation ● 1st-2nd synchronizer hub installation
ST30032000 (J26010-01) Drift a: 80 mm (3.15 in) dia. b: 38 mm (1.50 in) dia. c: 31 mm (1.22 in) dia.	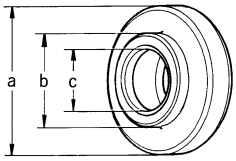 ZZA0978D	● 5th stopper and input shaft bearing spacer installation ● Input shaft front bearing installation
ST30901000 (J26010-01) Drift a: 79 mm (3.11 in) dia. b: 45 mm (1.77 in) dia. c: 35.2 mm (1.386 in) dia.	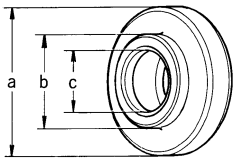 ZZA0978D	● Input shaft rear bearing installation ● 4th main gear installation ● 5th main gear installation ● Mainshaft rear bearing installation
ST30031000 (J22912-01) Puller	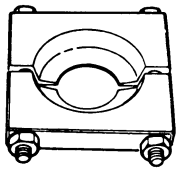 ZZA0537D	● Measuring wear of 1st and 2nd baulk ring
KV40101630 (J35870) Drift a: 68 mm (2.68 in) dia. b: 60 mm (2.36 in) dia.	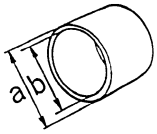 ZZA1003D	● Reverse main gear installation

Tool number (Kent-More No.) Tool name		Description
KV38102510 (—) Drift a: 71 mm (2.80 in) dia. b: 65 mm (2.56 in) dia.	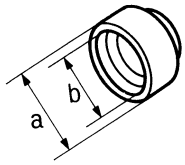 ZZA0838D	● 1st bushing installation ● 1st-2nd synchronizer hub installation ● Differential side bearing installation
(J39713) Preload adapter	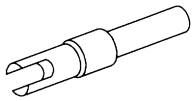 NT087	● Checking differential side gear end play

Commercial Service Tools

ECS004PX

Tool name		Description
Puller	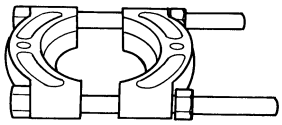 ZZB0823D	● Each bearing gear and bushing removal
Puller	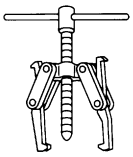 NT077	● Each bearing gear and bushing removal
Pin punch Tip diameter: 4.5 mm (0.177 in) dia.	 ZZA0815D	● Each retaining pin removal and installation
Power tool	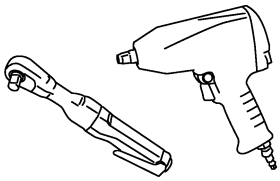 PBIC0190E	● Loosening bolts and nuts

NOISE, VIBRATION, AND HARSHNESS (NVH) TROUBLESHOOTING

PFP:00003

NVH Troubleshooting Chart

ECS004PY

Use the chart below to help you find the cause of the symptom. The numbers indicate the order of the inspection. If necessary, repair or replace these parts.

MANUAL TRANSAXLE

Reference page		MT-10	MT-10	MT-10	MT-19	MT-19	MT-19	MT-13	MT-19	MT-19, MT-58	MT-19	MT-19	MT-19	MT-19
SUSPECTED PARTS (Possible cause)		(Oil level is low.)	(Wrong oil)	(Oil level is high.)	GASKET (Damaged)	OIL SEAL (Worn or damaged)	O-RING (Worn or damaged)	SHIFT CONTROL LINKAGE (Worn)	CHECK PLUG RETURN SPRING AND CHECK BALL (Worn or damaged)	SHIFT FORK (Worn)	GEAR (Worn or damaged)	BEARING (Worn or damaged)	BAULK RING (Worn or damaged)	INSERT SPRING (Damaged)
Symptoms	Noise	1	2								3	3		
	Oil leakage		3	1	2	2	2							
	Hard to shift or will not shift		1	1				2					3	3
	Jumps out of gear							1	2	3	3			

DESCRIPTION

PFP:00000

Cross-sectional View

ECS004PZ

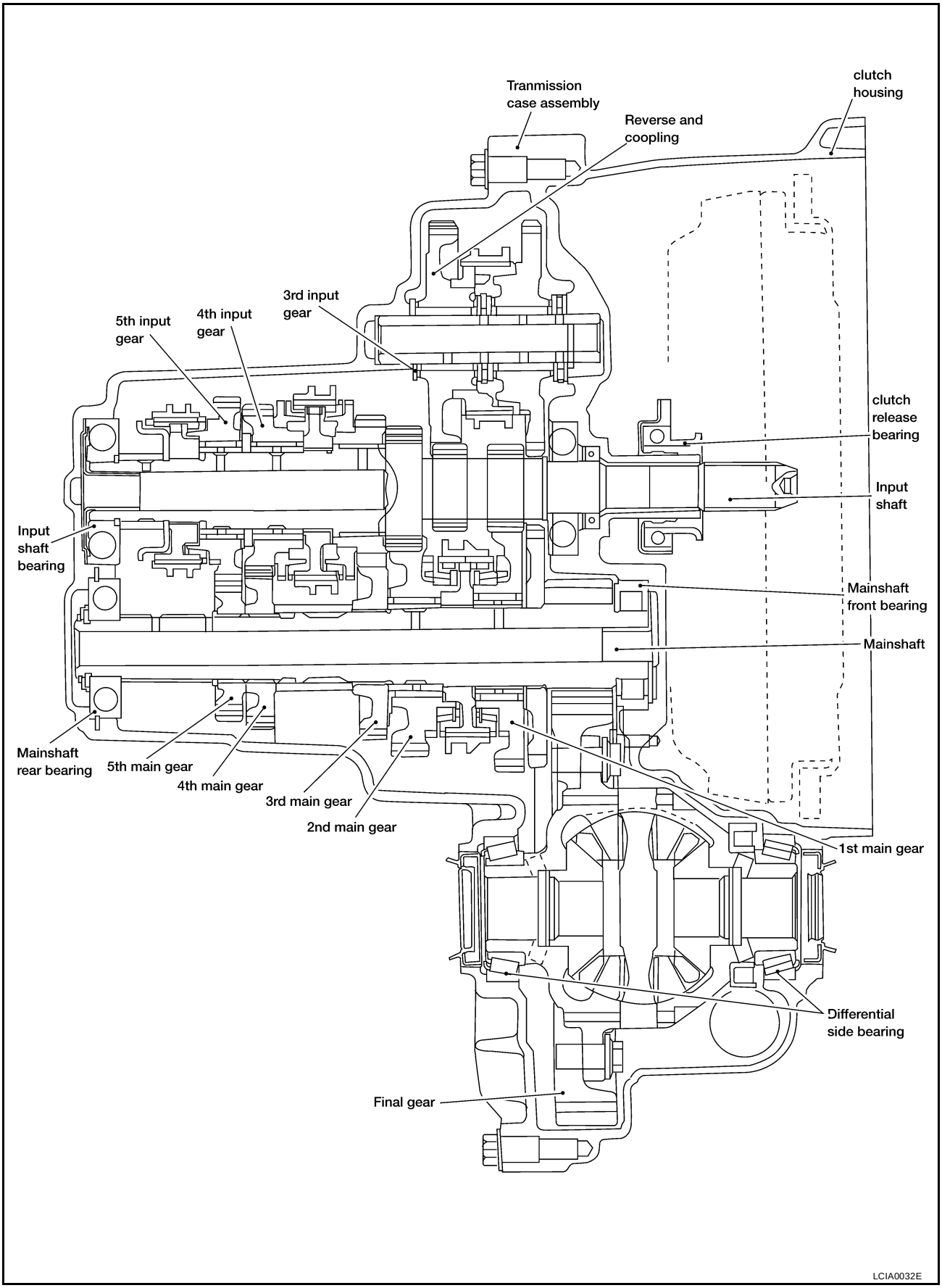

DOUBLE-CONE SYNCHRONIZER

Double-cone synchronizer is adopted for 1st and 2nd gears to reduce operating force of the shift lever.

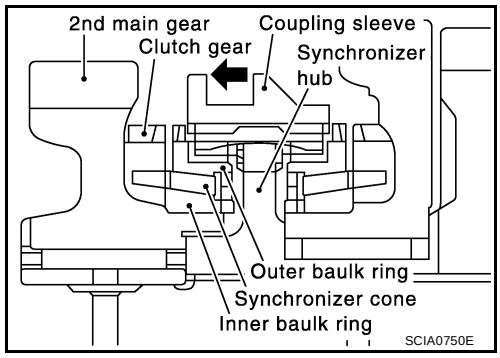

REVERSE GEAR

See figure for description of reverse gear components.

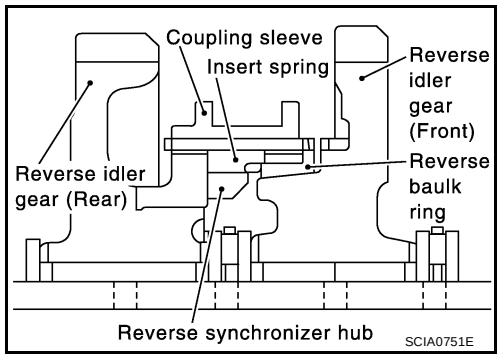

M/T OIL

PFP:KLD20

Replacement

ECS004Q0

DRAINING

1. Start the engine and let it run to warm up the transaxle oil.
2. Stop the engine. Remove the drain plug and drain the transaxle oil into a suitable container.
3. Set a new gasket on the drain plug, and install the drain plug in the transaxle body.

   Drain plug : 30 - 39 N·m (3.1 - 4.0 kg-m, 23 - 28 ft-lb)

   CAUTION:
   Do not reuse the drain plug gasket.

FILLING

1. Remove the filler plug after the drain plug has been installed. Fill the transaxle with new oil until the oil level reaches the rim of the filler plug hole as shown.

   Oil grade : API GL-4, Viscosity SAE 75W-85

   Oil capacity : 2.3 ℓ (4 7/8 US pt, 4 Imp pt)

2. After refilling the transaxle with oil, check the oil level as shown. Set a new gasket on the filler plug, and install the filler plug in the transaxle body.

   Filler plug : 30 - 39 N·m (3.1 - 4.0 kg-m, 23 - 28 ft-lb)

   CAUTION:
   Do not reuse the filler plug gasket.

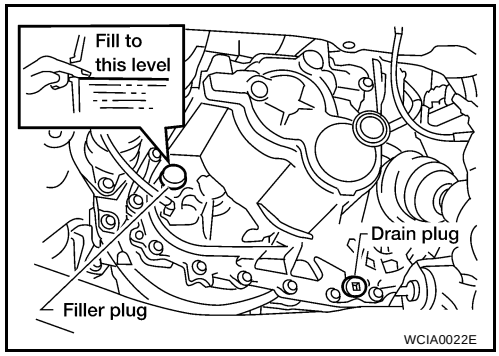

Checking

ECS004Q1

OIL LEAKAGE AND OIL LEVEL

- Check that the oil is not leaking from the transaxle.
- Check the oil level from the filler plug mounting hole as shown.

  CAUTION:
  Never start the engine while checking the oil level.

- Set a new gasket on the filler plug, and install the filler plug in the transaxle body.

  Filler plug : 30 - 39 N·m (3.1 - 4.0 kg-m, 23 - 28 ft-lb)

  CAUTION:
  Do not reuse the filler plug gasket.

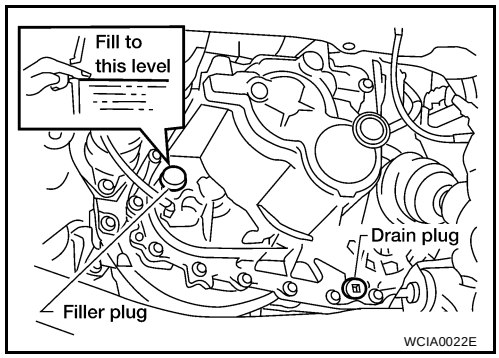

SIDE OIL SEAL

PFP:32113

Removal and Installation

ECS004Q2

REMOVAL

1. Remove the drive shaft from the transaxle body. Refer to FAX-11, "Removal and Installation" .
2. Remove oil seal with a slotted screwdriver.

   CAUTION:
   Be careful not to damage the case surface when removing the oil seal.

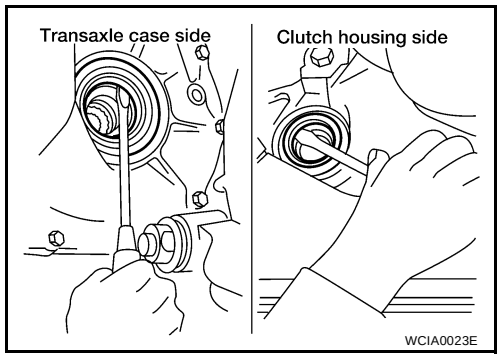

INSTALLATION

1. Using a drift (special service tool), drive the oil seal straight until it protrudes from the case end equal to dimension A shown in the figure.

   Dimension A : Within 0.5 mm (0.02 in) of flush with the case.

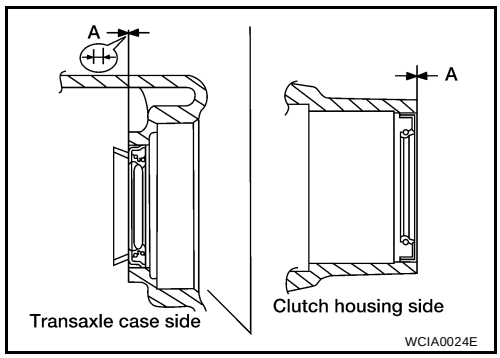

Drift to be used:

Transaxle case side	ST3340 0001
Clutch housing side	KV401 00621

CAUTION:
- **When installing oil seals, apply multi-purpose grease to oil seal lips.**
- **Oil seals are not reusable. Never reuse them.**

2. Installation is in the reverse order of removal. Check oil level after installation.

POSITION SWITCH

PFP:32005

Checking

ECS004Q3

BACK-UP LAMP SWITCH

- Check continuity.

Gear position	Continuity
Reverse	Yes
Except reverse	No

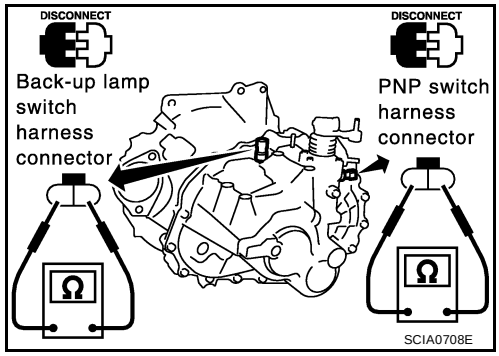

PARK/NEUTRAL POSITION SWITCH

- Check continuity.

Gear position	Continuity
Neutral	Yes
Except neutral	No

CONTROL LINKAGE

PFP:34103

Removal and Installation of Control Device and Cable

ECS004Q4

Refer to the figure below for removal and installation procedure.

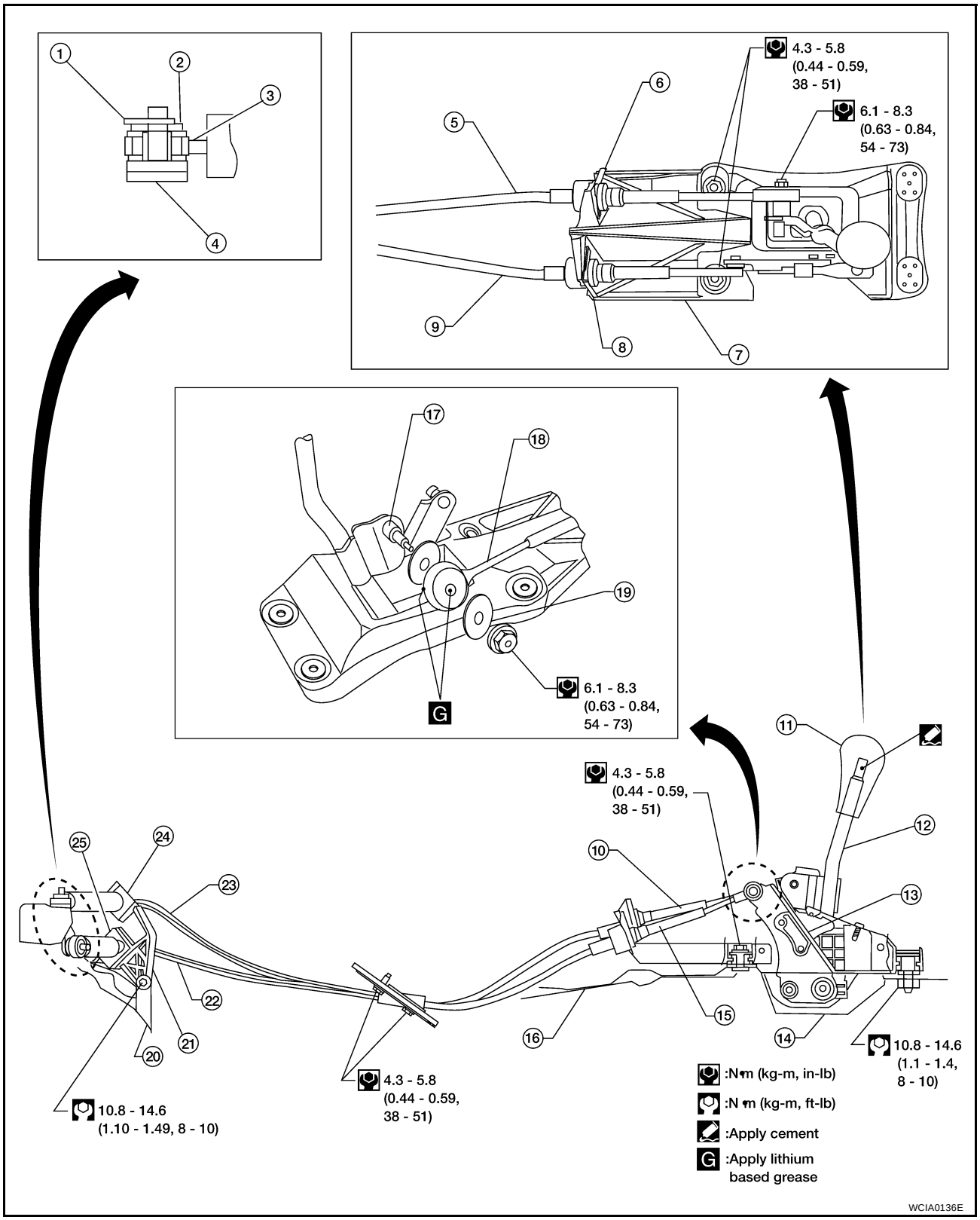

1.	Snap pin	2.	Washer	3.	Cable
4.	Manual lever	5.	Shift cable	6.	Lock plate
7.	Control device assembly	8.	Lock plate	9.	Select cable

10. Shift cable	11. Control lever knob	12. Control lever
13. Control device assembly	14. Cover plate	15. Select cable
16. Floor pan	17. Control lever	18. Shift cable
19. Washer	20. Clutch housing	21. Cable mounting bracket
22. Select cable	23. Shift cable	24. Lock plate
25. Lock plate		

CAUTION:

- **Note that the select side lock plate for securing the control cable is different from the one on the shift side.**
- **After assembly, make sure selector lever automatically returns to Neutral when it is moved to 1st, 2nd, or Reverse.**

AIR BREATHER HOSE

PFP:31098

Removal and Installation

ECS004Q5

Refer to the figure for air breather hose removal and installation information.

QR engine models

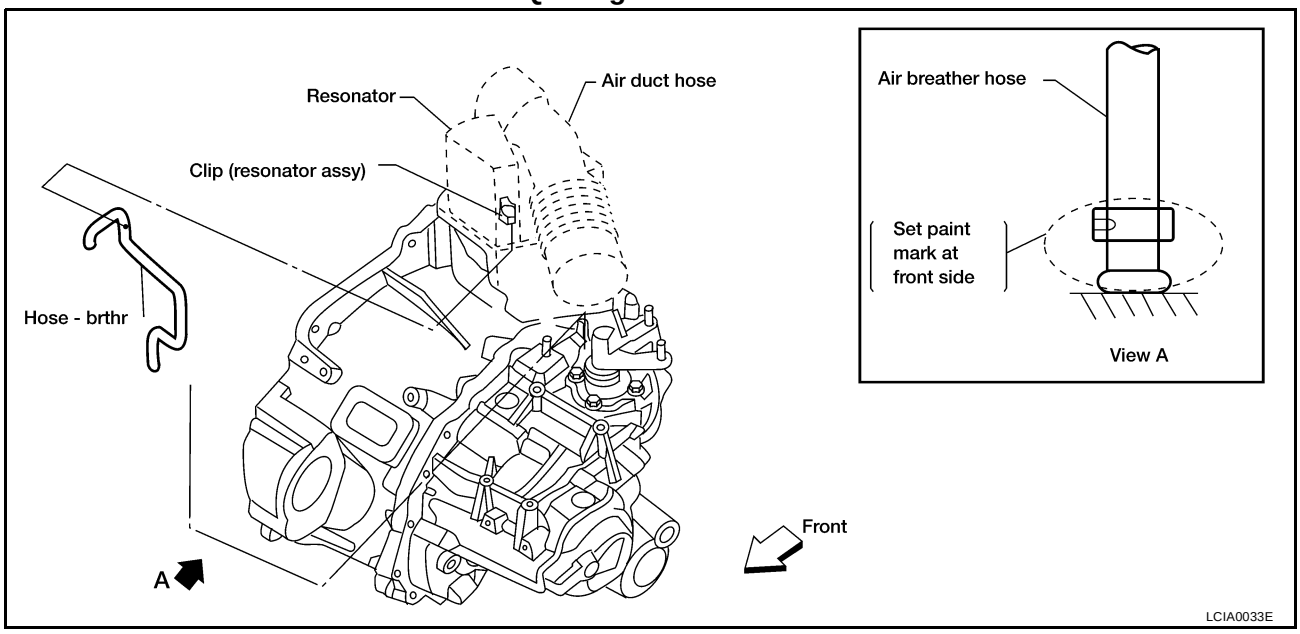

VQ engine models

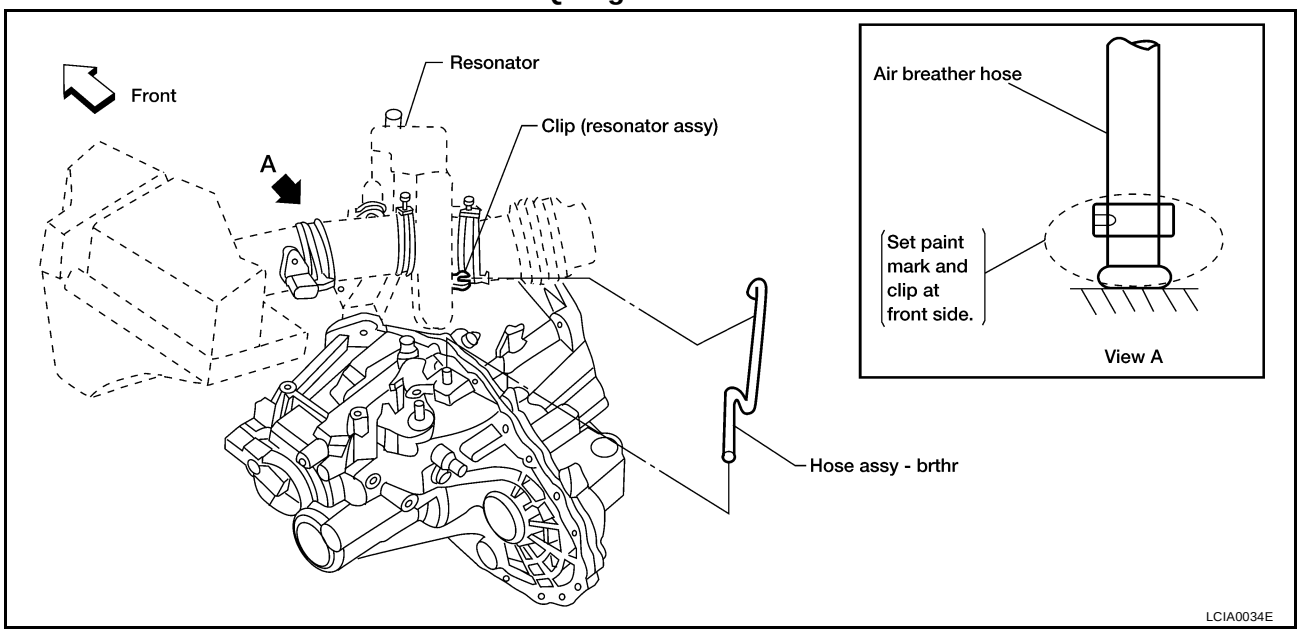

CAUTION:

- **Make sure there are no pinched or restricted areas on the air breather hose caused by bending or winding when installing it.**
- **Be sure to insert hose into the transaxle tube until overlap area reaches the spool.**

TRANSAXLE ASSEMBLY

PFP:32010

Removal and Installation

ECS004Q6

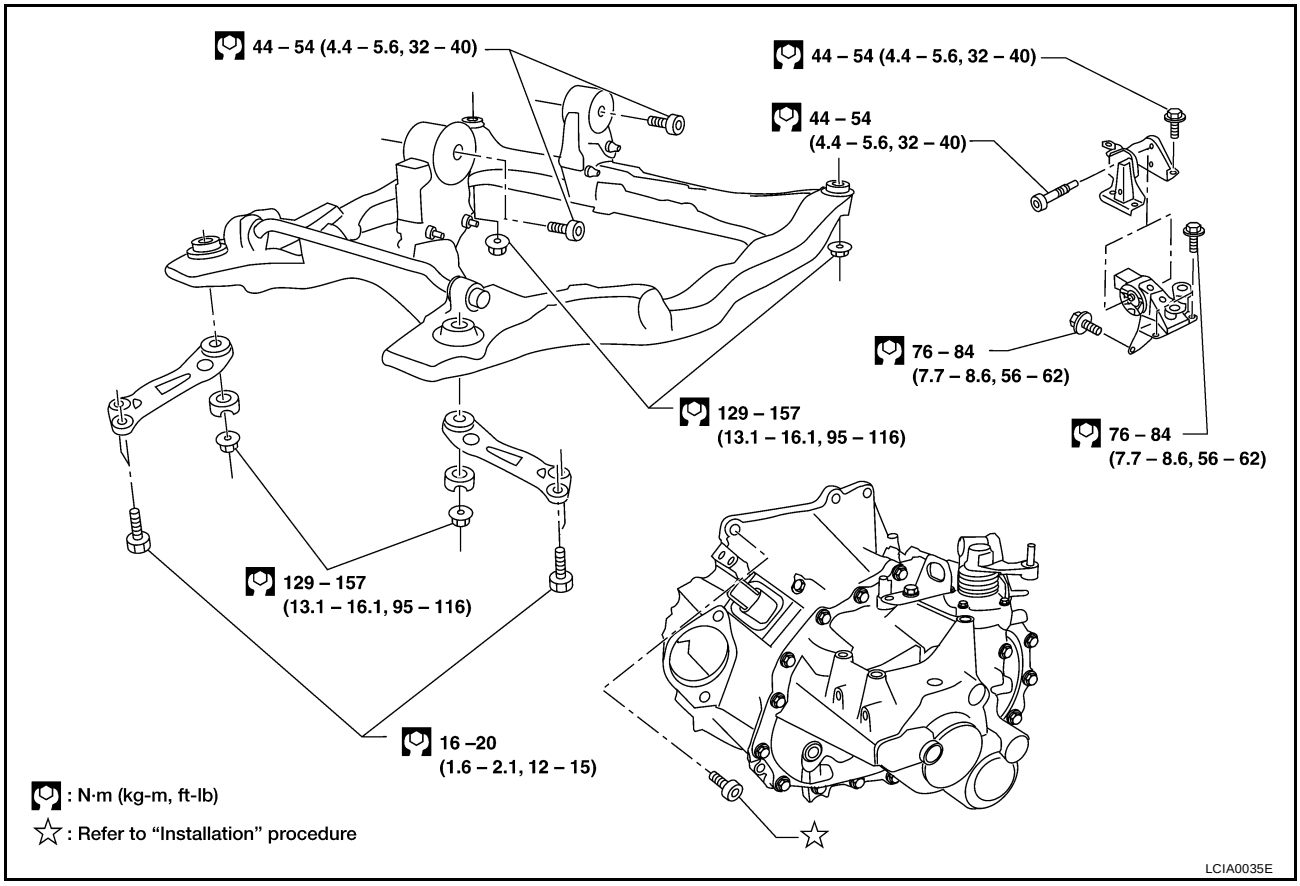

REMOVAL

1. Remove the air cleaner and air duct. Refer to EM-14, "Removal and Installation" (QR25DE), EM-110, "Removal and Installation" (VQ35DE).
2. Remove the battery and battery tray.
3. Remove the air breather hose.
4. Disconnect the clutch operating cylinder and position it aside without disconnecting the hydraulic lines. Refer to CL-10, "Removal and Installation" .

   CAUTION:
   Do not depress clutch pedal during removal procedure.
5. Remove the control cable from the transaxle.
6. Drain gear oil from transaxle.
7. Remove connectors and harnesses for:
   - Speed sensor
   - PNP switch
   - Back-up lamp switch
   - Ground
   - Harness clips
8. Remove the exhaust front tube and hanger bracket using power tool. Refer to EX-3, "Removal and Installation" (QR25DE), EX-6, "Removal and Installation" (VQ35DE).
9. Remove the transaxle vent tube.
10. Remove the drive shafts using power tool. Refer to FAX-11, "Removal and Installation" .
11. Remove the starter motor, using power tool. Refer to SC-23, "Removal and Installation" .
12. Place a jack under the transaxle.

CAUTION:
When setting jack, be careful not to bring it into contact with the switch.

13. Disconnect LH transaxle mounting insulator.
14. Remove the engine insulator and the engine mount bracket using power tool.
15. Remove suspension member.
    - Refer to FSU-14, "Removal and Installation" .
16. Support engine by placing a jack under oil pan.
17. Remove the bolts that mount the engine to the transaxle using power tool.
18. Remove the transaxle from the vehicle.

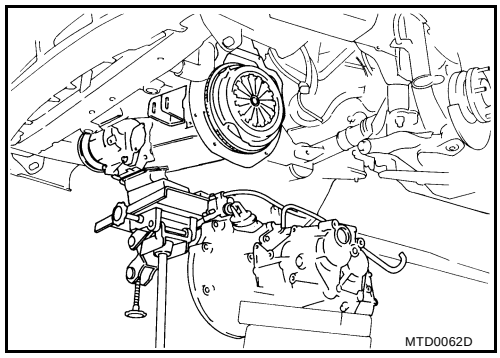

INSTALLATION

Installation is the reverse order of removal.

- When installing the transaxle to the engine, use the tightening torque and sequence shown below:

CAUTION:
When installing transaxle, be careful not to bring transaxle input shaft into contact with the clutch cover.

QR engine models:

Bolt No.	1	2	3	4	5	6	7	8	9	10
" ℓ " mm (in)	40	82	47	47	52	40	40	40	30	30
Tightening torque N·m (kg-m, ft-lb)	30 - 40 (3.1 - 4.1, 22 - 29)	70 - 80 (7.1 - 8.1, 52 - 59)				30 - 40 (3.1 - 4.1, 22 - 29)				

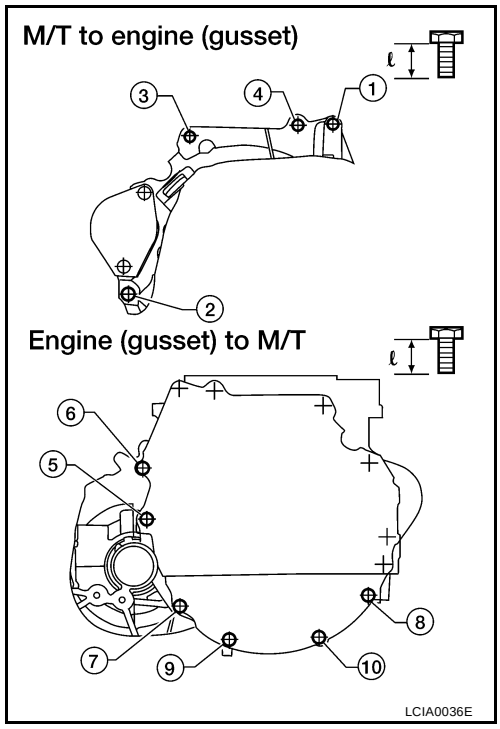

VQ engine models:

Bolt No.	1	2	3	4	5	6	7	8	9	10
"ℓ" mm (in)	52	113	113	52	52	52	40	40	40	40
Tightening torque N·m (kg-m, ft-lb)	70 - 80 (7.1 - 8.1, 52 - 59)						30 - 40 (3.1 - 4.1, 22 - 29)			

- After installation, check oil level, and look for leaks and loose mechanisms.

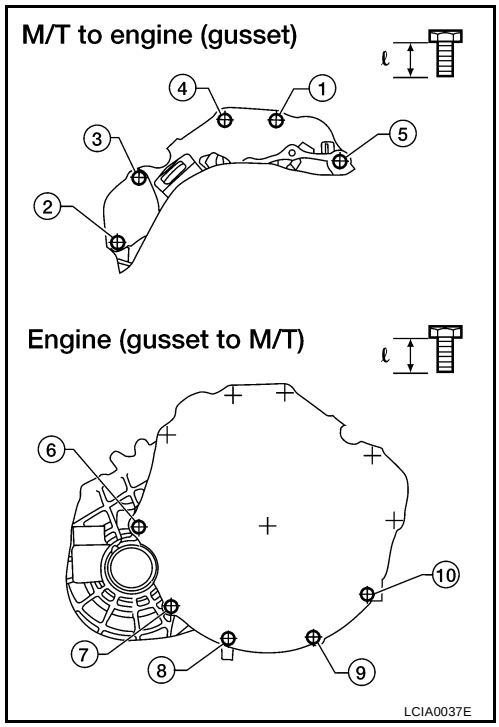

Component Parts

ECS004Q7

CASE AND HOUSING COMPONENTS

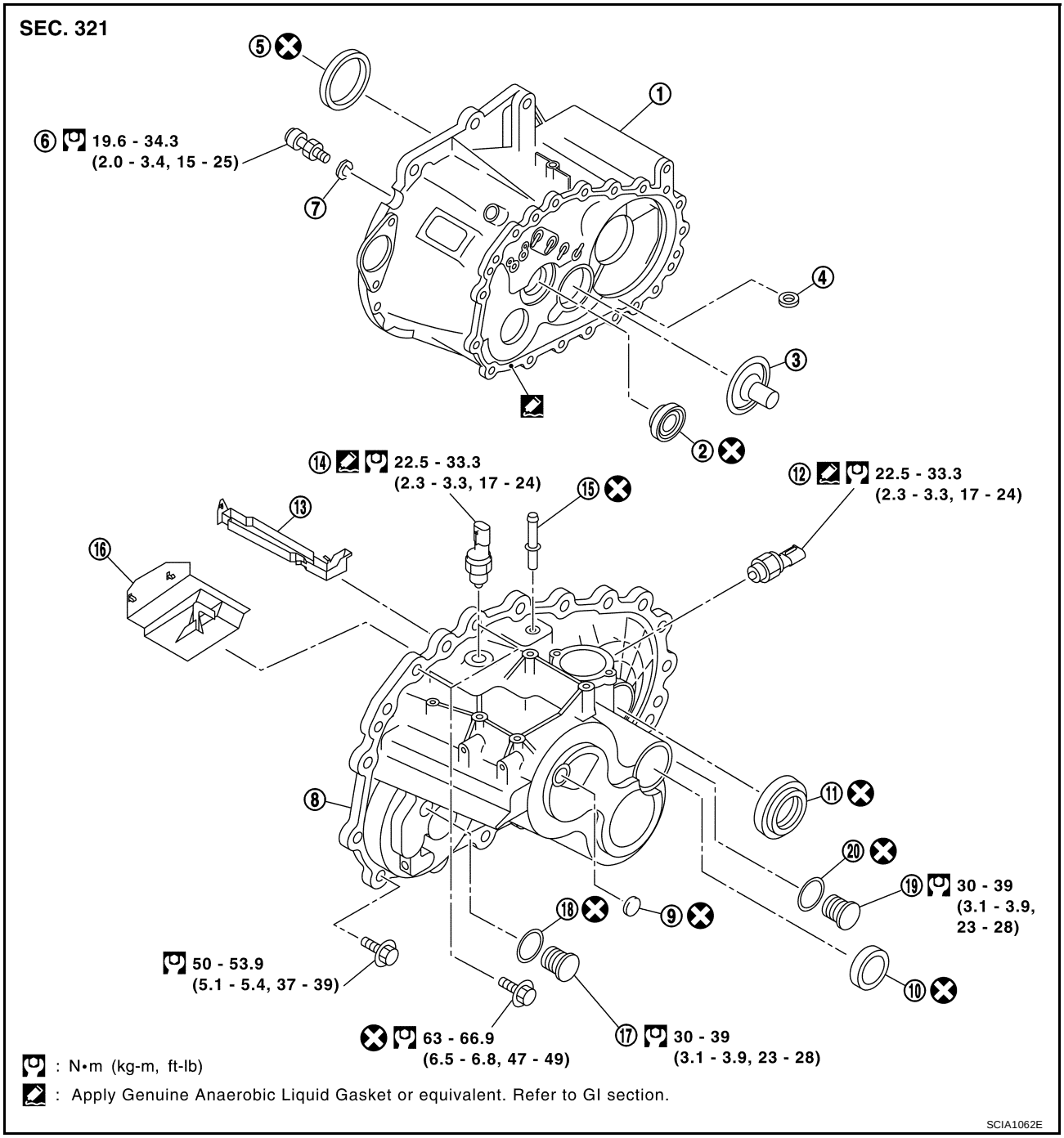

1.	Clutch housing	2.	Input shaft oil seal	3.	Oil channel
4.	Magnet	5.	Differential oil seal	6.	Ball pin
7.	Washer	8.	Transaxle case	9.	Welch plug
10.	Bore plug	11.	Differential oil seal	12.	Park/Neutral position switch
13.	Oil gutter	14.	Back-up lamp switch	15.	Air breather tube
16.	Baffle plate	17.	Filler plug	18.	Gasket
19.	Drain plug	20.	Gasket		

GEAR COMPONENTS

SEC. 322

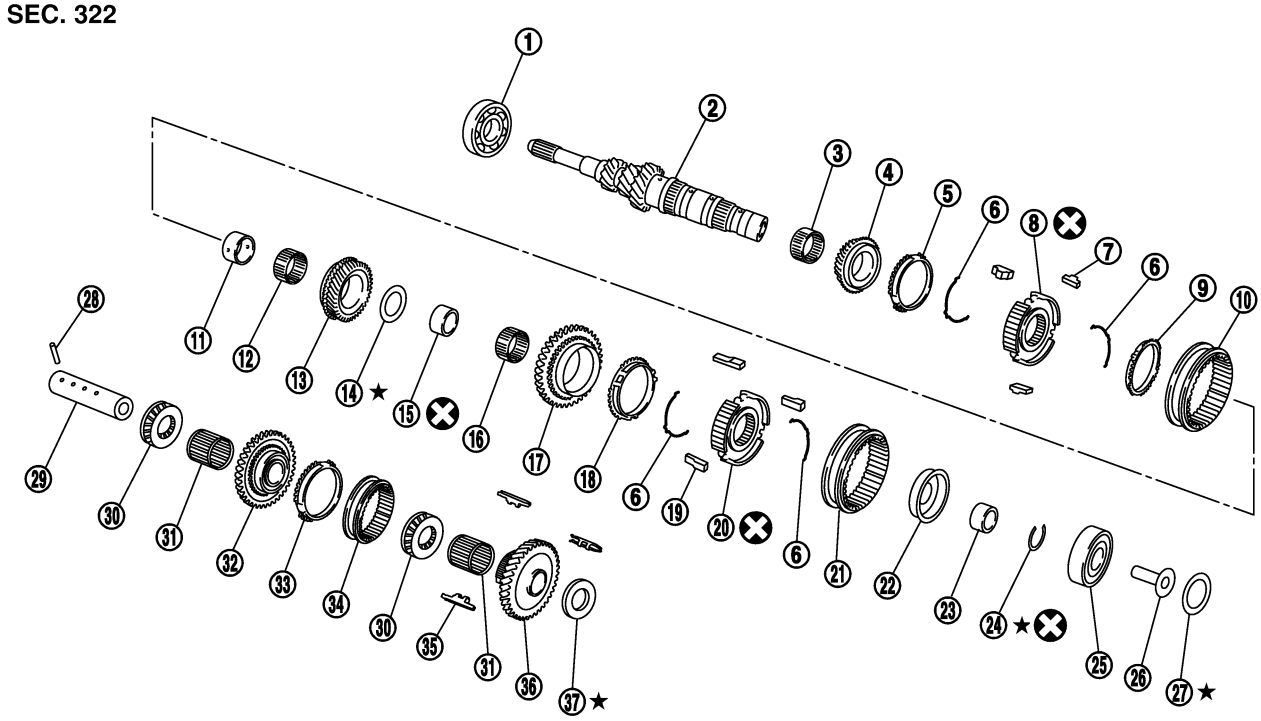

★ : Select proper thickness.

NOTE :

- Apply gear oil to gears, shafts, synchronizers and bearings when assembling.
- Replace ⑧ and ⑩ , ⑳ and ㉑ as a set.

SCIA0385E

1.	Input shaft front bearing	2.	Input shaft	3.	Needle bearing
4.	3rd input gear	5.	3rd baulk ring	6.	Spread spring
7.	3rd & 4th shifting insert	8.	3rd & 4th synchronizer hub	9.	4th baulk ring
10.	Bushing	11.	Needle bearing	12.	4th input gear
13.	Thrust washer	14.	Bushing	15.	Needle bearing
16.	5th input gear	17.	5th baulk ring	18.	5th shifting insert
19.	5th synchronizer hub	20.	3rd & 4th coupling sleeve	21.	5th stopper
22.	Input shaft bearing spacer	23.	Snap ring	24.	Input shaft rear bearing
25.	Oil channel	26.	Input shaft rear bearing adjusting shim	27.	Lock pin
28.	Reverse idler shaft	29.	Thrust needle bearing	30.	Needle bearing
31.	Reverse idler gear (Front)	32.	Reverse baulk ring	33.	Reverse coupling sleeve
34.	Insert spring	35.	Reverse idler gear (Rear)	36.	Reverse idler gear adjusting shim
37.	5th coupling sleeve				

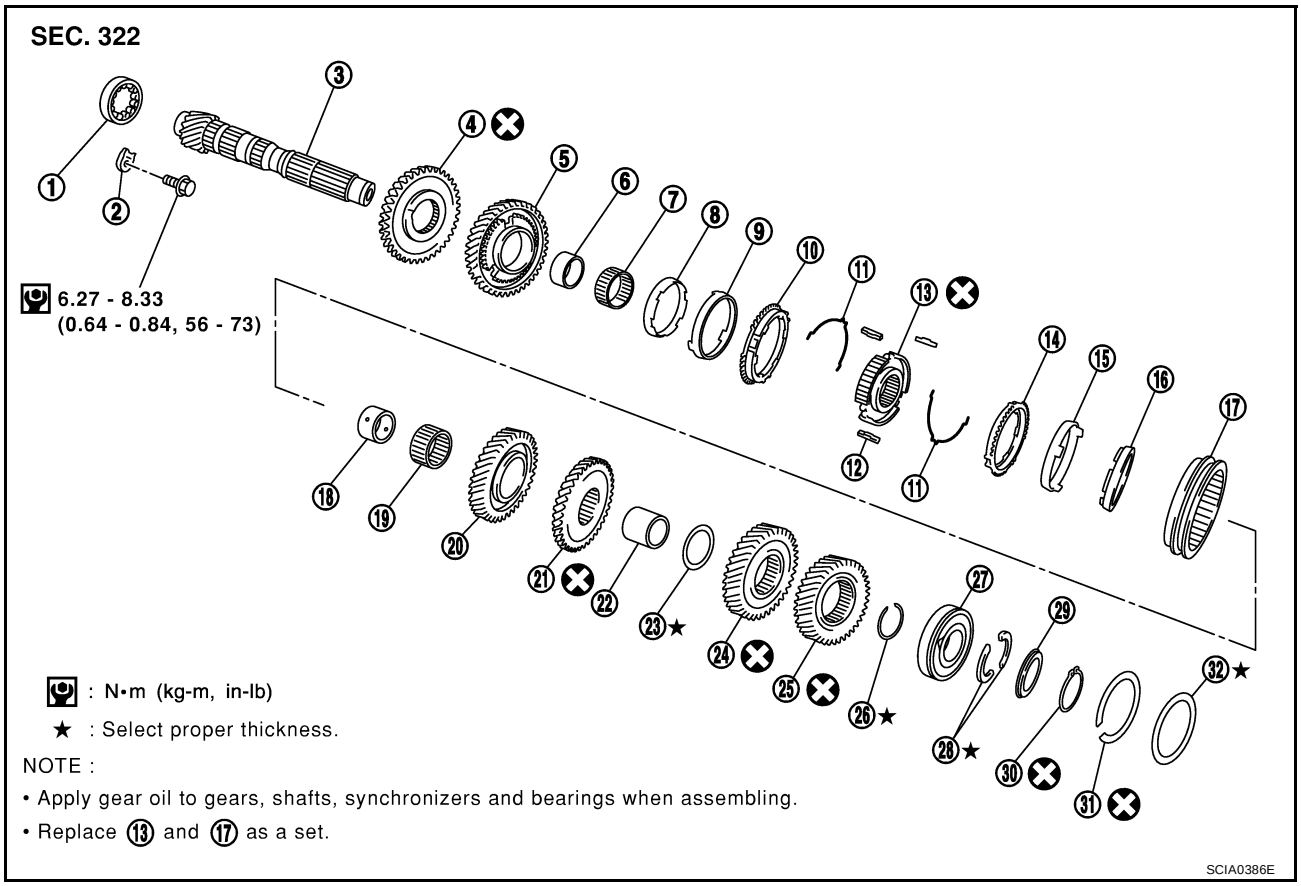

1.	Mainshaft front bearing	2.	Mainshaft bearing retainer	3.	Mainshaft
4.	Reverse main gear	5.	1st main gear	6.	Bushing
7.	Needle bearing	8.	1st inner baulk ring	9.	1st gear synchronizer cone
10.	1st outer baulk ring	11.	Spread spring	12.	1st & 2nd shifting insert
13.	1st & 2nd synchronizer hub	14.	2nd outer baulk ring	15.	2nd gear synchronizer cone
16.	2nd inner baulk ring	17.	1st &2nd coupling sleeve	18.	Bushing
19.	Needle bearing	20.	2nd main gear	21.	3rd main gear
22.	3rd &4th mainshaft spacer	23.	4th main adjusting shim	24.	4th main gear
25.	5th main gear	26.	Snap ring	27.	Mainshaft rear bearing
28.	Mainshaft C ring	29.	C ring holder	30.	Snap ring
31.	Snap ring	32.	Mainshaft rear bearing adjusting shim		

SHIFT CONTROL COMPONENTS

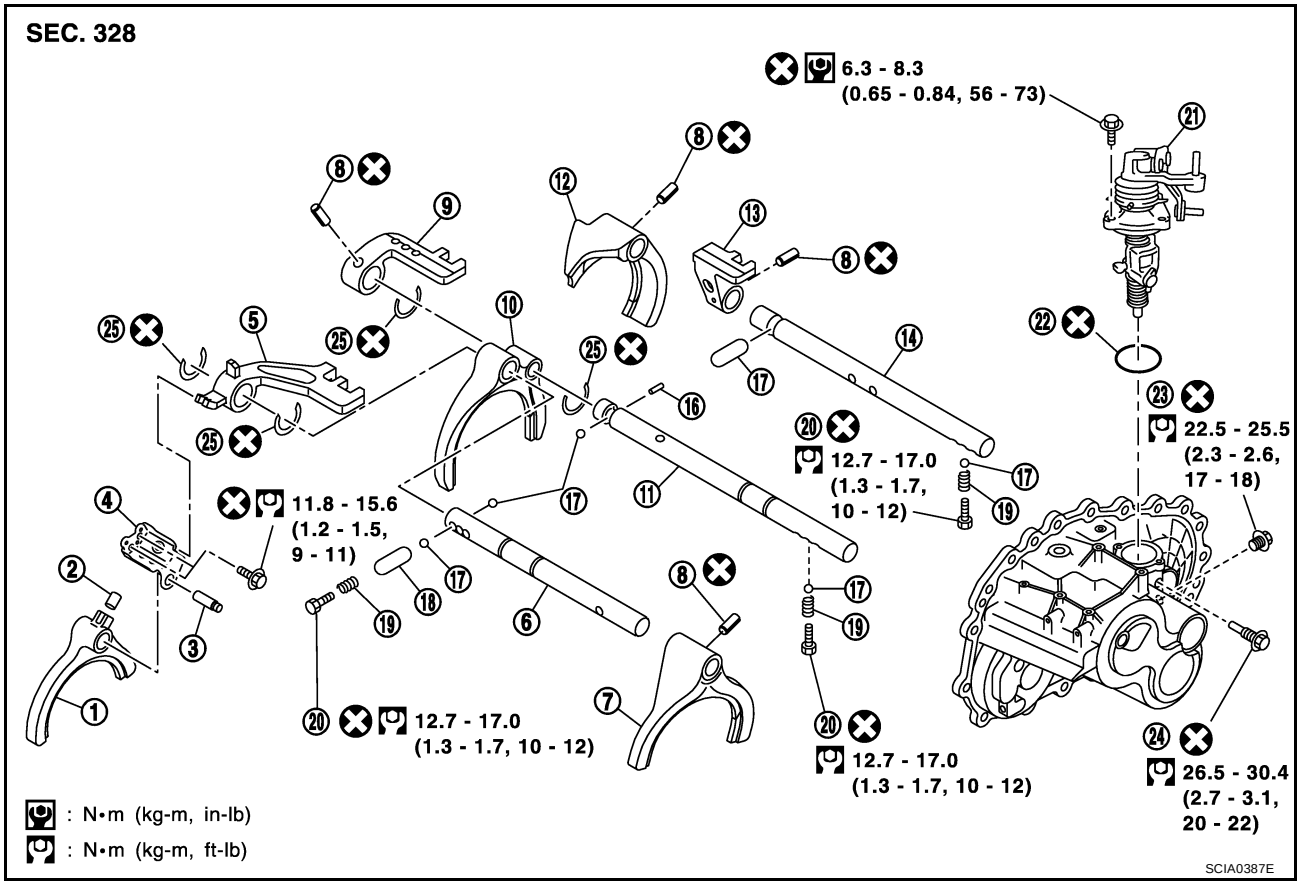

1.	Reverse shift fork	2.	Shifter cap	3.	Reverse fork rod
4.	Reverse lever assembly	5.	5th & reverse bracket	6.	5th & reverse fork rod
7.	5th shift fork	8.	Retaining pin	9.	3rd & 4th bracket
10.	3rd & 4th shift fork	11.	3rd & 4th fork rod	12.	1st & 2nd shift fork
13.	1st & 2nd bracket	14.	1st & 2nd fork rod	15.	Shift check sleeve
16.	Inter lock pin	17.	Check ball	18.	Shift check sleeve
19.	Check spring	20.	Check plug	21.	Control rod assembly
22.	O ring	23.	Shift check	24.	Stopper bolt
25.	Stopper ring				

FINAL DRIVE COMPONENTS

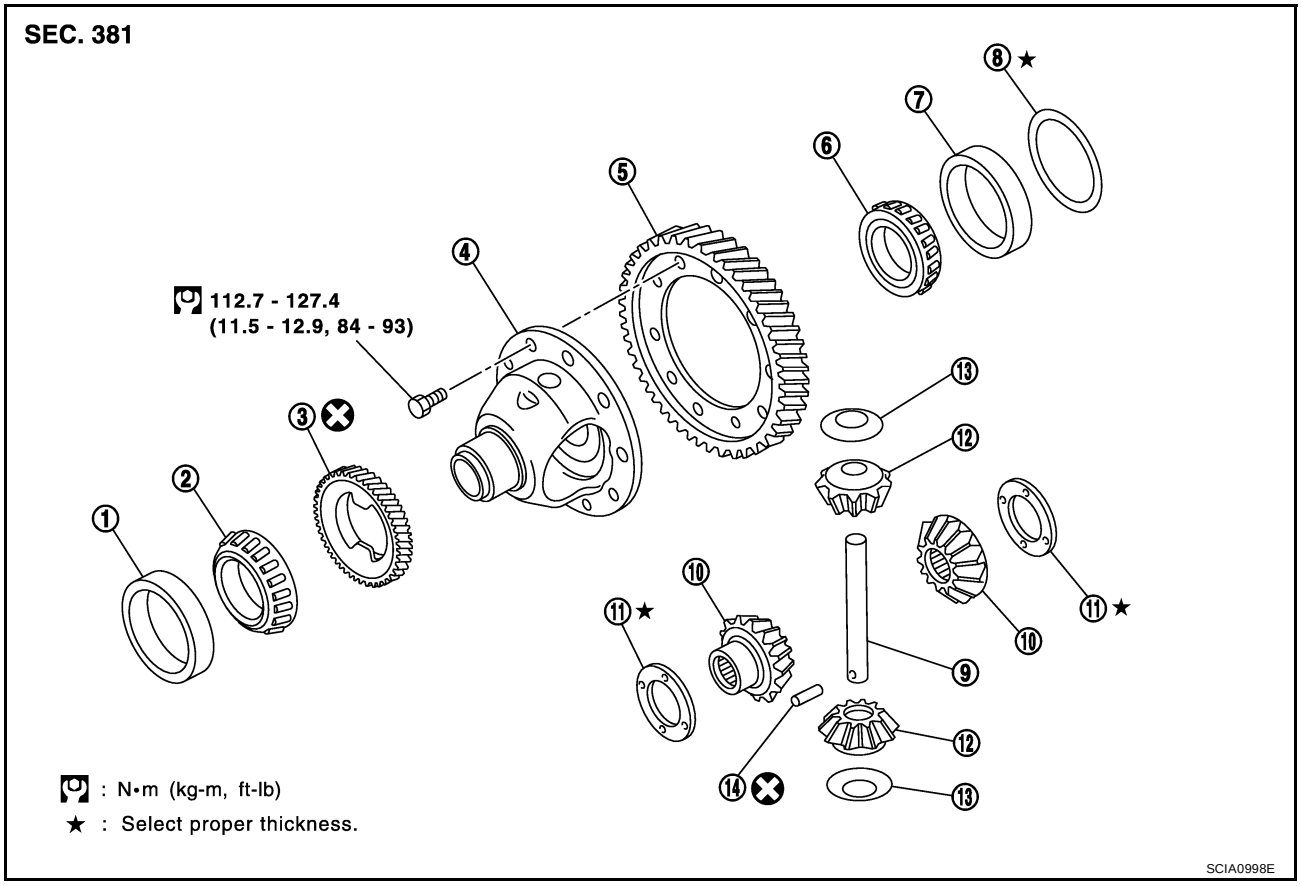

1.	Differential side bearing outer race	2.	Differential side bearing	3.	Speedometer drive gear
4.	Differential case	5.	Final gear	6.	Differential side bearing
7.	Differential side bearing outer race	8.	Differential side bearing adjusting shim	9.	Pinion mate shaft
10.	Side gear	11.	Side gear thrust washer	12.	Pinion mate gear
13.	Pinion mate gear washer	14.	Retaining pin		

Disassembly and Assembly

ECS004Q8

DISASSEMBLY

1. Remove drain plug and filler plug.
2. Remove park/neutral position switch and back-up lamp switch.
3. After removing shift check and stopper bolt, remove control assembly.

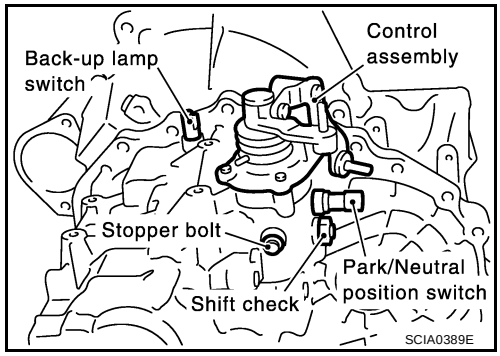

4. Remove check plugs (3 pieces), check springs (3 pieces), check balls (3 pieces) and shift check sleeve (1 piece).

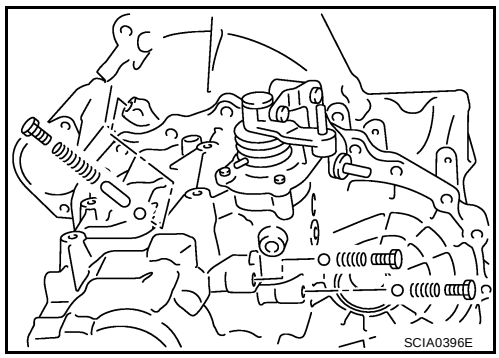

5. Remove transaxle case fixing bolts.
6. Remove bore plug.

   CAUTION:
   Be careful not to damage transaxle case.
7. While spreading the snap ring of mainshaft rear bearing located at bore plug hole, remove transaxle case.
8. Remove oil gutter, baffle plate.
9. Remove snap ring, mainshaft rear bearing adjusting shim and input shaft rear bearing adjusting shim from transaxle case.

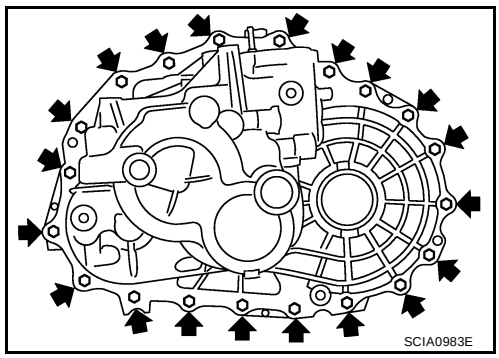

10. Remove differential side bearing outer race (transaxle case side) and then adjust shim.

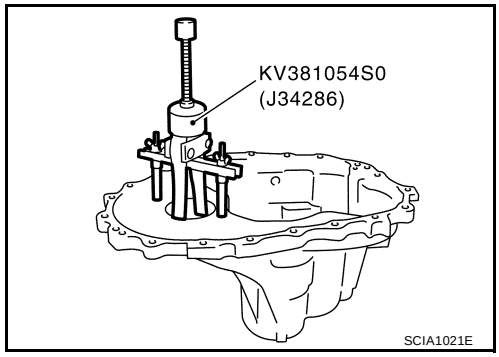

11. Remove differential oil seal.
12. Remove magnet from clutch housing.

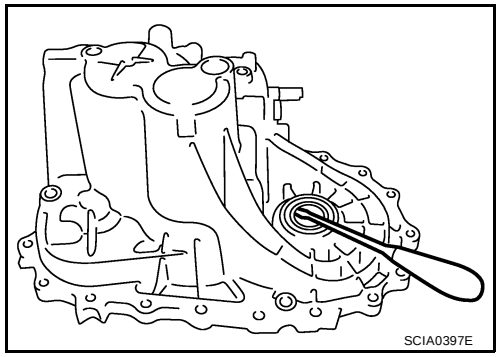

13. With shift lever in 5th position, remove bracket bolts from reverse lever assembly. Lift reverse lever assembly to remove.

    CAUTION:
    Be careful not to lose shifter cap.
14. Pull out reverse fork rod then remove reverse shift fork.

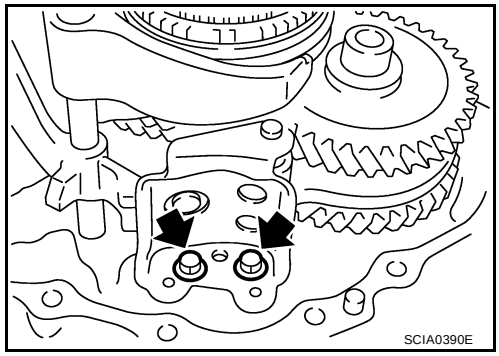

15. Shift 3rd & 4th fork rod to 3rd position. Remove retaining pin of 5th shift fork using pin punch.

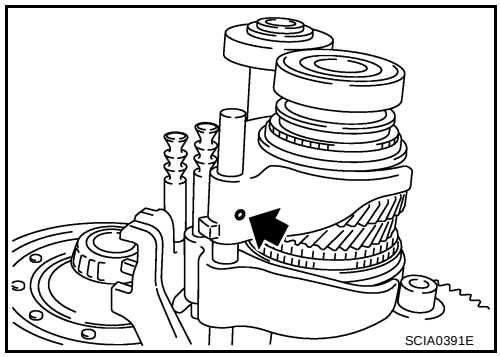

16. Remove stopper rings for 5th & reverse bracket.
17. Pull out 5th & reverse fork rod and remove 5th shift fork and 5th & reverse bracket.
18. Remove check balls (2 pieces) and inter lock pin.

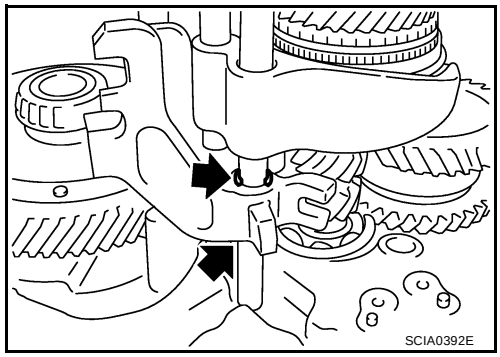

19. Remove retaining pin of 3rd & 4th bracket using pin punch.
20. Remove stopper rings for 3rd & 4th shift fork.
21. Pull out 3rd & 4th fork rod and remove 3rd & 4th shift fork and bracket.
22. Remove shift check sleeve from clutch housing.

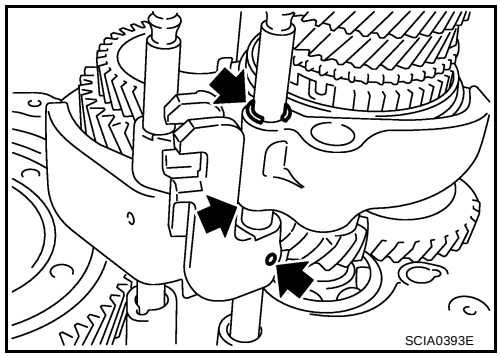

23. Remove retaining pin of 1st & 2nd shift fork using pin punch.
24. Pull out 1st & 2nd with bracket.
25. Remove 1st & 2nd shift fork.
26. Remove retaining pin of 1st & 2nd bracket using pin punch and separate 1st & 2nd fork rod and bracket.

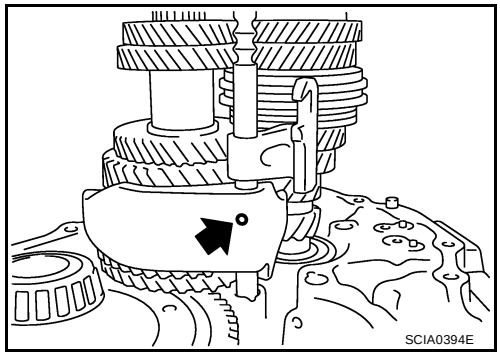

27. Remove gear components from clutch housing in the following procedure.

a. While tapping input shaft with plastic hammer, remove input shaft assembly, mainshaft assembly and reverse idler gear assembly as a set.

CAUTION:
Always withdraw mainshaft straight out. Failure to do so can damage resin oil channel on clutch housing side.

b. Remove final drive assembly.

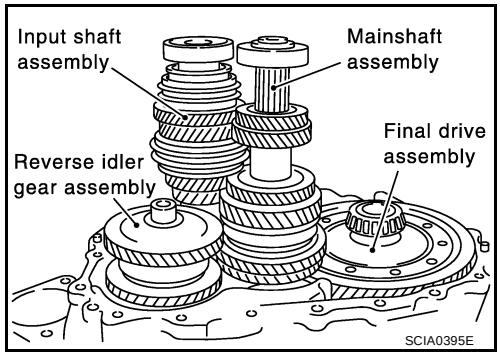

28. Remove bearing retainer and then mainshaft front bearing.
29. Remove oil channel on mainshaft side.
30. Remove differential oil seal.
31. Remove differential side bearing outer race (clutch housing side).

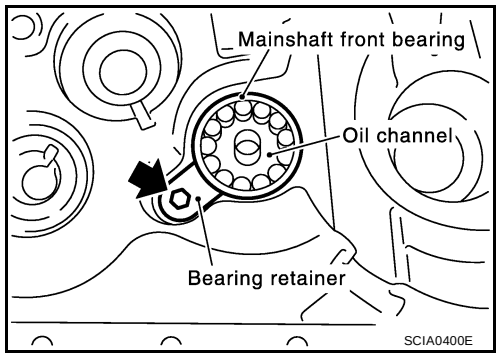

32. Remove input shaft oil seal.

CAUTION:
Be careful not to damage clutch housing.

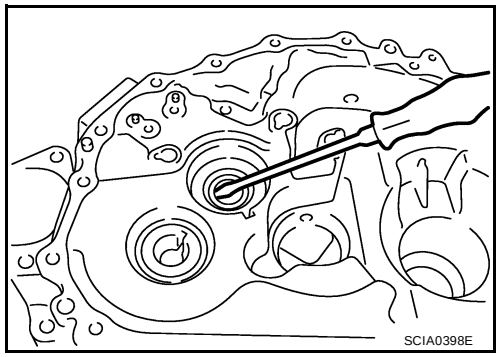

ASSEMBLY

1. Using a drift, install input shaft oil seal.

CAUTION:
Oil seals are not reusable. Never reuse them.

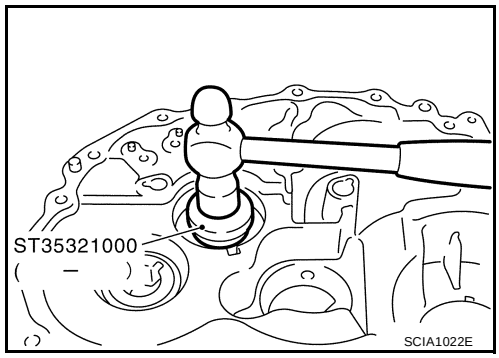

2. Using a drift, install differential oil seal.

CAUTION:
Oil seals are not reusable. Never reuse them.

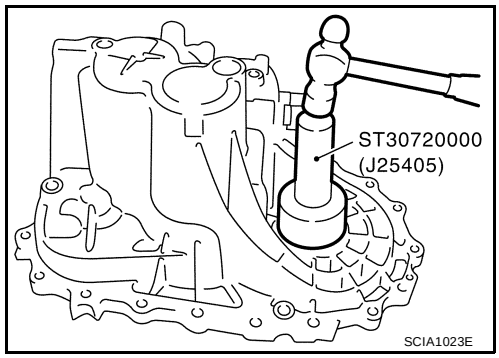

3. Install oil channel on mainshaft side.

CAUTION:
Be careful with orientation of installation.

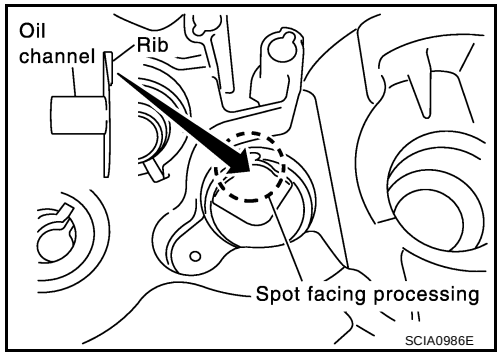

4. Using a drift, install mainshaft front bearing.

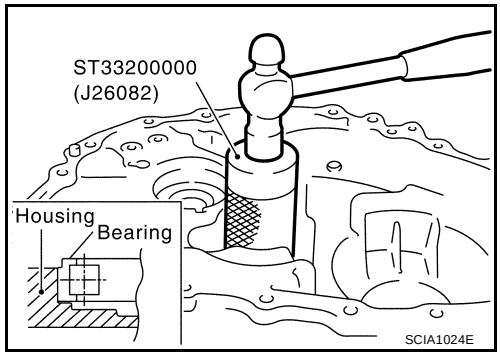

5. Install bearing retainer.

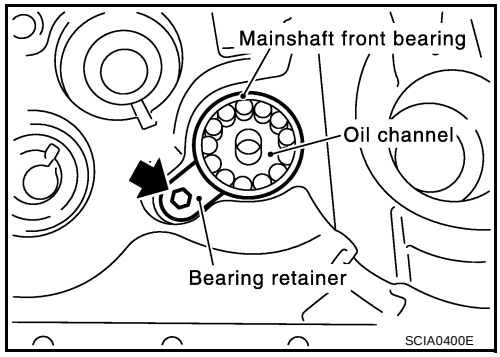

6. Install differential side bearing outer race.

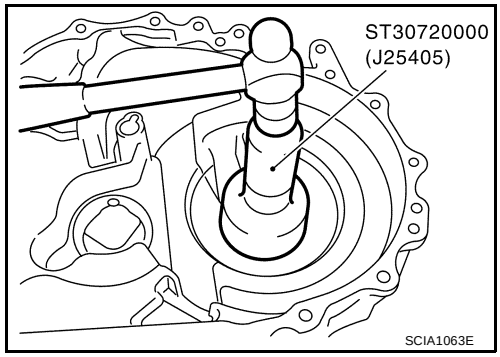

7. Install final drive assembly into clutch housing.

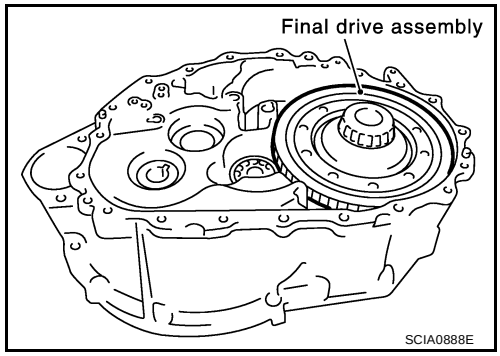

8. Install input shaft assembly, mainshaft assembly, and reverse idler gear assembly into clutch housing.

   CAUTION:
   Be sure not to damage input shaft oil seal.

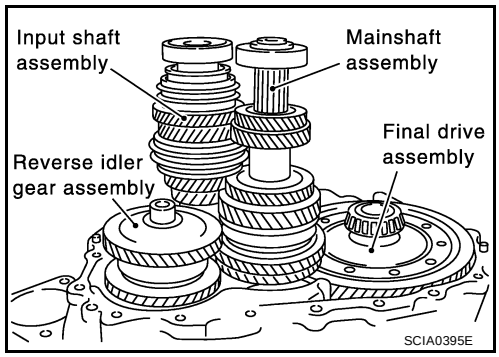

9. Install 1st-2nd fork rod bracket onto 1st-2nd fork rod, and then install retaining pin.

   CAUTION:
   Retaining pins are not reusable. Never reuse them.

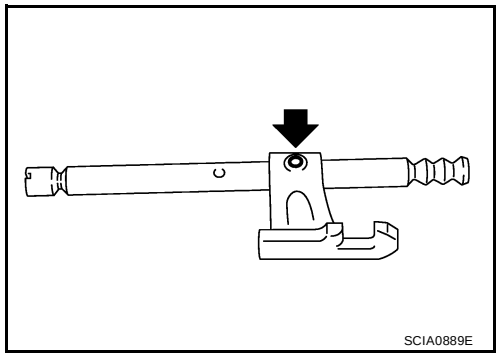

10. Install 1st-2nd fork rod and 1st-2nd shift fork, and then install retaining pin.

    CAUTION:
    Retaining pins are not reusable. Never reuse them.

11. Install shift check sleeve.

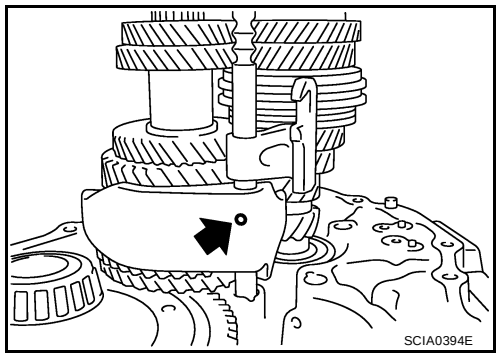

12. Install 3rd-4th bracket, 3rd-4th shift fork, and 3rd-4th fork rod with inter lock pin.
13. Install stopper ring onto 3rd-4th shift fork.

    CAUTION:
    Stopper rings are not reusable. Never reuse them.

14. Install retaining pin onto 3rd-4th bracket.

    CAUTION:
    Retaining pins are not reusable. Never reuse them.

15. Install 2 check balls.

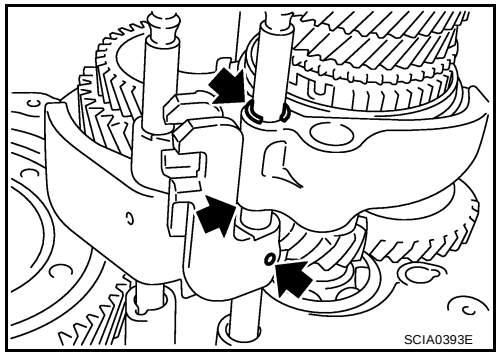

16. Install 5th-reverse bracket, 5th shift fork, and 5th-reverse fork rod.
17. Install stopper ring onto 5th-reverse bracket.

    CAUTION:
    Stopper rings are not reusable. Never reuse them.

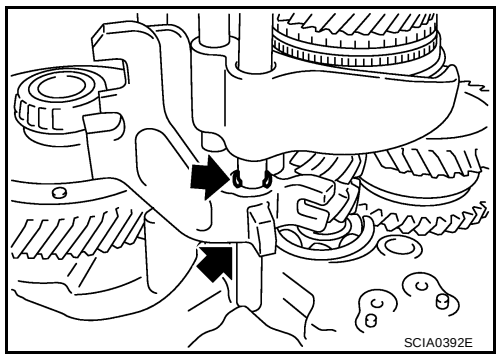

18. Install retaining pin onto 5th shift fork.

CAUTION:
Retaining pins are not reusable. Never reuse them.

19. Install reverse shift fork and reverse fork rod.
20. Install reverse lever assembly following procedures below.

a. Install shifter cap onto reverse lever assembly cam, and then install them onto reverse shift fork.

CAUTION:
Do not drop shifter cap.

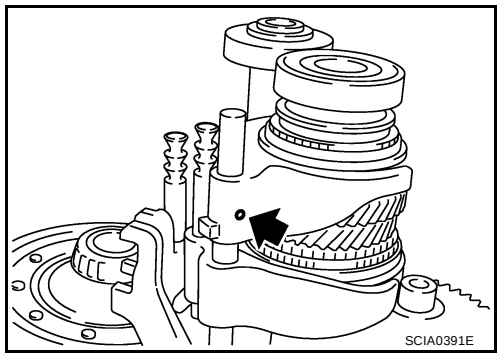

b. While lifting reverse shift fork, align cam with 5th-reverse bracket.

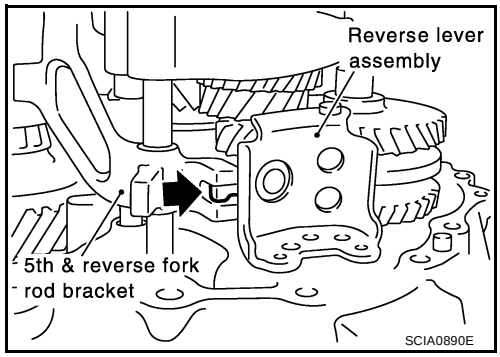

c. Tighten mounting bolts to specified torque, and then install reverse lever assembly.

d. Install snap ring.

21. Install the magnet onto clutch housing.
22. Install selected input shaft adjusting shim onto input shaft.
    - For selection of adjusting shims, refer to MT-31, "INPUT-SHAFT END PLAY" .
23. Install baffle plate and oil gutter.
24. Install transaxle case following procedures below.

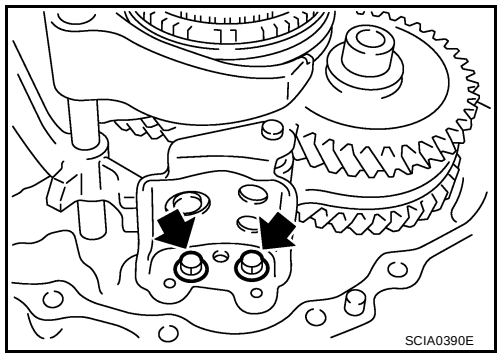

a. Install selected mainshaft rear bearing adjusting shim into transaxle case.
    - For selection of adjusting shims, refer to MT-33, "MAINSHAFT END PLAY" .

b. Temporarily install snap ring of mainshaft rear bearing into transaxle case.

CAUTION:
Do not reuse the snap ring.

c. Apply Anaerobic Liquid Gasket, Three Bond TB1215, Loctite Part No. 51813 or equivalent to mating surfaces of transaxle case and clutch housing. Refer to GI-42, "Recommended Chemical Products and Sealants" .

CAUTION:
Remove old sealant adhering to mounting surfaces. Also remove any moisture, oil, or foreign material adhering to application and mounting surfaces.

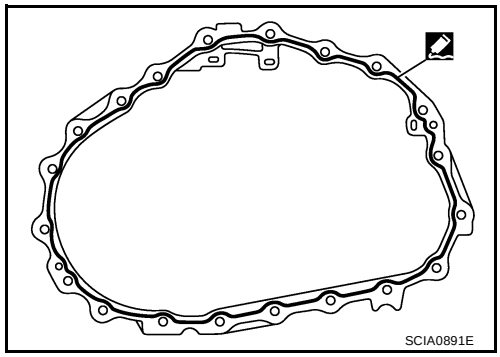

d. With snap ring of mainshaft rear bearing temporarily installed, place transaxle case over clutch housing.

e. Install control assembly.

CAUTION:
Do not reuse the O-ring.

f. Install shift check and stopper bolt.

CAUTION:
Shift check and stopper bolt are not reusable. Never reuse them.

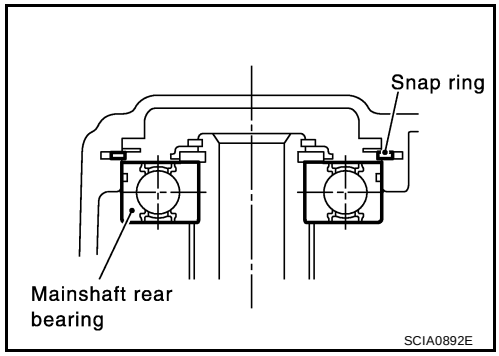

g. Through bore plug mounting hole, with snap ring stretched, move shift lever of striking rod assembly to 2nd speed, and lift up mainshaft assembly.

h. Securely install snap ring onto mainshaft rear bearing.

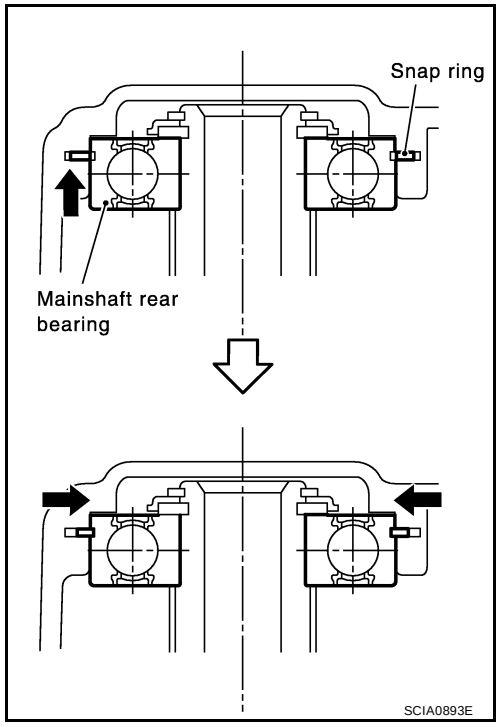

i. Tighten mounting bolts.

Bolt A:

: 50.0 - 53.9 N·m (5.1 - 5.4 kg-m, 37 - 39 ft-lb)

Bolt B:

: 63.0 - 66.9 N·m (6.5 - 6.8 kg-m, 47 - 49 ft-lb)

CAUTION:
Always replace bolts B as they are self-sealing bolts.

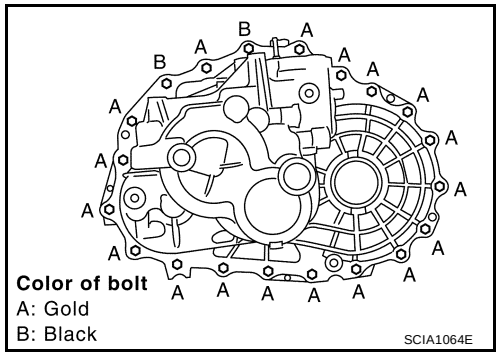

25. Using a drift, install bore plug.

CAUTION:
Bore plugs are not reusable. Never reuse them.

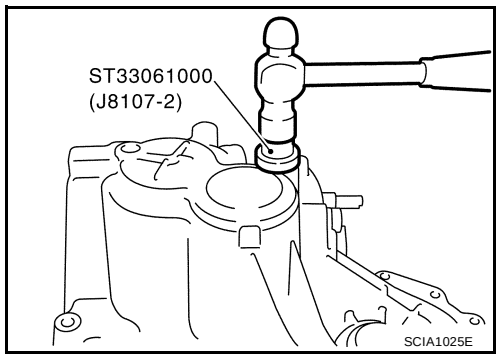

26. Install 1 shift check sleeve, 3 check balls, 3 check springs, and 3 check ball plugs.

CAUTION:
Check ball plugs are not reusable. Never reuse them.

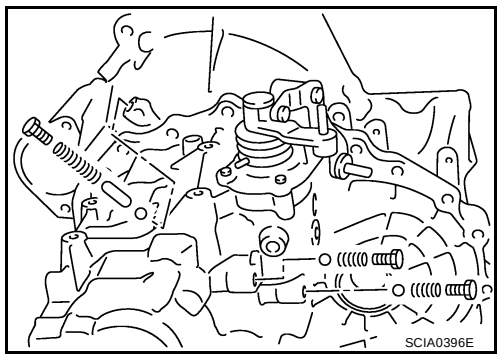

27. Apply Anaerobic Liquid Gasket, Three Bond TB1215, Loctite Part No. 51813 or equivalent to threads of neutral switch and reverse lamp switch. Then install them into transaxle case. Refer to GI-42, "Recommended Chemical Products and Sealants" .
28. Install gaskets onto drain plug and filler plug, and then install them into transaxle case.

CAUTION:
- **Gaskets are not reusable. Never reuse them.**
- **After oil is filled, tighten filler plug to specified torque.**

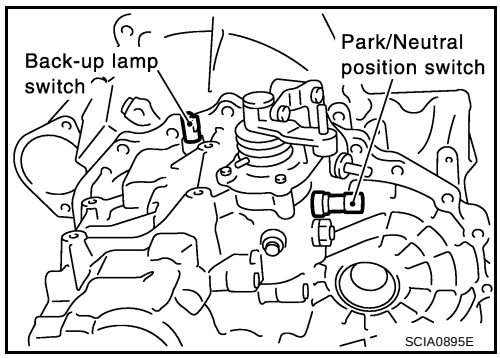

Adjustment

ECS004Q9

INPUTSHAFT END PLAY

- When adjusting input shaft end play, select adjusting shim for input shaft bearing. To select adjusting shim, measure clearance between transaxle case and input shaft rear bearing.
- Calculate dimension "O" (thickness of adjusting shim) using the following procedure to satisfy specification of end play for input shaft rear bearing.

End play : 0 - 0.06 mm (0 - 0.0024 in)

Dimension"O" = (O_1 - O_2) + End play

O : Thickness of adjusting shim

O_1 : Distance between transaxle case end face and mounting face of adjusting shim

O_2 : Distance between clutch housing case end face and end face of input shaft rear bearing

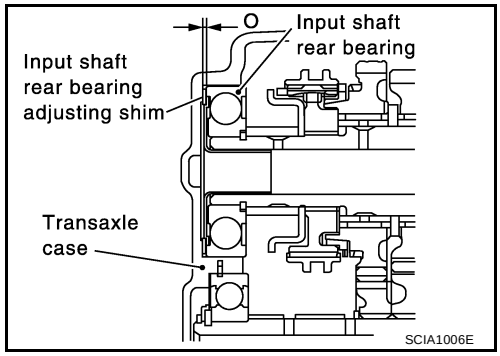

Adjusting Shim

Shim thickness	Part number	Shim thickness	Part number	Shim thickness	Part number
0.40 mm (0.0157 in)	32225 8H500	0.88 mm (0.0346 in)	32225 8H512	1.36 mm (0.0520 in)	32225 8H524
0.44 mm (0.0173 in)	32225 8H501	0.92 mm (0.0362 in)	32225 8H513	1.40 mm (0.0551 in)	32225 8H560
0.48 mm (0.0189 in)	32225 8H502	0.96 mm (0.0378 in)	32225 8H514	1.44 mm (0.0567 in)	32225 8H561
0.52 mm (0.0205 in)	32225 8H503	1.00 mm (0.0396 in)	32225 8H515	1.48 mm (0.0583 in)	32225 8H562
0.56 mm (0.0220 in)	32225 8H504	1.04 mm (0.0409 in)	32225 8H516	1.52 mm (0.0598 in)	32225 8H563
0.60 mm (0.0236 in)	32225 8H505	1.08 mm (0.0425 in)	32225 8H517	1.56 mm (0.0614 in)	32225 8H564
0.64 mm (0.0252 in)	32225 8H506	1.12 mm (0.0441 in)	32225 8H518	1.60 mm (0.0630 in)	32225 8H565
0.68 mm (0.0268 in)	32225 8H507	1.16 mm (0.0457 in)	32225 8H519	1.64 mm (0.0646 in)	32225 8H566
0.72 mm (0.0283 in)	32225 8H508	1.20 mm (0.0472 in)	32225 8H520	1.68 mm (0.0661 in)	32225 8H567
0.76 mm (0.0299 in)	32225 8H509	1.24 mm (0.0488 in)	32225 8H521	1.72 mm (0.0677 in)	32225 8H568
0.80 mm (0.0315 in)	32225 8H510	1.28 mm (0.0504 in)	32225 8H522		
0.84 mm (0.0331 in)	32225 8H511	1.32 mm (0.0520 in)	32225 8H523		

CAUTION:
Only 1 adjusting shim can be selected.

1. Using depth micrometer and straight edge, measure dimension "O_1 " between transaxle case end face and mounting face of adjusting shim.

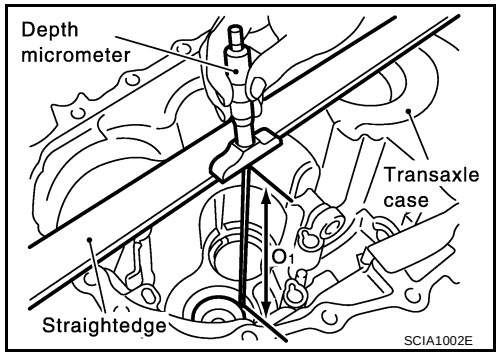

2. Using depth micrometer and straight edge as shown in the figure, measure dimension "O_2 " between clutch housing case end face and end face of input shaft rear bearing.
3. Install selected input shaft rear bearing adjusting shim onto input shaft.

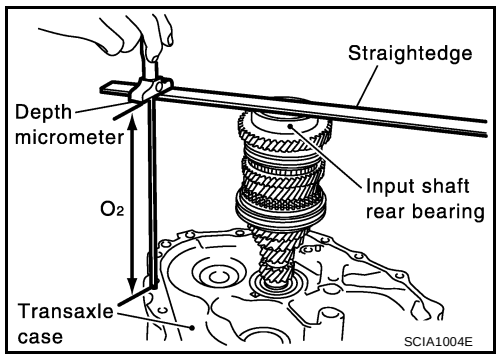

DIFFERENTIAL SIDE BEARING PRELOAD

- When adjusting differential side bearing preload, select adjusting shim for differential side bearing. To select adjusting shim, measure clearance “L” between transaxle case and differential side bearing outer race.
- Calculate dimension “L” (thickness of adjusting shim) using the following procedure to satisfy specification of preload for differential side bearing.

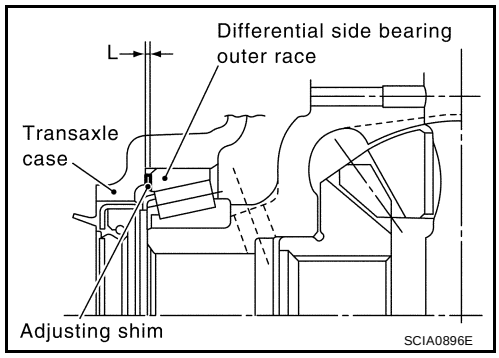

Preload : 0.15 - 0.21 mm (0.0059 - 0.0083 in)

Dimension“L” = (L_1 - L_2) + Preload

L : Thickness of adjusting shim

L_1 : Distance between clutch housing case end face and mounting face of adjusting shim

L_2 : Distance between differential side bearing and transaxle case

Adjusting Shim

Shim thickness	Part number
0.48 mm (0.0189 in)	31438 80X00
0.52 mm (0.0205 in)	31438 80X01
0.56 mm (0.0220 in)	31438 80X02
0.60 mm (0.0236 in)	31438 80X03
0.64 mm (0.0252 in)	31438 80X04
0.68 mm (0.0268 in)	31438 80X05
0.72 mm (0.0283 in)	31438 80X06
0.76 mm (0.0299 in)	31438 80X07
0.80 mm (0.0315 in)	31438 80X08
0.84 mm (0.0331 in)	31438 80X09
0.88 mm (0.0346 in)	31438 80X10
0.92 mm (0.0362 in)	31438 80X11

CAUTION:

Up to 2 adjusting shims can be selected.

1. Using dial gauge and scale, measure dimension "L_1 " between clutch housing case end face and mounting face of adjusting shim.
2. Install outer race onto differential side bearing on final gear side. Holding lightly the outer race horizontally by hand, rotate final gear five times or more (for smooth movement of bearing roller).

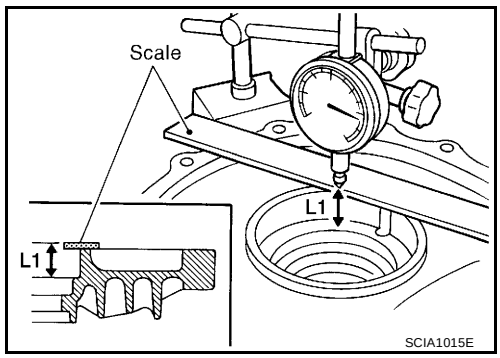

3. Using dial gauge and scale as shown in the figure, measure dimension "L_2 " between differential side bearing outer race and transaxle case end face.

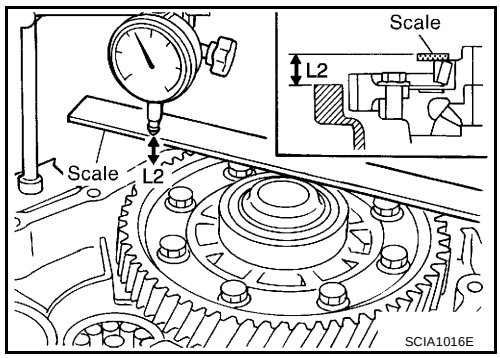

4. Install selected adjusting shim and then differential side bearing outer race.

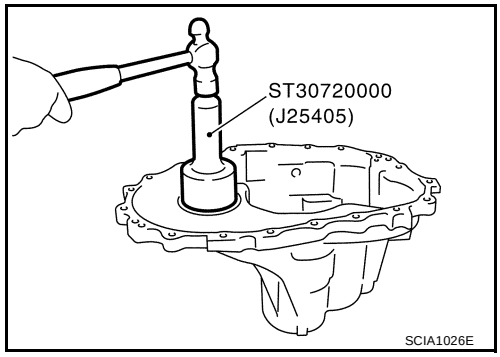

MAINSHAFT END PLAY

- When adjusting mainshaft end play, select adjusting shim for mainshaft rear bearing. To select adjusting shim, measure clearance “M” between transaxle case and mainshaft rear bearing.
- Calculate dimension "P" (thickness of adjusting shim) using the following procedure to satisfy specification of end play for mainshaft rear bearing.

End play : 0 - 0.06 mm (0 - 0.0024 in)

Dimension“P” = "M" + End play

P : Thickness of adjusting shim

M : Distance between mainshaft rear bearing and transaxle case

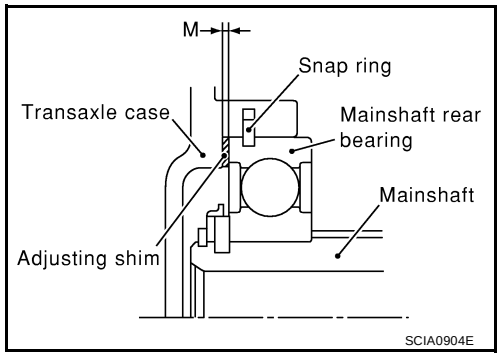

Adjusting Shim

Shim thickness	Part number
0.44 mm (0.0173 in)	32238 8H510
0.48 mm (0.0189 in)	32238 8H511
0.52 mm (0.0205 in)	32238 8H512
0.56 mm (0.0220 in)	32238 8H513
0.60 mm (0.0236 in)	32238 8H514
0.64 mm (0.0252 in)	32238 8H515
0.68 mm (0.0268 in)	32238 8H516
0.72 mm (0.0283 in)	32238 8H517
0.76 mm (0.0299 in)	32238 8H518
0.80 mm (0.0315 in)	32238 8H519
0.84 mm (0.0331 in)	32238 8H520
0.88 mm (0.0346 in)	32238 8H521
0.92 mm (0.0362 in)	32238 8H522
0.96 mm (0.0378 in)	32238 8H523
1.00 mm (0.0396 in)	32238 8H524
1.04 mm (0.0409 in)	32238 8H560
1.08 mm (0.0425 in)	32238 8H561

CAUTION:
Only 1 adjusting shim can be selected.

1. Install mainshaft assembly to clutch housing.
2. Install snap ring to transaxle case.
3. Install transaxle case to clutch housing, and temporarily assemble them with fixing bolts. Install temporarily snap ring to mainshaft rear bearing.
4. Install dial gauge to snap ring access hole, and expand snap ring. Lift mainshaft assembly through control assembly installation hole, and push it against transaxle case. This state shall be defined as base. Moving distance of mainshaft assembly, with snap ring fit on main bearing, becomes “M”.

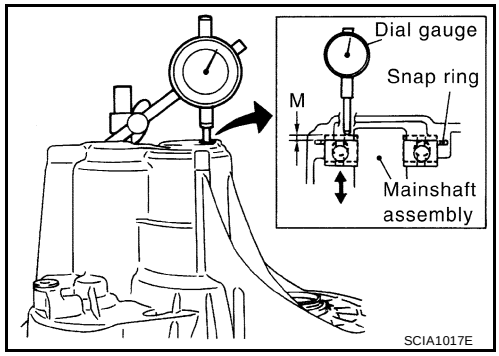

REVERSE IDLER GEAR END PLAY

- When adjusting reverse idler gear end play, select adjusting shim for reverse idler gear. To select adjusting shim, measure clearance between transaxle case and reverse idler gear.
- Calculate dimension "Q" (thickness of adjusting shim) using the following procedure to satisfy specification of end play for reverse idler gear.

End play : 0.04 - 0.14 mm (0.0016 - 0.0055 in)

Dimension“Q” = (Q_1 - Q_2) + End play

Q : Thickness of adjusting shim

Q_1 : Distance between transaxle case end face and mounting face of adjusting shim

Q_2 : Distance between clutch housing case end face and end face of reverse idler gear

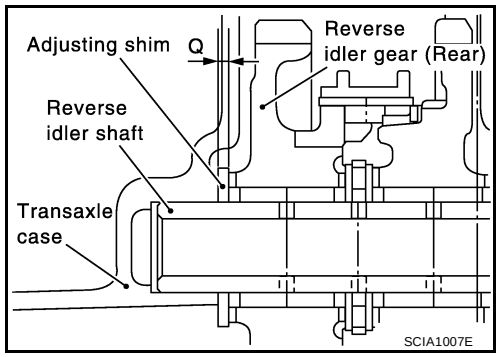

Adjusting Shim

Shim thickness	Part number
1.76 mm (0.0693 in)	32237 8H500
1.84 mm (0.0724 in)	32237 8H501
1.92 mm (0.0756 in)	32237 8H502
2.00 mm (0.0787 in)	32237 8H503
2.08 mm (0.0819 in)	32237 8H504
2.16 mm (0.0850 in)	32237 8H505
2.24 mm (0.0882 in)	32237 8H506
2.32 mm (0.0913 in)	32237 8H507
2.40 mm (0.0945 in)	32237 8H508
2.48 mm (0.0976 in)	32237 8H509
2.56 mm (0.1008 in)	32237 8H510
2.64 mm (0.1039 in)	32237 8H511

CAUTION:

Only 1 adjusting shim can be selected.

1. Using depth micrometer and straight edge, measure dimension "Q_1 " between transaxle case end face and mounting face of adjusting shim.

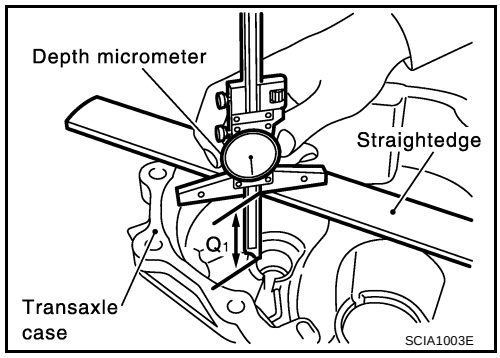

2. Using depth micrometer and straight edge as shown in the figure, measure dimension "Q_2 " between clutch housing case end face and end face of reverse idler gear.
3. Install selected reverse idler gear adjusting shim onto reverse idler gear.

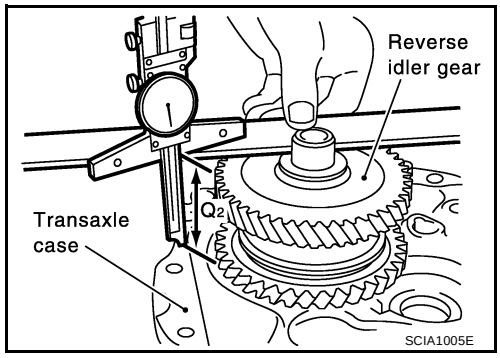

INPUT SHAFT AND GEARS

PFP:32200

Disassembly and Assembly

ECS004QA

DISASSEMBLY

1. Before disassembling, measure end play for 3rd, 4th, and 5th input gears.

   End play standard value

   3rd gear : 0.18 - 0.31 mm (0.0071 - 0.0122 in)

   4th gear : 0.20 - 0.30 mm (0.0079 - 0.0118 in)

   5th gear : 0.06 - 0.16 mm (0.0024 - 0.0063 in)

   CAUTION:

   If measurement is outside the standard range, disassemble to check contact surfaces of gear, shaft, and hub. Adjust with snap ring at assembly.

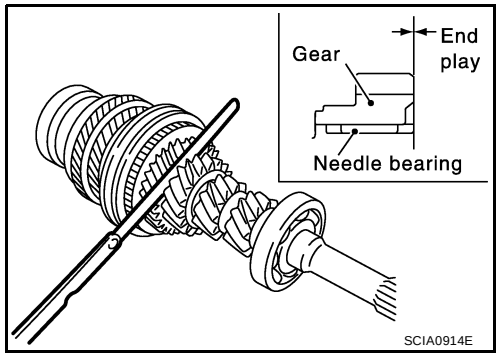

2. Remove oil channel.
3. Remove input shaft rear bearing.

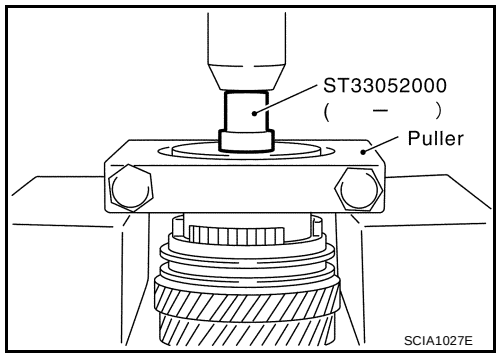

4. Remove the snap ring.

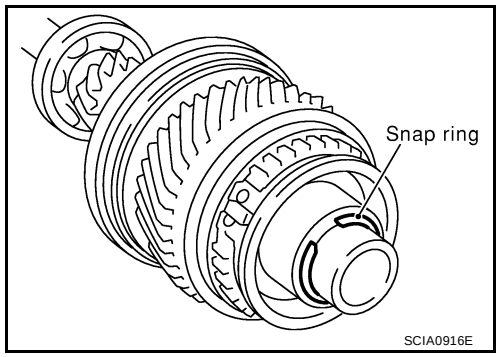

5. Remove input shaft bearing spacer and 5th stopper simultaneously.

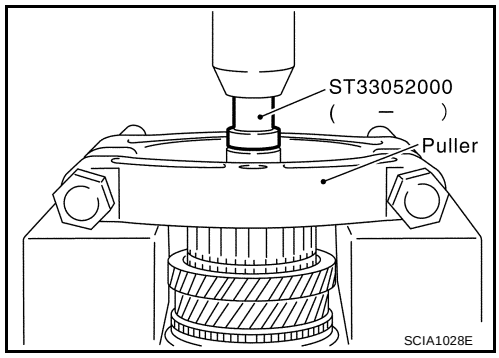

6. Remove 5th input gear and synchronizer hub assembly simultaneously.
7. Remove 5th needle bearing.

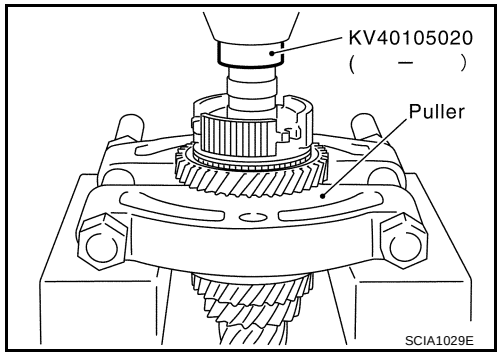

8. Remove 5th bushing, thrust washer, 4th input gear, 4th needle bearing, 4th gear bushing, 3rd-4th synchronizer hub assembly, 3rd-4th baulk ring and 3rd input gear simultaneously.
9. Remove 3rd needle bearing.

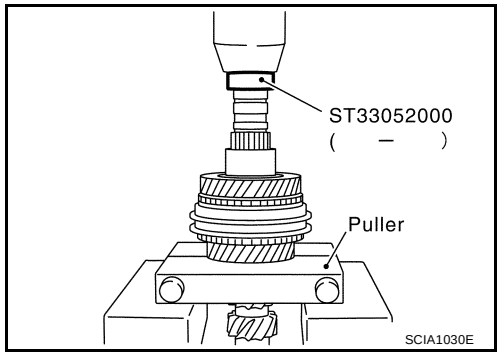

10. Remove input shaft front bearing.

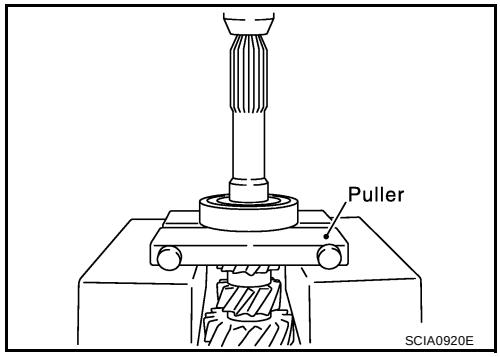

INSPECTION AFTER DISASSEMBLY

Input Shaft and Gear

Check items below. If necessary, replace them with new ones.

- Damage, peeling, dent, uneven wear, bending, etc. of shaft
- Excessive wear, damage, peeling, etc. of gears

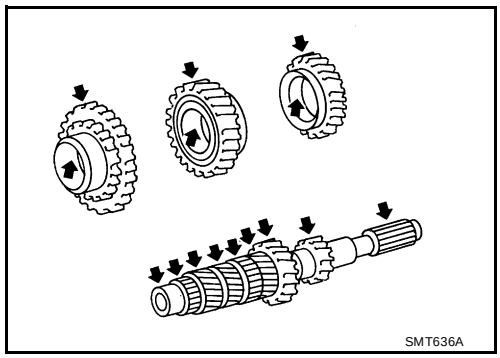

Synchronizer

Check items below. If necessary, replace them with new ones.

- Damage and excessive wear of contact surfaces of coupling sleeve, synchronizer hub, and shifting insert
- Coupling sleeve and synchronizer hub must move smoothly.

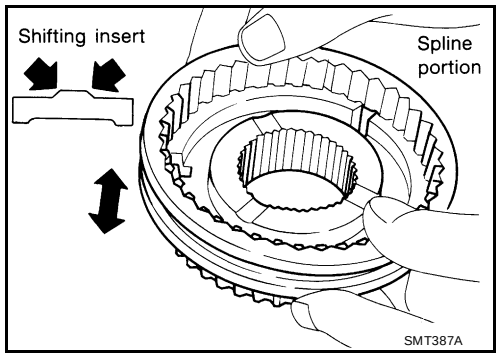

- If any crack, damage, or excessive wear is found on cam face of baulk ring or working face of insert, replace it.

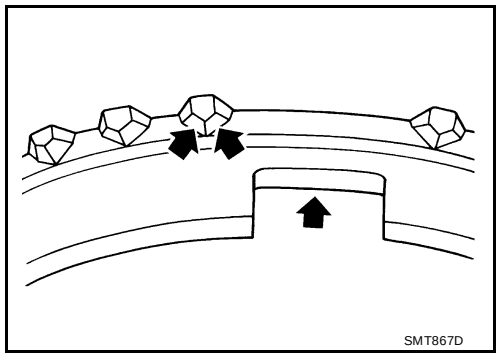

Baulk Ring Clearance

- Press baulk ring against cone, and measure clearance between baulk ring and cone. If measurement is below limit, replace it with a new one.

Clearance

Standard

3rd and 4th	**: 0.9 - 1.45 mm (0.035 - 0.0571 in)**
5th	**: 0.95 - 1.4 mm (0.0374 - 0.055 in)**
Limit value	**: 0.7 mm (0.028 in)**

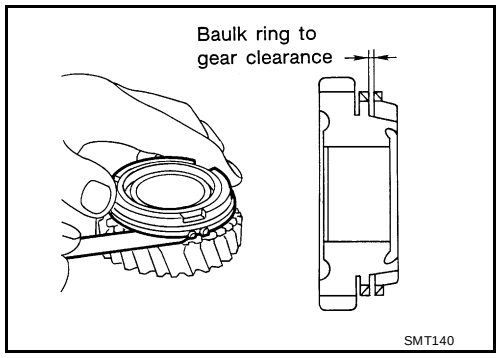

Bearing

Check items below. If necessary, replace them with new ones.

- Damage and rough rotation of bearing

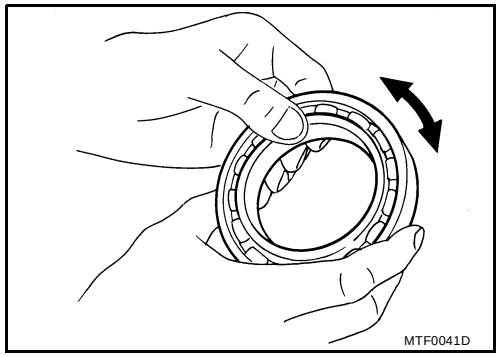

ASSEMBLY

1. Install 3rd needle bearing.
2. Install 3rd input gear and 3rd baulk ring.
3. Install spread spring, shifting insert and 3rd-4th synchronizer hub onto 3rd-4th coupling sleeve.

CAUTION:

- **Be careful with orientation of synchronizer hub.**

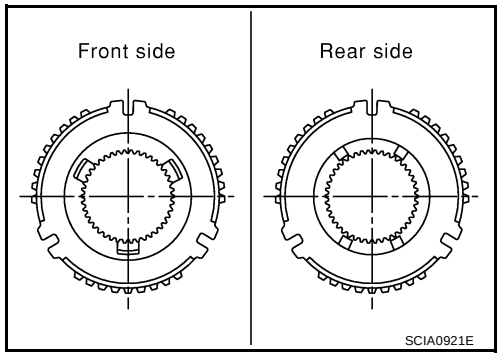

- **Be careful with orientation of coupling sleeve.**

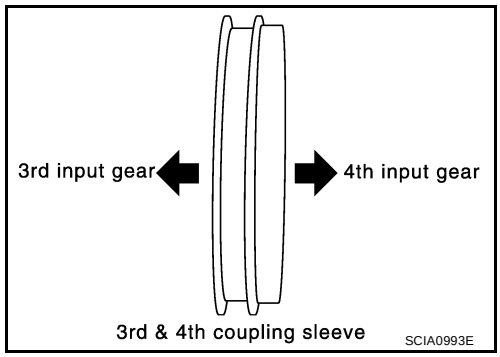

- **Be sure not to hook ends of 2 spread springs (front and back: 2 each) on same shifting insert.**

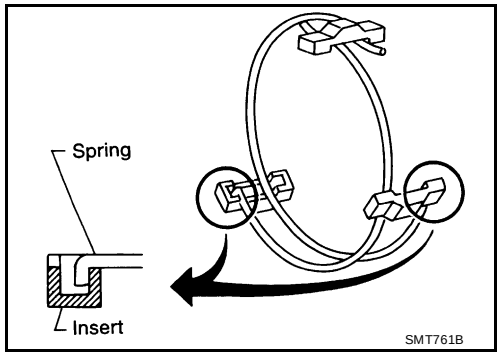

4. Install 3rd-4th synchronizer hub assembly.

CAUTION:

Align grooves of shifting insert and 3rd baulk ring.

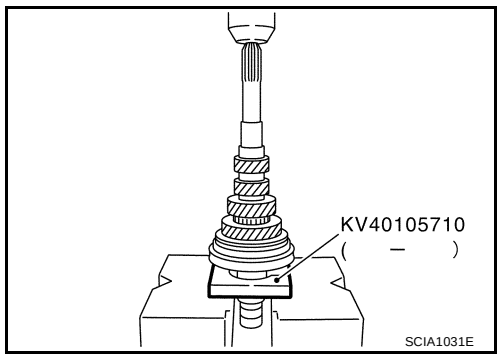

5. Install 4th bushing.
6. Install 4th baulk ring.
7. Install 4th input gear and 4th needle bearing.

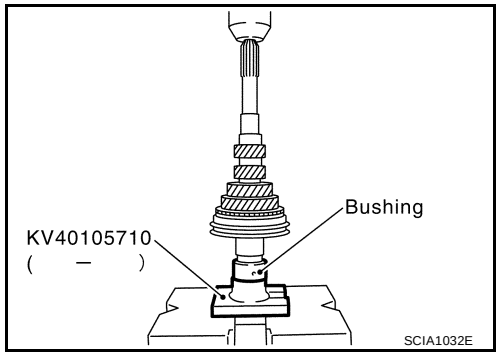

8. Select thrust washer so that dimension “C2” satisfies standard below. Then install it onto input shaft.

   Standard for dimension C2

   : 154.7 - 154.8 mm (6.091 - 6.094 in)

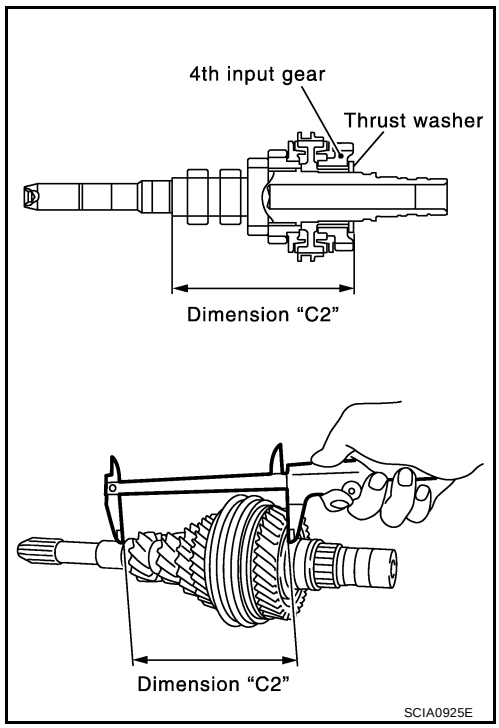

Thrust Washer

Thickness	Part number	Thickness	Part number
3.84 mm (0.1512 in)	32347 8H500	4.02 mm (0.1583 in)	32347 8H503
3.90 mm (0.1535 in)	32347 8H501	4.08 mm (0.1606 in)	32347 8H504
3.96 mm (0.1559 in)	32347 8H502	4.14 mm (0.1630 in)	32347 8H505

CAUTION:
Only one thrust washer can be selected.

9. Install 5th bushing.
10. Install 5th needle bearing and 5th input gear.
11. Install 5th baulk ring.

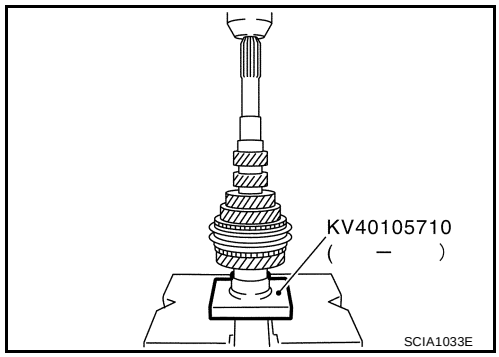

12. Install spread spring, shifting insert and 5th synchronizer hub onto 5th coupling sleeve.

CAUTION:

- **Be careful with orientation of synchronizer hub and shifting insert.**

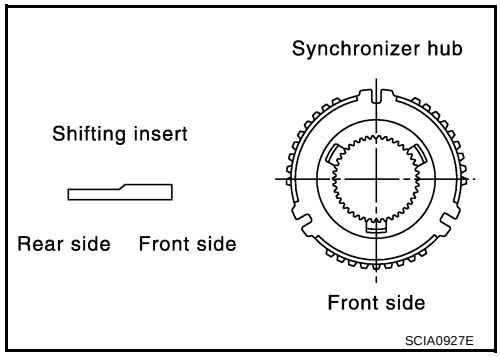

- **Be careful with orientation of coupling sleeve.**

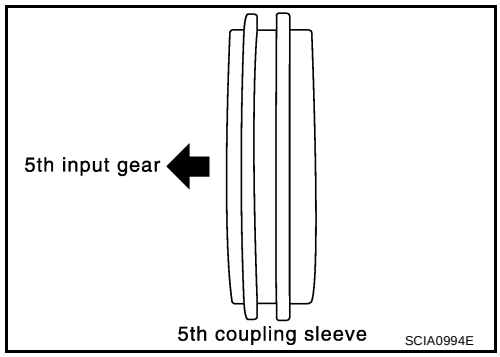

- **Be sure not to hook ends of 2 spread springs (front and back: 2 each) on same shifting insert.**

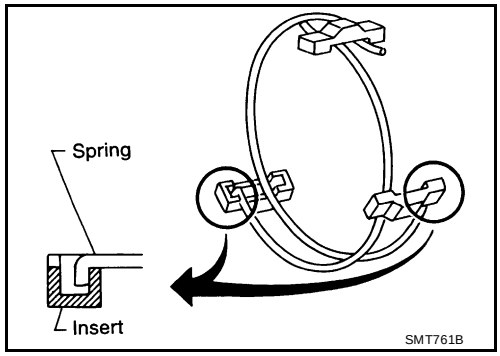

13. Install 5th synchronizer hub assembly.

CAUTION:

Align grooves of 5th shifting insert and 5th baulk ring.

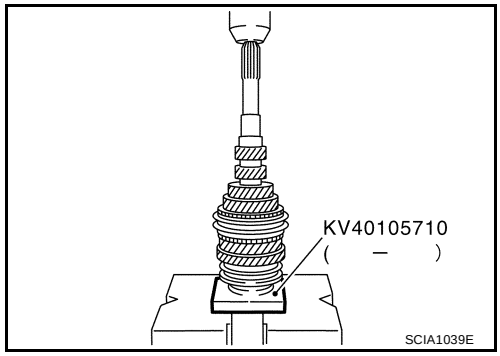

14. Install 5th stopper and then input shaft bearing spacer.

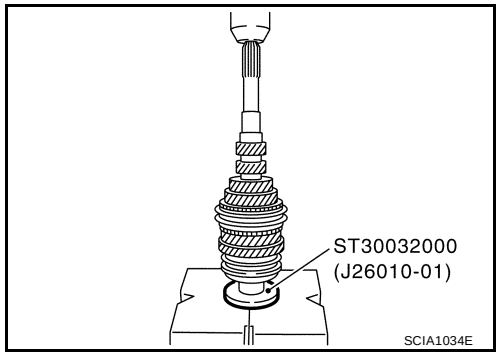

15. Install snap ring onto input shaft, and check that end play (gap between snap ring and groove) of input shaft bearing spacer satisfies standard.

    End play standard value : 0 - 0.1 mm (0 - 0.004 in)

    - If measurement is outside the standard range, select snap ring.

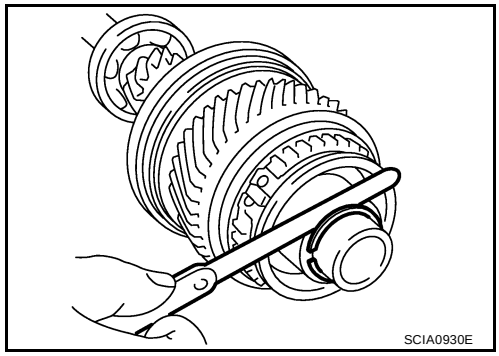

Snap Rings

Thickness	Part number	Thickness	Part number
1.71 mm (0.0673 in)	32204 8H510	2.01 mm (0.0791 in)	32204 8H516
1.76 mm (0.0693 in)	32204 8H511	2.06 mm (0.0811 in)	32204 8H517
1.81 mm (0.0713 in)	32204 8H512	2.11 mm (0.0831 in)	32204 8H518
1.86 mm (0.0732 in)	32204 8H513	2.16 mm (0.0850 in)	32204 8H519
1.91 mm (0.0752 in)	32204 8H514	2.21 mm (0.0871 in)	32204 8H520
1.96 mm (0.0772 in)	32204 8H515	2.26 mm (0.0890 in)	32204 8H521

16. Install input shaft rear bearing.

    CAUTION:
    Install input shaft rear bearing with its brown surface facing the input gear side.

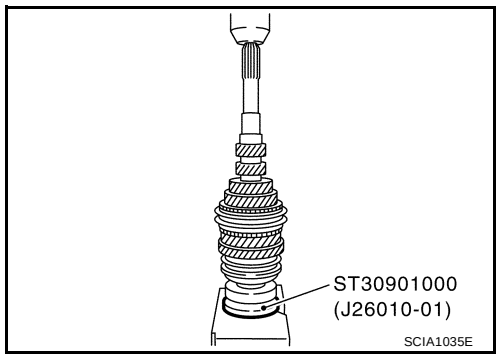

17. Install input shaft front bearing.
18. Install oil channel onto input shaft.

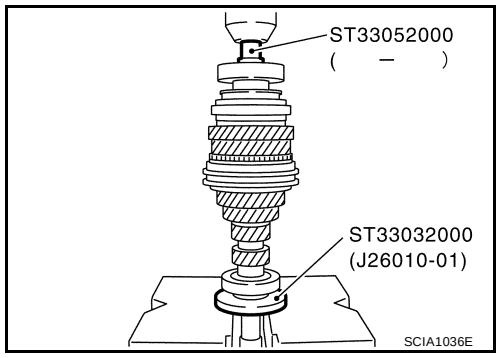

19. Check end play of 3rd, 4th, and 5th input gears.

End play standard value

3rd gear : 0.18 - 0.31 mm (0.0071 - 0.0122 in)

4th gear : 0.20 - 0.30 mm (0.0079 - 0.0118 in)

5th gear : 0.06 - 0.16 mm (0.0024 - 0.0063 in)

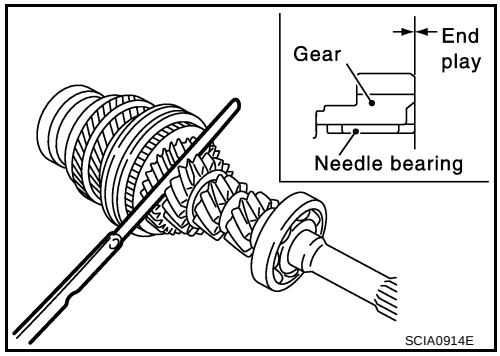

MAINSHAFT AND GEARS

PFP:32241

Disassembly and Assembly

ECS004QB

DISASSEMBLY

1. Before disassembling, measure end play of 1st and 2nd main gears.

   End play standard value

   1st gear : 0.20 - 0.30 mm (0.0079 - 0.0118 in)

   2nd gear : 0.06 - 0.16 mm (0.0024 - 0.0063 in)

   CAUTION:
   If measurement is outside the standard range, disassemble to check contact surfaces of gear, shaft, and hub. Adjust with snap ring at assembly.

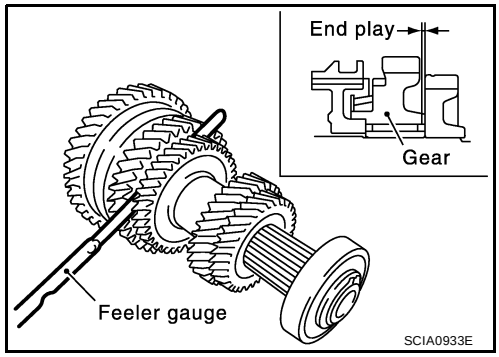

2. Remove the snap ring.
3. Remove C-ring holder, and then mainshaft C-ring.

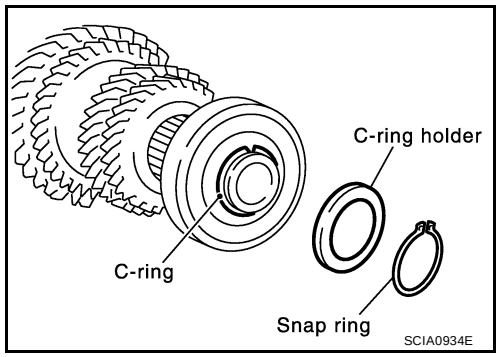

4. Remove mainshaft rear bearing.

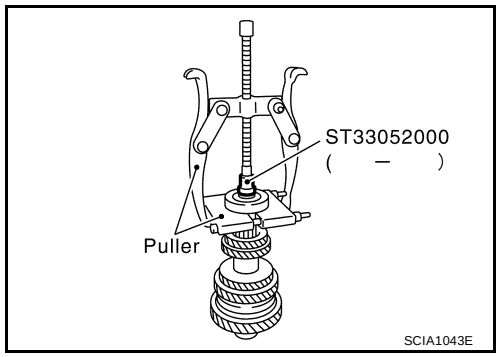

5. Remove the snap ring.

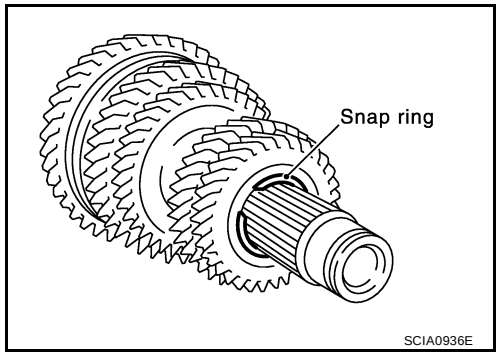

6. Remove 4th main gear and 5th main gear simultaneously.
7. Remove adjusting shim.
8. Remove 3rd-4th mainshaft spacer.

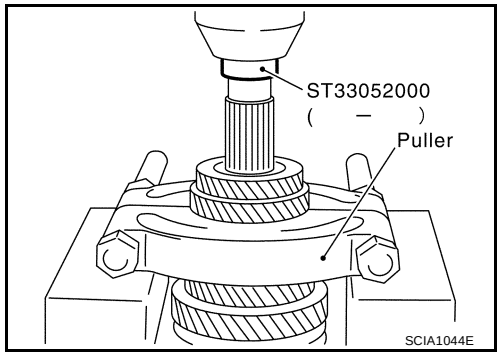

9. Remove 3rd main gear, 2nd main gear, 2nd needle bearing, 2nd bushing, 1st-2nd synchronizer hub assembly, 1st main gear, reverse main gear, 1st needle bearing, and 1st bushing simultaneously.

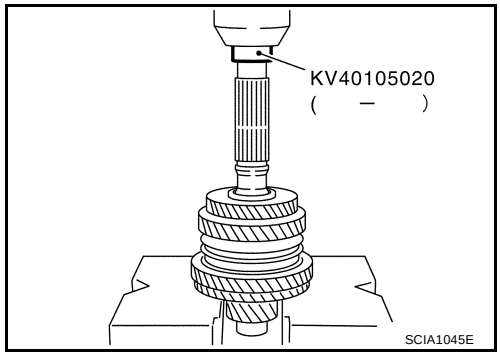

INSPECTION AFTER DISASSEMBLY

Mainshaft and Gears

Check items below. If necessary, replace them with new ones.

- Damage, peeling, dent, uneven wear, bending, and other non-standard conditions of the shaft.
- Excessive wear, damage, peeling, and other non-standard conditions of the gears.

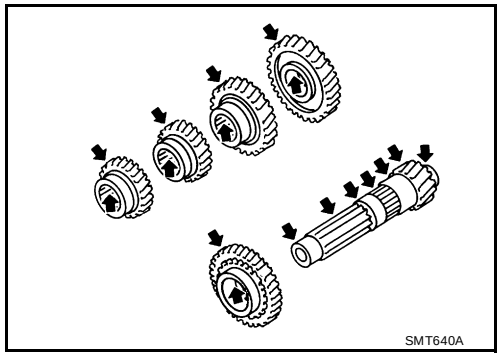

Synchronizer

Check items below. If necessary, replace them with new ones.

- Damage and unusual wear on contact surfaces of coupling sleeve, synchronizer hub, and shifting insert.
- Coupling sleeve and synchronizer hub must move smoothly.

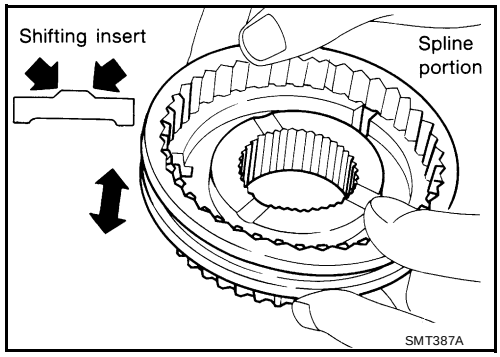

- If any crack, damage, or excessive wear is found on cam face of baulk ring or working face of insert, replace it.

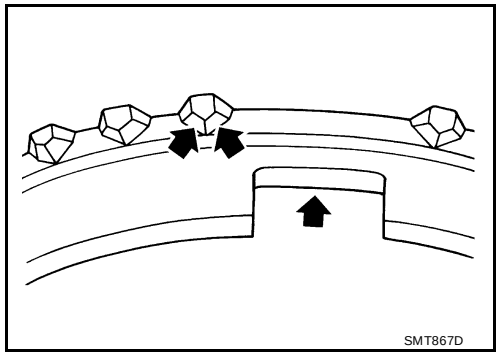

Baulk Ring Clearance

- For the double cone synchronizer (1st and 2nd) check the clearance of the outer baulk ring, synchronizer cone, and inner baulk ring of the 1st and 2nd double cone synchronizers using the following procedure.

  CAUTION:
  Outer baulk ring, synchronizer cone, and inner baulk ring as a set control clearance A and B. If the measurement exceeds the service limit value, replace all of them as a set.

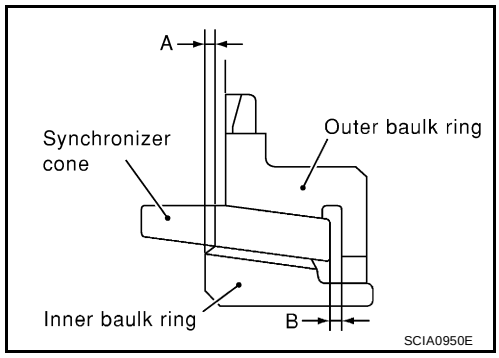

1. Using a dial gauge, measure clearance A at 2 or more points diagonally opposite, and calculate mean value.

   Clearance A

   Standard : 0.6 - 0.8 mm (0.024 - 0.031 in)

   Limit value : 0.2 mm (0.008 in) or less

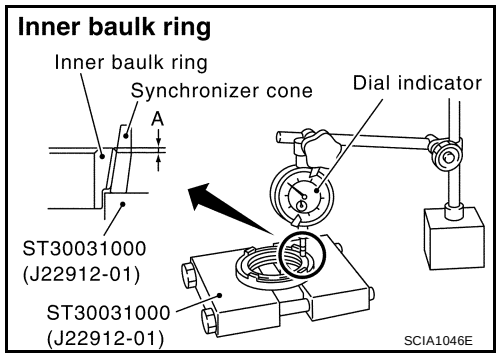

2. Using a dial gauge, measure clearance B at 2 or more points diagonally opposite, and calculate mean value.

   Clearance B

   Standard : 1.3 - 1.5 mm (0.051 - 0.059 in)

   Limit value : 0.2 mm (0.008 in) or less

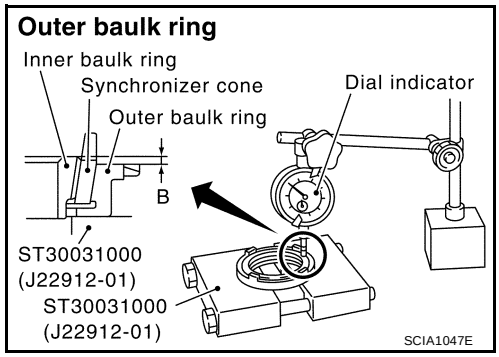

Bearing

Check items below. If necessary, replace them with new ones.

- Damage and rough rotation of bearing

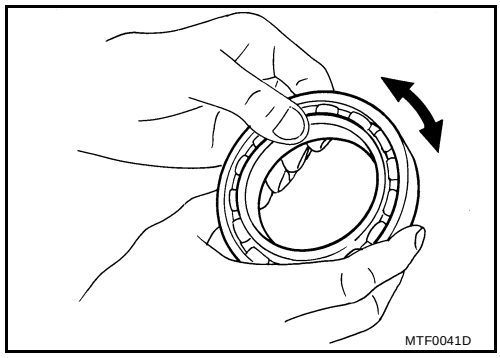

ASSEMBLY

1. Install reverse main gear.

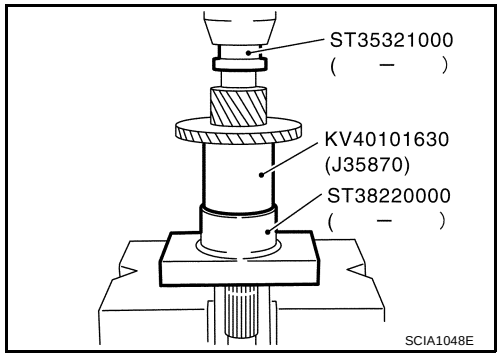

CAUTION:
Be careful with orientation of reverse main gear.

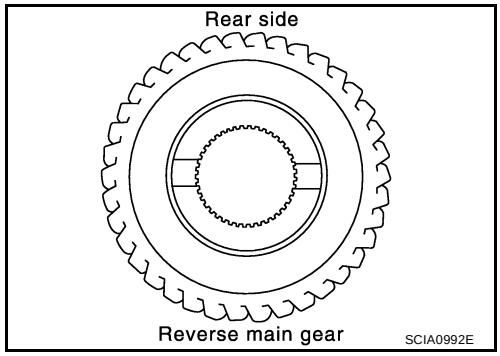

2. Install 1st bushing.
3. Install needle bearing, and then 1st main gear.

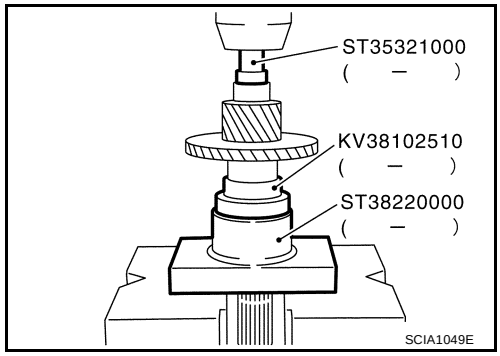

4. Install spread spring, shifting insert and 1st-2nd synchronizer hub onto 1st-2nd coupling sleeve.

CAUTION:

- **Be careful with orientation of synchronizer hub.**

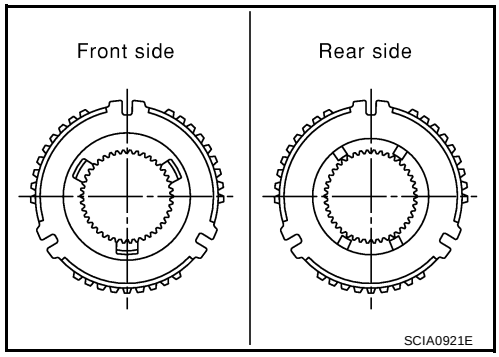

- **Be careful with orientation of coupling sleeve.**

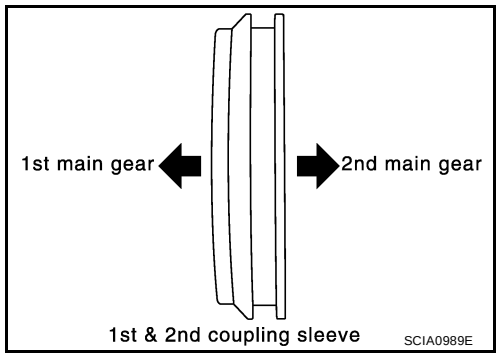

- **Be sure not to hook ends of 2 spread springs (front and back: 2 each) on same shifting insert.**

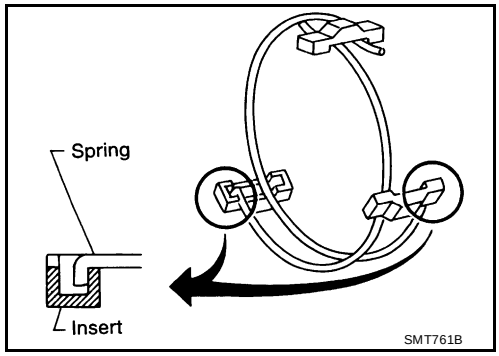

5. Install 1st gear synchronizer assembly onto mainshaft, and synchronizer hub assembly onto mainshaft.

CAUTION:

- **Outer baulk ring, synchronizer cone, and inner baulk ring on 2nd gear-side must have been removed.**
- **Be careful with orientation of coupling sleeve.**

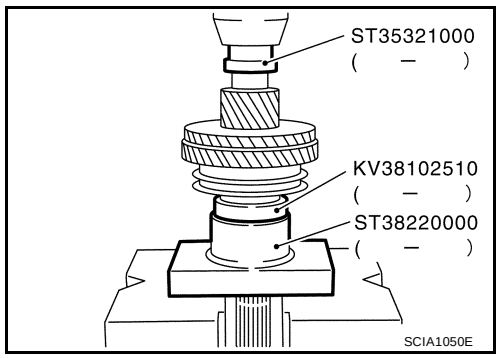

6. Install 2nd bushing.
7. Install outer baulk ring, synchronizer cone, and inner baulk ring on 2nd gear-side.
8. Install 2nd needle bearing and 2nd gear.

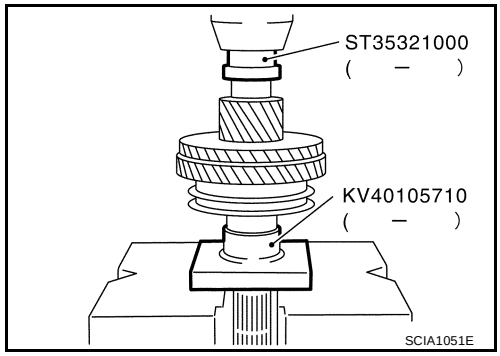

9. Install 3rd main gear.

   CAUTION:
   Be careful with orientation of 3rd main gear.
10. Install 3rd-4th mainshaft spacer.

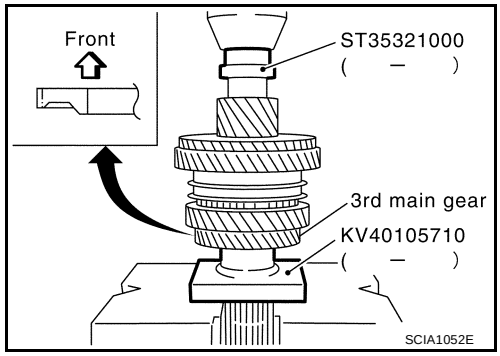

11. Select suitable adjusting shim so that dimension “C1” satisfies standard value below, and install it onto mainshaft.

    Standard for dimension C1

    : 173.85 - 173.95 mm (6.844 - 6.848 in)

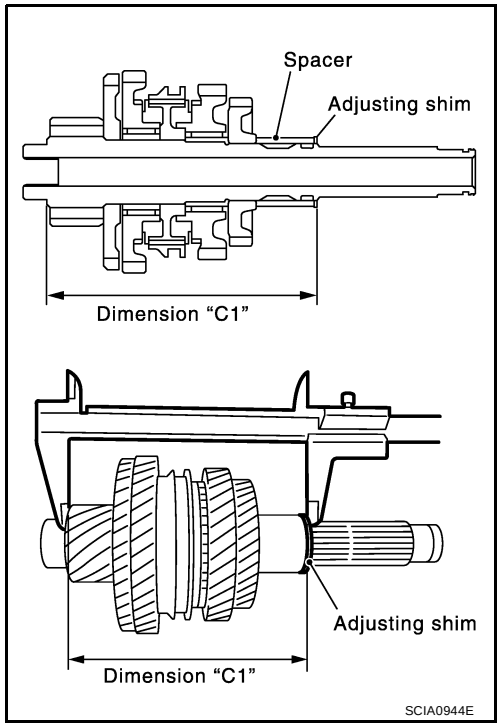

Adjusting Shim

Thickness	Part number	Thickness	Part number
0.52 mm (0.0205 in)	32238 8H500	0.84 mm (0.0331 in)	32238 8H504
0.60 mm (0.0236 in)	32238 8H501	0.92 mm (0.0362 in)	32238 8H505
0.68 mm (0.0268 in)	32238 8H502	1.00 mm (0.0394 in)	32238 8H506
0.76 mm (0.0299 in)	32238 8H503	1.08 mm (0.0425 in)	32238 8H507

CAUTION:
Only one adjusting shim can be selected.

12. Install 4th main gear.

CAUTION:
Be careful with orientation of 4th main gear.

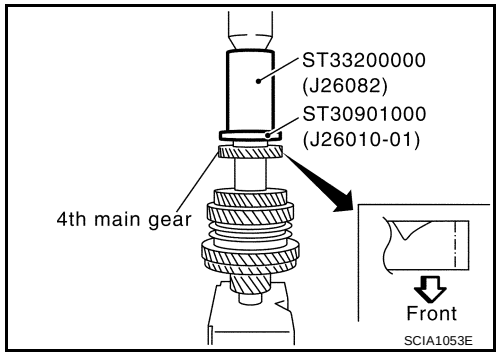

13. Install 5th main gear.

CAUTION:
Be careful with orientation of 5th main gear.

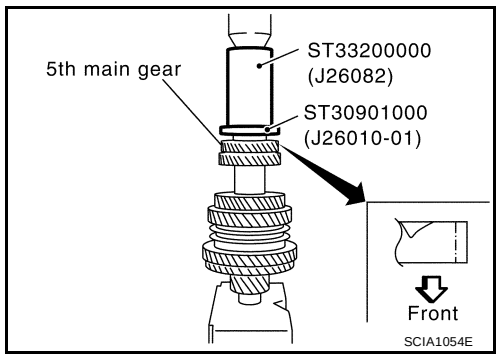

14. Install snap ring onto mainshaft, and check that end play of 5th main gear satisfies standard value.

End play standard value : 0 - 0.1 mm (0 - 0.004 in)

- If measurement is outside the standard range, reselect snap ring.

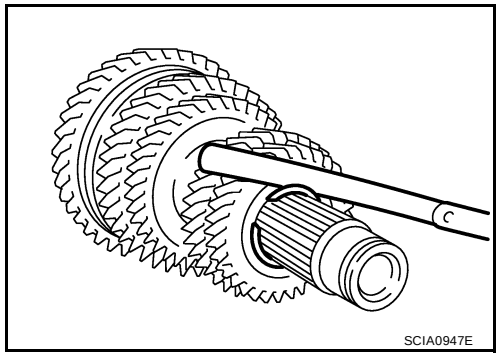

Snap Rings

Thickness	Part number	Thickness	Part number
1.85 mm (0.0728 in)	32204 8H500	2.05 mm (0.0807 in)	32204 8H504
1.90 mm (0.0748 in)	32204 8H501	2.10 mm (0.0827 in)	32204 8H505
1.95 mm (0.0768 in)	32204 8H502	2.15 mm (0.0846 in)	32204 8H506
2.00 mm (0.0787 in)	32204 8H503	2.20 mm (0.0866 in)	32204 8H507

15. Install mainshaft rear bearing.

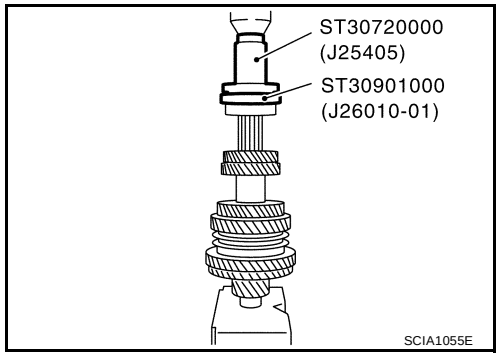

16. Install C-ring onto mainshaft, and check that end play of mainshaft rear bearing satisfies standard value.

End play standard value : 0 - 0.06 mm (0 - 0.0024 in)

- If measurement is outside the standard range, reselect C-ring.

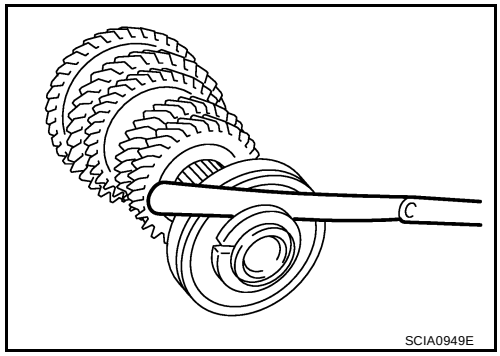

C-ring

Thickness	Part number	Thickness	Part number
2.535 mm (0.0866 in)	32348 8H800	2.835 mm (0.1116 in)	32348 8H810
2.565 mm (0.1010 in)	32348 8H801	2.865 mm (0.1128 in)	32348 8H811
2.595 mm (0.1022 in)	32348 8H802	2.895 mm (0.1140 in)	32348 8H812
2.625 mm (0.1033 in)	32348 8H803	2.925 mm (0.1152 in)	32348 8H813
2.655 mm (0.1045 in)	32348 8H804	2.955 mm (0.1163 in)	32348 8H814
2.685 mm (0.1057 in)	32348 8H805	2.985 mm (0.1175 in)	32348 8H815
2.715 mm (0.1069 in)	32348 8H806	3.015 mm (0.1187 in)	32348 8H816
2.745 mm (0.1081 in)	32348 8H807	3.045 mm (0.1199 in)	32348 8H817
2.775 mm (0.1093 in)	32348 8H808	3.075 mm (0.1211 in)	32348 8H818
2.805 mm (0.1104 in)	32348 8H809		

17. Fit C-ring holder, and install snap ring.
18. Check end play of 1st and 2nd main gears.

End play standard value

1st gear : 0.20 - 0.30 mm (0.0079 - 0.0118 in)

2nd gear : 0.06 - 0.16 mm (0.0024 - 0.0063 in)

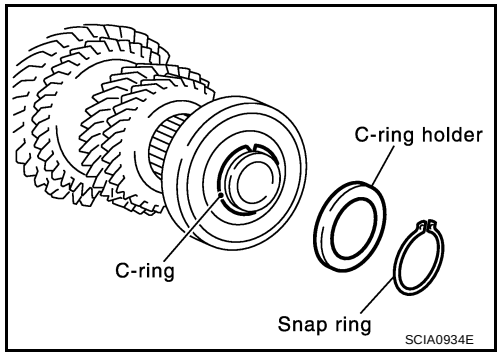

REVERSE IDLER SHAFT AND GEARS

PFP:32281

Disassembly and Assembly

ECS004QC

DISASSEMBLY

1. Remove reverse idler gear adjusting shim.
2. Remove reverse idler gear (rear), reverse coupling sleeve and insert spring simultaneously.
3. Remove reverse idler gear needle bearing.
4. Remove thrust needle bearing.
5. Remove reverse baulk ring.
6. Remove reverse idler gear (front).
7. Remove reverse idler gear needle bearing.
8. Remove thrust needle bearing.
9. Pull off locking pin from reverse idler shaft.

INSPECTION AFTER DISASSEMBLY

Reverse Idler Shaft and Gears

Check items below. If necessary, replace them with new ones.

- Damage, peeling, dent, uneven wear, bending, and other non-standard conditions of the shaft.
- Excessive wear, damage, peeling, and other non-standard conditions of the gears.

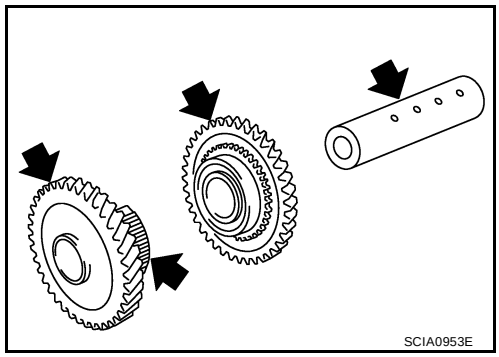

Synchronizer

Check items below. If necessary, replace them with new ones.

- Damage and unusual wear on contact surfaces of coupling sleeve, synchronizer hub, and insert spring.
- Coupling sleeve and synchronizer hub must move smoothly.

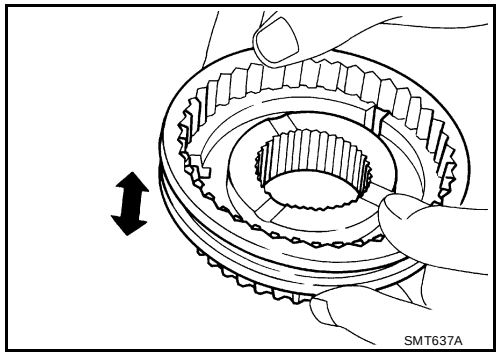

- If any crack, damage, or excessive wear is found on cam face of baulk ring or working face of insert, replace it.

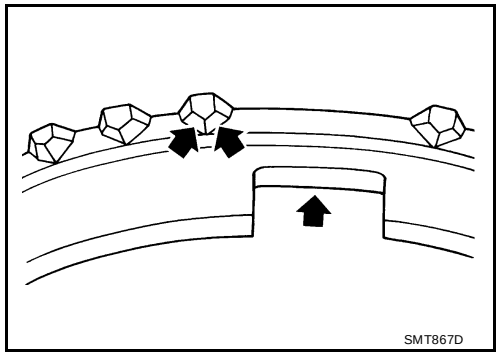

Baulk Ring Clearance

- Press baulk ring against cone, and measure clearance between baulk ring and cone. If measurement is below limit, replace it with a new one.

Clearance

Standard	**: 0.95 - 1.4 mm (0.0374 - 0.055 in)**
Limit value	**: 0.7 mm (0.028 in)**

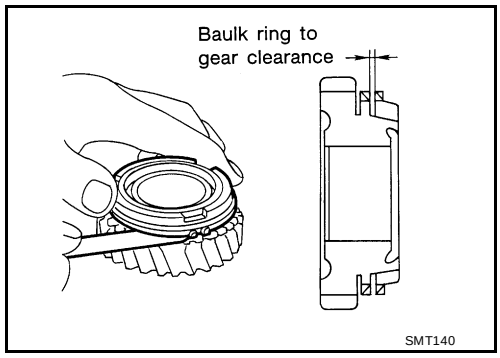

Bearing

Check items below. If necessary, replace them with new ones.

- Damage and rough rotation of bearing.

ASSEMBLY

Paying attention to following work, assemble in reverse order of disassembly.

CAUTION:

- **Be careful with orientation of insert spring.**

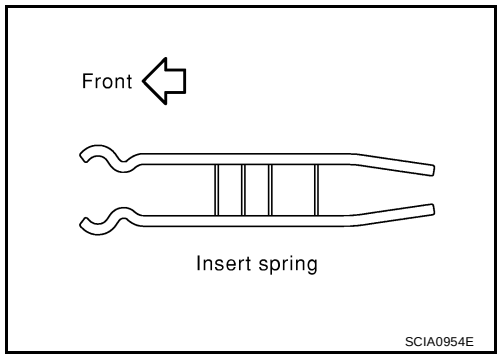

FINAL DRIVE

PFP:38411

Disassembly and Assembly

ECS004QD

PRE-INSPECTION

- Check the clearance between side gear and differential case as follows.

1. Clean final drive assembly sufficiently to prevent side gear thrust washer, differential case, side gear, and other parts from sticking by gear oil.

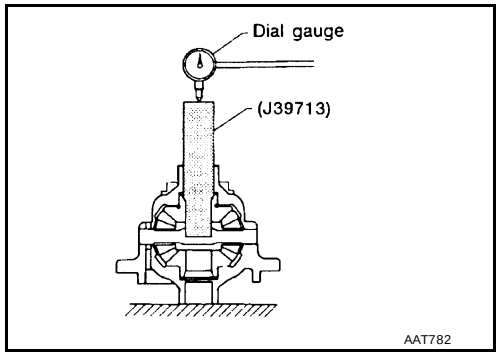

2. Upright the differential case so that the side gear to be measured faces upward.
3. Place final drive adapter and dial gauge onto side gear. Move side gear up and down, and measure the clearance.

   Between side gear and differential case

   Clearance : 0.1 - 0.2 mm (0.004 - 0.008 in)

4. If not within specification, adjust the clearance by changing thrust washer thickness.
5. Turn differential case upside down, and measure the clearance between side gear and differential case on the other side in the same way.

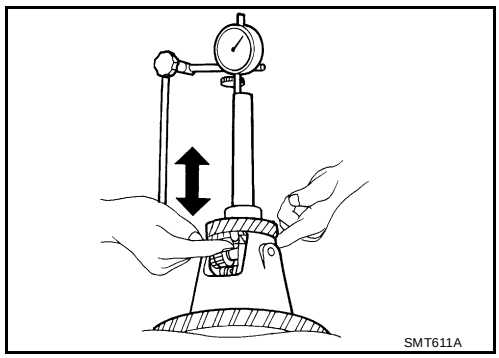

DISASSEMBLY

1. Remove mounting bolts.Then, separate the final gear from differential case.
2. Remove speedometer drive gear.
3. Using a drift and puller, remove differential side bearing (clutch housing side).

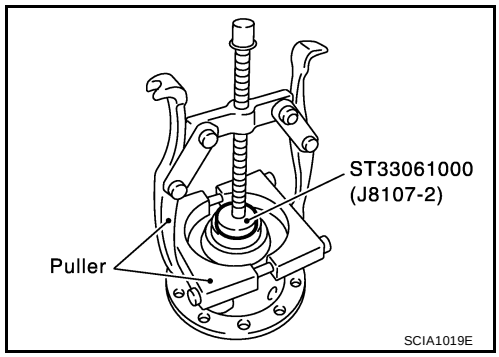

4. Using a drift and puller, remove differential side bearing (transaxle case side).

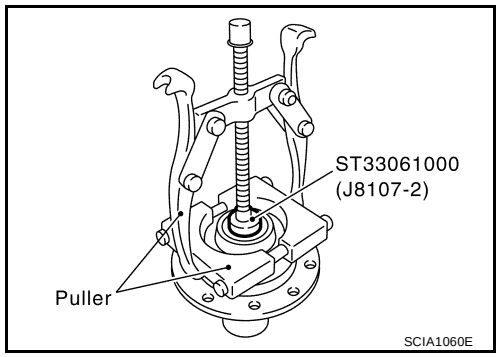

5. Using a pin punch, pull out lock pin and pinion mate shaft.
6. Rotate pinion mate gears, and remove pinion mate gears, pinion mate thrust washers, side gears, and side gear thrust washers from differential case.

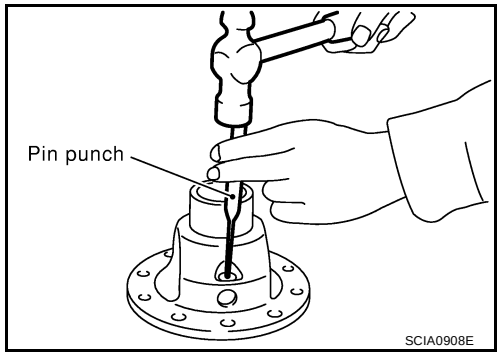

INSPECTION AFTER DISASSEMBLY

Gear, Washer, Shaft and Case

- Check side gears, side gear thrust washers, pinion mate shaft, pinion mate gears, pinion mate thrust washers and differential case. If necessary, replace with a new one.

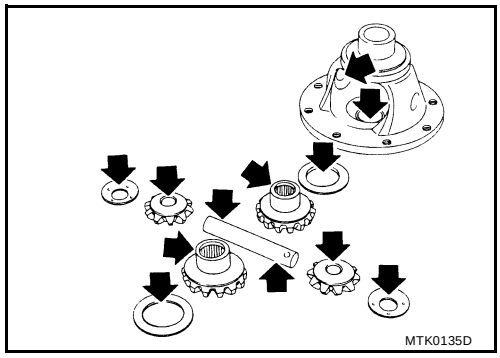

Bearing

- Check for bearing damage and rough rotation. If necessary, replace with a new one.

  CAUTION:
  When replacing the tapered roller bearing, replace the outer and inner races as a set.

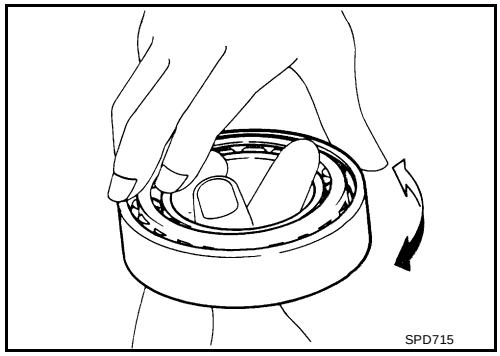

ASSEMBLY

1. Apply gear oil to sliding area of differential case, each gear, and thrust washer.
2. Install side gear thrust washers and side gears into differential case.
3. While rotating pinion mate thrust washers and pinion mate gears, aligning them diagonally, install them into differential case.

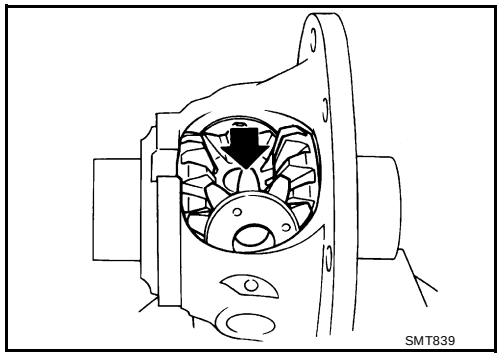

4. Insert pinion mate shaft into differential case.

CAUTION:
Be sure not to damage pinion mate thrust washers.

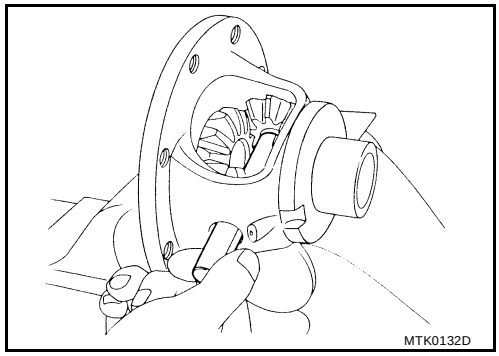

5. Measure end play of side gears following procedure below. Then select side gear thrust washer.

a. Upright the differential case so that its side gear to be measured face upward.

b. Place final drive adapter and dial gauge onto side gears.

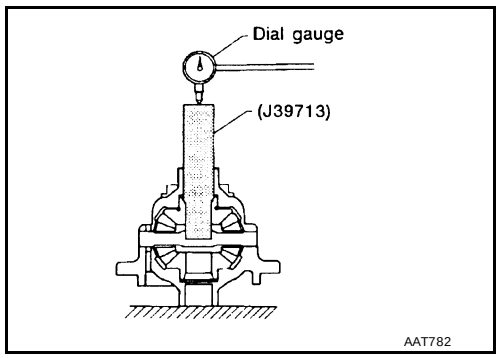

c. Move side gears up and down to measure end play, and select thrust washer so that it satisfies standard.

End Play

Standard value : 0.1 - 0.2 mm (0.004 - 0.008 in)

CAUTION:
Place differential case upside down. Be sure to measure end play for opposite side-gears likewise.

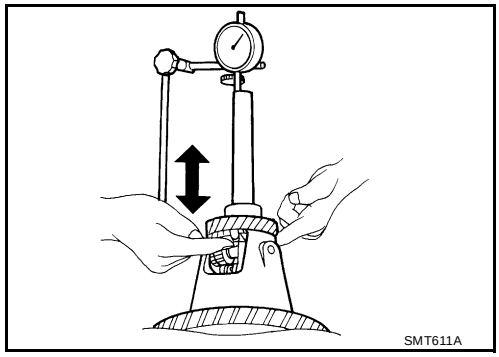

Thrust washer

Thickness	Part number
0.75 mm (0.0295 in)	38424 81X00
0.80 mm (0.0315 in)	38424 81X01
0.85 mm (0.0335 in)	38424 81X02
0.90 mm (0.0354 in)	38424 81X03
0.95 mm (0.0374 in)	38424 81X04

CAUTION:
Only one thrust washer can be selected.

6. Using a pin punch (special service tool), drive a lock pin into the pinion mate shaft.

CAUTION:
Do not reuse the lock pin.

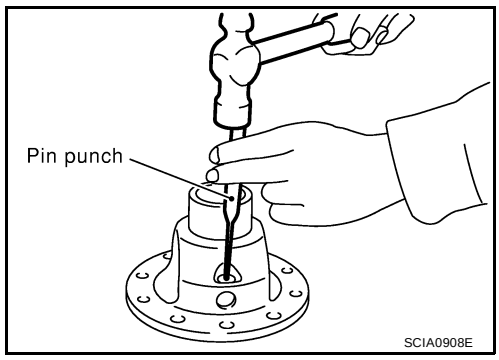

7. Using a drift (special service tool), install differential side bearing (transaxle case side).

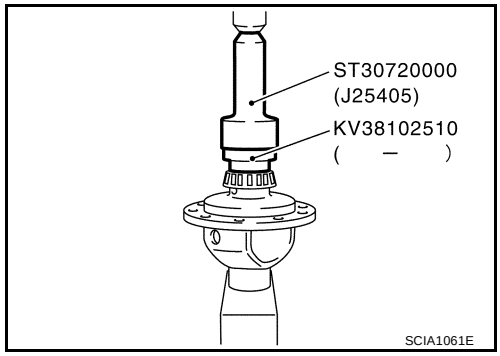

8. Align and install speedometer drive gear onto differential case.

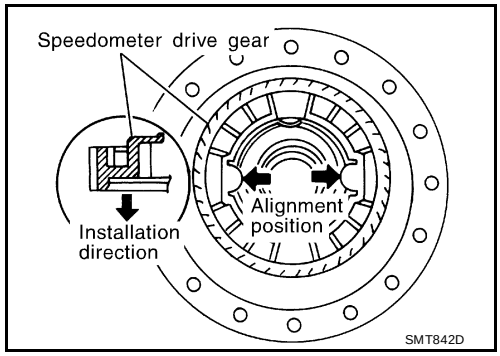

9. Using a drift (special service tool), install differential side bearing (clutch housing side).

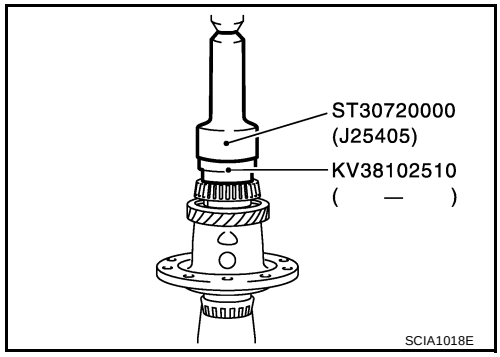

10. Install differential gear into differential case, and tighten final gear mounting bolts.

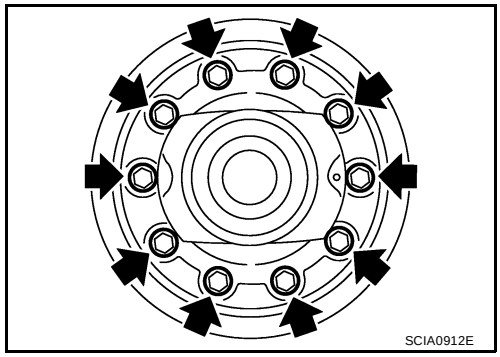

SHIFT CONTROL

PFP:32982

Inspection

ECS004QE

- Check contact surfaces and sliding area for wear, damage, bending, etc. If necessary, replace parts.

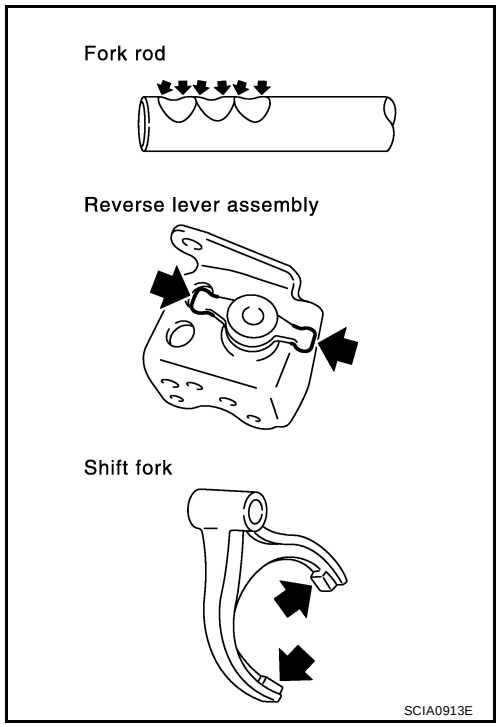

SHIFT FORK

- Check if the width of shift fork hook (sliding area with coupling sleeve) is within allowable specification below.

Item	One-side wear specification	Sliding width of new part
1st & 2nd	0.2 mm (0.008 in)	7.80 - 7.93 mm (0.3071 - 0.3122 in)
3rd & 4th	0.2 mm (0.008 in)	7.80 - 7.93 mm (0.3071 - 0.3122 in)
5th	0.2 mm (0.008 in)	6.10 - 6.23 mm (0.2402 - 0.2453 in)
Reverse	0.2 mm (0.008 in)	12.80 - 12.93 mm (0.5039 - 0.5091 in)

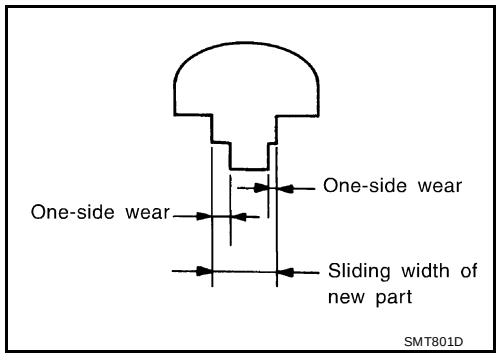

SERVICE DATA AND SPECIFICATIONS (SDS)

PFP:00030

General Specifications

ECS004QF

TRANSAXLE

Engine			QR25DE	VQ35DE
Transaxle model			RS5F51A	
Model code number			8J206	8J204
Number of speed			5	
Synchromesh type			Warner	
Shift pattern			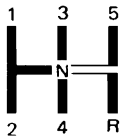 SCIA0821E	
Gear ratio	1st		3.416	3.153
	2nd		1.944	1.842
	3rd		1.258	
	4th		0.947	
	5th		0.772	
	Reverse		3.252	3.002
Number of teeth	Input gear	1st	12	13
		2nd	18	19
		3rd	31	
		4th	38	
		5th	44	
		Reverse	12	13
	Main gear	1st	49	
		2nd	35	
		3rd	39	
		4th	36	
		5th	34	
		Reverse	38	
	Reverse idler gear	Front	37	
		Rear	38	
Oil capacity			2.3 ℓ (4 7/8 US pt, 4 Imp pt)	
Oil grade			API GL-4, Viscosity SAE 75W-85	
Remarks	Reverse synchronizer		Installed	
	Double baulk ring type synchronizer		1st & 2rd synchronizer	

FINAL GEAR

Engine		QR25DE	VQ35DE
Transaxle model		RS5F51A	
Model code number		8J206	8J204
Final gear ratio		4.133	3.812
Number of teeth	Final gear/Pinion	62/15	61/16
	Side gear/Pinion mate gear	14/10	14/10

Gear End Play

ECS004QG

Unit: mm (in)

Gear	End play
1st main gear	0.20 - 0.30 (0.0079 - 0.0118)
2nd main gear	0.06 - 0.16 (0.0024 - 0.0063)
3rd input gear	0.18 - 0.31 (0.0071 - 0.0122)
4th input gear	0.20 - 0.30 (0.0079 - 0.0118)
5th input gear	0.06 - 0.16 (0.0024 - 0.0063)

Clearance Between Baulk Ring and Gear

ECS004QH

3RD,4TH,5TH & REVERSE BAULK RING

Unit: mm (in)

Standard		Wear limit
3rd	0.9 - 1.45 (0.035 - 0.0571)	0.7 (0.028)
4th	0.9 - 1.45 (0.035 - 0.0571)	0.7 (0.028)
5th	0.95 - 1.4 (0.0374 - 0.055)	0.7 (0.028)
Reverse	0.95 - 1.4 (0.0374 - 0.055)	0.7 (0.028)

1ST AND 2ND DOUBLE BAULK RING

Unit: mm (in)

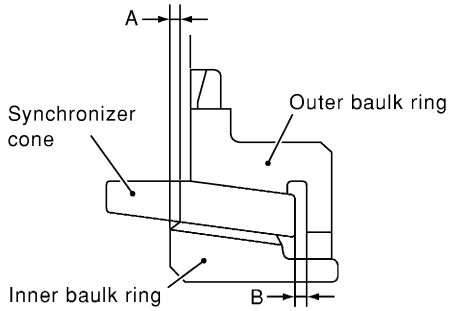

SCIA0950E

Dimension	Standard	Wear limit
A	0.6 - 0.8 (0.024 - 0.031)	0.2 (0.008)
B	1.3 - 1.5 (0.051 - 0.059)	0.2 (0.008)

Available Snap Rings

ECS004QI

INPUT SHAFT SPACER

End play		0 - 0.1 mm (0 - 0.004 in)	
Thickness mm (in)	Part number*	Thickness mm (in)	Part number*
1.71 (0.0673)	32204 8H510	2.01 (0.0791)	32204 8H516
1.76 (0.0693)	32204 8H511	2.06 (0.0811)	32204 8H517
1.81 (0.0713)	32204 8H512	2.11 (0.0831)	32204 8H518
1.86 (0.0732)	32204 8H513	2.16 (0.0850)	32204 8H519
1.91 (0.0752)	32204 8H514	2.21 (0.0871)	32204 8H520
1.96 (0.0772)	32204 8H515	2.26 (0.0890)	32204 8H521

*: Always check with the Parts Department for the latest parts information.

5TH MAIN GEAR

End play		0 - 0.1 mm (0 - 0.004 in)	
Thickness mm (in)	Part number*	Thickness mm (in)	Part number*
1.85 (0.0728)	32204 8H500	2.05 (0.0807)	32204 8H504
1.90 (0.0748)	32204 8H501	2.10 (0.0827)	32204 8H505
1.95 (0.0768)	32204 8H502	2.15 (0.0846)	32204 8H506
2.00 (0.0787)	32204 8H503	2.20 (0.0866)	32204 8H507

*: Always check with the Parts Department for the latest parts information.

Available C-rings

ECS004QJ

MAINSHAFT C-RING

End play		0 - 0.06 mm (0 - 0.0024 in)	
Thickness mm (in)	Part number*	Thickness mm (in)	Part number*
2.535 (0.0866)	32348 8H800	2.835 (0.1116)	32348 8H810
2.565 (0.1010)	32348 8H801	2.865 (0.1128)	32348 8H811
2.595 (0.1022)	32348 8H802	2.895 (0.1140)	32348 8H812
2.625 (0.1033)	32348 8H803	2.925 (0.1152)	32348 8H813
2.655 (0.1045)	32348 8H804	2.955 (0.1163)	32348 8H814
2.685 (0.1057)	32348 8H805	2.985 (0.1175)	32348 8H815
2.715 (0.1069)	32348 8H806	3.015 (0.1187)	32348 8H816
2.745 (0.1081)	32348 8H807	3.045 (0.1199)	32348 8H817
2.775 (0.1093)	32348 8H808	3.075 (0.1211)	32348 8H818
2.805 (0.1104)	32348 8H809		

*: Always check with the Parts Department for the latest parts information.

Available Thrust Washer

ECS004QK

INPUT SHAFT THRUST WASHER

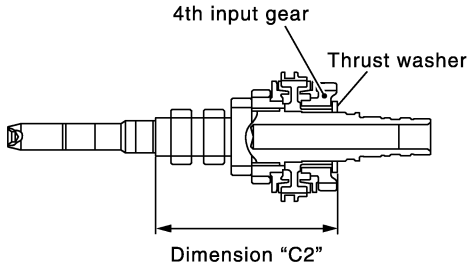

SCIA1008E

Standard length “C2”		154.7 - 154.8 mm (6.091 - 6.094in)	
Thickness mm (in)	Part number*	Thickness mm (in)	Part number*
3.84 (0.1512)	32347 8H500	4.02 (0.1583)	32347 8H503
3.90 (0.1535)	32347 8H501	4.08 (0.1606)	32347 8H504
3.96 (0.1559)	32347 8H502	4.14 (0.1630)	32347 8H505

*: Always check with the Parts Department for the latest parts information.

DIFFERENTIAL SIDE GEAR THRUST WASHER

Allowable clearance between side gear and differential case with washer	0.1 - 0.2 mm (0.004 - 0.008 in)
Thickness mm (in)	Part number*
0.75 (0.0295)	38424 81X00
0.80 (0.0315)	38424 81X01
0.85 (0.0335)	38424 81X02
0.90 (0.0354)	38424 81X03
0.95 (0.0374)	38424 81X04

*: Always check with the Parts Department for the latest parts information.

Available Adjusting Shims

ECS004QL

MAINSHAFT ADJUSTING SHIM

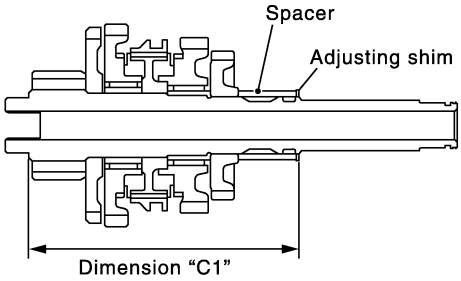

SCIA1009E

Standard length “C1”		173.85 - 173.95 mm (6.844 - 6.848in)	
Thickness mm (in)	Part number*	Thickness mm (in)	Part number*
0.52 (0.0205)	32238 8H500	0.84 (0.0331)	32238 8H504
0.60 (0.0236)	32238 8H501	0.92 (0.0362)	32238 8H505
0.68 (0.0268)	32238 8H502	1.00 (0.0394)	32238 8H506
0.76 (0.0299)	32238 8H503	1.08 (0.0425)	32238 8H507

*: Always check with the Parts Department for the latest parts information.

INPUT SAFT REAR BEARING ADJUSTING SHIM

End play			0 - 0.06 mm (0 - 0.0024 in)		
Thickness mm (in)	Part number*	Thickness mm (in)	Part number*	Thickness mm (in)	Part number*
0.40 (0.0157)	32225 8H500	0.88 (0.0346)	32225 8H512	1.36 (0.0520)	32225 8H524
0.44 (0.0173)	32225 8H501	0.92 (0.0362)	32225 8H513	1.40 (0.0551)	32225 8H560
0.48 (0.0189)	32225 8H502	0.96 (0.0378)	32225 8H514	1.44 (0.0567)	32225 8H561
0.52 (0.0205)	32225 8H503	1.00 (0.0396)	32225 8H515	1.48 (0.0583)	32225 8H562
0.56 (0.0220)	32225 8H504	1.04 (0.0409)	32225 8H516	1.52 (0.0598)	32225 8H563
0.60 (0.0236)	32225 8H505	1.08 (0.0425)	32225 8H517	1.56 (0.0614)	32225 8H564
0.64 (0.0252)	32225 8H506	1.12 (0.0441)	32225 8H518	1.60 (0.0630)	32225 8H565
6.68 (0.0268)	32225 8H507	1.16 (0.0457)	32225 8H519	1.64 (0.0646)	32225 8H566
0.72 (0.0283)	32225 8H508	1.20 (0.0472)	32225 8H520	1.68 (0.0661)	32225 8H567
0.76 (0.0299)	32225 8H509	1.24 (0.0488)	32225 8H521	1.72 (0.0677)	32225 8H568
0.80 (0.0315)	32225 8H510	1.28 (0.0504)	32225 8H522		
0.84 (0.0331)	32225 8H511	1.32 (0.0520)	32225 8H523		

*: Always check with the Parts Department for the latest parts information.

MAINSAFT REAR BEARING ADJUSTING SHIM

End play		0 - 0.06 mm (0 - 0.0024 in)	
Thickness mm (in)	Part number*	Thickness mm (in)	Part number*
0.44 (0.0173)	32238 8H510	0.80 (0.0315)	32238 8H519
0.48 (0.0189)	32238 8H511	0.84 (0.0331)	32238 8H520
0.52 (0.0205)	32238 8H512	0.88 (0.0346)	32238 8H521
0.56 (0.0220)	32238 8H513	0.92 (0.0362)	32238 8H522
0.60 (0.0236)	32238 8H514	0.96 (0.0378)	32238 8H523
0.64 (0.0252)	32238 8H515	1.00 (0.0396)	32238 8H524
0.68 (0.0268)	32238 8H516	1.04 (0.0409)	32238 8H560
0.72 (0.0283)	32238 8H517	1.08 (0.0425)	32238 8H561
0.76 (0.0299)	32238 8H518		

*: Always check with the Parts Department for the latest parts information.

REVERASE IDLER GEAR ADJUSTING SHIM

End play		0.04 - 0.14 mm (0.0016 - 0.0055 in)	
Thickness mm (in)	Part number*	Thickness mm (in)	Part number*
1.76 (0.0693)	32237 8H500	2.24 (0.0882)	32237 8H506
1.84 (0.0724)	32237 8H501	2.32 (0.0913)	32237 8H507
1.92 (0.0756)	32237 8H502	2.40 (0.0945)	32237 8H508
2.00 (0.0787)	32237 8H503	2.48 (0.0976)	32237 8H509
2.08 (0.0819)	32237 8H504	2.56 (0.1008)	32237 8H510
2.16 (0.0850)	32237 8H505	2.64 (0.1039)	32237 8H511

*: Always check with the Parts Department for the latest parts information.

Available Shims

ECS004QM

— Differential Side Bearing Preload and Adjusting Shim

BEARING PRELOAD

Differential side bearing preload: L*	0.15 - 0.21 mm (0.0059 - 0.0083)

*: Install shims which are “deflection of differential case” + “L” in thickness.

DIFFERENTIAL SIDE BEARING ADJUSTING SHIM(S)

Thickness mm (in)	Part number*	Thickness mm (in)	Part number*
0.48 (0.0189)	31438 80X00	0.72 (0.0283)	31438 80X06
0.52 (0.0205)	31438 80X01	0.76 (0.0299)	31438 80X07
0.56 (0.0220)	31438 80X02	0.80 (0.0315)	31438 80X08
0.60 (0.0236)	31438 80X03	0.84 (0.0331)	31438 80X09
0.64 (0.0252)	31438 80X04	0.88 (0.0346)	31438 80X10
0.68 (0.0268)	31438 80X05	0.92 (0.0362)	31438 80X11

*: Always check with the Parts Department for the latest parts information.

SECTION MTC

MANUAL AIR CONDITIONER

CONTENTS

PRECAUTIONS 3
Precautions for Supplemental Restraint System (SRS) “AIR BAG” and “SEAT BELT PRE-TENSIONER” 3
Precautions for Working with HFC-134a (R-134a)..... 3
Contaminated Refrigerant 3
General Refrigerant Precautions 4
Precautions for Leak Detection Dye 4
A/C Identification Label 4
Precautions for Refrigerant Connection 5
FEATURES OF NEW TYPE REFRIGERANT CONNECTION 5
O-RING AND REFRIGERANT CONNECTION..... 6
Precautions for Servicing Compressor 9
Precautions for Service Equipment 9
RECOVERY/RECYCLING EQUIPMENT 9
ELECTRONIC LEAK DETECTOR 9
VACUUM PUMP 10
MANIFOLD GAUGE SET 10
SERVICE HOSES 10
SERVICE COUPLERS 11
REFRIGERANT WEIGHT SCALE 11
CALIBRATING ACR4 WEIGHT SCALE 11
CHARGING CYLINDER 11
Wiring Diagrams and Trouble Diagnosis 11
PREPARATION 12
Special Service Tools 12
HFC-134a (R-134a) Service Tools and Equipment.. 12
Commercial Service Tools 15
REFRIGERATION SYSTEM 16
Refrigeration Cycle 16
REFRIGERANT FLOW 16
REFRIGERANT SYSTEM PROTECTION 16
Component Layout 17
LUBRICANT 18
Maintenance of Lubricant Quantity in Compressor.. 18
LUBRICANT 18
CHECKING AND ADJUSTING 18
AIR CONDITIONER CONTROL 21
Control Operation 21
FAN CONTROL DIAL 21
AIR CONTROL DIAL 21
TEMPERATURE CONTROL DIAL 21
RECIRCULATION (REC) SWITCH 21
AIR CONDITIONER (A/C) SWITCH 21
Discharge Air Flow 22
System Description 23
SWITCHES AND THEIR CONTROL FUNCTION.. 23
CAN Communication System Description 23
FOR TCS MODELS 23
FOR A/T MODELS 25
FOR M/T MODELS 26
TROUBLE DIAGNOSIS 28
How to Perform Trouble Diagnoses for Quick and Accurate Repair 28
WORK FLOW 28
SYMPTOM TABLE 28
Component Parts and Harness Connector Location.. 29
ENGINE COMPARTMENT 29
PASSENGER COMPARTMENT 31
Circuit Diagram 32
Wiring Diagram — HEATER — 33
Wiring Diagram — A/C,M — 35
Operational Check 38
CONDITIONS: 38
PROCEDURE: 38
A/C System 40
DIAGNOSTIC PROCEDURE 40
Mode Door Motor Circuit 42
INSPECTION FLOW 42
SYSTEM DESCRIPTION 43
DIAGNOSTIC PROCEDURE 43
MODE DOOR 44
Air Mix Door 45
INSPECTION FLOW 45
CONTROL LINKAGE ADJUSTMENT 45
Intake Door Motor Circuit 46
INSPECTION FLOW 46
SYSTEM DESCRIPTON 47
DIAGNOSTIC PROCEDURE 47

CONTROL LINKAGE ADJUSTMENT 48
Blower Motor Circuit 49
INSPECTION FLOW 49
DIAGNOSTIC PROCEDURE 49
ELECTRICAL COMPONENTS INSPECTION 53
Magnet Clutch Circuit 54
INSPECTION FLOW 54
DIAGNOSTIC PROCEDURE 55
REFRIGERANT PRESSURE SENSOR 57
Insufficient Cooling 58
INSPECTION FLOW 58
PERFORMANCE CHART 59
TROUBLE DIAGNOSES FOR ABNORMAL PRESSURE 59
Insufficient Heating 63
INSPECTION FLOW 63
Noise 64
INSPECTION FLOW 64
Intake Sensor Circuit 65
COMPONENT DESCRIPTION 65
DIAGNOSTIC PROCEDURE 65
CONTROL UNIT 67
Removal and Installation 67
REMOVAL 67
INSTALLATION 67
INTAKE SENSOR 68
Removal and Installation 68
BLOWER UNIT 69
Removal and Installation 69
REMOVAL 69
BLOWER MOTOR 70
Removal and Installation 70
INTAKE DOOR MOTOR 71
Removal and Installation 71
IN-CABIN MICROFILTER 72
Removal and Installation 72
FUNCTION 72
REPLACEMENT TIMING 72
REPLACEMENT PROCEDURES 72
HEATER & COOLING UNIT ASSEMBLY 73
Removal and Installation 73
REMOVAL 73
INSTALLATION 73
HEATER CORE 74
Removal and Installation 74
MODE DOOR MOTOR 75
Removal and Installation 75
DRIVER SIDE MODE DOOR MOTOR 75
BLOWER FAN RESISTER 76
Removal and Installation 76
DUCTS AND GRILLES 77
Removal and Installation 77
Ventilator Duct, Defroster Nozzle and Defroster Ducts 77
Center Ventilator Grille 77
Side Ventilator Grille LH 77
Side Ventilator Grille RH 78
Floor duct 78
REFRIGERANT LINES 79
HFC-134a (R-134a) Service Procedure 79
SETTING OF SERVICE TOOLS AND EQUIPMENT 79
Components 80
Removal and Installation for Compressor — QR25DE Models 83
REMOVAL 83
INSTALLATION 83
Removal and Installation for Compressor — VQ35DE Models 84
REMOVAL 84
INSTALLATION 84
Removal and Installation for Compressor Clutch ... 85
REMOVAL 85
INSPECTION 86
INSTALLATION 86
BREAK-IN OPERATION 87
Removal and Installation for Low-pressure Flexible Hose 87
REMOVAL 87
INSTALLATION 87
Removal and Installation for High-pressure flexible hose 88
REMOVAL 88
INSTALLATION 88
Removal and Installation for High-pressure Pipe ... 88
REMOVAL 88
INSTALLATION 88
Removal and Installation for Refrigerant Pressure Sensor 88
Removal and Installation for Condenser 88
REMOVAL 88
INSTALLATION 89
Removal and Installation for Liquid Tank 89
Removal and Installation for Evaporator 90
REMOVAL 90
INSTALLATION 91
Removal and Installation for Expansion Valve 91
Checking for Refrigerant Leaks 91
Checking System for Leaks Using the Fluorescent Leak Detector 91
Dye Injection 92
Electronic Refrigerant Leak Detector 92
PRECAUTIONS FOR HANDLING LEAK DETECTOR 92
CHECKING PROCEDURE 93
SERVICE DATA AND SPECIFICATIONS (SDS) 95
Service Data and Specifications (SDS) 95
COMPRESSOR 95
LUBRICANT 95
REFRIGERANT 95
ENGINE IDLING SPEED 95
BELT TENSION 95

PRECAUTIONS

PFP:00001

Precautions for Supplemental Restraint System (SRS) “AIR BAG” and “SEAT BELT PRE-TENSIONER”

EJS000Z2

The Supplemental Restraint System such as “AIR BAG” and “SEAT BELT PRE-TENSIONER”, used along with a front seat belt, helps to reduce the risk or severity of injury to the driver and front passenger for certain types of collision. Information necessary to service the system safely is included in the SRS and SB section of this Service Manual.

WARNING:

- **To avoid rendering the SRS inoperative, which could increase the risk of personal injury or death in the event of a collision which would result in air bag inflation, all maintenance must be performed by an authorized NISSAN/INFINITI dealer.**
- **Improper maintenance, including incorrect removal and installation of the SRS, can lead to personal injury caused by unintentional activation of the system. For removal of Spiral Cable and Air Bag Module, see the SRS section.**
- **Do not use electrical test equipment on any circuit related to the SRS unless instructed to in this Service Manual. SRS wiring harnesses can be identified by yellow and/or orange harness connectors.**

Precautions for Working with HFC-134a (R-134a)

EJS000Z3

WARNING:

- **CFC-12 (R-12) refrigerant and HFC-134a (R-134a) refrigerant are not compatible. If the refrigerants are mixed, compressor failure is likely to occur. Refer to MTC-3, "Contaminated Refrigerant" . To determine the purity of HFC-134a (R-134a) in the vehicle and recovery tank, use Refrigerant Recovery/Recycling Recharging equipment (ACR4) (J-39500-NI) and Refrigerant Identifier.**
- **Use only specified lubricant for the HFC-134a (R-134a) A/C system and HFC-134a (R-134a) components. If lubricant other than that specified is used, compressor failure is likely to occur.**
- **The specified HFC-134a (R-134a) lubricant rapidly absorbs moisture from the atmosphere. The following handling precautions must be observed:**
  - **When removing refrigerant components from a vehicle, immediately cap (seal) the component to minimize the entry of moisture from the atmosphere.**
  - **When installing refrigerant components to a vehicle, do not remove the caps (unseal) until just before connecting the components. Connect all refrigerant loop components as quickly as possible to minimize the entry of moisture into system.**
  - **Only use the specified lubricant from a sealed container. Immediately reseal containers of lubricant. Without proper sealing, lubricant will become moisture saturated and should not be used.**
  - **Avoid breathing A/C refrigerant and lubricant vapor or mist. Exposure may irritate eyes, nose and throat. Remove R-134a from the A/C system using certified service equipment meeting requirements of SAE J2210 (R-134a recycling equipment), or J2209 (R-134a recovery equipment). If accidental system discharge occurs, ventilate work area before resuming service. Additional health and safety information may be obtained from refrigerant and lubricant manufacturers.**
  - **Do not allow lubricant (Nissan A/C System Oil Type DH-PS) to come in contact with styrofoam parts. Damage may result.**

Contaminated Refrigerant

EJS000Z4

If a refrigerant other than pure R-134a is identified in a vehicle, your options are:

- Explain to the customer that environmental regulations prohibit the release of contaminated refrigerant into the atmosphere.
- Explain that recovery of the contaminated refrigerant could damage your service equipment and refrigerant supply.
- Suggest the customer return the vehicle to the location of previous service where the contamination may have occurred.
- If you choose to perform the repair, recover the refrigerant using only **dedicated equipment and containers. Do not recover contaminated refrigerant into your existing service equipment.** If your facility does not have dedicated recovery equipment, you may contact a local refrigerant product retailer for available service. This refrigerant must be disposed of in accordance with all federal and local regulations. In addition, replacement of all refrigerant system components on the vehicle is recommended.

- If the vehicle is within the warranty period, the air conditioner warranty is void. Please contact Nissan Customer Affairs for further assistance.

General Refrigerant Precautions

EJS000Z5

WARNING:

- **Do not release refrigerant into the air. Use approved recovery/recycling equipment to capture the refrigerant every time an air conditioning system is discharged.**
- **Always wear eye and hand protection (goggles and gloves) when working with any refrigerant or air conditioning system.**
- **Do not store or heat refrigerant containers above 52°C (125°F).**
- **Do not heat a refrigerant container with an open flame; if container warming is required, place the bottom of the container in a warm pail of water.**
- **Do not intentionally drop, puncture, or incinerate refrigerant containers.**
- **Keep refrigerant away from open flames: poisonous gas will be produced if refrigerant burns.**
- **Refrigerant will displace oxygen, therefore be certain to work in well ventilated areas to prevent suffocation.**
- **Do not pressure test or leak test HFC-134a (R-134a) service equipment and/or vehicle air conditioning systems with compressed air during repair. Some mixtures of air and R-134a have been shown to be combustible at elevated pressures. These mixtures, if ignited, may cause injury or property damage. Additional health and safety information may be obtained from refrigerant manufacturers.**

Precautions for Leak Detection Dye

EJS000Z6

- The A/C system contains a fluorescent leak detection dye used for locating refrigerant leaks. An ultraviolet (UV) lamp is required to illuminate the dye when inspecting for leaks.
- Always wear fluorescence enhancing UV safety glasses to protect your eyes and enhance the visibility of the fluorescent dye.
- A compressor shaft seal should not be repaired because of dye seepage. The compressor shaft seal should only be repaired after confirming the leak with an electronic refrigerant leak detector (J-41995).
- Always remove any dye from the leak area after repairs are complete to avoid a misdiagnosis during a future service.
- Do not allow dye to come into contact with painted body panels or interior components. If dye is spilled, clean immediately with the approved dye cleaner. Fluorescent dye left on a surface for an extended period of time **cannot be removed** .
- Do not spray the fluorescent dye cleaning agent on hot surfaces (engine exhaust manifold, etc.).
- Do not use more than one refrigerant dye bottle (1/4 ounce / 7.4 cc) per A/C system.
- Leak detection dyes for R-134a and R-12 A/C systems are different. Do not use R-134a leak detection dye in R-12 A/C systems or R-12 leak detection dye in R-134a A/C systems or A/C system damage may result.
- The fluorescent properties of the dye will remain for over three (3) years unless a compressor failure occurs.

A/C Identification Label

EJS000Z7

Vehicles with factory installed fluorescent dye have this identification label on the underside of hood.

NOTE:
Vehicles with factory installed fluorescent dye have a green label.

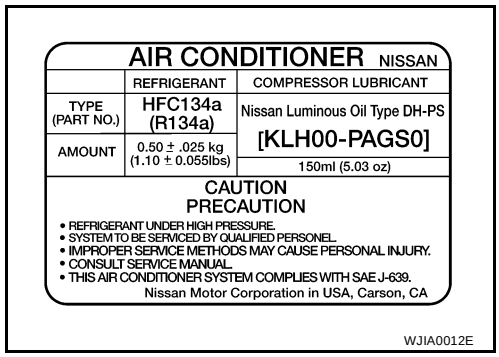

Precautions for Refrigerant Connection

EJS000Z8

A new type refrigerant connection has been introduced to all refrigerant lines except the following locations.

- Expansion valve to cooling unit
- Evaporator pipes to evaporator (inside cooling unit)
- Refrigerant pressure sensor

FEATURES OF NEW TYPE REFRIGERANT CONNECTION

- The O-ring has been relocated. It has also been provided with a groove for proper installation. This eliminates the chance of the O-ring being caught in, or damaged by, the mating part. The sealing direction of the O-ring is now set vertically in relation to the contacting surface of the mating part to improve sealing characteristics.
- The reaction force of the O-ring will not occur in the direction that causes the joint to pull out, thereby facilitating piping connections.

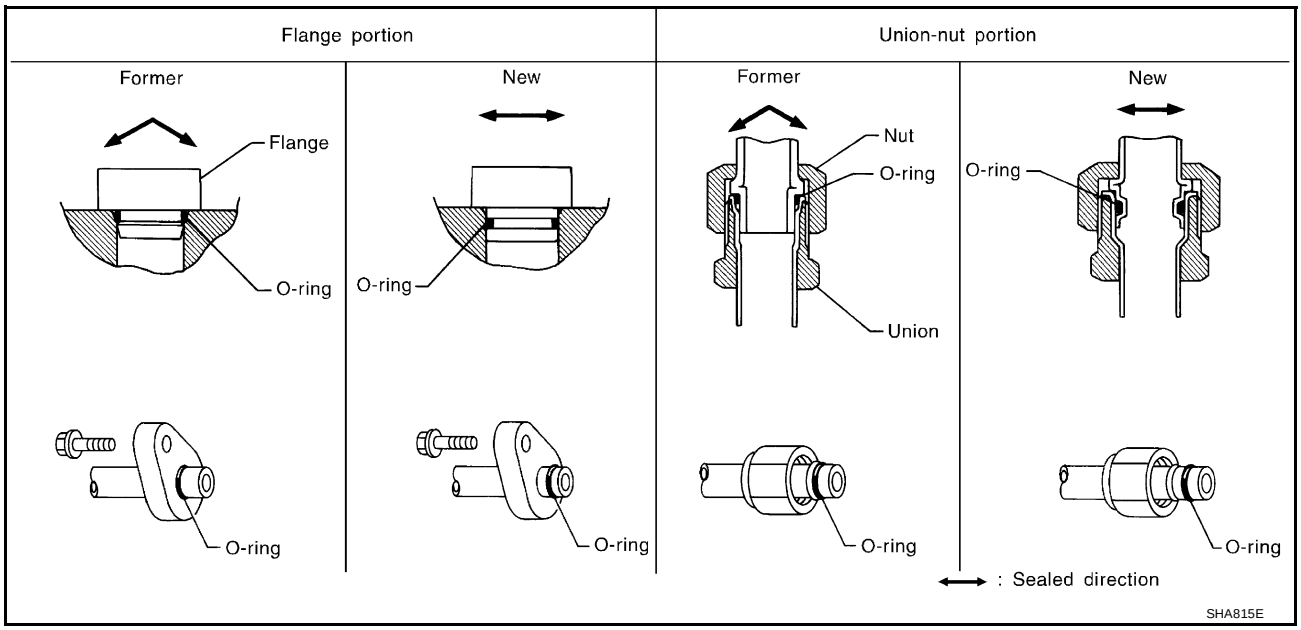

O-RING AND REFRIGERANT CONNECTION

QR25DE Models

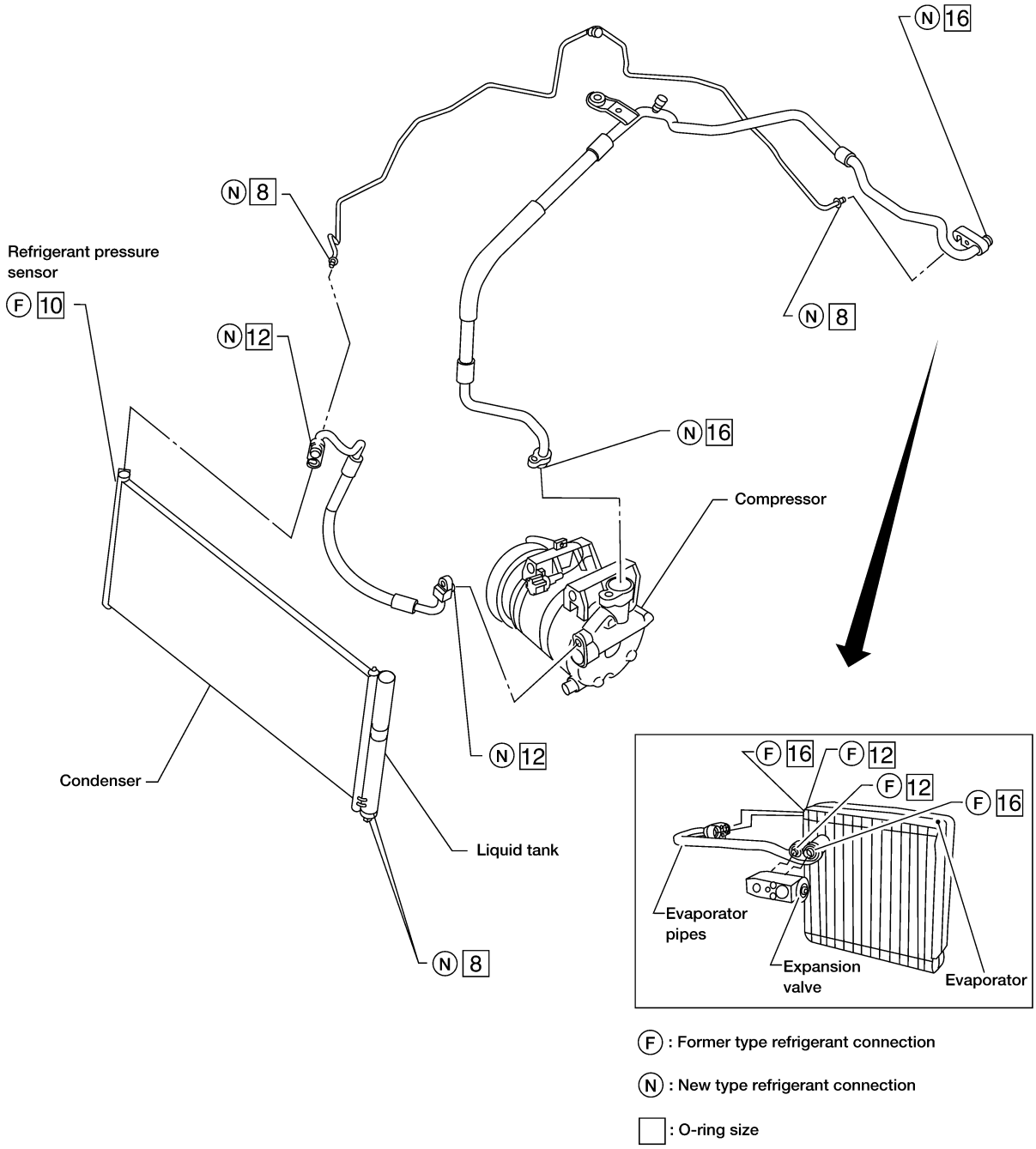

WJIA0131E

VQ35DE Models

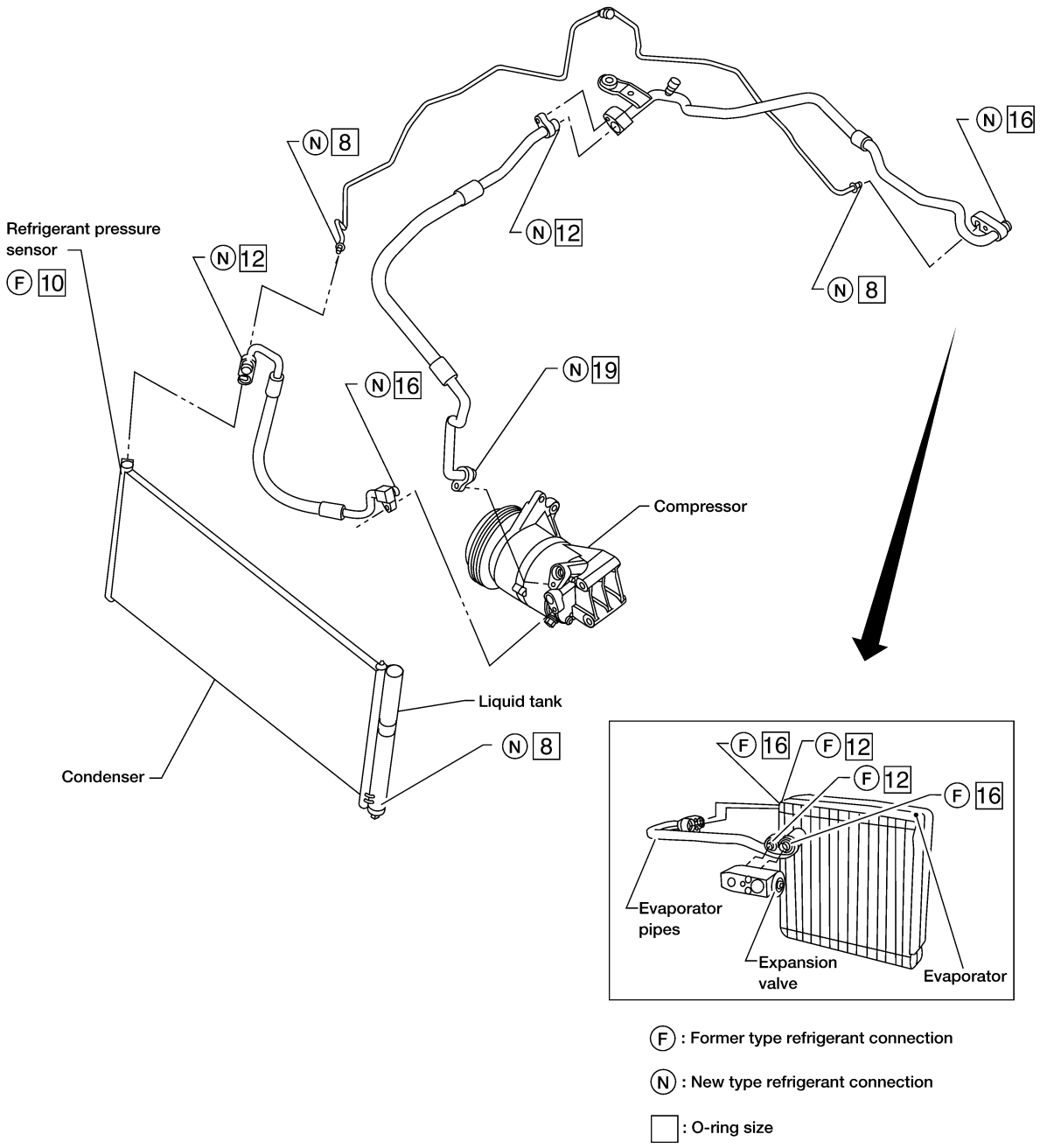

WJIA0135E

CAUTION:

The new and former refrigerant connections use different O-ring configurations. Do not confuse O-rings since they are not interchangeable. If a wrong O-ring is installed, refrigerant will leak at, or around, the connection.

O-Ring Part Numbers and Specifications

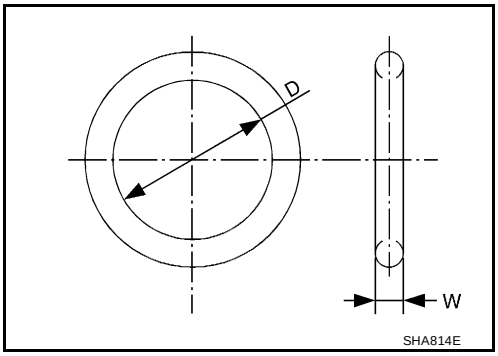

Connection type	O-ring size	Part number*	D mm (in)	W mm (in)
New	8	92471 N8210	6.8 (0.268)	1.85 (0.0728)
Former	10	J2476 89956	9.25 (0.3642)	1.78 (0.0701)
New	12	92472 N8210	10.9 (0.429)	2.43 (0.0957)
Former		92475 71L00	11.0 (0.433)	2.4 (0.094)
New	16	92473 N8210	13.6 (0.535)	2.43 (0.0957)
Former		92475 72L00	14.3 (0.563)	2.3 (0.091)
New	19	92474 N8210	16.5 (0.650)	2.43 (0.0957)

*: Always check with the Parts Department for the latest parts information.

WARNING:

Make sure all refrigerant is discharged into the recycling equipment and the pressure in the system is less than atmospheric pressure. Then gradually loosen the discharge side hose fitting and remove it.

CAUTION:

When replacing or cleaning refrigerant cycle components, observe the following.

- **When the compressor is removed, store it in the same position as it is when mounted on the car. Failure to do so will cause lubricant to enter the low pressure chamber.**
- **When connecting tubes, always use a torque wrench and a back-up wrench.**
- **After disconnecting tubes, immediately plug all openings to prevent entry of dirt and moisture.**
- **When installing an air conditioner in the vehicle, connect the pipes as the final stage of the operation. Do not remove the seal caps of pipes and other components until just before required for connection.**
- **Allow components stored in cool areas to warm to working area temperature before removing seal caps. This prevents condensation from forming inside A/C components.**
- **Thoroughly remove moisture from the refrigeration system before charging the refrigerant.**
- **Always replace used O-rings.**
- **When connecting tube, apply lubricant to circle of the O-rings shown in illustration. Be careful not to apply lubricant to threaded portion.**
  Lubricant name: Nissan A/C System Oil Type DH-PS
  Part number: KLH00-PAGS0
- **O-ring must be closely attached to dented portion of tube.**
- **When replacing the O-ring, be careful not to damage O-ring and tube.**
- **Connect tube until you hear it click, then tighten the nut or bolt by hand until snug. Make sure that the O-ring is installed to tube correctly.**

- **After connecting line, conduct leak test and make sure that there is no leakage from connections. When the gas leaking point is found, disconnect that line and replace the O-ring. Then tighten connections of seal seat to the specified torque.**

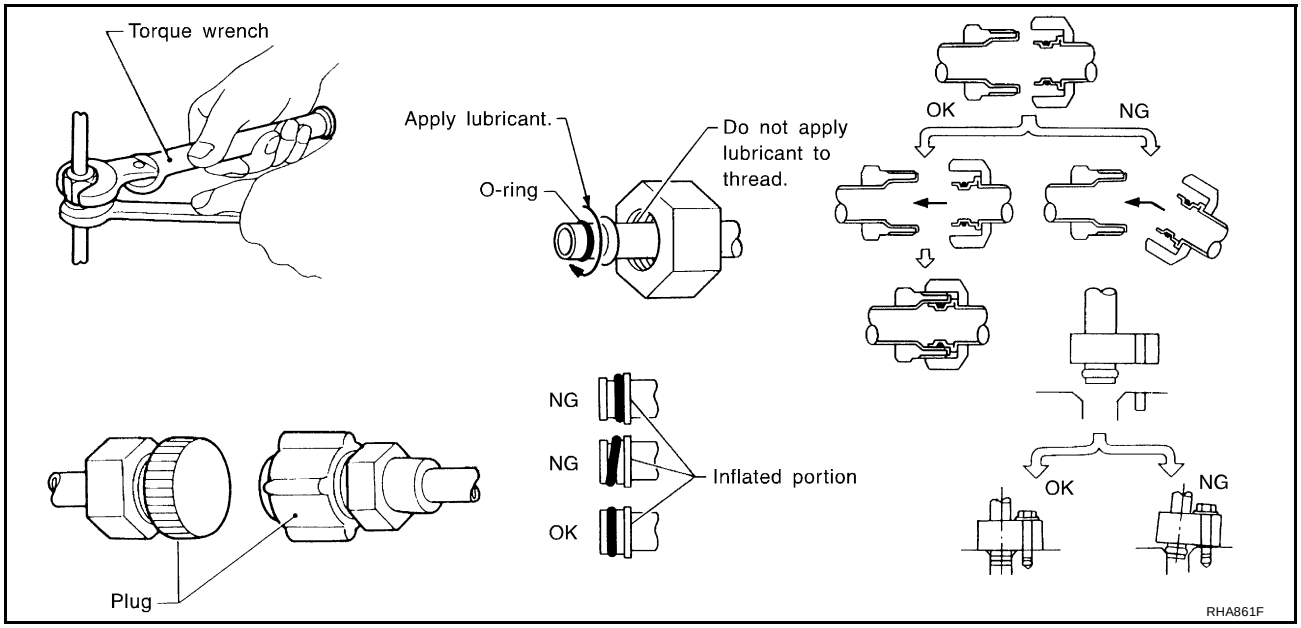

Precautions for Servicing Compressor

EJS000Z9

- **Plug all openings to prevent moisture and foreign matter from entering.**
- **When the compressor is removed, store it in the same position as it is when mounted on the car.**
- **When replacing or repairing compressor, follow “Maintenance of Lubricant Quantity in Compressor” exactly. Refer to MTC-18, "Maintenance of Lubricant Quantity in Compressor" .**
- **Keep friction surfaces between clutch and pulley clean. If the surface is contaminated, with lubricant, wipe it off by using a clean waste cloth moistened with thinner.**
- **After compressor service operation, turn the compressor shaft by hand more than 5 turns in both directions. This will equally distribute lubricant inside the compressor. After the compressor is installed, let the engine idle and operate the compressor for 1 hour.**
- **After replacing the compressor magnet clutch, apply voltage to the new one and check for normal operation. [Gap between clutch disc and pulley is 0.3 - 0.6 mm (0.012 - 0.024 in)]**

Precautions for Service Equipment

EJS000ZA

RECOVERY/RECYCLING EQUIPMENT

Follow the manufacturer's instructions for machine operation and machine maintenance. Never introduce any refrigerant other than that specified into the machine.

ELECTRONIC LEAK DETECTOR

Follow the manufacturer's instructions for tester operation and tester maintenance.

VACUUM PUMP

The lubricant contained inside the vacuum pump is not compatible with the specified lubricant for HFC-134a (R-134a) A/C systems. The vent side of the vacuum pump is exposed to atmospheric pressure so the vacuum pump lubricant may migrate out of the pump into the service hose. This is possible when the pump is switched off after evacuation (vacuuming) and hose is connected to it.
To prevent this migration, use a manual valve situated near the hose-to-pump connection, as follows.

- Usually vacuum pumps have a manual isolator valve as part of the pump. Close this valve to isolate the service hose from the pump.
- For pumps without an isolator, use a hose equipped with a manual shut-off valve near the pump end. Close the valve to isolate the hose from the pump.
- If the hose has an automatic shut off valve, disconnect the hose from the pump: as long as the hose is connected, the valve is open and lubricating oil may migrate.

Some one-way valves open when vacuum is applied and close under a no vacuum condition. Such valves may restrict the pump's ability to pull a deep vacuum and are not recommended.

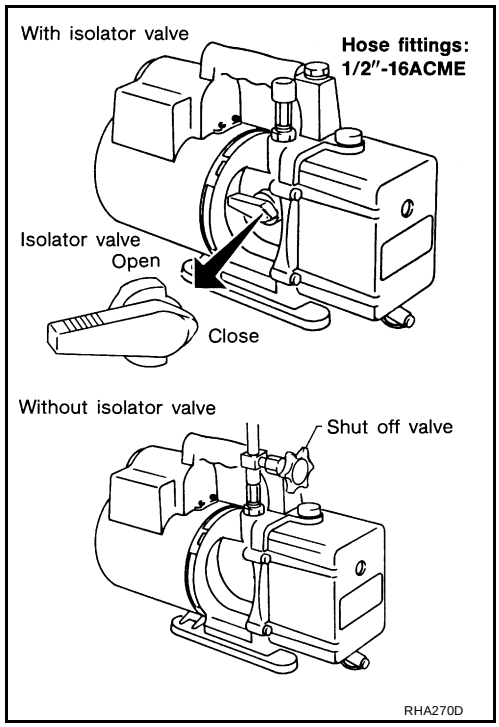

MANIFOLD GAUGE SET

Be certain that the gauge face indicates R-134a or 134a. Make sure the gauge set has 1/2″-16 ACME threaded connections for service hoses. Confirm the set has been used only with refrigerant HFC-134a (R-134a) along with specified lubricant.

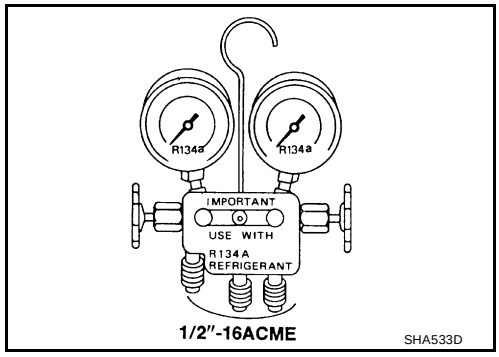

SERVICE HOSES

Be certain that the service hoses display the markings described (colored hose with black stripe). All hoses must include positive shut-off devices (either manual or automatic) near the end of the hoses opposite the manifold gauge.

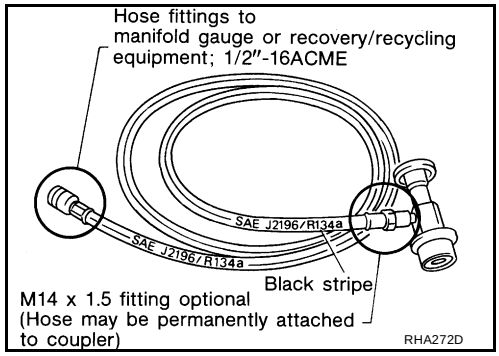

SERVICE COUPLERS

Never attempt to connect HFC-134a (R-134a) service couplers to a CFC-12 (R-12) A/C system. The HFC-134a (R-134a) couplers will not properly connect to the CFC-12 (R-12) system. However, if an improper connection is attempted, discharging and contamination may occur.

Shut-off valve rotation	A/C service valve
Clockwise	Open
Counterclockwise	Close

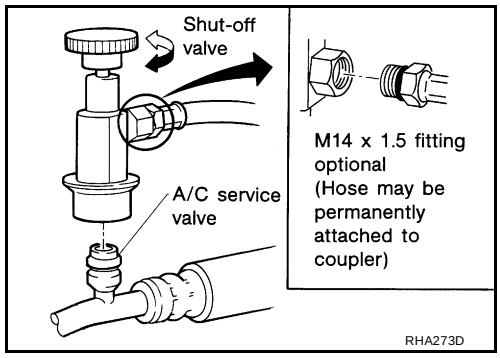

REFRIGERANT WEIGHT SCALE

Verify that no refrigerant other than HFC-134a (R-134a) and specified lubricants have been used with the scale. If the scale controls refrigerant flow electronically, the hose fitting must be 1/2″-16 ACME.

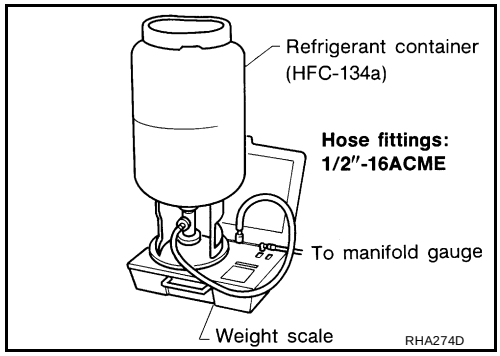

CALIBRATING ACR4 WEIGHT SCALE

Calibrate the scale every three months.
To calibrate the weight scale on the ACR4 (J-39500-NI):

1. Press **Shift/Reset** and **Enter** at the same time.
2. Press **8787** . “**A1** ” will be displayed.
3. Remove all weight from the scale.
4. Press **0** , then press **Enter** . “**0.00** ” will be displayed and change to “**A2** ”.
5. Place a known weight (dumbbell or similar weight), between 4.5 and 36.3 kg (10 and 80 lb) on the center of the weight scale.
6. Enter the known weight using four digits. (Example 10 lbs = 10.00, 10.5 lbs = 10.50)
7. Press **Enter** — the display returns to the vacuum mode.
8. Press **Shift/Reset** and **Enter** at the same time.
9. Press **6** — the known weight on the scale is displayed.
10. Remove the known weight from the scale. “**0.00** ” will be displayed.
11. Press **Shift/Reset** to return the ACR4 to the program mode.

CHARGING CYLINDER

Using a charging cylinder is not recommended. Refrigerant may be vented into air from cylinder's top valve when filling the cylinder with refrigerant. Also, the accuracy of the cylinder is generally less than that of an electronic scale or of quality recycle/recharge equipment.

Wiring Diagrams and Trouble Diagnosis

EJS000ZB

When you read wiring diagrams, refer to the following:

- GI-12, "How to Read Wiring Diagrams"
- PG-5, "Wiring Diagram — POWER —"

When you perform trouble diagnosis, refer to the following:

- GI-9, "How to Follow Trouble Diagnoses"
- GI-25, "How to Perform Efficient Diagnosis for an Electrical Incident"

PREPARATION

PFP:00002

Special Service Tools

EJS000ZC

The actual shapes of Kent-Moore tools may differ from those of special service tools illustrated here.

Tool number (Kent-Moore No.) Tool name	Description
KV99234330 (J-38873) Pulley installer 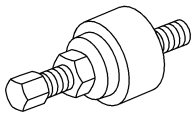 LHA171	Installing pulley
KV99233130 (J-29884) Pulley puller 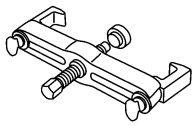 LHA172	Removing pulley

HFC-134a (R-134a) Service Tools and Equipment

EJS000ZD

Never mix HFC-134a refrigerant and/or its specified lubricant with CFC-12 (R-12) refrigerant and/or its lubricant.
Separate and non-interchangeable service equipment must be used for handling each type of refrigerant/lubricant.
Refrigerant container fittings, service hose fittings and service equipment fittings (equipment which handles refrigerant and/or lubricant) are different between CFC-12 (R-12) and HFC-134a (R-134a). This is to avoid mixed use of the refrigerants/lubricant.
Adapters that convert one size fitting to another must never be used: refrigerant/lubricant contamination will occur and compressor failure will result.

Tool number (Kent-Moore No.) Tool name	Description
HFC-134a (R-134a) refrigerant 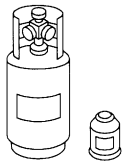 S-NT196	Container color:Light blue Container marking:HFC-134a (R-134a) Fitting size: Thread size ● large container 1/2^2 -16 ACME
KLH00-PAGS0 (-) Nissan A/C System Oil Type DH-PS S-NT197	Type:Poly alkylene glycol oil (PAG), type DH-PS Application:HFC-134a (R-134a) vane rotary compressors (Nissan only) Lubricity: 40 m ℓ (1.4 US fl oz, 1.4 Imp fl oz)

Tool number (Kent-Moore No.) Tool name		Description
(J-39500-NI) Recovery/Recycling Recharging equipment (ACR4)	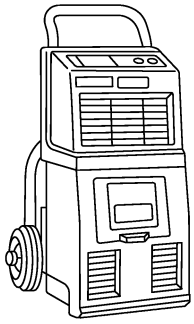 RJIA0195E	Function:Refrigerant Recovery and Recycling and Recharging
(J-41995) Electronic refrigerant leak detector	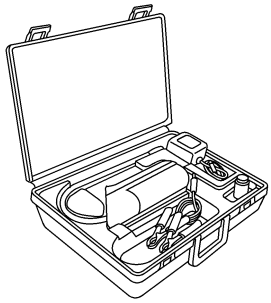 AHA281A	Power supply: ● DC 12V (Cigarette lighter)
(J-43926) Refrigerant dye leak detection kit Kit includes: (J-42220) UV lamp and UV safety glasses (J-41459) Refrigerant dye injector (J-41447) qty. 24 HFC-134a (R-134a) refrigerant dye (J-43872) Refrigerant dye cleaner	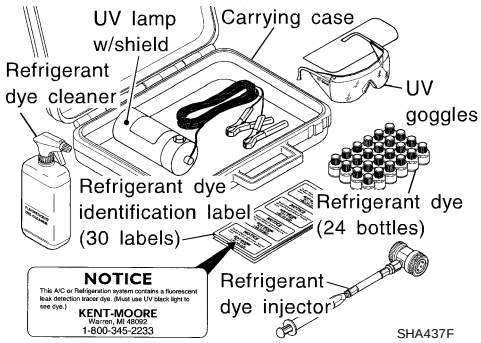 SHA437F	Power supply: DC 12V (Battery terminal)
(J-42220) Fluorescent dye leak detector	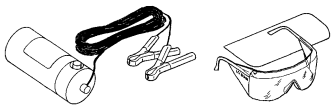 SHA438F	Power supply: DC 12V (Battery terminal) For checking refrigerant leak when fluorescent dye is installed in A/C system. Includes: UV lamp and UV safety glasses
(J-41447) HFC-134a (R-134a) Fluorescent leak detection dye (Box of 24, 1/4 ounce bottles)	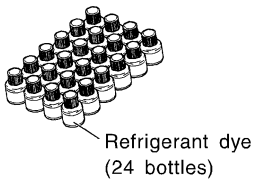 SHA439F	Application: For HFC-134a (R-134a) PAG oil Container: 1/4 ounce (7.4cc) bottle (Includes self-adhesive dye identification labels for affixing to vehicle after charging system with dye.)

Tool number (Kent-Moore No.) Tool name		Description
(J-41459) HFC-134a (R-134a) Dye injector Use with J-41447, 1/4 ounce bottle	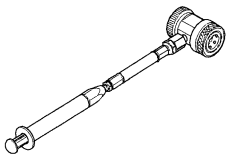 SHA440F	For injecting 1/4 ounce of fluorescent leak detection dye into A/C system.
(J-43872) Dye cleaner	 SHA441F	For cleaning dye spills.
(J-39183-C) Manifold gauge set (with hoses and couplers)	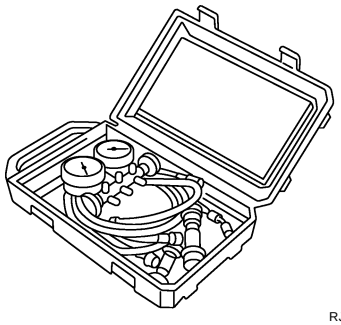 RJIA0196E	Identification: ● The gauge face indicates R-134a. Fitting size: Thread size ● $1/2^2$ -16 ACME
Service hoses ● High side hose (J-39500-72B) ● Low side hose (J-39500-72R) ● Utility hose (J-39500-72Y)	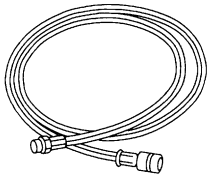 S-NT201	Hose color: ● Low side hose:Blue with black stripe ● High side hose:Red with black stripe ● Utility hose:Yellow with black stripe or green with black stripe Hose fitting to gauge: ● $1/2^2$ -16 ACME
Service couplers ● High side coupler (J-39500-20A) ● Low side coupler (J-39500-24A)	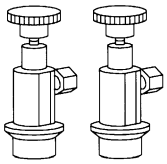 S-NT202	Hose fitting to service hose: ● M14 x 1.5 fitting is optional or permanently attached.
(J-39699) Refrigerant weight scale	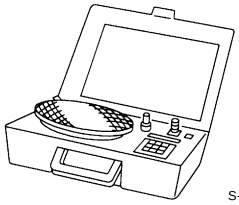 S-NT200	For measuring of refrigerant Fitting size: Thread size ● $1/2^2$ -16 ACME
(J-39649) Vacuum pump (Including the isolator valve)	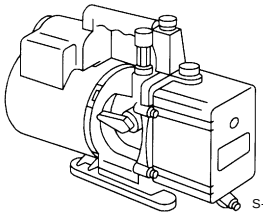 S-NT203	Capacity: ● Air displacement: 4 CFM ● Micron rating: 20 microns ● Oil capacity: 482 g (17 oz) Fitting size: Thread size ● $1/2^2$ -16 ACME

Commercial Service Tools

EJS000ZE

Tool name	Description
(J-41810-NI) Refrigerant identifier equipment-(R-134a) 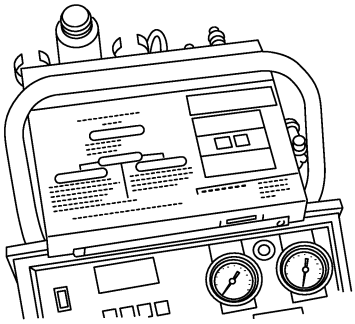 RJIA0197E	Checks refrigerant purity and for system contamination
Power tool 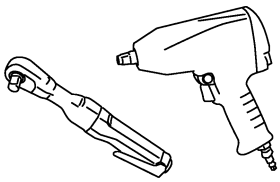 PBIC0190E	Loosening bolts and nuts
(J-44614) Clutch disc holding tool 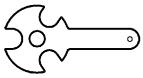 WHA230	Clutch disc holding tool

REFRIGERATION SYSTEM

PFP:KA990

Refrigeration Cycle

EJS000ZF

REFRIGERANT FLOW

The refrigerant flows in the standard pattern, that is, through the compressor, the condenser, the liquid tank, through the evaporator, and back to the compressor. The refrigerant evaporation through the evaporator coil is controlled by an externally equalized expansion valve, located inside the evaporator case.

REFRIGERANT SYSTEM PROTECTION

Refrigerant Pressure Sensor

The refrigerant system is protected against excessively high or low pressures by the refrigerant pressure sensor, located on the condenser. If the system pressure rises above or falls below the specifications, the refrigerant pressure sensor detects the pressure inside the refrigerant line and sends the voltage signal to the ECM. ECM makes the A/C relay go OFF and stops the compressor when pressure on the high pressure side detected by refrigerant pressure sensor is over about 2,746 kPa (28 kg/cm^2 , 398 psi) or below about 120 kPa (1.22 kg/cm^2 , 17.4 psi).

Pressure Relief Valve

The refrigerant system is also protected by a pressure relief valve, located in the rear head of the compressor. When the pressure of refrigerant in the system increases to an abnormal level [more than 3,727 kPa (38 kg/cm^2 , 540 psi)], the release port on the pressure relief valve automatically opens and releases refrigerant into the atmosphere.

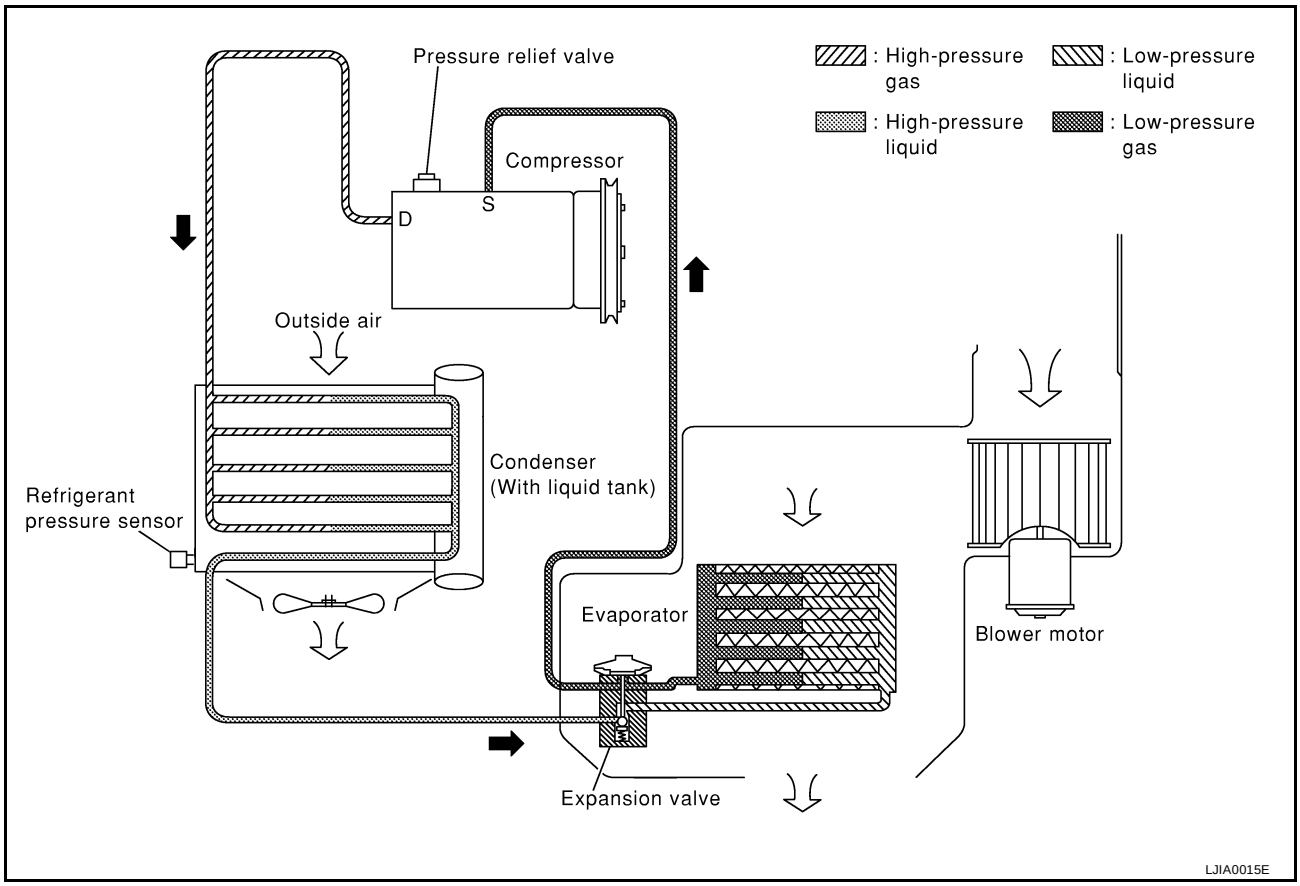

Component Layout

EJS000ZG

SEC. 270 • 271 • 272 • 273

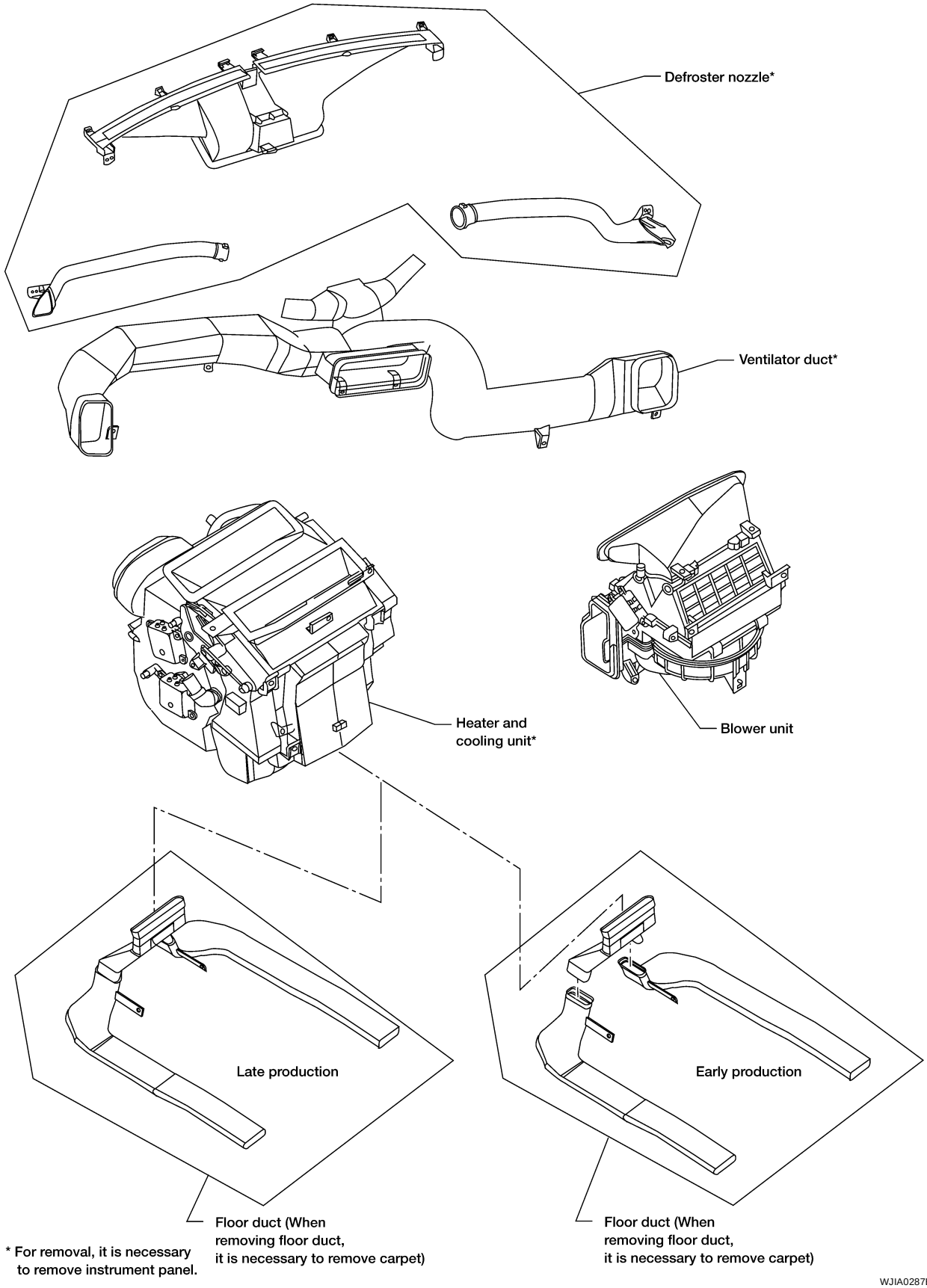

LUBRICANT

PFP:KLG00

Maintenance of Lubricant Quantity in Compressor

EJS000ZH

The lubricant in the compressor circulates through the system with the refrigerant. Add lubricant to compressor when replacing any component or after a large refrigerant leakage has occurred. It is important to maintain the specified amount.
If lubricant quantity is not maintained properly, the following malfunctions may result:

- Lack of lubricant: May lead to a seized compressor
- Excessive lubricant: Inadequate cooling (thermal exchange interference)

LUBRICANT

Name: Nissan A/C System Oil Type DH-PS
Part number: KLH00-PAGS0

CHECKING AND ADJUSTING

Adjust the lubricant quantity according to the test group shown below.

1. LUBRICANT RETURN OPERATION

Can lubricant return operation be performed?

- A/C system works properly.
- There is no evidence of a large amount of lubricant leakage.

Yes or No

Yes >> GO TO 2.
No >> GO TO 3.

2. PERFORM LUBRICANT RETURN OPERATION, PROCEEDING AS FOLLOWS

1. Start engine, and set the following conditions:

– **Test condition**
Engine speed: Idling to 1,200 rpm
A/C switch: ON
Blower speed: Max. position
Temp. control: Optional [Set so that intake air temperature is 25 to 30°C (77 to 86°F).]
Intake position: Recirculation (REC)

2. Perform lubricant return operation for about 10 minutes.
3. Stop engine.

CAUTION:
If excessive lubricant leakage is noted, do not perform the lubricant return operation.

>> GO TO 3.

3. CHECK COMPRESSOR

Should the compressor be replaced?

Yes or No

Yes >> GO TO MTC-19, "Lubricant Adjustment Procedure for Compressor Replacement" .
No >> GO TO 4.

4. CHECK ANY PART

Is there any part to be replaced? (Evaporator, condenser, liquid tank or in case there is evidence of a large amount of lubricant leakage.)

Yes or No

Yes >> GO TO MTC-19, "Lubricant Adjusting Procedure for Component Replacement Except Compressor" .
No >> Carry out the A/C performance test.

Lubricant Adjusting Procedure for Component Replacement Except Compressor

After replacing any of the following major components, add the correct amount of lubricant to the system.

Amount of lubricant to be added

Part replaced	Lubricant to be added to system Amount of lubricant m ℓ (US fl oz, Imp fl oz)	Remarks
Evaporator	75 (2.5, 2.6)	—
Condenser	75 (2.5, 2.6)	—
Liquid tank	5 (0.2, 0.2)	Add if compressor is not replaced.
In case of refrigerant leak	30 (1.0, 1.1)	Large leak
	—	Small leak *1

- *1: If refrigerant leak is small, no addition of lubricant is needed.

Lubricant Adjustment Procedure for Compressor Replacement

1. Before connecting ACR4 to vehicle, check ACR4 gauges. No refrigerant pressure should be displayed. If OK, recover refrigerant from equipment lines.
2. Confirm refrigerant purity in supply tank using ACR4 and refrigerant identifier. If NG, refer to MTC-3, "Contaminated Refrigerant" .
3. Connect ACR4 to vehicle. Confirm refrigerant purity in vehicle A/C system using ACR4 and refrigerant identifier. If NG, refer to MTC-3, "Contaminated Refrigerant" .
4. Discharge refrigerant into the refrigerant recovery/recycling equipment. Measure lubricant discharged into the recovery/recycling equipment.
5. Drain the lubricant from the “old” (removed) compressor into a graduated container and recover the amount of lubricant drained.
6. Drain the lubricant from the “new” compressor into a separate, clean container.
7. Measure an amount of new lubricant installed equal to amount drained from “old” compressor. Add this lubricant to “new” compressor through the suction port opening.
8. Measure an amount of new lubricant equal to the amount recovered during discharging. Add this lubricant to “new” compressor through the suction port opening.
9. If the liquid tank also needs to be replaced, add an additional 5 m ℓ (0.2 US fl oz, 0.2 Imp fl oz) of lubricant at this time.
   Do not add this 5 m ℓ (0.2 US fl oz, 0.2 Imp fl oz) of lubricant if only replacing the compressor.

Lubricant adjusting procedure for compressor replacement

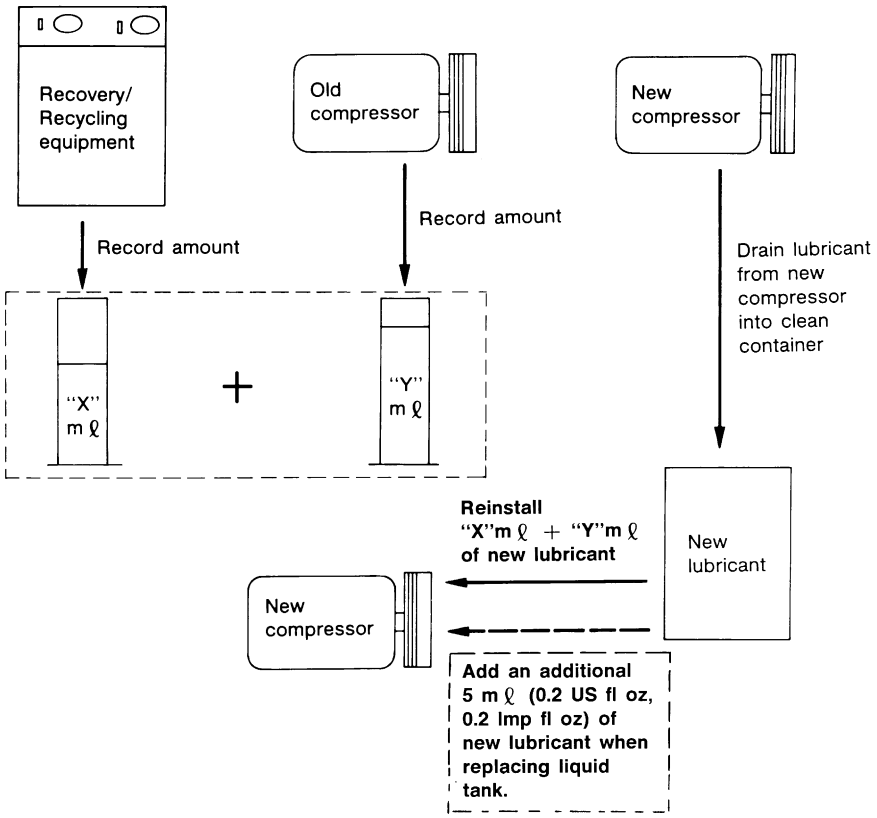

RHA065DD

AIR CONDITIONER CONTROL

PFP:27500

Control Operation

EJS000ZI

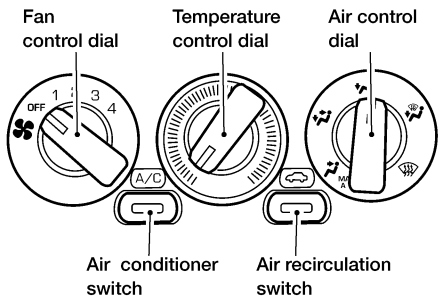

WJIA0133E

FAN CONTROL DIAL

This dial turns the fan ON and OFF, and controls fan speed.

AIR CONTROL DIAL

This dial allows control of the outlet air flow.
In , , or mode, the intake door is set to "FRESH".
The compressor turns on when the dial is moved to "MAX A/C" or .

TEMPERATURE CONTROL DIAL

This dial allows adjustment of the temperature of the outlet air.

RECIRCULATION (REC) SWITCH

OFF position: Outside air is drawn into the passenger compartment.
ON position: Interior air is recirculated inside the vehicle. The indicator lamp will also light.
Recirculation is canceled when , or is selected, and resumes when another mode is chosen.
If the refrigerant pressure sensor input signal is high, recirculation is canceled, when , and mode is selected.

AIR CONDITIONER (A/C) SWITCH

The air conditioner switch controls the A/C system. When the switch is depressed with the fan ON, the compressor will turn ON. The indicator lamp will also light.
The air conditioner cooling function operates only when the engine is running.

Discharge Air Flow

EJS000ZJ

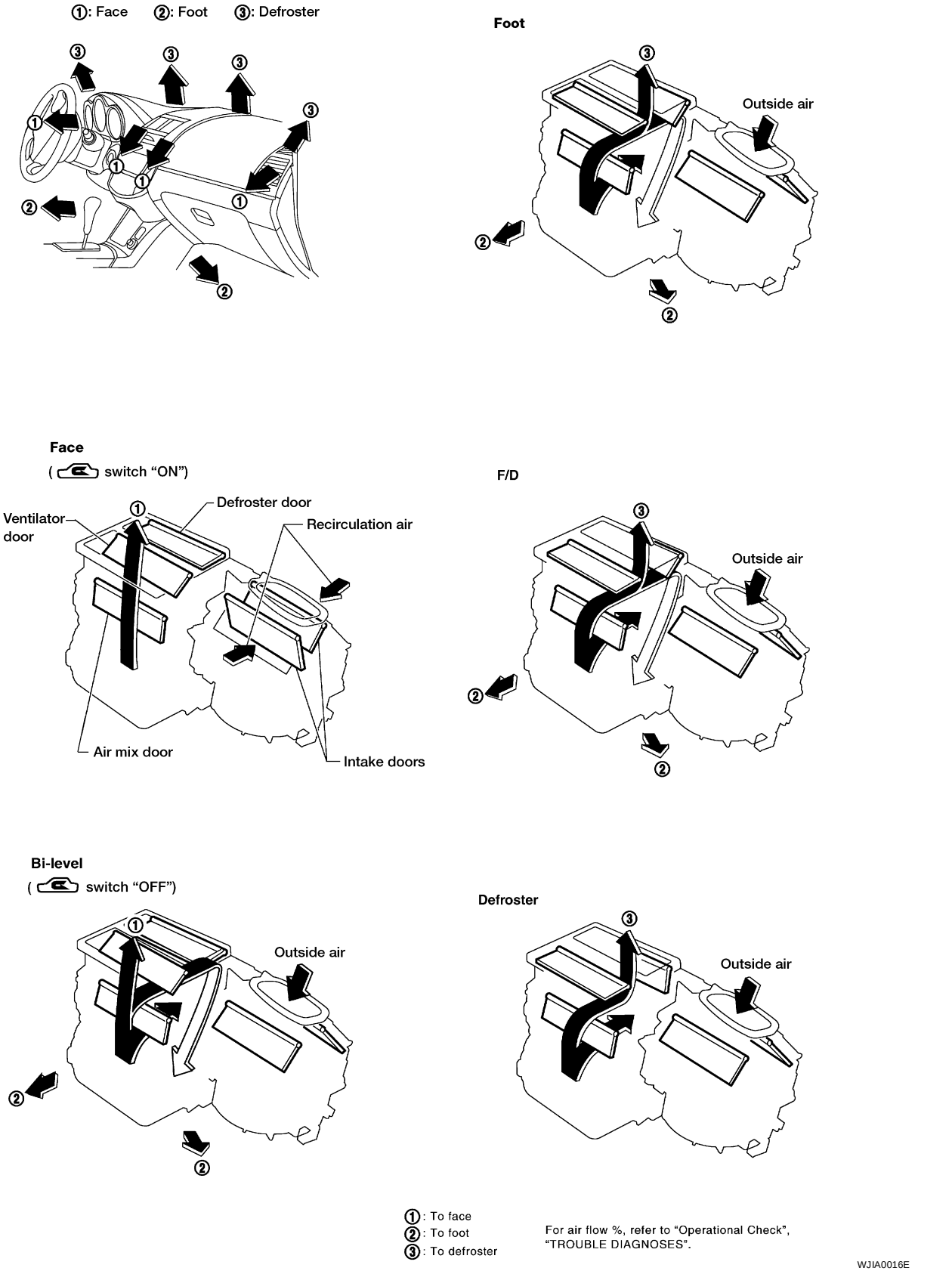

System Description

EJS000ZK

SWITCHES AND THEIR CONTROL FUNCTION

Knob/Switch		Knob/Switch position							Air outlet	Intake air	Compressor
		A/C									
A/C		○							—	—	ON*1
Mode			○						VENT	*4	*3
				○					B/L	*4	*3
					○				FOOT	FRE	*3
						○			D/F	FRE	*3
							○		DEF	FRE	*1
								○	—	REC*2	—

*1: Compressor is operated by ECM.
*2: In , and modes, REC switch is canceled
*3: Compressor operates if A/C switch is ON.
*4: Recirculation operates if REC switch is ON.

WJIA0134E

CAN Communication System Description

EJS000ZL

CAN (Controller Area Network) is a serial communication line for real time application. It is an on-vehicle multiplex communication line with high data communication speed and excellent error detection ability. Many electronic control units are equipped onto a vehicle, and each control unit shares information and links with other control units during operation (not independent). In CAN communication, control units are connected with 2 communication lines (CAN H line, CAN L line) allowing a high rate of information transmission with less wiring. Each control unit transmits/receives data but selectively reads required data only.

FOR TCS MODELS

System diagram

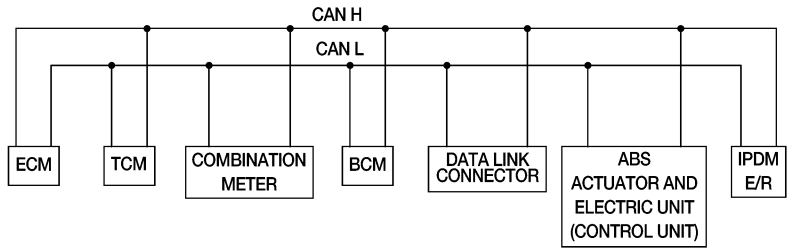

LKIA0015E

Input/output signal chart

T: Transmit R: Receive

Signals	ECM	TCM	COMBINATION METER	BCM	ABS/TCS control unit	IPDM E/R
Engine speed signal	T		R		R	
Engine coolant temperature signal	T		R			

Signals	ECM	TCM	COMBINA-TION METER	BCM	ABS/TCS control unit	IPDM E/R
Accelerator pedal position signal	T					
Fuel consumption monitor signal	T		R			
A/T warning lamp signal		T	R			
A/T position indicator signal	R	T	R	R(R range only)	R	
ABS operation signal	R				T	
TCS operation signal	R	R			T	
Air conditioner switch signal	R			T		
Air conditioner compressor signal	R					T
A/C compressor request signal	T					R
Cooling fan motor operation signal	R					T
Cooling fan speed request signal	T					R
Position lights request			R	T		R
Position lights status				R		T
Low beam request				T		R
Low beam status	R			R		T
High beam request			R	T		R
High beam status	R			R		T
Front fog lights request				T		R
Front fog light status				R		T
OD cancel switch signal		R	T			R
Brake switch signal		R	T			
Vehicle speed signal	R		T			
	R		T	R		
Oil pressure switch			R			T
Sleep request1			R	T		
Sleep request2				T		R
N range switch signal		R	T			
P range switch signal		R	T			
Seat belt buckle switch signal			T	R		
Door switch signal			R	T		R
Tail lamp request			R	T		R
Turn indicator signal			R	T		
Buzzer output signal			R	T		
Trunk switch signal			R	T		
ASCD main switch signal	T		R			
ASCD cruise signal	T		R			
Wiper operation				R		T
Wiper stop position signal				R		T
Rear window defogger switch signal				T		R
Rear window defogger control signal	R			R		T

FOR A/T MODELS

System diagram

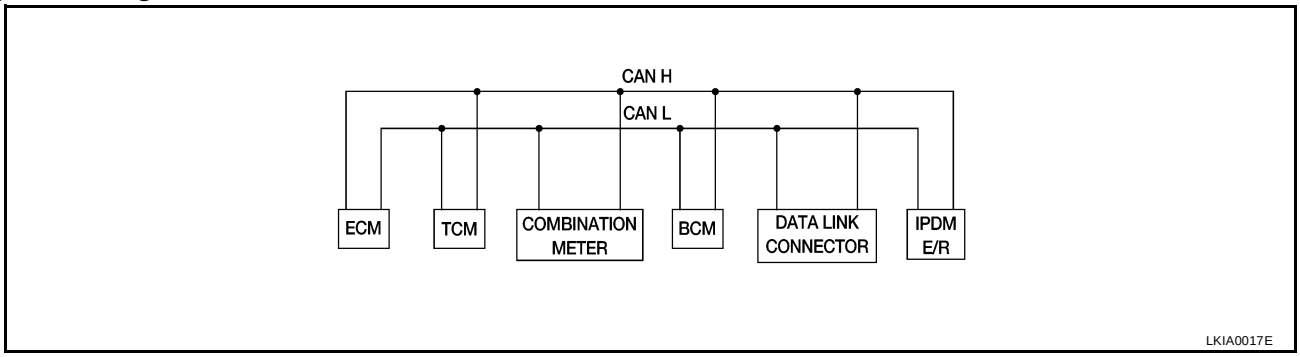

Input/output signal chart

T: Transmit R: Receive

Signals	ECM	TCM	COMBINATION METER	BCM	IPDM E/R
Engine speed signal	T		R		
Engine coolant temperature signal	T		R		
Accelerator pedal position signal	T				R
Fuel consumption monitor signal	T		R		
A/T warning lamp signal		T	R		
A/T position indicator signal	R	T	R	R(R range only)	
Air conditioner switch signal	R			T	
Air conditioner compressor signal	R				T
A/C compressor request signal	T				R
Blower fan switch signal	R(QR25DE)			T	
Cooling fan motor operation signal	R			T	
Cooling fan speed request signal	T				R
Position lights request			R	T	R
Position lights status				R	T
Low beam request				T	R
Low beam status	R			R	T
High beam request			R	T	R
High beam status	R			R	T
Front fog lights request				T	R
Front fog light status				R	T
OD cancel switch signal		R	T		R
Brake switch signal		R	T		
Vehicle speed signal	R		T		
	R		T	R	
Oil pressure switch			R		T
Sleep request1			R	T	
Sleep request2				T	R
N range switch signal		R	T		
P range switch signal		R	T		
Seat belt buckle switch signal			T	R	
Door switch signal			R	T	R

Signals	ECM	TCM	COMBINATION METER	BCM	IPDM E/R
Tail lamp request			R	T	R
Turn indicator signal			R	T	
Buzzer output signal			R	T	
Trunk switch signal			R	T	
ASCD main switch signal	T		R		
ASCD cruise signal	T		R		
Wiper operation				R	T
Wiper stop position signal				R	T
Rear window defogger switch signal				T	R
Rear window defogger control signal	R			R	T

FOR M/T MODELS

System diagram

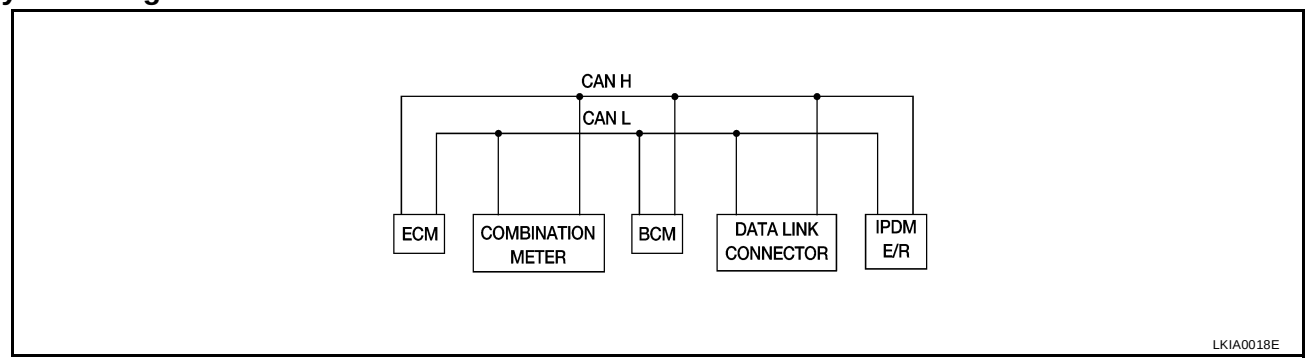

Input/output signal chart

T: Transmit R: Receive

Signals	ECM	COMBINATION METER	BCM	IPDM E/R
Engine speed signal	T			
Engine coolant temperature signal	T			
Fuel consumption monitor signal	T			
Air conditioner switch signal	R		T	
Air conditioner compressor signal	R			T
A/C compressor request signal	T			R
Blower fan switch signal	R(QR25DE)		T	
Cooling fan motor operation signal	R			T
Cooling fan speed request signal	T			R
Position lights request		R	T	R
Position lights status			R	T
Low beam request			T	R
Low beam status	R		R	T
High beam request		R	T	R
High beam status	R		R	T
Front fog lights request			T	R
Front fog light status			R	T
Vehicle speed signal	R	T		
Oil pressure switch		R		T

Signals	ECM	COMBINATION METER	BCM	IPDM E/R
Sleep request1		R	T	
Sleep request2			T	R
Seat belt buckle switch signal		T	R	
Door switch signal		R	T	R
Tail lamp request		R	T	R
Turn indicator signal		R	T	
Buzzer output signal		R	T	
Trunk switch signal		R	T	
ASCD main switch signal	T	R		
ASCD cruise signal	T	R		
Wiper operation			R	T
Wiper stop position signal			R	T
Rear window defogger switch signal			T	R
Rear window defogger control signal	R		R	T

TROUBLE DIAGNOSIS

PFP:00004

How to Perform Trouble Diagnoses for Quick and Accurate Repair

EJS000ZM

WORK FLOW

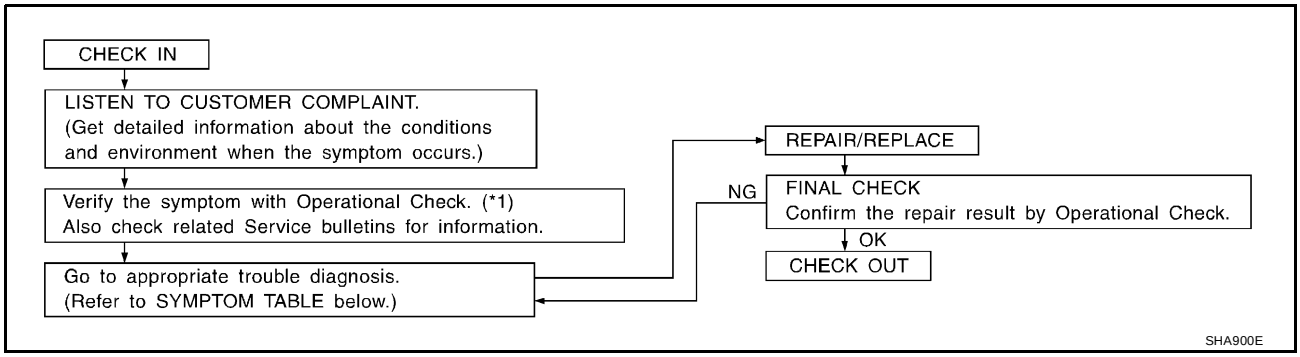

*1: MTC-38, "Operational Check"

SYMPTOM TABLE

Symptom	Reference Page	
● A/C system does not come on.	● Go to Trouble Diagnosis Procedure for A/C system.	MTC-40
● Air outlet does not change. ● Mode door motor does not operate normally.	● Go to Trouble Diagnosis Procedure for Mode Door Motor.	MTC-42
● Air Mix door does not change.	● Go to Trouble Diagnosis Procedure for Air Mix Door.	MTC-45
● Intake door does not change. ● Intake door motor does not operate normally.	● Go to Trouble Diagnosis Procedure for Intake Door Motor.	MTC-46
● Blower motor operation is malfunctioning.	● Go to Trouble Diagnosis Procedure for Blower Motor.	MTC-49
● Magnet clutch does not engage.	● Go to Trouble Diagnosis Procedure for Magnet Clutch.	MTC-54
● Insufficient cooling.	● Go to Trouble Diagnosis Procedure for Insufficient Cooling.	MTC-58
● Insufficient heating.	● Go to Trouble Diagnosis Procedure for Insufficient Heating.	MTC-63
● Noise.	● Go to Trouble Diagnosis Procedure for Noise.	MTC-64

Component Parts and Harness Connector Location

EJS000ZN

ENGINE COMPARTMENT

QR25DE Models

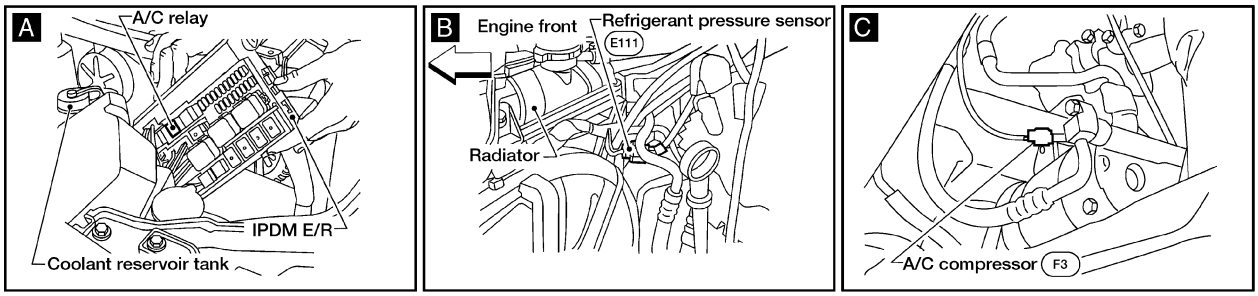

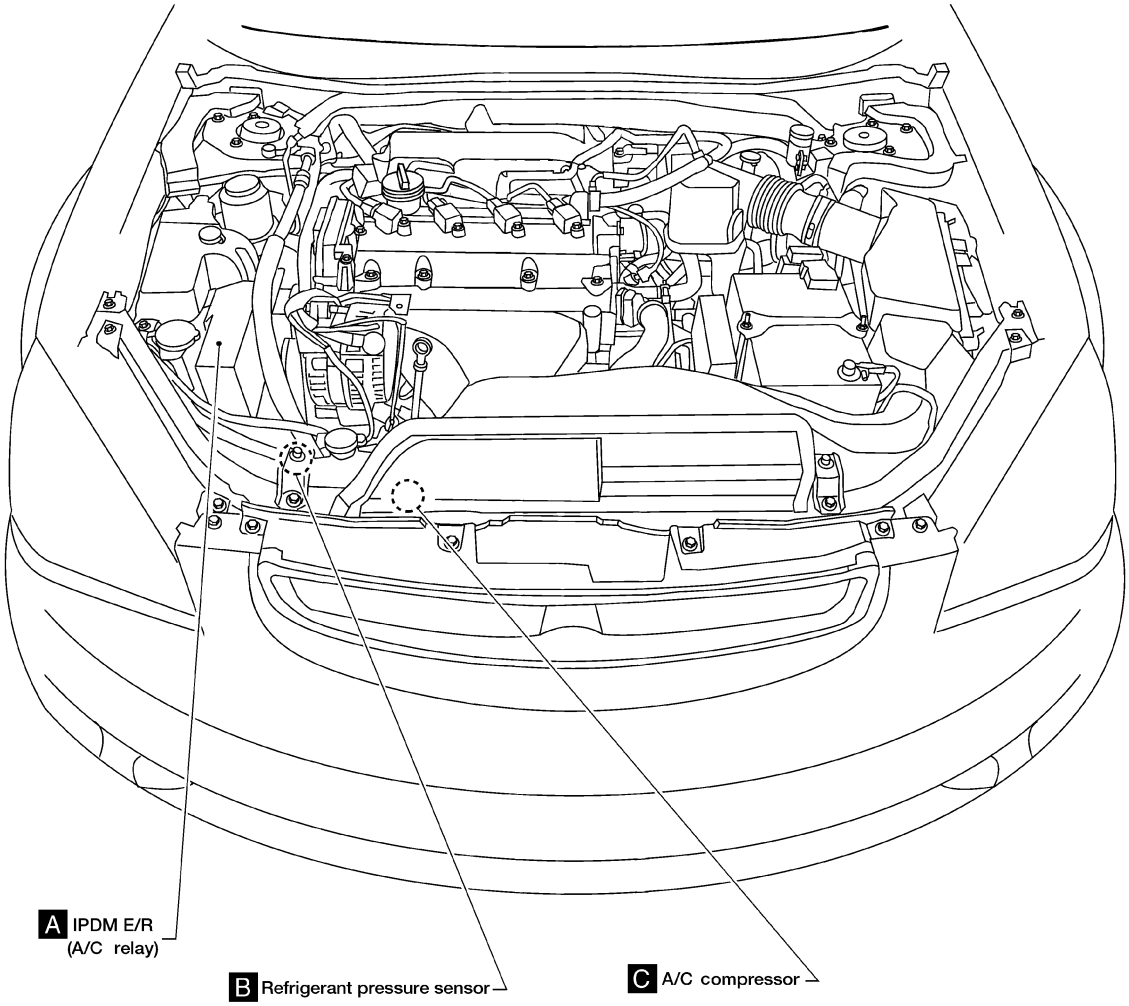

WJIA0136E

VQ35DE Models

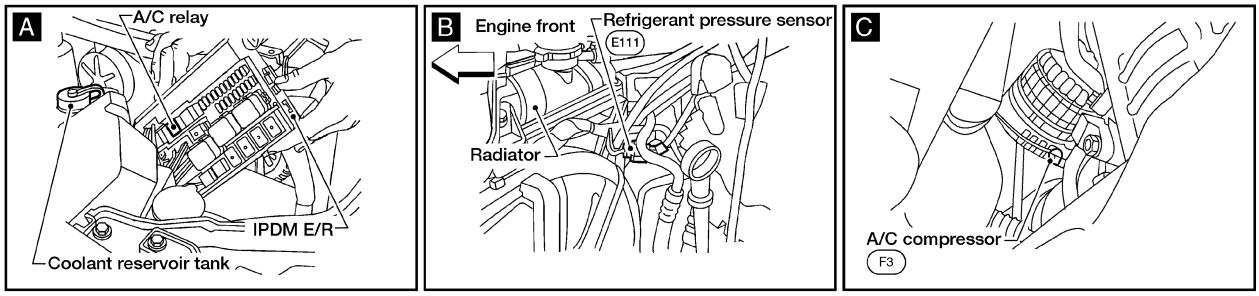

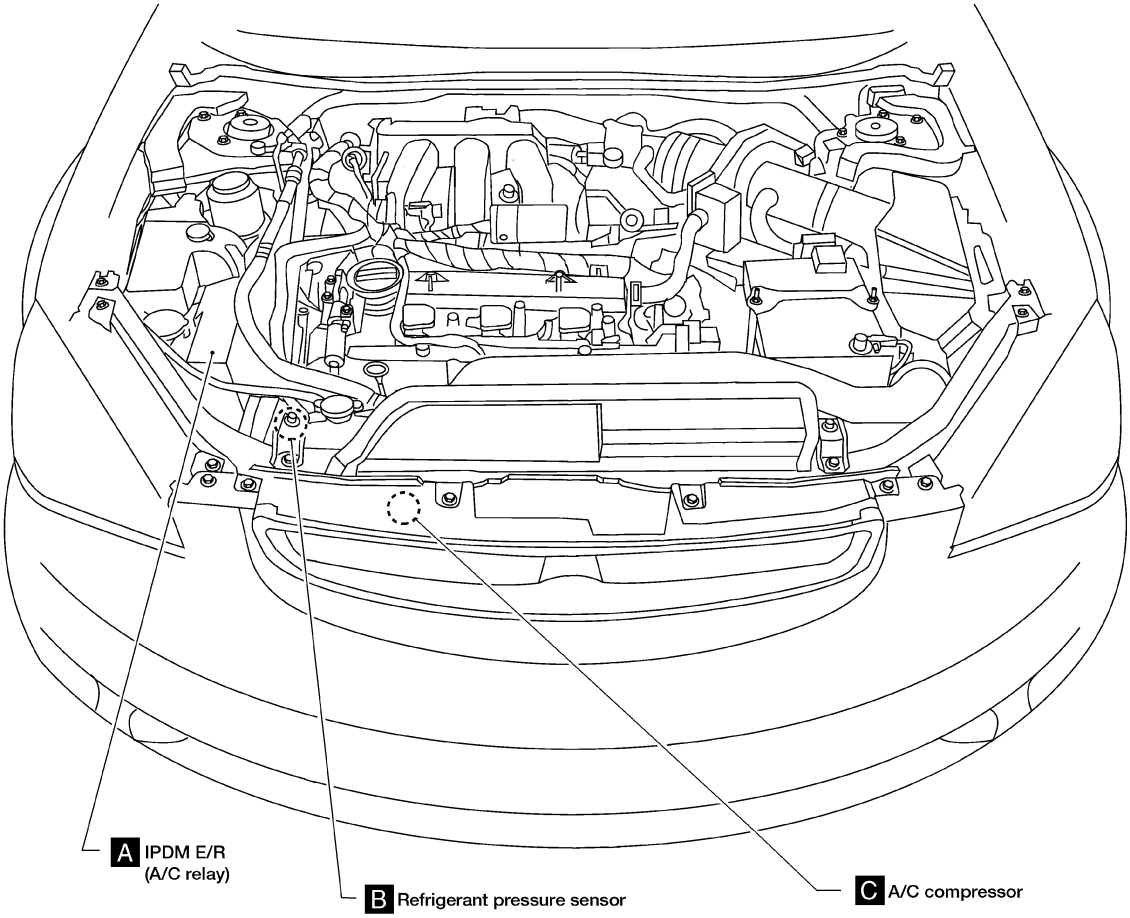

WJIA0137E

PASSENGER COMPARTMENT

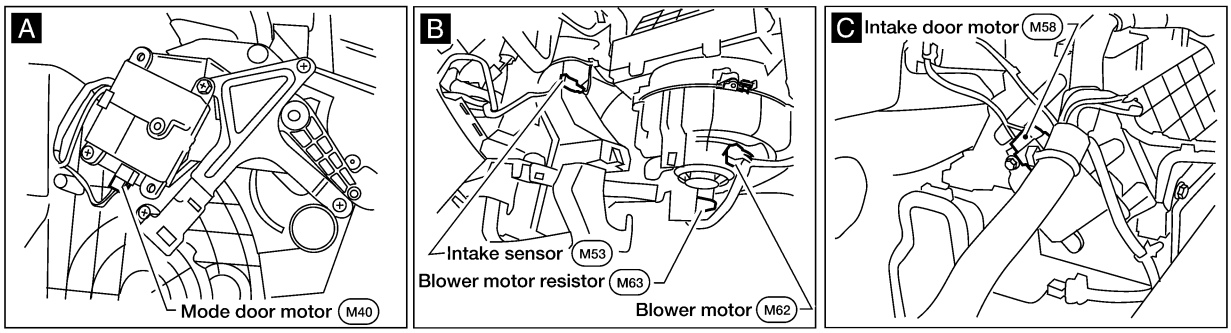

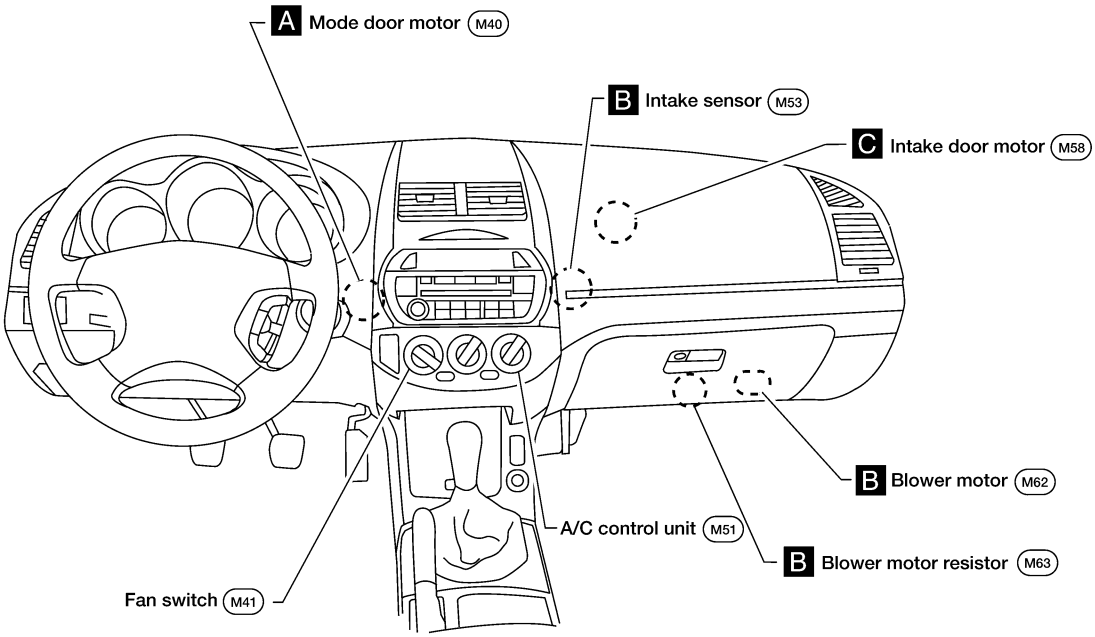

WJIA0138E

Circuit Diagram

EJS000ZO

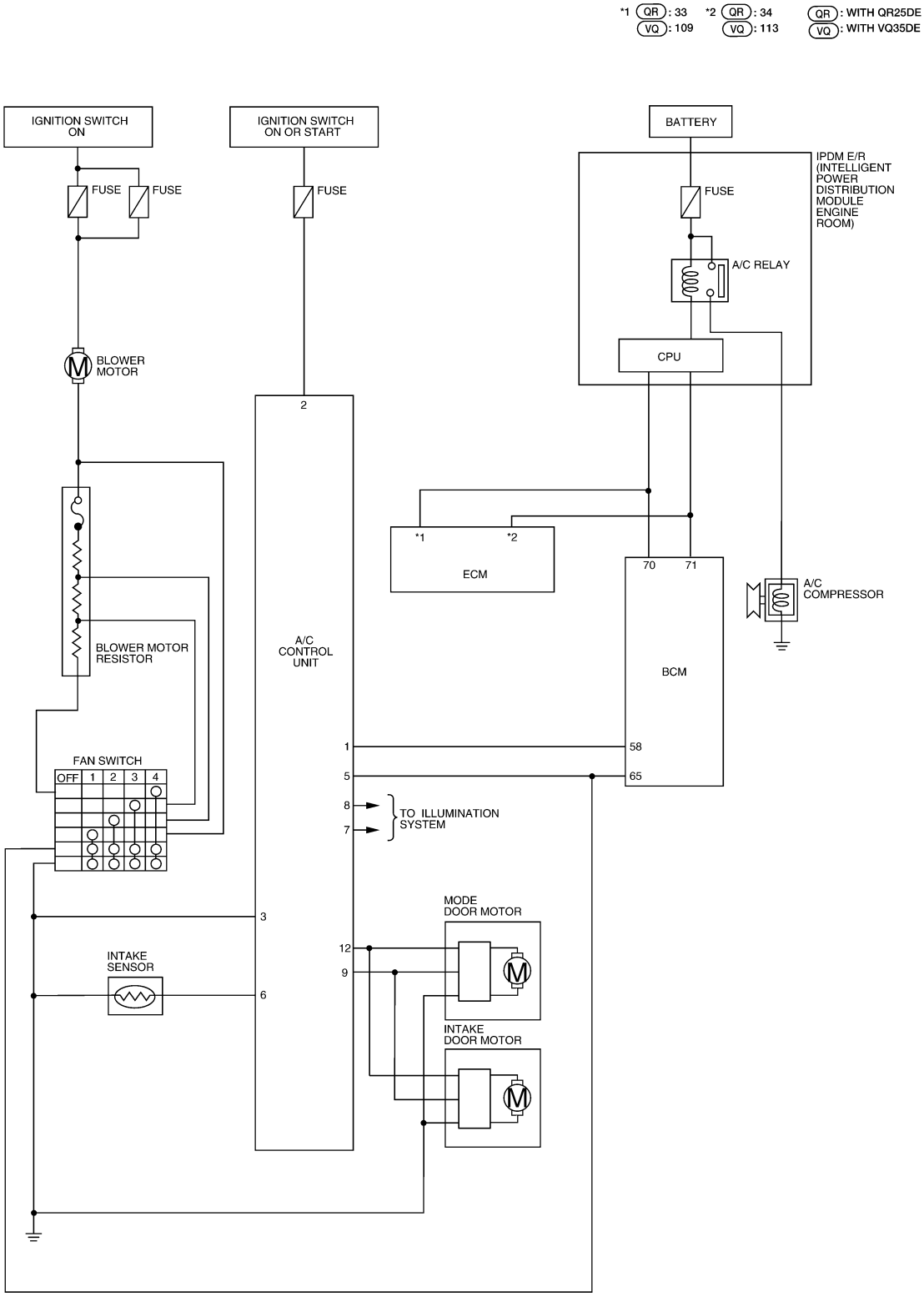

WJWA0011E

Wiring Diagram — HEATER —

EJS000ZP

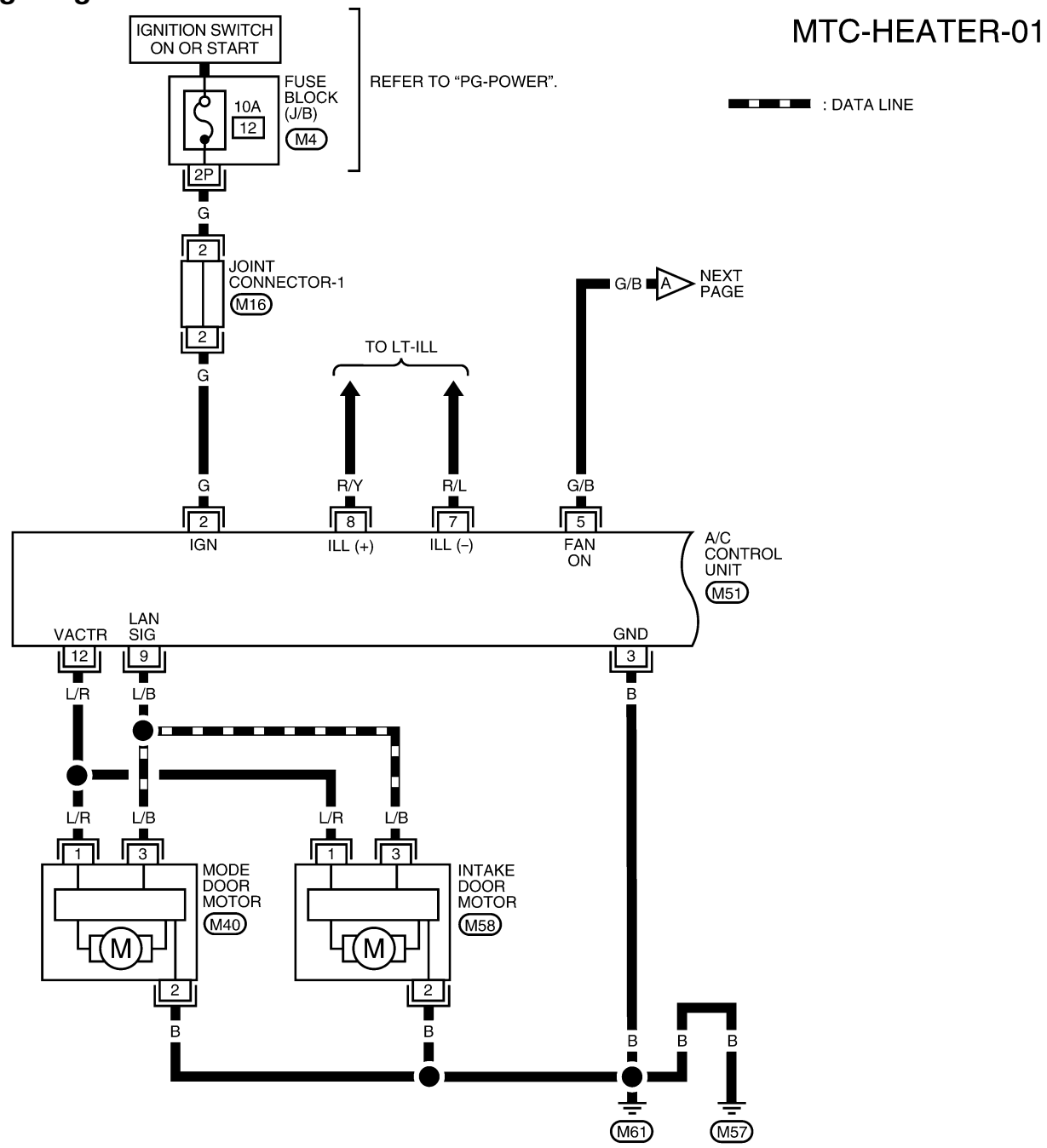

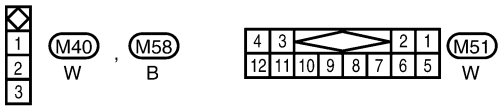

REFER TO THE FOLLOWING.
M4 - FUSE BLOCK JUNCTION BOX (J/B)
M16 - JOINT CONNECTOR (J/C)

WJWA0012E

MTC-HEATER-02

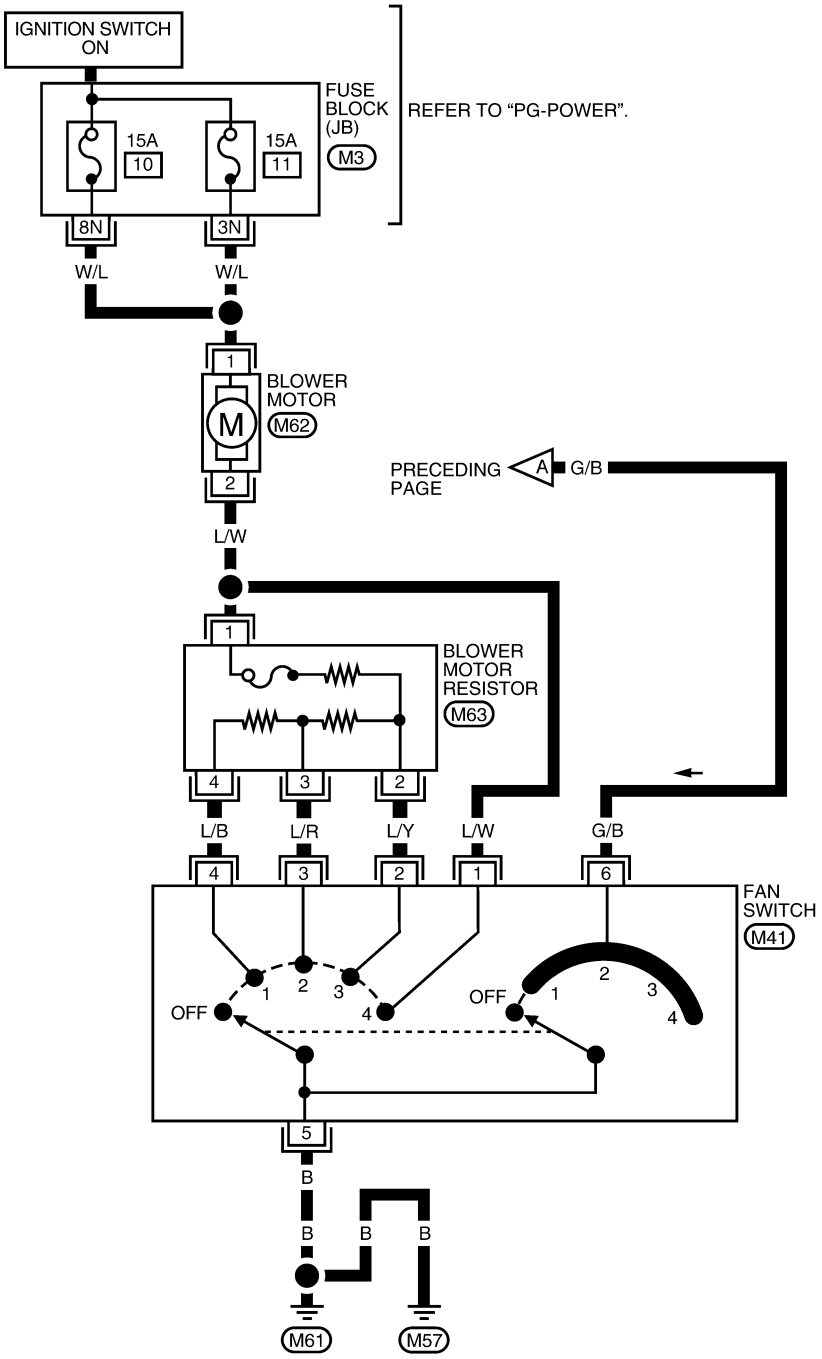

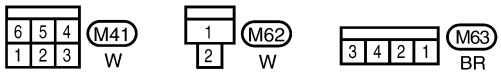

REFER TO THE FOLLOWING.
M3 - FUSE BLOCK JUNCTION BOX (J/B)

WJWA0013E

Wiring Diagram — A/C,M —

EJS000ZQ

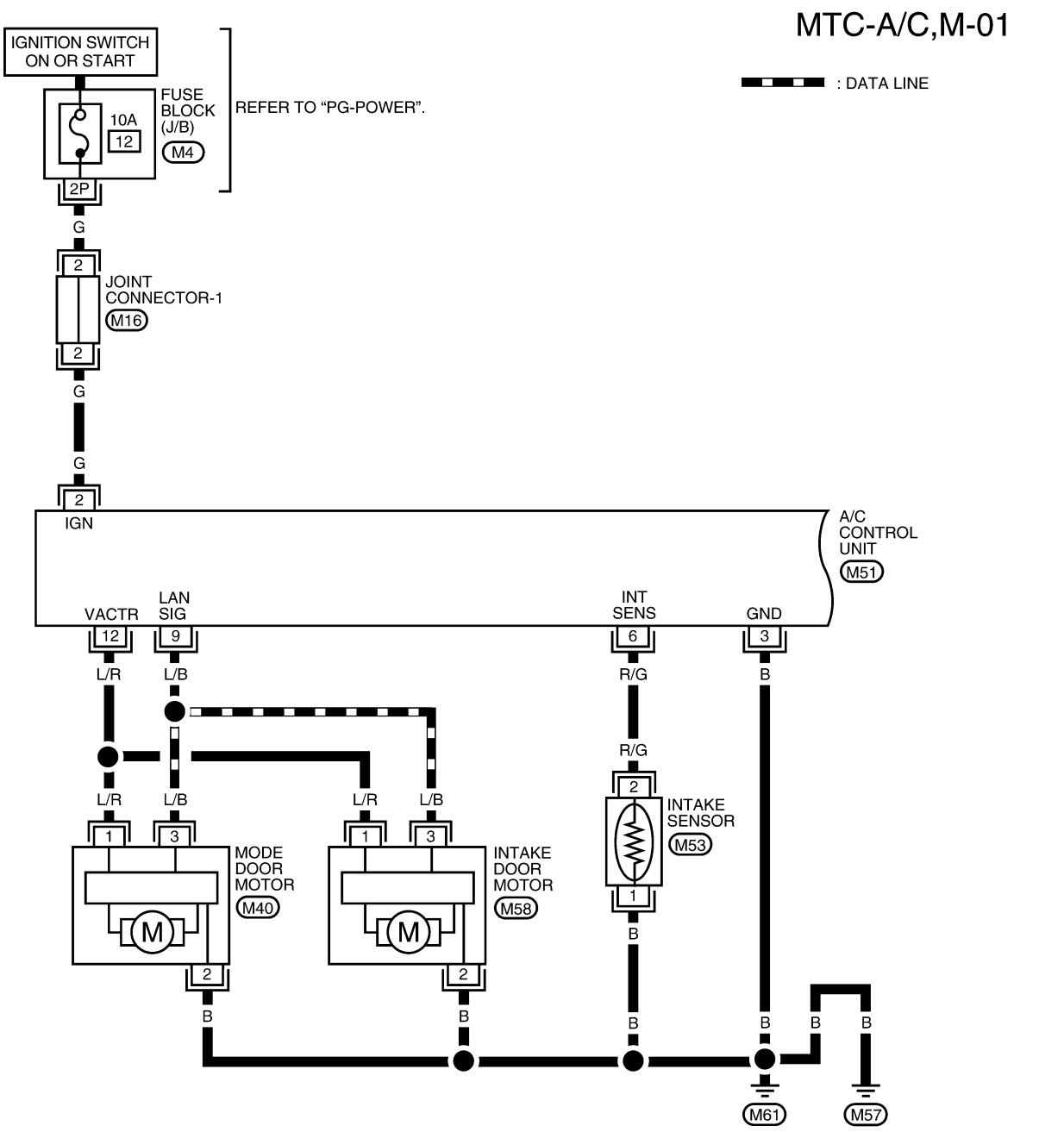

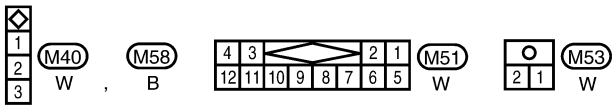

REFER TO THE FOLLOWING.
M4 - FUSE BLOCK JUNCTION BOX (J/B)
M16 - JOINT CONNECTOR (J/C)

WJWA0014E

MTC-A/C,M-02

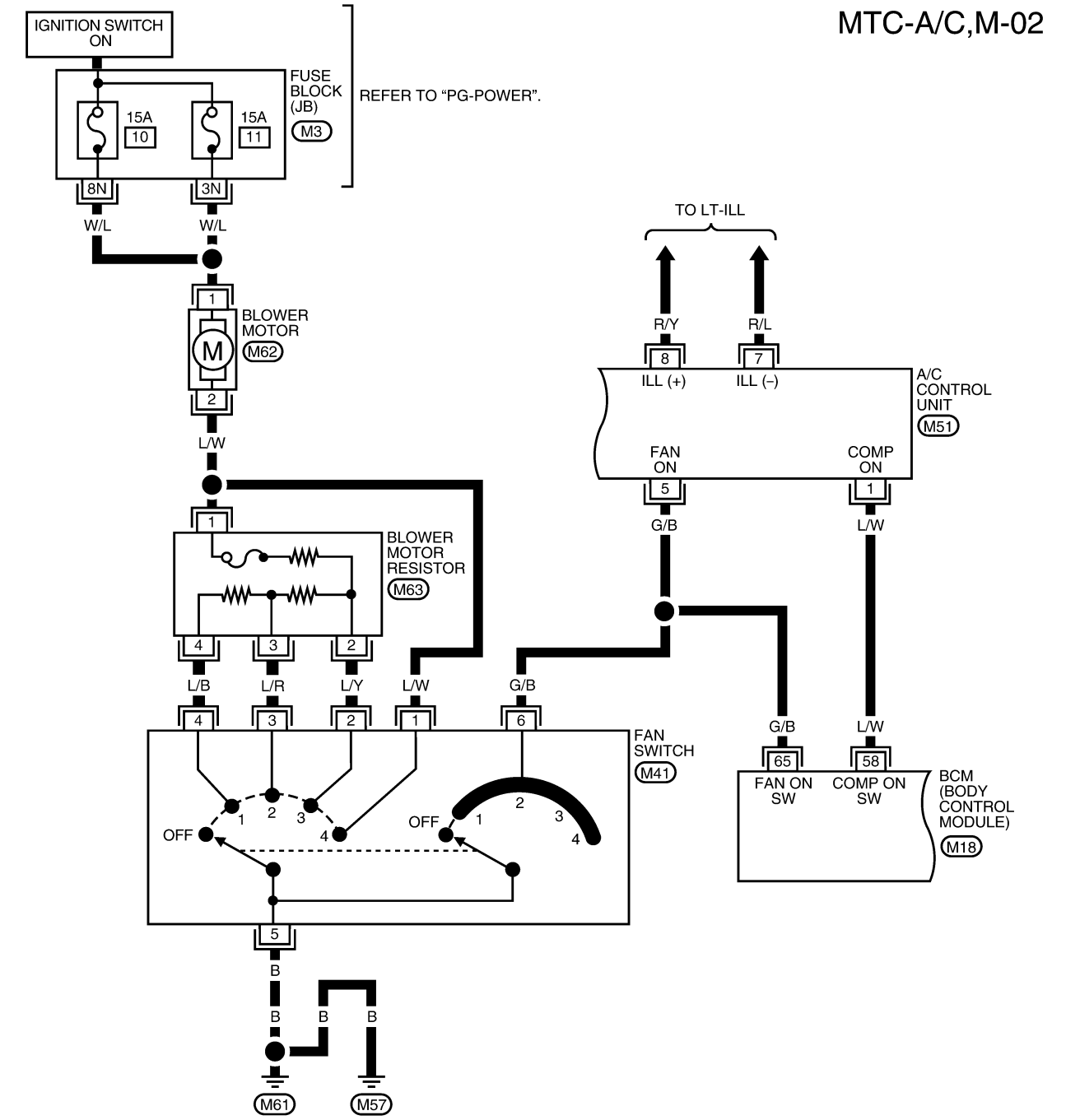

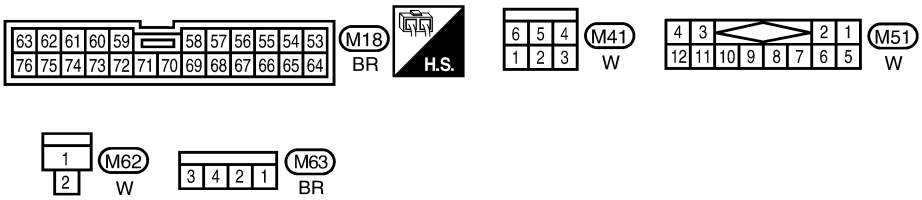

REFER TO THE FOLLOWING.
M3 - FUSE BLOCK JUNCTION BOX (J/B)

WJWA0015E

MTC-A/C,M-03

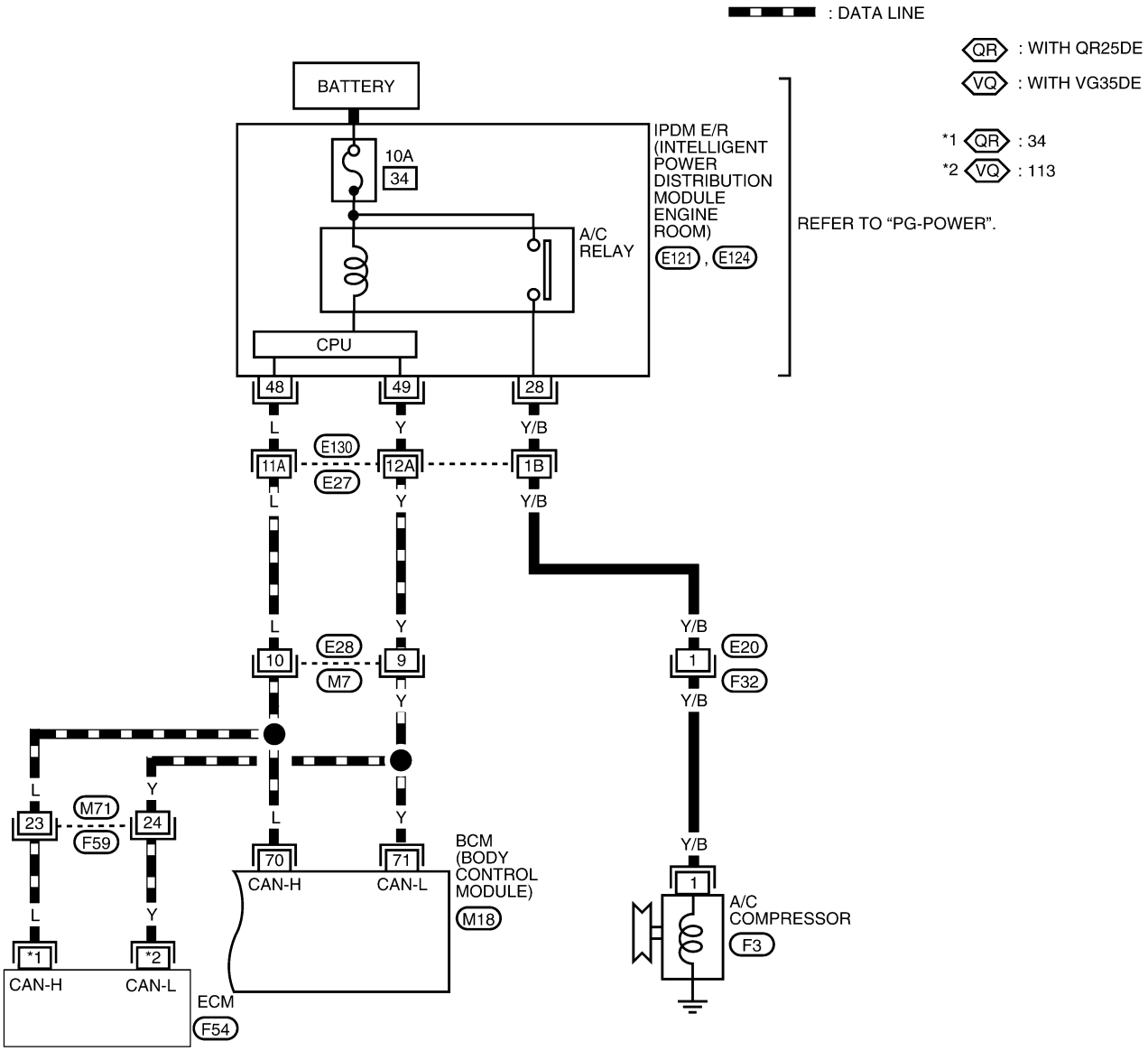

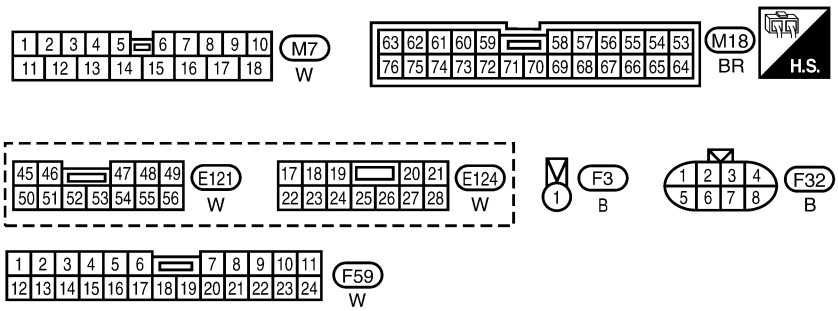

REFER TO THE FOLLOWING.
E130 - SUPER MULTIPLE JUNCTION (SMJ)
F54 - ELECTRICAL UNITS

WJWA0016E

Operational Check

EJS000ZR

The purpose of the operational check is to confirm that the system operates as it should. The systems which are checked are the blower, mode (discharge air), intake air, temperature decrease, temperature increase.

CONDITIONS:

Engine running at normal operating temperature.

PROCEDURE:

1. Check Blower

1. Turn fan control dial to 1-speed.
   Blower should operate on 1-speed.
2. Then turn fan control dial to 2-speed.
3. Continue checking blower speed until all four speeds are checked.
4. Leave blower on 4-speed.

If NG, go to MTC-49, "Blower Motor Circuit" .
If OK, continue with next check.

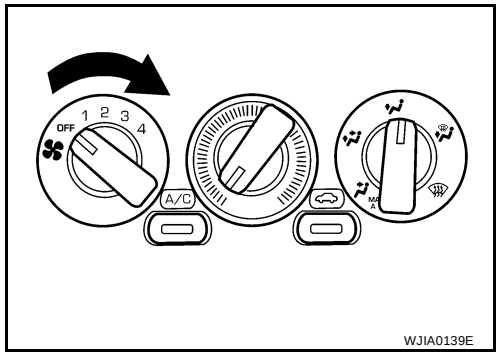

2. Check Discharge Air

1. Turn air control dial to each position.
2. Confirm air discharge at all air outlets.

If NG, go to MTC-42, "Mode Door Motor Circuit" .
If OK, continue with next check.

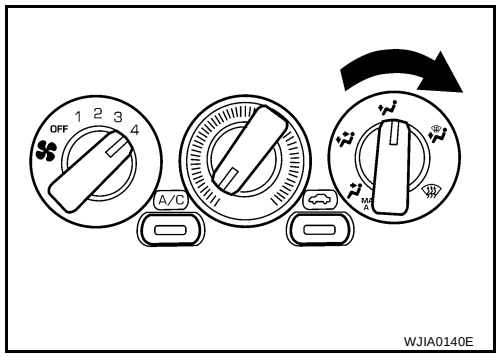

3. Check Recirculation

1. Press recirculation switch.
   Recirculation indicator should light.
2. Listen for intake door position change (you should hear blower sound change slightly).

   NOTE:
   Confirm that the RECIRCULATION (REC) switch is canceled in the FOOT ( ), D/F ( ) and DEF ( ) modes.

If NG, go to MTC-46, "Intake Door Motor Circuit" .
If OK, continue with next check.

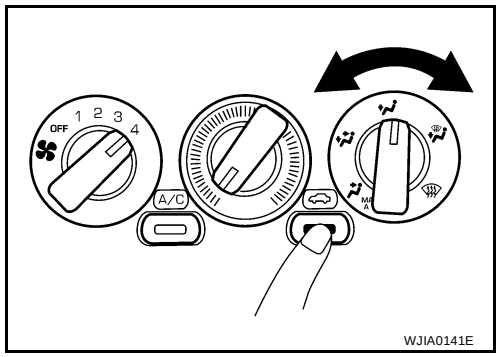

4. Check Temperature Decrease

1. Turn fan control dial to 1-speed.
2. Turn temperature control dial to full cold.
3. Check for cold air at discharge air outlets.

If NG, go to MTC-58, "Insufficient Cooling" .
If OK, continue with next check.

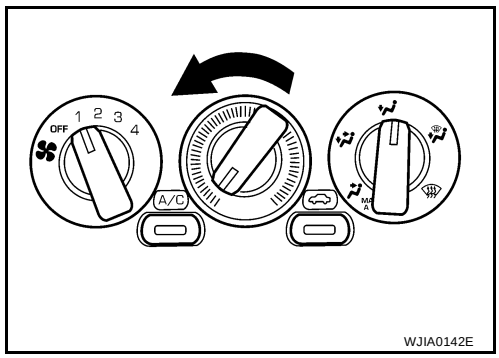

5. Check Temperature Increase

1. Turn temperature control dial to full hot.
2. Check for hot air at discharge air outlets.

If NG, go to MTC-63, "Insufficient Heating" .
If OK, continue with next check.

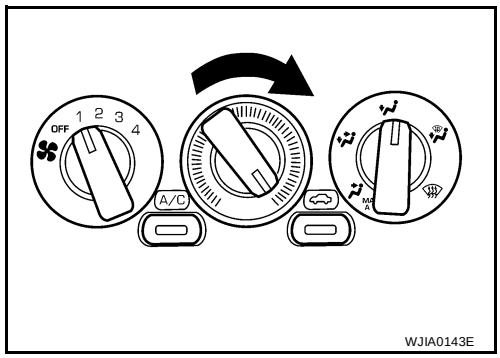

6. Check Air Conditioner Switch

Turn fan control dial to the desired (1- to 4-speed) position and push the air conditioner switch (if equipped) to turn ON the air conditioner. The indicator light should come on when air conditioner is ON.
If NG, go to MTC-40, "A/C System" .
If all operational checks are OK (symptom can not be duplicated), go to “Incident Simulation Tests” (GI-25) and perform tests as outlined to simulate driving conditions environment. If symptom appears, refer to MTC-28, "SYMPTOM TABLE" and perform applicable trouble diagnosis procedures.

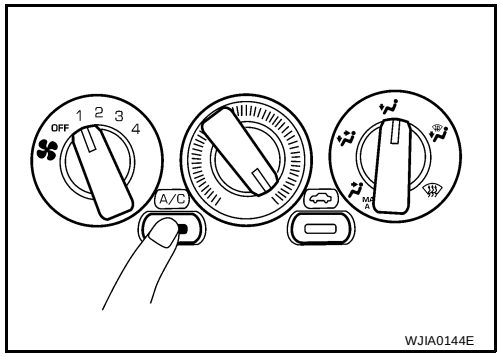

A/C System

EJS000ZS

SYMPTOM:

- **A/C system does not come on.**

INSPECTION FLOW

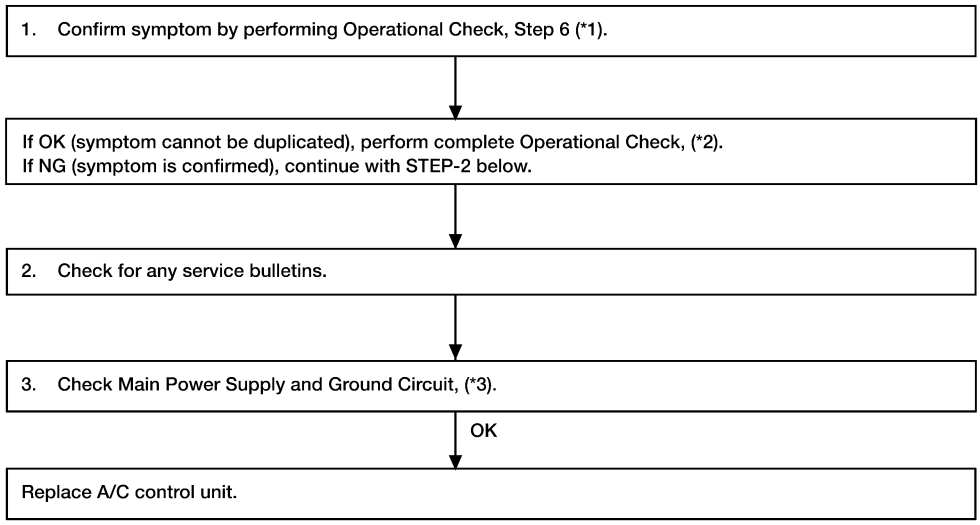

WJIA0145E

*1: MTC-39, "6. Check Air Conditioner Switch"
*2: MTC-38, "Operational Check"
*3: MTC-40, "DIAGNOSTIC PROCEDURE"

DIAGNOSTIC PROCEDURE

SYMPTOM:

- **A/C system does not come on.**

1. CHECK POWER SUPPLY CIRCUIT FOR A/C CONTROL UNIT

Terminal			Voltage (V) (Approx.)
(+)		(-)	
Connector	Wire color	Body ground	12V
M51-2	G		

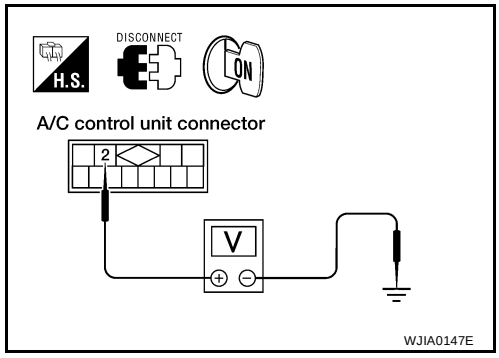

OK or NG

OK >> GO TO 2.
NG >> Check 10A fuse (No. 12) at fuse block (J/B).

2. CHECK BODY GROUND CIRCUIT FOR A/C CONTROL UNIT

Terminal			Continuity
Connector	Wire color	Body ground	Yes
M51-3	B		

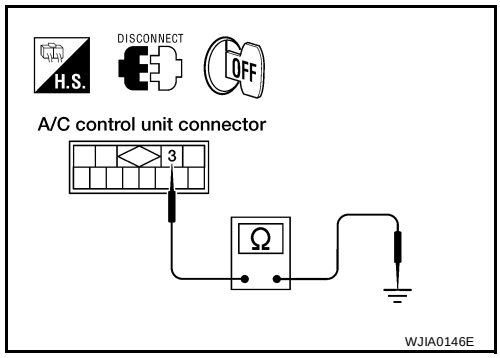

If OK, check harness for short.

OK or NG

OK >> **INSPECTION END**
NG >> If NG, repair harness or connector.

Mode Door Motor Circuit

EJS000ZT

SYMPTOM:

- Air outlet does not change.
- Mode door motor does not operate normally.

INSPECTION FLOW

1. Confirm symptom by performing the following operational check.

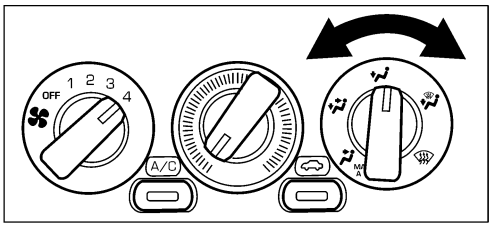

Discharge air flow

Mode switch	Mode door/distribution		
	Face	Foot	Defroster
	100%	–	–
	60%	40%	–
	–	80%	20%
	–	60%	40%
	–	–	100%

OPERATIONAL CHECK - Discharge air.

1) Turn air control dial to each position.

2) Confirm that discharge air comes out according to the air distribution table at left.
Refer to "Discharge Air Flow" in "DESCRIPTION" (*4).

2. Check for any service bulletins.

3. Check mode door operation. (*1)

NG → Go to Trouble Diagnosis Procedure for mode door motor. (*5)

OK → If the symptom still exists, perform a complete operational check (*2) and check for other symptoms. [Refer to symptom table, (*3).] Does another symptom exist?

Yes → Go to Trouble Diagnosis for related symptom **[Another symptom exists.]**

→ INSPECTION END

WJIA0205E

*1 MTC-44, "MODE DOOR"

*2 MTC-38, "Operational Check"

*3 MTC-28, "SYMPTOM TABLE"

*4 MTC-22, "Discharge Air Flow"

*5 MTC-43, "DIAGNOSTIC PROCEDURE"

SYSTEM DESCRIPTION

Mode Door Motor

The mode door motor is installed on the heater unit. Using a link it operates the mode door. When the air control dial is turned to each position, the mode door motor moves the mode door to control air flow direction.

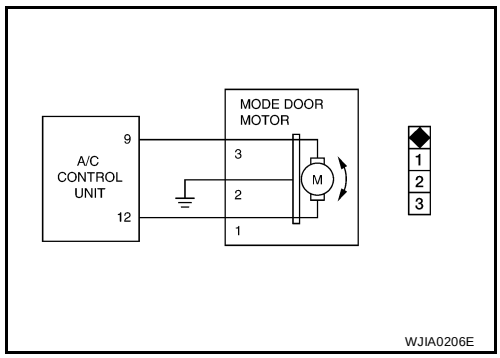

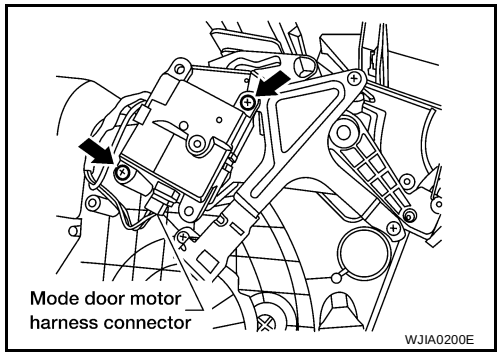

DIAGNOSTIC PROCEDURE

SYMPTOM: Mode door motor does not operate normally.

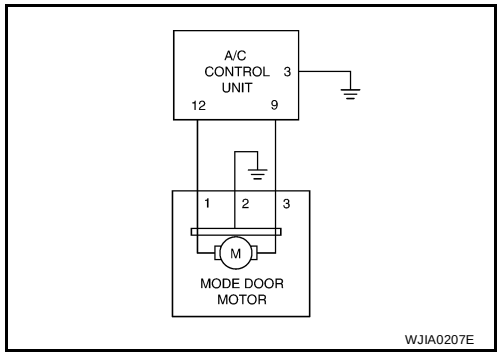

1. CHECK BODY GROUND CIRCUIT FOR MODE DOOR MOTOR

Terminals			Continuity
Connector	Wire color	Body ground	Yes
M40-2	B		

Continuity should exist.

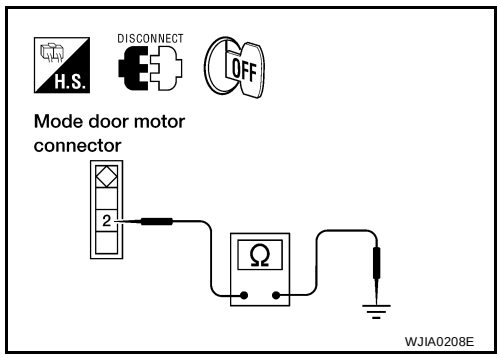

If OK, check harness for short.

OK or NG

OK >> GO TO 2.
NG >> Repair harness or connector.

2. CHECK CIRCUIT CONTINUITY BETWEEN EACH TERMINAL ON A/C CONTROL UNIT AND ON MODE DOOR MOTOR

Terminals				Continuity
Connectors	Wire colors	Connectors	Wire colors	Yes
M51-9	L/B	M40-3	L/B	
M51-12	L/R	M40-1	L/R	

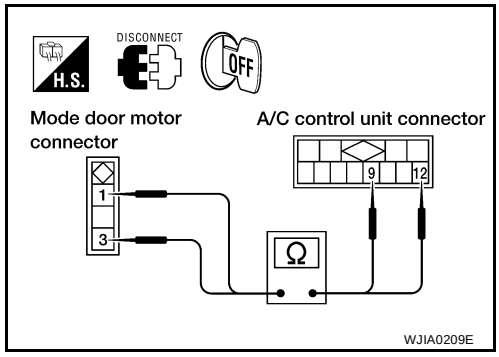

Continuity should exist.

If OK, check harness for short.

OK or NG

OK >> GO TO 3.
NG >> Repair harness or connector.

3. CHECK FOR A/C CONTROL UNIT OUTPUT

1. Reconnect mode door motor connector.
2. Measure voltage across A/C control unit harness connector M51 terminals 9 (L/B) and 12 (L/R) while turning air control dial to each position.

Voltage (V) : Approx. 12V

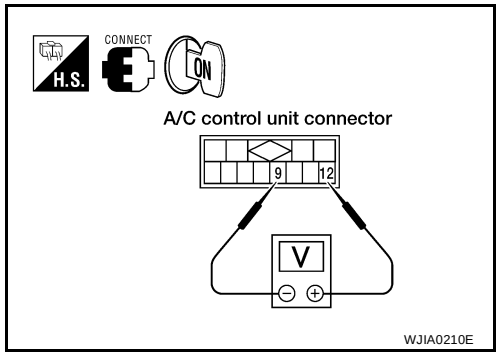

OK or NG

OK >> Replace mode door motor.
NG >> Replace A/C control unit.

MODE DOOR

1. Install mode door motor on heater unit.
   Ensure that the linkage is properly attached.
2. Connect mode door motor harness connector.
3. Turn ignition switch ON.
4. Check that the mode door operates properly when air control dial is turned to each position.

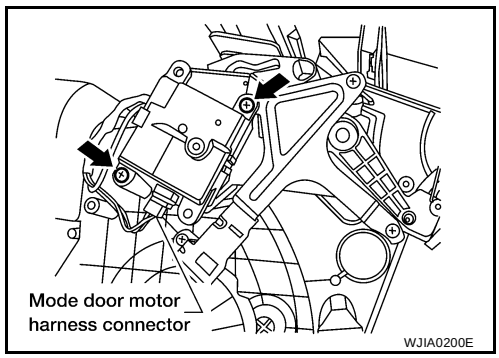

Air Mix Door

EJS001LH

SYMPTOM: Air mix door does not change.

INSPECTION FLOW

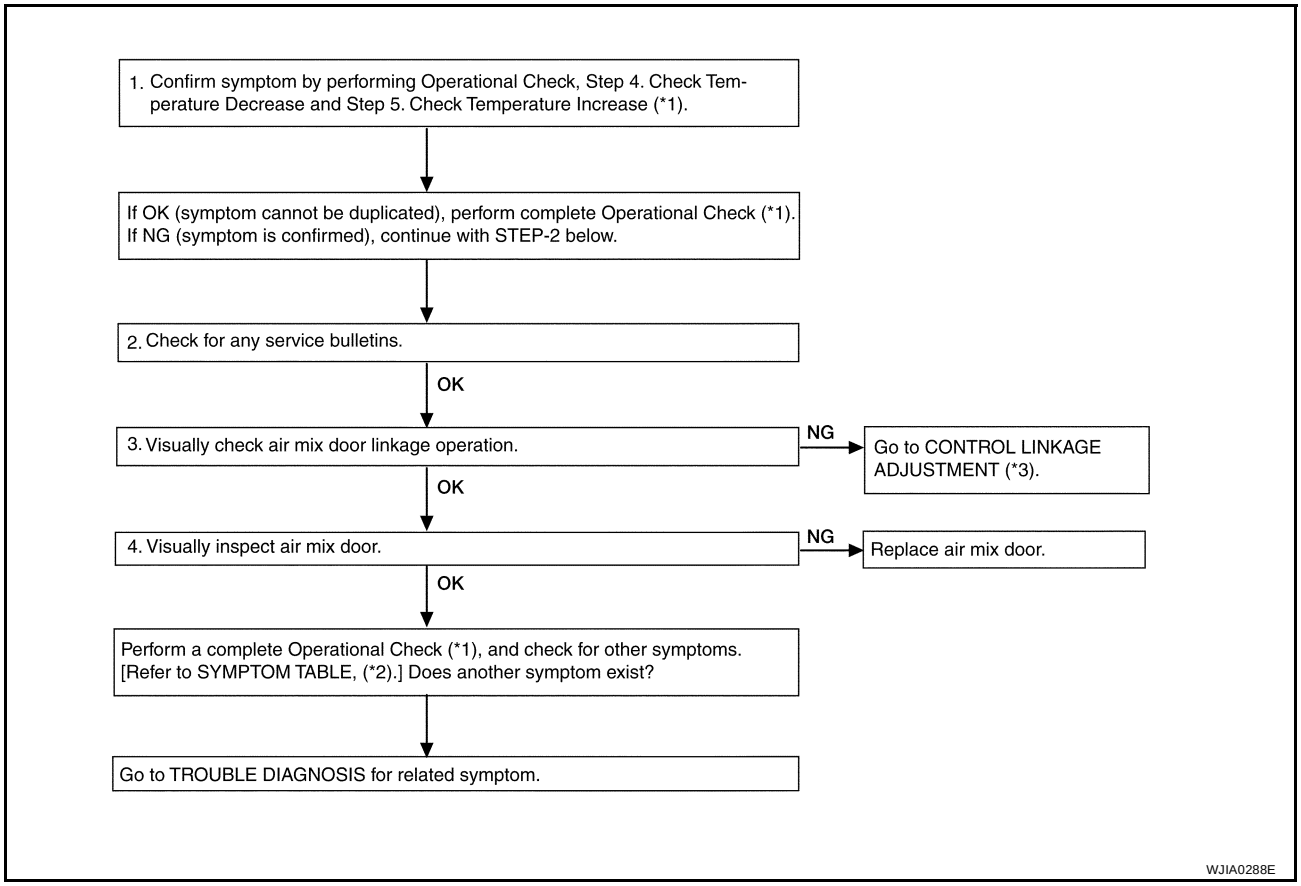

*1 MTC-38 *2 MTC-28 *3 MTC-45

CONTROL LINKAGE ADJUSTMENT

Temperature control cable

1. Attach temperature control cable.
2. Rotate control knob to full cold position.
3. Remove slack from cable and install temperature control cable clamp.

After positioning control cable, check for proper operation.

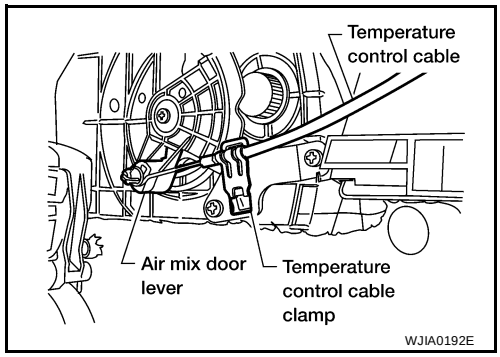

Intake Door Motor Circuit

EJS000ZU

Symptom:

- **Intake door does not change.**
- **Intake door motor does not operate normally.**

INSPECTION FLOW

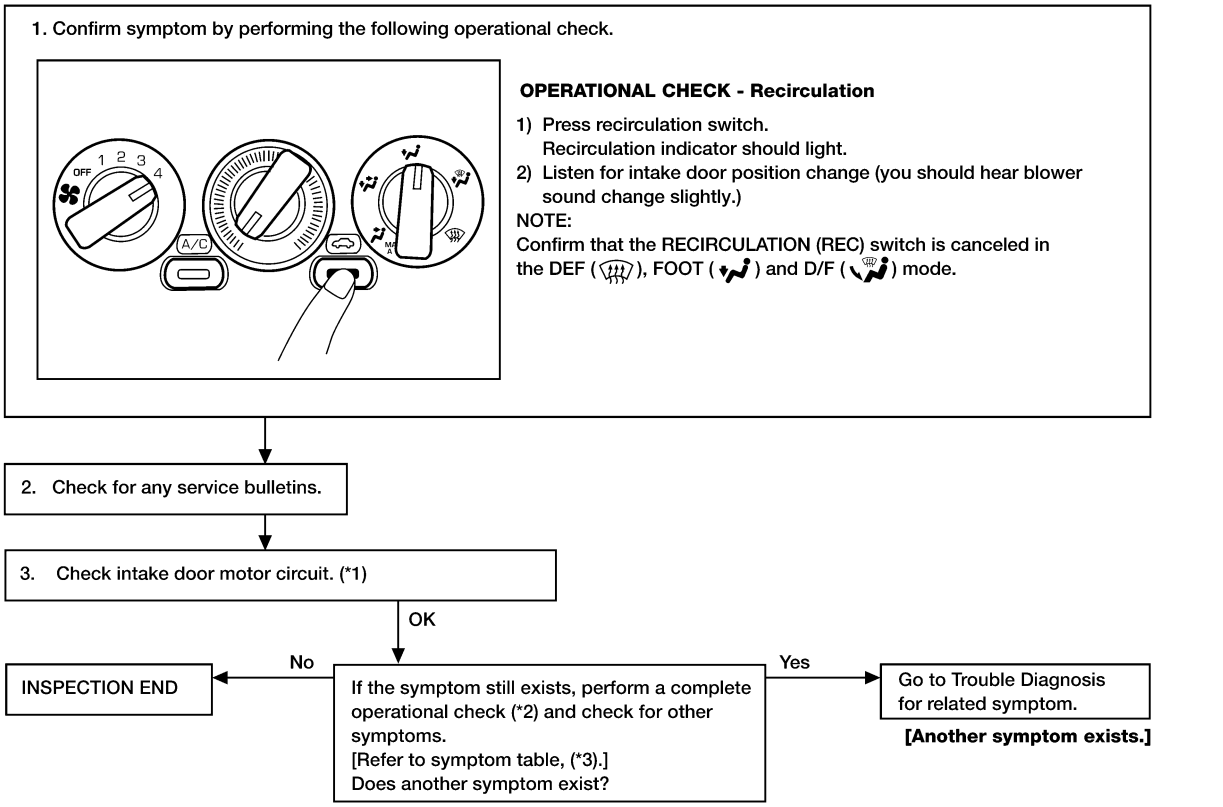

WJIA0148E

*1: MTC-46, "Intake Door Motor Circuit" *2: MTC-38, "Operational Check" *3: MTC-28, "SYMPTOM TABLE"

SYSTEM DESCRIPTON

Intake Door Motor

The intake door motor is installed on the blower unit. Using a link it opens and closes the intake door.
When RECIRCULATION switch is at REC (except DEF and D/F modes), the A/C control unit sets the intake door at the “RECIRCULATION” position.

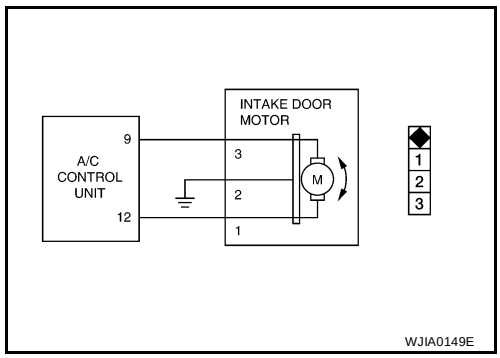

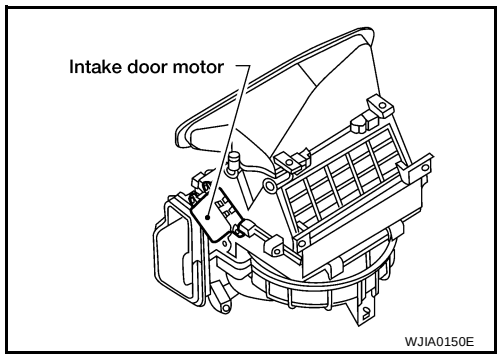

DIAGNOSTIC PROCEDURE

SYMPTOM: Intake door does not change. Intake door motor does not operate normally.

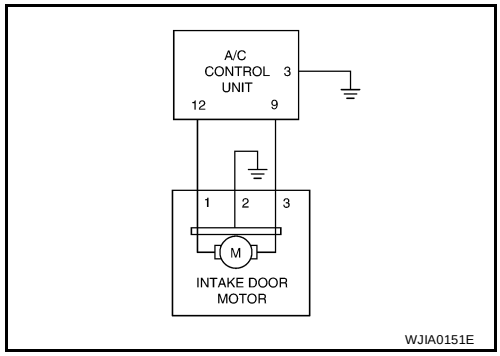

1. CHECK BODY GROUND CIRCUIT FOR INTAKE DOOR MOTOR

Terminals			Continuity
Connector	Wire color	Body ground	Yes
M58-2	B		

Continuity should exist.

If OK, check harness for short.

OK or NG

OK >> GO TO 2.
NG >> Repair harness or connector.

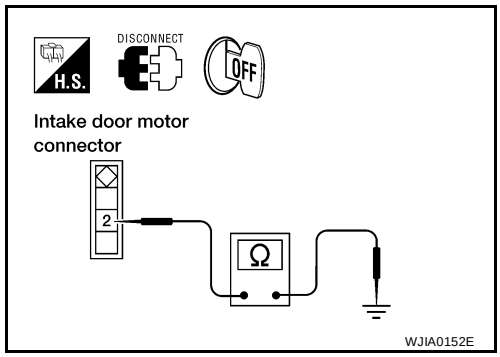

2. CHECK CIRCUIT CONTINUITY BETWEEN EACH TERMINAL ON A/C CONTROL UNIT AND ON INTAKE DOOR MOTOR

Terminals				Continuity
Connectors	Wire colors	Connectors	Wire colors	Yes
M51-9	L/B	M58-3	L/B	
M51-12	L/R	M58-1	L/R	

Continuity should exist.

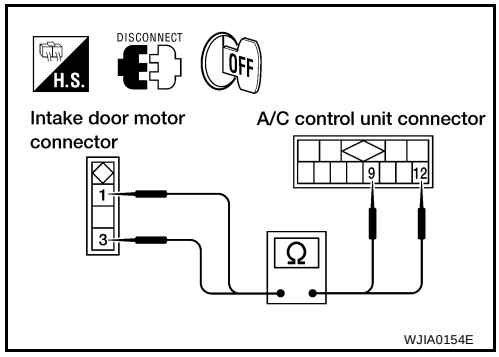

If OK, check harness for short.

OK or NG

OK >> GO TO 3.
NG >> Repair harness or connector.

3. CHECK FOR A/C CONTROL UNIT OUTPUT

Measure voltage across A/C control unit harness terminals and body ground.

RECIRCU-LATION	Terminals (+) Connectors	Terminals (+) Wire colors	Terminals (-)	Condition	Voltage (V) (Approx.)
REC(ON)	M51-9	L/B	Body ground	REC	12V
	M51-12	L/R			0V
FRE(OFF)	M51-9	L/B		FRE	0V
	M51-12	L/R			12V

OK or NG

OK >> Replace intake door motor.
NG >> Replace A/C control unit.

CONTROL LINKAGE ADJUSTMENT

1. Install intake door motor on blower unit.
   Ensure that the intake door motor lever is fitted into the slit portion of intake door link.
2. Connect the intake door motor harness connector.
3. Turn ignition switch to ON.
4. Check that intake door operates properly when RECIRCULATION switch is turned ON and OFF.

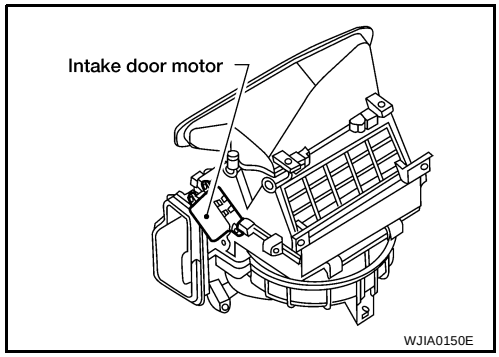

Blower Motor Circuit

EJS000ZV

Symptom:

- **Blower motor operation is malfunctioning.**

INSPECTION FLOW

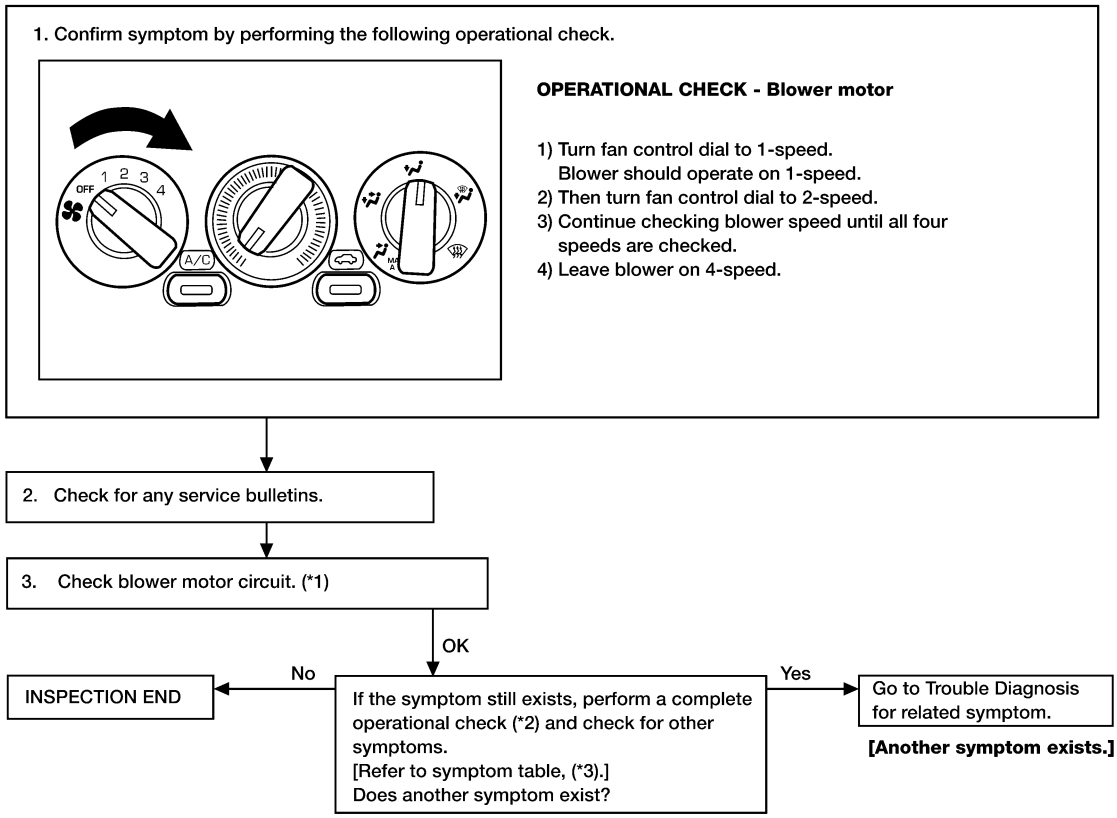

WJIA0156E

*1: MTC-49, "Blower Motor Circuit" *2: MTC-38, "Operational Check" *3: MTC-28, "SYMPTOM TABLE"

DIAGNOSTIC PROCEDURE

SYMPTOM:

- **Blower motor operation is malfunctioning.**

Test group No.	INCIDENT
1	Fan fails to rotate.
2	Fan does not rotate at 1-speed.
3	Fan does not rotate at 2-speed.
4	Fan does not rotate at 3-speed.
5	Fan does not rotate at 4-speed.

1. DIAGNOSTIC PROCEDURE

Check if blower motor rotates properly at each fan speed.
Conduct checks as per table above.

1 >> GO TO 2.
2, 3, 4 >> GO TO 8.
5 >> GO TO 10.

2. CHECK POWER SUPPLY FOR BLOWER MOTOR

Disconnect blower motor harness connector.

Terminals			Voltage (V) (Approx.)
(+)		(-)	
Connector	Wire color	Body ground	12V
M62-1	W/L		

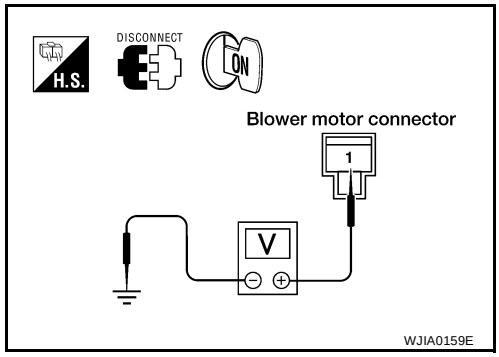

Yes or No

Yes >> GO TO 3.
No >> ● Check 15A fuses (No. 10 and No. 11) at fuse block (J/B).
● Check blower relay [located in fuse block (J/B)]. Refer to PG-5, "Wiring Diagram — POWER — " .

3. CHECK CIRCUIT CONTINUITY FOR BLOWER MOTOR

Turn fan control switch to any position except OFF.

Terminals			Voltage (V) (Approx.)
(+)		(-)	
Connector	Wire color		12V
M62-2	L/W	Body ground	

Continuity should exist.

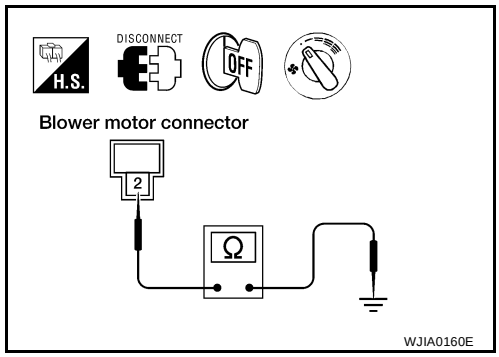

OK or NG

OK >> GO TO 4.
NG >> GO TO 5.

4. CHECK BLOWER MOTOR

(Refer to Electrical Components Inspection.)
(MTC-53, "Blower motor")

OK or NG

OK >> INSPECTION END
NG >> Replace blower motor.

5. CHECK BLOWER MOTOR CIRCUIT BETWEEN BLOWER MOTOR AND RESISTOR

Reconnect blower motor harness connector.

Terminals			Voltage (V) (Approx.)
(+)		(-)	
Connector	Wire color		12V
M63-1	L/W	Body ground	

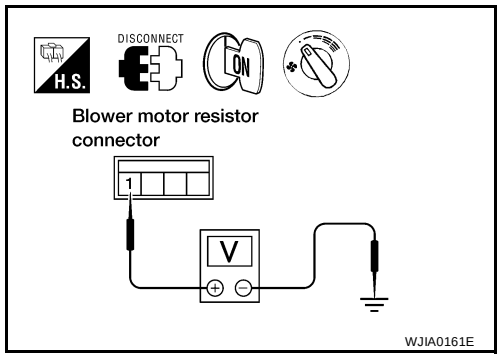

Yes or No

Yes >> GO TO 7.
No >> GO TO 6.

6. CHECK CIRCUIT CONTINUITY BETWEEN BLOWER MOTOR AND RESISTOR

Disconnect blower motor and resistor harness connectors.

Terminals				Continuity
Connector	Wire color	Connector	Wire color	
M63-1	L/W	M62-2	L/W	Yes

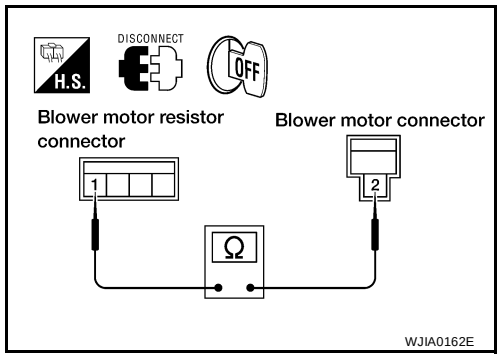

Continuity should exist.

If OK, check harness for short.

OK or NG

OK >> INSPECTION END
NG >> Repair harness or connector.

7. CHECK GROUND CIRCUIT FOR FAN SWITCH

- Disconnect fan switch harness connector.
- Check circuit continuity between fan switch harness terminal and body ground.

Terminals			Voltage (V) (Approx.)
(+)		(-)	
Connector	Wire color		12V
M41-5	B	Body ground	

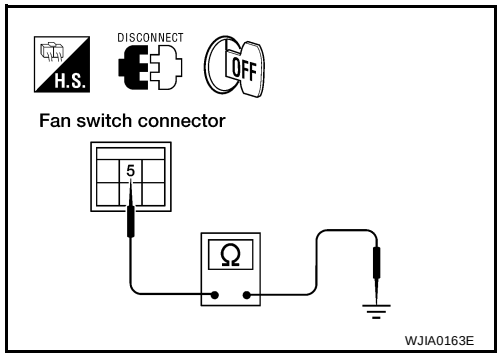

OK or NG

OK >> GO TO 8.
NG >> Repair harness or connector.

8. CHECK BLOWER MOTOR RESISTOR

Refer to MTC-53, "Blower Motor Resistor" .

OK or NG

OK >> GO TO 9.
NG >> Replace blower motor resistor.

9. CHECK RESISTOR HARNESS CONNECTOR

Reconnect resistor harness connector.

OK or NG

1 >> GO TO 12.
2, 3, 4 >> GO TO 10.

10. CHECK FAN SWITCH CIRCUIT

Do approx. 12 volts exist between each fan switch harness connector terminal and body ground?

Test group No.	Terminal			Voltage (V) (Approx.)
	(+)		(-)	
	Connector	Wire color		
2	M41-4	L/B	Body ground	12V
3	M41-3	L/R		
4	M41-2	L/Y		
5	M41-1	L/W		

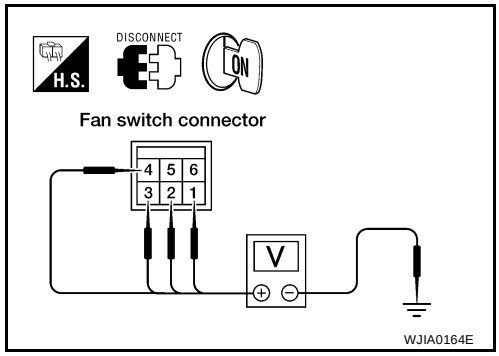

Yes or No

Yes >> GO TO 12.
No >> GO TO 11.

11. CHECK CIRCUIT CONTINUITY BETWEEN FAN SWITCH HARNESS TERMINAL AND RESISTOR HARNESS TERMINAL

Terminal No.				Continuity
Fan switch		Resistor		
Connectors	Wire colors	Connectors	Wire colors	
M41-4	L/B	M63-4	L/B	Yes
M41-3	L/R	M63-3	L/R	
M41-2	L/Y	M63-2	L/Y	
M41-1	L/W	M63-1	L/W	

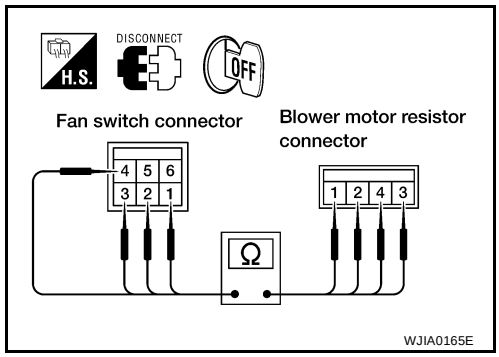

OK or NG

OK >> Check harness for short.
NG >> Repair harness or connector.

12. CHECK FAN SWITCH

Refer to MTC-53, "Fan Switch" .

OK or NG

OK >> INSPECTION END
NG >> Replace fan switch.

ELECTRICAL COMPONENTS INSPECTION

Fan Switch

Check continuity between terminals at each switch position.

SWITCH POSITION	Continuity between terminals
OFF	
1	4 — 5 — 6
2	3 — 5 — 6
3	2 — 5 — 6
4	1 — 5 — 6

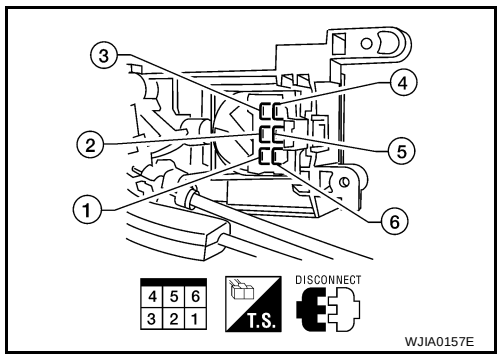

Blower motor

Confirm smooth rotation of the blower motor.

- Ensure that there are no foreign particles inside the intake unit.

Blower Motor Resistor

Check resistance between terminals.

Terminal No.		Resistance (Ω) (Approx.)
(+)	(–)	
3	1	0.9 - 1.1Ω
4		2.27 - 2.78Ω
2		0.3 - 0.38Ω

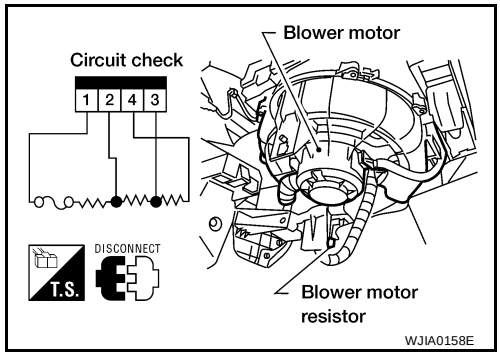

Magnet Clutch Circuit

EJS000ZW

Symptom:

- **Magnet clutch does not engage when A/C switch and fan switch are ON.**

INSPECTION FLOW

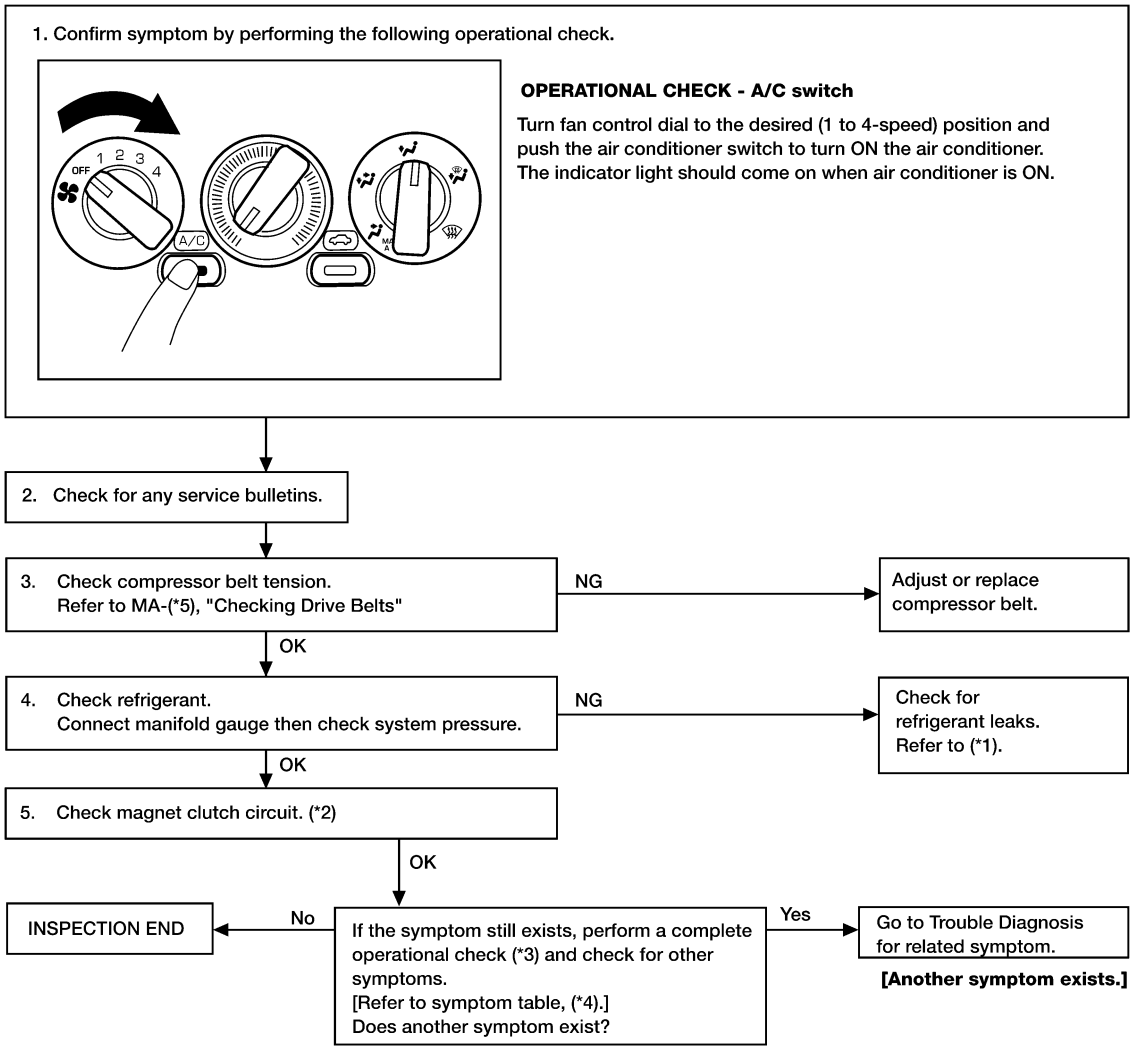

WJIA0166E

*1: MTC-91, "Checking for Refrigerant Leaks"
*2: MTC-55, "DIAGNOSTIC PROCEDURE"
*3: MTC-38, "Operational Check"
*4: MTC-28, "SYMPTOM TABLE"
*5: MA-14, "Checking Drive Belts"

DIAGNOSTIC PROCEDURE

SYMPTOM:

- **Magnet clutch does not engage when A/C switch and fan switch are ON.**

1. CHECK POWER SUPPLY FOR COMPRESSOR

Disconnect compressor harness connector.

Terminals			Voltage (V) (Approx.)
(+)		(-)	
Connector	Wire color		12V
F3-1	Y/B	Body ground	

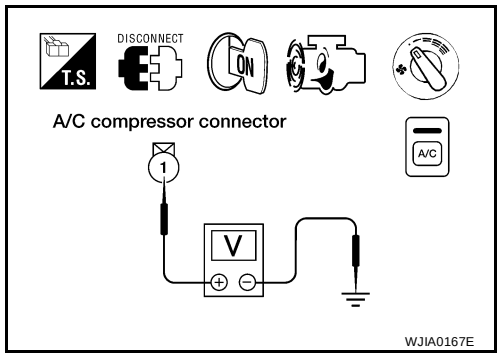

OK or NG

OK >> GO TO 2.
NG >> GO TO 3.

2. CHECK MAGNET CLUTCH COIL

Check magnet clutch coil.

OK or NG

OK >> Check compressor mounting points for looseness or corrosion and repair as necessary.
NG >> Replace magnet clutch. Refer to MTC-85, "Removal and Installation for Compressor Clutch" .

3. CHECK MAGNET CLUTCH COIL POWER SUPPLY FROM IPDM E/R

Reconnect compressor harness connector.

Terminals			Voltage (V) (Approx.)
(+)		(-)	
Connector	Wire color		
E124-28	Y/B	Body ground	12V

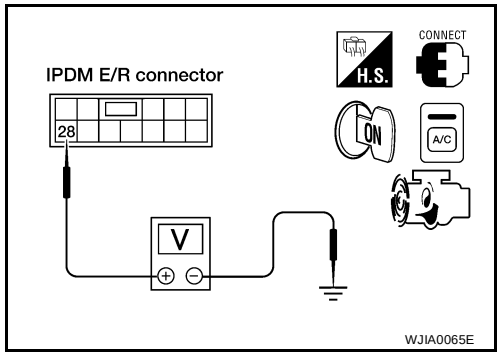

OK or NG

OK >> Repair harness or connector between IPDM E/R and compressor.
NG >> GO TO 4.

4. CHECK INTAKE SENSOR CIRCUIT

Refer to MTC-65, "Intake Sensor Circuit" .

OK or NG

OK >> GO TO 5.
NG >> Repair as necessary.

5. CHECK REFRIGERANT PRESSURE SENSOR

Refer to EC-596, "REFRIGERANT PRESSURE SENSOR" (QR25DE models) or EC-1252, "REFRIGERANT PRESSURE SENSOR" (VQ35DE models).

OK or NG

OK >> GO TO 6.
NG >> Repair as necessary.

6. CHECK FAN ON SIGNAL TO A/C CONTROL UNIT AND BCM

1. Disconnect A/C control unit harness connector M51.
2. Measure voltage between A/C control unit and body ground.
3. Reconnect A/C control unit harness connector M51 and disconnect BCM harness connector M18.
4. Measure voltage between BCM and body ground.

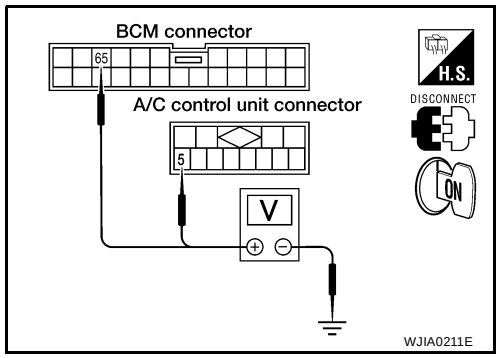

Terminals			Condition	Voltage (V) (Approx.)
(+)		(-)		
Connectors	Wire colors			
M51-5	G/B	Body ground	FAN SW: OFF	5V
	G/B		FAN SW: ON	0V
M18-65	G/B		FAN SW: OFF	5V
	G/B		FAN SW: ON	0V

OK or NG

OK >> GO TO 8.
NG >> GO TO 7.

7. CHECK FAN SWITCH

Check fan switch. Refer to MTC-53, "Fan Switch" .

OK or NG

OK >> Repair harness or connectors between fan switch and A/C control unit and BCM.
NG >> Replace fan switch.

8. CHECK COMPRESSOR ON SIGNAL

1. Reconnect A/C control unit harness connector.
2. With fan switch ON, measure voltage between A/C control unit and body ground with A/C switch OFF and ON.

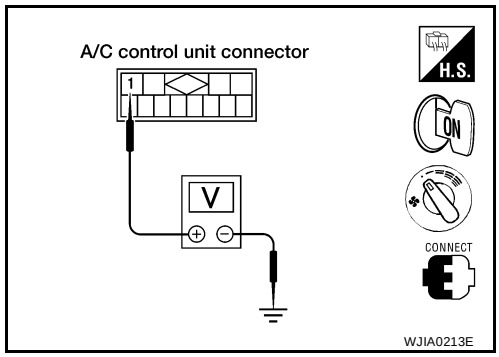

Terminals			Condition	Voltage (V) (Approx.)
(+)		(-)		
Connector	Wire color			
M51-1	L/W	Body ground	A/C SW: OFF	9V
	L/W		A/C SW: ON	0V

OK or NG

OK >> GO TO 9.
NG >> Replace A/C control unit.

9. CHECK COMPRESSOR ON SIGNAL CIRCUIT

1. Disconnect A/C control unit harness connector.
2. Check continuity between A/C control unit and BCM.

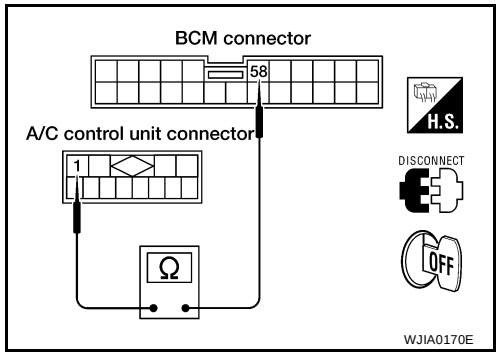

Terminals				Continuity
Connector	Wire color	Connector	Wire color	Yes
M18-58	L/W	M51-1	L/W	

If OK, check harness for short.

OK or NG

OK >> GO TO 10.
NG >> Repair harness or connectors.

10. CHECK CAN COMMUNICATION CIRCUITS

Check CAN communication circuits between BCM to ECM and between ECM to IPDM E/R. Refer to LAN-4, "CAN COMMUNICATION" .

OK or NG

OK >> ECM is malfunctioning.
NG >> Repair or replace component based on diagnosis.

REFRIGERANT PRESSURE SENSOR

Make sure that higher A/C refrigerant pressure results in higher refrigerant pressure sensor output voltage.

	OFF kPa (kg/cm^2 , psi)
Low-pressure side	Decreasing to 0.18 (0.00184, 0.03)
High-pressure side	Increasing to 2.74 (0.0279, 0.40)

Refer to EC-596, "REFRIGERANT PRESSURE SENSOR" (QR25DE models) or EC-1252, "REFRIGERANT PRESSURE SENSOR" (VQ35DE models).

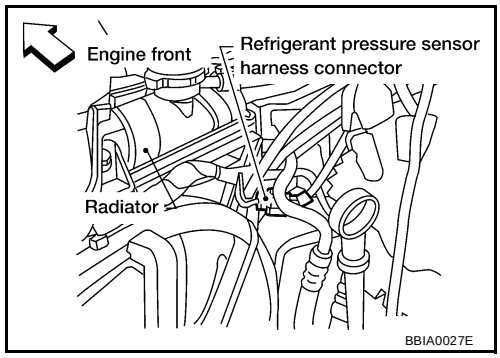

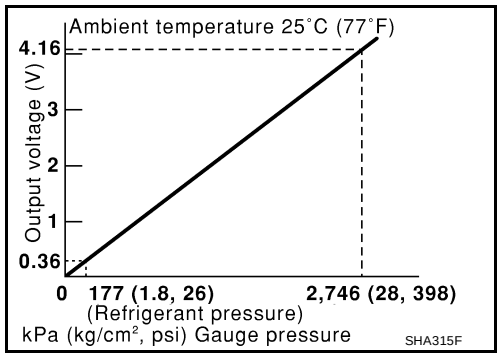

Insufficient Cooling

EJS000ZX

Symptom:

- **Insufficient cooling.**

INSPECTION FLOW

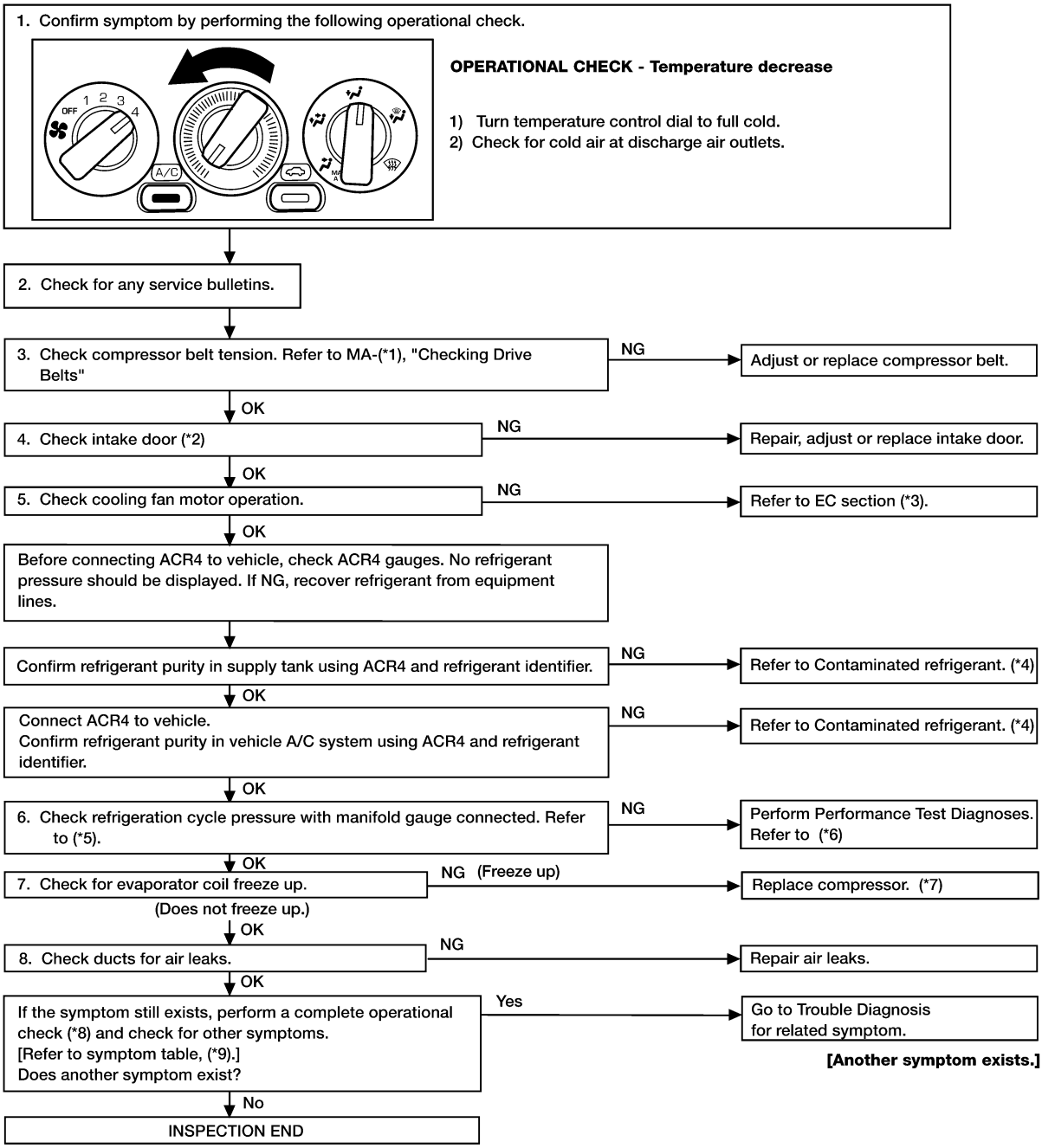

*1: MA-14, "Checking Drive Belts" (QR25DE) or MA-21, "Checking Drive Belts" (VQ35DE)

*2: MTC-46, "Intake Door Motor Circuit"

*3: EC Section

*4: MTC-3, "Contaminated Refrigerant"

*5: MTC-79, "HFC-134a (R-134a) Service Procedure"

*6: MTC-59, "Performance Chart"

*7: MTC-83, "Removal and Installation for Compressor — QR25DE Models" or MTC-84, "Removal and Installation for Compressor — VQ35DE Models"

*8: MTC-38, "Operational Check"

*9 MTC-28, "SYMPTOM TABLE"

PERFORMANCE CHART

Test Condition

Testing must be performed as follows:

Vehicle location	Indoors or in the shade (in a well-ventilated place)
Doors	Closed
Door window	Open
Hood	Open
TEMP.	Max. COLD
Mode switch	(Ventilation) set
Intake switch	(Recirculation) set
(blower) speed	Max. speed set
Engine speed	Idle speed
Operate the air conditioning system for 10 minutes before taking measurements.	

Test Reading

Recirculating-to-discharge Air Temperature Table

Inside air (Recirculating air) at blower assembly inlet		Discharge air temperature at center ventilator °C (°F)
Relative humidity %	Air temperature °C (°F)	
50 - 60	25 (77)	10.0 - 12.3 (50 - 54)
	30 (86)	13.2 - 15.3 (56 - 60)
	35 (95)	17.2 - 21.0 (63 - 70)
60 - 70	25 (77)	12.3 - 14.9 (54 - 59)
	30 (86)	15.3 - 19.3 (60 - 67)
	35 (95)	21.0 - 24.4 (70 - 76)

Ambient Air Temperature-to-operating Pressure Table

Ambient air		High-pressure (Discharge side) kPa (kg/cm2, psi)	Low-pressure (Suction side) kPa (kg/cm2, psi)
Relative humidity %	Air temperature °C (°F)		
50 - 70	30 (86)	1,220 - 1,500 (12.44 - 15.30, 176.9 - 217.5)	240 - 295 (2.45 - 3.01, 34.8 - 42.8)
	35 (95)	1,360 - 1,690 (13.87 - 17.24, 197.2 - 245.1)	275 - 335 (2.81 - 3.42, 39.9 - 48.6)
	40 (104)	1,500 - 1,830 (12.44 - 18.67, 176.9 - 265.4)	310 - 375 (3.16 - 3.83, 45.0 - 54.4)

TROUBLE DIAGNOSES FOR ABNORMAL PRESSURE

Whenever system's high and/or low side pressure is abnormal, diagnose using a manifold gauge. The marker above the gauge scale in the following tables indicates the standard (normal) pressure range. Since the standard (normal) pressure, differs from vehicle to vehicle, refer to Ambient Air Temperature-to-operating Pressure Table above.

Both High and Low-pressure Sides are Too High

Gauge indication	Refrigerant cycle	Probable cause	Corrective action
Both high and low-pressure sides are too high. 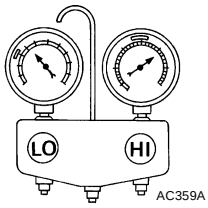	Pressure is reduced soon after water is splashed on condenser.	Excessive refrigerant charge in refrigeration cycle	Reduce refrigerant until specified pressure is obtained.
	Air suction by cooling fan is insufficient.	Insufficient condenser cooling performance ↓ 1. Condenser fins are clogged. 2. Improper fan rotation of cooling fan	● Clean condenser. ● Check and repair cooling fan as necessary.
	● Low-pressure pipe is not cold. ● When compressor is stopped high-pressure value quickly drops by approximately 196 kPa (2 kg/cm^2 , 28 psi). It then decreases gradually thereafter.	Poor heat exchange in condenser (After compressor operation stops, high pressure decreases too slowly.) ↓ Air in refrigeration cycle	Evacuate repeatedly and recharge system.
	Engine tends to overheat.	Engine cooling systems malfunction.	Check and repair each engine cooling system.
	● An area of the low-pressure pipe is colder than areas near the evaporator outlet. ● Plates are sometimes covered with frost.	● Excessive liquid refrigerant on low-pressure side ● Excessive refrigerant discharge flow ● Expansion valve is open a little compared with the specification. ↓ 1. Improper thermal valve installation 2. Improper expansion valve adjustment	Replace expansion valve.

High-pressure Side is Too High and Low-pressure Side is Too Low

Gauge indication	Refrigerant cycle	Probable cause	Corrective action
High-pressure side is too high and low-pressure side is too low. 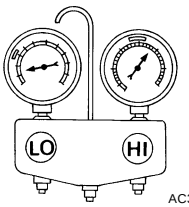	Upper side of condenser and high-pressure side are hot, however, liquid tank is not so hot.	High-pressure tube or parts located between compressor and condenser are clogged or crushed.	● Check and repair or replace malfunctioning parts. ● Check lubricant for contamination.

High-pressure Side is Too Low and Low-pressure Side is Too High

Gauge indication	Refrigerant cycle	Probable cause	Corrective action
High-pressure side is too low and low-pressure side is too high. 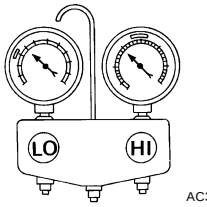	High and low-pressure sides become equal soon after compressor operation stops.	Compressor pressure operation is improper. ↓ Damaged inside compressor packings	Replace compressor.
	No temperature difference between high and low-pressure sides	Compressor pressure operation is improper. ↓ Damaged inside compressor packings.	Replace compressor.

Both High- and Low-pressure Sides are Too Low

Gauge indication	Refrigerant cycle	Probable cause	Corrective action
Both high- and low-pressure sides are too low. 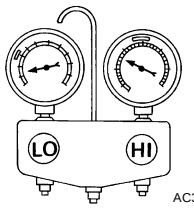	● There is a big temperature difference between receiver drier outlet and inlet. Outlet temperature is extremely low. ● Liquid tank inlet and expansion valve are frosted.	Liquid tank inside is slightly clogged.	● Replace desiccant assy. ● Check lubricant for contamination.
	● Temperature of expansion valve inlet is extremely low as compared with areas near liquid tank. ● Expansion valve inlet may be frosted. ● Temperature difference occurs somewhere in high-pressure side	High-pressure pipe located between receiver drier and expansion valve is clogged.	● Check and repair malfunctioning parts. ● Check lubricant for contamination.
	Expansion valve and liquid tank are warm or only cool when touched.	Low refrigerant charge ↓ Leaking fittings or components	Check refrigerant for leaks. Refer to MTC-91, "Checking for Refrigerant Leaks" .
	There is a big temperature difference between expansion valve inlet and outlet while the valve itself is frosted.	Expansion valve closes a little compared with the specification. ↓ 1. Improper expansion valve adjustment 2. Malfunctioning thermal valve 3. Outlet and inlet may be clogged.	● Remove foreign particles by using compressed air. ● Check lubricant for contamination.
	An area of the low-pressure pipe is colder than areas near the evaporator outlet.	Low-pressure pipe is clogged or crushed.	● Check and repair malfunctioning parts. ● Check lubricant for contamination.
	Air flow volume is not enough or is too low.	Evaporator is frozen.	● Check intake sensor operation. Refer to MTC-68, "INTAKE SENSOR" . ● Replace compressor.

Low-pressure Side Sometimes Becomes Negative

Gauge indication	Refrigerant cycle	Probable cause	Corrective action
Low-pressure side sometimes becomes negative. 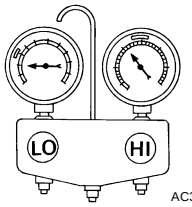	● Air conditioning system does not function and does not cyclically cool the compartment air. ● The system constantly functions for a certain period of time after compressor is stopped and restarted.	Refrigerant does not discharge cyclically. ↓ Moisture is frozen at expansion valve outlet and inlet. ↓ Water is mixed with refrigerant.	● Drain water from refrigerant or replace refrigerant. ● Replace desiccant assy.

Low-pressure Side Becomes Negative

Gauge indication	Refrigerant cycle	Probable cause	Corrective action
Low-pressure side becomes negative. 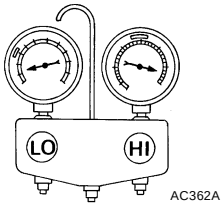 	Liquid tank or front/rear side of expansion valve's pipe is frosted or dewed.	High-pressure side is closed and refrigerant does not flow. ↓ Expansion valve or liquid tank is frosted.	Leave the system at rest until no frost is present. Start it again to check whether or not the problem is caused by water or foreign particles. ● If water is the cause, initially cooling is okay. Then the water freezes causing a blockage. Drain water from refrigerant or replace refrigerant. ● If due to foreign particles, remove expansion valve and remove the particles with dry and compressed air (not shop air). ● If either of the above methods cannot correct the problem, replace expansion valve. ● Replace desiccant assy. ● Check lubricant for contamination.

Insufficient Heating

EJS000ZY

SYMPTOM: Insufficient heating

INSPECTION FLOW

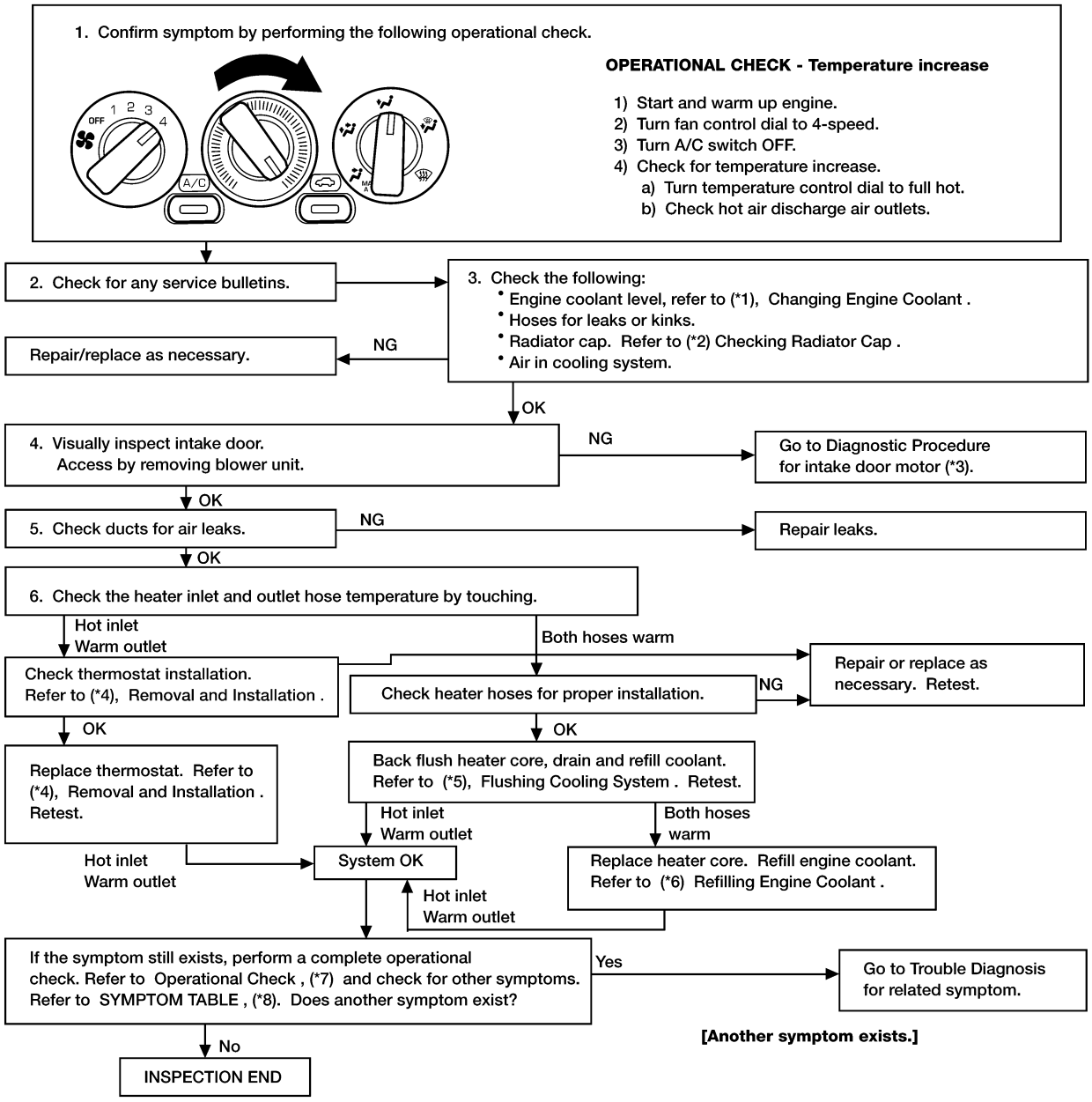

*1: MA-14, "Changing Engine Coolant" (QR25DE) or MA-22, "Changing Engine Coolant" (VQ35DE)

*2: CO-11, "CHECKING RADIATOR CAP" (QR25DE) or CO-33, "CHECKING RADIATOR CAP" (VQ35DE)

*3: MTC-46, "Intake Door Motor Circuit"

*4: CO-20, "Removal and Installation" (QR25DE) or EC-1104, "Overall Function Check" (VQ35DE)

*5: MA-16, "FLUSHING COOLING SYSTEM" (QR25DE) or MA-23, "FLUSHING COOLING SYSTEM" (VQ35DE)

*6: CO-11, "Refilling Engine Coolant" (QR25DE) or CO-33, "Refilling Engine Coolant" (VQ35DE)

*7: MTC-38, "Operational Check"

*8 MTC-28, "SYMPTOM TABLE"

Noise

EJS000ZZ

SYMPTOM: Noise

INSPECTION FLOW

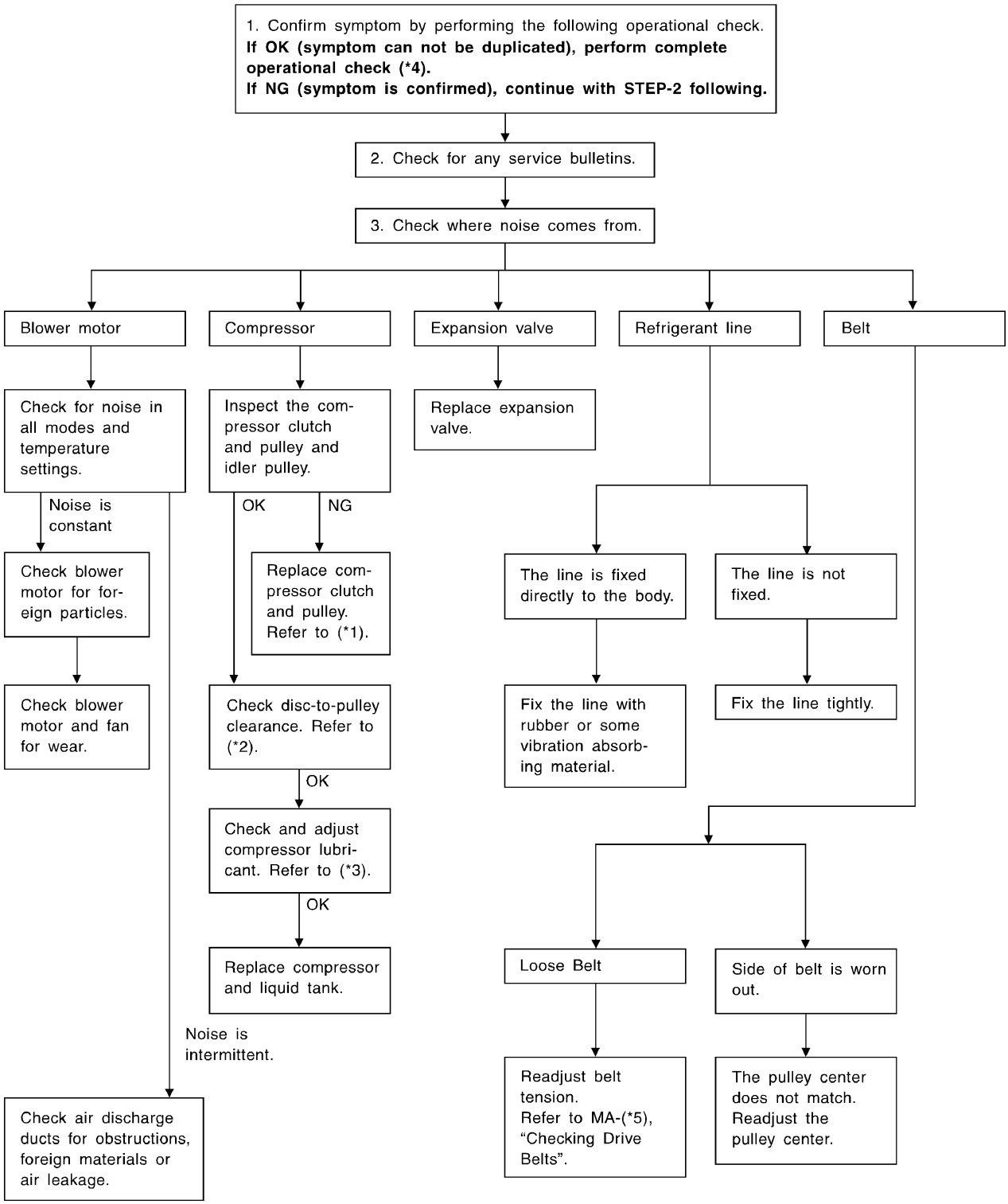

*1 MTC-85, "Removal and Installation for Compressor Clutch"

*2 MTC-86, "INSTALLATION"

*3 MTC-18, "Maintenance of Lubricant Quantity in Compressor"

*4 MTC-38, "Operational Check"

*5 MA-14, "Checking Drive Belts" (QR25DE) or MA-21, "Checking Drive Belts" (VQ35DE)

Intake Sensor Circuit

EJS00100

COMPONENT DESCRIPTION

Intake Sensor

The intake sensor is located on the heater and cooling unit. It converts temperature of air after it passes through the evaporator into a resistance value which is then input to the A/C control unit.
After disconnecting intake sensor harness connector, measure resistance between terminals 1 and 2 at sensor harness side, using the table below.

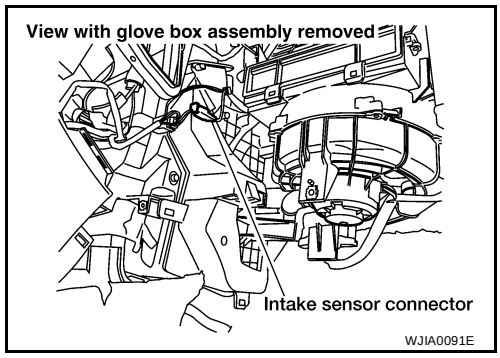

Temperature °C (°F)	Resistance kΩ
-15 (5)	12.34
-10 (14)	9.62
-5 (23)	7.56
0 (32)	6.00
5 (41)	4.80
10 (50)	3.87
15 (59)	3.15
20 (68)	2.57
25 (77)	2.12
30 (86)	1.76
35 (95)	1.47
40 (104)	1.23
45 (113)	1.04

If NG, replace intake sensor.

DIAGNOSTIC PROCEDURE

SYMPTOM: Intake sensor circuit is open or shorted.

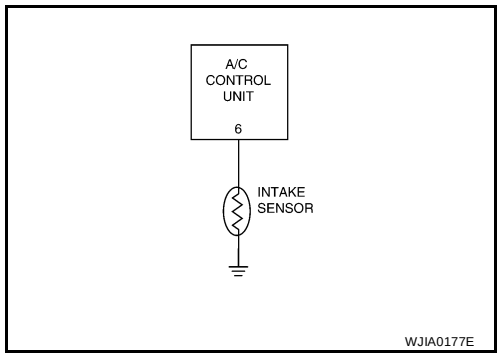

1. CHECK INTAKE SENSOR CIRCUIT BETWEEN INTAKE SENSOR AND BODY GROUND

Disconnect intake sensor harness connector.

Terminal			Continuity
Connector	Wire color	Body ground	Yes
M53-1	B		

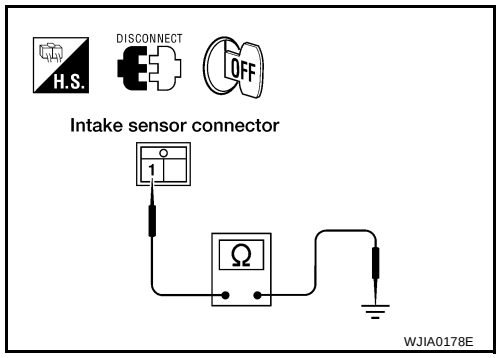

OK or NG

OK >> GO TO 2.
NG >> Repair harness or connector.

2. CHECK INTAKE SENSOR CIRCUIT BETWEEN INTAKE SENSOR AND A/C CONTROL UNIT

Disconnect A/C control unit harness connector.

Terminals				Continuity
Connector	Wire color	Connector	Wire color	Yes
M53-2	R/G	M51-6	R/G	

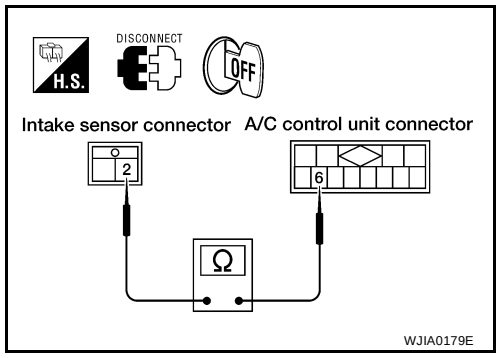

OK or NG

OK >> GO TO 3.
NG >> Repair harness or connector.

3. CHECK INTAKE SENSOR

Refer to MTC-65, "Intake Sensor" .

OK or NG

OK >> Replace A/C control unit.
NG >> Replace intake sensor.

CONTROL UNIT

PFP:27500

Removal and Installation

EJS00101

REMOVAL

1. Remove cluster lid C. Refer to IP-12, "Cluster Lid C" .
2. Remove audio unit. Refer to AV-22, "AUDIO UNIT" .
3. Remove the temperature control cable clamp and then remove the cable from the air mix door lever.

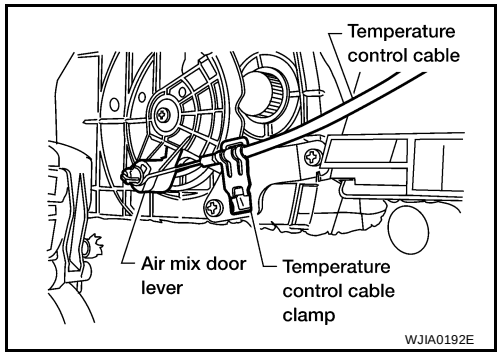

4. Remove the A/C control unit screws and then remove it from the instrument panel.
5. Disconnect the A/C control unit connectors and then remove it.

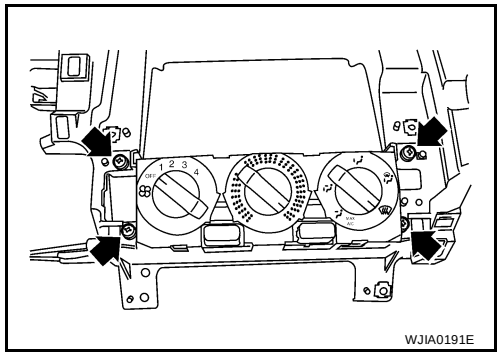

INSTALLATION

Installation is in the reverse order of removal.

Adjustment

1. Attach temperature control cable.
2. Rotate control knob to full cold position.
3. Remove slack from cable and install temperature control cable clamp.

After positioning control cable, check for proper operation.

INTAKE SENSOR

PFP:27723

Removal and Installation

EJS00102

1. Remove the evaporator. Refer to MTC-90, "Removal and Installation for Evaporator" .
2. Remove the intake sensor clip and then the sensor.

   CAUTION:
   Be careful not to damage the core surface.

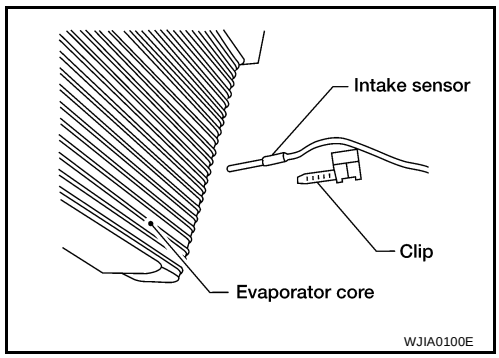

BLOWER UNIT

PFP:27200

Removal and Installation

EJS00103

REMOVAL

1. Remove the glove box assembly. Refer to IP-15, "Glove Box" .
2. Remove the ECM.
3. Disconnect the blower motor, intake door motor and fan control amp. connector.
4. Remove the 2 bolts and 1 screw from the blower unit, then remove it.

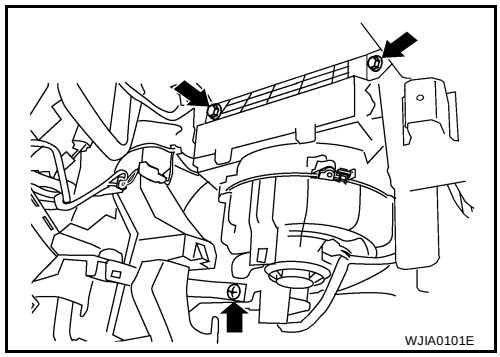

BLOWER MOTOR

PFP:27226

Removal and Installation

EJS00104

1. Remove the blower unit. Refer to MTC-69, "Removal and Installation" .
2. Release the 8 tabs attaching blower motor to blower unit case and then remove it.

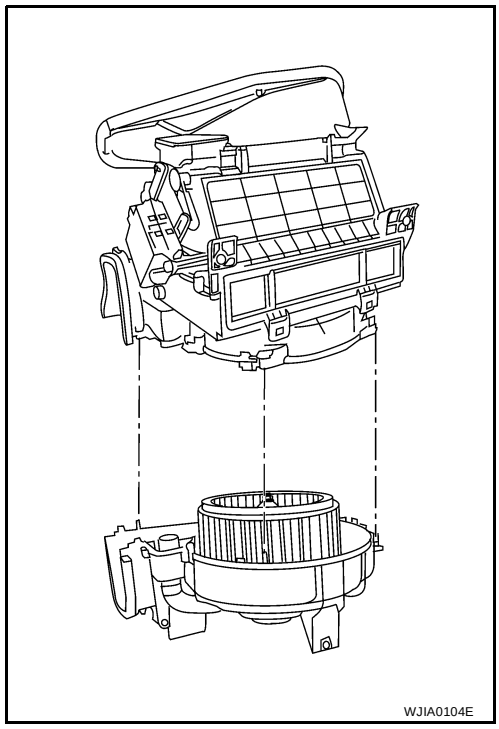

INTAKE DOOR MOTOR

PFP:27730

Removal and Installation

EJS00105

1. Remove the blower unit. Refer to MTC-69, "Removal and Installation" .
2. Remove the screws and then the intake door motor from the blower unit.

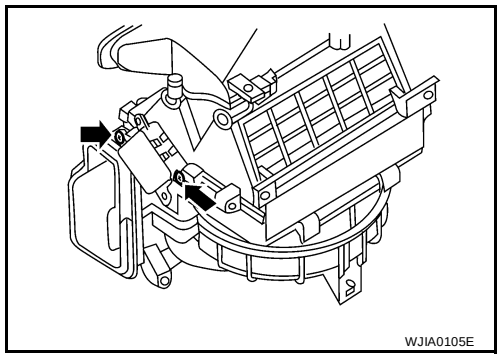

IN-CABIN MICROFILTER

PFP:27277

Removal and Installation

EJS001LK

FUNCTION

Air inside passenger compartment is kept clean at either recirculation or fresh mode by installing in-cabin microfilter into blower unit.

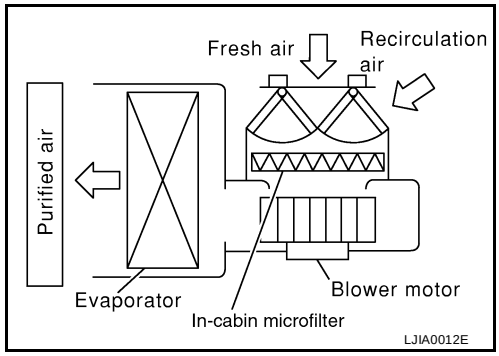

REPLACEMENT TIMING

Replace in-cabin microfilter.
Refer to MA-7, "SCHEDULE 1" and MA-10, "SCHEDULE 2" .
Caution label is fixed inside the glove box.

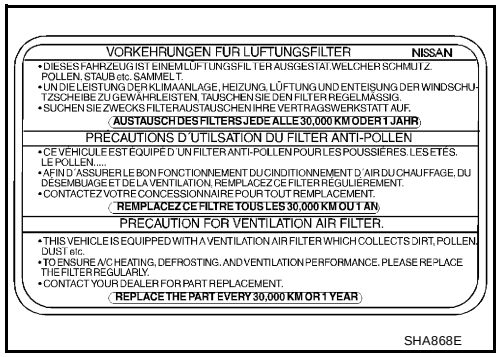

REPLACEMENT PROCEDURES

1. Remove glove box assembly. Refer to IP-15, "Glove Box" .
2. Remove in-cabin microfilter cover.
3. Take out the ventilation air filter from blower unit.
4. Replace with new in-cabin microfilter and reinstall on blower unit.
5. Reinstall glove box assembly.

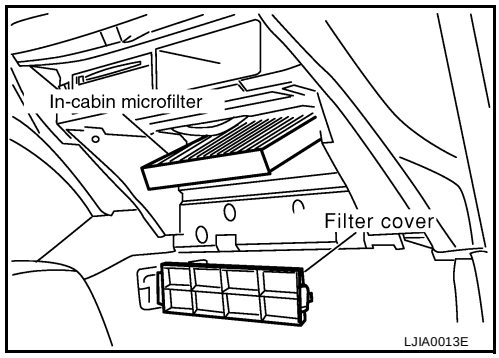

HEATER & COOLING UNIT ASSEMBLY

PFP:27110

Removal and Installation

EJS00106

REMOVAL

1. Discharge refrigerant from A/C system. Refer to MTC-79, "HFC-134a (R-134a) Service Procedure" .
2. Drain coolant from cooling system. Refer to MA-14, "Changing Engine Coolant" (QR25DE models) or MA-22, "Changing Engine Coolant" (VQ35DE models).
3. Disconnect heater hoses from heater core pipes.
4. Disconnect refrigerant lines from evaporator.

   CAUTION:
   Cap or wrap the joint of the pipe with suitable material such as vinyl tape to avoid entry of air.
5. Remove the instrument panel. Refer to IP-10, "INSTRUMENT PANEL ASSEMBLY" .
6. Remove the blower unit. Refer to MTC-69, "Removal and Installation" .
7. Remove the temperature control cable clamp and then remove the cable from the air mix door lever.

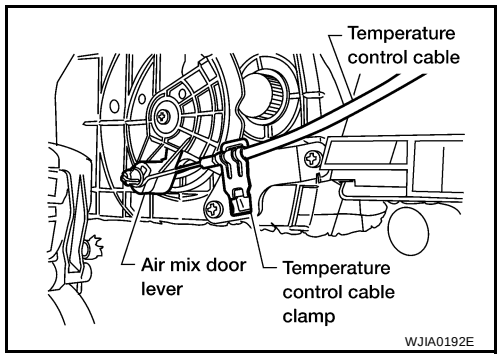

8. Disconnect mode door motor connector.
9. Remove the heater and cooling unit.

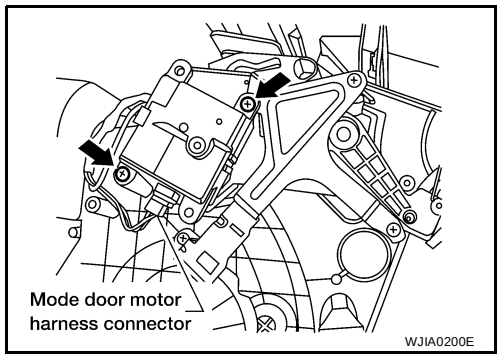

INSTALLATION

Install in the reverse order of removal.

NOTE:
When filling radiator with coolant, refer to CO-11, "Refilling Engine Coolant" (QR25DE models) or CO-33, "Refilling Engine Coolant" (VQ35DE models). Recharge the A/C system. Refer to MTC-79, "HFC-134a (R-134a) Service Procedure" .

HEATER CORE

PFP:27140

Removal and Installation

EJS00107

1. Remove heater and cooling unit. Refer to MTC-73, "Removal and Installation" .
2. Remove heater core pipe support screws and then remove it.

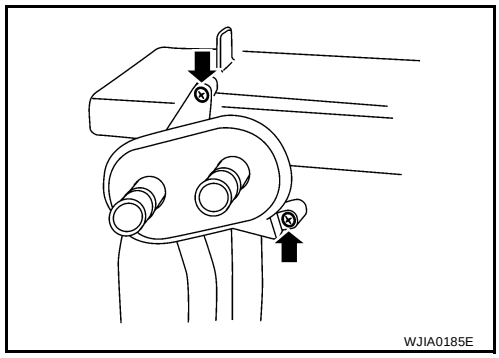

3. Remove heater core cover screws and then remove it.

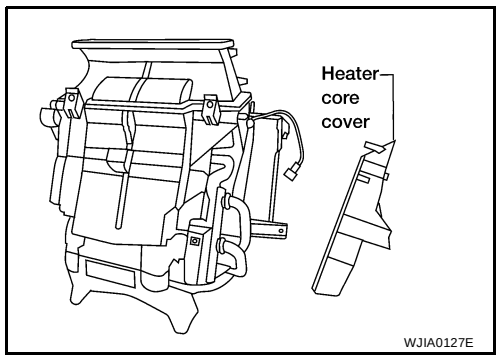

4. Remove heater core.

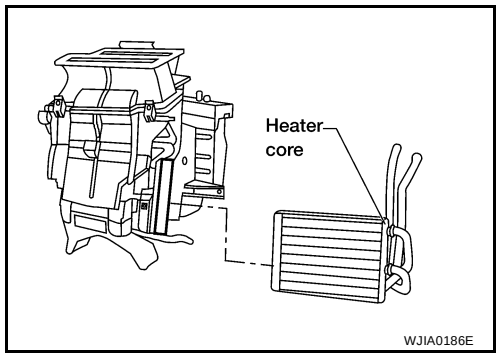

MODE DOOR MOTOR

PFP:27731

Removal and Installation

EJS00108

DRIVER SIDE MODE DOOR MOTOR

1. Remove the driver lower instrument panel assembly. Refer to IP-13, "Driver Lower Instrument Panel" .
2. Disconnect the mode door motor connector.
3. Remove the mode door motor screws and then remove it.

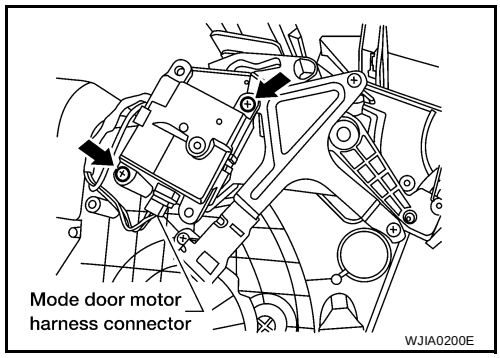

BLOWER FAN RESISTER

PFP:27150

Removal and Installation

EJS00109

1. Disconnect blower motor resistor connector.
2. Remove blower motor resistor screws and then remove it.

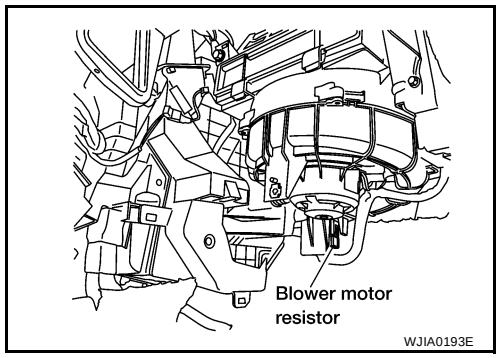

DUCTS AND GRILLES

PFP:27860

Removal and Installation

EJS0010A

Ventilator Duct, Defroster Nozzle and Defroster Ducts

EJS0010B

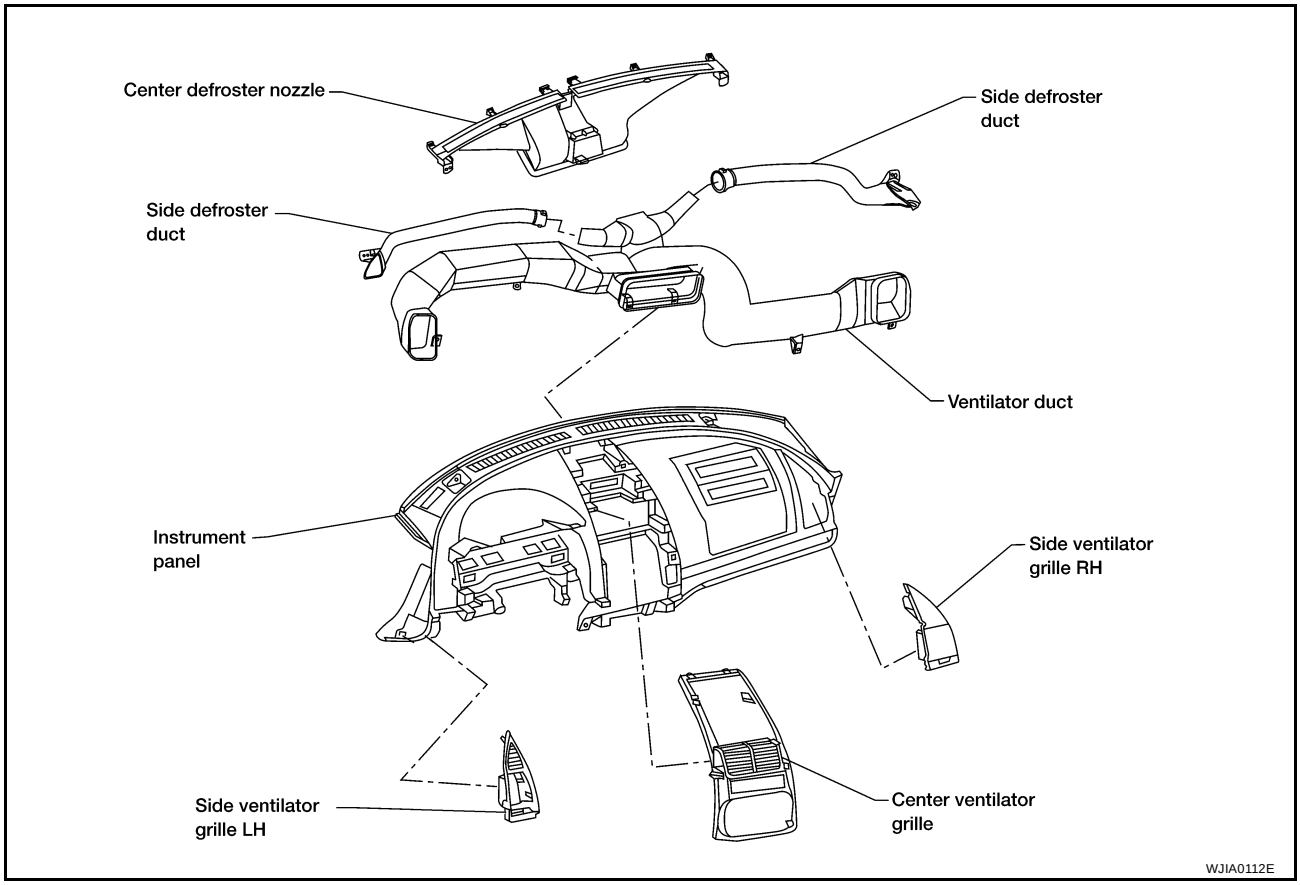

Center Ventilator Grille

EJS0010C

1. Remove cluster lid D. Refer to IP-13, "Cluster Lid D" .
2. Release the tabs to remove center ventilator grille.

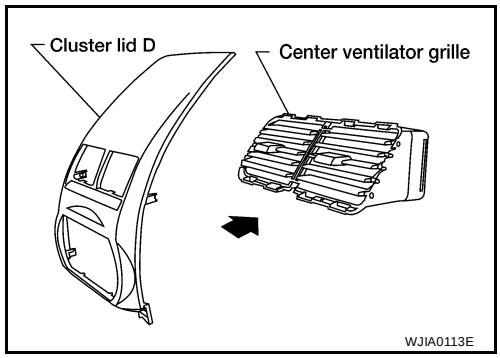

Side Ventilator Grille LH

EJS0010D

1. Remove cluster lid A. Refer to IP-13, "Cluster Lid A" .
2. Remove side ventilator grille LH.

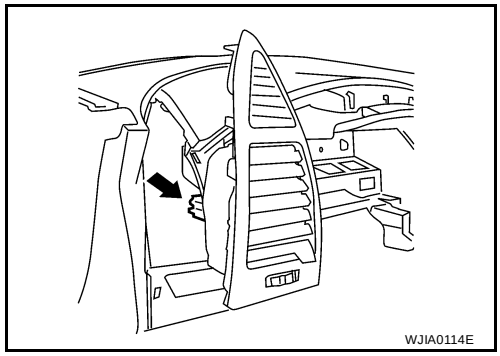

Side Ventilator Grille RH

EJS0010E

1. Remove glove box assembly. Refer to IP-15, "Glove Box" .
2. Remove side ventilator grille RH screw and then remove it.

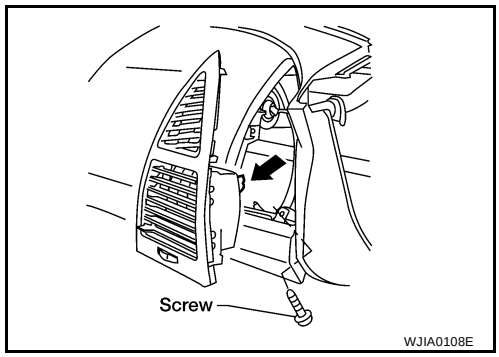

Floor duct

EJS0010F

1. Remove the carpet. Refer to EI-32, "FLOOR TRIM" .
2. Release foam tape and slide floor duct rearward to release from clips.

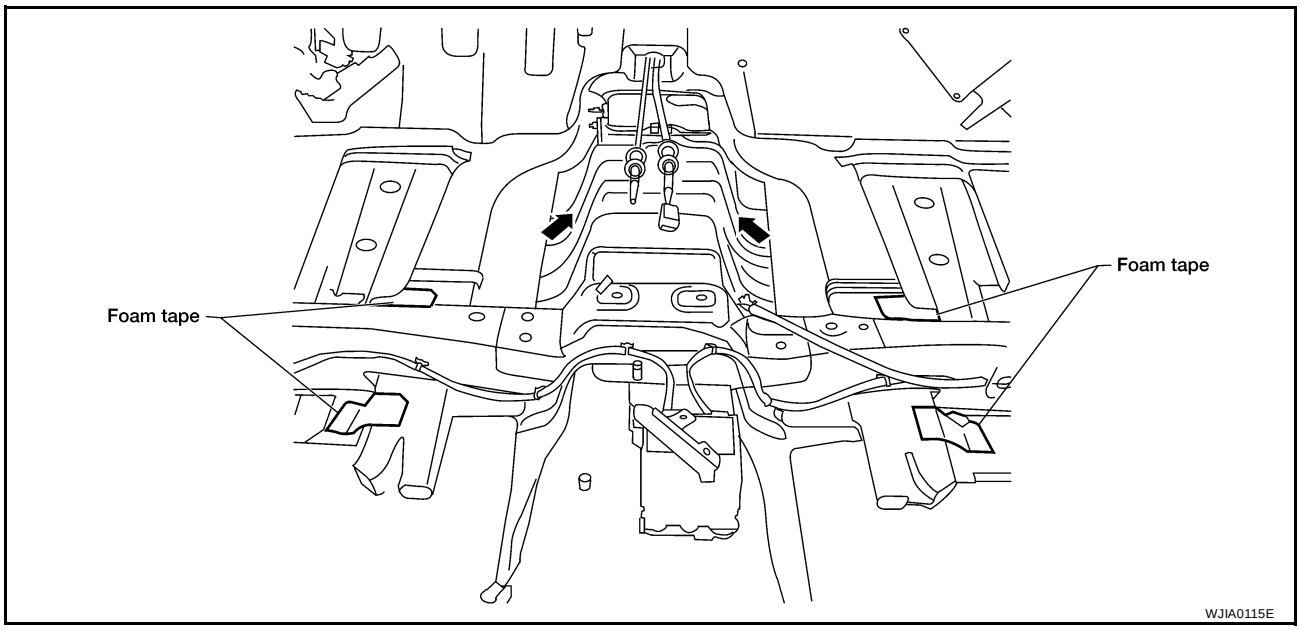

REFRIGERANT LINES

PFP:92600

HFC-134a (R-134a) Service Procedure

EJS0010G

SETTING OF SERVICE TOOLS AND EQUIPMENT

Discharging Refrigerant

WARNING:

Avoid breathing A/C refrigerant and lubricant vapor or mist. Exposure may irritate eyes, nose and throat. Remove HFC-134a (R-134a) from A/C system using certified service equipment meeting requirements of SAE J2210 (R-134a recycling equipment) or J2201 (R-134a recovery equipment). If accidental system discharge occurs, ventilate work area before resuming service. Additional health and safety information may be obtained from refrigerant and lubricant manufacturers.

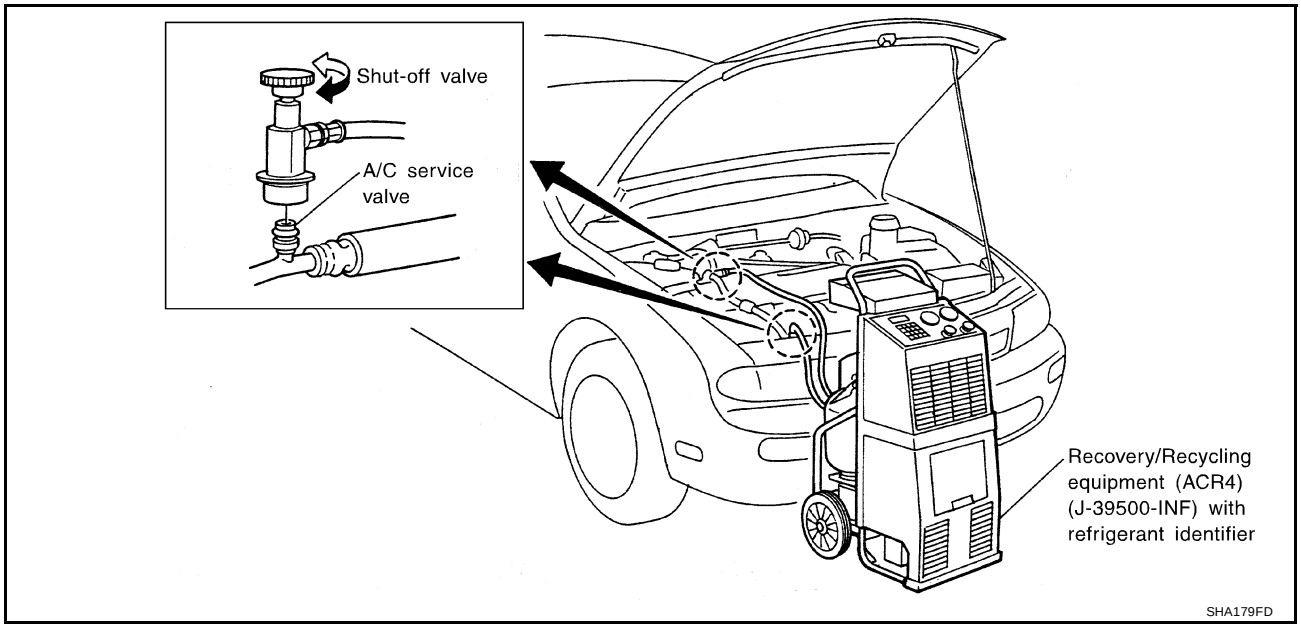

Evacuating System and Charging Refrigerant

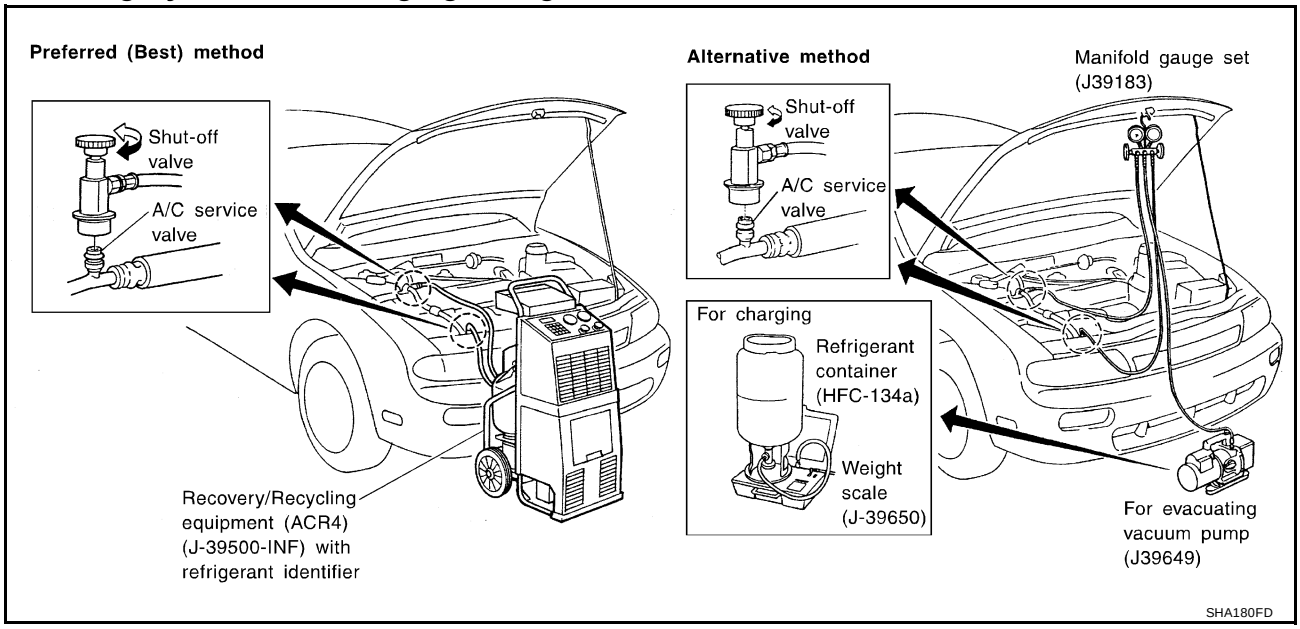

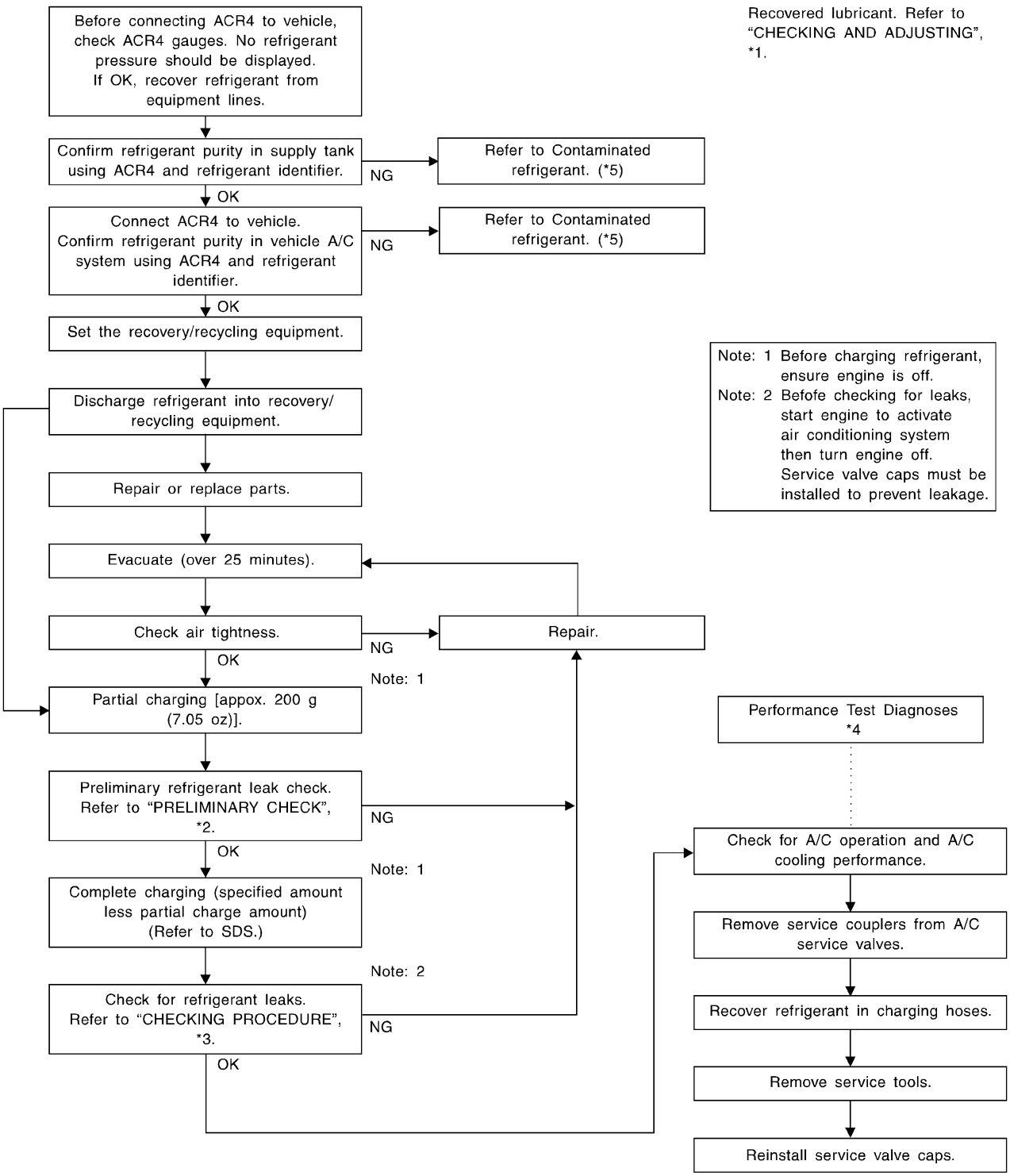

*1 MTC-18, "LUBRICANT"

*2 MTC-91, "Checking for Refrigerant Leaks"

*3 MTC-91, "Checking for Refrigerant Leaks"

*4 MTC-59, "Performance Chart"

*5 MTC-3, "Contaminated Refrigerant"

Components

EJS0010H

Refer to MTC-5, "Precautions for Refrigerant Connection" .

QR25DE Models

SEC. 214 • 271 • 274 • 276

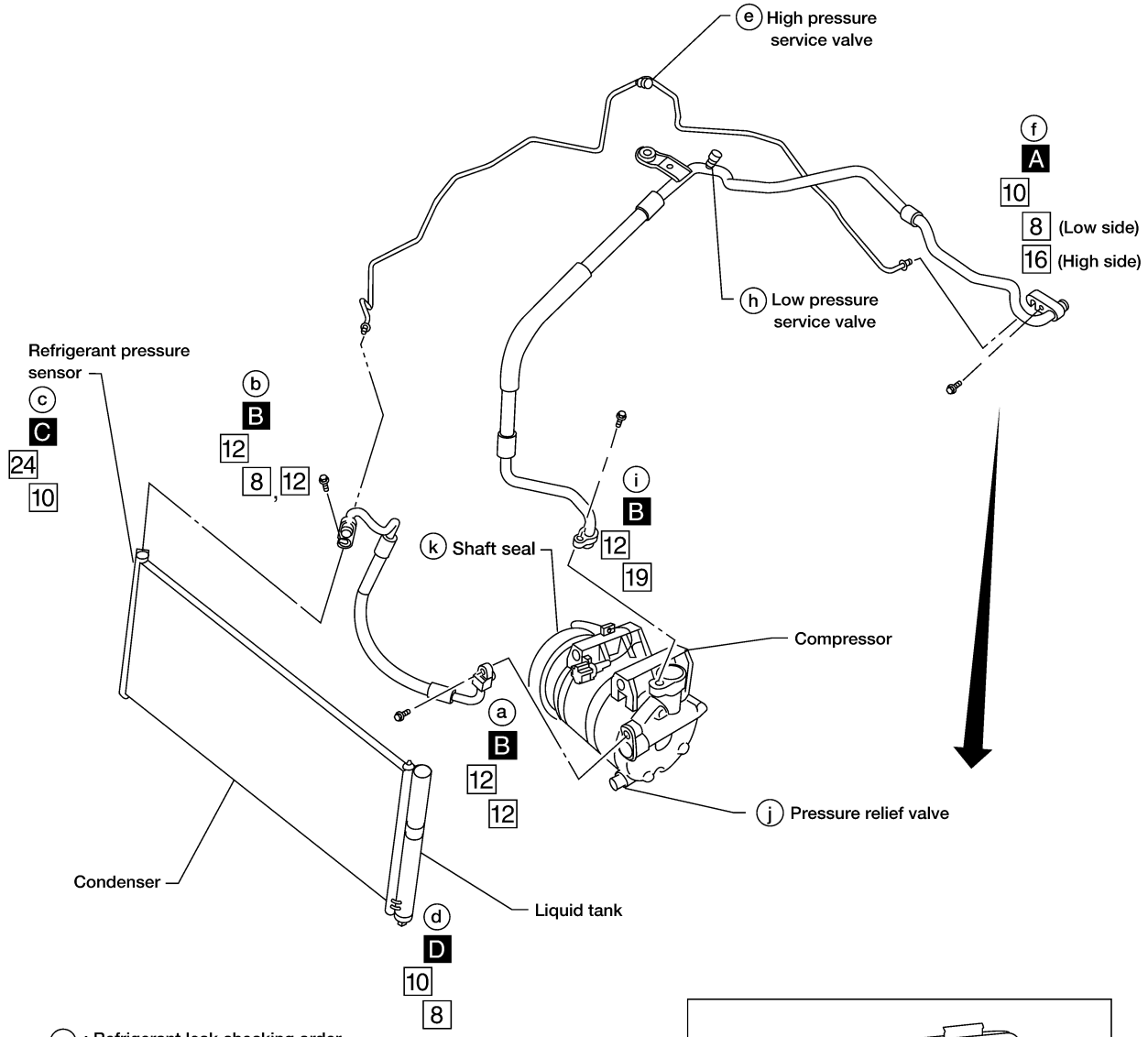

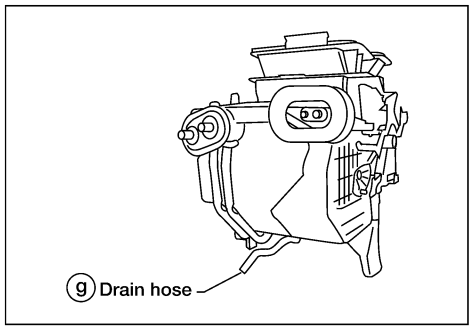

○ : Refrigerant leak checking order

□ : (Tightening torque)

□ □ : (Wrench size)

□ : (O-ring size)

: Nm (kg-m, in-lb)

: Nm (kg-m, ft-lb)

A : 2.9 – 5.9 (0.29 – 0.60, 26 – 52)

B : 7.8 – 19.6 (0.8 – 1.9, 69 – 173)

C : 9.8 – 11.7 (1.0 – 1.1, 7.3 – 8.6)

D : 5.0 – 6.47 (0.51 – 0.65, 45 – 57)

WJIA0180E

VQ35DE Models

SEC. 214 • 271 • 274 • 276

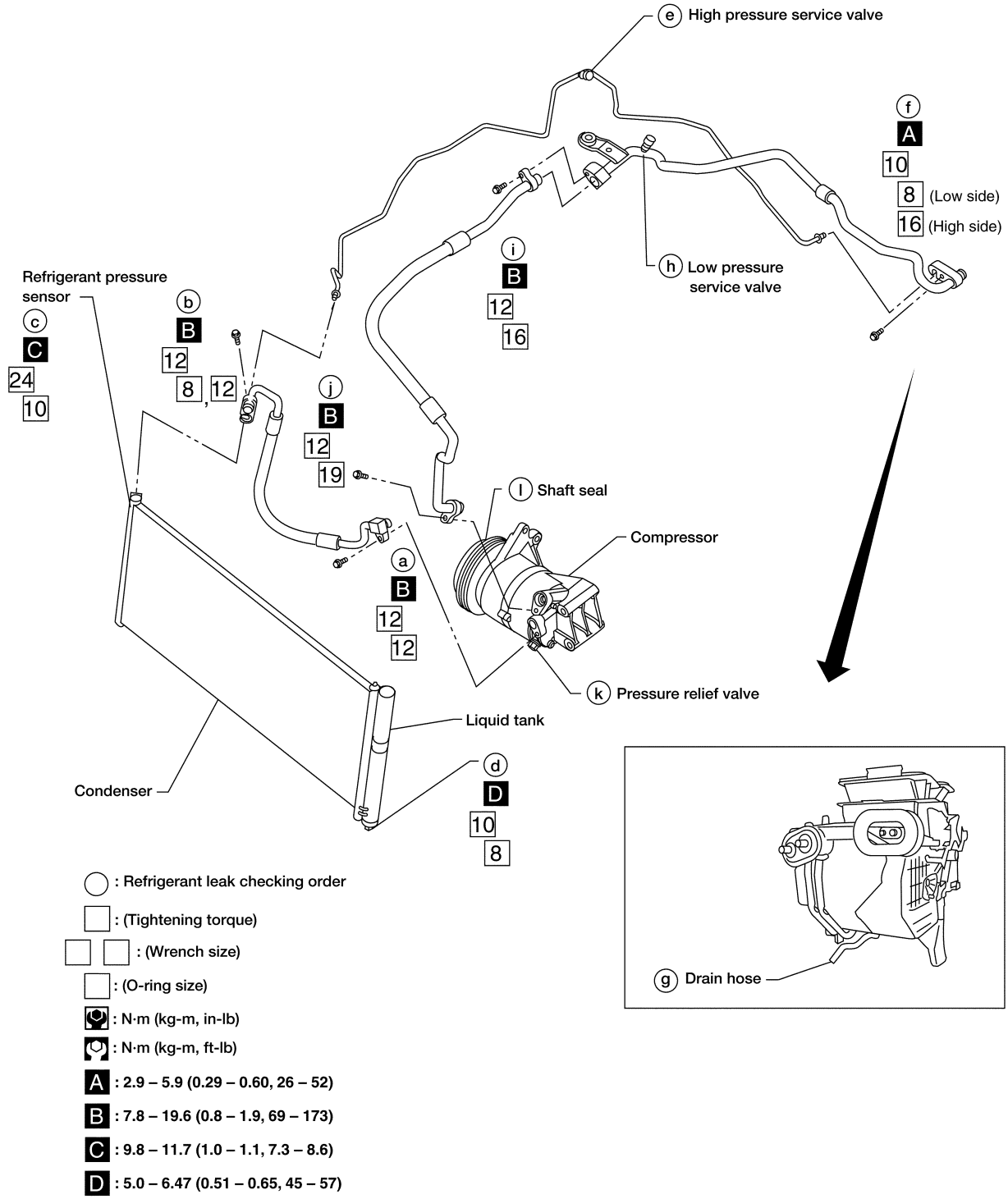

WJIA0116E

Removal and Installation for Compressor — QR25DE Models

EJS0010I

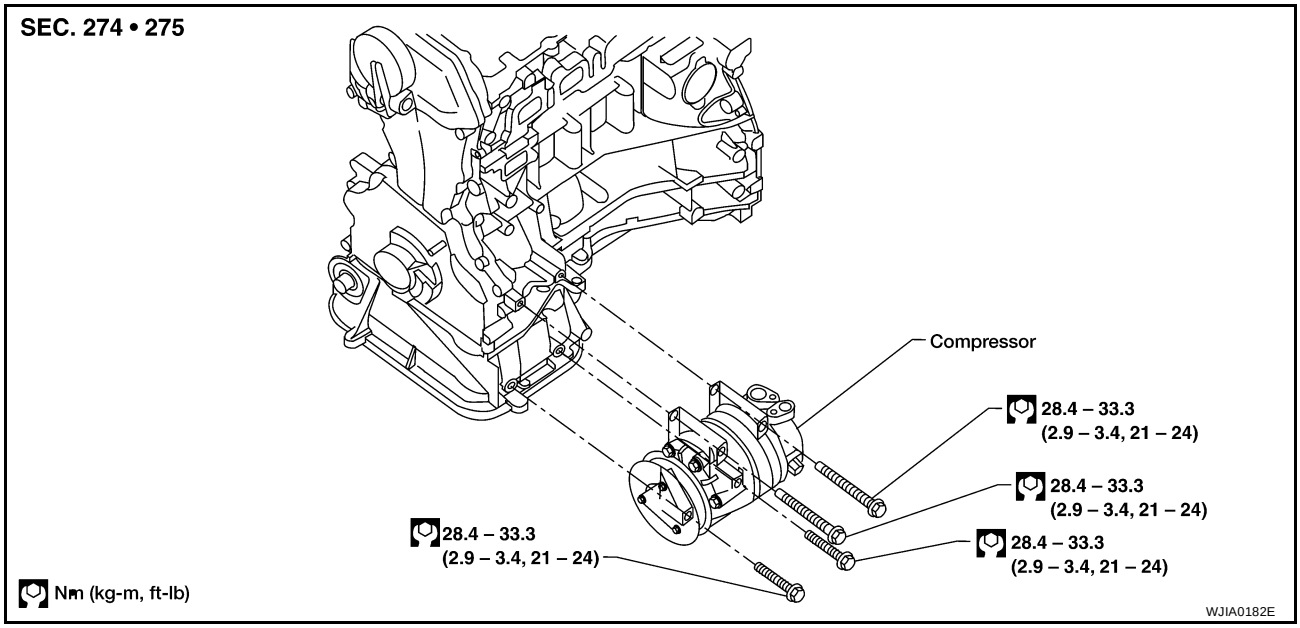

REMOVAL

1. Discharge the refrigerant. Refer to MTC-79, "HFC-134a (R-134a) Service Procedure" .
2. Remove the drive belt.
   Refer to MA-14, "ENGINE MAINTENANCE (QR25DE ENGINE)" .
3. Disconnect the compressor connector.
4. Remove the high-pressure flexible hose and low-pressure flexible hose.
   CAUTION:
   Cap or wrap the joint of the pipe with suitable material such as vinyl tape to avoid the entry of air.
5. Remove the mounting bolts from compressor using power tools.

INSTALLATION

CAUTION:

- **Replace the O-ring of the low-pressure flexible hose and high-pressure flexible hose with a new one, then apply compressor oil to it when installing it.**
- **When charging refrigerant, check for leaks.**

Bolts mounting the compressor

Tightening torque : 28.4 - 33.3 N·m (2.9 - 3.4 kg-m, 21 - 24 ft-lb)

Tightening torque : 59.8 - 69.6 N·m (6.1 - 7.0 kg-m, 45 - 51 ft-lb)

Bolt mounting the high- and low-pressure flexible hoses

Tightening torque : 7.8 - 19.6 N·m (0.8 - 1.9 kg-m, 69 - 173 in-lb)

Removal and Installation for Compressor — VQ35DE Models

EJS0010J

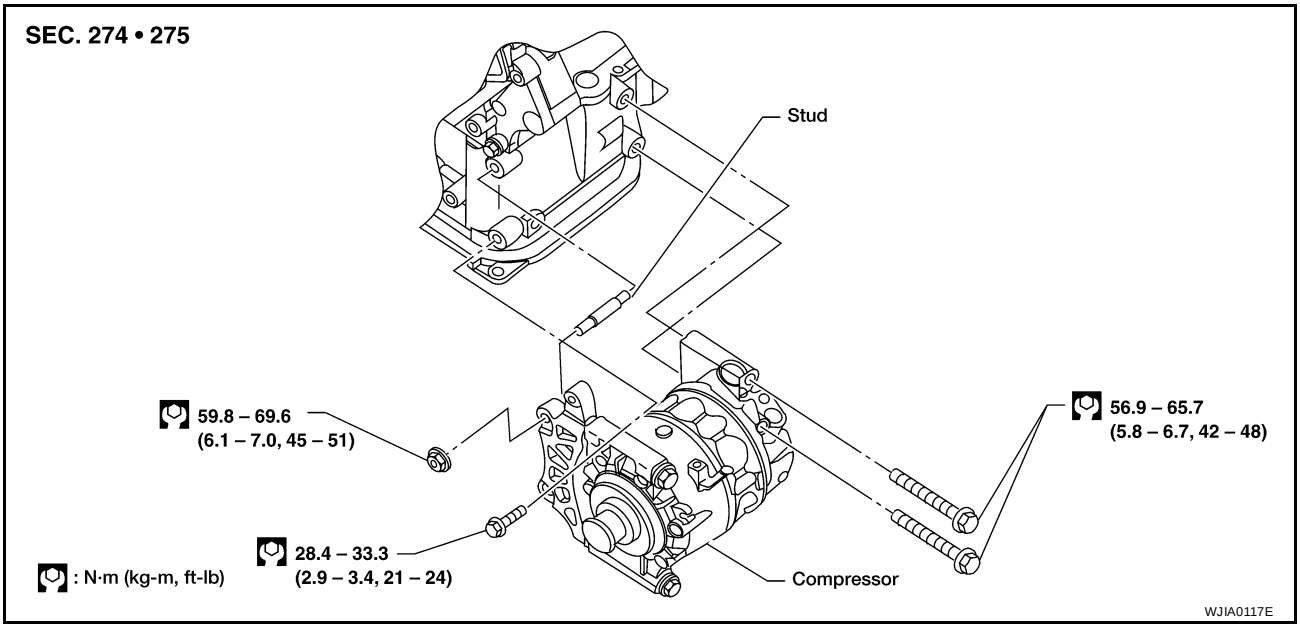

REMOVAL

1. Discharge the refrigerant. Refer to MTC-79, "HFC-134a (R-134a) Service Procedure" .
2. Remove the drive belt.
   Refer to MA-21, "ENGINE MAINTENANCE (VQ35DE ENGINE)" .
3. Remove the coolant pipe bracket bolt.
4. Remove compressor mounting stud.
5. Disconnect the compressor connector.
6. Remove the high-pressure flexible hose and low-pressure flexible hose.

   CAUTION:
   Cap or wrap the joint of the pipe with suitable material such as vinyl tape to avoid the entry of air.
7. Remove the mounting bolts and nut from compressor using power tools.

INSTALLATION

CAUTION:

- **Replace the O-ring of the low-pressure flexible hose and high-pressure flexible hose with a new one, then apply compressor oil to it when installing it.**
- **When charging refrigerant, check for leaks.**

Bolts mounting the compressor (rear side)

Tightening torque : 56.9 - 65.7 N·m (5.8 - 6.8 kg-m, 42 - 48 ft-lb)

Bolt mounting the compressor (front side)

Tightening torque : 28.4 - 33.3 N·m (2.9 - 3.4 kg-m, 21 - 24 ft-lb)

Nut mounting the compressor (front side)

Tightening torque : 59.8 - 69.6 N·m (6.1 - 7.0 kg-m, 45 - 51 ft-lb)

Bolt mounting the high- and low-pressure flexible hoses

Tightening torque : 7.8 - 19.6 N·m (0.8 - 1.9 kg-m, 69 - 173 in-lb)

Removal and Installation for Compressor Clutch

EJS0010K

REMOVAL

- When removing center bolt, hold clutch disc with clutch disc tool.
- Remove the clutch disc.
  Clutch disc holding tool:
  (J-44614) Commercial service tool

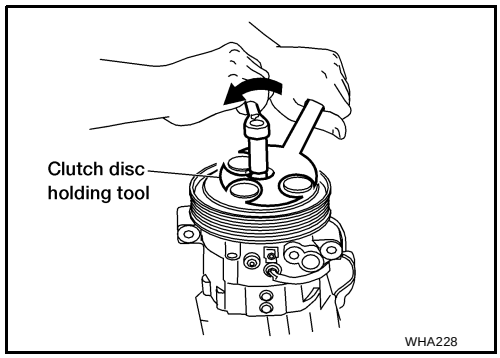

- Remove the snap ring using external snap ring pliers.

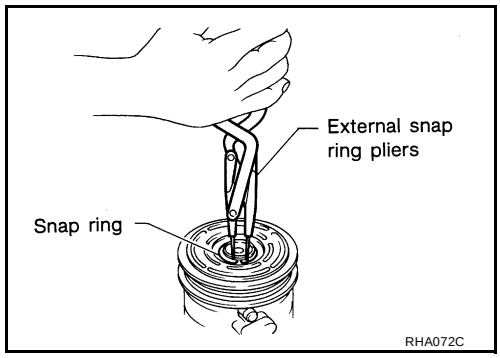

- Pulley removal:

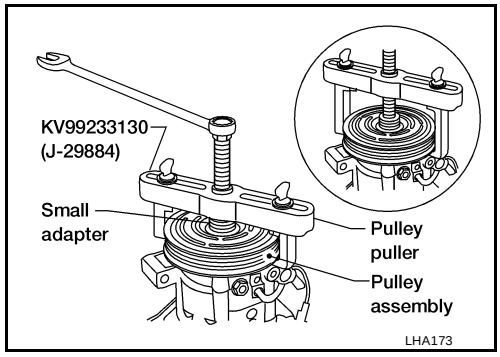

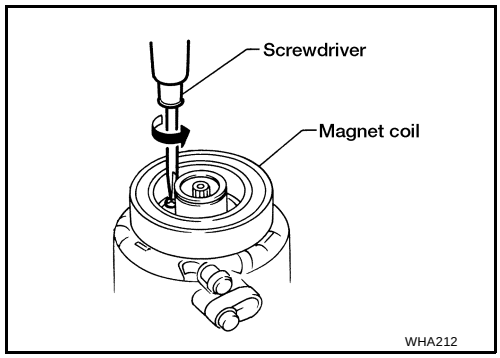

Use a pulley puller with small adapter. Position the small adapter on the end of the drive shaft and the center of the puller on the small adapter. Remove the pulley assembly with the puller.
To prevent deformation of the pulley groove, the puller claws should be hooked under (not into) the pulley groove.

- Remove the snap ring using external snap ring pliers.
- Remove the magnet coil harness clip using a screwdriver, remove the three magnet coil fixing screws and remove the magnet coil.

INSPECTION

Clutch Disc

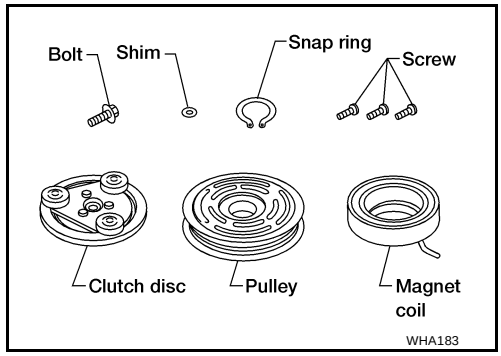

If the contact surface shows signs of damage due to excessive heat, replace clutch disc and pulley.

Pulley

Check the appearance of the pulley assembly. If contact surface of pulley shows signs of excessive grooving, replace clutch disc and pulley. The contact surfaces of the pulley assembly should be cleaned with a suitable solvent before reinstallation.

Coil

Check magnet coil for loose connection or cracked insulation.

INSTALLATION

- Install the magnet coil.
  Be sure to align the magnet coil pin with the hole in the compressor front head.
- Install the magnet coil harness clip using a screwdriver.

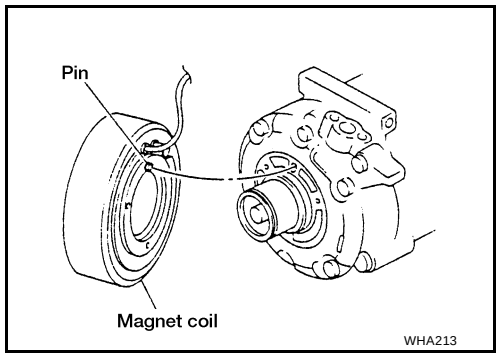

- Install the pulley assembly using the installer and a wrench, and then install the snap ring using snap ring pliers.

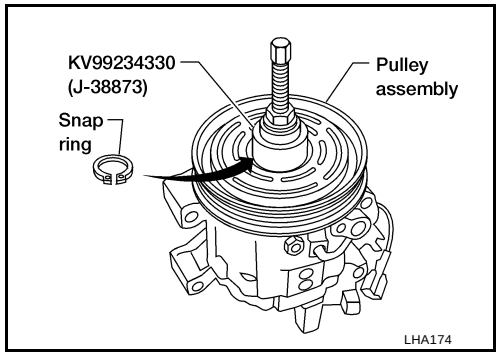

- Install the clutch disc on the drive shaft, together with the original shim(s). Press the clutch disc down by hand.

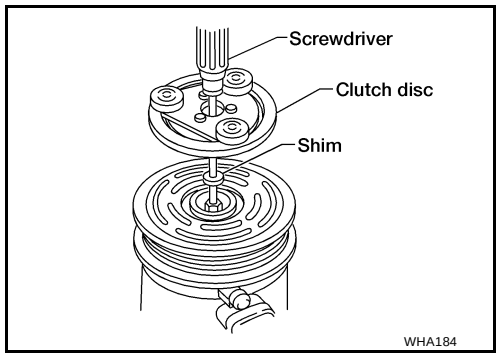

- Using the clutch disc tool to prevent clutch disc rotation, tighten the bolt to 12 N·m (1.2 kg-m, 9 ft-lb).
- **After tightening the bolt, check that the pulley rotates smoothly.**

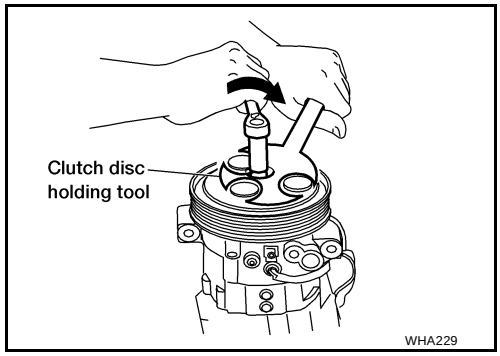

- Check clearance all the way around the clutch disc.

  Clutch disc-to-pulley clearance : 0.3 - 0.6 mm (0.012 - 0.024 in)

  If the specified clearance is not obtained, replace adjusting spacer and readjust.

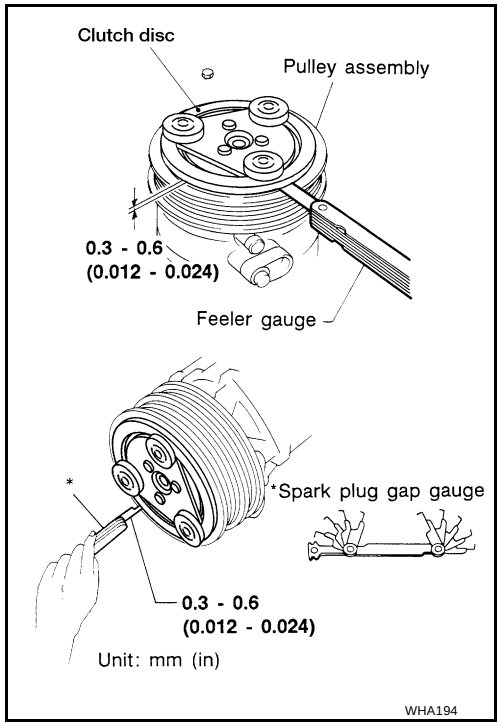

BREAK-IN OPERATION

When replacing compressor clutch assembly, always conduct the break-in operation. This is done by engaging and disengaging the clutch about 30 times. Break-in operation raises the level of transmitted torque.

Removal and Installation for Low-pressure Flexible Hose

EJS0010L

REMOVAL

1. Discharge the refrigerant. Refer to MTC-79, "HFC-134a (R-134a) Service Procedure" .

CAUTION:

Cap or wrap the joint of the pipe with suitable material such as vinyl tape to avoid the entry of air.

2. Remove the low-pressure flexible hose. Refer to MTC-80, "Components" .

INSTALLATION

CAUTION:

- **Replace the O-ring of the low-pressure flexible hose with a new one, then apply compressor oil to it when installing it.**
- **When charging refrigerant, check for leaks.**

Bolt mounting the low-pressure flexible hose (evaporator side)

Tightening torque : 2.9 - 5.9 N·m (0.29 - 0.60 kg-m, 26 - 52 in-lb)

Bolt mounting the low-pressure flexible hose (compressor side)

Tightening torque : 7.8 - 19.6 N·m (0.8 - 1.9 kg-m, 69 - 173 in-lb)

Bolt connecting the low-pressure flexible hose in-line connection (VQ35DE models)

Tightening torque : 7.8 - 19.6 N·m (0.8 - 1.9 kg-m, 69 - 173 in-lb)

Removal and Installation for High-pressure flexible hose

EJS0010M

REMOVAL

1. Discharge the refrigerant. Refer to MTC-79, "HFC-134a (R-134a) Service Procedure" .
2. Remove the high-pressure flexible hose. Refer to MTC-80, "Components" .

CAUTION:

Cap or wrap the joint of the pipe with suitable material such as vinyl tape to avoid the entry of air.

INSTALLATION

CAUTION:

- **Replace the O-ring of the high-pressure flexible hose with a new one, then apply compressor oil to it when installing it.**
- **When charging refrigerant, check for leaks.**

Bolts mounting the high-pressure flexible hose

Tightening torque : 7.8 - 19.6 N·m (0.8 - 1.9 kg-m, 69 - 173 in-lb)

Removal and Installation for High-pressure Pipe

EJS0010N

REMOVAL

1. Discharge the refrigerant. Refer to MTC-79, "HFC-134a (R-134a) Service Procedure" .
2. Remove the high-pressure pipe. Refer to MTC-80, "Components" .

CAUTION:

Cap or wrap the joint of the pipe with suitable material such as vinyl tape to avoid the entry of air.

INSTALLATION

CAUTION:

- **Replace the O-ring of the high-pressure pipe with a new one, then apply compressor oil to it when installing it.**
- **When charging refrigerant, check for leaks.**

Bolt mounting the high-pressure pipe (evaporator side)

Tightening torque : 2.9 - 5.9 N·m (0.29 - 0.60 kg-m, 26 - 52 in-lb)

Bolt mounting the high-pressure pipe (condenser side)

Tightening torque : 7.8 - 19.6 N·m (0.8 - 1.9 kg-m, 69 - 173 in-lb)

Removal and Installation for Refrigerant Pressure Sensor

EJS0010O

1. Discharge the refrigerant. Refer to MTC-79, "HFC-134a (R-134a) Service Procedure" .
2. Disconnect the refrigerant pressure sensor connector and remove the refrigerant pressure sensor from condenser.

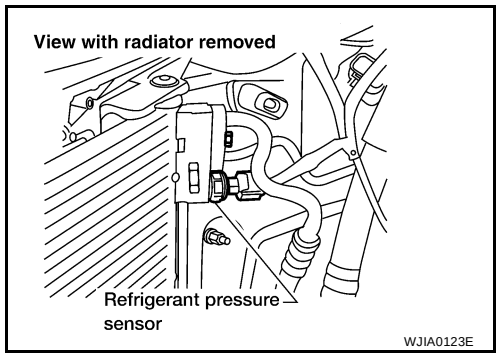

CAUTION:

- **Please be careful not to damage the condenser fins.**
- **Apply compressor oil to the O-ring of the refrigerant pressure sensor when installing it.**

Tightening torque : 9.8 - 11.7 N·m (1.0 - 1.2 kg-m, 7.3 - 8.6 ft-lb)

Removal and Installation for Condenser

EJS0010P

REMOVAL

1. Discharge the refrigerant. Refer to MTC-79, "HFC-134a (R-134a) Service Procedure" .
2. Remove the radiator. Refer to CO-34, "RADIATOR" .

CAUTION:

Be careful not to damage the core surface of the condenser and the radiator.

3. Disconnect the high-pressure flexible hose and the high-pressure pipe from the condenser.

   CAUTION:
   Cap or wrap the joint of the pipe with suitable material such as vinyl tape to avoid the entry of air.
4. Disconnect the refrigerant pressure sensor connector.
5. Remove the front fascia. Refer to EI-13, "FRONT BUMPER" .

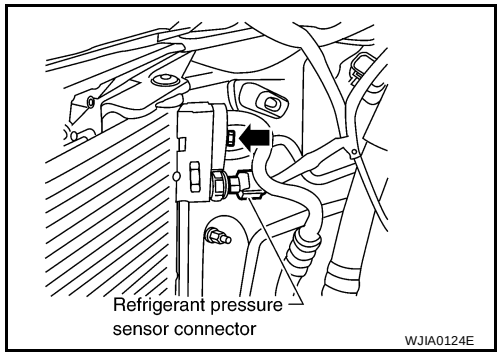

6. Remove the mounting nuts from condenser mounting brackets.

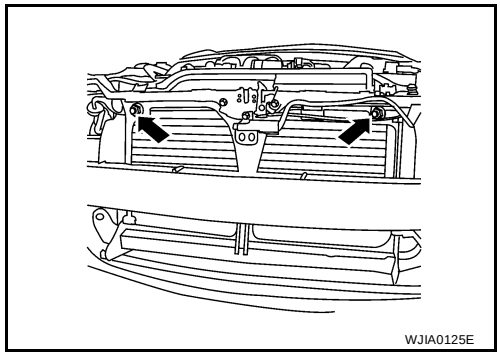

INSTALLATION

CAUTION:

- **Replace the O-rings of the high-pressure pipe and the high-pressure flexible hose with new ones, then apply compressor oil to them after installing them.**
- **When charging refrigerant, check for leaks.**

High-pressure flexible hose and pipe mounting bolt
Tightening torque : 7.8 - 19.6 N·m (0.8 - 1.9 kg-m, 69 - 173 in-lb)
Condenser mounting nuts
Tightening torque : 5.0 - 6.79 N·m (0.51 - 0.69 kg-m, 45 - 60 in-lb)

Removal and Installation for Liquid Tank

EJS0010Q

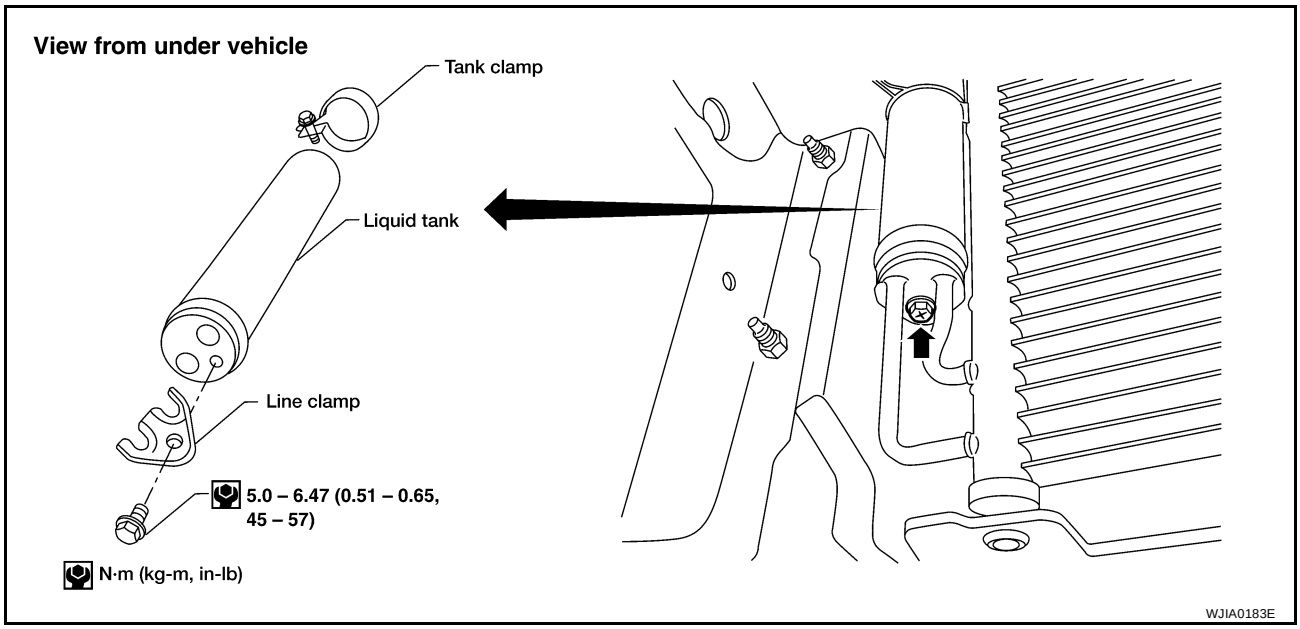

1. Discharge the refrigerant. Refer to MTC-79, "HFC-134a (R-134a) Service Procedure" .
2. Remove the battery.

3. Remove the hood switch (if equipped).
4. Remove the engine undercover using power tools.
5. Remove the bolt and line clamp.
6. Loosen the tank clamp and remove the liquid tank.

Removal and Installation for Evaporator

EJS0010R

REMOVAL

1. Remove the heater and cooling unit. Refer to MTC-79, "HFC-134a (R-134a) Service Procedure" .
2. Remove the heater core cover.

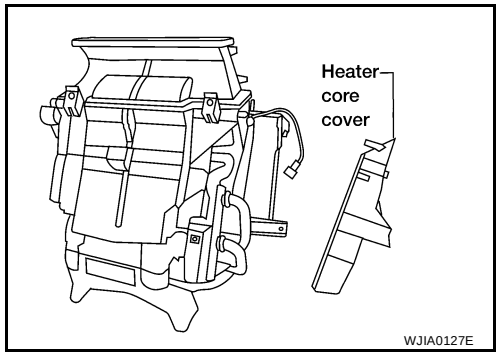

3. Remove the evaporator cover.

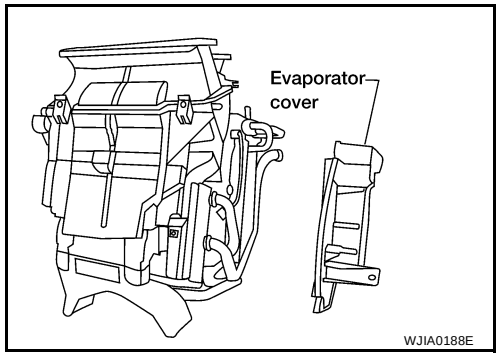

4. Remove the evaporator pipes.

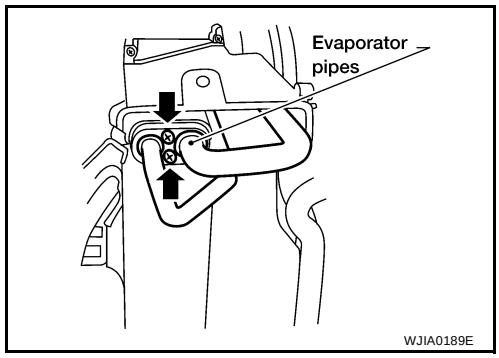

5. Remove the evaporator.

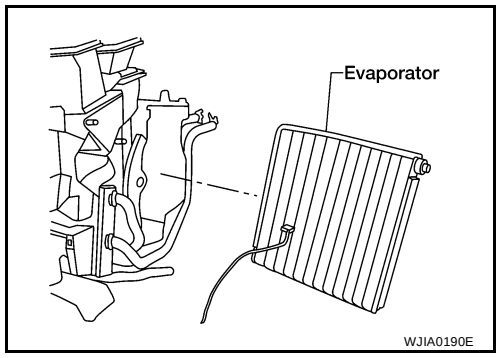

INSTALLATION

CAUTION:

- **Replace the O-rings of the low-pressure flexible hose and the high-pressure pipe with new ones, then apply compressor oil to them when installing them.**
- **Mark the mounting position of the intake sensor bracket.**

Removal and Installation for Expansion Valve

EJS0010S

1. Discharge the refrigerant. Refer to MTC-79, "HFC-134a (R-134a) Service Procedure" .
2. Disconnect the refrigerant lines from the cooler unit.

   CAUTION:
   Cap or wrap the joint of the pipe with suitable material such as vinyl tape to avoid the entry of air.
3. Remove the cooler grommet.
4. Remove the expansion valve.

Expansion valve mounting bolts

Tightening torque : 2.9 - 5.0 N·m (0.30 - 0.50 kg-m)

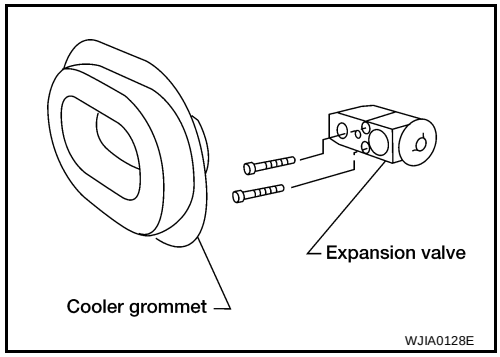

Checking for Refrigerant Leaks

EJS0010T

Perform a visual inspection of all refrigeration parts, fittings, hoses and components for signs of A/C lubricant leakage, damage and corrosion. A/C lubricant leakage may indicate an area of refrigerant leakage. Allow extra inspection time in these areas when using either an electronic refrigerant leak detector or fluorescent dye leak detector.
If dye is observed, confirm the leak with an electronic refrigerant leak detector. It is possible a prior leak was repaired and not properly cleaned.
When searching for leaks, do not stop when one leak is found but continue to check for additional leaks at all system components and connections.
When searching for refrigerant leaks using an electronic leak detector, move the probe along the suspected leak area at 25 - 50 mm (1 - 2 in) per second and no further than 6 mm (1/4 in) from the component.

CAUTION:
Moving the electronic leak detector probe slower and closer to the suspected leak area will improve the chances of finding a leak.

Checking System for Leaks Using the Fluorescent Leak Detector

EJS0010U

1. Check A/C system for leaks using the UV lamp and safety glasses (J-42220) in a low sunlight area (area without windows preferable). Illuminate all components, fittings and lines. The dye will appear as a bright green/yellow area at the point of leakage. Fluorescent dye observed at the evaporator drain opening indicates an evaporator core assembly (tubes, core or TXV) leak.
2. If the suspected area is difficult to see, use an adjustable mirror or wipe the area with a clean shop rag or cloth, with the UV lamp for dye residue.
3. After the leak is repaired, remove any residual dye using dye cleaner (J-43872) to prevent future misdiagnosis.
4. Perform a system performance check and verify the leak repair with an approved electronic refrigerant leak detector.

NOTE:
Other gases in the work area or substances on the A/C components, for example, anti-freeze, windshield washer fluid, solvents and lubricants, may falsely trigger the leak detector. Make sure the surfaces to be checked are clean.
Clean with a dry cloth or blow off with shop air.
Do not allow the sensor tip of the detector to contact with any substance. This can also cause false readings and may damage the detector.

Dye Injection

EJS0010V

(This procedure is only necessary when recharging the system or when the compressor has seized and was replaced.)

1. Check A/C system static (at rest) pressure. Pressure must be at least 345 kPa (50 psi).
2. Pour one bottle (1/4 ounce / 7.4 cc) of the A/C refrigerant dye into the injector tool (J-41459).
3. Connect the injector tool to the A/C LOW PRESSURE side service fitting.
4. Start engine and switch A/C ON.
5. When the A/C operating (compressor running), inject one bottle (1/4 ounce / 7.4 cc) of fluorescent dye through the low-pressure service valve using dye injector tool J-41459 (refer to the manufacturer's operating instructions).
6. With the engine still running, disconnect the injector tool from the service fitting.

CAUTION:

Be careful the A/C system or replacing a component, pour the dye directly into the open system connection and proceed with the service procedures.

7. Operate the A/C system for a minimum of 20 minutes to mix the dye with the system oil. Depending on the leak size, operating conditions and location of the leak, it may take from minutes to days for the dye to penetrate a leak and become visible.

Electronic Refrigerant Leak Detector

EJS0010W

PRECAUTIONS FOR HANDLING LEAK DETECTOR

When performing a refrigerant leak check, use a J-41995 A/C leak detector or equivalent. Ensure that the instrument is calibrated and set properly per the operating instructions.
The leak detector is a delicate device. In order to use the leak detector properly, read the operating instructions and perform any specified maintenance.

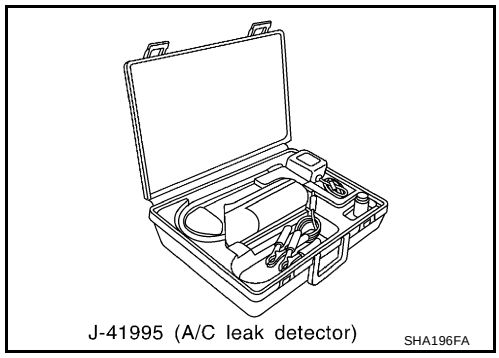

1. Position probe approximately 5 mm (3/16 in) away from point to be checked.

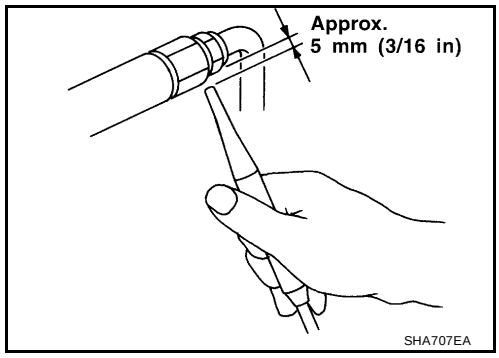

2. When testing, circle each fitting completely with probe.

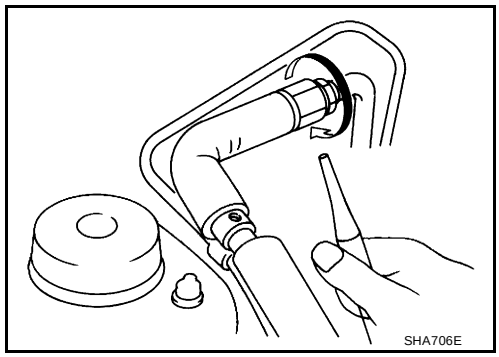

3. Move probe along component approximately 25 to 50 mm (1 to 2 in)/sec.

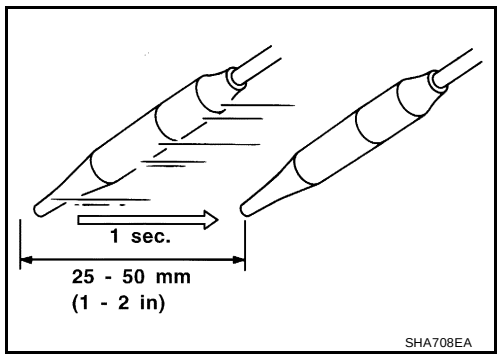

CHECKING PROCEDURE

To prevent inaccurate or false readings, make sure there is no refrigerant vapor, shop chemicals, or cigarette smoke in the vicinity of the vehicle. Perform the leak test in calm area (low air/wind movement) so that the leaking refrigerant is not dispersed.

1. Turn engine OFF.
2. Connect a suitable A/C manifold gauge set to the A/C service ports.
3. Check if the A/C refrigerant pressure is at least 345 kPa (3.52 kg/cm^2 , 50 psi) above 16°C (61°F). If less than specification, recover/evacuate and recharge the system with the specified amount of refrigerant.

NOTE:
At temperatures below 16°C (61°F), leaks may not be detected since the system may not reach 345 kPa (3.54 kg/cm^2 , 50 psi).

4. Conduct the leak test from the high side (compressor discharge a to evaporator inlet f) to the low side [evaporator drain hose g to shaft seal k (QR25DE models) or l (VQ35DE models)]. Refer to MTC-80 . Perform a leak check for the following areas carefully. Clean the component to be checked and move the leak detected probe completely around the connection/component.
   Compressor
   Check the fitting of high- and low-pressure hoses, relief valve and shaft seal.
   Liquid tank
   Check the refrigerant pressure sensor.
   Service valves
   Check all around the service valves. Ensure service valve caps are secured on the service valves (to prevent leaks).

   NOTE:
   After removing A/C manifold gauge set from service valves, wipe any residue from valves to prevent any false readings by leak detector.

   Cooling unit (Evaporator)
   With engine OFF, turn blower fan on "High" for at least 15 seconds to dissipate any refrigerant trace in the cooling unit. Wait a minimum of 10 minutes accumulation time (refer to the manufacturer's recommended procedure for actual wait time) before inserting the leak detector probe into the drain hose.
   Keep the probe inserted for at least 10 seconds. Use caution not to contaminate the probe tip with water or dirt that may be in the drain hose.
5. If a leak detector detects a leak, verify at least once by blowing compressed air into area of suspected leak, then repeat check as outlined above.
6. Do not stop when one leak is found. Continue to check for additional leaks at all system components.
   If no leaks are found, perform steps 7 - 10.
7. Start engine.
8. Set the heater A/C control as follows;

a. A/C switch: ON
b. Face mode
c. Intake position: Recirculation
d. Max cold temperature
e. Fan speed: High

9. Run engine at 1,500 rpm for at least 2 minutes.

10. Turn engine off and perform leak check again following steps 4 through 6 above.

Refrigerant leaks should be checked immediately after stopping the engine. Begin with the leak detector at the compressor. The pressure on the high pressure side will gradually drop after refrigerant circulation stops and pressure on the low pressure side will gradually rise, as shown in the graph. Some leaks are more easily detected when pressure is high.

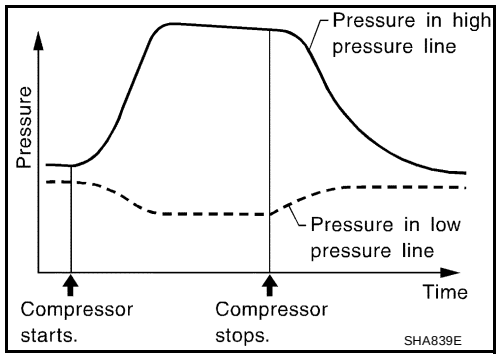

11. Before connecting ACR4 to vehicle, check ACR4 gauges. No refrigerant pressure should be displayed. If pressure is displayed, recover refrigerant from equipment lines and then check refrigerant purity.
12. Confirm refrigerant purity in supply tank using ACR4 and refrigerant identifier.
13. Confirm refrigerant purity in vehicle A/C system using ACR4 and refrigerant identifier.
14. Discharge A/C system using approved refrigerant recovery equipment. Repair the leaking fitting or component as necessary.
15. Evacuate and recharge A/C system and perform the leak test to confirm no refrigerant leaks.
16. Conduct A/C performance test to ensure system works properly.

SERVICE DATA AND SPECIFICATIONS (SDS)

PFP:00030

Service Data and Specifications (SDS)

EJS0010X

COMPRESSOR

Model	CALSONIC KANSEI make
Type	DKS-17D
Displacement cm3 (cu in)/rev	175.5 (10.7)/rev
Cylinder bore × stroke mm (in)	30.5 (1.201) x 21.4 (0.84)
Direction of rotation	Clockwise (viewed from drive end)
Drive belt	Poly V

LUBRICANT

Model		CALSONIC KANSEI make DKS-17D
Name		Nissan A/C System Oil Type DH-PS
Part number		KLH00-PAGS0
Capacity m ℓ (US fl oz, Imp fl oz)	Total in system	150 (5.03, 5.3)
	Compressor (Service part) charging amount	150 (5.03, 5.3)

REFRIGERANT

Type	HFC-134a (R-134a)
Capacity kg (lb)	0.475 - 0.525 (1.045 - 1.155)

ENGINE IDLING SPEED

Refer to EC-38, "Idle Speed and Ignition Timing Check" (QR25DE models) or EC-657, "Idle Speed and Ignition Timing Check" (VQ35DE models).

BELT TENSION

Refer to MA-14, "ENGINE MAINTENANCE (QR25DE ENGINE)" or MA-21, "ENGINE MAINTENANCE (VQ35DE ENGINE)" .

SECTION PB
PARKING BRAKE SYSTEM

CONTENTS

PARKING BRAKE SYSTEM 2
Components 2
Removal and Installation 2
REMOVAL 2
INSTALLATION 3
Inspection 3
Adjustment 3
PARKING BRAKE SHOE 5
Removal and Installation 5
REMOVAL 5
INSTALLATION 5
SHOE CLEARANCE ADJUSTMENT 6
Inspection 6
Breaking-in Drum and Lining 6
SERVICE DATA AND SPECIFICATIONS (SDS) 7
Parking Brake Control 7
Parking Drum Brake 7

PARKING BRAKE SYSTEM

PFP:36010

Components

EFS002OB

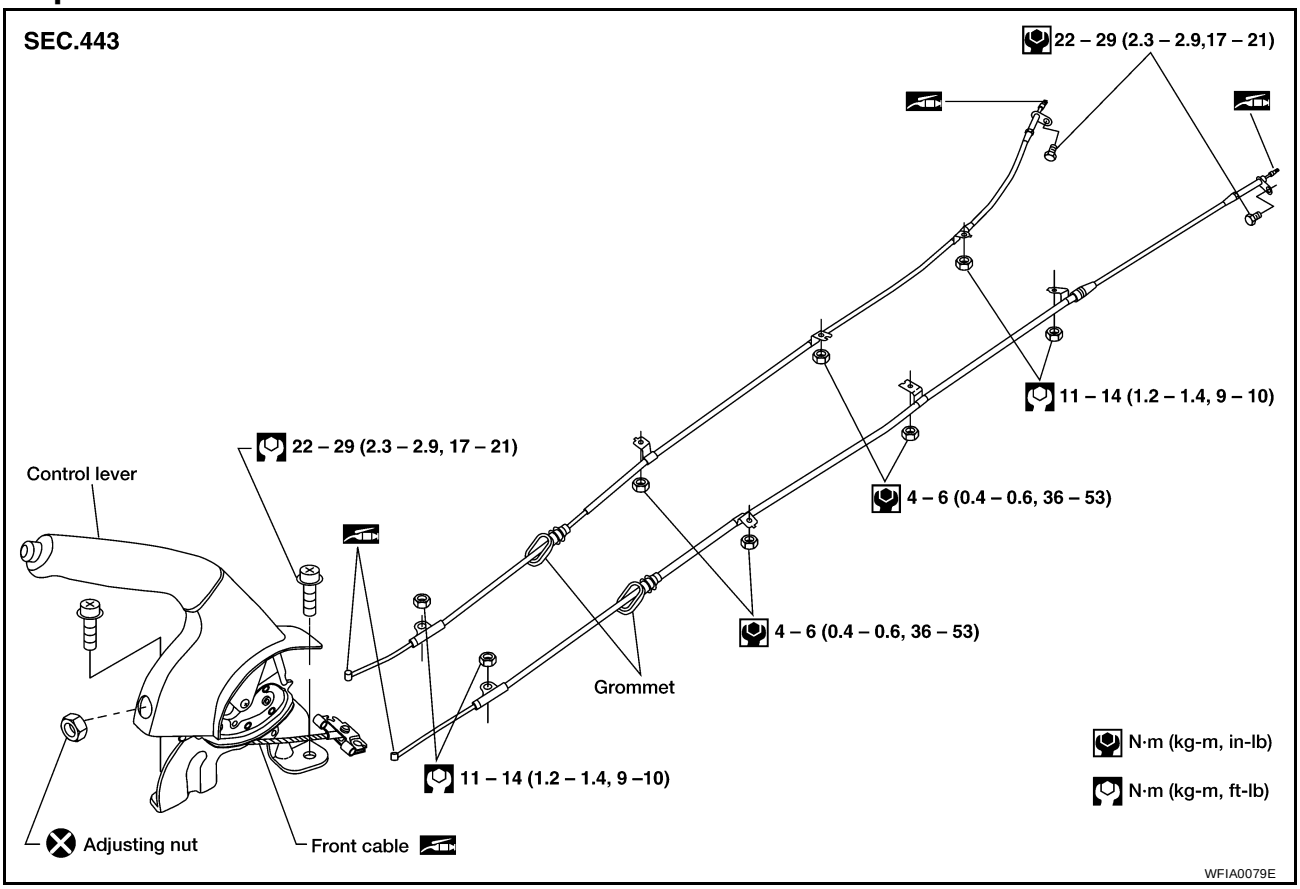

Removal and Installation

EFS002OC

REMOVAL

1. Remove center console. Refer to IP-10, "Removal and Installation" .
2. Disconnect warning lamp connector.
3. Remove all parking brake cable mounting nuts and bolts, loosen and remove adjusting nut.

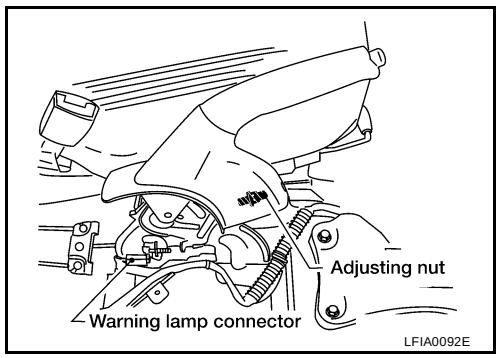

4. Remove the rear brake rotor. Refer to BR-28, "Removal and Installation" .

5. Remove the lock plate mounting bolt.
6. Remove the pin, then the parking brake cable.

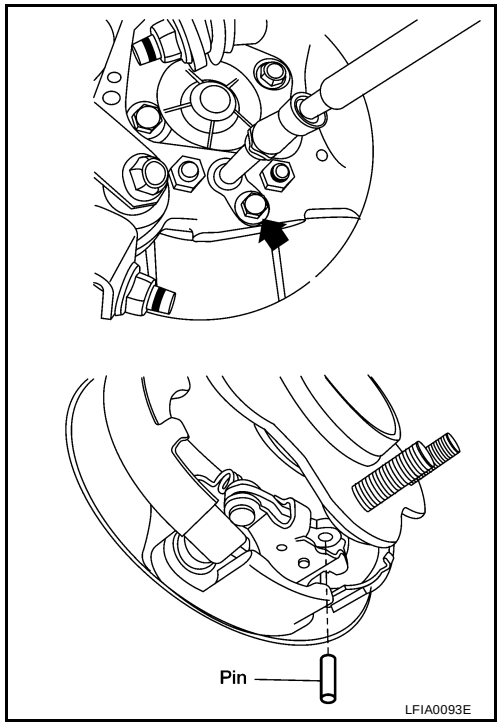

INSTALLATION

Installation is in the reverse order of removal.

- Adjust the parking brake cable. Refer to PB-3, "Adjustment" .

Inspection

EFS002OD

- Check control lever for wear or other damage. Replace if necessary.
- Check wires for discontinuity or deterioration. Replace if necessary.
- Check warning lamp and switch. Replace if necessary.
- Check parts at each connecting portion and, if found deformed or damaged, replace.
- Check if the control lever stroke is within specification. Refer to PB-3, "Adjustment" .

Adjustment

EFS002OE

1. Fully engage the control lever.
2. Loosen the parking brake cable adjusting nut and fully release the control lever.
3. Adjust clearance of the rear parking brake shoes. Refer to PB-6, "SHOE CLEARANCE ADJUSTMENT" .
4. Depress the brake pedal fully more than five times.
5. Make sure that no drag exists while rotating the rear wheels.
6. Operate control lever 10 times or more with a full stroke [216 mm (8.5 in)].
7. Adjust control lever by turning adjusting nut.
8. Pull control lever with specified amount of force. Check control lever stroke and ensure smooth operation.

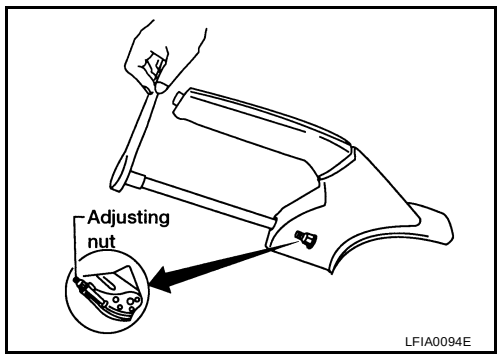

Lever stroke (number of notches)	**: 7 - 8**
Force	**: 196 N (20 kgf, 44 lbf)**

9. After adjustment, check the following points.

- There is no drag when control lever is being released.
- Toggle lever returns to stopper when parking brake lever is released.

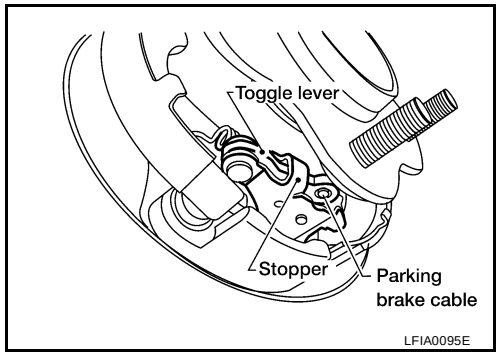

PARKING BRAKE SHOE

PFP:44060

Removal and Installation

EFS002OF

REMOVAL

WARNING:

Clean brakes with a vacuum dust collector to minimize the hazard of airborne particles or other materials.

1. Remove the wheel and remove the brake rotor with the parking brake lever completely disengaged.
2. If the brake rotor cannot be removed, remove as follows:

a. Secure the brake rotor with the wheel nut and remove the adjuster hole plug.

b. Insert a flat-bladed screwdriver through the plug opening and rotate the star wheel on the adjuster assembly in the direction as shown to retract the parking brake shoes.

3. Remove the parking brake shoe springs.
4. Remove the parking brake shoes and adjuster.

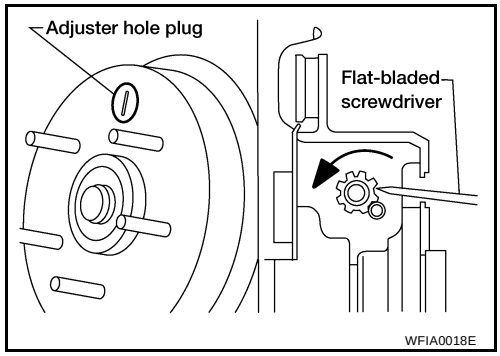

INSTALLATION

Installation is in the reverse order of removal noting the following:

- Apply brake grease to the contact areas shown. Refer to MA-12, "RECOMMENDED FLUIDS AND LUBRICANTS" .

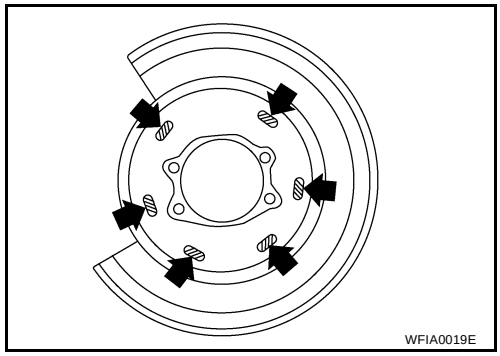

- Install the parking brake shoe springs as shown.

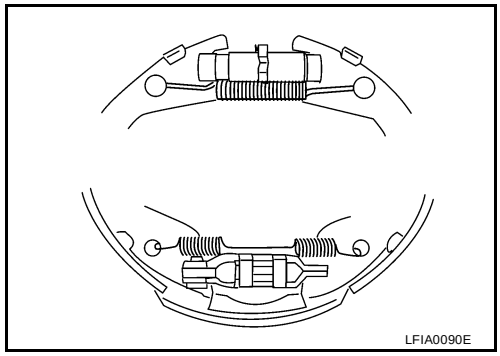

- The orientation of the adjuster is different from left to right. Assemble the adjuster so that the threaded part is expanded when rotating it to the direction as shown. Completely retract the adjuster to assemble. When disassembling the adjuster, apply brake grease to the threads.
- After installing parking brake shoes and rotor, adjust the parking brake. Refer to PB-6, "SHOE CLEARANCE ADJUSTMENT" .

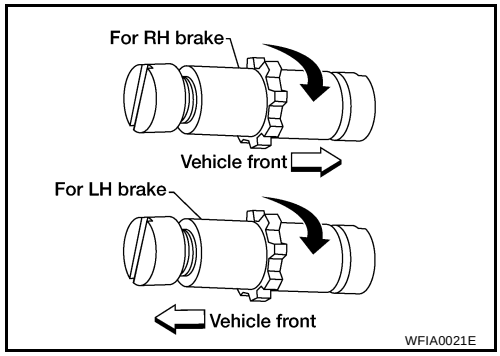

SHOE CLEARANCE ADJUSTMENT

1. Make sure the parking brake control lever is fully released and parking brake cable adjusting nut is loosened.
2. Remove the adjuster hole plug installed on the rotor. Using a screwdriver, turn the adjuster as shown in the figure until the rotor is locked. After locking, turn the adjuster in the opposite direction 5 or 6 notches.
3. Rotate the rotor as shown to make sure that there is no drag. Install the adjuster hole plug.
4. After adjusting the clearance of the rear shoes, adjust the parking brake cable. Refer to PB-3, "Adjustment" .

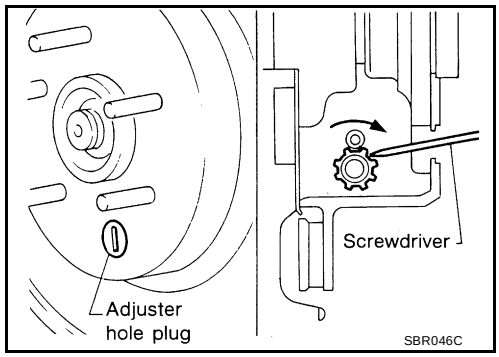

- After replacing the shoes or the brake rotor or if the parking brake does not function well, carry out the break-in procedure. Refer to PB-6, "Breaking-in Drum and Lining" .

Inspection

EFS002OG

- Visually inspect the lining for abnormal wear, damage and peeling.
- Using a micrometer, measure the thickness "A" of the lining.

Standard lining thickness : 3.2 mm (0.126 in)
Lining wear limit "A" : 1.5 mm (0.059 in)

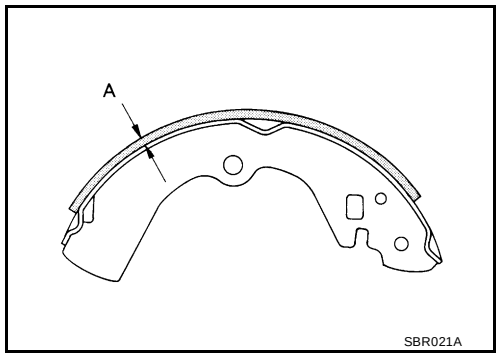

- Visually inspect the inside of the drum for abnormal wear, damage and cracks. Using a pair of vernier calipers, measure the inside diameter of the drum.

Standard inner diameter : 172.0 mm (6.77 in)
Maximum inner diameter : 173.0 mm (6.81 in)

CAUTION:
If necessary, remove the parking brake shoe and check as follows.

- Check the shoe sliding surface for abnormal wear and damage.
- Check the anchor pin for abnormal wear and corrosion.
- Check the return springs for sagging.
- Check the adjuster for rough operation.

Breaking-in Drum and Lining

EFS002OH

CAUTION:
Do not carry out the break-in procedure excessively. Doing so may cause uneven or premature wear of the brake shoe lining.

When new parking brake shoes or brake rotors are installed or when parking brake performance is poor, perform the following break-in procedure.

1. Drive the unloaded vehicle on a safe, level and dry road.
2. Pull the parking brake control lever with a force of 147 N (15 kg, 33 lb).
3. While pulling the lever, continue to drive the vehicle forward 100 meters (328 ft) at approximately 35 km/h (22 MPH).
4. Allow the parking brake to cool down for approximately five minutes.
5. Release the parking brake control lever and drive the vehicle under normal conditions for two minutes to cool down the parking brake.
6. Repeat steps 1 through 5 three times and repeat just step 5 once more.
7. After performing the break-in procedure, check the stroke of the parking brake control lever. If it is out of specification, adjust again. Refer to PB-3, "Adjustment" .

SERVICE DATA AND SPECIFICATIONS (SDS)

PFP:00030

Parking Brake Control

EFS002OI

Control type	Hand lever
Number of notches [under force of 196 N (20 kg, 44 lb)]	7 - 8
Number of notches when warning lamp switch comes on	1

Parking Drum Brake

EFS002OJ

Type		DS17HF
Brake lining	Standard thickness (new)	3.2 mm (0.126 in)
	Wear limit thickness	1.5 mm (0.059 in)
Drum (disc)	Standard inner diameter (new)	172 mm (6.77 in)
	Wear limit of inner diameter	173 mm (6.81 in)

SECTION PG

POWER SUPPLY, GROUND & CIRCUIT ELEMENTS

CONTENTS

POWER SUPPLY ROUTING CIRCUIT 3
Schematic 3
Wiring Diagram — POWER — 5
BATTERY POWER SUPPLY — IGNITION SW. IN ANY POSITION 5
ACCESSORY POWER SUPPLY — IGNITION SW. IN ACC OR ON 9
IGNITION POWER SUPPLY — IGNITION SW. IN ON 10
IGNITION POWER SUPPLY — IGNITION SW. IN ON AND/OR START 11
IPDM E/R (INTELLIGENT POWER DISTRIBUTION MODULE ENGINE ROOM) 14
System Description 14
SYSTEMS CONTROLLED BY IPDM E/R 14
CAN COMMUNICATION LINE CONTROL 14
IPDM E/R STATUS CONTROL 14
CAN Communication System Description 15
FOR TCS MODELS 15
FOR A/T MODELS 16
FOR M/T MODELS 18
Function of Detecting Ignition Relay Malfunction 19
Auto Active Test 19
DESCRIPTION 19
OPERATION PROCEDURE 19
INSPECTION IN AUTO ACTIVE TEST MODE 20
Schematic 22
IPDM E/R FUSE AND RELAY ARRANGEMENT 23
IPDM E/R TERMINAL ARRANGEMENT 23
IPDM E/R Power/Ground Circuit Inspection 23
Removal and Installation of IPDM E/R 24
GROUND CIRCUIT 26
Ground Distribution 26
MAIN HARNESS 26
ENGINE ROOM LH HARNESS 28
ENGINE ROOM RH HARNESS 29
ENGINE CONTROL HARNESS (QR25DE) 30
ENGINE CONTROL HARNESS (VQ35DE) 32
BODY HARNESS 34
BODY NO. 2 HARNESS 35
HARNESS 37
Harness Layout 37
HOW TO READ HARNESS LAYOUT 37
OUTLINE 38
MAIN HARNESS 39
ENGINE ROOM LH HARNESS 41
ENGINE ROOM RH HARNESS 44
ENGINE CONTROL HARNESS (QR25DE) 46
ENGINE CONTROL HARNESS (VQ35DE) 48
BODY HARNESS 50
BODY NO. 2 HARNESS 52
ROOM LAMP HARNESS 54
FRONT DOOR LH HARNESS 55
FRONT DOOR RH HARNESS 55
REAR DOOR LH HARNESS 56
REAR DOOR RH HARNESS 56
Wiring Diagram Codes (Cell Codes) 57
ELECTRICAL UNITS LOCATION 60
Electrical Units Location 60
ENGINE COMPARTMENT 60
PASSENGER COMPARTMENT 61
Fuse 63
Fusible Link 63
Circuit Breaker (Built Into BCM) 63
HARNESS CONNECTOR 64
Description 64
HARNESS CONNECTOR (TAB-LOCKING TYPE) 64
HARNESS CONNECTOR (SLIDE-LOCKING TYPE) 65
JOINT CONNECTOR (J/C) 66
Terminal Arrangement 66
ELECTRICAL UNITS 67
Terminal Arrangement 67
SMJ (SUPER MULTIPLE JUNCTION) 68
Terminal Arrangement 68
STANDARDIZED RELAY 69
Description 69
NORMAL OPEN, NORMAL CLOSED AND

MIXED TYPE RELAYS 69
TYPE OF STANDARDIZED RELAYS 69
FUSE BLOCK-JUNCTION BOX(J/B) 71
Terminal Arrangement 71
FUSE AND FUSIBLE LINK BOX 72
Terminal Arrangement 72

POWER SUPPLY ROUTING CIRCUIT

PFP:24110

Schematic

EKS002L5

For detailed ground distribution, refer to PG-26, "Ground Distribution" .

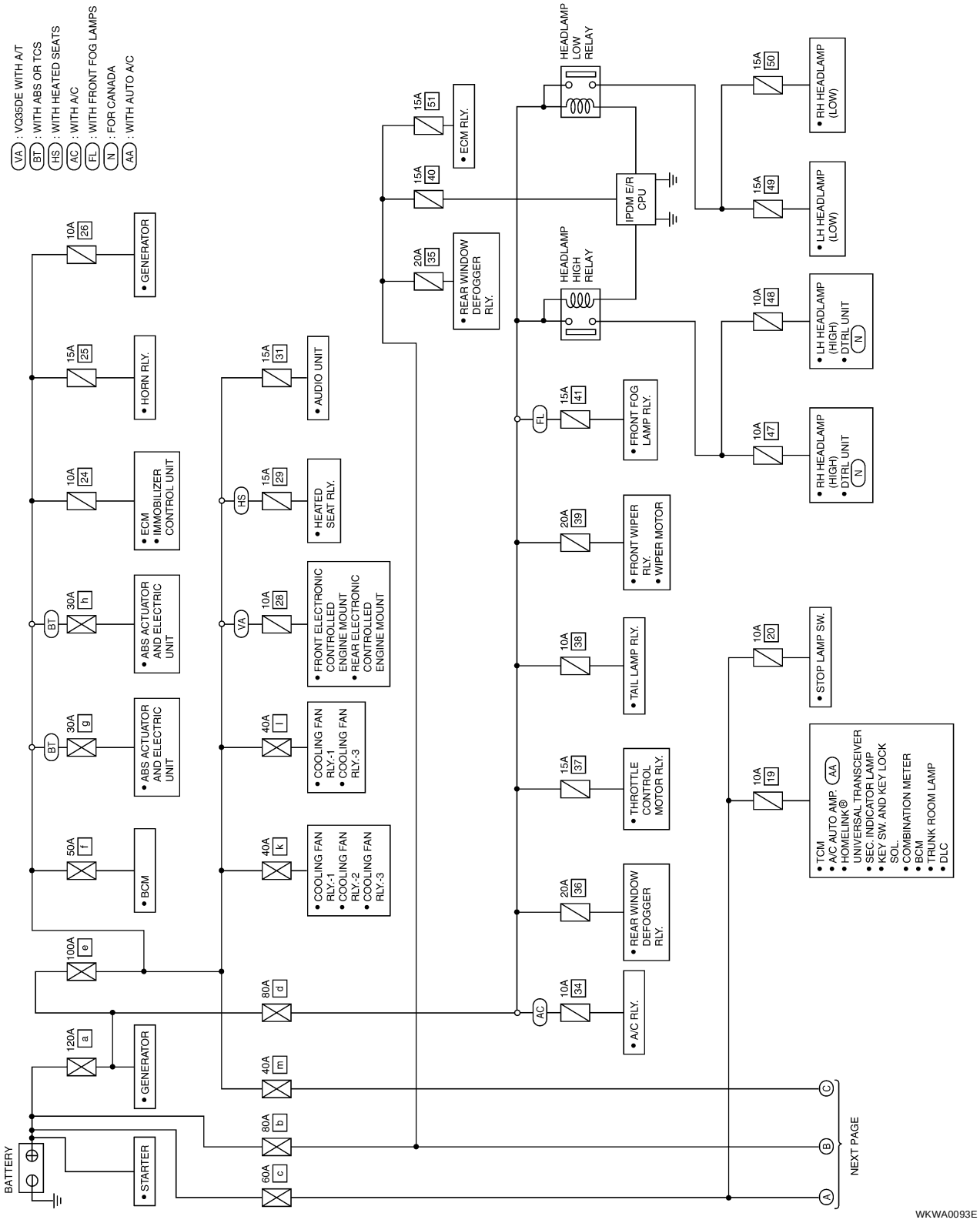

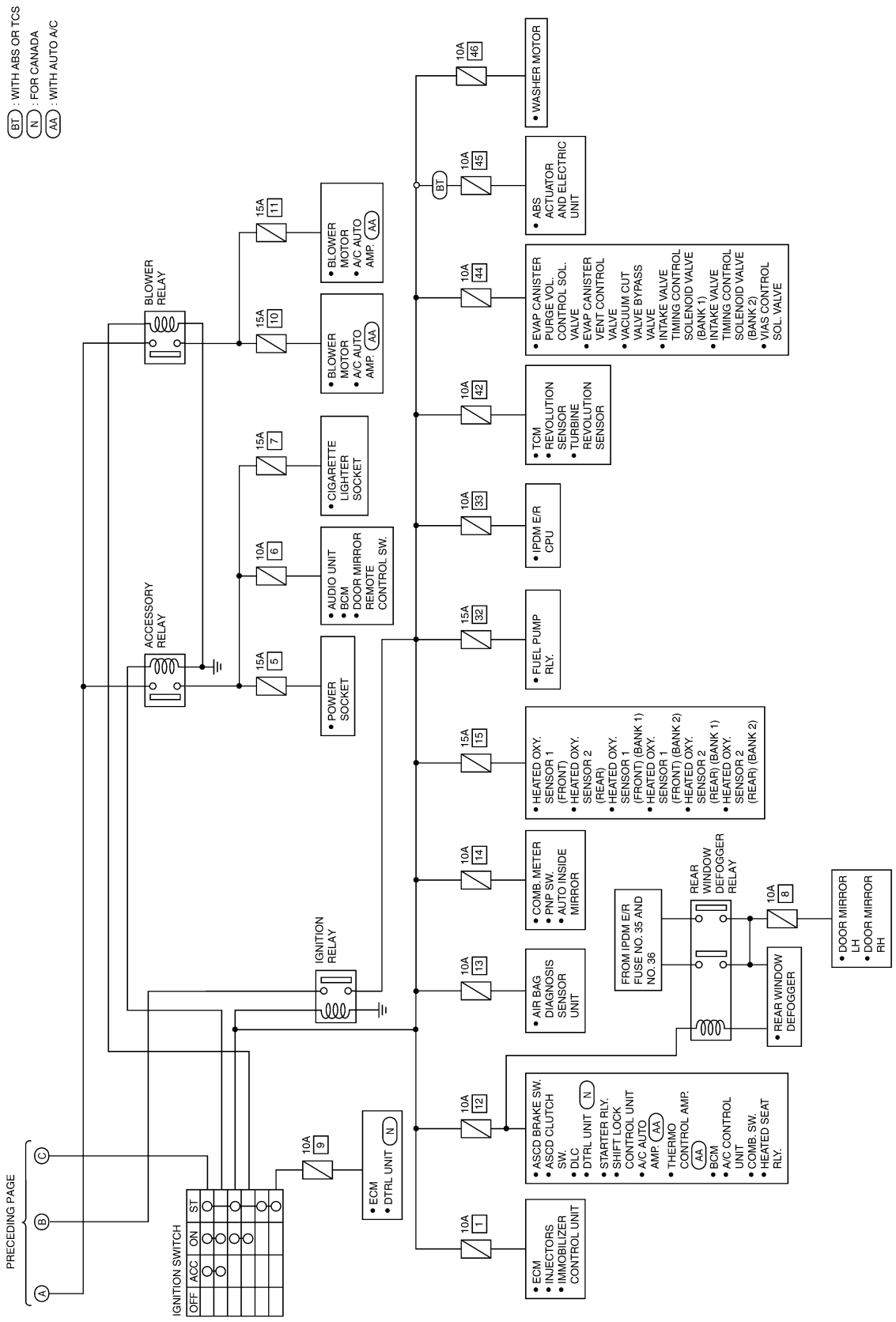
BT : WITH ABS OR TCS
N : FOR CANADA
AA : WITH AUTO A/C
PRECEDING PAGE
A
B
C
IGNITION SWITCH
OFF
ACC
ON
ST
BLOWER RELAY
ACCESSORY RELAY
IGNITION RELAY
10A 9
• ECM
• DTRL UNIT N
15A 5
• POWER SOCKET
10A 6
• AUDIO UNIT
• BCM
• DOOR MIRROR REMOTE CONTROL SW.
15A 7
• CIGARETTE LIGHTER SOCKET
15A 10
• BLOWER MOTOR
• A/C AUTO AMP. AA
15A 11
• BLOWER MOTOR
• A/C AUTO AMP. AA
10A 1
• ECM
• INJECTORS
• IMMOBILIZER CONTROL UNIT
10A 12
• ASCD BRAKE SW.
• ASCD CLUTCH SW.
• DLC
• DTRL UNIT N
• STARTER RLY.
• SHIFT LOCK CONTROL UNIT
• A/C AUTO AMP. AA
• THERMO CONTROL AMP. AA
• BCM
• A/C CONTROL UNIT
• COMB. SW.
• HEATED SEAT RLY.
10A 13
• AIR BAG DIAGNOSIS SENSOR UNIT
10A 14
• COMB. METER
• PNP SW.
• AUTO INSIDE MIRROR
15A 15
• HEATED OXY. SENSOR 1 (FRONT)
• HEATED OXY. SENSOR 2 (REAR)
• HEATED OXY. SENSOR 1 (FRONT) (BANK 1)
• HEATED OXY. SENSOR 1 (FRONT) (BANK 2)
• HEATED OXY. SENSOR 2 (REAR) (BANK 1)
• HEATED OXY. SENSOR 2 (REAR) (BANK 2)
15A 32
• FUEL PUMP RLY.
10A 33
• IPDM E/R CPU
10A 42
• TCM
• REVOLUTION SENSOR
• TURBINE REVOLUTION SENSOR
10A 44
• EVAP CANISTER PURGE VOL. CONTROL SOL. VALVE
• EVAP CANISTER VENT CONTROL VALVE
• VACUUM CUT VALVE BYPASS VALVE
• INTAKE VALVE TIMING CONTROL SOLENOID VALVE (BANK 1)
• INTAKE VALVE TIMING CONTROL SOLENOID VALVE (BANK 2)
• VIAS CONTROL SOL. VALVE
BT
10A 45
• ABS ACTUATOR AND ELECTRIC UNIT
10A 46
• WASHER MOTOR
FROM IPDM E/R FUSE NO. 35 AND NO. 36
REAR WINDOW DEFOGGER RELAY
• REAR WINDOW DEFOGGER
10A 8
• DOOR MIRROR LH
• DOOR MIRROR RH

WKWA0094E

Wiring Diagram — POWER —

EKS002L6

BATTERY POWER SUPPLY — IGNITION SW. IN ANY POSITION

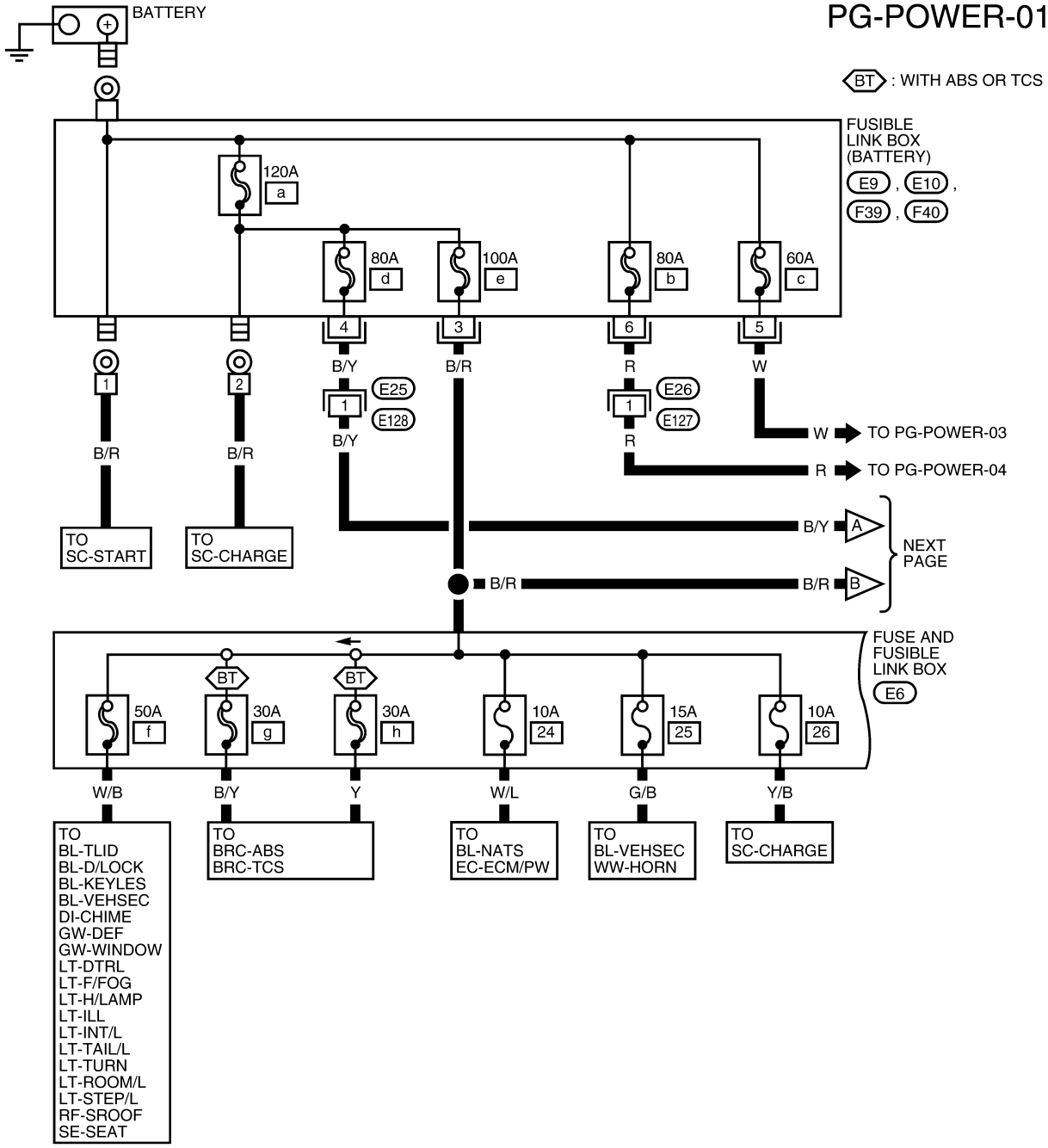

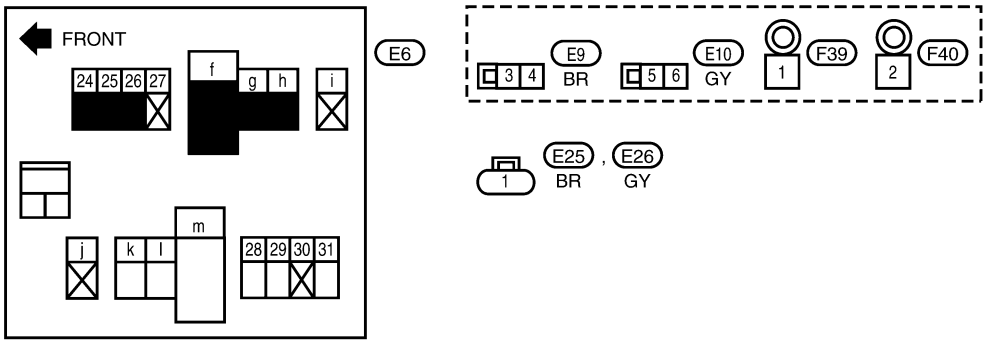

WKWA0393E

PG-POWER-02

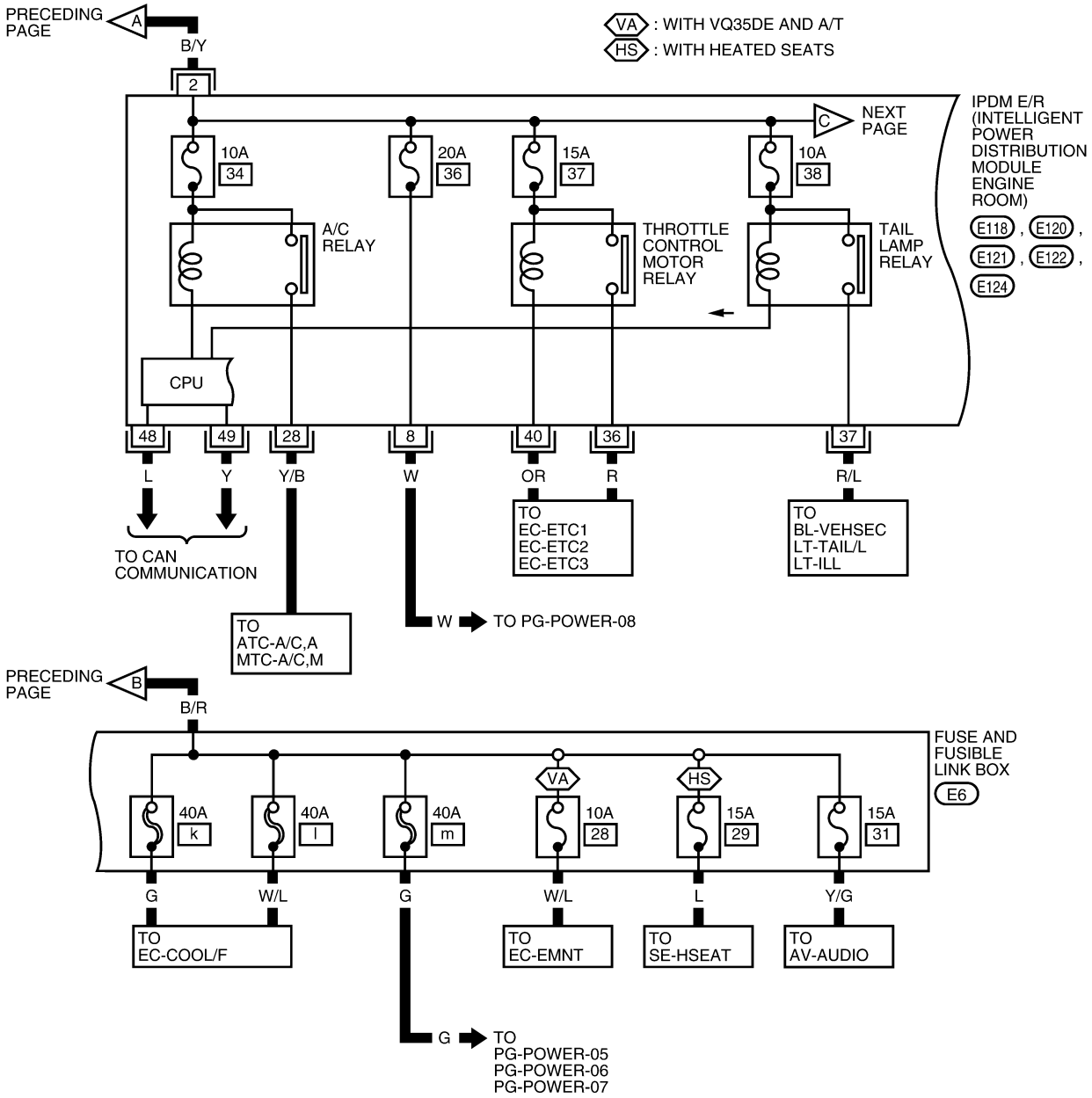

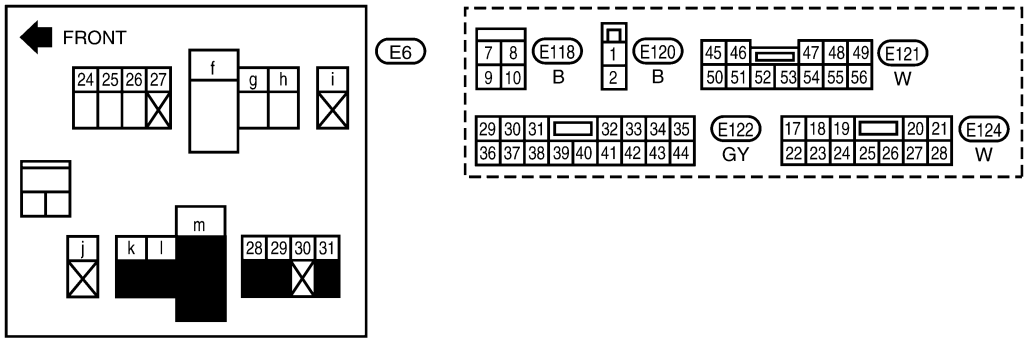

WKWA0085E

PG-POWER-03

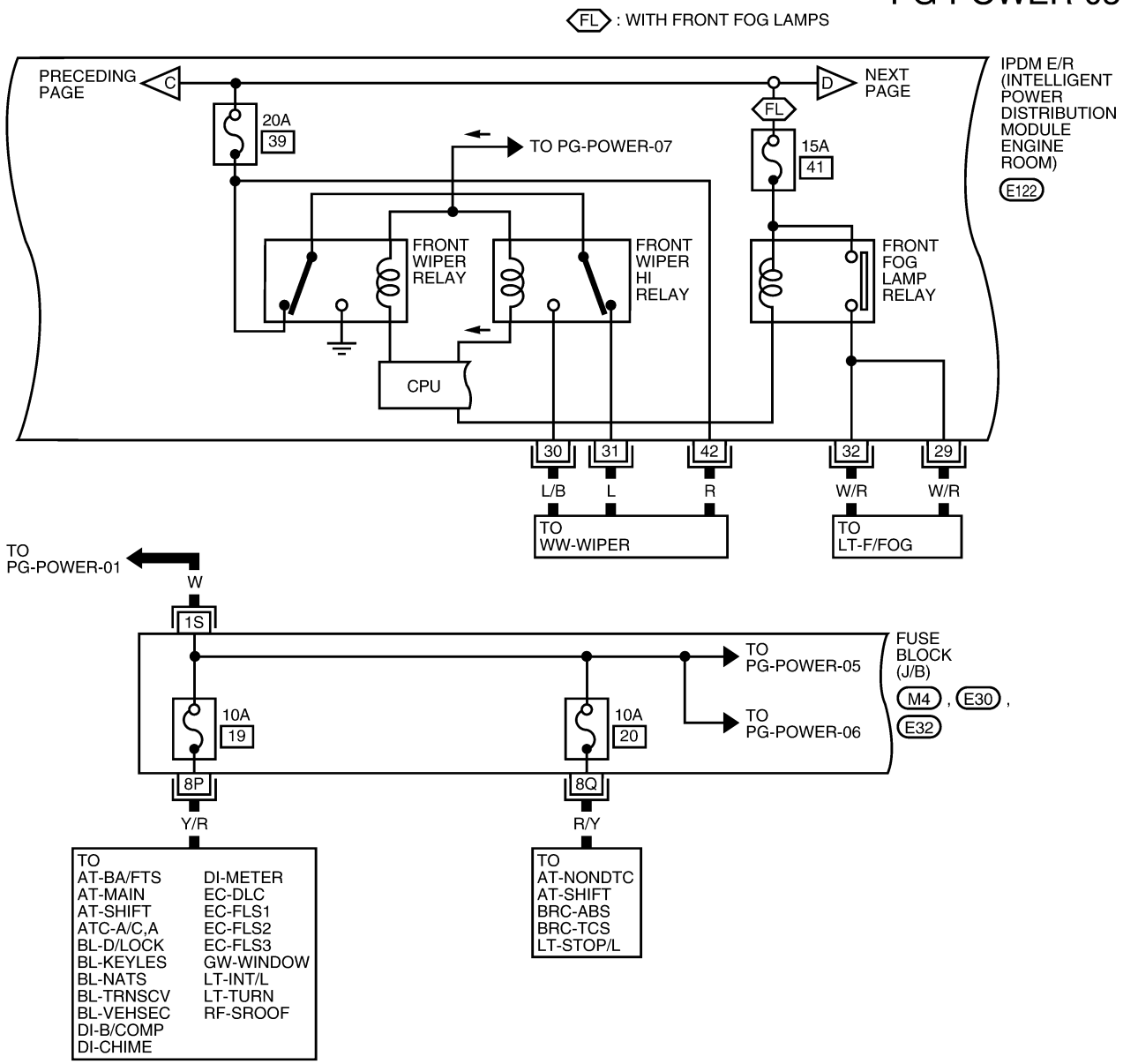
FL : WITH FRONT FOG LAMPS
PRECEDING PAGE
C
D
NEXT PAGE
IPDM E/R (INTELLIGENT POWER DISTRIBUTION MODULE ENGINE ROOM)
E122
20A
39
FL
15A
41
TO PG-POWER-07
FRONT WIPER RELAY
FRONT WIPER HI RELAY
FRONT FOG LAMP RELAY
CPU
30
31
42
32
29
L/B
L
R
W/R
W/R
TO WW-WIPER
TO LT-F/FOG
TO PG-POWER-01
W
1S
TO PG-POWER-05
TO PG-POWER-06
FUSE BLOCK (J/B)
M4 , E30 , E32
10A
19
10A
20
8P
8Q
Y/R
R/Y
TO
AT-BA/FTS
AT-MAIN
AT-SHIFT
ATC-A/C,A
BL-D/LOCK
BL-KEYLES
BL-NATS
BL-TRNSCV
BL-VEHSEC
DI-B/COMP
DI-CHIME
DI-METER
EC-DLC
EC-FLS1
EC-FLS2
EC-FLS3
GW-WINDOW
LT-INT/L
LT-TURN
RF-SROOF
TO
AT-NONDTC
AT-SHIFT
BRC-ABS
BRC-TCS
LT-STOP/L

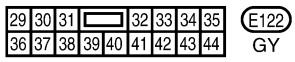
29 30 31 32 33 34 35
36 37 38 39 40 41 42 43 44
E122
GY

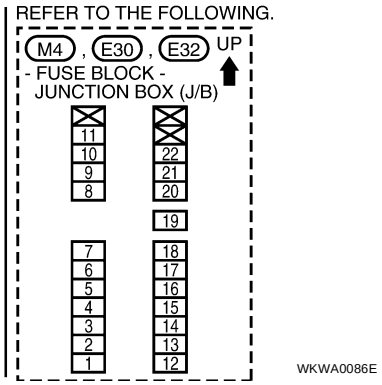
REFER TO THE FOLLOWING.
M4 , E30 , E32
UP
- FUSE BLOCK - JUNCTION BOX (J/B)
11
10
9
8
22
21
20
19
7
6
5
4
3
2
1
18
17
16
15
14
13
12
WKWA0086E

PG-POWER-04

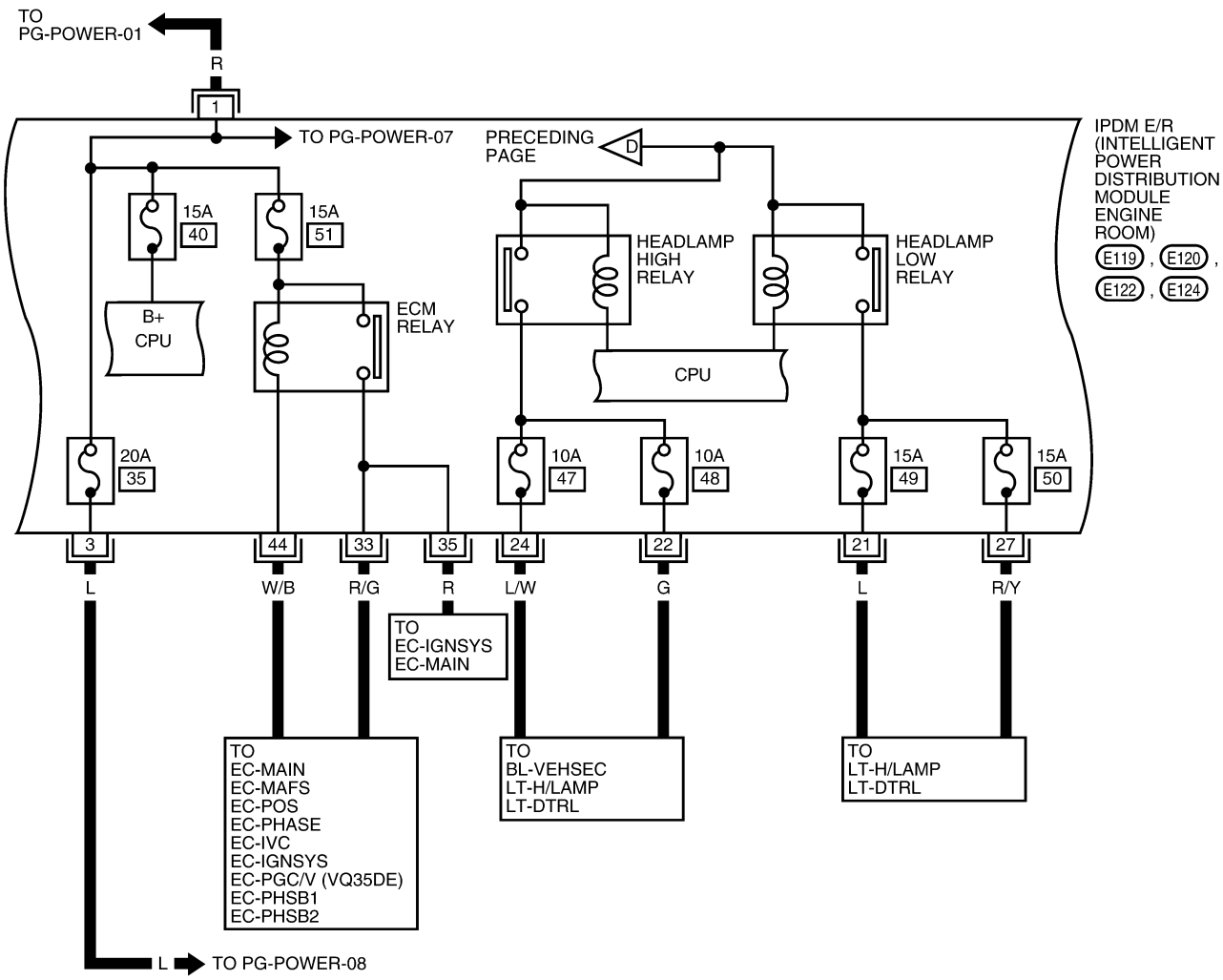

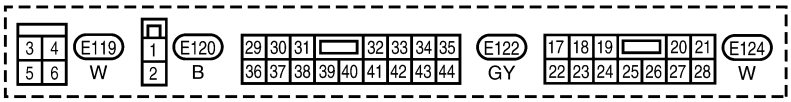

WKWA0087E

ACCESSORY POWER SUPPLY — IGNITION SW. IN ACC OR ON

PG-POWER-05

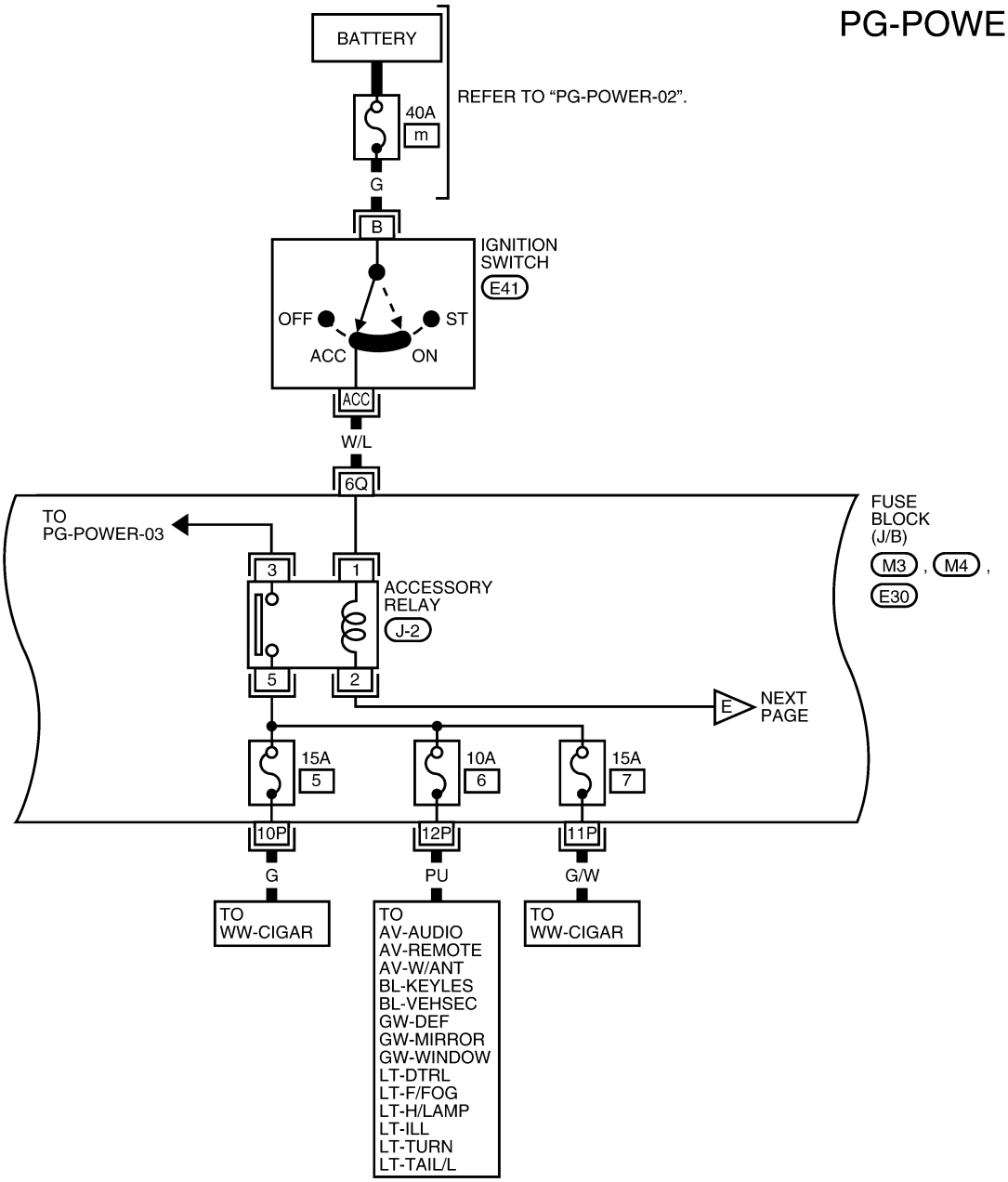

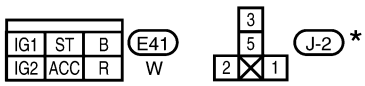

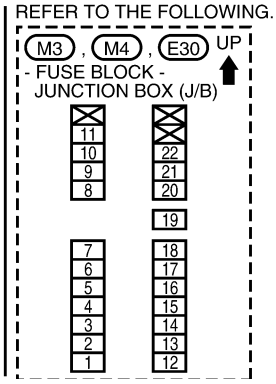

WKWA0088E

*: THIS CONNECTOR IS NOT SHOWN IN “HARNESS LAYOUT”.

IGNITION POWER SUPPLY — IGNITION SW. IN ON

PG-POWER-06

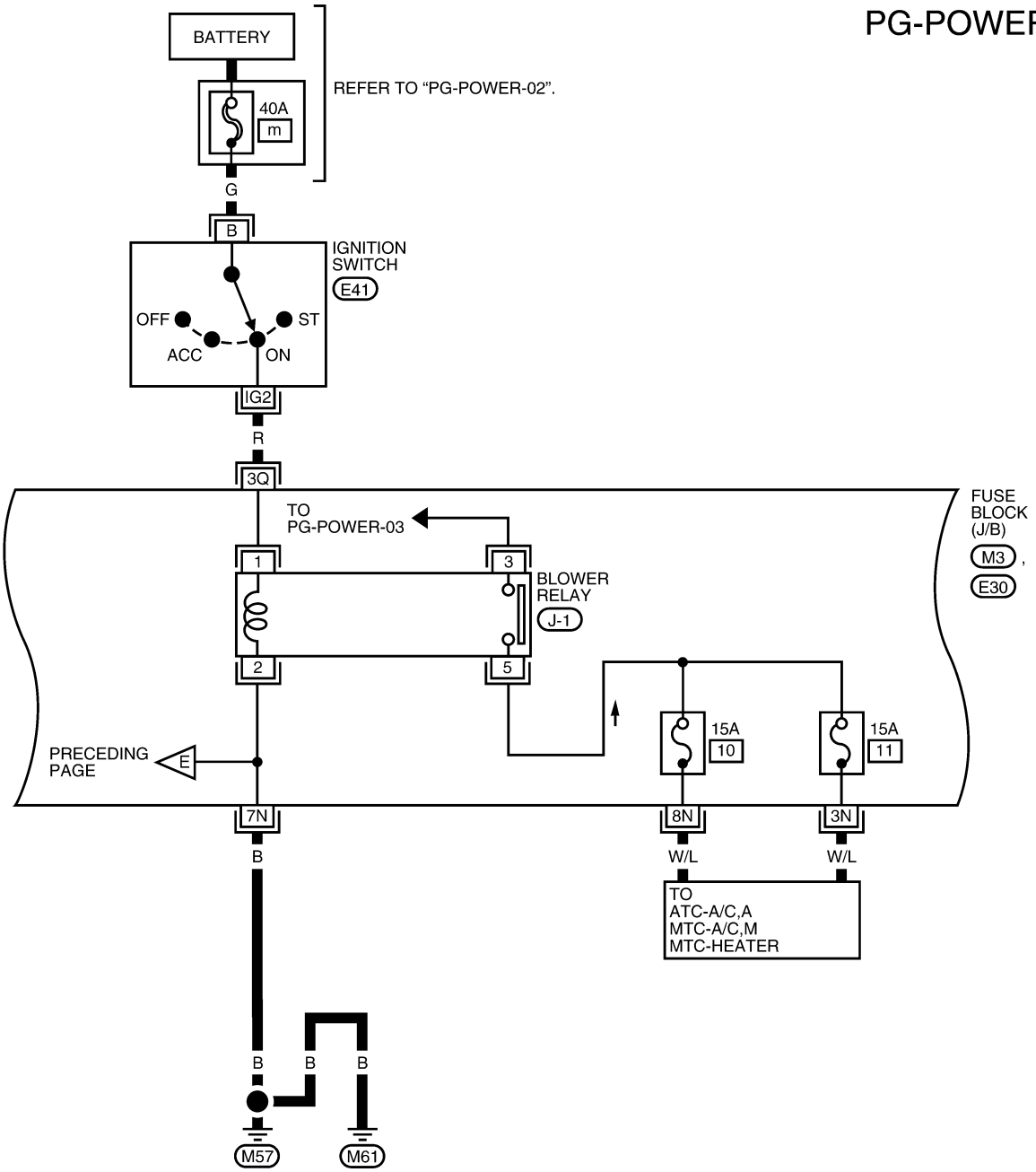

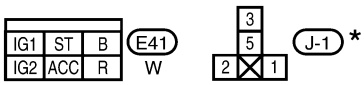

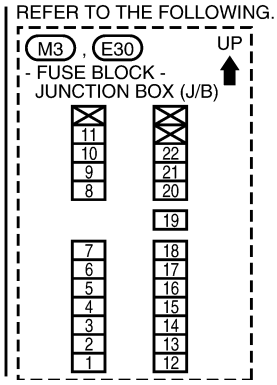

WKWA0089E

*: THIS CONNECTOR IS NOT SHOWN IN “HARNESS LAYOUT”.

IGNITION POWER SUPPLY — IGNITION SW. IN ON AND/OR START

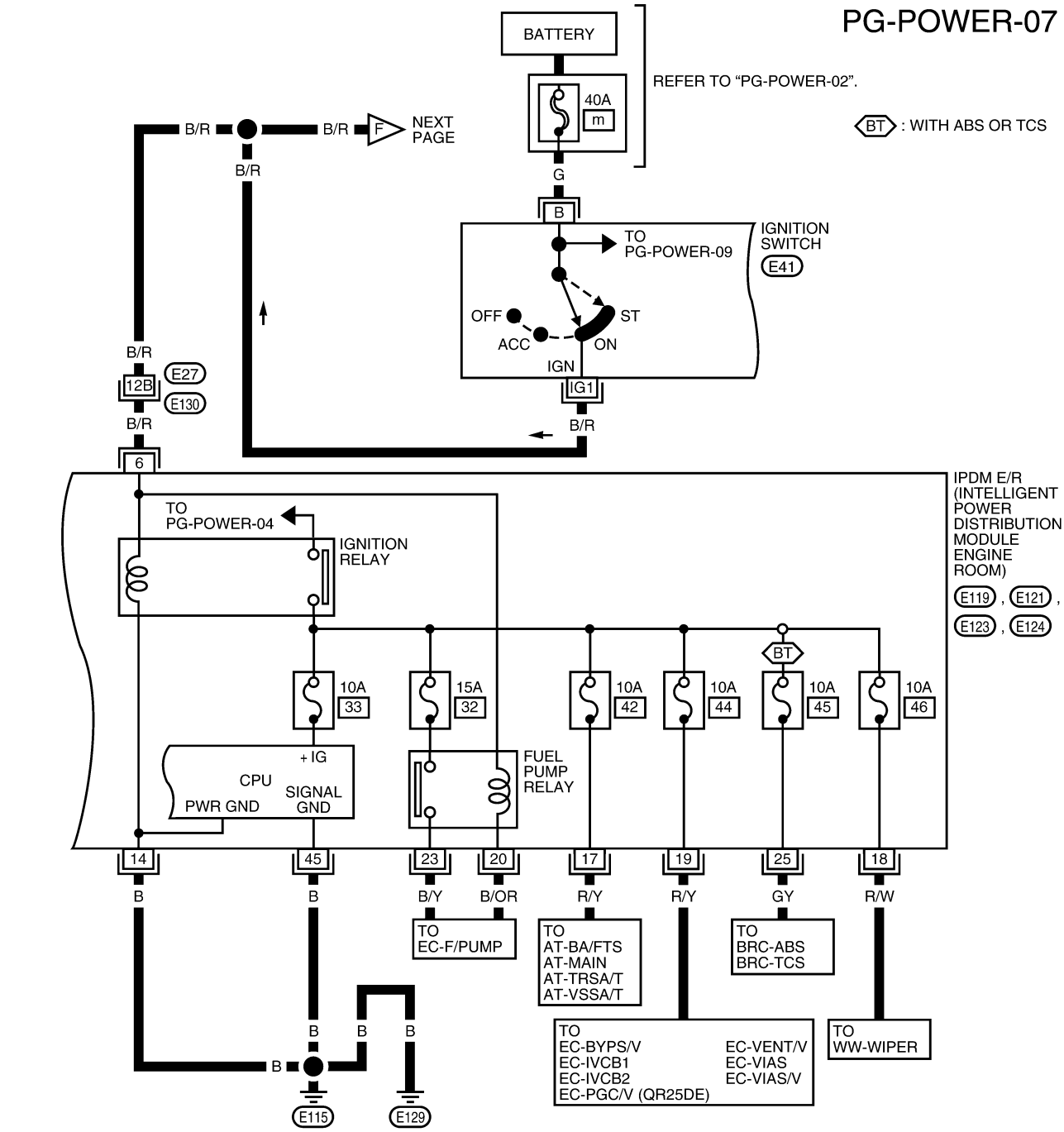

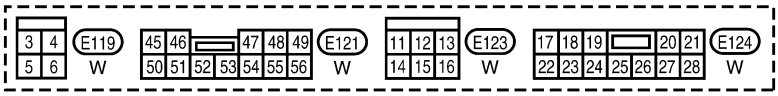

REFER TO THE FOLLOWING.
E130 - SUPER MULTIPLE JUNCTION (SMJ)

WKWA0090E

PG-POWER-08

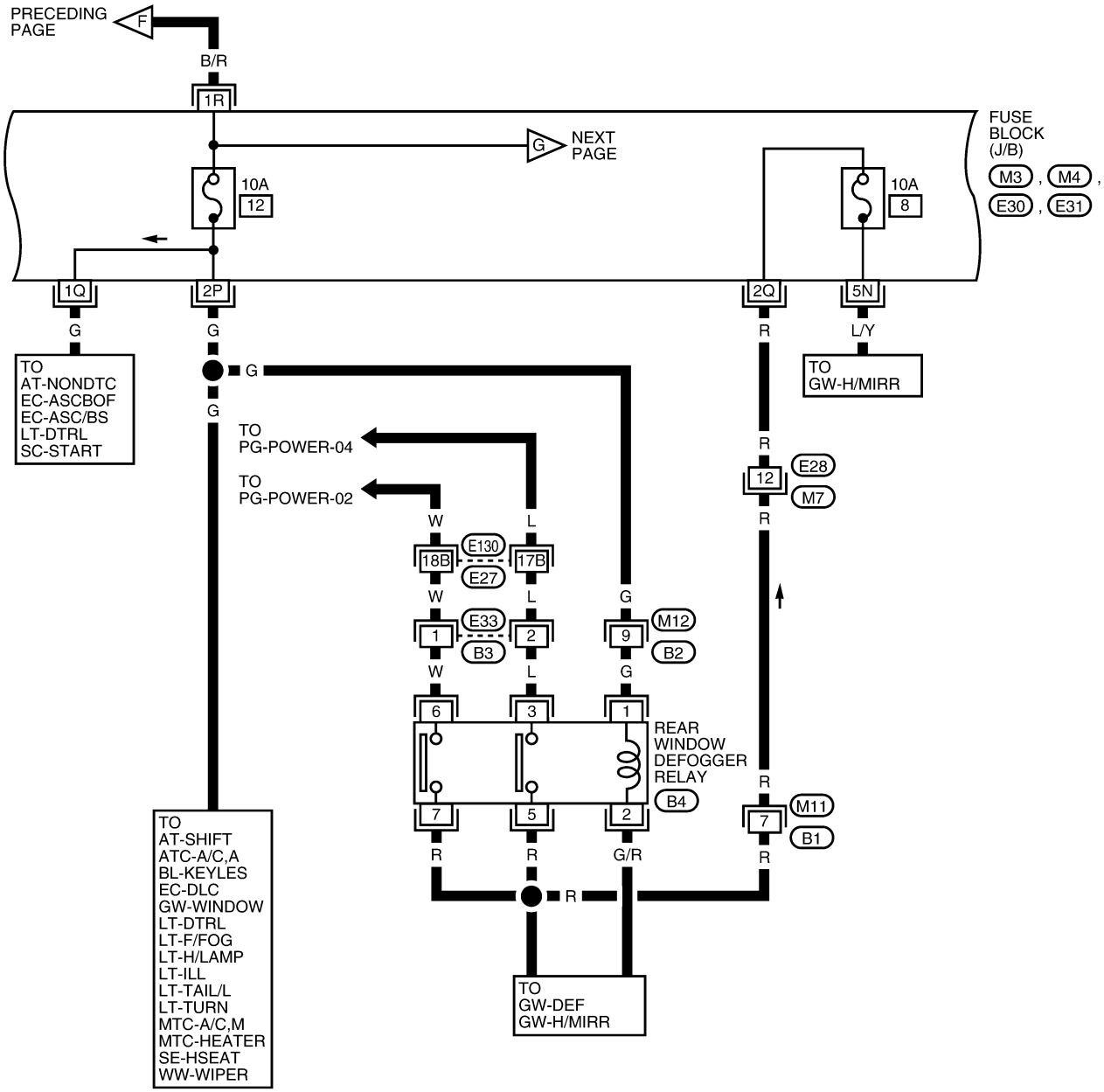

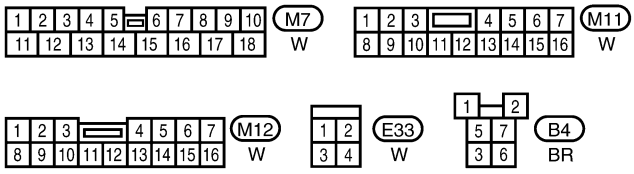

REFER TO THE FOLLOWING.

E130 - SUPER MULTIPLE JUNCTION (SMJ)

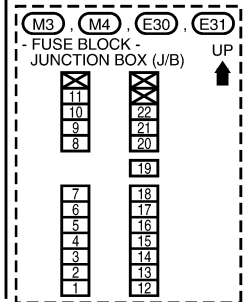

WKWA0091E

PG-POWER-09

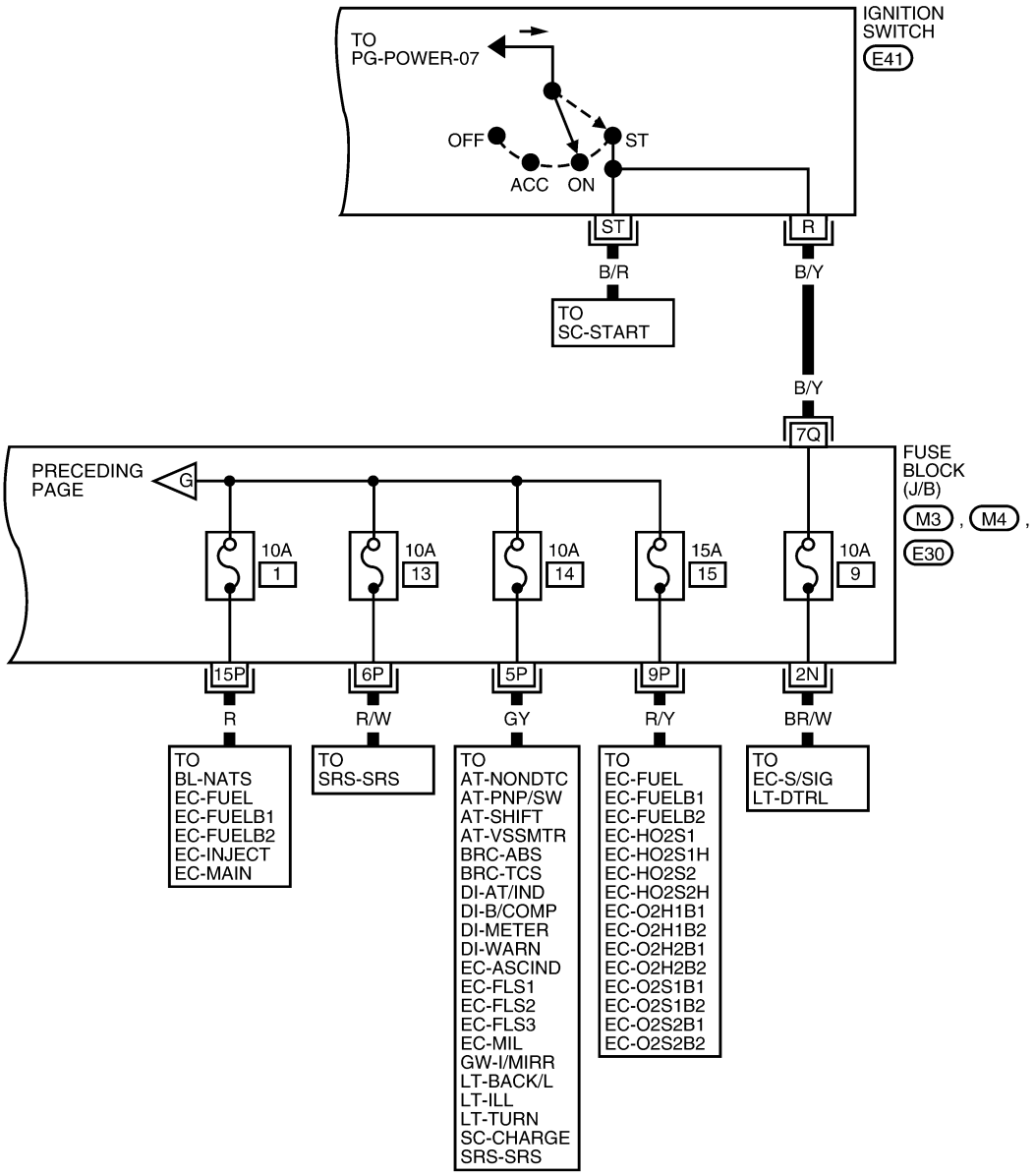
IGNITION SWITCH
E41
TO PG-POWER-07
OFF
ACC
ON
ST
ST
R
B/R
B/Y
TO SC-START
B/Y
7Q
FUSE BLOCK (J/B)
M3 , M4 , E30
PRECEDING PAGE
G
10A 1
10A 13
10A 14
15A 15
10A 9
15P
6P
5P
9P
2N
R
R/W
GY
R/Y
BR/W
TO BL-NATS EC-FUEL EC-FUELB1 EC-FUELB2 EC-INJECT EC-MAIN
TO SRS-SRS
TO AT-NONDTC AT-PNP/SW AT-SHIFT AT-VSSMTR BRC-ABS BRC-TCS DI-AT/IND DI-B/COMP DI-METER DI-WARN EC-ASCIND EC-FLS1 EC-FLS2 EC-FLS3 EC-MIL GW-I/MIRR LT-BACK/L LT-ILL LT-TURN SC-CHARGE SRS-SRS
TO EC-FUEL EC-FUELB1 EC-FUELB2 EC-HO2S1 EC-HO2S1H EC-HO2S2 EC-HO2S2H EC-O2H1B1 EC-O2H1B2 EC-O2H2B1 EC-O2H2B2 EC-O2S1B1 EC-O2S1B2 EC-O2S2B1 EC-O2S2B2
TO EC-S/SIG LT-DTRL

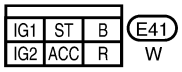
IG1 ST B
IG2 ACC R
E41
W

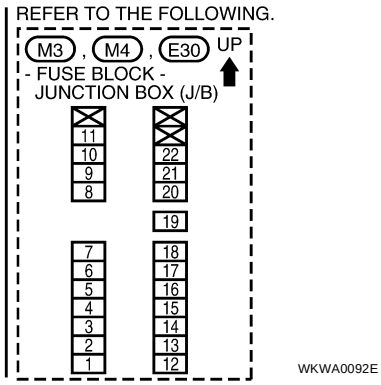
REFER TO THE FOLLOWING.
M3 , M4 , E30
UP
- FUSE BLOCK - JUNCTION BOX (J/B)
11 10 9 8
22 21 20
19
7 6 5 4 3 2 1
18 17 16 15 14 13 12
WKWA0092E

IPDM E/R (INTELLIGENT POWER DISTRIBUTION MODULE ENGINE ROOM)

PFP:284B7

System Description

EKS002L7

- IPDM E/R (Intelligent Power Distribution Module Engine Room) integrates the relay box and fuse block which were originally placed in engine compartment. It controls integrated relay via IPDM E/R control circuit.
- IPDM E/R-integrated control circuit performs ON-OFF operation of relay, CAN communication control, oil pressure switch signal reception, etc.
- It controls operation of each electrical part via BCM and CAN communication lines.

CAUTION:

All IPDM E/R-integrated relays cannot be removed.

SYSTEMS CONTROLLED BY IPDM E/R

1. Lamp control

Using CAN communication line, it receives signal from BCM and controls the following lamps:

- Headlamps (Hi, Lo)
- Parking lamps
- Tail lamps
- Front fog lamps

2. Wiper control

Using CAN communication line, it receives signals from BCM and controls the front wipers.

3. Rear window defogger relay control

Using CAN communication line, it receives signals from BCM and controls the rear window defogger relay.

4. A/C compressor control

Using CAN communication line, it receives signal from ECM and controls the A/C relay.

5. Cooling fan control

Using CAN communication line, it receives signal from ECM and controls cooling fan relay.

CAN COMMUNICATION LINE CONTROL

With CAN communication, by connecting each control unit using two communication lines (CAN L-line, CAN H-line), it is possible to transmit maximum amount of information with minimum wiring. Each control unit can transmit and receive data, and read necessary information only.

1. Fail-safe control
   - When CAN communication with other control units is impossible, IPDM E/R performs fail-safe control. After CAN communication recovers normally, it also returns to normal control.
   - Operation of control parts by IPDM E/R during fail-safe mode is as follows:

Controlled parts	Fail-safe mode
Headlamps	Headlamp relay (Lo) ON
Front fog lamps	Front fog lamp relay OFF
Tail and parking lamps	Tail lamp relay OFF
Front wipers	Until ignition switch is turned OFF, status immediately before fail-safe control is performed is maintained.
Rear window defogger	Rear window defogger relay OFF
Cooling fan	Cooling fan (HI) ON
A/C compressor	A/C relay OFF

IPDM E/R STATUS CONTROL

In order to save power, IPDM E/R switches status by itself based on each operating condition.

1. CAN communication status
   - CAN communication is normally performed with other control units.
   - Individual unit control by IPDM E/R is normally performed.

- When sleep request signal is received from BCM, mode is switched to sleep waiting status.

2. Sleep waiting status
   - Process to stop CAN communication is activated.
   - All systems controlled by IPDM E/R are stopped. When 3 seconds have elapsed after CAN communication with other control units is stopped, mode switches to sleep status.
3. Sleep status
   - IPDM E/R operates in low current-consumption mode.
   - CAN communication is stopped.
   - When a change in CAN communication line is detected, mode switches to CAN communication status.

CAN Communication System Description

EKS002L8

CAN (Controller Area Network) is a serial communication line for real time application. It is an on-vehicle multiplex communication line with high data communication speed and excellent error detection ability. Many electronic control units are equipped onto a vehicle, and each control unit shares information and links with other control units during operation (not independent). In CAN communication, control units are connected with 2 communication lines (CAN H line, CAN L line) allowing a high rate of information transmission with less wiring. Each control unit transmits/receives data but selectively reads required data only.

FOR TCS MODELS

System diagram

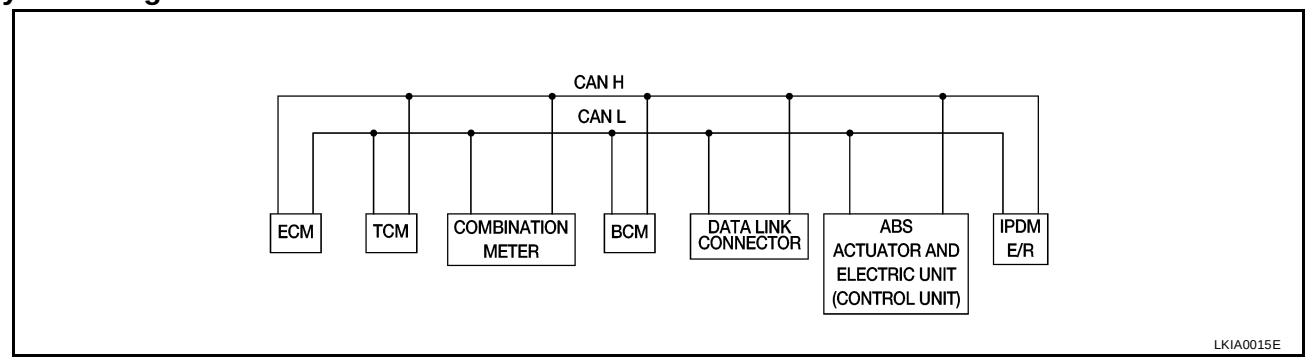

Input/output signal chart

T: Transmit R: Receive

Signals	ECM	TCM	COMBINATION METER	BCM	ABS/TCS control unit	IPDM E/R
Engine speed signal	T		R		R	
Engine coolant temperature signal	T		R			
Accelerator pedal position signal	T					
Fuel consumption monitor signal	T		R			
A/T warning lamp signal		T	R			
A/T position indicator signal	R		R	R(R range only)	R	
ABS operation signal	R				T	
TCS operation signal	R	R			T	
Air conditioner switch signal	R			T		
Air conditioner compressor signal	R					T
A/C compressor request signal	T					R
Cooling fan motor operation signal	R					T
Cooling fan speed request signal	T					R
Position lights request			R	T		R
Position lights status				R		T
Low beam request				T		R

Signals	ECM	TCM	COMBINA-TION METER	BCM	ABS/TCS control unit	IPDM E/R
Low beam status	R			R		T
High beam request			R	T		R
High beam status	R			R		T
Front fog lights request				T		R
Front fog light status				R		T
OD cancel switch signal		R	T			R
Brake switch signal		R	T			
Vehicle speed signal	R	T				
	R		T	R		
Oil pressure switch			R			T
Sleep request1			R	T		
Sleep request2				T		R
N range switch signal		R	T			
P range switch signal		R	T			
Seat belt buckle switch signal			T	R		
Door switch signal			R	T		R
Tail lamp request			R	T		R
Turn indicator signal			R	T		
Buzzer output signal			R	T		
Trunk switch signal			R	T		
ASCD main switch signal	T		R			
ASCD cruise signal	T		R			
Wiper operation				R		T
Wiper stop position signal				R		T
Rear window defogger switch signal				T		R
Rear window defogger control signal	R			R		T

FOR A/T MODELS

System diagram

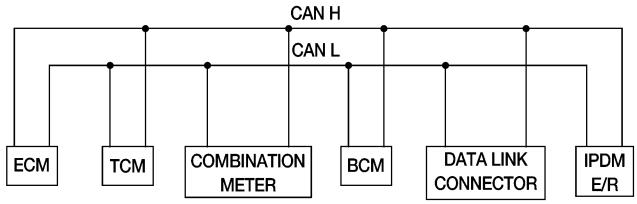

LKIA0017E

Input/output signal chart

T: Transmit R: Receive

Signals	ECM	TCM	COMBINATION METER	BCM	IPDM E/R
Engine speed signal	T		R		
Engine coolant temperature signal	T		R		

Signals	ECM	TCM	COMBINATION METER	BCM	IPDM E/R
Accelerator pedal position signal	T				R
Fuel consumption monitor signal	T		R		
A/T warning lamp signal		T	R		
A/T position indicator signal	R	T	R	R(R range only)	
Air conditioner switch signal	R			T	
Air conditioner compressor signal	R				T
A/C compressor request signal	T				R
Blower fan switch signal	R(QR25DE)			T	
Cooling fan motor operation signal	R			T	
Cooling fan speed request signal	T				R
Position lights request			R	T	R
Position lights status				R	T
Low beam request				T	R
Low beam status	R			R	T
High beam request			R	T	R
High beam status	R			R	T
Front fog lights request				T	R
Front fog light status				R	T
OD cancel switch signal		R	T		R
Brake switch signal		R	T		
Vehicle speed signal	R	T			
	R		T	R	
Oil pressure switch			R		T
Sleep request1			R	T	
Sleep request2				T	R
N range switch signal		R	T		
P range switch signal		R	T		
Seat belt buckle switch signal			T	R	
Door switch signal			R	T	R
Tail lamp request			R	T	R
Turn indicator signal			R	T	
Buzzer output signal			R	T	
Trunk switch signal			R	T	
ASCD main switch signal	T		R		
ASCD cruise signal	T		R		
Wiper operation				R	T
Wiper stop position signal				R	T
Rear window defogger switch signal				T	R
Rear window defogger control signal	R			R	T

FOR M/T MODELS

System diagram

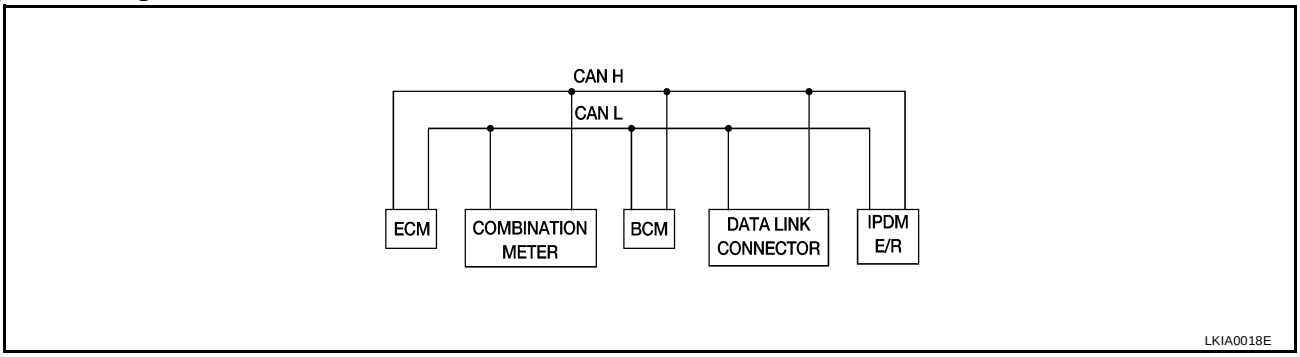

Input/output signal chart

T: Transmit R: Receive

Signals	ECM	COMBINATION METER	BCM	IPDM E/R
Engine speed signal	T			
Engine coolant temperature signal	T			
Fuel consumption monitor signal	T			
Air conditioner switch signal	R		T	
Air conditioner compressor signal	R			T
A/C compressor request signal	T			R
Blower fan switch signal	R(QR25DE)		T	
Cooling fan motor operation signal	R			T
Cooling fan speed request signal	T			R
Position lights request		R	T	R
Position lights status			R	T
Low beam request			T	R
Low beam status	R		R	T
High beam request		R	T	R
High beam status	R		R	T
Front fog lights request			T	R
Front fog light status			R	T
Vehicle speed signal	R	T		
Oil pressure switch		R		T
Sleep request1		R	T	
Sleep request2			T	R
Seat belt buckle switch signal		T	R	
Door switch signal		R	T	R
Tail lamp request		R	T	R
Turn indicator signal		R	T	
Buzzer output signal		R	T	
Trunk switch signal		R	T	
ASCD main switch signal	T	R		
ASCD cruise signal	T	R		
Wiper operation			R	T
Wiper stop position signal			R	T

Signals	ECM	COMBINATION METER	BCM	IPDM E/R
Rear window defogger switch signal			T	R
Rear window defogger control signal	R		R	T

Function of Detecting Ignition Relay Malfunction

EKS002L9

- When contact point of integrated ignition relay is stuck and cannot be turned OFF, IPDM E/R turns ON tail and parking lamps for 10 minutes to indicate IPDM E/R malfunction.

Auto Active Test

EKS002LA

DESCRIPTION

- In auto active test mode, operation inspection can be performed when IPDM E/R sends a drive signal to the following systems:
  - Rear window defogger
  - Front wipers
  - Tail and parking lamps
  - Front fog lamps
  - Headlamps (Hi, Lo)
  - A/C compressor (magnet clutch)
  - Cooling fan

OPERATION PROCEDURE

1. Close hood and lift wiper arms away from windshield (to prevent glass damage by wiper operation).

   NOTE:
   When auto active test is performed with hood opened, sprinkle water on windshield beforehand.
2. Turn ignition switch OFF.
3. Turn ignition switch ON and, within 10 seconds, press front door switch LH ten times. Then turn ignition switch OFF.

   CAUTION:
   Close front door RH.
4. Turn ignition switch ON.
5. When auto active test mode is actuated, horn chirps once, and oil pressure warning lamp starts blinking.
6. After a series of operations is repeated three times, auto active test is completed.

   NOTE:
   When auto active test mode has to be cancelled halfway, turn ignition switch OFF.

   CAUTION:
   Be sure to inspect DI-38, "Oil Pressure Warning Lamp Stays Off (Ignition Switch ON)" and BL-28, "Door Switch Check" when the auto active test cannot be performed.

INSPECTION IN AUTO ACTIVE TEST MODE

- When auto active test mode is actuated, the following seven steps are repeated three times.

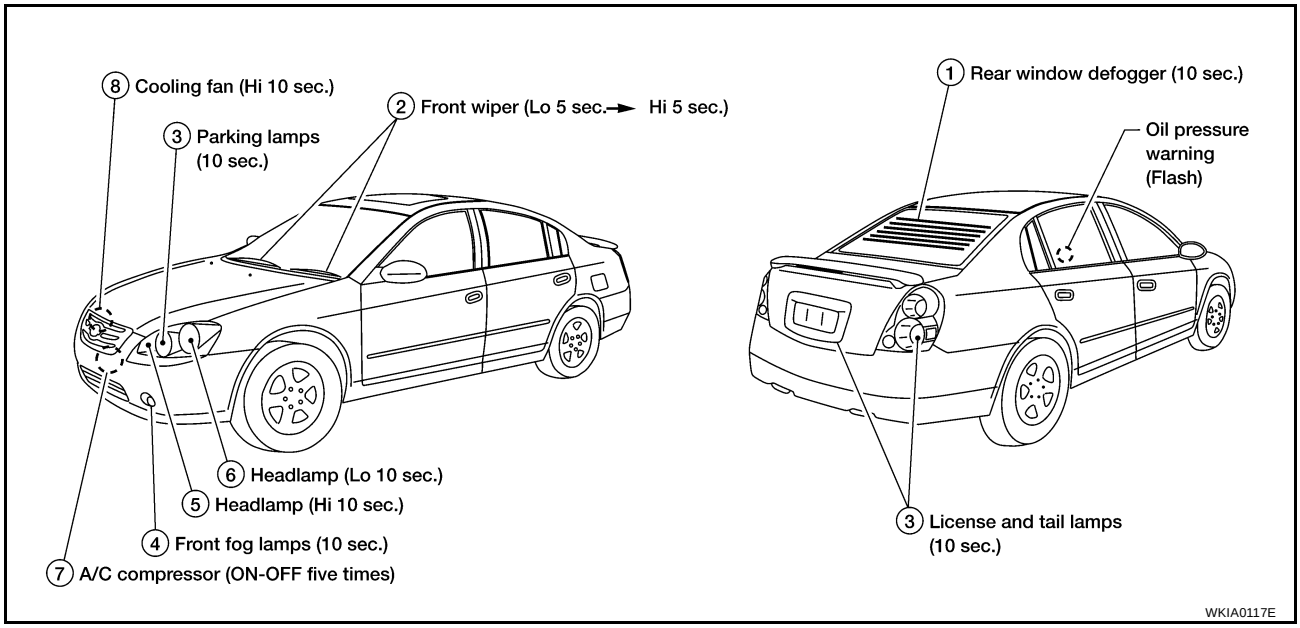

Concept of Auto Active Test

- IPDM E/R actuates auto active test mode when it receives door switch signal from BCM via CAN communication line. Therefore, when auto active test mode is activated successfully, CAN communication between IPDM E/R and BCM is normal.
- If any of systems controlled by IPDM E/R cannot be operated, possible cause can be easily diagnosed using auto active test.

Diagnosis chart in auto active test mode

Symptom	Inspection contents		Possible cause
Any of front wipers, tail and parking lamps, front fog lamps, and headlamps (Hi, Lo) do not operate.	Perform auto active test. Does system in question operate?	OK	● BCM signal input system
		NG	● Lamp/motor malfunction ● Lamp/motor ground system malfunction ● Harness/connector malfunction between IPDM E/R and system in question ● IPDM E/R (integrated relay) malfunction
Rear window defogger does not operate.	Perform auto active test. Does rear window defogger operate?	OK	● BCM signal input system
		NG	● Rear window defogger relay system ● Open circuit of rear window defogger ● IPDM E/R malfunction
A/C compressor does not operate.	Perform auto active test. Does magnet clutch operate?	OK	● BCM signal input system ● CAN communication signal between BCM and ECM. ● CAN communication signal between ECM and IPDM E/R ● BCM ● ECM
		NG	● Magnet clutch malfunction ● Harness/connector malfunction between IPDM E/R and magnet clutch ● IPDM E/R (integrated relay) malfunction
Cooling fan does not operate.	Perform auto active test. Does cooling fan operate?	OK	● ECM signal input system ● CAN communication signal between ECM and IPDM E/R ● ECM
		NG	● Cooling fan motor malfunction ● Harness/connector malfunction between IPDM E/R and cooling fan motor ● IPDM E/R (integrated relay) malfunction

Symptom	Inspection contents		Possible cause
Oil pressure warning lamp does not operate.	Perform auto active test. Does oil pressure warning lamp blink?	OK	● Harness/connector malfunction between IPDM E/R and oil pressure switch ● Oil pressure switch malfunction
		NG	● CAN communication signal between IPDM E/R and combination meter ● Combination meter

Schematic

EKS002LB

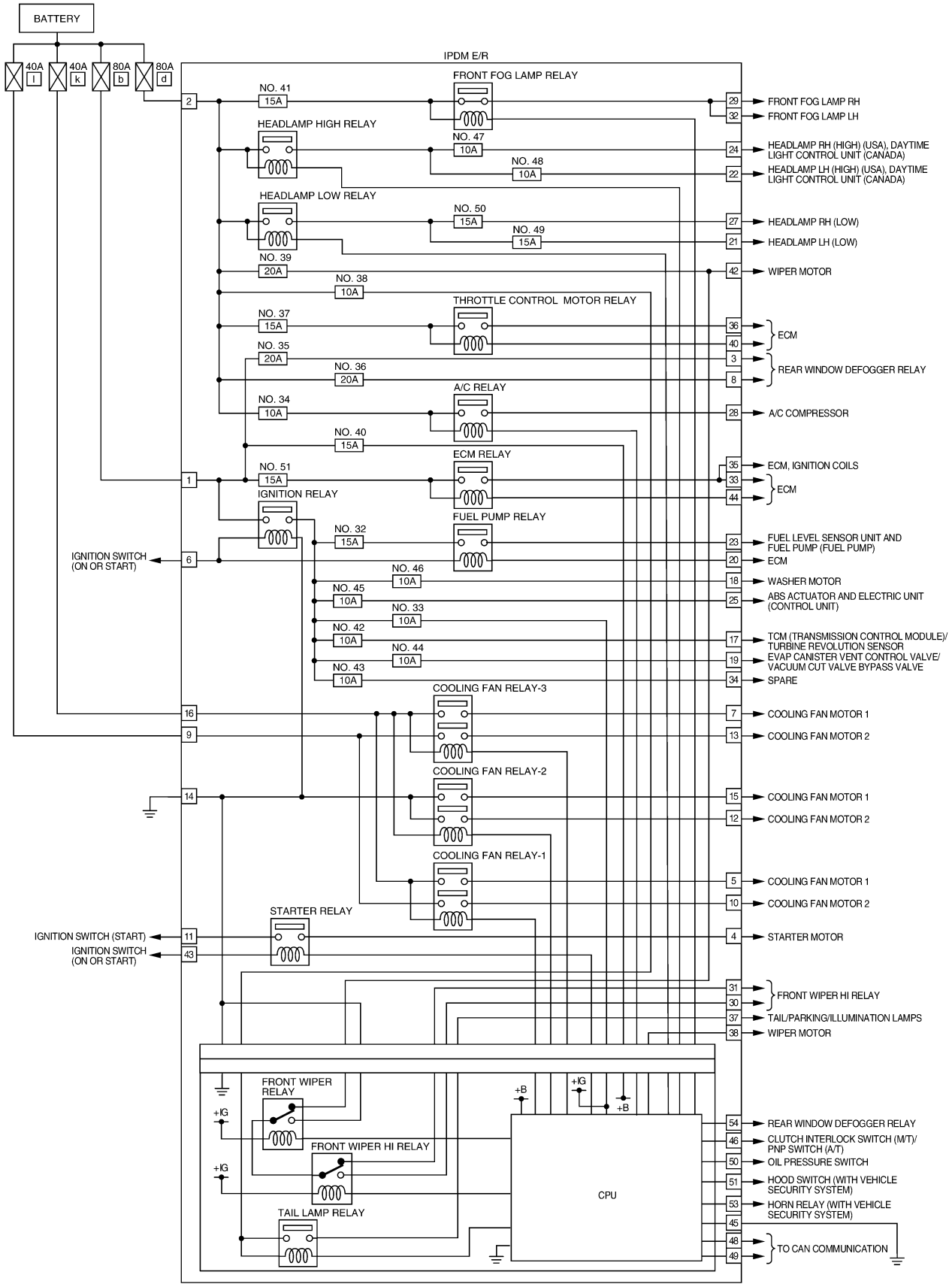

IPDM E/R FUSE AND RELAY ARRANGEMENT

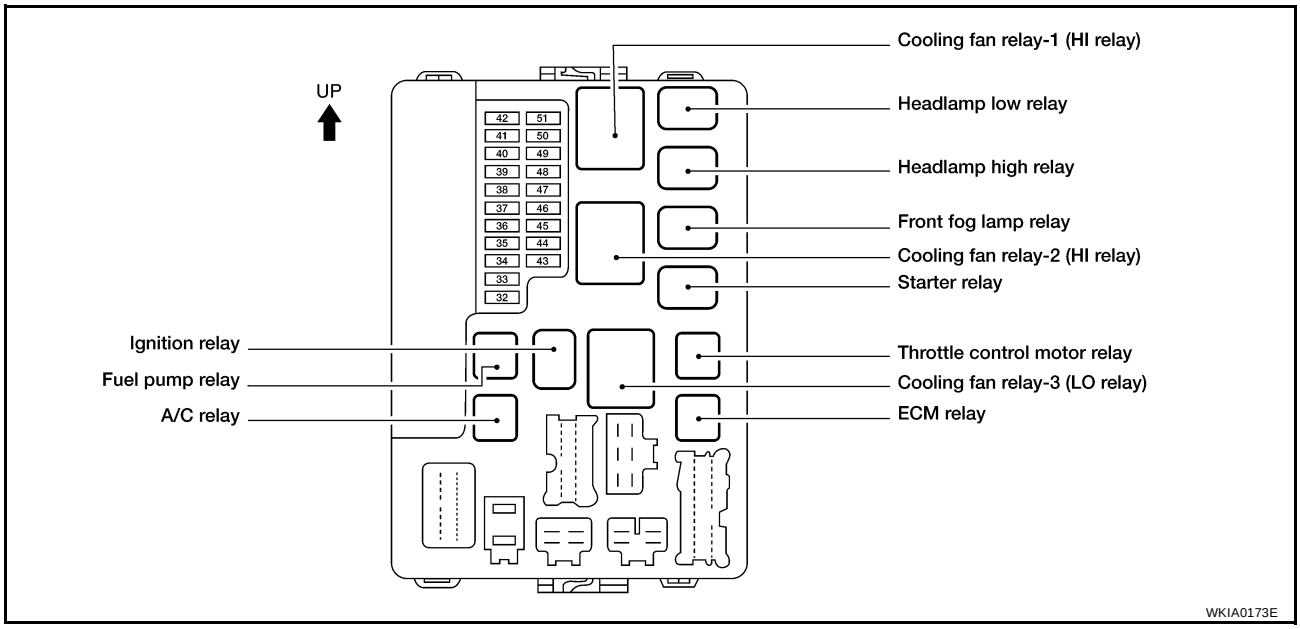

IPDM E/R TERMINAL ARRANGEMENT

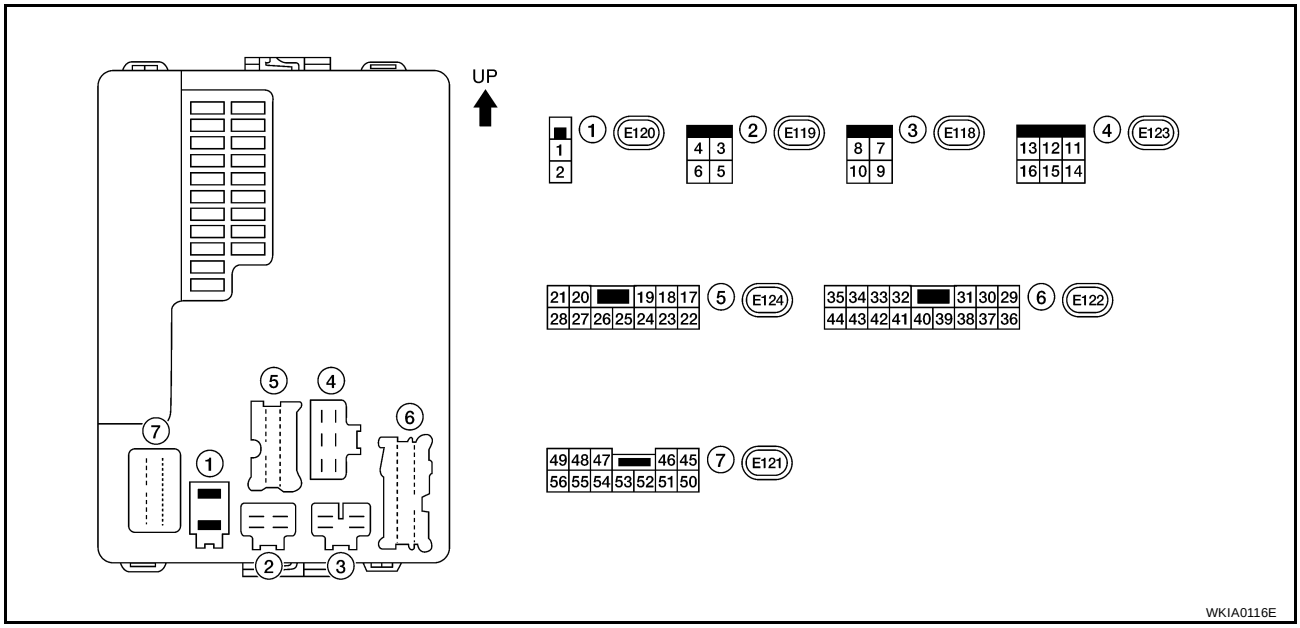

IPDM E/R Power/Ground Circuit Inspection

EKS002LC

1. FUSE AND FUSIBLE LINK INSPECTION

- Check that the following fusible links or IPDM E/R fuses are not blown.

Terminal No.	Signal name	Fuse, fusible link No.
1, 2	Battery power	F/L–b, F/L–d, Fuse No. 40
–	Ignition power	Fuse No. 33

OK or NG?

OK >> GO TO 2.
NG >> Replace fuse or fusible link.

2. POWER CIRCUIT INSPECTION

Disconnect IPDM E/R harness connector E120. Measure voltage between IPDM E/R harness connector E120 terminals 1 (R), 2 (B/Y) and body ground.

Terminal No.	Signal name	Ignition switch	Voltage (V)
1, 2	Battery power	OFF	Approx. 12

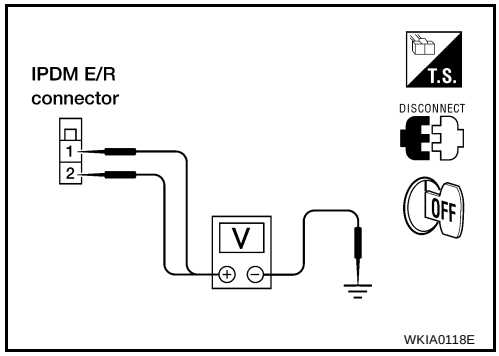

OK or NG?

OK >> GO TO 3.
NG >> Replace IPDM E/R power circuit harness.

3. GROUND CIRCUIT INSPECTION

Disconnect IPDM E/R harness connectors E121 and E123. Check continuity between IPDM E/R harness connectors E123 terminal 14 (B), E121 terminal 45 (B) and body ground.

Terminal No.	Signal name	Ignition switch	Continuity
14, 45	Ground	OFF	YES

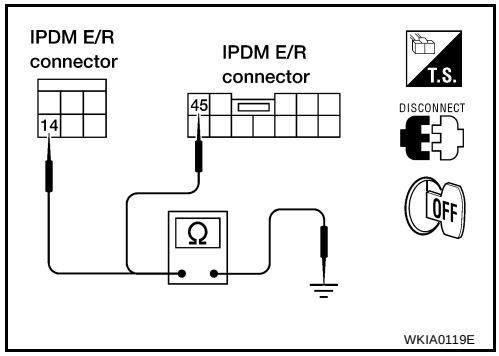

OK or NG?

OK >> Normal
NG >> Replace ground circuit harness of IPDM E/R.

Removal and Installation of IPDM E/R

EKS002LD

1. Disconnect the negative battery cable.
2. Remove 2 bolts and position coolant reservoir aside.
3. Remove IPDM E/R upper cover.

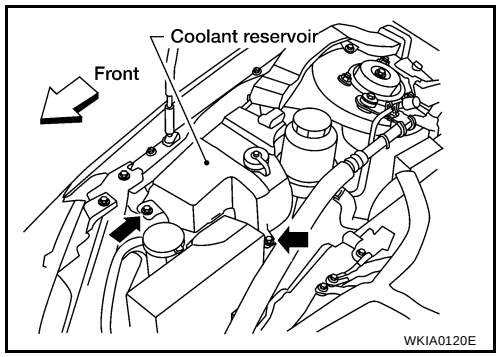

4. Remove IPDM E/R harness cover.

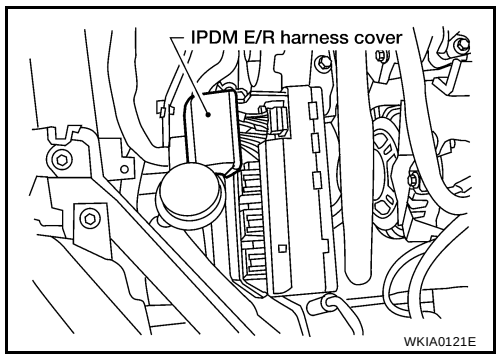

5. Release 2 clips and pull IPDM E/R up from case.
6. Disconnect IPDM E/R connectors and then remove it.

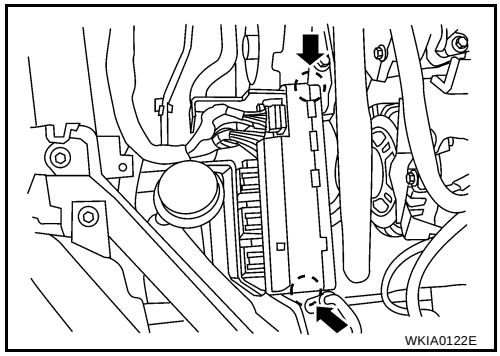

GROUND CIRCUIT

PFP:24080

Ground Distribution

EKS002LE

MAIN HARNESS

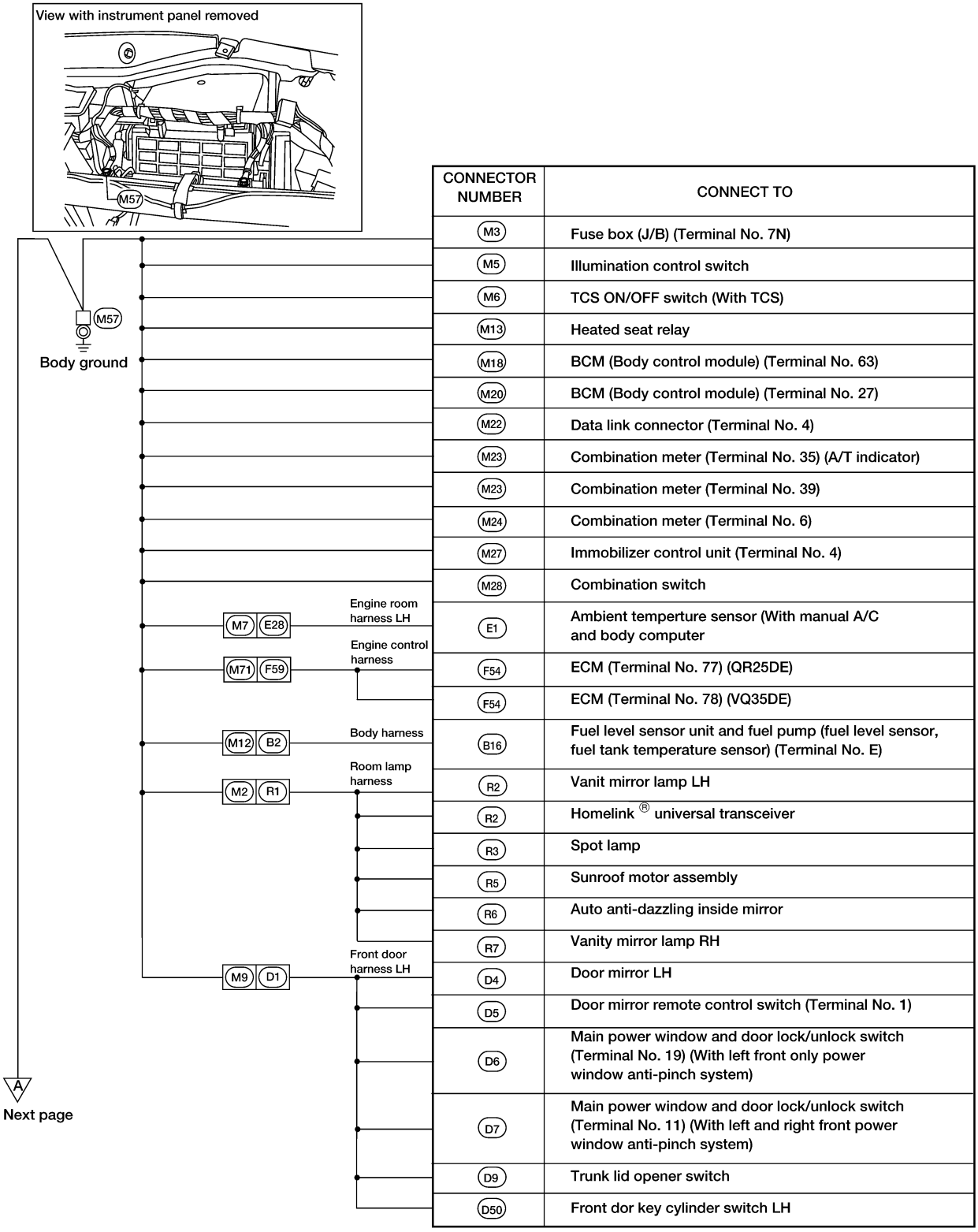

CONNECTOR NUMBER	CONNECT TO
M3	Fuse box (J/B) (Terminal No. 7N)
M5	Illumination control switch
M6	TCS ON/OFF switch (With TCS)
M13	Heated seat relay
M18	BCM (Body control module) (Terminal No. 63)
M20	BCM (Body control module) (Terminal No. 27)
M22	Data link connector (Terminal No. 4)
M23	Combination meter (Terminal No. 35) (A/T indicator)
M23	Combination meter (Terminal No. 39)
M24	Combination meter (Terminal No. 6)
M27	Immobilizer control unit (Terminal No. 4)
M28	Combination switch
E1	Ambient temperture sensor (With manual A/C and body computer
F54	ECM (Terminal No. 77) (QR25DE)
F54	ECM (Terminal No. 78) (VQ35DE)
B16	Fuel level sensor unit and fuel pump (fuel level sensor, fuel tank temperature sensor) (Terminal No. E)
R2	Vanit mirror lamp LH
R2	Homelink ® universal transceiver
R3	Spot lamp
R5	Sunroof motor assembly
R6	Auto anti-dazzling inside mirror
R7	Vanity mirror lamp RH
D4	Door mirror LH
D5	Door mirror remote control switch (Terminal No. 1)
D6	Main power window and door lock/unlock switch (Terminal No. 19) (With left front only power window anti-pinch system)
D7	Main power window and door lock/unlock switch (Terminal No. 11) (With left and right front power window anti-pinch system)
D9	Trunk lid opener switch
D50	Front dor key cylinder switch LH

WKIA0080E

View with instrument panel removed

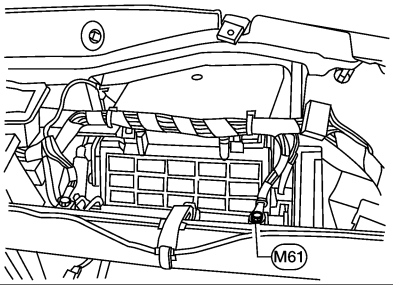

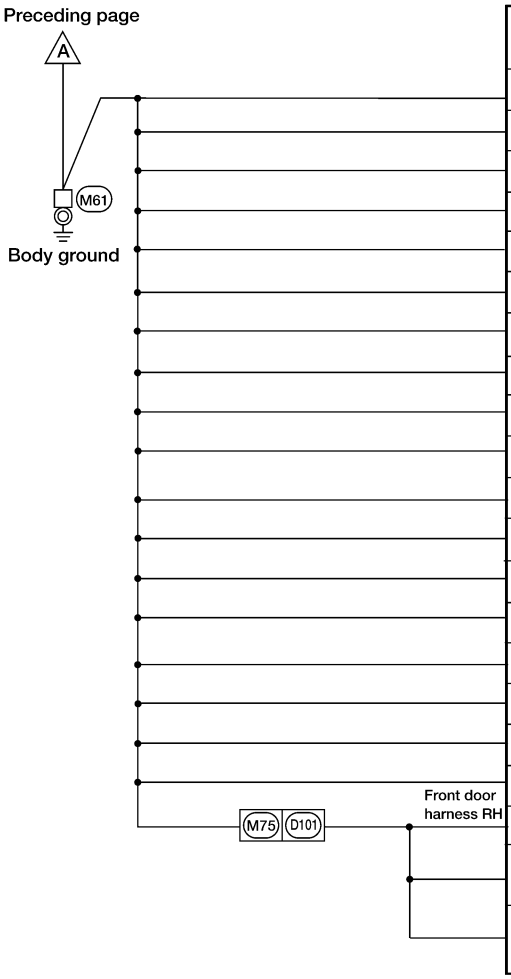

CONNECTOR NUMBER	CONNECT TO
M34	A/T device (Terminal No. 2) (Overdrive control switch)
M35	Air bag diagnosis sensor unit (Terminal No. 2)
M37	Heated seat switch LH
M38	Power socket
M39	Air mix door motor (With automatic A/C)
M40	Mode door motor
M41	Fan switch
M42	Rear window defogger switch
M49	A/C auto amp. (With auto A/C) (Terminal Nos. 8 and 14)
M50	A/C auto amp. (With auto A/C) (Terminal No. 32)
M51	A/C control unit (With manual A/C or heater only)
M53	Intake sensor
M55	Hazard switch
M56	Cigarette lighter socket
M58	Intake door motor
M59	Glove box lamp
M64	Fan control amp. (With auto A/C)
M76	Heated seat switch RH
D104	Door mirror RH
D105	Front power window switch RH (Terminal No. 19) (With left front only power window anti-pinch system)
D106	Front power window switch RH (Terminal No. 7) (With left and right front power window anti-pinch system)

WKIA0081E

ENGINE ROOM LH HARNESS

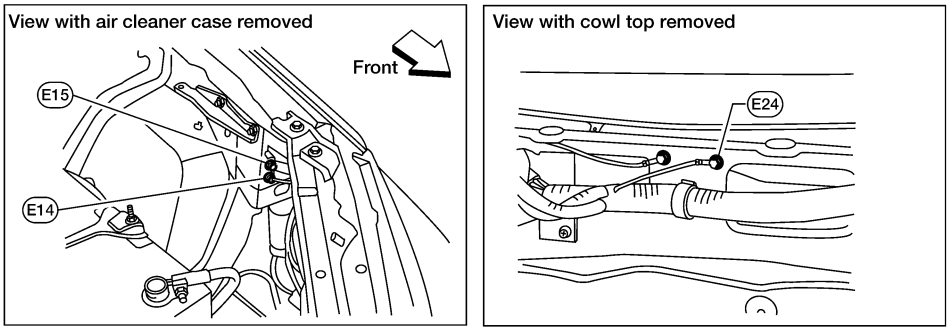

CONNECTOR NUMBER	CONNECT TO
M35	Air bag diagnosis sensor unit (Shield wire) (Terminal No.16)

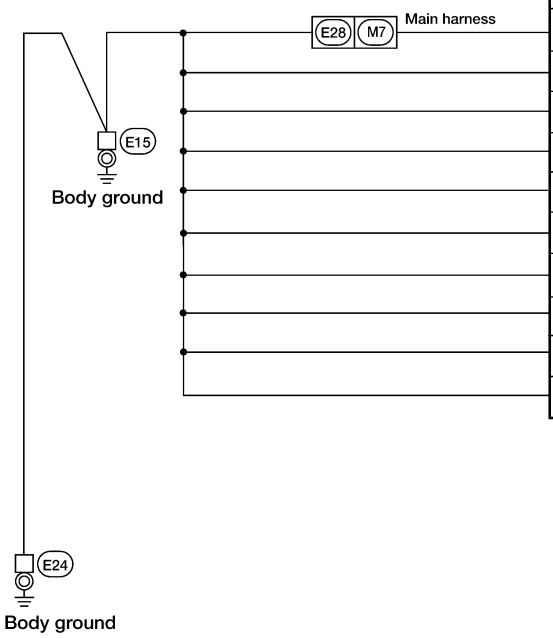

CONNECTOR NUMBER	CONNECT TO
M49	A/C auto amp. (With auto A/C) (Canada only)
E2	Front fog lamp LH
E5	Hood switch
E11	Headlamp LH (High)
E12	Front combination lamp LH
E13	Headlamp LH (Low)
E16	Brake fluid level switch
E23	Wiper motor
E34	Clutch interlock switch (With M/T)
E39	BCM (Body control module) (Terminal No. 8)

WKIA0354E

ENGINE ROOM RH HARNESS

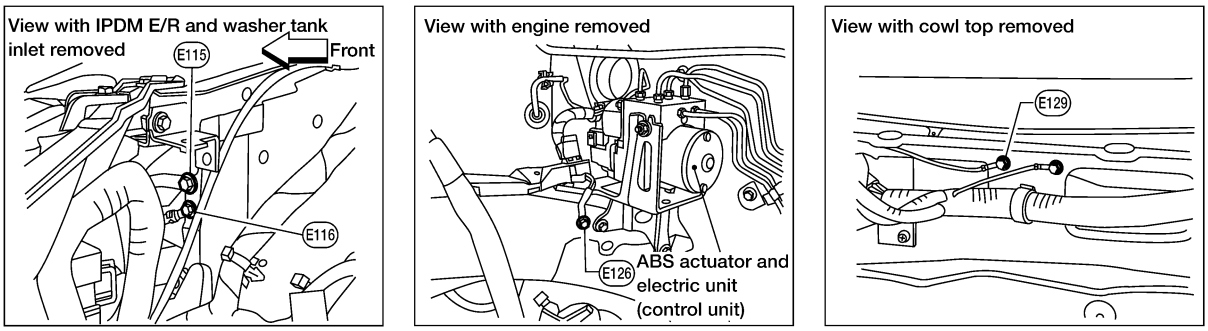

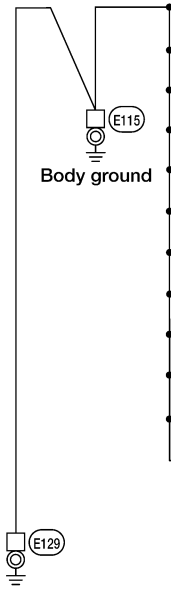

CONNECTOR NUMBER	CONNECT TO
E101	Front fog lamp RH
E103	Daytime light control unit (Canada only) (Terminal No. 13)
E103	Daytime light control unit (Canada only) (Terminal No. 14)
E104	Daytime light control unit (Canada only) (Terminal No. 16)
E106	Washer level switch
E107	Headlamp RH (Low)
E109	Front combination lamp RH
E110	Headlamp RH (High)
E113	Cooling fan motor 1
E114	Cooling fan motor 2
E121	IPDM E/R (Terminal No. 45)
E123	IPDM E/R [Cooling fan relay-2 (low-relay)] (Terminal No. 14)

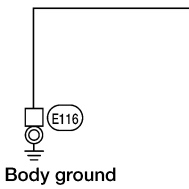

CONNECTOR NUMBER	CONNECT TO
E112	Generator

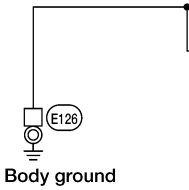

CONNECTOR NUMBER	CONNECT TO
E125	ABS actuator and electric unit (Control unit) (Terminal No. 16)
E125	ABS actuator and electric unit (Control unit) (Terminal No. 19)

WKIA0355E

ENGINE CONTROL HARNESS (QR25DE)

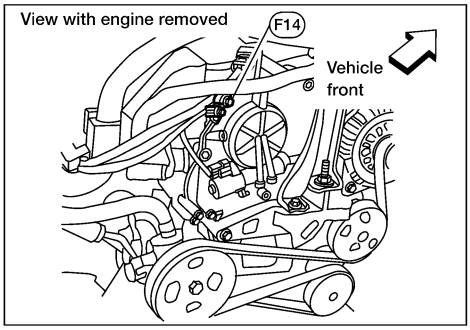

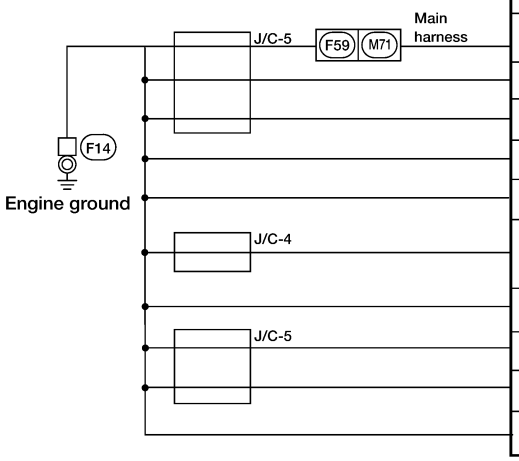

CONNECTOR NUMBER	CONNECT TO
M22	Data link connector (Terminal No. 5)
F9	Camshaft position sensor (PHASE)
F11	Crankshaft position sensor (POS)
F22	Heated oxygen sensor 1 (Front)
F23	Heated oxygen sensor 2 (Rear)
F50	Electric throttle control actuator (Throttle position sensor, throttle motor) (Shield wire)
F54	ECM (Terminal No. 59)
F54	ECM (Terminal No. 60)
F57	TCM (Terminal No. 25)
F57	TCM (Terminal No. 48)

J/C : Joint connector

WKIA0084E

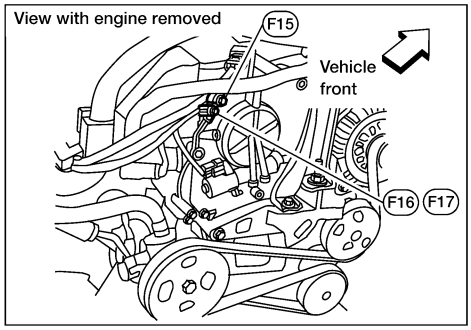

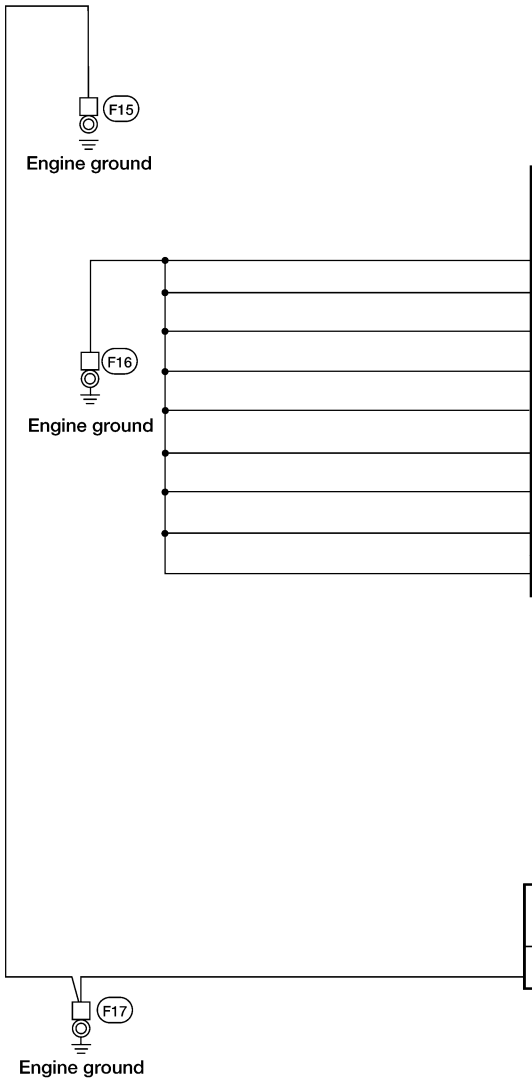

CONNECTOR NUMBER	CONNECT TO
F5	Ignition coil No. 1 (With power transistor)
F6	Ignition coil No. 2 (With power transistor)
F7	Ignition coil No. 4 (With power transistor)
F8	Ignition coil No. 3 (With power transistor)
F21	Condenser-2
F29	Park/neutral position (PNP) switch (Terminal No. 2) (With A/T)
F42	Park/neutral position (PNP) switch (Terminal No. 2) (With M/T)
F54	ECM (Terminal No. 106)
F54	ECM (Terminal No. 108)

CONNECTOR NUMBER	CONNECT TO
F54	ECM (Terminal No. 115)

WKIA0085E

ENGINE CONTROL HARNESS (VQ35DE)

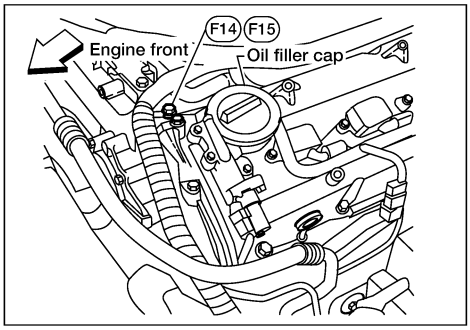

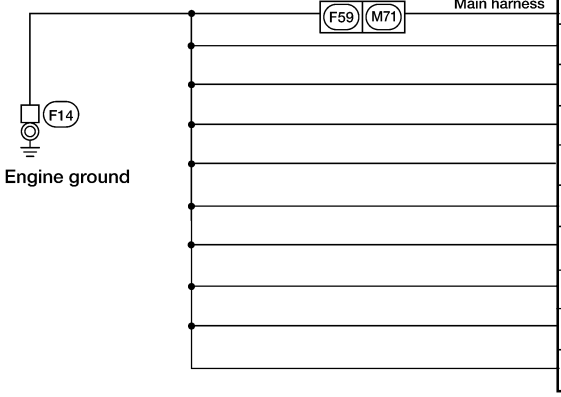

CONNECTOR NUMBER	CONNECT TO
M22	Data link connector (Terminal No. 5)
F11	Crankshaft position sensor
F12	Heated oxygen sensor 2 (Rear) (Bank 2)
F13	Heated oxygen sensor 2 (Rear) (Bank 1)
F23	Camshaft position sensor (PHASE) (Bank 2)
F48	Camshaft position sensor (PHASE) (Bank 1)
F54	ECM (Terminal No. 48)
F54	ECM (Terminal No. 57)
F57	TCM (Terminal No. 25)
F57	TCM (Terminal No. 48)

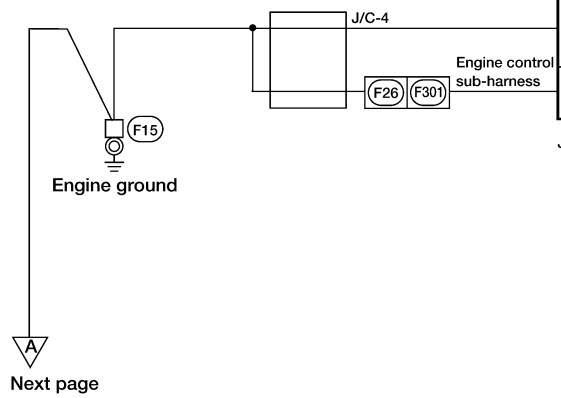

CONNECTOR NUMBER	CONNECT TO
F50	Electric throttle control actuator (Throttle control motor) (Shield wire)
F302	Knock sensor (Shield wire)

J/C: Joint connector

WKIA0086E

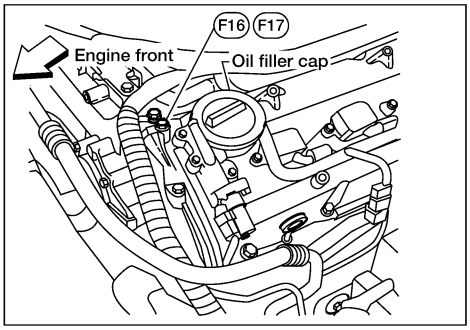

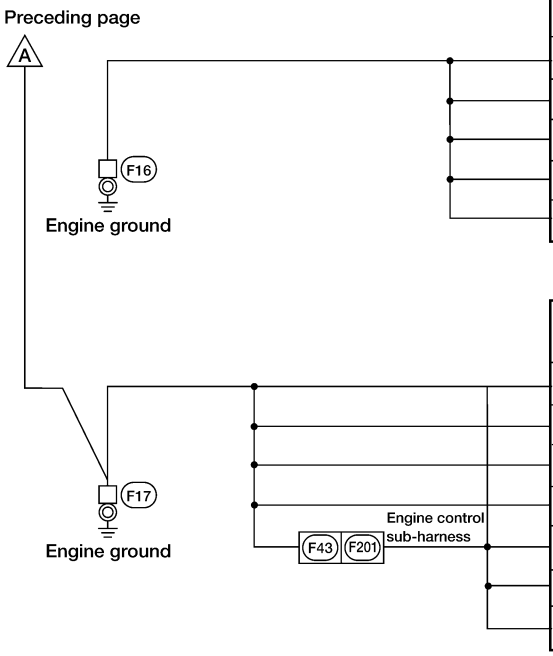

CONNECTOR NUMBER	CONNECT TO
F6	Ignition coil No. 2 (With power transistor)
F7	Ignition coil No. 4 (With power transistor)
F8	Ignition coil No. 6 (With power transistor)
F21	Condenser-2
F54	ECM (Terminal No. 107)

CONNECTOR NUMBER	CONNECT TO
F29	Park/neutral position (PNP) switch (Terminal No. 2) (With A/T)
F42	Park/neutral possition (PNP) switch (Terminal No. 2) (With M/T)
F54	ECM (Terminal No. 106)
F54	ECM (Terminal No. 108)
F202	Ignition coil No. 1 (With power transistor)
F203	Ignition coil No. 3 (With power transistor)
F204	Ignition coil No. 5 (With power transistor)

WKIA0087E

BODY HARNESS

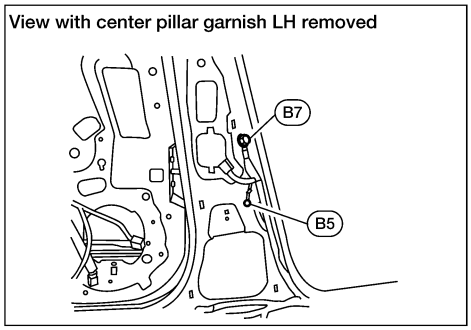

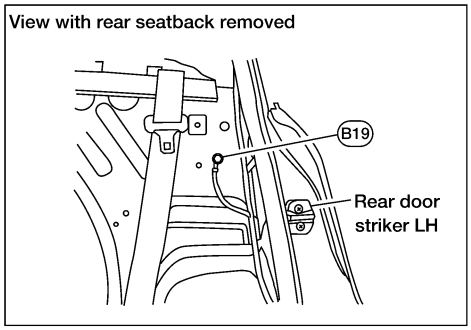

CONNECTOR NUMBER	CONNECT TO
B9	Air bag diagnosis sensor unit (Shield wire) (Terminal No. 44) (With side air bags)

B5
Body ground

CONNECTOR NUMBER	CONNECT TO
B11	Power seat
B12	Seat belt buckle switch LH
B13	Heated seat LH
B16	Fuel level sensor unit and fuel pump (Fuel pump) (Terminal No. -)
B24	High mounted stop lamp (Without rear air spoiler and without Bose audio)
B30	High mounted stop lamp (With rear air spoiler)
B31	License lamp LH
B32	Trunk lamp switch and truck release solenoid
B33	License lamp LH
B34	Trunk key cylinder switch (Unlock switch)
B35	Rear combination lamp LH (Turn signal, tail, back-up and stop lamp) (Terminal No. 5)
B36	Rear combination lamp RH (Turn signal, tail, back-up and stop lamp) (Terminal No. 5)
D203	Rear power window switch LH

J/C: Joint connector

B7
Body ground

J/C-7

J/C-7

Rear door harness LH

B6 D201

CONNECTOR NUMBER	CONNECT TO
B17	Condenser-1 (Fuel pump)

B19
Body ground

WKIA0088E

BODY NO. 2 HARNESS

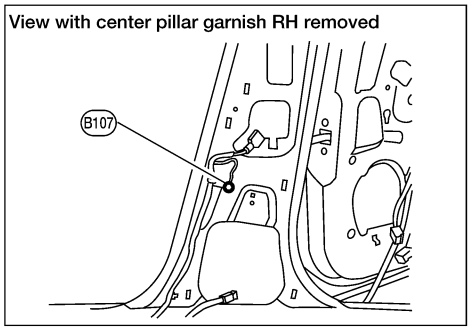

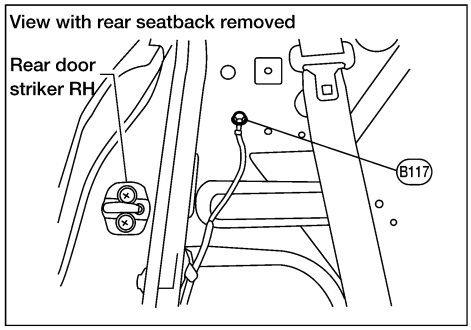

CONNECTOR NUMBER	CONNECT TO
B113	Air bag diagnosis sensor unit (Shield wire) (Terminal No. 40) (With side air bags)

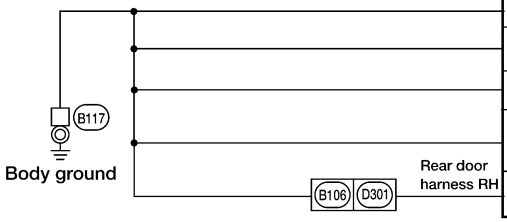

CONNECTOR NUMBER	CONNECT TO
B110	Seat belt buckle switch RH
B111	Heated seat RH
B127	Bose speaker amplifier
B129	High mounted stop lamp (Without rear air spoiler, with Bose audio)
B303	Rear power window switch RH

WKIA0089E

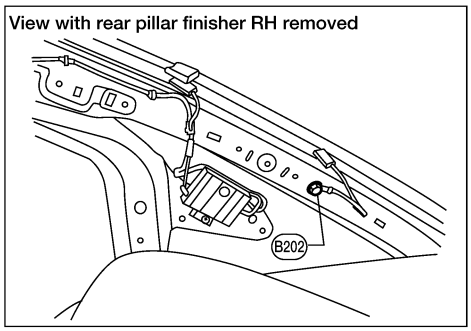

CONNECTOR NUMBER	CONNECT TO
B201	Rear window defogger (-)

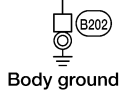

WKIA0090E

HARNESS

PFP:24010

Harness Layout

EKS002LF

HOW TO READ HARNESS LAYOUT

The following Harness Layouts use a map style grid to help locate connectors on the drawings:

- Main Harness
- Engine Room Harness LH (Engine Compartment)
- Engine Room Harness RH (Engine Compartment)
- Engine Control Harness (QR25DE)
- Engine Control Harness (VQ35DE)
- Body Harness
- Body No. 2 Harness

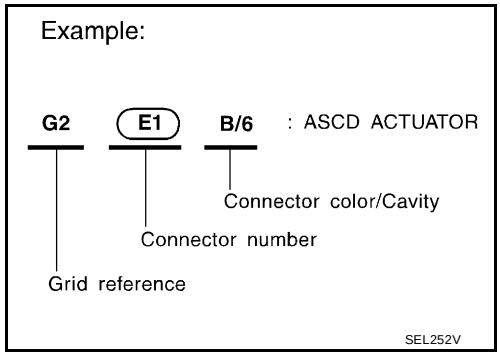

To use the grid reference

1. Find the desired connector number on the connector list.
2. Find the grid reference.
3. On the drawing, find the crossing of the grid reference letter column and number row.
4. Find the connector number in the crossing zone.
5. Follow the line (if used) to the connector.

CONNECTOR SYMBOL

Main symbols of connector (in Harness Layout) are indicated below.

Connector type	Water proof type		Standard type	
	Male	Female	Male	Female
● Cavity: Less than 4 ● Relay connector				
● Cavity: From 5 to 8				
● Cavity: More than 9				
● Ground terminal etc.	—			

OUTLINE

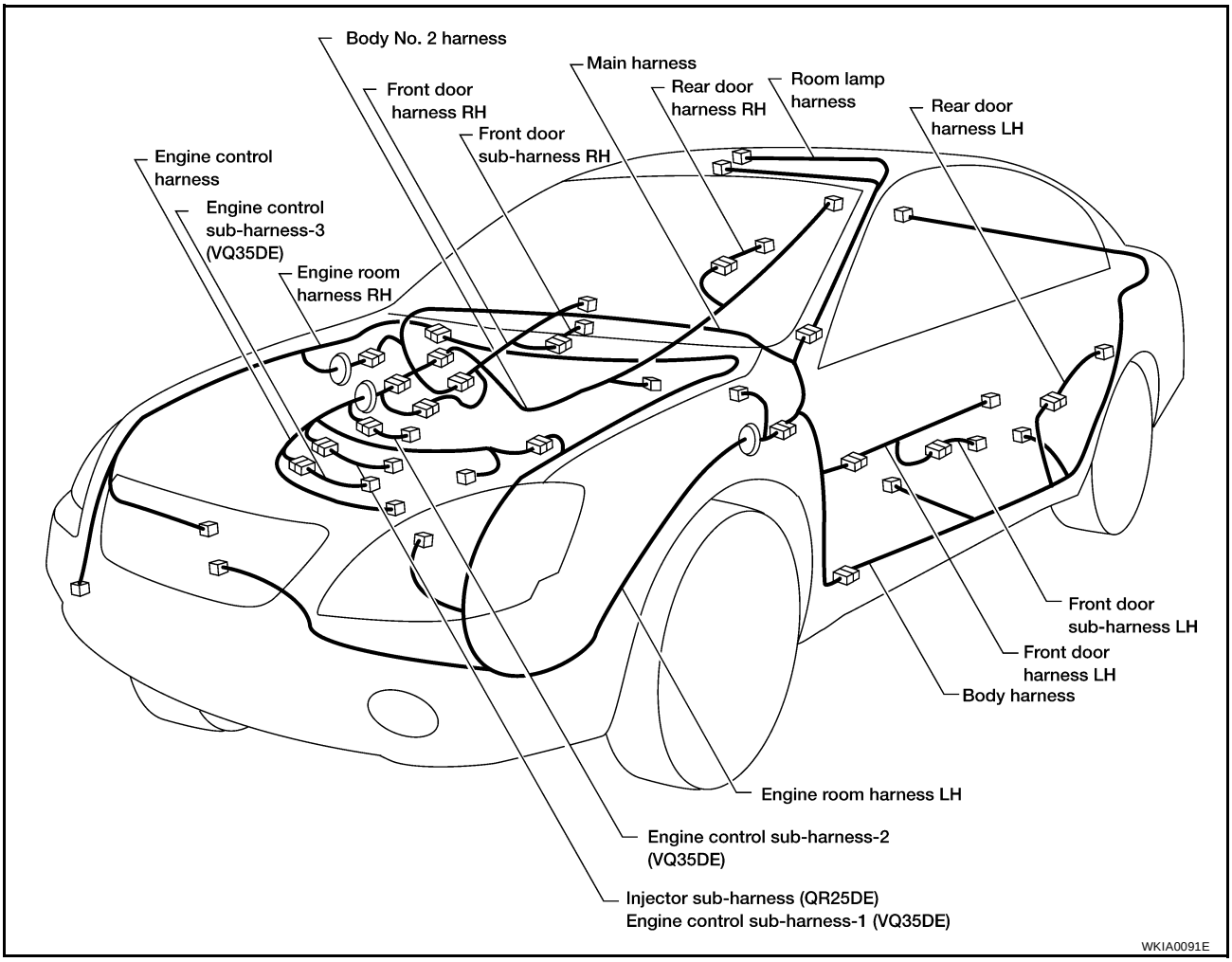
Body No. 2 harness
Main harness
Front door harness RH
Rear door harness RH
Room lamp harness
Rear door harness LH
Front door sub-harness RH
Engine control harness
Engine control sub-harness-3 (VQ35DE)
Engine room harness RH
Front door sub-harness LH
Front door harness LH
Body harness
Engine room harness LH
Engine control sub-harness-2 (VQ35DE)
Injector sub-harness (QR25DE)
Engine control sub-harness-1 (VQ35DE)
WKIA0091E

MAIN HARNESS

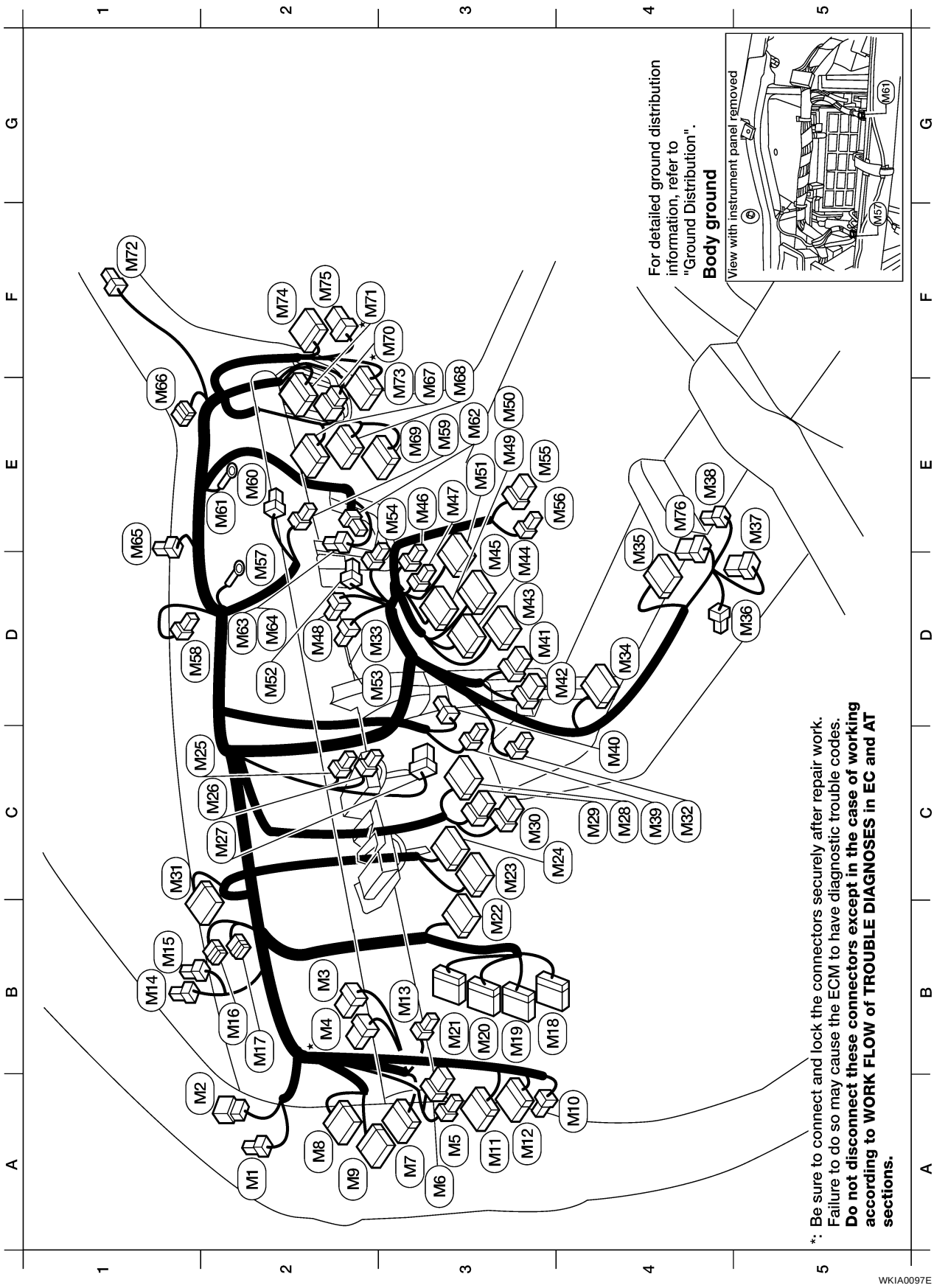

A2	M1	BR/2	: Tweeter LH
A2	M2	W/6	: To R1 (without vanity mirror lamps)
A2	M2	W/8	: To R1 (with vanity mirror lamps)
B2	M3	W/8	: Fuse block (J/B)
B2 *	M4	W/16	: Fuse block (J/B)
A3	M5	W/3	: Illumination control switch
A3	M6	GY/6	: TCS ON/OFF switch (with TCS)A3
A3	M7	W/18	: To E28
A2	M8	W/16	: To D2
A2	M9	W/12	: To D1
A4	M10	Y/4	: To E29
A3	M11	W/16	: To B1
A3	M12	W/16	: To B2
B3	M13	L/4	: Heated seat relay
B1	M14	BR/2	: Security indicator lamp
B1	M15	W/3	: Auto light sensor (with auto lights)
B2	M16	BR/20	: Joint connector-1
B2	M17	P/20	: Joint connector-2
B4	M18	BR/24	: BCM (Body control module)
B3	M19	W/16	: BCM (Body control module)
B3	M20	W/16	: BCM (Body control module)
B3	M21	W/12	: BCM (Body control module)
B3	M22	W/16	: Data link connector
C3	M23	W/24	: Combination meter
C4	M24	BR/24	: Combination meter
C2	M25	B/2	: Ignition key illumination
C2	M26	W/4	: Key switch and key lock solenoid
C2	M27	W/8	: Immobilizer control unit
C4	M28	W/16	: Combination switch
C4	M29	Y/6	: Combination switch
C3	M30	GY/8	: Combination switch
C1	M31	GY/10	: Shift lock control unit (with A/T)
C4	M32	W/2	: In-vehicle sensor (with auto A/C)
D3	M33	W/2	: Intake sensor (with auto A/C)
D4	M34	W/12	: A/T device
E4	M35	Y/28	: Air bag diagnosis sensor unit
D4	M36	B/1	: Parking brake switch
E5	M37	W/6	: Heated seat switch LH
E4	M38	B/2	: Power socket
C4	M39	W/3	: Air mix door motor (with auto A/C)
C4	M40	W/3	: Mode door motor
D3	M41	W/6	: Fan switch (with manual A/C or heater only)
D3	M42	W/6	: Rear window defogger switch
D3	M43	W/10	: Audio unit
E3	M44	W/6	: Audio unit
E3	M45	W/16	: Audio unit
E3	M46	W/4	: (Not used)
E3	M47	B/2	: (Not used)
D2	M48	W/2	: Antenna amplifier
E3	M49	GY/20	: A/C auto amp. (with auto A/C)
F3	M50	GY/16	: A/C auto amp. (with auto A/C)
E3	M51	W/12	: A/C control unit (with manual A/C or heater only)
D2	M52	W/3	: Thermo control amplifier (with auto A/C)
D3	M53	W/2	: Intake sensor (with manual A/C)
E3	M54	W/2	: Trunk lid opener cancel switch
E3	M55	W/8	: Hazard switch
E4	M56	B/2	: Cigarette lighter
D2	M57	-	: Body ground
D2	M58	W/3	: Intake door motor
E3	M59	BR/2	: Glove box lamp
E2	M60	Y/4	: Front passenger air bag module
E2	M61	-	: Body ground
E3	M62	W/2	: Blower motor
D2	M63	BR/4	: Blower motor resistor (with manual A/C)
D2	M64	W/4	: Fan control amp. (with auto A/C)
E1	M65	B/2	: Sunload sensor (with auto A/C)
E2	M66	BR/20	: Joint connector-3
E3	M67	W/10	: To E131
E3	M68	W/10	: To B102
E3	M69	W/18	: To B104
F3 *	M70	W/6	: To F58
F3 *	M71	W/24	: To F59
F1	M72	BR/2	: Tweeter RH
F3	M73	W/16	: To B103
F2	M74	W/10	: To D102
F2	M75	W/8	: To D101
E4	M76	W/6	: Heated seat switch RH

*: Be sure to connect and lock the connectors securely after repair work. Failure to do so may cause the ECM to have diagnostic trouble codes. **Do not disconnect these connectors except in the case of working according to WORK FLOW of TROUBLE DIAGNOSES in EC and AT sections.**

WKIA0098E

ENGINE ROOM LH HARNESS

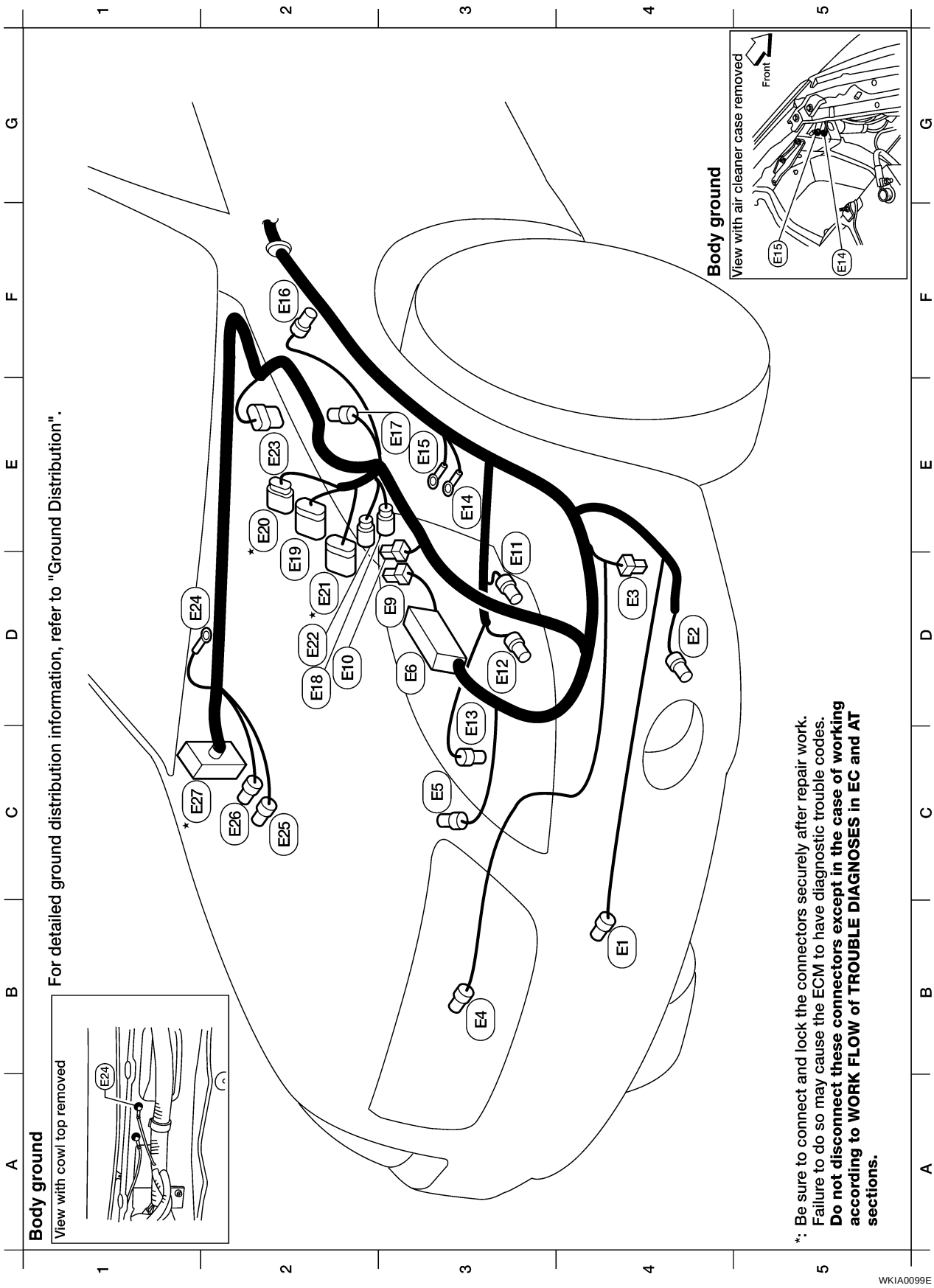

B4	E1	B/2	: Ambient sensor
D4	E2	BR/2	: Front fog lamp LH
D4	E3	B/1	: Horn (low)
B3	E4	Y/2	: Crash zone sensor
C3	E5	GY/2	: Hood switch
D3	E6	-	: Fuse and fusible link box
	H-1	W/3	: Horn relay (inside fuse and fusible link box)
D3	E9	BR/2	: Fusible link box (battery)
D2	E10	GY/2	: Fusible link box (battery)
E3	E11	B/2	: Headlamp LH (high)
D3	E12	B/3	: Front combination lamp LH
D3	E13	B/2	: Headlamp LH (low) (conventional type)
D3	E13	BR/2	: Headlamp LH (low) (xenon type)
E3	E14	-	: Body ground
E3	E15	-	: Body ground
F2	E16	GY/2	: Brake fluid level switch
E3	E17	GY/2	: Dropping resistor (with A/T)
D2	E18	BR/2	: Front wheel sensor LH
D2	*E19	GY/9	: To F33
E2	*E20	B/8	: To F32
D2	*E21	GY/10	: To F34
D2	E22	B/2	: To F35 (with A/T)
E2	E23	GY/6	: Wiper motor
D2	E24	-	: Body ground
C2	E25	BR/1	: To E128
C2	E26	GY/1	: To E127
C1	*E27	SMJ	: To E130

*: Be sure to connect and lock the connectors securely after repair work. Failure to do so may cause the ECM to have diagnostic trouble codes. **Do not disconnect these connectors except in the case of working according to WORK FLOW of TROUBLE DIAGNOSES in EC and AT sections.**

WKIA0356E

Passenger Compartment

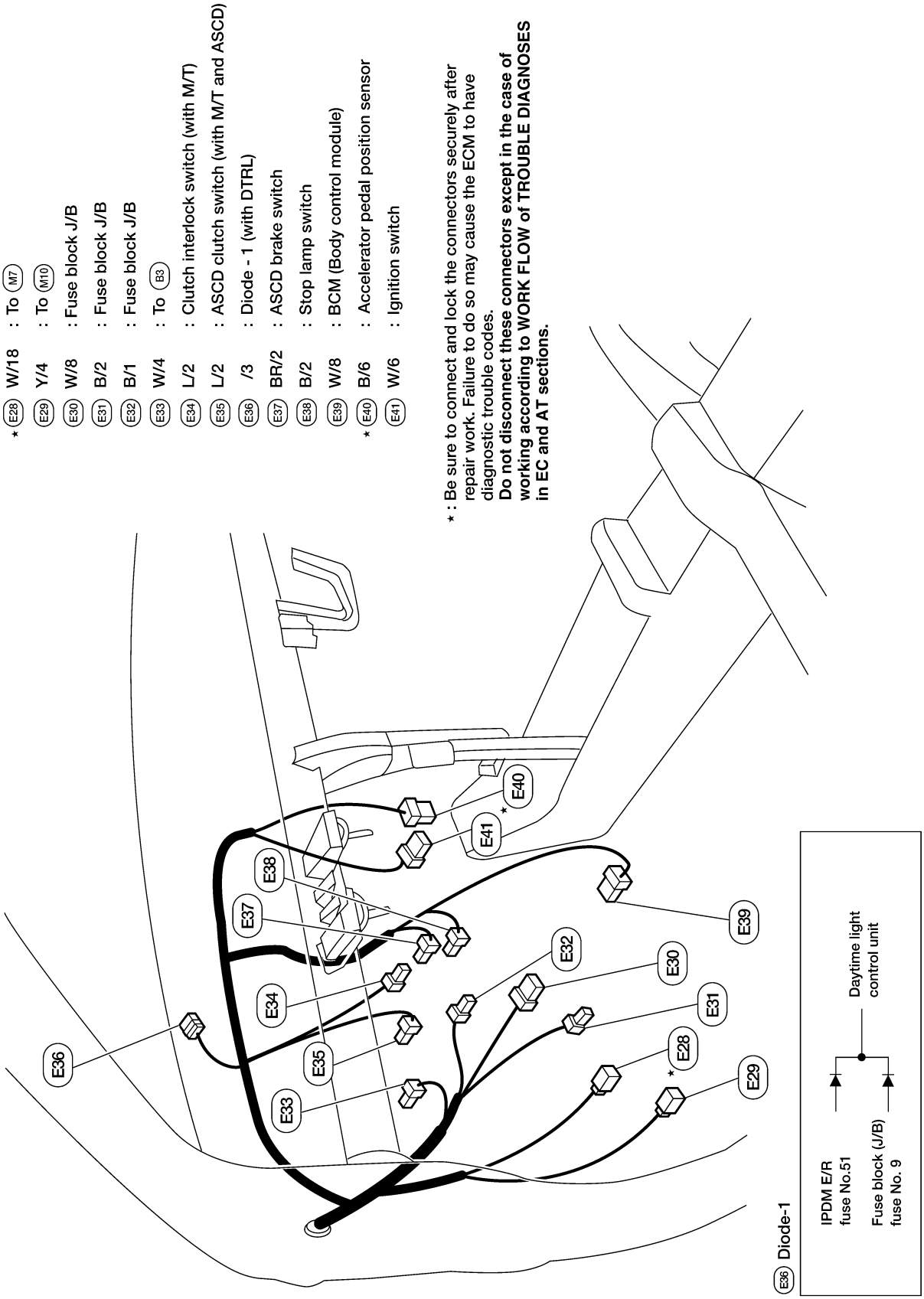

ENGINE ROOM RH HARNESS

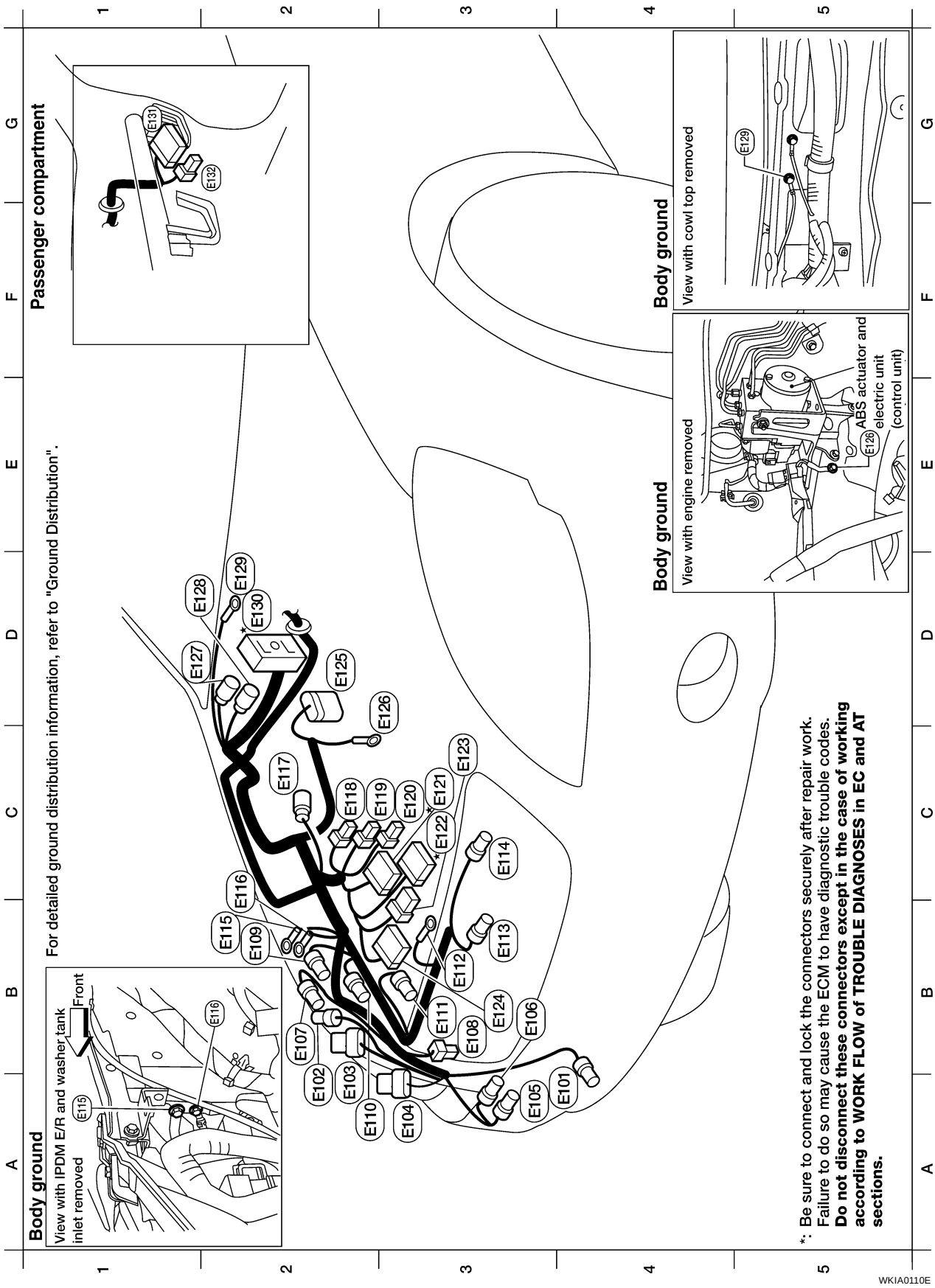

A4	E101	BR/2	:	Front fog lamp RH
A2	E102	GY/4	:	Daytime light control unit (for Canada)
A2	E103	GY/6	:	Daytime light control unit (for Canada)
A3	E104	GY/8	:	Daytime light control unit (for Canada)
A3	E105	GY/2	:	Front washer motor
B3	E106	BR/2	:	Washer fluid level sensor
B2	E107	B/2	:	Headlamp RH (low) (conventional type)
B2	E107	BR/2	:	Headlamp RH (low) (xenon type)
B3	E108	B/1	:	Horn (high)
B2	E109	B/3	:	Front combination lamp RH
A2	E110	B/2	:	Headlamp RH (high)
B3	E111	B/3	:	Refrigerant pressure sensor
B3	E112	-	:	Generator (ground)
B3	E113	GY/4	:	Cooling fan motor-1
C3	E114	GY/4	:	Cooling fan motor-2
B2	E115	-	:	Body ground
C2	E116	-	:	Body ground
C2	E117	GY/2	:	Front wheel sensor RH
C2	E118	B/4	:	IPDM E/R (Intelligent Power Distribution Module Engine Room)
C3	E119	W/4	:	IPDM E/R (Intelligent Power Distribution Module Engine Room)
C3	E120	B/2	:	IPDM E/R (Intelligent Power Distribution Module Engine Room)
C3	* E121	W/12	:	IPDM E/R (Intelligent Power Distribution Module Engine Room)
C3	* E122	GY/16	:	IPDM E/R (Intelligent Power Distribution Module Engine Room)
C3	E123	W/6	:	IPDM E/R (Intelligent Power Distribution Module Engine Room)
C3	E124	W/12	:	IPDM E/R (Intelligent Power Distribution Module Engine Room)
D2	E125	B/31	:	ABS actuator and electric unit (with ABS or TCS)
D3	E126	-	:	Body ground
D2	E127	GY/1	:	To E26
D2	E128	BR/1	:	To E25
D2	E129	-	:	Body ground
D2	* E130	SMJ	:	To E25
G1	E131	W/10	:	To M67 (With ABS or TCS)
G2	E132	W/4	:	To B101 (With ABS or TCS)

*: Be sure to connect and lock the connectors securely after repair work. Failure to do so may cause the ECM to have diagnostic trouble codes. **Do not disconnect these connectors except in the case of working according to WORK FLOW of TROUBLE DIAGNOSES in EC and AT sections.**

WKIA0357E

ENGINE CONTROL HARNESS (QR25DE)

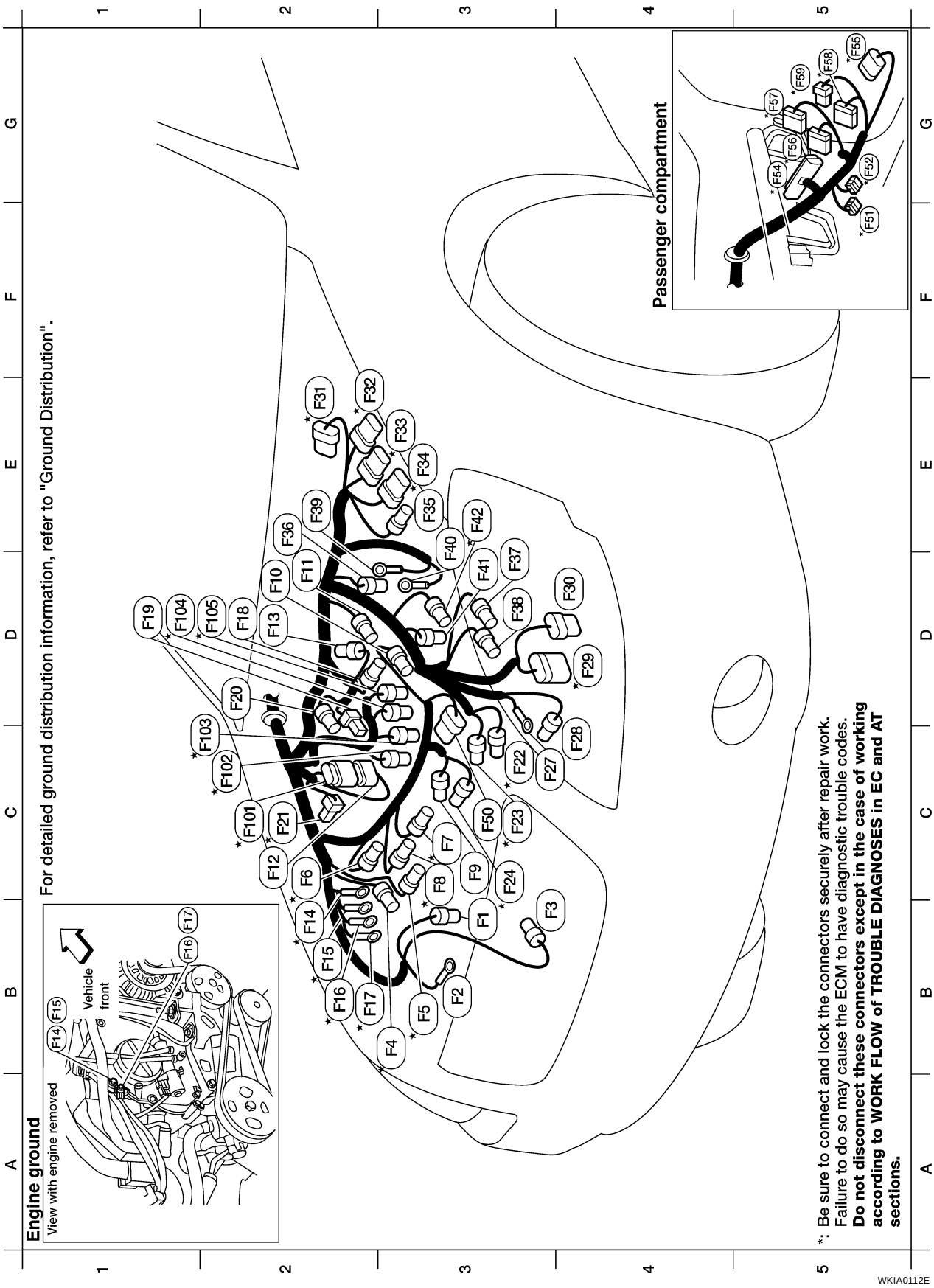

B3	F1	GY/2	:	Generator
B3	F2	-	:	Generator
B4	F3	B/1	:	A/C compressor
B3	*F4	G/2	:	Intake valve timing control solenoid valve
B3	*F5	GY/3	:	Ignition coil No. 1 (with power transistor)
C2	*F6	GY/3	:	Ignition coil No. 2 (with power transistor)
C3	*F7	GY/3	:	Ignition coil No. 4 (with power transistor)
C3	*F8	GY/3	:	Ignition coil No. 3 (with power transistor)
C3	*F9	B/3	:	Camshaft position sensor (PHASE)
D2	*F10	L/2	:	EVAP canister purge volume control solenoid valve
D2	*F11	B/3	:	Crankshaft position sensor
C2	*F12	B/6	:	To F101
D2	F13	BR/2	:	VISA control solenoid valve
B2	*F14	-	:	Engine ground
B2	*F15	-	:	Engine ground
B2	*F16	-	:	Engine ground
B2	*F17	-	:	Engine ground
D2	F18	GY/2	:	Knock sensor
D1	F19	GY/1	:	Oil pressure switch
D2	F20	B/1	:	Power steering oil pressure switch
C2	*F21	GY/2	:	Condenser 2
C3	*F22	G/4	:	Heated oxygen sensor 1 (Front)
C3	*F23	L/4	:	Heated oxygen sensor 2 (Rear)
C3	*F24	GY/2	:	Engine coolant temperature sensor
C4	F27	-	:	Starter motor
C4	F28	GY/1	:	Starter motor
D4	*F29	B/10	:	Park/neutral position (PNP) switch (with A/T)
D4	F30	B/8	:	Terminal cord assembly (with A/T)
E2	*F31	GY/5	:	Mass air flow sensor
E3	*F32	B/8	:	To E20
E3	*F33	GY/9	:	To E19
E3	*F34	GY/10	:	To E21
E3	F35	B/2	:	To E22 (with A/T)
E2	F36	GY/2	:	Vehicle speed sensor
D3	F37	B/3	:	Turbine revolution sensor (with A/T)
D3	F38	B/3	:	Revolution sensor (with A/T)
E2	F39	-	:	Battery (positive)
D3	F40	-	:	Fusible link box (battery)
D3	F41	B/2	:	Back-up lamp switch (with M/T)
E3	*F42	B/2	:	Park/neutral position (PNP) switch (with M/T)
C3	*F50	G/6	:	Electric throttle control actuator
F5	*F51	L/12	:	Joint connector-4
G5	*F52	L/12	:	Joint connector-5
G5	*F54	SMJ	:	ECM
G5	*F55	W/12	:	To B105
G5	*F56	W/24	:	TCM (transmission control module) (with A/T)
G5	*F57	GY/24	:	TCM (transmission control module) (with A/T)
G5	*F58	W/6	:	To M70
G5	*F59	W/24	:	To M71
Engine control sub-harness				
C2	*F101	B/6	:	To F12
C2	*F102	GY/2	:	Injector No. 1
C2	*F103	GY/2	:	Injector No. 2
D1	*F104	GY/2	:	Injector No. 3
D2	*F105	GY/2	:	Injector No. 4

*: Be sure to connect and lock the connectors securely after repair work. Failure to do so may cause the ECM to have diagnostic trouble codes. **Do not disconnect these connectors except in the case of working according to WORK FLOW of TROUBLE DIAGNOSES in EC and AT sections.**

WKIA0113E

ENGINE CONTROL HARNESS (VQ35DE)

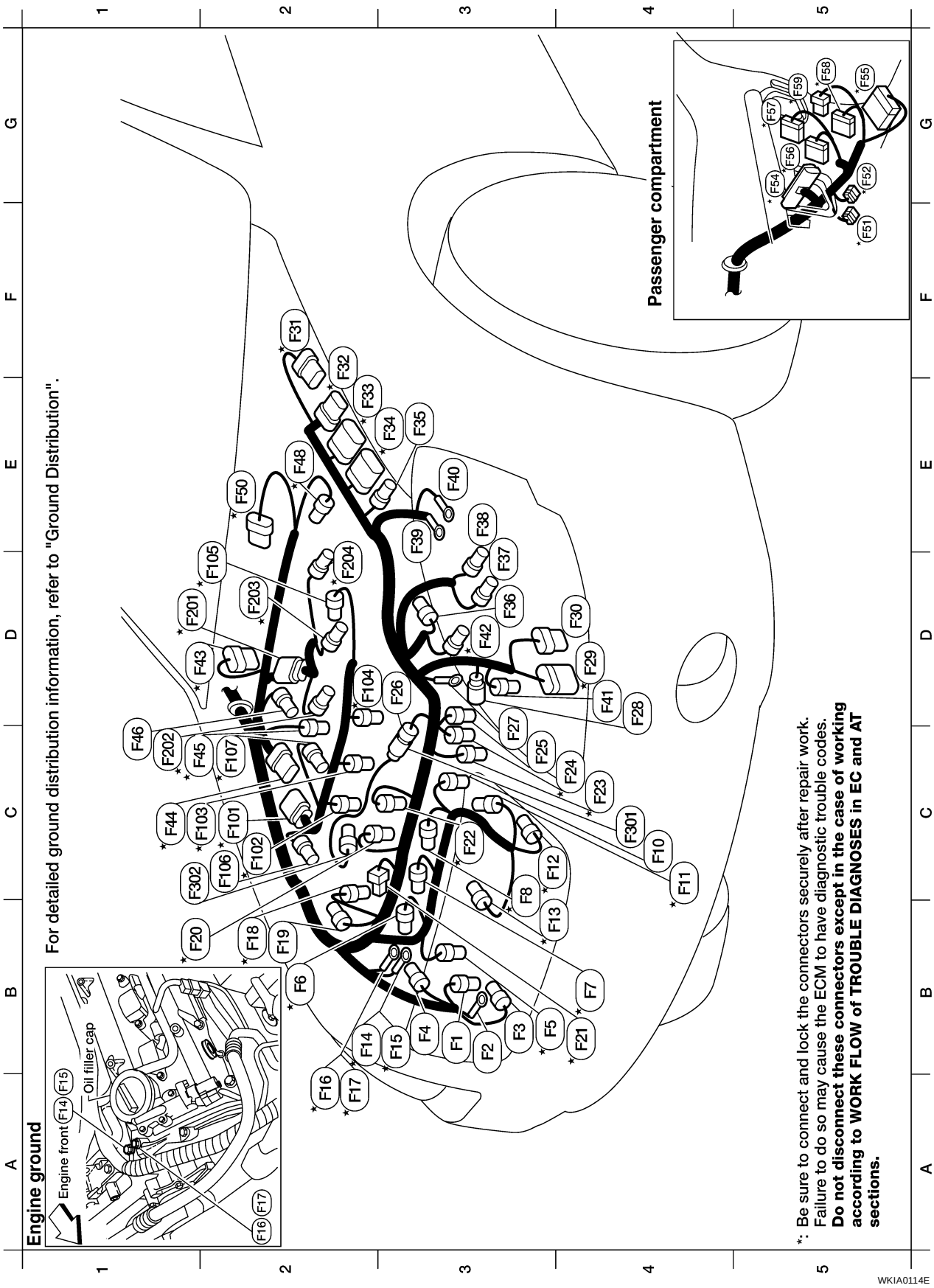

B3	F1	GY/2	: Generator
B3	F2	-	: Generator
B3	F3	B/1	: A/C compressor
B3*	F4	G/2	: Intake valve timing control solenoid valve (Bank 2)
B3*	F5	B/3	: Heated oxygen sensor 1 (Front) (Bank 2)
B2*	F6	GY/3	: Ignition coil No. 2 (with power transistor)
B4*	F7	GY/3	: Ignition coil No. 4 (with power transistor)
C3*	F8	GY/3	: Ignition coil No. 6 (with power transistor)
C4	F10	BR/3	: Front electronic controlled engine mount
C4*	F11	B/3	: Crankshaft position sensor
C3*	F12	G/4	: Heated oxygen sensor 2 (Rear) (Bank 2)
B3*	F13	L/4	: Heated oxygen sensor 2 (Rear) (Bank 1)
B2*	F14	-	: Engine ground
B3*	F15	-	: Engine ground
A2*	F16	-	: Engine ground
A2*	F17	-	: Engine ground
B2*	F18	GY/2	: Injector No. 2
B2	F19	B/2	: VIAS control solenoid valve
B2*	F20	GY/2	: Injector No. 4
B4*	F21	GY/2	: Condenser 2
C3*	F22	GY/2	: Injector No. 6
C4*	F23	B/3	: Camshaft position sensor (PHASE) (Bank 2)
C4*	F24	GY/2	: Engine coolant temperature sensor
C3	F25	BR/3	: Rear electronic controlled engine mount
C3	F26	B/2	: To F301
C3	F27	-	: Starter motor
D4	F28	GY/1	: Starter motor
D4	*F29	B/10	: Park/neutral position (PNP) switch (with A/T)
D4	F30	B/8	: Terminal cord assembly (with A/T)
F2	*F31	GY/5	: Mass air flow sensor
F2	*F32	B/8	: To E20
E3	*F33	GY/9	: To E19
E3	*F34	GY/10	: To E21
E3	F35	B/2	: To E22 (with A/T)
D3	F36	GY/2	: Vehicle speed sensor
D3	F37	B/3	: Turbine revolution sensor (with A/T)
E3	F38	B/3	: Revolution sensor (with A/T)
D3	F39	-	: Battery (positive)
E3	F40	-	: Fusible link box (battery)
D4	F41	B/2	: Back-up lamp switch (with M/T)
D3*	F42	B/2	: Park/neutral position (PNP) switch (with M/T)
D2	*F43	G/6	: To F201
C1	*F44	G/8	: To F101
C2	*F45	B/3	: Heated oxygen sensor 1 (Front) (Bank 1)
C1	F46	B/3	: Power steering oil pressure sensor
E2	*F48	G/3	: Camshaft position sensor (PHASE) (Bank 1)
E2	*F50	G/6	: Electric throttle control actuator
F5	*F51	L/12	: Joint connector-4
G5	*F52	L/12	: Joint connector-5
G5	*F54	SMJ	: ECM
G5	*F55	W/12	: To B105
G5	*F56	W/24	: TCM (transmission control module) (with A/T)
G5	*F57	GY/24	: TCM (transmission control module) (with A/T)
G5	*F58	W/6	: To M70
G5	*F59	W/24	: To M71

Engine control sub-harness-1

C2	*F101	G/8	: To F44
C2	*F102	GY/2	: Injector No. 1
C2	*F103	GY/2	: Injector No. 3
D2	*F104	GY/2	: Injector No. 5
D2	*F105	L/2	: EVAP canister purge volume control solenoid valve
C2	F106	B/1	: Oil pressure switch
C2	*F107	G/2	: Intake valve timing control solenoid valve (Bank 1)

Engine control sub-harness-2

D1	*F201	G/6	: To F43
C1	*F202	GY/3	: Ignition coil No. 1 (with power transistor)
D2	*F203	GY/3	: Ignition coil No. 3 (with power transistor)
D2	*F204	GY/3	: Ignition coil No. 5 (with power transistor)

Engine control sub-harness-3

C4	F301	B/2	: To F26
C1	F302	GY/2	: Knock sensor

*: Be sure to connect and lock the connectors securely after repair work. Failure to do so may cause the ECM to have diagnostic trouble codes. **Do not disconnect these connectors except in the case of working according to WORK FLOW of TROUBLE DIAGNOSES in EC and AT sections.**

WKIA0115E

BODY HARNESS

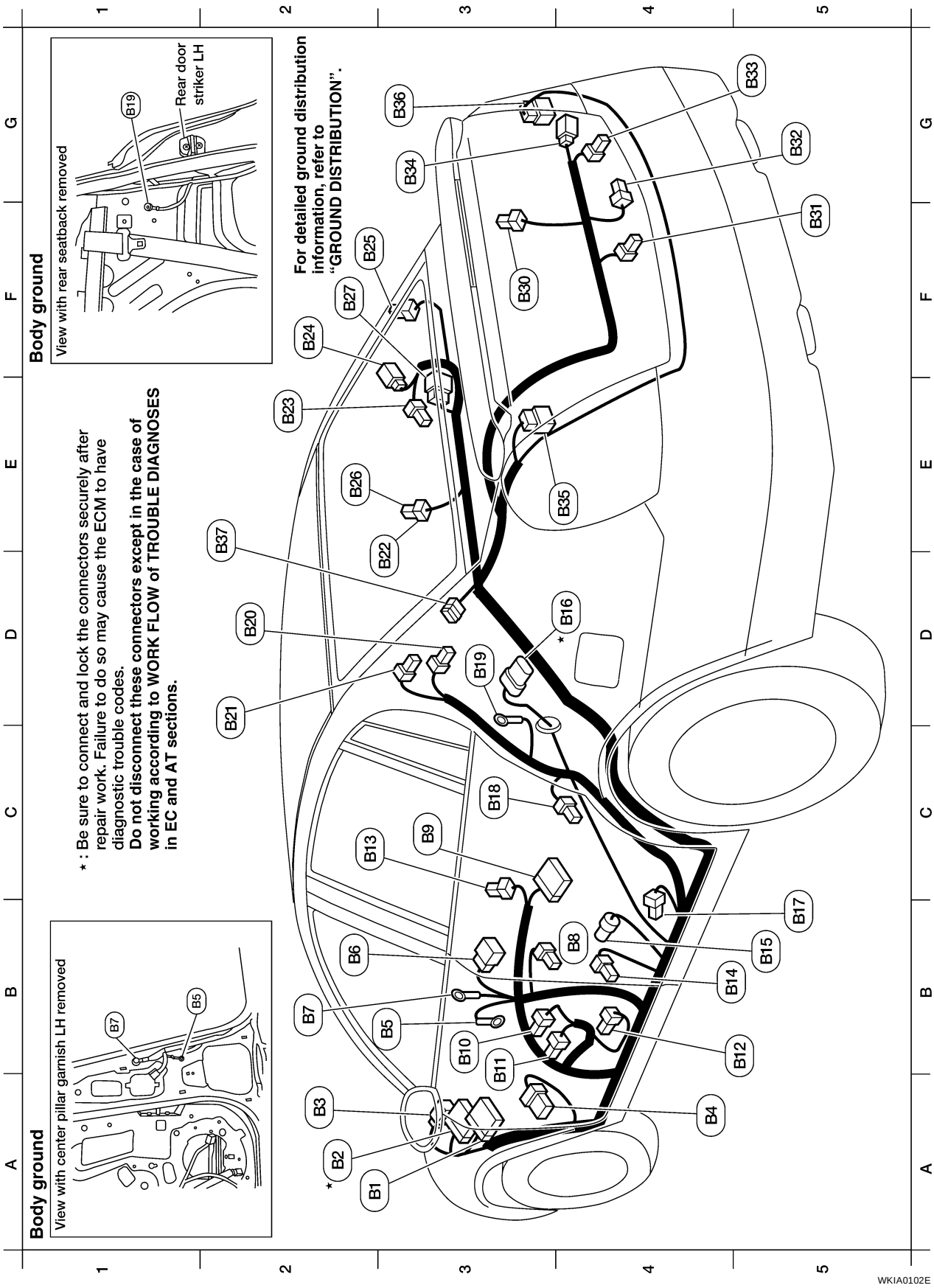

A2	B1	W/16	: To M11
A2 ★	B2	W/16	: To M12
A2	B3	W/4	: To E33
A4	B4	BR/6	: Rear window defogger relay
A3	B5	-	: Body ground
B3	B6	W/8	: To D201
B3	B7	-	: Body ground
B4	B8	W/3	: Front door switch LH
C3	B9	Y/12	: Air bag diagnosis sensor unit
B3	B10	Y/2	: Front LH side air bag module
B3	B11	W/2	: Power seat
B5	B12	W/3	: Seatbelt buckle switch LH
C3	B13	W/3	: Heated seat switch
B5	B14	Y/2	: Front LH seat belt pre-tensioner
B5	B15	Y/2	: LH side airbag (satellite) sensor
D4 ★	B16	GY/5	: Fuel level sensor unit and fuel pump
B5	B17	W/2	: Condenser-1
C3	B18	W/1	: Rear door switch LH
D3	B19	-	: Body ground
D2	B20	Y/2	: LH side curtain air bag module
C2	B21	W/1	: Rear window defogger condenser
D3	B22	BR/2	: Rear speaker LH (without Bose audio system)
E2	B23	W/2	: Truck room lamp (without Bose audio system)
F2	B24	W/2	: High mounted stop lamp (without rear spoiler and with Bose audio system)
F3	B25	BR/2	: Rear speaker RH (without Bose audio system)
E2	B26	W/2	: Subwoofer LH (with BOSE audio system)
F2	B27	W/8	: To B131 (with Bose audio system)
F3	B30	BR/2	: High mounted stop lamp (with rear spoiler)
F5	B31	BR/2	: License lamp LH
G5	B32	W/4	: Truck lamp switch and truck release solenoid
G5	B33	BR/2	: License lamp RH
G3	B34	W/2	: Truck key cylinder switch
E4	B35	W/6	: Rear combination lamp LH
G3	B36	W/6	: Rear combination lamp RH
E2	B37	B/20	: Joint connector-7

★ : Be sure to connect and lock the connectors securely after repair work. Failure to do so may cause the ECM to have diagnostic trouble codes.
Do not disconnect these connectors except in the case of working according to WORK FLOW of TROUBLE DIAGNOSES in EC and AT sections.

WKIA0103E

BODY NO. 2 HARNESS

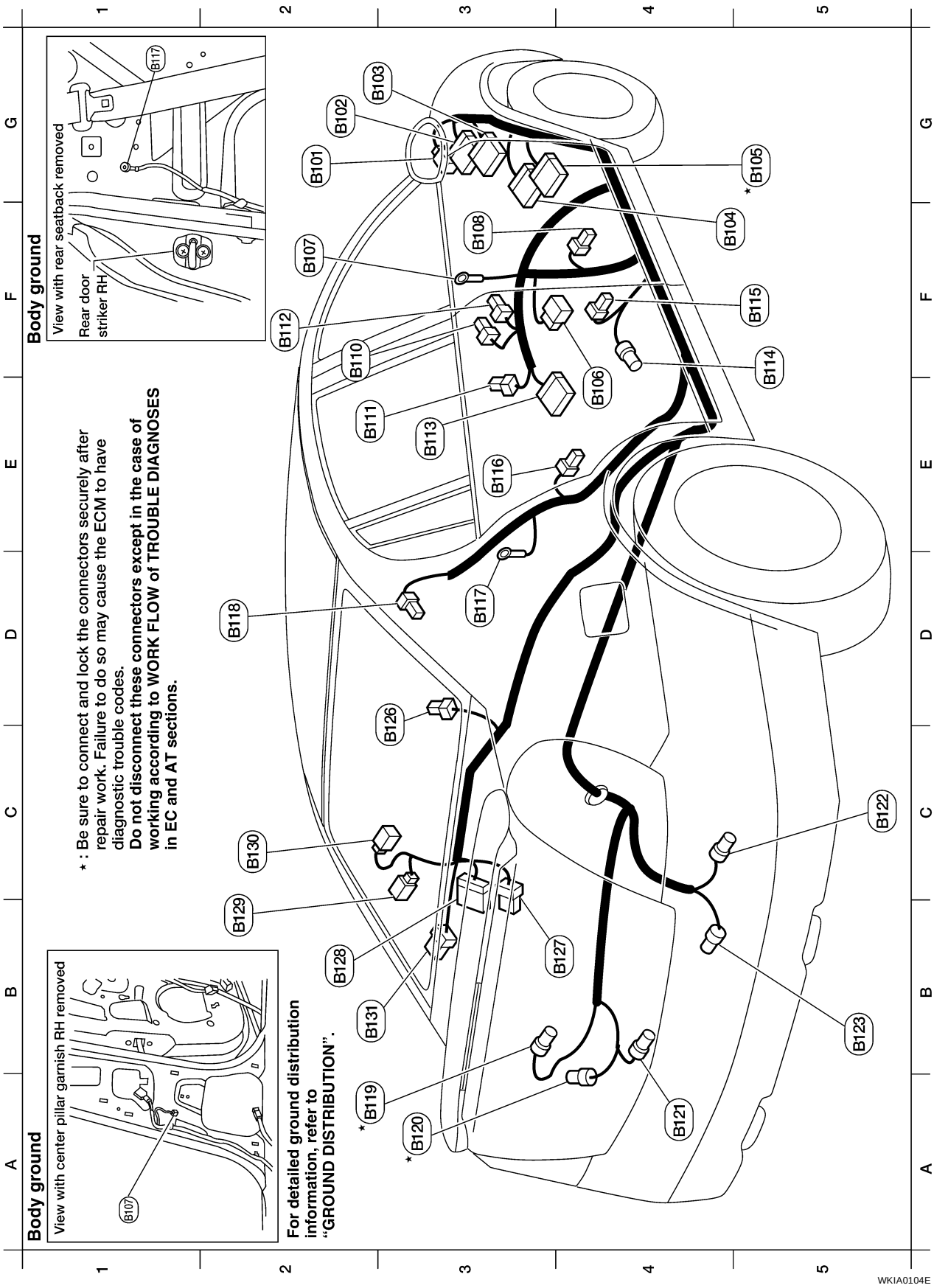

G2	B101	W/4	: To E132
G2	B102	W/10	: To M68
G2	B103	W/16	: To M73
F4	B104	W/18	: To M69
F5	★B105	W/12	: To F55
F4	B106	W/8	: To D301
F2	B107	-	: Body ground
F3	B108	W/3	: Front door switch RH
F2	B110	W/3	: Seat belt buckle switch RH
E2	B111	W/3	: Heated seat switch RH
F2	B112	Y/2	: Front RH side air bag module
E3	B113	Y/12	: Air bag diagnosis sensor unit
F5	B114	Y/2	: RH side air bag (satellite) sensor
F5	B115	Y/2	: Front RH seatbelt pre-tensionor
E3	B116	W/1	: Rear door switch RH
D3	B117	-	: Body ground
D2	B118	Y/2	: RH side curtain air bag module
A2	★B119	BR/3	: EVAP control system pressure sensor (QR25DE)
A2	★B119	GY/3	: EVAP control system pressure sensor (VQ35DE)
A3	★B120	G/2	: Vacuum cut valve bypass valve
A4	★B121	B/2	: EVAP canister vent control valve
C5	B122	GY/2	: Rear wheel sensor RH
B5	B123	BR/2	: Rear wheel sensor LH
C3	B126	W/2	: Subwoofer RH (with BOSE audio system)
B4	B127	GY/8	: Bose Speaker Amp.
B2	B128	B/24	: Bose Speaker Amp.
B2	B129	W/2	: High mounted stop lamp (without rear spoiler and with BOSE audio system)
C2	B130	W/2	: Truck room lamp (with BOSE audio system)
B2	B131	W/8	: To B27 (with BOSE audio system)

★ : Be sure to connect and lock the connectors securely after repair work. Failure to do so may cause the ECM to have diagnostic trouble codes.
Do not disconnect these connectors except in the case of working according to WORK FLOW of TROUBLE DIAGNOSES in EC and AT sections.

WKIA0105E

ROOM LAMP HARNESS

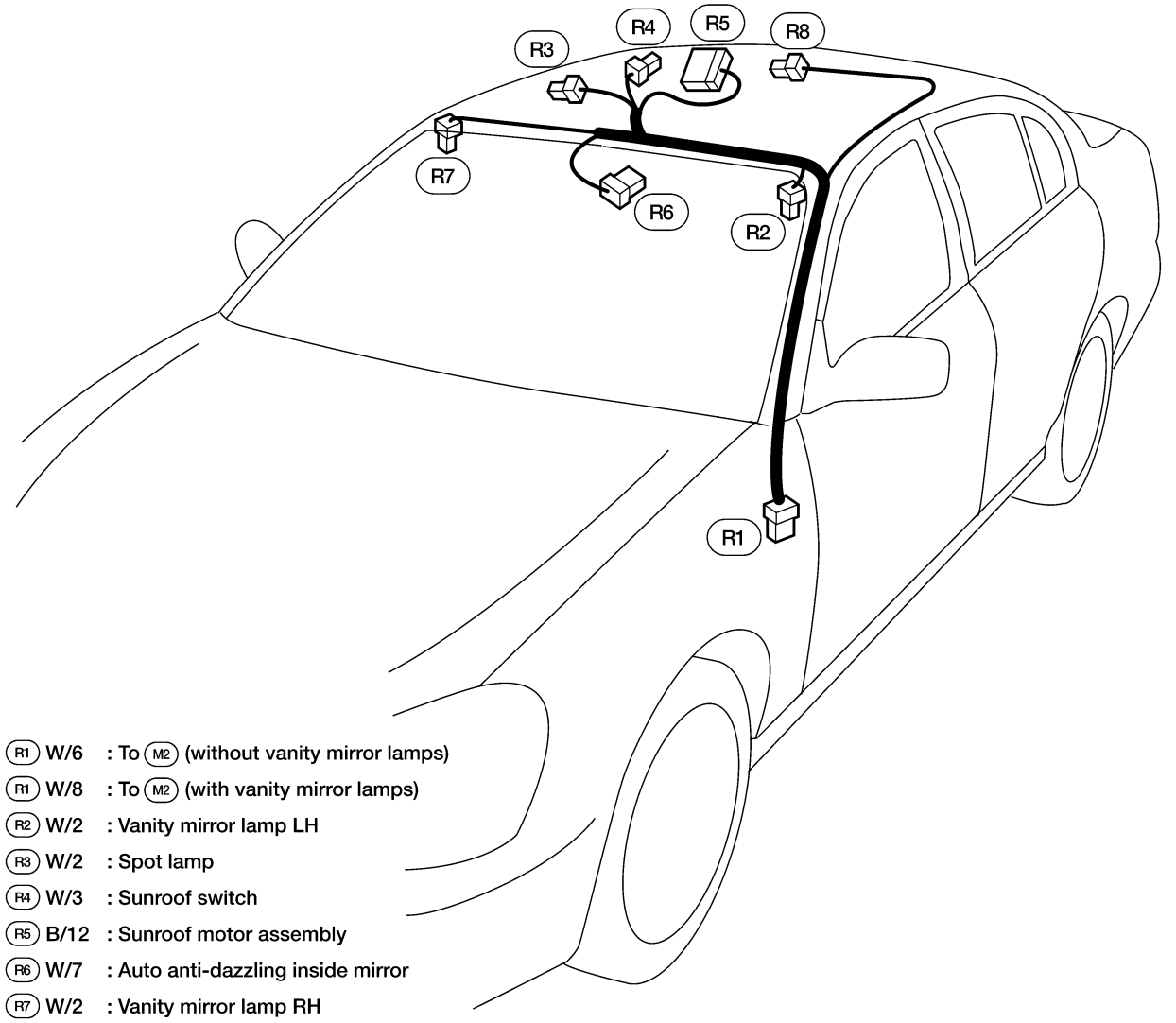

R1 W/6 : To M2 (without vanity mirror lamps)
R1 W/8 : To M2 (with vanity mirror lamps)
R2 W/2 : Vanity mirror lamp LH
R3 W/2 : Spot lamp
R4 W/3 : Sunroof switch
R5 B/12 : Sunroof motor assembly
R6 W/7 : Auto anti-dazzling inside mirror
R7 W/2 : Vanity mirror lamp RH
R8 W/2 : Room lamp

WKIA0092E

FRONT DOOR LH HARNESS

D1 W/12 : To M9
D2 W/16 : To M8
D3 W/2 : Front door speaker LH
D4 W/8 : Door mirror LH
D5 W/10 : Door mirror switch
D6 W/3 : Main power window and door lock/unlock switch
D7 W/16 : Main power window and door lock/unlock switch (With left front only power window anti-pinch system)
D7 BR/16 : Main power window and door lock/unlock switch (With left and right front power window anti-pinch system)
D8 W or BR/6 : Front power window motor LH
D9 W/4 : Trunk lid opener switch
D10 W/6 : To D50
D11 W/2 : Step lamp LH

Front door LH sub-harness

D50 W/6 : To D10
D51 GY/4 : Front door lock actuator LH

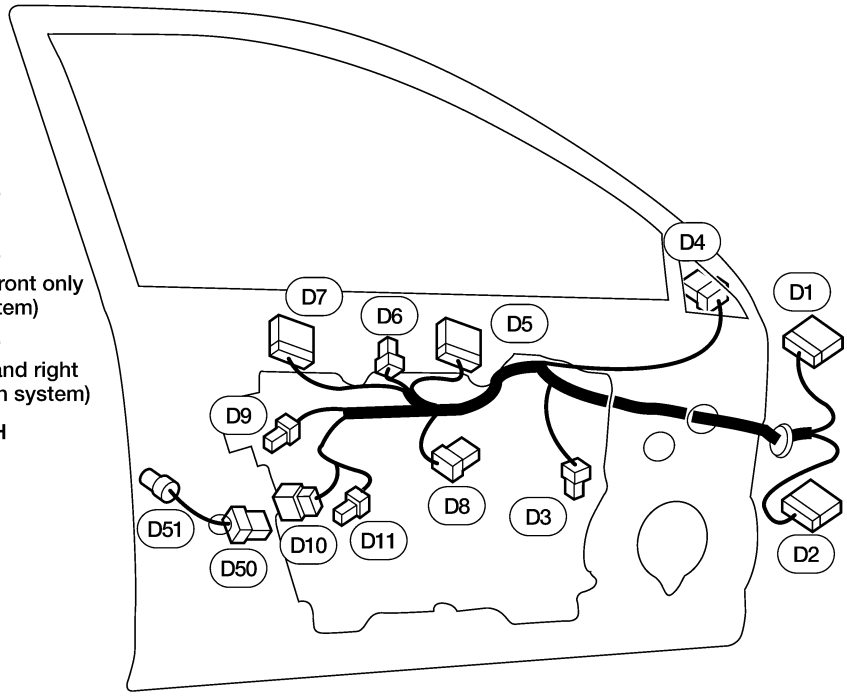

WKIA0093E

FRONT DOOR RH HARNESS

D101 W/8 : To M75
D102 W/10 : To M74
D103 W/2 : Front door speaker RH
D104 W/8 : Door mirror RH
D105 W/12 : Front power window switch RH
D106 BR/8 : Front power window switch RH (With left front only power window anti-pinch system)
D106 W/8 : Front power window switch RH (With left and right power window anti-pinch system)
D107 W or BR/6 : Front power window motor RH (With left and front only power window anti-pinch system)
D107 W/2 : Front power window switch RH (With left and right front power window anti-pinch system)
D108 W/2 : To D150
D109 W/2 : Step lamp RH

Front door RH sub-harness

D150 W/6 :To D108
D151 GY/4 :Front door lock actuator RH

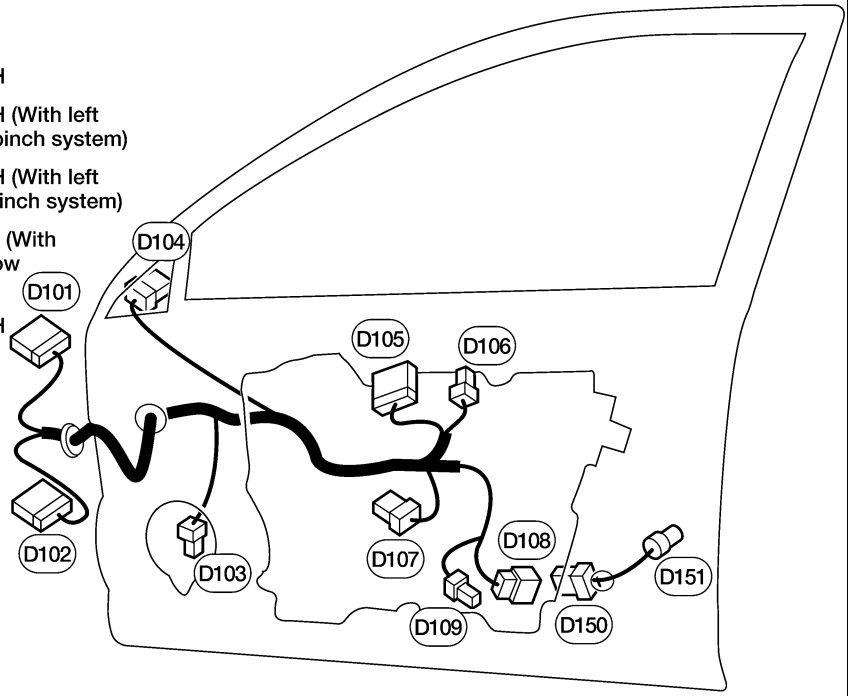

WKIA0094E

REAR DOOR LH HARNESS

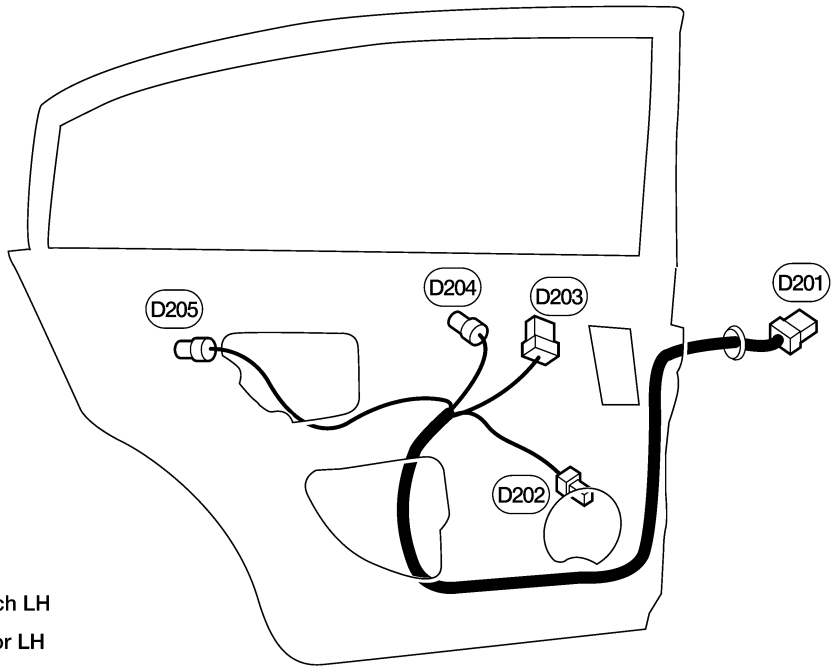

D201 W/8 : To B6
D202 BR/2 : Rear door speaker LH
D203 W/8 : Rear power window switch LH
D204 BR/2 : Rear power window motor LH
D205 GY/4 : Rear door lock actuator LH

WKIA0095E

REAR DOOR RH HARNESS

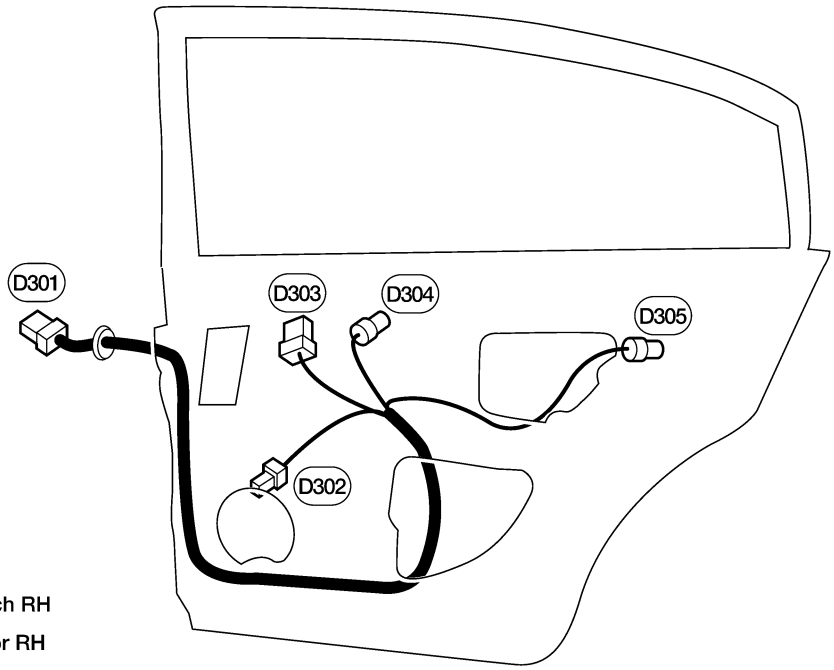

D301 W/8 : To B106
D302 BR/2 : Rear door speaker RH
D303 W/8 : Rear power window switch RH
D304 BR/2 : Rear power window motor RH
D305 GY/4 : Rear door lock actuator RH

WKIA0096E

Wiring Diagram Codes (Cell Codes)

EKS002LG

Use the chart below to find out what each wiring diagram code stands for.
Refer to the wiring diagram code in the alphabetical index to find the location (page number) of each wiring diagram.

Code	Section	Wiring Diagram Name
1STSIG	AT	A/T 1st Signal
2NDSIG	AT	A/T 2nd Signal
3RDSIG	AT	A/T 3rd Signal
4THSIG	AT	A/T 4th Signal
A/C,A	ATC	Auto Air Conditioner
A/C,M	MTC	Manual Air Conditioner
A/LIGHT	LT	Auto Light Control
ABS	BRC	Anti-Lock Brake System
APPS1	EC	Accelerator Pedal Position Sensor
APPS2	EC	Accelerator Pedal Position Sensor
APPS3	EC	Accelerator Pedal Position Sensor
ASCBOF	EC	ASCD Brake Switch
ASC/BS	EC	ASCD Brake Switch
ASCIND	EC	ASCD Indicator
ASC/SW	EC	ASCD Steering Switch
AT/IND	DI	A/T Indicator Lamp
AUDIO	AV	Audio
B/COMP	DI	Board Computer
BAF/TS	AT	A/T Fluid Temperature Sensor and TCM Power Supply
BACK/L	LT	Back-up Lamp
BRK/SW	EC	Brake Switch
BYPS/V	EC	Vacuum Cut Valve Bypass Valve
CAN	AT	CAN Communication Line
CAN	EC	CAN Communication Line
CAN	LAN	CAN System
CHARGE	SC	Charging System
CHIME	DI	Warning Chime
CIGAR	WW	Cigarette Lighter
COOL/F	EC	Cooling Fan Control
D/LOCK	BL	Power Door Lock
DEF	GW	Rear Window Defogger
DLC	EC	Data Link Connector
DTRL	LT	Headlamp - With Daytime Light System
ECM/PW	EC	ECM Power Supply for Back-Up
ECTS	EC	Engine Coolant Temperature Sensor
ENGSS	AT	Engine Speed Signal
EMNT	EC	Engine Mount
ETC1	EC	Electric Throttle Control Function
ETC2	EC	Throttle Control Motor Relay
ETC3	EC	Throttle Control Motor
F/FOG	LT	Front Fog Lamp
F/PUMP	EC	Fuel Pump
FLS1	EC	Fuel Level Sensor Function (SLOSH)
FLS2	EC	Fuel Level Sensor Circuit
FLS3	EC	Fuel Level Sensor Circuit (Ground Signal)
FTS	AT	A/T Fluid Temperature Sensor
FTTS	EC	Fuel tank Temperature Sensor

FUEL	EC	Fuel Injection System Function
FUELB1	EC	Fuel Injection System Function (Bank 1)
FUELB2	EC	Fuel Injection System Function (Bank 2)
H/LAMP	LT	Headlamp
H/MIRR	GW	Door Mirror with Heated Mirror
HEATER	MTC	Heater System
HO2S1	EC	Heated Oxygen Sensor 1 (Front)
HO2S1H	EC	Heated Oxygen Sensor 1 (Front) Heater
HO2S2	EC	Heated Oxygen Sensor 2 (Rear)
HO2S2H	EC	Heated Oxygen Sensor 2 (Rear) Heater
HORN	WW	Horn
HSEAT	SE	Heated Seat
I/MIRR	GW	Inside Mirror (Auto-Anti Dazzling Mirror)
IATS	EC	Intake Air Temperature Sensor
IGNSYS	EC	Ignition System
ILL	LT	Illumination
INJECT	EC	Injector
INT/L	LT	Spot, Vanity Mirror and Trunk Room Lamps
IVC	EC	Intake Valve Timing Control Solenoid Valve
IVCB1	EC	Intake Valve Timing Control Solenoid Valve Bank 1
IVCB2	EC	Intake Valve Timing Control Solenoid Valve Bank 2
IVCSB1	EC	Intake Valve Timing Control Position Sensor Bank 1
IVCSB2	EC	Intake Valve Timing Control Position Sensor Bank 2
KEYLES	BL	Remote Keyless Entry System
KS	EC	Knock Sensor
LPSV	AT	Line Pressure Solenoid Valve
MAFS	EC	Mass Air Flow Sensor
MAIN	AT	Main Power Supply and Ground Circuit
MAIN	EC	Main Power Supply and Ground Circuit
METER	DI	Speedometer, Tachometer, Temp., Oil and Fuel Gauges
MIL	EC	Malfunction Indicator Lamp
MIRROR	GW	Door Mirror
NATS	BL	Nissan Anti-Theft System
NONDTC	AT	Non-detective Items
O2H1B1	EC	Heated Oxygen Sensor 1(Front) Heater Bank 1
O2H1B2	EC	Heated Oxygen Sensor 1 (Front) Heater Bank 2
O2H2B1	EC	Rear Heated Oxygen Sensor 2 (Rear) Heater Bank 1
O2H2B2	EC	Rear Heated Oxygen Sensor 2 (Rear) Heater Bank 2
O2S1B1	EC	Heated Oxygen Sensor 1 (Front) Bank 1
O2S1B2	EC	Heated Oxygen Sensor 1 (Front) Bank 2
O2S2B1	EC	Heated Oxygen Sensor 2 (Rear) Bank 1
O2S2B2	EC	Heated Oxygen Sensor 2 (Rear) Bank 2
OVRCSV	AT	Over Run Clutch Solenoid Valve
PGC/V	EC	EVAP Canister Purge Volume Control Solenoid Valve
PHASE	EC	Camshaft Position Sensor (PHASE)
PHSB1	EC	Camshaft Position Sensor (PHASE) (Bank 1)
PHSB2	EC	Camshaft Position Sensor (PHASE) (Bank 2)
PNP/SW	AT	Park/Neutral Position Switch
PNP/SW	EC	Park/Neutral Position Switch
POS	EC	Crankshaft Position Sensor (CKPS) (POS)
POWER	PG	Power Supply Routing
PRE/SE	EC	EVAP Control System Pressure Sensor

PS/SEN	EC	Power Steering Oil Pressure Sensor
PST/SW	EC	Power Steering Oil Pressure Switch
REMOTE	AV	Audio (Remote Control Switch)
ROOM/L	LT	Interior Room Lamp
RP/SEN	EC	Refrigerant Pressure Sensor
S/SIG	EC	Start Signal
SEAT	SE	Power Seat
SEN/PW	EC	Sensor Power Supply
SHIFT	AT	A/T Shift Lock System
SROOF	RF	Sunroof
SRS	SRS	Supplemental Restraint System
SSV/A	AT	Shift Solenoid Valve A
SSV/B	AT	Shift Solenoid Valve B
START	SC	Starting System
STEP/L	LT	Step Lamp
STOP/L	LT	Stop Lamp
TLID	BL	Trunk Lid Opener
TAIL/L	LT	Parking, License and Tail Lamps
TCCSIG	AT	A/T TCC Signal (Lock Up)
TCS	BRC	Traction Control System
TCV	AT	Torque Converter Clutch Solenoid Valve
TPS	AT	Throttle Position Sensor
TPS1	EC	Throttle Position Sensor
TPS2	EC	Throttle Position Sensor
TPS3	EC	Throttle Position Sensor
TRNSCV	BL	HOMELINK® Universal Transceiver
TRSA/T	AT	Turbine Revolution Sensor
TURN	LT	Turn Signal and Hazard Warning Lamps
VEHSEC	BL	Vehicle Security System
VENT/V	EC	EVAP Canister Vent Control Valve
VIAS	EC	Variable Air Induction Control System
VIAS/V	EC	Variable Air Induction Control System Valve
VSSA/T	AT	Vehicle Speed Sensor A/T (Revolution Sensor)
VSSMTR	AT	Vehicle Speed Sensor Meter
W/ANT	AV	Audio Antenna
WARN	DI	Warning Lamps
WINDOW	GW	Power Window
WIPER	WW	Front Wiper and Washer

ELECTRICAL UNITS LOCATION

PFP:25230

Electrical Units Location

EKS002LH

ENGINE COMPARTMENT

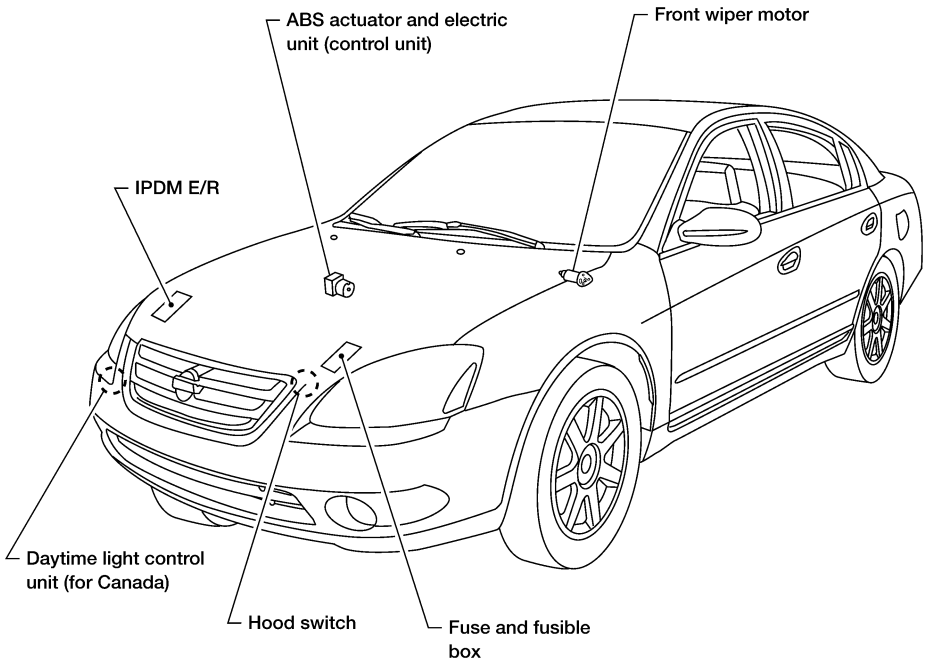

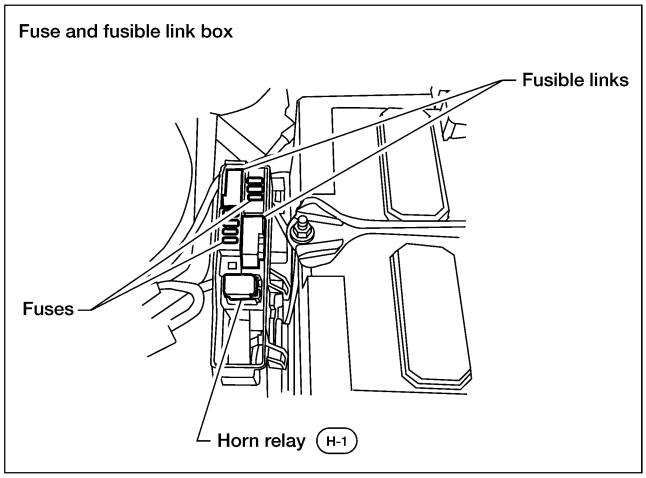

WKIA0124E

PASSENGER COMPARTMENT

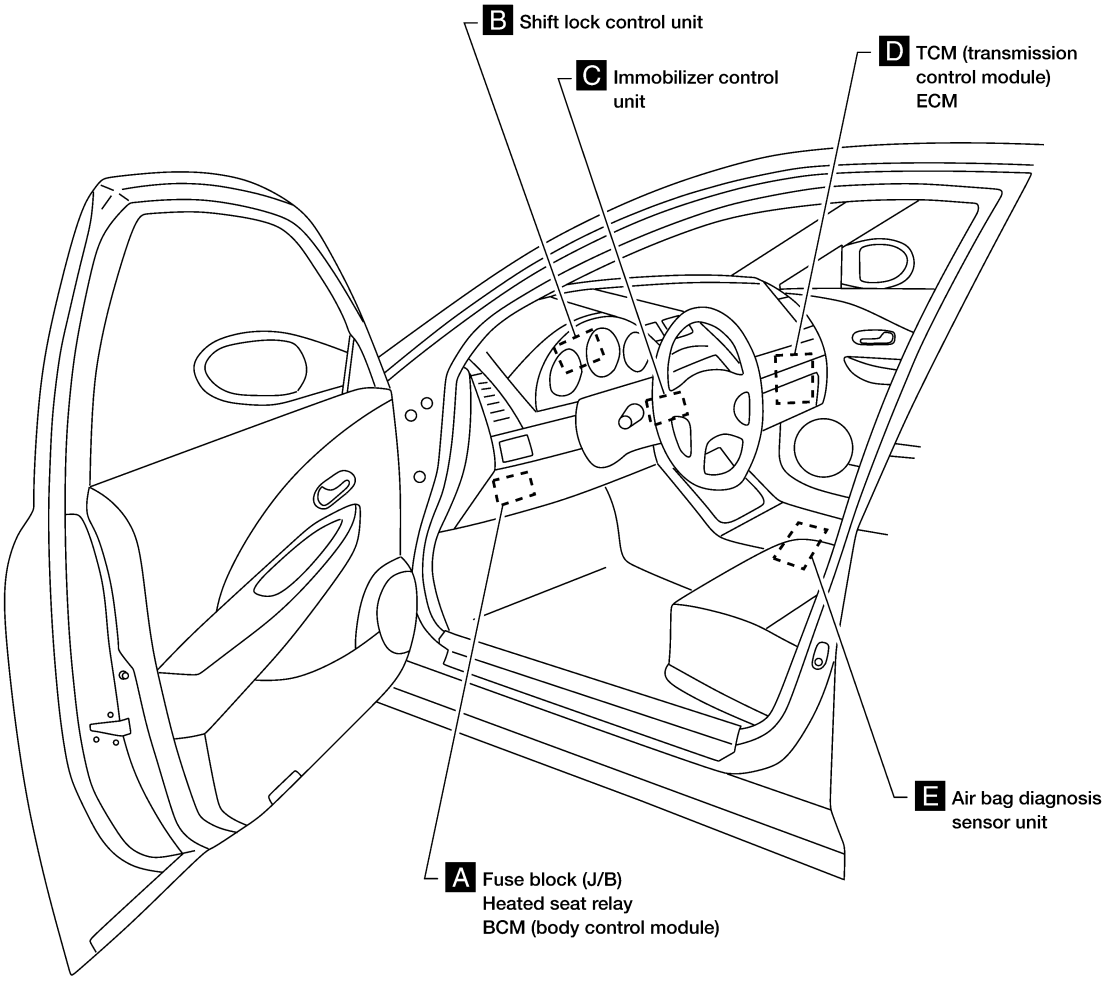

A Dash side LH

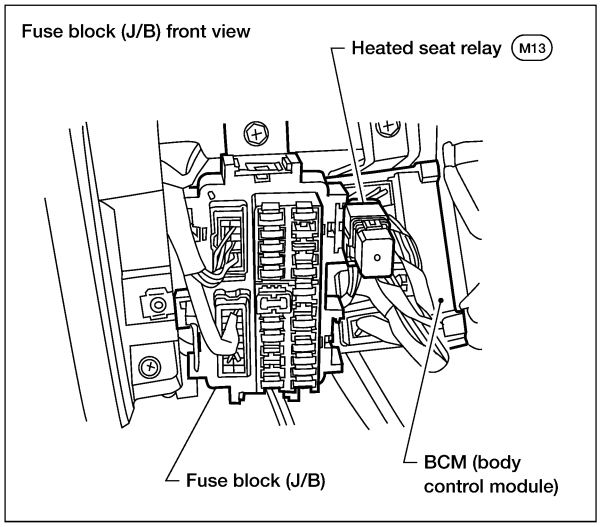

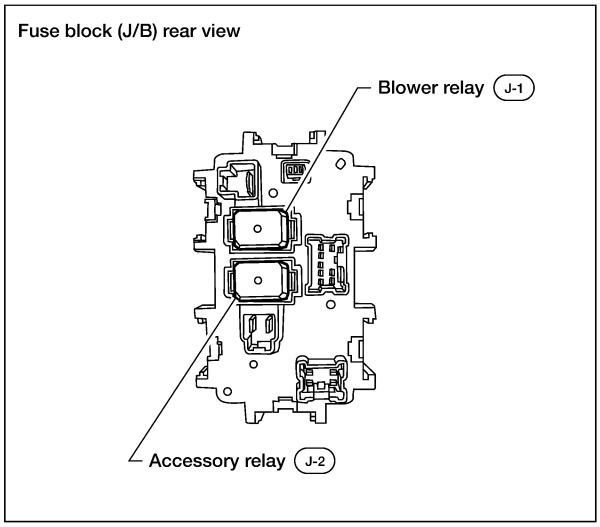

WKIA0125E

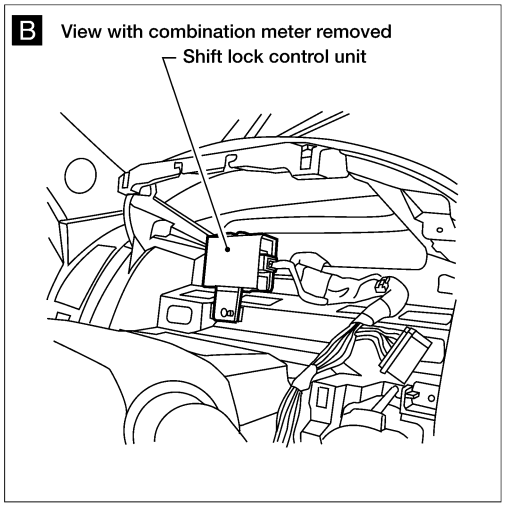
B View with combination meter removed
Shift lock control unit

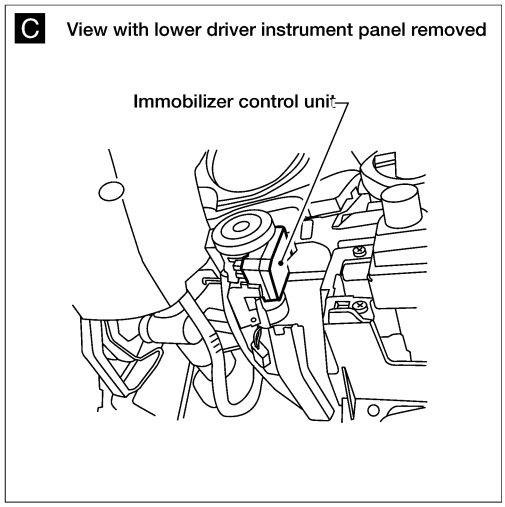
C View with lower driver instrument panel removed
Immobilizer control unit

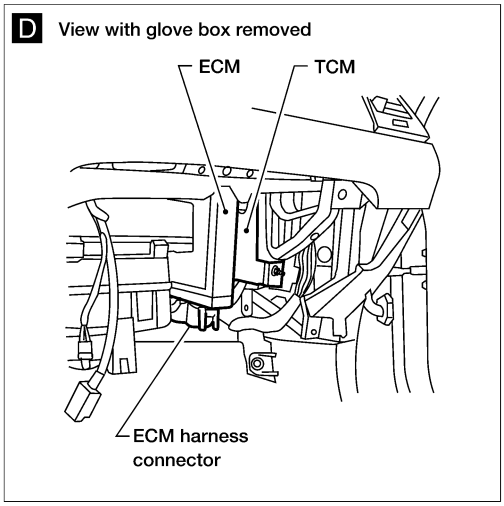
D View with glove box removed
ECM
TCM
ECM harness connector

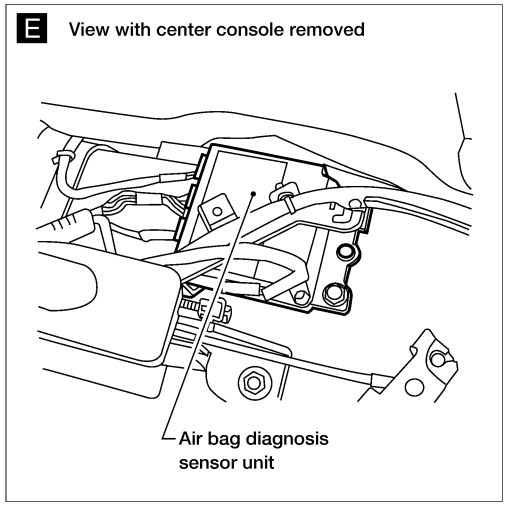
E View with center console removed
Air bag diagnosis sensor unit

WKIA0131E

Fuse

EKS002LI

- If fuse is blown, be sure to eliminate cause of incident before installing new fuse.
- Use fuse of specified rating. Never use fuse of more than specified rating.
- Do not partially install fuse; always insert it into fuse holder properly.
- Remove fuse for “ELECTRICAL PARTS (BAT)” if vehicle is not used for a long period of time.

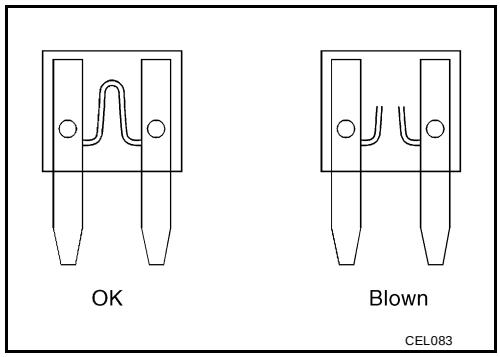

Fusible Link

EKS002LJ

A melted fusible link can be detected either by visual inspection or by feeling with finger tip. If its condition is questionable, use circuit tester or test lamp.

CAUTION:

- **If fusible link should melt, it is possible that critical circuit (power supply or large current carrying circuit) is shorted. In such a case, carefully check and eliminate cause of incident.**
- **Never wrap outside of fusible link with vinyl tape. Important: Never let fusible link touch any other wiring harness, vinyl or rubber parts.**

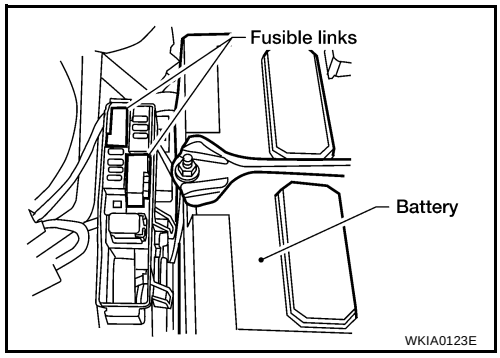

Circuit Breaker (Built Into BCM)

EKS002LK

For example, when current is 30A, the circuit is broken within 8 to 20 seconds.
A circuit breaker is used for the following systems:

- Power seat
- Power windows
- Power door locks
- Remote keyless entry system

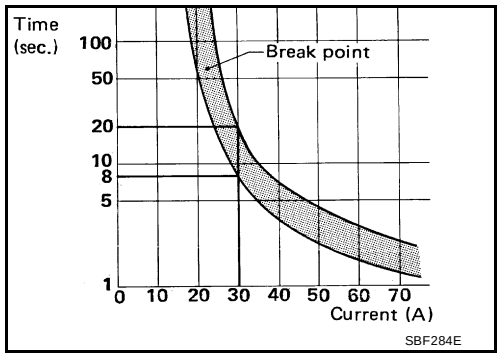

HARNESS CONNECTOR

PFP:B4341

Description

EKS002LL

HARNESS CONNECTOR (TAB-LOCKING TYPE)

- The tab-locking type connectors help prevent accidental looseness or disconnection.
- The tab-locking type connectors are disconnected by pushing or lifting the locking tab(s). Refer to the illustration below.

Refer to the next page for description of the slide-locking type connector.

CAUTION:

Do not pull the harness or wires when disconnecting the connector.

[Example]

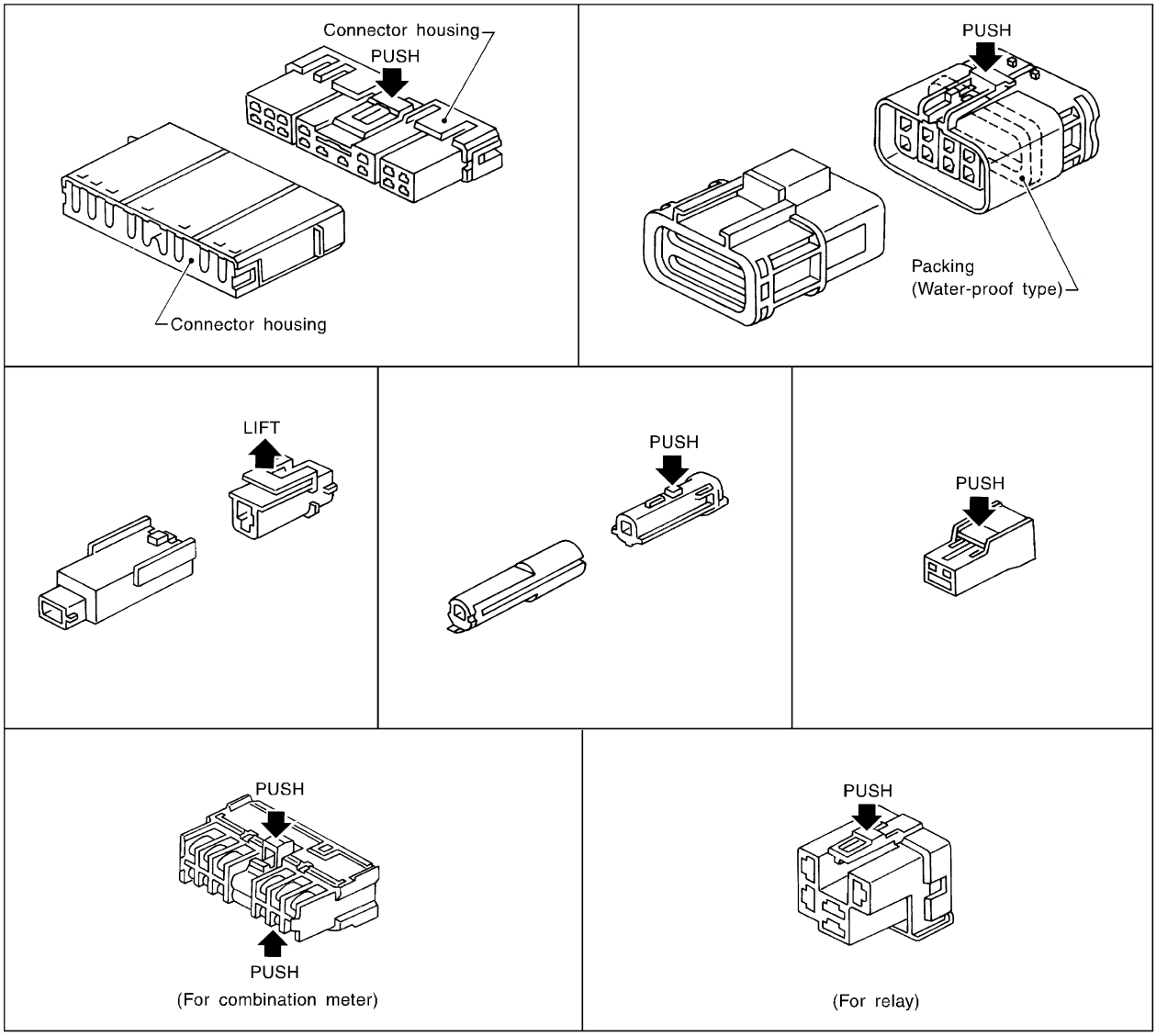

SEL769DA

HARNESS CONNECTOR (SLIDE-LOCKING TYPE)

- A new style slide-locking type connector is used on certain systems and components, especially those related to OBD.
- The slide-locking type connectors help prevent incomplete locking and accidental looseness or disconnection.
- The slide-locking type connectors are disconnected by pushing or pulling the slider. Refer to the illustration below.

CAUTION:

- **Do not pull the harness or wires when disconnecting the connector.**
- **Be careful not to damage the connector support bracket when disconnecting the connector.**

[Example]

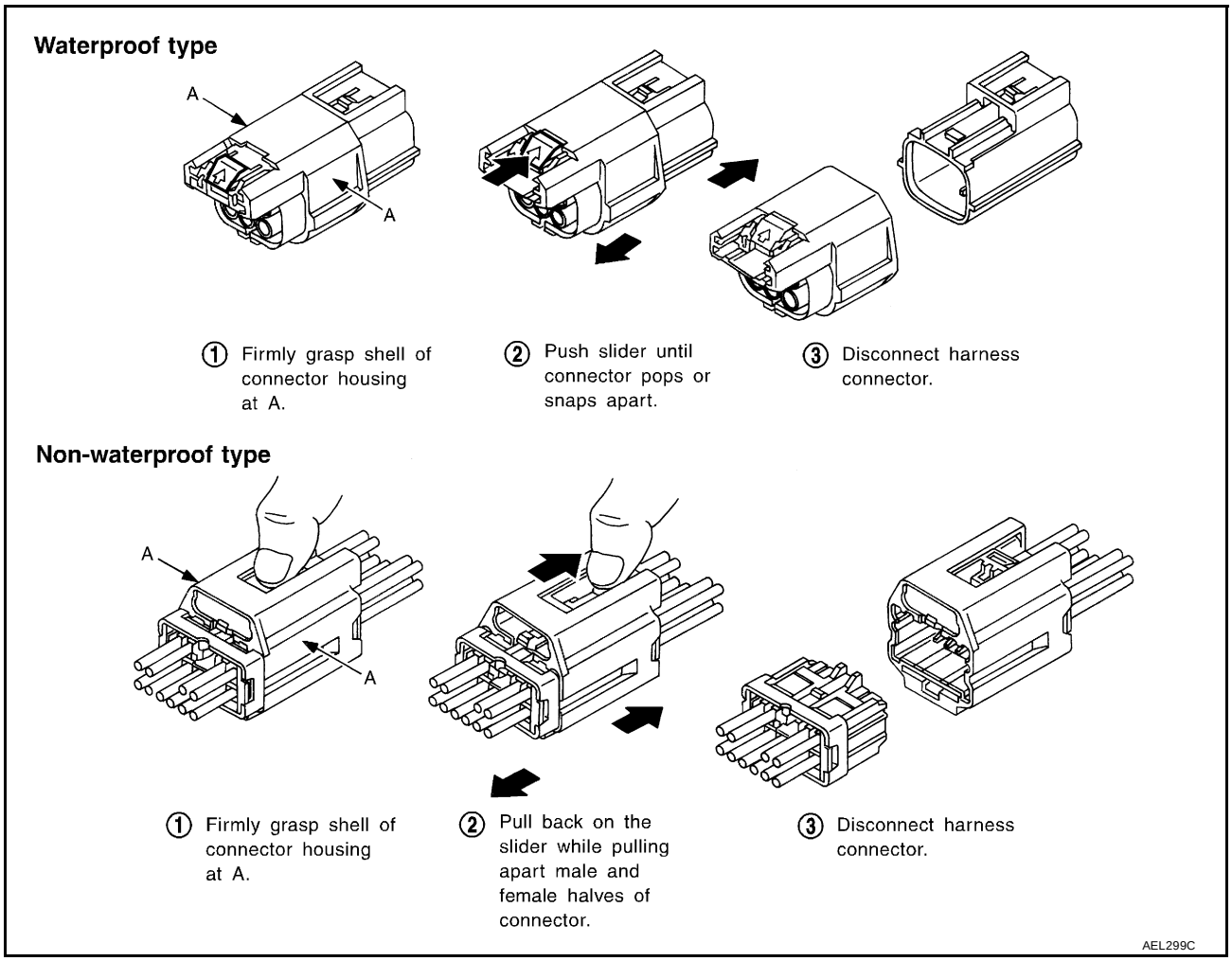

JOINT CONNECTOR (J/C)

PFP:B4341

Terminal Arrangement

EKS002LM

Joint connector-1 (M16)

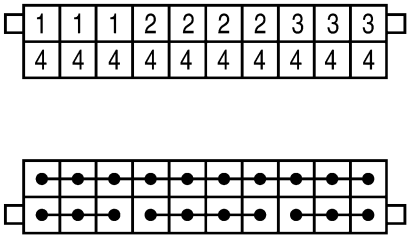

(Brown)

Joint connector-2 (M17)

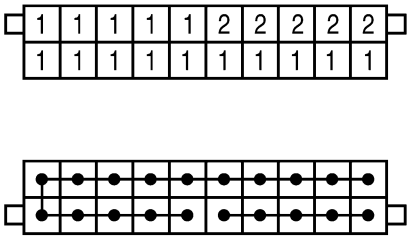

(Pink)

Joint connector-3 (M66)

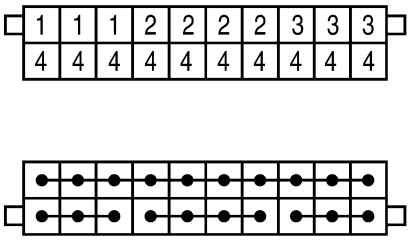

(Brown)

Joint connector-7 (B37)

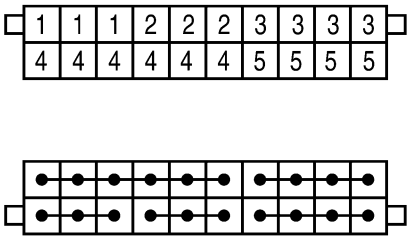

(Black)

Joint connector-4 (F51)

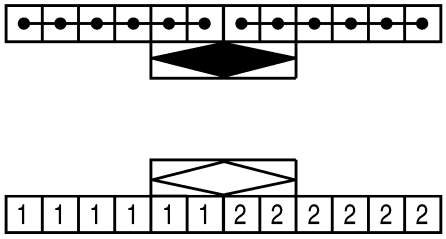

(Blue)

Joint connector-5 (F52)

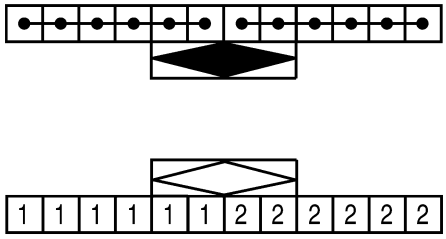

(Blue)

WKIA0126E

ELECTRICAL UNITS

PFP:23710

Terminal Arrangement

EKS002LN

BCM (BODY CONTROL MODULE)

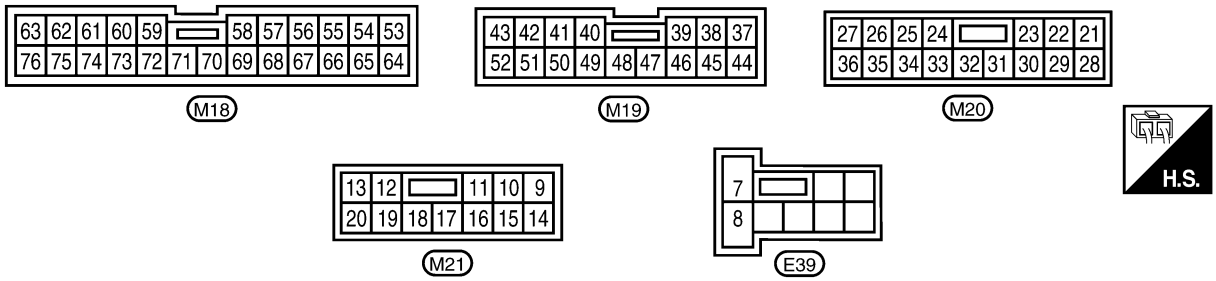

ABS ACTUATOR AND ELECTRIC UNIT (CONTROL UNIT)

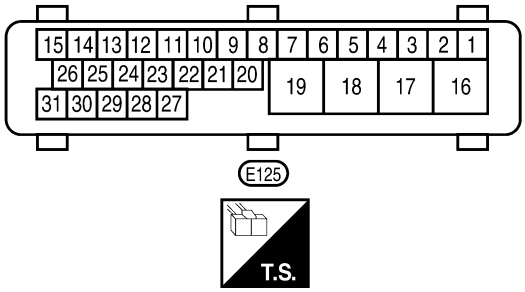

ECM

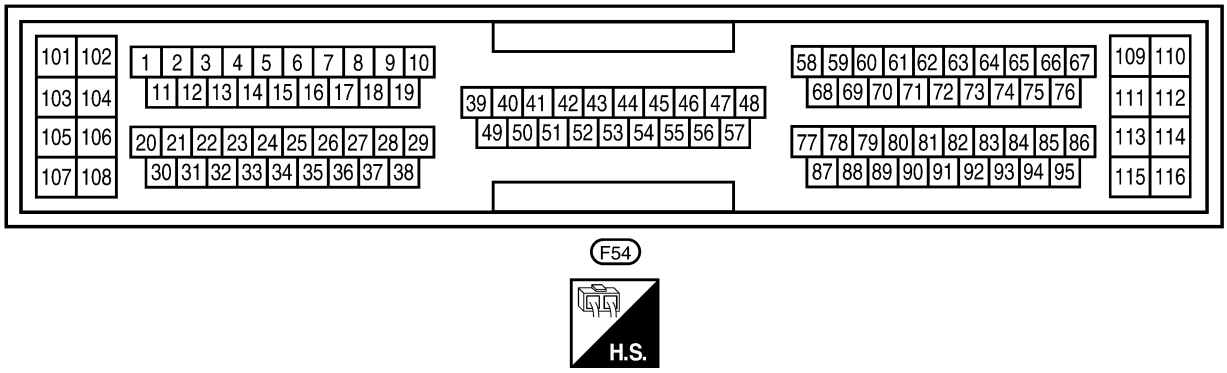

TCM (TRANSMISSION CONTROL MODULE)

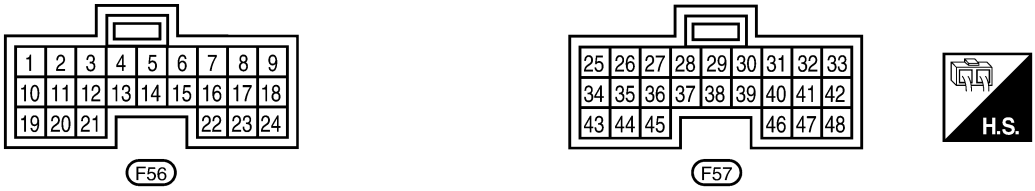

WKIA0127E

SMJ (SUPER MULTIPLE JUNCTION)

PFP:B4341

Terminal Arrangement

EKS002LO

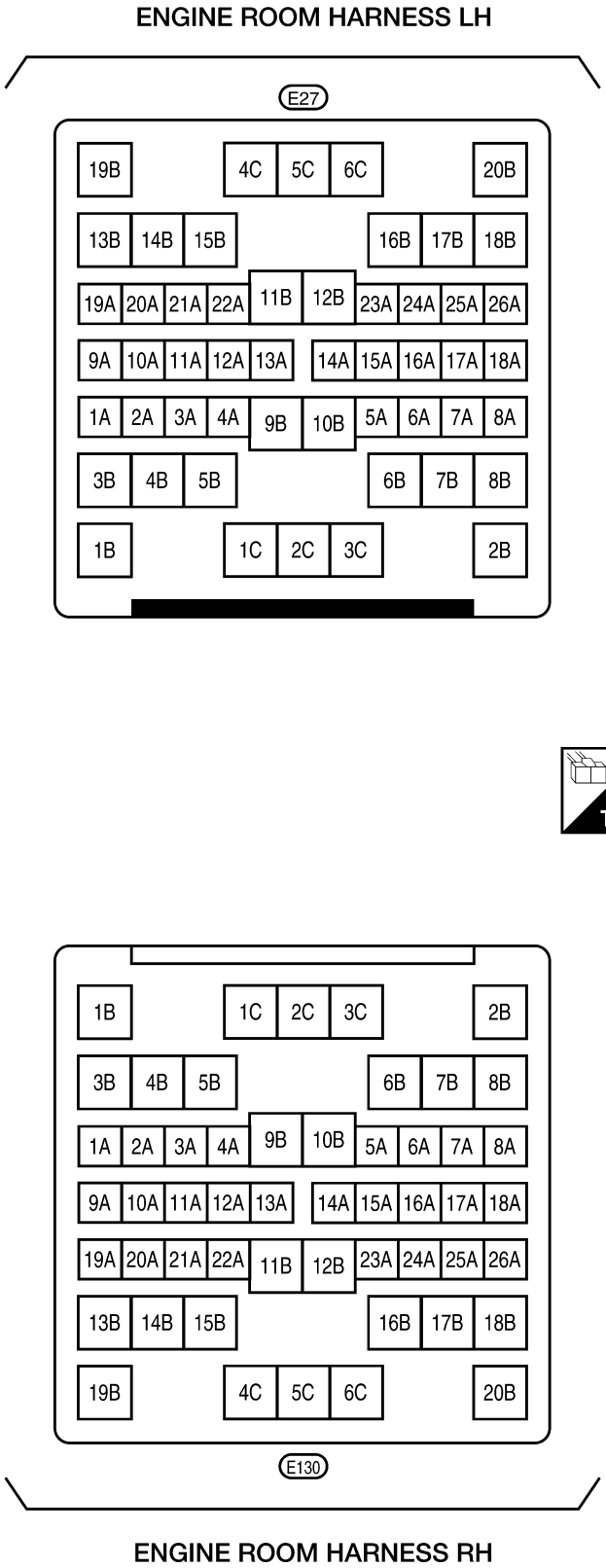

WKIA0128E

STANDARDIZED RELAY

PFP:25230

Description

EKS002LP

NORMAL OPEN, NORMAL CLOSED AND MIXED TYPE RELAYS

Relays can mainly be divided into three types: normal open, normal closed and mixed type relays.

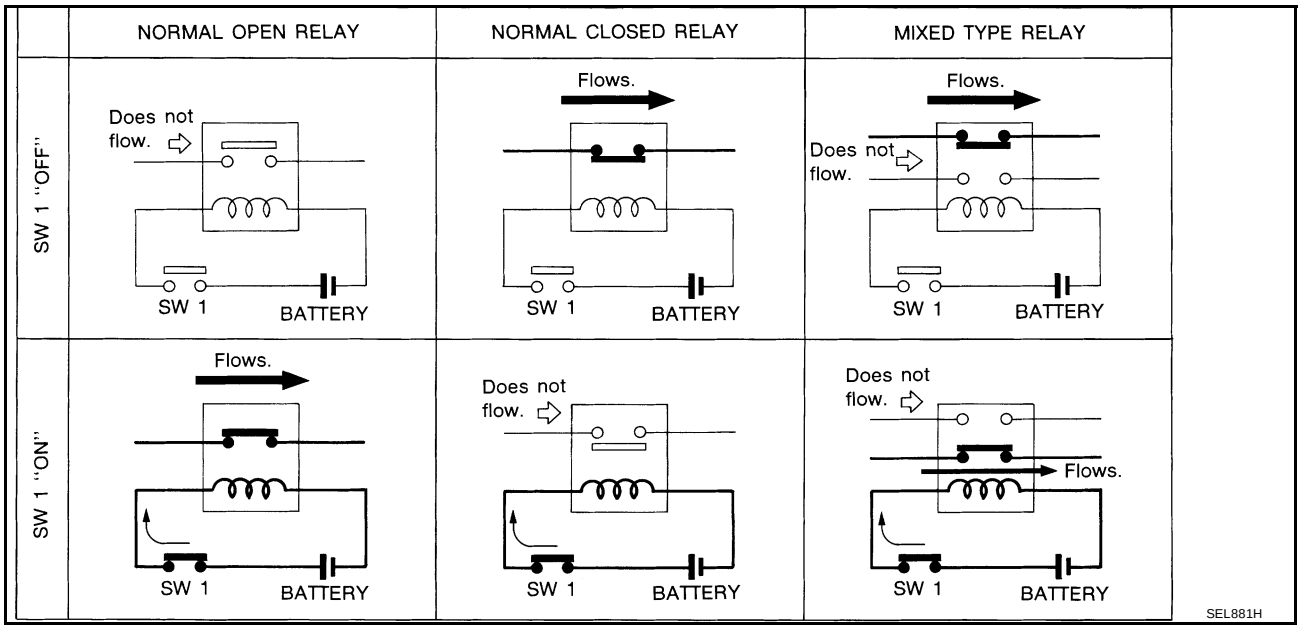

TYPE OF STANDARDIZED RELAYS

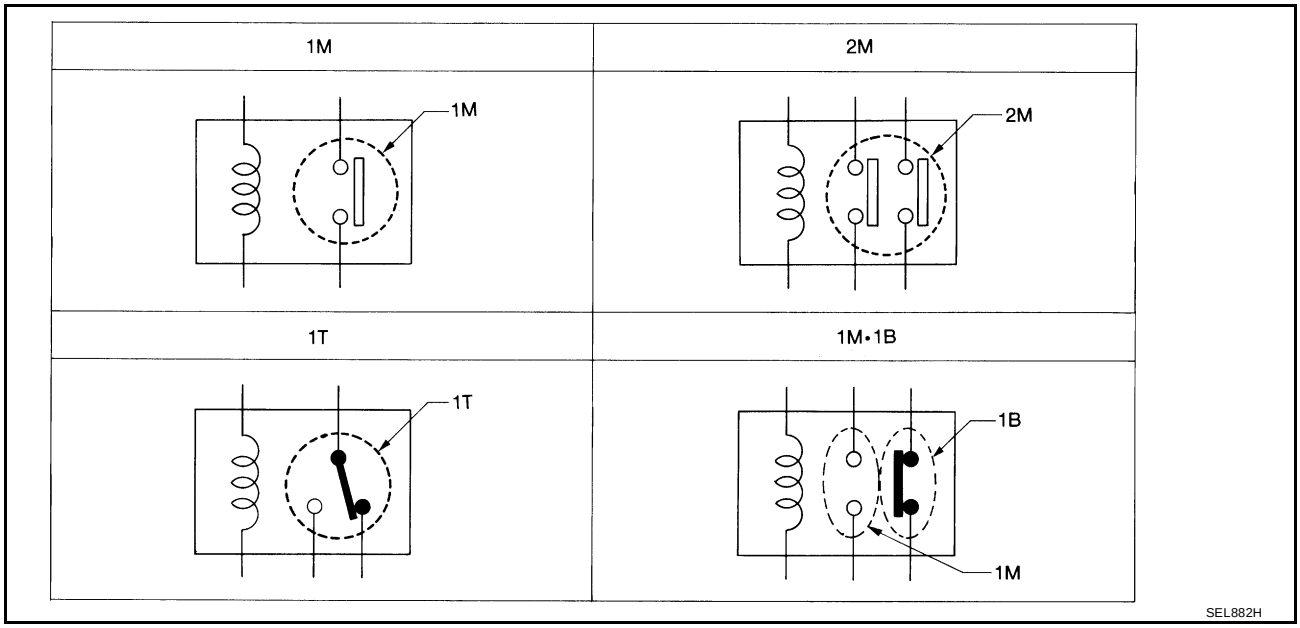

1M	1 Make	2M	2 Make
1T	1 Transfer	1M·1B	1 Make 1 Break

Type	Outer view	Circuit	Connector Symbol and connection	Case color
1T	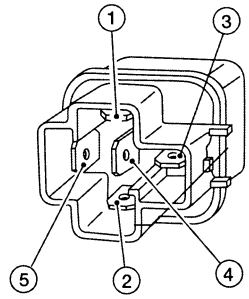	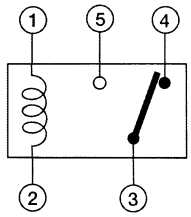	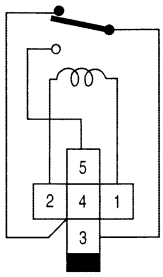	BLACK
2M	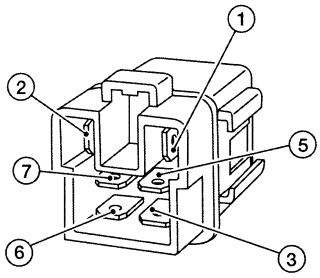	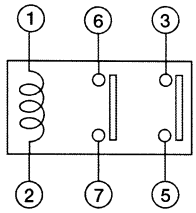	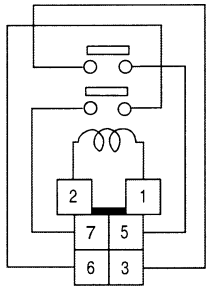	BROWN
1M ·1B	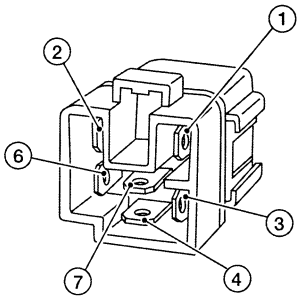	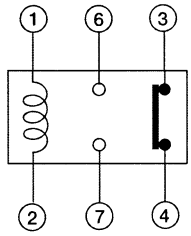	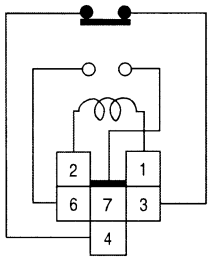	GRAY
1M	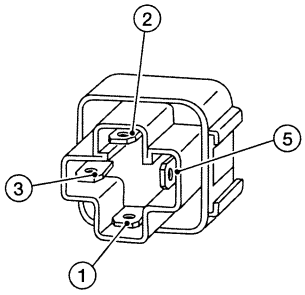	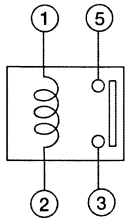	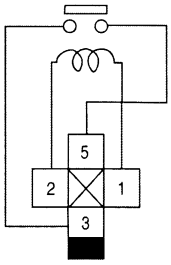	BLUE OR GRAY
	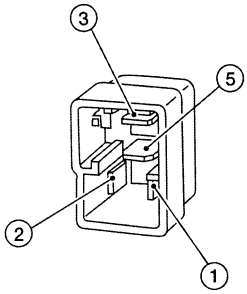		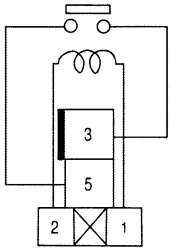	

The arrangement of terminal numbers on the actual relays may differ from those shown above.

LEL638

FUSE BLOCK-JUNCTION BOX(J/B)

PFP:24350

Terminal Arrangement

EKS002LQ

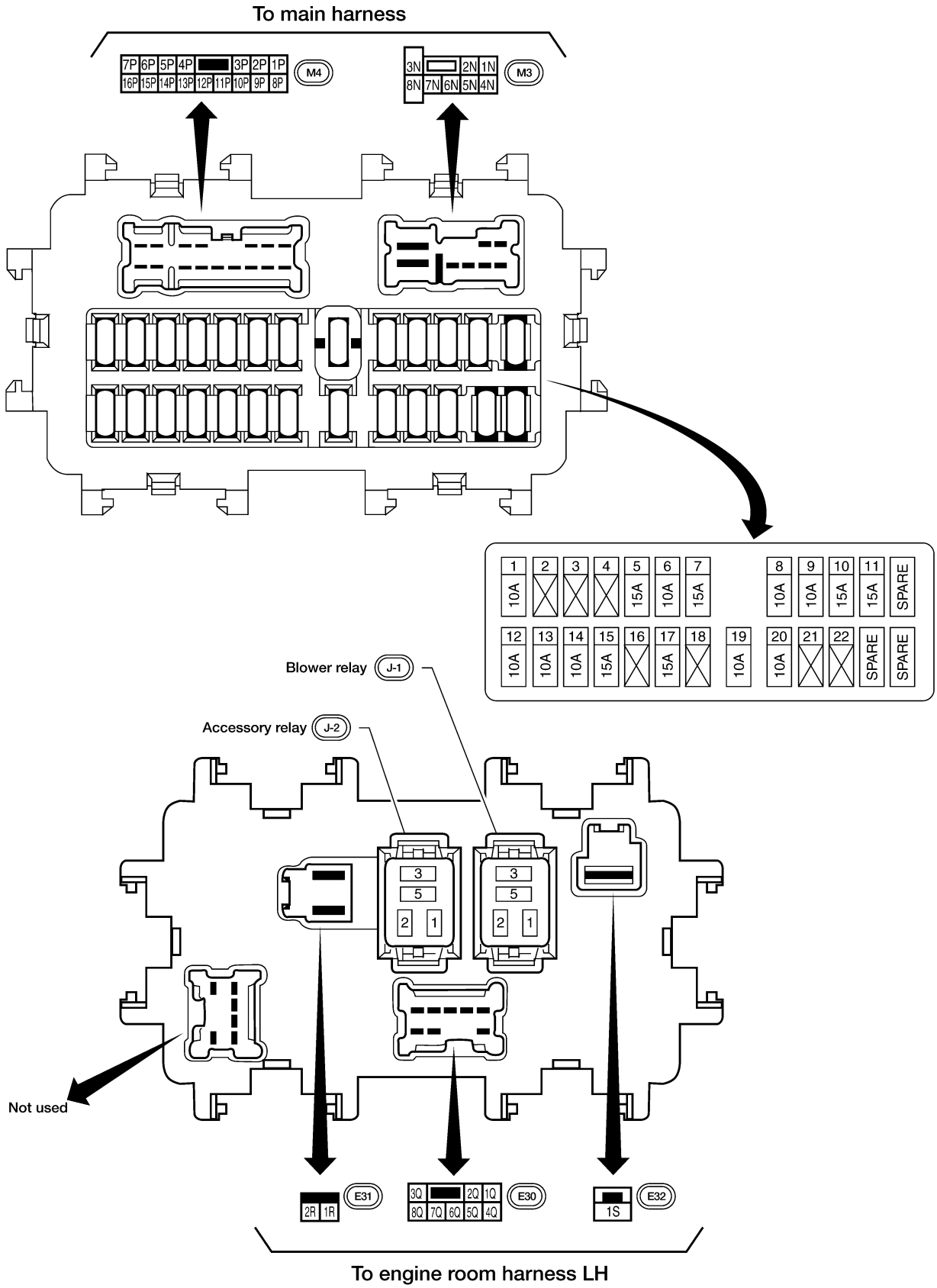

WKIA0129E

FUSE AND FUSIBLE LINK BOX

PFP:24381

Terminal Arrangement

EKS002LR

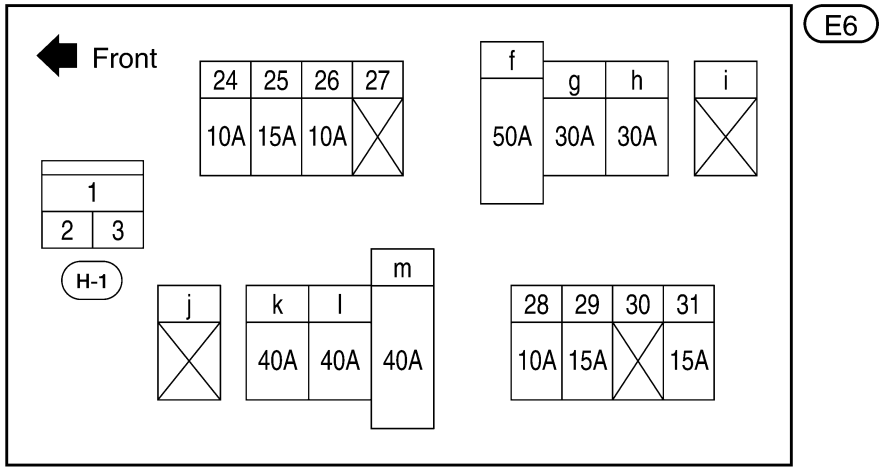

24 - 31: FUSE f - m: FUSBILE LINK

WKIA0130E

SECTION PS
POWER STEERING SYSTEM

CONTENTS

PRECAUTIONS 2
Precautions for Supplemental Restraint System (SRS) “AIR BAG” and “SEAT BELT PRE-TENSIONER” 2
Precautions for Steering System 2
PREPARATION 3
Special Service Tools 3
Commercial Service Tool 4
NOISE, VIBRATION, AND HARSHNESS (NVH) TROUBLESHOOTING 5
NVH Troubleshooting Chart 5
POWER STEERING FLUID 6
Checking Fluid Level 6
Checking Fluid Leakage 6
Bleeding Hydraulic System 6
STEERING WHEEL 7
On-Vehicle service 7
CHECKING STEERING WHEEL PLAY 7
CHECKING NEUTRAL POSITION ON STEERING WHEEL 7
CHECKING STEERING WHEEL TURNING FORCE 7
FRONT WHEEL TURNING ANGLE 8
Removal and Installation 8
REMOVAL 8
INSTALLATION 8
STEERING COLUMN 10
Removal and installation 10
Disassembly and Assembly 11
Inspection 12
POWER STEERING GEAR AND LINKAGE 13
On-Vehicle Service 13
CHECKING STEERING GEAR 13
CHECKING STEERING LINKAGE 13
CHECKING GEAR HOUSING MOVEMENT 13
Removal and Installation 13
REMOVAL 14
Disassembly and Assembly 16
DISASSEMBLY 17
INSPECTION AFTER DISASSEMBLY 17
ASSEMBLY 17
Adjustment for Rack Sliding Force 18
DECREASE 18
INCREASE 19
POWER STEERING OIL PUMP 20
On-Vehicle Service 20
CHECKING HYDRAULIC SYSTEM 20
Removal and Installation 20
REMOVAL 20
INSTALLATION 20
Disassembly and Assembly 21
PRE-DISASSEMBLY INSPECTION 21
DISASSEMBLY 22
ASSEMBLY 22
Inspection After Disassembly 24
HYDRAULIC LINE 25
Removal and Installation 25
SERVICE DATA AND SPECIFICATIONS (SDS) 27
General Specifications 27
Steering Wheel 27
Steering Column 27
Steering Gear and Linkage 27
Power Steering 28

PRECAUTIONS

PFP:00001

Precautions for Supplemental Restraint System (SRS) “AIR BAG” and “SEAT BELT PRE-TENSIONER”

EGS000AP

The Supplemental Restraint System such as “AIR BAG” and “SEAT BELT PRE-TENSIONER”, used along with a front seat belt, helps to reduce the risk or severity of injury to the driver and front passenger for certain types of collision. Information necessary to service the system safely is included in the SRS and SB section of this Service Manual.

WARNING:

- **To avoid rendering the SRS inoperative, which could increase the risk of personal injury or death in the event of a collision which would result in air bag inflation, all maintenance must be performed by an authorized NISSAN/INFINITI dealer.**
- **Improper maintenance, including incorrect removal and installation of the SRS, can lead to personal injury caused by unintentional activation of the system. For removal of Spiral Cable and Air Bag Module, see the SRS section.**
- **Do not use electrical test equipment on any circuit related to the SRS unless instructed to in this Service Manual. SRS wiring harnesses can be identified by yellow and/or orange harness connectors.**

Precautions for Steering System

EGS000AQ

- **Before disassembly, thoroughly clean the outside of the unit.**
- **Disassembly should be done in a clean work area. It is important to prevent the internal parts from becoming contaminated by dirt or other foreign matter.**
- **For easier and proper assembly, place disassembled parts in order on a parts rack.**
- **Use nylon cloths or paper towels to clean the parts; common shop rags can leave lint that might interfere with their operation.**
- **Before inspection or reassembly, carefully clean all parts with a general purpose, non-flammable solvent.**
- **Before assembly, apply a coat of recommended Genuine NISSAN PSF II or equivalent to hydraulic parts. Petroleum jelly may be applied to O-rings and seals. Do not use any grease.**
- **Replace all gaskets, seals and O-rings. Avoid damaging O-rings, seals and gaskets during installation. Perform functional tests whenever designated.**

PREPARATION

PFP:00002

Special Service Tools

EGS000AR

The actual shapes of Kent-Moore tools may differ from those of special service tools illustrated here.

Tool number (Kent-Moore No.) Tool name		Description
KV48100700 (J26364) Torque adapter	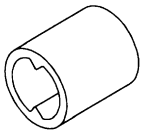	Measuring pinion rotating torque
KV48102500 (J33914) Pressure gauge adapter	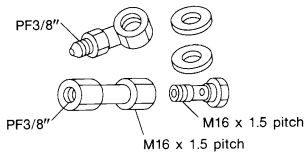	Measuring oil pressure
ST27180001 (J25726-A) Steering wheel puller	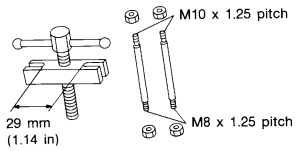	Removing steering wheel
HT72520000 (J25730-B) Ball joint remover	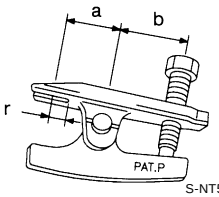	Removing ball joint **a: 33 mm (1.30 in)** **b: 50 mm (1.97 in)** **r: R11.5 mm (0.453 in)**
KV48103500 (J26357 and J26357-10) Pressure gauge	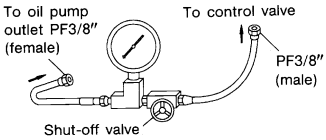	Measuring oil pressure
KV48104400 (　　—　　) Rack seal ring reformer	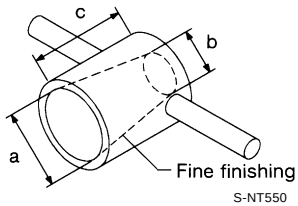	Reforming teflon ring **a: 50 mm (1.97 in) dia.** **b: 36 mm (1.42 in) dia.** **c: 100 mm (3.94 in)**

Tool number (Kent-Moore No.) Tool name	Description
ST3127S000 1 GG91030000 (See J25765-A) Torque wrench 2 HT62940000 (—) Socket adapter 3 HT62900000 (—) Socket adapter 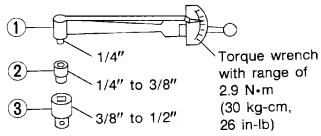 S-NT541	Measuring turning torque
(J-44372) Spring gauge 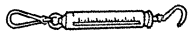 LST024	Measuring steering wheel turning force
(J-44183-A) Spring gauge 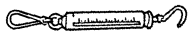 LST025	Measuring rack sliding force

Commercial Service Tool

EGS000AS

Tool number	Description
Oil pump attachment 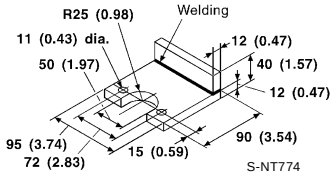 S-NT774	Disassembling and assembling oil pump Unit: mm (in)

NOISE, VIBRATION, AND HARSHNESS (NVH) TROUBLESHOOTING

PFP:00003

NVH Troubleshooting Chart

EGS000AT

Use the chart below to help you find the cause of the symptom. If necessary, repair or replace these parts.

Reference page			PS-6, "POWER STEERING FLUID"	PS-6, "POWER STEERING FLUID"	FSU-5, "FRONT SUSPENSION ASSEMBLY"	FSU-5, "FRONT SUSPENSION ASSEMBLY"	FSU-5, "FRONT SUSPENSION ASSEMBLY"	PS-6, "Checking Fluid Leakage"	PS-7, "Checking Steering Wheel Play"	PS-18, "Adjustment for Rack Sliding Force"	EM-12, "Checking Drive Belts", EC-1133, "Diagnostic Procedure"	PS-7, "On-Vehicle service"	PS-12, "Inspection"	PS-13, "Checking gear housing movement"	PS-12, "Inspection"	PS-12, "Inspection"	PS-13, "Checking steering linkage"	FAX-4, "NVH Troubleshooting Chart"	FAX-4, "NVH Troubleshooting Chart"	FSU-4, "NVH Troubleshooting Chart"	WT-2, "NVH Troubleshooting Chart"	WT-2, "NVH Troubleshooting Chart"	BR-5, "NVH Troubleshooting Chart"
Possible cause and SUSPECTED PARTS			Fluid level	Air in hydraulic system	Tie-rod ball joint swinging force	Tie-rod ball joint rotating torque	Tie-rod ball joint end play	Steering gear fluid leakage	Steering wheel play	Steering gear rack sliding force	Drive belt looseness	Improper steering wheel	Improper installation or looseness or tilt lock lever	Mounting rubber deterioration	Steering column deformation or damage	Improper installation or looseness of steering column	Steering linkage looseness	DRIVE SHAFT	AXLE	SUSPENSION	TIRES	ROAD WHEEL	BRAKES
Symptom	STEERING	Noise	×	×	×	×	×	×	×	×	×							×	×	×	×	×	×
		Shake										×	×	×				×	×	×	×	×	×
		Vibration										×	×	×	×	×		×	×	×	×		
		Shimmy										×	×	×			×		×	×	×	×	×
		Judder												×			×		×	×	×	×	×

×: Applicable

POWER STEERING FLUID

PFP:KLF20

Checking Fluid Level

EGS000AU

Check fluid level, referring to the scale on reservoir tank.
Use HOT range for fluid temperatures of 50° to 80°C (122° to 176°F).
Use COLD range for fluid temperatures of 0° to 30°C (32° to 86° F).

CAUTION:

- **Do not overfill.**
- **Recommended fluid is Genuine NISSAN PSF II or equivalent.**

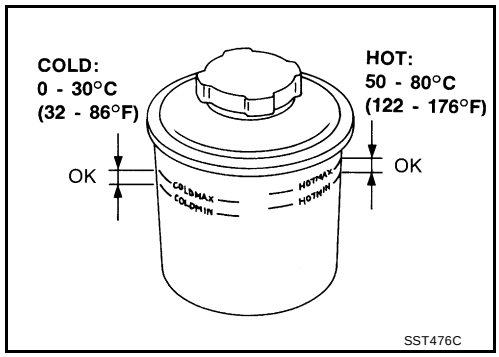

Checking Fluid Leakage

EGS000AV

Check the lines for improper attachment and for leaks, cracks, damage, loose connections, chafing and deterioration.

1. Run engine between idle speed and 1,000 rpm.
   Make sure temperature of fluid in oil tank rises to 60° to 80°C (140° to 176°F).
2. Turn steering wheel right-to-left several times.
3. Hold steering wheel at each lock position for five seconds and carefully check for fluid leakage.

   CAUTION:
   Do not hold the steering wheel in a locked position for more than 15 seconds.

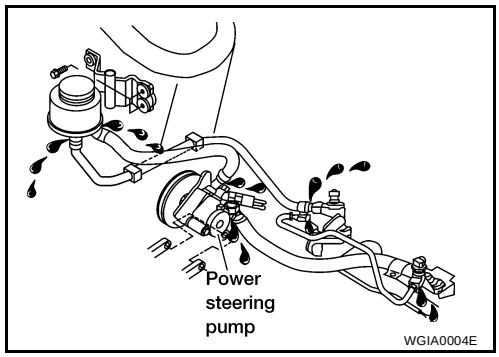

4. If fluid leakage at connectors is noticed, loosen flare nut and then retighten.
   Do not overtighten connector as this can damage O-ring, washer and connector.
5. If fluid leakage from power steering pump is noticed, check the power steering pump. Refer to PS-24, "Inspection After Disassembly" .
6. Check steering gear boots for accumulation of power steering fluid indicating a steering gear leak.

Bleeding Hydraulic System

EGS000AW

1. Raise the front end of vehicle until the wheels are clear of the ground.
2. Add Genuine NISSAN PSF II or equivalent, into the steering fluid reservoir tank to the specified level. Then quickly turn the steering wheel fully to right and left and lightly touch steering stoppers. Repeat steering wheel operation until the fluid level no longer decreases.

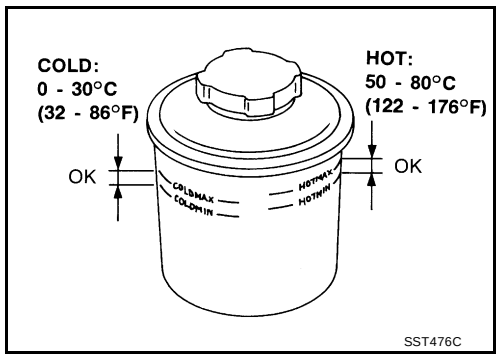

3. Start the engine then repeat step 2 above. Incomplete air bleeding will cause the following symptoms:
   - Air bubbles in reservoir tank
   - Clicking noise in oil pump
   - Excessive buzzing in oil pump

If this happens, bleed out the air repeating step 2 above. Fluid noise may occur in the valve or oil pump. This is common when the vehicle is stationary or while turning the steering wheel slowly. This does not affect the performance or durability of the system.

STEERING WHEEL

PFP:48430

On-Vehicle service

EGS000AX

CHECKING STEERING WHEEL PLAY

- With wheels in a straight-ahead position, check steering wheel play.

  Steering wheel play : 35 mm (1.38 in) or less

- If it is not within specification, check the following for looseness or worn components.
  Steering gear assembly
  Steering column
  Front suspension and axle
  Check steering system for looseness while moving the steering wheel in all directions.

  Axial end play : 0 mm (0 in)

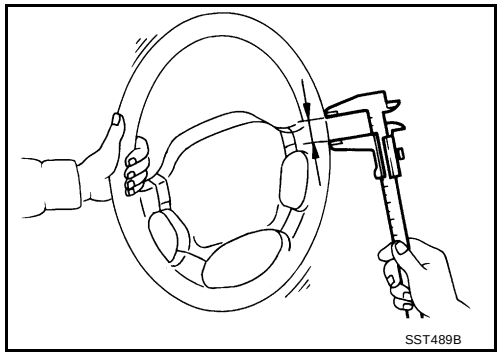

CHECKING NEUTRAL POSITION ON STEERING WHEEL

Pre-checking

- Make sure that wheel alignment is correct. Refer to FSU-15, "Front Wheel Alignment (Unladen*1)" .
- Verify that the steering gear is centered before removing the steering wheel.

Checking

1. Check that the steering wheel is in neutral position when driving straight ahead.
2. If it is not in neutral position, remove the steering wheel and reinstall it correctly.
3. If the neutral position is between two teeth, loosen tie-rod lock nuts. Turn the tie-rods by the same amount in opposite directions on both left and right sides.

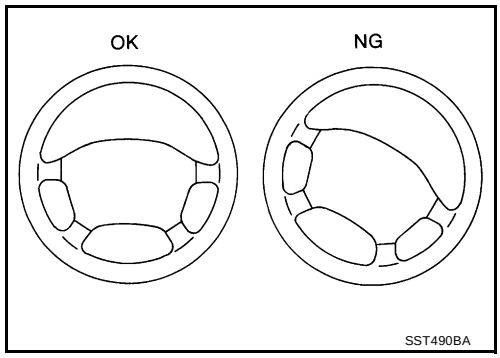

CHECKING STEERING WHEEL TURNING FORCE

1. Park vehicle on a level, dry surface and set parking brake.
2. Start engine.
3. Bring power steering fluid up to adequate operating temperature. Make sure the fluid temperature is approximately 60° to 80°C (140° to 176°F).
   Tires need to be inflated to normal pressure.
4. Check steering wheel turning force when steering wheel has been turned 360° from the neutral position.

   Steering wheel turning force : 39 N (4 kg-f, 9 lb-f) or less

5. If steering wheel turning force is out of specification, check rack sliding force.

a. Disconnect steering column lower joint and knuckle arms from the gear.

b. Start and run engine at idle to make sure steering fluid has reached normal operating temperature.

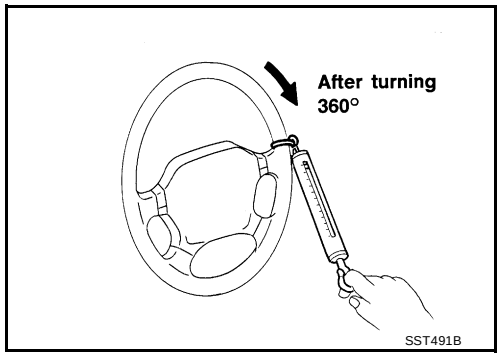

c. Pull tie-rod slowly to move it from neutral position to ±11.5 mm (±0.453 in) at speed of 3.5 mm (0.138 in)/s. Check that rack sliding force is within specification.

Average rack sliding force	**: 210.7 - 298.9 N (21.49 - 30.49 kg-f, 47.37 - 67.19 lb-f)**
Maximum force deviation	**: 98 N (10 kg-f, 22 lb-f)**

d. Check sliding force outside the above range.

Rack sliding force	**: Not more than 294 N (30 kg-f, 66 lb-f)**

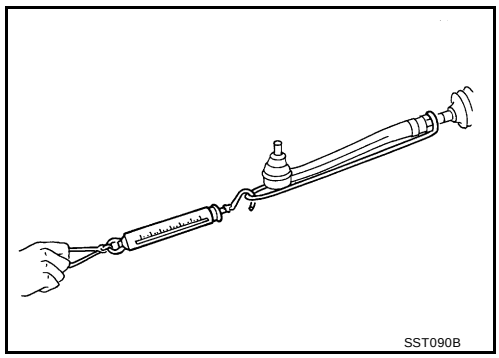

6. If rack sliding force is not within specifications, overhaul steering gear assembly.
7. If rack sliding force is OK, inspect steering column. Refer to PS-12, "Inspection" .

FRONT WHEEL TURNING ANGLE

1. Rotate steering wheel all the way right and left; measure turning angle. Refer to FSU-15, "General Specifications (Front)" .
2. If it is not within specifications, check rack stroke. Refer to PS-27, "Steering Gear and Linkage" .

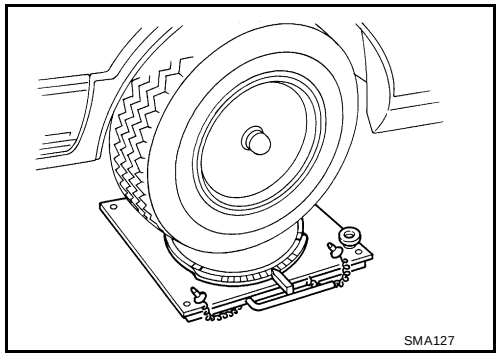

Removal and Installation

EGS000AY

REMOVAL

1. Set the front wheels in the straight-ahead position.
2. Remove the driver air bag module.
   Refer to SRS-39, "Removal and Installation" .
3. Remove the steering wheel center nut.
4. Remove the steering wheel with the Tool.
5. Place a piece of tape across the spiral cable so it will not be rotated out of position.

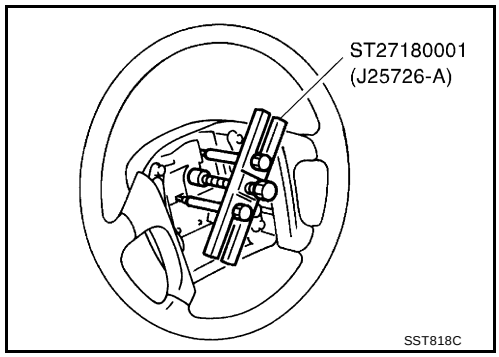

INSTALLATION

1. Installation is in the reverse order of removal.

- Align spiral cable correctly when installing steering wheel. Make sure that the spiral cable is in the neutral position. The neutral position is detected by turning left 2.5 revolutions from the right end position and ending with the knob at the top.

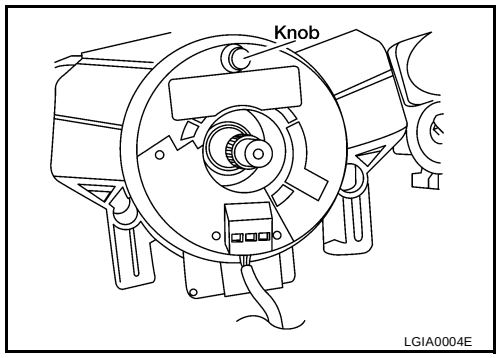

CAUTION:
The spiral cable may snap due to steering operation if the cable is installed in an improper position. Also, with the steering linkage disconnected, the cable may snap by turning the steering wheel beyond the limited number of turns. (The spiral cable can be turned up to 2.5 turns from the neutral position to both the right and left.)

Steering wheel center nut : 29 - 39 N·m (3.0 - 4.0 kg-m, 22 - 29 ft-lb)

STEERING COLUMN

PFP:48810

Removal and installation

EGS000AZ

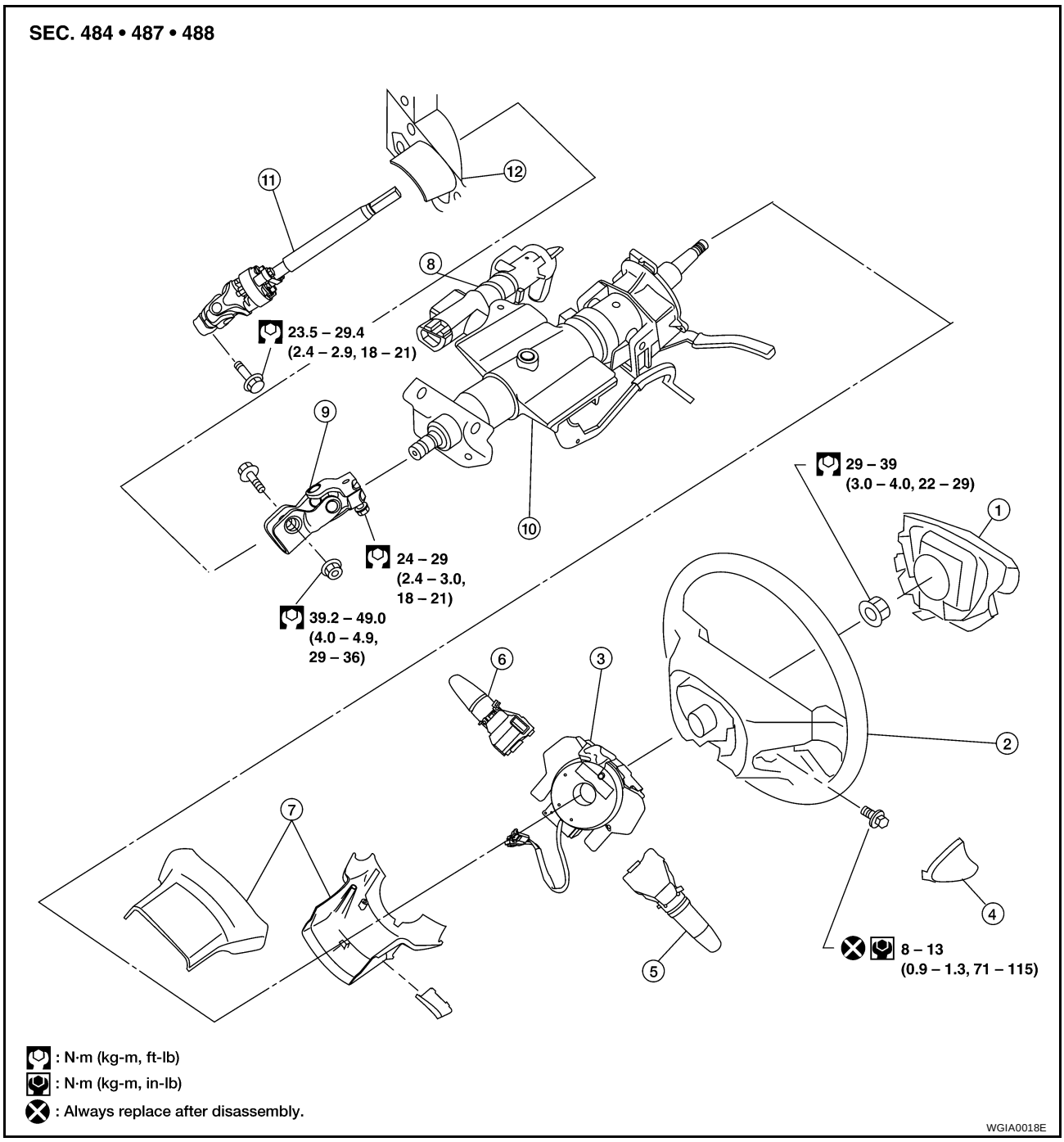

1.	Driver air bag module	2.	Steering wheel	3.	Spiral cable
4.	Steering wheel side cover	5.	Head lamp switch	6.	Wiper/washer switch
7.	Upper and lower column covers	8.	Ignition switch	9.	Upper joint
10.	Steering column (tilt/telescope type)	11.	Lower joint and shaft assembly	12.	Cowl panel

CAUTION:

- **The rotation of the spiral cable (SRS air bag component part) is limited. If the steering gear must be removed, set the front wheels in the straight-ahead direction. Do not rotate the steering column while the steering gear is removed.**
- **Remove the steering wheel before disconnecting the coupling joint to avoid damaging the spiral cable.**

- **When installing the steering column, finger-tighten all of the lower bracket and joint retaining bolts; then tighten them to specification. Do not apply undue stress to the steering column.**

- **Align slit of the coupling joint with projection on dust cover. Insert the joint until surface A contacts surface B.**

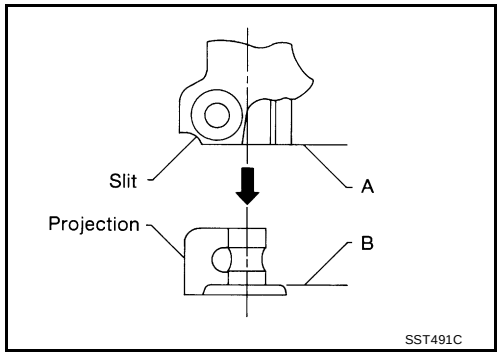

- After installation, turn steering wheel to make sure it moves smoothly. Ensure the number of turns are the same from the straight-forward position to left and right locks. Be sure that the steering wheel is in a neutral position when driving straight ahead.

Disassembly and Assembly

EGS000B0

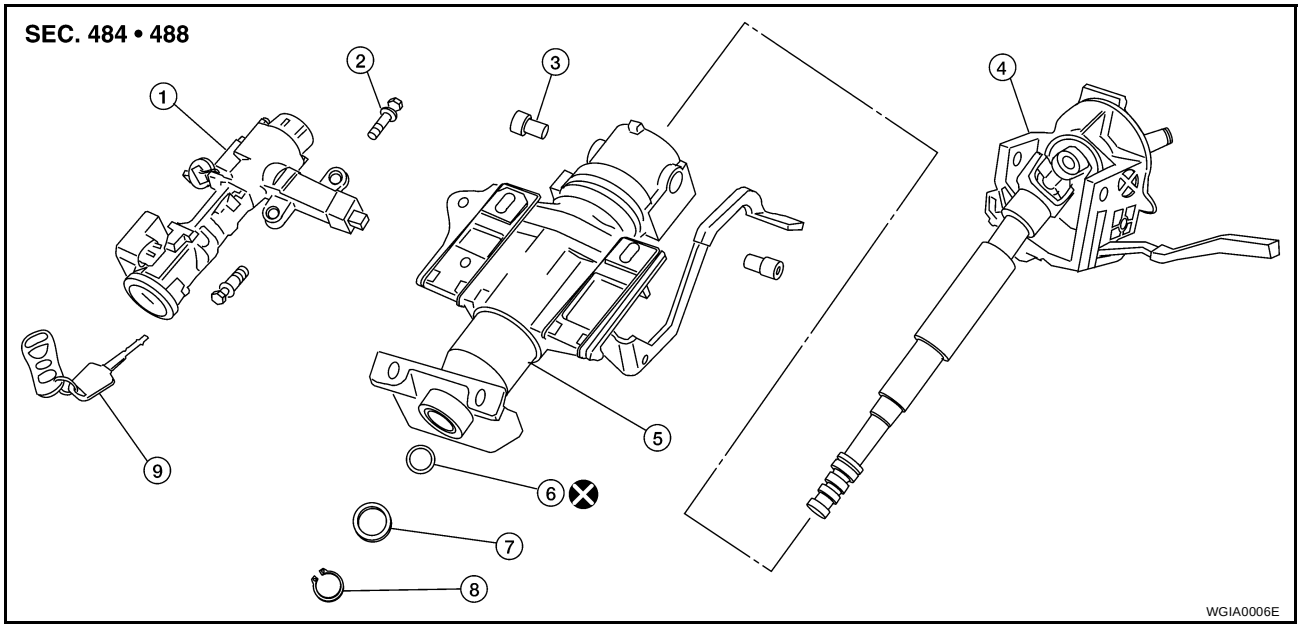

1. Ignition switch	2. Tamper resistant self-shear bolt	3. Tilt knuckle retainer pin
4. Column shaft with tilt assembly	5. Column tube (tilt/telescope type)	6. O-ring
7. Washer	8. Snap ring	9. Key

- Remove the tamper resistant self-shear type screws with a drill or other appropriate tool.
- Install new tamper resistant self-shear type screws.

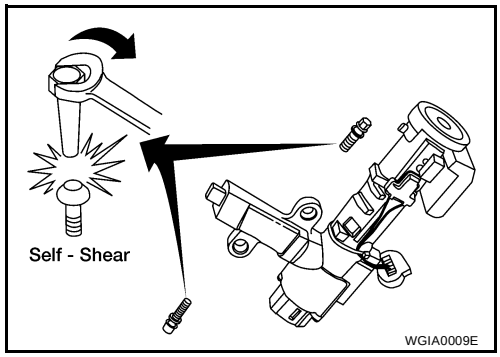

Inspection

EGS000B1

- When the steering wheel does not turn smoothly, check the steering column as follows:

1. Check the column bearings for damage or unevenness. Lubricate with recommended multi-purpose grease. Replace the steering column as an assembly, if necessary.
2. Check the column tube for deformation or breakage. Replace the steering column as an assembly, if necessary.

- If the vehicle has been involved in a collision, or if noise and rattles are heard during a turn, check the length (L) of the column. If out of specification, replace the steering column as an assembly.

Steering column length (L) : 612 - 616 mm (24.09 - 24.25 in)

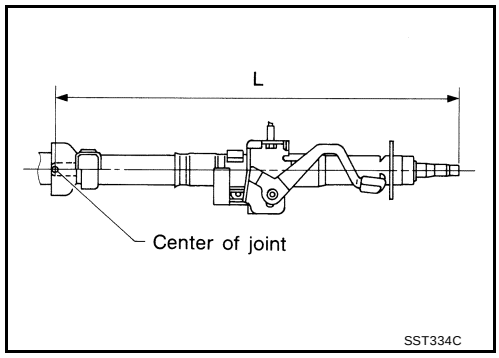

- Check for proper lubrication, apply grease as necessary.
- Check for wear around the seal edges, replace as necessary.
- Check for corrosion or pitting around the seal sliding area.
- **Replace the seal and shaft in case of seal edge wear or damage.**

- After installing the steering column, check the tilt mechanism for proper operation.

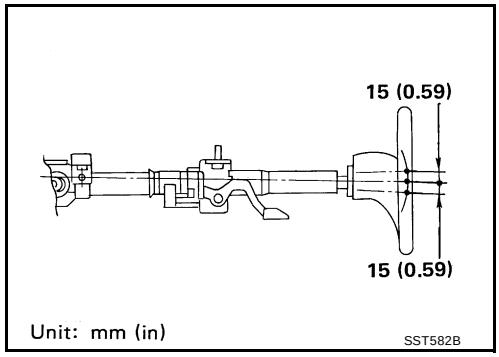

CAUTION:

- **Do not exert any load or impact in the axial direction immediately before or after column removal.**
- **After installation check for smooth steering wheel rotation, without any catches or noise.**
- **Replace the column if it is depleted of grease, worn, damaged, or if any scratches or coating separation is present on the shaft seal area.**
- **The nut on the upper joint may not be reused.**
- **During lower joint detachment, insert a tool into the yoke groove to prevent gouging damage.**
- **A washer must be used on all fastener bolts.**

POWER STEERING GEAR AND LINKAGE

PFP:49001

On-Vehicle Service

EGS000B2

CHECKING STEERING GEAR

- Check gear housing and boots for looseness, damage and fluid leakage.
- Check connection with steering column for looseness.

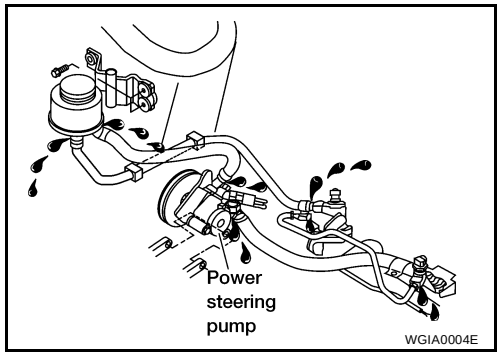

CHECKING STEERING LINKAGE

- Check ball joint, and other component parts for looseness, wear, and damage.

CHECKING GEAR HOUSING MOVEMENT

1. Check the movement of steering gear housing during stationary steering on a dry paved surface.
   - Apply a force of 49 N (5 kg, 11 lb) to steering wheel to check the gear housing movement. Turn off ignition key while checking.

   Movement of gear housing : ±2 mm (±0.08 in) or less

2. If movement exceeds the limit, replace or repair as necessary.

Removal and Installation

EGS000B3

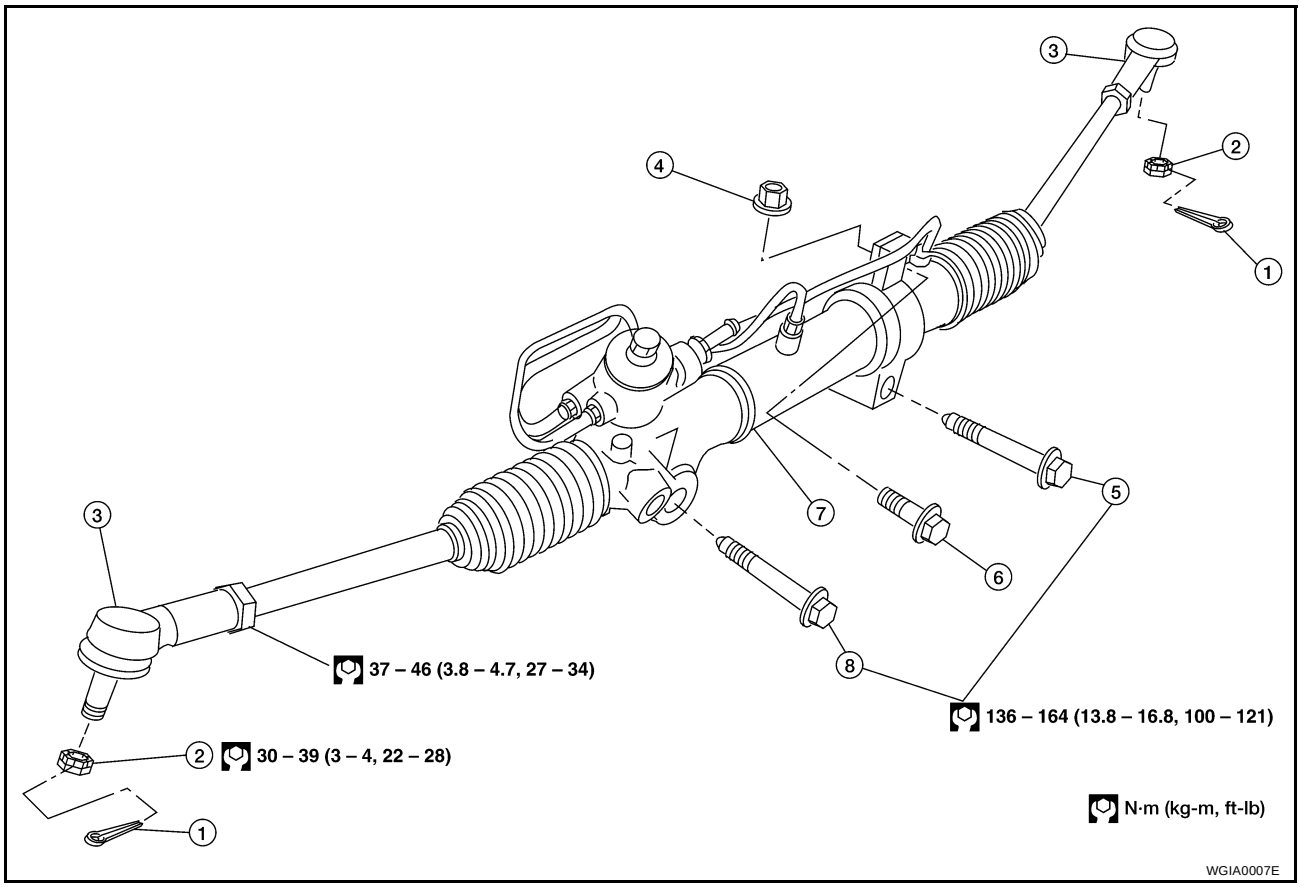

1. Cotter pin
2. Castellated nut
3. Outer tie rod end

4. Gear housing bracket nut
5. Gear housing mounting bolt
6. Gear housing bracket bolt
7. Power steering gear and linkage assembly
8. Gear housing mounting bolt

REMOVAL

CAUTION:

- **The rotation of the driver air bag spiral cable is limited. If the steering gear must be removed, set the front wheels in the straight-ahead direction. Do not rotate the steering column while the steering gear is removed.**
- **Remove the steering wheel and spiral cable before removing the steering lower joint to avoid damaging the SRS spiral cable.**

1. Remove the two front tires with power tool.
2. Disconnect the outer tie-rod ends with Tool.
3. Disconnect the outer swaybar ends with power tool.

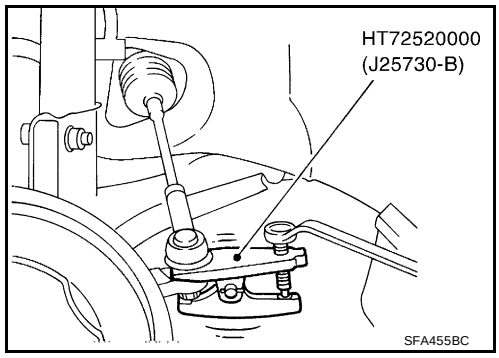

4. Remove the swaybar bracket rear bolts and loosen the front bolts with power tool.

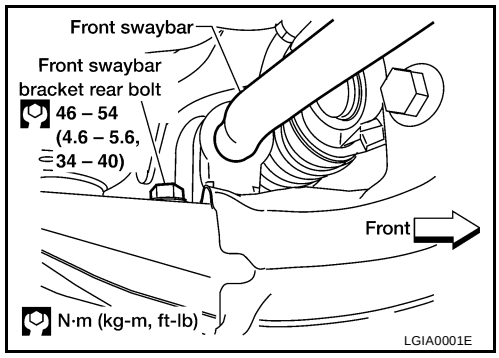

5. Remove the lower joint pinch bolt.

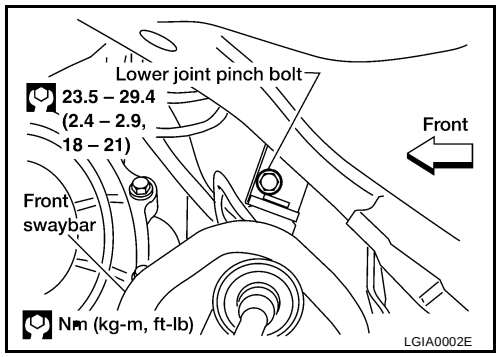

6. Disconnect the power steering high and low pressure lines from the steering gear.
7. Reposition the swaybar up and out of the way.

8. Remove the two steering gear mounting bolts.
   - Do not remove the steering gear mounting bracket from the gear housing.
9. Remove the power steering gear and linkage assembly.

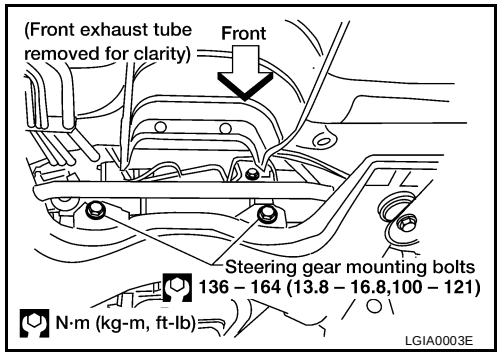

10. Installation is in the reverse order of removal.
    - Install pipe connector.
    - Use the specified tightening torque when installing the high-pressure and low-pressure pipe connections. Excessive tightening will damage threads of connection or O-ring.

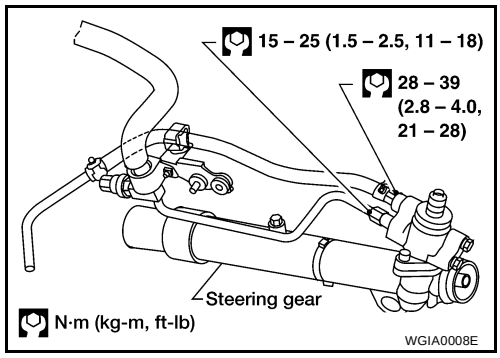

    - The O-ring in low-pressure pipe connector is larger than that in high-pressure connector. Take care to install the proper O-ring.
    - Initially, tighten nut on tie-rod outer socket and knuckle arm to specification. Then tighten further to align nut groove with first pin hole so that the cotter pin can be installed.

      Outer tie rod grooved nut : 29 - 39 N·m (3 - 4 kg-m, 22 - 29 ft-lb)

      CAUTION:
      Tightening torque must not exceed 49 N·m (5 kg-m, 36 ft-lb).

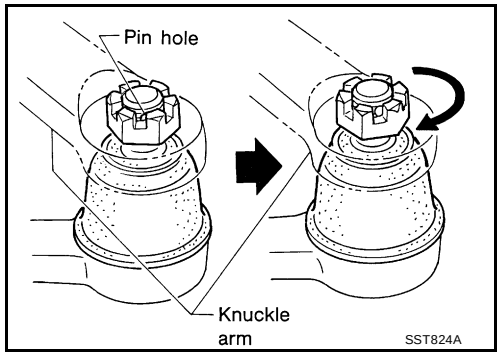

Disassembly and Assembly

EGS000B4

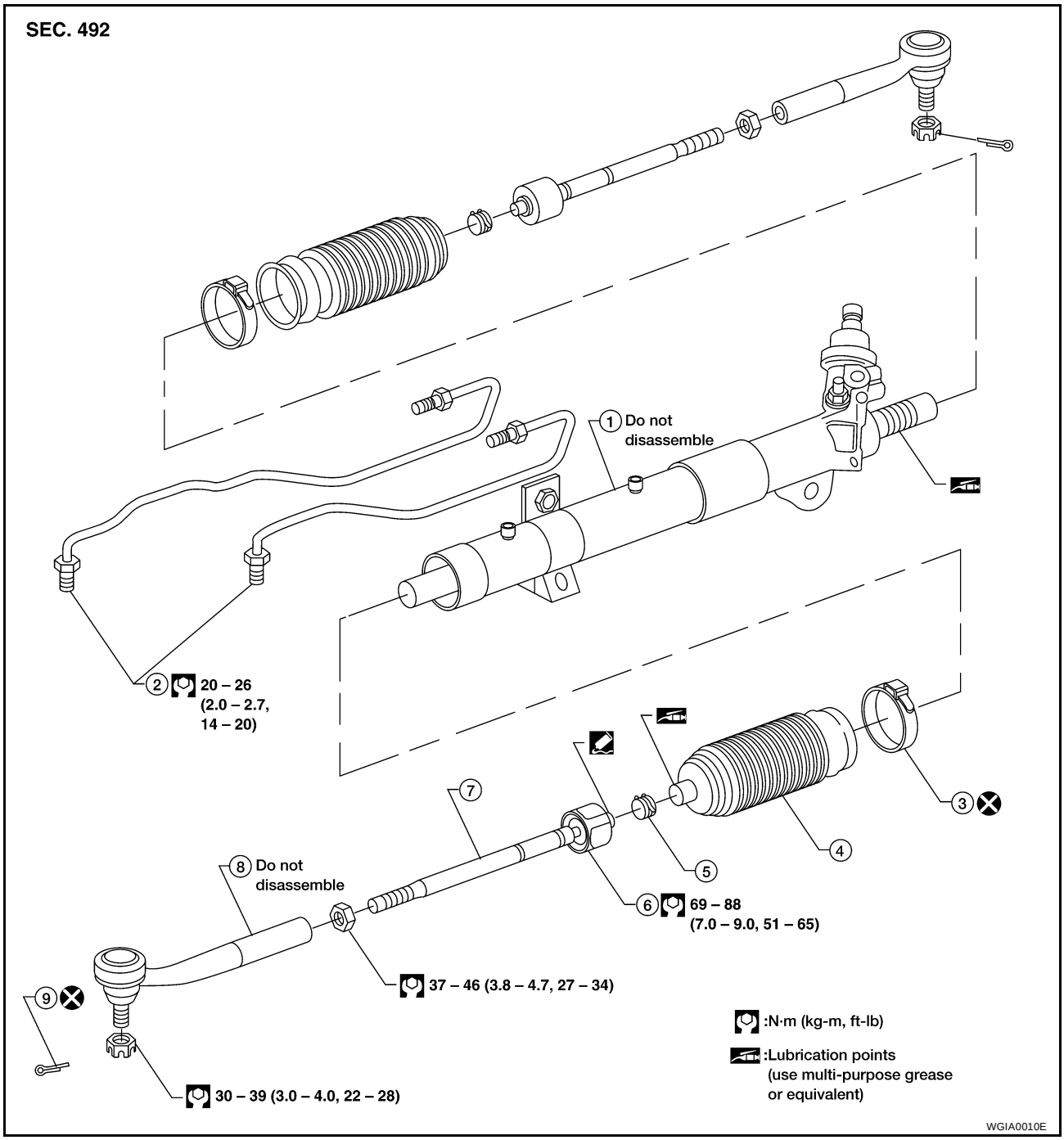

1.	Steering gear	2.	Gear housing fluid tube	3.	Boot clamp
4	Dust boot	5.	Boot band	6.	Tie-rod inner socket
7.	Inner tie-rod	8.	Outer tie-rod	9.	Cotter pin

DISASSEMBLY

1. Prior to disassembling, measure pinion rotating torque. Record the pinion rotating torque. If the rotating torque is not within specifications, replace the steering gear assembly.
   - Before measuring, disconnect gear housing tube and drain fluid.
   - Use soft jaws when holding steering gear housing. Handle gear housing carefully, as it is made of aluminum. Do not grip cylinder in a vise.
2. Remove the outer tie-rod sockets.
3. Remove the inner tie-rod sockets and boots.

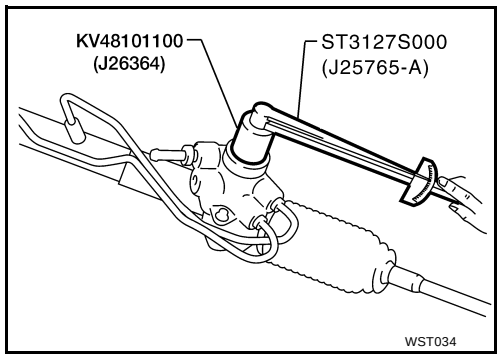

INSPECTION AFTER DISASSEMBLY

Thoroughly clean all parts in cleaning solvent or Genuine NISSAN PSF II or equivalent. Blow dry with compressed air.

Boot

- Check condition of boot. If cracked, replace it.
- Check boots for accumulation of power steering fluid indicating steering gear leak, replace the gear.

Gear

- Thoroughly examine steering gear. If damaged, cracked, leaking, or worn, replace it.

Inner and outer tie-rods

- Check ball joints for swinging force:
  Tie-rod outer and inner ball joints swinging force A. Refer to PS-27, "Steering Gear and Linkage" .
- Check ball joint for rotating torque:
  Tie-rod outer ball joint rotating torque B. Refer to PS-27, "Steering Gear and Linkage" .
- Check ball joints for axial end play:
  Tie-rod outer and inner ball joints axial end play C. Refer to PS-27, "Steering Gear and Linkage" .
- Check condition of dust cover. If cracked, replace outer tie-rod

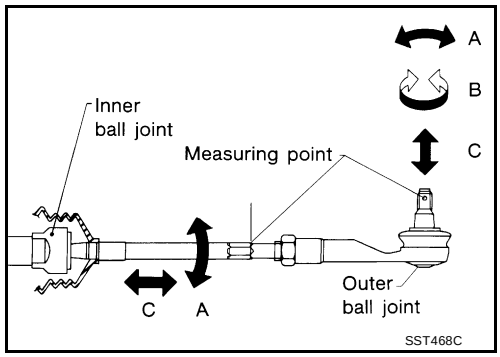

ASSEMBLY

1. Install the inner tie-rods.
2. Install the outer tie-rods to the specified length and tighten the outer socket lock nut. Refer to PS-27, "Steering Gear and Linkage" .
   Use Genuine High Temperature, High Strength Thread Locking Sealant (Red) or equivalent. Refer to GI-42, "RECOMMENDED CHEMICAL PRODUCTS AND SEALANTS" .

   Outer socket lock nut : 37 - 46 N·m (3.8 - 4.7 kg-m, 27 - 34 ft-lb)

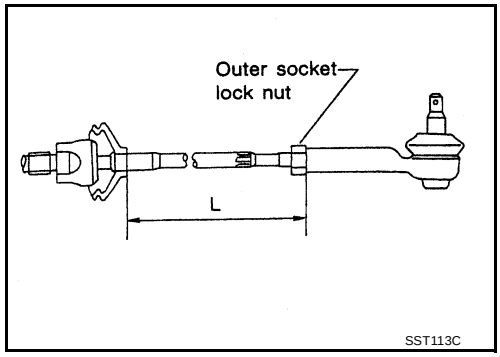

3. Measure rack stroke. Refer to PS-27, "Steering Gear and Linkage" .

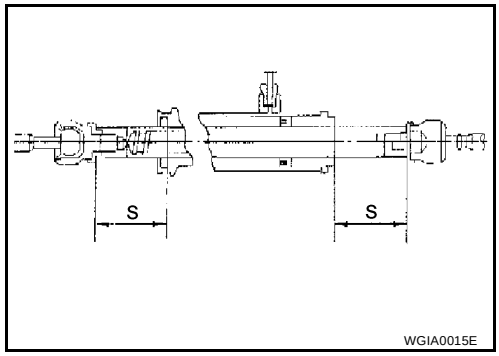

4. Before installing boot, coat the contact surfaces between boot and tie-rod with grease.

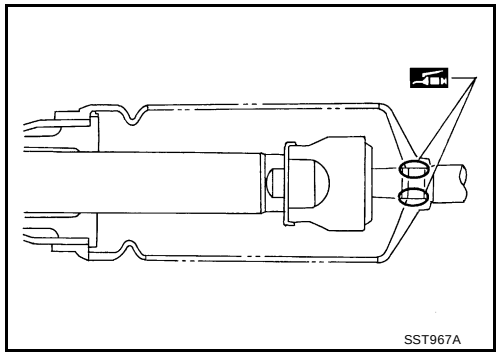

5. Install the boot clamps and crimp securely.

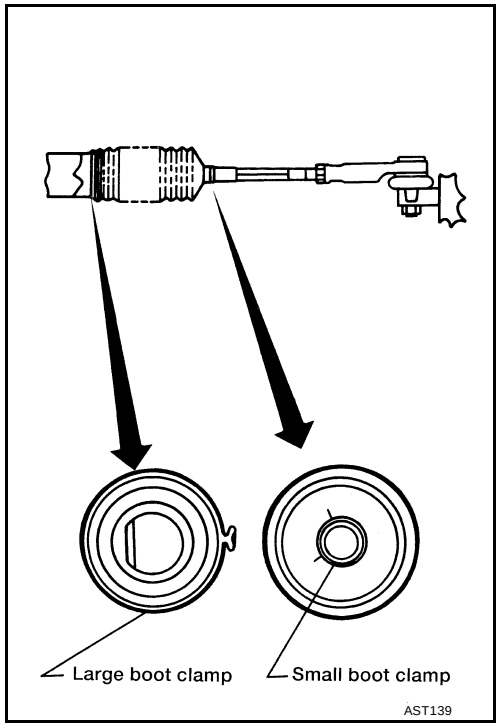

Adjustment for Rack Sliding Force

EGS000IJ

DECREASE

Decrease rack sliding force as follows:

1. Loosen adjusting screw two rotations counter clockwise.

   CAUTION:
   - **Do not remove adjusting screw.**
   - **Steering gear must replaced if adjusting screw is removed or loosended more than two rotations.**

2. Tighten adjusting screw in 40° - 60° increments until rack sliding force is within specification.

Average rack sliding force	**: 210.7 - 298.9 N (21.49 - 30.49 kg-f, 47.37 - 67.19 lb-f)**
Maximum force deviation	**: 98 N (10 kg-f, 22 lb-f)**

NOTE:
Steering gear must replaced if adjusting screw rotation torque is less than 5.0N·m (0.9 kg-m, 44in-lb).

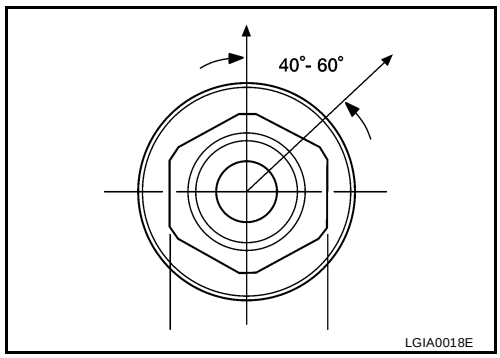

3. Verify rack sliding force.
4. If rack sliding force is out of specification adjust rack sliding force again.
5. If rack sliding force can not be adjusted within specification replace steering gear.

INCREASE

Increase rack sliding force as follows:

1. Tighten adjusting screw until it is flush with housing surface.

CAUTION:
- **Do not remove adjusting screw.**
- **Steering gear must replaced if adjusting screw is removed or loosended more than two rotations.**

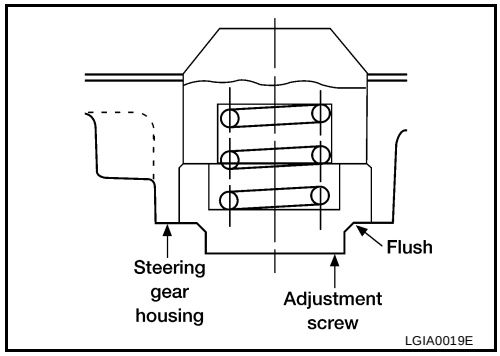

2. Loosen adjusting screw in 40° - 60° increments until rack sliding force is within specification.

Average rack sliding force	**: 210.7 - 298.9 N (21.49 - 30.49 kg-f, 47.37 - 67.19 lb-f)**
Maximum force deviation	**: 98 N (10 kg-f, 22 lb-f)**

NOTE:
Steering gear must replaced if adjusting screw rotation torque is less than 5.0N·m (0.9 kg-m, 44in-lb).

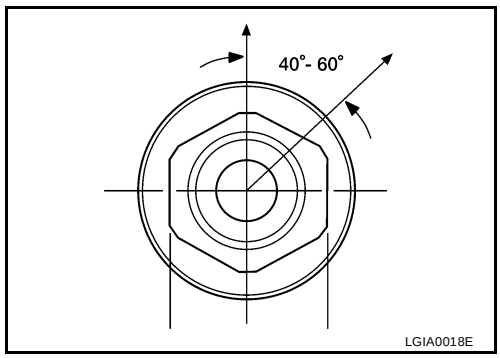

3. Verify rack sliding force.
4. If rack sliding force is out of specification adjust rack sliding force again.
5. If rack sliding force can not be adjusted within specification replace steering gear.

POWER STEERING OIL PUMP

PFP:49110

On-Vehicle Service

EGS000B6

CHECKING HYDRAULIC SYSTEM

Before starting, check belt tension, driving pulley and tire pressure.

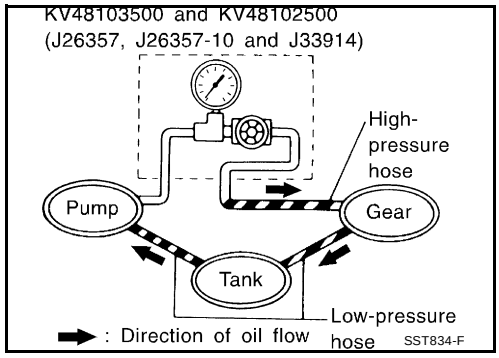

1. Set Tool. Open shut-off valve. Then bleed air. Refer to PS-6, "Bleeding Hydraulic System" .
2. Run engine at idle speed or 1,000 rpm.
   Make sure temperature of fluid in tank rises to 60 to 80°C (140 to 176°F).

   WARNING:
   Warm up engine with shut-off valve fully opened. If engine is started with shut-off valve closed, fluid pressure in oil pump increases to maximum. This will raise oil temperature abnormally.
3. Check pressure with steering wheel fully turned to left and right positions with engine idling at 1,000 rpm.

   CAUTION:
   Do not hold the steering wheel in a locked position for more than 15 seconds.

   Oil pump maximum standard pressure : 8,000 - 8,800 kPa (82 - 90 kg/cm, 1,160 - 1,276 psi)

   - **If pressure reaches maximum operating pressure, system is OK.**
   - **If pressure increases above maximum operating pressure, check power steering pump flow control valve. Refer to PS-28, "Power Steering" .**
4. If power steering pressure is below the maximum operating pressure, slowly close shut-off valve and check pressure again.

   CAUTION:
   Do not close shut-off valve for more than 15 seconds.

   - **If pressure increases to maximum operating pressure, gear is damaged. Refer to PS-13, "Removal and Installation" .**
   - **If pressure remains below maximum operating pressure, pump is damaged. Refer to PS-20, "Removal and Installation" .**
5. After checking hydraulic system, remove Tool and add fluid as necessary. Then completely bleed air out of system. Refer to PS-6, "Bleeding Hydraulic System" .

Removal and Installation

EGS000B7

REMOVAL

1. Loosen adjust screw and oil pump fixing bolt, then remove belt.
2. Remove oil pump union bolts and hose.
3. Remove oil pump bracket fixing bolts.
4. Remove oil pump.

INSTALLATION

Installation is in the reverse order of removal.

- Adjust belt tension.
  Refer to MA-14, "Checking Drive Belts" (QR25DE), MA-21, "Checking Drive Belts" (VQ35DE).
- Bleed air after installation.
  Refer to PS-6, "Bleeding Hydraulic System" .

Disassembly and Assembly

EGS000B8

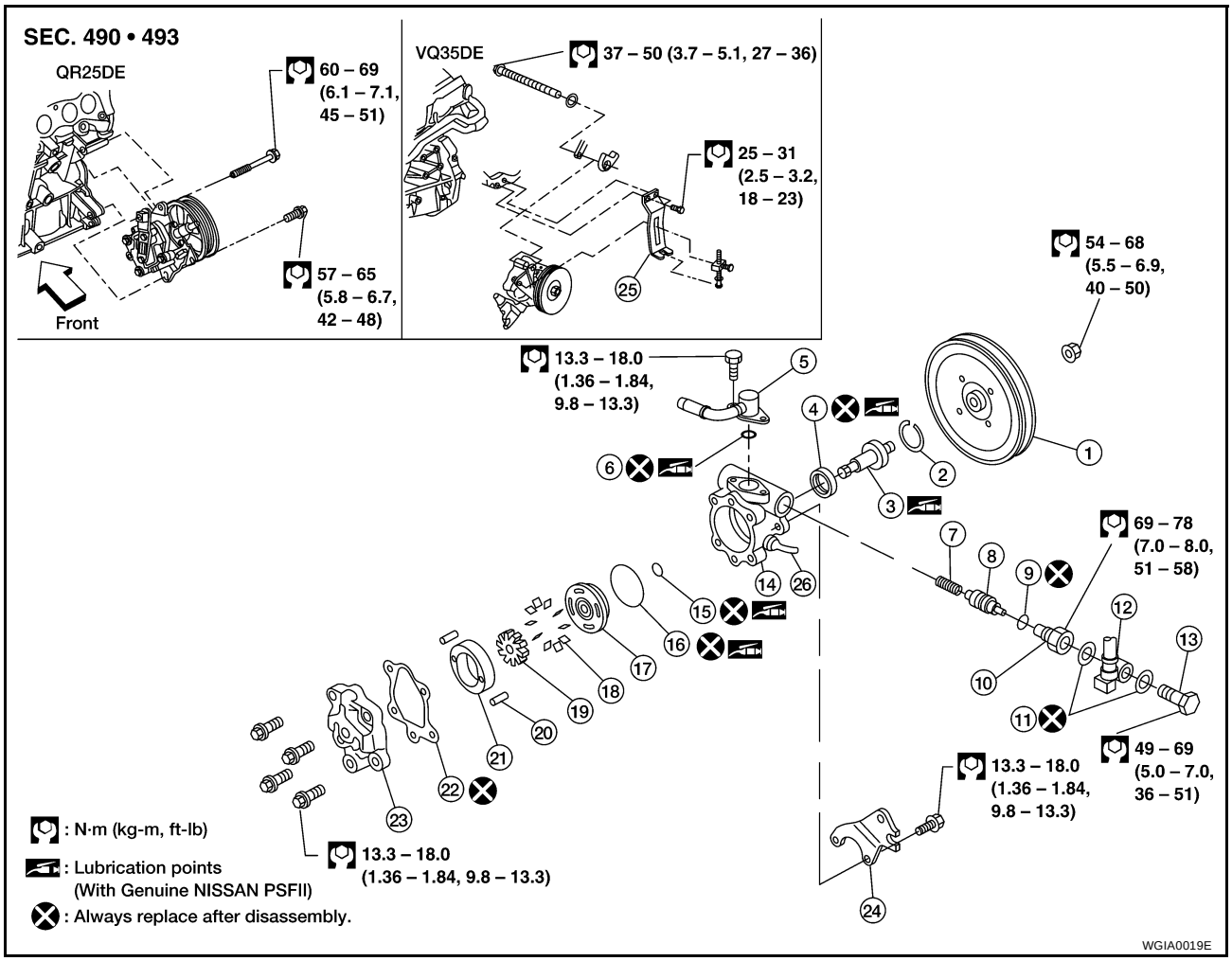

1.	Pulley	2.	Snap ring	3.	Drive shaft
4.	Oil seal	5.	Suction pipe	6.	O-ring
7.	Spring	8.	Flow control valve	9.	O-ring
10.	Connector	11.	Washer	12.	Joint
13.	Connector bolt	14.	Pump case	15.	O-ring
16.	O-ring	17.	Front side plate	18.	Vane
19.	Rotor	20.	Pin	21.	Cam ring
22.	Gasket	23.	Rear cover	24.	Mounting bracket
25.	Power steering pump bracket	26.	Power steering pressure switch		

PRE-DISASSEMBLY INSPECTION

Disassemble the power steering oil pump only if the following items are found.

- Oil leak from any point shown in the figure
- Deformed or damaged pulley
- Poor performance

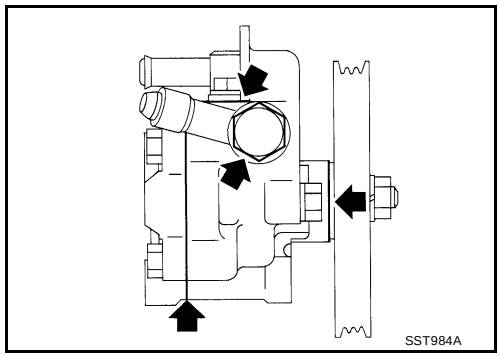

DISASSEMBLY

CAUTION:

- **Parts which can be disassembled are strictly limited. Never disassemble parts other than those specified.**
- **Disassemble in as clean a place as possible.**
- **Clean your hands before disassembly.**
- **Do not use rags; use nylon cloths or paper towels.**
- **Follow the procedures and cautions in the Service Manual.**
- **When disassembling and reassembling, do not let foreign matter enter or contact the parts.**

1. Remove snap ring, then draw drive shaft out.
   Be careful not to drop drive shaft.

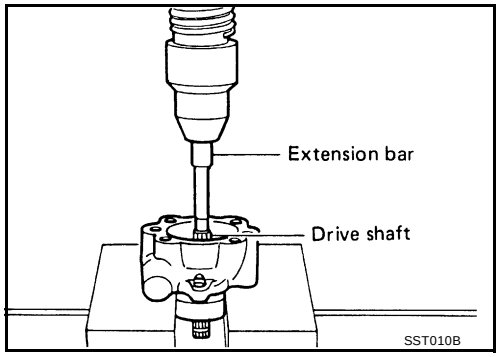

2. Remove oil seal.
   Be careful not to damage front housing.

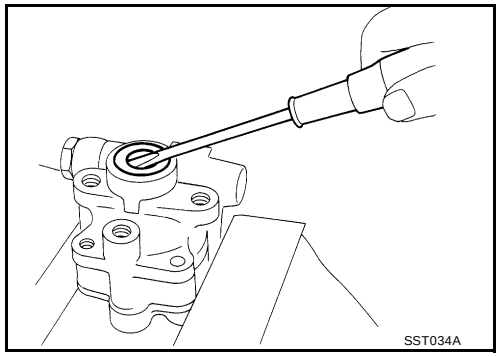

3. Remove connector and flow control valve with spring.
   Be careful not to drop flow control valve.

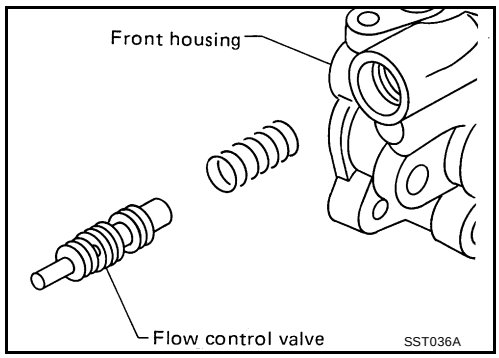

4. Inspect all of the power steering oil pump components, and repair or replace as necessary. Refer to PS-24, "Inspection After Disassembly" .

ASSEMBLY

Assembly is in the reverse order of disassembly, noting the following instructions.

- Make sure O-rings and oil seal are properly installed.
- Always install new O-rings and oil seal.

- Be careful of oil seal direction.
- Cam ring, rotor and vanes must be replaced as a set if necessary.
- Coat each part with Genuine NISSAN PSF II when assembling.

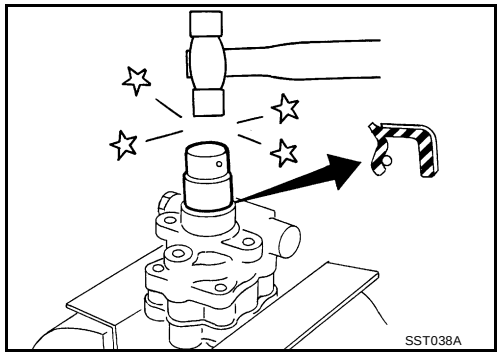

- Pay attention to the direction of rotor.

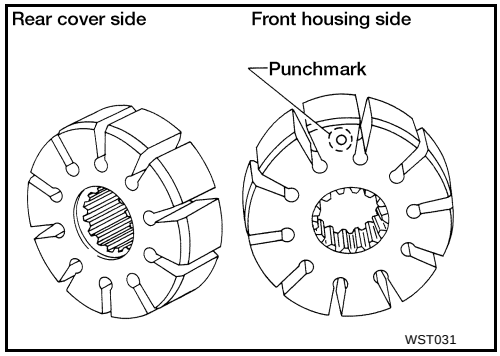

- When assembling vanes to rotor, rounded surfaces of vanes must face cam ring side.

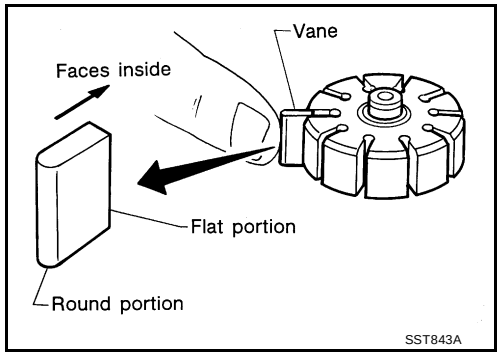

- Insert pin 2 into pin groove 1 of front housing and front side plate. Then install cam ring 3 as shown.

  Cam ring : D_1 is less than D_2

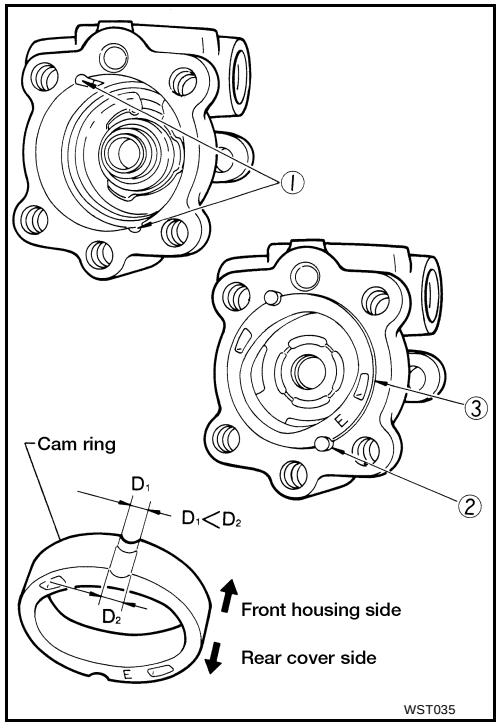

Inspection After Disassembly

EGS000B9

- If pulley is cracked or deformed, replace it.
- If an oil leak is found around pulley shaft oil seal, replace the seal.
- If the pulley or pulley shaft is deformed or worn, replace it.

HYDRAULIC LINE

PFP:49721

Removal and Installation

EGS000BA

All except VQ35DE with A/T

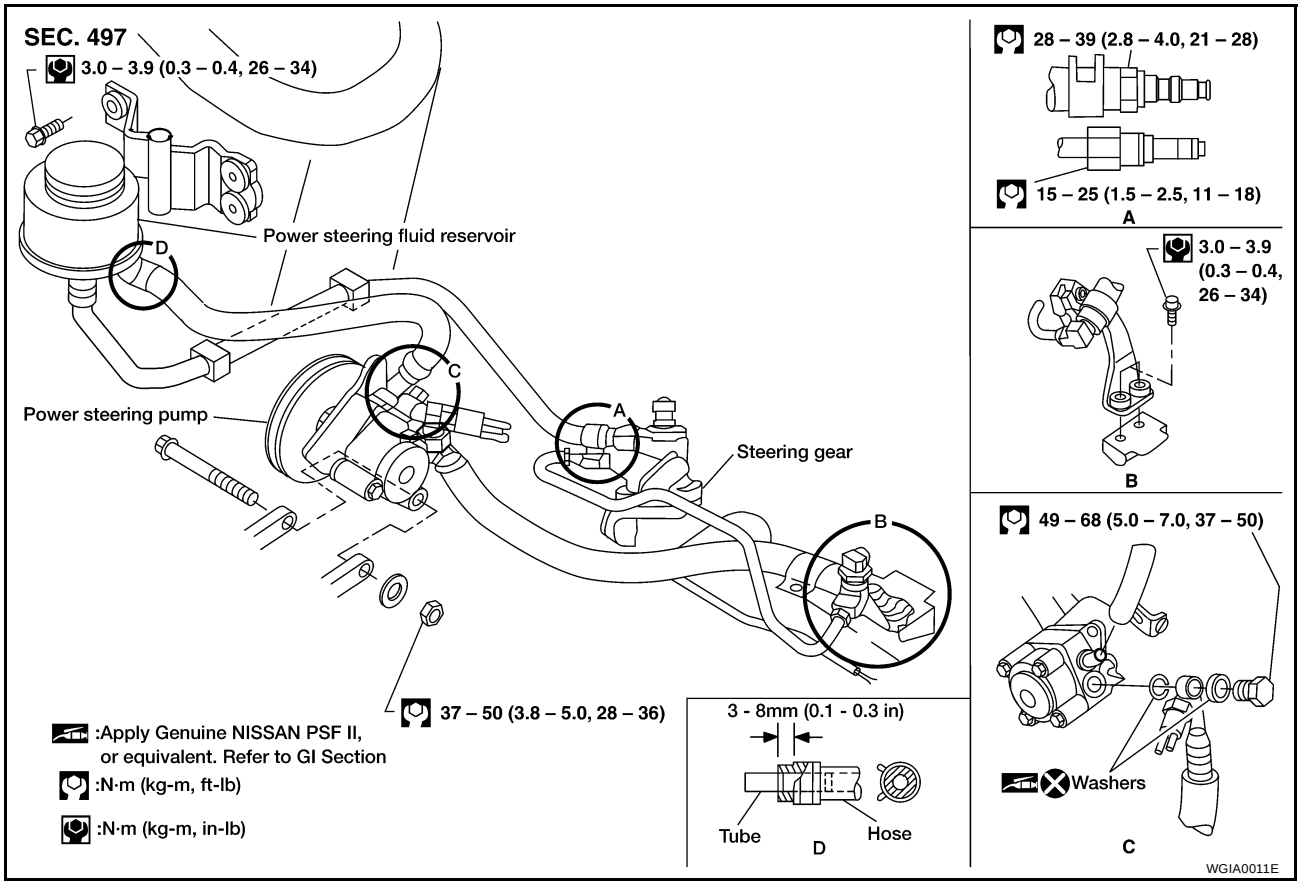

VQ35DE with A/T only

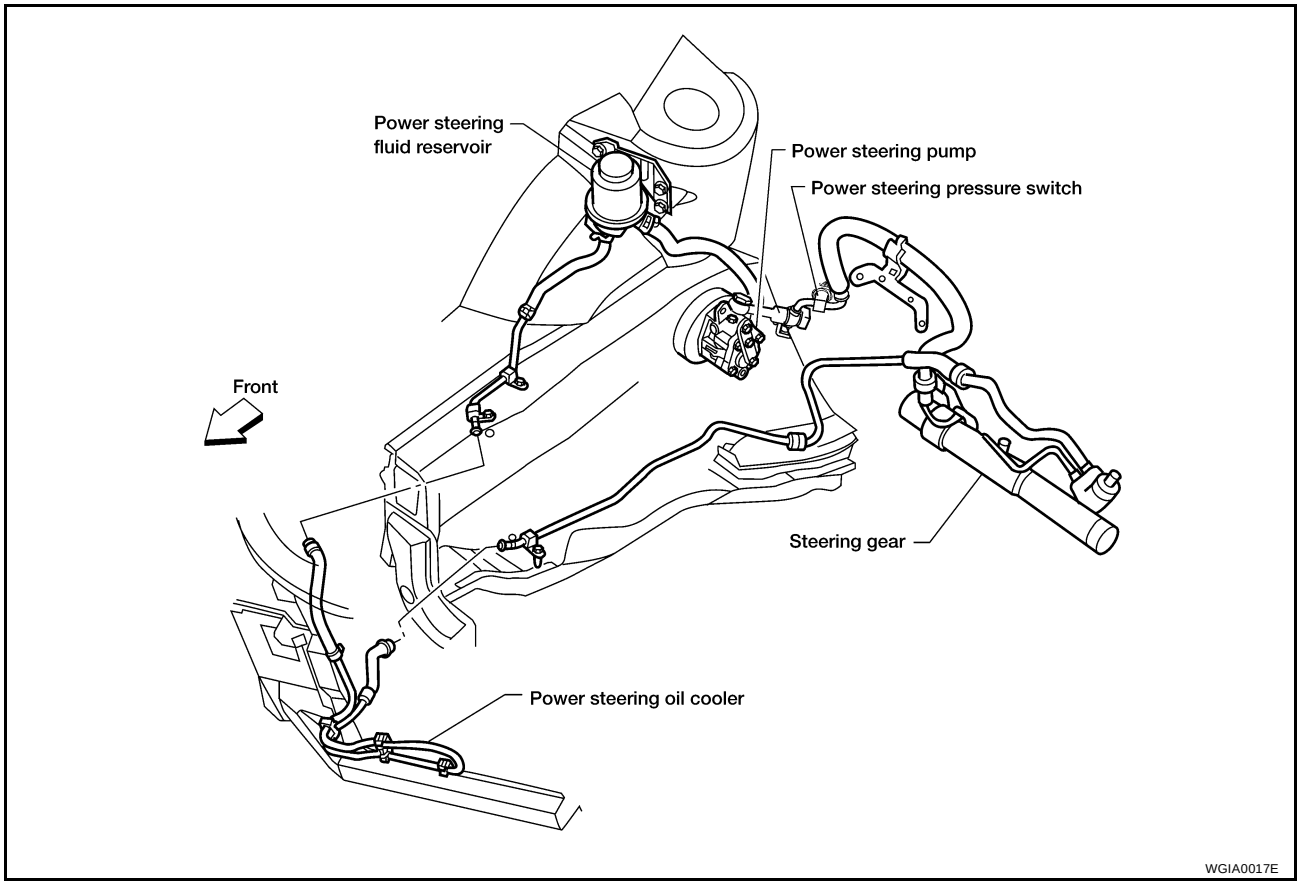

SERVICE DATA AND SPECIFICATIONS (SDS)

PFP:00100

General Specifications

EGS000BB

Steering model	Power steering	
	16 inch tire	17 inch tire
Steering gear type	PR26AD	
Steering overall gear ratio	16.6	
Turns of steering wheel (Lock to lock)	2.9	2.6
Steering column type	Collapsible, tilt, non-motorized telescoping	

Steering Wheel

EGS000BC

Steering wheel axial play mm (in)	0 (0)
Steering wheel play mm (in)	35 (1.38) or less
Movement of gear housing mm (in)	±2 (±0.08) or less

Steering Column

EGS000BD

Applied model	All
Steering column length “L” mm (in)	612 - 616 (24.09 - 24.25)

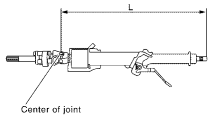

SST855C

Steering Gear and Linkage

EGS000BE

Applied model		All
Steering gear type		PR26AD
Tie-rod outer ball joint	Swinging force at cotter pin hole: “A” N (kg-f, lb-f)	6.47 - 64.63 (0.66 - 6.59, 1.46 - 14.53)
	Rotating torque: “B” N-m (kg-cm, in-lb)	0.29 - 2.94 (3.0 - 30.0, 2.6 - 26.0)
	Axial end play: “C” mm (in)	0.4 (0.016) or less
Tie-rod inner ball joint	Swinging force*: “A” N (kg-f, lb-f)	5.69 - 45.60 (0.58 - 4.65, 1.28 - 10.25)
	Axial end play: “C” mm (in)	0.2 (0.008) or less
Tie-rod standard length “L” mm (in)		208.8 (8.220)

*: Measuring point [l: 172 mm (6.77 in)]

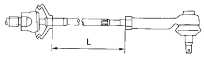

SST867C

Retainer adjustment Adjusting screw	Initial tightening torque N·m (kg-cm, in-lb)	4.9 - 5.9 (50 - 60, 43 - 52)
	Retightening torque after loosening N·m (kg-cm, in-lb)	0.2 (2, 1.7)
	Tightening torque after gear has settled N·m (kg-cm, in-lb)	4.9 - 5.9 (50 - 60, 43 - 52)
	Returning angle degree	60° - 80°
Steering gear type		PR26AD

Rack stroke “S” mm (in)	16 inch tire: 69.5 mm (2.74 in) 17 inch tire: 66.5 mm (2.62 in)

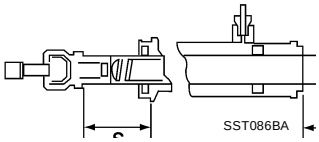

Power Steering

EGS000BF

Applied model			All
Steering gear type			PR26AD
Pump type			F40
Rack sliding force N (kg-f, lb-f) Under normal operating oil pressure	Range within ±11.5 mm (±0.453 in) from the neutral position at rack speed of 3.5 mm (0.138 in)/s	Average force	210.7 - 298.9 (21.49 - 30.49, 47.37 - 67.19)
		Maximum force deviation	98 (10, 22)
	Except for the above range	Maximum sliding force	294 (30, 66)
		Maximum force deviation	147 (15, 33)
Steering wheel turning force (Measured at one full turn from the neutral position) N (kg-f, lb-f)			39 (4, 9) or less
Fluid capacity (Approximate) ℓ (qt.)			1.0 (1-1/8)
Oil pump maximum pressure kPa (kg/cm^2 , psi)			8,000 - 8,800 (82 - 90, 1,160 - 1,276)

SECTION RAX
REAR AXLE

CONTENTS

PRECAUTIONS 2
Precautions 2
PREPARATION 3
Special Service Tools 3
Commercial Service Tools 3
NOISE, VIBRATION, AND HARSHNESS(NVH) TROUBLESHOOTING 4
NVH Troubleshooting Chart 4
WHEEL HUB 5
On-vehicle Service 5
REAR WHEEL BEARING 5
Removal and Installation 6
REMOVAL 6
INSPECTION AFTER REMOVAL 7
INSTALLATION 7
SERVICE DATA AND SPECIFICATIONS (SDS) 8
Wheel Bearing (Rear) 8

PRECAUTIONS

PFP:00001

Precautions

EDS0009D

- **When installing each rubber part, final tightening must be carried out under unladen condition* with tires on ground.**
  ***: Fuel, radiator coolant and engine oil full. Spare tire, jack, hand tools and mats in designated positions.**
- **Use flare nut wrench when removing or installing brake tubes.**
- **After installing removed suspension parts, check wheel alignment.**
- **Do not jack up at the trailing arm and lateral link.**
- **Always torque brake lines when installing.**

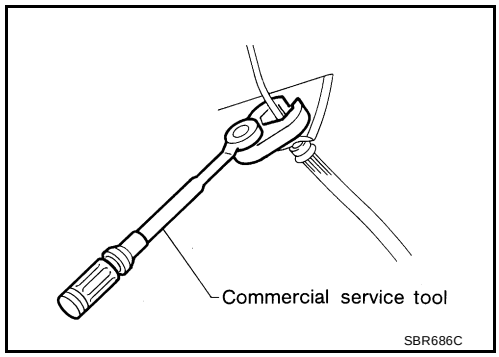

PREPARATION

PFP:00002

Special Service Tools

EDS0009E

The actual shapes of Kent-Moore tools may differ from those of special service tools illustrated here.

Tool number (Kent-Moore No.) Tool name		Description
ST15310000 (—) Drift	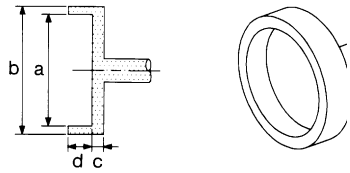 NT607	Install ABS sensor rotor **a: 84 mm (3.31 in) dia.** **b: 96 mm (3.78 in) dia.** **c: 8 mm (0.31 in)** **d: 20 mm (0.79 in)**

Commercial Service Tools

EDS0009F

Tool name		Description
GG94310000 1 Flare nut crowfoot 2 Torque wrench	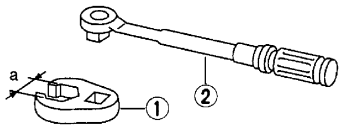 NT360	Removing and installing brake piping **a: 10 mm (0.39 in)**
Drift	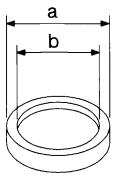 NT371	Install ABS sensor rotor **a: 75 mm (2.95 in) dia.** **b: 62 mm (2.44 in) dia.**
Power tool	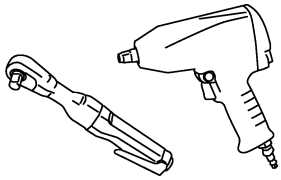 PBIC0190E	Loosening bolts and nuts

NOISE, VIBRATION, AND HARSHNESS(NVH) TROUBLESHOOTING

PFP:00003

NVH Troubleshooting Chart

EDS0009G

Use the chart below to help you find the cause of the symptom. If necessary, repair or replace these parts.

Reference page			RSU-8, "Removal and Installation"	RSU-8, "Removal and Installation"	RAX-5	WT-2, "NOISE, VIBRATION, AND HARSHNESS (NVH) TROUBLESHOOTING"	WT-2, "NOISE, VIBRATION, AND HARSHNESS (NVH) TROUBLESHOOTING"
Possible cause and SUSPECTED PARTS			Improper installation, looseness	Parts interference	Wheel bearing damage	TIRES	ROAD WHEEL
Symptom	REAR AXLE	Noise	×	×		×	×
		Shake	×	×		×	×
		Vibration	×	×		×	
		Shimmy	×	×		×	×
		Judder	×			×	×
		Poor quality ride or handling	×	×	×	×	×

×: Applicable

WHEEL HUB

PFP:43202

On-vehicle Service

EDS0009H

Check axle and suspension parts for excessive play, wear or damage.

- Shake each rear wheel to check for excessive play.

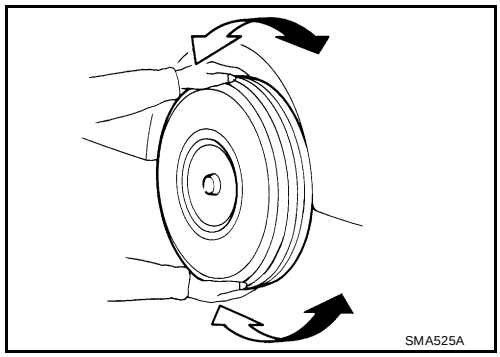

REAR WHEEL BEARING

- Check axial end play.

Axial end play	**: 0.1 mm (0.0040 in) or less**

- Check that wheel hub bearings operate smoothly.
- Replace wheel bearing assembly if there is axial end play or wheel bearing does not turn smoothly. Refer to RAX-6, "Removal and Installation" .

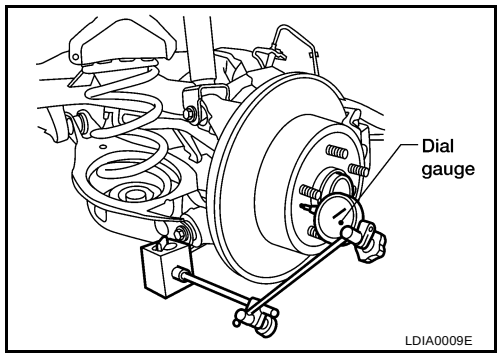

Removal and Installation

EDS0009I

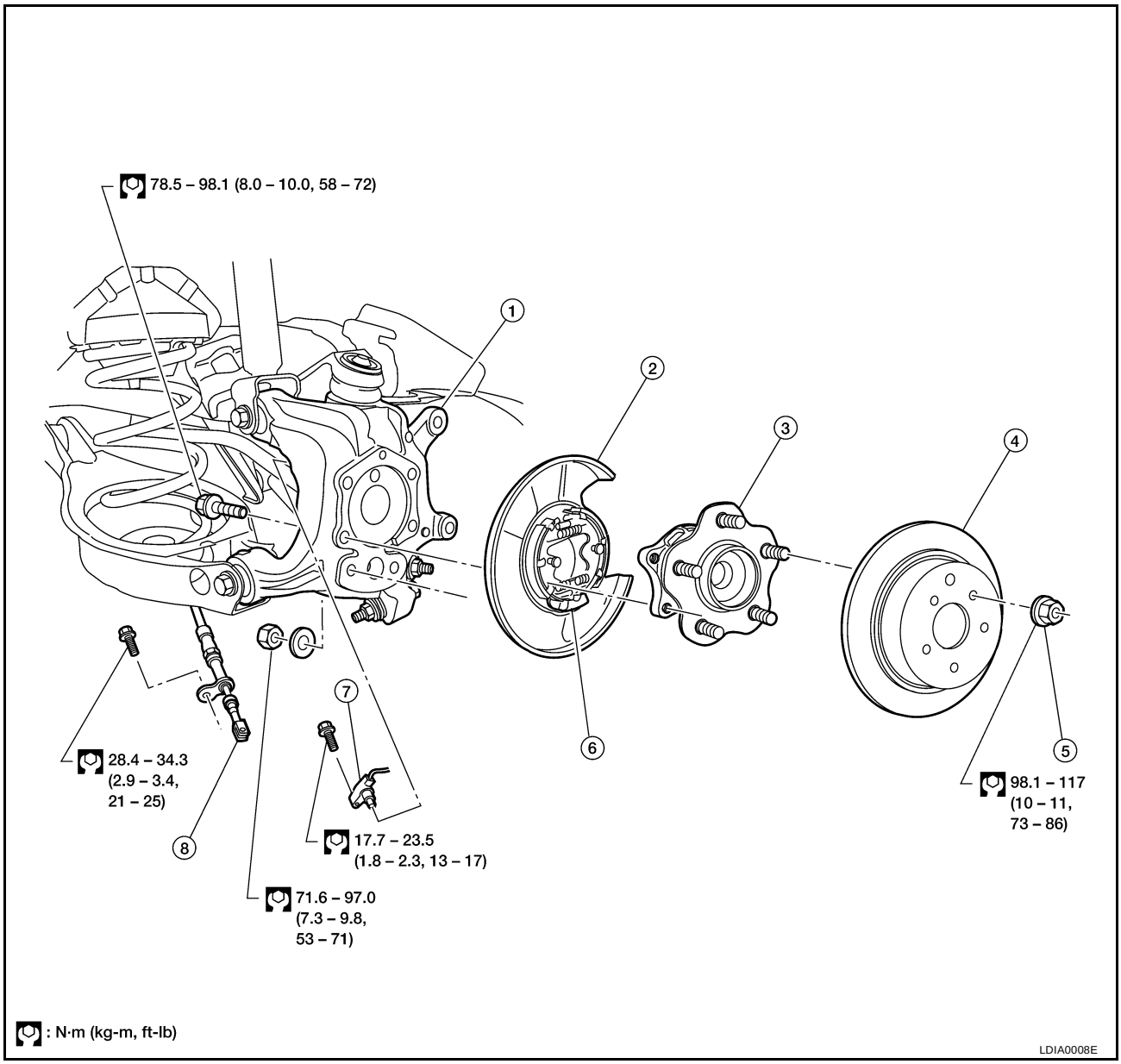

1. Spindle	2. Baffle plate	3. Wheel hub
4. Brake rotor	5 Wheel nut	6. Anchor block
7. ABS sensor, if equipped	8. Parking brake cable	

REMOVAL

CAUTION:

- **Before removing the rear wheel hub assembly, disconnect the ABS sensor and parking brake cable from the assembly. Then move it away from the hub assembly. Failure to do so may result in damage to the sensor wires and the sensor becoming inoperative.**
- **Wheel hub bearing does not require maintenance. If any of the following symptoms are noted, replace wheel hub bearing assembly.**
- **Growling noise is emitted from wheel hub bearing during operation.**
- **Wheel hub bearing drags or turns roughly. This occurs when turning hub by hand after bearing lock nut is tightened to specified torque.**

1. Remove brake caliper assembly, using power tool.
2. Remove brake rotor.
3. Remove wheel hub from spindle.
   Brake hose does not need to be disconnected from brake caliper.

Suspend caliper assembly with wire so as not to stretch brake hose.
Be careful not to depress brake pedal, or piston will pop out.
Make sure brake hose is not twisted.

INSPECTION AFTER REMOVAL

- Check for deformity, cracks and damage on wheel hub, replace if necessary.

INSTALLATION

- Install wheel hub.
- Check that wheel bearings operate smoothly.
- Check wheel hub bearing axial end play.

Axial end play	**: 0.1 mm (0.0040 in) or less**

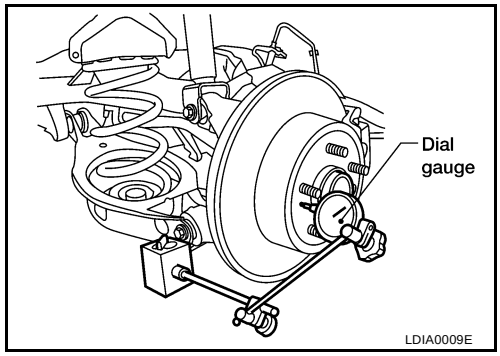

SERVICE DATA AND SPECIFICATIONS (SDS)

PFP:00030

Wheel Bearing (Rear)

EDS0009J

Wheel bearing axial end play	0.1 mm (0.0040 in) or less

SECTION RF
ROOF

CONTENTS

PRECAUTIONS 2
Precautions for Supplemental Restraint System (SRS) “AIR BAG” and “SEAT BELT PRE-TENSIONER” 2
Precautions 2
PREPARATION 3
Special service tool 3
Commercial Service Tool 3
SQUEAK AND RATTLE TROUBLE DIAGNOSES..... 4
Work Flow 4
CUSTOMER INTERVIEW 4
DUPLICATE THE NOISE AND TEST DRIVE 5
CHECK RELATED SERVICE BULLETINS 5
LOCATE THE NOISE AND IDENTIFY THE ROOT CAUSE 5
REPAIR THE CAUSE 5
CONFIRM THE REPAIR 6
Generic Squeak and Rattle Troubleshooting 6
INSTRUMENT PANEL 6
CENTER CONSOLE 6
DOORS 6
TRUNK 7
SUNROOF/HEADLINER 7
SEATS 7
UNDERHOOD 7
Diagnostic Worksheet 8
SUNROOF 10
Component Parts and Harness Connector Location.. 10
System Description 10
OUTLINE 10
OPERATION 10
DELAYED POWER OPERATION 10
MEMORY RESET PROCEDURE 10
Wiring Diagram — SROOF — 11
Terminals and Reference Value for Sunroof Motor.. 12
Trouble Diagnosis Chart by Symptom 12
Sunroof Switch Check 12
Sunroof Motor Assembly Power Supply and Ground Circuit Check 13
Sunroof Motor Assembly Circuit System Check 13
Link and Wire Assembly 13
Fitting Adjustment 14
GAP ADJUSTMENT (A-A, C-C) 14
GAP ADJUSTMENT (B-B) 14
HEIGHT DIFFERENCE ADJUSTMENT 15
Removal and Installation 15
SUNROOF UNIT 17
GLASS LID 17
SUNSHADE 18
SUNROOF MOTOR 18

PRECAUTIONS

PFP:00001

Precautions for Supplemental Restraint System (SRS) “AIR BAG” and “SEAT BELT PRE-TENSIONER”

EIS000TF

The Supplemental Restraint System such as “AIR BAG” and “SEAT BELT PRE-TENSIONER”, used along with a front seat belt, helps to reduce the risk or severity of injury to the driver and front passenger for certain types of collision. Information necessary to service the system safely is included in the SRS and SB section of this Service Manual.

WARNING:

- **To avoid rendering the SRS inoperative, which could increase the risk of personal injury or death in the event of a collision which would result in air bag inflation, all maintenance must be performed by an authorized NISSAN/INFINITI dealer.**
- **Improper maintenance, including incorrect removal and installation of the SRS, can lead to personal injury caused by unintentional activation of the system. For removal of Spiral Cable and Air Bag Module, see the SRS section.**
- **Do not use electrical test equipment on any circuit related to the SRS unless instructed to in this Service Manual. SRS wiring harnesses can be identified by yellow and/or orange harness connectors.**

Precautions

EIS000TG

- Disconnect both battery cables in advance.
- Never tamper with or force air bag lid open, as this may adversely affect air bag performance.
- Be careful not to scratch pad and other parts.
- When removing or disassembling any part, be careful not to damage or deform it. Protect parts which may get in the way with cloth.
- When removing parts with a screwdriver or other tool, protect parts by wrapping them with vinyl or tape.
- Keep removed parts protected with cloth.
- If a clip is deformed or damaged, replace it.
- If an unreusable part is removed, replace it with a new one.
- Tighten bolts and nuts firmly to the specified torque.
- After re-assembly has been completed, make sure each part functions correctly.
- Remove stains in the following way.

Water-soluble stains:
Dip a soft cloth in warm water, and then squeeze it tightly. After wiping the stain, wipe with a soft dry cloth.
Oil stain:
Dissolve a synthetic detergent in warm water (density of 2 to 3% or less), dip the cloth, then clean off the stain with the cloth. Next, dip the cloth in fresh water and squeeze it tightly. Then clean off the detergent completely. Then wipe the area with a soft dry cloth.

- Do not use any organic solvent, such as thinner or benzine.

PREPARATION

PFP:00002

Special service tool

EIS000TH

The actual shapes of Kent-Moore tools may differ from those of special service tools illustrated here.

Tool number (Kent-Moore No.) Tool name		Description
(J-39570) Chassis ear	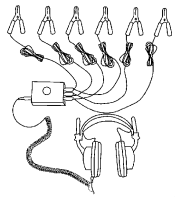 SIIA0993E	Locating the noise
(J-43980) NISSAN Squeak and Rattle Kit	 SIIA0994E	Repairing the cause of noise

Commercial Service Tool

EIS000TI

Tool name		Description
(J-39565) Engine ear	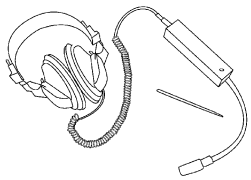 SIIA0995E	Locating the noise

SQUEAK AND RATTLE TROUBLE DIAGNOSES

PFP:00000

Work Flow

EIS000TJ

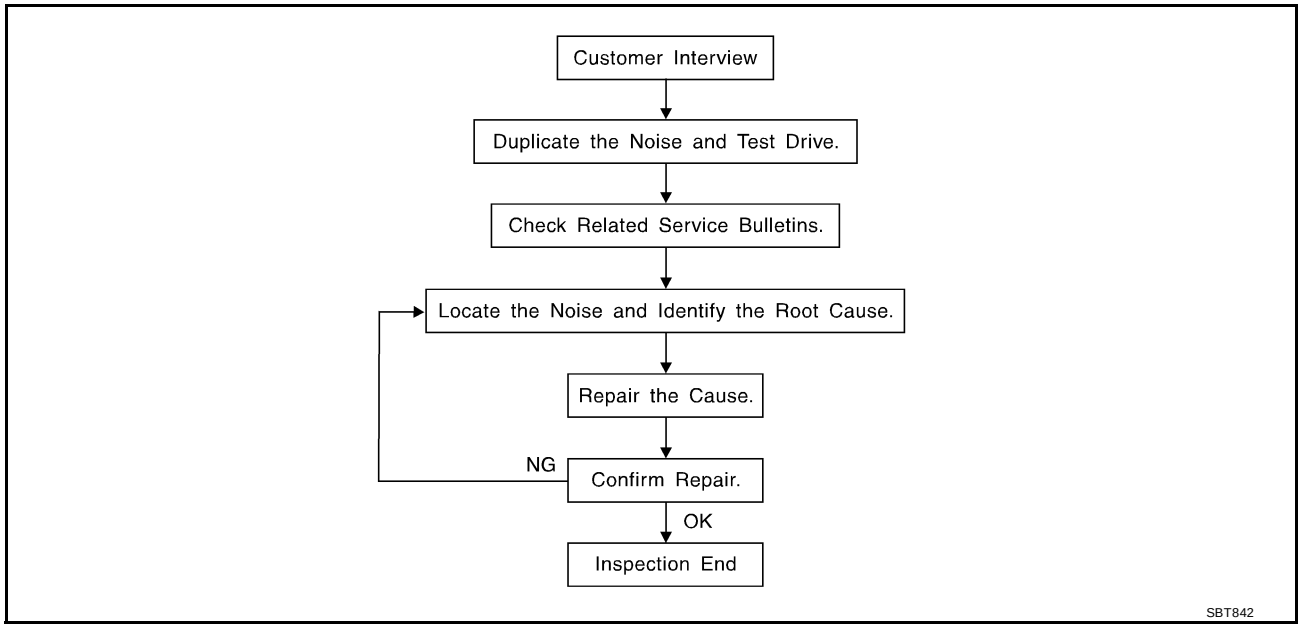

CUSTOMER INTERVIEW

Interview the customer if possible, to determine the conditions that exist when the noise occurs. Use the Diagnostic Worksheet during the interview to document the facts and conditions when the noise occurs and any customer comments; refer to RF-8, "Diagnostic Worksheet" . This information is necessary to duplicate the conditions that exist when the noise occurs.

- The customer may not be able to provide a detailed description or the location of the noise. Attempt to obtain all the facts and conditions that exist when the noise occurs (or does not occur).
- If there is more than one noise in the vehicle, be sure to diagnose and repair the noise that the customer is concerned about. This can be accomplished by test driving the vehicle with the customer.
- After identifying the type of noise, isolate the noise in terms of its characteristics. The noise characteristics are provided so the customer, service adviser and technician are all speaking the same language when defining the noise.
- Squeak —(Like tennis shoes on a clean floor)
  Squeak characteristics include the light contact/fast movement/brought on by road conditions. Hard surfaces = higher pitch noise/softer surfaces = lower pitch noises/edge to surface = chirping.
- Creak—(Like walking on an old wooden floor)
  Creak characteristics include firm contact/slow movement/twisting with a rotational movement/pitch dependent on materials/often brought on by activity.
- Rattle—(Like shaking a baby rattle)
  Rattle characteristics include the fast repeated contact/vibration or similar movement/loose parts/missing clip or fastener/incorrect clearance.
- Knock —(Like a knock on a door)
  Knock characteristics include hollow sounding/sometimes repeating/often brought on by driver action.
- Tick—(Like a clock second hand)
  Tick characteristics include gentle contacting of light materials/loose components/can be caused by driver action or road conditions.
- Thump—(Heavy, muffled knock noise)
  Thump characteristics include softer knock/dead sound often drought on by activity.
- Buzz—(Like a bumble bee)
  Buzz characteristics include high frequency rattle/firm contact.
- Often the degree of acceptable noise level will vary depending upon the person. A noise that you may judge as acceptable may be irritating to the customer.
- Weather conditions, especially humidity and temperature, may have a great effect on noise level.

DUPLICATE THE NOISE AND TEST DRIVE

If possible, drive the vehicle with the customer until the noise is duplicated. Note any additional information on the Diagnostic Worksheet regarding the conditions or location of the noise. This information can be used to duplicate the same conditions when you confirm the repair.
If the noise can be duplicated easily during the test drive, to help identify the source of the noise, try to duplicate the noise with the vehicle stopped by doing one or all of the following:

1) Close a door.
2) Tap or push/pull around the area where the noise appears to be coming from.
3) Rev the engine.
4) Use a floor jack to recreate vehicle "twist".
5) At idle, apply engine load (electrical load, half-clutch on M/T model, drive position on A/T model).
6) Raise the vehicle on a hoist and hit a tire with a rubber hammer.

- Drive the vehicle and attempt to duplicate the conditions the customer states exist when the noise occurs.
- If it is difficult to duplicate the noise, drive the vehicle slowly on an undulating or rough road to stress the vehicle body.

CHECK RELATED SERVICE BULLETINS

After verifying the customer concern or symptom, check ASIST for Technical Service Bulletins (TSBs) related to that concern or symptom.
If a TSB relates to the symptom, follow the procedure to repair the noise.

LOCATE THE NOISE AND IDENTIFY THE ROOT CAUSE

1. Narrow down the noise to a general area. To help pinpoint the source of the noise, use a listening tool (Chassis Ear: J-39570, Engine Ear: J-39565 and mechanics stethoscope).
2. Narrow down the noise to a more specific area and identify the cause of the noise by:

- removing the components in the area that you suspect the noise is coming from.
  Do not use too much force when removing clips and fasteners, otherwise clips and fastener can be broken or lost during the repair, resulting in the creation of new noise.
- tapping or pushing/pulling the component that you suspect is causing the noise.
  Do not tap or push/pull the component with excessive force, otherwise the noise will be eliminated only temporarily.
- feeling for a vibration with your hand by touching the component(s) that you suspect is (are) causing the noise.
- placing a piece of paper between components that you suspect are causing the noise.
- looking for loose components and contact marks.
  Refer to RF-6, "Generic Squeak and Rattle Troubleshooting" .

REPAIR THE CAUSE

- If the cause is a loose component, tighten the component securely.
- If the cause is insufficient clearance between components:
  - separate components by repositioning or loosening and retightening the component, if possible.
  - insulate components with a suitable insulator such as urethane pads, foam blocks, felt cloth tape or urethane tape. A Nissan Squeak and Rattle Kit (J-43980) is available through your authorized Nissan Parts Department.

CAUTION:
Do not use excessive force as many components are constructed of plastic and may be damaged. Always check with the Parts Department for the latest parts information.

The following materials are contained in the Nissan Squeak and Rattle Kit (J-43980). Each item can be ordered separately as needed.
URETHANE PADS [1.5 mm (0.059 in) thick]
Insulates connectors, harness, etc.
76268-9E005: 100×135 mm (3.94×5.31 in)
76884-71L01: 60×85 mm (2.36×3.35 in)
76884-71L02: 15×25 mm (0.59×0.98 in)
INSULATOR (Foam blocks)
Insulates components from contact. Can be used to fill space behind a panel.
73982-9E000: 45 mm (1.77 in) thick, 50×50 mm (1.97×1.97 in)
73982-50Y00: 10 mm (0.39 in) thick, 50×50 mm (1.97×1.97 in)

INSULATOR (Light foam block)
80845-71L00: 30 mm (1.18 in) thick, 30×50 mm (1.18×1.97 in)
FELT CLOTHTAPE
Used to insulate where movement does not occur. Ideal for instrument panel applications.
68370-4B000: 15×25 mm (0.59×0.98 in) pad/68239-13E00: 5 mm (0.20 in) wide tape roll.
The following materials, not found in the kit, can also be used to repair squeaks and rattles.
UHMW (TEFLON) TAPE
Insulates where slight movement is present. Ideal for instrument panel applications.
SILICONE GREASE
Used in place of UHMW tape that will be visible or not fit.
Note: Will only last a few months.
SILICONE SPRAY
Use when grease cannot be applied.
DUCT TAPE
Use to eliminate movement.

CONFIRM THE REPAIR

Confirm that the cause of a noise is repaired by test driving the vehicle. Operate the vehicle under the same conditions as when the noise originally occurred. Refer to the notes on the Diagnostic Worksheet.

Generic Squeak and Rattle Troubleshooting

EIS000TK

Refer to Table of Contents for specific component removal and installation information.

INSTRUMENT PANEL

Most incidents are caused by contact and movement between:

1. The cluster lid A and instrument panel
2. Acrylic lens and combination meter housing
3. Instrument panel to front pillar garnish
4. Instrument panel to windshield
5. Instrument panel mounting pins
6. Wiring harnesses behind the combination meter
7. A/C defroster duct and duct joint

These incidents can usually be located by tapping or moving the components to duplicate the noise or by pressing on the components while driving to stop the noise. Most of these incidents can be repaired by applying felt cloth tape or silicone spray (in hard to reach areas).Urethane pads can be used to insulate wiring harness.

CAUTION:
Do not use silicone spray to isolate a squeak or rattle. If you saturate the area with silicone, you will not be able to recheck the repair.

CENTER CONSOLE

Components to pay attention to include:

1. Shifter assembly cover to finisher
2. A/C control unit and cluster lid C
3. Wiring harnesses behind audio and A/C control unit

The instrument panel repair and isolation procedures also apply to the center console.

DOORS

Pay attention to the:

1. Finisher and inner panel making a slapping noise
2. Inside handle escutcheon to door finisher
3. Wiring harnesses tapping
4. Door striker out of alignment causing a popping noise on starts and stops

Tapping or moving the components or pressing on them while driving to duplicate the conditions can isolate many of these incidents. You can usually insulate the areas with felt cloth tape or insulator foam blocks from the Nissan Squeak and Rattle Kit (J-43980) to repair the noise.

TRUNK

Trunk noises are often caused by a loose jack or loose items put into the trunk by the owner.
In addition look for:

1. Trunk lid bumpers out of adjustment
2. Trunk lid striker out of adjustment
3. The trunk lid torsion bars knocking together
4. A loose license plate or bracket

Most of these incidents can be repaired by adjusting, securing or insulating the item(s) or component(s) causing the noise.

SUNROOF/HEADLINER

Noises in the sunroof/headliner area can often be traced to one of the following:

1. Sunroof lid, rail, linkage or seals making a rattle or light knocking noise
2. Sunvisor shaft shaking in the holder
3. Front or rear windshield touching headliner and squeaking

Again, pressing on the components to stop the noise while duplicating the conditions can isolate most of these incidents. Repairs usually consist of insulating with felt cloth tape.

SEATS

When isolating seat noise it's important to note the position the seat is in and the load placed on the seat when the noise is present. These conditions should be duplicated when verifying and isolating the cause of the noise.
Cause of seat noise include:

1. Headrest rods and holder
2. A squeak between the seat pad cushion and frame
3. The rear seat back lock and bracket

These noises can be isolated by moving or pressing on the suspected components while duplicating the conditions under which the noise occurs. Most of these incidents can be repaired by repositioning the component or applying urethane tape to the contact area.

UNDERHOOD

Some interior noise may be caused by components under the hood or on the engine wall. The noise is then transmitted into the passenger compartment.
Causes of transmitted underhood noise include:

1. Any component mounted to the engine wall
2. Components that pass through the engine wall
3. Engine wall mounts and connectors
4. Loose radiator mounting pins
5. Hood bumpers out of adjustment
6. Hood striker out of adjustment

These noises can be difficult to isolate since they cannot be reached from the interior of the vehicle. The best method is to secure, move or insulate one component at a time and test drive the vehicle. Also, engine RPM or load can be changed to isolate the noise. Repairs can usually be made by moving, adjusting securing, or insulating the component causing the noise.

Diagnostic Worksheet

EIS000TL

SQUEAK & RATTLE DIAGNOSTIC WORKSHEET

Dear Nissan Customer:
We are concerned about your satisfaction with your Nissan vehicle. Repairing a squeak or rattle sometimes can be very difficult. To help us fix your Nissan right the first time, please take a moment to note the area of the vehicle where the squeak or rattle occurs and under what conditions. You may be asked to take a test drive with a service advisor or technician to ensure we confirm the noise you are hearing.

I. WHERE DOES THE NOISE COME FROM? (circle the area of the vehicle)
The illustrations are for reference only, and may not reflect the actual configuration of your vehicle.

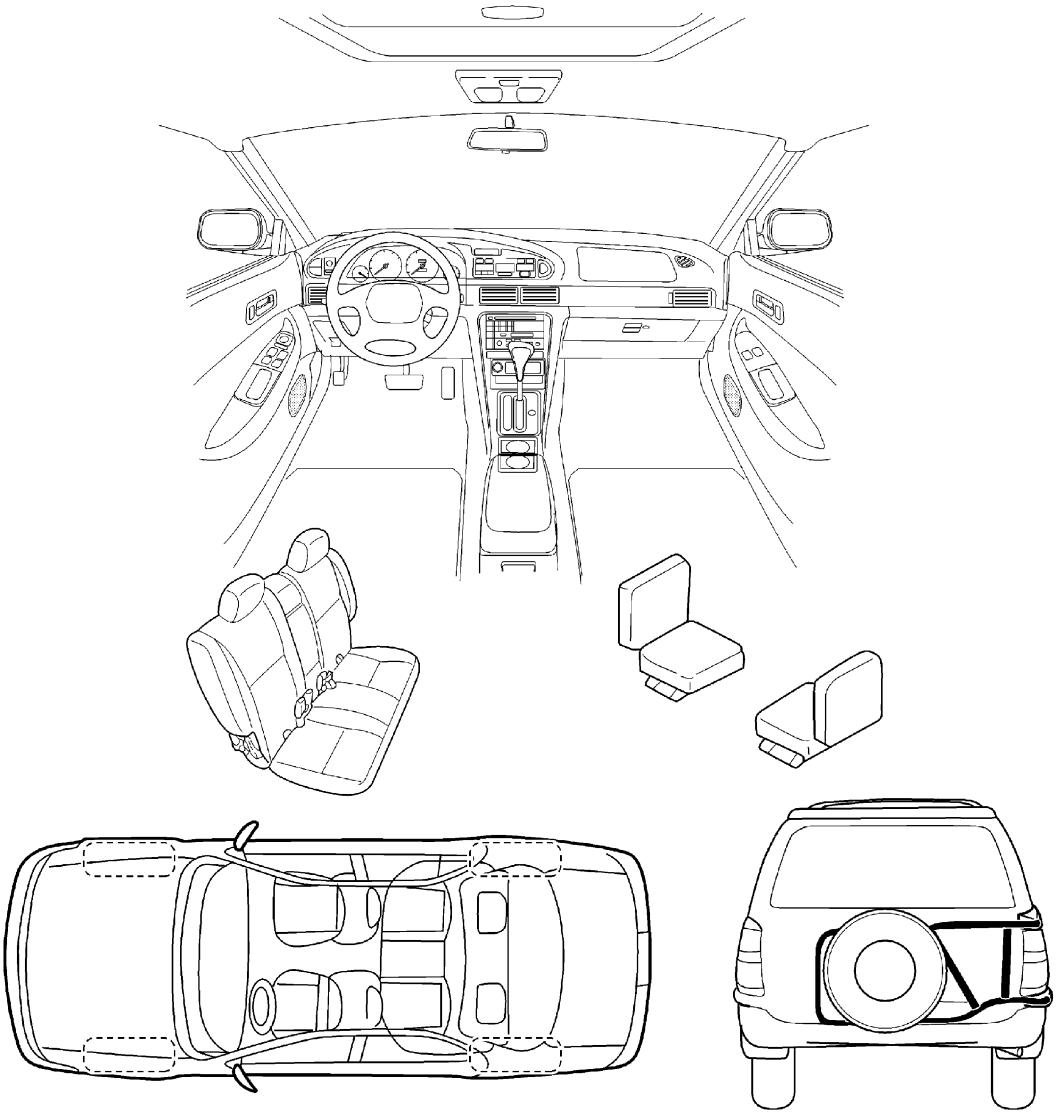

Continue to the back of the worksheet and briefly describe the location of the noise or rattle. In addition, please indicate the conditions which are present when the noise occurs.

SBT843

SQUEAK & RATTLE DIAGNOSTIC WORKSHEET- page 2

Briefly describe the location where the noise occurs:

_____

_____

II. WHEN DOES IT OCCUR? (check the boxes that apply)

- ❑ anytime
- ❑ 1st time in the morning
- ❑ only when it is cold outside
- ❑ only when it is hot outside
- ❑ after sitting out in the sun
- ❑ when it is raining or wet
- ❑ dry or dusty conditions
- ❑ other: _____

III. WHEN DRIVING:

- ❑ through driveways
- ❑ over rough roads
- ❑ over speed bumps
- ❑ only at about ____ mph
- ❑ on acceleration
- ❑ coming to a stop
- ❑ on turns : left, right or either (circle)
- ❑ with passengers or cargo
- ❑ other: _____
- ❑ after driving ____ miles or ____ minutes

IV. WHAT TYPE OF NOISE?

- ❑ squeak (like tennis shoes on a clean floor)
- ❑ creak (like walking on an old wooden floor)
- ❑ rattle (like shaking a baby rattle)
- ❑ knock (like a knock on a door)
- ❑ tick (like a clock second hand)
- ❑ thump (heavy, muffled knock noise)
- ❑ buzz (like a bumble bee)

TO BE COMPLETED BY DEALERSHIP PERSONNEL
Test Drive Notes:

_____

_____

	YES	NO	Initials of person performing
Vehicle test driven with customer	❑	❑	_____
- Noise verified on test drive	❑	❑	
- Noise source located and repaired	❑	❑	_____
- Follow up test drive performed to confirm repair	❑	❑	_____

VIN: _____ Customer Name: _____

W.O. #: _____ Date: _____

SBT844

This form must be attached to Work Order

SUNROOF

PFP:91210

Component Parts and Harness Connector Location

EIS000TM

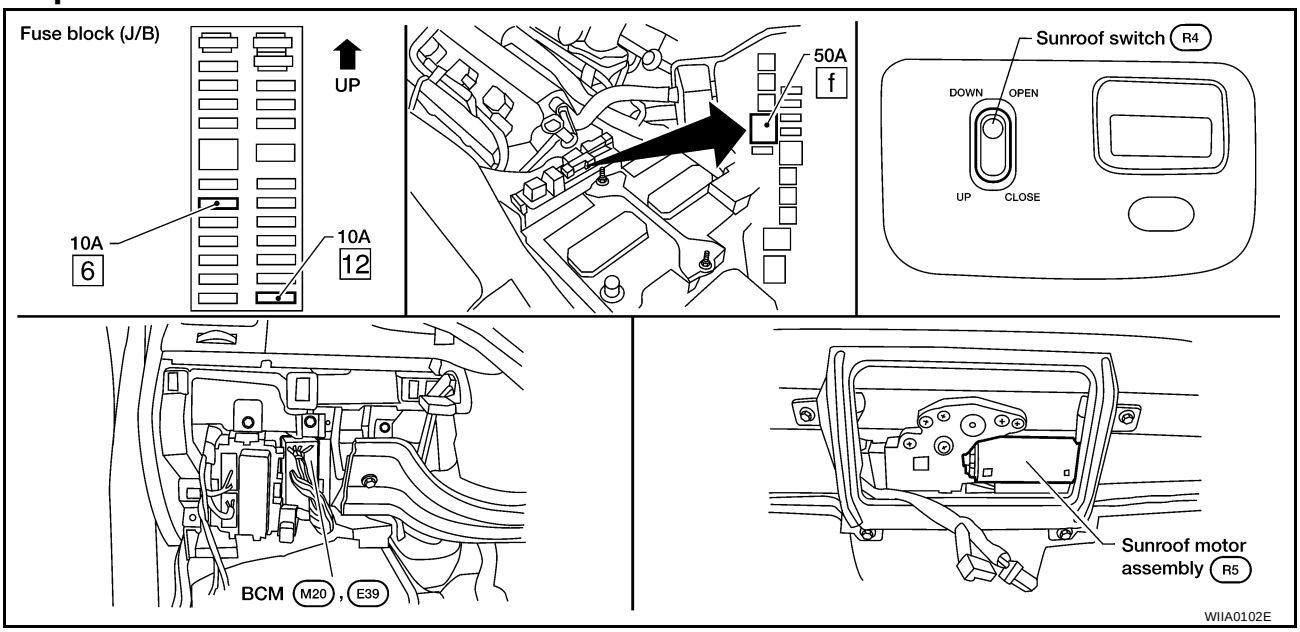

System Description

EIS000TN

OUTLINE

Electric sunroof system consists of

- Sunroof switch
- Sunroof motor assembly
- BCM (Body Control Module)

BCM supplies power to the sunroof motor. Sunroof operation depends on sunroof switch condition.

OPERATION

- Sunroof can be opened or closed and tilted up or down with sunroof switch.

DELAYED POWER OPERATION

When the ignition switch is turned to the “OFF” position, the sunroof will still operate for up to approximately 45 seconds unless driver or front passenger door is opened.

MEMORY RESET PROCEDURE

If the battery is disconnected, or the sunroof motor harness connector is disconnected, the sunroof motor memory must be reset. To reset the sunroof motor memory from any sunroof position (full open, partially open, closed, partially vented, and vented), push and hold the sunroof switch in the forward (CLOSE) position until the sunroof vents in the full-up position. This resets the sunroof motor memory and now the sunroof will operate correctly.

Wiring Diagram — SROOF —

EIS000TO

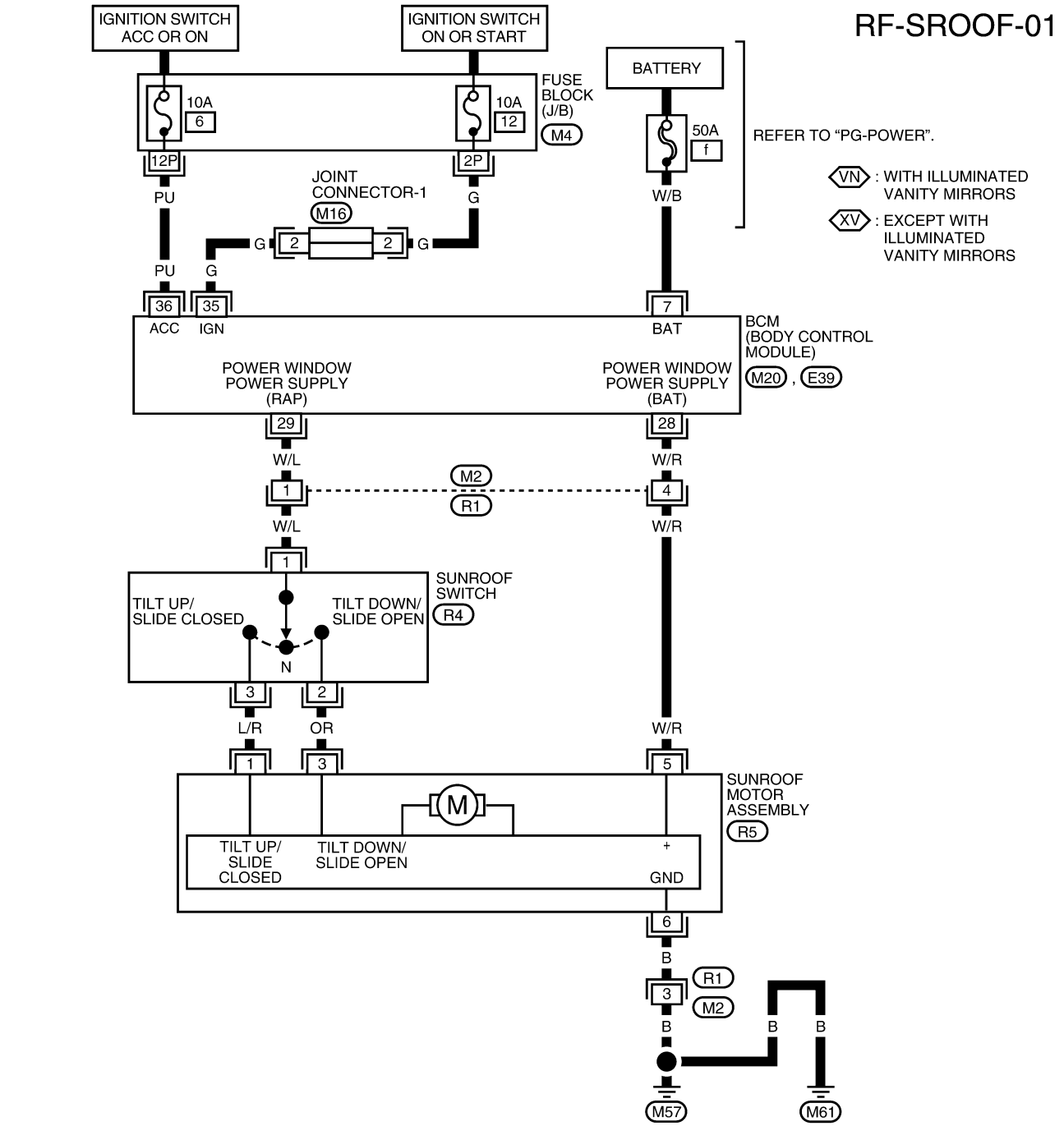

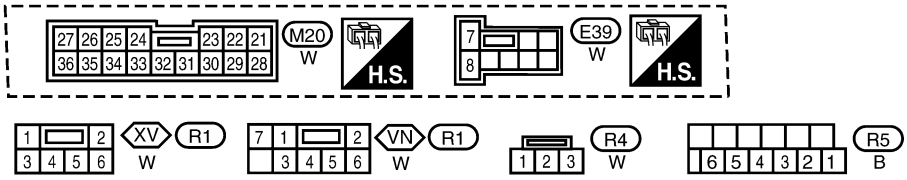

REFER TO THE FOLLOWING.
M4 - FUSE BLOCK - JUNCTION BOX (J/B)
M16 - JOINT CONNECTOR

WIWA0148E

Terminals and Reference Value for Sunroof Motor

EIS000TP

TERMI-NAL	WIRE COLOR	ITEM	CONDITION	Voltage
1	L/R	Sunroof tilt up/slide closed switch	Ignition switch ON and sunroof switch in tilt up/slide closed position	Battery voltage→ 0V
3	OR	Sunroof tilt down/slide open switch	Ignition switch ON and sunroof switch in tilt down/ slide open position	Battery voltage→ 0V
5	W/R	Power window power supply (BAT)	Ignition switch ON	Battery voltage
6	B	Ground	—	—

Trouble Diagnosis Chart by Symptom

EIS000TQ

Symptom	Faulty system and reference
Sunroof does not operate.	Sunroof switch system check. Refer to RF-12, "Sunroof Switch Check" .
	Sunroof motor assembly power supply and ground circuit check. Refer to RF-13, "Sunroof Motor Assembly Power Supply and Ground Circuit Check" .
	Sunroof motor assembly circuit system check. Refer to RF-13, "Sunroof Motor Assembly Circuit System Check" .
	If the above systems are normal, replace the sunroof motor assembly.
Sunroof does not open when a foreign material is pinched.	Replace sunroof motor assembly.
Motor does not stop at the sunroof fully open or fully closed position.	

Sunroof Switch Check

EIS000TR

1. CHECK SUNROOF SWITCH

Disconnect sunroof switch connector. Operate sunroof switch, and check continuity between terminals 2 and 3, and terminal 1 on the sunroof switch connector R4 in each of the switch positions.

Tilt up switch operation	
1 – 3	Continuity should exist.
Close switch operation	
1 – 3	Continuity should exist.
Tilt down switch operation	
1 – 2	Continuity should exist.
Open switch operation	
1 – 2	Continuity should exist.

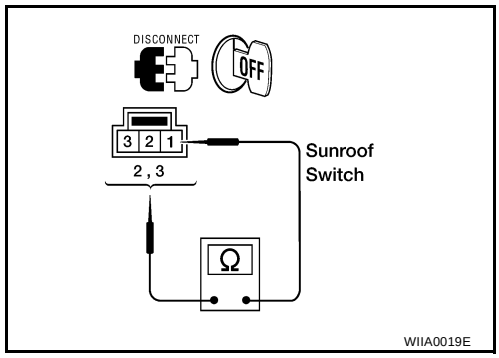

OK or NG

OK >> Check harness for open or short between BCM and sunroof motor assembly.
NG >> Replace sunroof switch.

Sunroof Motor Assembly Power Supply and Ground Circuit Check

EIS000TS

1. CHECK POWER SUPPLY CIRCUIT

1. Disconnect sunroof motor assembly connector R5.
2. Turn ignition switch ON.
3. Check voltage between sunroof motor assembly connector R5 terminal 5 (W/R) and body ground.

Battery voltage should exist.

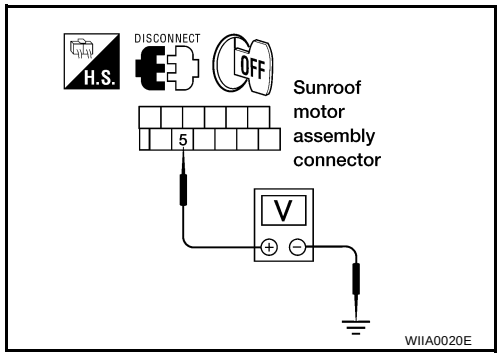

OK or NG

OK >> GO TO 2.
NG >> Check harness for open or short between sunroof motor assembly and BCM.

2. CHECK GROUND CIRCUIT

Check continuity between sunroof motor assembly connector R5 terminal 6 (B) and body ground.

Continuity should exist.

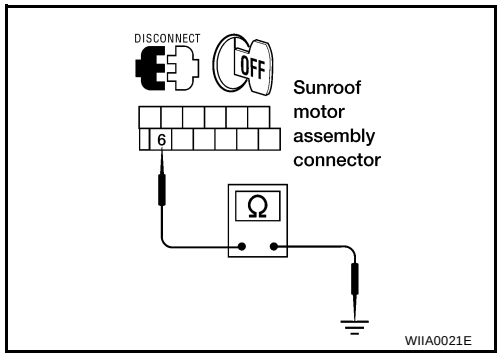

OK or NG

OK >> Harness connector is OK.
NG >> Repair or replace harness.

Sunroof Motor Assembly Circuit System Check

EIS000TT

1. CHECK HARNESS CONTINUITY

1. Turn the ignition switch OFF.
2. Disconnect sunroof switch connector R4 and sunroof motor assembly connector R5.
3. Check continuity between sunroof switch connector R4 terminals 2 (OR) and 3 (L/R) and sunroof motor assembly connector R5 terminals 1 (L/R) and 3 (OR).

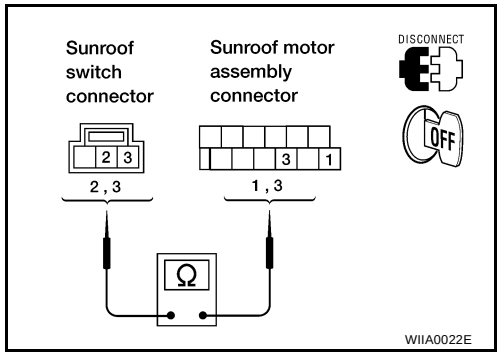

Terminals				Continuity
(+)		(–)		
Connector	Terminal (wire color)	Connector	Terminal (wire color)	
R4	2 (OR)	R5	3 (OR)	Yes
R4	3 (L/R)	R5	1 (L/R)	Yes

OK or NG

OK >> Check harness for short between sunroof switch connector and sunroof motor assembly.
NG >> Repair or replace harness.

Link and Wire Assembly

EIS000TU

NOTE:
Before replacing a suspect part, carefully ensure it is the source of noise being experienced.

1. Check link to determine if coating film has peeled off to such an extent that substrate is visible. Check also to determine if link is the source of noise. If it is, replace it.
2. Visually check to determine if a sufficient amount of grease has been applied to wire or rail groove. If not, add grease as required.
3. Check wire for any damage or deterioration. If any damage is found, replace wire.

Fitting Adjustment

EIS000TV

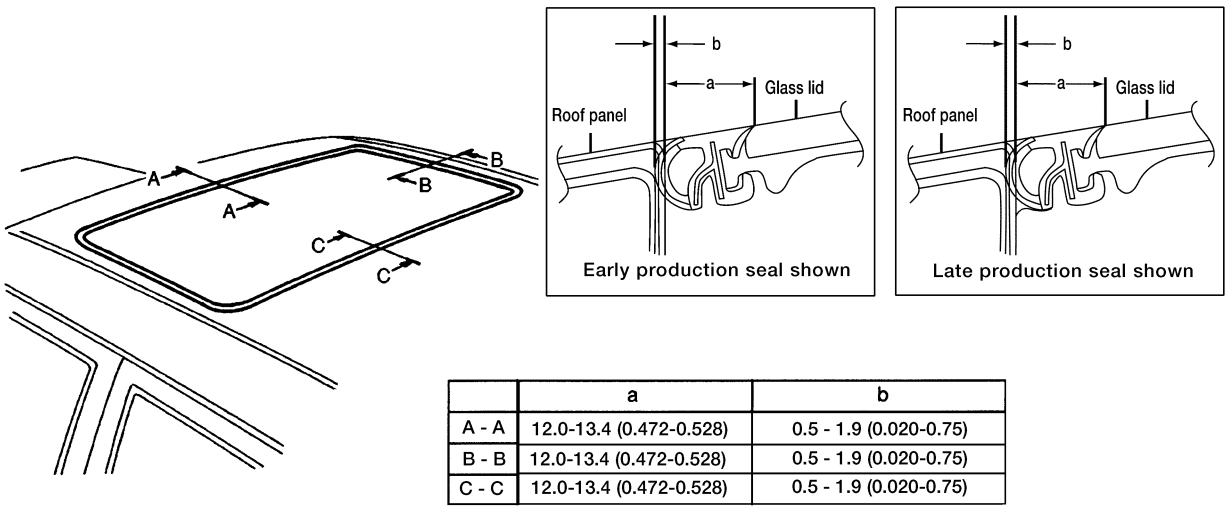

	a	b
A - A	12.0-13.4 (0.472-0.528)	0.5 - 1.9 (0.020-0.75)
B - B	12.0-13.4 (0.472-0.528)	0.5 - 1.9 (0.020-0.75)
C - C	12.0-13.4 (0.472-0.528)	0.5 - 1.9 (0.020-0.75)

Unit: mm (in)

WIIA0145E

GAP ADJUSTMENT (A-A, C-C)

1. Open sunshade assembly.
2. Tilt glass lid up then remove side trim.
3. Loosen glass lid securing bolts, then tilt glass lid down.
4. Manually adjust glass lid from outside of vehicle so gap is within specifications, and snug securing bolts.
5. Tilt glass lid up and down several times using sunroof switch to ensure smooth operation.
6. Tilt glass lid up and tighten bolts.

NOTE:
First tighten left front bolt, then tighten right rear bolt on glass lid to prevent lid from moving while tightening other bolts.

Glass lid assembly mounting bolts : **3.0 - 5.0 N·m (0.3 - 0.5 kg-m, 26 - 43 in-lb)**

GAP ADJUSTMENT (B-B)

1. Remove headlining. Refer to EI-33, "Removal and Installation" .
2. Loosen sunroof assembly front end, side rail, and front and rear bracket attaching bolts.
3. Carefully slide sunroof assembly side to side until gap is within specifications, and snug securing bolts.
4. Tilt glass lid up and down several times using sunroof switch to ensure smooth operation.
5. Tighten sunroof assembly front end, side rail, and front and rear bracket attaching bolts.

Sunroof assembly mounting bolts

Sunroof assembly front end bolts : **5.1 - 6.47 N·m (0.52 - 0.66 kg-m, 46 - 57 in-lb)**

Sunroof assembly side rail bolts : **5.1 - 6.47 N·m (0.52 - 0.66 kg-m, 46 - 57 in-lb)**

Sunroof assembly front bracket bolts	**: 5.1 - 6.47 N·m (0.52 - 0.66 kg-m, 46 - 57 in-lb)**
Sunroof assembly rear bracket bolts	**: 5.1 - 6.47 N·m (0.52 - 0.66 kg-m, 46 - 57 in-lb)**

HEIGHT DIFFERENCE ADJUSTMENT

1. Tilt glass lid up and down.
2. Check height difference between roof panel and glass lid, and compare to “A – A” as shown.

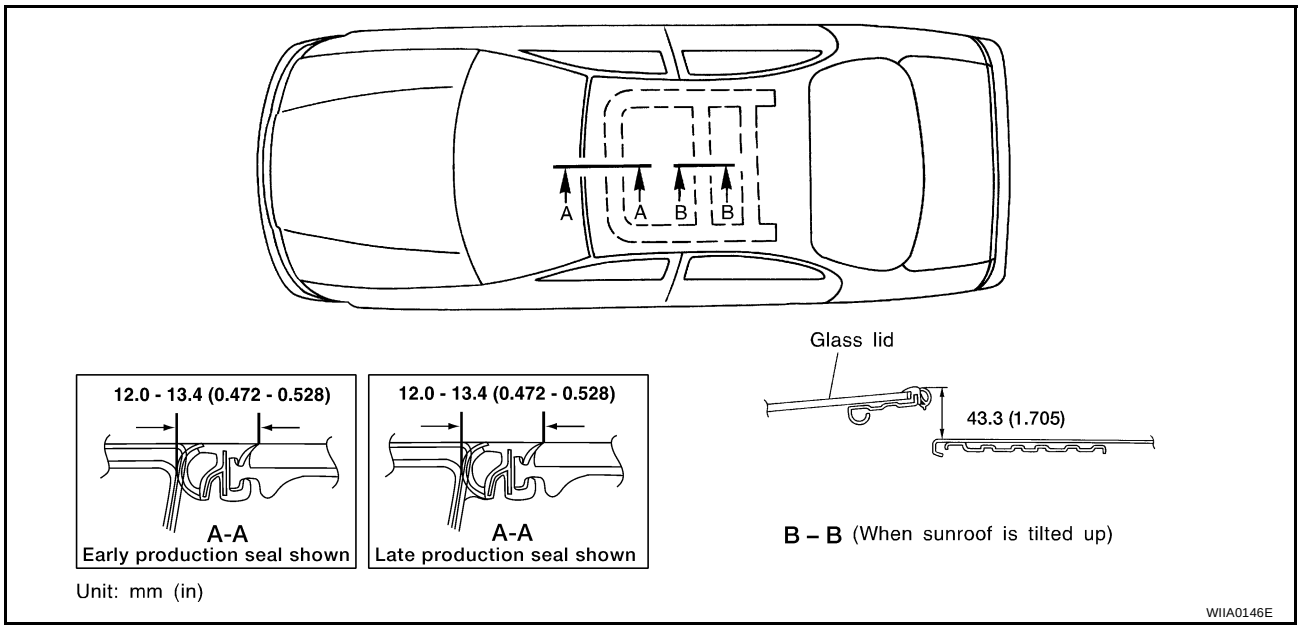

3. If necessary, adjust height difference by using the following procedure.

- Loosen glass lid securing bolts.
- Manually raise/lower glass lid until height difference is within specification.
- Tighten glass lid securing bolts.

Glass lid assembly mounting bolts	**: 3.0 - 5.0 N·m (0.3 - 0.5 kg-m, 26 - 43 in-lb)**

Removal and Installation

EIS000TW

- After any adjustment, check sunroof operation and lid alignment.
- Handle glass lid with care so not to cause damage.
- For easier installation, mark each point before removal.

CAUTION:

- **Always work with a helper.**
- **Before removal, fully close the glass lid assembly. Then, after removal, do not move the motor assembly.**

- **After installing the sunroof and glass lid, check gap adjustment to ensure there is no malfunction.**

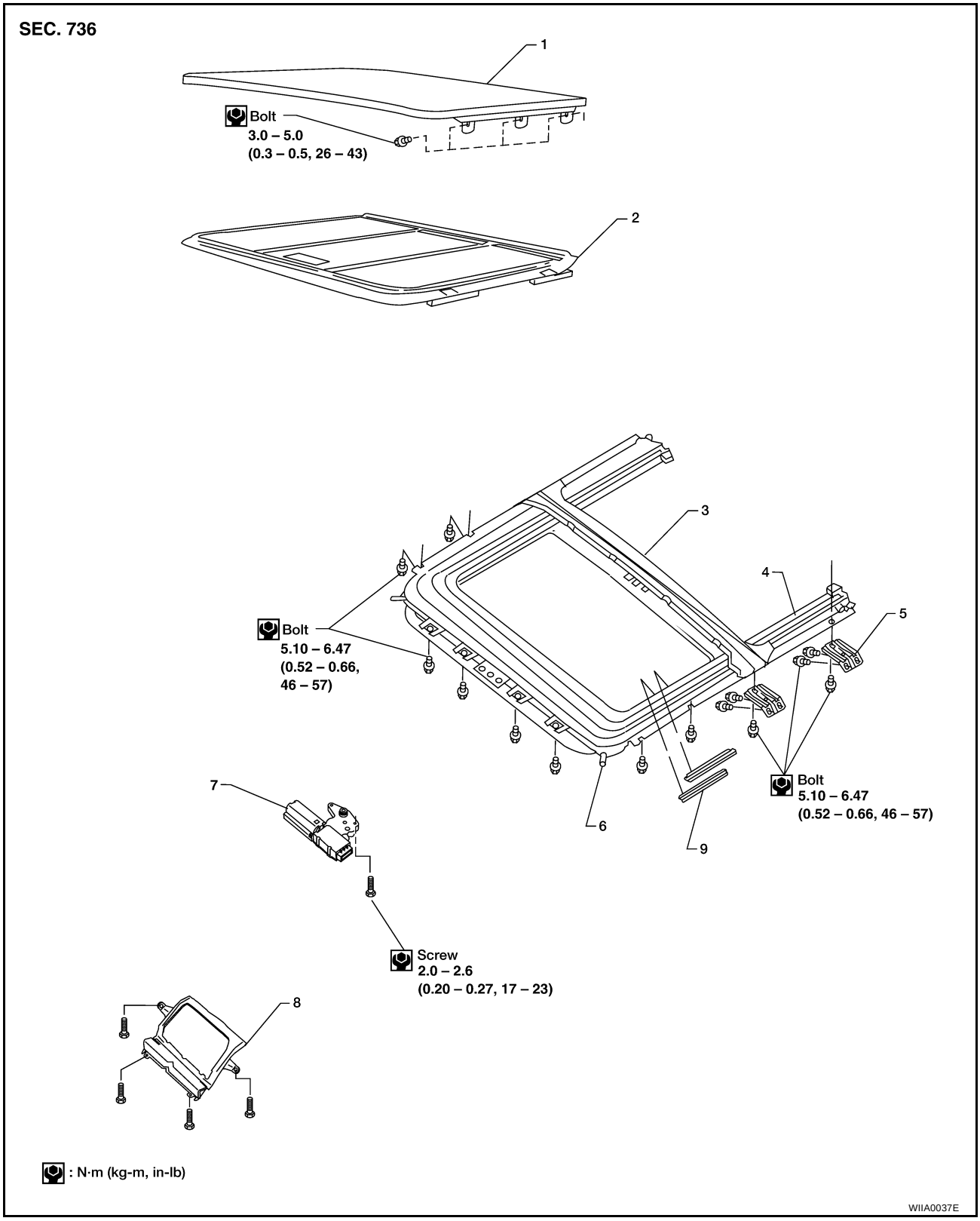

1. Glass lid assembly
2. Sunshade assembly
3. Drain channel assembly
4. Sunroof assembly
5. Sunroof bracket
6. Drain hose connecting area
7. Sunroof motor
8. Sunroof switch bracket
9. Side trim

SUNROOF UNIT

Removal

CAUTION:

- **Always work with a helper.**
- **When taking sunroof unit out, use shop cloths to protect the seats and trim from damage.**
- **After installing the sunroof unit and glass lid, be sure to check gap adjustment to ensure there is no malfunction.**

1. Remove headlining. Refer to EI-33, "Removal and Installation" .
2. Disconnect drain hoses.
3. Close glass lid.
4. Remove sunroof switch bracket.
5. Disconnect sunroof motor harness electrical connector.

CAUTION:

- **Before removing sunroof motor, make sure that sunroof is fully closed.**
- **After removing sunroof motor, never attempt to rotate sunroof motor as a single unit.**

6. Remove bolts on the front end and side rails.
7. Remove front sunroof bracket bolts.
8. Remove rear sunroof bracket bolts, and remove sunroof unit from roof panel.

- Remove sunroof unit through the passenger compartment while being careful not to damage the seats and trim.

Installation

1. Temporarily tighten the mounting bolts on the rear sunroof brackets.
2. Bring sunroof unit into passenger compartment and place the rear end of the rail onto the rear sunroof brackets.
3. Temporarily tighten the mounting bolts on the front end.
4. Tighten the installation point bolts diagonally excluding the installation point of the sunroof bracket around the roof opening.
5. Tighten the bolts on the front sunroof bracket at the vehicle side, and then at the rail side.
6. Tighten the bolts on the rear sunroof bracket at the vehicle side, and then at the rail side.

Sunroof assembly mounting bolts

Sunroof assembly front end bolts	**: 5.1 - 6.47 N·m (0.52 - 0.66 kg-m, 46 - 57 in-lb)**
Sunroof assembly side rail bolts	**: 5.1 - 6.47 N·m (0.52 - 0.66 kg-m, 46 - 57 in-lb)**
Sunroof assembly front bracket bolts	**: 5.1 - 6.47 N·m (0.52 - 0.66 kg-m, 46 - 57 in-lb)**
Sunroof assembly rear bracket bolts	**: 5.1 - 6.47 N·m (0.52 - 0.66 kg-m, 46 - 57 in-lb)**

7. Install sunroof motor switch bracket.
8. Connect drain hoses.
9. Install headlining. Refer to EI-33, "Removal and Installation" .

GLASS LID

Removal

1. Open sunroof shade.
2. Ensure glass lid is closed.
3. Carefully pry away trim to access glass lid securing bolts.
4. Remove bolts securing glass lid assembly to sunroof assembly.

Installation

1. Position glass lid to sunroof assembly.

2. Tighten glass lid assembly bolts to specification. (First tighten left front bolt, then tighten right rear bolt on glass lid to prevent lid from moving while tightening other bolts.)

Glass lid assembly mounting bolts	**: 3.0 - 5.0 N·m (0.3 - 0.5 kg-m, 26 - 43 in-lb)**

3. Position and push trim into place.
4. After installation, perform fitting adjustment.

SUNSHADE

Removal and Installation

CAUTION:

Before removing or installing the sunshade, be sure to remove the sunroof unit from the vehicle.

1. Remove glass lid. Refer to RF-17, "GLASS LID" .
2. Carefully pry sunshade from sunroof frame.

Install in the reverse order of removal.

SUNROOF MOTOR

Removal

1. Position sunroof assembly in full open position.
2. Remove headlining, refer to EI-33, "Removal and Installation" .
3. Remove motor mounting screws.
4. Disconnect harness connector to remove sunroof motor.

CAUTION:

- **When removing the sunroof motor, be sure that the sunroof is in the fully open position.**
- **Never run the removed motor as a single unit.**

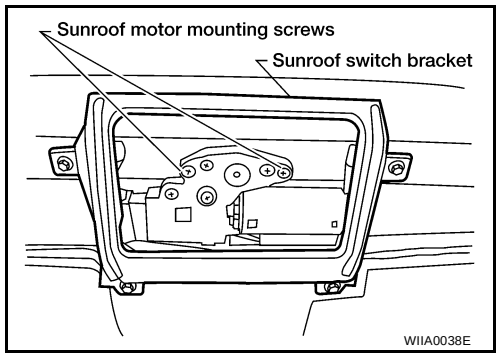

Installation

1. Move the motor laterally little by little so that the gear is completely engaged into the wire on the sunroof unit and the mounting surface becomes parallel. Then secure the motor with screws.

Sunroof motor mounting screws	**: 2.0 - 2.6 N·m (0.20 - 0.27 kg-m, 17 - 23 in-lb)**

CAUTION:

Before installing the motor, be sure to place the link and wire assembly in the symmetrical and fully closed position.

Remainder of installation is reverse order of removal.

SECTION RSU
REAR SUSPENSION

CONTENTS

PRECAUTIONS 2
Precautions 2
PREPARATION 3
Commercial Service Tools 3
NOISE, VIBRATION, AND HARSHNESS (NVH) TROUBLESHOOTING 4
NVH Troubleshooting Chart 4
REAR SUSPENSION ASSEMBLY 5
Components 5
On-vehicle Service 6
Rear Wheel Alignment 6
PRELIMINARY INSPECTION 6
CAMBER 6
TOE-IN 7
Removal and Installation 8
REAR SUSPENSION ASSEMBLY 8
SHOCK ABSORBER 8
SUSPENSION ARM 8
RADIUS ROD 9
FRONT LOWER LINK 9
REAR LOWER LINK AND COIL SPRING 9
STABILIZER BAR 9
Inspection 10
SHOCK ABSORBER ASSEMBLY 10
SUSPENSION ARM 10
FRONT LOWER LINK 10
UPPER RUBBER SEAT AND BUSHING 10
REAR LOWER LINK AND COIL SPRING 10
STABILIZER BAR 10
SERVICE DATA AND SPECIFICATIONS (SDS) 11
General Specifications (Rear) 11
Rear Wheel Alignment (Unladen*) 11
Ball Joint 11
Wheelarch Height (Unladen*) 11

PRECAUTIONS

PFP:00001

Precautions

EES000DJ

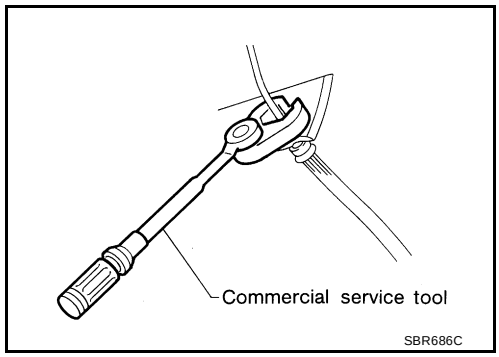

- **When installing each rubber part, final tightening must be carried out under unladen condition* with tires on ground. Oil will shorten the life of rubber bushes. Be sure to wipe off any spilled oil.**
  ***: Fuel, radiator coolant and engine oil full. Spare tire, jack, hand tools and mats in designated positions.**
- **Use flare nut wrench when removing or installing brake tubes.**
- **After installing removed suspension parts, check wheel alignment.**
- **Do not jack up at the trailing arm and lateral link.**
- **Always torque brake lines when installing.**
- **Lock nuts are unreusable parts; always use new ones.**
  When replacing, do not wipe the oil off of the new lock nut before tightening.

PREPARATION

PFP:00002

Commercial Service Tools

EES000DK

Tool name	Description
Equivalent to GG94310000 1. Flare nut crowfoot 2. Torque wrench 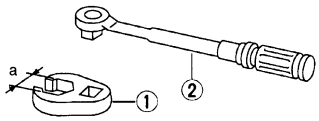 S-NT360	Removing and installing brake piping a:10 mm (0.39 in)
Spring compressor 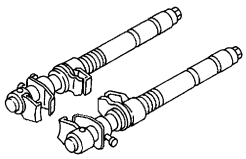 NT717	Removing and installing coil spring
Power tool 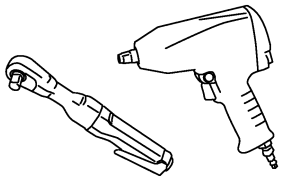 PBIC0190E	Loosening bolts and nuts

NOISE, VIBRATION, AND HARSHNESS (NVH) TROUBLESHOOTING

PFP:00003

NVH Troubleshooting Chart

EES000DL

Use the following chart to help you find the cause of the symptom. If necessary, repair or replace these parts.

		Reference page	RSU-5	RSU-10	RSU-10	—	RSU-10	RSU-5	RSU-6	RSU-10	WT-3	WT-4	WT-6	—	—	—	WT-6	FAX-4	FAX-4	Refer to SUSPENSION in this chart.	Refer to TIRES in this chart.	Refer to ROAD WHEEL in this chart.	BR-5	PS-5
		Possible Cause and SUSPECTED PARTS	Improper installation, looseness	Shock absorber deformation, damage or deflection	Bushing or mounting	Parts interference	Spring fatigue	Suspension looseness	Incorrect wheel alignment	Stabilizer bar fatigue	Out-of-round	Imbalance	Incorrect air pressure	Uneven tire wear	Deformation or damage	Non-uniformity	Incorrect tire size	DRIVE SHAFT	AXLE	SUSPENSION	TIRES	ROAD WHEEL	BRAKES	STEERING
Symptom	SUSPENSION	Noise	×	×	×	×	×	×										×	×		×	×	×	×
		Shake	×	×	×	×		×										×	×		×	×	×	×
		Vibration	×	×	×	×	×											×	×		×			×
		Shimmy	×	×	×	×			×										×		×	×	×	×
		Judder	×	×	×														×		×	×	×	×
		Poor quality ride or handling	×	×	×	×	×		×	×									×		×	×		
	TIRES	Noise	×								×	×	×	×	×	×		×	×	×		×	×	×
		Shake	×								×	×	×	×	×		×	×	×	×		×	×	×
		Vibration											×				×	×	×	×				×
		Shimmy	×								×	×	×	×	×	×	×		×	×		×	×	×
		Judder	×								×	×	×	×	×		×		×	×		×	×	×
		Poor quality ride or handling	×								×	×	×	×	×		×		×	×		×		
	ROAD WHEEL	Noise	×								×	×			×			×	×	×	×		×	×
		Shake	×								×	×			×			×	×	×	×		×	×
		Shimmy, Judder	×								×	×			×				×	×	×		×	×
		Poor quality ride or handling	×								×	×			×				×	×	×			

×: Applicable

REAR SUSPENSION ASSEMBLY

PFP:55020

Components

EES000DM

SEC. 430 - 431

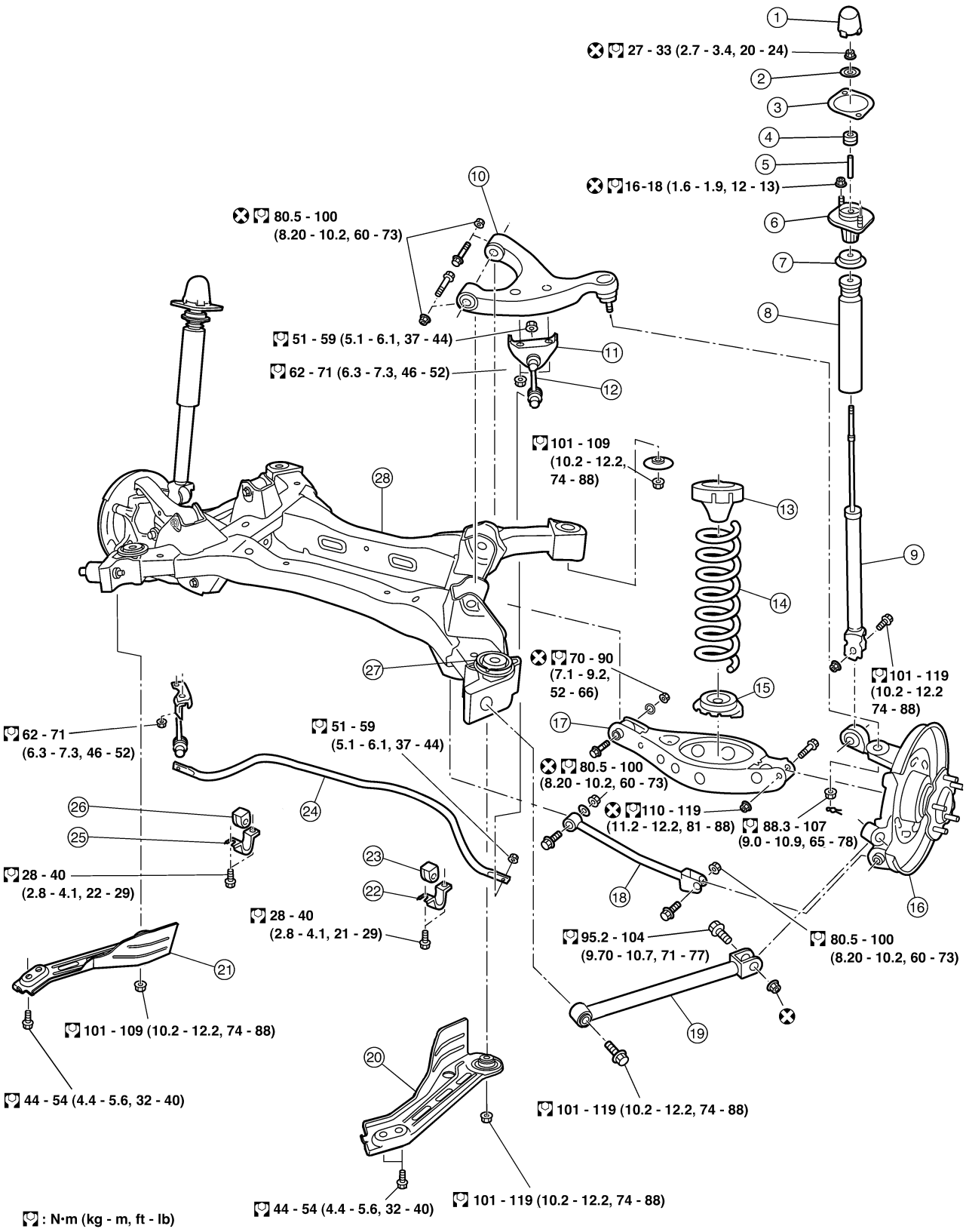

1.	Cap	2.	Washer	3.	Gasket
4.	Bushing	5.	Distance tube	6.	Shock absorber mount bracket
7.	Bound bumper cover	8.	Bound bumper	9.	Shock absorber
10.	Suspension arm	11.	Connecting rod mount bracket	12.	Connecting rod
13.	Upper rubber seat	14.	Coil spring	15.	Lower rubber seat
16.	Wheel hub and spindle assembly	17.	Rear lower link	18.	Front lower link
19.	Radius rod	20.	Member stay	21.	Member stay
22.	Stabilizer bar clamp	23.	Bushing	24.	Stabilizer bar
25.	Stabilizer bar clamp	26.	Bushing	27.	Member stopper
28.	Rear suspension member				

On-vehicle Service

EES000DN

- Check suspension parts for excessive play, cracks, wear or damage. Shake each rear wheel to check for excessive play.
- Retighten all nuts and bolts to the specified torque.
- Make sure that cotter pin is inserted.
- Check shock absorber for oil leakage or other damage.
- Check wheelarch height. Refer to RSU-11, "Wheelarch Height (Unladen*)" .
- Check suspension ball joint for grease leakage and ball joint dust cover for cracks or other damage.

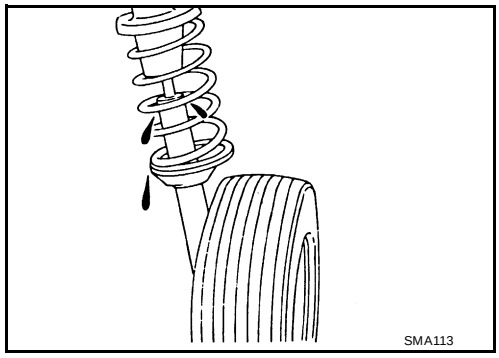

Rear Wheel Alignment

EES000DO

Before checking rear wheel alignment, be sure to make a preliminary inspection.

PRELIMINARY INSPECTION

- Check tires for wear and for improper inflation.
- Check wheels for deformation, cracks and other damage. If deformed, remove wheel and check wheel runout. Refer to WT-3, "Inspection" .
- Check rear wheel bearings for looseness.
- Check rear suspension for looseness.
- Check that rear shock absorber works properly.
- Check wheelarch height (Unladen*). Refer to RSU-11, "Wheelarch Height (Unladen*)" .

CAMBER

- Measure camber of both right and left wheels with a suitable alignment gauge and adjust in accordance with the following procedures.

Camber : **Refer to RSU-11, "Rear Wheel Alignment (Unladen*)" .**

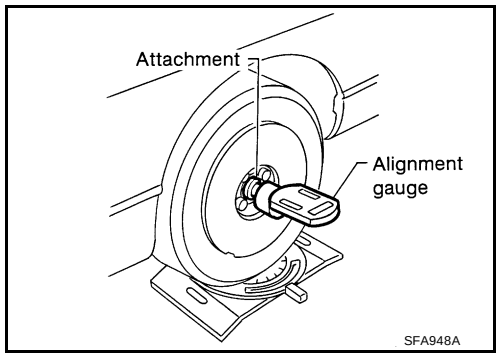

If camber is not within specification, adjust by turning the adjusting bolts in the same direction.

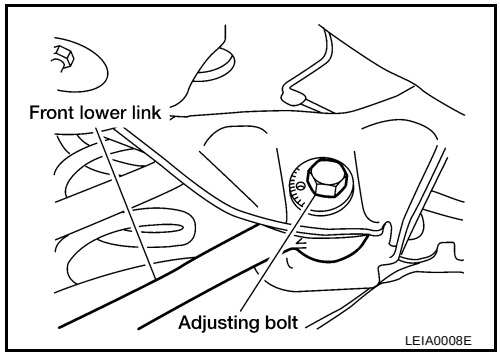

1. Turn the adjusting bolts in the same direction to calibrate.
Camber changes about 5' with each graduation of the adjusting bolt.
2. Tighten to the specified torque. Refer to RSU-5, "Components" .

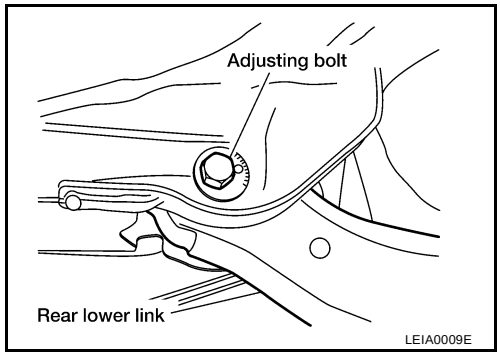

TOE-IN

Measure toe-in using following procedure. If out of specification, inspect and replace any damaged or worn rear suspension parts.

WARNING:

- **Always perform the following procedure on a flat surface.**
- **Make sure that no person is in front of the vehicle before pushing it.**

1. Bounce rear of vehicle up and down to stabilize the posture.
2. Push the vehicle straight ahead about 5 m (16 ft).
3. Put a mark on base line of the tread (rear side) of both tires at the same height of hub center. This mark is a measuring point.

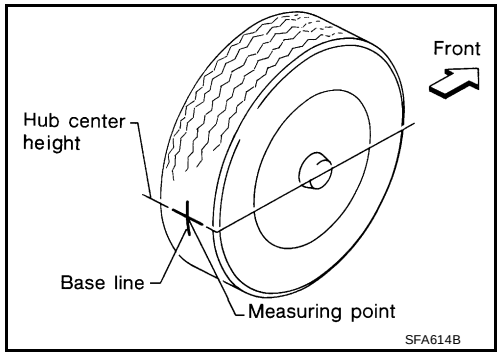

4. Measure distance “A” (rear side).
5. Push the vehicle slowly ahead to rotate the wheels 180 degrees (1/2 turn).
If the wheels have rotated more than 180 degrees (1/2 turn), try the above procedure again from the beginning. Never push vehicle backward.
6. Measure distance “B” (front side).

Total toe-in : Refer to RSU-11, "Rear Wheel Alignment (Unladen*)" .

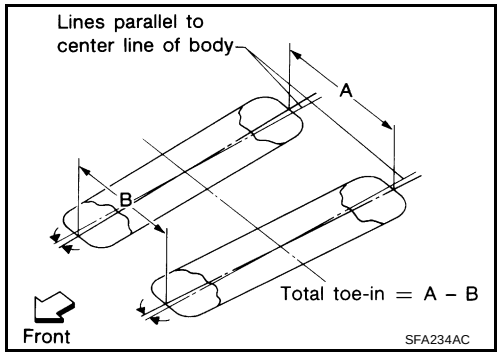

7. Adjust toe-in by turning adjusting bolt.

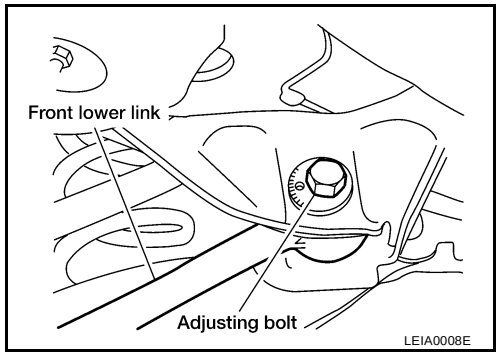

Toe changes about 1.5 mm (0.059 in) [One side] with each graduation of the adjusting bolt.

8. Tighten to the specified torque.

: 70 - 90 N·m (7.1 - 9.2 kg-m, 52 - 66 ft-lb)

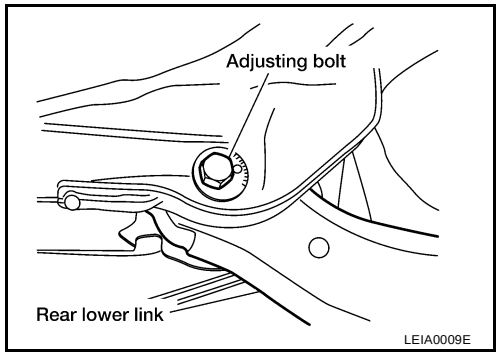

Removal and Installation

EES000DP

REAR SUSPENSION ASSEMBLY

CAUTION:

- **Before removing the rear suspension assembly, disconnect the ABS wheel sensor from the assembly. Failure to do so may result in damage to the sensor wires and the sensor becoming inoperative.**

1. Remove center exhaust tube with muffler(s). Refer to EX-3, "Removal and Installation" (QR25DE) or EX-6, "Removal and Installation" (VQ35DE).
2. Disconnect parking brake wire front end.
3. Remove brake caliper assembly, using power tools.

- Leave brake line connected to brake caliper.
  Be careful not to depress brake pedal, or piston will pop out.
  Do not pull or twist brake hose.

4. Remove upper end nuts of shock absorber.
5. Remove suspension member mounting nuts. Then draw out rear axle and rear suspension assembly.
6. Installation is in the reverse order of removal.

SHOCK ABSORBER

1. Set the transmission jack on the rear lower link to remove the fitting bolt and nut in the lower side of shock absorber.
2. Remove the transmission jack from rear lower link.
3. Remove the fitting nuts in the upper side of shock absorber.
4. Installation is in the reverse order of removal.

SUSPENSION ARM

1. Remove the connecting rod mounting bracket from suspension arm.
2. Remove the fixing bolts and nuts in the suspension member side of suspension arm.
3. Remove the cotter pin and lock nut.
4. Remove the suspension arm from axle housing using puller.

CAUTION:

- **Do not damage ball joint with puller.**
- **While using puller, temporarily tighten the nut so as not to damage screw part.**

5. Installation is in the reverse order of removal.

RADIUS ROD

- Check radius rod for any deformation, cracks, or damage and replace if necessary.
- After installing radius rod, check wheel alignment and adjust if necessary.

FRONT LOWER LINK

1. Jack up front lower link.
2. Remove front lower link, using power tools.
3. Installation is in the reverse order of removal.

- After installing front lower link, check wheel alignment and adjust if necessary.

REAR LOWER LINK AND COIL SPRING

Removal

1. Jack up rear lower link.
2. Loosen the mounting bolt and nut of the rear lower link from the suspension member, using power tool.
3. Remove the mounting bolt and nut from the side of the suspension member.
4. Slowly lower jack, then remove upper rubber seat, coil spring and rubber sheet from rear lower link.
5. Remove mounting bolt and nut in the side of suspension member to remove rear lower link.

Installation

- Installation is in the reverse order of removal.
- Check that the projecting part inside the upper seat and the flange part of bracket are attached as shown.
- Check that the projection part outside the upper seat directs to vehicle front.
- Position the hollow of the rubber seat with the groove part of rear lower link to install.
- Install coil spring with the side of two paint markers directing to lower side.
- After installing rear lower link and coil spring, check wheel alignment and adjust if necessary.

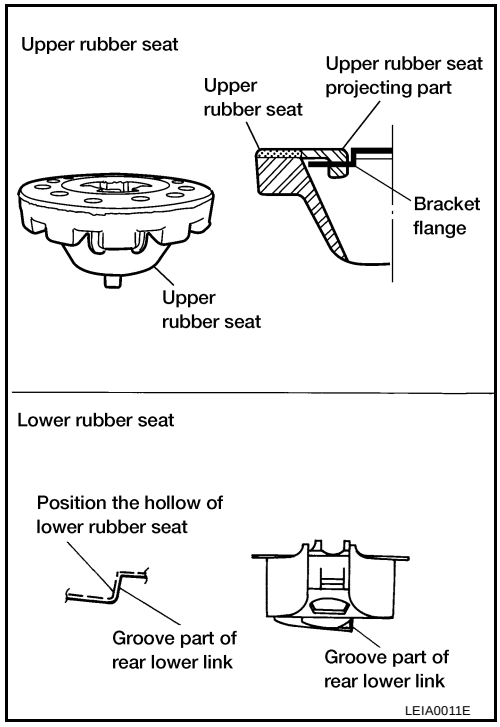

STABILIZER BAR

Removal

1. Remove stabilizer from connecting rod, using power tools.
2. Remove clamps, using power tools, and bushings.
3. Remove the stabilizer bar.

Installation

- Install stabilizer bar with ball joint socket properly placed.
- When the bushing and clamp are installed to stabilizer bar, position the bushing and clamp inside of the sideslip prevention clamp.

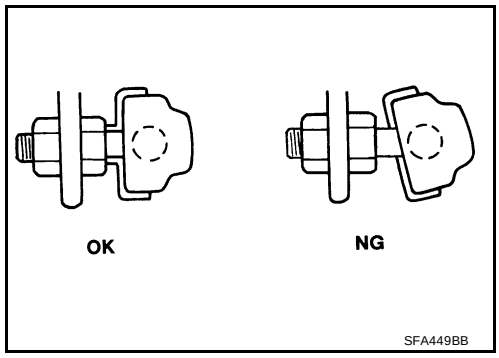

Inspection

EES000DQ

SHOCK ABSORBER ASSEMBLY

- Check for smooth operation through a full stroke, both compression and extension.
- Check for oil leakage on welded or gland packing portions.
- Check piston rod for cracks, deformation or other damage and replace if necessary.

SUSPENSION ARM

- Check suspension arm for damage, cracks, deformation and replace if necessary.
- Check rubber bushing for damage, cracks and deformation. Replace suspension arm assembly if necessary.
- Check ball joint. Replace suspension arm assembly if any of the following exists:
  a. Ball stud is worn.
  b. Joint is hard to swing.
  c. Play in axial direction is excessive.
  Before checking, turn ball joint at least 10 revolutions so that ball joint is properly broken in.

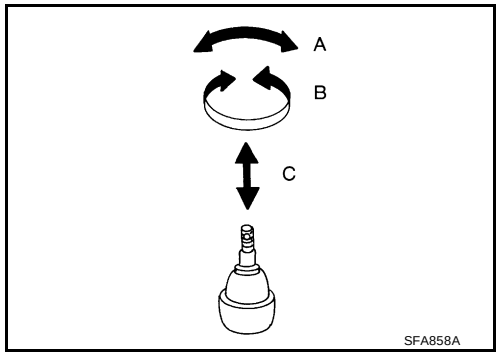

Swinging force:	**Refer to RSU-11, "Ball Joint" .**
Turning force:	**Refer to RSU-11, "Ball Joint" .**
Vertical end play:	**Refer to RSU-11, "Ball Joint" .**

FRONT LOWER LINK

- Check front lower link for any deformation, cracks, or damage and replace if necessary.

UPPER RUBBER SEAT AND BUSHING

- Check rubber parts for deterioration, or cracks and replace if necessary.

REAR LOWER LINK AND COIL SPRING

- Check for deformation, cracks, or other damage and replace if necessary.

STABILIZER BAR

- Check stabilizer bar for any deformation, cracks, or damage and replace if necessary.
- Check rubber bushings for deterioration, or cracks and replace if necessary.

SERVICE DATA AND SPECIFICATIONS (SDS)

PFP:00030

General Specifications (Rear)

EES000DR

Suspension type	Multi-link independent suspension
Shock absorber type	Double-acting hydraulic

Rear Wheel Alignment (Unladen*)

EES000DS

Engine			QR25DE	VQ35DE
Camber Degree minute (Decimal degree)		Minimum	–0°04′ (–0.07°)	–0°10' (–0.17°)
		Nominal	–0°34′ (–0.57°)	–0°40′ (–0.67°)
		Maximum	-0°64′ (-1.07°)	-0°70′ (-1.17°)
Total toe-in	Distance (A – B) mm (in)	Minimum	2.4 (0.09)	2.5 (0.10)
		Nominal	3.9 (0.15)	4.0 (0.16)
		Maximum	5.4 (0.21)	5.5 (0.22)
	Angle (left plus right) Degree minute (Decimal degree)	Minimum	6′ (0.1°)	
		Nominal	10′ (0.167°)	
		Maximum	14′ (0.233°)	

*: Fuel, radiator coolant and engine oil full. Spare tire, jack, hand tools and mats in designated positions.

Ball Joint

EES000DT

Swinging force “A” (Measuring point: cotter pin hole of ball stud) N (kg-f, lb-f)	7.8 - 54.9 (0.8 - 5.6, 1.8 - 12.3)
Turning torque “B” N·m (kg-cm, in-lb)	0.49 - 3.43 (5.0 - 35.0, 4.3 - 30.4)
Vertical end play “C” mm (in)	0 (0)

Wheelarch Height (Unladen*)

EES000DU

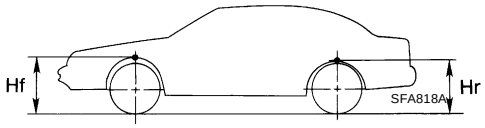

Engine	QR25DE	VQ35DE
Tire	205/65R16	215/55R17
Front (Hf) mm (in)	731 (28.78)	726 (28.58)
Rear (Hr) mm (in)	705 (27.75)	700 (27.56)

*: Fuel, radiator coolant and engine oil full. Spare tire, jack, hand tools and mats in designated positions.

SECTION SB
SEAT BELTS

CONTENTS

PRECAUTIONS 2
Supplemental Restraint System (SRS) “AIR BAG” and “SEAT BELT PRE-TENSIONER” 2
Precaution for Seat Belt Service 2
AFTER A COLLISION 2
SEAT BELTS 3
Removal and Installation of Front Seat Belt 3
REMOVAL OF SEAT BELT RETRACTOR 3
INSTALLATION OF SEAT BELT RETRACTOR..... 3
REMOVAL OF SEAT BELT BUCKLE 4
INSTALLTION OF SEAT BELT BUCKLE 4
Removal and Installation of Rear Seat Belt 4
REMOVAL 4
INSTALLATION 4
Seat Belt Inspection 5
AFTER A COLLISION 5
PRELIMINARY CHECKS 5
SEAT BELT RETRACTOR ON-VEHICLE CHECK 6
SEAT BELT RETRACTOR OFF-VEHICLE CHECK 6
LATCH (LOWER ANCHORS AND TETHER FOR CHILDREN) SYSTEM 8
Removal and Installation 8
TOP TETHER STRAP CHILD RESTRAINT 9
Removal and Installation 9

PRECAUTIONS

PFP:00001

Supplemental Restraint System (SRS) “AIR BAG” and “SEAT BELT PRE-TENSIONER”

EHS000EL

The Supplemental Restraint System such as “AIR BAG” and “SEAT BELT PRE-TENSIONER” used along with a front seat belt, helps to reduce the risk or severity of injury to the driver and front passenger for certain types of collision.

WARNING:

- **To avoid rendering the SRS inoperative, which could increase the risk of personal injury or death in the event of a collision which would result in air bag inflation, all maintenance should be performed by an authorized NISSAN/INFINITI dealer.**
- **Improper maintenance, including incorrect removal and installation of the SRS, can lead to personal injury caused by unintentional activation of the system.**
- **Do not use electrical test equipment on any circuit related to the SRS unless instructed to in this Service Manual. SRS wiring harnesses can be identified by yellow and/or orange harness connectors.**

Precaution for Seat Belt Service

EHS000EM

CAUTION:

- **Before removing the seat belt pre-tensioner assembly, turn the ignition switch off, disconnect the battery ground cable and wait at least 3 minutes.**
- **Do not use electrical test equipment for seat belt pre-tensioner connector.**
- **After replacing or reinstalling seat belt pre-tensioner assembly, or reconnecting seat belt pre-tensioner connector, check the system function. Refer to SRS-19, "SRS Operation Check" .**
- **Deploy seat belt pre-tensioner assembly before disposing. Refer to SRS-54, "DISPOSAL OF AIR BAG MODULE AND SEAT BELT PRE-TENSIONER" .**
- **Do not use disassemble buckle or seat belt assembly.**
- **Replace anchor bolts if they are deformed or worn out.**
- **Never oil tongue and buckle.**
- **If any component of seat belt assembly is questionable, do not repair. Replace the whole seat belt assembly.**
- **If webbing is cut, frayed, or damaged, replace seat belt assembly.**
- **When replacing seat belt assembly, use a genuine NISSAN seat belt assembly.**

AFTER A COLLISION

WARNING:

Inspect all seat belt assemblies including retractors and attaching hardware after any collision.
NISSAN recommends that all seat belt assemblies in use during a collision be replaced unless the collision was minor and the belts show no damage and continue to operate properly. Failure to do so could result in serious personal injury in an accident. Seat belt assemblies not in use during a collision should also be replaced if either damage or improper operation is noted. Seat belt pre-tensioner should be replaced even if the seat belts are not in use during a frontal collision in which the air bags are deployed.

Replace any seat belt assembly (including anchor bolts) if:

- The seat belt was in use at the time of a collision (except for minor collisions and the belts, retractors and buckles show no damage and continue to operate properly).
- The seat belt was damaged in an accident. (i.e. torn webbing, bent retractor or guide).
- The seat belt attaching point was damaged in an accident. Inspect the seat belt attaching area for damage or distortion and repair as necessary before installing a new seat belt assembly.
- Anchor bolts are deformed or worn out.
- The seat belt pre-tensioner should be replaced even if the seat belts are not in use during the collision in which the air bags are deployed.

SEAT BELTS

PFP:86884

Removal and Installation of Front Seat Belt

EHS000EN

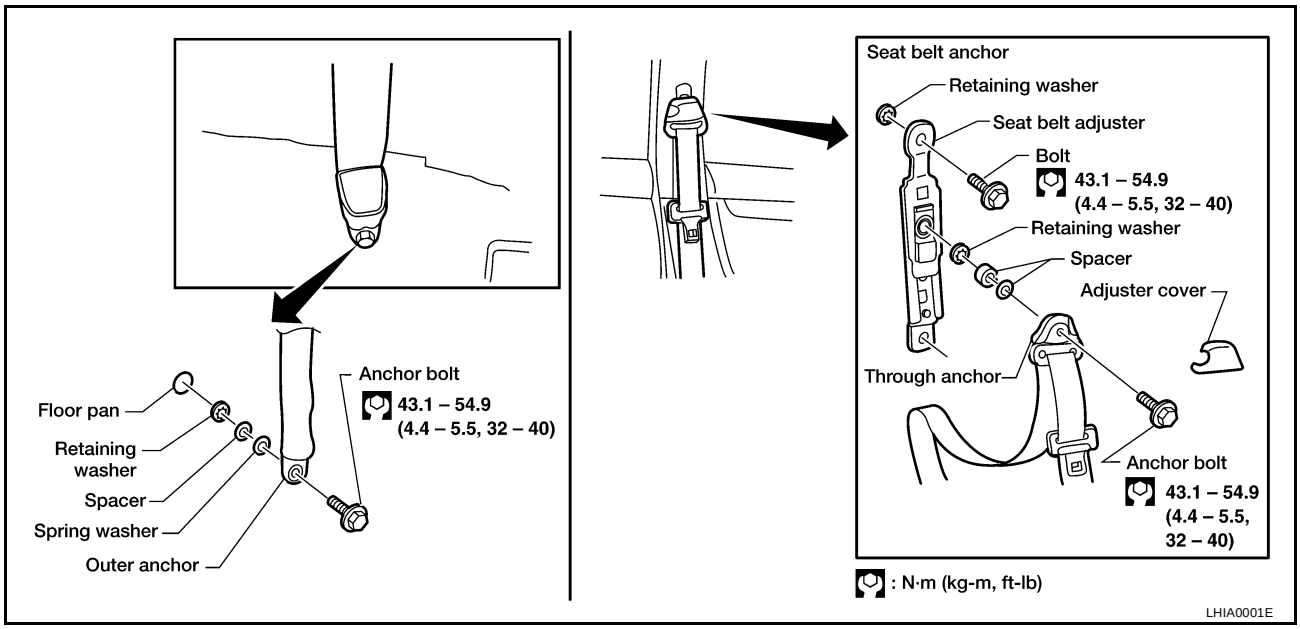

CAUTION:

- **Before servicing SRS, turn the ignition switch off, disconnect both battery cables and wait at least 3 minutes.**

REMOVAL OF SEAT BELT RETRACTOR

1. Remove the adjuster cover on the seat belt anchor.

   NOTE:
   Insert a screwdriver wound with cloth into the slot of the release button to disengage the tab and remove the release button.
2. Remove the anchor bolt.
3. Slide up outer anchor cover, and remove the anchor bolt.
4. Remove the center pillar upper/lower garnish. Refer to EI-29, "Removal and Installation" .

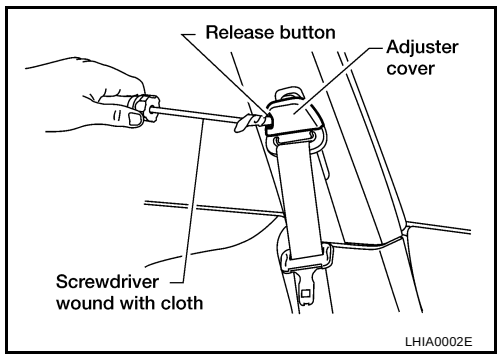

5. Disconnect the seat belt pre-tensioner connector.
6. Remove the seat belt pre-tensioner retractor fixing screw and anchor bolt, and then remove the seat belt retractor.

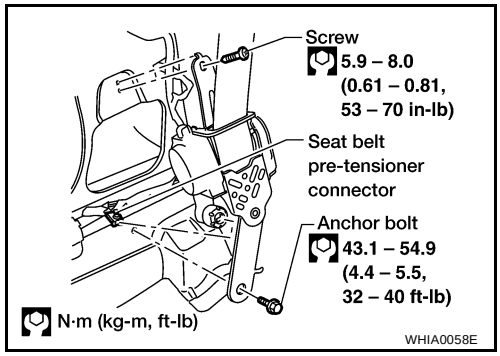

INSTALLATION OF SEAT BELT RETRACTOR

To install, reverse the removal procedure.

REMOVAL OF SEAT BELT BUCKLE

1. Remove the front seat.
2. Remove the screws, and remove the inner seat cushion finisher.
3. Remove the anchor bolt, and remove the buckle.

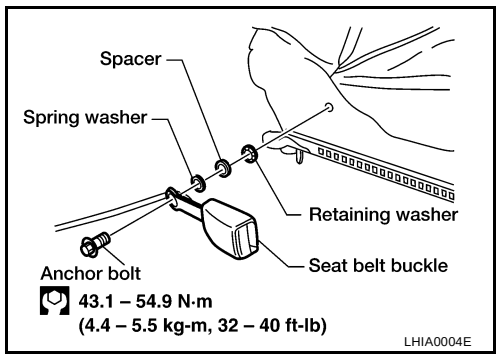

INSTALLTION OF SEAT BELT BUCKLE

To install, reverse the removal procedure.

Removal and Installation of Rear Seat Belt

EHS000EO

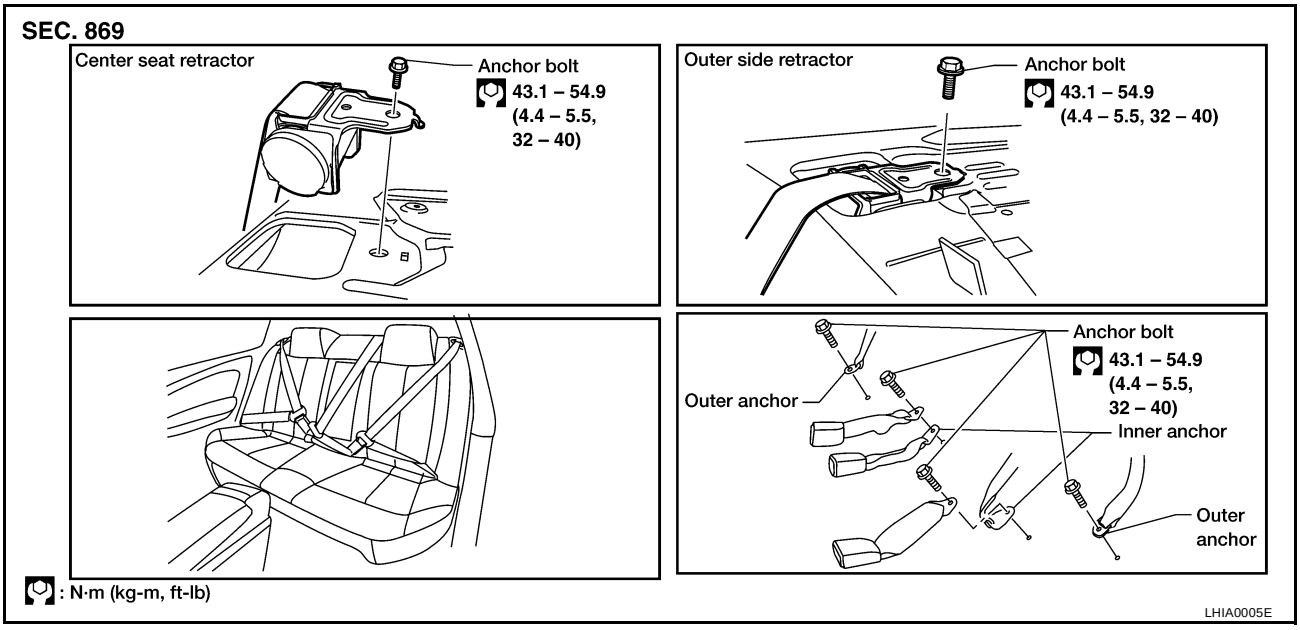

REMOVAL

1. Remove the rear seat. Refer to SE-19, "Removal and Installation" .
2. Remove the rear pillar finisher. Refer to EI-29, "Removal and Installation" .
3. Remove the outer anchor and floor anchor bolt.
4. Remove the rear parcel shelf finisher. Refer to EI-31, "Removal and Installation" .
5. Remove seat belt retractor mounting screw and anchor bolt, and remove the seat belt assembly.

INSTALLATION

To install, reverse the removal procedure.

Seat Belt Inspection

EHS000EP

AFTER A COLLISION

WARNING:

Inspect all seat belt assemblies including retractors and attaching hardware after any collision. NISSAN recommends that all seat belt assemblies in use during a collision be replaced unless the collision was minor and the belts show no damage and continue to operate properly. Failure to do so could result in serious personal injury in an accident. Seat belt assemblies not in use during a collision should also be replaced if either damage or improper operation is noted. Seat belt pre-tensioners should be replaced even if the seat belts are not in use during a frontal collision in which the air bags are deployed.

Replace any seat belt assembly (including anchor bolts) if:

- The seat belt was in use at the time of a collision (except for minor collisions and the belts, retractors and buckles show no damage and continue to operate properly).
- The seat belt was damaged in an accident. (i.e. torn webbing, bent retractor or guide).
- The seat belt attaching point was damaged in an accident. Inspect the seat belt attaching area for damage or distortion and repair as necessary before installing a new seat belt assembly.
- Anchor bolts are deformed or worn out.
- The seat belt pre-tensioner should be replaced even if the seat belts are not in use during the collision in which the air bags are deployed.

PRELIMINARY CHECKS

1. Check the seat belt warning lamp/chime for proper operation as follows:

a. Switch ignition ON. The seat belt warning lamp should illuminate. Also, the seat belt warning chime should sound for about seven seconds.

b. Fasten driver's seat belt. The seat belt warning lamp should go out and the chime (if sounding) should stop.

2. If the air bag warning lamp is blinking, conduct self-diagnosis using CONSULT-II, and air bag warning lamp. Refer to SRS-19, "SRS Operation Check" .
3. Check that the seat belt retractor, seat belt anchor and buckle bolts are securely attached.
4. Check the shoulder seat belt guide and shoulder belt height adjuster for front seats. Ensure guide swivels freely and that belt lays flat and does not bind in guide. Ensure height adjuster operates properly and holds securely.
5. Check retractor operation:

a. Fully extend the seat belt webbing and check for twists, tears or other damage.

b. Allow the seat belt to retract. Ensure that belt returns smoothly and completely into the retractor. If the seat belt does not return smoothly, wipe the inside of the loops with a clean paper cloth, because dirt built up in the loops of the upper anchors can cause the seat belts to retract slowly.

c. Fasten the seat belt. Check the seat belt returns smoothly and completely to the retractor. If the belt does not return smoothly, the cause may be an accumulation of dust or dirt. Use the “SEAT BELT TAPE SET” and perform the following steps.

Inspect the front seat belt though-anchor:

1. Pull the seat belt out to a length of 500 mm (19.69 in) or more.
2. Use a clip or other device to the fix the seat belt at the center pillar belt opening.
3. Pass a thin wire though the though-anchor belt opening. Hold both ends of the wire and pull taut while moving it up and down several times along the belt opening surface to remove dirt.
4. Any dirt that cannot be removed with the wire can be removed by cleaning the opening with a clean cloth.
5. Apply tape at the point where the belt contacts the though-anchor belt opening.

   NOTE:
   Apply the tape so that there is no looseness or wrinkling.
6. Remove the clip fixing the seat belt and check that the belt returns smoothly.
7. Repeat steps above as necessary to check the other seat belts.

SEAT BELT RETRACTOR ON-VEHICLE CHECK

Emergency Locking Retractors (ELR) and Automatic Locking Retractors (ALR)

NOTE:

All seat belt retractors are of the Emergency Locking Retractors (ELR) type. In an emergency (sudden stop) the retractor will lock and prevent the belt from extending any further. All 3-point type seat belt retractors except the driver's seat belt also have an Automatic Locking Retractors (ALR) mode. The ALR mode (also called child restraint mode) is used when installing child seats. The ALR mode is activated when the seat belt is fully extended. When the belt is then retracted partially, the ALR mode automatically locks the seat belt in a specific position so the belt cannot be extended any further. To cancel the ALR mode, allow the seat belt to fully wind back into the retractor.

Check the seat belt retractors using the following test(s) to determine if a retractor assembly is operating properly.

ELR Function Stationary Check

Grasp the shoulder belt and pull forward quickly. The retractor should lock and prevent the belt from extending further.

ALR Function Stationary Check

1. Pull out entire length of seat belt from retractor until a click is heard.
2. Retract the belt partially. A clicking noise should be heard as the belt retracts indicating that the retractor is in the Automatic Locking Retractor (ALR) mode.
3. Grasp the seat belt and try to pull out the retractor. The belt must lock and not extend any further. If necessary replace the retractor assembly.
4. Allow the entire length of the belt to retract to cancel the automatic locking mode.

ELR Function Moving Check

WARNING:

Perform the following test in a safe, open area clear of other vehicles and obstructions (for example, a large, empty parking lot). Road surface must be paved and dry. DO NOT perform the following test on wet or gravel roads or on public streets and highways. This could result in an accident and serious personal injury. The driver and passenger must be prepared to brace themselves in the event the retractor does not lock.

1. Fasten driver's seat belt. Buckle a passenger into the seat for the belt that is to be tested.
2. Proceed to the designated safe area.
3. Drive the vehicle at approximately 16 km/h (10 MPH). Notify any passengers of a pending sudden stop. The driver and passenger must be prepared to brace themselves in the event the retractor does not lock. Apply brakes firmly and make a very hard stop.

During stop, seat belts should lock and not be extended. If the seat belt retractor assembly does not lock, perform the retractor off-vehicle check.

SEAT BELT RETRACTOR OFF-VEHICLE CHECK

1. Remove the seat belt retractor assembly.
2. Slowly pull out belt while tilting the retractor assembly forward from the mounted position without twisting the retractor assembly as shown in the illustration.

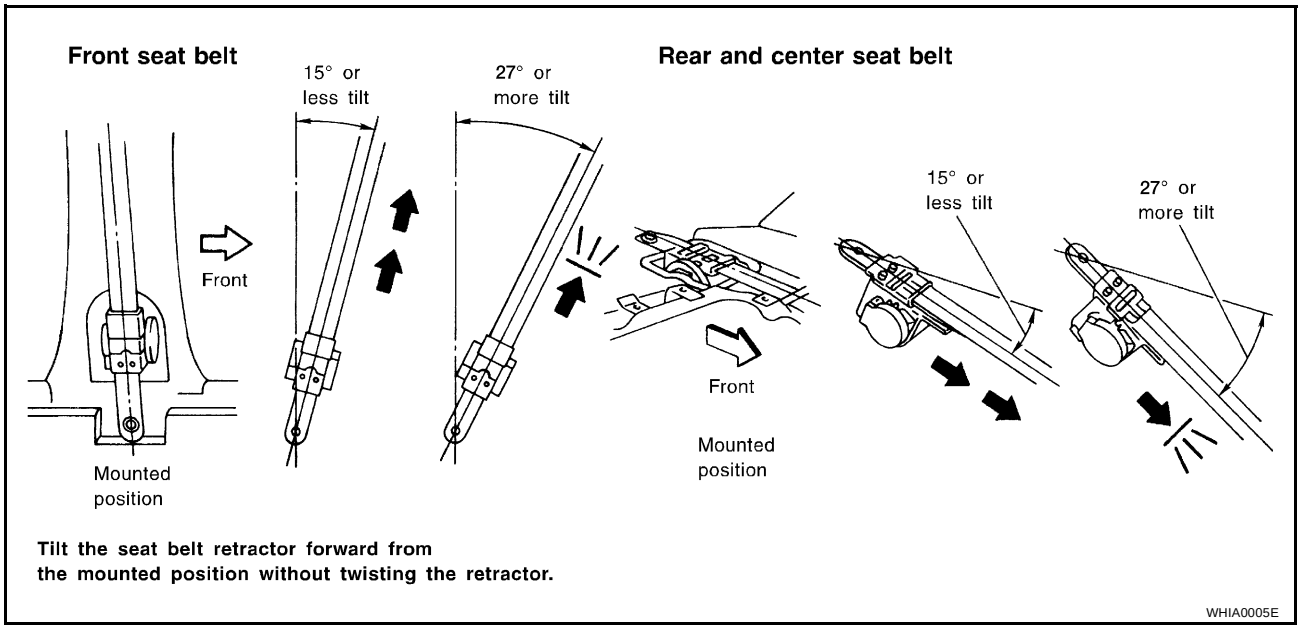

15 degrees or less tilt : Belt can be pulled out.

27 degrees or more tilt : Belt locks and cannot be pulled out.

If NG, replace the retractor assembly.

LATCH (LOWER ANCHORS AND TETHER FOR CHILDREN) SYSTEM

PFP:75466

Removal and Installation

EHS000EQ

NOTE:
The LATCH (Lower Anchors and Tether for Children) system is not serviceable.

TOP TETHER STRAP CHILD RESTRAINT

PFP:88000

Removal and Installation

EHS000ER

NOTE:
The top tether strap child restraint is not serviceable.

SECTION SC
STARTING & CHARGING SYSTEM

CONTENTS

PRECAUTIONS 2
Precautions for Supplemental Restraint System (SRS) “AIR BAG” and “SEAT BELT PRE-TENSIONER” 2
Wiring Diagrams and Trouble Diagnosis 2
PREPARATION 3
Special Service Tool 3
Commerical Service Tools 3
BATTERY 4
How to Handle Battery 4
METHODS OF PREVENTING OVER-DISCHARGE 4
CHECKING ELECTROLYTE LEVEL 4
SPECIFIC GRAVITY CHECK 5
CHARGING THE BATTERY 6
Trouble Diagnoses with Battery/Starting/Charging System Tester 6
DIAGNOSTIC RESULT ITEM CHART 8
STARTING SYSTEM 9
System Description 9
M/T MODEL 9
A/T MODEL 9
CAN Communication System Description 9
FOR TCS MODELS 10
FOR A/T MODELS 11
FOR M/T MODELS 12
Wiring Diagram — START — 14
M/T MODEL 14
A/T MODEL 15
Trouble Diagnoses with Battery/Starting/Charging System Tester 16
DIAGNOSTIC RESULT ITEM CHART 16
WORK FLOW 17
DIAGNOSTIC PROCEDURE 1 18
DIAGNOSTIC PROCEDURE 2 19
MINIMUM SPECIFICATION OF CRANKING VOLTAGE REFERENCING COOLANT TEMPERATURE 20
Construction 20
Removal and Installation 23
REMOVAL 23
Pinion/Clutch Check 24
CHARGING SYSTEM 25
System Description 25
Wiring Diagram — CHARGE — 26
Trouble Diagnoses with Battery/Starting/Charging System Tester 27
DIAGNOSTIC RESULT ITEM CHART 28
WORK FLOW 29
DIAGNOSTIC PROCEDURE 1 30
DIAGNOSTIC PROCEDURE 2 31
DIAGNOSTIC PROCEDURE 3 32
MALFUNCTION INDICATOR 33
Construction 33
Removal and Installation 33
QR25DE 33
VG35DE 34
SERVICE DATA AND SPECIFICATIONS (SDS) 35
Battery 35
Starter 35
Generator 35

PRECAUTIONS

PFP:00001

Precautions for Supplemental Restraint System (SRS) “AIR BAG” and “SEAT BELT PRE-TENSIONER”

EKS002D8

The Supplemental Restraint System such as “AIR BAG” and “SEAT BELT PRE-TENSIONER”, used along with a front seat belt, helps to reduce the risk or severity of injury to the driver and front passenger for certain types of collision. Information necessary to service the system safely is included in the SRS and SB section of this Service Manual.

WARNING:

- **To avoid rendering the SRS inoperative, which could increase the risk of personal injury or death in the event of a collision which would result in air bag inflation, all maintenance must be performed by an authorized NISSAN/INFINITI dealer.**
- **Improper maintenance, including incorrect removal and installation of the SRS, can lead to personal injury caused by unintentional activation of the system. For removal of Spiral Cable and Air Bag Module, see the SRS section.**
- **Do not use electrical test equipment on any circuit related to the SRS unless instructed to in this Service Manual. SRS wiring harnesses can be identified by yellow and/or orange harness connectors.**

Wiring Diagrams and Trouble Diagnosis

EKS002D9

When you read wiring diagrams, refer to the following:

- GI-12, "How to Read Wiring Diagrams" .
- PG-3, "POWER SUPPLY ROUTING CIRCUIT" for power distribution circuit.

When you perform trouble diagnosis, refer to the following:

- GI-10, "HOW TO FOLLOW TEST GROUPS IN TROUBLE DIAGNOSES".
- GI-25, "How to Perform Efficient Diagnosis for an Electrical Incident".

PREPARATION

PFP:00002

Special Service Tool

EKS002DA

Tool number Tool name	Description
J-44373 Model 620 Battery/Starting/Charging system tester 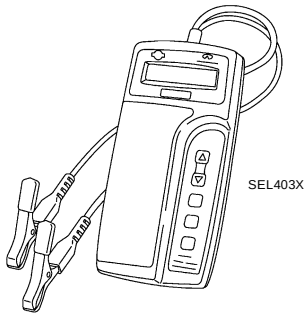 SEL403X	

Commerical Service Tools

EKS002DB

Tool number Tool name	Description
Power tool 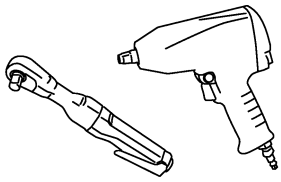 PBIC0190E	Loosening bolts and nuts

BATTERY

PFP:AYBGL

How to Handle Battery

EKS002DC

CAUTION:

- **If it becomes necessary to start the engine with a booster battery and jumper cables, use a 12-volt booster battery.**
- **After connecting battery cables, ensure that they are tightly clamped to battery terminals for good contact.**
- **Never add distilled water through the hole used to check specific gravity.**

METHODS OF PREVENTING OVER-DISCHARGE

The following precautions must be taken to prevent over-discharging a battery.

- The battery surface (particularly its top) should always be kept clean and dry.
- The terminal connections should be clean and tight.
- At every routine maintenance, check the electrolyte level.
  This also applies to batteries designated as “low maintenance” and “maintenance-free”.

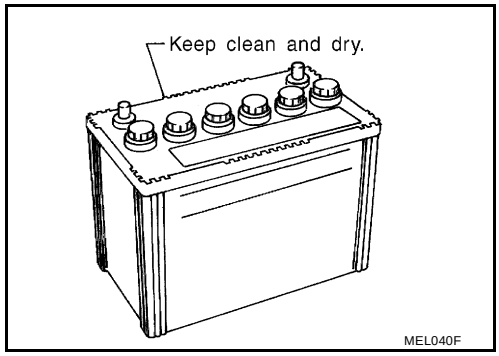

- When the vehicle is not going to be used over a long period of time, disconnect the negative battery terminal.

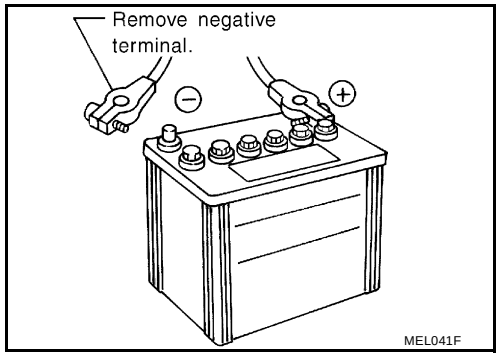

- Check the charge condition of the battery.
  Periodically check the specific gravity of the electrolyte. Keep a close check on charge condition to prevent over-discharge.

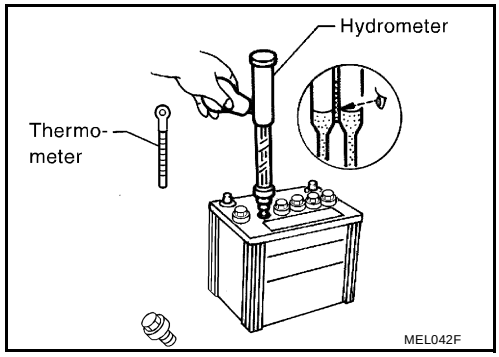

CHECKING ELECTROLYTE LEVEL

WARNING:

Do not allow battery fluid to come in contact with skin, eyes, fabrics, or painted surfaces. After touching a battery, do not touch or rub your eyes until you have thoroughly washed your hands. If acid contacts eyes, skin or clothing, immediately flush with water for 15 minutes and seek medical attention.

- Remove the cell plug using a suitable tool.
- Add distilled water up to the MAX level.

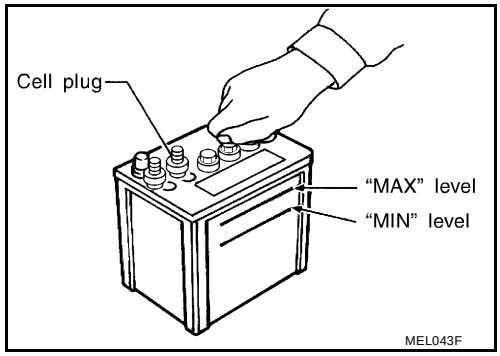

Sulphation

A battery will be completely discharged if it is left unattended for a long time and the specific gravity will become less than 1.100. This may result in sulphation on the cell plates.
To determine if a battery has been "sulphated", note its voltage and current when charging it. As shown in the figure, less current and higher voltage are observed in the initial stage of charging sulphated batteries.
A sulphated battery may sometimes be brought back into service by means of a long, slow charge, 12 hours or more, followed by a battery capacity test.

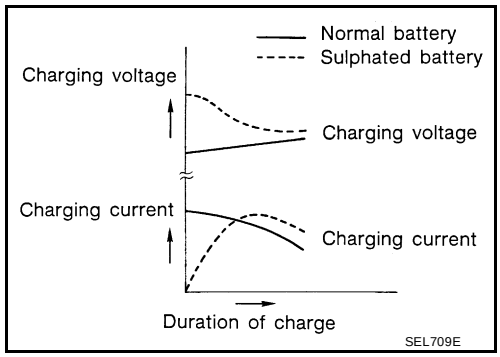

SPECIFIC GRAVITY CHECK

1. Read hydrometer and thermometer indications at eye level.
2. Use the chart below to correct your hydrometer reading according to electrolyte temperature.

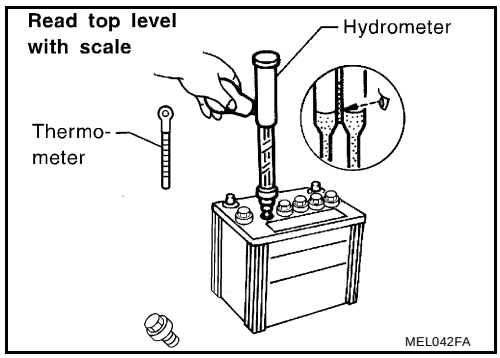

Hydrometer Temperature Correction

Battery electrolyte temperature °C (°F)	Add to specific gravity reading
71 (160)	0.032
66 (150)	0.028
60 (140)	0.024
54 (130)	0.020
49 (120)	0.016
43 (110)	0.012
38 (100)	0.008
32 (90)	0.004
27 (80)	0
21 (70)	–0.004
16 (60)	–0.008
10 (50)	–0.012
4 (40)	–0.016
–1 (30)	–0.020
–7 (20)	–0.024

Battery electrolyte temperature °C (°F)	Add to specific gravity reading
–12 (10)	–0.028
–18 (0)	–0.032

Corrected specific gravity	Approximate charge condition
1.260 - 1.280	Fully charged
1.230 - 1.250	3/4 charged
1.200 - 1.220	1/2 charged
1.170 - 1.190	1/4 charged
1.140 - 1.160	Almost discharged
1.110 - 1.130	Completely discharged

CHARGING THE BATTERY

CAUTION:

- **Do not "quick charge" a fully discharged battery.**
- **Keep the battery away from open flame while it is being charged.**
- **When connecting the charger, connect the leads first, then turn on the charger. Do not turn on the charger first, as this may cause a spark.**
- **If battery electrolyte temperature rises above 60°C (140°F), stop charging. Always charge battery at a temperature below 60°C (140°F).**

Charging Rates

Amps	Time
50	1 hour
25	2 hours
10	5 hours
5	10 hours

Do not charge at more than 50 ampere rate.

NOTE:

The ammeter reading on your battery charger will automatically decrease as the battery charges. This indicates that the voltage of the battery is increasing normally as the state of charge improves. The charging amps indicated above refer to initial charge rate.

- If, after charging, the specific gravity of any two cells varies more than .050, the battery should be replaced.

Trouble Diagnoses with Battery/Starting/Charging System Tester

EKS002DD

CAUTION:

When working with batteries, always wear appropriate eye protection.

NOTE:

- To ensure a complete and thorough diagnosis, the battery, starter and generator test segments must be done as a set from start to finish.
- If battery surface charge is detected while testing, the tester will prompt you to turn on the headlights to remove the surface charge.
- If necessary, the tester will prompt you to determine if the battery temperature is above or below 0°C (32°F). Choose the appropriate selection by pressing the up or down arrow button, then press "ENTER" to make the selection.

1. Turn off all loads on the vehicle electrical system. Clean or repair as necessary.
2. Visually inspect the battery, battery terminals and cable ends with ignition switch in “OFF” position.

   NOTE:
   The contact surface between the battery terminals, cable ends and tester leads must be clean for a valid test. A poor connection will prevent testing and a “CHECK CONNECTION” message will appear during the test procedures. If this occurs, clean the battery post and terminals, reconnect them and restart the test.

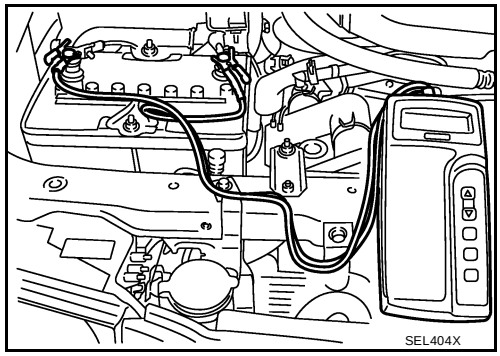

3. Connect the red tester lead clamp to the positive battery terminal, and the black to the negative terminal.
4. The tester will turn on automatically. Using the arrow keys, select “IN-VEHICLE” on the tester and then press the “ENTER” key.

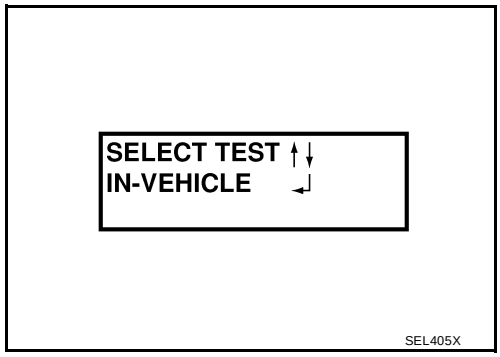

5. Locate the battery type and rating stamped or written on the top case of the battery to be tested.

   NOTE:
   The battery type and rating will have either of the following.
   CCA: Cold Cranking Amps (490 CCA, 550 CCA, etc.)
   JIS: Japanese Industrial Standard.
   Battery is stamped with a number such as:
   80D26L: 80 (rank of output), D (physical size-depth), 26 (width in cm). The last character L (post configuration) is not input into the tester.
   The tester requires the rating for the battery be entered exactly as it is written or stamped on the battery. Do not attempt a CCA conversion for JIS stamped batteries. JIS must be input directly.

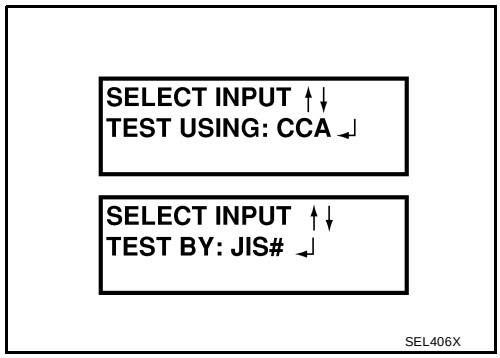

6. Using the arrow and “ENTER” keys alternately, select the battery type and rating.

   NOTE:
   The tester lists five choices; CCA, JIS, IEC, DIN, and EN. Only use CCA or JIS.
7. Press “ENTER” to begin the test. Diagnosis results are displayed on the tester. Refer to SC-8, "DIAGNOSTIC RESULT ITEM CHART" .

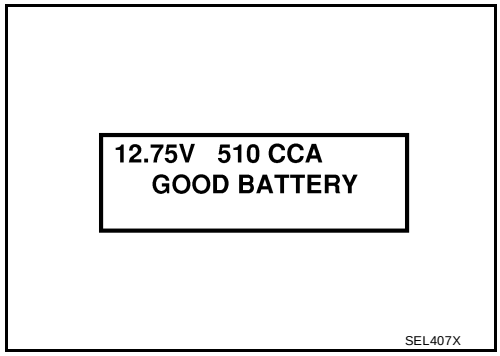

8. Press “ENTER”, then test output code is displayed. Record the test output code on the repair order.
9. Toggle back to the “DIAGNOSTIC SCREEN” for test results.

   NOTE:
   - If necessary, the tester will ask the user to determine if the battery has just been charged. Choose the appropriate selection by pressing the up or down arrow button and then press the “ENTER” button to make the selection.
   - When testing a battery installed in a vehicle that has recently been driven, select “BEFORE CHARGE”.
   - If the battery has just been slow charged due to a “CHARGE & RETEST” decision by the tester, and the tester asks the user “BEFORE CHARGE/AFTER CHARGE”, select “AFTER CHARGE”.

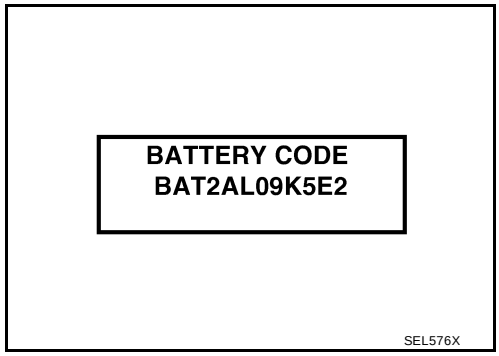

DIAGNOSTIC RESULT ITEM CHART

Diagnostic item	Service procedure
GOOD BATTERY	Battery is OK. Refer to SC-6, "Trouble Diagnoses with Battery/Starting/Charging System Tester" .
REPLACE BATTERY	Replace battery. Before replacing battery, clean the battery cable clamps and battery posts. Perform battery test again with Battery/Starting/Charging system tester. If second test result is “Replace Battery”, then do so. Perform battery test again to confirm repair.
BAD CELL-REPLACE	Replace the battery. Perform battery test again with Battery/Starting/Charging system tester to confirm repair.
GOOD-RECHARGE	Perform the slow battery charging procedure. (Initial rate of charge is 10A for 12 hours.) Perform battery test again with Battery/Starting/Charging system tester.
CHARGE & RETEST	Perform the slow battery charging. (Initial rate of charge is 10A for 12 hours.) Perform battery test again with Battery/Starting/Charging system tester to confirm repair. **NOTE:** **If the tester asks the user “BEFORE CHARGE/AFTER CHARGE”, select “AFTER CHARGE”.**

STARTING SYSTEM

PFP:23300

System Description

EKS003OQ

M/T MODEL

Power is supplied at all times:

- through 40A fusible link (letter **m** , located in the fuse and fusible link box)
- to ignition switch terminal B.

With the ignition switch in the START position, power is supplied:

- from ignition switch terminal St
- to intelligent power distribution module engine room (IPDM E/R) terminal 11.

With the ignition switch in the ON or START position, power is supplied:

- through 10A fuse [No. 12, located in the fuse block (J/B)]
- to intelligent power distribution module engine room (IPDM E/R) terminal 43.

When the clutch pedal is depressed, ground is supplied to intelligent power distribution module engine room (IPDM E/R) terminal 46 through the clutch interlock switch and body grounds E15 and E24.
Provided that the intelligent power distribution module (IPDM E/R) receives a starter relay on signal from the BCM over the CAN lines, the IPDM E/R is energized and power is supplied:

- from terminal 4 of the clutch interlock relay
- to terminal S of the starter motor windings.

The starter motor plunger closes and provides a closed circuit between the battery and the starter motor. The starter motor is grounded to the cylinder block. With power and ground supplied, the starter motor operates.
In the event that the CAN communication line fails, the IPDM E/R will continue to receive a starter relay on signal from the BCM as long as the ignition switch remains in the START or ON positions.

A/T MODEL

Power is supplied at all times:

- through 40A fusible link (letter **m** , located in the fuse and fusible link box)
- to ignition switch terminal B.

With the ignition switch in the START position, power is supplied:

- from ignition switch terminal St
- to intelligent power distribution module engine room (IPDM E/R) terminal 11.

With the ignition switch in the ON or START position, power is supplied:

- through 10A fuse [No. 12, located in the fuse block (J/B)]
- to intelligent power distribution module engine room (IPDM E/R) terminal 43.

Ground is supplied, with the selector lever in the P or N position:

- to intelligent power distribution module engine room (IPDM E/R) terminal 46
- through park/neutral position switch.
- from ignition switch terminal St
- through intelligent power distribution module engine room (IPDM E/R) terminal 71
- to terminal S of the starter motor windings.

The starter motor plunger closes and provides a closed circuit between the battery and the starter motor. The starter motor is grounded to the cylinder block. With power and ground supplied, the starter motor operates.
In the event that the CAN communication line fails, the IPDM E/R will continue to receive a starter relay on signal from the BCM as long as the ignition switch remains in the START or ON positions.

CAN Communication System Description

EKS003OR

CAN (Controller Area Network) is a serial communication line for real time application. It is an on-vehicle multiplex communication line with high data communication speed and excellent error detection ability. Many electronic control units are equipped onto a vehicle, and each control unit shares information and links with other control units during operation (not independent). In CAN communication, control units are connected with 2 communication lines (CAN H line, CAN L line) allowing a high rate of information transmission with less wiring. Each control unit transmits/receives data but selectively reads required data only.

FOR TCS MODELS

System diagram

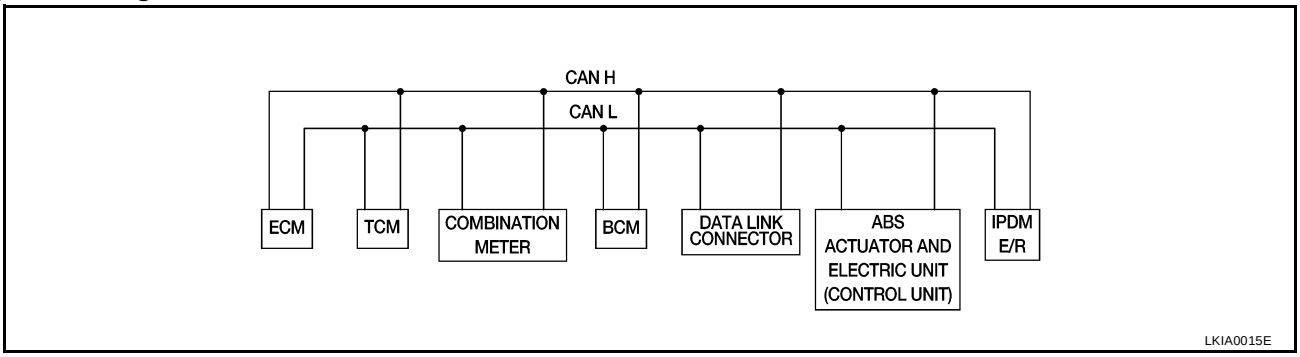

Input/output signal chart

T: Transmit R: Receive

Signals	ECM	TCM	COMBINA-TION METER	BCM	ABS/TCS control unit	IPDM E/R
Engine speed signal	T		R		R	
Engine coolant temperature signal	T		R			
Accelerator pedal position signal	T					
Fuel consumption monitor signal	T		R			
A/T warning lamp signal		T	R			
A/T position indicator signal	R	T	R	R(R range only)	R	
ABS operation signal	R				T	
TCS operation signal	R	R			T	
Air conditioner switch signal	R			T		
Air conditioner compressor signal	R					T
A/C compressor request signal	T					R
Cooling fan motor operation signal	R					T
Cooling fan speed request signal	T					R
Position lights request			R	T		R
Position lights status				R		T
Low beam request				T		R
Low beam status	R			R		T
High beam request			R	T		R
High beam status	R			R		T
Front fog lights request				T		R
Front fog light status				R		T
OD cancel switch signal		R	T			R
Brake switch signal		R	T			
Vehicle speed signal	R		T			
	R		T	R		
Oil pressure switch			R			T
Sleep request1			R	T		
Sleep request2				T		R
N range switch signal		R	T			
P range switch signal		R	T			
Seat belt buckle switch signal			T	R		

Signals	ECM	TCM	COMBINATION METER	BCM	ABS/TCS control unit	IPDM E/R
Door switch signal			R	T		R
Tail lamp request			R	T		R
Turn indicator signal			R	T		
Buzzer output signal			R	T		
Trunk switch signal			R	T		
ASCD main switch signal	T		R			
ASCD cruise signal	T		R			
Wiper operation				R		T
Wiper stop position signal				R		T
Rear window defogger switch signal				T		R
Rear window defogger control signal	R			R		T

FOR A/T MODELS

System diagram

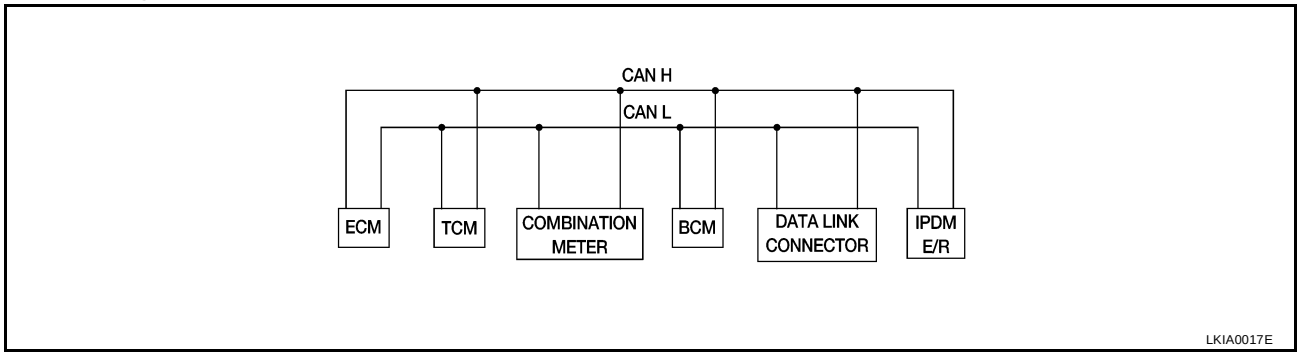

Input/output signal chart

T: Transmit R: Receive

Signals	ECM	TCM	COMBINATION METER	BCM	IPDM E/R
Engine speed signal	T		R		
Engine coolant temperature signal	T		R		
Accelerator pedal position signal	T				R
Fuel consumption monitor signal	T		R		
A/T warning lamp signal		T	R		
A/T position indicator signal	R	T	R	R(R range only)	
Air conditioner switch signal	R			T	
Air conditioner compressor signal	R				T
A/C compressor request signal	T				R
Blower fan switch signal	R(QR25DE)			T	
Cooling fan motor operation signal	R			T	
Cooling fan speed request signal	T				R
Position lights request			R	T	R
Position lights status				R	T
Low beam request				T	R
Low beam status	R			R	T
High beam request			R	T	R

Signals	ECM	TCM	COMBINATION METER	BCM	IPDM E/R
High beam status	R			R	T
Front fog lights request				T	R
Front fog light status				R	T
OD cancel switch signal		R	T		R
Brake switch signal		R	T		
Vehicle speed signal	R		T		
	R		T	R	
Oil pressure switch			R		T
Sleep request1			R	T	
Sleep request2				T	R
N range switch signal		R	T		
P range switch signal		R	T		
Seat belt buckle switch signal			T	R	
Door switch signal			R	T	R
Tail lamp request			R	T	R
Turn indicator signal			R	T	
Buzzer output signal			R	T	
Trunk switch signal			R	T	
ASCD main switch signal	T		R		
ASCD cruise signal	T		R		
Wiper operation				R	T
Wiper stop position signal				R	T
Rear window defogger switch signal				T	R
Rear window defogger control signal	R			R	T

FOR M/T MODELS

System diagram

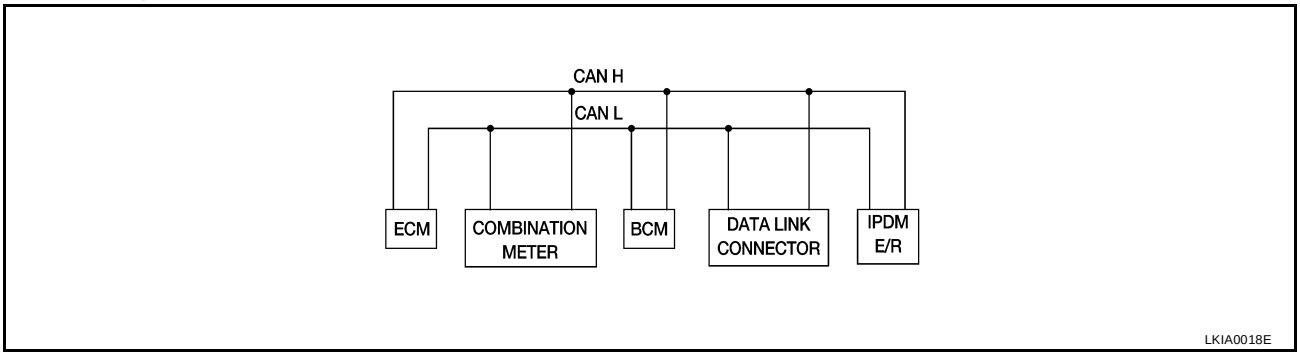

Input/output signal chart

T: Transmit R: Receive

Signals	ECM	COMBINATION METER	BCM	IPDM E/R
Engine speed signal	T			
Engine coolant temperature signal	T			
Fuel consumption monitor signal	T			
Air conditioner switch signal	R		T	
Air conditioner compressor signal	R			T
A/C compressor request signal	T			R

Signals	ECM	COMBINATION METER	BCM	IPDM E/R
Blower fan switch signal	R(QR25DE)		T	
Cooling fan motor operation signal	R			T
Cooling fan speed request signal	T			R
Position lights request		R	T	R
Position lights status			R	T
Low beam request			T	R
Low beam status	R		R	T
High beam request		R	T	R
High beam status	R		R	T
Front fog lights request			T	R
Front fog light status			R	T
Vehicle speed signal	R	T		
Oil pressure switch		R		T
Sleep request1		R	T	
Sleep request2			T	R
Seat belt buckle switch signal		T	R	
Door switch signal		R	T	R
Tail lamp request		R	T	R
Turn indicator signal		R	T	
Buzzer output signal		R	T	
Trunk switch signal		R	T	
ASCD main switch signal	T	R		
ASCD cruise signal	T	R		
Wiper operation			R	T
Wiper stop position signal			R	T
Rear window defogger switch signal			T	R
Rear window defogger control signal	R		R	T

Wiring Diagram — START —

EKS003OS

M/T MODEL

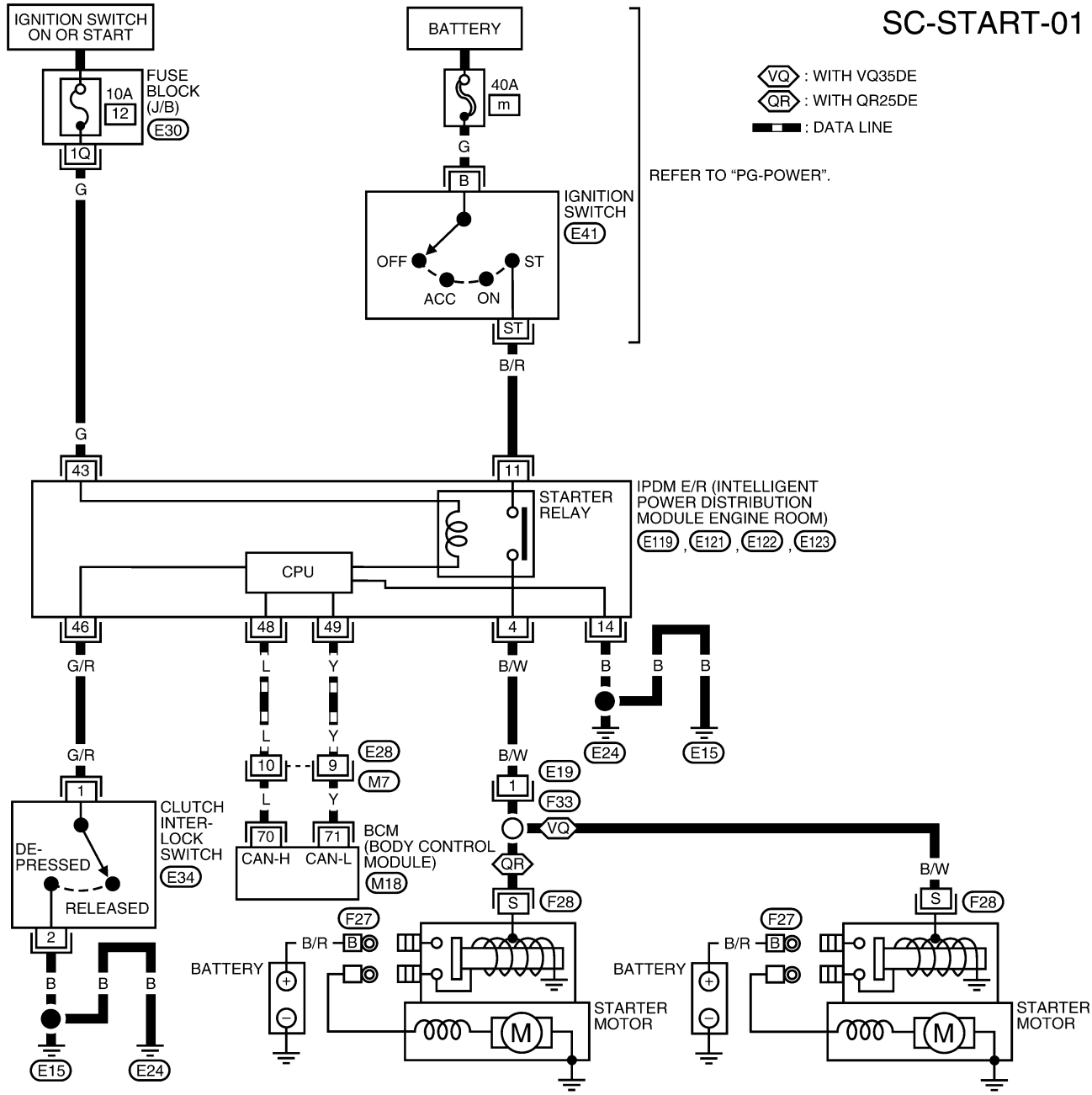

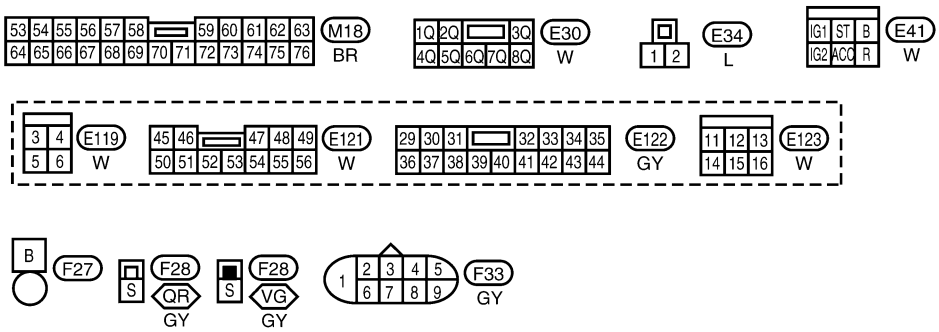

WKWA0156E

A/T MODEL

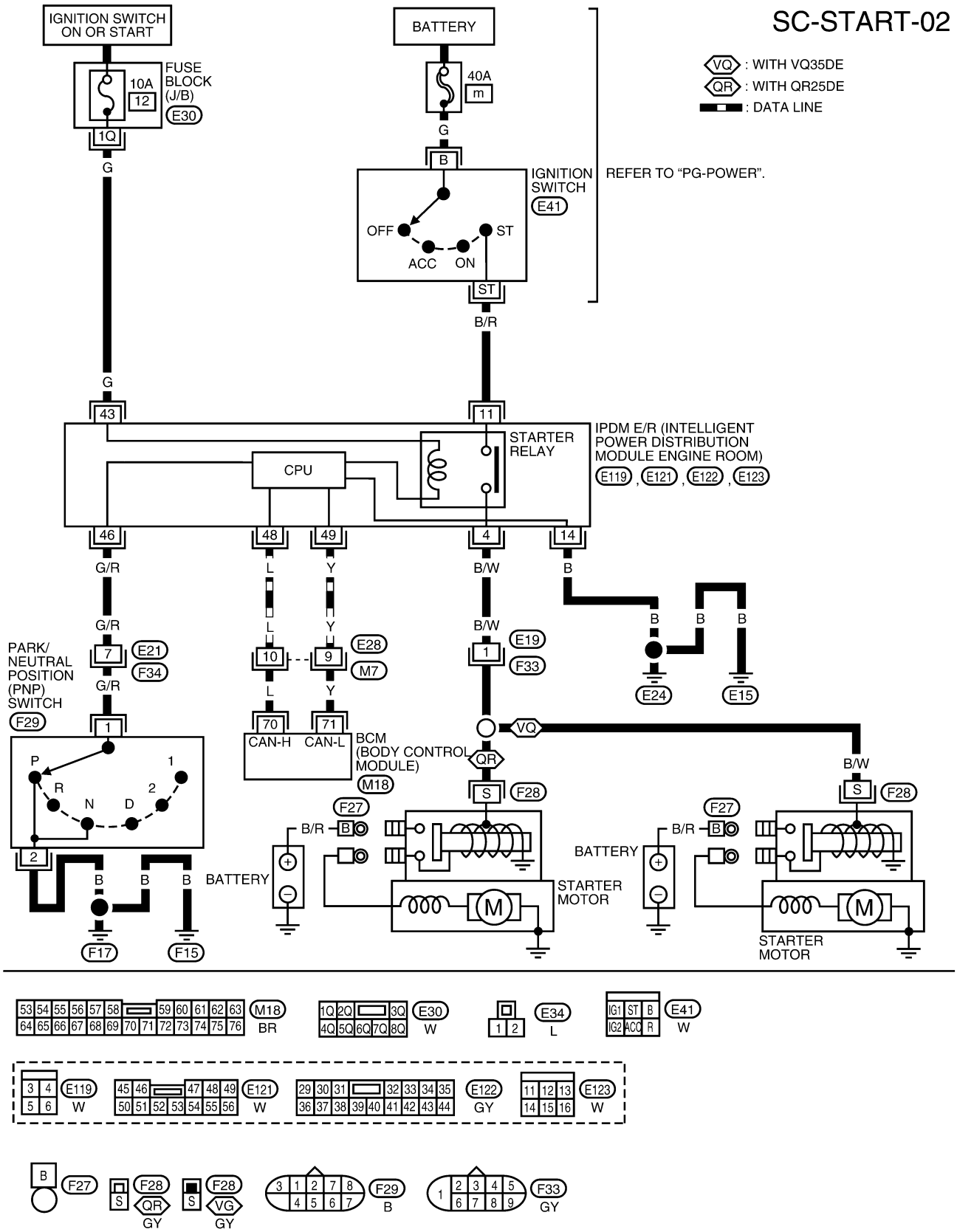

WKWA0157E

Trouble Diagnoses with Battery/Starting/Charging System Tester

EKS003OT

NOTE:
To ensure a complete and thorough diagnosis, the battery, starter and generator test segments must be done as a set from start to finish.

1. Turn off all loads on the vehicle electrical system.
2. Perform battery test with Battery/Starting/Charging system tester. Refer to SC-16, "Trouble Diagnoses with Battery/Starting/Charging System Tester" .
3. Press “ENTER” to begin the starting system test.

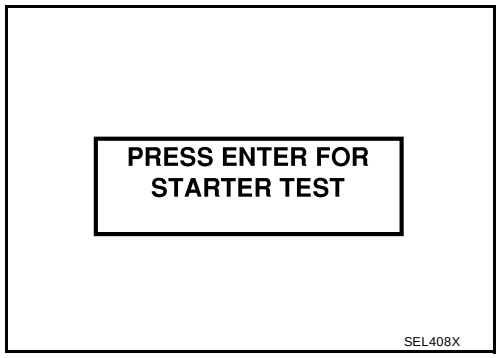

4. Start the engine.

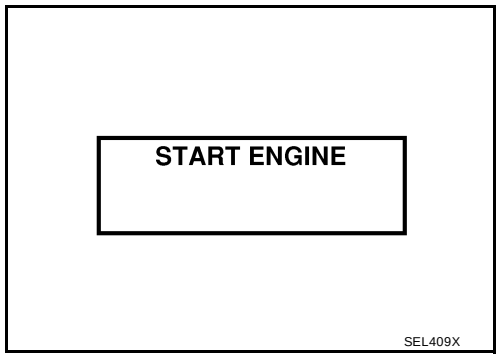

5. Diagnosis result is displayed on the tester. Refer to SC-16, "DIAGNOSTIC RESULT ITEM CHART" .

   NOTE:
   - If the starter performs normally but the engine does not start, perform engine diagnosis.
   - For intermittent “NO CRANK” or “NO STARTER OPERATION” incidents, refer to SC-19, "DIAGNOSTIC PROCEDURE 2" .

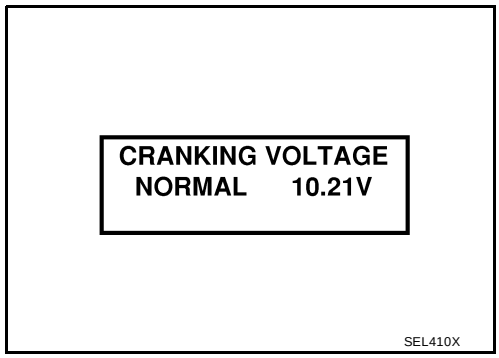

DIAGNOSTIC RESULT ITEM CHART

Diagnostic item	Service procedure
CRANKING VOLTAGE NORMAL	Go to “WORK FLOW”, SC-17, "WORK FLOW" .
CRANKING VOLTAGE LOW	Go to “WORK FLOW”, SC-17, "WORK FLOW" .
CHARGE BATTERY	Perform the slow battery charging procedure. (Initial rate of charge is 10A for 12 hours.) Perform battery test again with Battery/Starting/Charging system tester. Refer to SC-16, "Trouble Diagnoses with Battery/Starting/Charging System Tester" .
REPLACE BATTERY	Before replacing battery, clean the battery cable clamps and battery posts. Perform battery test again with Battery/Starting/Charging system tester. Refer to SC-16, "Trouble Diagnoses with Battery/Starting/Charging System Tester" . If second test result is “REPLACE BATTERY”, then do so. Perform battery test again to confirm repair.

WORK FLOW

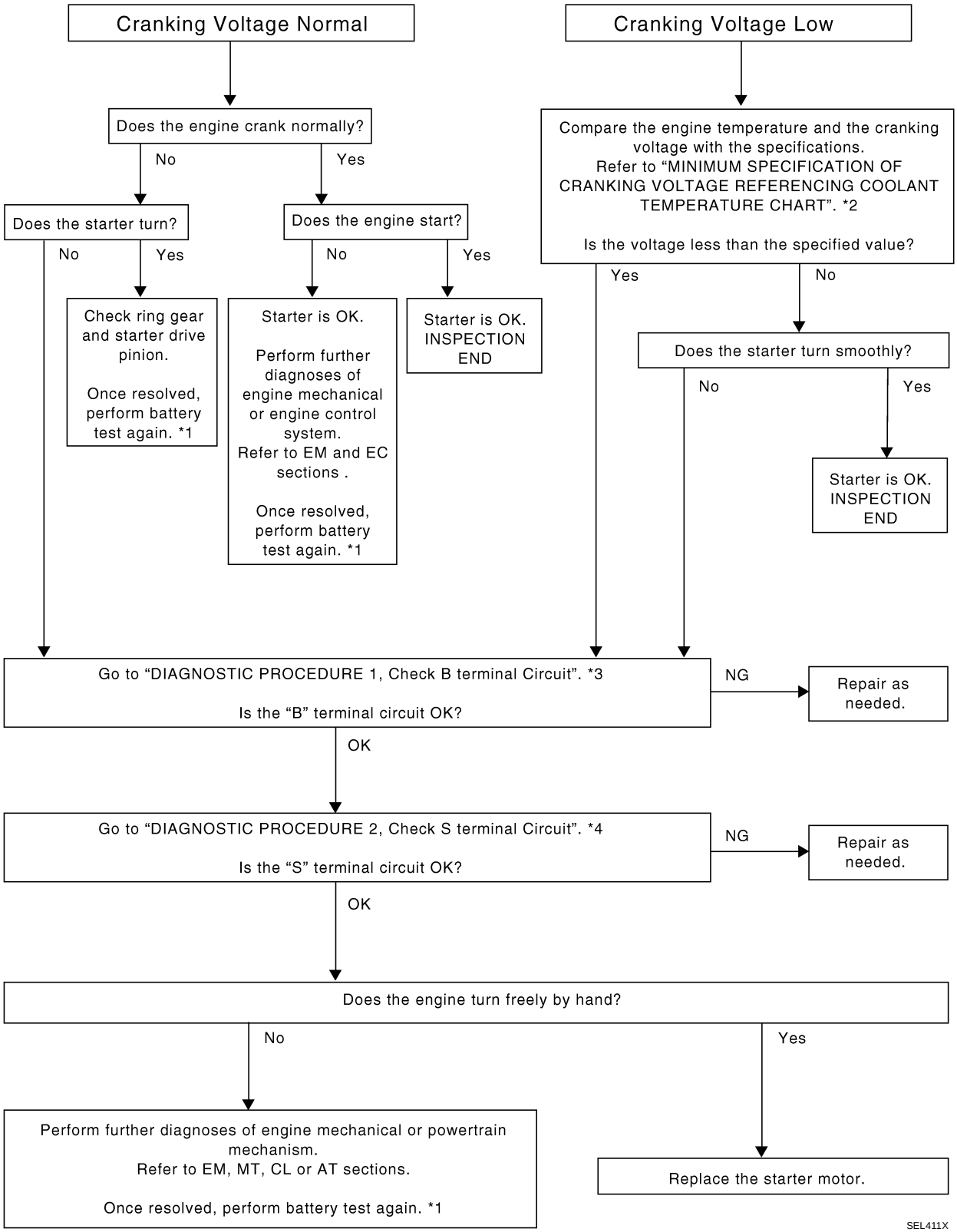

*1 SC-16 *2 SC-18 *3 SC-19
*4 SC-19

DIAGNOSTIC PROCEDURE 1
Check “B” Terminal Circuit

1. CHECK POWER SUPPLY FOR STARTER MOTOR “B” TERMINAL

1. Remove the fuel pump fuse.
2. Crank or start the engine (where possible) until the fuel pressure is released.
3. Turn the ignition switch OFF.
4. Check that the starter motor connector F27 terminal B (B/R) connection is clean and tight.
5. Check voltage between starter motor connector F27 terminal B (B/R) and ground using a digital circuit tester.

Battery voltage should exist

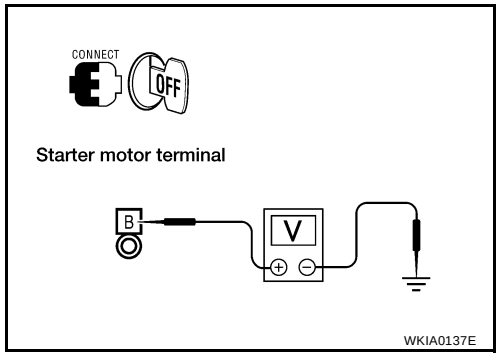

OK or NG

OK >> GO TO 2.
NG >> Check harness between the battery and the starter motor for open circuit.

2. CHECK BATTERY CABLE CONNECTION QUALITY (VOLTAGE DROP TEST)

1. Check voltage between starter motor connector F27 terminal B (B/R) and battery positive terminal using a digital circuit tester.

Ignition switch in START : Less than 0.5V

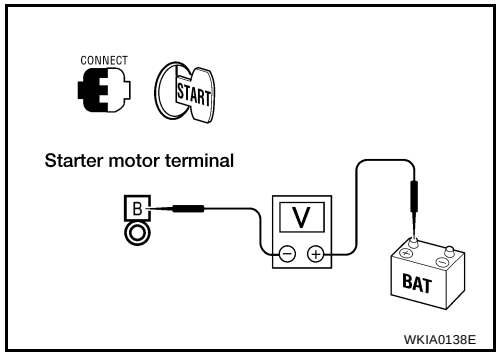

OK or NG

OK >> GO TO 3.
NG >> Check harness between the battery and the starter motor for poor continuity.

3. CHECK STARTER MOTOR GROUND CIRCUIT (VOLTAGE DROP TEST)

1. Check voltage between starter motor case and battery negative terminal using a digital circuit tester.

Ignition switch in START : Less than 0.2V

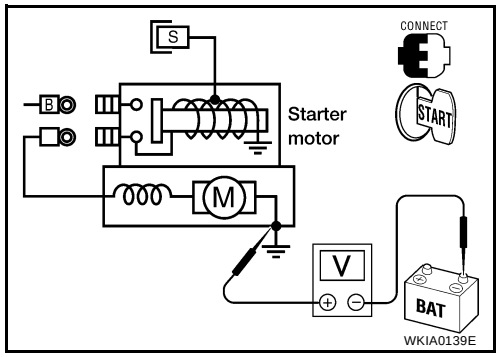

OK or NG

OK >> Starter motor “B” terminal circuit is OK. Further inspection is necessary. Refer to SC-17, "WORK FLOW" .
NG >> Check harness between the starter motor case and ground for poor continuity.

DIAGNOSTIC PROCEDURE 2
Check “S” Terminal Circuit

1. CHECK POWER SUPPLY FOR STARTER MOTOR “S” TERMINAL

1. Remove the fuel pump fuse.
2. Crank or start the engine (where possible) until the fuel pressure is released.
3. Turn the ignition switch OFF.
4. Disconnect starter motor connector F28 terminal S (B/W) connector.
5. Check voltage between starter motor connector F28 terminal S (B/W) and ground using a digital circuit tester.

Ignition switch in START **: Battery voltage**

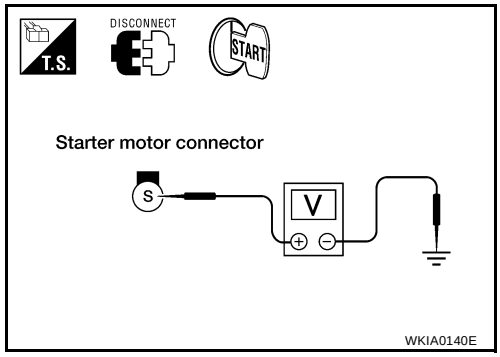

OK or NG

OK >> GO TO 2.

NG >> Check the following.

- 40A fusible link (letter **m** , located in fuse and fusible link box)
- Starter relay [within the intelligent power distribution module engine room (IPDM E/R)]
- Harness for open or short

2. CHECK “S” TERMINAL CONNECTION QUALITY (VOLTAGE DROP TEST)

1. Connect starter motor connector F28 terminal S (B/W) connector.
2. Check voltage between starter motor connector F28 terminal S (B/W) and battery positive terminal using a digital tester.

Ignition switch in START **: Less than 1V**

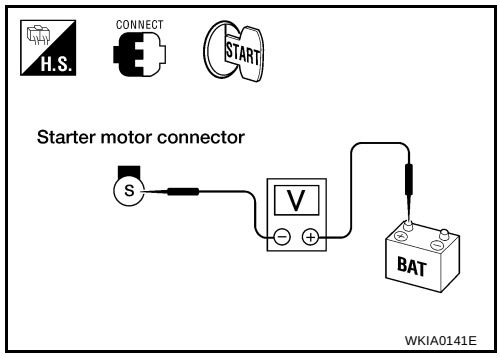

OK or NG

OK >> Starter motor “S” terminal circuit is OK. Further inspection is necessary. Refer to SC-17, "WORK FLOW" .

NG >> Check harness between the battery and the starter motor “S” terminal for poor continuity.

MINIMUM SPECIFICATION OF CRANKING VOLTAGE REFERENCING COOLANT TEMPERATURE

Engine coolant temperature	Voltage V	
	QR25DE	VQ35DE
–30°C to –20°C (–22°F to –4°F)	8.7	8.4
–19°C to –10°C (–2°F to 14°F)	9.2	8.9
–9°C to 0°C (16°F to 32°F)	9.6	9.3
More than 1°C (More than 34°F)	10.0	9.7

Construction

EKS003OU

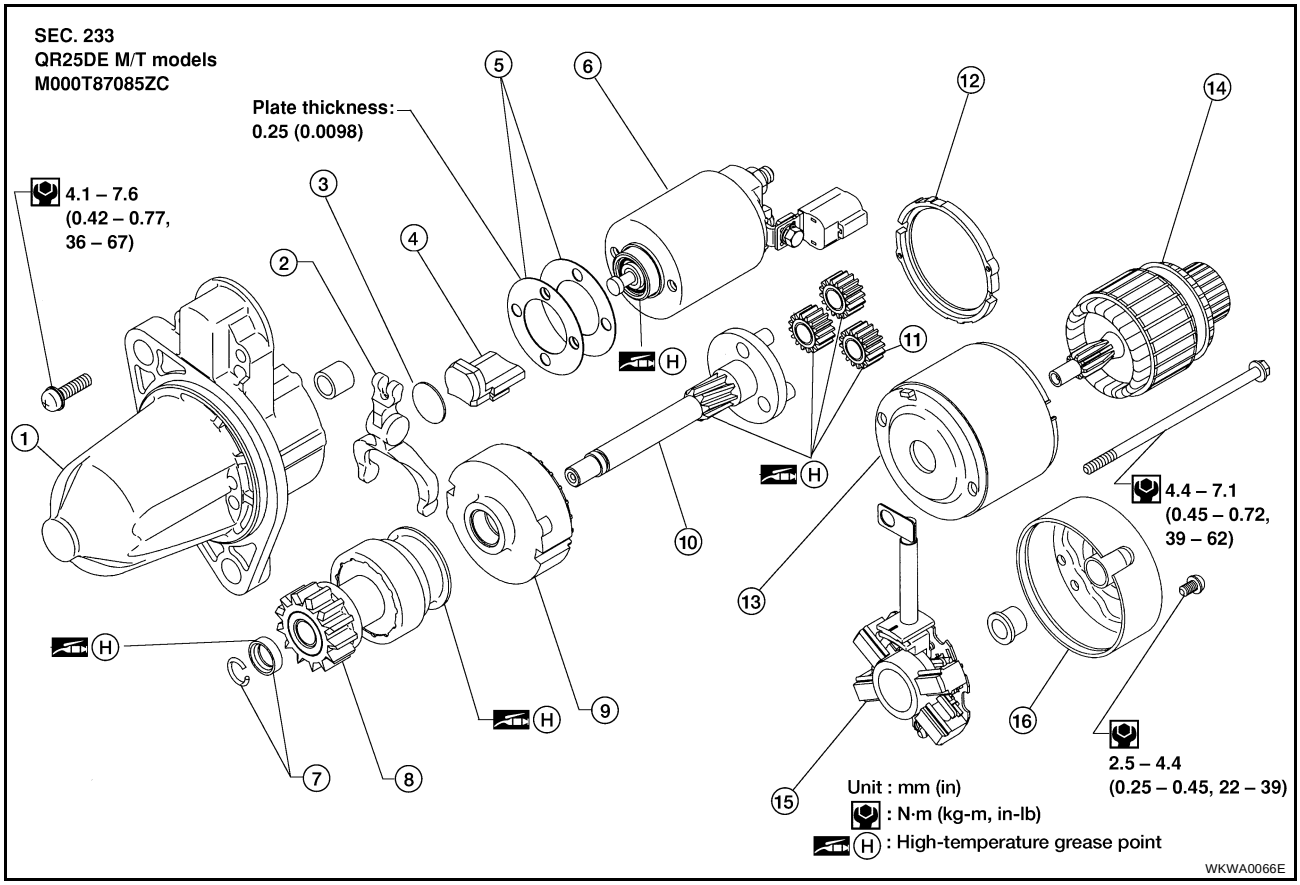

1. Gear case
2. Shift lever
3. Plate
4. Packing
5. Adjusting plate
6. Magnetic switch assembly
7. Pinion stopper set
8. Pinion assembly
9. Internal gear
10. Pinion shaft
11. Planetary gear
12. Packing
13. Yoke
14. Armature
15. Brush holder assembly
16. Rear cover

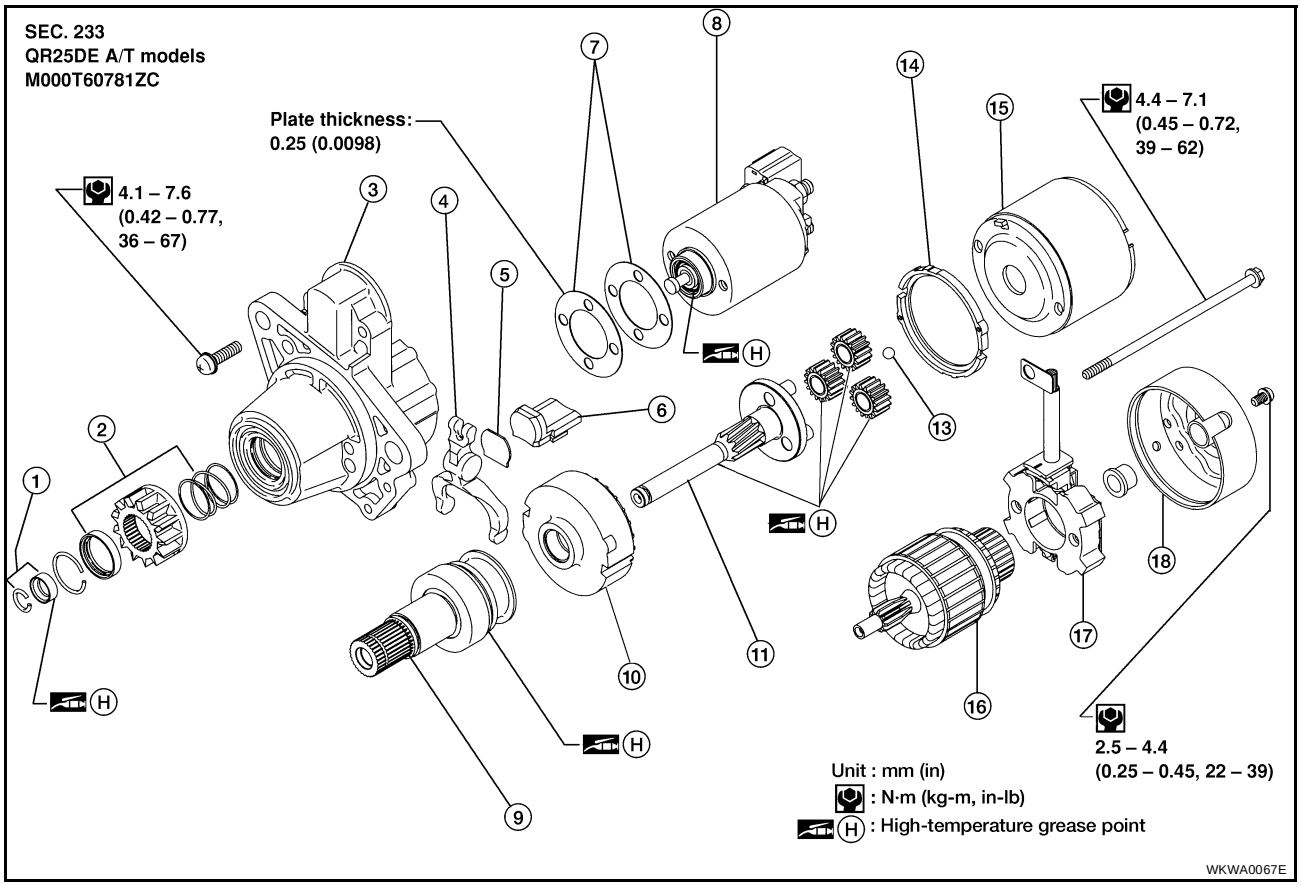

1.	Pinion stopper set	2.	Pinion set	3.	Front bracket
4.	Shift lever	5.	Plate	6.	Packing
7.	Adjusting plate	8.	Magnetic switch assembly	9.	Clutch gear
10.	Internal gear	11.	Gear shaft	12.	Planetary gears
13.	Ball	14.	Center bracket	15.	Yoke assembly
16.	Armature	17.	Brush assembly	18.	Rear bracket

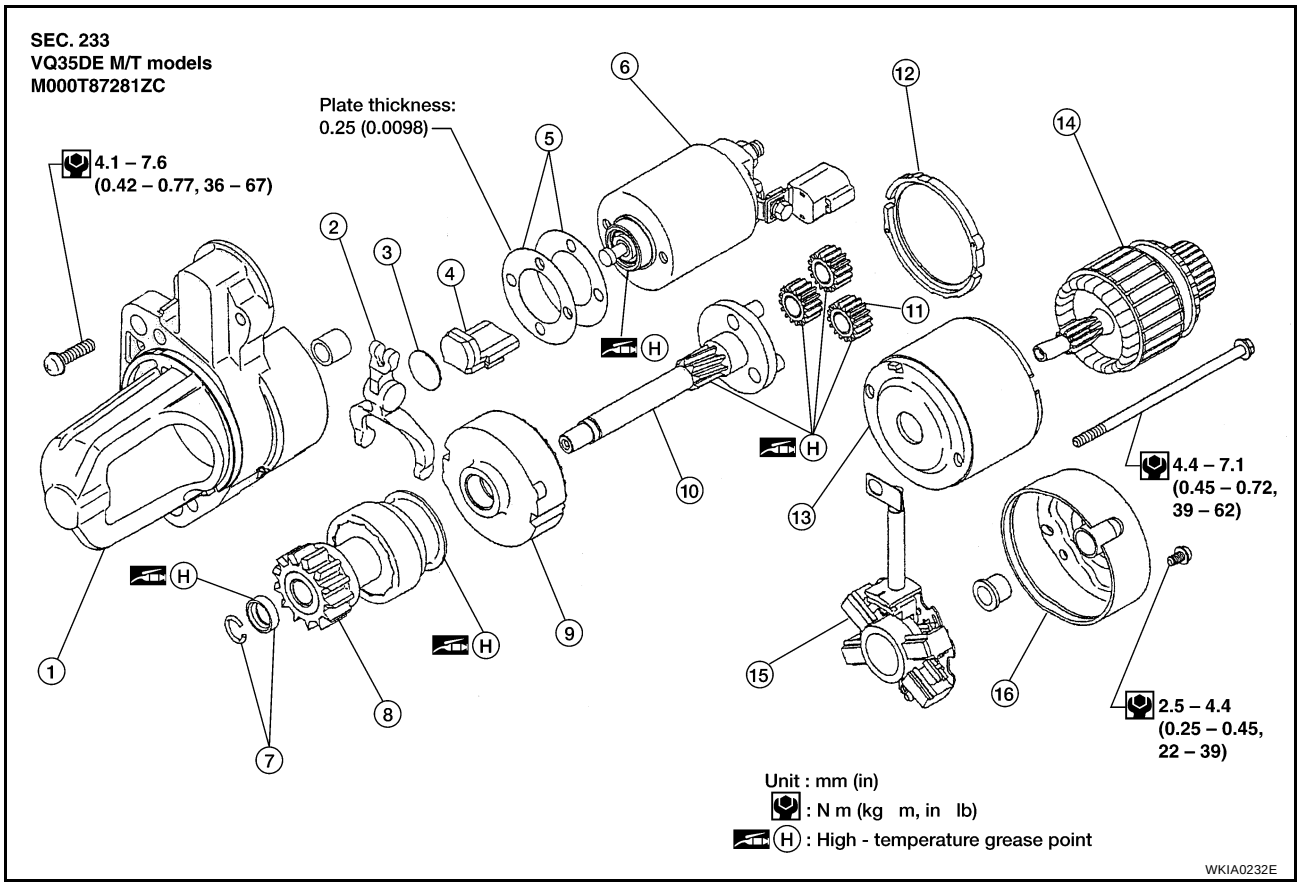

1.	Gear case	2.	Shift lever	3.	Plate
4.	Packing	5.	Adjusting plate	6.	Magnetic switch assembly
7.	Pinion stopper set	8.	Pinion assembly	9.	Internal gear
10.	Pinion shaft	11.	Planetary gear	12.	Packing
13.	Yoke	14.	Armature	15.	Brush holder assembly
16.	Rear cover				

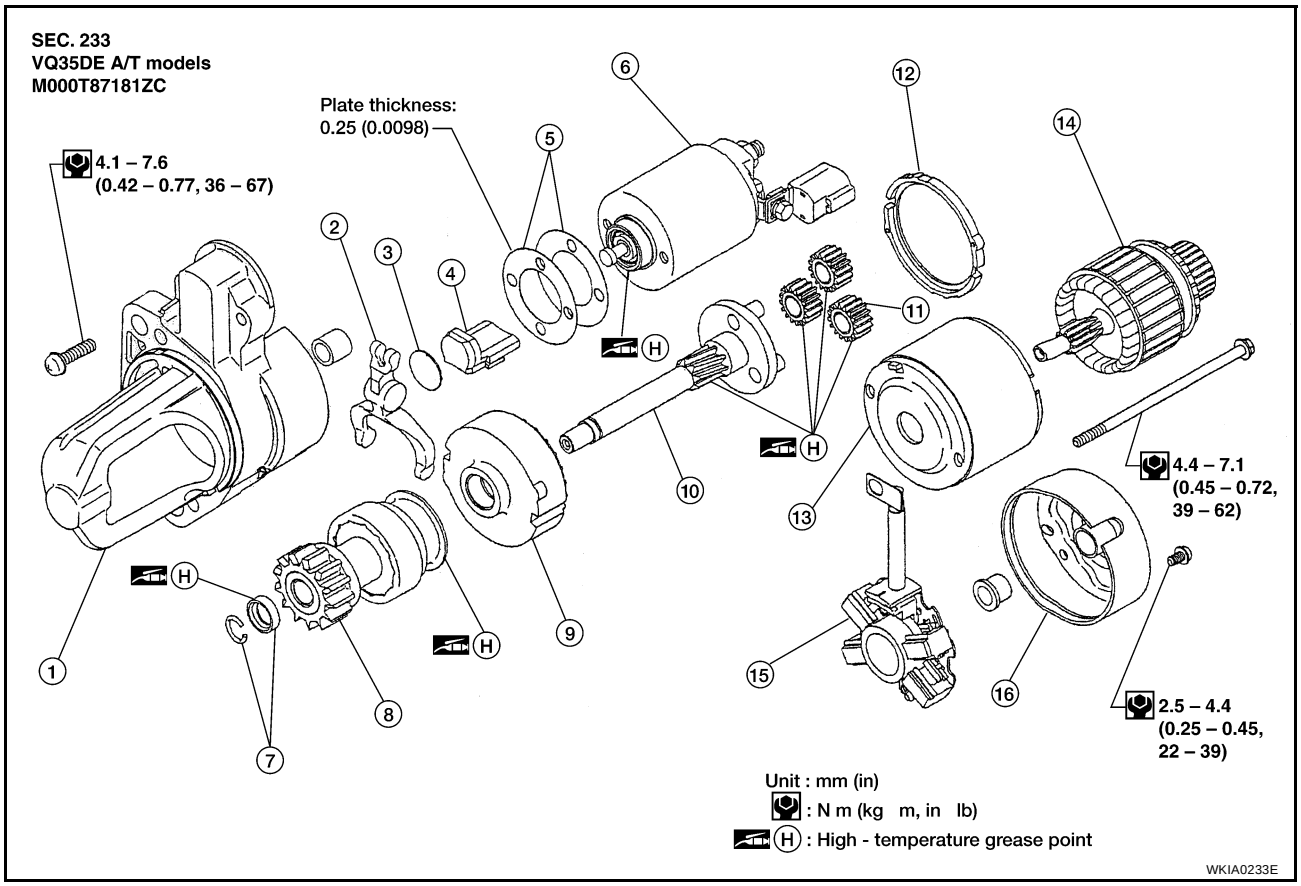

1. Gear case	2. Shift lever	3. Plate
4. Packing	5. Adjusting plate	6. Magnetic switch assembly
7. Pinion stopper set	8. Pinion assembly	9. Internal gear
10. Pinion shaft	11. Planetary gear	12. Packing
13. Yoke	14. Armature	15. Brush holder assembly
16. Rear cover		

Removal and Installation

EKS003OV

REMOVAL

1. Disconnect the negative battery terminal.
2. Remove the air cleaner cover and the air cleaner to intake manifold collector duct (A/T models only).
3. Remove the harness protector from the starter engine room harness.
4. Disconnect the starter harness connectors.
5. Remove the two starter mounting bolts, using power tools.
6. Remove the starter.

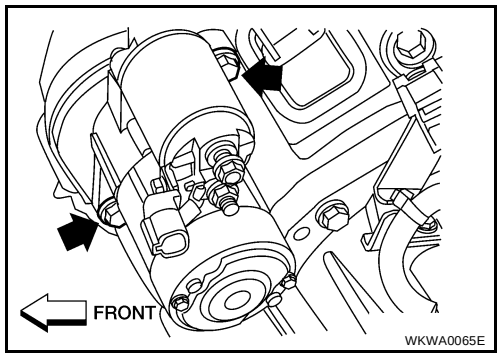

Installation

To install, reverse the removal procedure.

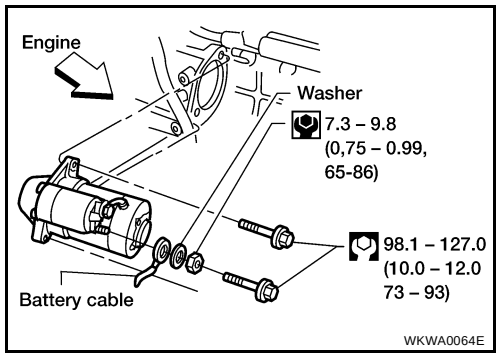

Pinion/Clutch Check

EKS003OW

1. Inspect pinion assembly teeth.
   - Replace pinion assembly if teeth are worn or damaged. (Also check condition of ring gear teeth.)
2. Inspect planetary gears/planetary gear teeth.
   - Replace planetary gears/planet gears if teeth are worn or damaged. (Also check condition of pinion shaft/drive shaft gear teeth.)
3. Check to see if pinion assembly locks in one direction and rotates smoothly in the opposite direction.
   - If it locks or rotates in both directions, or if unusual resistance is evident, replace.

CHARGING SYSTEM

PFP:23100

System Description

EKS002DL

The generator provides DC voltage to operate the vehicle's electrical system and to keep the battery charged. The voltage output is controlled by the IC regulator.
Power is supplied at all times to generator terminal B through:

- 120A fusible link (letter **a** , located in the fusible link box).

Power is supplied at all times to generator terminal S through:

- 10A fuse (No. 26, located in the fuse and fusible link box).

Terminal B supplies power to charge the battery and operate the vehicle's electrical system. Output voltage is controlled by the IC regulator at terminal S detecting the input voltage. The charging circuit is protected by the 120A fusible link.
The generator is grounded to the engine block.
With the ignition switch in the ON or START position, power is supplied:

- through 10A fuse [No. 14, located in the fuse block (J/B)]
- to combination meter terminals 17 and 18 for the charge warning lamp.

Ground is supplied to terminal 24 of the combination meter through terminal L of the generator. With power and ground supplied, the charge warning lamp will illuminate. When the generator is providing sufficient voltage with the engine running, the ground is opened and the charge warning lamp will go off.
If the charge warning lamp illuminates with the engine running, a fault is indicated.

Wiring Diagram — CHARGE —

EKS002DM

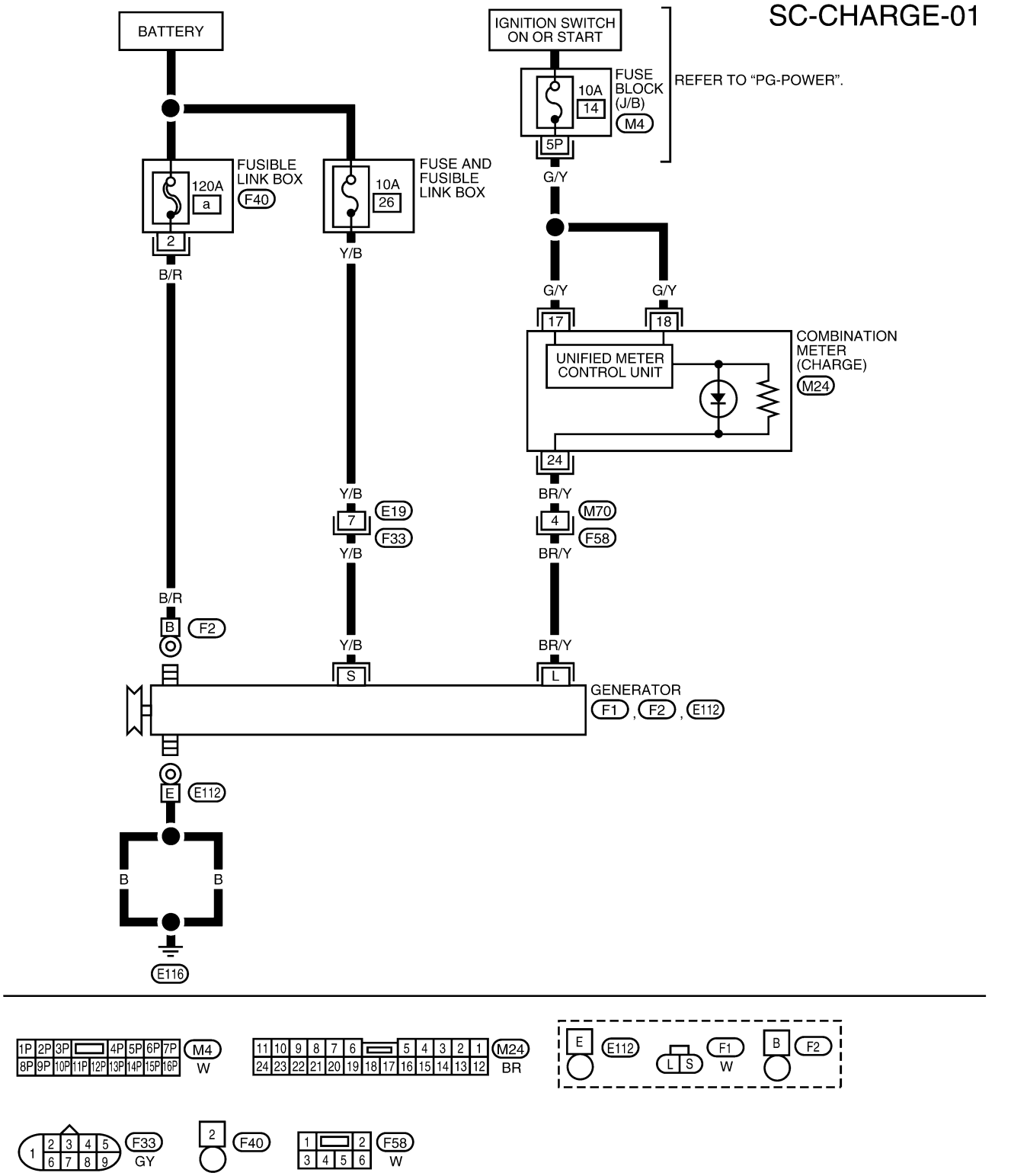

WKWA0007E

Trouble Diagnoses with Battery/Starting/Charging System Tester

EKS002DN

NOTE:
To ensure a complete and thorough diagnosis, the battery, starter and generator test segments must be done as a set from start to finish.

1. Turn off all loads on the vehicle electrical system.
2. Perform battery and starting system test with Battery/Starting/Charging system tester.
3. Press “ENTER” to begin the charging system test.
4. Start engine.

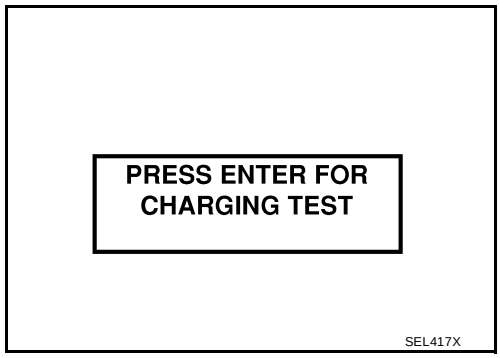

5. Press “ENTER” until “LOADS OFF REV ENGINE 5 SEC” is displayed.
6. Raise and hold the engine speed at 1,500 to 2,000 rpm for about 5 seconds, then return the engine to idle.
   Once the increase in engine rpm is detected, press “ENTER” to continue.

   NOTE:
   - If after 30 seconds an increase in engine idle speed is not detected, “RPM NOT DETECTED” will display.
   - Some engines may have a higher idle initially after starting, particularly when the engine is cold. The tester may detect this without any other action being taken. If this occurs, continue on with the testing process. The final results will not be affected.

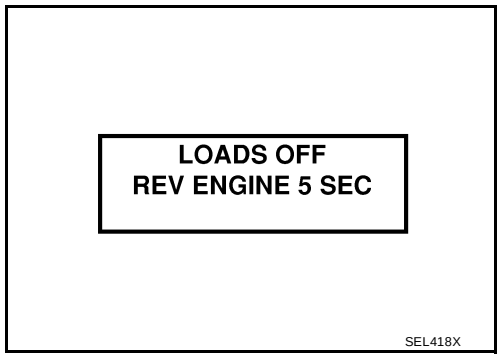

7. The tester now checks the engine at idle and performs the DIODE/RIPPLE check.
8. When complete, the tester will prompt you to turn on the following electrical loads.
   - Heater fan set to highest speed. Do not run the A/C or windshield defroster.
   - Headlamp high beam
   - Rear window defogger

   NOTE:
   Do not run the windshield wipers or any other cyclical loads.

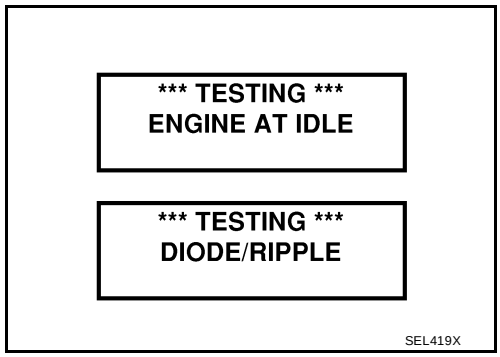

9. Press “ENTER” to continue.

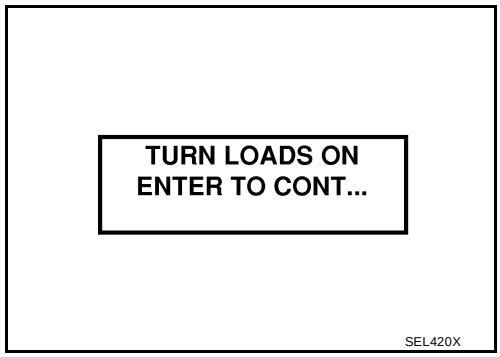

10. Raise and hold the engine speed at 1,500 to 2,000 rpm for about 5 seconds, then return the engine to idle. Once the increase in engine rpm is detected, press “ENTER” to continue.

    NOTE:
    If after 30 seconds an increase in engine idle speed is not detected, “RPM NOT DETECTED” will be displayed. Press “ENTER” to restart the test.

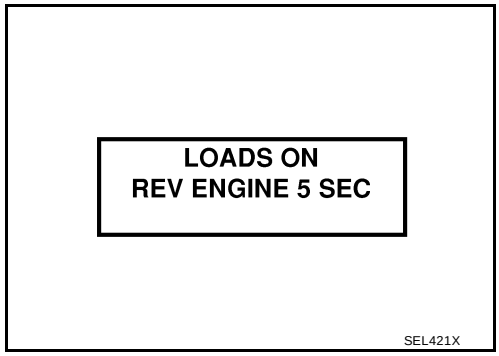

11. Diagnostic result is displayed on the tester. Refer to SC-28, "DIAGNOSTIC RESULT ITEM CHART" .

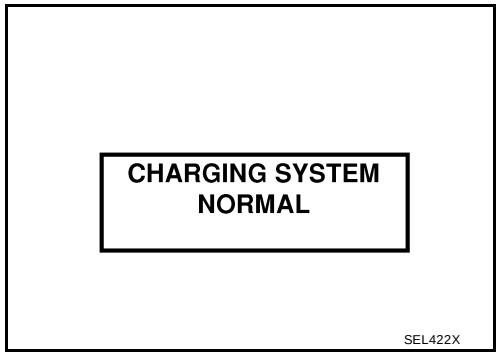

12. Press “ENTER” then test output code is displayed. Record the test output code on the repair order.
13. Toggle back to the “DIAGNOSTIC SCREEN” for test results.

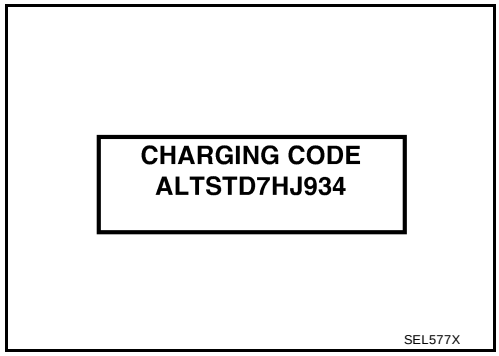

DIAGNOSTIC RESULT ITEM CHART

Diagnostic item	Service procedure
CHARGING SYSTEM NORMAL	Charging system is normal and will also show DIODE RIPPLE test result.
NO CHARGING VOLTAGE	Go to SC-29, "WORK FLOW" .
LOW CHARGING VOLTAGE	Go to SC-29, "WORK FLOW" .
HIGH CHARGING VOLTAGE	Go to SC-29, "WORK FLOW" .
DIODE RIPPLE NORMAL	Diode ripple is OK and will also show CHARGING VOLTAGE test result.
EXCESS RIPPLE DETECTED	Replace the generator. Perform “DIODE RIPPLE” test again using Battery/Starting/Charging system tester to confirm repair.
DIODE RIPPLE NOT DETECTED	Go to SC-29, "WORK FLOW" .

WORK FLOW

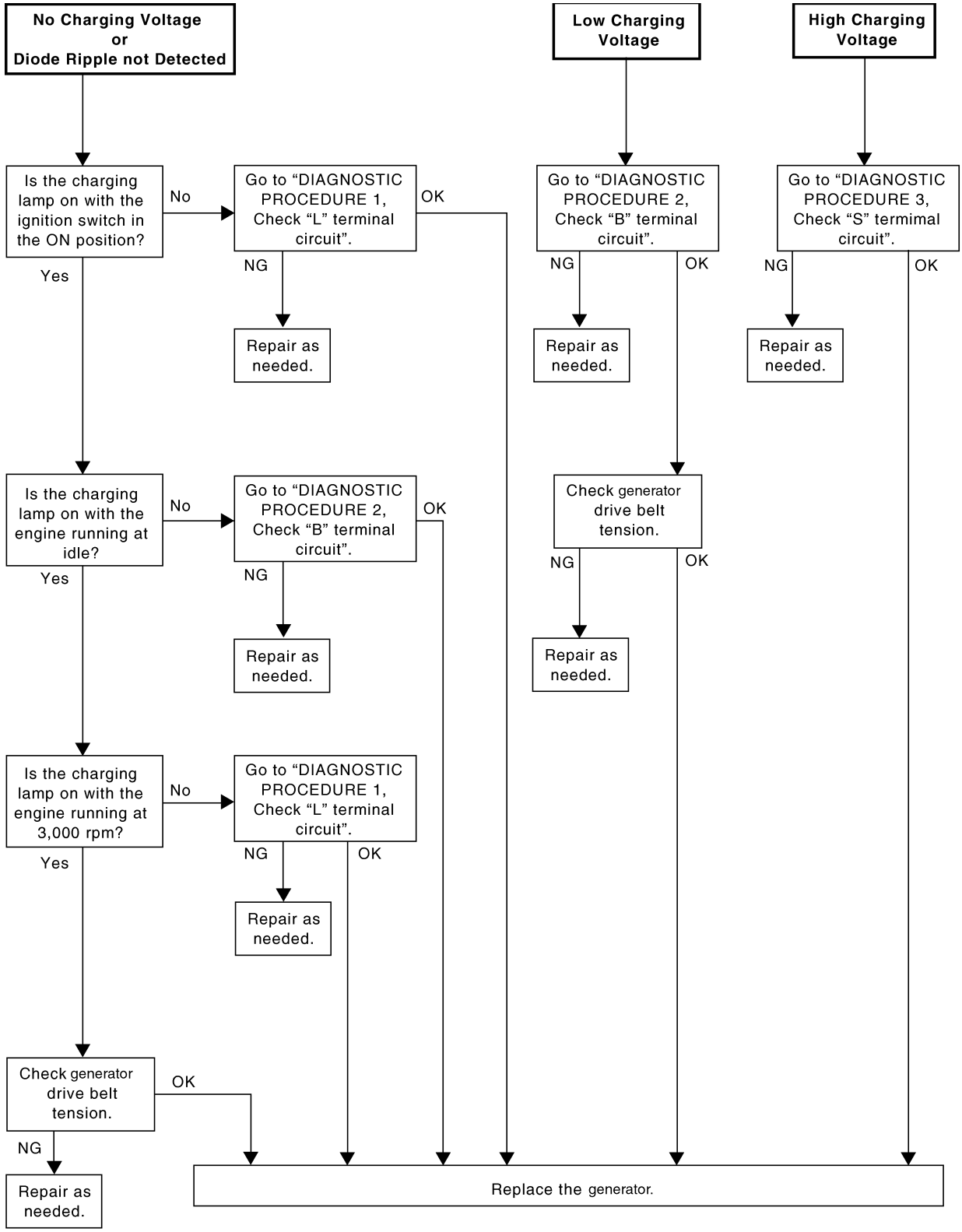
No Charging Voltage or Diode Ripple not Detected
Low Charging Voltage
High Charging Voltage
Is the charging lamp on with the ignition switch in the ON position?
No
Yes
Go to "DIAGNOSTIC PROCEDURE 1, Check "L" terminal circuit".
OK
NG
Repair as needed.
Go to "DIAGNOSTIC PROCEDURE 2, Check "B" terminal circuit".
NG
OK
Repair as needed.
Go to "DIAGNOSTIC PROCEDURE 3, Check "S" termimal circuit".
NG
OK
Repair as needed.
Is the charging lamp on with the engine running at idle?
No
Yes
Go to "DIAGNOSTIC PROCEDURE 2, Check "B" terminal circuit".
OK
NG
Repair as needed.
Check generator drive belt tension.
NG
OK
Repair as needed.
Is the charging lamp on with the engine running at 3,000 rpm?
No
Yes
Go to "DIAGNOSTIC PROCEDURE 1, Check "L" terminal circuit".
NG
OK
Repair as needed.
Check generator drive belt tension.
OK
NG
Repair as needed.
Replace the generator.
LSC047

DIAGNOSTIC PROCEDURE 1
Check “L” Terminal Circuit

1. CHECK “L” TERMINAL CONNECTION

Check to see if “L” terminal is clean and tight.

OK or NG

OK >> GO TO 2.

NG >> Repair “L” terminal connection. Confirm repair by performing complete Battery/Starting/Charging system test.

2. CHECK “L” TERMINAL CIRCUIT

1. Disconnect F1 connector from generator.
2. Apply ground to connector F1 terminal L (BR/Y) with the ignition switch in the ON position.

CHARGE lamp should light up.

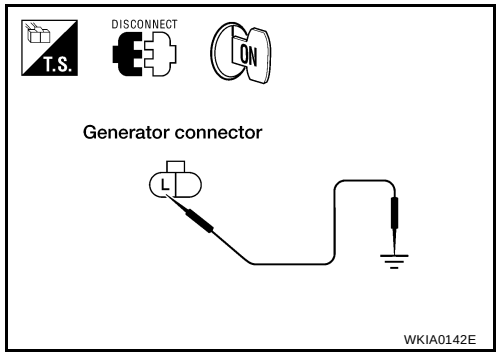

OK or NG

OK >> Replace the generator. Confirm repair by performing complete Battery/Starting/Charging system test.

NG >> Check the following.

- 10A fuse [No. 14, located in fuse block (J/B)]
- CHARGE lamp
- Harness for open or short between combination meter and fuse
- Harness for open or short between combination meter and generator

DIAGNOSTIC PROCEDURE 2
Check “B” Terminal Circuit

1. CHECK “B” TERMINAL CONNECTION

Check to see if “B” terminal is clean and tight.

OK or NG

OK >> GO TO 2. Confirm repair by performing complete Battery/Starting/Charging system test.
NG >> Repair “B” terminal connection.

2. CHECK GENERATOR “B” TERMINAL CIRCUIT

Check voltage between generator connector F2 terminal B (B/R) and ground using a digital circuit tester.

Battery voltage should exist.

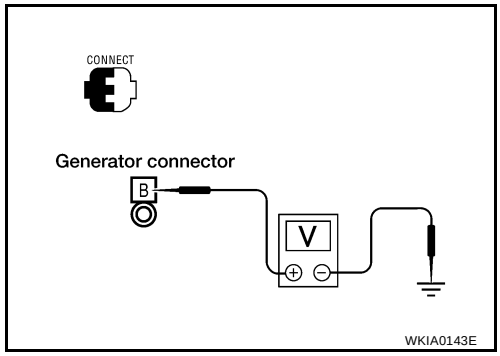

OK or NG

OK >> GO TO 3.
NG >> Check the following.
- 120A fusible link (letter **a** , located in fusible link box)
- Harness for open or short between generator and fusible link

3. CHECK “B” TERMINAL CONNECTION QUALITY (VOLTAGE DROP TEST)

Check voltage between generator connector F2 terminal B (B/R) and battery positive terminal using a digital tester.

With engine running at idle and warm :Less than 0.2V

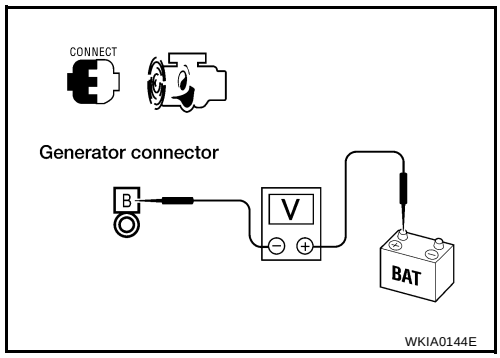

OK or NG

OK >> Replace the generator. Confirm repair by performing complete Battery/Starting/Charging system test.
NG >> Check harness between the battery and the generator for poor continuity.

DIAGNOSTIC PROCEDURE 3
Check “S” Terminal Circuit

1. CHECK “S” TERMINAL CONNECTION

Check to see if “S” terminal is clean and tight.

OK or NG

OK >> GO TO 2.
NG >> Repair “S” terminal connection. Confirm repair by performing complete Battery/Starting/Charging system test.

2. CHECK GENERATOR “S” TERMINAL CIRCUIT

Check voltage between generator connector F1 terminal S (Y/B) and ground using a digital circuit tester.

Battery voltage should exist.

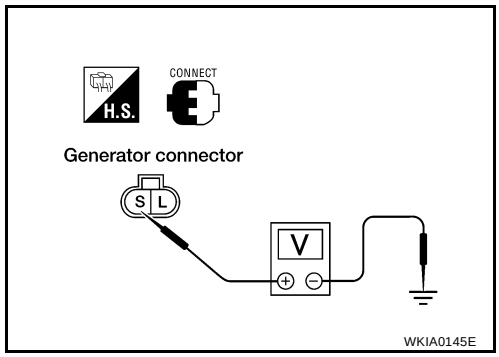

OK or NG

OK >> GO TO 3.
NG >> Check the following.
- 10A fuse (No. 26, located in fuse and fusible link box)
- Harness for open or short between generator and fuse

3. CHECK “S” TERMINAL CONNECTION QUALITY (VOLTAGE DROP TEST)

Check voltage between generator connector F1 terminal S (Y/B) and battery positive terminal using a digital tester.

With engine running at idle and warm :Less than 0.2V

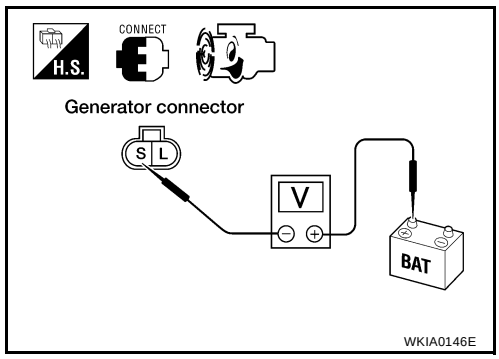

OK or NG

OK >> Replace the generator. Confirm repair by performing complete Battery/Starting/Charging system test.
NG >> Check harness between the battery and the generator for poor continuity.

MALFUNCTION INDICATOR

The IC regulator warning function activates to illuminate “CHARGE” warning lamp, if any of the following symptoms occur while generator is operating:

- Excessive voltage is produced.
- No voltage is produced.

Construction

EKS002DO

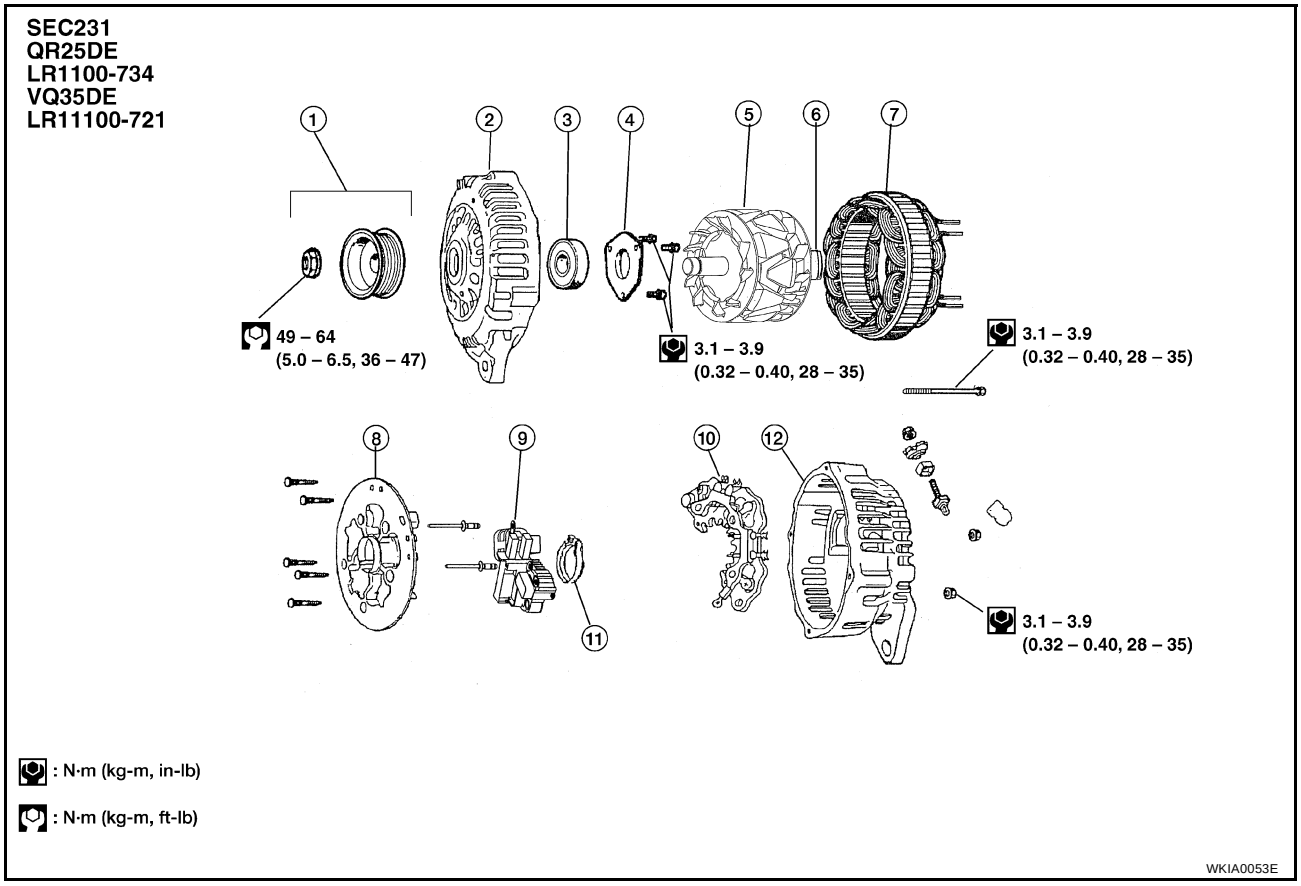

1. Pulley assembly	2. Front cover	3. Front bearing
4. Retainer	5. Rotor	6. Slip ring
7. Stator	8. Fan guide	9. IC regulator assembly
10 Diode assembly	11 Packing	12 Rear cover
.	.	.

Removal and Installation

EKS002DP

QR25DE

Removal

1. Disconnect the negative battery terminal.
2. Remove the front/right-side engine undercover, using power tools.
3. Remove the drive belt.
4. Disconnect the generator harness connector.
5. Disconnect the engine ground wire from top mount.
6. Remove the generator upper and lower mounting bolts, using power tools.
7. Set the generator aside and remove the generator top mount.
8. Slide the generator out and remove.

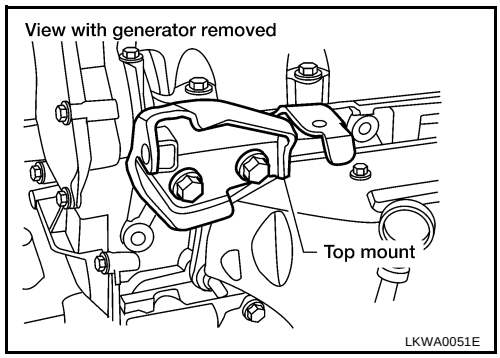

Installation

To install, reverse the removal procedure.

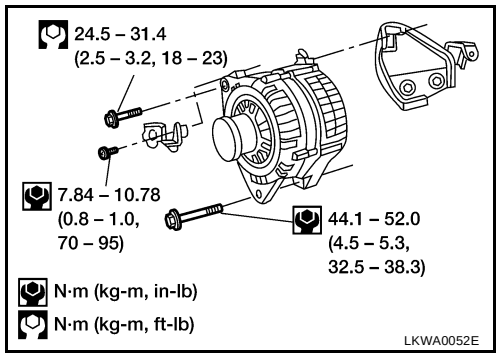

VG35DE

Removal

1. Disconnect the negative battery terminal.
2. Remove radiator, refer EC-1079, "Component Description" .
3. Remove front/right-side engine under cover
4. Remove the drive belt, refer toEM-12, "Removal and Installation" .
5. Remove idler pulley.
6. Remove the generator adjustable top mount, using power tools.
7. Remove the generator lower mount bolt and nuts, using power tools.
8. Remove the generator lower front bracket bolt, using power tools.
9. Disconnect the generator harness connectors.
10. Slide the generator out and remove.

Installation

To install, reverse the removal procedure.

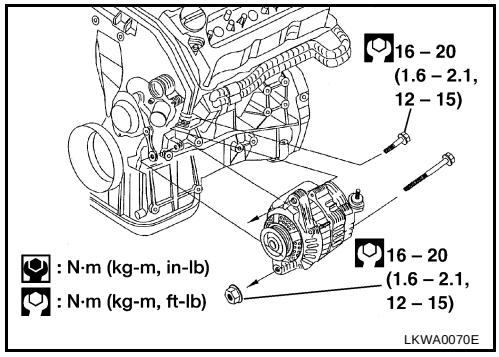

SERVICE DATA AND SPECIFICATIONS (SDS)

PFP:00030

Battery

EKS003OX

Type	GR.24F (BCI)
Capacity (20 HR) minimum V-AH	12-63
Cold cranking current A (For reference value)	550 @ -18°C (0°F)

Starter

EKS003OY

Application		QR25DE		VQ35DE	
		M/T model	A/T model	M/T model	A/T model
Manufacturer		Mitsubishi M000T87085ZC	Mitsubishi M000T60781ZC	Mitsubishi M000T87281ZC	Mitsubishi M000T87181ZC
Type		Reduction gear type			
System voltage		12V			
No-load	Terminal voltage	11V			
	Current	90A Max.			
	Revolution	2,500 rpm Min.		2,800 rpm Min.	
Minimum diameter of commutator		28.8 mm			
Minimum length of brush		5.5mm	7.0 mm		
Brush spring tension		15.0-20.4 N (1.53-2.08 kg, 3.37-4.59 lb)	18.3-24.8 N (1.87-2.53 kg, 4.11-5.58 lb)		
Clearance between pinion front edge and pinion stopper		0.5-2.0 mm			

Generator

EKS003OZ

Application	QR25DE	VQ35DE
Type	LR1100-734	LR1100-721
	HITACHI	
Nominal rating	12V-110A	
Ground polarity	Negative	
Minimum revolution under no-load (When 13.5 volts is applied)	950 rpm	1100 rpm
Hot output current (When 13.5 volts is applied)	More than 35A/1,300 rpm More than 83A/2,500 rpm More than 95A/5,000 rpm	More than 35A/1,300 rpm More than 91A/2,500 rpm More than 110A/5,000 rpm
Regulated output voltage	14.1 - 14.7V	
Minimum length of brush	6 mm (0.236 in)	
Brush spring pressure	1.000 - 3.432 N (0.102 - 0.350 kg, 0.225 - 0.772 lbs)	
Slip ring minimum outer diameter	26.0 mm (1.024 in)	
Rotor (Field coil) resistance	2.31 ohms	

SECTION SE
SEAT

CONTENTS

PRECAUTIONS 2
Precautions for Supplemental Restraint System (SRS) “AIR BAG” and “SEAT BELT PRE-TENSIONER” 2
Precautions for Work 2
PREPARATION 3
Special Service Tool 3
Commercial Service Tool 3
SQUEAK AND RATTLE TROUBLE DIAGNOSES..... 4
Work Flow 4
CUSTOMER INTERVIEW 4
DUPLICATE THE NOISE AND TEST DRIVE 5
CHECK RELATED SERVICE BULLETINS 5
LOCATE THE NOISE AND IDENTIFY THE ROOT CAUSE 5
REPAIR THE CAUSE 5
CONFIRM THE REPAIR 6
Generic Squeak and Rattle Troubleshooting 6
INSTRUMENT PANEL 6
CENTER CONSOLE 6
DOORS 6
TRUNK 7
SUNROOF/HEADLINING 7
SEATS 7
UNDERHOOD 7
Diagnostic Worksheet 8
POWER SEAT 10
Wiring Diagram–SEAT– 10
HEATED SEAT 12
Description 12
Wiring Diagram–HSEAT– 13
FRONT SEAT 14
Removal and Installation 14
REMOVAL 15
INSTALLATION 15
Disassembly and Assembly 15
SEATBACK TRIM AND PAD 15
REMOVAL OF SEATBACK ASSEMBLY 16
INSTALLATION OF SEATBACK ASSEMBLY ... 16
SEAT CUSHION TRIM AND PAD 16
REAR SEAT 18
Dissasembly and Assembly 18
Removal and Installation 19
REMOVAL 19
INSTALLATION 19

PRECAUTIONS

PFP:00001

Precautions for Supplemental Restraint System (SRS) “AIR BAG” and “SEAT BELT PRE-TENSIONER”

EIS000UV

The Supplemental Restraint System such as “AIR BAG” and “SEAT BELT PRE-TENSIONER”, used along with a front seat belt, helps to reduce the risk or severity of injury to the driver and front passenger for certain types of collision. Information necessary to service the system safely is included in the SRS and SB section of this Service Manual.

WARNING:

- **To avoid rendering the SRS inoperative, which could increase the risk of personal injury or death in the event of a collision which would result in air bag inflation, all maintenance must be performed by an authorized NISSAN/INFINITI dealer.**
- **Improper maintenance, including incorrect removal and installation of the SRS, can lead to personal injury caused by unintentional activation of the system. For removal of Spiral Cable and Air Bag Module, see the SRS section.**
- **Do not use electrical test equipment on any circuit related to the SRS unless instructed to in this Service Manual. SRS wiring harnesses can be identified by yellow and/or orange harness connectors.**

Precautions for Work

EIS000UW

- When removing or disassembling each component, be careful not to damage or deform it. If a component may be subject to interference, be sure to protect it with a shop cloth.
- When removing (disengaging) components with a screwdriver or similar tool, be sure to wrap the component with a shop cloth or vinyl tape to protect it.
- Protect the removed parts with a shop cloth and keep them.
- Replace a deformed or damaged clip.
- If a part is specified as a non-reusable part, always replace it with new one.
- Be sure to tighten bolts and nuts securely to the specified torque.
- After re-installation is completed, be sure to check that each part works normally.
- Follow the steps below to clean components.
  - Water soluble foul: Dip a soft cloth into lukewarm water, and wring the water out of the cloth to wipe the fouled area.
    Then rub with a soft and dry cloth.
  - Oily foul: Dip a soft cloth into lukewarm water with mild detergent (concentration: within 2 to 3%), and wipe the fouled area.
    Then dip a cloth into fresh water, and wring the water out of the cloth to wipe the detergent off. Then rub with a soft and dry cloth.
- Do not use organic solvent such as thinner, benzene, alcohol, or gasoline.
- For genuine leather seats, use a genuine leather seat cleaner.

PREPARATION

PFP:00002

Special Service Tool

EIS000UX

The actual shapes of Kent-Moore tools may differ from those of special service tools illustrated here.

Tool number (Kent-Moore No.) Tool name	Description
(J-39570) Chassis ear 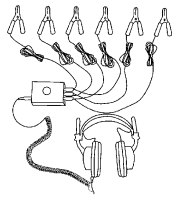 SIIA0993E	Locating the noise
(J-43980) NISSAN Squeak and Rattle Kit 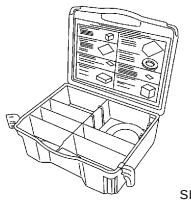 SIIA0994E	Repairing the cause of noise

Commercial Service Tool

EIS000UY

Tool name	Description
(J-39565) Engine ear 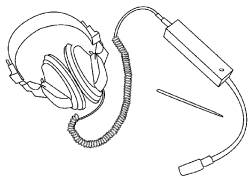 SIIA0995E	Locating the noise

SQUEAK AND RATTLE TROUBLE DIAGNOSES

PFP:00000

Work Flow

EIS000UZ

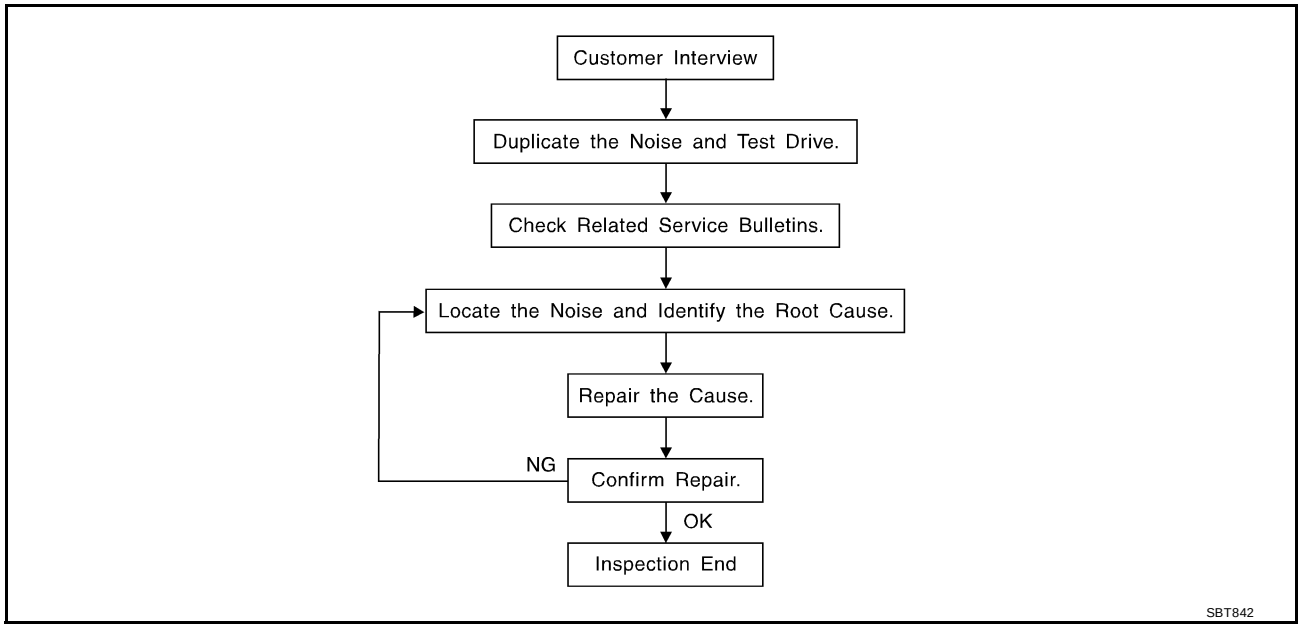

CUSTOMER INTERVIEW

Interview the customer if possible, to determine the conditions that exist when the noise occurs. Use the Diagnostic Worksheet during the interview to document the facts and conditions when the noise occurs and any customer's comments; refer to SE-8, "Diagnostic Worksheet" . This information is necessary to duplicate the conditions that exist when the noise occurs.

- The customer may not be able to provide a detailed description or the location of the noise. Attempt to obtain all the facts and conditions that exist when the noise occurs (or does not occur).
- If there is more than one noise in the vehicle, be sure to diagnose and repair the noise that the customer is concerned about. This can be accomplished by test driving the vehicle with the customer.
- After identifying the type of noise, isolate the noise in terms of its characteristics.The noise characteristics are provided so the customer, service adviser and technician are all speaking the same language when defining the noise.
- Squeak —(Like tennis shoes on a clean floor)
  Squeak characteristics include the light contact/fast movement/brought on by road conditions/hard surfaces=higher pitch noise/softer surfaces=lower pitch noises/edge to surface=chirping
- Creak—(Like walking on an old wooden floor)
  Creak characteristics include firm contact/slow movement/twisting with a rotational movement/pitch dependent on materials/often brought on by activity.
- Rattle—(Like shaking a baby rattle)
  Rattle characteristics include the fast repeated contact/vibration or similar movement/loose parts/missing clip or fastener/incorrect clearance.
- Knock —(Like a knock on a door)
  Knock characteristics include hollow sounding/sometimes repeating/often brought on by driver action.
- Tick—(Like a clock second hand)
  Tick characteristics include gentle contacting of light materials/loose components/can be caused by driver action or road conditions.
- Thump—(Heavy, muffled knock noise)
  Thump characteristics include softer knock/dead sound often brought on by activity.
- Buzz—(Like a bumble bee)
  Buzz characteristics include high frequency rattle/firm contact.
- Often the degree of acceptable noise level will vary depending upon the person. A noise that you may judge as acceptable may be very irritating to the customer.
- Weather conditions, especially humidity and temperature, may have a great affect on noise level.

DUPLICATE THE NOISE AND TEST DRIVE

If possible, drive the vehicle with the customer until the noise is duplicated. Note any additional information on the Diagnostic Worksheet regarding the conditions or location of the noise. This information can be used to duplicate the same conditions when you confirm the repair.
If the noise can be duplicated easily during the test drive, to help identify the source of the noise, try to duplicate the noise with the vehicle stopped by doing one or all of the following:

1) Close a door.
2) Tap or push/pull around the area where the noise appears to be coming from.
3) Rev the engine.
4) Use a floor jack to recreate vehicle "twist".
5) At idle, apply engine load (electrical load, half-clutch on M/T model, drive position on A/T model).
6) Raise the vehicle on a hoist and hit a tire with a rubber hammer.

- Drive the vehicle and attempt to duplicate the conditions the customer states exist when the noise occurs.
- If it is difficult to duplicate the noise, drive the vehicle slowly on an undulating or rough road to stress the vehicle body.

CHECK RELATED SERVICE BULLETINS

After verifying the customer concern or symptom, check ASIST for Technical Service Bulletins (TSBs) related to that concern or symptom.
If a TSB relates to the symptom, follow the procedure to repair the noise.

LOCATE THE NOISE AND IDENTIFY THE ROOT CAUSE

1. Narrow down the noise to a general area.To help pinpoint the source of the noise, use a listening tool (Chassis Ear: J-39570, Engine Ear: J-39565 and mechanic's stethoscope).
2. Narrow down the noise to a more specific area and identify the cause of the noise by:

- removing the components in the area that you suspect the noise is coming from.
  Do not use too much force when removing clips and fasteners, otherwise clips and fasteners can be broken or lost during the repair, resulting in the creation of new noise.
- tapping or pushing/pulling the component that you suspect is causing the noise.
  Do not tap or push/pull the component with excessive force, otherwise the noise will be eliminated only temporarily.
- feeling for a vibration with your hand by touching the component(s) that you suspect is (are) causing the noise.
- placing a piece of paper between components that you suspect are causing the noise.
- looking for loose components and contact marks.
  Refer to SE-6, "Generic Squeak and Rattle Troubleshooting" .

REPAIR THE CAUSE

- If the cause is a loose component, tighten the component securely.
- If the cause is insufficient clearance between components:
  - separate components by repositioning or loosening and retightening the component, if possible.
  - insulate components with a suitable insulator such as urethane pads, foam blocks, felt cloth tape or urethane tape. A NISSAN Squeak and Rattle Kit (J-43980) is available through your authorized Nissan Parts Department.

CAUTION:
Do not use excessive force as many components are constructed of plastic and may be damaged.
Always check with the Parts Department for the latest parts information.

The following materials are contained in the NISSAN Squeak and Rattle Kit (J-43980). Each item can be ordered separately as needed.
URETHANE PADS [1.5 mm (0.059 in) thick]
Insulates connectors, harness, etc.
76268-9E005: 100×135 mm (3.94×5.31 in)/76884-71L01: 60×85 mm (2.36×3.35 in)/76884-71L02: 15×25mm(0.59×0.98 in)
INSULATOR (Foam blocks)
Insulates components from contact.Can be used to fill space behind a panel.
73982-9E000: 45 mm (1.77 in) thick, 50×50 mm (1.97×1.97 in)/73982-50Y00: 10 mm (0.39 in) thick, 50×50 mm (1.97×1.97 in)
INSULATOR (Light foam block)

80845-71L00: 30 mm (1.18 in) thick, 30×50 mm (1.18×1.97 in)
FELT CLOTHTAPE
Used to insulate where movement does not occur.Ideal for instrument panel applications.
68370-4B000: 15×25 mm (0.59×0.98 in) pad/68239-13E00: 5 mm (0.20 in) wide tape roll. The following materials, not found in the kit can also be used to repair squeaks and rattles.
UHMW (TEFLON) TAPE
Insulates where slight movement is present. Ideal for instrument panel applications.
SILICONE GREASE
Used in place of UHMW tape that will be visible or not fit.
Note: Will only last a few months.
SILICONE SPRAY
Use when grease cannot be applied.
DUCT TAPE
Use to eliminate movement.

CONFIRM THE REPAIR

Confirm that the cause of a noise is repaired by test driving the vehicle. Operate the vehicle under the same conditions as when the noise originally occurred. Refer to the notes on the Diagnostic Worksheet.

Generic Squeak and Rattle Troubleshooting

EIS000V0

Refer to Table of Contents for specific component removal and installation information.

INSTRUMENT PANEL

Most incidents are caused by contact and movement between:

1. The cluster lid A and instrument panel
2. Acrylic lens and combination meter housing
3. Instrument panel to front pillar garnish
4. Instrument panel to windshield
5. Instrument panel mounting pins
6. Wiring harnesses behind the combination meter
7. A/C defroster duct and duct joint

These incidents can usually be located by tapping or moving the components to duplicate the noise or by pressing on the components while driving to stop the noise. Most of these incidents can be repaired by applying felt cloth tape or silicone spray (in hard to reach areas). Urethane pads can be used to insulate wiring harness.

CAUTION:
Do not use silicone spray to isolate a squeak or rattle. If you saturate the area with silicone, you will not be able to recheck the repair.

CENTER CONSOLE

Components to pay attention to include:

1. Shifter assembly cover to finisher
2. A/C control unit and cluster lid C
3. Wiring harnesses behind audio and A/C control unit

The instrument panel repair and isolation procedures also apply to the center console.

DOORS

Pay attention to the:

1. Finisher and inner panel making a slapping noise
2. Inside handle escutcheon to door finisher
3. Wiring harnesses tapping
4. Door striker out of alignment causing a popping noise on starts and stops

Tapping or moving the components or pressing on them while driving to duplicate the conditions can isolate many of these incidents. You can usually insulate the areas with felt cloth tape or insulator foam blocks from the NISSAN Squeak and Rattle Kit (J-43980) to repair the noise.

TRUNK

Trunk noises are often caused by a loose jack or loose items put into the trunk by the owner.
In addition look for:

1. Trunk lid bumpers out of adjustment
2. Trunk lid striker out of adjustment
3. The trunk lid torsion bars knocking together
4. A loose license plate or bracket

Most of these incidents can be repaired by adjusting, securing or insulating the item(s) or component(s) causing the noise.

SUNROOF/HEADLINING

Noises in the sunroof/headlining area can often be traced to one of the following:

1. Sunroof lid, rail, linkage or seals making a rattle or light knocking noise
2. Sunvisor shaft shaking in the holder
3. Front or rear windshield touching headlining and squeaking

Again, pressing on the components to stop the noise while duplicating the conditions can isolate most of these incidents. Repairs usually consist of insulating with felt cloth tape.

SEATS

When isolating seat noise it is important to note the position the seat is in and the load placed on the seat when the noise is present. These conditions should be duplicated when verifying and isolating the cause of the noise.
Cause of seat noise include:

1. Headrest rods and holder
2. A squeak between the seat pad cushion and frame
3. The rear seatback lock and bracket

These noises can be isolated by moving or pressing on the suspected components while duplicating the conditions under which the noise occurs. Most of these incidents can be repaired by repositioning the component or applying urethane tape to the contact area.

UNDERHOOD

Some interior noise may be caused by components under the hood or on the engine wall. The noise is then transmitted into the passenger compartment.
Causes of transmitted underhood noise include:

1. Any component mounted to the engine wall
2. Components that pass through the engine wall
3. Engine wall mounts and connectors
4. Loose radiator mounting pins
5. Hood bumpers out of adjustment
6. Hood striker out of adjustment

These noise can be difficult to isolate since they cannot be reached from the interior of the vehicle. The best method is to secure, move or insulate one component at a time and test drive the vehicle. Also, engine RPM or load can be changed to isolate the noise. Repairs can usually be made by moving, adjusting securing, or insulating the component causing the noise.

Diagnostic Worksheet

EIS000V1

SQUEAK & RATTLE DIAGNOSTIC WORKSHEET

Dear Nissan Customer:
We are concerned about your satisfaction with your Nissan vehicle. Repairing a squeak or rattle sometimes can be very difficult. To help us fix your Nissan right the first time, please take a moment to note the area of the vehicle where the squeak or rattle occurs and under what conditions. You may be asked to take a test drive with a service advisor or technician to ensure we confirm the noise you are hearing.

I. WHERE DOES THE NOISE COME FROM? (circle the area of the vehicle)
The illustrations are for reference only, and may not reflect the actual configuration of your vehicle.

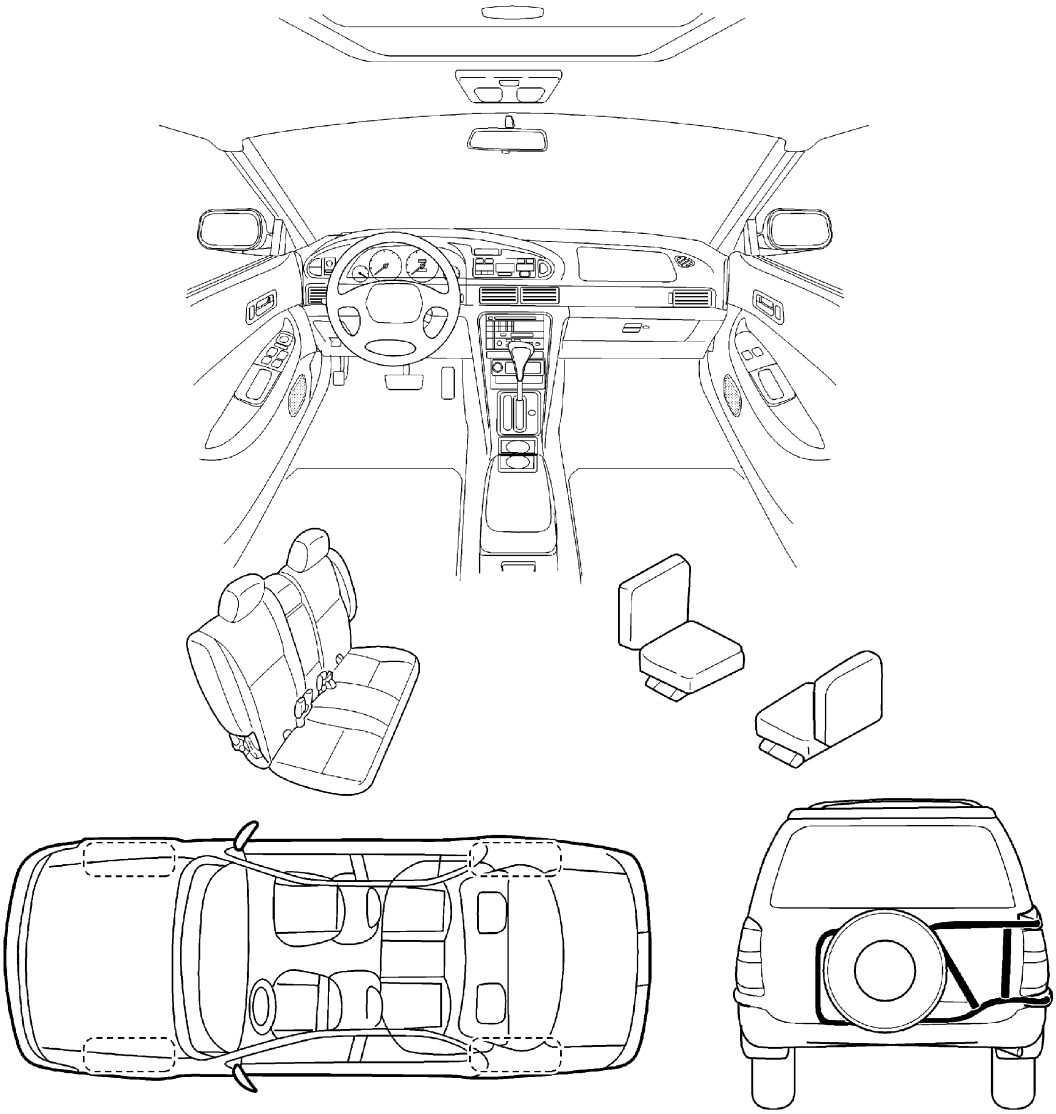

Continue to the back of the worksheet and briefly describe the location of the noise or rattle. In addition, please indicate the conditions which are present when the noise occurs.

SBT843

SQUEAK & RATTLE DIAGNOSTIC WORKSHEET- page 2

Briefly describe the location where the noise occurs:

_____

_____

II. WHEN DOES IT OCCUR? (check the boxes that apply)

- ❑ anytime
- ❑ 1st time in the morning
- ❑ only when it is cold outside
- ❑ only when it is hot outside
- ❑ after sitting out in the sun
- ❑ when it is raining or wet
- ❑ dry or dusty conditions
- ❑ other: _____

III. WHEN DRIVING:

- ❑ through driveways
- ❑ over rough roads
- ❑ over speed bumps
- ❑ only at about ____ mph
- ❑ on acceleration
- ❑ coming to a stop
- ❑ on turns : left, right or either (circle)
- ❑ with passengers or cargo
- ❑ other: _____
- ❑ after driving ____ miles or ____ minutes

IV. WHAT TYPE OF NOISE?

- ❑ squeak (like tennis shoes on a clean floor)
- ❑ creak (like walking on an old wooden floor)
- ❑ rattle (like shaking a baby rattle)
- ❑ knock (like a knock on a door)
- ❑ tick (like a clock second hand)
- ❑ thump (heavy, muffled knock noise)
- ❑ buzz (like a bumble bee)

TO BE COMPLETED BY DEALERSHIP PERSONNEL
Test Drive Notes:

_____

_____

	YES	NO	Initials of person performing
Vehicle test driven with customer	❑	❑	_____
- Noise verified on test drive	❑	❑	
- Noise source located and repaired	❑	❑	_____
- Follow up test drive performed to confirm repair	❑	❑	_____

VIN: _____ Customer Name: _____

W.O. #: _____ Date: _____

SBT844

This form must be attached to Work Order

POWER SEAT

PFP:87016

Wiring Diagram–SEAT–

EIS000V2

SE-SEAT-01

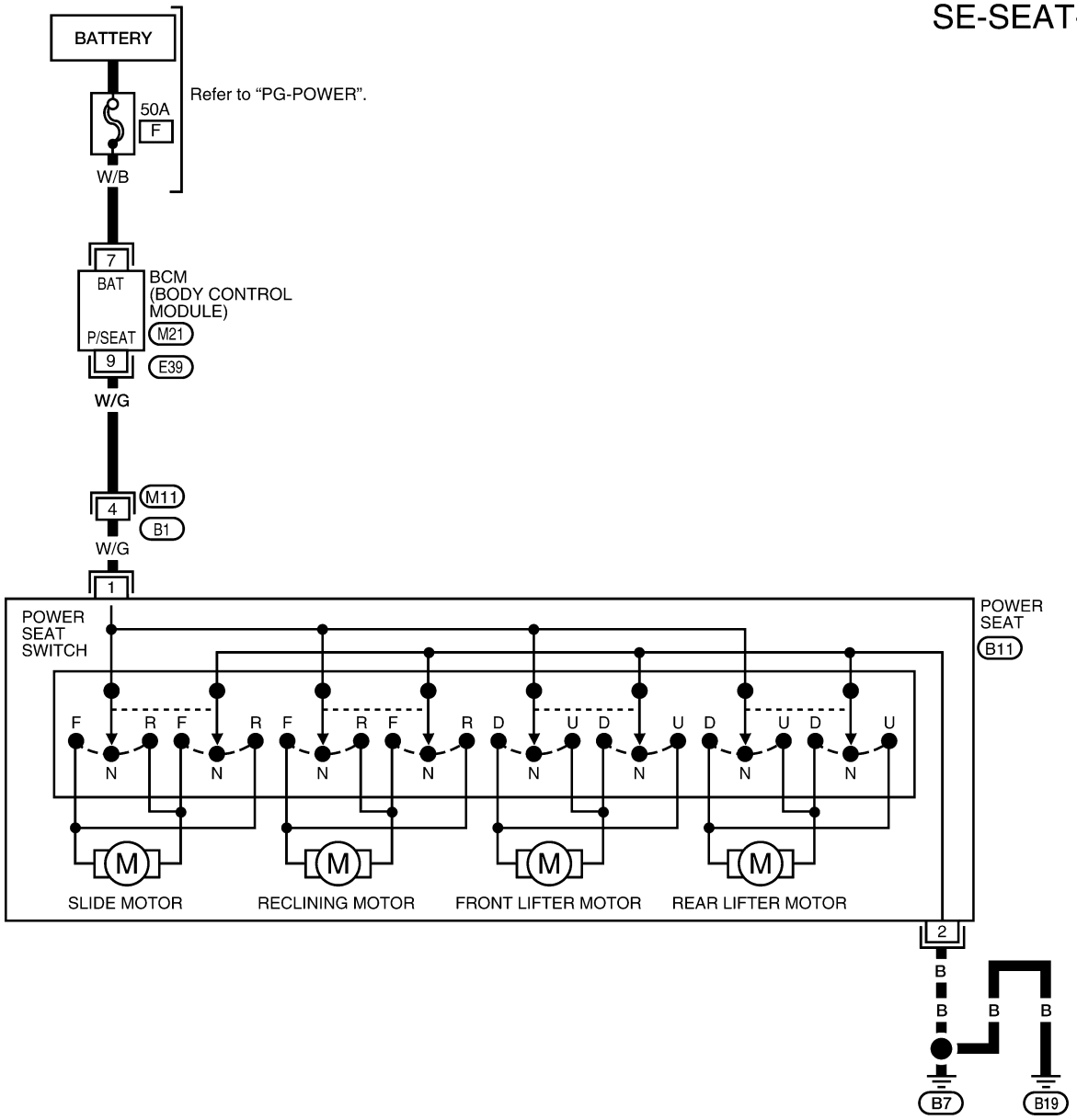

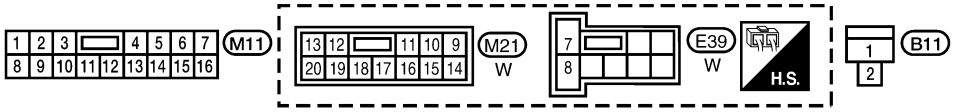

LIWA0003E

TERMINALS AND REFERENCE VALUE MEASURED BETWEEN EACH TERMINAL AND GROUND				
TERMINAL	WIRE COLOR	ITEM	CONDITION	DATA (DC)
7	W/B	BATTERY POWER	—	12V
9	W/G	POWER SEAT SWITCH	OFF	12V
			ON	12V

HEATED SEAT

PFP:87335

Description

EIS000V3

- When handling seat, be extremely careful not to scratch heating unit.
- To replace heating unit, seat trim and pad should be separated.
- Do not use any organic solvent, such as thinner, benzene, alcohol, etc. to clean trim.

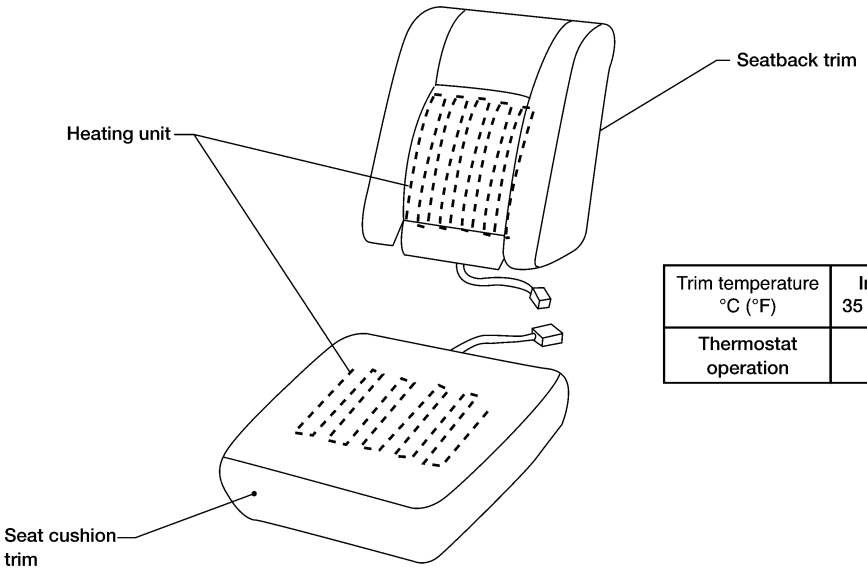

Trim temperature °C (°F)	Increasing to 35 - 45 (95 - 113)	Decreasing to 25 - 35 (77 - 95)
Thermostat operation	OFF	ON

Wiring Diagram–HSEAT–

EIS000V4

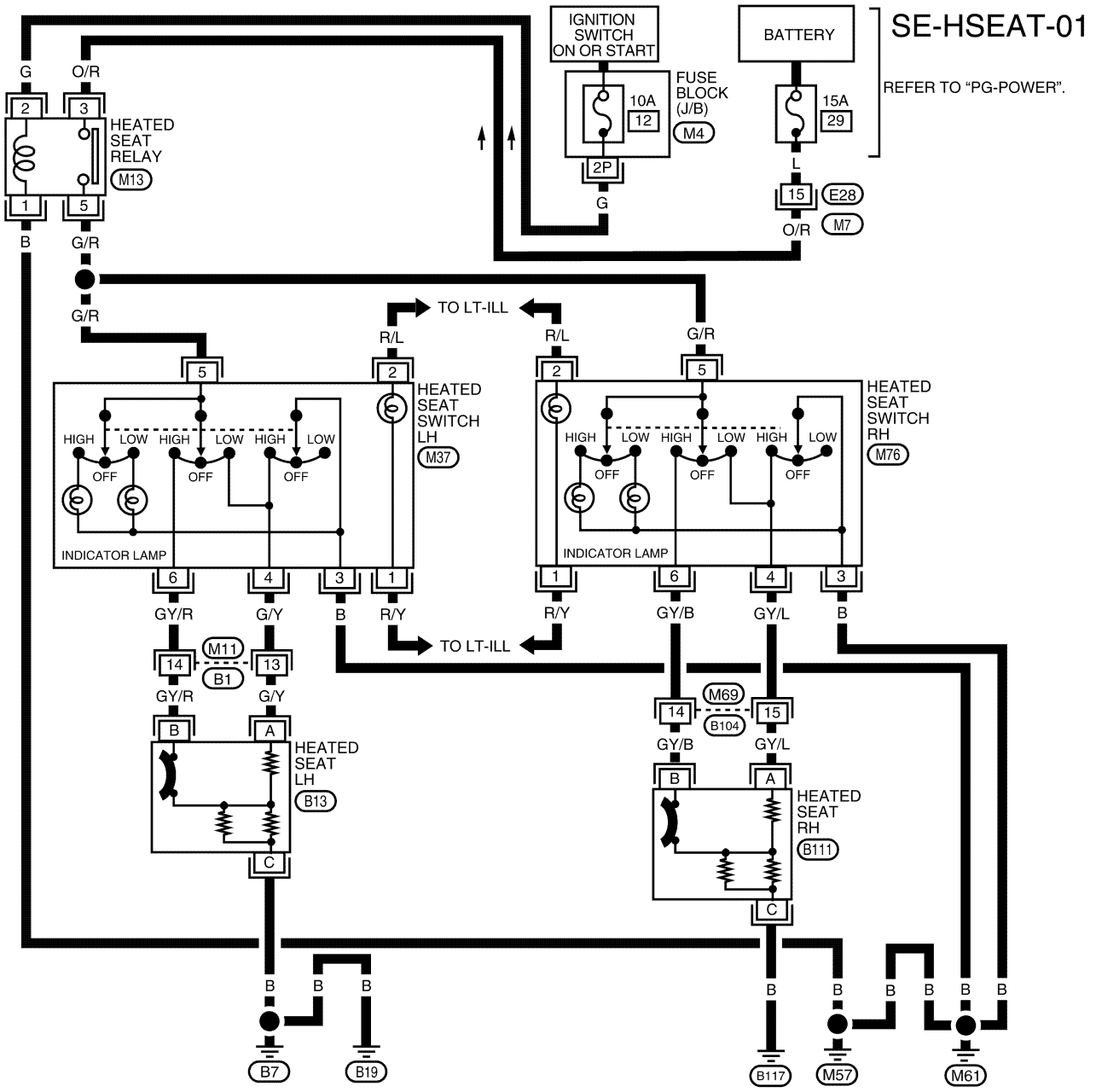

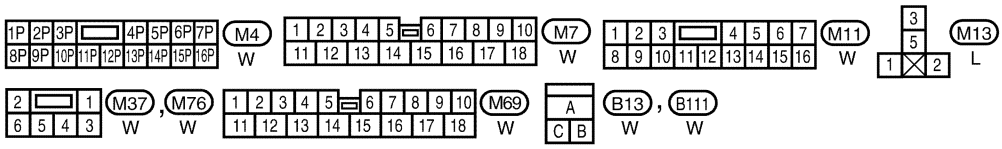

LIWA0004E

FRONT SEAT

PFP:87000

Removal and Installation

EIS000V5

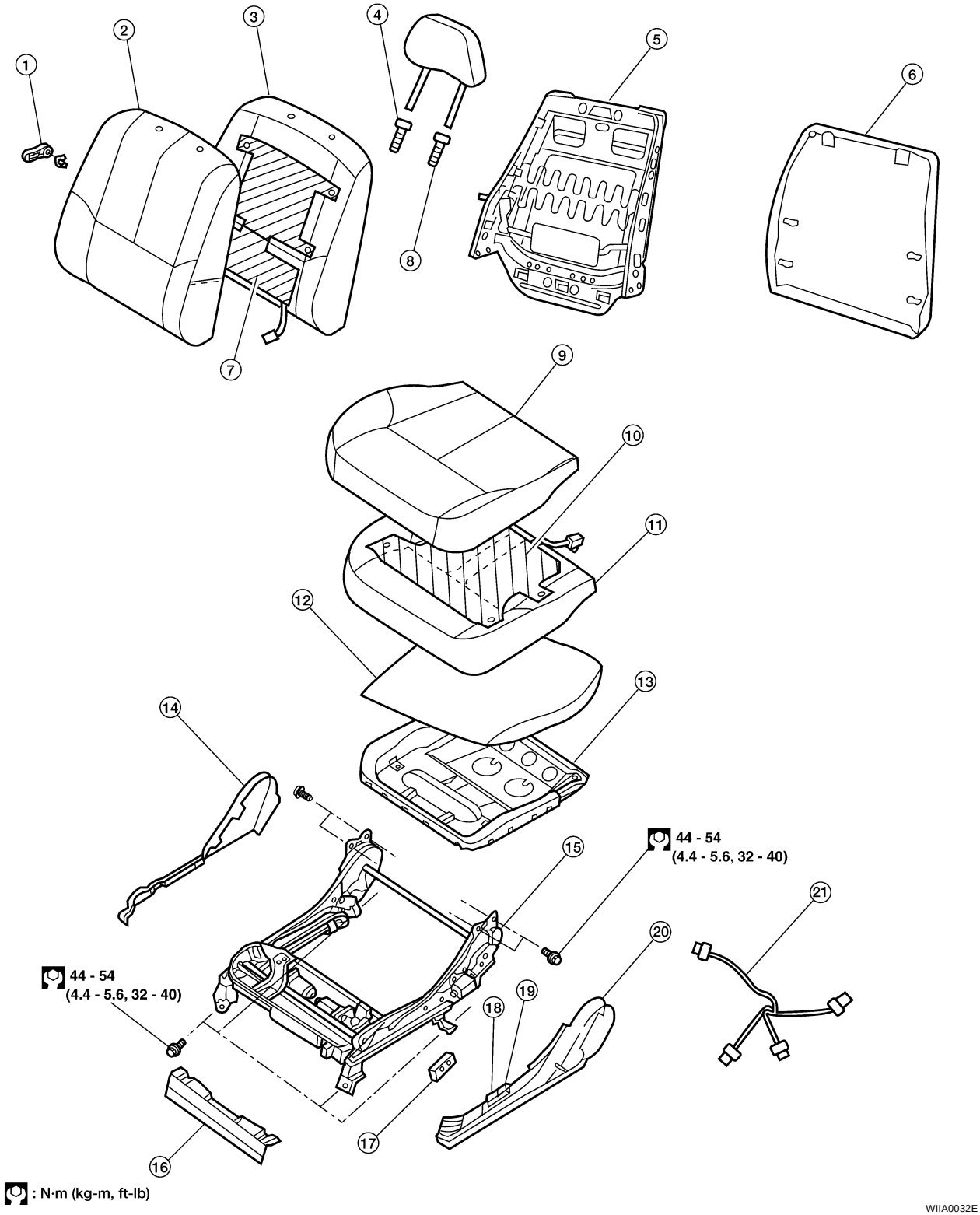

1. Seat lumbar unit lever	2. Seatback trim	3. Seatback pad
4. Headrest holder (free)	5. Seatback frame	6. Seatback board
7. Seatback heater unit	8. Headrest holder (locked)	9. Seat cushion trim
10 Seat cushion heater unit	11 Seat cushion pad	12 Silk film bag
.	.	.

13 Seat cushion frame	14 Seat cushion inner finisher	15 Driver seat frame assembly
16 Seat cushion front finisher	17 Power seat switch	18 Slide-lifter switch knob
19 Reclining switch knob	20 Seat cushion outer finisher	21 Driver power seat harness

REMOVAL

When removing or installing the seat trim, handle it carefully to keep dirt out and avoid damage.

CAUTION:

- **Before removing the front seat, turn the ignition switch off, disconnect both battery cables and wait and least 3 minutes.**
- **When checking the power seat circuit for continuity using a circuit tester, do not confuse its connector with the side air bag module connector. Such an error may cause the air bag to deploy.**
- **Do not drop, tilt, or bump the side air bag module while installing the seat. Always handle it with care.**
- **After front side air bag module inflates, front seatback assembly must be replaced.**

1. Slide the seat until the four body mounting bolts are visible and a tool can be inserted.

   NOTE:
   - When disassembling the driver seat after removal, set the front/rear cushion lifter to the top position.
2. Disconnect both battery cables and wait at least 3 minutes.
3. Remove the harness connector for the side air bag module.
4. Remove the four body mounting bolts and the seat belt anchor bolt.
   To remove the seat belt anchor bolt, refer to SB-3, "Removal and Installation of Front Seat Belt" .
5. Remove the power seat harness connector and vehicle harness fixing clip from the vehicle.

   NOTE:
   When removing and installing, use shop cloths to protect the parts from damage where they may interfere with other parts.

INSTALLATION

- Install in the reverse order of removal.

  NOTE:
  Be sure to insert the rear end tab of the rear leg cover under the rail.

Disassembly and Assembly

EIS000V6

SEATBACK TRIM AND PAD

WARNING:

Removal of front side air bag module should only be done to allow deployment of front side air bag module prior to disposal of seatback assembly.

NOTE:

Only complete seatback assemblies can be replaced on vehicles equipped with side air bags.

NOTE:

Be sure to set the front/rear cushion lifter to the top position.

1. Remove the seatback board from the back of the seatback.

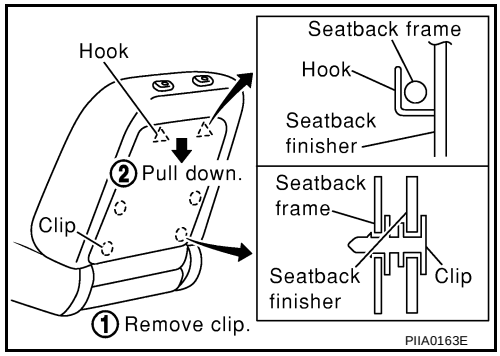

2. From the back of the seatback, press the headrest holder tabs at the base of the stay pipe to disengage. Then pull the headrest holder up to remove.

   NOTE:
   Before installing the headrest holder, check its orientation (front/rear and right/left).

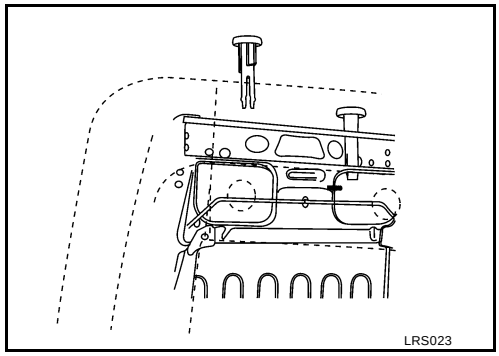

3. Remove the retainer.

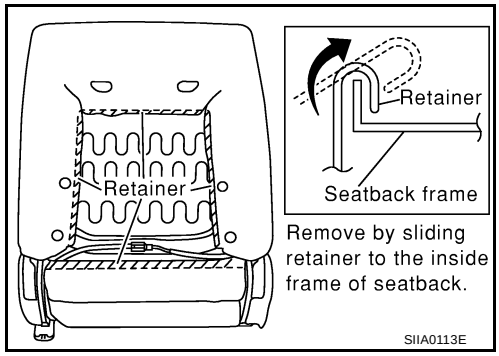

4. Remove the seat heater harness connector. After removing the seatback trim and pad, remove the hog ring to separate the trim from the pad and the seatback heater unit.

REMOVAL OF SEATBACK ASSEMBLY

1. After completing the steps 1 and 2 of "Seatback Trim and Pad", remove the harness connectors for the reclining motor and lumbar support motor (driver seat only).
2. Pull out the harness connector for the side air bag from the seat cushion.
3. Remove the reclining device mounting bolts (2 for each side) on the seatback frame, and remove the seatback assembly.

   NOTE:
   When assembling the seatback frame, make sure that the reclining device is locked on both sides, and be sure to temporarily tighten the bolts, then finish tightening them.

INSTALLATION OF SEATBACK ASSEMBLY

- Install in the reverse order of removal.

SEAT CUSHION TRIM AND PAD

1. Remove the power seat switch knob (or recline knob on manual seat).
2. Remove the front seat cushion finisher (inner).

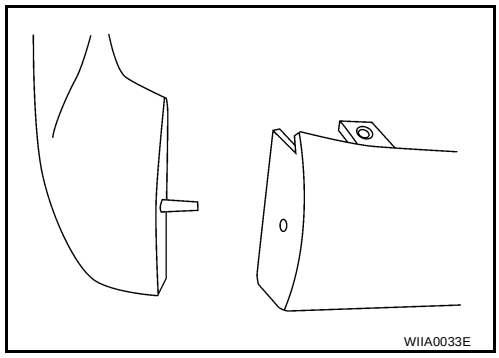

3. Remove the three power seat switch assembly screws (or lift knobs on manual seats).

4. Remove four bolts retaining the seat cushion assembly, remove seat cushion assembly.

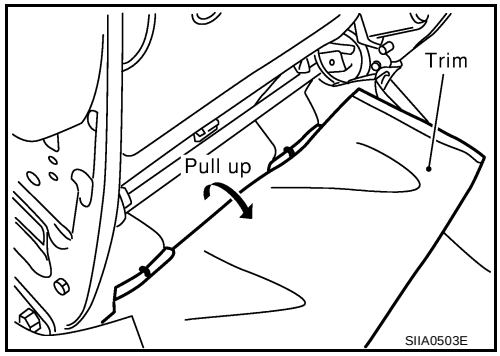

5. Remove the retainer on the seat cushion frame, then remove the harness connector for the seat heater.
6. After removing the seat cushion trim and pad, remove the hog rings to separate the trim from the pad and seat cushion heater unit.

REAR SEAT

PFP:88300

Dissasembly and Assembly

EIS000V7

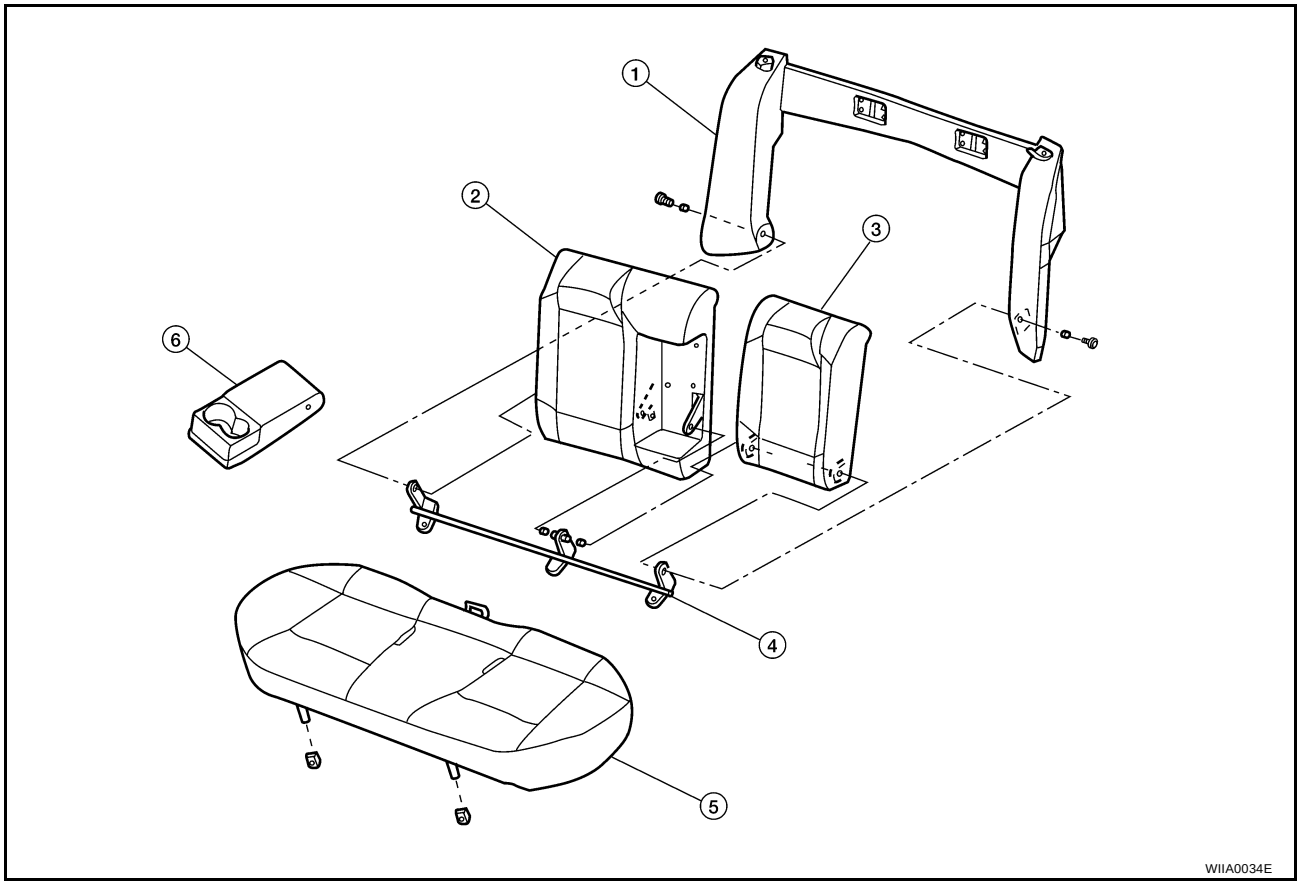

1. Rear seat side bolster assembly
2. Passenger seatback trim and pad
3. Driver seatback trim and pad
4. Rear seatback hinge assembly
5. Rear seat cushion trim and pad
6. Rear seat armrest

Center Seatback Assembly

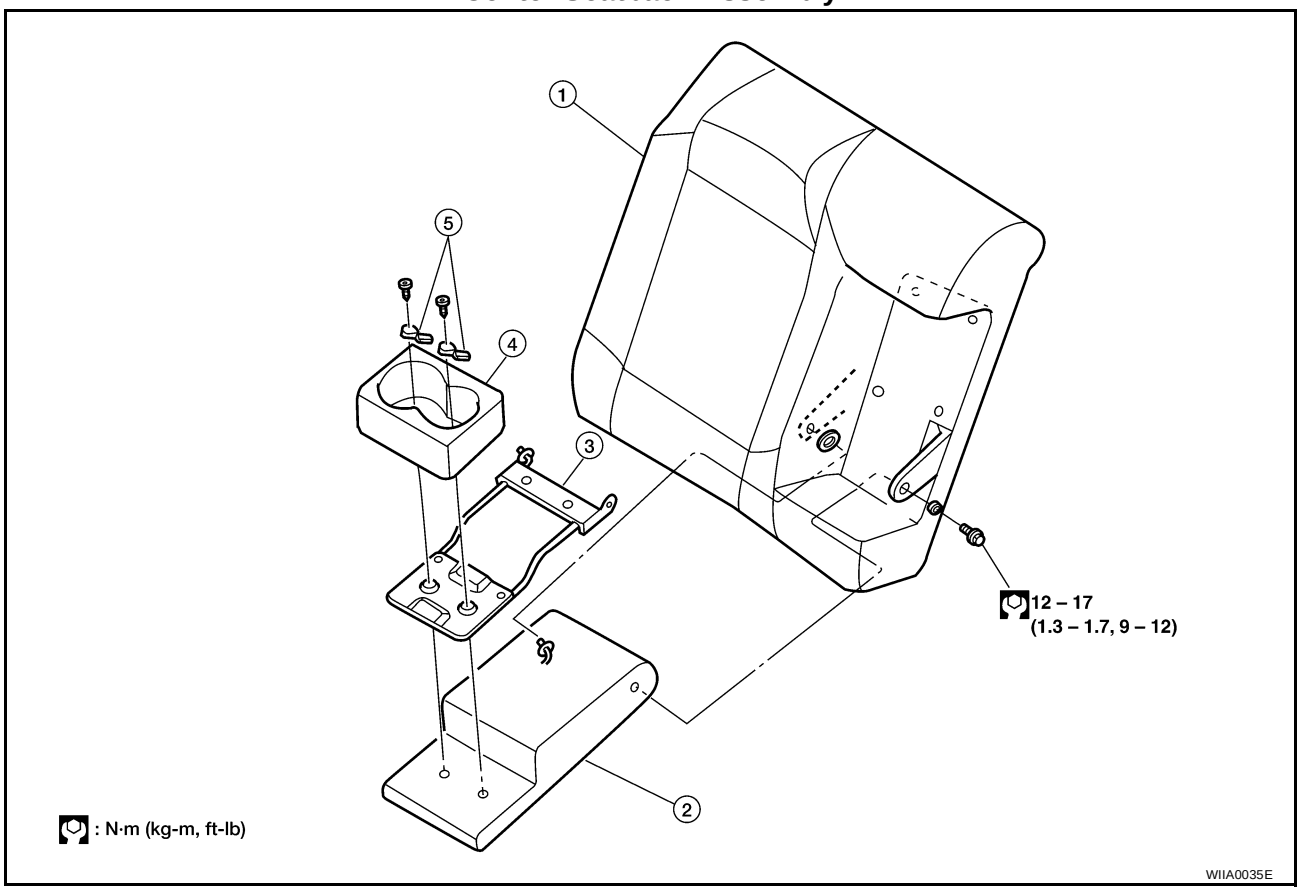

1. Passenger seatback trim and pad
2. Rear seat armrest
3. Cup holder bracket
4. Cup holder
5. Cup holder retaining screws/covers

Removal and Installation

EIS000V8

REMOVAL

1. Pull the lock at the front bottom of the seat cushion forward (1 for each side), and pull the seat cushion upward to release the wire from the plastic hook, then pull the seat cushion forward to remove.
2. Remove the RH and LH screws on the seatback.
3. Slide the seatback upward to pull off the wire from the wire from the vehicle-side hook, and remove the seatback.
4. After removing, remove the hog ring to separate the trim and pad.

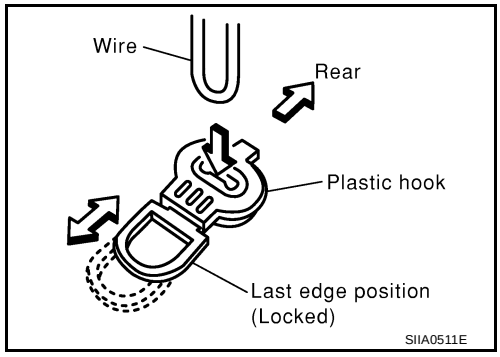

INSTALLATION

- Install in the reverse order of removal.

SECTION SRS

SUPPLEMENTAL RESTRAINT SYSTEM (SRS)

CONTENTS

PRECAUTIONS 3
Precautions for Supplemental Restraint System (SRS) “AIR BAG” and “SEAT BELT PRE-TENSIONER” 3
Precautions for SRS “AIR BAG” and “SEAT BELT PRE-TENSIONER” Service 3
Trouble Diagnosis Precaution 3
PREPARATION 4
Special Service Tool 4
SUPPLEMENTAL RESTRAINT SYSTEM (SRS) 5
SRS Configuration 5
Front Seat Belt Pre-tensioner with Load Limiter 6
Front Side Air Bag 6
Side Curtain Air Bag 6
Direct-connect SRS Component Connectors 7
TROUBLE DIAGNOSIS 8
Trouble Diagnoses Introduction 8
DIAGNOSIS FUNCTION 8
HOW TO PERFORM TROUBLE DIAGNOSES FOR QUICK AND ACCURATE REPAIR 8
WORK FLOW 9
SRS Components Parts Location 10
Schematic 11
Wiring Diagram-SRS- 12
CONSULT-II FUNCTION 17
DIAGNOSIS MODE FOR CONSULT-II 17
HOW TO CHANGE SELF-DIAGNOSIS MODE WITH CONSULT-II 17
HOW TO ERASE SELF-DIAGNOSIS RESULTS.. 18
SELF-DIAGNOSIS FUNCTION (WITHOUT CONSULT-II) 18
HOW TO CHANGE SELF-DIAGNOSIS MODE... 18
HOW TO ERASE SELF-DIAGNOSIS RESULTS.. 18
SRS Operation Check 19
DIAGNOSTIC PROCEDURE 1 19
Trouble Diagnoses with CONSULT-II 21
DIAGNOSTIC PROCEDURE 2 21
DIAGNOSTIC PROCEDURE 3 25
DIAGNOSTIC PROCEDURE 4 (CONTINUED FROM DIAGNOSTIC PROCEDURE 2) 27
DIAGNOSTIC PROCEDURE 5 27
Trouble diagnoses without CONSULT-II. 32
DIAGNOSTIC PROCEDURE 6 32
WARNING LAMP FLASH CODE CHART 33
Trouble Diagnoses: “AIR BAG” Warning Lamp Does Not Turn Off 37
DIAGNOSTIC PROCEDURE 6 37
Trouble Diagnoses: “AIR BAG” Warning Lamp Does Not Turn On 38
DIAGNOSTIC PROCEDURE 7 38
DRIVER AIR BAG MODULE 39
Removal and Installation 39
REMOVAL 39
INSTALLATION 40
SPIRAL CABLE 41
Removal and Installation 41
REMOVAL 41
INSTALLATION 42
FRONT PASSENGER AIR BAG MODULE 43
Removal and Installation 43
REMOVAL 43
INSTALLATION 44
WIRING HARNESS MODIFICATION 44
FRONT SIDE AIR BAG MODULE 47
Removal 47
SIDE CURTAIN AIR BAG MODULE 48
Removal and Installation 48
REMOVAL 48
INSTALLATION 49
CRASH ZONE SENSOR 50
Removal and Installation 50
REMOVAL 50
INSTALLATION 50
SIDE AIR BAG (SATELLITE) SENSOR 51
Removal and Installation 51
REMOVAL 51
INSTALLATION 51
FRONT SEAT BELT PRE-TENSIONER 52
Removal and Installation 52

DIAGNOSIS SENSOR UNIT 53
Removal and Installation 53
REMOVAL 53
INSTALLATION 53
ECU DISCRIMINATED NO. 53
DISPOSAL OF AIR BAG MODULE AND SEAT BELT PRE-TENSIONER 54
Caution for Air Bag Module and Seat Belt Pre-tensioner 54
CHECKING DEPLOYMENT TOOL 54
DEPLOYMENT PROCEDURES FOR AIR BAG MODULE (OUTSIDE OF VEHICLE) 55
DEPLOYMENT PROCEDURES FOR SEAT BELT PRE-TENSIONER (OUTSIDE OF VEHICLE) 59
DEPLOYMENT OF AIR BAG MODULE AND SEAT BELT PRE-TENSIONER WHILE MOUNTED IN VEHICLE 60
DISPOSING OF AIR BAG MODULE AND SEAT BELT PRE-TENSIONER 60
COLLISION DIAGNOSIS 61
For Frontal Collision 61
WHEN SRS (EXCEPT THE FRONT SIDE AIR BAG AND SIDE CURTAIN AIR BAG MODULES) IS ACTIVATED IN A COLLISION 61
WHEN SRS IS NOT ACTIVATED IN A COLLISION 61
SRS INSPECTION (FOR FRONTAL COLLISION) 61
For Side Collision 62
WHEN SRS IS ACTIVATED IN THE SIDE COLLISION 62
WHEN SRS IS NOT ACTIVATED IN THE SIDE COLLISION 62
SRS INSPECTION (FOR SIDE COLLISION) 63

PRECAUTIONS

PFP:00001

Precautions for Supplemental Restraint System (SRS) “AIR BAG” and “SEAT BELT PRE-TENSIONER”

EHS000NF

The Supplemental Restraint System such as “AIR BAG” and “SEAT BELT PRE-TENSIONER”, used along with a front seat belt, helps to reduce the risk or severity of injury to the driver and front passenger for certain types of collision. This system includes seat belt switch inputs and dual stage front air bag modules. The SRS system uses the seat belt switches to determine the front air bag deployment, and may only deploy one front air bag, depending on the severity of a collision and whether the front occupants are belted or unbelted.
Information necessary to service the system safely is included in the SRS and SB section of this Service Manual.

WARNING:

- **To avoid rendering the SRS inoperative, which could increase the risk of personal injury or death in the event of a collision which would result in air bag inflation, all maintenance must be performed by an authorized NISSAN/INFINITI dealer.**
- **Improper maintenance, including incorrect removal and installation of the SRS, can lead to personal injury caused by unintentional activation of the system. For removal of Spiral Cable and Air Bag Module, see the SRS section.**
- **Do not use electrical test equipment on any circuit related to the SRS unless instructed to in this Service Manual. SRS wiring harnesses can be identified by yellow and/or orange harness connectors.**

Precautions for SRS “AIR BAG” and “SEAT BELT PRE-TENSIONER” Service

EHS000NG

- Do not use electrical test equipment to check SRS circuits unless instructed to in this Service Manual.
- Before servicing the SRS, turn ignition switch OFF, disconnect both battery cables and wait at least 3 minutes.
  For approximately 3 minutes after the cables are removed, it is still possible for the air bag and seat belt pre-tensioner to deploy. Therefore, do not work on any SRS connectors or wires until at least 3 minutes have passed.
- The diagnosis sensor unit must always be installed with the arrow mark “⇐” pointing toward the front of the vehicle for proper operation. Also check diagnosis sensor unit for cracks, deformities or rust before installation and replace as required.
- The spiral cable must be aligned with the neutral position since its rotations are limited. Do not attempt to turn steering wheel or column after removal of steering gear.
- Handle air bag module carefully. Always place driver and front passenger air bag modules with the pad side facing upward and seat mounted front side air bag module standing with the stud bolt side facing down.
- Conduct self-diagnosis to check entire SRS for proper function after replacing any components.
- After air bag inflates, the front instrument panel assembly should be replaced if damaged.

Trouble Diagnosis Precaution

EHS000NH

When you read wiring diagrams, refer to the following:

- GI-12, "How to Read Wiring Diagrams" in GI section
- PG-3, "POWER SUPPLY ROUTING CIRCUIT" in PG section

When you perform trouble diagnosis, refer to the following:

- GI-10, "HOW TO FOLLOW TEST GROUPS IN TROUBLE DIAGNOSES" in GI section
- GI-25, "How to Perform Efficient Diagnosis for an Electrical Incident" in GI section

Check for any service bulletins before servicing the vehicle.

PREPARATION

PFP:00002

Special Service Tool

EHS000LY

The actual shapes of Kent-Moore tools may differ from those of special service tools illustrated here.

Tool number (Kent-Moore No.) Tool name		Description
KV99105300 (J41246) Air bag module bracket	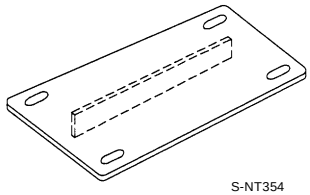 S-NT354	Anchoring air bag module
KV99106400 (J38381) Deployment tool	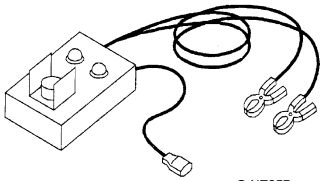 S-NT357	Disposing of air bag modules and front seat belt pre-tensioners
(J38381-80) Deployment tool adapter for front driver air bag module, side curtain air bag module and front seat belt pre-tensioner	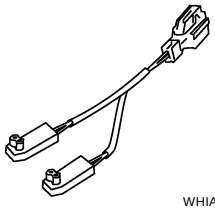 WHIA0089E	Connection between the deployment tool and front driver air bag module, side curtain air bag module and front seat belt pre-tensioner
(J38381-65) Deployment tool adapter for front passenger air bag module (service replacement)	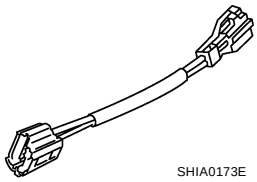 SHIA0173E	Connection between the deployment tool and front passenger air bag module (service replacement)
KV99109000 (J44230) Deployment tool adapter for front side air bag module	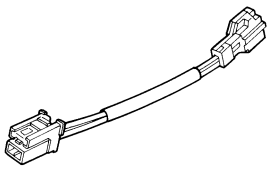 ZZA1190D	Connection between the deployment tool and front side air bag module
(J44615) Air bag lock master key set	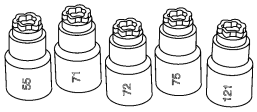 LRS210	Removing and installing air bag lock

SUPPLEMENTAL RESTRAINT SYSTEM (SRS)

PFP:28556

SRS Configuration

EHS000LZ

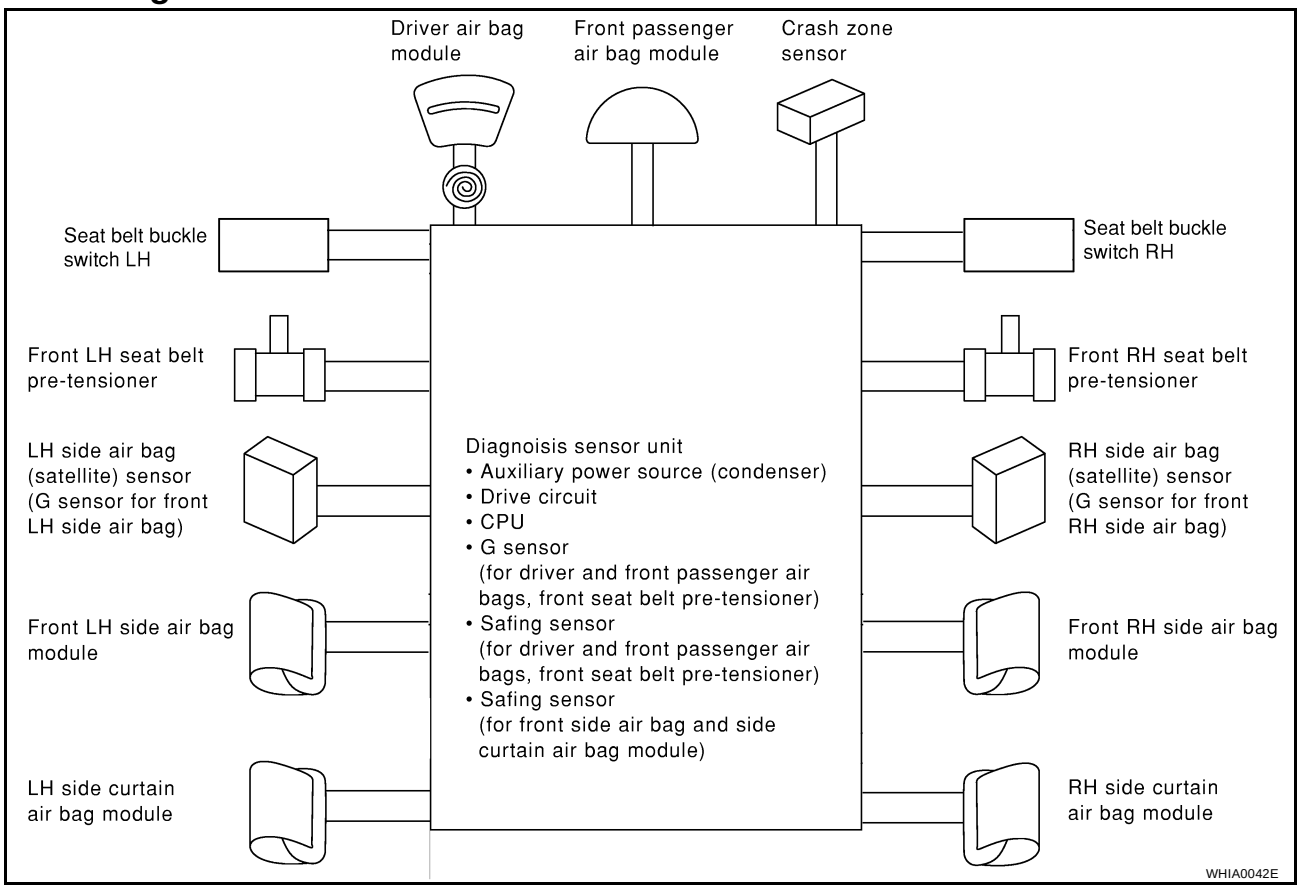

The air bag deploys if the diagnosis sensor unit activates while the ignition switch is in the ON or START position.
The collision modes for which supplemental restraint systems are activated are different among the SRS systems. For example, the driver air bag module and front passenger air bag module are activated in a frontal collision but not in a side collision.
SRS configurations which are activated for some collision modes are as follows;

SRS configuration	Frontal collision	Left side collision	Right side collision
Driver air bag module	×	—	—
Front passenger air bag module	×	—	—
Front LH seat belt pre-tensioner	×	—	—
Front RH seat belt pre-tensioner	×	—	—
Front LH side air bag module	—	×	—
Front RH side air bag module	—	—	×
LH side curtain air bag module	—	×	—
RH side curtain air bag module	—	—	×

Front Seat Belt Pre-tensioner with Load Limiter

EHS000M0

The seat belt pre-tensioner system with load limiter is installed for both the driver's seat and the front passenger's seat. It operates simultaneously with the SRS air bag system in the event of a frontal collision with an impact exceeding a specified level.
When the frontal collision with an impact exceeding a specified level occurs, seat belt slack resulting from clothing or other factors is immediately taken up by the pre-tensioner. Vehicle passengers are securely restrained.
When passengers in a vehicle are thrown forward in a collision and the restraining force of the seat belt exceeds a specified level, the load limiter permits the specified extension of the seat belt by the twisting of the ELR shaft, and a relaxation of the chest-area seat belt web tension while maintaining force.

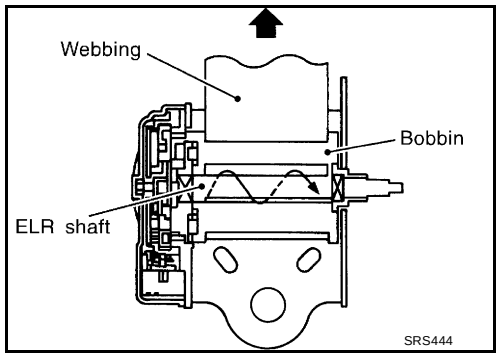

Front Side Air Bag

EHS000M1

Front side air bag is built-in type.
The front seatbacks with built-in type side air bag have the labels as shown.

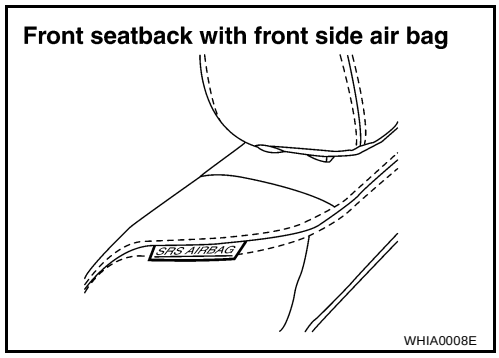

Side Curtain Air Bag

EHS000M2

The side curtain air bags have the labels as shown.

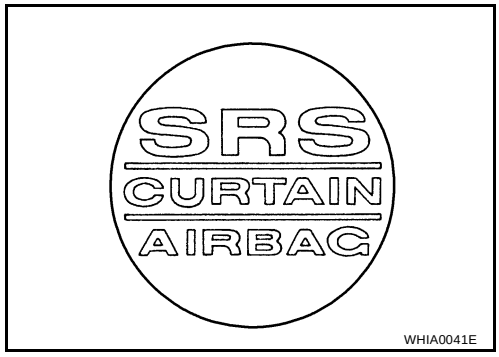

Direct-connect SRS Component Connectors

EHS000M3

The following SRS components use direct-connect style harness connectors.

- Driver air bag module
- Front passenger air bag module
- LH side curtain air bag module
- RH side curtain air bag module
- Front LH seat belt pre-tensioner
- Front RH seat belt pre-tensioner

Always pull up to release black locking tab prior to removing connector from SRS component.
Always push down to lock black locking tab after installing connector to SRS component. When locked, the black locking tab is level with the connector housing.

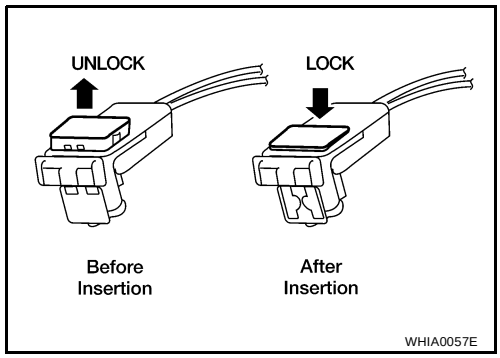

TROUBLE DIAGNOSIS

PFP:00004

Trouble Diagnoses Introduction

EHS000NJ

CAUTION:

- **Do not use electrical test equipment on any circuit related to the SRS unless instructed to in this Service Manual. SRS wiring harnesses can be identified by yellow and/or orange harness connectors.**
- **Do not attempt to repair, splice or modify the SRS wiring harness. If the harness is damaged, replace it with a new one.**
- **Keep ground portion clean.**

DIAGNOSIS FUNCTION

The SRS self-diagnosis results can be read by using “AIR BAG” warning lamp and/or CONSULT-II.
The User mode is exclusively prepared for the customer (driver). This mode warns the driver of a system malfunction through the operation of the “AIR BAG” warning lamp.
The Diagnosis mode allows the technician to locate and inspect the malfunctioning part.
The mode applications for the “AIR BAG” warning lamp and CONSULT-II are as follows:

	User mode	Diagnosis mode	Display type
“AIR BAG” warning lamp	X	X	ON-OFF operation
CONSULT-II	—	X	Monitoring

HOW TO PERFORM TROUBLE DIAGNOSES FOR QUICK AND ACCURATE REPAIR

A good understanding of the malfunction conditions can make troubleshooting faster and more accurate.
In general, each customer feels differently about a malfunction. It is important to fully understand the symptoms or conditions for a customer complaint.

Information From Customer

WHAT..... Vehicle model
WHEN..... Date, Frequencies
WHERE..... Road conditions
HOW..... Operating conditions, Symptoms

Preliminary Check

Check that the following parts are in good order.

- Battery (Refer to SC-4, "How to Handle Battery" .)
- Fuse (Refer to SRS-11, "Schematic" .)
- System component-to-harness connections

WORK FLOW

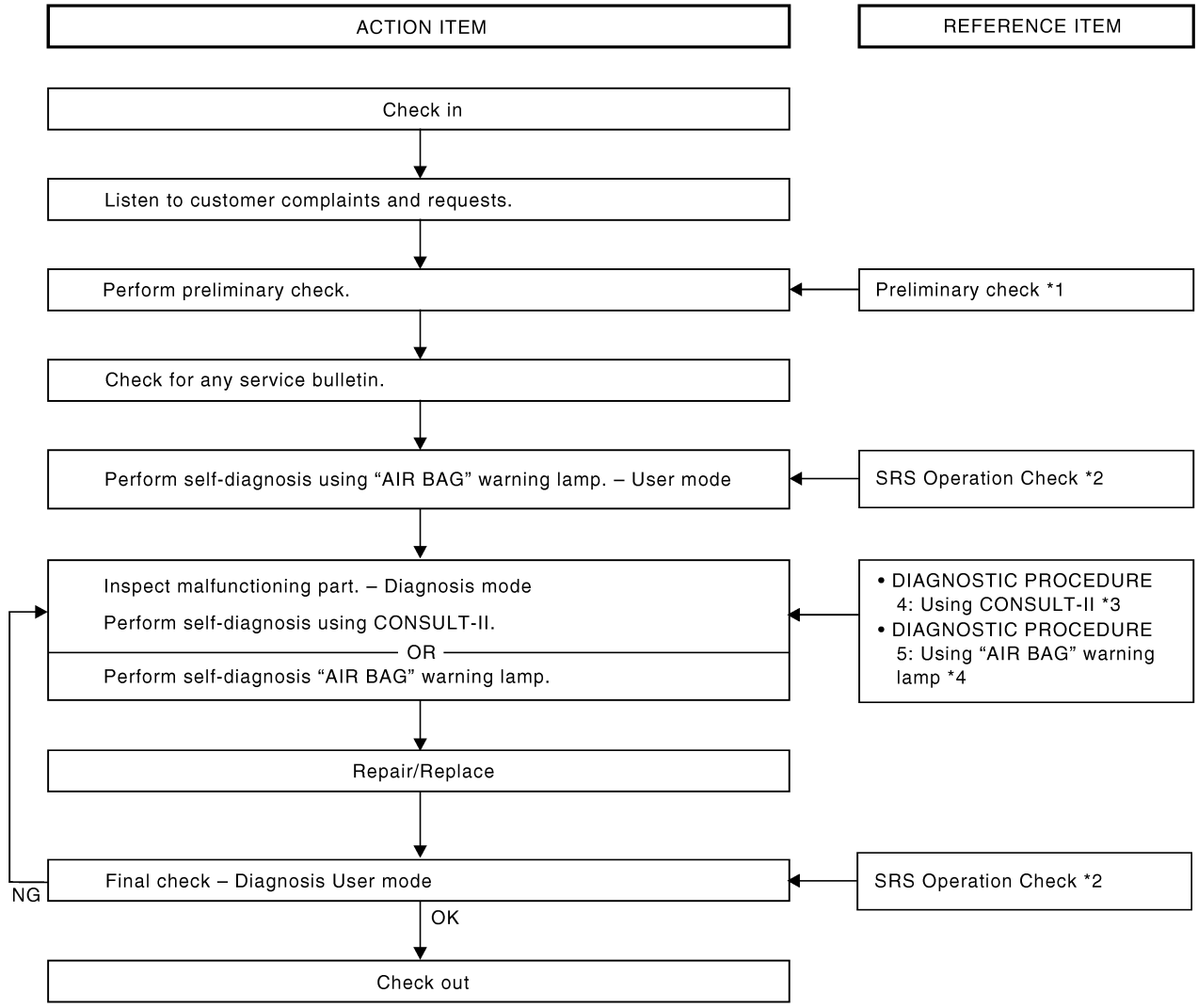

*1: SRS-8 *2: SRS-19 *3: SRS-27
*4: SRS-27

SRS Components Parts Location

EHS000NK

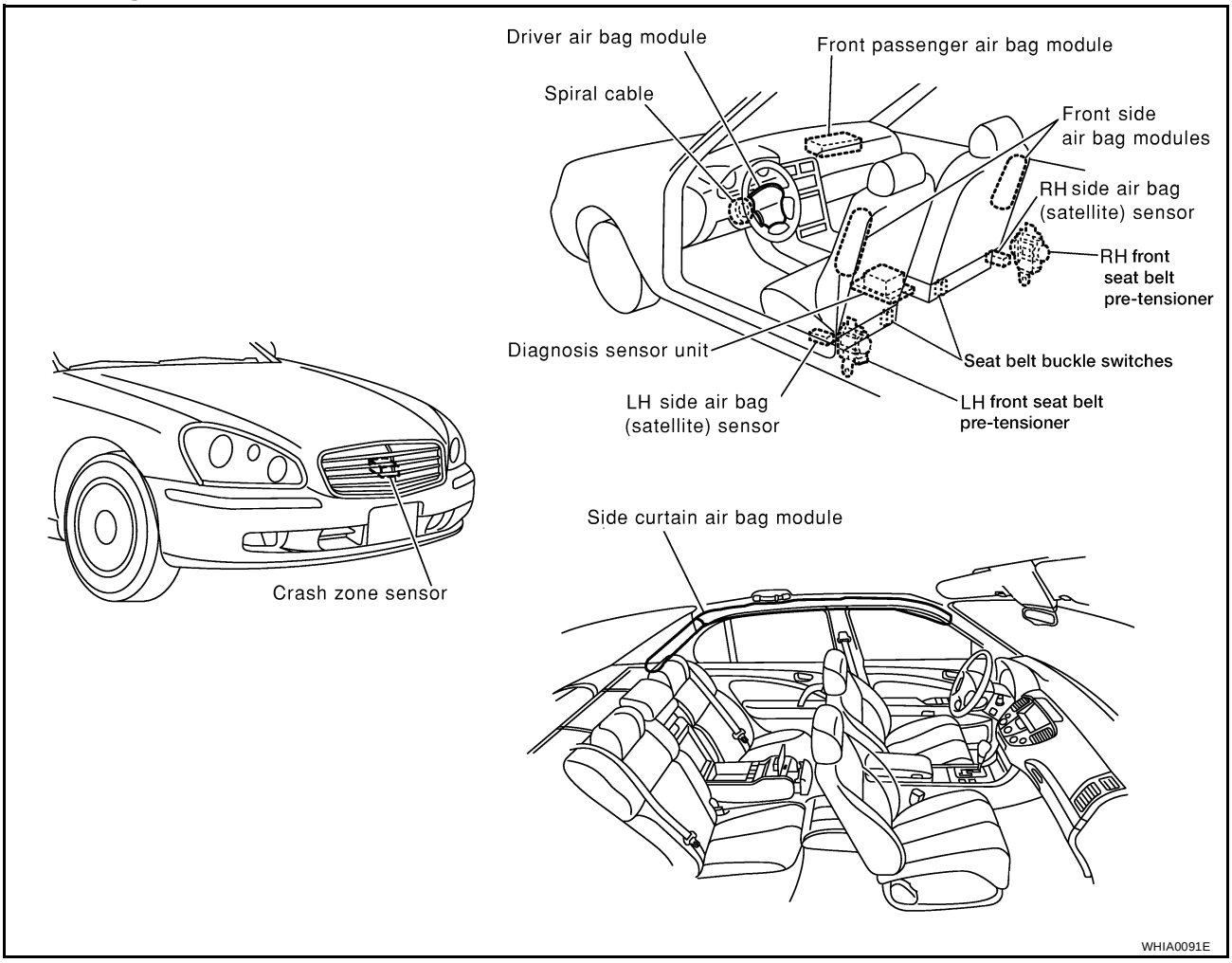

Schematic

EHS000NL

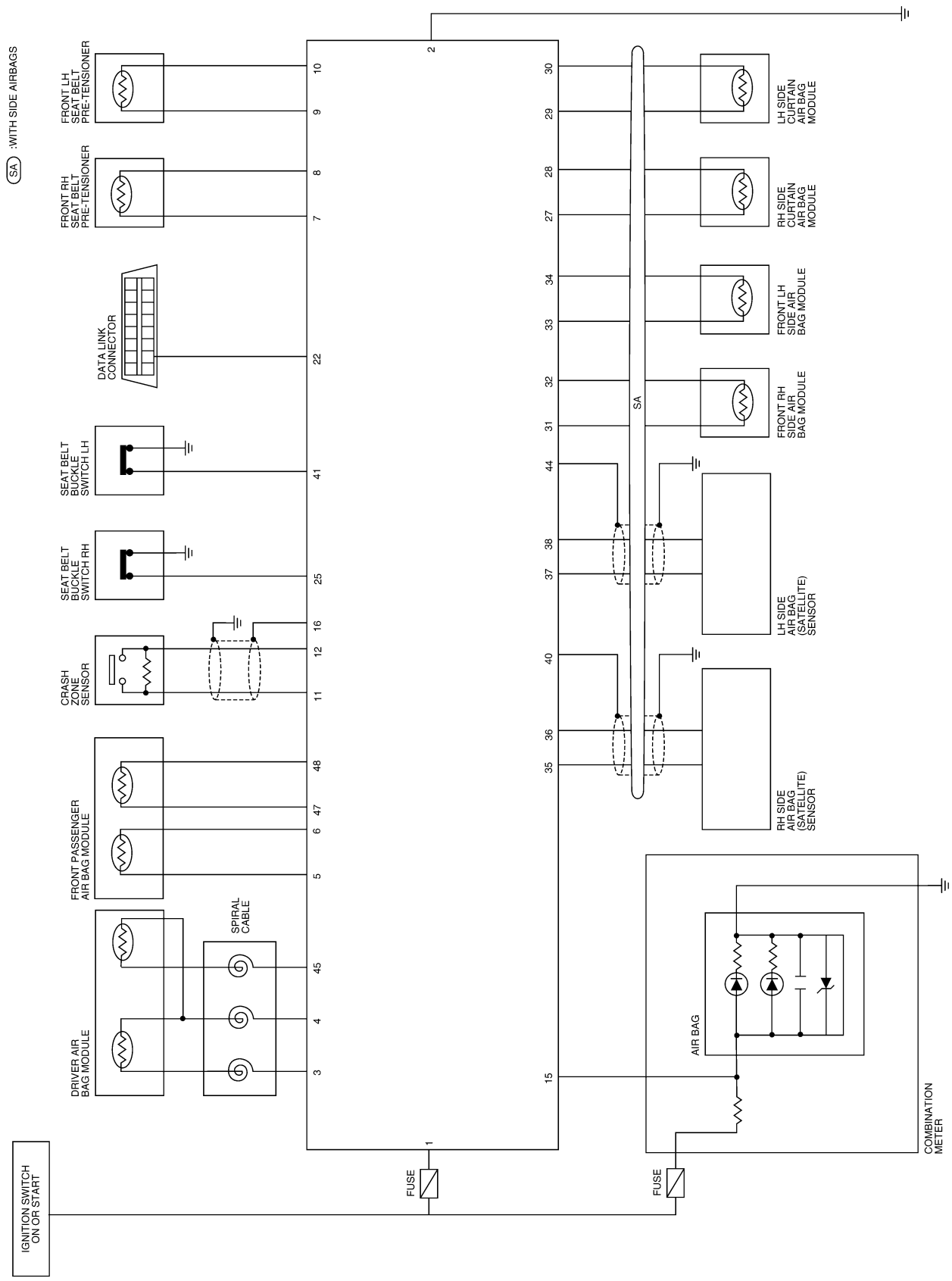

WHWA0017E

Wiring Diagram-SRS-

EHS000NM

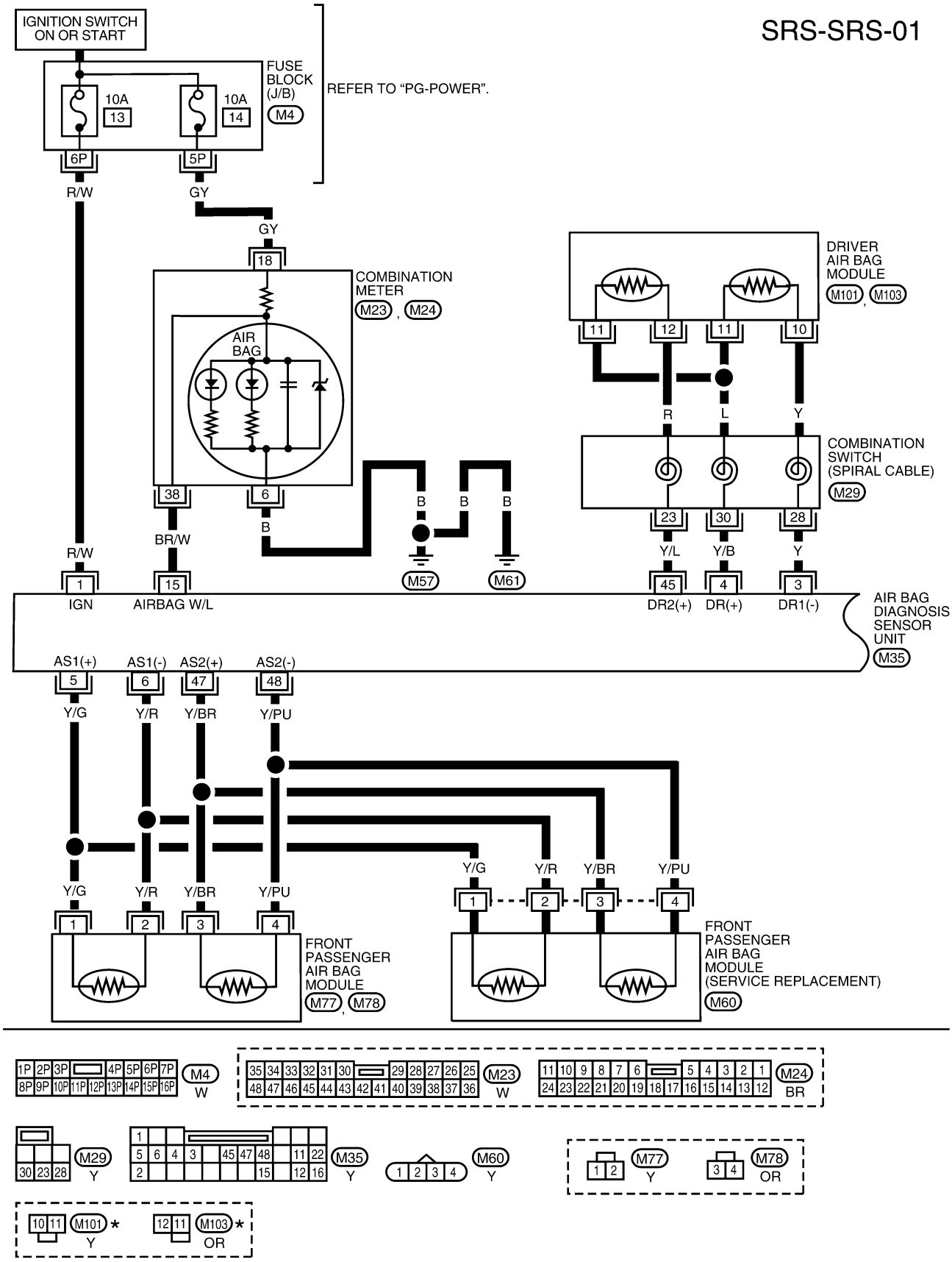

*: THIS CONNECTOR IS NOT SHOWN IN "HARNESS LAYOUT" OF PG SECTION.

WHWA0018E

SRS-SRS-02

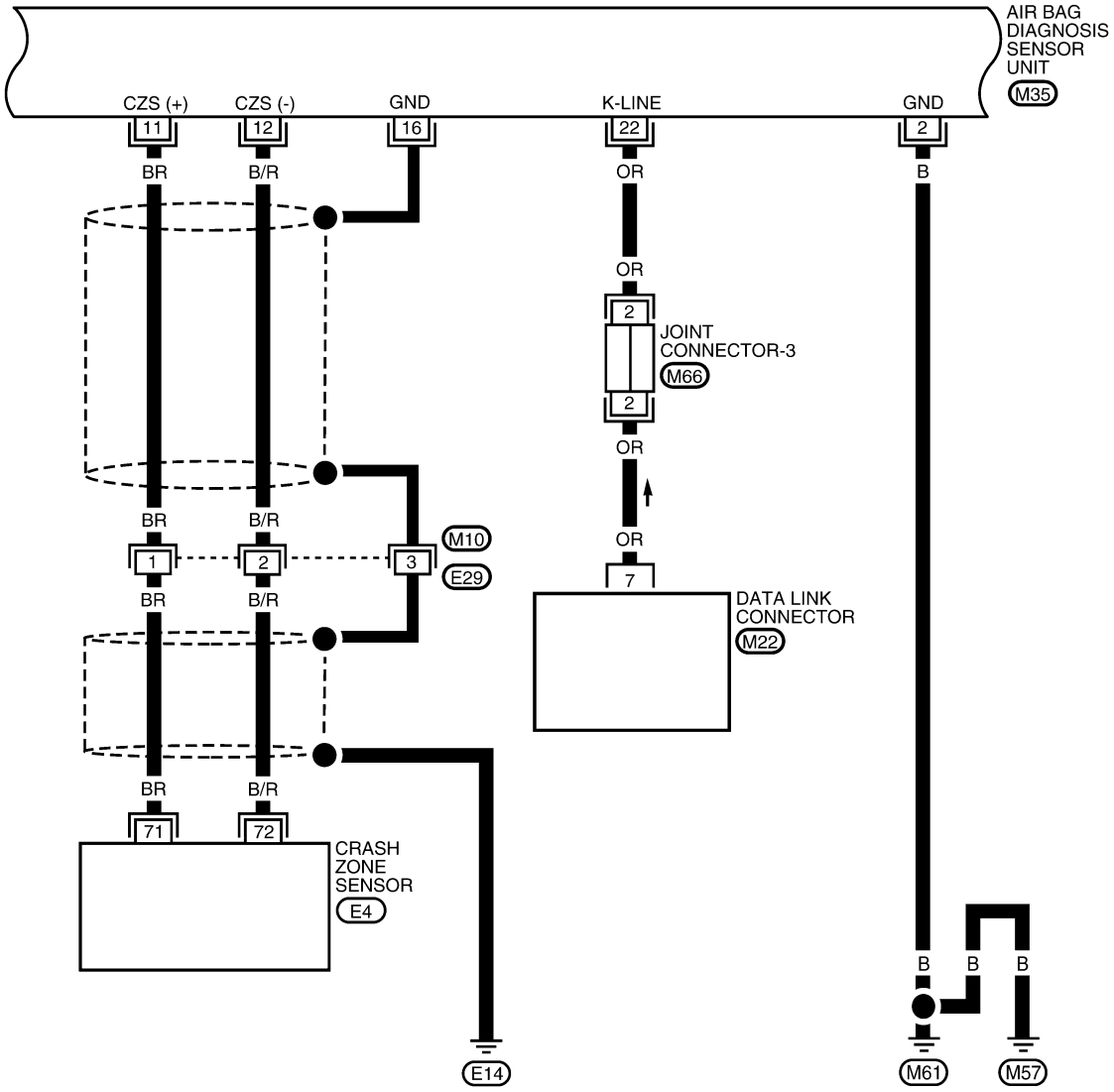

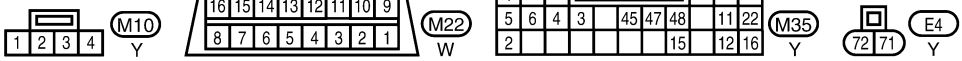

REFER TO THE FOLLOWING.
M66 - JOINT CONNECTOR

WHWA0019E

SRS-SRS-03

SA : WITH SIDE AIR BAGS

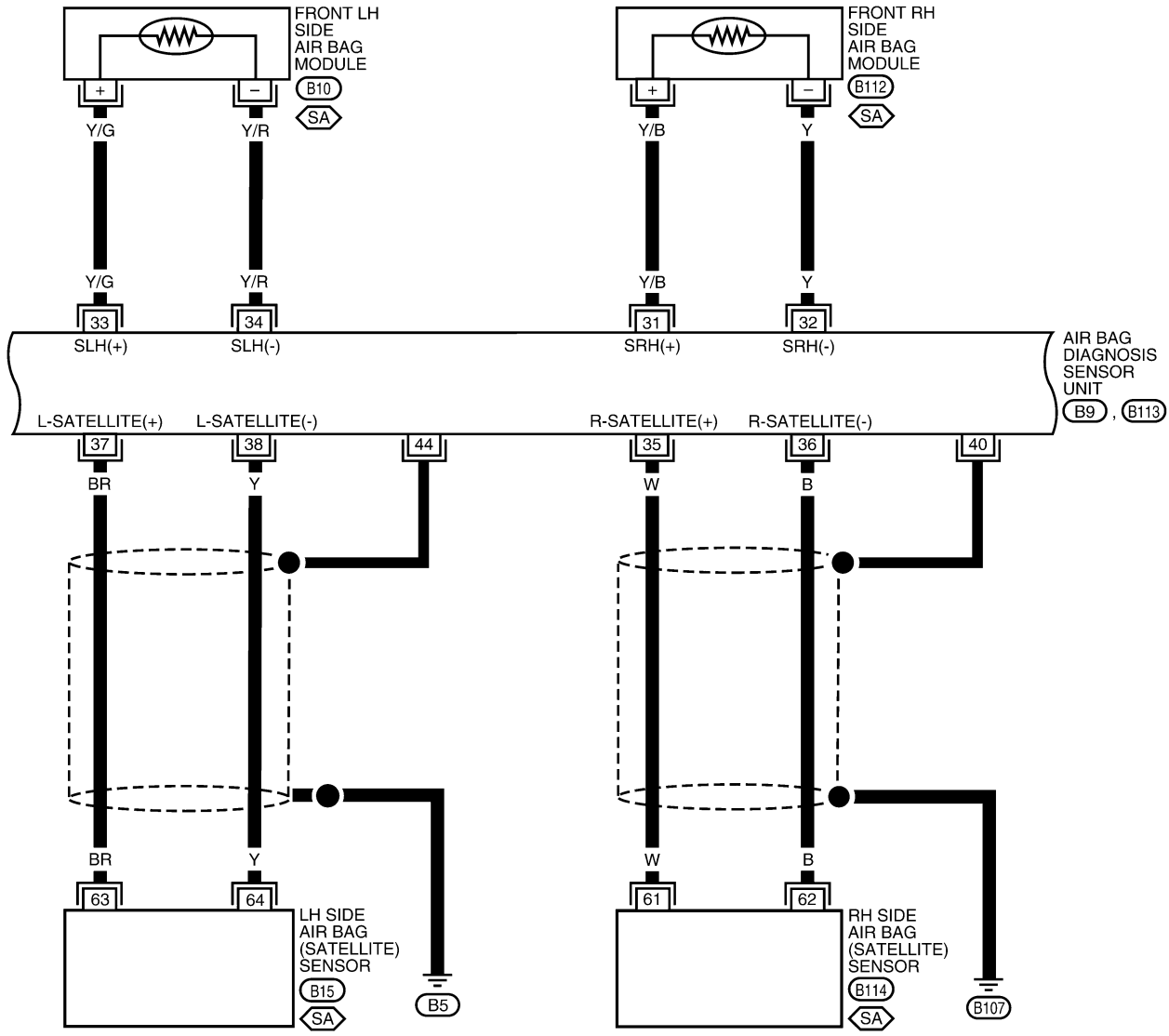

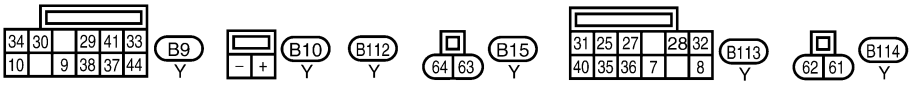

WHWA0020E

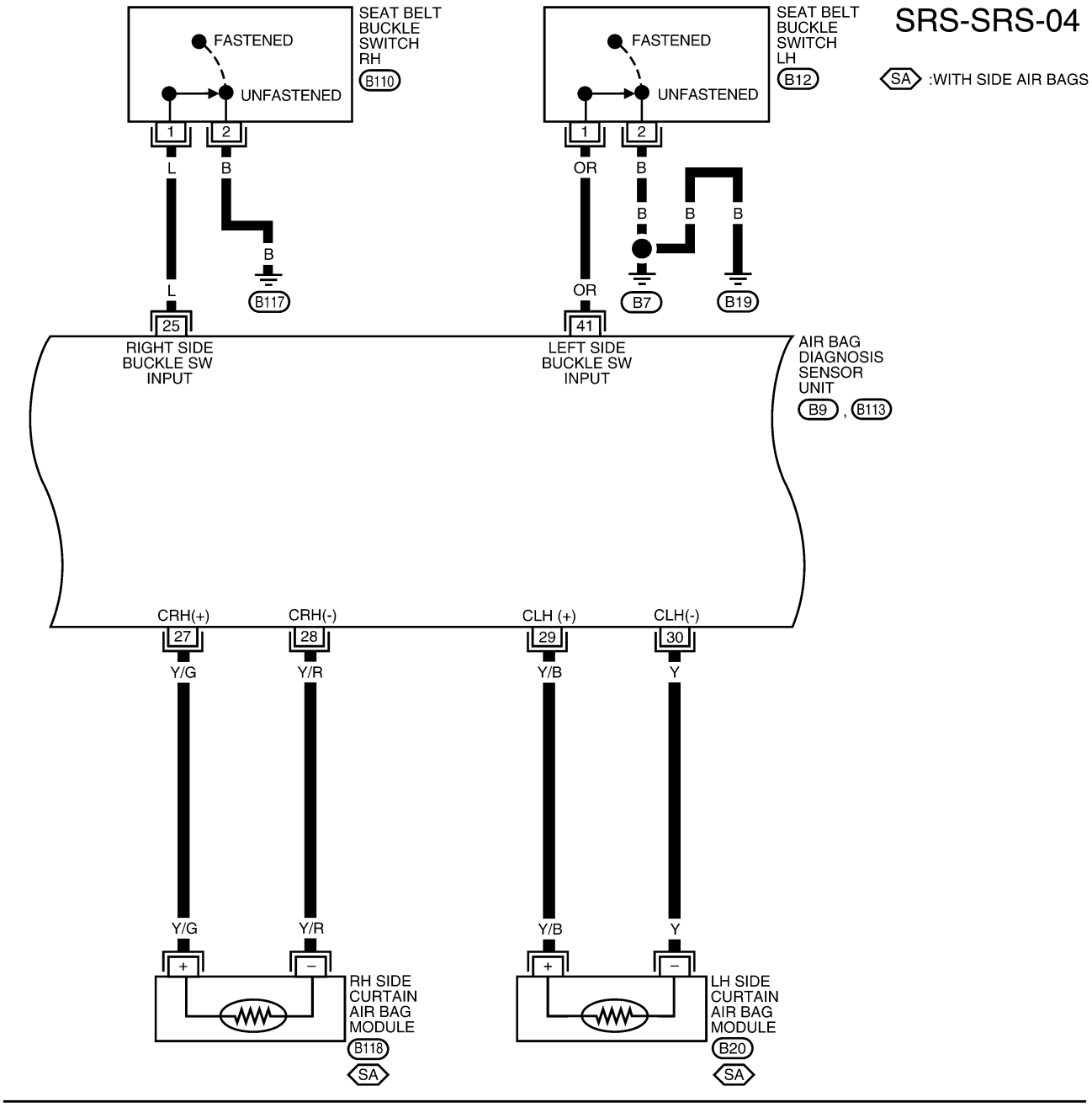
SRS-SRS-04
SA :WITH SIDE AIR BAGS
SEAT BELT BUCKLE SWITCH RH
B110
FASTENED
UNFASTENED
SEAT BELT BUCKLE SWITCH LH
B12
FASTENED
UNFASTENED
1
2
L
B
OR
B
B
B
B
B
B117
B7
B19
L
OR
25
41
RIGHT SIDE BUCKLE SW INPUT
LEFT SIDE BUCKLE SW INPUT
AIR BAG DIAGNOSIS SENSOR UNIT
B9 , B113
CRH(+)
CRH(-)
CLH (+)
CLH(-)
27
28
29
30
Y/G
Y/R
Y/B
Y
Y/G
Y/R
Y/B
Y
+
−
RH SIDE CURTAIN AIR BAG MODULE
B118
SA
LH SIDE CURTAIN AIR BAG MODULE
B20
SA

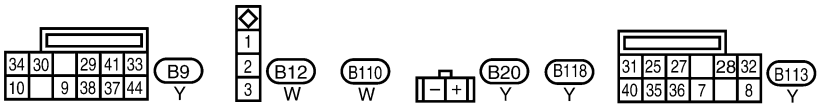
34 30 29 41 33
10 9 38 37 44
B9
Y
1
2
3
B12
W
B110
W
− +
B20
Y
B118
Y
31 25 27 28 32
40 35 36 7 8
B113
Y

WHWA0021E

SRS-SRS-05

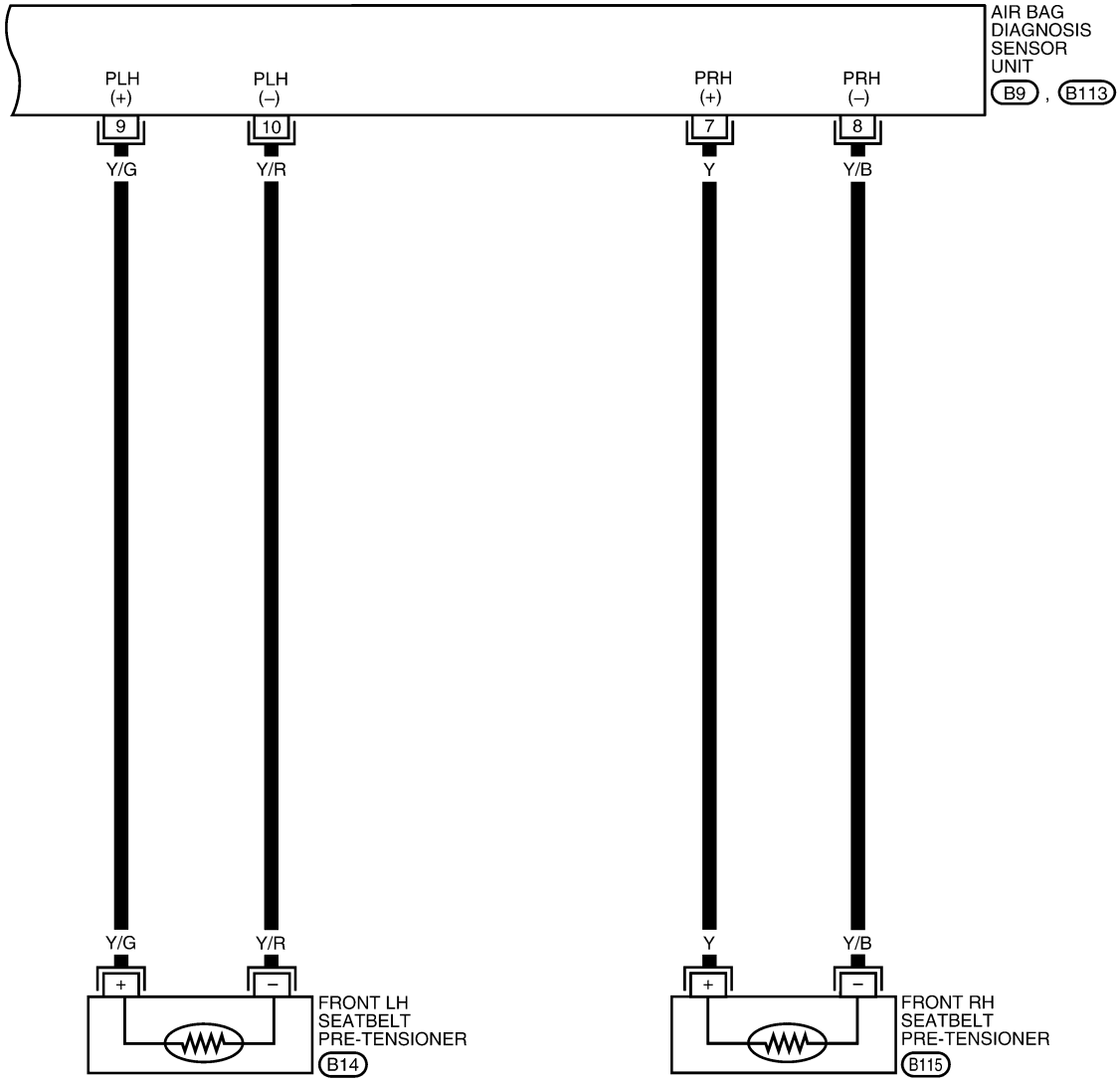

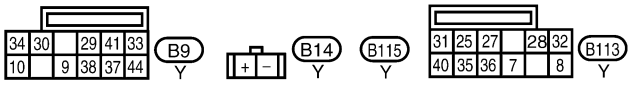

WHWA0022E

CONSULT-II FUNCTION

EHS000NN

DIAGNOSIS MODE FOR CONSULT-II

- "SELF-DIAG [CURRENT]"
  A current Self-diagnosis result (also indicated by the number of warning lamp flashes in the Diagnosis mode) is displayed on the CONSULT-II screen in real time. This refers to a malfunctioning part requiring repairs.
- "SELF-DIAG [PAST]"
  Diagnosis results previously stored in the memory are displayed on the CONSULT-II screen. The stored results are not erased until memory erasing is executed.
- "TROUBLE DIAG RECORD"
  With TROUBLE DIAG RECORD, diagnosis results previously erased by a reset operation can be displayed on the CONSULT-II screen.
- "ECU DISCRIMINATED NO."
  The diagnosis sensor unit for each vehicle model is assigned with its own, individual classification number. This number will be displayed on the CONSULT-II screen, as shown. When replacing the diagnosis sensor unit, refer to the part number for the compatibility. After installation, replacement with a correct unit can be checked by confirming this classification number on the CONSULT-II screen.

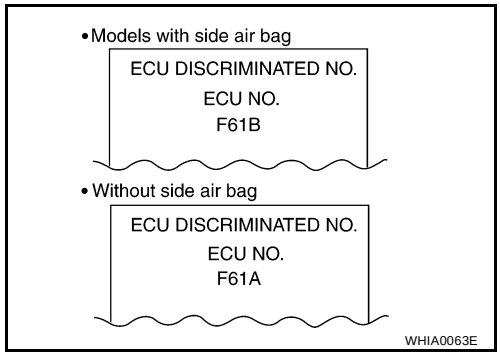

HOW TO CHANGE SELF-DIAGNOSIS MODE WITH CONSULT-II

From User Mode to Diagnosis Mode

After selecting "AIR BAG" on the "SELECT SYSTEM" screen, User mode automatically changes to Diagnosis mode.

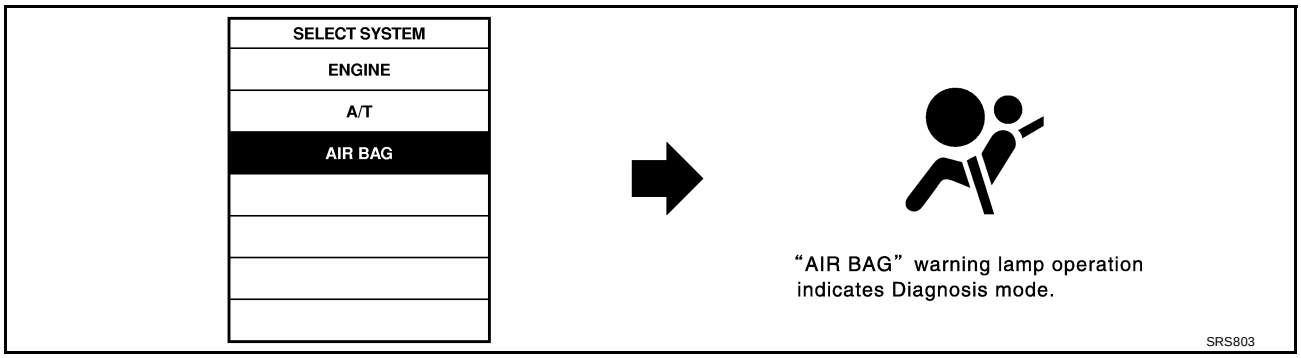

From Diagnosis Mode to User Mode

To return to User mode from Diagnosis mode, touch "BACK" key of CONSULT-II until "SELECT SYSTEM" appears, Diagnosis mode automatically changes to User mode.

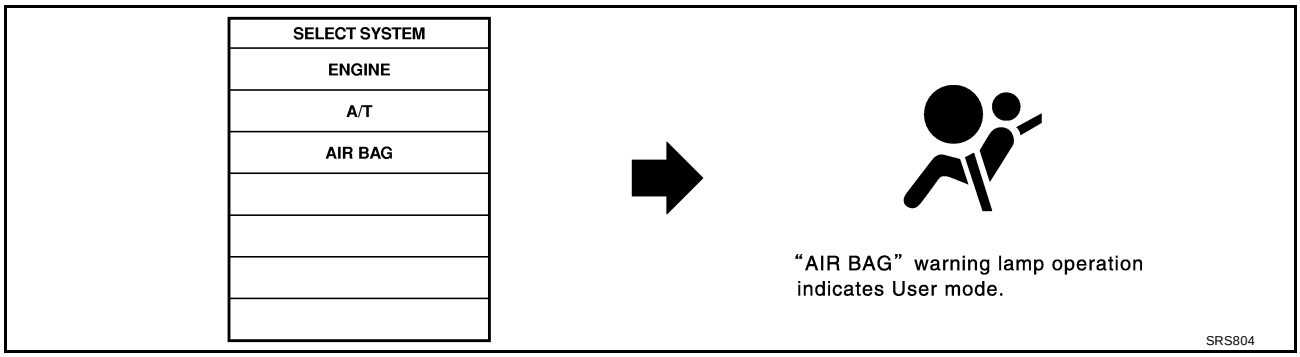

HOW TO ERASE SELF-DIAGNOSIS RESULTS

- "SELF-DIAG [CURRENT]"
  A current Self-diagnosis result is displayed on the CONSULT-II screen in real time.
  After the malfunction is repaired completely, no malfunction is detected on "SELF-DIAG [CURRENT]".
- "SELF-DIAG [PAST]"
  Return to the "SELF-DIAG [CURRENT]" CONSULT-II screen by touching "BACK" key of CONSULT-II and select "SELF-DIAG [CURRENT]" in SELECT DIAG MODE. Touch "ERASE" in "SELF-DIAG [CURRENT]" mode.

  NOTE:
  If the memory of the malfunction in "SELF-DIAG [PAST]" is not erased, the User mode shows the system malfunction by the operation of the warning lamp even if the malfunction is repaired completely.
- "TROUBLE DIAG RECORD"
  The memory of "TROUBLE DIAG RECORD" cannot be erased.

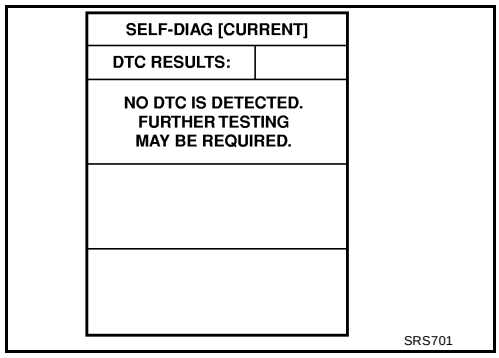

SELF-DIAGNOSIS FUNCTION (WITHOUT CONSULT-II)

EHS000NO

- The reading of these results is accomplished using one of two modes — "User mode" and "Diagnosis mode".
- After a malfunction is repaired, turn the ignition switch OFF for at least one second, then back ON. Diagnosis mode returns to the User mode. At that time, the self-diagnostic result is cleared.

HOW TO CHANGE SELF-DIAGNOSIS MODE

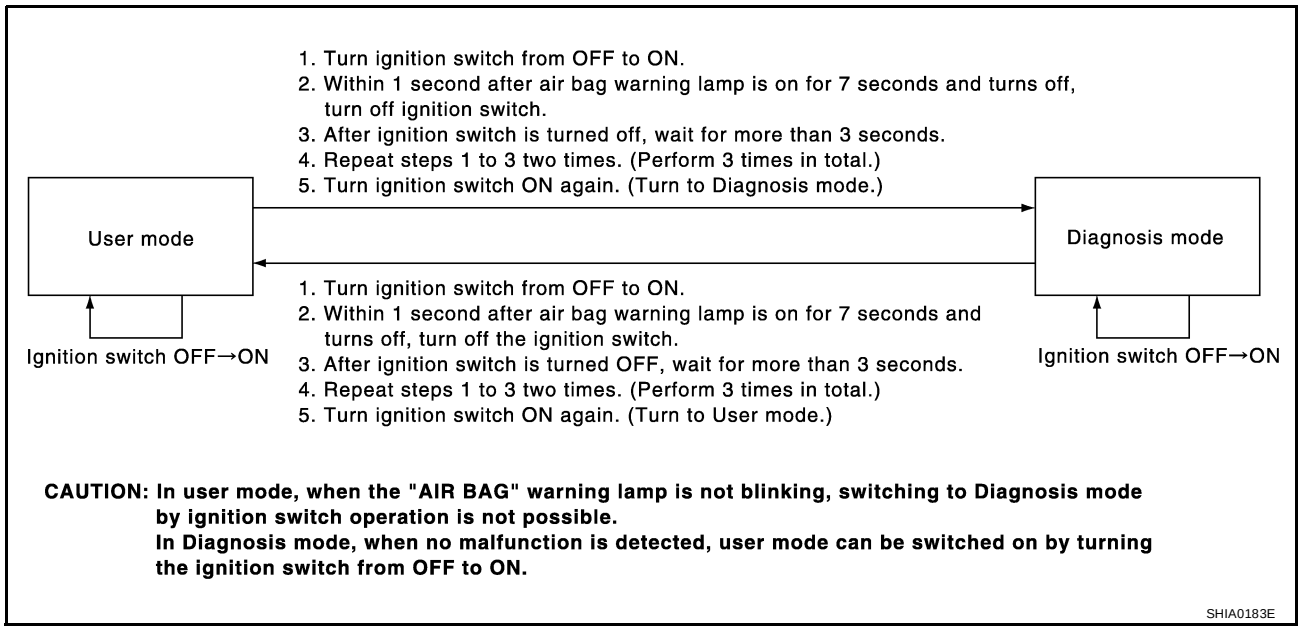

HOW TO ERASE SELF-DIAGNOSIS RESULTS

After a malfunction is repaired, turn the ignition switch OFF for at least one second, then back ON. Diagnosis mode returns to the User mode. At that time, the self-diagnostic result is cleared.

SRS Operation Check

EHS000NP

DIAGNOSTIC PROCEDURE 1

Checking Air Bag Operation by Using “AIR BAG” Warning Lamp-User Mode

1. Turn the ignition switch from OFF to ON, and check that the air bag warning lamp blinks.
2. Compare the SRS air bag warning lamp blinking pattern with the examples.

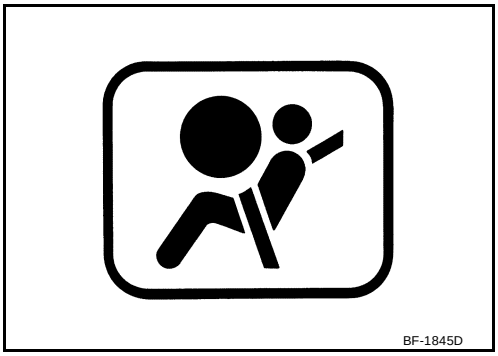

Warning lamp examples

"AIR BAG" warning lamp operation-User mode-	SRS condition	Reference item
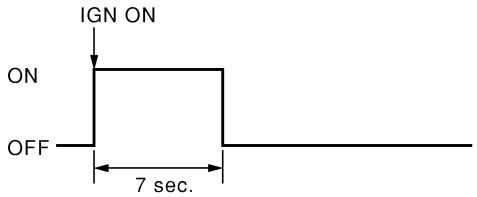 SHIA0011E	● No malfunction is detected. ● No further action is necessary.	—
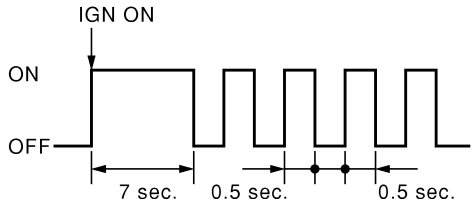 SHIA0012E	● The system is malfunctioning and need to be repaired as indicated.	Go to SRS-21, "DIAGNOSTIC PROCEDURE 2" or SRS-32, "DIAGNOSTIC PROCEDURE 6" .
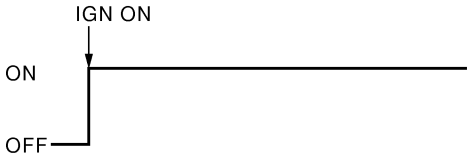 SHIA0013E	● Air bag is deployed. ● Seat belt pre-tensioner is deployed.	Go to SRS-61, "COLLISION DIAGNOSIS" .
	● Diagnosis sensor unit is malfunctioning. ● Air bag power supply circuit is malfunctioning. ● SRS air bag warning lamp circuit is malfunctioning.	Go to SRS-37, "Trouble Diagnoses: "AIR BAG" Warning Lamp Does Not Turn Off" .
 SHIA0014E	● Diagnosis sensor unit is malfunctioning. ● Air bag warning lamp circuit is malfunctioning.	Go to SRS-38, "Trouble Diagnoses: "AIR BAG" Warning Lamp Does Not Turn On" .

Trouble Diagnoses with CONSULT-II

EHS000NQ

DIAGNOSTIC PROCEDURE 2

1. Turn ignition switch OFF.
2. Connect CONSULT-II to the data link connector.

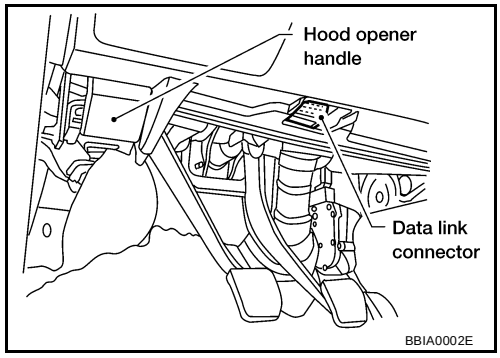

3. Turn ignition switch ON.
4. Touch “START”.

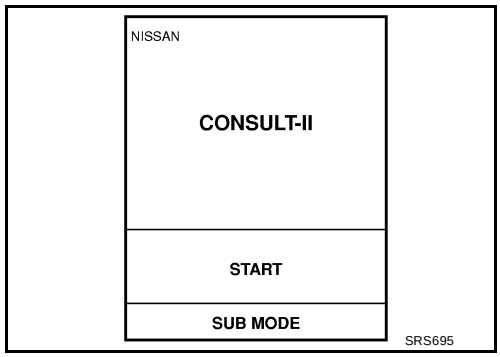

5. Touch “AIR BAG”.

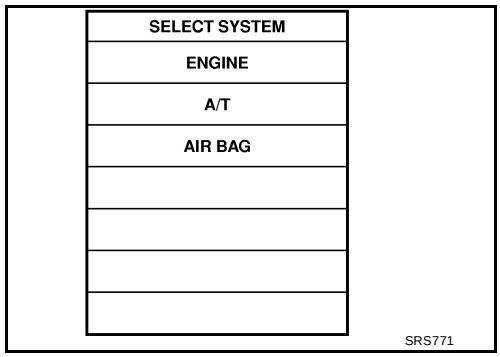

6. Touch "SELF-DIAG [CURRENT]".

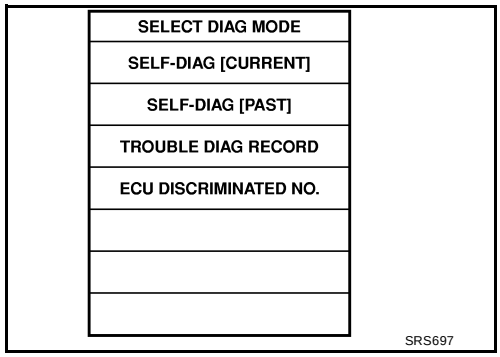

7. Diagnostic code is displayed on "SELF-DIAG [CURRENT]".

SELF-DIAG [CURRENT]	
DTC RESULTS:	
DRIVER AIR BAG MODULE [OPEN]	

SHIA0203E

If no malfunction is detected on "SELF-DIAG [CURRENT]" even though malfunction is detected in "SRS Operation Check", refer to SRS-27, "DIAGNOSTIC PROCEDURE 4 (CONTINUED FROM DIAGNOSTIC PROCEDURE 2)" , to diagnose the following cases:

- Self-diagnostic result "SELF-DIAG [PAST]" (previously stored in the memory) might not be erased after repair.
- The SRS system malfunctions intermittently.

SELF-DIAG [CURRENT]	
DTC RESULTS:	
NO DTC IS DETECTED. FURTHER TESTING MAY BE REQUIRED.	

SRS701

CONSULT-II Diagnostic Code Chart ("SELF-DIAG [CURRENT]")

Diagnostic item	Explanation		Repair order Recheck SRS at each replacement
NO DTC IS DETECTED.	When malfunction is indicated by the “AIR BAG” warning lamp in User mode.	● Low battery voltage (Less than 9V)	● Go to SRS-25, "DIAGNOSTIC PROCEDURE 3" .
		● Self-diagnostic result “SELF-DIAG [PAST]” (previously stored in the memory) might not be erased after repair. ● Intermittent malfunction has been detected in the past.	● Go to SRS-27, "DIAGNOSTIC PROCEDURE 4 (CONTINUED FROM DIAGNOSTIC PROCEDURE 2)" . ● Go to SRS-27, "DIAGNOSTIC PROCEDURE 5" .
	● No malfunction is detected.		—
DRIVER AIRBAG MODULE [OPEN]	● Driver air bag module circuit is open (including the spiral cable).		1. Visually check the wiring harness connection. 2. Replace the harness if it has visible damage. 3. Replace driver air bag module. (Before disposal, it must be deployed.) 4. Replace the spiral cable. 5. Replace the diagnosis sensor unit. 6. Replace the related harness.
DRIVER AIRBAG MODULE [VB-SHORT]	● Driver air bag module circuit is shorted to some power supply circuit (including the spiral cable).		
DRIVER AIRBAG MODULE [GND-SHORT]	● Driver air bag module circuit is shorted to ground (including the spiral cable).		
DRIVER AIRBAG MODULE [SHORT]	● Driver air bag module circuits are shorted to each other.		
ASSIST A/B MODULE [VB-SHORT]	● Front passenger air bag module circuit is shorted to some power supply circuit.		1. Visually check the wiring harness connection. 2. Replace the harness if it has visible damage. 3. Replace front passenger air bag module. (Before disposal, it must be deployed.) 4. Replace the diagnosis sensor unit. 5. Replace the related harness.
ASSIST A/B MODULE [OPEN]	● Front passenger air bag module circuit is open.		
ASSIST A/B MODULE [GND-SHORT]	● Front passenger air bag module circuit is shorted to ground.		
ASSIST A/B MODULE [SHORT]	● Front passenger air bag module circuits are shorted to each other.		

Diagnostic item	Explanation	Repair order Recheck SRS at each replacement
CRASH ZONE SEN [UNIT FAIL] CRASH ZONE SEN [COMM FAIL] CRASH ZONE SEN [UNMATCH]	● Crash zone sensor	1. Visually check the wiring harness connection. 2. Replace the harness if it has visible damage. 3. Replace the crash zone sensor. 4. Replace the diagnosis sensor unit. 5. Replace the related harness.
SIDE MODULE LH [OPEN]	● Front LH side air bag module circuit is open.	1. Visually check the wiring harness connection. 2. Replace the harness if it has visible damage. 3. Replace front LH seatback assembly (front LH side air bag module). (Before disposal, it must be deployed.) 4. Replace the diagnosis sensor unit. 5. Replace the related harness.
SIDE MODULE LH [VB-SHORT]	● Front LH side air bag module circuit is shorted to some power supply circuit.	
SIDE MODULE LH [GND-SHORT]	● Front LH side air bag module circuit is shorted to ground.	
SIDE MODULE LH [SHORT]	● Front LH side air bag module circuits are shorted to each other.	
SIDE MODULE RH [OPEN]	● Front RH side air bag module circuit is open.	1. Visually check the wiring harness connection. 2. Replace the harness if it has visible damage. 3. Replace front RH seatback assembly (front RH side air bag module). (Before disposal, it must be deployed.) 4. Replace the diagnosis sensor unit. 5. Replace the related harness.
SIDE MODULE RH [VB-SHORT]	● Front RH side air bag module circuit is shorted to some power supply circuit.	
SIDE MODULE RH [GND-SHORT]	● Front RH side air bag module circuit is shorted to ground.	
SIDE MODULE RH [SHORT]	● Front RH side air bag module circuits are shorted to each other.	
SATELLITE SENS LH [UNIT FAIL] SATELLITE SENS LH [COMM FAIL] SATELLITE SENS LH [UNMATCH]	● LH side air bag (Satellite) sensor	1. Visually check the wiring harness connection. 2. Replace the harness if it has visible damage. 3. Replace the LH side air bag (satellite) sensor. 4. Replace the diagnosis sensor unit. 5. Replace the related harness.
SATELLITE SENS RH [UNIT FAIL] SATELLITE SENS RH [COMM FAIL] SATELLITE SENS RH [UNMATCH]	● RH side air bag (Satellite) sensor	1. Visually check the wiring harness connection. 2. Replace the harness if it has visible damage. 3. Replace the RH side air bag (satellite) sensor. 4. Replace the diagnosis sensor unit. 5. Replace the related harness.

Diagnostic item	Explanation	Repair order Recheck SRS at each replacement
PRE-TEN FRONT LH [OPEN]	● The circuit for front LH pre-tensioner is open.	1. Visually check the wiring harness connections. 2. Replace the harness if it has visible damage. 3. Replace front LH seat belt pre-tensioner. (Before disposal, it must be deployed.) 4. Replace the diagnosis sensor unit. 5. Replace the related harness.
PRE-TEN FRONT LH [VB-SHORT]	● The circuit for front LH pre-tensioner is shorted to some power supply circuit.	
PRE-TEN FRONT LH [GND-SHORT]	● The circuit for front LH pre-tensioner is shorted to ground.	
PRE-TEN FRONT LH [SHORT]	The circuits for the front LH pre-tensioner are shorted to each other.	
PRE-TEN FRONT RH [OPEN]	● The circuit for front RH pre-tensioner is shorted to some power supply circuit.	1. Visually check the wiring harness connections. 2. Replace the harness if it has visible damage. 3. Replace front RH seat belt pre-tensioner. (Before disposal, it must be deployed.) 4. Replace the diagnosis sensor unit. 5. Replace the related harness.
PRE-TEN FRONT RH [VB-SHORT]	● The circuit for front RH pre-tensioner is shorted to some power supply circuit.	
PRE-TEN FRONT RH [GND-SHORT]	● The circuit for front RH pre-tensioner is shorted to ground.	
PRE-TEN FRONT RH [SHORT]	The circuits for the front RH pre-tensioner are shorted to each other.	
CURTAIN MODULE LH [OPEN]	● The LH side curtain air bag module circuit is open.	1. Visually check the wiring harness connection. 2. Replace the harness if it has visible damage. 3. Replace LH side curtain air bag module. (Before disposal, it must be deployed.) 4. Replace the diagnosis sensor unit. 5. Replace the related harness.
CURTAIN MODULE LH [VB-SHORT]	● The LH side curtain air bag module circuit is shorted to some power supply circuits.	
CURTAIN MODULE LH [GND-SHORT]	● The LH side curtain air bag module circuit is shorted to ground.	
CURTAIN MODULE RH [OPEN]	● The RH side curtain air bag module circuit is open.	1. Visually check the wiring harness connection. 2. Replace the harness if it has visible damage. 3. Replace RH side curtain air bag module. (Before disposal, it must be deployed.) 4. Replace the diagnosis sensor unit. 5. Replace the related harness.
CURTAIN MODULE RH [VB-SHORT]	● The RH side curtain air bag module circuit is shorted to some power supply circuit.	
CURTAIN MODULE RH [GND-SHORT]	● The RH side curtain air bag module circuit is shorted to ground.	
CONTROL UNIT	● Diagnosis sensor unit is malfunctioning.	1. Visually check the wiring harness connection. 2. Replace the diagnosis sensor unit.

NOTE:

- Follow the procedures in numerical order when repairing malfunctioning parts. Confirm whether malfunction is eliminated using air bag warning lamp or CONSULT-II each time repair is finished. If malfunction is still observed, proceed to the next step. When malfunction is eliminated, further repair work is not required.

DIAGNOSTIC PROCEDURE 3

Final checking after repairing SRS by using CONSULT-II — Diagnosis mode

1. After repairing SRS, connect both battery cables.
2. Connect CONSULT-II to data link connector.
3. Turn ignition switch “ON”.

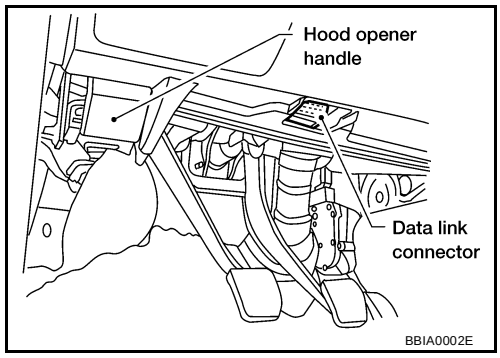

4. Touch “START”.

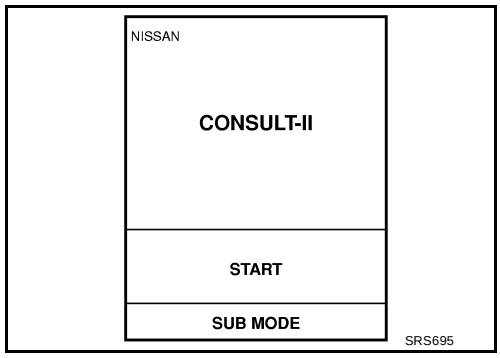

5. Touch “AIR BAG”.

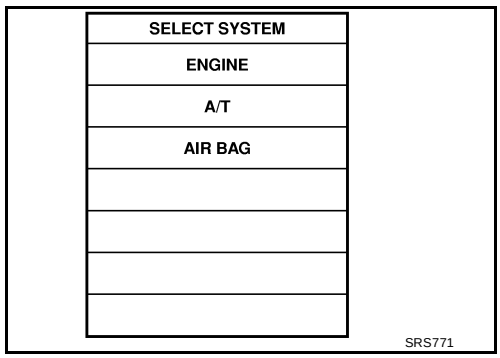

6. Touch “SELF-DIAG [CURRENT]”.

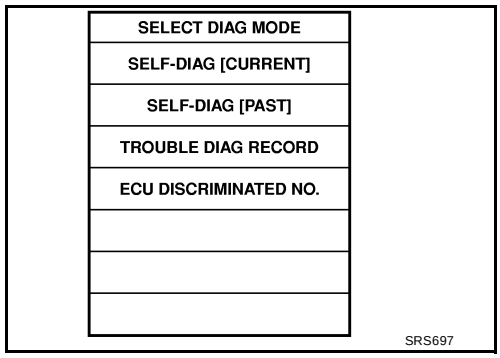

7. If no malfunction is detected on “SELF-DIAG [CURRENT]”, repair of SRS is completed. Go to step 8.
   If any malfunction is detected on “SELF-DIAG [CURRENT]”, the malfunctioning part is not repaired completely or another malfunctioning part is detected. Go to SRS-21, "DIAGNOSTIC PROCEDURE 2" , and repair malfunctioning part completely.

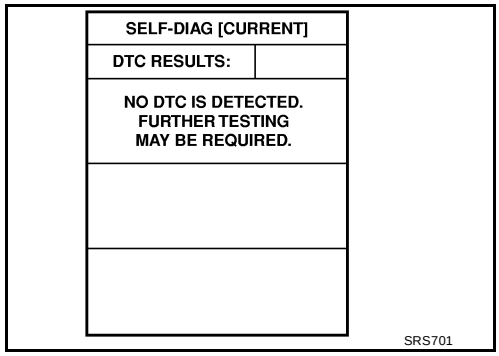

8. Touch “ERASE”.
   NOTE:
   Touch “ERASE” to clear the memory of the malfunction (“SELF-DIAG [PAST]”).
   If the memory of the malfunction in “SELF-DIAG [PAST]” is not erased, the User mode shows the system malfunction by the operation of the warning lamp even if the malfunction is repaired completely.

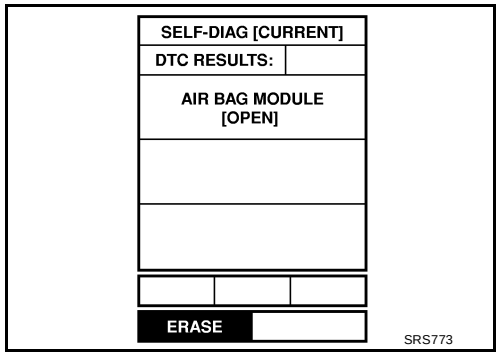

9. Touch “BACK” key of CONSULT-II to “SELECT DIAG MODE” screen. Touch “SELF-DIAG [PAST]”.

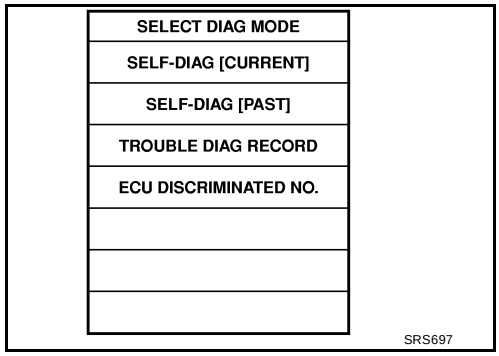

10. Check that no malfunction is detected on “SELF-DIAG [PAST]”.
11. Touch “BACK” key of CONSULT-II until “SELECT SYSTEM” appears in order to return to User mode from Diagnosis mode.
12. Turn ignition switch OFF then turn off and disconnect CONSULT-II.
13. Go to SRS-19, "Checking Air Bag Operation by Using “AIR BAG” Warning Lamp-User Mode" .

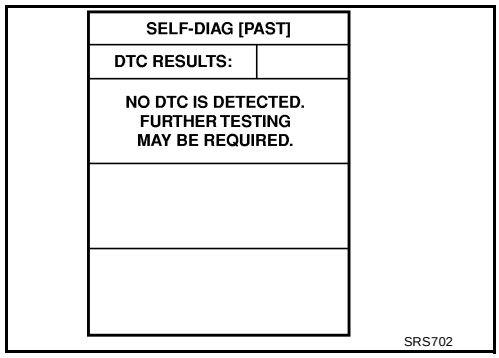

DIAGNOSTIC PROCEDURE 4 (CONTINUED FROM DIAGNOSTIC PROCEDURE 2)

Inspecting SRS malfunctioning record

1. CONSIDER POSSIBILITY OF NOT ERASING SELF-DIAGNOSTIC RESULT AFTER REPAIRING

Is it the first time for maintenance of SRS?

Yes or No

Yes >> Go to SRS-21, "DIAGNOSTIC PROCEDURE 2" .

No >> Self-diagnostic result “SELF-DIAG [PAST]” (previously stored in the memory) might not be erased after repair. Go to SRS-25, "DIAGNOSTIC PROCEDURE 3" .

DIAGNOSTIC PROCEDURE 5

Inspecting SRS intermittent malfunction by using CONSULT-II — Diagnosis mode

1. Turn ignition switch OFF.
2. Connect “CONSULT-II” to data link connector.

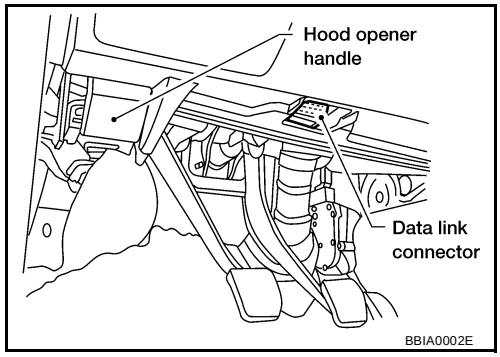

3. Turn ignition switch ON.
4. Touch “START”.

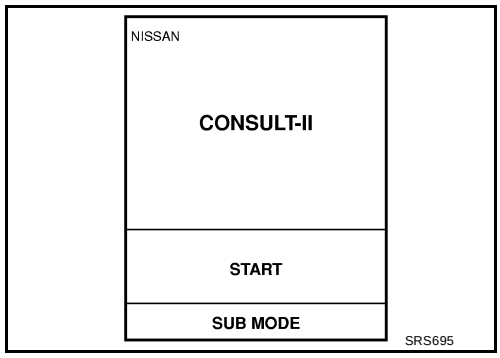

5. Touch “AIR BAG”.

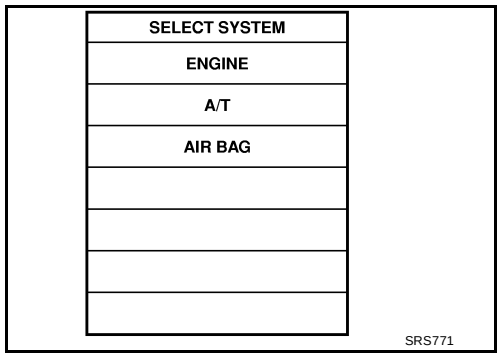

6. Touch “SELF-DIAG [PAST]”.

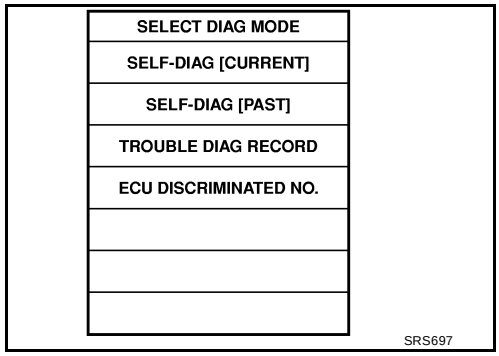

7. If diagnostic codes are displayed on “SELF-DIAG [PAST]”, go to step 10.

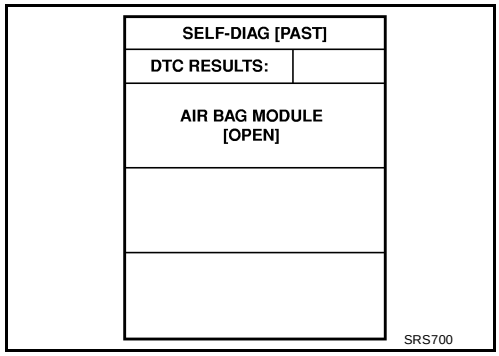

If no malfunction is detected on “SELF-DIAG [PAST]”, touch “BACK” and go back to “SELECT DIAG MODE”.

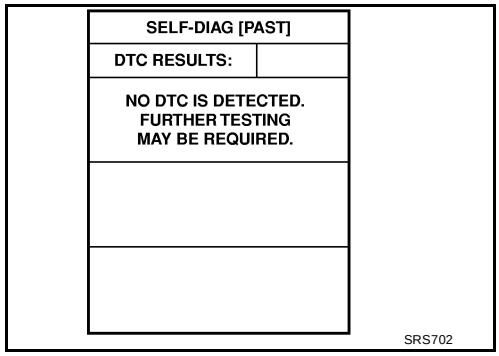

8. Touch “TROUBLE DIAG RECORD”.

NOTE:
With “TROUBLE DIAG RECORD”, diagnosis results previously erased by a reset operation can be displayed.

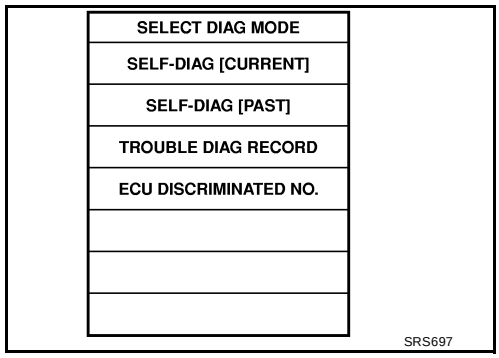

9. Diagnostic code is displayed on “TROUBLE DIAG RECORD”.
10. Touch “PRINT”.
11. Compare diagnostic codes to SRS-29, "CONSULT-II Diagnostic Code Chart ("SELF-DIAG [PAST]" or "TROUBLE DIAG RECORD")" .
12. Touch “BACK” key of CONSULT-II until “SELECT SYSTEM” appears.
13. Turn ignition switch OFF, then turn off and disconnect CONSULT-II, and both battery cables.

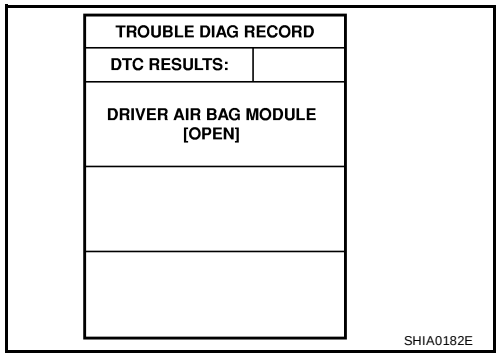

14. Repair the system as outlined by the “Repair order” in “Intermittent Malfunction Diagnostic Code Chart”, that corresponds to the self-diagnostic result. For replacement procedure of component parts, refer to the Removal and Installation procedure for the appropriate component.
15. Go to SRS-25, "DIAGNOSTIC PROCEDURE 3" , for final checking.

CONSULT-II Diagnostic Code Chart ("SELF-DIAG [PAST]" or "TROUBLE DIAG RECORD")

Diagnostic item	Explanation		Repair order Recheck SRS at each replacement
NO DTC IS DETECTED.	When malfunction is indicated by the “AIR BAG” warning lamp in User mode.	● Low battery voltage (Less than 9V)	● Go to SRS-25, "DIAGNOSTIC PROCEDURE 3" .
		● Self-diagnostic result “SELF-DIAG [PAST]” (previously stored in the memory) might not be erased after repair. ● Intermittent malfunction has been detected in the past.	● Go to SRS-27, "DIAGNOSTIC PROCEDURE 4 (CONTINUED FROM DIAGNOSTIC PROCEDURE 2)" . ● Go to SRS-27, "DIAGNOSTIC PROCEDURE 5" .
	● No malfunction is detected.		—
DRIVER AIRBAG MODULE [OPEN]	● Driver air bag module circuit is open (including the spiral cable).		1. Visually check the wiring harness connection. 2. Replace the harness if it has visible damage. 3. Replace driver air bag module. (Before disposal, it must be deployed.) 4. Replace the spiral cable. 5. Replace the diagnosis sensor unit. 6. Replace the related harness.
DRIVER AIRBAG MODULE [VB-SHORT]	● Driver air bag module circuit is shorted to some power supply circuit (including the spiral cable).		
DRIVER AIRBAG MODULE [GND-SHORT]	● Driver air bag module circuit is shorted to ground (including the spiral cable).		
DRIVER AIRBAG MODULE [SHORT]	● Driver air bag module circuits are shorted to each other.		
ASSIST A/B MODULE [VB-SHORT]	● Front passenger air bag module circuit is shorted to some power supply circuit.		1. Visually check the wiring harness connection. 2. Replace the harness if it has visible damage. 3. Replace front passenger air bag module. (Before disposal, it must be deployed.) 4. Replace the diagnosis sensor unit. 5. Replace the related harness.
ASSIST A/B MODULE [OPEN]	● Front passenger air bag module circuit is open.		
ASSIST A/B MODULE [GND-SHORT]	● Front passenger air bag module circuit is shorted to ground.		
ASSIST A/B MODULE [SHORT]	● Front passenger air bag module circuits are shorted to each other.		
CRASH ZONE SEN [UNIT FAIL] CRASH ZONE SEN [COMM FAIL] CRASH ZONE SEN [UNMATCH]	● Crash zone sensor		1. Visually check the wiring harness connection. 2. Replace the harness if it has visible damage. 3. Replace the crash zone sensor. 4. Replace the diagnosis sensor unit. 5. Replace the related harness.
SIDE MODULE LH [OPEN]	● Front LH side air bag module circuit is open.		1. Visually check the wiring harness connection. 2. Replace the harness if it has visible damage. 3. Replace front LH seatback assembly (front LH side air bag module). (Before disposal, it must be deployed.) 4. Replace the diagnosis sensor unit. 5. Replace the related harness.
SIDE MODULE LH [VB-SHORT]	● Front LH side air bag module circuit is shorted to some power supply circuit.		
SIDE MODULE LH [GND-SHORT]	● Front LH side air bag module circuit is shorted to ground.		
SIDE MODULE LH [SHORT]	● Front LH side air bag module circuits are shorted to each other.		

Diagnostic item	Explanation	Repair order Recheck SRS at each replacement
SIDE MODULE RH [OPEN]	● Front RH side air bag module circuit is open.	1. Visually check the wiring harness connection. 2. Replace the harness if it has visible damage. 3. Replace front RH seatback assembly (front RH side air bag module). (Before disposal, it must be deployed.) 4. Replace the diagnosis sensor unit. 5. Replace the related harness.
SIDE MODULE RH [VB-SHORT]	● Front RH side air bag module circuit is shorted to some power supply circuit.	
SIDE MODULE RH [GND-SHORT]	● Front RH side air bag module circuit is shorted to ground.	
SIDE MODULE RH [SHORT]	● Front RH side air bag module circuits are shorted to each other.	
SATELLITE SENS LH [UNIT FAIL] SATELLITE SENS LH [COMM FAIL] SATELLITE SENS LH [UNMATCH]	● LH side air bag (Satellite) sensor	1. Visually check the wiring harness connection. 2. Replace the harness if it has visible damage. 3. Replace the LH side air bag (satellite) sensor. 4. Replace the diagnosis sensor unit. 5. Replace the related harness.
SATELLITE SENS RH [UNIT FAIL] SATELLITE SENS RH [COMM FAIL] SATELLITE SENS RH [UNMATCH]	● RH side air bag (Satellite) sensor	1. Visually check the wiring harness connection. 2. Replace the harness if it has visible damage. 3. Replace the RH side air bag (satellite) sensor. 4. Replace the diagnosis sensor unit. 5. Replace the related harness.
PRE-TEN FRONT LH [OPEN]	● The circuit for front LH pre-tensioner is open.	1. Visually check the wiring harness connections. 2. Replace the harness if it has visible damage. 3. Replace front LH seat belt pre-tensioner. (Before disposal, it must be deployed.) 4. Replace the diagnosis sensor unit. 5. Replace the related harness.
PRE-TEN FRONT LH [VB-SHORT]	● The circuit for front LH pre-tensioner is shorted to some power supply circuit.	
PRE-TEN FRONT LH [GND-SHORT]	● The circuit for front LH pre-tensioner is shorted to ground.	
PRE-TEN FRONT RH [OPEN]	● The circuit for front RH pre-tensioner is shorted to some power supply circuit.	1. Visually check the wiring harness connections. 2. Replace the harness if it has visible damage. 3. Replace front RH seat belt pre-tensioner. (Before disposal, it must be deployed.) 4. Replace the diagnosis sensor unit. 5. Replace the related harness.
PRE-TEN FRONT RH [VB-SHORT]	● The circuit for front RH pre-tensioner is shorted to some power supply circuit.	
PRE-TEN FRONT RH [GND-SHORT]	● The circuit for front RH pre-tensioner is shorted to ground.	

Diagnostic item	Explanation	Repair order Recheck SRS at each replacement
CURTAIN MODULE LH [OPEN]	● The LH side curtain air bag module circuit is open.	1. Visually check the wiring harness connection. 2. Replace the harness if it has visible damage. 3. Replace LH side curtain air bag module. (Before disposal, it must be deployed.) 4. Replace the diagnosis sensor unit. 5. Replace the related harness.
CURTAIN MODULE LH [VB-SHORT]	● The LH side curtain air bag module circuit is shorted to some power supply circuits.	
CURTAIN MODULE LH [GND-SHORT]	● The LH side curtain air bag module circuit is shorted to ground.	
CURTAIN MODULE RH [OPEN]	● The RH side curtain air bag module circuit is open.	1. Visually check the wiring harness connection. 2. Replace the harness if it has visible damage. 3. Replace RH side curtain air bag module. (Before disposal, it must be deployed.) 4. Replace the diagnosis sensor unit. 5. Replace the related harness.
CURTAIN MODULE RH [VB-SHORT]	● The RH side curtain air bag module circuit is shorted to some power supply circuit.	
CURTAIN MODULE RH [GND-SHORT]	● The RH side curtain air bag module circuit is shorted to ground.	
CONTROL UNIT	● Diagnosis sensor unit is malfunctioning.	1. Visually check the wiring harness connection. 2. Replace the diagnosis sensor unit.

Trouble diagnoses without CONSULT-II.

EHS000NR

DIAGNOSTIC PROCEDURE 6

Inspecting SRS malfunctioning parts by using "AIR BAG" warning lamp—Diagnosis mode

NOTE:

SRS will not enter Diagnosis mode if no malfunction is detected in User mode.

1. Turn ignition switch ON.
2. After “AIR BAG” warning lamp lights for 7 seconds, turn ignition switch OFF within 1 second.
3. Wait more than 3 seconds.
4. Repeat steps 1 to 3 two times.
5. Turn ignition switch ON.

SRS is now in Diagnosis mode.
"AIR BAG" warning lamp operates in Diagnosis mode as follows:

WARNING LAMP FLASH CODE CHART

<Diagnosis results (previously stored in the memory) might not be erased after repair or intermittent malfunctions have been detected in the past.>

Flash pattern	Repair order
a through b are repeated. 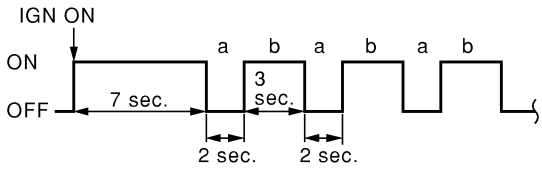 	1. Go to DIAGNOSTIC PROCEDURES 2 and 3.

SHIA0026E

<Driver air bag module>

Flash pattern	Repair order
a through d are repeated. d: Two flashes indicate malfunctioning driver air bag module circuits. 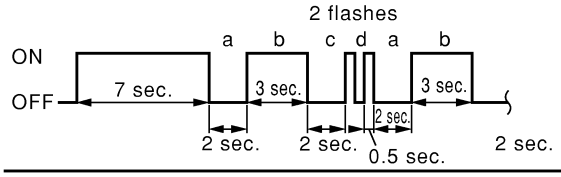 	1. Visually check the wiring harness connection. 2. Replace the harness if it has visible damage. 3. Replace the spiral cable. 4. Replace driver air bag module. (Before disposal, it must be deployed.) 5. Replace the diagnosis sensor unit. 6. Replace the related harness.

LHIA0023E

<Diagnosis sensor unit>

Flash pattern	Repair order
a through d are repeated. d: Seven flashes indicate malfunctioning diagnosis sensor unit circuit. 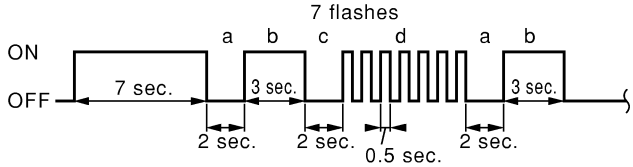 	1. Visually check the wiring harness connections. 2. Replace the harness if it has visible damage. 3. Replace the diagnosis sensor unit. 4. Replace the related harness.

SHIA0028E

<Front passenger air bag module>

Flash pattern	Repair order
a through d are repeated. d: Eight flashes indicate malfunctioning front passenger air bag module circuit. 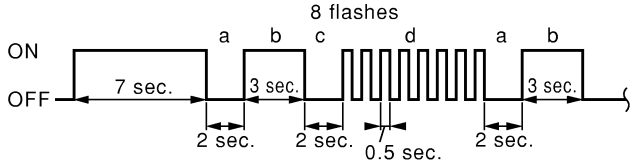 	1. Visually check the wiring harness connection. 2. Replace the harness if it has visible damage. 3. Replace front passenger air bag module. (Before disposal, it must be deployed.) 4. Replace the diagnosis sensor unit. 5. Replace the related harness.

SHIA0029E

<Crash zone sensor>

Flash pattern	Repair order
a through d are repeated. d: Six flashes indicate malfunctioning crash zone sensor circuit. 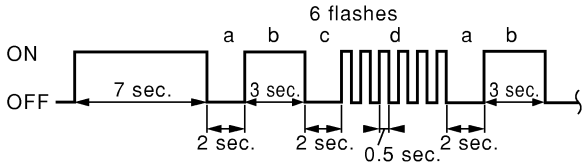 	1. Visually check the wiring harness connection. 2. Replace the harness if it has visible damage. 3. Replace the crash zone sensor. 4. Replace the diagnosis sensor unit. 5. Replace the related harness.

SHIA0083E

<Front RH seat belt pre-tensioner>

Flash pattern	Repair order
a through d are repeated. d: One flash indicates malfunctioning front RH seat belt pre-tensioner circuit. 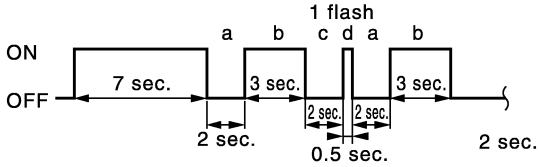 	1. Visually check the wiring harness connections. 2. Replace the harness if it has visible damage. 3. Replace front RH seat belt pre-tensioner. (Before disposal, it must be activated.) 4. Replace the diagnosis sensor unit. 5. Replace the related harness.

SHIA0030E

<Front LH seat belt pre-tensioner>

Flash pattern	Repair order
a through d are repeated. d: Three flashes indicate malfunctioning front LH seat belt pre-tensioner circuit. 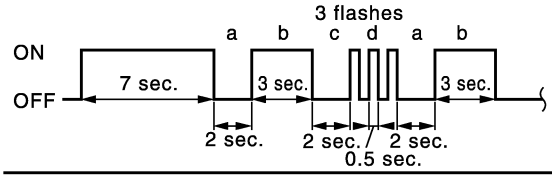 	1. Visually check the wiring harness connections. 2. Replace the harness if it has visible damage. 3. Replace front LH seat belt pre-tensioner. (Before disposal, it must be activated.) 4. Replace the diagnosis sensor unit. 5. Replace the related harness.

SHIA0031E

<RH side air bag (Satellite) sensor>

Flash pattern	Repair order
a through f are repeated. f: Three flashes indicate malfunctioning RH side air bag (Satellite) sensor circuit. 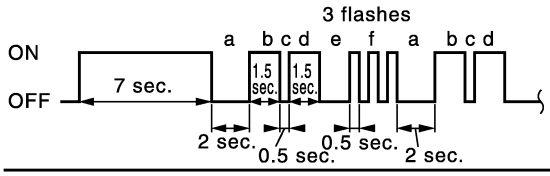 	1. Visually check the wiring harness connection. 2. Replace the harness if it has visible damage. 3. Replace the RH side air bag (Satellite) sensor. 4. Replace the diagnosis sensor unit. 5. Replace the related harness.

SHIA0032E

<LH side air bag (Satellite) sensor>

Flash pattern	Repair order
a through f are repeated. f: Four flashes indicate malfunctioning LH side air bag (Satellite) sensor. 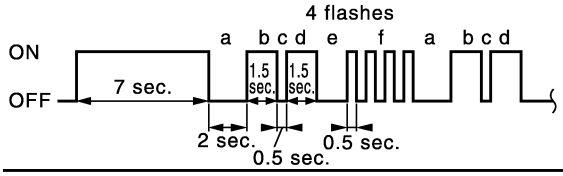 	1. Visually check the wiring harness connection. 2. Replace the harness if it has visible damage. 3. Replace the LH side air bag (Satellite) sensor. 4. Replace the diagnosis sensor unit. 5. Replace the related harness.

SHIA0033E

<Front RH side air bag module>

Flash pattern	Repair order
a through f are repeated. f: One flash indicate malfunctioning front RH side air bag module circuit. 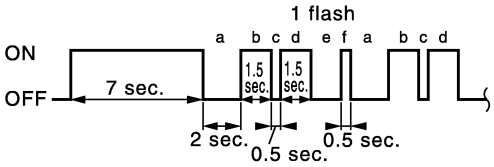 	1. Visually check the wiring harness connection. 2. Replace the harness if it has visible damage. 3. Replace front RH seat back assembly. (Before disposal, side air bag module must be deployed.) 4. Replace the diagnosis sensor unit. 5. Replace the related harness.

WHIA0064E

<Front LH side air bag module>

Flash pattern	Repair order
a through f are repeated. f: Two flashes indicate malfunctioning front LH side air bag module circuit. 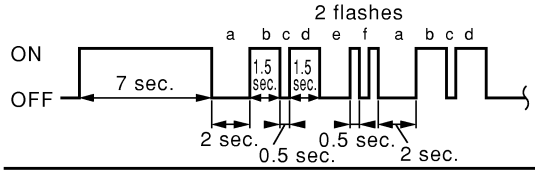 	1. Visually check the wiring harness connection. 2. Replace the harness if it has visible damage. 3. Replace front LH seat back assembly. (Before disposal, side air bag module must be deployed.) 4. Replace the diagnosis sensor unit. 5. Replace the related harness.

WHIA0065E

<RH side curtain air bag module>

Flash pattern	Repair order
a through f are repeated. f: Five flashes indicate malfunctioning RH side curtain air bag module circuit. 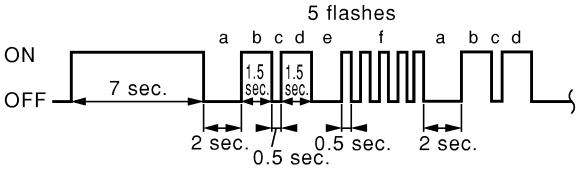 	1. Visually check the wiring harness connection. 2. Replace the harness if it has visible damage. 3. Replace RH side curtain air bag module. (Before disposal, it must be deployed.) 4. Replace the diagnosis sensor unit. 5. Replace the related harness.

SHIA0084E

<LH side curtain air bag module>	
Flash pattern	Repair order
a through f are repeated. f: Six flashes indicate malfunctioning LH side curtain air bag module circuit. 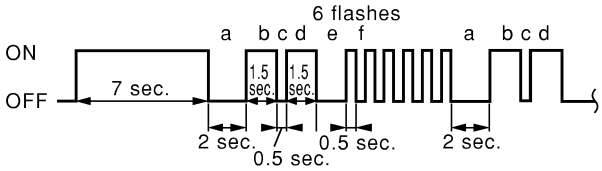 	1. Visually check the wiring harness connection. 2. Replace the harness if it has visible damage. 3. Replace LH side curtain air bag module. (Before disposal, it must be deployed.) 4. Replace the diagnosis sensor unit. 5. Replace the related harness.

SHIA0086E

Trouble Diagnoses: “AIR BAG” Warning Lamp Does Not Turn Off

EHS000NS

DIAGNOSTIC PROCEDURE 6

1. SEE THE DEPLOYMENT OF AIR BAG MODULE

Is air bag module deployed?

Yes or No

Yes >> Refer to SRS-61, "COLLISION DIAGNOSIS" .
No >> GO TO 2.

2. CHECK THE AIR BAG FUSE

Check 10A fuse [No. 13, located in the fuse block (J/B)].
Refer to PG-3, "POWER SUPPLY ROUTING CIRCUIT" .

OK or NG

OK >> GO TO 4.
NG >> GO TO 3.

3. CHECK AIR BAG FUSE AGAIN

Replace “AIR BAG” fuse and turn ignition switch ON.

Does the “AIR BAG” fuse blow again?

Yes >> Repair main harness.
No >> **INSPECTION END**.

4. CHECK DIAGNOSIS SENSOR UNIT

Connect CONSULT-II and touch “START”.

- Is “AIR BAG” displayed on CONSULT-II?

Yes or No

Yes >> GO TO 5.
No >> Visually check the wiring harness connection of diagnosis sensor unit. If the harness connection check result is OK, replace diagnosis sensor unit.

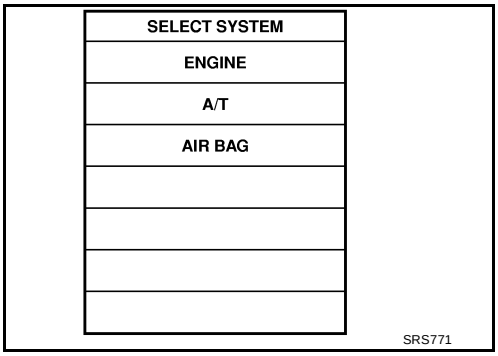

5. CHECK HARNESS CONNECTION

Is harness connection between warning lamp and diagnosis sensor unit OK?

OK or NG

OK >> Replace diagnosis sensor unit.
NG >> Connect “AIR BAG” warning lamp and diagnosis sensor unit connector properly. If “AIR BAG” warning lamp still does not go off, replace harness.

Trouble Diagnoses: “AIR BAG” Warning Lamp Does Not Turn On

EHS000NT

DIAGNOSTIC PROCEDURE 7

1. CHECK “METER” FUSE

Check the 10A meter fuse [No. 14, located in the fuse block (J/B)] .
Refer to PG-3, "POWER SUPPLY ROUTING CIRCUIT" .

OK or NG

OK >> GO TO 3.
NG >> GO TO 2.

2. CHECK “METER” FUSE AGAIN

Replace 10A meter fuse [No. 14, located in the fuse block (J/B)] and turn ignition switch ON.

Does the meter fuse blow again?

Yes >> Repair the related harness.
No >> **INSPECTION END.**

3. CHECK HARNESS CONNECTION BETWEEN DIAGNOSIS SENSOR UNIT AND COMBINATION METER

Disconnect diagnosis sensor unit connector and turn ignition switch ON.

- Does “AIR BAG” warning lamp turn on?

Yes or No

Yes >> Replace diagnosis sensor unit.
No >> Check the ground circuit of “AIR BAG” warning lamp.

DRIVER AIR BAG MODULE

PFP:K8510

Removal and Installation

EHS000M4

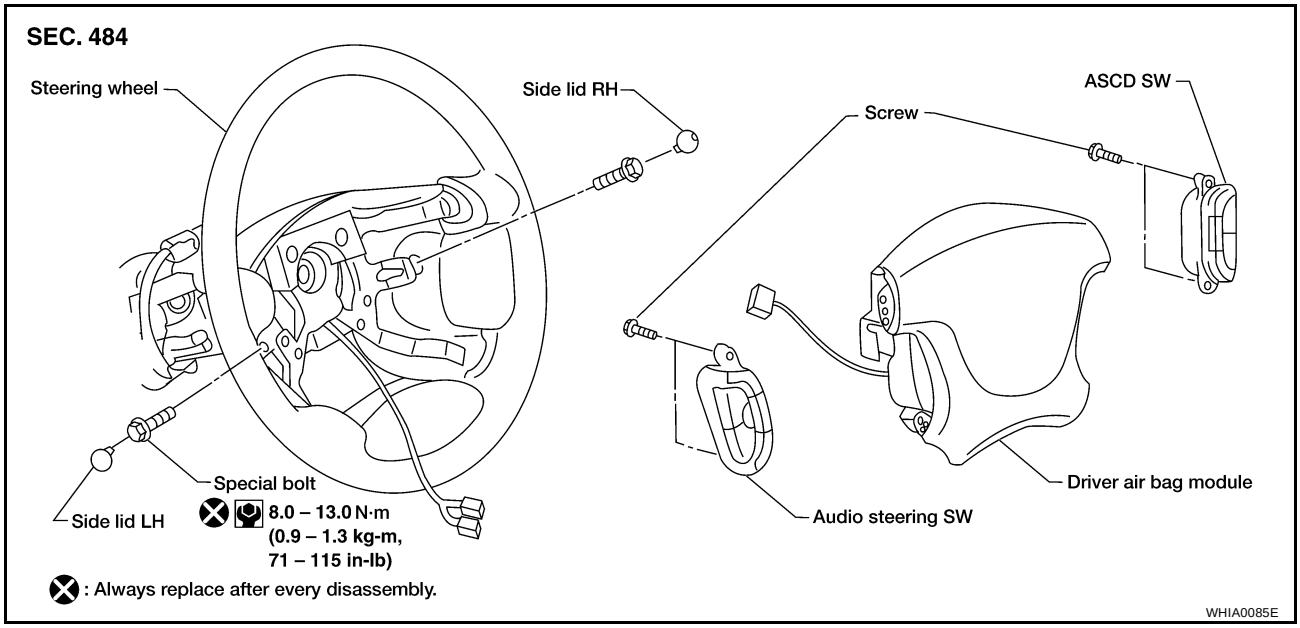

REMOVAL

CAUTION:

- **Do not attempt to repair or replace damaged direct-connect driver air bag module connectors. If a direct-connect harness connector is damaged, the spiral cable must be replaced.**
- **Before servicing SRS, turn the ignition switch off, disconnect both battery cables and wait at least 3 minutes.**
- **Always work from the side of driver air bag module.**

1. Remove the side lids.
2. Remove the right and left side special hex head bolts.

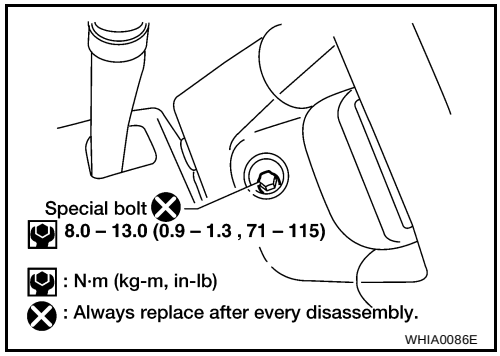

3. Disconnect the steering wheel switches sub-harness connector.
4. Disconnect the air bag harness connectors, and remove the air bag module.
   - For removal/installation of the direct-connect SRS connectors, refer to SRS-7, "Direct-connect SRS Component Connectors" .

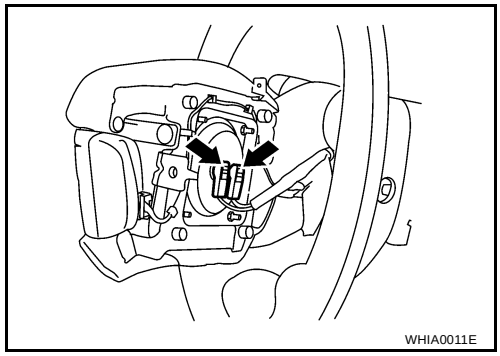

5. Remove the steering switch from the air bag module.

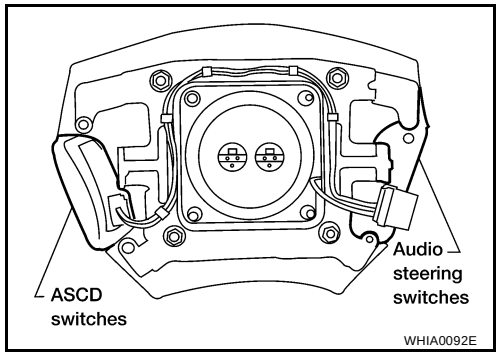

CAUTION:

- **Always work from the side of driver air bag module.**
- **Always place driver air bag module with pad side facing upward.**
- **Do not insert any foreign objects (screwdriver, etc.) into driver air bag module.**
- **Do not attempt to disassemble driver air bag module.**
- **Do not use old bolts after removal; replace with new bolts.**

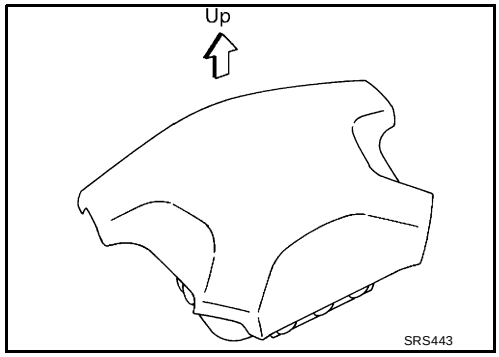

- **Do not expose the driver air bag module to temperatures exceeding 90°C (194°F).**
- **Replace driver air bag module if it has been dropped or sustained an impact.**
- **Do not allow oil, grease or water to come in contact with the front passenger air bag module.**

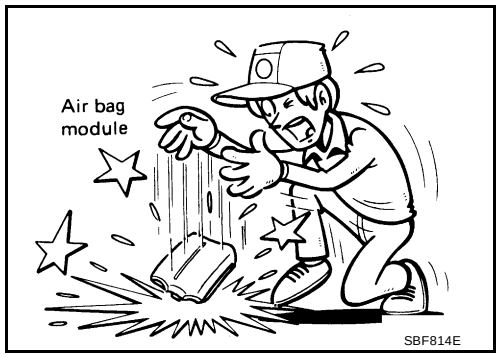

INSTALLATION

To install, reverse the removal procedure.

- For removal/installation of the direct-connect SRS connectors, refer to SRS-7, "Direct-connect SRS Component Connectors" .
- For installing the air bag module, tighten the special bolts with the center of the horn pad pressed to make the contacts (RH/LH) ON.
- After the work is completed, perform self-diagnosis to check that no malfunction is detected. Refer to SRS-19, "SRS Operation Check" .

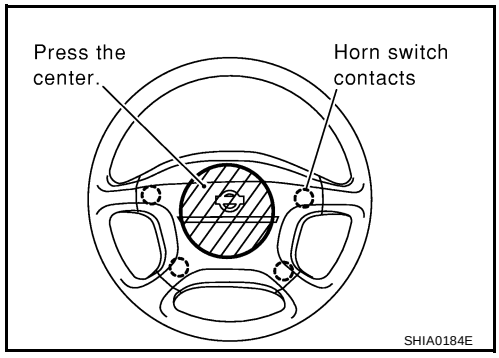

SPIRAL CABLE

PFP:25554

Removal and Installation

EHS000M5

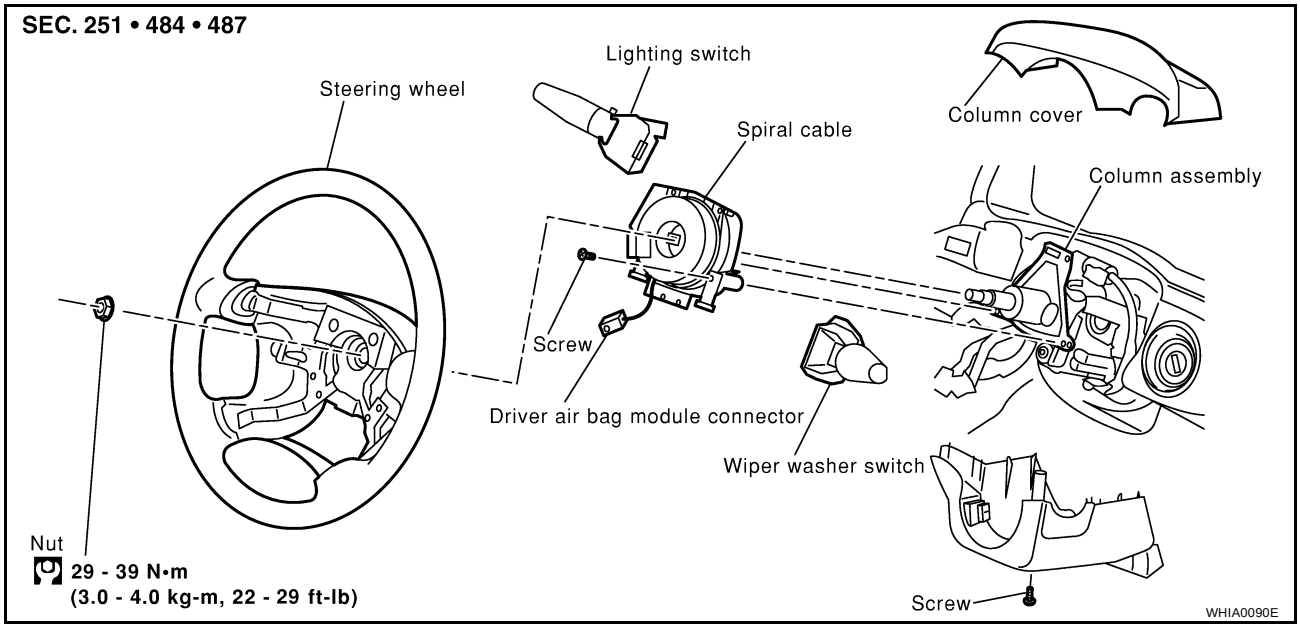

REMOVAL

CAUTION:

- **Before servicing SRS, turn the ignition switch off, disconnect both battery cables and wait at least 3 minutes.**

1. Remove driver air bag module. Refer to SRS-39, "Removal and Installation" .
2. Set the steering wheel in the neutral position.
3. Disconnect the horn switch connector.
4. Remove the column cover. Refer to IP-10, "INSTRUMENT PANEL ASSEMBLY" .
5. Disconnect the spiral cable connector.

   CAUTION:

   Do not tap or bump the steering wheel.
6. Remove steering wheel with steering wheel puller. Be careful not to over-tighten puller on steering wheel.

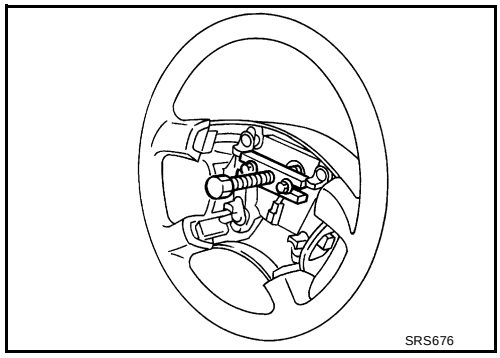

7. Remove the spiral cable fixing screws, remove the spiral cable.

   CAUTION:

   - **Do not attempt to disassemble spiral cable.**
   - **Do not apply lubricant to the spiral cable.**
8. Remove the wiper washer switch and lighting switch from the spiral cable.

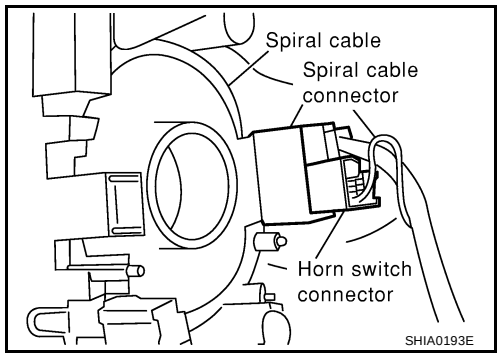

CAUTION:

- **The spiral cable may snap due to steering operation if the cable is installed in an improper position.**
- **Also, with the steering linkage disconnected the cable may snap by turning the steering wheel beyond the limited number of turns. The spiral cable can be turned counterclockwise about 2.5 turns from the right end position.**

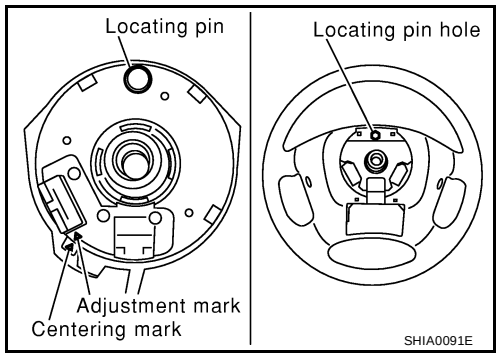

INSTALLATION

To install, reverse the removal procedure.

- After the work is completed, perform self-diagnosis to check that no malfunction is detected. Refer to SRS-19, "SRS Operation Check" .

FRONT PASSENGER AIR BAG MODULE

PFP:K8515

Removal and Installation

EHS000M6

The passenger air bag module originally installed in the vehicle uses direct-connect style harness connectors. Service replacement passenger air bag modules use tab-locking style harness connectors. If the passenger air bag module is replaced or if the direct-connect harness connectors are damaged, the vehicle wiring harness must be modified to allow connection of the service replacement passenger air bag module. Refer to SRS-44, "WIRING HARNESS MODIFICATION" for wiring harness modification procedure.

REMOVAL

CAUTION:

- **Do not attempt to repair or replace damaged direct-connect front passenger air bag module connectors. If a direct-connect harness connector is damaged, the front passenger air bag must be replaced and the wiring harness modified.**
- **Before servicing SRS, turn the ignition switch off, disconnect both battery cables and wait at least 3 minutes.**
- **Always work from the side of or under front passenger air bag module.**

1. Remove the glove box. Refer to IP-15, "Glove Box" .
2. Remove cluster lid C. Refer to IP-12, "Cluster Lid C" .
3. Remove cluster lid D. Refer to IP-13, "Cluster Lid D" .
4. Remove the side ventilator grille RH. Refer to ATC-118, "Side Ventilator Grille RH" (auto A/C) or MTC-78, "Side Ventilator Grille RH" (manual A/C).
5. Remove screws retaining instrument panel pad assembly.
6. Remove hex head bolt (through glove box opening) retaining front passenger air bag module to instrument panel crossmember.
7. Remove instrument panel pad and front passenger air bag module assembly from opening in instrument panel. Rest air bag module on the front edge of the instrument panel opening (crossmember) taking care to not allow module to hang by the connected wiring.

   CAUTION:

   - **Do not allow the front passenger air bag module to hang by the connected wires.**

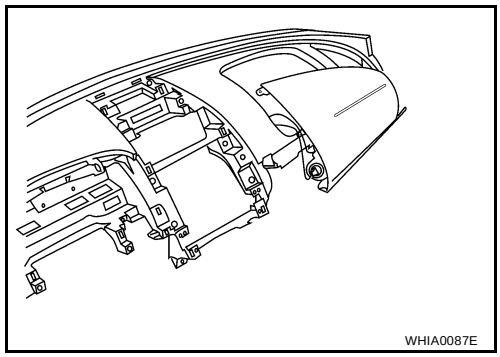

8. Disconnect the passenger air bag module electrical connector(s) and remove the instrument panel pad and front passenger air bag module assembly from the vehicle.
   - For removal/installation of the direct-connect SRS connectors, refer to SRS-7, "Direct-connect SRS Component Connectors" .

CAUTION:

- **Always place front passenger air bag module with caution label side facing upward.**
- **Do not insert any foreign objects (screwdriver, etc.) into front passenger air bag module.**
- **Do not attempt to disassemble front passenger air bag module.**
- **Do not use old bolt after removal; replace with new bolt.**

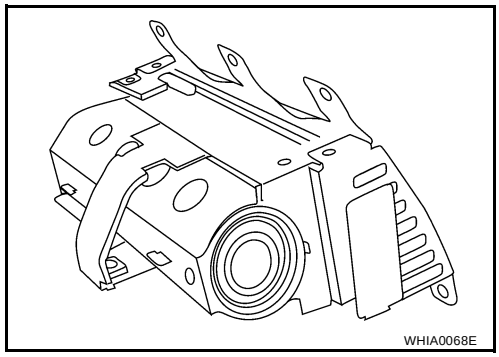

- **Replace front passenger air bag module if it has been dropped or sustained an impact.**
- **Do not expose the front passenger air bag module to temperatures exceeding 90°C (194°F).**
- **Do not allow oil, grease or water to come in contact with the front passenger air bag module.**

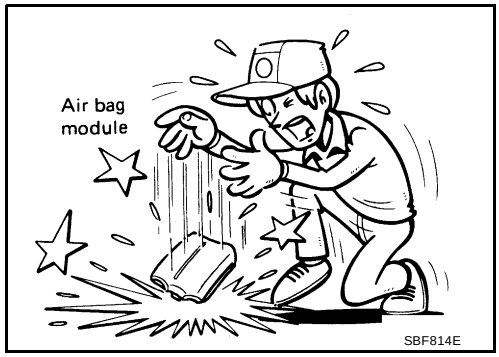

INSTALLATION

Original Passenger Air Bag Module

To install, reverse the removal procedure.

- For removal/installation of the direct-connect SRS connectors, refer to SRS-7, "Direct-connect SRS Component Connectors" .

CAUTION:

- **Always work from the side of or under front passenger air bag module.**
- **After the work is completed, perform self-diagnosis to check that no malfunction is detected. Refer to SRS-19, "SRS Operation Check" .**

Service Replacement Passenger Air Bag Module

1. Untape yellow 4-pin service replacement air bag connector from the main harness.
2. Position the front passenger air bag module and instrument panel pad assembly in the instrument panel.
3. Install the hex head bolt to secure front passenger air bag module to the instrument panel crossmember.
4. Install screws to secure the instrument panel pad.
5. Clip the front passenger air bag module connector to the mounting bracket.
6. Install the side ventilator grille RH. Refer to ATC-118, "Side Ventilator Grille RH" (auto A/C) or MTC-78, "Side Ventilator Grille RH" (manual A/C).
7. Install cluster lid D. Refer to IP-13, "Cluster Lid D" .
8. Install cluster lid C. Refer to IP-12, "Cluster Lid C" .
9. Install the glove box. Refer to IP-15, "Glove Box" .
10. Connect the front passenger air bag module harness connector to yellow 4-pin service replacement air bag connector.

CAUTION:

- **Always work from the side of or under front passenger air bag module.**
- **After the work is completed, perform self-diagnosis to check that no malfunction is detected. Refer to SRS-19, "SRS Operation Check" .**

WIRING HARNESS MODIFICATION

The passenger air bag module originally installed in the vehicle uses direct-connect style harness connectors. Service replacement passenger air bag modules use tab-locking style harness connectors. If the passenger

air bag module is replaced or if the direct-connect harness connectors are damaged, the vehicle wiring harness must be modified to allow connection of the service replacement passenger air bag module.

NOTE:
The wiring harness modification is to be performed only if the vehicle is equipped with the original passenger air bag which uses direct-connect harness connectors. If the passenger air bag is to be replaced in a vehicle that has already had the service replacement passenger air bag installed, the wiring harness modification is not required.

CAUTION:

- **Do not attempt to repair or replace damaged direct-connect front passenger air bag module connectors. If a direct-connect harness connector is damaged, the front passenger air bag must be replaced and the wiring harness modified.**
- **Before servicing SRS, turn the ignition switch off, disconnect both battery cables and wait at least 3 minutes.**
- **Always work from the side of or under front passenger air bag module.**
- **After the work is completed, perform self-diagnosis to check that no malfunction is detected. Refer to SRS-19, "SRS Operation Check" .**

1. Locate the yellow and orange direct-connect passenger air bag module harness connectors.
2. Use wire cutters to cut back both previously used direct-connect passenger air bag module harness connectors from the vehicle wiring harness approximately 50 mm (1.9 in) from the connectors.
3. Remove approximately 150 mm (5.9 in) of the vehicle harness covering from the cut end.
4. Slide a piece of dual-wall heat shrink tubing (provided in the passenger air bag service kit) onto each wire of the previously used vehicle wiring harness.

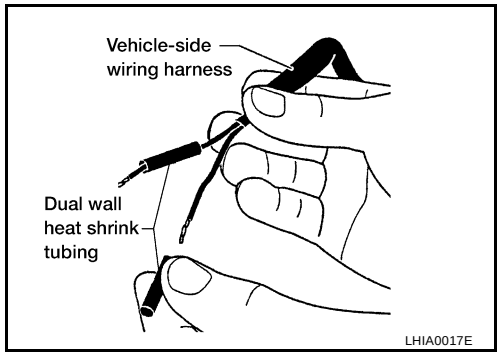

5. Fold each wire back and insert into the end of the heat shrink tubing so that the end of the wire is approximately centered in the heat shrink tubing.

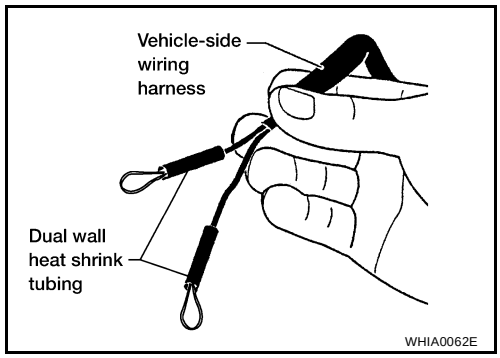

6. Use a heat gun to shrink the heat shrink tubing and seal the wire.
7. Use electrical tape to secure the modified circuits to the outside of the wiring harness.

8. Locate the front passenger air bag service replacement connector that is taped back to the main harness. Unwrap the tape to access the yellow service replacement connector.

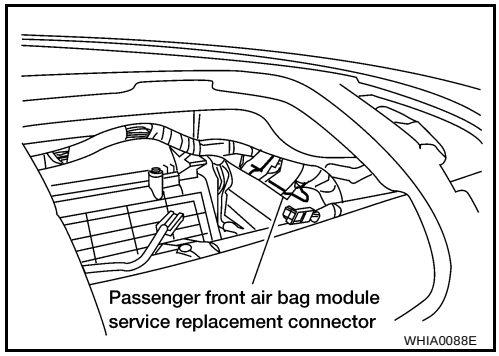

FRONT SIDE AIR BAG MODULE

PFP:K8EH0

Removal

EHS000M7

WARNING:

Removal of front side air bag module should only be done to allow deployment of front side air bag module prior to disposal of seatback assembly.

Only complete seatback assemblies can be replaced. Refer to SE-16, "Removal of seatback assembly" .

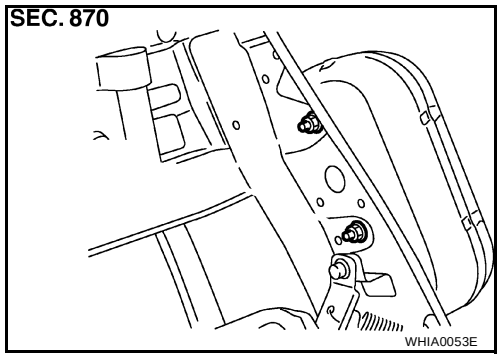

CAUTION:

- **Before servicing SRS, turn the ignition switch off, disconnect both battery cables and wait at least 3 minutes.**
- **Always work from the rear of the front side air bag module.**

1. Remove the front seat. Refer to SE-15, "REMOVAL" .
2. Remove the seatback trim and pad. Refer to SE-15, "SEATBACK TRIM AND PAD" .
3. Remove the seatback rear finisher, and remove the retainers securing the seat cushion trim. Refer to SE-16, "SEAT CUSHION TRIM AND PAD" .
4. Remove air bag module harness clips.
5. Remove the special fasteners coated with bonding agent from the front side air bag module, and remove the front side air bag module.

CAUTION:

- **When using a clip removal tool to remove the seatback board, take care not to damage the harness for front side air bag module.**
- **Always place the front side air bag module standing with the stud bolt side facing down.**
- **Do not insert any foreign objects (screwdrivers, etc.) into front side air bag module.**
- **Do not attempt to disassemble front side air bag module.**

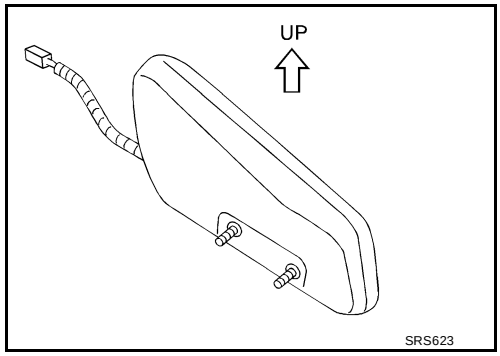

- **Replace front seatback assembly (side air bag module) if it has been dropped or sustained an impact.**
- **Do not expose front seatback assembly (side air bag module) to temperatures exceeding 90°C (194°F).**
- **Do not allow oil, grease or water to come in contact with the front side air bag module.**
- **After front side air bag module inflates, front seatback assembly must be replaced.**

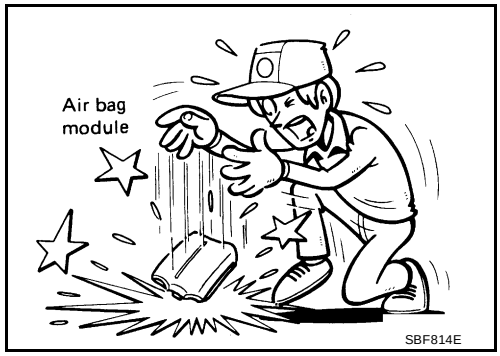

SIDE CURTAIN AIR BAG MODULE

PFP:985P0

Removal and Installation

EHS000M8

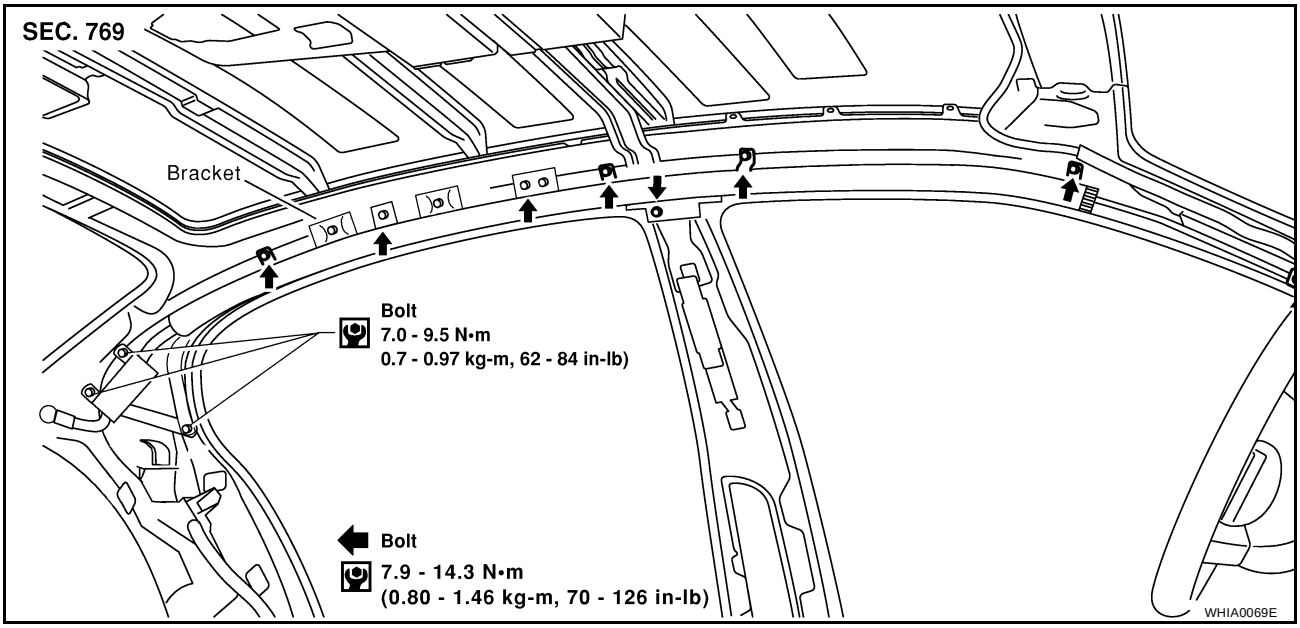

REMOVAL

CAUTION:

- **Do not attempt to repair or replace damaged direct-connect side curtain air bag module connectors. If a direct-connect harness connector is damaged, the harness must be replaced.**
- **Before servicing SRS, turn the ignition switch off, disconnect both battery cables and wait at least 3 minutes.**
- **Always work from the side of the side curtain air bag module.**

1. Remove headlining. Refer to EI-33, "Removal and Installation" .
2. Remove three rearmost side curtain air bag inflator fixing bolts, and unhook the side curtain air bag inflator.
3. Disconnect side curtain air bag connector.
   - For removal/installation of the direct-connect SRS connectors, refer to SRS-7, "Direct-connect SRS Component Connectors" .
4. Unclip wiring harness from side curtain air bag module bracket.
5. Remove side curtain air bag module fixing bolts and remove the side curtain air bag module.

CAUTION:

- **Always place the side curtain air bag module with the warning label facing upward.**
- **Do not attempt to disassemble side curtain air bag module.**
- **Do not insert any foreign objects (screwdriver, etc.) into air bag module connector.**

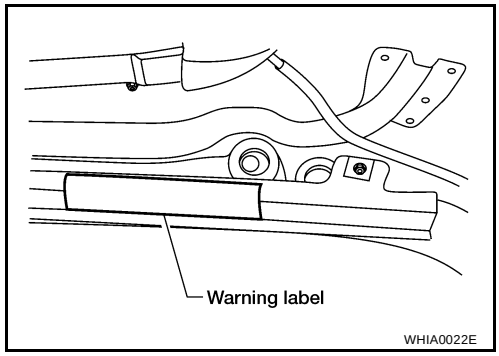

- **Replace side curtain air bag module if it has been dropped or sustained an impact.**
- **Do not expose the air bag module to temperatures exceeding 90°C (194°F).**
- **Do not allow oil, grease or water to come in contact with the side curtain air bag module.**

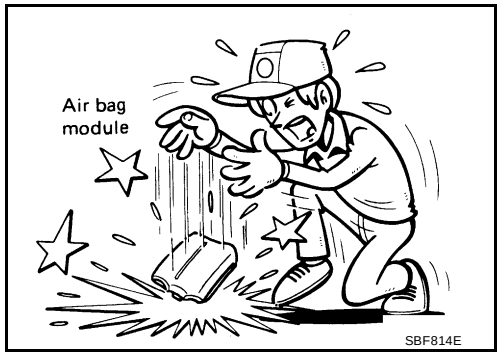

INSTALLATION

To install, reverse the removal procedure.

- For removal/installation of the direct-connect SRS connectors, refer to SRS-7, "Direct-connect SRS Component Connectors" .

CAUTION:

- **Always work from the side of the side curtain air bag module.**
- **After replacement of side curtain air bag module, perform self-diagnosis to check that no malfunction is detected. Refer to SRS-19, "SRS Operation Check" .**

CRASH ZONE SENSOR

PFP:98531

Removal and Installation

EHS000FG

REMOVAL

CAUTION:

- **Before servicing SRS, turn the ignition switch off, disconnect both battery cables and wait at least 3 minutes.**

1. Remove front grille. Refer to EI-17, "Removal and Installation" .
2. Remove crash zone sensor connector.
3. Remove crash zone sensor fixing nuts.

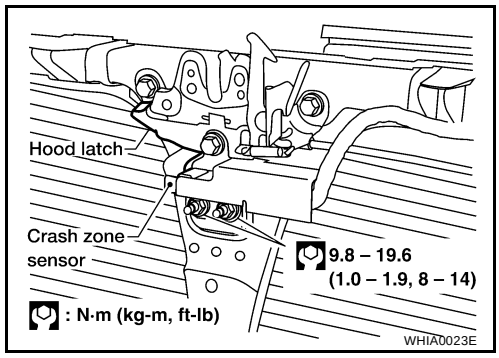

CAUTION:

- **Replace crash zone sensor if it has been dropped or sustained an impact.**
- **Do not attempt to disassemble crash zone sensor.**

INSTALLATION

To install, reverse the removal procedure.

CAUTION:

- **Check crash zone sensor for proper installation.**
- **After the work is complete, perform self-diagnosis to check that no malfunction is detected. Refer to SRS-19, "SRS Operation Check" .**

SIDE AIR BAG (SATELLITE) SENSOR

PFP:98830

Removal and Installation

EHS000NI

REMOVAL

CAUTION:

- **Before servicing SRS, turn the ignition switch off, disconnect both battery cables and wait at least 3 minutes.**

1. Remove seat belt pre-tensioner. Refer to SB-3, "Removal and Installation of Front Seat Belt" .
2. Remove side air bag (satellite) sensor fixing nuts.
3. Remove the side air bag (satellite) sensor connector.

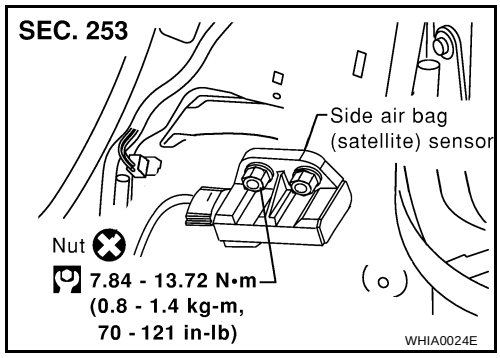

CAUTION:

- **Do not use old nuts; replace with new ones.**
- **Check side air bag (satellite) sensor to ensure it is free of deformities, dents, cracks or rust. If it shows any visible signs of damage, replace it with new one.**
- **Do not attempt to disassemble side air bag (satellite) sensor.**
- **Replace side air bag (satellite) sensor if it has been dropped or sustained an impact.**

INSTALLATION

To install, reverse the removal procedure.

CAUTION:

- **Check side air bag (satellite) sensor for proper installation.**
- **After replacement of side air bag (satellite) sensor, perform self-diagnosis to check that no malfunction is detected. Refer to SRS-19, "SRS Operation Check" .**

FRONT SEAT BELT PRE-TENSIONER

PFP:86884

Removal and Installation

EHS000FI

For removal and installation procedures, refer to SB-3, "Removal and Installation of Front Seat Belt" .

DIAGNOSIS SENSOR UNIT

PFP:28556

Removal and Installation

EHS000NU

REMOVAL

CAUTION:

- **Before servicing SRS, turn the ignition switch off, disconnect both battery cables and wait at least 3 minutes.**

1. Disconnect each harness connector for the air bag module and seat belt pre-tensioner.
2. Remove center console. Refer to IP-12, "Removal and Installation" .
3. Disconnect diagnosis sensor unit connectors.
4. Remove special hex bolts from the diagnosis sensor unit.

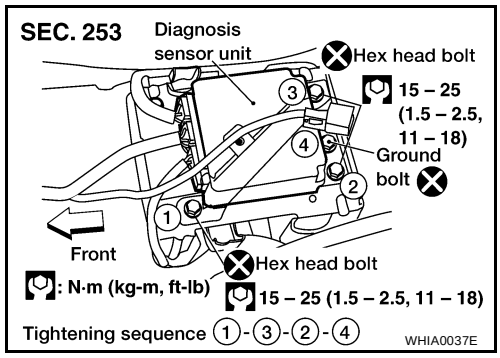

CAUTION:

- **Do not use old bolts. Replace with new ones.**
- **Check diagnosis sensor unit bracket to ensure it is free of deformities, dents, cracks or rust. If it shows any visible signs of damage, replace with new one.**
- **Replace diagnosis sensor unit if it has been dropped or sustained an impact.**

INSTALLATION

To install, reverse the removal procedure.

NOTE:

The diagnosis sensor unit must always be installed with the arrow mark "⇐" pointing toward the front of the vehicle for proper operation.

CAUTION:

- **Check the diagnosis sensor unit for proper installation.**
- **After replacement of diagnosis sensor unit, perform self-diagnosis to check that no malfunction is detected. Refer to SRS-19, "SRS Operation Check" .**

ECU DISCRIMINATED NO.

After replacing the diagnosis sensor unit, confirm that the diagnosis sensor unit identification is correct for the vehicle as equipped. Refer to SRS-17, "DIAGNOSIS MODE FOR CONSULT-II" .

DISPOSAL OF AIR BAG MODULE AND SEAT BELT PRE-TENSIONER

PFP:00014

Caution for Air Bag Module and Seat Belt Pre-tensioner

EHS000M9

- Before disposing of air bag module, seat belt pre-tensioner or vehicle equipped with such systems, deploy the systems. If such systems have already been deployed due to an accident, dispose of them as indicated in "SRS-60, "DISPOSING OF AIR BAG MODULE AND SEAT BELT PRE-TENSIONER" .
- When deploying the air bag module or seat belt pre-tensioner, always use the Special Service Tool; Deployment tool [KV99106400 (J38381)].
- When deploying the air bag module or seat belt pre-tensioner, stand at least 5 m (16 ft) away from the deployment component.
- When deploying air bag module or seat belt pre-tensioner, a fairly loud noise is made, followed by smoke being released. The smoke is not poisonous, however, be careful not to inhale smoke since it irritates the throat and can cause choking.
- Always deploy one air bag module at a time.
- Due to heat, leave air bag module unattended for more than 30 minutes after deployment. Also leave seat belt pre-tensioner unattended for more than 10 minutes after deployment.
- Be sure to wear gloves when handling a deployed air bag module or seat belt pre-tensioner.
- Never apply water to the deployed air bag module or seat belt pre-tensioner.
- Wash your hands clean after finishing work.
- Place the vehicle outdoors with an open space of at least 6 m (20 ft) on all sides when deploying air bag module or seat belt pre-tensioner while mounted in vehicle.
- Use a voltmeter to make sure the vehicle battery is fully charged.
- Do not dispose of the air bag module or seat belt pre-tensioner undeployed.

CHECKING DEPLOYMENT TOOL

Connecting to Battery

CAUTION:

The battery must show voltage of 9.6V or more.

Remove the battery from the vehicle and place it on dry wood blocks approximately 5 m (16 ft) away from the vehicle.

- Wait 3 minutes after the vehicle battery is disconnected before proceeding.
- Connect red clip of deployment tool to battery positive terminal and black clip to negative terminal.

Make sure the polarity is correct. The right side lamp in the tool marked "deployment tool power" should glow with a green light. If the right side lamp glows red, reverse the connections to the battery.

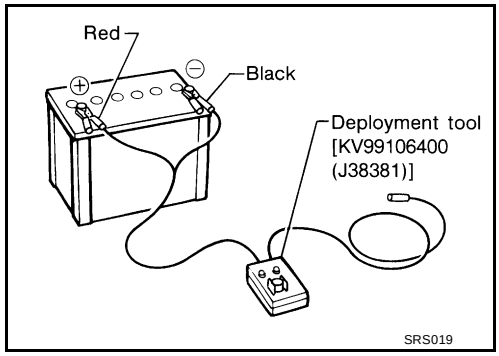

Deployment Tool Check

Press the deployment tool switch to the ON position. The left side lamp in the tool, marked "air bag connector voltage" should illuminate. If it does not illuminate, replace the tool.

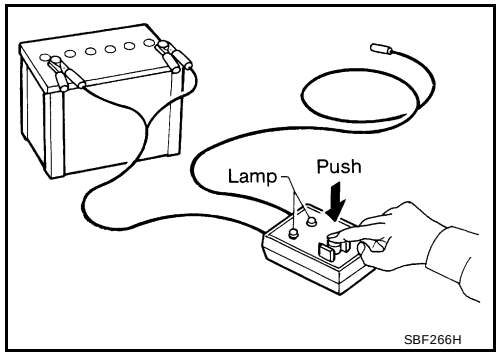

Air Bag Deployment Tool Lamp Illumination Chart (Battery connected)

Switch operation	Left side lamp, green* “AIR BAG CONNECTOR VOLTAGE”	Right side lamp, green* “DEPLOYMENT TOOL POWER”
OFF	OFF	ON
ON	ON	ON

*: If this lamp glows red, the tool is connected to the battery incorrectly. Reverse the connections and make sure the lamp glows green.

DEPLOYMENT PROCEDURES FOR AIR BAG MODULE (OUTSIDE OF VEHICLE)

Unless the vehicle is being scrapped, deploying the air bag in the vehicle is not recommended. This may cause damage to the vehicle interior.
Anchor air bag module bracket [KV99105300 (J41246)] in a vise secured to a firm foundation during deployment.

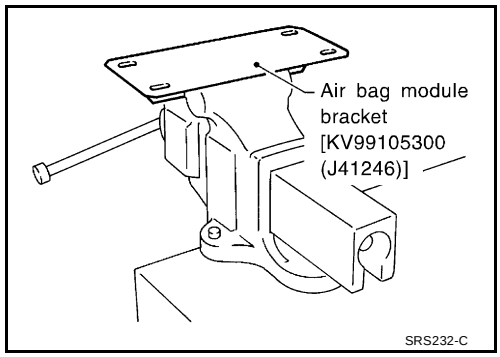

Deployment of Driver Air Bag Module (Outside of vehicle)

1. Using wire, secure air bag module to air bag module bracket [SST: KV99105300 (J41246)] at two places.

   CAUTION:
   Use wire of at least 1 mm (0.04 in) diameter.

2. Firmly secure air bag module bracket [SST: KV99105300 (J41246)] with air bag module attached, in a vise.

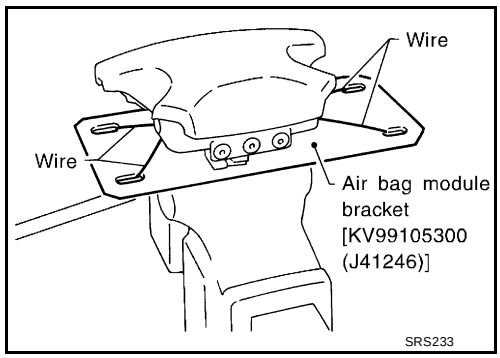

3. Connect deployment tool [SST: KV99106400 (J38381)] to air bag module connector using deployment tool adapter (J38381-80).

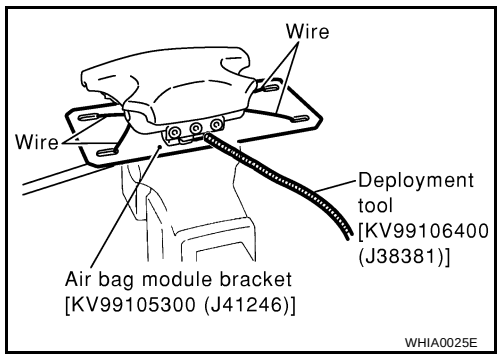

4. Connect red clip of deployment tool to battery positive terminal and black clip to negative terminal.
5. The lamp on the right side of the tool, marked “deployment tool power”, should glow green, not red.
6. Press the button on the deployment tool. The left side lamp on the tool, marked “air bag connector voltage”, will illuminate and the air bag module will deploy.

CAUTION:
When deploying the driver air bag module, stand at least 5 m (16 ft) away from the air bag module.

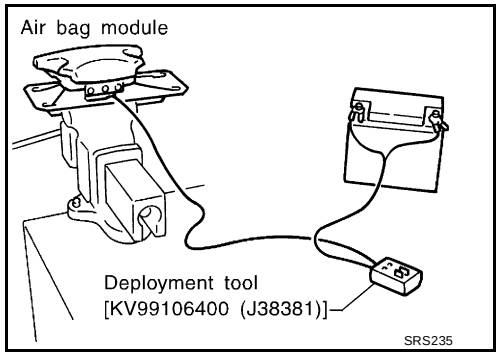

Deployment of Front Passenger Air Bag Module (Outside of vehicle)

1. Make an 8.5 mm (0.335 in) diameter hole in air bag module bracket [SST: KV99105300 (J41246)] at the position shown in figure.
2. Firmly secure air bag module bracket [SST: KV99105300 (J41246)] in a vise.

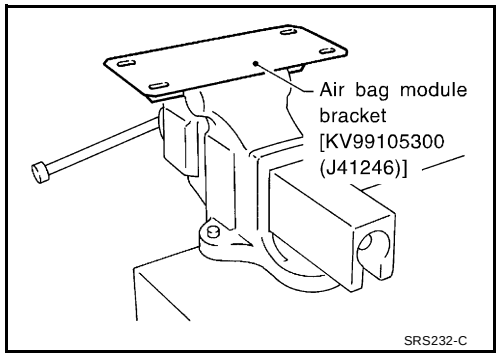

3. Match the two holes in air bag module bracket (held in vise) and front passenger air bag module and fix them with two bolts [M8 × 25 - 30 mm (0.98 - 1.18 in)].

   CAUTION:
   If a gap exists between front passenger air bag module and air bag module bracket, use a piece of wood inserted in the gap to stabilize the air bag module.

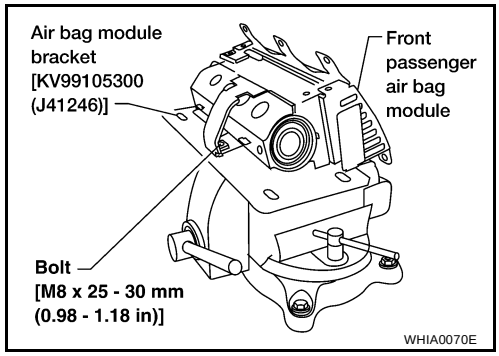

4. Connect deployment tool [SST: KV99106400 (J38381)] to front passenger air bag module.
   For service replacement front passenger air bag module, use deployment tool adapter (J38381-65).
5. Connect red clip of deployment tool to battery positive terminal and black clip to negative terminal.
6. The lamp on the right side of the tool, marked “deployment tool power”, should glow green, not red.

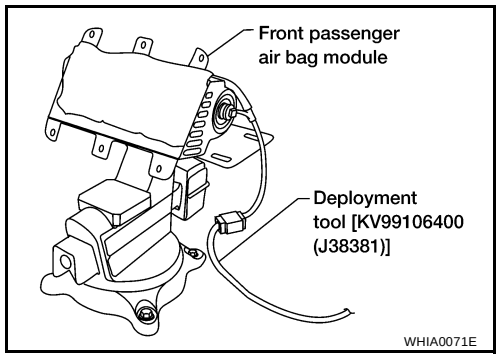

7. Press the button on the deployment tool. The left side lamp on the tool, marked “air bag connector voltage”, will illuminate and the air bag module will deploy.

CAUTION:

- **When deploying the front passenger air bag module, do not stand on the deploying side.**
- **Stand at least 5 m (16 ft) away from the air bag module.**

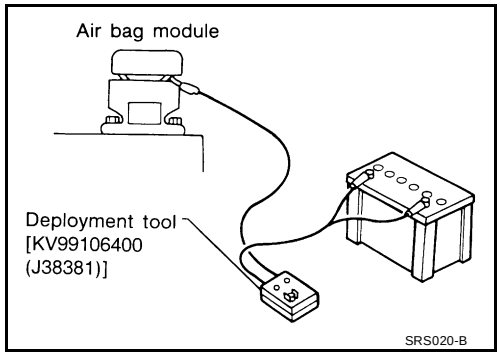

Deployment of Front Side Air Bag Module (Outside of vehicle)

1. Make 6.5 mm (0.256 in) diameter holes in air bag module bracket [SST: KV99105300 (J41246)] at the position shown in figure.

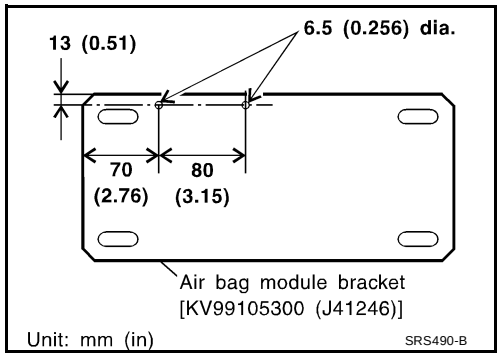

2. Firmly secure air bag module bracket [SST: KV99105300 (J41246)] in a vise.
3. Insert the stud bolts of side air bag module into the two holes in air bag module bracket (held in vise) and fix them with two M6 nuts.

   CAUTION:
   Side air bag module should be secured to air bag module bracket [SST: KV99105300 (J41246)] in a vise with stud bolt side facing down.

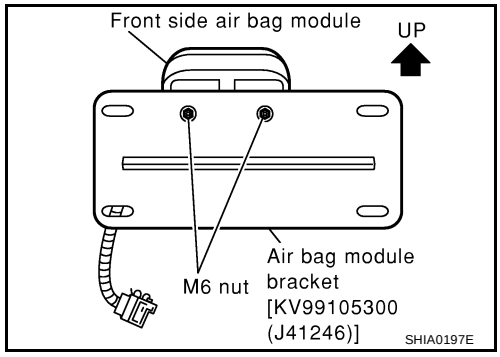

4. Connect deployment tool [SST: KV99106400 (J38381)] connector to connector on air bag module using deployment tool adapter [SST: KV99109000 (J44230)].

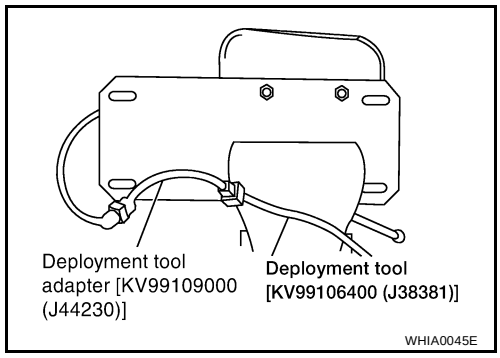

5. Connect red clip of deployment tool to battery positive terminal and black clip to negative terminal.
6. The lamp on the right side of the tool, marked “deployment tool power”, should glow green, not red.
7. Press the button on the deployment tool. The left side lamp on the tool, marked “air bag connector voltage”, will illuminate and the air bag module will deploy.

   CAUTION:
   When deploying the front side air bag module, stand at least 5 m (16 ft) away from the air bag module.

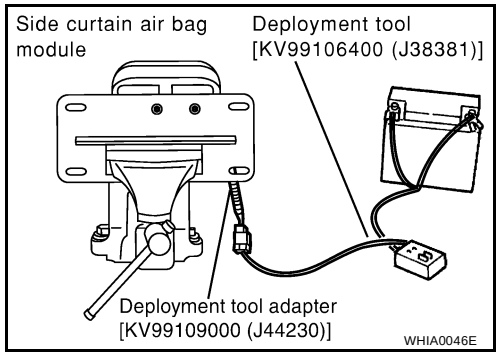

Deployment of Side Curtain Air Bag Module (Outside of vehicle)

1. Cut the inflator from side curtain air bag module.

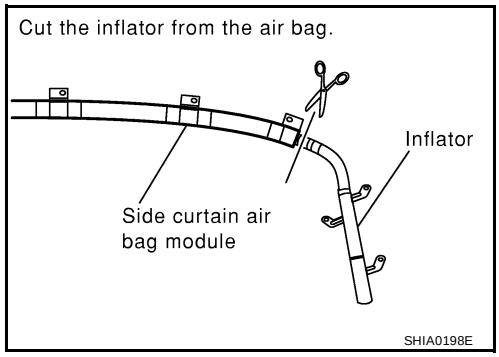

2. Connect deployment tool [SST: KV99106400 (J38381)] to the inflator using deployment tool adapter (J38381-80).

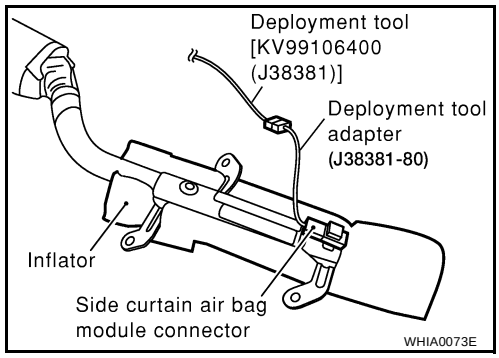

3. Put the inflator connected with the deployment tool [SST: KV99106400 (J38381)] into a tire without a wheel.

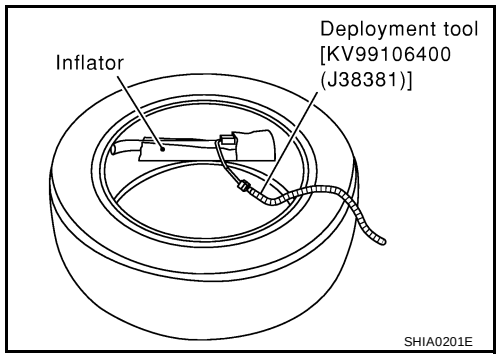

4. Put the tire with the inflator onto another tire without wheel. Add an additional tire without a wheel and then a tire mounted on a wheel on top.

   CAUTION:
   Tie all tires together with a strap in order keep them standing.

5. Connect red clip of deployment tool to battery positive terminal and black clip to negative terminal.
6. The lamp on the right side of the tool, marked “deployment tool power”, should glow green, not red.
7. Press the button on the deployment tool. The left side lamp on the tool, marked “air bag connector voltage”, will illuminate and the air bag module will deploy.

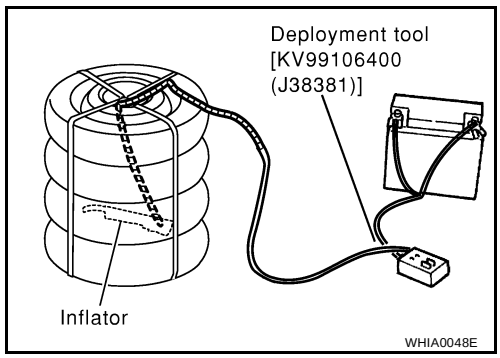

   CAUTION:
   When deploying the side curtain air bag module, stand at least 5 m (16 ft) away from the side curtain air bag module.

DEPLOYMENT PROCEDURES FOR SEAT BELT PRE-TENSIONER (OUTSIDE OF VEHICLE)

1. Firmly grip pre-tensioner in a vise and cut off the webbing.

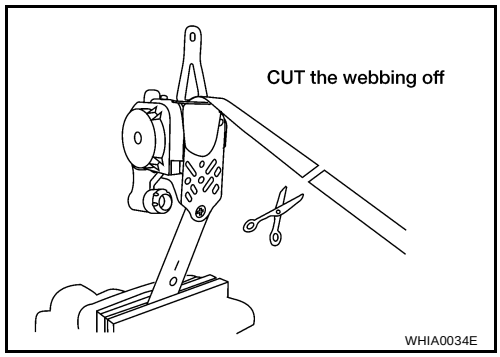

2. Connect deployment tool [SST: KV99106400 (J38381)] connector to front seat belt pre-tensioner using deployment tool adapter (J38381-80).

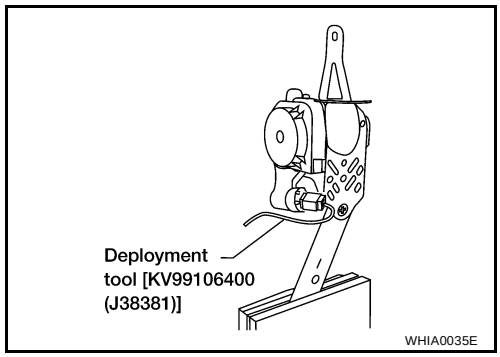

3. Connect red clip of deployment tool to battery positive terminal and black clip to negative terminal.
4. The lamp on the right side of the tool, marked “deployment tool power”, should glow green, not red.
5. Press the button on the deployment tool. The left side lamp on the tool, marked “seat belt pre-tensioner connector voltage”, will illuminate and the seat belt pre-tensioner will deploy.

   CAUTION:
   When deploying the front seat belt pre-tensioner, stand at least 5 m (16 ft) away from the seat belt pre-tensioner.

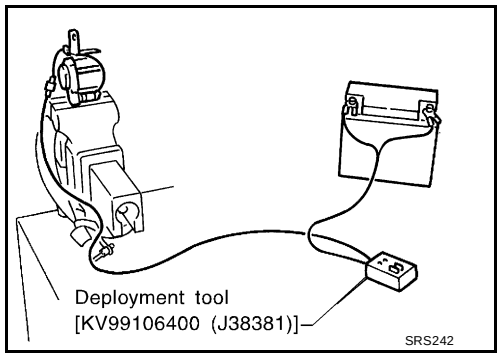

DEPLOYMENT OF AIR BAG MODULE AND SEAT BELT PRE-TENSIONER WHILE MOUNTED IN VEHICLE

When disposing of a vehicle, deploy air bag module and seat belt pre-tensioners while they are mounted in vehicle.

CAUTION:

When deploying air bag module or seat belt pre-tensioner, ensure vehicle is empty.

1. Disconnect both the vehicle battery cables and wait 3 minutes.
2. Disconnect air bag module and seat belt pre-tensioner connector.
3. Connect deployment tool [SST: KV99106400 (J38381)] to air bag module or seat belt pre-tensioner.
   For front driver air bag module, use deployment tool adapter (J38381-80).
   For front passenger air bag module (service replacement), use deployment tool adapter (J38381-65).
   For side curtain air bag module, use deployment tool adapter (J38381-80).
   For side air bag module, use deployment tool adapter [SST: KV99109000 (J44230)].
4. Connect red clip of deployment tool to battery positive terminal and black clip to negative terminal.
5. The lamp on the right side of the tool, marked “deployment tool power”, should glow green, not red.
6. Press the button on the deployment tool. The left side lamp on the tool, marked “air bag connector voltage”, will illuminate and the air bag module or seat belt pre-tensioner will deploy.

   CAUTION:

   Activate only one air bag module or seat belt pre-tensioner at a time.

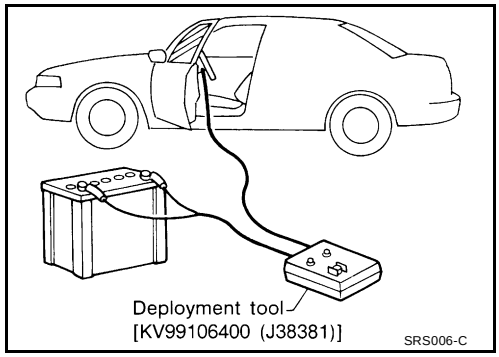

DISPOSING OF AIR BAG MODULE AND SEAT BELT PRE-TENSIONER

Deployed air bag module and seat belt pre-tensioner are very hot. Before disposing of air bag module or seat belt pre-tensioner, wait at least 30 minutes or 10 minutes, respectively. Seal them in a plastic bag before disposal.

CAUTION:

- **Never apply water to a deployed air bag module or seat belt pre-tensioner.**
- **Be sure to wear gloves when handling a deployed air bag module or seat belt pre-tensioner.**
- **No poisonous gas is produced upon air bag module deployment. However, be careful not to inhale gas since it irritates the throat and can cause choking.**
- **Do not attempt to disassemble air bag module or seat belt pre-tensioner.**
- **Air bag module and seat belt pre-tensioner cannot be reused.**
- **Wash your hands clean after finishing work.**

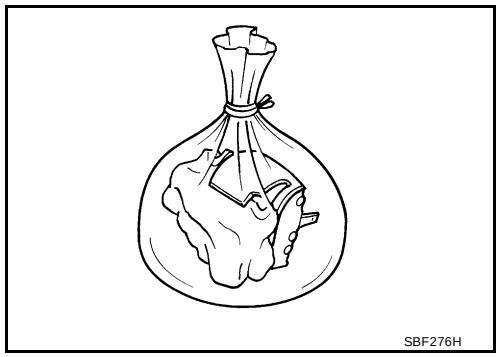

COLLISION DIAGNOSIS

PFP:00015

For Frontal Collision

EHS000MA

To repair the SRS, perform the following steps.

WHEN SRS (EXCEPT THE FRONT SIDE AIR BAG AND SIDE CURTAIN AIR BAG MODULES) IS ACTIVATED IN A COLLISION

1. Replace the diagnosis sensor unit.
2. Remove the air bag modules (except the front side air bag modules and side curtain air bag modules), crash zone sensor assembly, bracket and seat belt pre-tensioner assemblies.
3. Check the SRS components using the table below:
   - Replace any SRS components showing visible signs of damage (dents, cracks and deformation).
4. Install new air bag modules (except the front side air bag modules and side curtain air bag modules) crash zone sensor assembly, bracket and seat belt pre-tensioner assemblies.
5. Conduct self-diagnosis using CONSULT-II or “AIR BAG” warning lamp. Refer to SRS-19, "SRS Operation Check" for details. Ensure entire SRS operates properly.

WHEN SRS IS NOT ACTIVATED IN A COLLISION

1. Check the SRS components using the table below:
   - Replace any SRS components showing visible signs of damage (dents, cracks and deformation).
2. Conduct self-diagnosis using CONSULT-II or “AIR BAG” warning lamp. Refer to SRS-19, "SRS Operation Check" for details. Ensure entire SRS operates properly.

SRS INSPECTION (FOR FRONTAL COLLISION)

Part	SRS is activated	SRS is NOT activated
Air bag module (driver and front passenger air bag module)	REPLACE Install with new bolts.	1. Remove air bag module. Check harness cover and connectors for damage, terminals for deformities, and harness for binding. 2. Install driver air bag module into the steering wheel to check fit and alignment with the wheel. 3. Install passenger air bag module into the instrument panel to check fit with the instrument panel. 4. If no damage is found, reinstall with new bolts. 5. If damaged—REPLACE. Install air bag modules with new special bolts. Air bag modules must be deployed before disposal.
Crash zone sensor	REPLACE the crash zone sensor and bracket with new nuts.	1. Remove the crash zone sensor. Check harness connectors for damage, terminals for deformities, and harness for binding. 2. Check for visible signs of damage (dents, cracks, deformation) of the crash zone sensor and bracket. 3. Install the crash zone sensor to check fit. 4. If no damage is found, reinstall with new nuts. 5. If damaged—REPLACE the crash zone sensor and bracket with new nuts.
Seat belt pre-tensioner assemblies	REPLACE Install seat belt pre-tensioner with new bolts.	1. Remove seat belt pre-tensioners. Check harness cover and connectors for damage, terminals for deformities, and harness for binding. 2. Check belts for damage and anchors for loose mounting. 3. Check retractor for smooth operation. 4. Check seat belt adjuster for damage. 5. If no damage is found, reinstall seat belt pre-tensioner assembly. 6. If damaged—REPLACE. Install the seat belt pre-tensioners with new bolts. Seat belt pre-tensioners must be deployed before disposal.
Diagnosis sensor unit	REPLACE Install with new bolts.	1. Check case for dents, cracks or deformities. 2. Check connectors for damage, and terminals for deformities. 3. If no damage is found, reinstall with new bolts and ground bolt. 4. If damaged—REPLACE. Install diagnosis sensor unit with new bolts and ground bolt.

Part	SRS is activated	SRS is NOT activated
Steering wheel	1. Visually check steering wheel for deformities. 2. Check harness (built into steering wheel) and connectors for damage, and terminals for deformities. 3. Install air bag module to check fit or alignment with steering wheel. 4. Check steering wheel for excessive free play. 5. If no damage is found, reinstall with nuts. 6. If damaged—REPLACE.	
Spiral cable	1. Visually check spiral cable and combination switch for damage. 2. Check connectors and protective tape for damage. 3. Check steering wheel for noise, binding or heavy operation. 4. If no damage is found, reinstall with screws. 5. If damaged—REPLACE.	
Harness and connectors	1. Check connectors for poor connection, damage, and terminals for deformities. 2. Check harness for binding, chafing, cuts, or deformities. 3. If no damage is found, reinstall the harness and connectors. 4. If damaged—REPLACE the damaged harness. Do not attempt to repair, splice or modify any SRS harness.	
Instrument panel	1. Visually check instrument panel for damage. 2. If no damage is found, reinstall the instrument panel. 3. If damaged—REPLACE the instrument panel with bolts.	

For Side Collision

EHS000MB

To repair the SRS, perform the following steps.

WHEN SRS IS ACTIVATED IN THE SIDE COLLISION

1. Replace the following components:
- Front seat back assembly (on the side on which side air bag is activated)
- Diagnosis sensor unit
- (LH and RH) side air bag (satellite) sensors
2. Check the SRS components and the related parts using the following table.
- Replace any SRS components and the related parts showing visible signs of damage (dents, cracks, deformation).
3. Conduct self-diagnosis using CONSULT-II and “AIR BAG” warning lamp. Refer to SRS-19, "SRS Operation Check" for details. Ensure entire SRS operates properly.

WHEN SRS IS NOT ACTIVATED IN THE SIDE COLLISION

1. Check the SRS components and the related parts using the following table.
- If the front seat back assembly is damaged, the front seat back assembly must be replaced.
2. Conduct self-diagnosis using CONSULT-II and “AIR BAG” warning lamp. Refer to SRS-19, "SRS Operation Check" for details. Ensure entire SRS operates properly.

SRS INSPECTION (FOR SIDE COLLISION)

Part	Front side air bag and side curtain air bag are activated	Front side air bag and side curtain air bag are NOT activated
(LH or RH) side curtain air bag module	Replace the side curtain air bag module. (Repair the center pillar inner, etc. before installing new one if damaged.)	1. Check for visible signs of damage (dents, tears, deformation) of the center pillar on the collision side. 2. If damaged— Remove the side curtain air bag module. 3. Check for visible signs of damaged (tears etc.) of the side curtain air bag module. 4. Check harness and connectors for damage, and terminals for deformities. 5. If no damage is found, reinstall the side curtain air bag module with new bolts. 6. If damaged—REPLACE the side curtain air bag module with new bolts. Air bag modules must be deployed before disposal.
Front (LH or RH) side air bag module	REPLACE front seat back assembly.	1. Check for visible signs of damage (dents, tears, deformation) of the seat back on the collision side. 2. Check harness and connectors for damage, and terminals for deformities. 3. If damaged—REPLACE the front seat back assembly.
(LH or RH) side air bag (satellite) sensor	REPLACE the side air bag (satellite) sensor on the collision side with new nuts. (Repair the center pillar inner, etc. before installing new one if damaged.)	1. Remove the side air bag (satellite) sensor on the collision side. Check harness connectors for damage, terminals for deformities, and harness for binding. 2. Check for visible signs of damage (dents, cracks, deformation) of the side air bag (satellite) sensor. 3. Install the side air bag (satellite) sensor to check fit. 4. If no damage is found, reinstall the side sir bag (satellite) sensor with new nuts. 5. If damaged—REPLACE the side air bag (satellite) sensor with new nuts.
Diagnosis sensor unit	REPLACE the diagnosis sensor unit with the new bolts.	1. Check case and bracket for dents, cracks or deformities. 2. Check connectors for damage, and terminals for deformities. 3. If no damage is found, reinstall the diagnosis sensor unit with new bolts and ground bolt. 4. If damaged—REPLACE the diagnosis sensor unit with new bolts and ground bolt.
Seat belt pre-tensioner assembly	1. Check if the seat belt can be extended smoothly. If the seat belt cannot be extended smoothly, – Check for deformities of the center pillar inner. – If the center pillar inner has no damage, REPLACE the seat belt pre-tensioner assembly. 2. Remove the seat belt pre-tensioner assembly on the collision side. Check harness cover and connectors for damage, terminals for deformities, and harness for binding. 3. Check for visible signs of damage (dents, cracks, deformation) of the seat belt pre-tensioner assembly. 4. Check seat belt adjuster for damage. 5. If no damage is found, reinstall the seat belt pre-tensioner assembly. 6. If damaged—REPLACE the seat belt pre-tensioner assembly with new bolts. The seat belt pre-tensioner assembly must be deployed before disposing of it.	
Seat (with front side air bag)	REPLACE front seat back assembly.	1. Visually check the seat on the collision side. 2. Remove the seat on the collision side and check the following for damage and deformities. – Harness, connectors and terminals – Frame and recliner (for front and rear seat), and also adjuster and slides (for front seat) 3. If no damage is found, reinstall the seat. 4. If damaged—REPLACE the damaged seat parts using new bolts. If the front seat back is damaged, the front seat back assembly must be replaced.
Center inner pillar	1. Check the center inner pillar on the collision side for damage (dents, cracks, deformation). 2. If damaged—REPAIR the center inner pillar.	
Trim/headliner	1. Check for visible signs of damage (dents, cracks, deformation) of the interior trim on the collision side. 2. If damaged—REPLACE the damaged trim parts.	

SECTION WT
ROAD WHEELS & TIRES

CONTENTS

NOISE, VIBRATION, AND HARSHNESS (NVH) TROUBLESHOOTING 2
NVH Troubleshooting Chart 2
WHEEL 3
Inspection 3
WHEEL AND TIRE ASSEMBLY 4
Balancing Wheels 4
REMOVAL 4
WHEEL BALANCE ADJUSTMENT 4
Rotation 5
SERVICE DATA AND SPECIFICATIONS (SDS) 6
Road Wheel 6
Tire 6

NOISE, VIBRATION, AND HARSHNESS (NVH) TROUBLESHOOTING

PFP:00003

NVH Troubleshooting Chart

EES000DV

Use the chart below to help you find the cause of the symptom. If necessary, repair or replace these parts.

Reference page			WT-3	WT-4	WT-6	WT-5	—	—	WT-6	MT-7	FAX-4, FSU-4	RAX-4, RSU-4	Refer to TIRES in this chart.	Refer to ROAD WHEEL in this chart.	BR-5	PS-5
Possible cause and SUSPECTED PARTS			Out-of-round	Imbalance	Incorrect tire pressure	Uneven tire wear	Deformation or damage	Non-uniformity	Incorrect tire size	DIFFERENTIAL (Transaxle)	FRONT AXLE AND FRONT SUSPENSION	REAR AXLE AND REAR SUSPENSION	TIRES	ROAD WHEEL	BRAKE	STEERING
Symptom	TIRES	Noise	×	×	×	×	×	×		×	×	×		×	×	×
		Shake	×	×	×	×	×		×		×	×		×	×	×
		Vibration			×				×		×	×				×
		Shimmy	×	×	×	×	×	×	×		×	×		×	×	×
		Judder	×	×	×	×	×		×		×	×		×	×	×
		Poor quality ride or handling	×	×	×	×	×		×		×	×		×		
	ROAD WHEEL	Noise	×	×			×			×	×	×	×		×	×
		Shake	×	×			×				×	×	×		×	×
		Shimmy, judder	×	×			×				×	×	×		×	×
		Poor quality ride or handling	×	×			×				×	×	×			

×: Applicable

WHEEL

PFP:40300

Inspection

EES000DW

1. Check tires for wear and improper inflation.
2. Check wheels for deformation, cracks and other damage. If deformed, remove wheel and check wheel runout.

a. Remove tire from wheel and mount wheel on a tire balance machine.

b. Set dial indicator as shown in the illustration.

Wheel runout (Dial indicator value):

Refer to WT-6, "Road Wheel" .

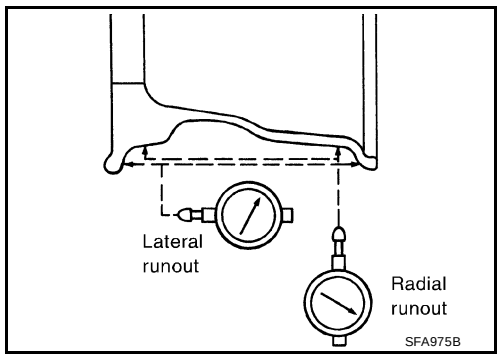

3. Check front wheel bearings for looseness.
4. Check front suspension for looseness.

WHEEL AND TIRE ASSEMBLY

PFP:40300

Balancing Wheels

EES000DX

REMOVAL

1. Remove inner and outer balance weights from the wheel.

   CAUTION:
   - **Be careful not to scratch the wheel during removal procedures.**

2. Using releasing agent, remove double-faced adhesive tape from the wheel.

   CAUTION:
   - **Be careful not to scratch the wheel during removal.**
   - **After removing double-faced adhesive tape, wipe clean traces of releasing agent from the wheel.**

WHEEL BALANCE ADJUSTMENT

- If a tire balance machine has adhesion balance weight mode settings and drive-in weight mode setting, select and adjust a drive-in weight mode suitable for wheels.

1. Set wheel on wheel balancer using the center hole as a guide. Start the tire balance machine.
2. When inner and outer unbalance values are shown on the wheel balancer indicator, multiply outer unbalance value by 1.6 to determine balance weight that should be used. Select the outer balance weight with a value closest to the calculated value and install it to the designated outer position of, or at the designated angle in relation to the road wheel.

   CAUTION:
   - **Do not install the inner balance weight before installing the outer balance weight.**
   - **Before installing the balance weight, be sure to clean the mating surface of the wheel.**

   Indicated unbalance value × 5/3 = balance weight to be installed
   Calculation example:
   23 g (0.81 oz) × 5/3 = 38.33 g (1.35 oz) = 40 g (1.41 oz) balance weight (closer to calculated balance weight value)
   Note that balance weight value must be closer to the calculated balance weight value.
   Example:
   37.4 g = 35 g (1.23 oz)
   37.5 g = 40 g (1.41 oz)

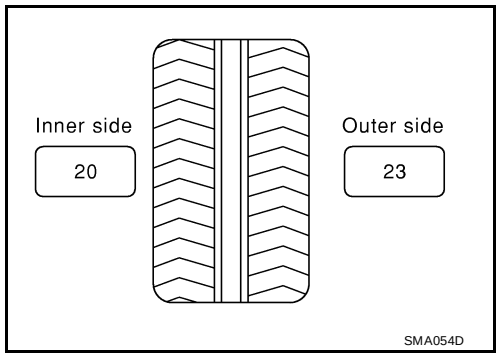

a. Install balance weight in the position shown.

b. When installing balance weight to wheels, set it into the grooved area on the inner wall of the wheel as shown so that the balance weight center is aligned with the wheel balancer indication position (angle).

CAUTION:

- **Always use genuine Nissan adhesion balance weights.**
- **Balance weights are not reusable; always replace with new ones.**
- **Do not install more than three sheets of balance weight.**

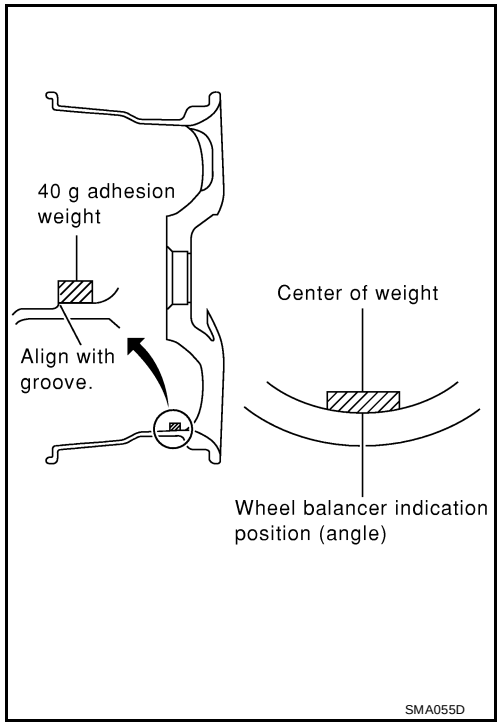

c. If calculated balance weight value exceeds 50 g (1.76 oz), install two balance weight sheets in line with each other as shown.

CAUTION:
Do not install one balance weight sheet on top of another.

3. Start wheel balancer again.
4. Install drive-in balance weight on inner side of road wheel in the wheel balancer indication position (angle).

CAUTION:
Do not install more than two balance weights.

5. Start wheel balancer. Make sure that inner and outer residual unbalance values are 10 g (0.35 oz) each or below.
   - If either residual unbalance value exceeds 10 g (0.35 oz), repeat installation procedures.

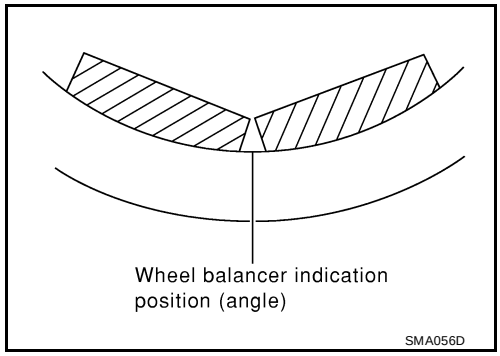

Wheel balance (Maximum allowable unbalance):

Maximum allowable unbalance	Dynamic (At rim flange)	10 g (0.35 oz) (one side)
	Static	20 g (0.71 oz)

Rotation

EES000DY

- Follow the maintenance schedule for tire rotation service intervals. Refer to MA-7, "PERIODIC MAINTENANCE" .
- Do not include the T-type spare tire when rotating the tires.

CAUTION:
When installing wheels, tighten them diagonally by dividing the work two to three times in order to prevent the wheels from developing any distortion.

- After rotating the tires, adjust the tire pressure.

Tightening torque of wheel nut : 98 - 117N-m (10 - 12 kg-m, 73 - 86 ft-lb)

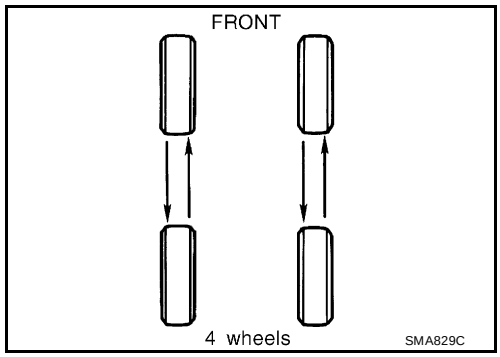

SERVICE DATA AND SPECIFICATIONS (SDS)

PFP:00030

Road Wheel

EES000DZ

Wheel type		Aluminum	Steel	
			Inside	Outside
Maximum radial runout limit	Lateral mm (in)	0.3 (0.012) or less	1.0 (0.039) or less	0.9 (0.035) or less
	Radial mm (in)	0.3 (0.012) or less	0.8 (0.031) or less	0.4 (0.016) or less
Allowable quantity of residual unbalance	Dynamic (On the ear part)	Less than 10 g (0.35 oz) (per side)		
	Static (On the ear part)	Less than 20 g (0.71 oz)		

Tire

EES000E0

Unit: kPa (kg/cm^2 , psi)

Tire size		Air pressure	
		Conventional tire	Spare tire
T135/70R16 T135/90D16		—	420 (4.2, 60)
P205/65R16		200 (2.0, 29)	—
P215/55R17	Front	230 (2.3, 33)	—
	Rear	210 (2.1, 30)	—

SECTION WW
WIPER, WASHER & HORN

CONTENTS

PRECAUTION 2
Precautions for Supplemental Restraint System (SRS) “AIR BAG” and “SEAT BELT PRE-TENSIONER” 2
Wiring Diagrams and Trouble Diagnosis 2
FRONT WIPER AND WASHER SYSTEM 3
Components Parts and Harness Connector Location 3
System Description 3
LOW SPEED WIPER OPERATION 3
HI SPEED WIPER OPERATION 4
INTERMITTENT OPERATION 4
AUTO STOP OPERATION 4
WASHER OPERATION 5
MIST OPERATION 5
FAIL-SAFE FUNCTION 5
CAN Communication System Description 5
FOR TCS MODELS 6
FOR A/T MODELS 7
FOR M/T MODELS 8
Wiring Diagram — WIPER — 10
Terminals and Reference Values for BCM 12
Terminals and Reference Values for IPDM E/R 12
BCM Wiper Switch Reading Function 13
OPERATION DESCRIPTION 13
TABLE OF BCM - COMBINATION SWITCH OPERATIONS 14
SAMPLE OPERATION: (WIPER SWITCH TURNED TO LO POSITION) 14
OPERATING MODES 15
INTERMITTENT OPERATION 16
Work Flow 16
Preliminary Inspection 17
INSPECTION FOR POWER SUPPLY AND GROUND CIRCUIT 17
CONSULT-II Functions 17
CONSULT-II OPERATION 17
DATA MONITOR 18
ACTIVE TEST 19
Trouble Diagnosis 19
FRONT WIPER DOES NOT OPERATE 19
FRONT WIPER STOP POSITION IS INCORRECT 21
ONLY FRONT WIPER LOW DOES NOT OPERATE 22
ONLY FRONT WIPER HI DOES NOT OPERATE 22
ONLY FRONT WIPER INT DOES NOT OPERATE 23
FRONT WIPER INTERMITTENT OPERATION SWITCH POSITION CANNOT BE ADJUSTED 23
WIPERS DO NOT WIPE WHEN FRONT WASHER OPERATES 24
Removal and Installation for Front Wiper Arms, Adjustment for Wiper Arms Stop Location 24
Removal and Installation for Wiper Motor and Linkage 25
REMOVAL 25
INSTALLATION 25
Washer Nozzle Adjustment 26
Washer Tube Layout 26
Removal and Installation for Wiper and Washer Switch 27
REMOVAL 27
INSTALLATION 27
Removal and Installation for Washer Tank 27
Removal and Installation for Washer Pump 27
CIGARETTE LIGHTER 28
Wiring Diagram — CIGAR — 28
Removal and Installation 29
POWER SOCKET 30
Wiring Diagram — CIGAR — 30
Removal and Installation 31
HORN 32
Wiring Diagram — HORN — 32
Removal and installation 33
REMOVAL (HORN HIGH) 33
INSTALLATION (HORN HIGH) 33
REMOVAL (HORN LOW) 33
INSTALLATION (HORN LOW) 33

PRECAUTION

PFP:00011

Precautions for Supplemental Restraint System (SRS) “AIR BAG” and “SEAT BELT PRE-TENSIONER”

EKS002IH

The Supplemental Restraint System such as “AIR BAG” and “SEAT BELT PRE-TENSIONER”, used along with a front seat belt, helps to reduce the risk or severity of injury to the driver and front passenger for certain types of collision. Information necessary to service the system safely is included in the SRS and SB section of this Service Manual.

WARNING:

- **To avoid rendering the SRS inoperative, which could increase the risk of personal injury or death in the event of a collision which would result in air bag inflation, all maintenance must be performed by an authorized NISSAN/INFINITI dealer.**
- **Improper maintenance, including incorrect removal and installation of the SRS, can lead to personal injury caused by unintentional activation of the system. For removal of Spiral Cable and Air Bag Module, see the SRS section.**
- **Do not use electrical test equipment on any circuit related to the SRS unless instructed to in this Service Manual. SRS wiring harnesses can be identified by yellow and/or orange harness connectors.**

Wiring Diagrams and Trouble Diagnosis

EKS002II

When you read wiring diagrams, refer to the following:

- Refer to GI-12, "How to Read Wiring Diagrams" .
- Refer to PG-3, "POWER SUPPLY ROUTING CIRCUIT" for power distribution circuit.

When you perform trouble diagnosis, refer to the following:

- Refer to GI-10, "HOW TO FOLLOW TEST GROUPS IN TROUBLE DIAGNOSES" .
- Refer to GI-25, "How to Perform Efficient Diagnosis for an Electrical Incident" .

FRONT WIPER AND WASHER SYSTEM

PFP:28810

Components Parts and Harness Connector Location

EKS002IJ

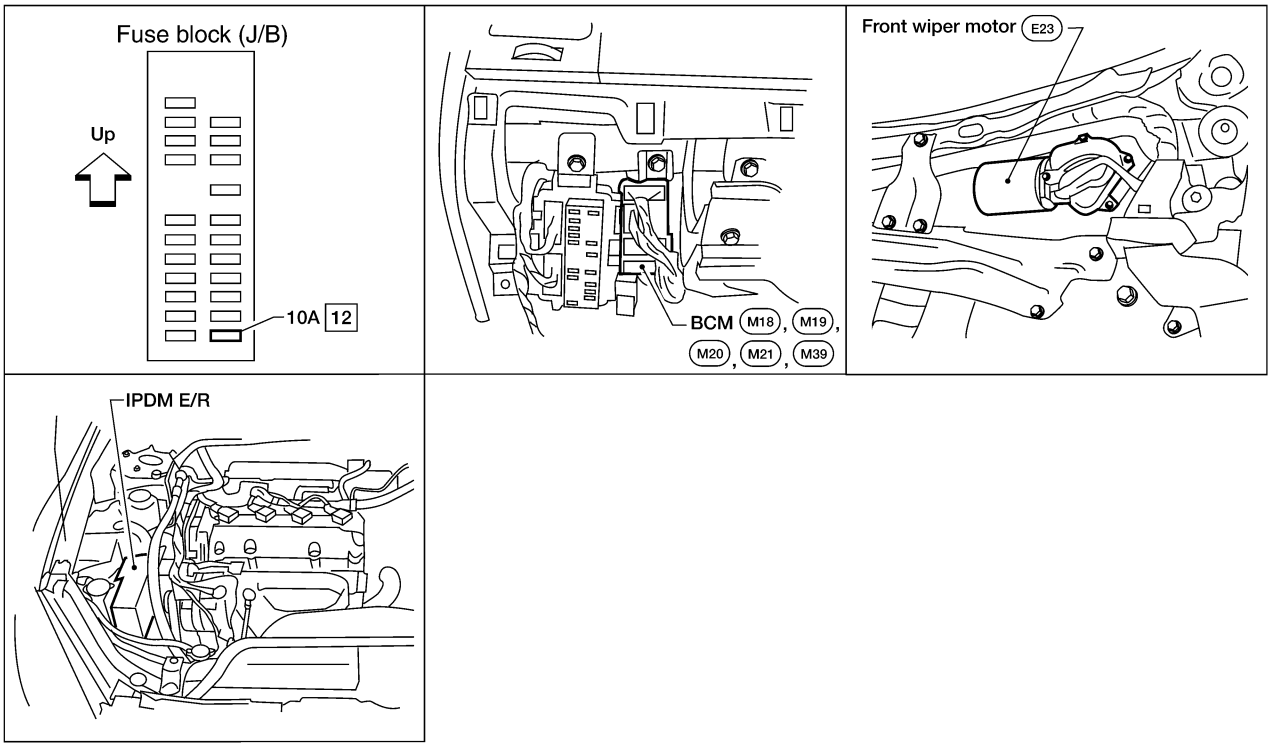

WKIA0065E

System Description

EKS002IK

- All front wiper relays (HI, LO) are included in IPDM E/R.
- Wiper switch (combination switch) is composed of a combination of 5 output terminals and 5 input terminals. Terminal combination status is read by BCM when switch is turned ON.
- BCM controls front wiper LO, HI, and INT (intermittent) operation.
- IPDM E/R operates wiper motor according to CAN communication signals from BCM.

LOW SPEED WIPER OPERATION

Power is supplied at all times

- from BCM (input 1) terminal 48
- to combination switch terminal 1
- to 20A fuse (No. 39, located in the IPDM E/R) and
- through IPDM E/R terminal 42
- to wiper motor terminal B.

When the ignition switch is in the ON or START position, and front wiper switch is turned to LO position, front wiper LO contact in combination switch comes ON, and
Power is supplied

- through combination switch terminal 3
- to BCM (output 3) terminal 50.

When BCM determines that wiper switch is in LO position, it uses CAN communications and
Front wiper request signal (LO) is sent

- from BCM terminals 70 and 71
- to IPDM E/R terminals 48 and 49.

When IPDM E/R receives front wiper request signal (LO), it turns ON front wiper relay (in IPDM E/R).
Ground is supplied

- from wiper motor terminal L,
- through IPDM E/R terminal 31 and front wiper relay
- to IPDM E/R terminal 16
- through body grounds E15 and E24.

With power and ground supplied, the front wiper motor operates at low speed.

HI SPEED WIPER OPERATION

Power is supplied at all times

- from BCM (input 2) terminal 49
- to combination switch terminal 2
- to 20A fuse (No. 39, located in the IPDM E/R) and
- through IPDM E/R terminal 42
- to wiper motor terminal B.

When the ignition switch is the ON or START position, and the front wiper switch is turned to HI position, front wiper HI contact in combination switch comes ON, and
Power is supplied

- through combination switch terminal 10
- to BCM (output 3) terminal 41.

When BCM determines that wiper switch is in HI position, it uses CAN communications and
Front wiper request signal (HI) is sent to IPDM E/R

- from BCM terminals 70 and 71
- to IPDM E/R terminals 48 and 49.

When the IPDM E/R receives front wiper request signal (HI), it energizes the front wiper relay and front wiper HI relay. Under this condition,
Ground is supplied

- to front wiper motor terminal H
- through IPDM E/R terminal 30 and front wiper relay and front wiper HI relay
- to IPDM E/R terminal 16
- through body grounds E15 and E24.

With power and ground supplied, the front wiper motor operates at high speed.

INTERMITTENT OPERATION

Power is supplied at all times

- from BCM (input 2) terminal 49
- to combination switch terminal 2.

When the ignition switch is in ON or START position, and the front wiper switch is turned to INT position, the front wiper INT contact in the combination switch comes ON,
and power is supplied

- from combination switch terminal 1
- to BCM (output 1) terminal 47.

When BCM determines that combination switch status is front wiper INT ON, it performs the following operations.

- When BCM detects ON/OFF status of intermittent operation dial positions 1, 2, and 3 (in same way as wiper INT), it determines wiper dial position status.
- BCM calculates operation interval from wiper dial position and vehicle speed signal received from combination meter through CAN communications.
- BCM sends front wiper request signal (INT) to IPDM E/R at calculated operation interval.

When IPDM E/R receives front wiper request signal (INT), it turns ON internal front wiper relay. It then sends auto-stop signal to BCM, and conducts intermittent front wiper motor operation.

AUTO STOP OPERATION

With wiper switch turned OFF, wiper motor will continue to operate until wiper arms reach windshield base.
When wiper arms are not located at base of windshield with wiper switch OFF, ground is provided

- from terminal 31 of the IPDM E/R
- to front wiper motor terminal L, in order to continue wiper motor operation at low speed.

Ground is also supplied

- through terminal 38 of the IPDM E/R
- to front wiper motor terminal P
- through terminal E of the front wiper motor and
- through body grounds E15 and E24.

When wiper arms reach base of windshield, front wiper motor terminals P and B are connected instead of terminals P and E.
Then the IPDM E/R sends auto stop operation signal to BCM with CAN communication line.
When BCM receives auto stop operation signal, BCM sends wiper stop signal to IPDM E/R with CAN communication line.
IPDM E/R stops wiper motor. Wiper motor will then stop wiper arms at the STOP position.

WASHER OPERATION

When the ignition switch is in ON or START position, power is supplied

- through 10A fuse (No. 46 located in the IPDM E/R)
- through IPDM E/R terminal 18
- to washer motor terminal +.

When front wiper switch is turned to washer position,
Ground is supplied

- to washer motor terminal -
- through combination switch terminal 11
- through combination switch terminal 12
- from body grounds M57 and M61.

With ground supplied, the front washer motor is operated, and at the same time,
Power is supplied

- through combination switch terminal 7
- to BCM (output 2) terminal 40.

When BCM detects that front washer motor has operated for 0.4 seconds or longer, BCM uses CAN communication and sends wiper request signal to IPDM E/R for low speed operation of wipers.
When BCM detects that washer switch is OFF, low speed operation cycles approximately 3 times and then stops.

MIST OPERATION

When the wiper switch is turned to the mist position, wiper low speed operation cycles once and then stops.
For additional information about wiper operation under this condition, refer to WW-3, "LOW SPEED WIPER OPERATION" .
If the switch is held in the mist position, low speed operation continues.

FAIL-SAFE FUNCTION

BCM includes fail-safe function to prevent malfunction of electrical components controlled by CAN communications if a malfunction in CAN communications occurs.
BCM uses CAN communications to stop output of electrical components it controls.
Until ignition switch is turned off, front wiper remains in same status as just before fail-safe control was initiated.
(If wiper was in low speed operation just before fail-safe, it continues low speed operation until ignition switch is turned OFF.)
When fail-safe status is initiated, BCM remains in standby until normal signals are received.
When normal signals are received, fail-safe status is canceled.

CAN Communication System Description

EKS002IL

CAN (Controller Area Network) is a serial communication line for real time application. It is an on-vehicle multiplex communication line with high data communication speed and excellent error detection ability. Many electronic control units are equipped onto a vehicle, and each control unit shares information and links with other control units during operation (not independent). In CAN communication, control units are connected with 2

communication lines (CAN H line, CAN L line) allowing a high rate of information transmission with less wiring. Each control unit transmits/receives data but selectively reads required data only.

FOR TCS MODELS

System Diagram

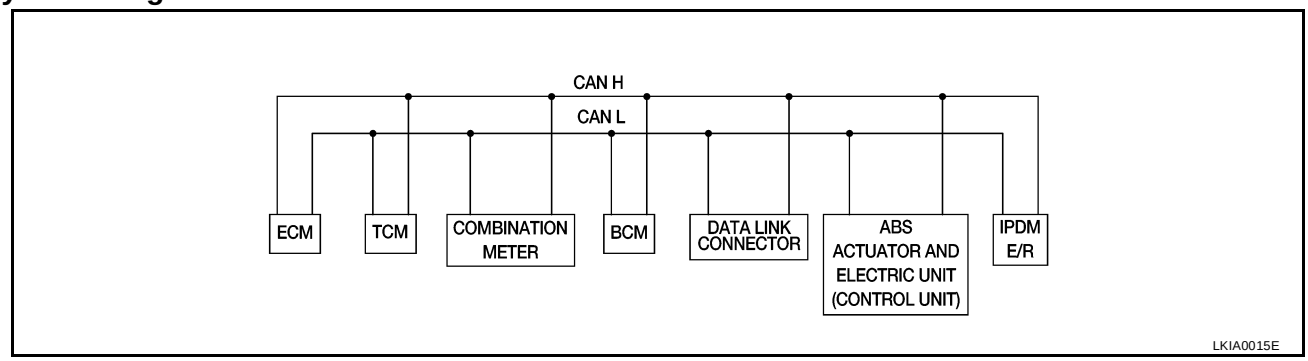

Input/Output Signal Chart

T: Transmit R: Receive

Signals	ECM	TCM	COMBINA-TION METER	BCM	ABS/TCS control unit	IPDM E/R
Engine speed signal	T		R		R	
Engine coolant temperature signal	T		R			
Accelerator pedal position signal	T					
Fuel consumption monitor signal	T		R			
A/T warning lamp signal		T	R			
A/T position indicator signal	R	T	R	R(R range only)	R	
ABS operation signal	R				T	
TCS operation signal	R	R			T	
Air conditioner switch signal	R			T		
Air conditioner compressor signal	R					T
A/C compressor request signal	T					R
Cooling fan motor operation signal	R					T
Cooling fan speed request signal	T					R
Position lights request			R	T		R
Position lights status				R		T
Low beam request				T		R
Low beam status	R			R		T
High beam request			R	T		R
High beam status	R			R		T
Front fog lights request				T		R
Front fog light status				R		T
OD cancel switch signal		R	T			R
Brake switch signal		R	T			
Vehicle speed signal	R		T			
	R		T	R		
Oil pressure switch			R			T
Sleep request1			R	T		
Sleep request2				T		R
N range switch signal		R	T			

Signals	ECM	TCM	COMBINATION METER	BCM	ABS/TCS control unit	IPDM E/R
P range switch signal		R	T			
Seat belt buckle switch signal			T	R		
Door switch signal			R	T		R
Tail lamp request			R	T		R
Turn indicator signal			R	T		
Buzzer output signal			R	T		
Trunk switch signal			R	T		
ASCD main switch signal	T		R			
ASCD cruise signal	T		R			
Wiper operation				R		T
Wiper stop position signal				R		T
Rear window defogger switch signal				T		R
Rear window defogger control signal	R			R		T

FOR A/T MODELS

System Diagram

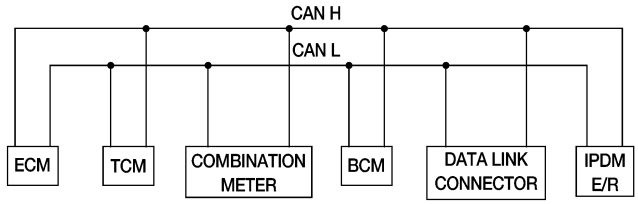

LKIA0017E

Input/Output Signal Chart

T: Transmit R: Receive

Signals	ECM	TCM	COMBINATION METER	BCM	IPDM E/R
Engine speed signal	T		R		
Engine coolant temperature signal	T		R		
Accelerator pedal position signal	T				R
Fuel consumption monitor signal	T		R		
A/T warning lamp signal		T	R		
A/T position indicator signal	R	T	R	R(R range only)	
Air conditioner switch signal	R			T	
Air conditioner compressor signal	R				T
A/C compressor request signal	T				R
Blower fan switch signal	R(QR25DE)			T	
Cooling fan motor operation signal	R			T	
Cooling fan speed request signal	T				R
Position lights request			R	T	R
Position lights status				R	T
Low beam request				T	R

Signals	ECM	TCM	COMBINATION METER	BCM	IPDM E/R
Low beam status	R			R	T
High beam request			R	T	R
High beam status	R			R	T
Front fog lights request				T	R
Front fog light status				R	T
OD cancel switch signal		R	T		R
Brake switch signal		R	T		
Vehicle speed signal	R		T		
	R		T	R	
Oil pressure switch			R		T
Sleep request1			R	T	
Sleep request2				T	R
N range switch signal		R	T		
P range switch signal		R	T		
Seat belt buckle switch signal			T	R	
Door switch signal			R	T	R
Tail lamp request			R	T	R
Turn indicator signal			R	T	
Buzzer output signal			R	T	
Trunk switch signal			R	T	
ASCD main switch signal	T		R		
ASCD cruise signal	T		R		
Wiper operation				R	T
Wiper stop position signal				R	T
Rear window defogger switch signal				T	R
Rear window defogger control signal	R			R	T

FOR M/T MODELS

System Diagram

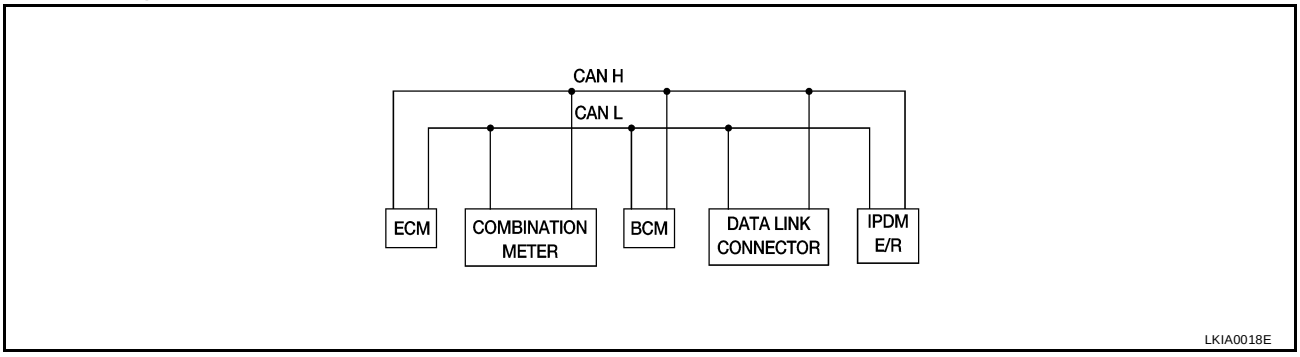

Input/Output Signal Chart

T: Transmit R: Receive

Signals	ECM	COMBINATION METER	BCM	IPDM E/R
Engine speed signal	T			
Engine coolant temperature signal	T			
Fuel consumption monitor signal	T			
Air conditioner switch signal	R		T	

Signals	ECM	COMBINATION METER	BCM	IPDM E/R
Air conditioner compressor signal	R			T
A/C compressor request signal	T			R
Blower fan switch signal	R(QR25DE)		T	
Cooling fan motor operation signal	R			T
Cooling fan speed request signal	T			R
Position lights request		R	T	R
Position lights status			R	T
Low beam request			T	R
Low beam status	R		R	T
High beam request		R	T	R
High beam status	R		R	T
Front fog lights request			T	R
Front fog light status			R	T
Vehicle speed signal	R	T		
Oil pressure switch		R		T
Sleep request1		R	T	
Sleep request2			T	R
Seat belt buckle switch signal		T	R	
Door switch signal		R	T	R
Tail lamp request		R	T	R
Turn indicator signal		R	T	
Buzzer output signal		R	T	
Trunk switch signal		R	T	
ASCD main switch signal	T	R		
ASCD cruise signal	T	R		
Wiper operation			R	T
Wiper stop position signal			R	T
Rear window defogger switch signal			T	R
Rear window defogger control signal	R		R	T

Wiring Diagram — WIPER —

EKS002IM

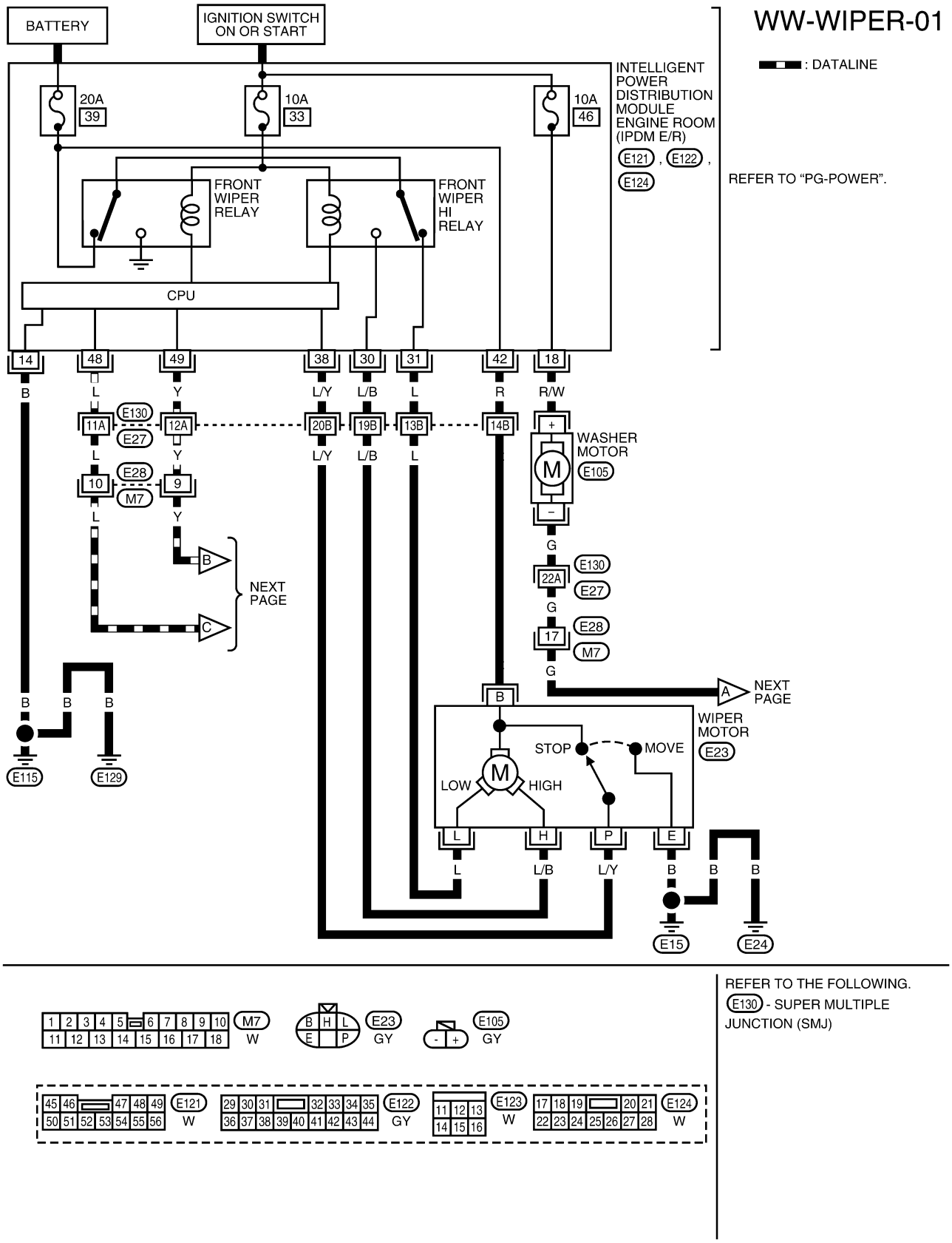

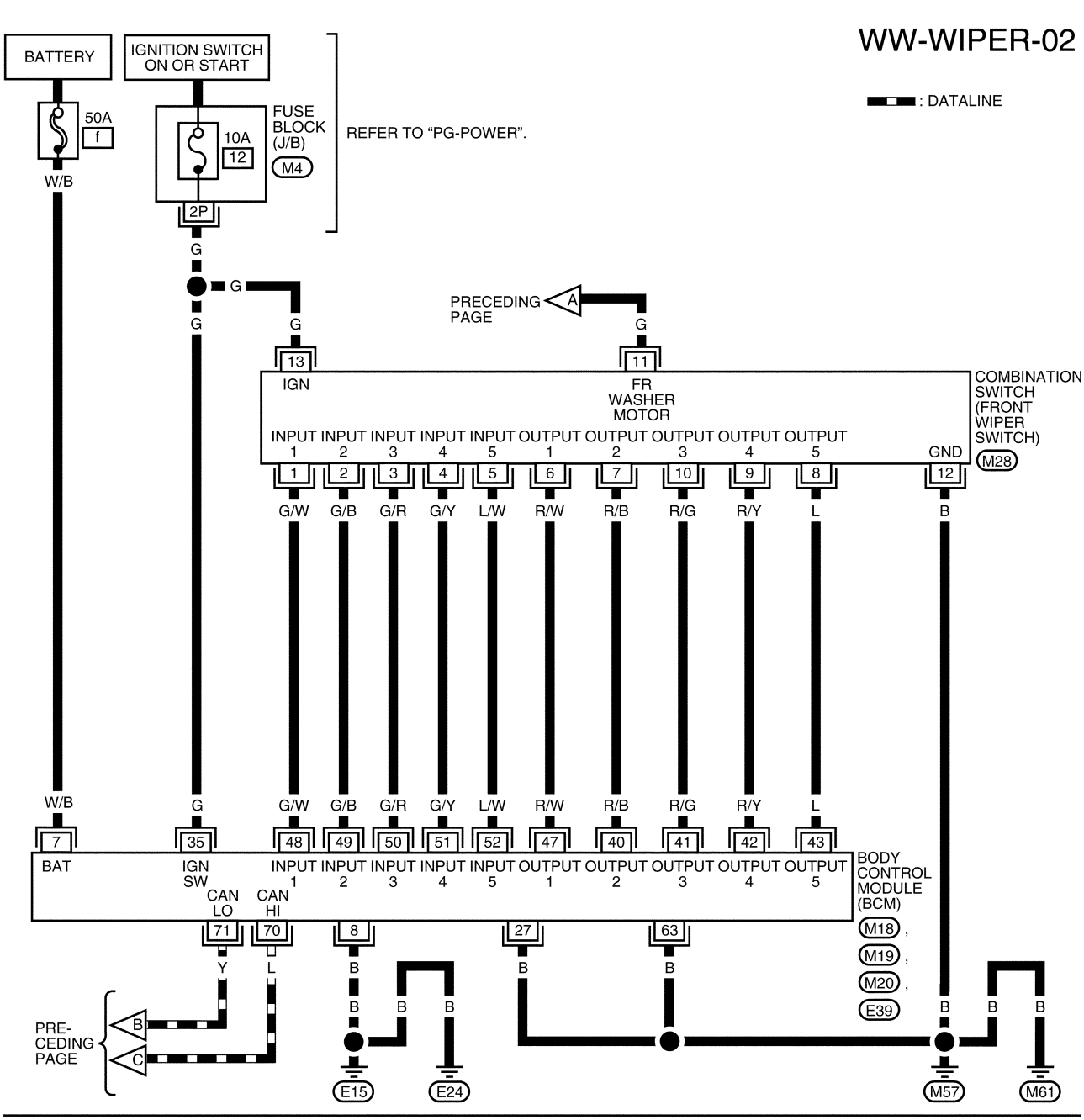
WW-WIPER-02
: DATALINE
BATTERY
IGNITION SWITCH ON OR START
50A
f
W/B
10A
12
FUSE BLOCK (J/B)
M4
REFER TO "PG-POWER".
2P
G
PRECEDING PAGE
A
13
IGN
11
FR WASHER MOTOR
COMBINATION SWITCH (FRONT WIPER SWITCH)
INPUT 1 INPUT 2 INPUT 3 INPUT 4 INPUT 5 OUTPUT 1 OUTPUT 2 OUTPUT 3 OUTPUT 4 OUTPUT 5 GND
M28
1 2 3 4 5 6 7 10 9 8 12
G/W G/B G/R G/Y L/W R/W R/B R/G R/Y L B
7 35 48 49 50 51 52 47 40 41 42 43
BAT
IGN SW
CAN LO
CAN HI
INPUT 1 INPUT 2 INPUT 3 INPUT 4 INPUT 5 OUTPUT 1 OUTPUT 2 OUTPUT 3 OUTPUT 4 OUTPUT 5
BODY CONTROL MODULE (BCM)
71 70 8 27 63
M18, M19, M20, E39
Y L B B B
PRE-CEDING PAGE
B C
E15 E24 M57 M61

1P 2P 3P 4P 5P 6P 7P
8P 9P 10P 11P 12P 13P 14P 15P 16P
M4
W

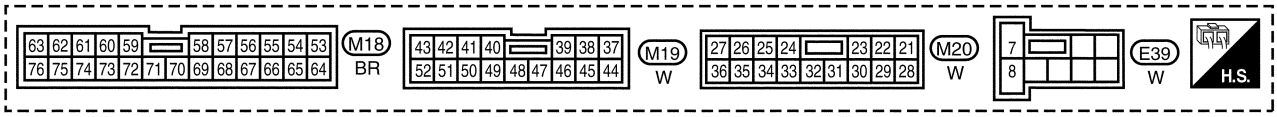
63 62 61 60 59 58 57 56 55 54 53
76 75 74 73 72 71 70 69 68 67 66 65 64
M18
BR
43 42 41 40 39 38 37
52 51 50 49 48 47 46 45 44
M19
W
27 26 25 24 23 22 21
36 35 34 33 32 31 30 29 28
M20
W
7
8
E39
W
H.S.

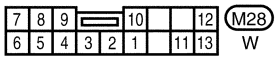
7 8 9 10 12
6 5 4 3 2 1 11 13
M28
W

WKWA0394E

Terminals and Reference Values for BCM

EKS002IN

Terminal No. (Wire color)	Signal name	Measuring condition		Standard (V)
		Ignition switch	Operation or condition	
7 (W/B)	Battery	ON	—	Approx. 12V
8 (B)	Ground	ON	—	Approx. 0
35 (G)	IGN power	ON	—	Approx. 12V
40 (R/B)	Combination switch output 2	ON	Light switch and wiper switch OFF	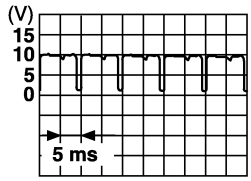 SKIA1119J
41 (R/G)	Combination switch output 3	ON	Light switch and wiper switch OFF	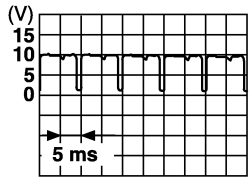 SKIA1119J
47 (R/W)	Combination switch output 1	ON	Light switch and wiper switch OFF	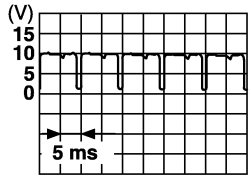 SKIA1119J
48 (G/W)	Combination switch input 1 (Front washer, front wiper LO)	ON	Light switch and wiper switch OFF	4.5 or more
49 (G/B)	Combination switch input 2 (Front wiper HI, front wiper INT)	ON	Light switch and wiper switch OFF	4.5 or more
50 (G/R)	Combination switch input 3 (intermittent operation dial position 1)	ON	Light switch and wiper switch OFF	4.5 or more
51 (G/Y)	Combination switch input 4 (intermittent operation dial position 2)	ON	Light switch and wiper switch OFF	4.5 or more
52 (L/W)	Combination switch input 5 (intermittent operation dial position 3)	ON	Light switch and wiper switch OFF	4.5 or more

Terminals and Reference Values for IPDM E/R

EKS002IO

Terminal No. (Wire color)	Signal name	Measuring condition			Reference value (V) (Approx.)
		Ignition switch	Operation or condition		
14 (B)	Ground	ON	—		0
18 (R/WL)	Washer motor power	ON	Wiper switch	OFF	12V
				LO	0

Terminal No. (Wire color)	Signal name	Measuring condition			Reference value (V) (Approx.)
		Ignition switch	Operation or condition		
30 (L/B)	Hi speed signal	ON	Wiper switch	OFF	12V
				HI	0
31 (L)	Low speed signal	ON	Wiper switch	OFF	12V
				LO	0
38 (L/Y)	Wiper position detection signal	ON	Wiper switch: LO position		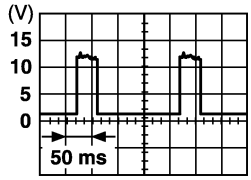 SKIA1132J
42 (R)	Wiper motor power source	ON	—		12V
48 (L)	CAN HI	ON	—		—
49 (Y)	CAN LO	ON	—		—

BCM Wiper Switch Reading Function

EKS002IP

BCM reads combination switch (wiper switch) status, and controls front wipers based on the results.
BCM is a combination of 5 output terminals (OUTPUT 1 - 5) and 5 input terminals (INPUT 1 - 5). It reads 20 types of switch data and 5 types of diagnosis data.

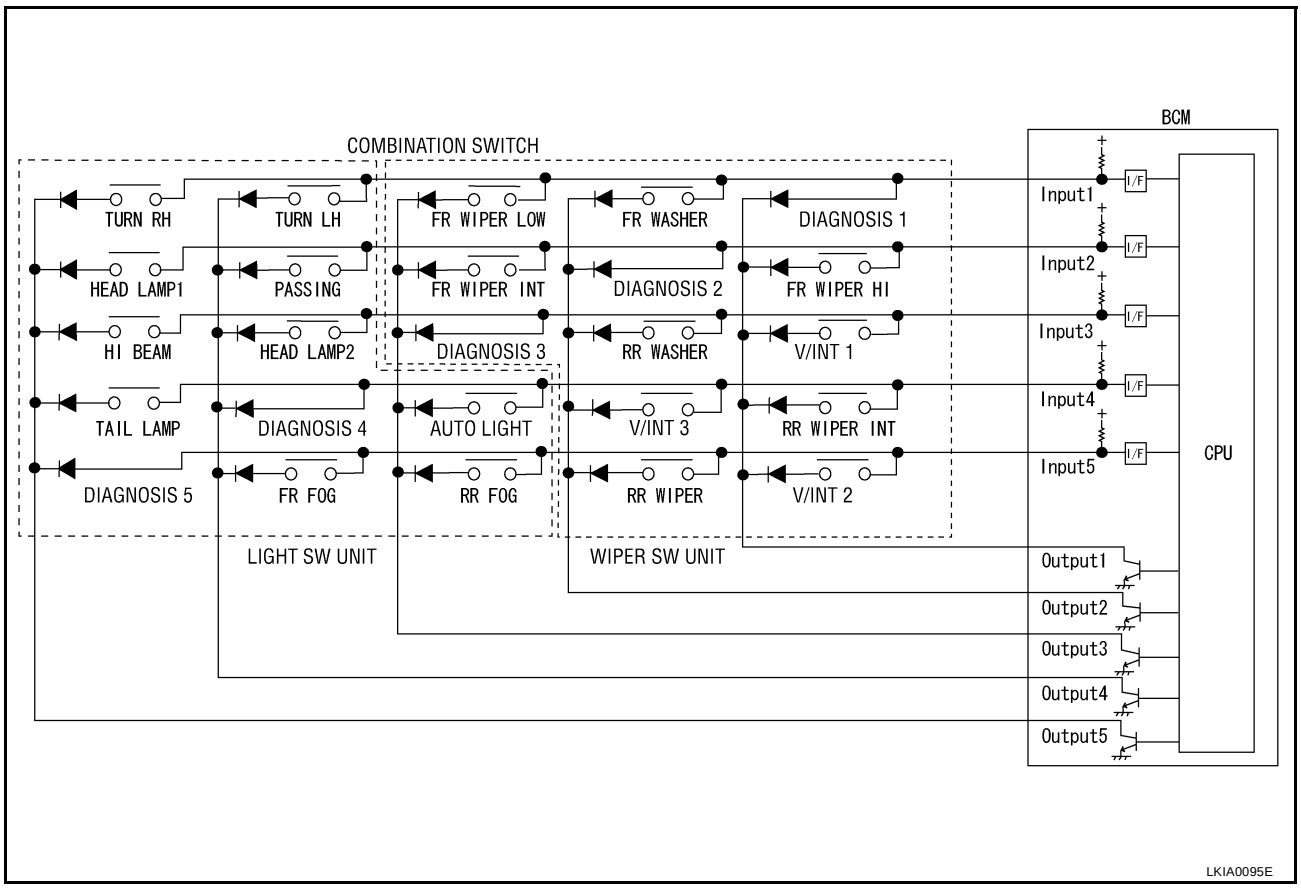

OPERATION DESCRIPTION

BCM continuously outputs power voltage from input terminals (INPUT 1 - 5). At this time, output terminals (OUTPUT 1 - 5) operate transistors in sequence and carry current. If any switch (or switches) become ON at this time, the input terminal corresponding to that switch detects current flowing, and BCM determines that the switch is ON.

TABLE OF BCM - COMBINATION SWITCH OPERATIONS

BCM reads operation status of combination switch using combinations shown in table below.

	COMB SW INPUT 1		COMB SW INPUT 2		COMB SW INPUT 3		COMB SW INPUT 4		COMB SW INPUT 5	
	ON	OFF	ON	OFF	ON	OFF	ON	OFF	ON	OFF
COMB SW OUTPUT 1	DIAGNOSIS 1 OK	DIAGNOSIS 1 NG	FR WIPER HI ON	FR WIPER HI OFF	V/INT 1 ON	V/INT 1 OFF	RR WIPER INT ON	RR WIPER INT OFF	V/INT 2 ON	V/INT 2 OFF
COMB SW OUTPUT 2	FR WASHER ON	FR WASHER OFF	DIAGNOSIS 2 OK	DIAGNOSIS 2 NG	RR WASHER ON	RR WASHER OFF	V/INT 3 ON	V/INT 3 OFF	RR WIPER ON	RR WIPER OFF
COMB SW OUTPUT 3	FR WIPER LOW ON	FR WIPER LOW OFF	FR WIPER INT ON	FR WIPER INT OFF	DIAGNOSIS 3 OK	DIAGNOSIS 3 NG	AUTO LIGHT ON	AUTO LIGHT OFF	RR FOG ON	RR FOG OFF
COMB SW OUTPUT 4	TURN LH ON	TURN LH OFF	PASSING ON	PASSING OFF	HEAD LAMP 2 ON	HEAD LAMP 2 OFF	DIAGNOSIS 4 OK	DIAGNOSIS 4 NG	FR FOG ON	FR FOG OFF
COMB SW OUTPUT 5	TURN RH ON	TURN RH OFF	HEAD LAMP ON	HEAD LAMP OFF	HI BEAM ON	HI BEAM OFF	LIGHTING SWITCH 1ST POSITION ON	LIGHTING SWITCH 1ST POSITION OFF	DIAGNOSIS 5 OK	DIAGNOSIS 5 NG

LKIA0097E

SAMPLE OPERATION: (WIPER SWITCH TURNED TO LO POSITION)

- When wiper switch is turned to LO position, front wiper LO contact inside combination switch becomes ON. At this time, OUTPUT 3 transistor operates and BCM detects flow of current at INPUT 1.
- When OUTPUT 3 transistor is ON and BCM detects current flowing at INPUT 1, BCM determines that wiper switch is at LO. BCM uses CAN communication and sends front wiper signals to IPDM E/R.
- When OUTPUT 3 transistor operates again and BCM again detects current flowing at INPUT 1, it confirms that front wiper LO operation is continuing.

NOTE:
Each OUTPUT terminal transistor operates at 10 ms intervals. Therefore, a delay occurs between the switch becoming ON and operation of the electric load. However, this delay is so small it is undetectable by human senses.

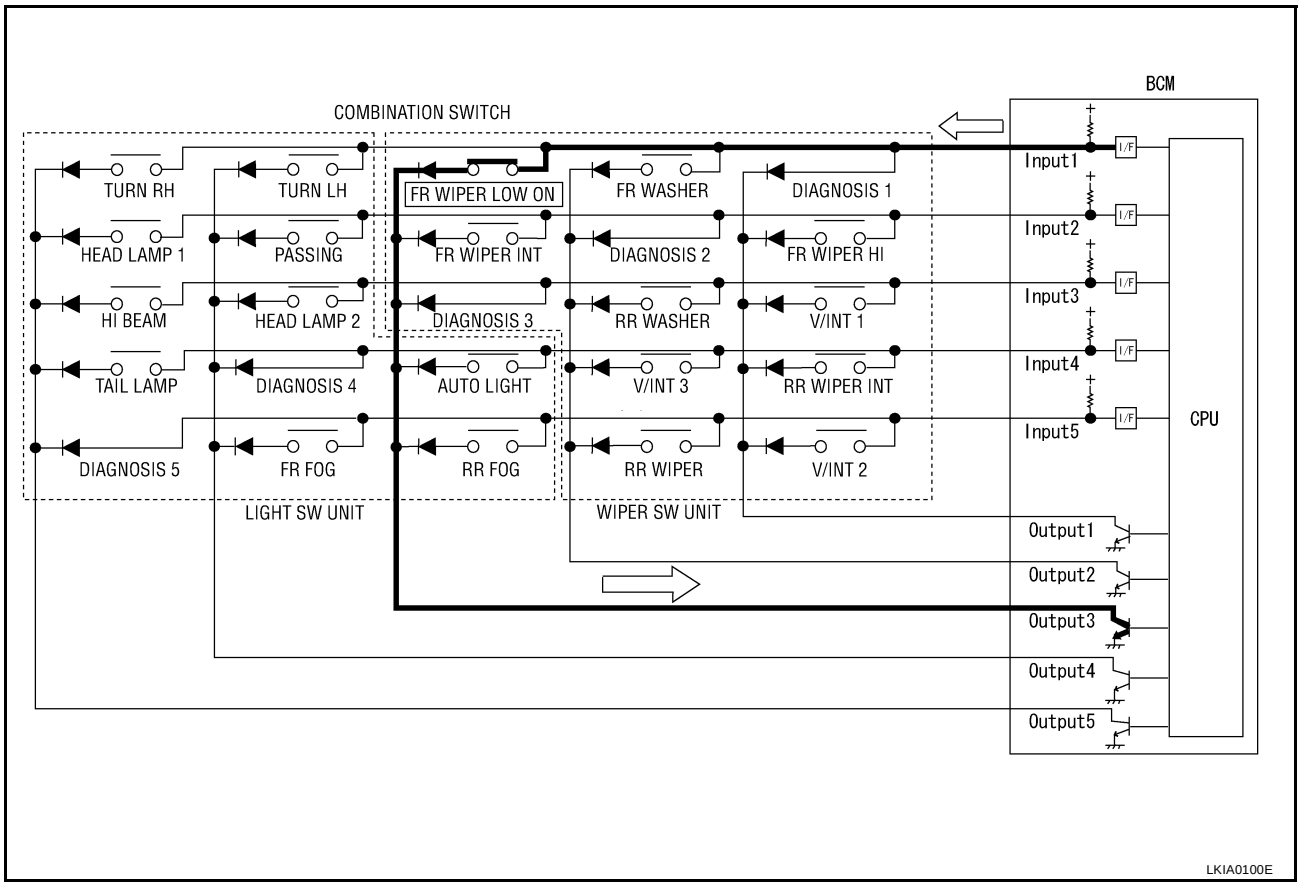

OPERATING MODES

The following operation modes exist for combination switch reading function.

Normal status

When BCM is not in sleep status, OUTPUT terminals (1 - 5) each turn ON-OFF every 10 ms.

Sleep status

When BCM is in sleep status, output from OUTPUT 1 and 2 transistors stops, with BCM entering a power-saving mode. OUTPUT (3 - 5) turn ON-OFF every 60 ms, and only input from light switch system is accepted.

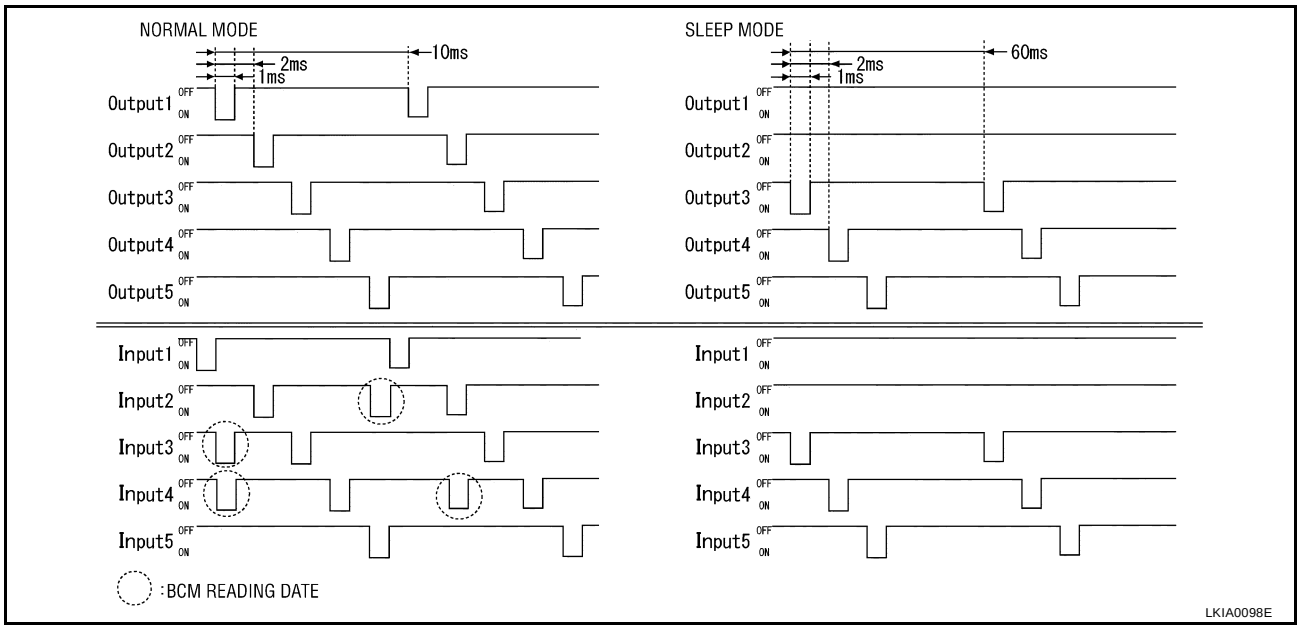

INTERMITTENT OPERATION

Wiper intermittent operation delay interval is determined from a combination of 3 switches (intermittent operation dial position 1, intermittent operation dial position 2, and intermittent operation dial position 3) and vehicle speed signal.
During each intermittent operation delay interval, BCM sends front wiper request signal to IPDM E/R.

Wiper Dial Position Setting

Wiper dial position	Intermittent operation interval	Combination switch		
		Intermittent operation dial position 1	Intermittent operation dial position 2	Intermittent operation dial position 3
Wiper dial position 1	Small	ON	ON	ON
Wiper dial position 2		ON	ON	OFF
Wiper dial position 3		ON	OFF	OFF
Wiper dial position 4	↓	OFF	OFF	OFF
Wiper dial position 5		OFF	OFF	ON
Wiper dial position 6		OFF	ON	ON
Wiper dial position 7	Large	OFF	ON	OFF

Example: For wiper dial position 1...
Using combination switch reading function, BCM detects ON/OFF status of intermittent operation dial positions 1, 2, and 3.
When combination switch status is as listed below, BCM determines that it is wiper dial position 1.

- Intermittent operation dial position 1: ON (input 3 and output 2 are conducting.)
- Intermittent operation dial position 2: ON (input 5 and output 2 are conducting.)
- Intermittent operation dial position 3: ON (input 4 and output 1 are conducting.)

BCM determines front wiper intermittent operation delay interval from wiper dial position 1 and vehicle speed, and sends wiper request signal (INT) to IPDM E/R.

Work Flow

EKS002IQ

1. Confirm the trouble symptom or customer complaint.
2. Understand the system description, refer to WW-3, "System Description" .
3. Perform preliminary inspection, refer to WW-17, "Preliminary Inspection" .
4. According to the trouble diagnosis chart, repair or replace the cause of the malfunction.

5. Does wiper function operate normally? If it operates normally, GO TO 6. If not, GO TO 4.
6. End.

Preliminary Inspection

EKS002IR

INSPECTION FOR POWER SUPPLY AND GROUND CIRCUIT

Inspection procedure

1. CHECK FUSE

- Check if wiper and washer fuse is blown.

Unit	Power source	Fuse No.
Front washer motor	Ignition ON or START	46
Front wiper motor, front wiper relay, front wiper HI relay	Battery	39
Front wiper relay, front wiper HI relay	Ignition ON or START	33

OK or NG

OK >> GO TO 2.
NG >> If fuse is blown, be sure to eliminate cause of problem before installing new fuse, refer to PG-3, "POWER SUPPLY ROUTING CIRCUIT" .

2. GROUND CIRCUIT INSPECTION (BCM)

Check for continuity between the following terminals on BCM connector and body ground.

Unit (Connector)	Terminals (wire color)		Ignition switch condition	Continuity
	(+)	(–)		
BCM (E39)	8 (B)	Body ground	OFF	Continuity should exist
BCM (M20)	27 (B)			
BCM (M18)	63 (B)			

OK or NG

OK >> Inspection end
NG >> Replace the harness BCM ground circuit.

CONSULT-II Functions

EKS002IS

CONSULT-II has functions for display of work support, self-diagnosis, data monitor, and active tests for each part, using received data and transmitted commands through communications lines from BCM.

BCM diagnosis location	Check item, diagnosis mode	Description
Wiper	Data monitor	Displays BCM input data in real time.
	Active test	Load operation can be checked by applying a drive signal to load.

CONSULT-II OPERATION

1. With the ignition switch OFF, connect CONSULT-II to the vehicle-side data link connector, then turn the ignition switch ON.
2. Touch “START”.

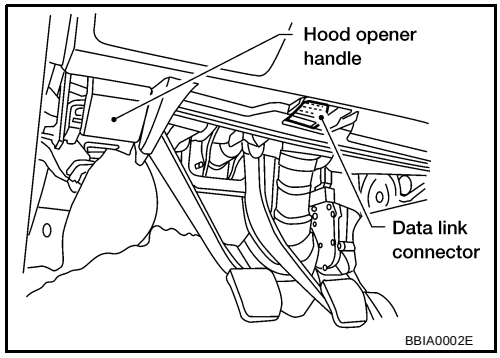

3. Touch “BCM” on the “SELECT SYSTEM” screen.

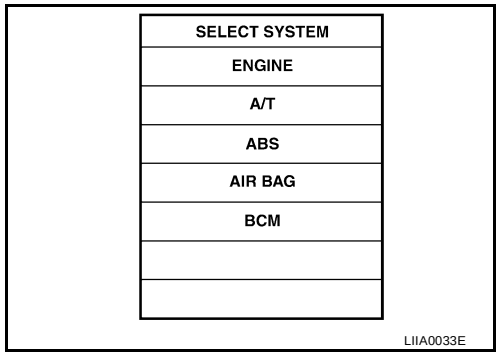

4. Select the desired part to be diagnosed on the “SELECT TEST ITEM” screen.

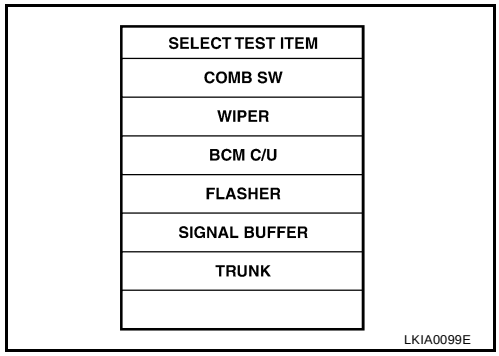

DATA MONITOR

Operation Procedure

1. Touch “WIPER” on the “SELECT TEST ITEM” screen.
2. Touch “DATA MONITOR” on the “SELECT DIAG MODE” screen.
3. Touch either “ALL SIGNALS” or “SELECTION FROM MENU” on the “DATA MONITOR” screen.

All signals	Monitors all the items.
Selection from menu	Selects and monitors the individual item selected.

4. Touch “START”.
5. When “SELECTION FROM MENU” is selected, touch items to be monitored. When “ALL SIGNALS” is selected, all the items will be monitored.
6. Touch “RECORD” while monitoring, then the status of the monitored item can be recorded. To stop recording, touch “STOP”.

Display Item List

Monitor item name “OPERATION OR UNIT”		Contents
IGN ON SW	“ON/OFF”	Displays “IGN Position (ON)/OFF, ACC Position (OFF)” status as judged from ignition switch signal.
FR WIPER INT	“ON/OFF”	Displays “Front Wiper INT (ON)/Other (OFF)” status as judged from wiper switch signal.
FR WIPER LOW	“ON/OFF”	Displays “Front Wiper LOW (ON)/Other (OFF)” status as judged from wiper switch signal.
FR WIPER HI	“ON/OFF”	Displays “Front Wiper HI (ON)/Other (OFF)” status as judged from wiper switch signal.
FR WASHER SW	“ON/OFF”	Displays “Front Washer Switch (ON)/Other (OFF)” status as judged from wiper switch signal.
INT VOLUME	(1 - 7)	Displays intermittent operation dial position setting (1 - 7) as judged from wiper switch signal.
VHCL SPEED SEN	“ON/OFF”	Displays “Driving (ON)/Stopped (OFF)” status as judged from vehicle speed signal.
FR WIPER STOP	“ON/OFF”	Displays “Stopped (ON)/Operating (OFF)” status as judged from the auto-stop signal.

ACTIVE TEST

Operation Procedure

1. Touch “WIPERS” on the “SELECT TEST ITEM” screen.
2. Touch “ACTIVE TEST” on the “SELECT DIAG MODE” screen.
3. Touch item to be tested and check operation of the selected item.
4. During the operation check, touching “BACK” deactivates the operation.

Display Item List

Test item	Display on CONSULT–II screen	Description
Front wiper HI output	FR WIPER (HI)	Front wiper HI can be operated by any ON–OFF operation.
Front wiper LO output	FR WIPER (LO)	Front wiper LO can be operated by any ON-OFF operation.
Front wiper INT output	FR WIPER (INT)	Front wiper INT can be operated by any ON-OFF operation.

Trouble Diagnosis

EKS002IT

FRONT WIPER DOES NOT OPERATE

1. IPDM E/R TO FRONT WIPERS (1) INSPECTION

1. Turn on front wipers using active test. Refer to WW-19, "ACTIVE TEST" .
2. Confirm front wiper operation.

OK or NG

OK >> GO TO 4.
NG >> GO TO 2.

2. IPDM E/R TO FRONT WIPERS (2) INSPECTION

1. Disconnect IPDM E/R connector and front wiper motor connector.
2. Check continuity between IPDM E/R harness connector terminals and front wiper motor harness connector terminals.

Terminals				Continuity
IPDM E/R		Front wiper motor		
Connector	Terminal (wire color)	Connector	Terminal (wire color)	
E122	30 (L/B)	E23	H (L/B)	YES
	31 (L)		L (L)	
	38 (L/Y)		P (L/Y)	

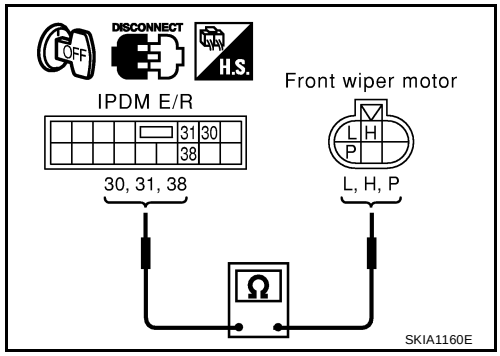

3. Check continuity between IPDM E/R harness connector terminal and body ground.

Terminals			Continuity
IPDM E/R		Body ground	YES
Connector	Terminal (wire color)		
E123	14 (B)		

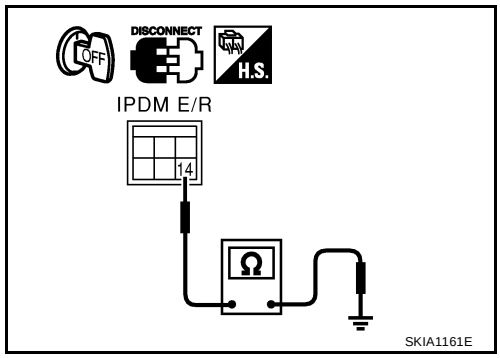

OK or NG

OK >> Connect connector. GO TO 3.
NG >>
- Check for short circuit or open circuit in harness between IPDM E/R and front wiper motor.
- Check for open circuit in harness between IPDM E/R and body ground.

3. IPDM E/R INSPECTION

Select "FR WIPER HI" during active test. Refer to WW-19, "ACTIVE TEST" . When front wiper relay, and front wiper HI relay are operating, check voltage between IPDM E/R terminals and body ground.

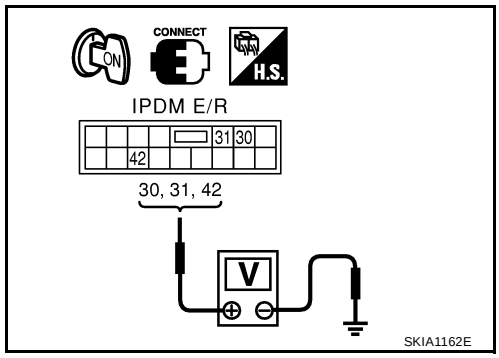

Terminals				Voltage
IPDM E/R(+)		Ground	Condition	
Connector	Terminal (wire color)			
E122	31 (L)		Stopped	Battery voltage
			LO operation	Approx. 0V
	30 (L/B)		Stopped	Battery voltage
			HI operation	Approx. 0V
	42 (R)		—	Battery voltage

OK or NG

OK >> Replace wiper motor.
NG >> Replace IPDM E/R.

4. COMBINATION SWITCH TO BCM (1) INSPECTION

Select BCM on Consult-II. Carry out self-diagnosis of “BCM C/U”.

Displayed self-diagnosis results

No malfunction detected>> GO TO 5.
CAN communications or CAN system>> Inspect the BCM CAN communications system. Go to BCS-15, "CAN Communication Inspection Using CONSULT-II (Self-Diagnosis)" .
OPEN DETECT 1 - 5>>Combinations switch system malfunction. Go to BCS-16, "Combination Switch Inspection According to Self-Diagnostic Results" .

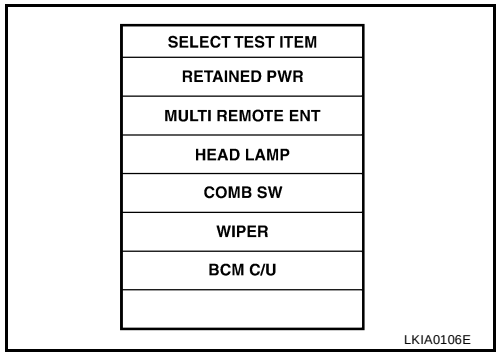

5. COMBINATION SWITCH TO BCM (2) INSPECTION

Select BCM on Consult-II. With “WIPER” data monitor, check that “FR WIPER INT”, “FR WIPER LOW” and “FR WIPER HI” turn ON-OFF according to operation of wiper switch.

OK or NG

OK >> Replace BCM.
NG >> Replace wiper switch.

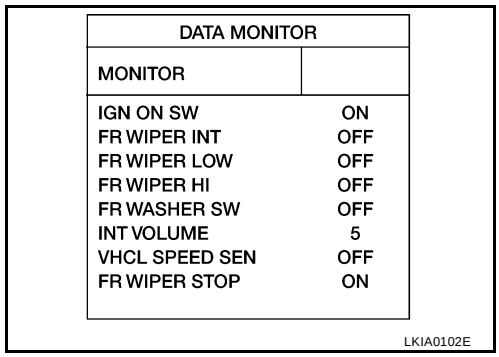

FRONT WIPER STOP POSITION IS INCORRECT

1. IPDM E/R TO WIPER MOTOR (1) INSPECTION

Select BCM on Consult-II. With “WIPER” data monitor, check that “FR WIPER STOP” turns ON-OFF according to wiper operation.

OK or NG

OK >> Replace IPDM E/R.
NG >> GO TO 2.

DATA MONITOR	
MONITOR	
IGN ON SW	ON
FR WIPER INT	OFF
FR WIPER LOW	OFF
FR WIPER HI	OFF
FR WASHER SW	OFF
INT VOLUME	5
VHCL SPEED SEN	OFF
FR WIPER STOP	ON

LKIA0102E

2. IPDM E/R TO WIPER MOTOR (2) INSPECTION

1. Disconnect IPDM E/R connector and front wiper motor connector.
2. Check continuity between IPDM E/R harness connector terminal and front wiper motor harness connector terminal.

Terminals				Continuity
IPDM E/R		Front wiper motor		
Connector	Terminal (wire color)	Connector	Terminal (wire color)	
E122	38 (L/Y)	E23	P (L/Y)	YES

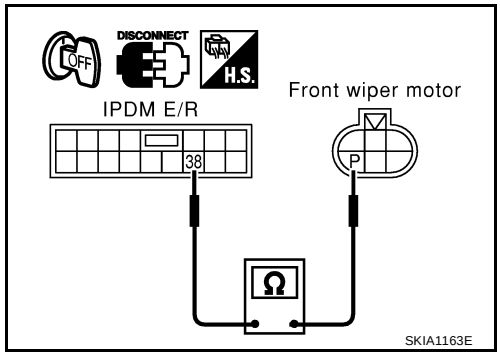

SKIA1163E

3. Check continuity between front wiper motor harness connector terminal E and body ground.

Terminals			Continuity
IPDM E/R		Ground	YES
Connector	Terminal (wire color)		
E23	E (B)		

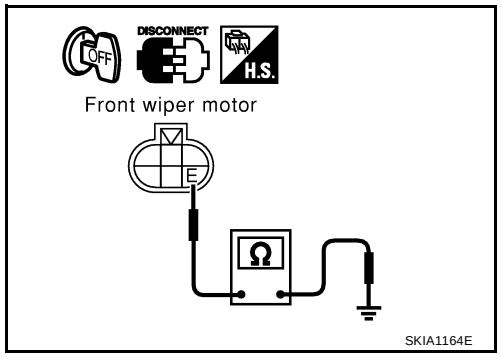

SKIA1164E

OK or NG

OK >> Connect connector. GO TO 3.
NG >>
- Check for short circuit or open circuit in harness between IPDM E/R and front wiper motor.
- Check for open circuit in harness between front wiper motor and body ground.

3. IPDM E/R TO WIPER MOTOR (3) INSPECTION

While front wiper motor is stopped and while operating, measure voltage between IPDM E/R terminal 38 and body ground.

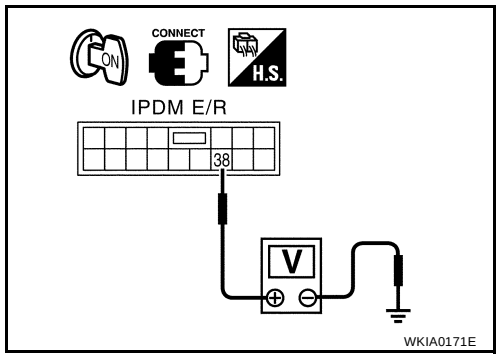

Terminals				Voltage (Approx.)
IPDM E/R (+)		Ground (–)	Condition	
Connector	Terminal (wire color)			
E122	38 (L/Y)		Wiper operating	0V
			Wiper stopped	12V

OK or NG

OK >> Replace IPDM E/R.
NG >> Replace front wiper motor.

ONLY FRONT WIPER LOW DOES NOT OPERATE

1. COMBINATION SWITCH TO BCM INSPECTION

Select BCM on Consult–II. With “WIPER” data monitor, check that “FR WIPER LOW” turns ON-OFF according to operation of wiper switch.

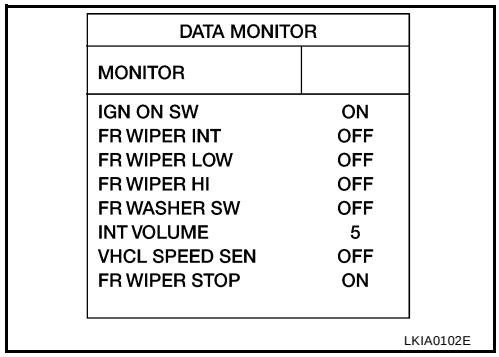

OK or NG

OK >> Replace BCM.
NG >> Replace wiper switch.

ONLY FRONT WIPER HI DOES NOT OPERATE

1. IPDM E/R TO FRONT WIPERS (1) INSPECTION

1. Select "FR WIPER HI" during active test. Refer to WW-19, "ACTIVE TEST" .
2. Verify that front wipers operate in HI operation mode.

OK or NG

OK >> GO TO 4.
NG >> GO TO 2.

2. IPDM E/R TO FRONT WIPERS (2) INSPECTION

1. Disconnect IPDM E/R connector and front wiper motor connector.
2. Check continuity between IPDM E/R vehicle side connector terminals and front wiper motor harness connector terminals.

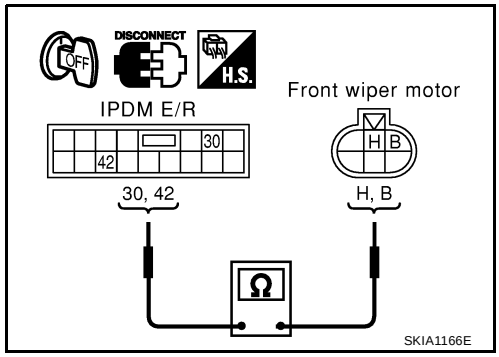

Terminals				Continuity
IPDM E/R		Front wiper motor		
Connector	Terminal (wire color)	Connector	Terminal (wire color)	
E122	30 (L/B)	E23	H (L/B)	YES
	42 (R)		B (R)	

OK or NG

OK >> Connect connector. GO TO 3.
NG >> Check for short circuit or open circuit in harness between IPDM E/R and front wiper motor.

3. IPDM E/R INSPECTION

Select "FR WIPER HI" during active test. Refer to WW-19, "ACTIVE TEST" . When front wiper relay (HI) is operating, check continuity between IPDM E/R terminal 30 and terminal 14.

Terminals			Continuity
IPDM E/R			
Connector	Terminal (wire color)	Terminal (wire color)	
E122	30 (L/B)	14 (B)	YES

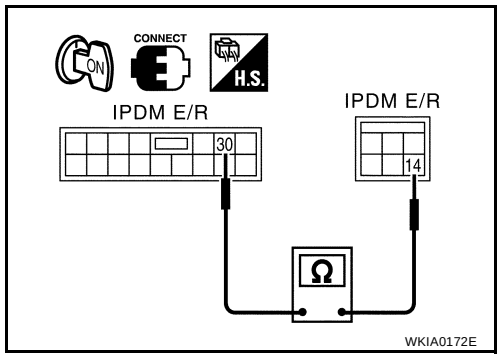

OK or NG

OK >> Replace wiper motor.
NG >> Replace IPDM E/R.

4. COMBINATION SWITCH TO BCM INSPECTION

Select BCM on Consult-II. With “WIPER” data monitor, check that “FR WIPER HI” turns ON-OFF according to operation of wiper switch.

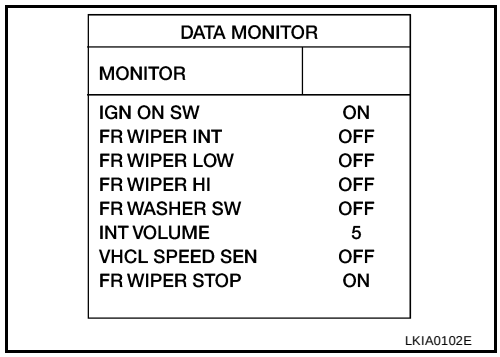

DATA MONITOR	
MONITOR	
IGN ON SW	ON
FR WIPER INT	OFF
FR WIPER LOW	OFF
FR WIPER HI	OFF
FR WASHER SW	OFF
INT VOLUME	5
VHCL SPEED SEN	OFF
FR WIPER STOP	ON

LKIA0102E

OK or NG

OK >> Replace BCM.
NG >> Replace wiper switch.

ONLY FRONT WIPER INT DOES NOT OPERATE

1. COMBINATION SWITCH TO BCM INSPECTION

Select BCM on Consult-II. With “WIPER” data monitor, check that “FR WIPER INT” turns ON-OFF according to operation of wiper switch.

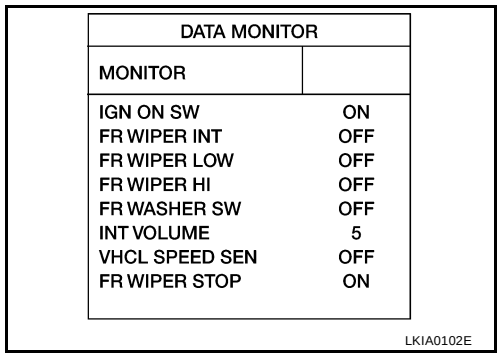

DATA MONITOR	
MONITOR	
IGN ON SW	ON
FR WIPER INT	OFF
FR WIPER LOW	OFF
FR WIPER HI	OFF
FR WASHER SW	OFF
INT VOLUME	5
VHCL SPEED SEN	OFF
FR WIPER STOP	ON

LKIA0102E

OK or NG

OK >> Replace BCM.
NG >> Replace wiper switch.

FRONT WIPER INTERMITTENT OPERATION SWITCH POSITION CANNOT BE ADJUSTED

1. COMBINATION SWITCH TO BCM INSPECTION

Select BCM on Consult-II. With “WIPER” data monitor, check that “INT VOLUME” changes in order from 1 to 7 according to operation of the intermittent switch dial position.

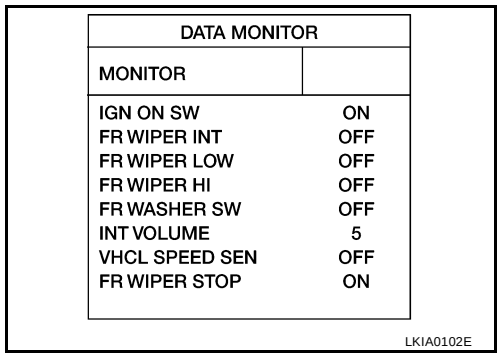

DATA MONITOR	
MONITOR	
IGN ON SW	ON
FR WIPER INT	OFF
FR WIPER LOW	OFF
FR WIPER HI	OFF
FR WASHER SW	OFF
INT VOLUME	5
VHCL SPEED SEN	OFF
FR WIPER STOP	ON

LKIA0102E

OK or NG

OK >> Replace BCM.
NG >> Replace wiper switch.

WIPERS DO NOT WIPE WHEN FRONT WASHER OPERATES

1. COMBINATION SWITCH TO BCM INSPECTION

Select BCM on Consult-II. With “WIPER” data monitor, check that “FR WASHER SW” turns ON-OFF according to operation of front washer switch.

OK or NG

OK >> Replace BCM.
NG >> Replace wiper switch.

DATA MONITOR	
MONITOR	
IGN ON SW	ON
FR WIPER INT	OFF
FR WIPER LOW	OFF
FR WIPER HI	OFF
FR WASHER SW	OFF
INT VOLUME	5
VHCL SPEED SEN	OFF
FR WIPER STOP	ON

LKIA0102E

Removal and Installation for Front Wiper Arms, Adjustment for Wiper Arms Stop Location

EKS002IU

1. Prior to wiper arm installation, turn on wiper switch to operate wiper motor and then turn it “OFF” (Auto Stop).
2. Lift the blade up and then set it down onto glass surface to set the blade center to clearance “L1” & “L2” immediately before tightening nut.
3. Eject washer fluid. Turn on wiper switch to operate wiper motor and then turn it “OFF”.
4. Ensure that wiper blades stop within clearance “L1” & “L2”.

   Clearance “L1” : 24.5 - 39.5 mm (0.965 - 1.555 in)
   Clearance “L2” : 32.5 - 47.5 mm (1.280 - 1.870 in)

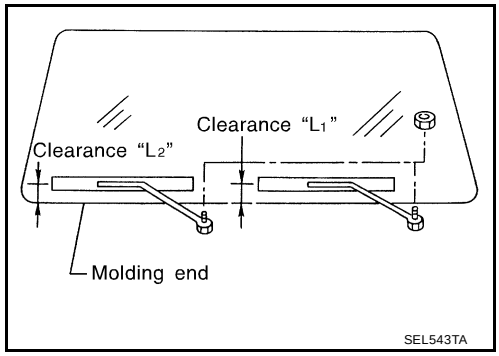

SEL543TA

- Before reinstalling wiper arm, clean up the pivot area as illustrated. This will reduce possibility of wiper arm looseness.
- Tighten wiper arm nuts to specified torque.

  Front wiper arm nuts : 20.6 - 26.5 N·m (2.1 - 2.7 kg-m, 16 - 19 ft-lb)

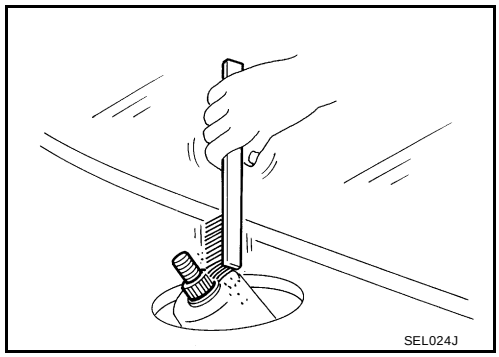
SEL024J

Removal and Installation for Wiper Motor and Linkage

EKS002IV

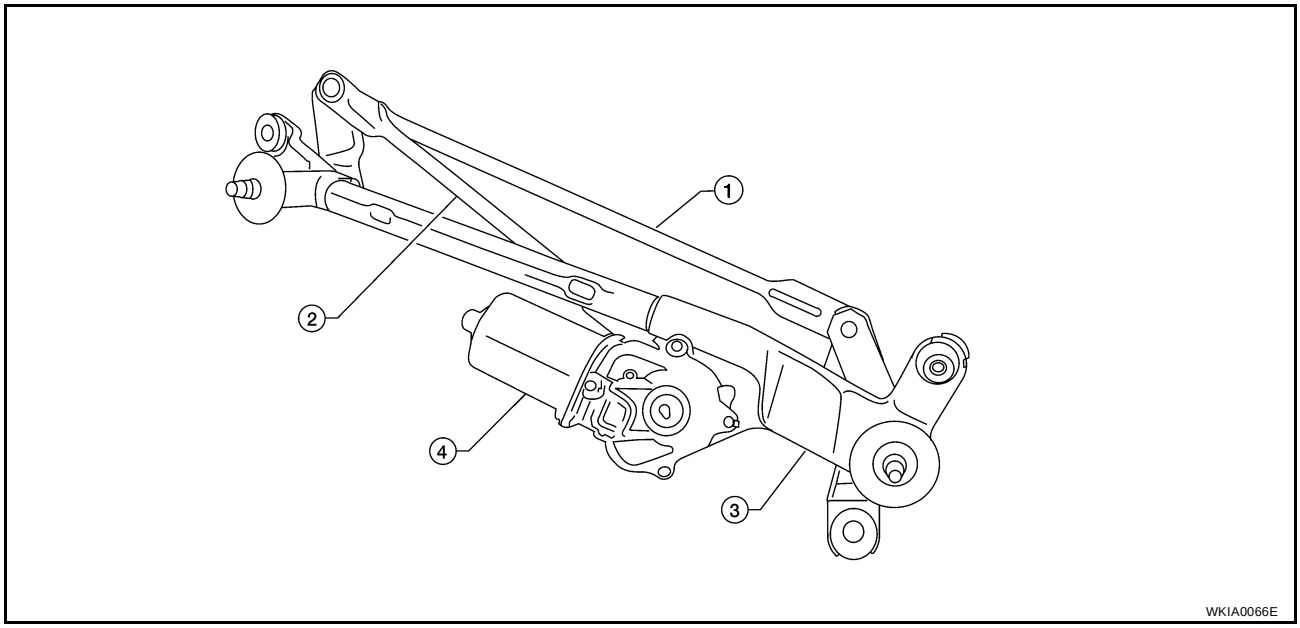

1. Wiper link
2. Wiper link
3. Wiper frame
4. Wiper motor

REMOVAL

1. Operate the wiper motor, and stop it at the auto stop position.
2. Remove wiper arm from the vehicle.
3. Remove the cowl top cover, refer to EI-18, "Removal and Installation" .
4. Disconnect wiper motor connector.
5. Remove bracket and wiper motor assembly.

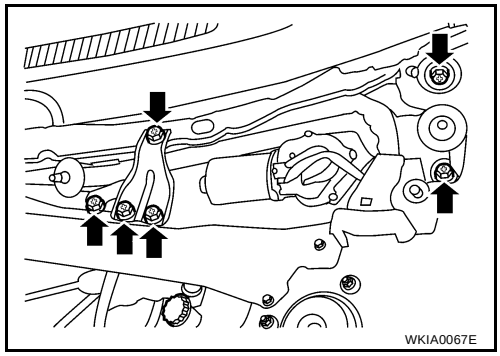

INSTALLATION

1. Connect wiper motor to connector. Turn the wiper switch ON to operate wiper motor, then turn the wiper switch OFF (auto stop).
2. Disconnect wiper motor connector.
3. Install wiper motor assembly to the vehicle.

Wiper motor assembly bolts	**: 3.8 - 5.1 N·m (0.39 - 0.52 kg-m, 33.9 - 45.1 in-lb)**

4. Connect wiper motor connector. Turn the wiper switch ON to operate the wiper motor, then turn wiper switch OFF (auto stop).
5. Install cowl top cover, refer to EI-18, "Removal and Installation" .
6. Install wiper arms, refer to WW-24, "Removal and Installation for Front Wiper Arms, Adjustment for Wiper Arms Stop Location" .

CAUTION:

- **Do not drop the wiper motor or cause it to contact other parts.**

- **Check the grease conditions of the motor arm and wiper link joint (at retainer). Apply grease if necessary.**

Washer Nozzle Adjustment

EKS002IW

- Adjust washer nozzle with suitable tool as shown.

Adjustable range: ±10°

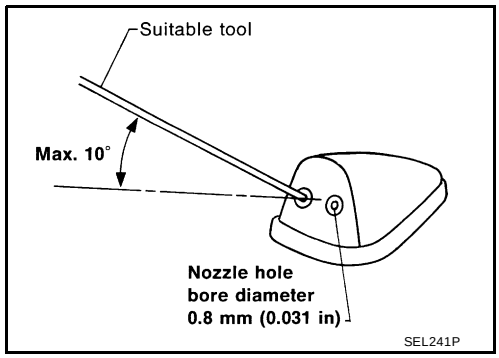

Unit: mm (in)

*1	350 (13.78)	*5	135 (5.31)
*2	190 (7.48)	*6	230 (9.06)
*3	320 (12.60)	*7	275 (10.83)
*4	135 (5.31)	*8	440 (17.32)

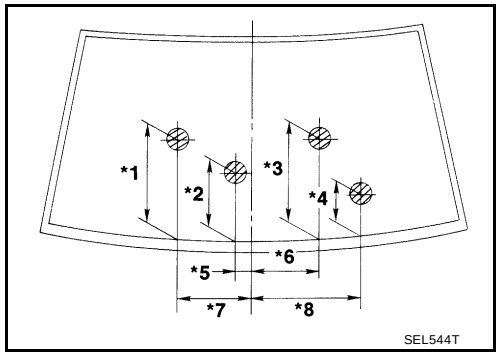

Washer Tube Layout

EKS002IX

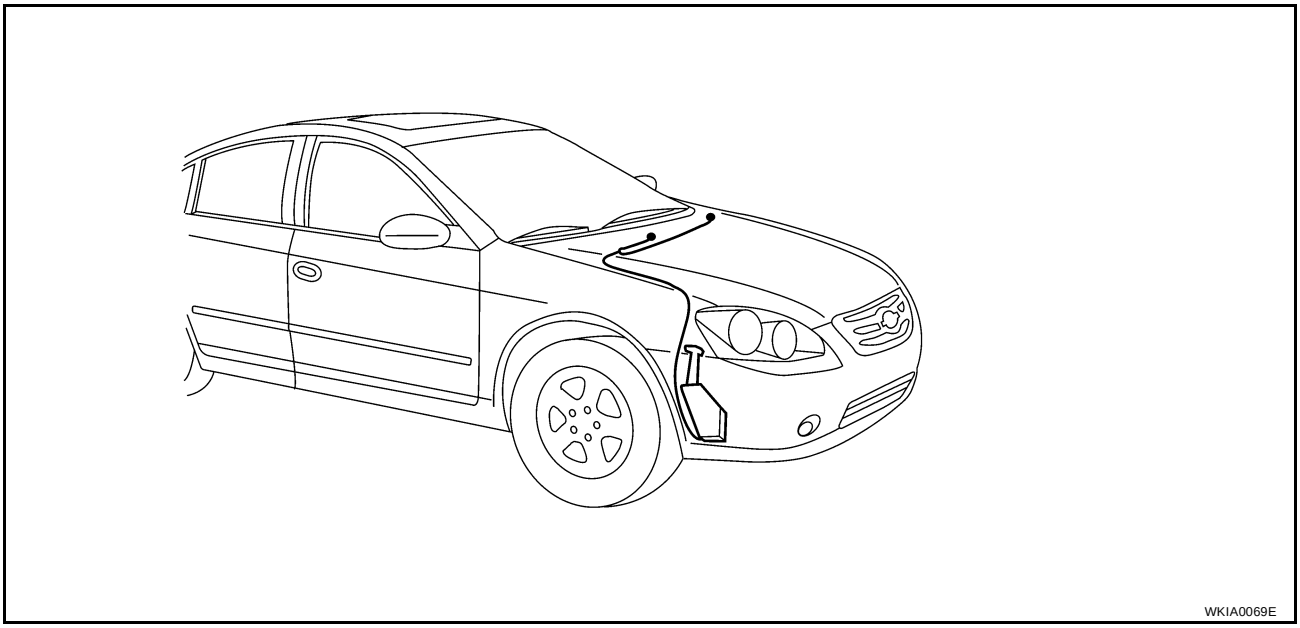

Removal and Installation for Wiper and Washer Switch

EKS002IY

REMOVAL

1. Remove steering column cover.
2. Remove wiper washer switch connector.
3. Pinch tabs at wiper and washer switch base and slide switch away from steering column to remove.

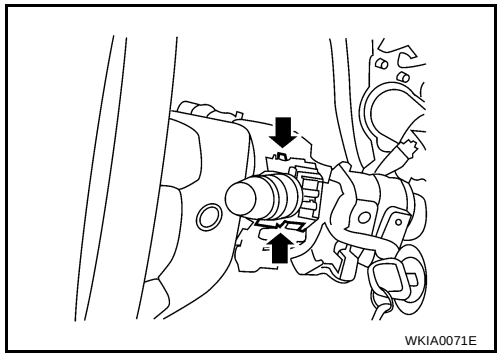

INSTALLATION

Installation is in the reverse order of removal.

Removal and Installation for Washer Tank

EKS002IZ

1. Pull out washer tank inlet.

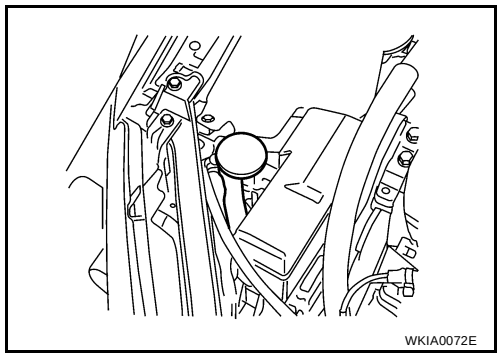

2. Remove fender protector, refer to EI-20, "Removal and Installation" .
3. Remove washer pump connector.
4. Remove washer tank installation screw.
5. Remove washer hose, and remove the washer tank from the vehicle.

CAUTION:

After installation, add water up to the upper level of the washer tank inlet, and check for water leaks.

Washer tank installation screw

Tightening torque: 3.9 - 5.0 N·m (0.39 - 0.52 kg-m, 34 - 45 in-lb)

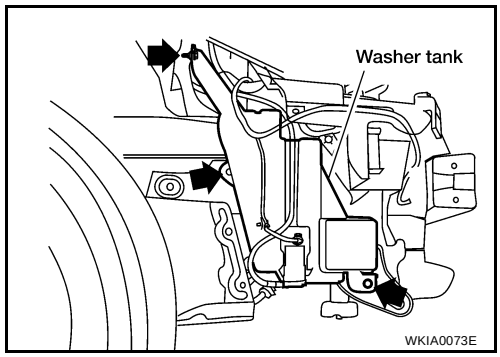

Removal and Installation for Washer Pump

EKS002J0

1. Remove fender protector, refer to EI-20, "Removal and Installation" .
2. Remove washer pump connector and hose.
3. Pull out washer pump in the direction of the arrow as shown, and remove the washer pump from the washer tank.

CAUTION:

When installing washer pump, there should be no packing twists, etc.

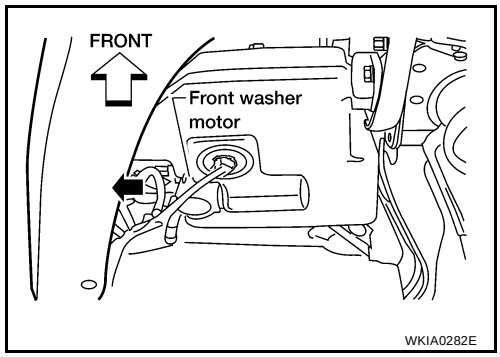

CIGARETTE LIGHTER

PFP:35330

Wiring Diagram — CIGAR —

EKS002J1

WW-CIGAR-01

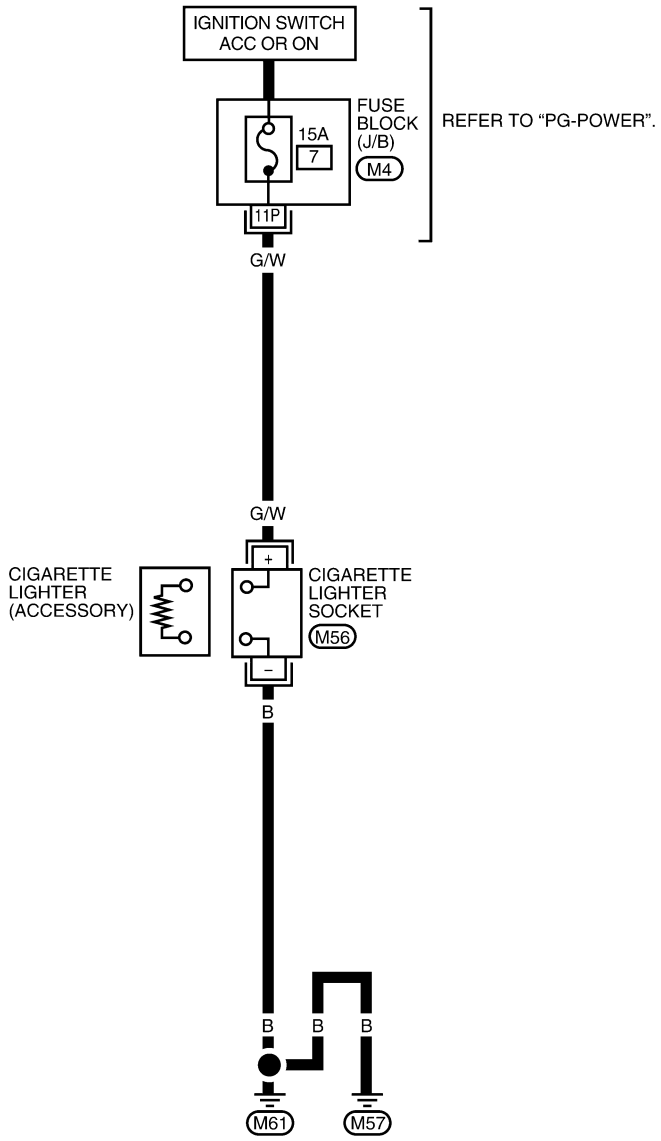

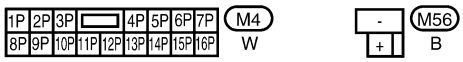

WKWA0081E

Removal and Installation

EKS002J2

1. Remove the A/T finisher (A/T models), refer to IP-14, "A/T Finisher" , or remove the M/T finisher (M/T models), refer to IP-14, "M/T Finisher" .
2. Remove console box finisher.
3. Remove socket.
4. Press out ring from the back of console box finisher.

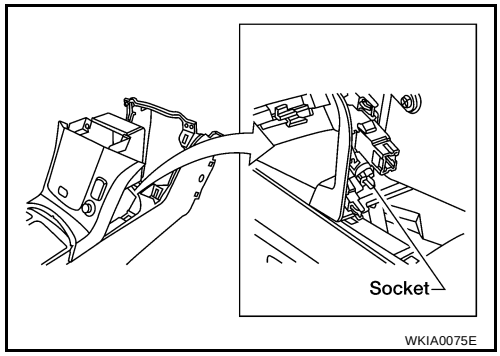

POWER SOCKET

PFP:253A2

Wiring Diagram — CIGAR —

EKS002J3

WW-CIGAR-02

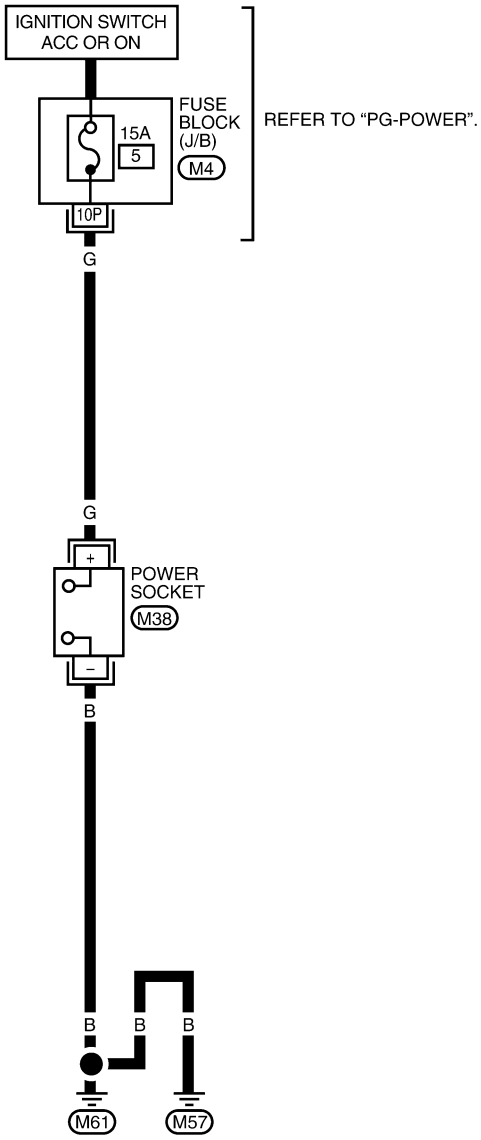

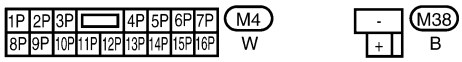

WKWA0082E

Removal and Installation

EKS002J4

1. Remove the console finisher, refer to IP-16, "Center Console" .
2. Disconnect power socket connector.
3. Remove socket from the console.

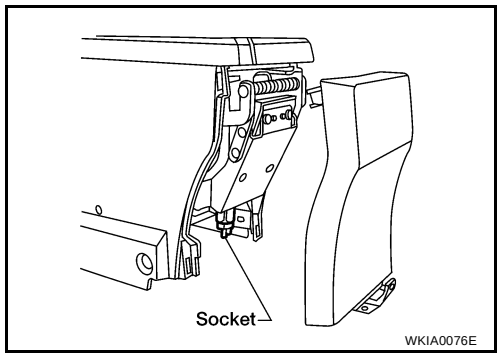

HORN

PFP:25610

Wiring Diagram — HORN —

EKS002J5

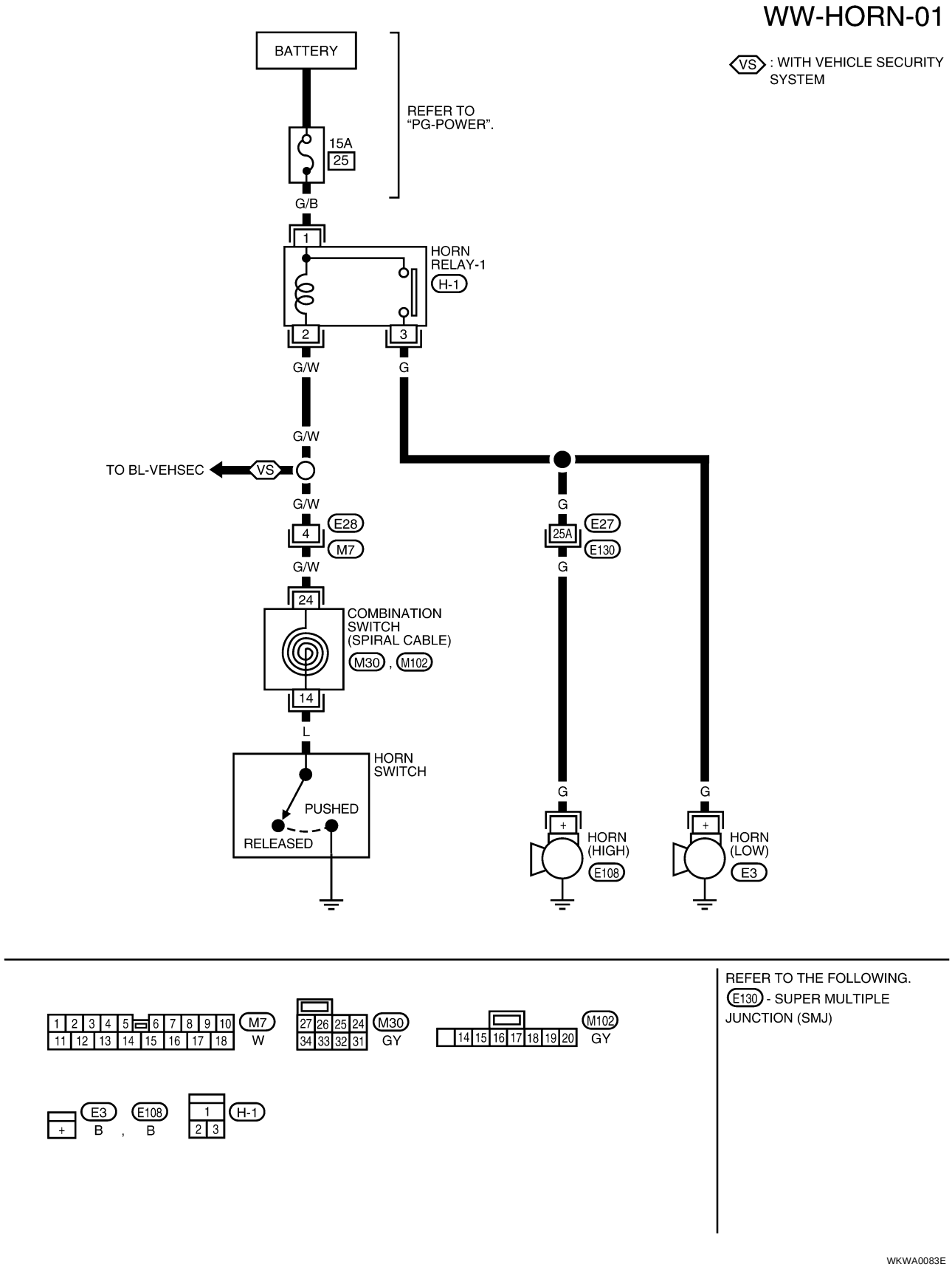

Removal and installation

EKS002J6

REMOVAL (HORN HIGH)

1. Remove right headlamp, refer to LT-25, "Removal and Installation" .
2. Disconnect horn connector.
3. Remove horn.

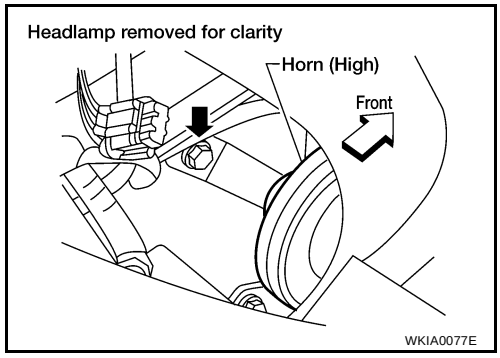

INSTALLATION (HORN HIGH)

Tighten horn bolt to specified torque.

Horn bolt **: 15.6-18.6 N·m (1.6-1.8 kg-m, 12-13 ft-lb)**

REMOVAL (HORN LOW)

1. Remove left headlamp, refer to LT-25, "Removal and Installation" .
2. Disconnect horn connector.
3. Remove horn.

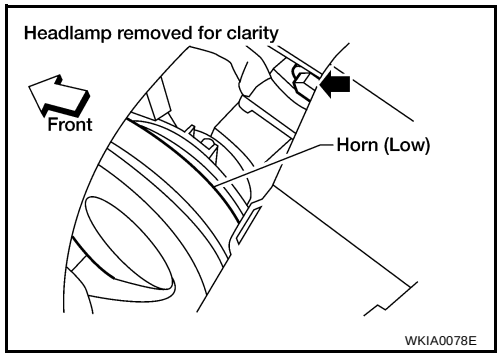

INSTALLATION (HORN LOW)

Tighten horn bolt to specified torque.

Horn bolt **: 15.6-18.6 N·m (1.6-1.8 kg-m, 12-13 ft-lb)**