MITSUBISHI MOTORS

Workshop Manual

chassis

L200

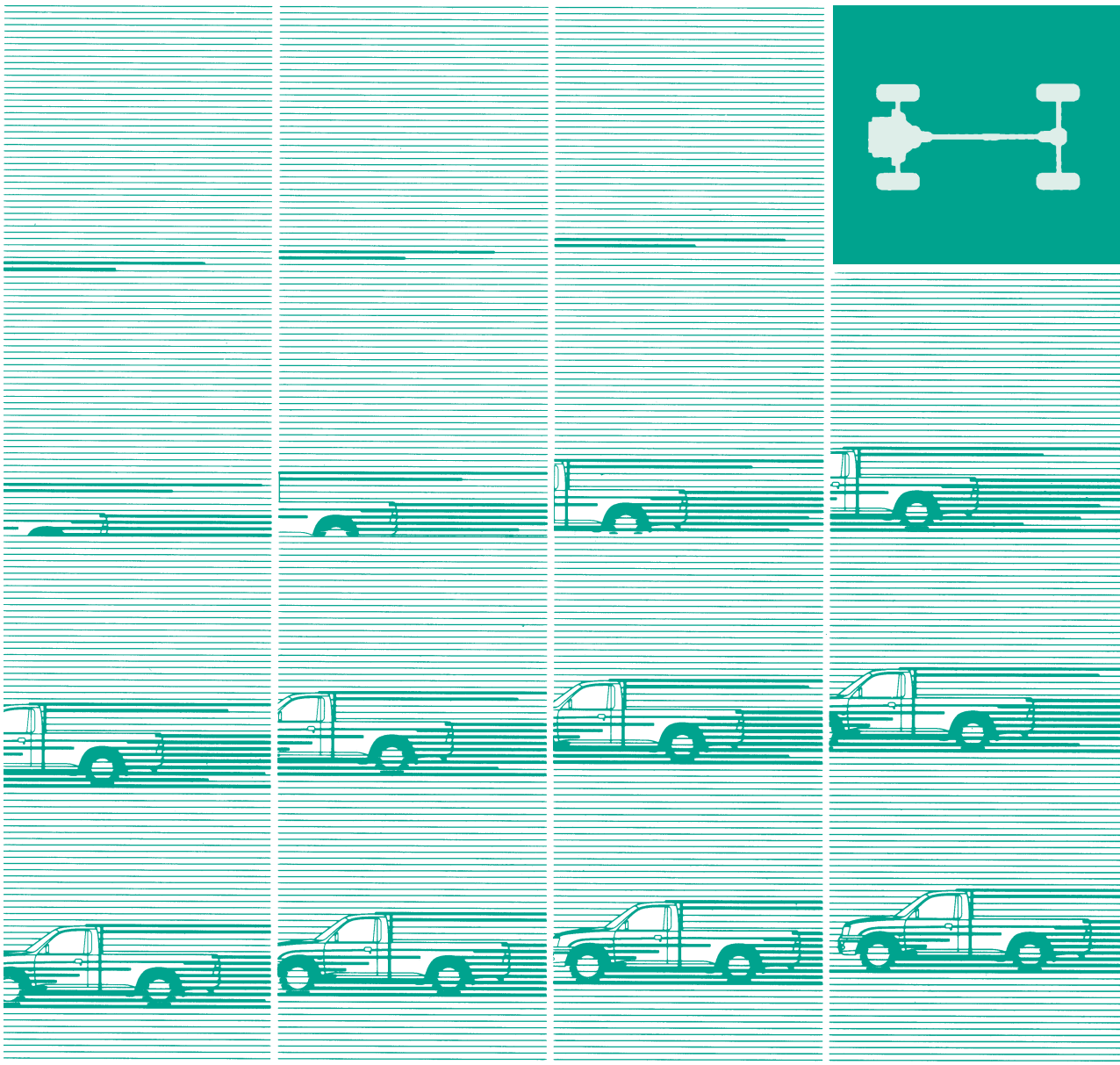

Pub. No. PWTE96E1

00109000416

L200

WORKSHOP MANUAL

FOREWORD

This Workshop Manual contains procedures for service mechanics, including removal, disassembly, inspection, adjustment, reassembly and installation. Use the following manuals in combination with this manual as required.

TECHNICAL INFORMATION MANUAL	PYTE9601
WORKSHOP MANUAL	
ENGINE GROUP	PWEE____ (Looseleaf edition)
ELECTRICAL WIRING	PHTE9601
BODY REPAIR MANUAL	PBTE9601
PARTS CATALOGUE	T603B006D

All information, illustrations and product descriptions contained in this manual are current as at the time of publication. We, however, reserve the right to make changes at any time without prior notice or obligation.

MITSUBISHI MOTORS CORPORATION

General 00
Engine 11
Engine Lubrication 12
Fuel 13
Engine Cooling 14
Intake and Exhaust 15
Engine Electrical 16
Engine and Emission Control 17
Clutch 21
Manual Transmission 22
Automatic Transmission 23
Propeller Shaft 25
Front Axle 26
Rear Axle 27
Wheel and Tyre 31
Power Plant Mount 32
Front Suspension 33
Rear Suspension 34
Service Brakes 35
Parking Brakes 36
Steering 37
Body 42
Exterior 51
Interior and Supplemental Restraint System (SRS) 52
Chassis Electrical 54
Heater, Air Conditioner and Ventilation 55

© Mitsubishi Motors Corporation Apr. 1996

ENGINE

CONTENTS

11109000382

ENGINE <4G6> 11A

ENGINE <4D5> 11B

FUEL

CONTENTS

13109000924

MULTIPOINT FUEL INJECTION (MPI).....13A

ELECTRONIC CONTROL TYPE CARBURETTOR.....13B

CONVENTIONAL TYPE CARBURETTOR 13C

VARIABLE VENTURI TYPE CARBURETTOR.....13D

DIESEL FUEL 13E

FUEL SUPPLY..... 13F

TRACTION CONTROL SYSTEM (TCL).....13H

DIESEL FUEL <4D5-STEP III> 13I

NOTE
THE GROUPS MARKED BY ARE NOT IN THIS MANUAL

SERVICE BRAKES

CONTENTS

35109000180

BASIC BRAKE SYSTEM 35A

ANTI-SKID BRAKING SYSTEM (ABS) <2WD> 35B

ANTI-SKID BRAKING SYSTEM (ABS) <4WD> 35C

INTERIOR AND SUPPLEMENTAL RESTRAINT SYSTEM (SRS)

CONTENTS

52109000187

INTERIOR 52A

SUPPLEMENTAL RESTRAINT SYSTEM (SRS) 52B

HEATER, AIR CONDITIONER AND VENTILATION

CONTENTS

HEATER, AIR CONDITIONER AND VENTILATION 55

AUTOMATIC AIR CONDITIONER 55B

GENERAL

Click on the applicable bookmark to selected the required model year

GENERAL

CONTENTS

00109000423

HOW TO USE THIS MANUAL 2

Scope of Maintenance, Repair and Servicing Explanations 2

Definition of Terms 2

Indication of Tightening Torque 2

Model Indications 3

Explanation of Manual Contents 4

HOW TO USE TROUBLESHOOTING/ INSPECTION SERVICE POINTS 6

Troubleshooting Contents 6

Diagnosis Function 7

How to Use the Inspection Procedures 9

Connector Measurement Service Points 10

Connector Inspection 11

Inspection Service Points for a Blown Fuse ... 12

Points to Note for Intermittent Malfunctions ... 12

TREATMENT BEFORE/AFTER THE FORDING OF A STREAM (4WD VEHICLES) 13

Inspection and Service before Fording a Stream 13

Inspection and Service after Fording a Stream 15

VEHICLE IDENTIFICATION 16

Vehicle Information Code Plate 16

Models 17

Model Code 18

Chassis Number 19

Engine Model Number 20

MAJOR SPECIFICATIONS 21

PRECAUTIONS BEFORE SERVICE 25

SUPPLEMENTAL RESTRAINT SYSTEM (SRS) 29

SUPPORT LOCATIONS FOR LIFTING AND JACKING 32

Support Positions for a Garage Jack and Axle Stands 32

Support Positions for a Single-Post Lift or Double-Post Lift and H-BAR Lift 34

STANDARD PARTS-TIGHTENING-TORQUE TABLE 36

HOW TO USE THIS MANUAL

00100010210

SCOPE OF MAINTENANCE, REPAIR AND SERVICING EXPLANATIONS

This manual provides explanations, etc. concerning procedures for the inspection, maintenance, repair and servicing of the subject model. Note, however, that for engine and transmission-related component parts, this manual covers only on-vehicle inspections, adjustments, and the removal and installation procedures for major components.
For detailed information concerning the inspection, checking, adjustment, disassembly and reassembly of the engine, transmission and major components after they have been removed from the vehicle, please refer to separate manuals covering the engine and the transmission.

ON-VEHICLE SERVICE

“On-vehicle Service” is procedures for performing inspections and adjustments of particularly important locations with regard to the construction and for maintenance and servicing, but other inspection (for looseness, play, cracking, damage, etc.) must also be performed.

INSPECTION

Under this title are presented inspection and checking procedures to be performed by using special tools and measuring instruments and by feeling, but, for actual maintenance and servicing procedures, visual inspections should always be performed as well.

DEFINITION OF TERMS

STANDARD VALUE

Indicates the value used as the standard for judging the quality of a part or assembly on inspection or the value to which the part or assembly is corrected and adjusted. It is given by tolerance.

LIMIT

Shows the standard for judging the quality of a part or assembly on inspection and means the maximum or minimum value within which the part or assembly must be kept functionally or in strength. It is a value established outside the range of standard value.

REFERENCE VALUE

Indicates the adjustment value prior to starting the work (presented in order to facilitate assembly and adjustment procedures, and so they can be completed in a shorter time).

CAUTION

Indicates the presentation of information particularly vital to the worker during the performance of maintenance and servicing procedures in order to avoid the possibility of injury to the worker, or damage to component parts, or a reduction of component or vehicle function or performance, etc.

INDICATION OF TIGHTENING TORQUE

The tightening torque shown in this manual is a basic value with a tolerance of ±10% except the following cases when the upper and lower limits of tightening torque are given.
(1) The tolerance of the basic value is within ±10%.
(2) Special bolts or the like are in use.
(3) Special tightening methods are used.

MODEL INDICATIONS

The following abbreviations are used in this manual for classification of model types.

M/T:	Indicates the manual transmission, or models equipped with the manual transmission.
A/T:	Indicates the automatic transmission, or models equipped with the automatic transmission.
SOHC:	Indicates an engine with the single overhead camshaft, or a model equipped with such an engine.
MPI:	Indicates the multi-point injection, or engines equipped with the multi-point injection.
DIESEL:	Indicates a diesel engine, or models equipped with such an engine.
2WD:	Indicates the rear wheel-drive vehicles.
4WD:	Indicates the 4 wheel-drive vehicles.

EXPLANATION OF MANUAL CONTENTS

Indicates procedures to be performed before the work in that section is started, and procedures to be performed after the work in that section is finished.

Component Diagram
A diagram of the component parts is provided near the front of each section in order to give a reader a better understanding of the installed condition of component parts.

Indicates (by symbols) where lubrication is necessary.

Maintenance and Servicing Procedures
The numbers provided within the diagram indicate the sequence for maintenance and servicing procedures.

- Removal steps:
  The part designation number corresponds to the number in the illustration to indicate removal steps.
- Disassembly steps:
  The part designation number corresponds to the number in the illustration to indicate disassembly steps.
- Installation steps:
  Specified in case installation is impossible in reverse order of removal steps. Omitted if installation is possible in reverse order of removal steps.
- Reassembly steps:
  Specified in case reassembly is impossible in reverse order of disassembly steps. Omitted if reassemby is possible in reverse order of disassembly steps.

Classifications of Major Maintenance/Service Points

When there are major points relative to maintenance and servicing procedures (such as essential maintenance and service points, maintenance and service standard values, information regarding the use of special tools, etc.), these are arranged together as major maintenance and service points and explained in detail.

◀A▶ : Indicates that there are essential points for removal or disassembly.
▶A◀ : Indicates that there are essential points for installation or reassembly.

Symbols for Lubrication, Sealants and Adhesives

Information concerning the locations for lubrication and for application of sealants and adhesives is provided, by using symbols, in the diagram of component parts or on the page following the component parts page, and explained.

: Grease
(multipurpose grease unless there is a brand or type specified)

: Sealant or adhesive

: Brake fluid or automatic transmission fluid

: Engine oil, gear oil or air conditioner compressor oil

: Adhesive tape or butyl rubber tape

Indicates the group title.

Indicates the section title.

Indicates the group number.

Indicates the page number.

STEERING – Power Steering Oil Pump 37A-29

POWER STEERING GEAR BOX

120000039

REMOVAL AND INSTALLATION

Pre-removal Operation
(1)Power Steering Fluid Draining (Refer to P. 37A-10.)
(2)Air Cleaner Assembly Removal
(3)Under Cover Removal (Refer to GROUP 42 – Under Cover.)

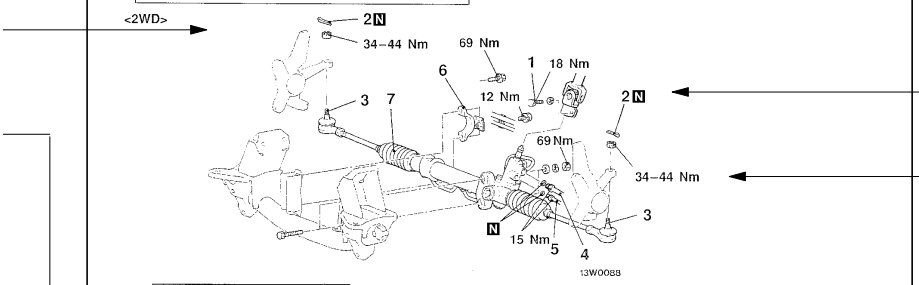

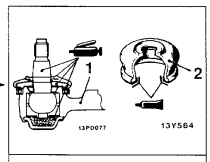

Sealant: 3M ATD Part No. 8661 or equivalent

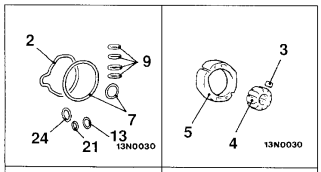

Oil pump seal kit	Oil pump cartridge kit

Removal steps
1. Lower shaft assembly and gear box connecting bolt
2. Split pin
3. Connection for tie-rod end and knuckle
4. Connection for return tube
5. Connection for pressure tube
6. Clamp
7. Gear box assembly

◀A▶ ◀B▶

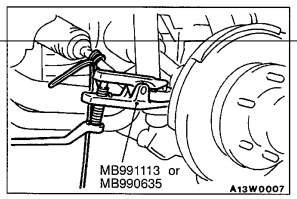

REMOVAL SERVICE POINTS

◀A▶ TIE-ROD END DISCONNECTION

Caution
1. **Using the special tool, loosen the tie rod end mounting nut. Only loosen the nut; do not remove it from the ball joint.**
2. **Support the special tool with a cord, etc. to prevent it from coming off.**

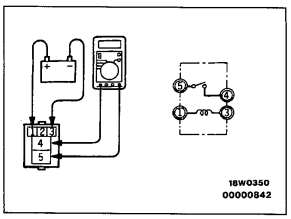

HEADLAMP RELAY CONTINUITY INSPECTION

Battery voltage	Terminal No.			
	1	3	4	5
Power is not supplied	○	○		
Power is supplied	⊕	⊖	○	○

35A-26 BASIC BRAKE SYSTEM – Master Cylinder and Brake Booster

Lubrication and sealing points

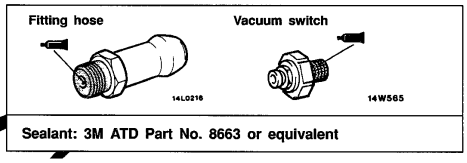

Sealant: 3M ATD Part No. 8663 or equivalent

00002471

Denotes non-reusable part.

Denotes tightening torque.
For bolts and nuts which do not have a tightening torque listed, refer to the "Standard Parts-tightening-torque Table".

Repair kit or set parts are shown. (Only very frequently used parts are shown.)

Operating procedures, cautions, etc. on removal, installation, disassembly and reassembly are described.

○——○ indicates that there is a continuity between the terminals.
⊕——⊖ indicates terminals to which battery voltage is applied.

The title of the page (following the page on which the diagram of component parts is presented) indicating the locations of lubrication and sealing procedures.

HOW TO USE TROUBLESHOOTING/INSPECTION SERVICE POINTS

00100020091

Troubleshooting of electronic control systems for which the MUT-II can be used follows the basic outline described below. Furthermore, even in systems for which the MUT-II cannot be used, part of these systems still follow this outline.

TROUBLESHOOTING CONTENTS

1. STANDARD FLOW OF DIAGNOSIS TROUBLESHOOTING

The troubleshooting sections follow the basic diagnosis flow which is given below. If the diagnosis flow is different from that given below, or if additional explanation is required, the details of such differences or additions will also be listed.

Diagnosis method

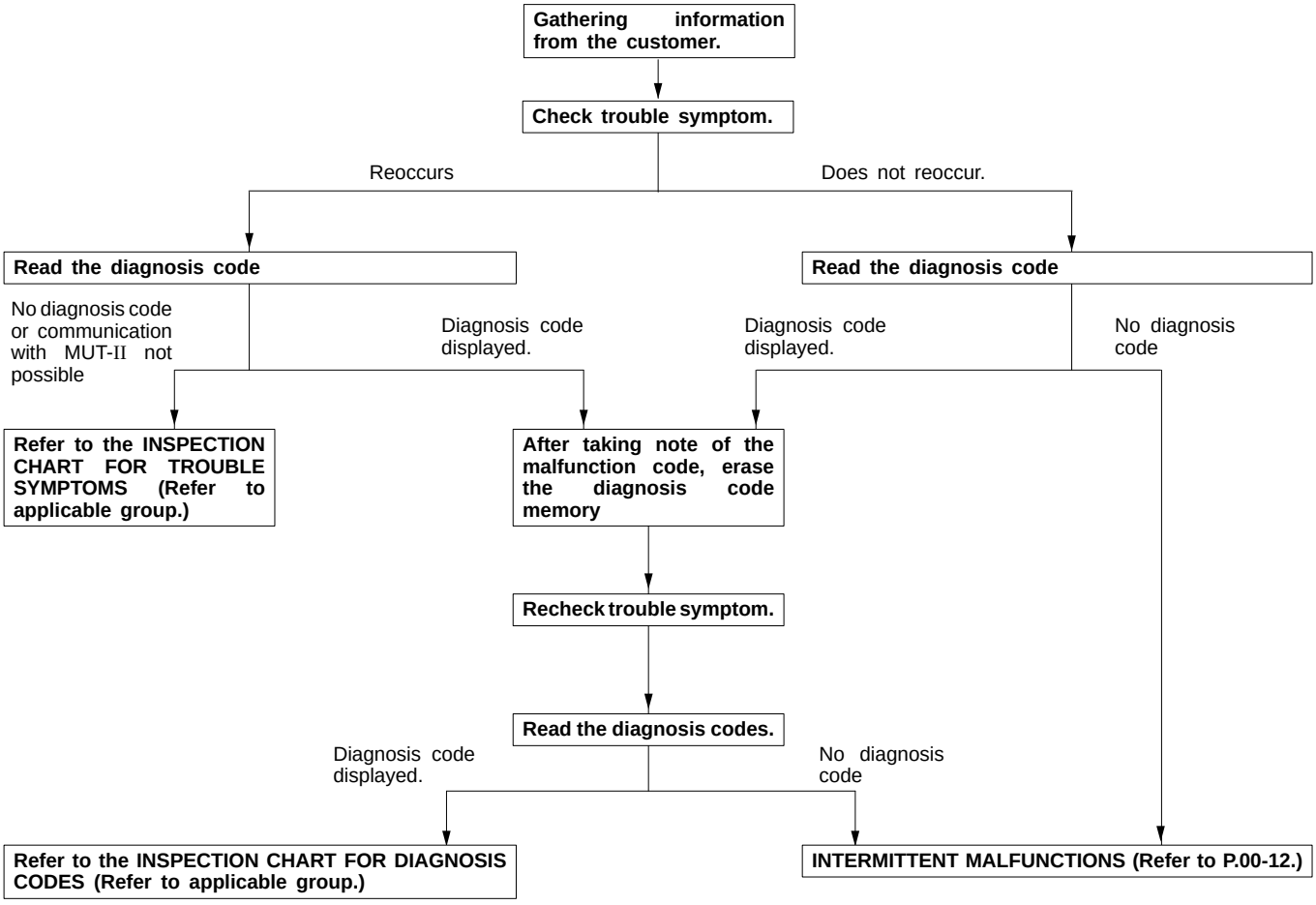

2. SYSTEM OPERATION AND SYMPTOM VERIFICATION TESTS

If verification of the trouble symptoms is difficult, procedures for checking operation and verifying trouble symptoms are shown.

3. DIAGNOSIS FUNCTION

Details which are different from those in the “Diagnosis Function” section on the next page are listed.

4. INSPECTION CHART FOR DIAGNOSIS CODES

5. INSPECTION PROCEDURE FOR DIAGNOSIS CODES

Indicates the inspection procedures corresponding to each diagnosis code. (Refer to P.00-9 for how to read the inspection procedures.)

6. INSPECTION CHART FOR TROUBLE SYMPTOMS

If there are trouble symptoms even though the results of inspection using the MUT-II show that all diagnosis codes are normal, inspection procedures for each trouble symptom will be found by means of this chart.

7. INSPECTION PROCEDURE FOR TROUBLE SYMPTOM

Indicates the inspection procedures corresponding to each trouble symptoms classified in the Inspection Chart for Trouble Symptoms. (Refer to P.00-9 for how to read the inspection procedures.)

8. SERVICE DATA REFERENCE TABLE

Inspection items and normal judgement values have been provided in this chart as reference information.

9. CHECK AT ECU TERMINALS

Terminal numbers for the ECU connectors, inspection items and standard values have been provided in this chart as reference information.

10. INSPECTION PROCEDURES USING AN OSCILLOSCOPE

When there are inspection procedures using an oscilloscope, these are listed here.

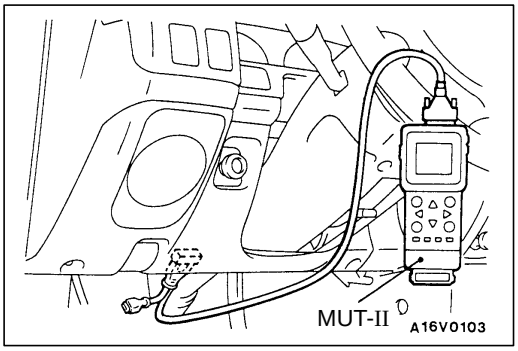

DIAGNOSIS FUNCTION

METHOD OF READING DIAGNOSIS CODES

WHEN USING THE MUT-II

Connect the MUT-II to the diagnosis connector and take a reading of the diagnosis codes.

Caution
Turn off the ignition switch before connecting or disconnecting the MUT-II.

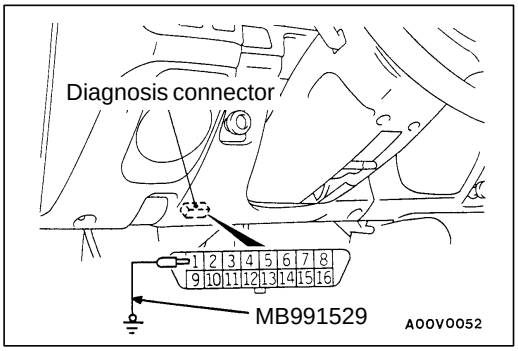

WHEN USING THE WARNING LAMP

1. Use the special tool to earth No.1 terminal (diagnosis control terminal) of the diagnosis connector.
2. To check ABS system, remove the valve relay.

   NOTE
   That is because the valve relay is off and the warning lamp remains illuminated if there is a fault in the ABS system.
3. Turn off the ignition switch.
4. Read out a diagnosis code by observing how the warning lamp flashes.

Applicable systems

System name	Warning lamp name
MPI	Engine warning lamp
ABS	ABS warning lamp

Indication of diagnosis code by warning lamp

When the diagnosis code No.24 is output	When no diagnosis code is output*
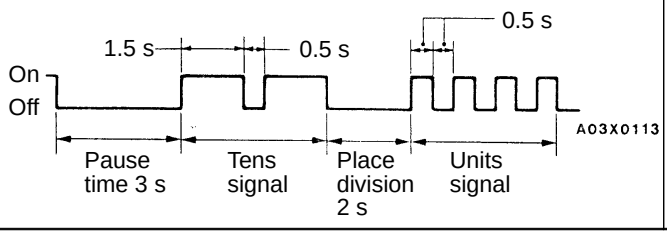	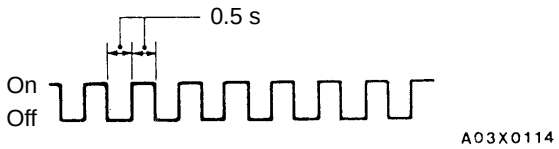

NOTE
*: Even if the ABS system is normal, removing the valve relay causes the diagnosis code No.51 to be output.

METHOD OF ERASING DIAGNOSIS CODES

WHEN USING THE MUT-II

Connect the MUT-II to the diagnosis connector and erase the diagnosis code.

Caution
Turn off the ignition switch before connecting or disconnecting the MUT-II.

WHEN NOT USING THE MUT-II

(1) Turn the ignition switch to OFF.
(2) After disconnecting the battery cable from the battery (–) terminal for 10 seconds or more, reconnect the cable.
(3) After the engine has warmed up, run it at idle for about 15 minutes.

HOW TO USE THE INSPECTION PROCEDURES

The causes of a high frequency of problems occurring in electronic circuitry are generally the connectors, components, the ECU and the harnesses between connectors, in that order. These inspection procedures follow this order, and they first try to discover a problem with a connector or a defective component.

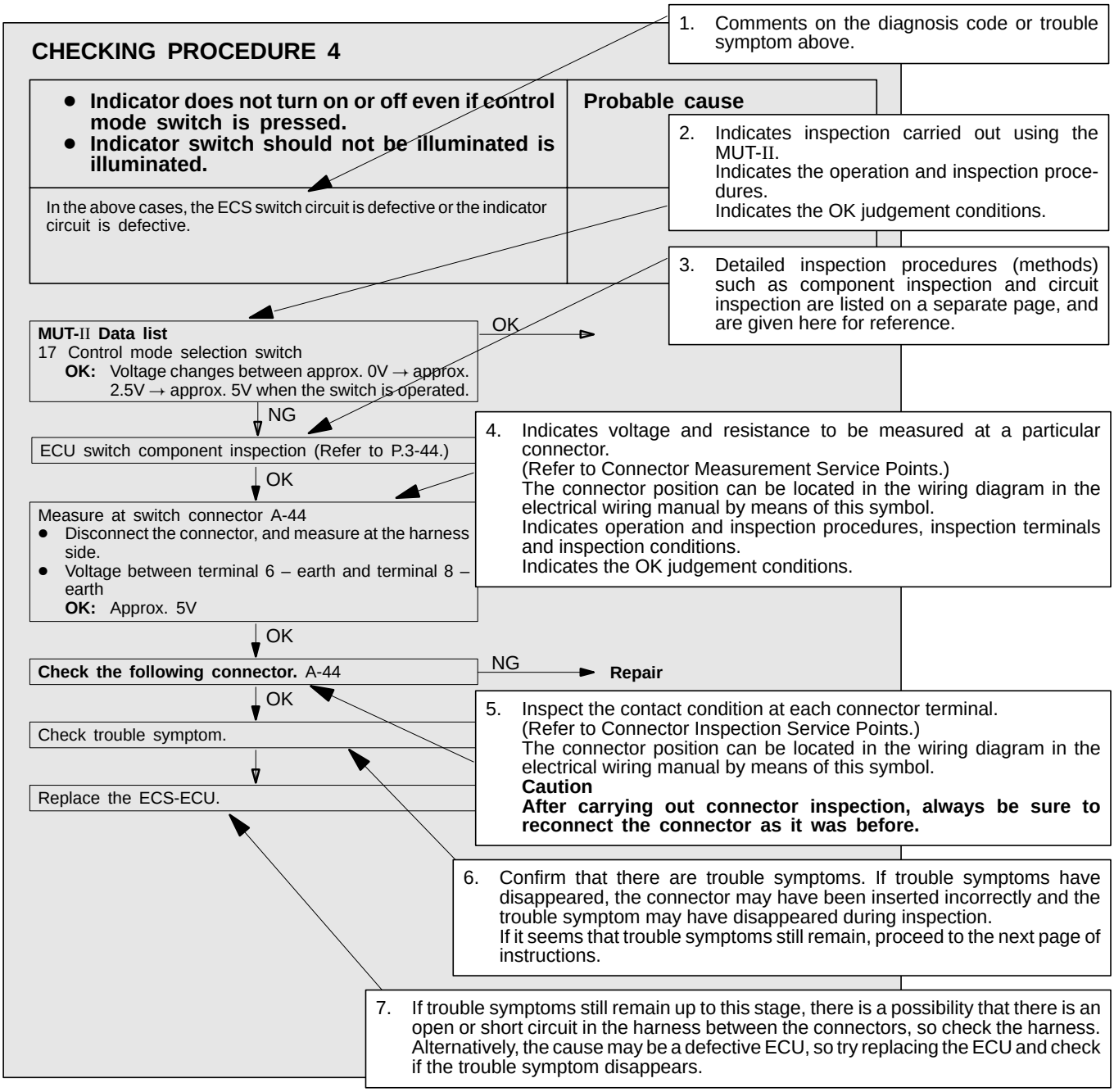

HARNESS INSPECTION

Check for an open or short circuit in the harness between the terminals which were defective according to the connector measurements. Carry out this inspection while referring to the electrical wiring manual. Here, “Check harness between power supply and terminal xx” also includes checking for blown fuses. For inspection service points when there is a blown fuse, refer to “Inspection Service Points for a Blown Fuse.”

MEASURES TO TAKE AFTER REPLACING THE ECU

If the trouble symptoms have not disappeared even after replacing the ECU, repeat the inspection procedure from the beginning.

CONNECTOR MEASUREMENT SERVICE POINTS

Turn the ignition switch to OFF when connecting disconnecting the connectors, and turn the ignition switch to ON when measuring if there are no instructions to be contrary.

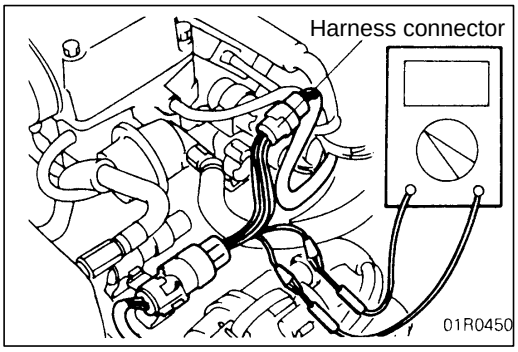

IF INSPECTING WITH THE CONNECTOR CONNECTED (WITH CIRCUIT IN A CONDITION OF CONTINUITY)

Waterproof Connectors

Be sure to use the special tool (harness connector). Never insert a test bar from the harness side, because to do so will reduce the waterproof performance and result in corrosion.

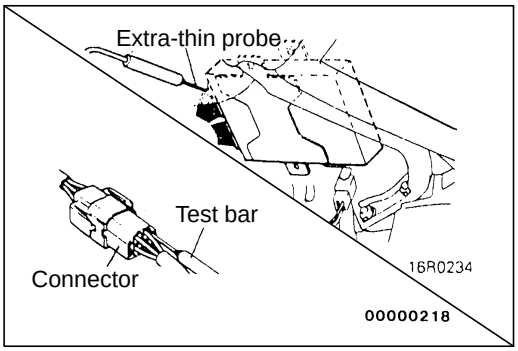

Ordinary (non-waterproof) Connectors

Check by inserting the test bar from the harness side. Note that if the connector (control unit, etc.) is too small to permit insertion of the test bar, it should not be forced; use a special tool (the extra-thin probe in the harness set for checking for this purpose.

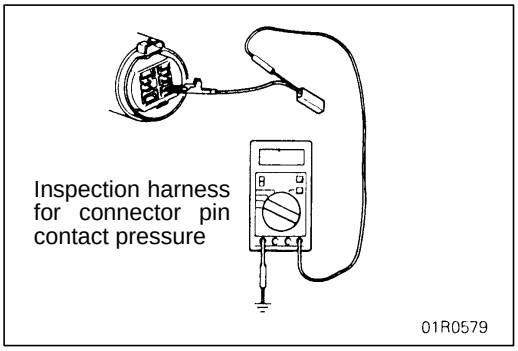

IF INSPECTING WITH THE CONNECTOR DISCONNECTED

<When Inspecting a Female Pin>

Use the special tool (inspection harness for connector pin contact pressure in the harness set for inspection).
The inspection harness for connector pin contact pressure should be used. the test bar should never be forcibly inserted, as it may cause a defective contact.

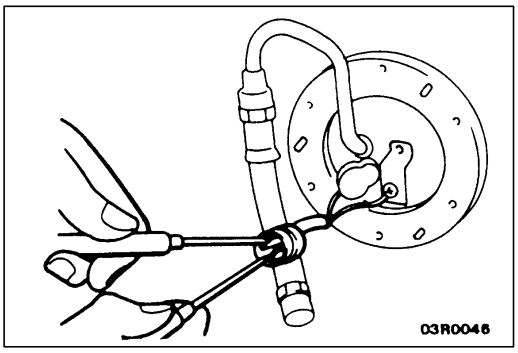

<When Inspecting a Male Pin>

Touch the pin directly with the test bar.

Caution

At this time, be careful not to short the connector pins with the test bars. To do so may damage the circuits inside the ECU.

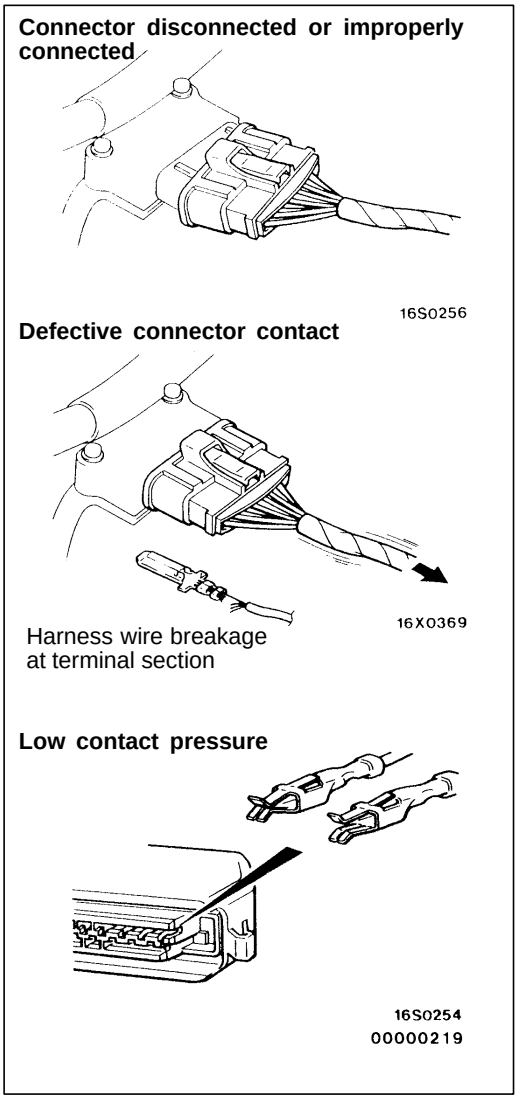

CONNECTOR INSPECTION

VISUAL INSPECTION

- Connector is disconnected or improperly connected
- Connector pins are pulled out
- Due to harness tension at terminal section
- Low contact pressure between male and female terminals
- Low connection pressure due to rusted terminals or foreign matter lodged in terminals

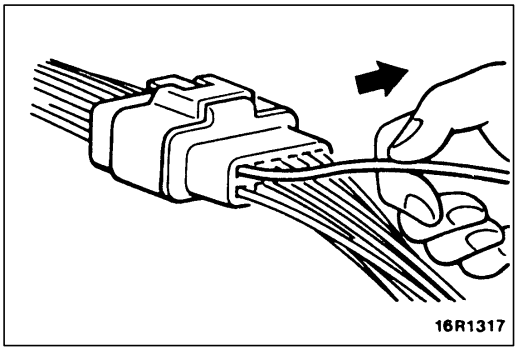

CONNECTOR PIN INSPECTION

If the connector pin stopper is damaged, the terminal connections (male and female pins) will not be perfect even if the connector body is connected, and the pins may pull out of the reverse side of the connector. Therefore, gently pull the harnesses one by one to make sure that no pins pull out of the connector.

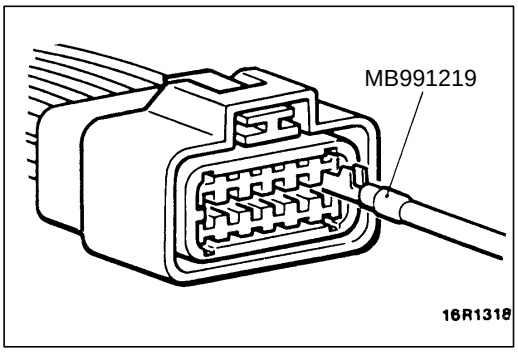

CONNECTOR ENGAGEMENT INSPECTION

Use the special tool (connector pin connection pressure inspection harness of the inspection harness set) to inspect the engagement of the male pins and females pins. (Pin drawing force : 1 N or more)

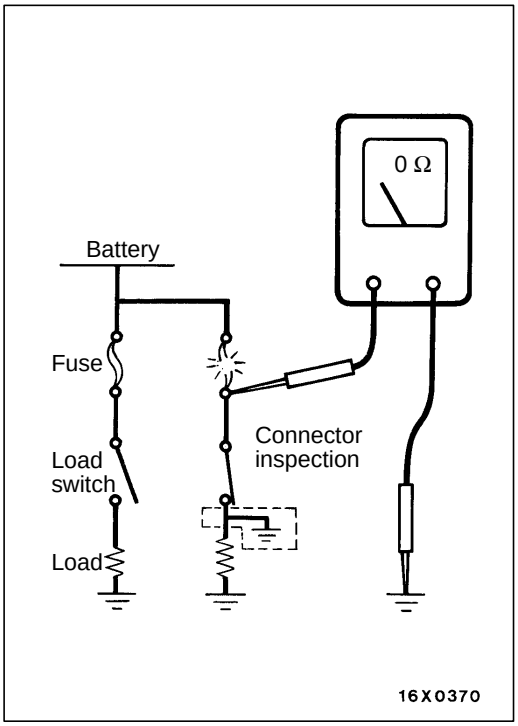

INSPECTION SERVICE POINTS FOR A BLOWN FUSE

Remove the fuse and measure the resistance between the load side of the fuse and the earth. Set the switches of all circuits which are connected to this fuse to a condition of continuity. If the resistance is almost 0 Ω at this time, there is a short somewhere between these switches and the load. If the resistance is not 0 Ω, there is no short at the present time, but a momentary short has probably caused the fuse to blow.

The main causes of a short circuit are the following.

- Harness being clamped by the vehicle body
- Damage to the outer casing of the harness due to wear or heat
- Water getting into the connector or circuitry
- Human error (mistakenly shorting a circuit, etc.)

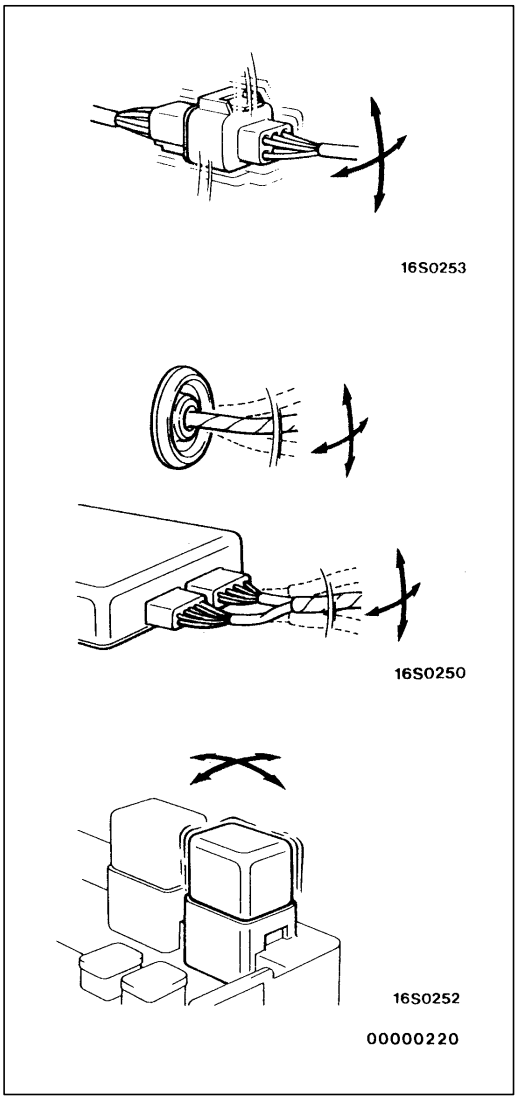

POINTS TO NOTE FOR INTERMITTENT MALFUNCTIONS

Intermittent malfunctions often occur under certain conditions, and if these conditions can be ascertained, determining the cause becomes simple. In order to ascertain the conditions under which an intermittent malfunction occurs, first ask the customer for details about the driving conditions, weather conditions, frequency of occurrence and trouble symptoms, and then try to recreate the trouble symptoms. Next, ascertain whether the reason why the trouble symptom occurred under these conditions is due to vibration, temperature or some other factor. If vibration is thought to be the cause, carry out the following checks with the connectors and components to confirm whether the trouble symptom occurs.
The objects to be checked are connectors and components which are indicated by inspection procedures or given as probable causes (which generates diagnosis codes or trouble symptoms.)

- Gently shake the connector up, down and to the left and right.
- Gently shake the wiring harness up, down and to the left and right.
- Gently rock each sensor and relay, etc. by hand.
- Gently shake the wiring harness at suspensions and other moving parts.

NOTE
If determining the cause is difficult, the flight recorder function of the MUT-II can also be used.

TREATMENT BEFORE/AFTER THE FORDING OF A STREAM (4WD VEHICLES)

00100060031

INSPECTION AND SERVICE BEFORE FORDING A STREAM

Vehicles which are driven through water, or which may possibly be driven through water, should be subjected to the following inspections and maintenance procedures in advance.

- Seal the speedometer cable with a water-resistant grease or tape.
- Inspect the dust boots and breather hose for cracks or damage, and replace them if cracks or damage are found.

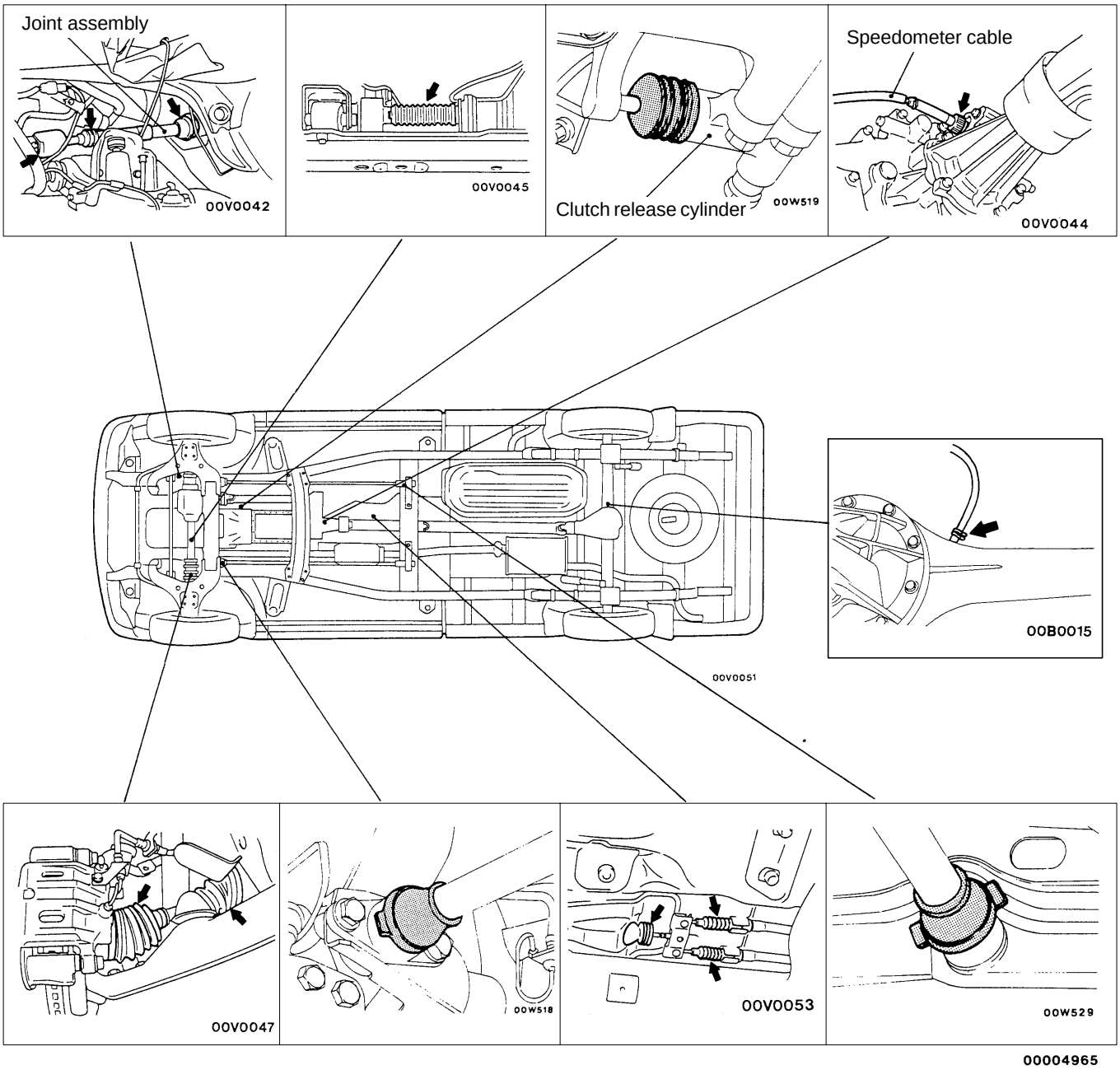

00004965

- Apply grease to the lubricating points of the front suspension, steering linkage and propeller shaft.

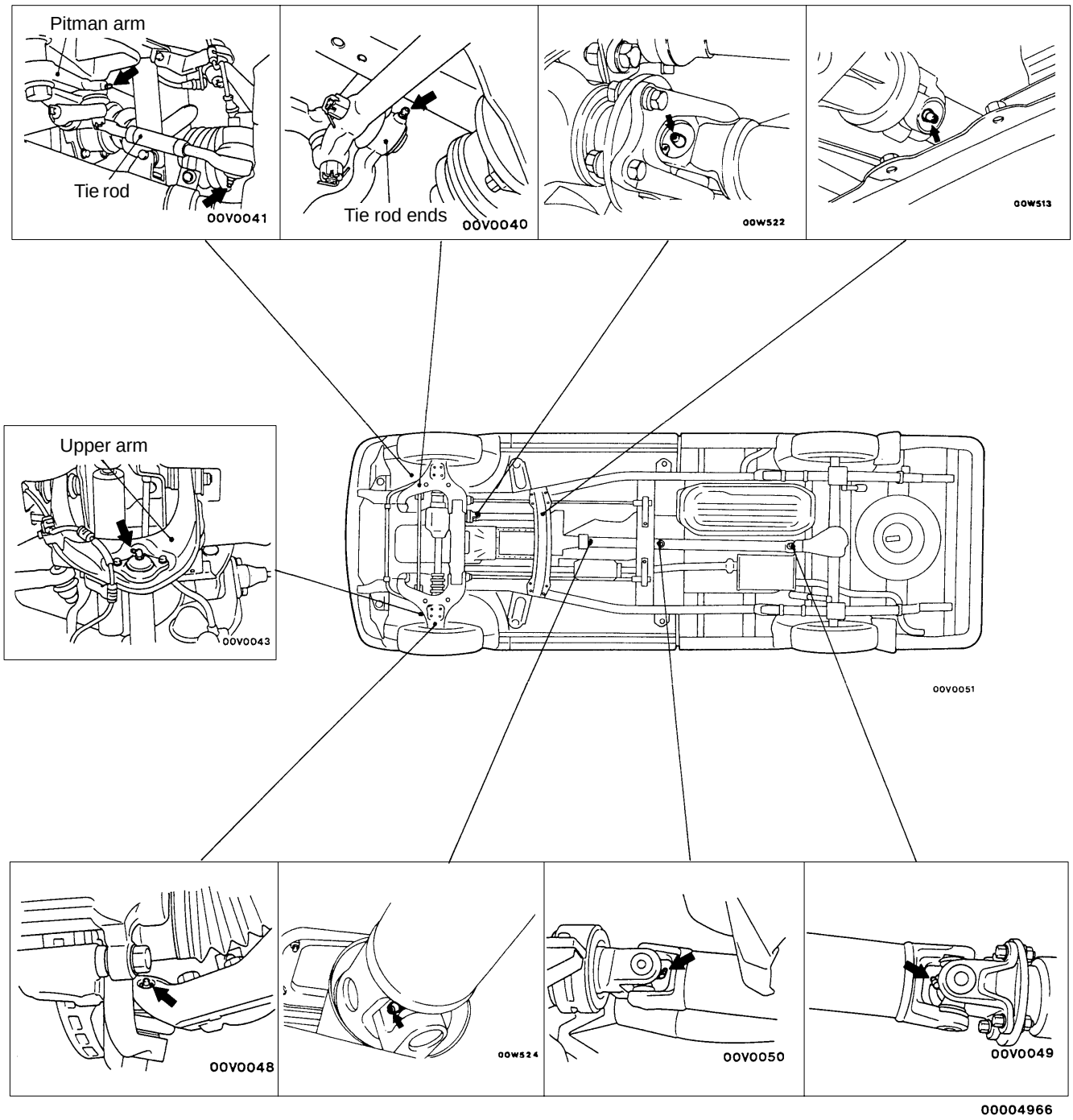

INSPECTION AND SERVICE AFTER FORDING A STREAM

After fording a stream, check the following points. If abnormal condition is evident, clean, replace or lubricate.

- Check for water, mud, sand, etc. in the rear brake drum, clutch housing, starter motor, brake pipe and fuel pipe.
- Check for water in the fluid or oil inside the front differential, rear differential, transmission and transfer.
- Apply grease to the lubricating points of the front suspension, steering linkage and propeller shaft.
- Check all boots and breather hoses for cracks and damage.

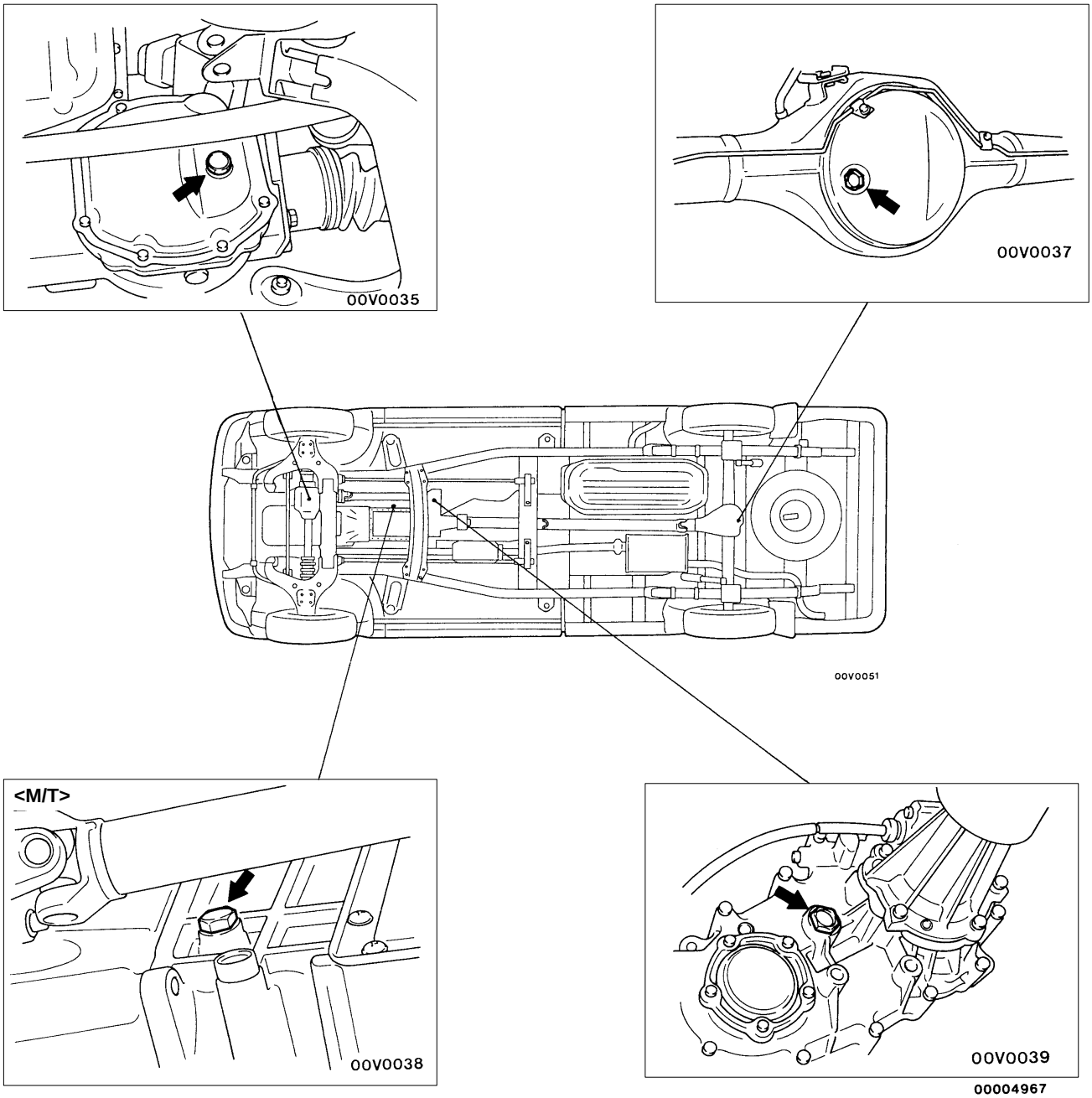

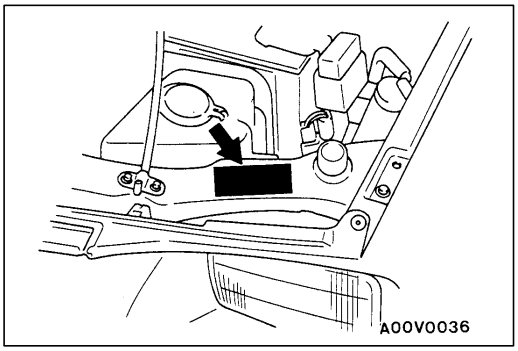

VEHICLE IDENTIFICATION

00100540061

VEHICLE INFORMATION CODE PLATE

LOCATION

Vehicle information code plate is riveted on the upside of the headlamp support panel inside the engine compartment.

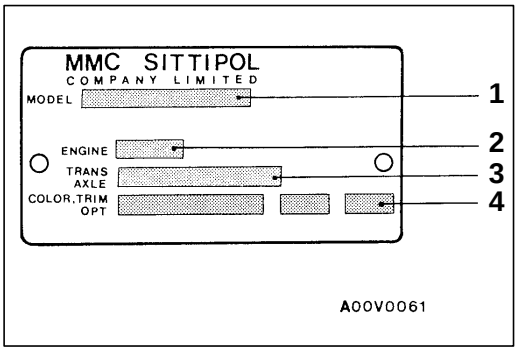

CODE PLATE DESCRIPTION

The plate shows model code, engine model, transmission model, and body colour code.

No.	Item	Contents	
1	MODEL	K62T JERDEL6	K62T: Vehicle model
			JERDEL6: Model series
2	ENGINE	4G63	Engine model
3	TRANS AXLE	R4AW2 4636	R4AW2: Transmission code
			4636: Rear differential reduction
4	COLOR TRIM OPT	B60 41H 03V	B60: Body colour code
			41H: Interior code
			03V: Equipment code

For monotone colour vehicles, the body colour code shall be indicated. For two-tone colour vehicles, each colour code only shall be indicated in series.

MODELS

00100550064

Model Code		Engine model	Transmission model	Fuel supply system
K62T	JERDEL6	4G63-SOHC (1,997 mℓ)	R4AW2 (2WD-4A/T)	MPI
	ENDEL6		R5M21 (2WD-5M/T)	
K64T	YNDL6	4D56 (2,477mℓ)	R5M21 (2WD-5M/T)	Fuel injection
	ZNDL6			
	ENDL6			
	ENDR6			
	CENDL6			
	JENDL6			
K75T	CENDEL6	4G64-SOHC (2,351 mℓ)	V5M21 (4WD-5M/T)	MPI
K74T	YNDFL6	4D56-Turbocharger with intercooler (2,477 mℓ)	V5MT1 (4WD-5M/T)	Fuel injection
	ZNDFL6			
	ENDFR6			
	JERDFL6		V4AW2 (4WD-4A/T)	
	GJENXFL6		V5MT1(4WD-5M/T)	
	CENDFL6			
	JENDFL6			
	JENHFL6			

MODEL CODE

00100040134

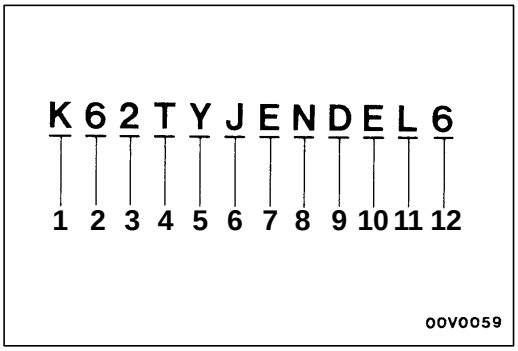

No.	Items	Contents
1	Vehicle line	K: L200
2	Drive system	6: 2WD
		7: 4WD
3	Engine type	2: 1,997 mℓ Petrol engine
		4: 2,477 mℓ Diesel engine
		5: 2,351 mℓ Petrol engine
4	Group	T: Truck
5	Vehicle wide, Cargo bed	None: Standard wide, With cargo bed
		G: Wide fender, with cargo bed
		Y: Without cargo bed (Cab and chassis, Single cab)
		Z: Without cargo bed (Cab and chassis, Double cab)
6	Cabin shape	None: Single cab
		J: Double cab
		C: Club cab
7	Rear body shape	None: Cab and chassis
		E: Smooth surface and low floor
8	Transmission type	N: 5-speed manual transmission (Floor shift)
		R: 4-speed automatic transmission (Floor shift)
9	Vehicle grade	D: GL
		H: GLX
		X: GLS
10	Specified engine feature	None: N/A
		E: MPI
		F: I/C T/C
11	Steering wheel location	L: Left hand
		R: Right hand
12	Destination	6: For Europe

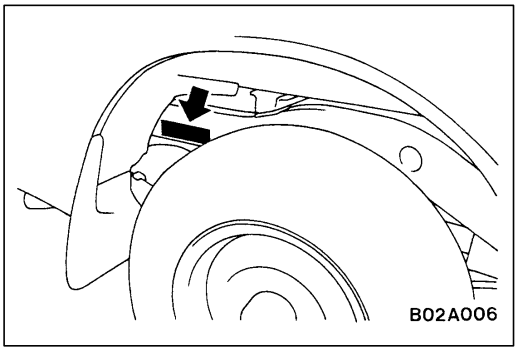

CHASSIS NUMBER

00100560067

The chassis number is stamped on the side wall of the frame near the rear wheel (R.H.).

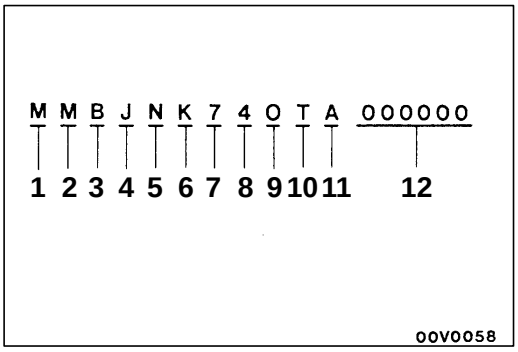

No.	Items		Contents
1	Continent	M	ASIA
2	Country	M	THAILAND
3	Register code	B	Follow register
4	Body shape	C	Club cab
		J	Double cab
		O	Single cab
		Y	Single cab without rear body
		Z	Double cab without rear body
5	Transmission type	N	5-speed manual transmission
		R	4-speed automatic transmission
6	Vehicle line	K	Mitsubushi L200
7	Body type	6	Long wheelbase
		7	4WD, Long wheelbase
8	Engine type	2	4G63: 1,997 mℓ petrol engine
		4	4D56: 2,477 mℓ diesel engine
		5	4G64: 2,351 mℓ petrol engine
9	International production control code	O	A, B, C,... etc. 0 (zero): No meaning
10	Model year	T	1996
11	Plant	A	A, C: LARDKRABANG factory D,F: LAEMCHABANG factory
12	Serial number	–	–

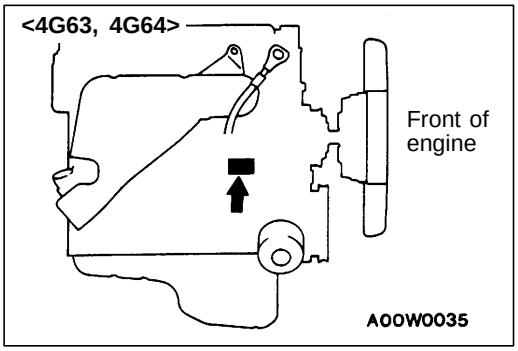

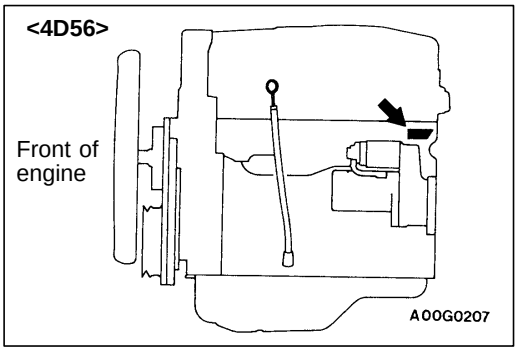

ENGINE MODEL NUMBER

00100570060

1. The engine model number is stamped at the cylinder block as shown in the following.

Engine model	Engine displacement mℓ
4G63	1,997
4G64	2,351
4D56	2,477

2. The engine serial number is stamped near the engine model number.

Engine serial number	AA0201 to YY9999

MAJOR SPECIFICATIONS

00100090146

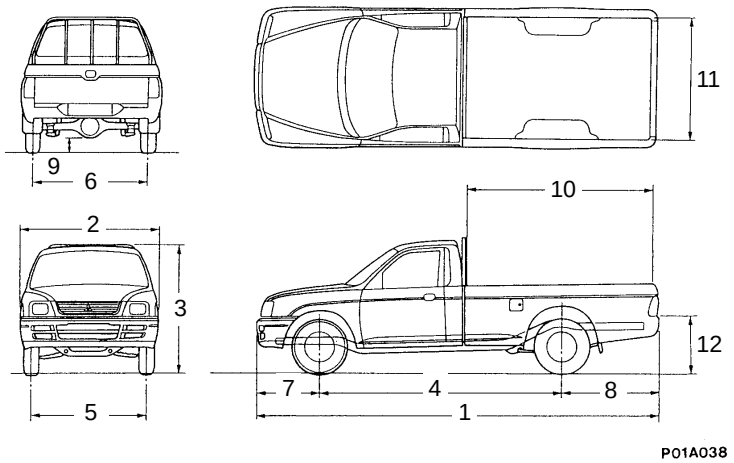

<2WD Single cab>

Items			K62T ENDEL6	K64T ENDL6	K64T YNDL6	K64T ENDR6
Vehicle dimensions mm	Overall length	1	4,935	4,935	4,775	4,935
	Overall width	2	1,695	1,695	1,695	1,695
	Overall height (unladen)	3	1,585	1,585	1,585	1,585
	Wheelbase	4	2,950	2,950	2,950	2,950
	Track-front	5	1,450	1,450	1,450	1,450
	Track-rear	6	1,435	1,435	1,435	1,435
	Overhang-front	7	775	775	775	775
	Overhang-rear	8	1,210	1,210	1,210	1,210
	Ground clearance (unladen)	9	190	190	190	190
	Cargo area length	10	2,245	2,245	–	2,245
	Cargo area width	11	1,470	1,470	–	1,470
	Cargo bed height	12	680	680	–	680
Vehicle weight kg	Kerb weight		1,315	1,365	1,235	1,365
	Max. gross vehicle weight rating		2,520	2,570	2,570	2,570
	Max. axle weight rating-front		1,000	1,000	1,000	1,000
	Max. axle weight rating-rear		1,700	1,700	1,700	1,700
	Max. trailer weight	With brake	1,500	1,500	1,500	1,500
		Without brake	500	500	500	500
	Max. trailer-nose weight		75	75	75	75
Seating capacity			2	2	2	2
Engine	Model No.		4G63	4D56	4D56	4D56
	Total displacement mℓ		1,997	2,477	2,477	2,477
Transmis-sion	Model No.		R5M21	R5M21	R5M21	R5M21
	Type		5-speed manual	5-speed manual	5-speed manual	5-speed manual
Fuel system	Fuel supply system		MPI	Fuel injection	Fuel injection	Fuel injection

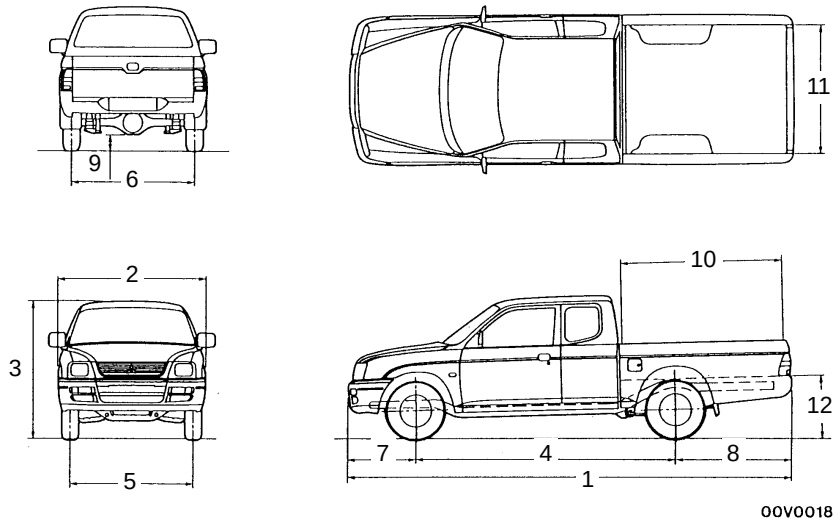

<2WD Double cab, Club cab>

Items				K64T CENDL6	K62T JERDEL6	K64T JENDL6	K64T ZENDL6
Vehicle dimensions mm	Overall length		1	5,050	4,935	4,935	4,775
	Overall width		2	1,695	1,695	1,695	1,695
	Overall height (unladen)		3	1,605	1,610	1,610	1,625
	Wheelbase		4	2,950	2,950	2,950	2,950
	Track-front		5	1,450	1,450	1,450	1,450
	Track-rear		6	1,435	1,435	1,435	1,435
	Overhang-front		7	775	775	775	775
	Overhang-rear		8	1,325	1,210	1,210	1,210
	Ground clearance (unladen)		9	190	190	190	190
	Cargo area length		10	1,830	1,500	1,500	–
	Cargo area width		11	1,470	1,470	1,470	–
	Cargo bed height		12	695	680	680	–
Vehicle weight kg	Kerb weight			1,440	1,435	1,465	1,335
	Max. gross vehicle weight rating			2,570	2,520	2,570	2,570
	Max. axle weight rating-front			1,000	1,000	1,000	1,000
	Max. axle weight rating-rear			1,700	1,700	1,700	1,700
	Max. trailer weight	With brake		1,500	1,500	1,500	1,500
		Without brake		500	500	500	500
	Max. trailer-nose weight			75	75	75	75
Seating capacity				4	5	5	5
Engine	Model No.			4D56	4G63	4D56	4D56
	Total displacement mℓ			2,477	1,997	2,477	2,477
Transmis-sion	Model No.			R5M21	R4AW2	R5M21	R5M21
	Type			5-speed manual	4-speed automatic	5-speed manual	5-speed manual
Fuel system	Fuel supply system			Fuel injection	MPI	Fuel injection	Fuel injection

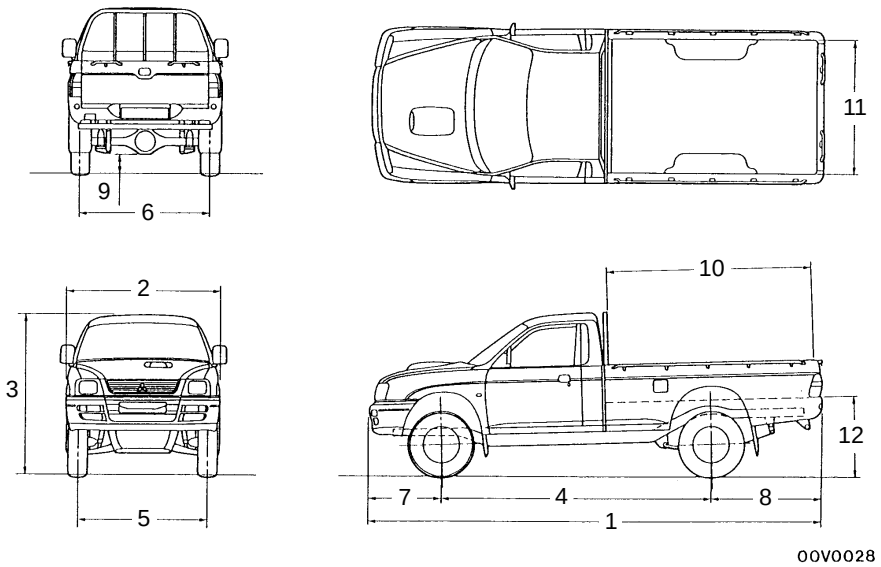

<4WD Single cab, Club cab>

Items				K74T YNDFL6	K74T ENDFR6	K75T CENDEL6	K74T CENDFL6
Vehicle dimensions mm	Overall length		1	4,810	4,935	5,050	5,050
	Overall width		2	1,695	1,695	1,695	1,695
	Overall height (unladen)		3	1,755	1,755	1,775	1,775
	Wheelbase		4	2,960	2,960	2,960	2,960
	Track-front		5	1,420	1,420	1,420	1,420
	Track-rear		6	1,435	1,435	1,435	1,435
	Overhang-front		7	765	765	765	765
	Overhang-rear		8	1,210	1,210	1,325	1,325
	Ground clearance (unladen)		9	215	215	215	215
	Cargo area length		10	–	2,245	1,830	1,830
	Cargo area width		11	–	1,470	1,470	1,470
	Cargo bed height		12	–	860	875	875
Vehicle weight kg	Kerb weight			1,500	1,630	1,615	1,705
	Max. gross vehicle weight rating			2,830	2,830	2,720	2,830
	Max. axle weight rating-front			1,200	1,200	1,200	1,200
	Max. axle weight rating-rear			1,800	1,800	1,800	1,800
	Max. trailer weight	With brake		2,200	2,200	2,200	2,200
		Without brake		500	500	500	500
	Max. trailer-nose weight			100	100	100	100
Seating capacity				2	2	4	4
Engine	Model No.			4D56	4D56	4G64	4D56
	Total displacement mℓ			2,477	2,477	2,351	2,477
Transmis-sion	Model No.			V5MT1	V5MT1	V5M21	V5MT1
	Type			5-speed manual	5-speed manual	5-speed manual	5-speed manual
Fuel system	Fuel supply system			Fuel injection	Fuel injection	MPI	Fuel injection

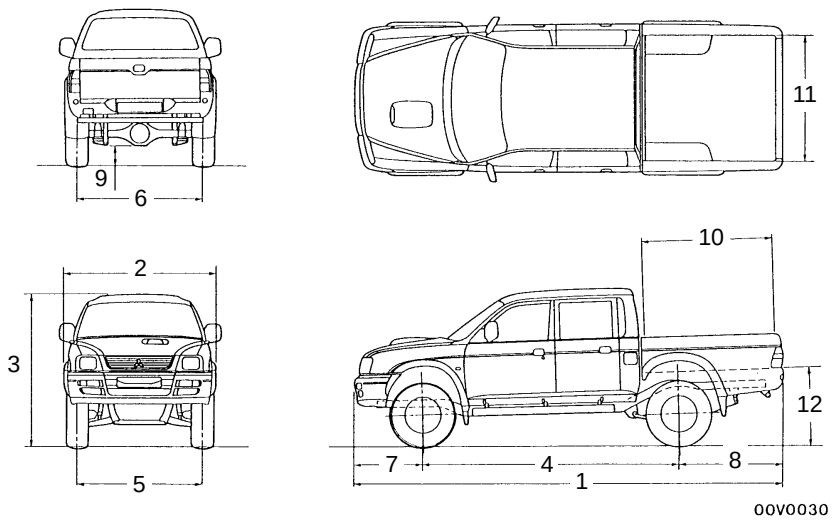

<4WD Double cab>

Items			K74T JENDFL6	K74T ZNDFL6	K74T JERDFL6	K74T JENHFL6	K74T GJENXFL6
Vehicle dimen-sions mm	Overall length	1	4,935	4,810	4,935	4,935	4,935
	Overall width	2	1,695	1,695	1,695	1,695	1,775
	Overall height (unladen)	3	1,780	1,795	1,780	1,780	1,800
	Wheelbase	4	2,960	2,960	2,960	2,960	2,960
	Track-front	5	1,420	1,420	1,420	1,420	1,465
	Track-rear	6	1,435	1,435	1,435	1,435	1,480
	Overhang-front	7	765	765	765	765	765
	Overhang-rear	8	1,210	1,210	1,210	1,210	1,210
	Ground clearance (unladen)	9	215	215	215	215	235
	Cargo area length	10	1,500	–	1,500	1,500	1,500
	Cargo area width	11	1,470	–	1,470	1,470	1,470
	Cargo bed height	12	860	–	860	860	880
Vehicle weight kg	Kerb weight		1,730	1,600	1,735	1,735	1,750
	Max. gross vehicle weight rating		2,830	2,830	2,830	2,830	2,830
	Max. axle weight rating-front		1,200	1,200	1,200	1,200	1,200
	Max. axle weight rating-rear		1,800	1,800	1,800	1,800	1,750
	Max. trailer weight	With brake	2,200	2,200	2,200	2,200	2,200
		Without brake	500	500	500	500	500
	Max. trailer-nose weight		100	100	100	100	100
Seating capacity			5	5	5	5	5
Engine	Model No.		4D56	4D56	4D56	4D56	4D56
	Total displacement mℓ		2,477	2,477	2,477	2,477	2,477
Trans-mission	Model No.		V5MT1	V5MT1	V4AW2	V5MT1	V5MT1
	Type		5-speed manual	5-speed manual	4-speed automatic	5-speed manual	5-speed manual
Fuel system	Fuel supply system		Fuel injection	Fuel injection	Fuel injection	Fuel injection	Fuel injection

PRECAUTIONS BEFORE SERVICE

00100050144

SUPPLEMENTAL RESTRAINT SYSTEM (SRS)

1. Items to follow when servicing SRS
   (1) Be sure to read GROUP 52B – Supplemental Restraint System (SRS).
   For safe operations, please follow the directions and heed all warnings.
   (2) Always use the designated special tools and test equipment.
   (3) Wait at least 60 seconds after disconnecting the battery cable before doing any further work.
   The SRS system is designed to retain enough voltage to deploy the air bag even after the battery has been disconnected. Serious injury may result from unintended air bag deployment if work is done on the SRS system immediately after the battery cable is disconnected.
   (4) Never attempt to disassembly or repair the SRS components, (SRS diagnosis unit, air bag module and clock spring). If faulty, replace it.
   (5) Warning labels must be heeded when servicing or handling SRS components. Warning labels are located in the following locations.
   - Hood
   - Sun visor
   - Glove box
   - SRS diagnosis unit
   - Steering wheel
   - Air bag module
   - Clock spring
   - Frame

   (6) Store components removed from the SRS in a clean and dry place.
   The air bag module should be stored on a flat surface and placed so that the pad surface is facing upward.
   Do not place anything on top of it.
   (7) Be sure to deploy the air bag before disposing of the air bag module or disposing of a vehicle equipped with an air bag. (Refer to GROUP 52B – Air Bag Module Disposal Procedures.)
   (8) Whenever you finish servicing the SRS, check the SRS warning lamp operation to make sure that the system functions properly.
2. Observe the following when carrying out operations on places where SRS components are installed, including operations not directly related to the SRS air bag.
   (1) When removing or installing parts do not allow any impact or shock to the SRS components.
   (2) SRS components should not be subjected to heat over 93°C, so remove the SRS components before drying or baking the vehicle after painting.
   After re-installing them, check the SRS warning lamp operation to make sure that the system functions properly.

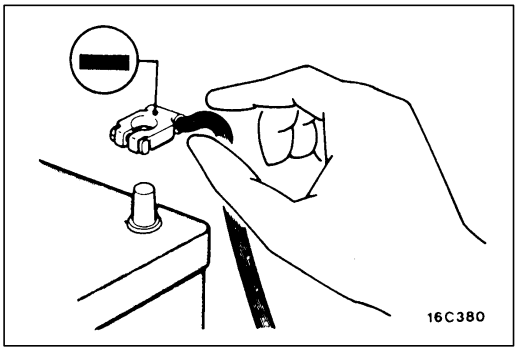

SERVICING THE ELECTRICAL SYSTEM

Before replacing a component related to the electrical system and before undertaking any repair procedures involving the electrical system, be sure to first disconnect the negative (–) cable from the battery in order to avoid damage caused by short-circuiting.

Caution
Before connecting or disconnecting the negative (–) cable, be sure to turn off the ignition switch and the lighting switch.
(If this is not done, there is the possibility of semiconductor parts being damaged.)

APPLICATION OF ANTI-CORROSION AGENTS AND UNDERCOATS

If oil or grease gets onto the oxygen sensor, it will cause a drop in the performance of the sensor.
Cover the oxygen sensor with a protective cover when applying anti-corrosion agents and undercoats.

PRE-INSPECTION CONDITION

"Pre-inspection condition" refers to the condition that the vehicle must be in before proper engine inspection can be carried out. If you see the words "Set the vehicle to the pre-inspection condition." in this manual, it means to set the vehicle to the following condition.

- Engine coolant temperature: 80–90°C
- Lamps, electric cooling fan and all accessories: OFF
- M/T: Neutral
- A/T: P range

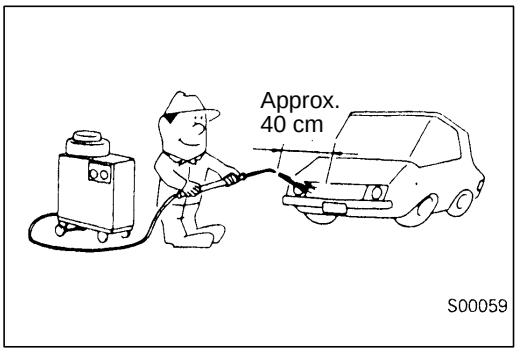

VEHICLE WASHING

If high-pressure car-washing equipment or steam car-washing equipment is used to wash the vehicle, be sure to note the following information in order to avoid damage to plastic components, etc.

- Spray nozzle distance: Approx. 40 cm or more
- Spray pressure: 3,900 kPa or less
- Spray temperature: 82°C or less
- Time of concentrated spray to one point: within 30 sec.

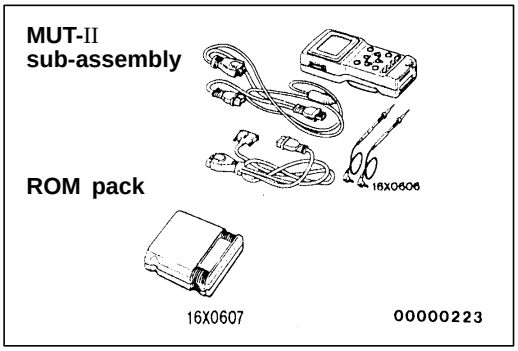

MUT-II

Refer to the MUT-II INSTRUCTION MANUAL for instructions on handling the MUT-II.

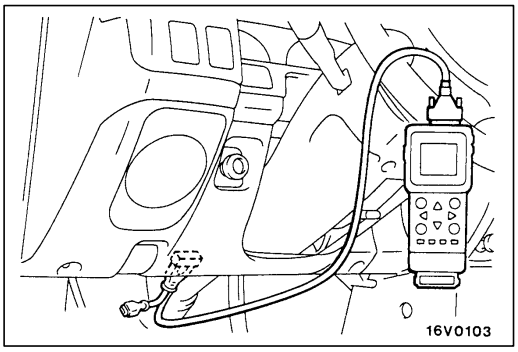

Connect the MUT-II to the diagnosis connector as shown in the illustration.

Caution
Connection and disconnection of the MUT-II should always be made with the ignition switch in the OFF position.

IN ORDER TO PREVENT VEHICLES FROM FIRE

"Improper installation of electrical or fuel related parts could cause a fire. In order to retain the high quality and safety of the vehicle, it is important that any accessories that may be fitted or modifications/repairs that may be carried out which involve the electrical or fuel systems, MUST be carried out in accordance with MMC's information/Instructions".

ENGINE OILS

Health Warning

Prolonged and repeated contact with mineral oil will result in the removal of natural fats from the skin, leading to dryness, irritation and dermatitits. In addition, used engine oil contains potentially harmful contaminants which may cause skin cancer. Adequate means of skin protection and washing facilities must be provided.

Recommended Precautions

The most effective precaution is to adapt working practices which prevent, as far as practicable, the risk of skin contact with mineral oils, for example by using enclosed systems for handling used engine oil and by degreasing components, where practicable, before handling them.

Other precautions:

- Avoid prolonged and repeated contact with oils, particularly used engine oils.
- Wear protective clothing, including impervious gloves where practicable.
- Avoid contaminating clothes, particularly underpants, with oil.
- Do not put oily rags in pockets, the use of overalls without pockets will avoid this.
- Do not wear heavily soiled clothing and oil-impregnated foot-wear. Overalls must be cleaned regularly and kept separately from personal clothing.
- Where there is a risk of eye contact, eye protection should be worn, for example, chemical goggles or face shields; in addition an eye wash facility should be provided.
- Obtain First Aid treatment immediately for open cuts and wounds.
- Wash regularly with soap and water to ensure all oil is removed, especially before meals (skin cleansers and nail brushes will help). After cleaning, the application of preparations containing lanolin to replace the natural skin oils is advised.
- Do not use petrol, kerosine, diesel fuel, gas oil, thinners or solvents for cleaning skin.
- Use barrier creams, applying them before each work period, to help the removal of oil from the skin after work.
- If skin disorders develop, obtain medical advice without delay.

SUPPLEMENTAL RESTRAINT SYSTEM (SRS)

00100590066

GENERAL INFORMATION

To improve safety, the SRS is available as optional part. These system enhance collision safety by restraining the driver in case of an accident.
The SRS consists of an air bag module, SRS diagnosis unit (SDU), SRS warning lamp, two front impact sensors and clock spring. Air bag is located in the center of the steering wheel. Air bag has a folded air bag and an inflator unit. The control unit under the instrument panel, which monitors the system and has a safing G sensor. The warning lamp on the instrument panel indicates the operational status of the SRS. Each front impact sensors are located left and right fender shield panel. The clock spring is installed in the steering column.

Only authorized service personnel should do work on or around the SRS components. Those service personnel should read this manual carefully before starting any such work. Extreme care must be used when servicing the SRS to avoid injury to the service personnel (by inadvertent deployment of the air bag) or the driver (by rendering the SRS inoperative.)

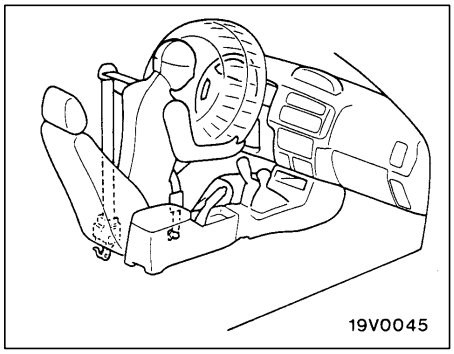

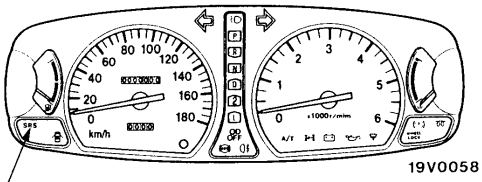

SRS warning lamp

SRS warning lamp

Clock spring

Front impact sensor (L.H.)

Front wiring harness or sensor cable

Air bag module

Body wiring harness

Front impact sensor (R.H.)

Diagnosis connector

SDU

19V0049

00005049

SRS SERVICE PRECAUTIONS

00100600066

1. In order to avoid injury to yourself or others from accidental deployment of the air bag during servicing, read and carefully follow all the precautions and procedures described in this manual.
2. Do not use any electrical test equipment on or near SRS components, except those specified on GROUP 52B.
3. **Never Attempt to Repair the Following Components:**
   - SRS Diagnosis unit (SDU)
   - Clock Spring
   - Air Bag Module
   - Front impact sensor

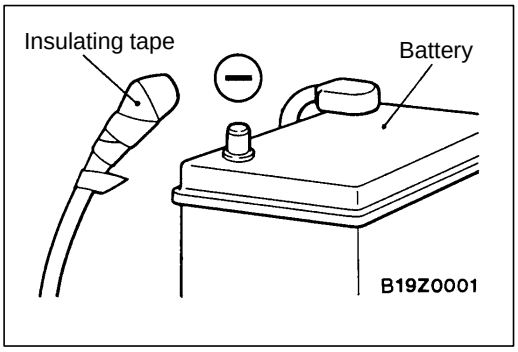

4. **After disconnecting the battery cable, wait 60 seconds or more before proceeding with the following work. The SRS system is designed to retain enough voltage to deploy the air bag for a short time even after the battery has been disconnected, so serious injury may result from unintended air bag deployment if work is done on the SRS system immediately after the battery cables are disconnected. Wind a tape around the disconnected (–) terminal for insulation.**

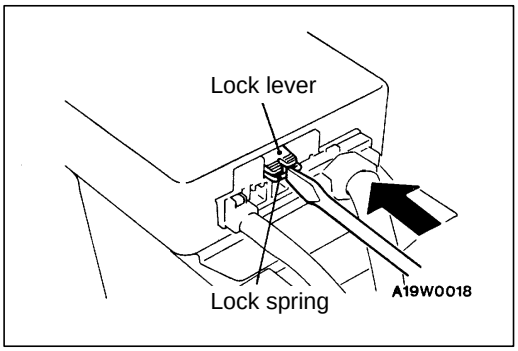

5. To unlock the SDU connector, place a flat-tipped screwdriver against the lock spring at the lock lever notch and push the spring toward the unit. In this case, do not force the lock lever up.

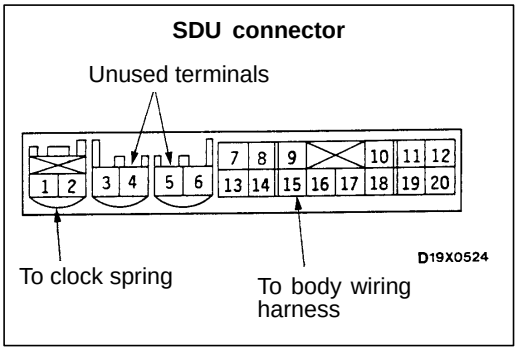

6. Do not attempt to repair the wiring harness connectors of the SRS. If any of the connectors are diagnosed as faulty, replace the wiring harness. If the wires are diagnosed as faulty, replace or repair the wiring harness according to the following table.

Harness connector (No. of terminals, colour)	SDU terminal No.	Destination of harness	Corrective action
2 pins, red	1, 2	Body wiring harness → Clock spring	Replace clock spring
–	3, 4	–	–
–	5, 6	–	–
14 pins, red	7, 8	–	–
	9	Body wiring harness → Diagnosis connector	Correct or replace each wiring harness
	10	Body wiring harness → Front wiring harness → Ignition switch (ST)	
	11	Body wiring harness → Junction block (fuse No. 11)	
	12	Body wiring harness → Junction block (fuse No. 10)	
	13	Body wiring harness → Combination meter (SRS warning lamp)	
	14	–	–
	15	Body wiring harness → Front wiring harness → Front impact sensor (+) (R.H.)	Sensor cable* installa-tion procedures (Refer to GROUP 52B.)
	16	Body wiring harness → Front wiring harness → Front impact sensor (+) (L.H.)	
	17	Body wiring harness → Front wiring harness → Front impact sensor (–) (L.H.)	
	18	Body wiring harness → Front wiring harness → Front impact sensor (–) (R.H.)	
	19, 20	Body wiring harness → Earth	Correct or replace each wiring harness

NOTE
The sensor cable marked with * is available as service part.

7. SRS components should not be subjected to heat over 93°C, so remove the SRS-diagnosis unit, air bag module, clock spring and front impact sensors before drying or braking the vehicle after painting.
8. Whenever you finish servicing the SRS, check warning lamp operation to make sure that the system functions properly. (Refer to GROUP 52B – SRS Maintenance.)
9. Make certain that the ignition switch is OFF when the MUT-II is connected or disconnected.
10. If you have any questions about the SRS, please contact your local distributor.

    NOTE
    SERIOUS INJURY CAN RESULT FROM UNINTENDED AIR BAG DEPLOYMENT, SO USE ONLY THE PROCEDURES AND EQUIPMENT SPECIFIED IN THIS MANUAL.

SUPPORT LOCATIONS FOR LIFTING AND JACKING

00100070058

Caution
Do not support the vehicles at locations other than specified supporting points. If do so, this will cause damage, etc.

SUPPORT POSITIONS FOR A GARAGE JACK AND AXLE STANDS

<2WD>

AXLE STANDS

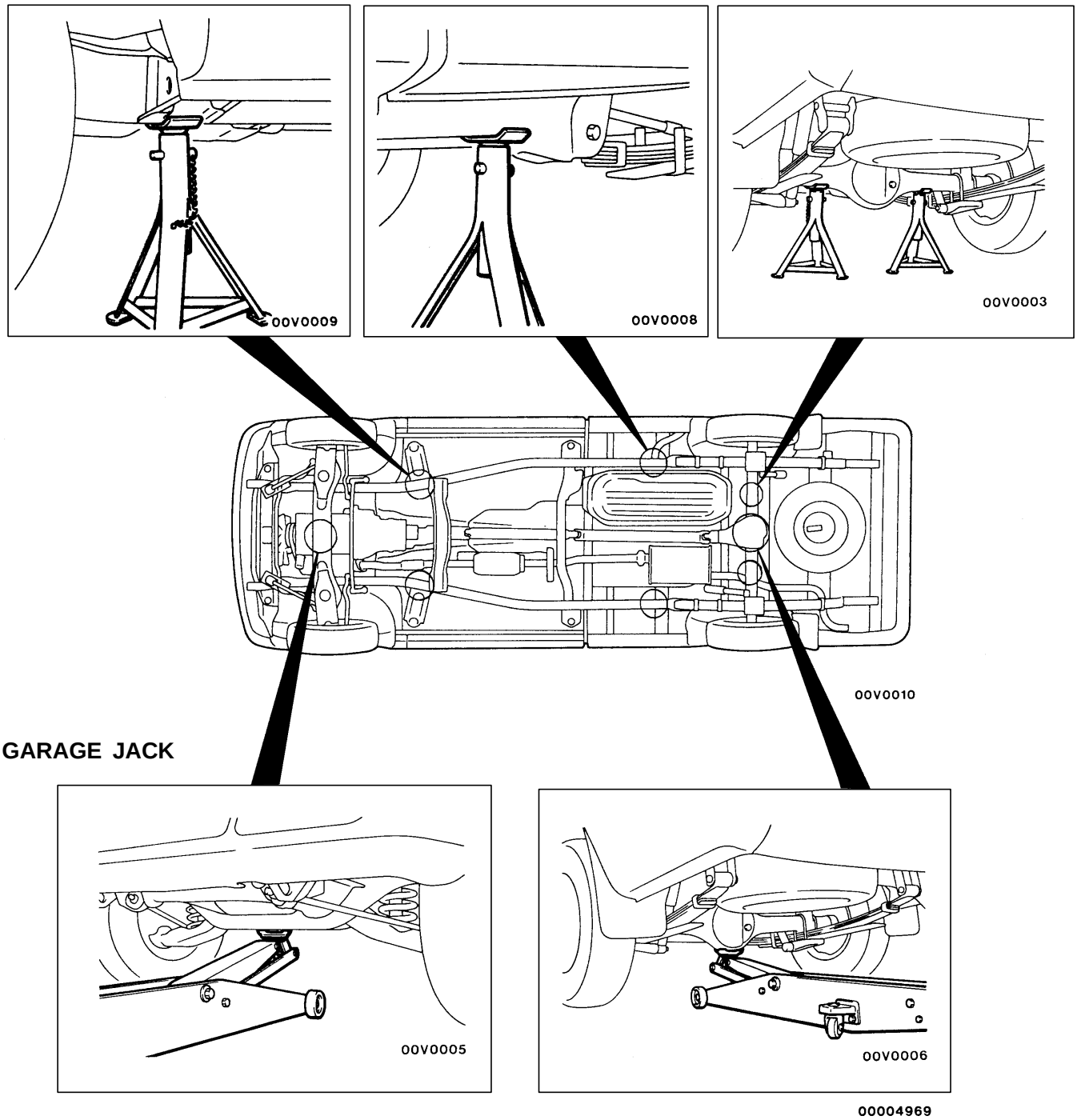

<4WD>

AXLE STANDS

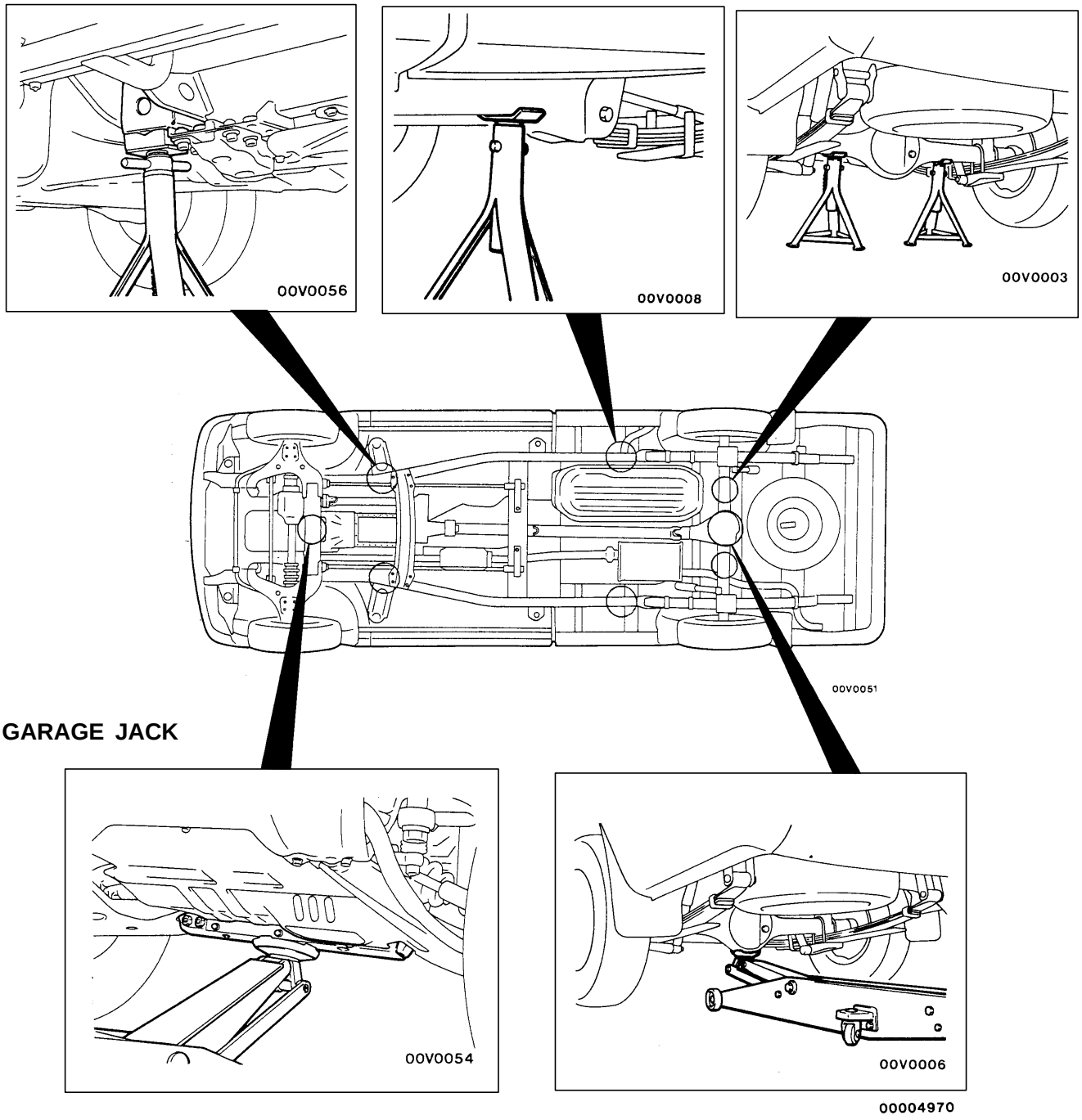

SUPPORT POSITIONS FOR A SINGLE-POST LIFT OR DOUBLE-POST LIFT AND H-BAR LIFT

Caution

When service procedures require removing rear suspension, spare tyre and rear bumper, place additional weight on rear end of vehicle or anchor vehicle to hoist to prevent tipping of centre of gravity changes.

<2WD>

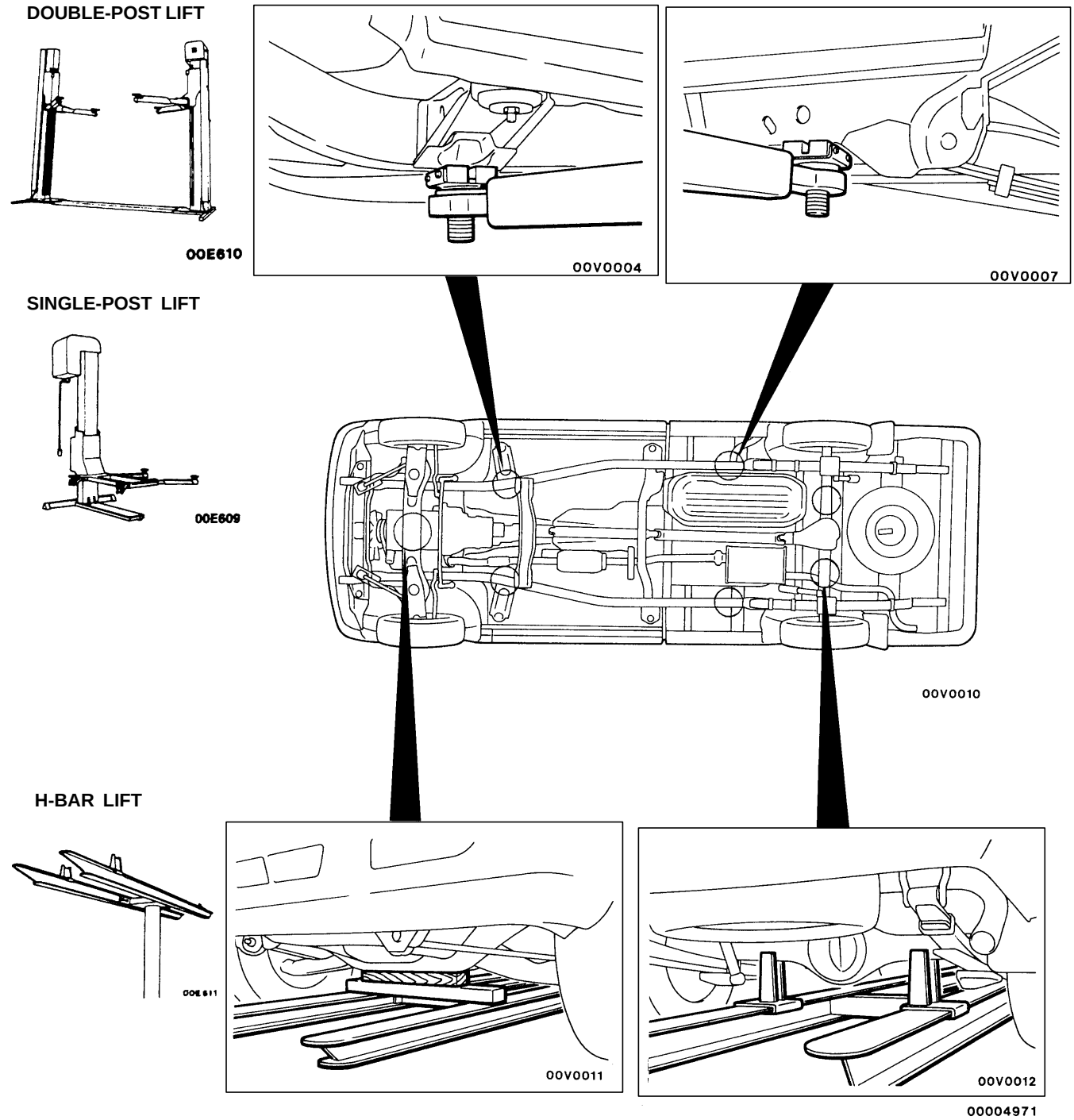

<4WD>

DOUBLE-POST LIFT

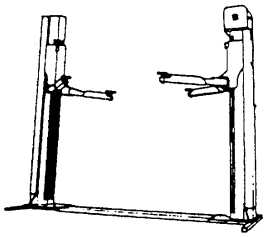

00E610

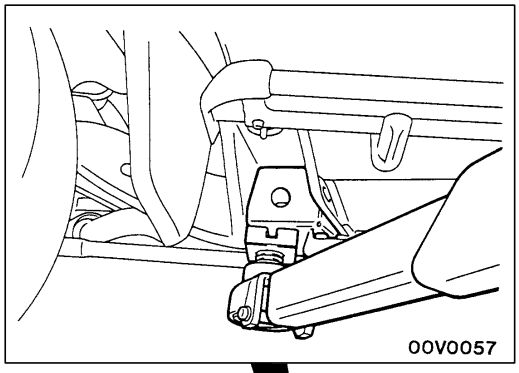

00V0057

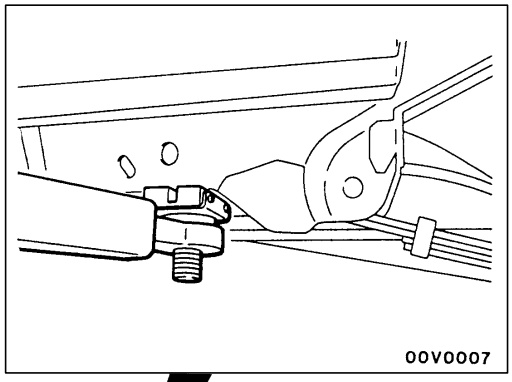

00V0007

SINGLE-POST LIFT

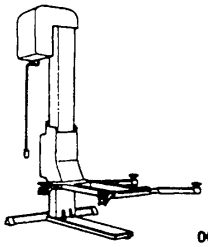

00E609

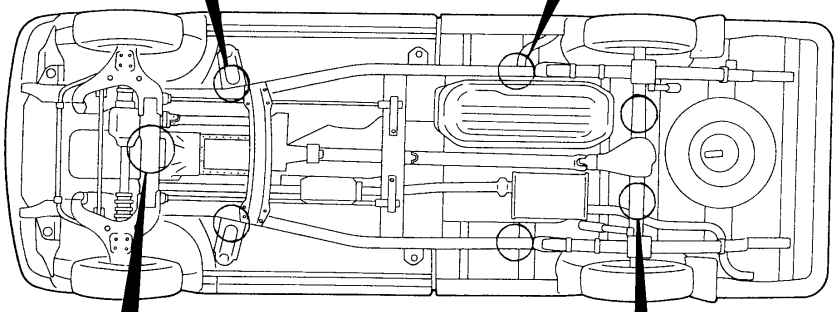

00V0051

H-BAR LIFT

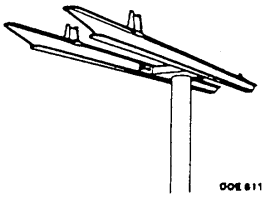

00E611

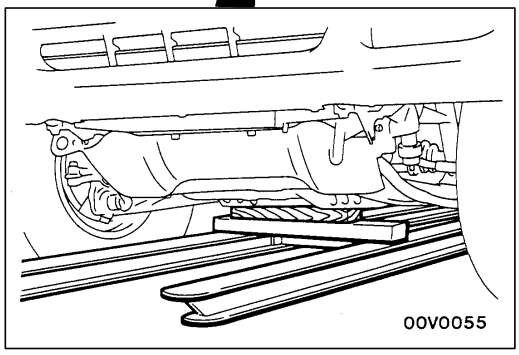

00V0055

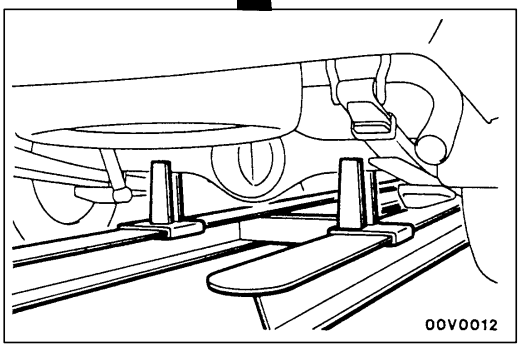

00V0012

00004972

STANDARD PARTS-TIGHTENING-TORQUE TABLE

00100110033

Each torque value in the table is a standard value for tightening under the following conditions.
(1) Bolts, nuts and washers are all made of steel and plated with zinc.
(2) The threads and bearing surface of bolts and nuts are all in dry condition.

The values in the table are not applicable:
(1) If toothed washers are inserted.
(2) If plastic parts are fastened.
(3) If bolts are tightened to plastic or die-cast inserted nuts.
(4) If self-tapping screws or self-locking nuts are used.

Standard bolt and nut tightening torque

Thread size		Torque Nm		
Bolt nominal diameter (mm)	Pitch (mm)	Head mark “4”	Head mark “7”	Head mark “8”
M5	0.8	2.5	4.9	5.9
M6	1.0	4.9	8.8	9.8
M8	1.25	12	22	25
M10	1.25	24	44	52
M12	1.25	41	81	96
M14	1.5	72	137	157
M16	1.5	111	206	235
M18	1.5	167	304	343
M20	1.5	226	412	481
M22	1.5	304	559	647
M24	1.5	392	735	853

Flange bolt and nut tightening torque

Thread size		Torque Nm		
Bolt nominal diameter (mm)	Pitch (mm)	Head mark “4”	Head mark “7”	Head mark “8”
M6	1.0	4.9	9.8	12
M8	1.25	13	24	28
M10	1.25	26	49	57
M10	1.5	24	44	54
M12	1.25	46	93	103
M12	1.75	42	81	96

GROUP 00
GENERAL

VEHICLE IDENTIFICATION

MODELS

Model Code		Engine model	Transmission model	Fuel supply system
K62T	JERDEL6	4G63-SOHC (1,997 mℓ)	R4AW2 (2WD-4A/T)	MPI
	ENDEL6		R5M21 (2WD-5M/T)	
K64T	YNDL6	4D56 (2,477mℓ)	R5M21 (2WD-5M/T)	Fuel injection
	ZNDL6			
	ENDL6			
	ENDR6			
	CENDL6			
	JENDL6			
K75T	CENDEL6	4G64-SOHC (2,351 mℓ)	V5M21 (4WD-5M/T)	MPI
K74T	YNDFL6	4D56-Turbocharger with intercooler (2,477 mℓ)	V5MT1 (4WD-5M/T)	Fuel injection
	ZNDFL6			
	ENDFR6			
	JERDFL6		V4AW2 (4WD-4A/T)	
	GJENXFL6		V5MT1(4WD-5M/T)	
	CENDFL6			
	JENDFL6			
	JENHFL6			

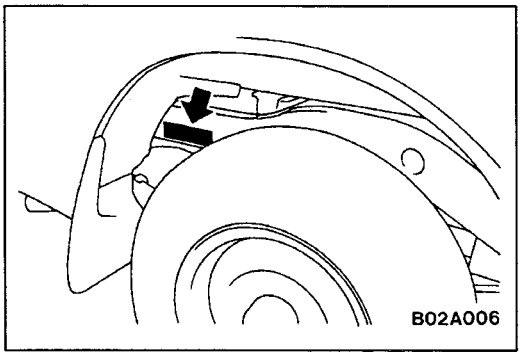

CHASSIS NUMBER

The chassis number is stamped on the side wall of the frame near the rear wheel (R.H.).

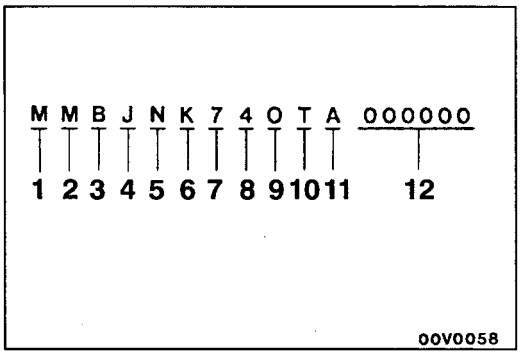

No.	Items		Contents
1	Continent	M	ASIA
2	Country	M	THAILAND
3	Register code	B	Follow register
4	Body shape	C	Club cab
		J	Double cab
		O	Single cab
		Y	Single cab without rear body
		Z	Double cab without rear body
5	Transmission type	N	5-speed manual transmission
		R	4-speed automatic transmission
6	Vehicle line	K	Mitsubushi L200
7	Body type	6	Long wheelbase
		7	4WD, Long wheelbase
8	Engine type	2	4G63: 1,997 mℓ petrol engine
		4	4D56: 2,477 mℓ diesel engine
		5	4G64: 2,351 mℓ petrol engine
9	Internal production control code	O	A, B, C... etc. 0 (zero): No meaning
10	Model year	W	1998
11	Plant	A	A, C: LARDKRABANG factory D, F: LAEMCHABANG factory
12	Serial number	–	–

MAJOR SPECIFICATIONS

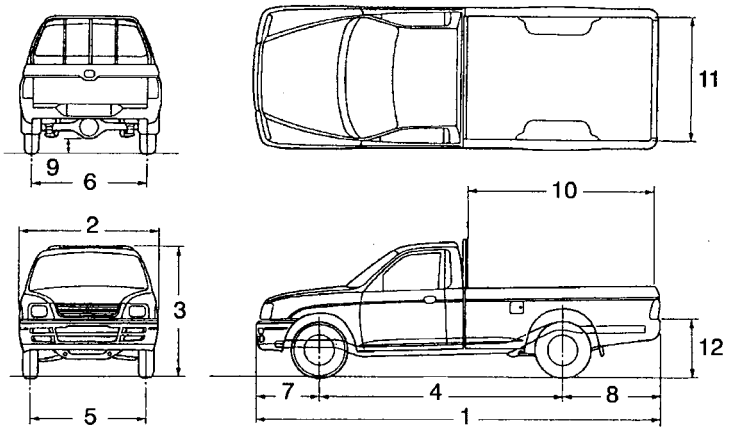

P01A038

<2WD Single cab>

Items				K62T ENDEL6	K64T ENDL6	K64T YNDL6	K64T ENDR6
Vehicle dimensions mm	Overall length		1	4,935	4,935	4,775	4,935
	Overall width		2	1,695	1,695	1,695	1,695
	Overall height (unladen)		3	1,585	1,585	1,585	1,585
	Wheelbase		4	2,950	2,950	2,950	2,950
	Track-front		5	1,450	1,450	1,450	1,450
	Track-rear		6	1,435	1,435	1,435	1,435
	Overhang-front		7	775	775	775	775
	Overhang-rear		8	1,210	1,210	1,210	1,210
	Ground clearance (unladen)		9	190	190	190	190
	Cargo area length		10	2,245	2,245	–	2,245
	Cargo area width		11	1,470	1,470	–	1,470
	Cargo bed height		12	680	680	–	680
Vehicle weight kg	Kerb weight			1,315	1,365	1,235	1,365
	Max. gross vehicle weight rating			2,520	2,570	2,570	2,570
	Max. axle weight rating-front			1,000	1,000	1,000	1,000
	Max. axle weight rating-rear			1,700	1,700	1,700	1,700
	Max. trailer weight	With brake		1,500	1,500	1,500	1,500
		Without brake		500	500	500	500
	Max. trailer-nose weight			75	75	75	75
Seating capacity				2	2	2	2
Engine	Model No.			4G63	4D56	4D56	4D56
	Total displacement mℓ			1,997	2,477	2,477	2,477
Transmission	Model No.			R5M21	R5M21	R5M21	R5M21
	Type			5-speed manual	5-speed manual	5-speed manual	5-speed manual
Fuel system	Fuel supply system			MPI	Fuel injection	Fuel injection	Fuel injection

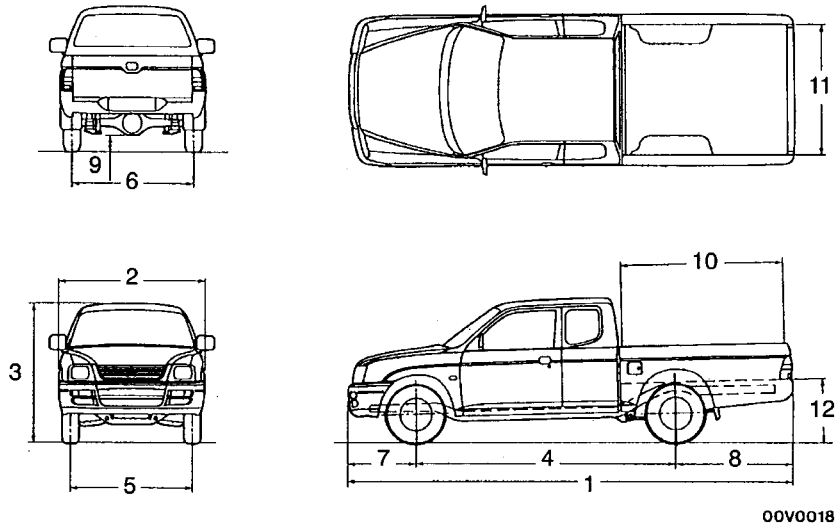

<2WD Double cab, Club cab>

Items			K64T CENDL6	K62T JERDEL6	K64T JENDL6	K64T ZNDL6
Vehicle dimensions mm	Overall length	1	5,050	4,935	4,935	4,775
	Overall width	2	1,695	1,695	1,695	1,695
	Overall height (unladen)	3	1,605	1,610	1,610	1,625
	Wheelbase	4	2,950	2,950	2,950	2,950
	Track-front	5	1,450	1,450	1,450	1,450
	Track-rear	6	1,435	1,435	1,435	1,435
	Overhang-front	7	775	775	775	775
	Overhang-rear	8	1,325	1,210	1,210	1,210
	Ground clearance (unladen)	9	190	190	190	190
	Cargo area length	10	1,830	1,500	1,500	-
	Cargo area width	11	1,470	1,470	1,470	-
	Cargo bed height	12	695	680	680	-
Vehicle weight kg	Kerb weight		1,440	1,435	1,465	1,335
	Max. gross vehicle weight rating		2,570	2,520	2,570	2,570
	Max. axle weight rating-front		1,000	1,000	1,000	1,000
	Max. axle weight rating-rear		1,700	1,700	1,700	1,700
	Max. trailer weight	With brake	1,500	1,500	1,500	1,500
		Without brake	500	500	500	500
	Max. trailer-nose weight		75	75	75	75
Seating capacity			4	5	5	5
Engine	Model No.		4D56	4G63	4D56	4D56
	Total displacement mℓ		2,477	1,997	2,477	2,477
Transmission	Model No.		R5M21	R4AW2	R5M21	R5M21
	Type		5-speed manual	4-speed automatic	5-speed manual	5-speed manual
Fuel system	Fuel supply system		Fuel injection	MPI	Fuel injection	Fuel injection

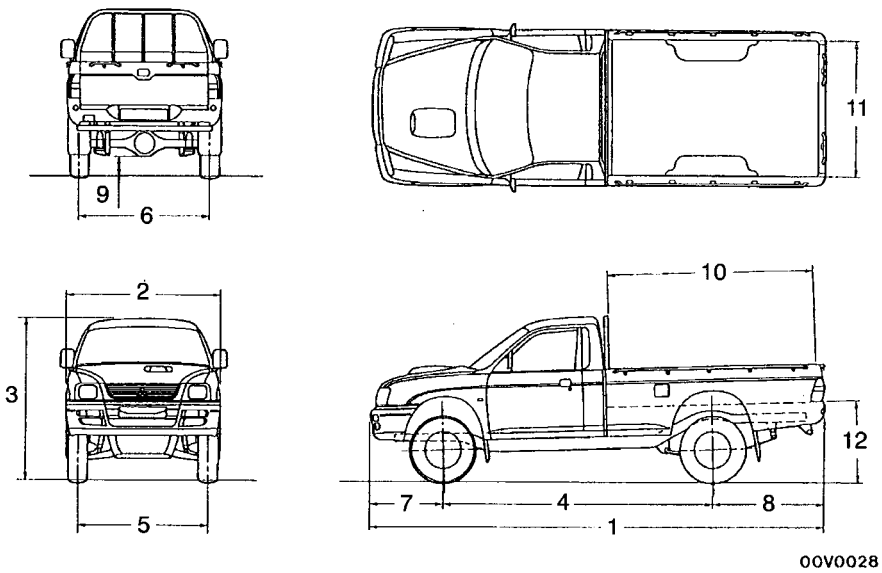

<4WD Single cab, Club cab>

Items			K74T YNDFL6	K74T ENDFR6	K75T CENDEL6	K74T CENDFL6
Vehicle dimensions mm	Overall length	1	4,810	4,935	5,050	5,050
	Overall width	2	1,695	1,695	1,695	1,695
	Overall height (unladen)	3	1,755	1,755	1,775	1,775
	Wheelbase	4	2,960	2,960	2,960	2,960
	Track-front	5	1,420	1,420	1,420	1,420
	Track-rear	6	1,435	1,435	1,435	1,435
	Overhang-front	7	765	765	765	765
	Overhang-rear	8	1,210	1,210	1,325	1,325
	Ground clearance (unladen)	9	215	215	215	215
	Cargo area length	10	–	2,245	1,830	1,830
	Cargo area width	11	–	1,470	1,470	1,470
	Cargo bed height	12	–	860	875	875
Vehicle weight kg	Kerb weight		1,500	1,630	1,615	1,705
	Max. gross vehicle weight rating		2,830	2,830	2,720	2,830
	Max. axle weight rating-front		1,200	1,200	1,200	1,200
	Max. axle weight rating-rear		1,800	1,800	1,800	1,800
	Max. trailer weight	With brake	2,200	2,200	2,200	2,200
		Without brake	500	500	500	500
	Max. trailer-nose weight		100	100	100	100
Seating capacity			2	2	4	4
Engine	Model No.		4D56	4D56	4G64	4D56
	Total displacement mℓ		2,477	2,477	2,351	2,477
Transmission	Model No.		V5MT1	V5MT1	V5M21	V5MT1
	Type		5-speed manual	5-speed manual	5-speed manual	5-speed manual
Fuel system	Fuel supply system		Fuel injection	Fuel injection	MPI	Fuel injection

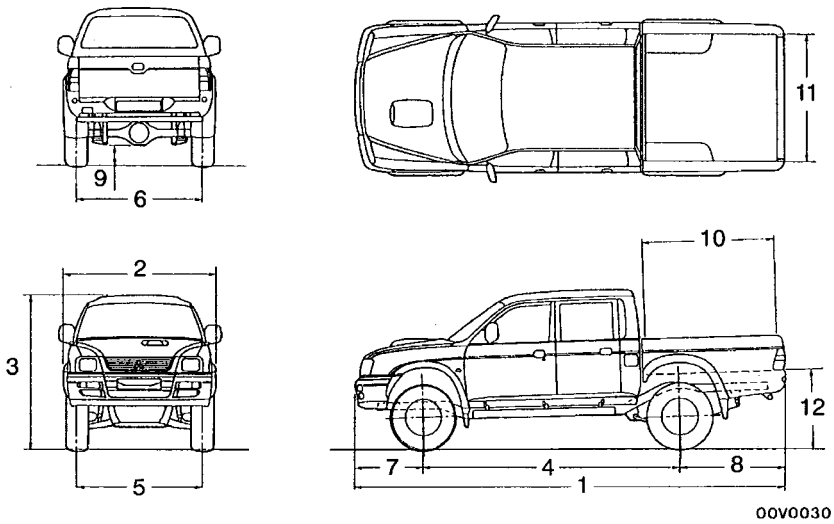

<4WD Double cab>

Items				K74T JENDFL6	K74T ZNDFL6	K74T JERDFL6	K74T JENHFL6	K74T GJENXFL6
Vehicle dimensions mm	Overall length		1	4,935	4,810	4,935	4,935	4,935
	Overall width		2	1,695	1,695	1,695	1,695	1,775
	Overall height (unladen)		3	1,780	1,795	1,780	1,780	1,800
	Wheelbase		4	2,960	2,960	2,960	2,960	2,960
	Track-front		5	1,420	1,420	1,420	1,420	1,465
	Track-rear		6	1,435	1,435	1,435	1,435	1,480
	Overhang-front		7	765	765	765	765	765
	Overhang-rear		8	1,210	1,210	1,210	1,210	1,210
	Ground clearance (unladen)		9	215	215	215	215	235
	Cargo area length		10	1,500	–	1,500	1,500	1,500
	Cargo area width		11	1,470	–	1,470	1,470	1,470
	Cargo bed height		12	860	–	860	860	880
Vehicle weight kg	Kerb weight			1,730	1,600	1,735	1,735	1,750
	Max. gross vehicle weight rating			2,830	2,830	2,830	2,830	2,830
	Max. axle weight rating-front			1,200	1,200	1,200	1,200	1,200
	Max. axle weight rating-rear			1,800	1,800	1,800	1,800	1,750
	Max. trailer weight	With brake		2,200	2,200	2,200	2,200	2,200
		Without brake		500	500	500	500	500
	Max. trailer-nose weight			100	100	100	100	100
Seating capacity				5	5	5	5	5
Engine	Model No.			4D56	4D56	4D56	4D56	4D56
	Total displacement mℓ			2,477	2,477	2,477	2,477	2,477
Transmission	Model No.			V5MT1	V5MT1	V4AW2	V5MT1	V5MT1
	Type			5-speed manual	5-speed manual	4-speed automatic	5-speed manual	5-speed manual
Fuel system	Fuel supply system			Fuel injection	Fuel injection	Fuel injection	Fuel injection	Fuel injection

GROUP 00
GENERAL

VEHICLE IDENTIFICATION

MODELS

Model Code		Engine model	Transmission model	Fuel supply system
K62T	JERDEL6	4G63-SOHC (1,997 mℓ)	R4AW2 (2WD-4A/T)	MPI
	ENDEL6		R5M21 (2WD-5M/T)	
K64T	ENDL6	4D56 (2,477mℓ)	R5M21 (2WD-5M/T)	Fuel injection
	ENDR6			
	CENDL6			
	JENDL6			
K75T	CENDEL6	4G64-SOHC (2,351 mℓ)	V5M21 (4WD-5M/T)	MPI
K74T	ENDFL6	4D56-Turbocharger with intercooler (2,477 mℓ)	V5MT1 (4WD-5M/T)	Fuel injection
	ENDFR6			
	JERDFL6		V4AW2 (4WD-4A/T)	
	GJENXFL6		V5MT1(4WD-5M/T)	
	GJENXFR6			
	CENDFL6			
	JENDFL6			
	JENDFR6			
	JENHFL6			

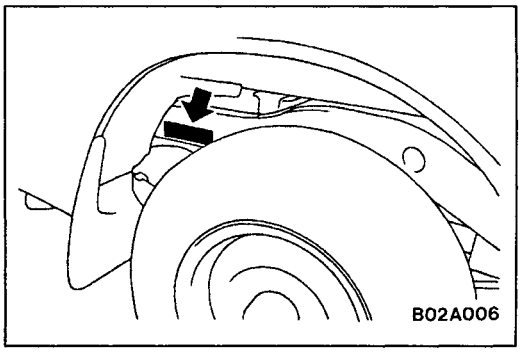

CHASSIS NUMBER

The chassis number is stamped on the side wall of the frame near the rear wheel (R.H.).

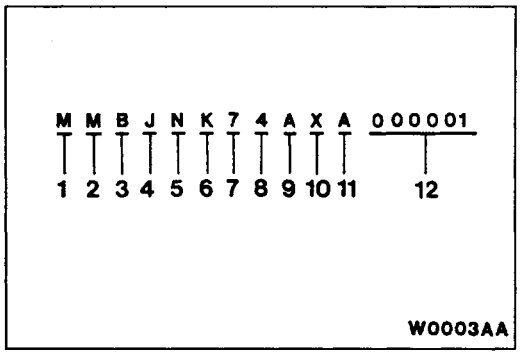

No.	Items		Contents
1	Continent	M	ASIA
2	Country	M	THAILAND
3	Register code	B	Follow register
4	Body shape	C	Club cab
		J	Double cab
		O	Single cab
		Y	Single cab without rear body
		Z	Double cab without rear body
5	Transmission type	N	5-speed manual transmission
		R	4-speed automatic transmission
6	Vehicle line	K	Mitsubushi L200
7	Body type	6	Long wheelbase
		7	4WD, Long wheelbase
8	Engine type	2	4G63: 1,997 mℓ petrol engine
		4	4D56: 2,477 mℓ diesel engine
		5	4G64: 2,351 mℓ petrol engine
9	Internal production control code	A	A, B, C... etc. 0 (zero): No meaning
10	Model year	X	1999
11	Plant	A	A, C: LARDKRABANG factory D, F: LAEMCHABANG factory
12	Serial number	–	–

MAJOR SPECIFICATIONS

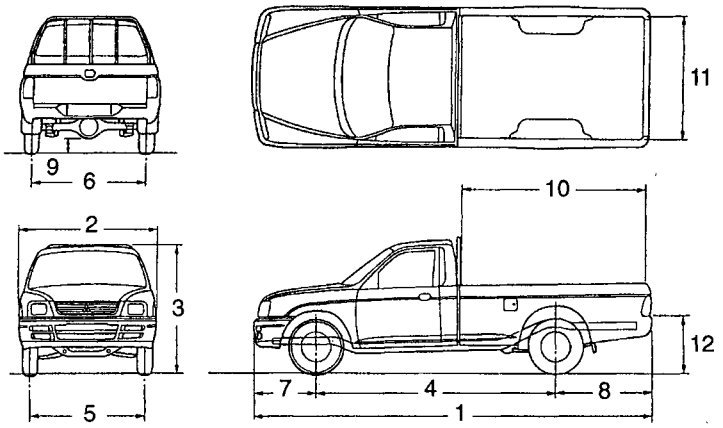

P01A038

<2WD Single cab>

Items			K62T ENDEL6	K64T ENDL6	K64T ENDR6
Vehicle dimensions mm	Overall length	1	4,935	4,935	4,935
	Overall width	2	1,695	1,695	1,695
	Overall height (unladen)	3	1,585	1,585	1,585
	Wheelbase	4	2,950	2,950	2,950
	Track-front	5	1,450	1,450	1,450
	Track-rear	6	1,435	1,435	1,435
	Overhang-front	7	775	775	775
	Overhang-rear	8	1,210	1,210	1,210
	Ground clearance (unladen)	9	190	190	190
	Cargo area length	10	2,245	2,245	2,245
	Cargo area width	11	1,470	1,470	1,470
	Cargo bed height	12	680	680	680
Vehicle weight kg	Kerb weight		1,320	1,370	1,370
	Max. gross vehicle weight rating		2,520	2,570	2,570
	Max. axle weight rating-front		1,000	1,000	1,000
	Max. axle weight rating-rear		1,700	1,700	1,700
	Max. trailer weight	With brake	1,800	1,800	1,800
		Without brake	500	500	500
	Max. trailer-nose weight		75	75	75
Seating capacity			3	2	2
Engine	Model No.		4G63	4D56	4D56
	Total displacement mℓ		1,997	2,477	2,477
Transmis-sion	Model No.		R5M21	R5M21	R5M21
	Type		5-speed manual	5-speed manual	5-speed manual
Fuel system	Fuel supply system		MPI	Fuel injection	Fuel injection

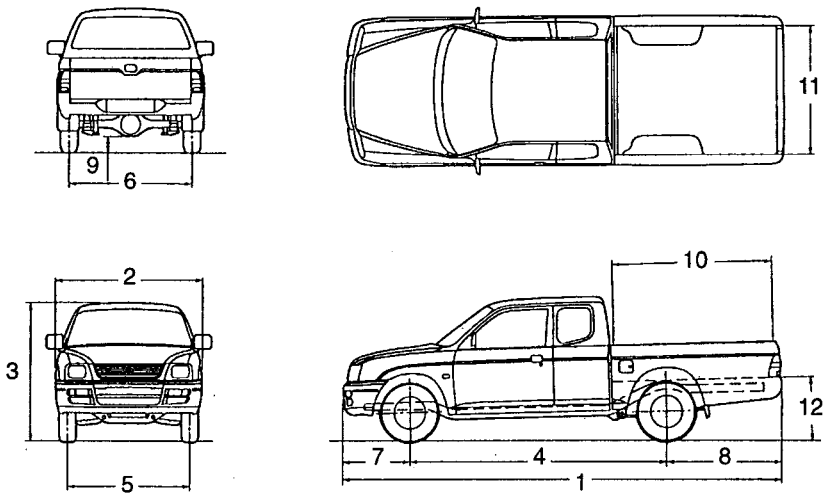

<2WD Double cab, Club cab>

Item				K64T CENDL6	K62T JERDEL6	K64T JENDL6
Vehicle dimensions mm	Overall length		1	5,050	4,935	4,935
	Overall width		2	1,695	1,695	1,695
	Overall height (unladen)		3	1,605	1,610	1,610
	Wheelbase		4	2,950	2,950	2,950
	Track-front		5	1,450	1,450	1,450
	Track-rear		6	1,435	1,435	1,435
	Overhang-front		7	775	775	775
	Overhang-rear		8	1,325	1,210	1,210
	Ground clearance (unladen)		9	190	190	190
	Cargo area length		10	1,830	1,500	1,500
	Cargo area width		11	1,470	1,470	1,470
	Cargo bed height		12	695	680	680
Vehicle weight kg	Kerb weight			1,445	1,440	1,470
	Max. gross vehicle weight rating			2,570	2,520	2,570
	Max. axle weight rating-front			1,000	1,000	1,000
	Max. axle weight rating-rear			1,700	1,700	1,700
	Max. trailer weight	With brake		1,800	1,800	1,800
		Without brake		500	500	500
	Max. trailer-nose weight			75	75	75
Seating capacity				4	5	5
Engine	Model No.			4D56	4G63	4D56
	Total displacement mℓ			2,477	1,997	2,477
Transmission	Model No.			R5M21	R4AW2	R5M21
	Type			5-speed manual	4-speed automatic	5-speed manual
Fuel system	Fuel supply system			Fuel injection	MPI	Fuel injection

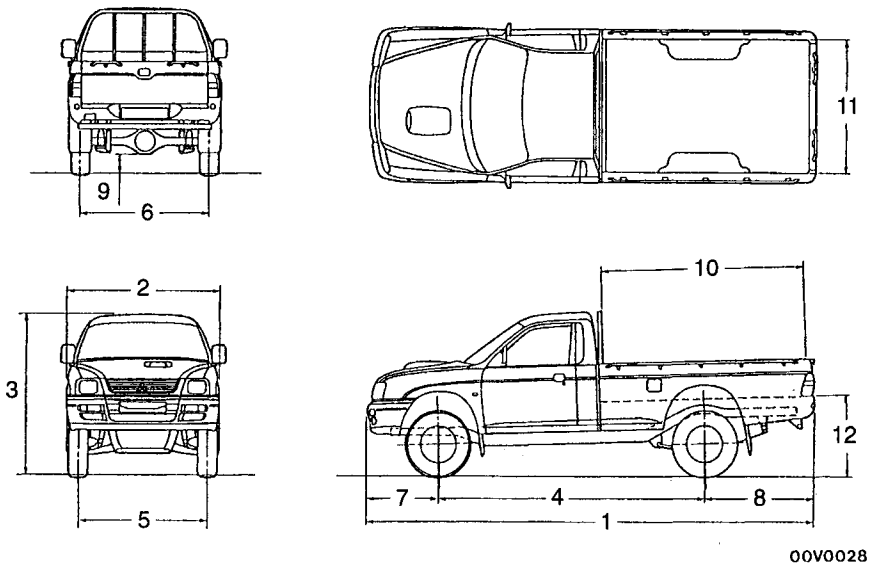

<4WD Single cab, Club cab>

Items				K74T ENDFL6	K74T ENDFR6	K75T CENDEL6	K74T CENDFL6
Vehicle dimensions mm	Overall length		1	4,810	4,935	5,050	5,050
	Overall width		2	1,695	1,695	1,695	1,695
	Overall height (unladen)		3	1,755	1,755	1,775	1,775
	Wheelbase		4	2,960	2,960	2,960	2,960
	Track-front		5	1,420	1,420	1,420	1,420
	Track-rear		6	1,435	1,435	1,435	1,435
	Overhang-front		7	765	765	765	765
	Overhang-rear		8	1,210	1,210	1,325	1,325
	Ground clearance (unladen)		9	215	215	215	215
	Cargo area length		10	2,245	2,245	1,830	1,830
	Cargo area width		11	1,470	1,470	1,470	1,470
	Cargo bed height		12	860	860	875	875
Vehicle weight kg	Kerb weight			1,630	1,630	1,615	1,705
	Max. gross vehicle weight rating			2,830	2,830	2,720	2,830
	Max. axle weight rating-front			1,200	1,200	1,200	1,200
	Max. axle weight rating-rear			1,800	1,800	1,800	1,800
	Max. trailer weight	With brake		2,700	2,700	2,700	2,700
		Without brake		500	500	500	500
	Max. trailer-nose weight			100	100	100	100
Seating capacity				3	2	4	4
Engine	Model No.			4D56	4D56	4G64	4D56
	Total displacement mℓ			2,477	2,477	2,351	2,477
Transmission	Model No.			V5MT1	V5MT1	V5M21	V5MT1
	Type			5-speed manual	5-speed manual	5-speed manual	5-speed manual
Fuel system	Fuel supply system			Fuel injection	Fuel injection	MPI	Fuel injection

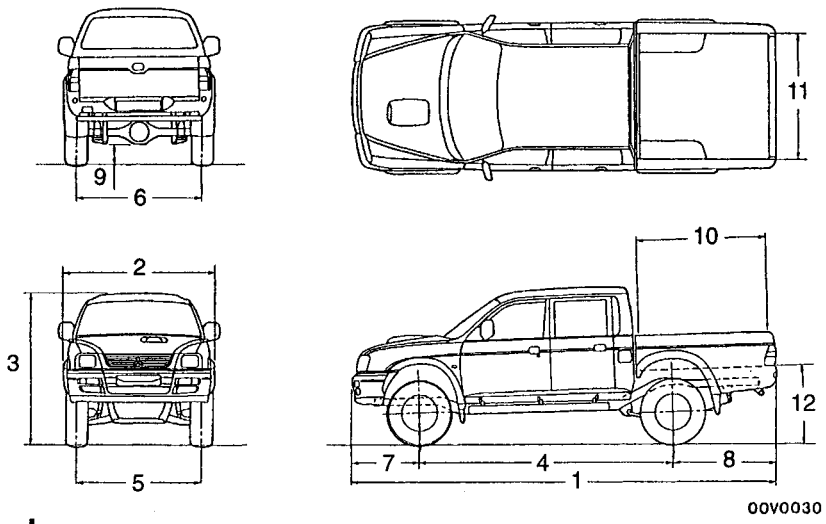

<4WD Double cab>

Items			K74T JENDFL6	K74T JENDFR6	K74T JERDFL6	K74T JENHFL6
Vehicle dimensions mm	Overall length	1	4,935	4,935	4,935	4,935
	Overall width	2	1,695	1,695	1,695	1,695
	Overall height (unladen)	3	1,780	1,780	1,780	1,780
	Wheelbase	4	2,960	2,960	2,960	2,960
	Track-front	5	1,420	1,420	1,420	1,420
	Track-rear	6	1,435	1,435	1,435	1,435
	Overhang-front	7	765	765	765	765
	Overhang-rear	8	1,210	1,210	1,210	1,210
	Ground clearance (unladen)	9	215	215	215	215
	Cargo area length	10	1,500	1,500	1,500	1,500
	Cargo area width	11	1,470	1,470	1,470	1,470
	Cargo bed height	12	860	860	860	860
Vehicle weight kg	Kerb weight		1,730	1,730	1,735	1,735
	Max. gross vehicle weight rating		2,830	2,830	2,830	2,830
	Max. axle weight rating-front		1,200	1,200	1,200	1,200
	Max. axle weight rating-rear		1,800	1,800	1,800	1,800
	Max. trailer weight	With brake	2,700	2,700	2,200	2,700
		Without brake	500	500	500	500
	Max. trailer-nose weight		100	100	100	100
Seating capacity			5	5	5	5
Engine	Model No.		4D56	4D56	4D56	4D56
	Total displacement mℓ		2,477	2,477	2,477	2,477
Transmission	Model No.		V5MT1	V5MT1	V4AW2	V5MT1
	Type		5-speed manual	5-speed manual	4-speed automatic	5-speed manual
Fuel system	Fuel supply system		Fuel injection	Fuel injection	Fuel injection	Fuel injection

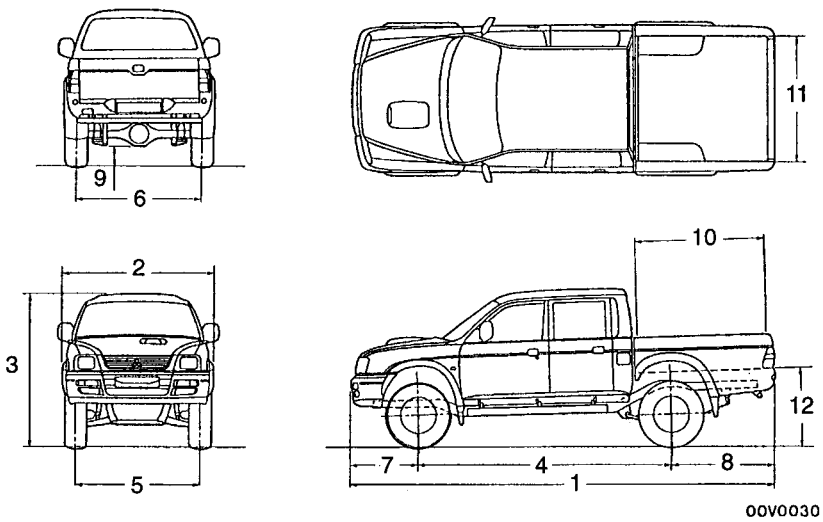

<4WD Double cab>

Items			K74T GJENXFL6	K74T GJENXFR6
Vehicle dimensions mm	Overall length	1	4,935	4,935
	Overall width	2	1,775	1,775
	Overall height (unladen)	3	1,800	1,800
	Wheelbase	4	2,960	2,960
	Track-front	5	1,465	1,465
	Track-rear	6	1,480	1,480
	Overhang-front	7	765	765
	Overhang-rear	8	1,210	1,210
	Ground clearance (unladen)	9	235	235
	Cargo area length	10	1,500	1,500
	Cargo area width	11	1,470	1,470
	Cargo bed height	12	880	880
Vehicle weight kg	Kerb weight		1,750	1,750
	Max. gross vehicle weight rating		2,830	2,830
	Max. axle weight rating-front		1,200	1,200
	Max. axle weight rating-rear		1,750	1,750
	Max. trailer weight	With brake	2,700	2,700
		Without brake	500	500
	Max. trailer-nose weight		100	100
Seating capacity			5	5
Engine	Model No.		4D56	4D56
	Total displacement mℓ		2,477	2,477
Transmission	Model No.		V5MT1	V5MT1
	Type		5-speed manual	5-speed manual
Fuel system	Fuel supply system		Fuel injection	Fuel injection

GROUP 00
GENERAL

VEHICLE IDENTIFICATION

MODELS

Model Code		Engine model	Transmission model	Fuel supply system
K62T	JERDEL6	4G63-SOHC (1,997 mℓ)	R4AW2 (2WD-4A/T)	MPI
	ENDEL6		R5M21 (2WD-5M/T)	
K64T	ENDL6	4D56 (2,477mℓ)	R5M21 (2WD-5M/T)	Fuel injection
	ENDR6			
	CENDL6			
	JENDL6			
K75T	CENDEL6	4G64-SOHC (2,351 mℓ)	V5M21 (4WD-5M/T)	MPI
	GJENXEL6*			
K74T	ENDFL6	4D56-Turbocharger with intercooler (2,477 mℓ)	V5MT1 (4WD-5M/T)	Fuel injection
	ENDFR6			
	JERDFL6		V4AW2 (4WD-4A/T)	
	GJERXFL6*		V5MT1(4WD-5M/T)	
	GJENXFL6			
	GJENXFR6			
	CENDFL6			
	GCENXFL6*			
	JENDFL6			
	JENDFR6			
	JENHFL6			

NOTE
*: indicates new models.

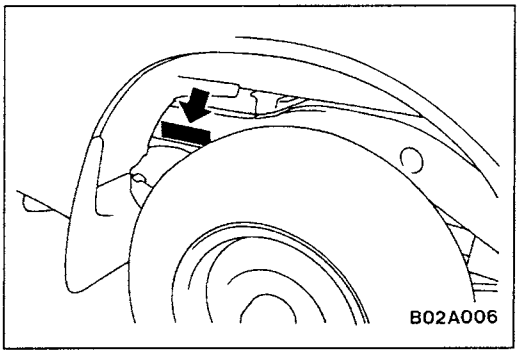

CHASSIS NUMBER

The chassis number is stamped on the side wall of the frame near the rear wheel (R.H.).

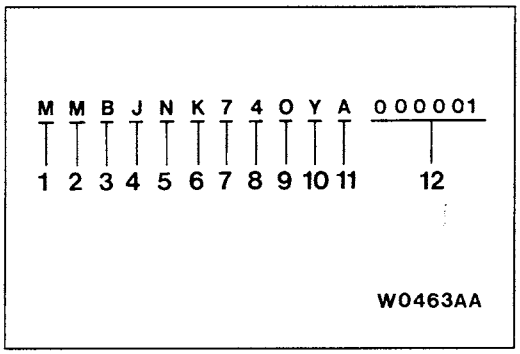

No.	Items		Contents
1	Continent	M	ASIA
2	Country	M	THAILAND
3	Register code	B	Follow register
4	Body shape	C	Club cab
		J	Double cab
		O	Single cab
		Y	Single cab without rear body
		Z	Double cab without rear body
5	Transmission type	N	5-speed manual transmission
		R	4-speed automatic transmission
6	Vehicle line	K	Mitsubushi L200
7	Body type	6	Long wheelbase
		7	4WD, Long wheelbase
8	Engine type	2	4G63: 1,997 mℓ petrol engine
		4	4D56: 2,477 mℓ diesel engine
		5	4G64: 2,351 mℓ petrol engine
9	Internal production control code	A	A, B, C... etc. 0 (zero): No meaning
10	Model year	Y	2000
11	Plant	A	A, C: LARDKRABANG factory D, F: LAEMCHABANG factory
12	Serial number	–	–

MAJOR SPECIFICATIONS

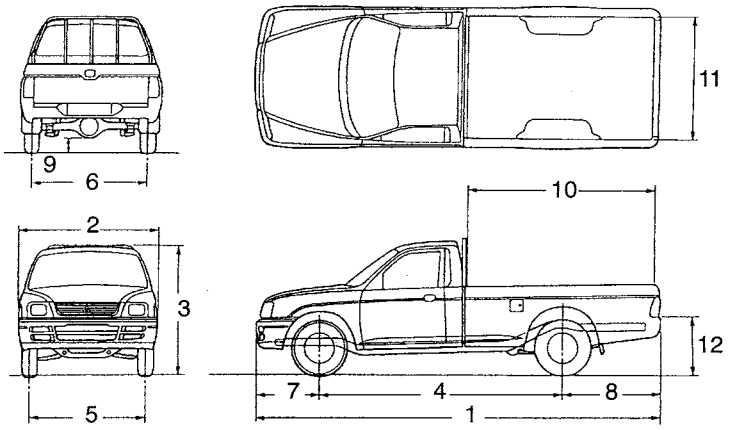

P01A038

<2WD Single cab>

Items			K62T ENDEL6	K64T ENDL6	K64T ENDR6
Vehicle dimensions mm	Overall length	1	4,935	4,935	4,935
	Overall width	2	1,695	1,695	1,695
	Overall height (unladen)	3	1,585	1,585	1,585
	Wheelbase	4	2,950	2,950	2,950
	Track-front	5	1,450	1,450	1,450
	Track-rear	6	1,435	1,435	1,435
	Overhang-front	7	775	775	775
	Overhang-rear	8	1,210	1,210	1,210
	Ground clearance (unladen)	9	190	190	190
	Cargo area length	10	2,245	2,245	2,245
	Cargo area width	11	1,470	1,470	1,470
	Cargo bed height	12	680	680	680
Vehicle weight kg	Kerb weight		1,320	1,370	1,370
	Max. gross vehicle weight rating		2,520	2,570	2,570
	Max. axle weight rating-front		1,000	1,000	1,000
	Max. axle weight rating-rear		1,700	1,700	1,700
	Max. trailer weight	With brake	1,800	1,800	1,800
		Without brake	500	500	500
	Max. trailer-nose weight		75	75	75
Seating capacity			3	2	2
Engine	Model No.		4G63	4D56	4D56
	Total displacement mℓ		1,997	2,477	2,477
Transmission	Model No.		R5M21	R5M21	R5M21
	Type		5-speed manual	5-speed manual	5-speed manual
Fuel system	Fuel supply system		MPI	Fuel injection	Fuel injection

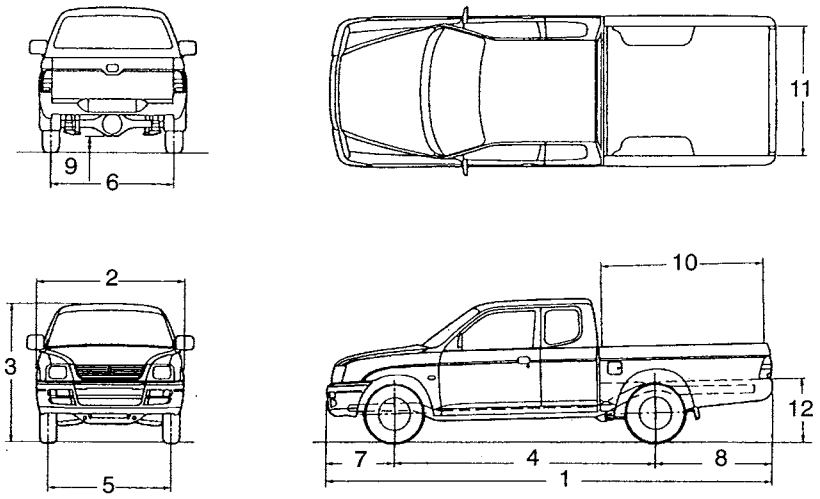

00V0018

<2WD Double cab, Club cab>

Items			K64T CENDL6	K62T JERDEL6	K64T JENDL6
Vehicle dimensions mm	Overall length	1	5,050	4,935	4,935
	Overall width	2	1,695	1,695	1,695
	Overall height (unladen)	3	1,605	1,610	1,610
	Wheelbase	4	2,950	2,950	2,950
	Track-front	5	1,450	1,450	1,450
	Track-rear	6	1,435	1,435	1,435
	Overhang-front	7	775	775	775
	Overhang-rear	8	1,325	1,210	1,210
	Ground clearance (unladen)	9	190	190	190
	Cargo area length	10	1,830	1,500	1,500
	Cargo area width	11	1,470	1,470	1,470
	Cargo bed height	12	695	680	680
Vehicle weight kg	Kerb weight		1,440	1,435	1,465
	Max. gross vehicle weight rating		2,570	2,520	2,570
	Max. axle weight rating-front		1,000	1,000	1,000
	Max. axle weight rating-rear		1,700	1,700	1,700
	Max. trailer weight	With brake	1,800	1,800	1,800
		Without brake	500	500	500
	Max. trailer-nose weight		75	75	75
Seating capacity			4	5	5
Engine	Model No.		4D56	4G63	4D56
	Total displacement mℓ		2,477	1,997	2,477
Transmission	Model No.		R5M21	R4AW2	R5M21
	Type		5-speed manual	4-speed automatic	5-speed manual
Fuel system	Fuel supply system		Fuel injection	MPI	Fuel injection

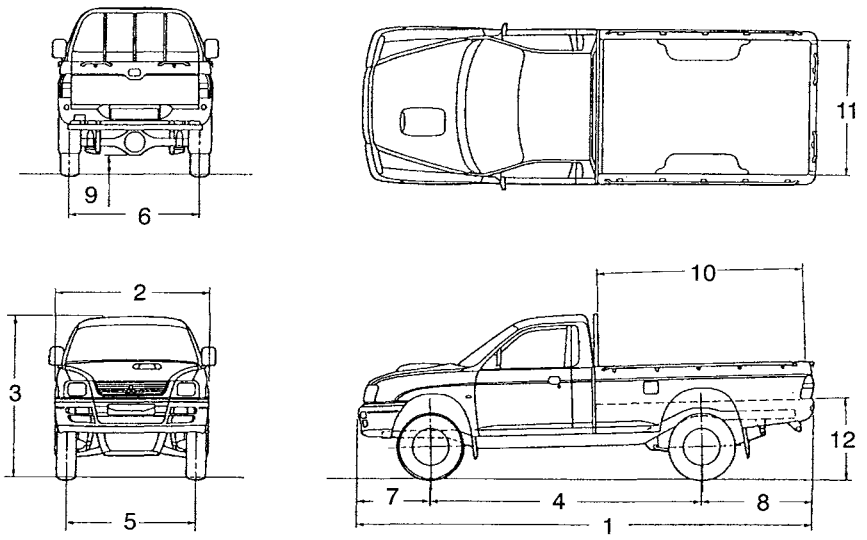

00V0028

<4WD Single cab, Club cab>

Items			K74T ENDFL6	K74T ENDFR6	K75T CENDEL6	K74T CENDFL6	K74T GCENXFL6
Vehicle dimensions mm	Overall length	1	4,935	4,935	5,050	5,050	5,050
	Overall width	2	1,695	1,695	1,695	1,695	1,775
	Overall height (unladen)	3	1,755	1,755	1,775	1,775	1,795
	Wheelbase	4	2,960	2,960	2,960	2,960	2,960
	Track-front	5	1,420	1,420	1,420	1,420	1,465
	Track-rear	6	1,435	1,435	1,435	1,435	1,480
	Overhang-front	7	765	765	765	765	765
	Overhang-rear	8	1,210	1,210	1,325	1,325	1,325
	Ground clearance (unladen)	9	215	215	215	215	235
	Cargo area length	10	2,245	2,245	1,830	1,830	1,830
	Cargo area width	11	1,470	1,470	1,470	1,470	1,470
	Cargo bed height	12	860	860	875	875	895
Vehicle weight kg	Kerb weight		1,630	1,630	1,615	1,705	1,725
	Max. gross vehicle weight rating		2,830	2,830	2,720	2,830	2,830
	Max. axle weight rating-front		1,200	1,200	1,200	1,200	1,200
	Max. axle weight rating-rear		1,800	1,800	1,800	1,800	1,750
	Max. trailer weight	With brake	2,700	2,700	2,700	2,700	2,700
		Without brake	500	500	500	500	500
	Max. trailer-nose weight		100	100	100	100	100
Seating capacity			2	2	4	4	4
Engine	Model No.		4D56*	4D56*	4G64	4D56*	4D56*
	Total displacement mℓ		2,477	2,477	2,351	2,477	2,477
Transmission	Model No.		V5MT1	V5MT1	V5M21	V5MT1	V5MT1
	Type		5-speed manual	5-speed manual	5-speed manual	5-speed manual	5-speed manual
Fuel system	Fuel supply system		Fuel injection	Fuel injection	MPI	Fuel injection	Fuel injection

NOTE
*: Turbocharger with intercooler

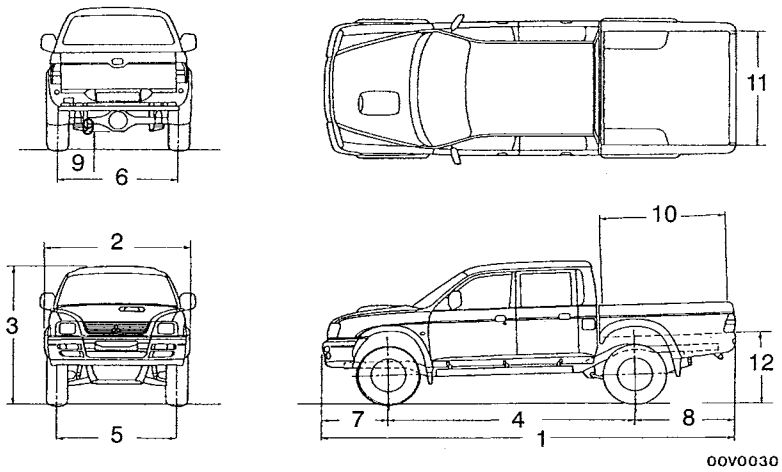

<4WD Double cab>

Items			K74T JENDFL6	K74T JENDRF6	K74T JERDFL6	K74T JENHFL6
Vehicle dimensions mm	Overall length	1	4,935	4,935	4,935	4,935
	Overall width	2	1,695	1,695	1,695	1,695
	Overall height (unladen)	3	1,780	1,780	1,780	1,780
	Wheelbase	4	2,960	2,960	2,960	2,960
	Track-front	5	1,420	1,420	1,420	1,420
	Track-rear	6	1,435	1,435	1,435	1,435
	Overhang-front	7	765	765	765	765
	Overhang-rear	8	1,210	1,210	1,210	1,210
	Ground clearance (unladen)	9	215	215	215	215
	Cargo area length	10	1,500	1,500	1,500	1,500
	Cargo area width	11	1,470	1,470	1,470	1,470
	Cargo bed height	12	860	860	860	860
Vehicle weight kg	Kerb weight		1,730	1,730	1,735	1,735
	Max. gross vehicle weight rating		2,830	2,830	2,830	2,830
	Max. axle weight rating-front		1,200	1,200	1,200	1,200
	Max. axle weight rating-rear		1,800	1,800	1,800	1,800
	Max. trailer weight	With brake	2,700	2,700	2,200	2,700
		Without brake	500	500	500	500
	Max. trailer-nose weight		100	100	100	100
Seating capacity			5	5	5	5
Engine	Model No.		4D56*	4D56*	4D56*	4D56*
	Total displacement mℓ		2,477	2,477	2,477	2,477
Transmission	Model No.		V5MT1	V5MT1	V4AW2	V5MT1
	Type		5-speed manual	5-speed manual	4-speed automatic	5-speed manual
Fuel system	Fuel supply system		Fuel injection	Fuel injection	Fuel injection	Fuel injection

NOTE
*: Turbocharger with intercooler

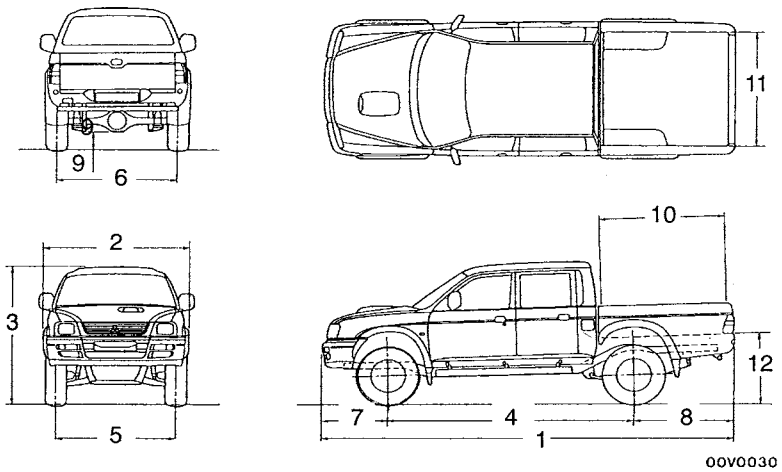

<4WD Double cab>

Items			K75T GJENXEL6	K74T GJENXFL6	K74T GJENXFR6	K74T GJERXFL6
Vehicle dimensions mm	Overall length	1	4,935	4,935	4,935	4,935
	Overall width	2	1,775	1,775	1,775	1,775
	Overall height (unladen)	3	1,800	1,800	1,800	1,800
	Wheelbase	4	2,960	2,960	2,960	2,960
	Track-front	5	1,465	1,465	1,465	1,465
	Track-rear	6	1,480	1,480	1,480	1,480
	Overhang-front	7	765	765	765	765
	Overhang-rear	8	1,210	1,210	1,210	1,210
	Ground clearance (unladen)	9	235	235	235	235
	Cargo area length	10	1,500	1,500	1,500	1,500
	Cargo area width	11	1,470	1,470	1,470	1,470
	Cargo bed height	12	880	880	880	880
Vehicle weight kg	Kerb weight		1,660	1,750	1,750	1,755
	Max. gross vehicle weight rating		2,720	2,830	2,830	2,830
	Max. axle weight rating-front		1,200	1,200	1,200	1,200
	Max. axle weight rating-rear		1,750	1,750	1,750	1,750
	Max. trailer weight	With brake	2,700	2,700	2,700	2,200
		Without brake	500	500	500	500
	Max. trailer-nose weight		100	100	100	100
Seating capacity			5	5	5	5
Engine	Model No.		4G64	4D56*	4D56*	4D56*
	Total displacement mℓ		2,351	2,477	2,477	2,477
Transmission	Model No.		V5M21	V5MT1	V5MT1	V4AW2
	Type		5-speed manual	5-speed manual	5-speed manual	4-speed manual
Fuel system	Fuel supply system		MPI	Fuel injection	Fuel injection	Fuel injection

NOTE
*: Turbocharger with intercooler

SERVICE BULLETIN

MITSUBISHI MOTORS

QUALITY INFORMATION ANALYSIS
OVERSEAS SERVICE DEPT. MITSUBISHI MOTORS CORPORATION

SERVICE BULLETIN		**No.:** MSB-98E00-503	
		Date: 1998-12-15	
Subject:	CORRECTION TO DIAGNOSIS CODE READING PROCEDURE FOLLOWED WHEN USING WARNING LAMP		
Group:	GENERAL	**Draft No.:** 98AL051414	
CORRECTION	**OVERSEAS SERVICE DEPT**	T.NITTA - VICE GENERAL MANAGER QUALITY INFORMATION ANALYSIS	

<Model>	<M/Y>
(EC,EXP)COLT	96-10
(CA0A,CC0A)	97-10
(EC,EXP)	97-10
GALANTE (E50-80)	96-10
(EC,EXP)L200(K00)	
(EC,EXP)LANCER	
(CB0A,CD0A)	

1. Description:

This Service Bulletin informs you of correction to the diagnosis code reading procedure to be followed when using the warning lamp.

2. Applicable Manuals:

Manual	Pub. No.	Language	Page(s)
’97 GALANT Workshop Manual CHASSIS	PWDE9611	(English)	00-8
	PWDW9616	(Swedish)	
’96 COLT/LANCER Workshop Manual CHASSIS	PWME9511	(English)	00-8
	PWMW9516	(Swedish)	
’97 L200 Workshop Manual CHASSIS	PWTE95E1	(English)	00-8

3. Details:

’97 GALANT Workshop Manual CHASSIS, Page 2
’96 COLT/LANCER Workshop Manual CHASSIS, Page 3
’97 L200 Workshop Manual CHASSIS, Page 4

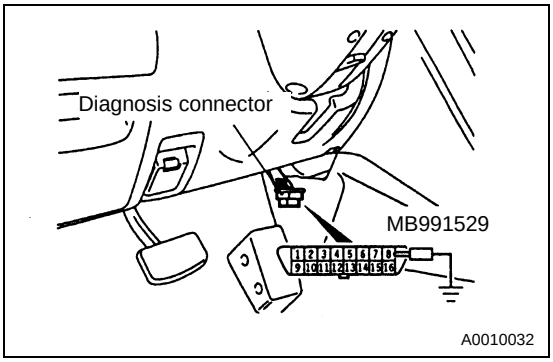

WHEN USING THE WARNING LAMP

1. Use the special tool to earth NO.1 terminal (diagnosis control terminal) of the diagnosis connector.
2. To check ABS system, remove the valve relay.

   NOTE
   That is because the valve relay is off and the warning lamp remains illuminated if there is a fault in the ABS system.

   <Incorrect>
3. Turn ~~off~~ the ignition switch.
4. Read out a diagnosis code by observing how the warning lamp flashes.

Applicable systems ON **<Correct>**

System name	Warning lamp name
MPI	Engine warning lamp
A/T	Neutral position indicator lamp
ABS	ABS warning lamp
TCL	TCL-OFF indicator lamp

Indication of diagnosis code by warning lamp

When the diagnosis code No.24 is output	When no diagnosis code is output*
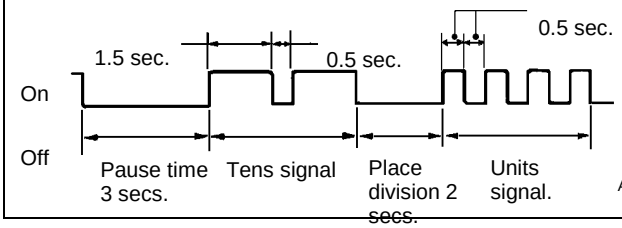	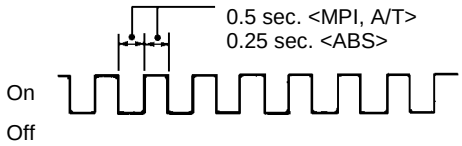

NOTE
*: Even if the ABS system is normal, removing the valve relay causes the diagnosis code No.52 to be output.

METHOD OF ERASING DIAGNOSIS CODES

WHEN USING THE MUT-II

Connect the MUT-II to the diagnosis connector and erase the diagnosis code.

Caution
Turn off the ignition switch before connecting or disconnecting the MUT-II.

WHEN NOT USING THE MUT-II

(1) Turn the ignition switch OFF.
(2) After disconnecting the battery cable from the battery (-) terminal for 10 seconds or more, reconnect the cable
(3) After the engine has warmed up, run it at idle for about 15 minutes.

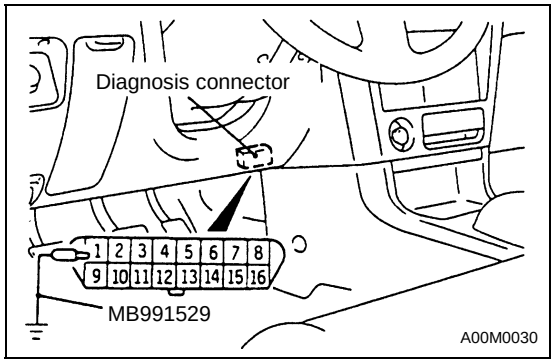

WHEN USING THE WARNING LAMP

1. Use the special tool to earth No.1 terminal (diagnosis control terminal) of the diagnosis connector.
2. To check ABS system, remove the valve relay.

   NOTE
   That is because the valve relay is off and the warning lamp remains illuminated if there is a fault in the ABS system.

   <Incorrect>
3. Turn off the ignition switch.
4. Read out a diagnosis code by observing how the warning lamp flashes.

Applicable systems

ON **<Correct>**

System name	Warning lamp name
MPI	Engine warning lamp
A/T	Neutral position indicator lamp
ABS	ABS warning lamp

Indication of diagnosis code by warning lamp

When the diagnosis code No.24 is output	When no diagnosis code is output*
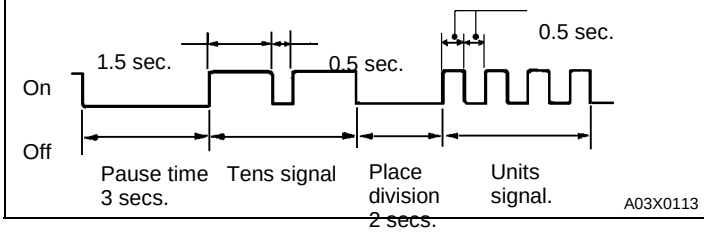	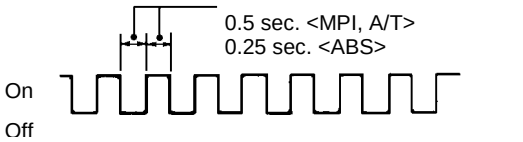

NOTE
*: Even if the ABS system is normal, removing the valve relay causes the diagnosis code No.52 to be output.

METHOD OF ERASING DIAGNOSIS CODES

WHEN USING THE MUT-II

Connect the MUT-II to the diagnosis connector and erase the diagnosis code.

Caution
Turn off the ignition switch before connecting or disconnecting the MUT-II.

WHEN NOT USING THE MUT-II

(1) Turn the ignition switch OFF.
(2) After disconnecting the battery cable from the battery (-) terminal for 10 seconds or more, reconnect the cable
(3) After the engine has warmed up, run it at idle for about 15 minutes.

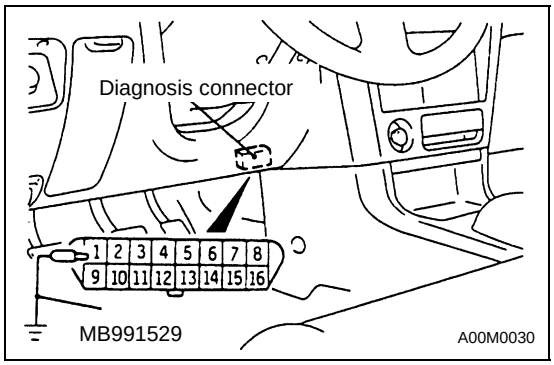

WHEN USING THE WARNING LAMP

1. Use the special tool to earth NO.1 terminal (diagnosis control terminal) of the diagnosis connector.
2. To check ABS system, remove the valve relay.

   NOTE
   That is because the valve relay is off and the warning lamp remains illuminated if there is a fault in the ABS system.

   <Incorrect>
3. Turn ~~off~~ the ignition switch.
4. Read out a diagnosis code by observing how the warning lamp flashes.

   ON **<Correct>**

Applicable systems

System name	Warning lamp name
MPI	Engine warning lamp
A/T	Neutral position indicator lamp
ABS	ABS warning lamp

Indication of diagnosis code by warning lamp

When the diagnosis code No.24 is output	When no diagnosis code is output*
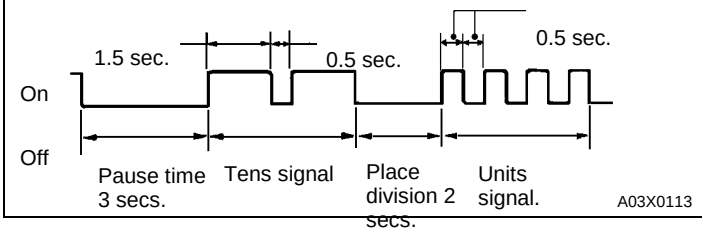	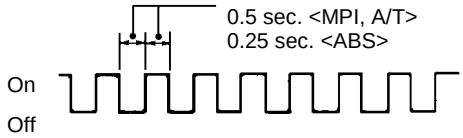

NOTE
*: Even if the ABS system is normal, removing the valve relay causes the diagnosis code No.52 to be output.

METHOD OF ERASING DIAGNOSIS CODES

WHEN USING THE MUT-II

Connect the MUT-II to the diagnosis connector and erase the diagnosis code.

Caution
Turn off the ignition switch before connecting or disconnecting the MUT-II.

WHEN NOT USING THE MUT-II

(1) Turn the ignition switch OFF.
(2) After disconnecting the battery cable from the battery (-) terminal for 10 seconds or more, reconnect the cable
(3) After the engine has warmed up, run it at idle for about 15 minutes.

SERVICE BULLETIN

MITSUBISHI MOTORS

QUALITY INFORMATION ANALYSIS
OVERSEAS SERVICE DEPT. MITSUBISHI MOTORS CORPORATION

SERVICE BULLETIN	**No.:** MSB-00E00-003		
	Date: 2000-05-30	**<Model>**	**<M/Y>**
Subject:	YEAR MODEL CHANGES FOR 2001 L200	(EC)L200(K60, K70)	00-10
Group:	GENERAL	**Draft No.:** 00SY0022915	
INFORMATION/ CORRECTION	**INTERNATIONAL CAR ADMINISTRATIO OFFICE**	T.NITTA - PROJECT LEADER AFTER SALES SERVICE & CS PROMOTION	

1. Description:

This Service Bulletin informs you of the year model changes for the 2001 L200

2. Applicable Manuals:

Manual	Pub. No.	Language	Page(s)
2000 L200 Workshop Manual Chassis	PWTE96E1-D	(English)	
	PWTS96E1-D	(Spanish)	
	PWTF96E1-D	(French)	
	PWTG96E1-D	(German)	

3. Details:

L200

WORKSHOP MANUAL SUPPLEMENT

FOREWORD

This Manual outlines changes in servicing proc e-dures related to the chassis including vehicle i n-spections, adjustments and improvements in the newly equipped models.

TECHNICAL INFORMATION MANUAL	PYTE96E1
WORKSHOP MANUAL	
ENIGINE GROUP	PWEE___ (looseleaf edition)
CHASSIS GROUP	PWTE96E1
	PWTE96E1-B (SUPPLEMENT)
	PWTE96E1-C (SUPPLEMENT)
	PWTE96E1-D (SUPPLEMENT)
ELECTRICAL WIRING	PHTE96E1
	PHTE96E1-A
	PHTE96E1-B
	PHTE96E1-D
	PHTE96E1-D (SUPLEMTENT)
BODY REPAIR MANUAL	PBTE96E1
PARTS CATALOGUE	T603B00□D□

All information, illustrations and product d e-scriptions contained in this manual are current as at the time of publication. We, however, re-serve the right to make changes at any time without prior notice or obligation.

MITSUBISHI MOTORS CORPORATION

© Mitsubishi Motors Corporation 2000

General 00

Engine Lubrication 12

Body 42

Interior and Supplemental Restraint System (SRS) 52

Chassis Electrical 54

GROUP 00
GENERAL

VEHICLE IDENTIFICATION

MODELS

Model Code		Engine model	Transmission model	Fuel supply system
K62T	JERDEL6	4G63-SOHC (1,997mℓ)	R4AW2 (2WD-4A/T	MPI
	ENDEL6		R5M21 (2WD-5M/T)	
K64T	ENDL6	4D56 (2,477mℓ)	R5M21 (2WD-M/T)	Fuel injection
	ENDR6			
	CENDL6			
	JENDL6			
K75T	CENDEL6	4G64-SOHC (2,351 mℓ)	V5M21 (4WD-5M/T)	MPI
	GJENXEL6			
K74T	ENDFL6	4D56- Turbocharger with intercooler (2,477mℓ)	V5MT1 (4WD-5M/T	Fuel injection
	ENDFR6			
	JERDFL6		V4AW2 (AWD-4A/T	
	GJERXFL6		V5MT1 (4WD-5M/T	
	GJENXFL6			
	GJENXFR6			
	CENDFL6			
	GCENXFL6			
	JENDFL6			
	JENDFR6			
	JENHFL6			

CHASSIS NUMBER

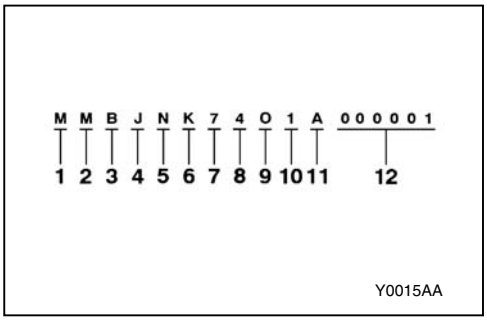

No.	Items		Contents
1	Continent	M	ASIA
2	Country	M	THAILAND
3	Register code	B	Follow register
4	Body shape	C	Club cab
		J	Double cab
		O	Single cab
		Y	Single cab without rear body
		Z	Double cab without rear body
5	Transmission type	N	5-speed manual transmission
		R	4-speed automatic transmission
6	Vehicle line	K	Mitsubushi L200
7	Body type	6	Long wheelbase
		7	4WD, Long wheelbase
8	Engine type	2	4G63: 1,997mℓ petrol engine
		4	4D56:2,477mℓ diesel engine
		5	4G64: 2,351 mℓ petrol engine
9	Internal production control code	A	A, B, C…etc 0 (zero): No meaning
10	Model year	1*	2001
11	Plant	A	A, C: LARDKRABANG factory D, F: LAEMCHABANG factory
12	Serial number	-	-

NOTE
*: Indicates changes.

NOTES

GROUP 12

ENGINE LUBRICATION

GENERAL

OUTLINE OF CHANGES

- A quality of the engine oil has been changed.

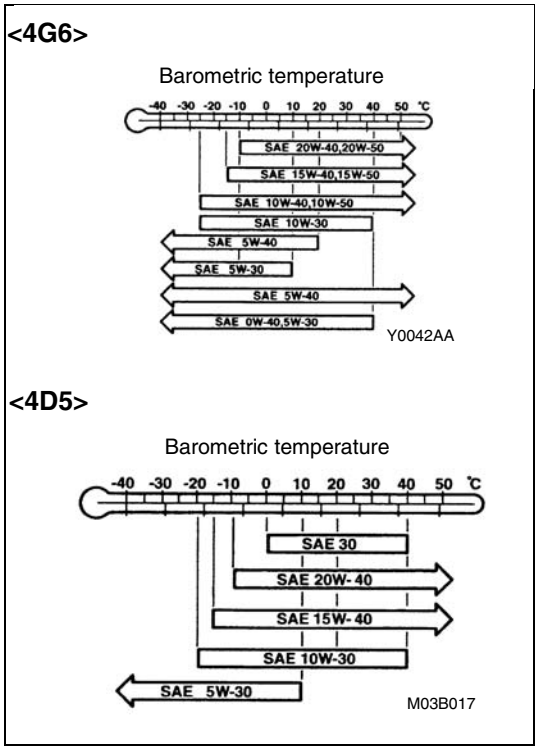

ON-VEHICLE SERVICE

specified engine oil (ACEA and API classification):
<4G6> ACEA A1, A2, A3/API SG or higher
<4D5> ACEA B1, B2, B3, B4/API CD or higher

NOTES

GROUP 42

BODY

GENERAL

OUTLINE OF CHANGES

The following service procedures have been added due to the introduction of the keyless entry system as an optional equipment <GLS>.

KEYLESS ENTRY SYSTEM

SPECIAL TOOL

Tool	Number	Name	Use
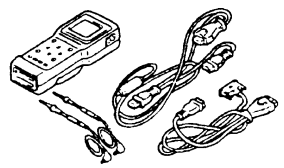	MB991502	MUT-II sub assembly	Encrypted codes recording

TROUBLESHOOTING

DIAGNOSIS FUNCTION

INPUT SIGNAL INSPECTION PROCEDURE

1. Connect the MUT-II to the diagnosis connector to check input signal. (Refer to ’97 L200 Workshop Manual GROUP 00 – How to Use Troubleshooting/Inspection Service Points.)
2. The following input signals can be checked:
   - Ignition switch (IG1, ACC)
   - Driver’s door switch
   - Every door switch
   - Key reminder switch
   - Driver’s door lock actuator
   - Keyless entry transmitter (LOCK, UNLOCK)

   NOTE
   If the MUT-II cannot check all the input signals, the diagnosis circuit may be defective.

ETACS FUNCTION ADJUSTMENT PROCEDURE

The following functions can be adjusted by operating input switches, The adjustments will be stored in th ECU memory even after a battery cable is disconnected:

- Switching of keyless entry answerback function (From activation to deactivation, or vice versa)
- Initialisation of the above function (From deactivation)

1. Entry conditions to the adjustment mode
   The ETACS-ECU sounds a buzzer once when all of the following conditions are satisfied, and then enters the adjustment mode:
   - Diagnosis control: ON (Connect the MUT-II.)
   - Key reminder switch: OFF
   - Ignition switch: LOCK (OFF
   - Door switch: OFF (Close the door)
   - If all of the conditions above are satisfied, the tailgate switch will be turned in for more than 10 seconds.

2. Exit conditions from the adjustment mode
   The ETACS-ECU cancels the adjustment mode when any of the following conditions is satisfied:
   - Diagnosis control: OFF (Disconnect the MUT-II>)
   - Key reminder switch: ON (Pull out the ignition key.)
   - Ignition switch: Other than LOCK (OFF)
   - Door switch: ON (Open the door)
   - After the ETACS_ECU has entered the adjustment mode, no adjustment is made within 3 minutes (If any adjustment is made within 3 minutes, the ETACS-ECU monitors an adjustment operation for other 3 minutes.
   - Other warning buzzer(s) sounds
3. Adjustment of functions

Function	Adjustment procedure
Keyless entry answerback function	When the transmitter lock switch is turned on twice continuously within 2 seconds, the lock answerback function toggles on and off. • If the function toggles on, the buzzer sounds once (default condition). • If the function toggles off, the buzzer sounds twice, When the transmitter unlock switch is turned on twice continuously within 2 seconds, the unlock answerback function toggles on and off. • If the function toggles on, the buzzer sounds once (default condition). • If the function toggles off, the buzzer sounds twice,
Initialisation of all the ETACS functions (From deactivation to activation)	When the tailgate switch remains on for more than 20 seconds, th buzzer sounds twice and he answer-back function of the keyless entry system is initialised. The buzzer will sound in 10 seconds (indicating that the ETACS-ECU enters the adjustment mode), but the washer switch must remains off for 20 seconds in order to initialise all the functions. If the tailgate switch remains on for more than 20 seconds without entering the adjustment mode, the system enters the adjustment mode in 10 seconds, but does not initialise all of the functions.

INSPECTION CHART FOR TROUBLE SYMPTOMS

Trouble symptom	Inspection procedure No.	Reference page
None of the doors can be locked or unlocked using th transmitter.	1	42-3
All of the doors can be locked and unlocked using th transmitter, but the room lamp or turn-signal lamp does not flash or illuminate. (However, the room lamp operates normally when the doors are opened and closed.)	2	42-4
Encrypted codes cannot be registered.	3	42-5

INSPECTION PROCEDURE FOR TROUBLE SYMPTOMS

INSPECTION PROCEDURE 1

None of the doors can be locked or unlocked using the transmitter.	Probable cause
The cause may be a malfunction of the transmitter or ETACS-ECU, defective connection between ETACS-ECU and junction block, defective power supply voltage to ETACS-ECU input line due to commercial equipment, or the lock and unlock signals are not being sent to the ETACS-ECU.	• Malfunction of transmitter • Malfunction of ETACS-ECU • Malfunction of key reminder switch • Malfunction of wiring harness or connector • Malfunction of door switch • Defective connection between ETACS-ECU and junction block • Defective power supply voltage to ETACS-ECU input line due to commercial equipment

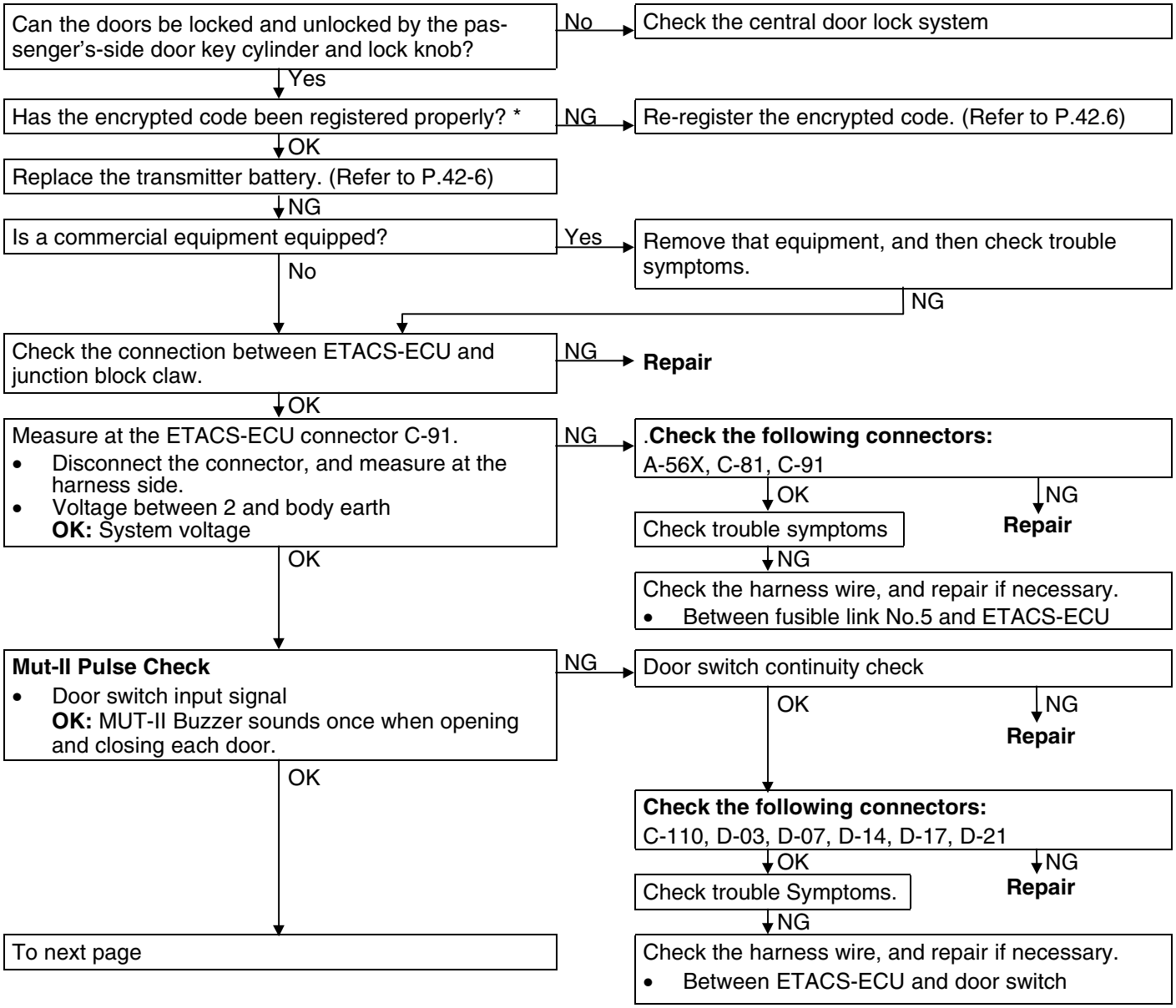

NOTE

*: This should be done if a transmitter, receiver or ETACS-ECU has been replaced, and if a secret cod has not been registered properly

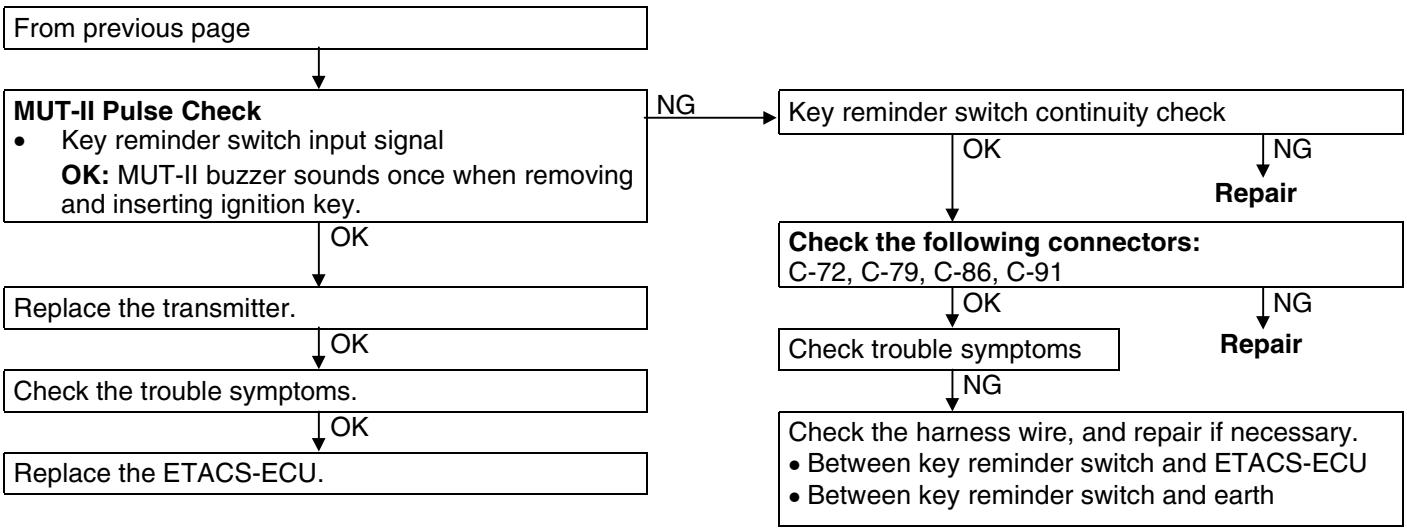

INSPECTION PROCEDURE 2

All of the doors can be locked and unlocked using th transmitter, but the room lamp or turn-signal lamp does not flash or illuminate. (However, the room lamp operates normally when the doors are opened and closed.)	Probable cause
If neither room lamp nor turn-signal lamp flash/illuminate, the cause may be a malfunction of the ETACS-ECU or driver's-side door lock actuator. If either room lamp or turn-signal lamp does not flash/illuminate, the cause may be a malfunction of the room lamp circuit or turn-signal lamp.	• Malfunction of ETACS-ECU • Malfunction of driver's door lock actuator • Burnt turn-signal lamp bulb • Malfunction of connector or wiring harness

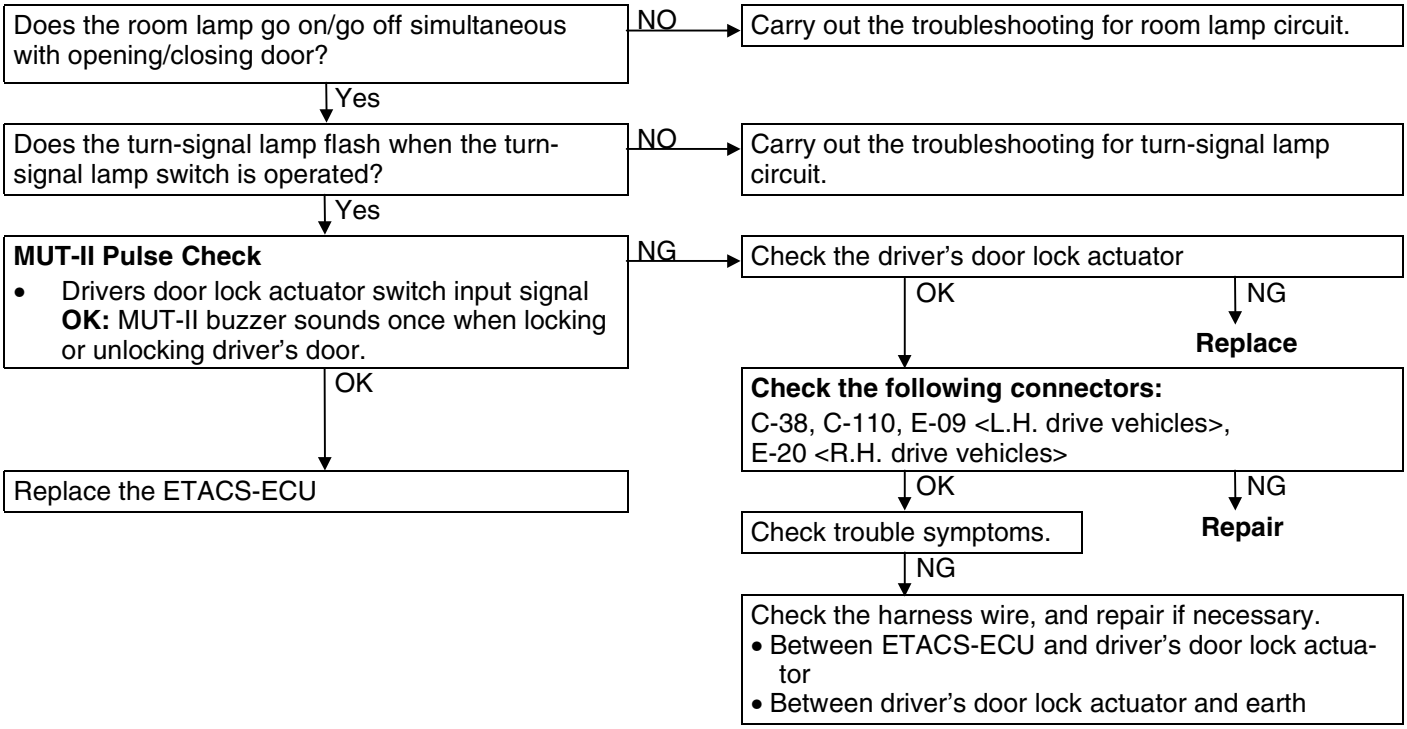

INSPECTION PROCEDURE 3

Encrypted codes cannot be registered	Probable cause
The cause may be a malfunction of the diagnosis connector, ETACS-ECU or diagnosis output circuit.	• Malfunction of MUT-II • Malfunction of connector or wiring harness • Malfunction of ETACS-ECU

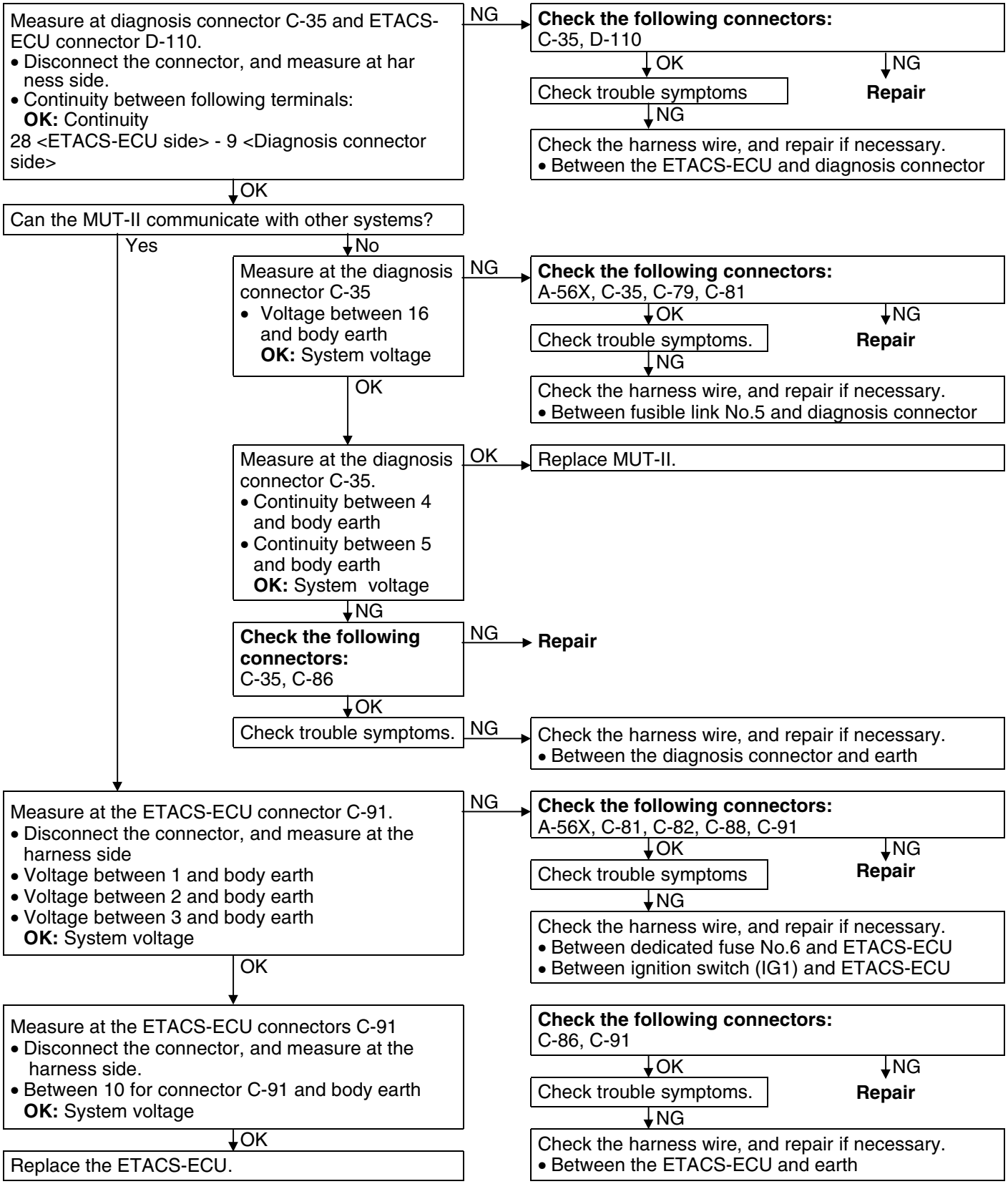

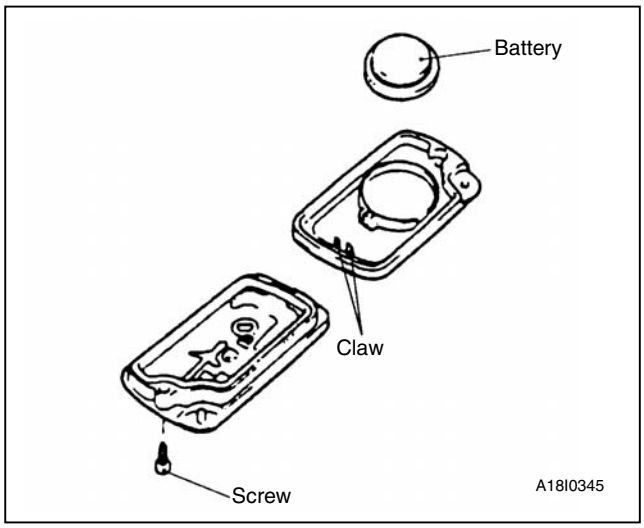

ON – VEHICLE SERVICE

HOW TO REPLACE A BATTERY OF THE TRANSMITTER

1. Remove the set screw to remove the battery from the transmitter.
   Install a battery with its (+) side face-down.
   Battery required for replacement:
   Coin type battery CR2032
3. Insert the claw, and then assemble the transmitter.
   Caution
   Do not let water or dust stick to the inside of the transmitter when it is open. Also, do not touch the precision electronic device.
4. Check to see if the keyless entry system operates.

SECRET CODE REGISTRATION METHOD

Each individual secret code is registered inside the transmitter, and so it is necessary to register these codes with the EEPROM inside the ETACS-ECU in the following cases.

- When either the transmitter or ETACS-ECU in the following cases.
- If a second transmitter is to be used;
- If it appears that a problem is occurring because of faulty registration of a code.

A maximum of two different codes can be stored in the memory area of the EEPROM (two different transmitters can be used).

When the code for the first transmitter is registered, th previously- registered codes for two transmitters are cleared.

Therefore, if you are using more than two or are addin a second transmitter, the codes for all the transmitters must be registered at the same time.

1. Check that the doors lock normally when the key is used.
2. Connect the MUT-II to the diagnosis connector
   NOTE
   This will connect terminal (1) of the diagnosis con nectar to earth, and the system will be in secret code registration standby mode.
   Caution
   Always turn the ignition switch to OFF before connecting and disconnecting the MUT-II

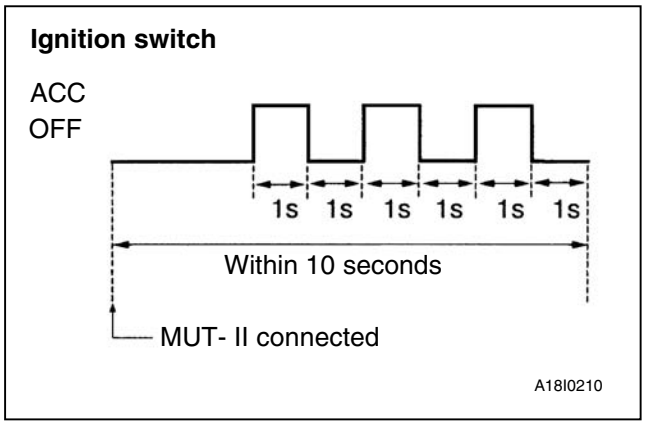

3. Within 10 seconds after connecting the MUT-II, turn the ignition switch to ACC ON for 1 second an then to OFF for 1 second; repeat this procedure three times.

   NOTE

   The doors will lock and unlock once at this tim and the system will switch to registration mode.
4. Press the lock switch or unlock switch; of th transmitter switch, and then press it two times within 10 seconds of the first press. This will register the code.
5. After registration is completed, the doors will be automatically locked and unlocked once.
6. If you are using two transmitters or have added a second transmitter, the same registration procedure should be carried out for the second transmitter, and it should be carried out within one minute after registration of the code for the first transmitter has been completed. After the second registration is completed, the doors will be automatically locked and unlocked once.
7. Registration mode will be terminated under the following conditions.

- When the secret codes for two transmitters hav been registered;
- When one minute has passed after registration mode started;
- If the MUT-II is disconnected (earth is released);
- If the ignition switch is tuned to ON;

8. After registration mode has been completed, carry out the followings to make sure that the keyless entry system operates.

- Pull the ignition key out.
- Close the all doors.

KEYLESS ENTRY SYSTEM

REMOVAL AND INSTALLATION

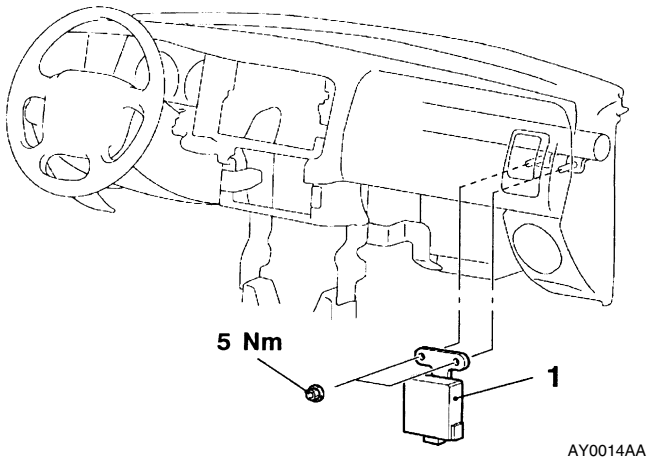

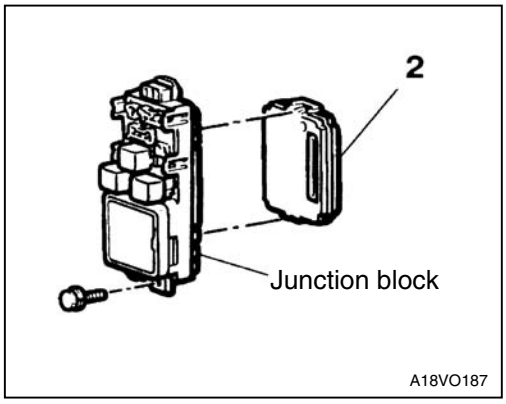

Keyless entry receiver-ECU removal steps

- Glove box assembly (Refer to GROUP 52A*.)

1. Keyless entry receiver-ECU

ETACS-ECU removal

2. ETACS-ECU

NOTE

*: Refer to ’97 L200 Workshop Manual <Pub. No. PWTE96E1>

GROUP 52A
INTERIOR

GENERAL
OUTLINE OF CHANGE

- The following service procedures have been added due to the introduction of the adjustable seat belt anchor.
- On dual cab models, three-point ELR/child seat fixing mechanism (ALR) seat belts have been added for rear seat as an optional equipment. The service procedures are the same as previous one.

FRONT SEAT BELT
REMOVAL AND INSTALLATION

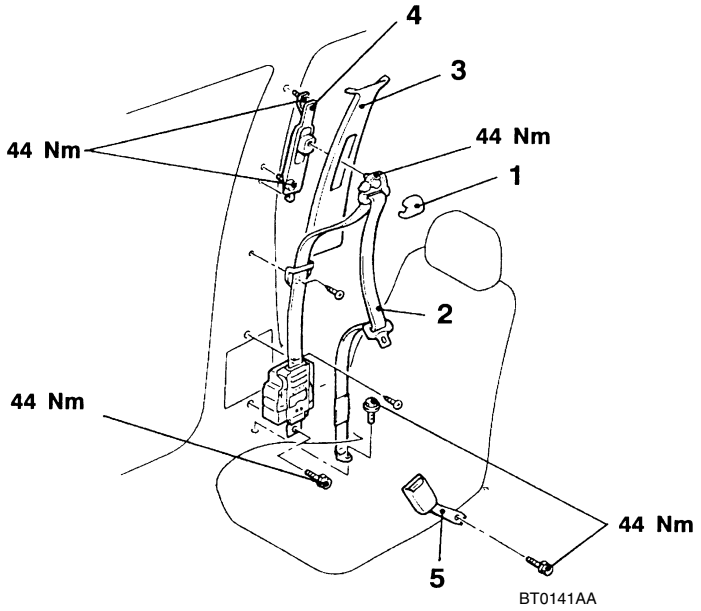

Outer seat belt removal steps

- Center pillar trim, lower or quarter trim, lower (refer to P.52A*.)

1. Sash guide cover
2. Outer seat belt
3. Center pillar trim, upper or quarter trim, upper (refer to P.52A*.)
4. Adjustable seat belt anchor.

Inner seat belt removal steps

- Front seat (refer to P.52A*.)

5. Inner seat belt

NOTE

*: Refer to ’97 L200 Workshop Manual <Pub. No. PWTE96E1>.

NOTES

GROUP 54
CHASSIS ELECTRAL

GENERAL
OUTLINE IF CHANGES
- The following procedure has been added due to the addition of the high-stop lamp <4WD>.

HIGH-MOUNTED STOP LAMP
REMOVAL AND INSTALLATION

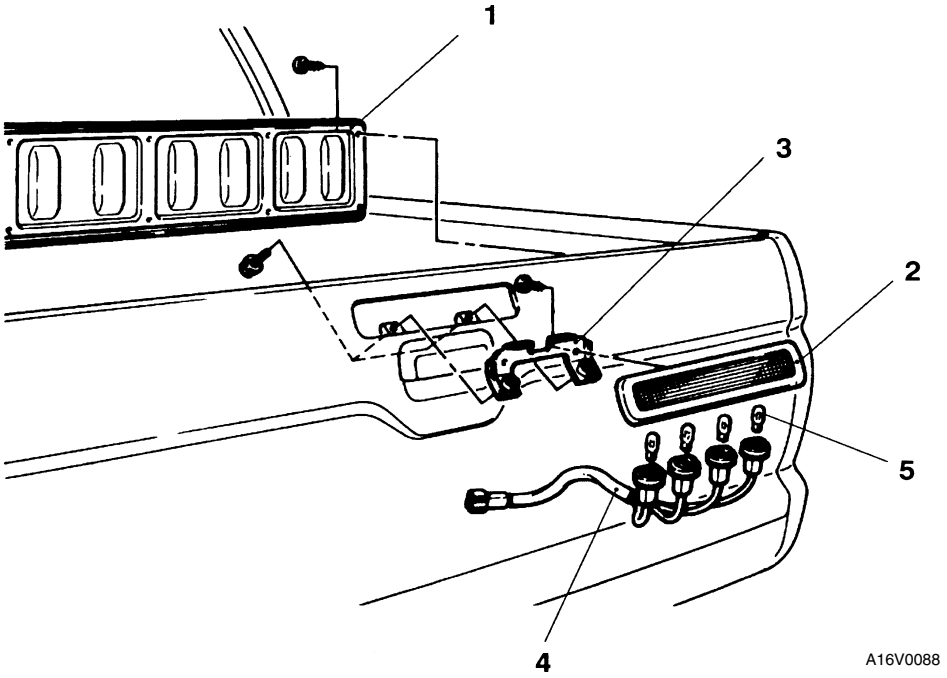

Removal steps
1. Rear gate panel
2. High mounted stop lamp
3. Lamp bracket
4. Bulb socket assembly
5. Bulb

GENERAL

CONTENTS

HOW TO USE THIS MANUAL 2

VEHICLE IDENTIFICATION 3

Models 3

Chassis Number 4

MAJOR SPECIFICATIONS 5

STANDARD PART/TIGHTENING-TORQUE TABLE 11

HOW TO USE THIS MANUAL

INDICATION OF TIGHTENING TORQUE

Tightening torques (units: N·m) are set to take into account the central value and the allowable tolerance.
The central value is the target value, and the allowable tolerance provides the checking range for tightening torques.

If bolts and nuts are not provided with tightening torques, refer to P.00-11.

EXPLANATION OF MANUAL CONTENTS

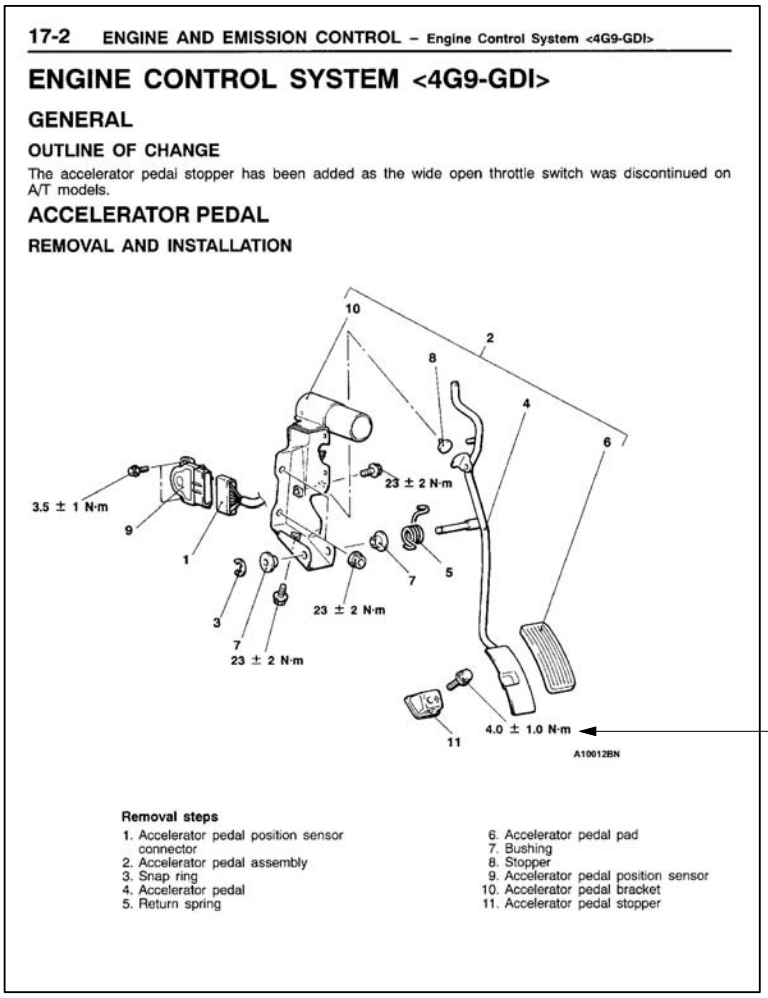

17-2 ENGINE AND EMISSION CONTROL – Engine Control System <4G9-GDI>

ENGINE CONTROL SYSTEM <4G9-GDI>

GENERAL

OUTLINE OF CHANGE

The accelerator pedal stopper has been added as the wide open throttle switch was discontinued on A/T models.

ACCELERATOR PEDAL

REMOVAL AND INSTALLATION

Removal steps
1. Accelerator pedal position sensor connector
2. Accelerator pedal assembly
3. Snap ring
4. Accelerator pedal
5. Return spring
6. Accelerator pedal pad
7. Bushing
8. Stopper
9. Accelerator pedal position sensor
10. Accelerator pedal bracket
11. Accelerator pedal stopper

Denotes tightening torque.
For bolts and nuts which do not have a tightening torque listed, refer to the “Standard Parts-tightening-torque Table”.

VEHICLE IDENTIFICATION

MODELS

Model Code		Engine model	Transmission model	Fuel supply system
K64T	ENDFL6	4D56-Turbocharger with intercooler (2,477 mL) <Emission regulation-step III>	R5M21 (2WD-5M/T)	Fuel injection
	ENDFR6			
	CENDFL6			
	JENDFL6			
	JERDFL6		R4AW2 (2WD-4A/T)	
	ENDPL6	4D56 (2,477 mL) <Emission regulation-step II >	R5M21 (2WD-5M/T)	
	JENDPL6			
K75T	CENDEL6	4G64-SOHC (2,351 mL)	V5M21 (4WD-5M/T)	MPI
	GJENXEL6			
K74T	ENDFL6	4D56-Turbocharger with intercooler (2,477 mL) <Emission regulation-step III>	V5MT1 (4WD-5M/T)	Fuel injection
	ENDFR6			
	JERDFL6		V4A51 (4WD-4A/T)	
	GJERXFL6			
	GJENXFL6		V5MT1(4WD-5M/T)	
	GJENXFR6			
	CENDFL6			
	GCENXFL6			
	JENDFL6			
	JENDFR6			
	JENHFL6			
	JERDPL6	4D56-Turbocharger with intercooler (2,477 mL) <Emission regulation-step II>	V4AW2 (4WD-4A/T)	
	GJERXPL6			
	GJENXPL6		V5MT1(4WD-5M/T)	
	GJENXPR6			
	JENDPL6			

CHASSIS NUMBER

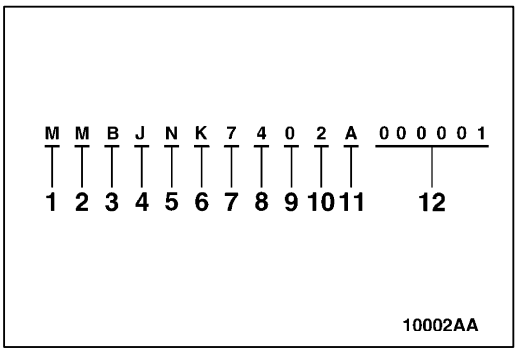

No.	Items		Contents
1	Continent	M	ASIA
2	Country	M	THAILAND
3	Register code	B	Follow register
4	Body shape	C	Club cab
		J	Double cab
		O	Single cab
		Y	Single cab without rear body
		Z	Double cab without rear body
5	Transmission type	N	5-speed manual transmission
		R	4-speed automatic transmission
6	Vehicle line	K	Mitsubishi L200
7	Body type	6	Long wheelbase
		7	4WD, Long wheelbase
8	Engine type	4	4D56: 2,477 mL diesel engine
		5	4G64: 2,351 mL petrol engine
9	Internal production control code	A	A, B, C... etc. 0 (zero): No meaning
10	Model year	2*	2002
11	Plant	A	A, C: LARDKRABANG factory D, F: LAEMCHABANG factory
12	Serial number	–	–

NOTE
*: Indicates changes.

MAJOR SPECIFICATIONS

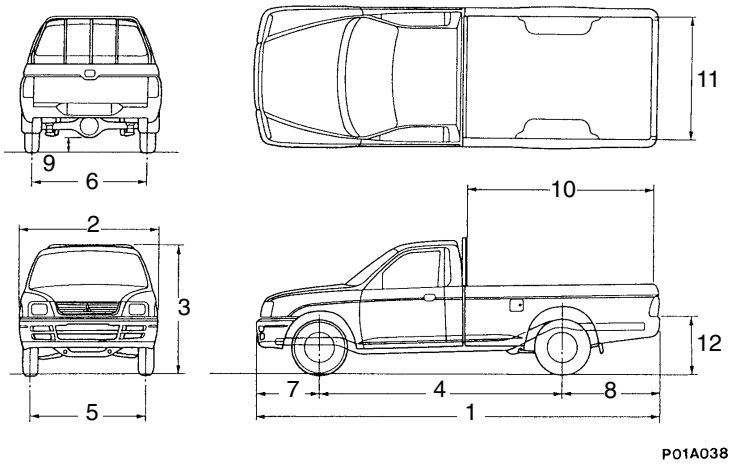

<2WD Single cab, club cab>

Items			K64T ENDFL6	K64T ENDFR6	K64T ENDPL6	K64T CENDFL6
Vehicle dimensions mm	Overall length	1	5,010	5,010	5,010	5,125
	Overall width	2	1,695	1,695	1,695	1,695
	Overall height (unladen)	3	1,585	1,585	1,585	1,605
	Wheelbase	4	2,950	2,950	2,950	2,950
	Track-front	5	1,450	1,450	1,450	1,450
	Track-rear	6	1,435	1,435	1,435	1,435
	Overhang-front	7	850	850	850	850
	Overhang-rear	8	1,210	1,210	1,210	1,325
	Ground clearance (unladen)	9	190	190	190	190
	Cargo area length	10	2,245	2,245	2,245	1,830
	Cargo area width	11	1,470	1,470	1,470	1,470
	Cargo bed height	12	680	680	680	695
Vehicle weight kg	Kerb weight		1,410	1,410	1,370	1,485
	Max. gross vehicle weight rating		2,570	2,570	2,570	2,570
	Max. axle weight rating-front		1,000	1,000	1,000	1,000
	Max. axle weight rating-rear		1,700	1,700	1,700	1,700
	Max. trailer weight	With brake	1,800	1,800	1,800	1,800
		Without brake	500	500	500	500
	Max. trailer-nose weight		75	75	75	75
Seating capacity			2	2	2	4
Engine	Model No.		4D56*	4D56*	4D56	4D56*
	Total displacement mL		2,477	2,477	2,477	2,477
Transmission	Model No.		R5M21	R5M21	R5M21	R5M21
	Type		5-speed manual	5-speed manual	5-speed manual	5-speed manual
Fuel system	Fuel supply system		Fuel injection	Fuel injection	Fuel injection	Fuel injection

NOTE
*: Turbocharger with intercooler

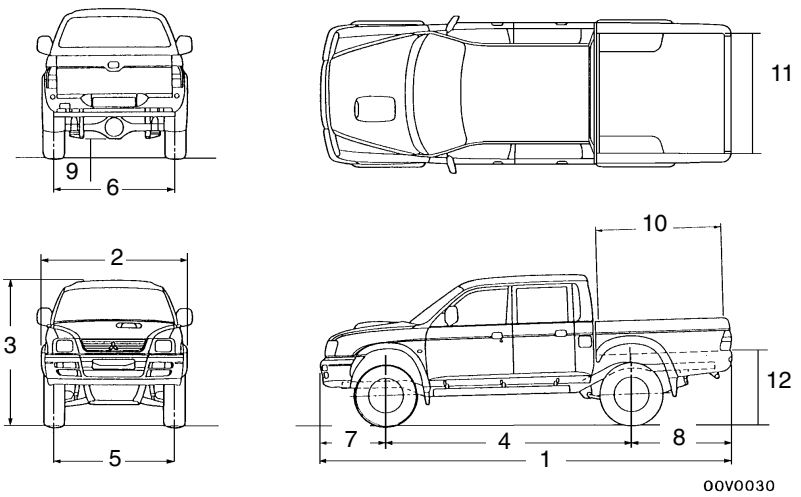

<2WD Double cab>

Items			K64T JENDFL6	K64T JERDFL6	K64T JENDPL6
Vehicle dimensions mm	Overall length	1	5,010	5,010	5,010
	Overall width	2	1,695	1,695	1,695
	Overall height (unladen)	3	1,610	1,610	1,610
	Wheelbase	4	2,950	2,950	2,950
	Track-front	5	1,450	1,450	1,450
	Track-rear	6	1,435	1,435	1,435
	Overhang-front	7	850	850	850
	Overhang-rear	8	1,210	1,210	1,210
	Ground clearance (unladen)	9	190	190	190
	Cargo area length	10	1,500	1,500	1,500
	Cargo area width	11	1,470	1,470	1,470
	Cargo bed height	12	680	680	680
Vehicle weight kg	Kerb weight		1,510	1,520	1,470
	Max. gross vehicle weight rating		2,570	2,570	2,570
	Max. axle weight rating-front		1,000	1,000	1,000
	Max. axle weight rating-rear		1,700	1,700	1,700
	Max. trailer weight	With brake	1,800	1,800	1,800
		Without brake	500	500	500
	Max. trailer-nose weight		75	75	75
Seating capacity			5	5	5
Engine	Model No.		4D56*	4D56*	4D56*
	Total displacement mL		2,477	2,477	2,477
Transmis-sion	Model No.		R5M21	R4AW2	R5M21
	Type		5-speed manual	4-speed automatic	5-speed manual
Fuel system	Fuel supply system		Fuel injection	Fuel injection	Fuel injection

NOTE
*: Turbocharger with intercooler

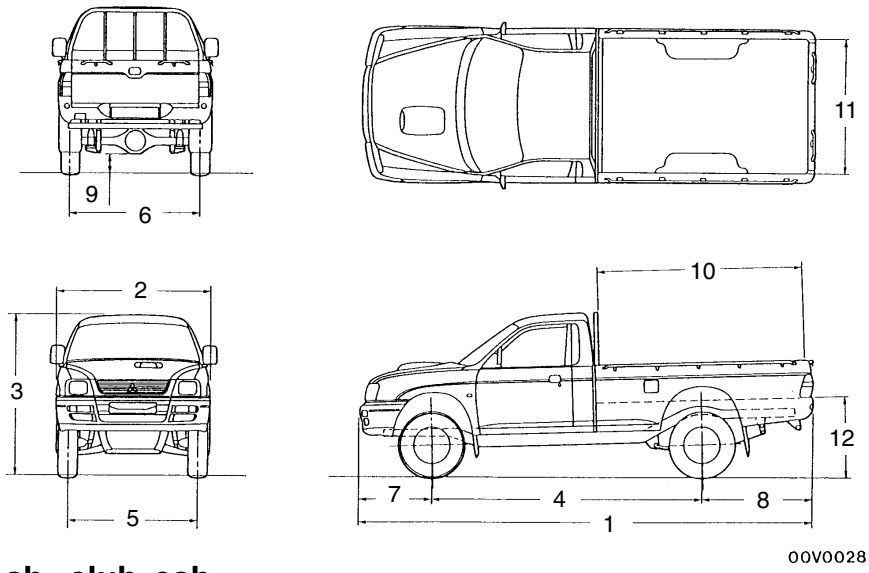

<4WD Single cab, club cab>

Items				K74T ENDFL6	K74T ENDFR6	K75T CENDEL6	K74T CENDFL6	K74T GCENXFL6
Vehicle dimensions mm	Overall length		1	5,010	5,010	5,125	5,125	5,125
	Overall width		2	1,695	1,695	1,695	1,695	1,775
	Overall height (unladen)		3	1,750	1,750	1,775	1,775	1,800
	Wheelbase		4	2,960	2,960	2,960	2,960	2,960
	Track-front		5	1,420	1,420	1,420	1,420	1,465
	Track-rear		6	1,435	1,435	1,435	1,435	1,480
	Overhang-front		7	840	840	840	840	840
	Overhang-rear		8	1,210	1,210	1,325	1,325	1,325
	Ground clearance (unladen)		9	215	215	215	215	235
	Cargo area length		10	2,245	2,245	1,830	1,830	1,830
	Cargo area width		11	1,470	1,470	1,470	1,470	1,470
	Cargo bed height		12	860	860	875	875	895
Vehicle weight kg	Kerb weight			1,675	1,675	1,615	1,720	1,740
	Max. gross vehicle weight rating			2,830	2,830	2,720	2,830	2,830
	Max. axle weight rating-front			1,200	1,200	1,200	1,200	1,200
	Max. axle weight rating-rear			1,800	1,800	1,800	1,800	1,750
	Max. trailer weight	With brake		2,700	2,700	2,700	2,700	2,700
		Without brake		500	500	500	500	500
	Max. trailer-nose weight			100	100	100	100	100
Seating capacity				2	2	4	4	4
Engine	Model No.			4D56*	4D56*	4G64	4D56*	4D56*
	Total displacement mL			2,477	2,477	2,351	2,477	2,477
Transmis-sion	Model No.			V5MT1	V5MT1	V5M21	V5MT1	V5MT1
	Type			5-speed manual	5-speed manual	5-speed manual	5-speed manual	5-speed manual
Fuel system	Fuel supply system			Fuel injection	Fuel injection	MPI	Fuel injection	Fuel injection

NOTE
*: Turbocharger with intercooler

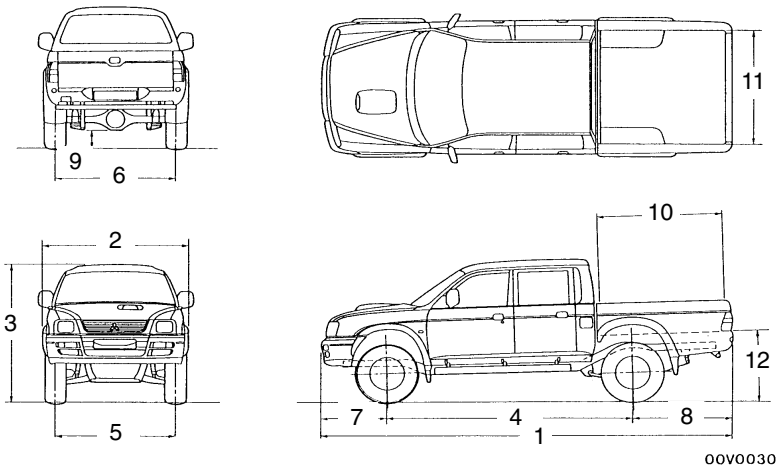

<4WD Double cab>

Items			K74T JENDFL6	K74T JENDFR6	K74T JERDFL6	K74T JENHFL6
Vehicle dimen-sions mm	Overall length	1	5,010	5,010	5,010	5,010
	Overall width	2	1,695	1,695	1,695	1,695
	Overall height (unladen)	3	1,780	1,780	1,780	1,780
	Wheelbase	4	2,960	2,960	2,960	2,960
	Track-front	5	1,420	1,420	1,420	1,420
	Track-rear	6	1,435	1,435	1,435	1,435
	Overhang-front	7	840	840	840	840
	Overhang-rear	8	1,210	1,210	1,210	1,210
	Ground clearance (unladen)	9	215	215	215	215
	Cargo area length	10	1,500	1,500	1,500	1,500
	Cargo area width	11	1,470	1,470	1,470	1,470
	Cargo bed height	12	860	860	860	860
Vehicle weight kg	Kerb weight		1,745	1,745	1,750	1,750
	Max. gross vehicle weight rating		2,830	2,830	2,830	2,830
	Max. axle weight rating-front		1,200	1,200	1,200	1,200
	Max. axle weight rating-rear		1,800	1,800	1,800	1,800
	Max. trailer weight	With brake	2,700	2,700	2,200	2,700
		Without brake	500	500	500	500
	Max. trailer-nose weight		100	100	100	100
Seating capacity			5	5	5	5
Engine	Model No.		4D56*	4D56*	4D56*	4D56*
	Total displacement mL		2,477	2,477	2,477	2,477
Trans-mission	Model No.		V5MT1	V5MT1	V4AW2	V5MT1
	Type		5-speed manual	5-speed manual	4-speed automatic	5-speed manual
Fuel system	Fuel supply system		Fuel injection	Fuel injection	Fuel injection	Fuel injection

NOTE
*: Turbocharger with intercooler

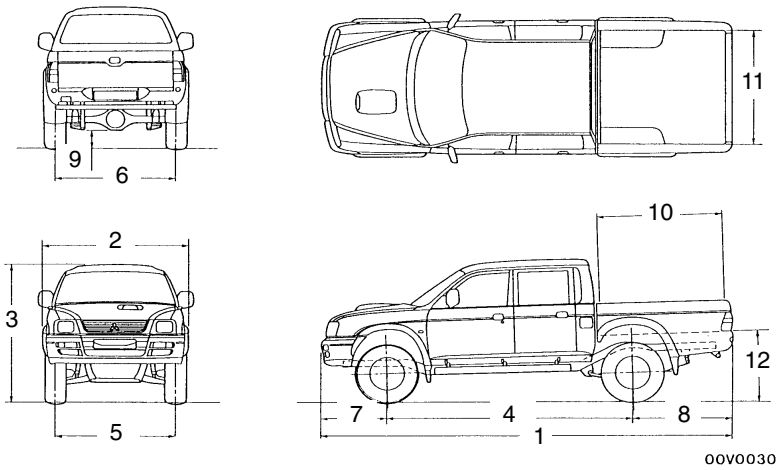

<4WD Double cab>

Items			K75T GJENXEL6	K74T GJENXFL6	K74T GJENXFR6	K74T GJERXFL6
Vehicle dimen-sions mm	Overall length	1	5,010	5,010	5,010	5,010
	Overall width	2	1,775	1,775	1,775	1,775
	Overall height (unladen)	3	1,800	1,800	1,800	1,800
	Wheelbase	4	2,960	2,960	2,960	2,960
	Track-front	5	1,465	1,465	1,465	1,465
	Track-rear	6	1,435	1,480	1,480	1,480
	Overhang-front	7	840	840	840	840
	Overhang-rear	8	1,210	1,210	1,210	1,210
	Ground clearance (unladen)	9	235	235	235	235
	Cargo area length	10	1,500	1,500	1,500	1,500
	Cargo area width	11	1,470	1,470	1,470	1,470
	Cargo bed height	12	880	880	880	880
Vehicle weight kg	Kerb weight		1,660	1,765	1,765	1,770
	Max. gross vehicle weight rating		2,720	2,830	2,830	2,830
	Max. axle weight rating-front		1,200	1,200	1,200	1,200
	Max. axle weight rating-rear		1,750	1,750	1,750	1,750
	Max. trailer weight	With brake	2,700	2,700	2,700	2,200
		Without brake	500	500	500	500
	Max. trailer-nose weight		100	100	100	100
Seating capacity			5	5	5	5
Engine	Model No.		4G64	4D56*	4D56*	4D56*
	Total displacement mL		2,351	2,477	2,477	2,477
Trans-mission	Model No.		V5M21	V5MT1	V5MT1	V4AW2
	Type		5-speed manual	5-speed manual	5-speed manual	4-speed manual
Fuel system	Fuel supply system		MPI	Fuel injection	Fuel injection	Fuel injection

NOTE
*: Turbocharger with intercooler

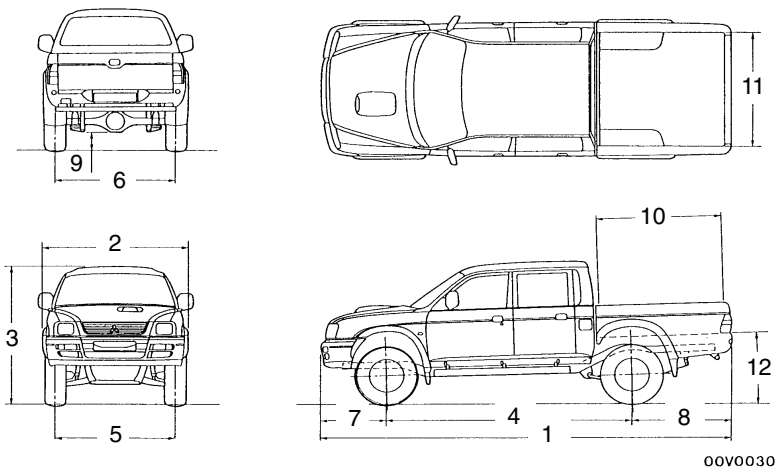

<4WD Double cab>

Items				K74T JENDPL6	K74T JERDPL6	K74T GJENXPR6	K74T GJENXPR6	K74T GJERXPL6
Vehicle dimensions mm	Overall length		1	5,010	5,010	5,010	5,010	5,010
	Overall width		2	1,695	1,695	1,775	1,775	1,775
	Overall height (unladen)		3	1,780	1,780	1,800	1,800	1,800
	Wheelbase		4	2,960	2,960	2,960	2,960	2,960
	Track-front		5	1,420	1,420	1,465	1,465	1,465
	Track-rear		6	1,435	1,435	1,480	1,480	1,480
	Overhang-front		7	840	840	840	840	840
	Overhang-rear		8	1,210	1,210	1,210	1,210	1,210
	Ground clearance (unladen)		9	215	215	235	235	235
	Cargo area length		10	1,500	1,500	1,500	1,500	1,500
	Cargo area width		11	1,470	1,470	1,470	1,470	1,470
	Cargo bed height		12	860	860	880	880	880
Vehicle weight kg	Kerb weight			1,730	1,735	1,750	1,750	1,755
	Max. gross vehicle weight rating			2,830	2,830	2,830	2,830	2,830
	Max. axle weight rating-front			1,200	1,200	1,200	1,200	1,200
	Max. axle weight rating-rear			1,800	1,800	1,750	1,750	1,750
	Max. trailer weight	With brake		2,700	2,200	2,700	2,700	2,200
		Without brake		500	500	500	500	500
	Max. trailer-nose weight			100	100	100	100	100
Seating capacity				5	5	5	5	5
Engine	Model No.			4D56*	4D56*	4D56*	4D56*	4D56*
	Total displacement mL			2,477	2,477	2,477	2,477	2,477
Transmission	Model No.			V5MT1	V4AW2	V5MT1	V5MT1	V4AW2
	Type			5-speed manual	4-speed automatic	5-speed manual	5-speed manual	4-speed automatic
Fuel system	Fuel supply system			Fuel injection	Fuel injection	Fuel injection	Fuel injection	Fuel injection

NOTE
*: Turbocharger with intercooler

STANDARD PART/TIGHTENING-TORQUE TABLE

Each torque value in the table is a standard value for tightening under the following conditions.
(1) Bolts, nuts and washers are all made of steel and plated with zinc.
(2) The threads and bearing surface of bolts and nuts are all in dry condition.

The values in the table are not applicable:
(1) If toothed washers are inserted.
(2) If plastic parts are fastened.
(3) If bolts are tightened to plastic or die-cast inserted nuts.
(4) If self-tapping screws or self-locking nuts are used.

Standard bolt and nut tightening torque

Thread size		Torque N·m		
Bolt nominal diameter (mm)	Pitch (mm)	Head mark “4”	Head mark “7”	Head mark “8”
M5	0.8	2.5 ± 0.5	5.0 ± 1.0	6.0 ± 1.0
M6	1.0	5.0 ± 1.0	9.0 ± 2.0	10 ± 2
M8	1.25	12 ± 2	22 ± 4	25 ± 4
M10	1.25	24 ± 4	44 ± 10	53 ± 7
M12	1.25	41 ± 8	83 ± 12	98 ± 12
M14	1.5	73 ± 12	140 ± 20	155 ± 25
M16	1.5	110 ± 20	210 ± 30	235 ± 35
M18	1.5	165 ± 25	300 ± 40	340 ± 50
M20	1.5	225 ± 35	410 ± 60	480 ± 70
M22	1.5	300 ± 40	555 ± 85	645 ± 95
M24	1.5	395 ± 55	735 ± 105	855 ± 125

Flange bolt and nut tightening torque

Thread size		Torque N·m		
Bolt nominal diameter (mm)	Pitch (mm)	Head mark “4”	Head mark “7”	Head mark “8”
M6	1.0	5.0 ± 1.0	10 ± 2	12 ± 2
M8	1.25	13 ± 2	24 ± 4	27 ± 5
M10	1.25	26 ± 4	49 ± 9	58 ± 7
M10	1.5	24 ± 4	45 ± 8	55 ± 10
M12	1.25	46 ± 8	95 ± 15	105 ± 15
M12	1.75	43 ± 8	83 ± 12	98 ± 12

NOTE
1. Be sure to use only the specified bolts and nuts, and always tighten them to the specified torques.
2. Bolts marked with indications such as 4T or 7T are reinforced bolts. The larger the number, the greater the bolt strength.

NOTES

<4G6> ENGINE

Click on the applicable bookmark to selected the required model year

ENGINE <4G6>

CONTENTS

11109000399

GENERAL INFORMATION 3

SERVICE SPECIFICATIONS 3

SEALANT 5

SPECIAL TOOLS 5

ON-VEHICLE SERVICE 7

Drive Belt Tension Check and Adjustment 7
Ignition Timing Check and Adjustment 10
Idle Speed Check 11
Idle Mixture Check 11
Compression Pressure Check 12
Manifold Vacuum Check 13
Lash Adjuster Check 14

CAMSHAFT OIL SEAL 16

OIL PAN, OIL SCREEN 19

CYLINDER HEAD GASKET 21

TIMING BELT, TIMING BELT B 26

CRANKSHAFT FRONT OIL SEAL 32

CRANKSHAFT REAR OIL SEAL 35

ENGINE ASSEMBLY 37

GENERAL INFORMATION

11100010322

Items			4G63	4G64
Total displacement mℓ			1,997	2,351
Bore × Stroke mm			85.0 x 88.0	86.5 x 100.0
Compression ratio			9.5	9.5
Combustion chamber			Pentroof type	Pentroof type
Camshaft arrangement			SOHC	SOHC
Number of valve	Intake		8	8
	Exhaust		8	8
Valve timing	Intake	Opening	BTDC 11°	BTDC 18°
		Closing	ABDC 53°	ABDC 58°
	Exhaust	Opening	BBDC 63°	BBDC 58°
		Closing	ATDC 21°	ATDC 18°
Fuel system			Electronic control multipoint fuel injection	Electronic control multipoint fuel injection
Rocker arm			Roller type	Roller type
Auto-lash adjuster			Equipped	Equipped

SERVICE SPECIFICATIONS

11100030342

Items			Standard value	Limit
Alternator drive belt tension	Tension N	When checked	294–490	–
		When a used belt is installed	343–441	–
		When a new belt is installed	490–686	–
	Deflection (Reference value) mm	When checked	7.0 – 9.0	–
		When a used belt is installed	7.5 – 8.5	–
		When a new belt is installed	5.5 – 7.5	–
Power steering oil pump drive belt tension	Tension N	When checked	294 – 490	–
		When a used belt is installed	343 – 441	–
		When a new belt is installed	490 – 686	–
	Deflection (Reference value) mm	When checked	5.5 – 7.5	–
		When a used belt is installed	6.0 – 7.0	–
		When a new belt is installed	4.0 – 6.0	–

Items			Standard value	Limit
A/C compressor drive belt tension	Tension N	When checked	355 – 445	–
		When a used belt is installed	355 – 445	–
		When a new belt is installed	530 – 620	–
	Deflection (Reference value) mm	When checked	6.0 – 7.0	–
		When a used belt is installed	6.0 – 7.0	–
		When a new belt is installed	4.5 – 5.5	–
Basic ignition timing			5° BTDC±2°	–
Idle speed r/min			750±100	–
CO contents %			0.5 or less	–
HC contents ppm			100 or less	–
Compression pressure (250–400 r/min) kPa		4G63	1,270	min. 960
		4G64	1,320	min. 1,000
Compression pressure difference of all cylinder kPa			–	max. 100
Intake manifold vacuum kPa			min. 60	–
Cylinder head bolt shank length mm			–	99.4
Auto-tensioner push rod movement mm			Within 1.0	–
Timing belt tension torque Nm (Reference value)			3.5	–
Auto tensioner rod protrusion mm			2.5 – 3.0	–

SEALANT

11100050218

Item	Specified sealant	Remark
Oil pan	MITSUBISHI GENUINE PART MD970389 or equivalent	Semi-drying sealant

SPECIAL TOOLS

11100060310

Tool	Number	Name	Use
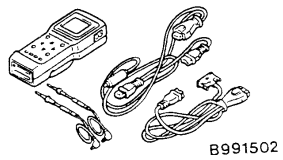	MB991502	MUT-II sub assembly	● Checking the idle speed ● Erasing of diagnosis code
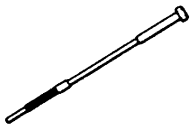	MD998738	Adjusting screw	● Holding the auto tensioner ● Timing belt tension adjustment
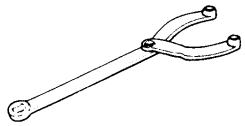	MB990767	End yoke holder	Holding the camshaft sprocket
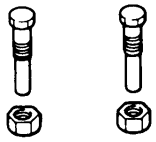	MD998719 or MD998754	Crankshaft pulley holder pin	
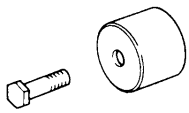	MD998713	Camshaft oil seal installer	Press-in of the camshaft oil seal
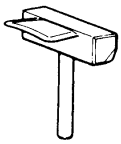	MD998727	Oil pan remover	Removal of the oil pan
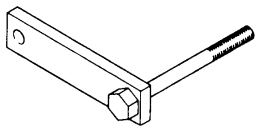	MD998781	Fly wheel stopper	Securing the flywheel <M/T> or drive plate <A/T>

Tool	Number	Name	Use
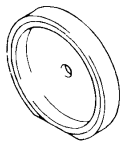	MD998776	Crankshaft rear oil seal installer	Press-fitting the crankshaft rear oil seal
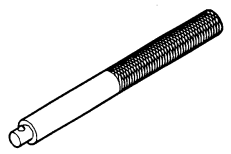	MB990938	Handle	Press-fitting the crankshaft rear oil seal
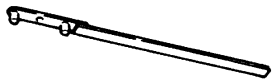	MD998747	Crankshaft pulley holder	Supporting of crankshaft sprocket
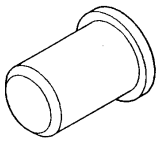	MD998375	Crankshaft front oil seal installer	Press-fitting the crankshaft front oil seal
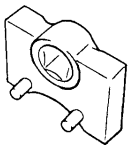	MD998767	Tension pulley socket wrench	Timing belt tension adjustment

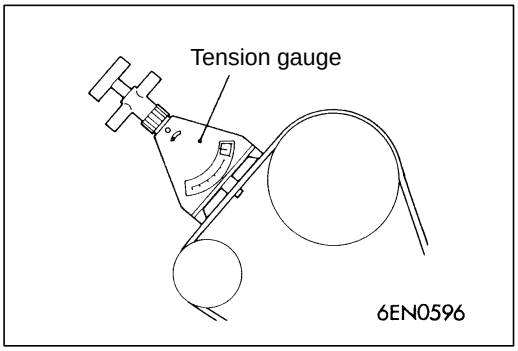

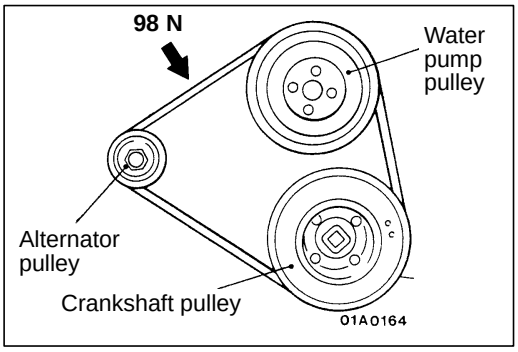

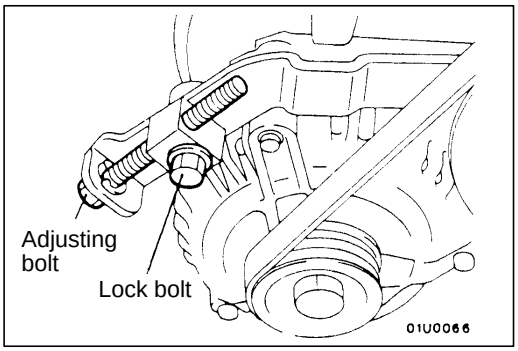

ON-VEHICLE SERVICE

11100090326

DRIVE BELT TENSION CHECK AND ADJUSTMENT

ALTERNATOR DRIVE BELT TENSION CHECK

Use a belt tension gauge to check that the belt tension is at the standard value at a point half-way between the two pulleys as shown in the illustration. In addition, press this section with a force of 98 N and check that the amount of belt deflection is at the standard value.

Standard value:

Tension N	294–490
Deflection (Reference value) mm	7.0 – 9.0

ALTERNATOR DRIVE BELT TENSION ADJUSTMENT

1. Loosen the nut of the alternator pivot bolt.
2. Loosen the lock bolt.
3. Use the adjusting bolt to adjust the belt tension and belt deflection to the standard values.

   Standard value:

Items	When a used belt is installed	When a new belt is installed
Tension N	343–441	490–686
Deflection (Reference value) mm	7.5 – 8.5	5.5 – 7.5

4. Tighten the nut of the alternator pivot bolt.

   Tightening torque: 22 Nm
5. Tighten the lock bolt.

   Tightening torque: 22 Nm
6. Tighten the adjusting bolt.

   Tightening torque: 9.8 Nm

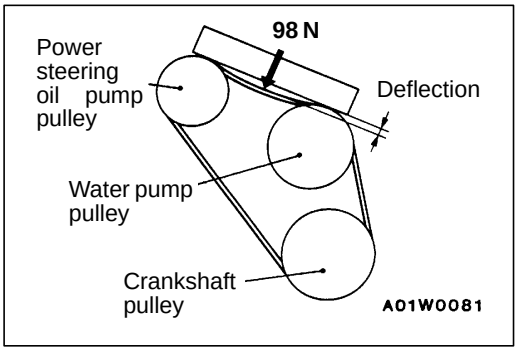

POWER STEERING OIL PUMP DRIVE BELT TENSION CHECK AND ADJUSTMENT

11100110145

1. Use a belt tention gauge to check that the belt tension is at the standard value at a point half-way between the two pulleys (indicated by an arrow in the illustration). In addition, press this section with a force of 98 N and check that the amount of belt deflection is at the standard value.

Standard value:

Items	When checked	When a used belt is intalled	When a new belt is installed
Tension N	294 – 490	343 – 441	490 – 686
Deflection (Reference value) mm	5.5 – 7.5	6.0 – 7.0	4.0 – 6.0

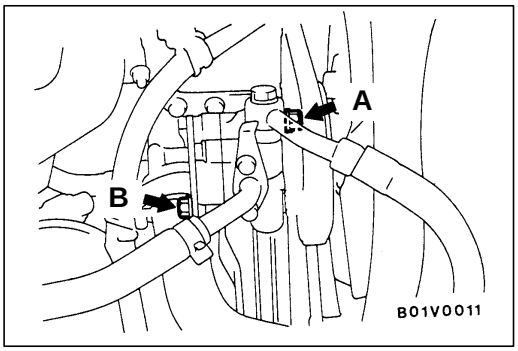

2. If the tension or deflection is outside the standard value, adjust by the following procedure.
   (1) Loosen power steering oil pump fixing bolts A and B.
   (2) Move power steering oil pump tension belt moderately and adjust tension.
   (3) Tighten fixing bolts A and B.

   Tightening torque: 22 Nm

   (4) Check the belt deflection amount and tension, and readjust if necessary.

   Caution
   Check after turning the crankshaft once or more clockwise (right turn).

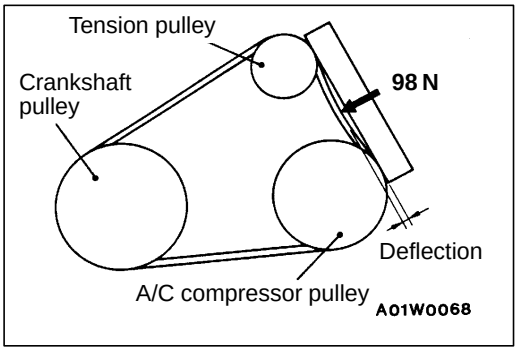

AIR CONDITIONER COMPRESSOR DRIVE BELT TENSION CHECK AND ADJUSTMENT

11100100135

1. Use a belt tention gauge to check that the belt tension is at the standard value at a point half-way between the two pulleys (indicated by an arrow in the illustration). In addition, press this section with a force of 98 N and check that the amount of belt deflection is at the standard value.

Standard value:

Items	When checked	When a used belt is intalled	When a new belt is installed
Tension N	355 – 445	355 – 445	530 – 620
Deflection (Reference value) mm	6.0 – 7.0	6.0 – 7.0	4.5 – 5.5

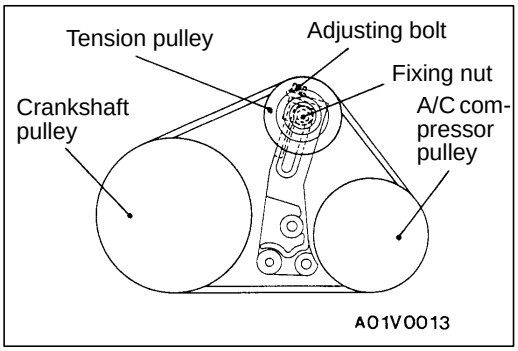

2. If the tension or deflection is outside the standard value, adjust by the following procedure.
   (1) Loosen tension pulley fixing nut.
   (2) Adjust belt tension with adjusting bolt.
   (3) Tighten fixing nut.
   (4) Check the belt deflection amount and tension, and readjust if necessary.

   Caution
   Check after turning the crankshaft once or more clockwise (right turn).

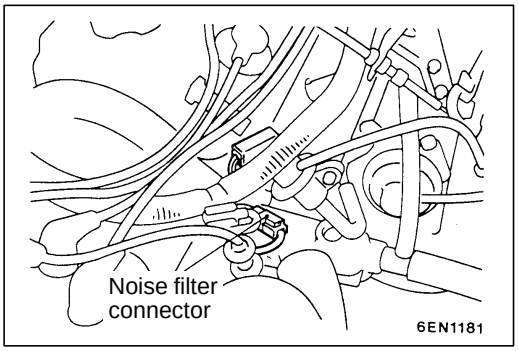

IGNITION TIMING CHECK AND ADJUSTMENT

11100170167

1. Before inspection, set the vehicle to the pre-inspection condition.
2. Insert a paper clip into the noise filter connector (1 pin) as shown in the illustration at left.
3. Connect a primary-voltage-detection type of tachometer to the paper clip.

   NOTE
   Do not use the MUT-II.
   If tested with the MUT-II connected to the diagnosis connector, the ignition timing will not be the basic timing but be ordinary timing.

4. Set up a timing light.
5. Start the engine and run at idle.
6. Check that engine idle speed is within the standard value.

   Standard value: 750 ± 100 r/min

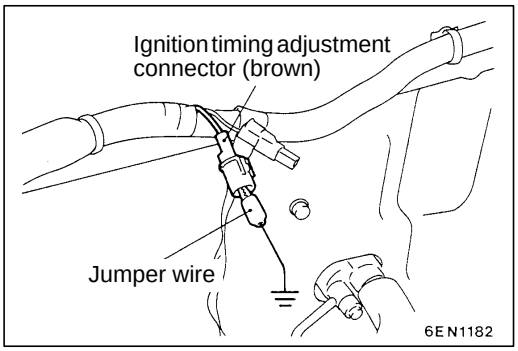

7. Turn the ignition switch to OFF.
8. Remove the waterproof connector from the ignition timing adjustment connector (brown).
9. Connect the jumper wire with the clip to the ignition timing adjustment terminal, and earth this to the body as illustrated.

   NOTE
   Earthing this terminal sets the engine to the basic ignition timing.

10. Start the engine and run it at idle.

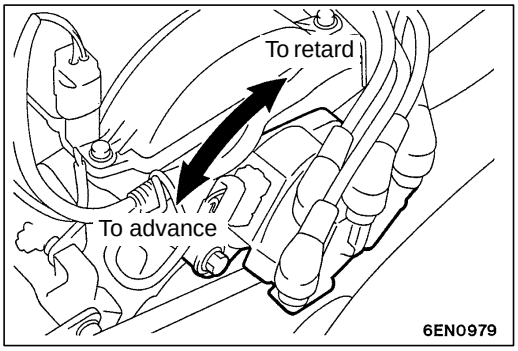

11. Check that basic ignition timing is within the standard value.

    Standard value: 5° BTDC±2°

12. If not within the standard value, loosen distributor fixing bolts and adjust by rotating distributor body.
13. Tighten mounting bolts after adjusting.

    Tightening torque: 12 Nm

14. Stop the engine, remove the jumper wire from the ignition timing adjustment connector (brown), and return the connector to its original condition.
15. Start the engine and check that ignition timing at the standard value.

    Standard value: Approx. 10° BTDC

    NOTE
    1. Ignition timing is variable within about ± 7°, even under normal operating.
    2. And it is automatically further advanced by about 5° from 10° BTDC at higher altitudes.

16. Attach a sealing tape to the fixing bolt and nut only for vehicles for Switzerland.

    NOTE
    Sealing tape is attached to all new vehicles.

IDLE SPEED CHECK

11100190330

1. Before inspection, set the vehicle to the pre-inspection condition.
2. Check the basic ignition timing. Adjust if necessary.

   Standard value: 5° BTDC±2°

3. After turning the ignition switch to OFF, connect the MUT-II to the diagnosis connector.
4. Start the engine and run it at idle.
5. Run the engine at idle for 2 minutes.
6. Check the idle speed.

   Curb idle speed: 750±100 r/min

   NOTE
   The idle speed is controlled automatically by the idle speed control (ISC) system.

7. If the idle speed is outside the standard value, inspect the MPI components by referring to GROUP 13A – Troubleshooting.

IDLE MIXTURE CHECK

11100210265

1. Before inspection, set the vehicle to the pre-inspection condition.
2. Check that the basic ignition timing is within the standard value.

   Standard value: 5° BTDC±2°

3. Turn the ignition switch to OFF and connect the MUT-II to the diagnosis connector.
4. Start the engine and run it at 2,500 r/min for 2 minutes.
5. Set the CO, HC tester.
6. Check the CO contents and the HC contents at idle.

   Standard value:
   CO contents: 0.5% or less
   HC contents: 100 ppm or less

7. If there is a deviation from the standard value, check the following items:
   - Diagnosis output
   - Closed-loop control (When the closed-loop control is normal, the output signal of the oxygen sensor changes between 0–400 mV and 600–1,000 mV at idle.)

- Fuel pressure
- Injector
- Ignition coil, spark plug cable, spark plug
- Leak in the EGR system and in the EGR valve
- Evaporative emission control system
- Compression pressure

NOTE
Replace the three way catalyst when the CO and HC contents are not within the standard value, even though the result of the inspection is normal on all items.

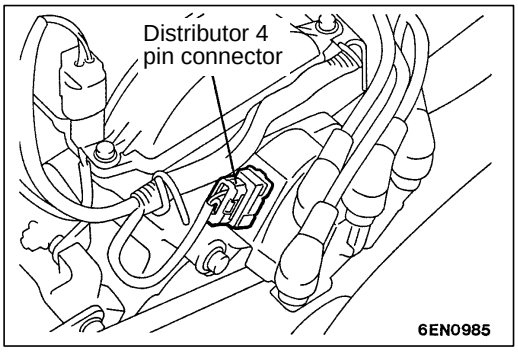

COMPRESSION PRESSURE CHECK 11100260352

1. Before inspection, check that the engine oil, starter and battery are normal. In addition, set the vehicle to the pre-inspection condition.
2. Disconnect the spark plug cables.
3. Remove all of the spark plugs.
4. Disconnect the distributor connector.

   NOTE
   Doing this will prevent the engine-ECU from carrying out ignition and fuel injection.

5. Cover the spark plug hole with a shop towel etc., and after the engine has been cranked, check that no foreign material is adhering to the shop towel.

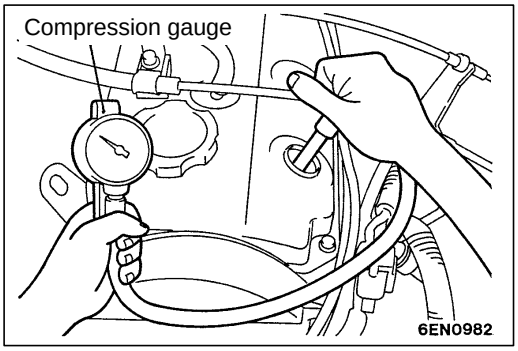

Caution
1. Keep away from the spark plug hole when cranking.
2. If compression is measured with water, oil, fuel, etc., that has come from cracks inside the cylinder, these materials will become heated and will gush out from the spark plug hole, which is dangerous.

6. Set compression gauge to one of the spark plug holes.
7. Crank the engine with the throttle valve fully open and measure the compression pressure.

   Standard value (at engine speed of 250–400 r/min):
   4G63: 1,270 kPa
   4G64: 1,320 kPa

   Limit (at engine speed of 250–400 r/min):
   4G63: min. 960 kPa
   4G64: min. 1,000 kPa

8. Measure the compression pressure for all the cylinders, and check that the pressure differences of the cylinders are below the limit.

   Limit: max. 100 kPa

9. If there is a cylinder with compression or a compression difference that is outside the limit, pour a small amount of engine oil through the spark plug hole, and repeat the operations in steps (7) and (8).
   (1) If the compression increases after oil is added, the cause of the malfunction is a worn or damaged piston ring and/or cylinder inner surface.
   (2) If the compression does not rise after oil is added, the cause is a burnt or defective valve seat, or pressure is leaking from the gasket.
10. Connect the distributor connector.
11. Install the spark plugs and spark plug cables.
12. Use the MUT-II to erase the diagnosis codes.

    NOTE
    This will erase the problem code resulting from the distributor connector being disconnected.

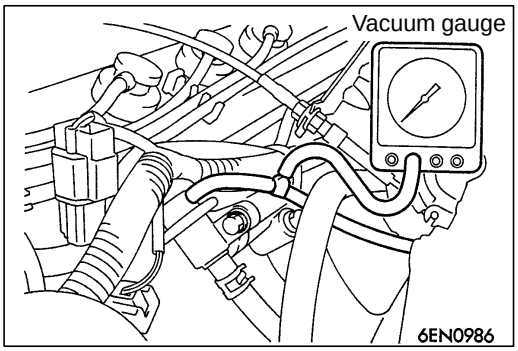

MANIFOLD VACUUM CHECK

11100270270

1. Start the engine and allow it to warm up until the temperature of the engine coolant reaches 80 to 95°C.
2. Connect a tachometer.
3. Attach a three-way union to the vacuum hose between the fuel pressure regulator and the air intake plenum, and connect a vacuum gauge.
4. Start the engine and check that idle speed is within specification. Then read off the vacuum gauge.

   Standard value: min. 60 kPa

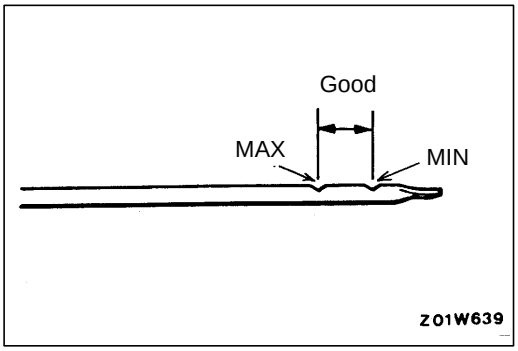

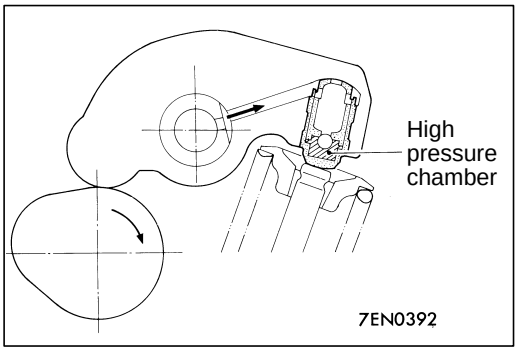

LASH ADJUSTER CHECK

11100290214

NOTE
Soon after the engine is started or while it is running, abnormal noise (clattering) which may be attributed to the adjuster sounds but does not stop. In this case, check the following.

1. Check the engine oil, and refil or replace oil if necessary.

   NOTE
   1. If the oil amount is small, air will be sucked from the oil strainer and mixed in the oil passage.
   2. If the oil amount is excessive, the oil will be stirred by the crank and mixed with a large amount of air.
   3. Air and oil can not be separated easily in the deteriorated oil, and the amount of air mixed in the oil increases.

   If such mixed-in air enters the high pressure chamber in the lash adjuster, the air in the high-pressure chamber will be compressed while the valve is opened, the lash adjuster will be excessively compressed and abnormal noise will be produced when the valve is closed.
   This is the same phenomenon which occurs when the valve clearance is improperly adjusted to be excessively large.
   However, it will return to be normal if the air entrapped in the adjuster is released in this case.
2. Start the engine, and slowly race* it several times (10 times or less).
   If the abnormal noise is eliminated by racing the engine, it means that the air is released from the high-pressure chamber of the lash adjuster and the function of the lash adjuster is returned to normal.
   * Gradually increase the engine speed from the idle speed to 3,000 r/min (for 30 seconds), and then gradually slow down the engine to the idling speed (for 30 seconds).

   NOTE
   1. If the vehicle is parked on a slope for a long time, the oill will be sometimes reduced in the lash adjuster, and air will enter the high-pressure chamber when the engine is started.
   2. After the vehicle is parked for a long time, the oil will go out of the oil passage. Since it takes a little time to supply oil to the lash adjuster, air sometimes enters the high-pressure chamber.

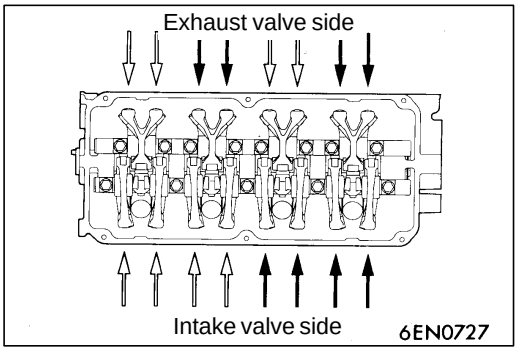

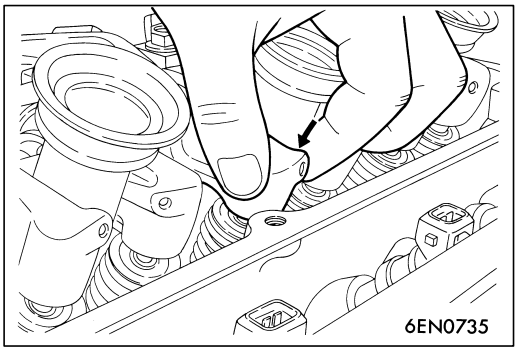

3. If any abnormal noise is not eliminated by racing, check the lash adjuster.
   (1) Stop the engine.
   (2) Set the engine so that cylinder No. 1 is positioned at the top dead centre of the compression.
   (3) Press the rocker arm at the area indicated by the white arrow mark to check whether the rocker arm is lowered or not.
   (4) Slowly turn the crankshaft 360 degrees clockwise.
   (5) In the same procedure as step (3), check the rocker arm at the area indicated by the black arrow mark.

   (6) If the rocker arm is easily lowered when the section directly above the lash adjuster of the rocker arm is pressed, the lash adjuster is defective, so replace it.
   Moreover, if it is felt to be so hard that the rocker arm is not lowered when it is pressed, the lash adjuster is normal. Check for other causes of the abnormality. For Y-formed rocker arm at the exhaust valve side, if one lash adjuster is defective and the other is normal, it is impossible to press the rocker arm. In this case, remove the lash adjuster and carry out the leak down test.

NOTE
1. A leak down test can be performed to accurately determine whether the lash adjuster is defective or not.
2. For the procedures for the leak down test and air bleeding of the lash adjuster, refer to the Engine Workshop Manual.

CAMSHAFT OIL SEAL

11200190272

REMOVAL AND INSTALLATION

Pre-removal and Post-installation Operation
- Distributor Removal and Installation

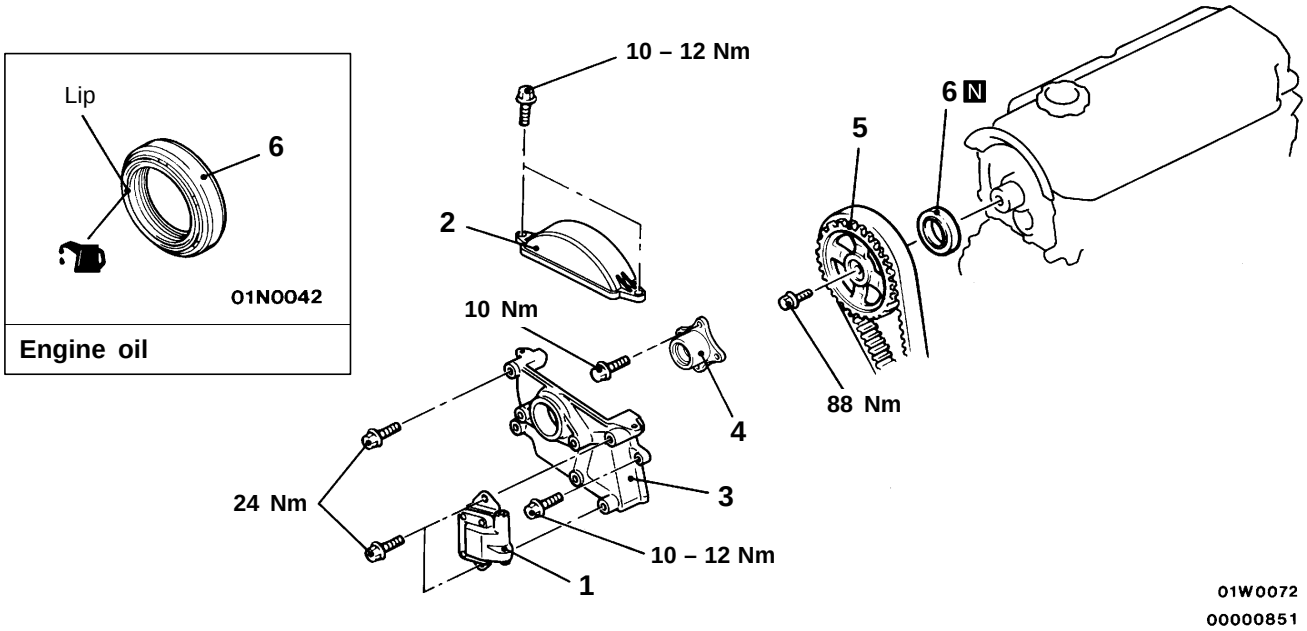

Removal steps

1. Ignition coil
2. Timing belt upper cover assembly
3. Distributor bracket
4. ▶C◀ Camshaft sprocket spacer
5. ◀A▶ ▶B◀ Camshaft sprocket
6. ◀B▶ ▶A◀ Camshaft oil seal

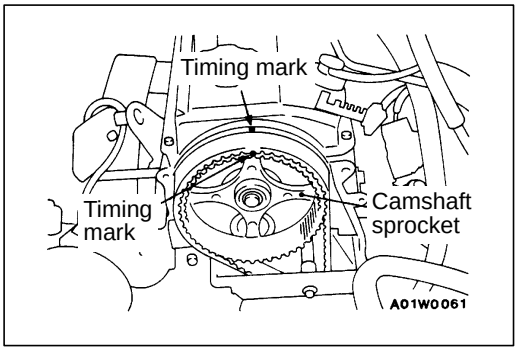

REMOVAL SERVICE POINTS

◀A▶ CAMSHAFT SPROCKET REMOVAL

1. Rotate the crankshaft in the forward (right) direction and align the timing mark.

   Caution
   The crankshaft must always be rotated in the forward direction only.

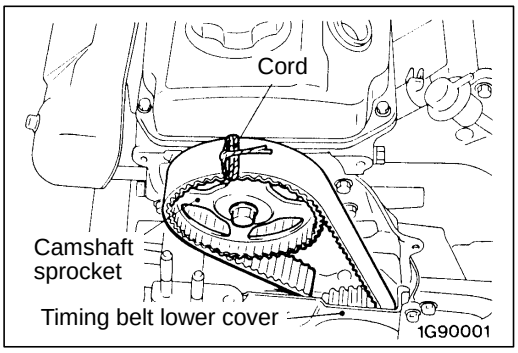

2. Tie the camshaft sprocket and timing belt with a cord so that the position of the camshaft sprocket will not move with respect to the timing belt.

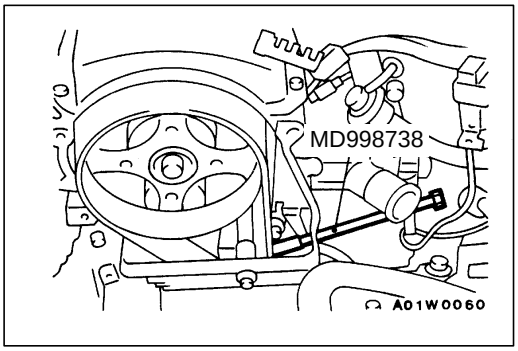

3. Insert the special tool into the rubber plug hole in the timing belt cover assembly rear and turn it gently. Stop turning the special tool when it can no longer be turned gently.

   NOTE
   This work will make the end of the special tool touch the tensioner arm. So the auto tensioner will stop and the timing belt tension will not vary.

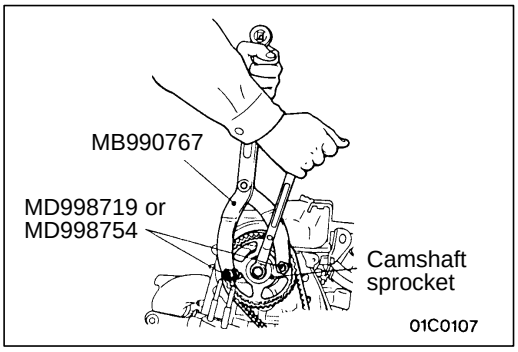

4. Use the special tool to remove the camshaft sprocket with the timing belt attached.

   Caution
   After removing the camshaft sprocket, be sure not to rotate the crankshaft.

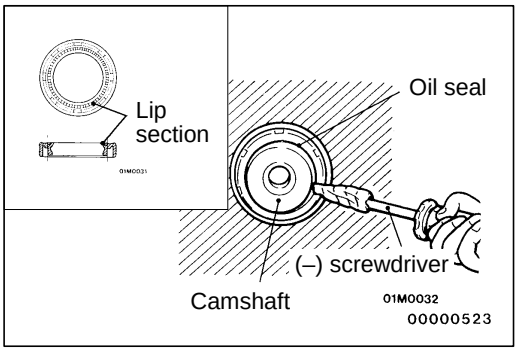

◀B▶ CAMSHAFT OIL SEAL REMOVAL

1. Make a notch in the oil seal lip section with a knife, etc.
2. Cover the end of a (–) screwdriver with a rag and insert into the notched section of the oil seal, and lever out the oil seal to remove it.

   Caution
   Be careful not to damage the camshaft and the cylinder head.

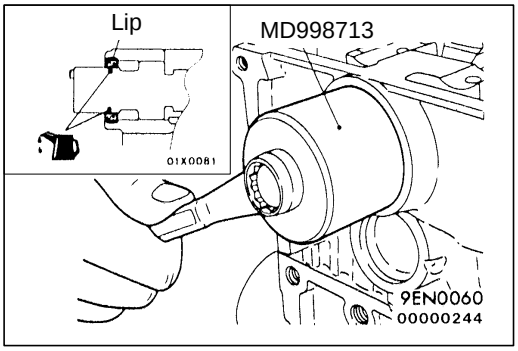

INSTALLATION SERVICE POINTS

▶A◀ CAMSHAFT OIL SEAL INSTALLATION

1. Apply engine oil to the camshaft oil seal lip.
2. Use the special tool to press-fit the camshaft oil seal.

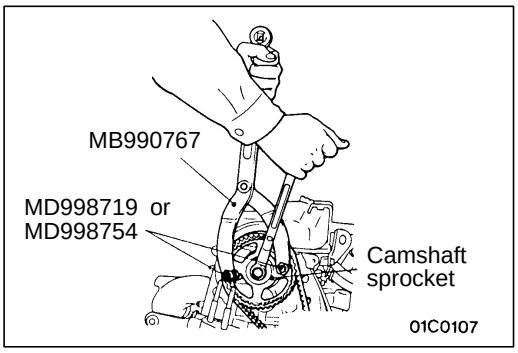

▶B◀ CAMSHAFT SPROCKET INSTALLATION

1. Use the special tool to stop the camshaft sprocket from turning, and then install the camshaft sprocket bolt.
2. Remove the special tool from the rubber plug hole.
3. Remove the cord which binds the camshaft sprocket and timing belt.

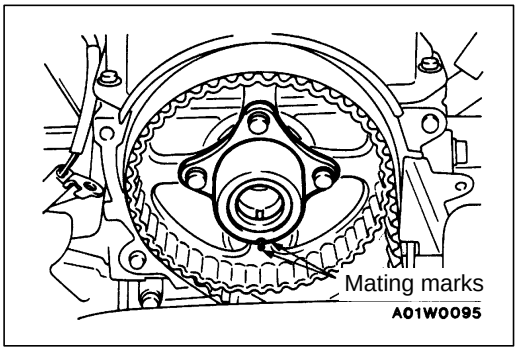

▶C◀ CAMSHAFT SPROCKET SPACER INSTALLATION

Align the mating marks on the camshaft sprocket and the camshaft sprocket spacer (groove), and then install them.

OIL PAN AND OIL SCREEN

11200250185

REMOVAL AND INSTALLATION

Pre-removal and Post-installation Operation
- Under Cover Removal and Installation
- Engine Oil Draining and Refilling
  (Refer to GROUP 12 – On-vehicle Service.)

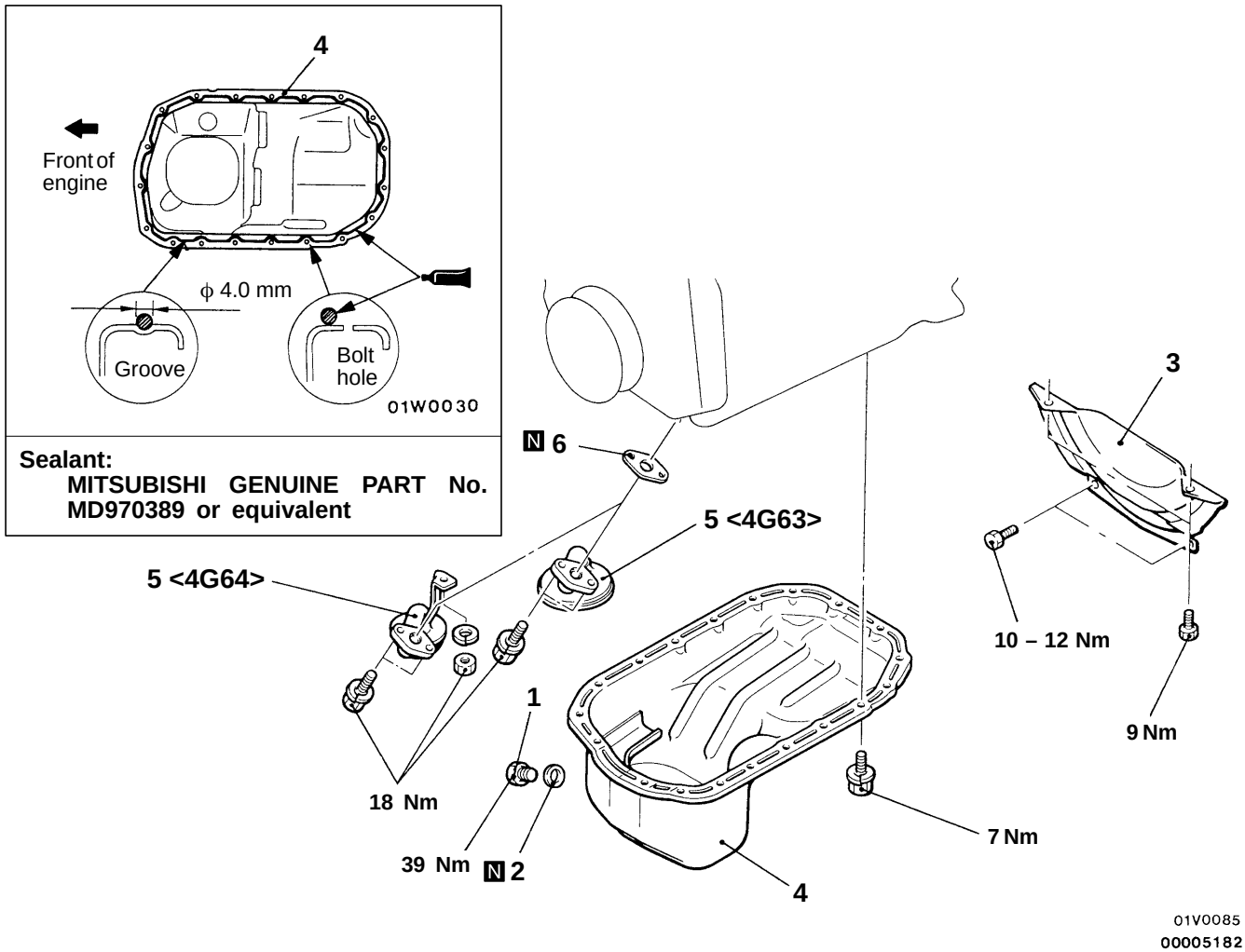

Removal steps

1. Drain plug
▶B◀ 2. Drain plug gasket
3. Bell housing cover
◀A▶ ▶A◀ 4. Oil pan
5. Oil screen
6. Gasket

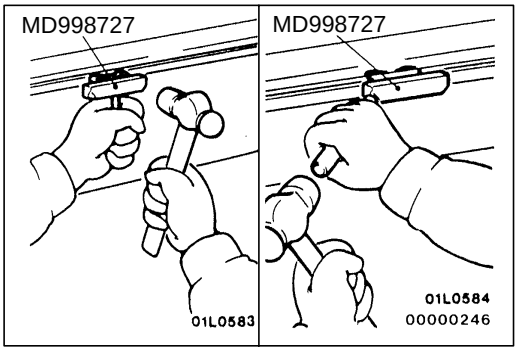

REMOVAL SERVICE POINT

◀A▶ OIL PAN REMOVAL

After removing the oil pan mounting bolts, remove the oil pan with the special tool and a brass bar.

Caution
Perform this slowly to avoid deformation of the oil pan flange.

INSTALLATION SERVICE POINTS

▶A◀ OIL PAN INSTALLATION

1. Remove sealant from oil pan and cylinder block mating surfaces.
2. Degrease the sealant-coated surface and the engine mating surface.
3. Apply the specified sealant around the gasket surface of oil pan.

   Specified sealant: MITSUBISHI GENUINE PART No. MD970389 or equivalent

   NOTE
   The sealant should be applied in a continuous bead approximately 4 mm in diameter.

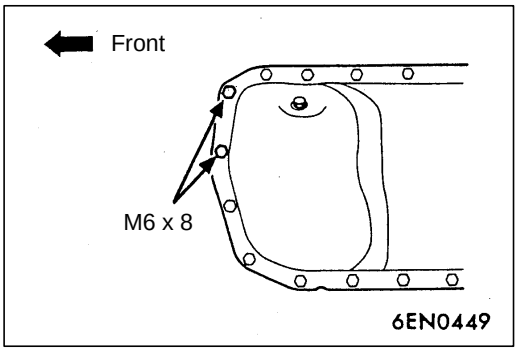

4. Assemble oil pan to cylinder block within 15 minutes after applying the sealant.

   Caution
   After installing the oil pan, wait at least 1 hour before starting the engine.

   Be careful when installing, as the bolts indicated in the illustration have different lengths from the other bolts.

▶B◀ DRAIN PLUG GASKET INSTALLATION

Install the drain plug gasket in the direction so that it faces as shown in the illustration.

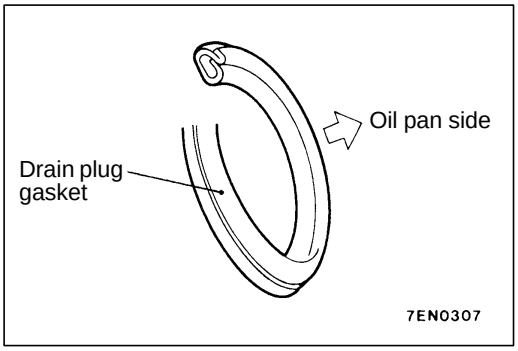

INSPECTION

11200260041

- Check oil pan for cracks.
- Check oil pan sealant-coated surface for damage and deformation.
- Check oil screen for cracked, clogged or damaged wire net and pipe.

CYLINDER HEAD GASKET

11200400351

REMOVAL AND INSTALLATION

Pre-removal Operation
- Engine Coolant Draining
  (Refer to GROUP 14 – On-vehicle Service.)
- Fuel Line Pressure Releasing
  (Refer to GROUP 13A – On-vehicle Service.)
- Battery Removal
- Air Cleaner Assembly Removal
  (Refer to GROUP 15.)
- Distributor Removal

Post-installation Operation
- Distributor installation
- Air Cleaner Assembly installation
  (Refer to GROUP 15.)
- Battery Installation
- Engine Coolant Refilling
  (Refer to GROUP 14 – On-vehicle Service.)
- Accelerator Cable Adjustment
  (Refer to GROUP 17 – On-vehicle Service.)
- Throttle Cable Adjustment
  (Refer to GROUP 23 – On-vehicle Service.)

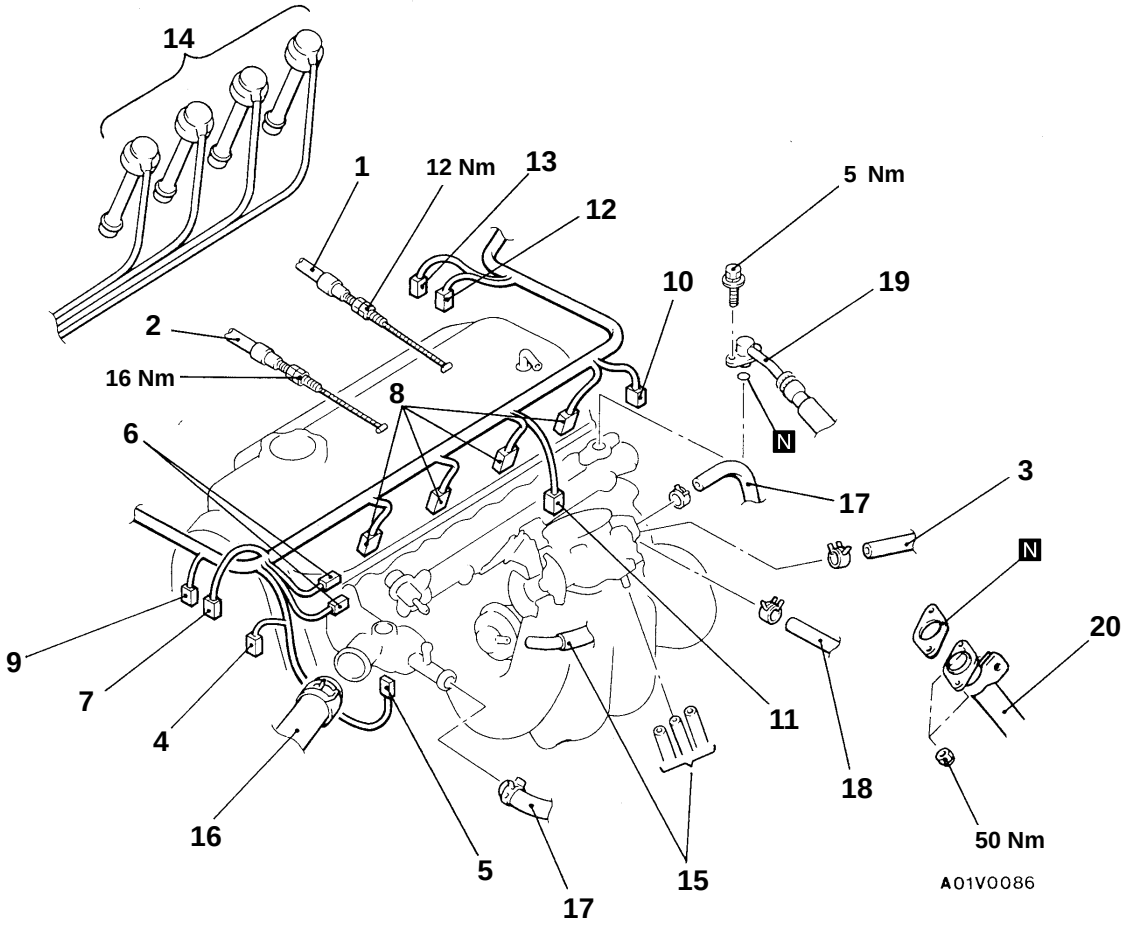

Removal steps

1. Accelerator cable connection
2. Throttle cable connection <A/T>
3. Brake booster vacuum hose connection
4. Ignition coil connector
5. Engine coolant temperature sensor connector
6. Noise filter connector
7. Power transistor connector
8. Injector connectors
9. Capacitor connector
10. Throttle position sensor connector
11. Idle speed control servo connector
12. Engine coolant temperature gauge unit connector
13. Engine coolant temperature switch connector <A/T>
14. Spark plug cable
15. Vacuum hose connection
16. Radiator upper hose connection
17. Water hose connections
18. Fuel return hose connection
19. High-pressure fuel hose connection
20. Front exhaust pipe connection

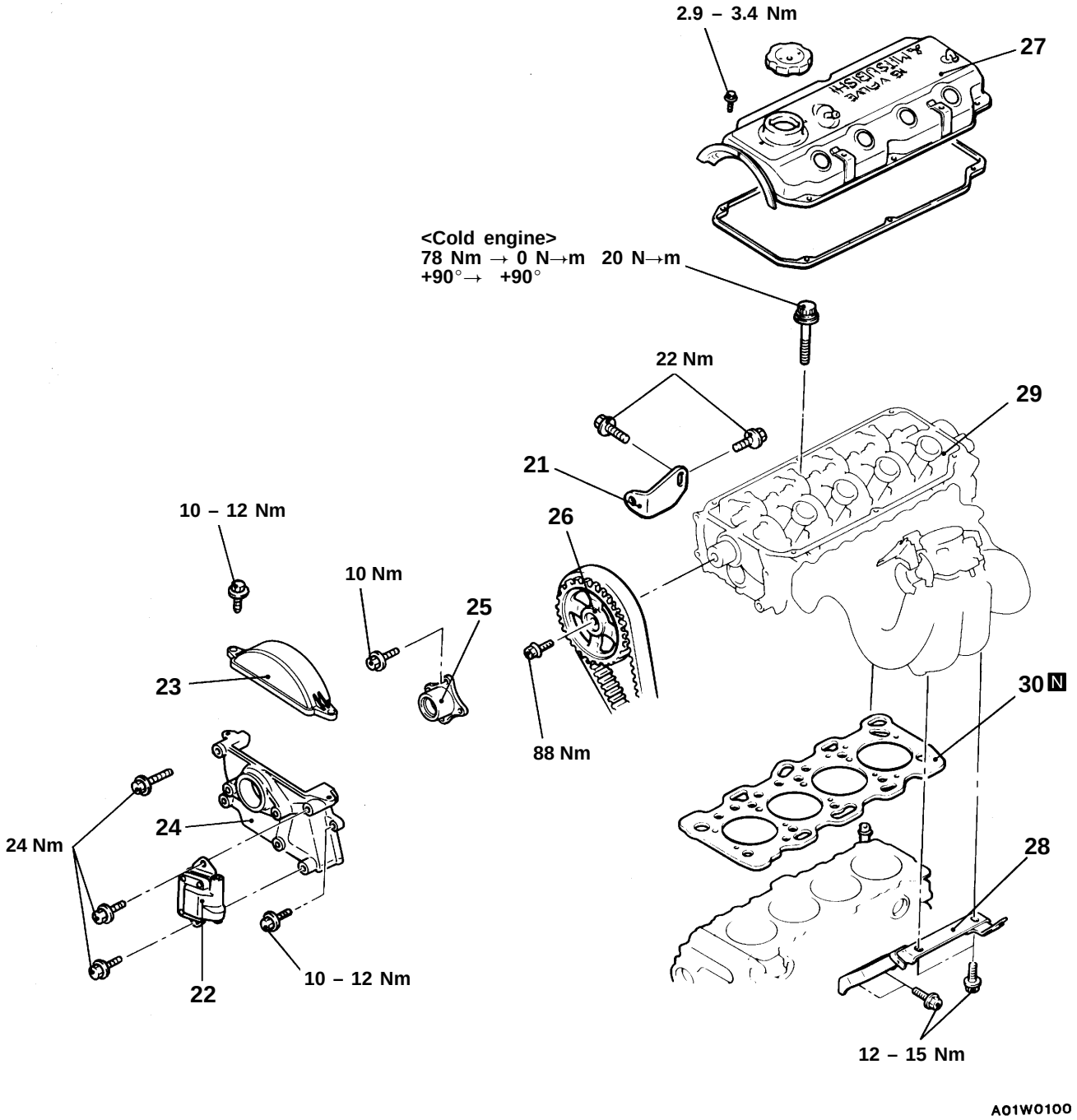

21. Power steering pump mount bracket
22. Ignition coil
23. Timing belt upper cover assembly
24. Distributor bracket
▶D◀ 25. Camshaft sprocket spacer
◀A▶ ▶C◀ 26. Camshaft sprocket
27. Rocker cover
28. Intake manifold stay
◀B▶ ▶B◀ 29. Cylinder head assembly
▶A◀ 30. Cylinder head gasket

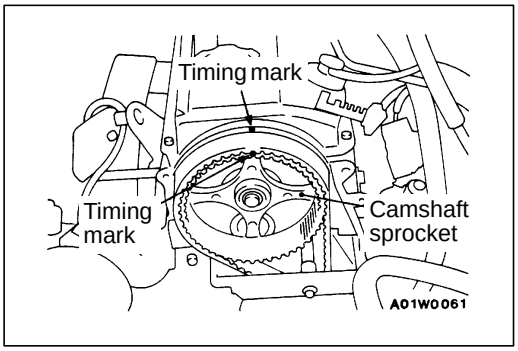

REMOVAL SERVICE POINTS

◀A▶ CAMSHAFT SPROCKET REMOVAL

1. Rotate the crankshaft in the forward (right) direction and align the timing mark.

   Caution
   The crankshaft must always be rotated in the forward direction only.

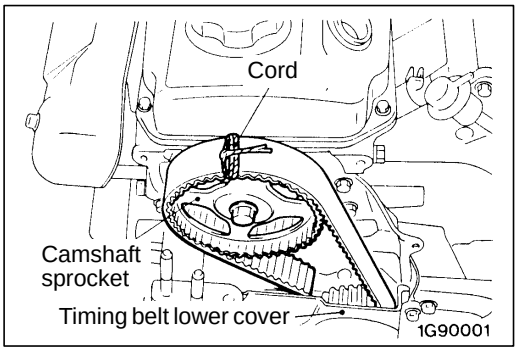

2. Tie the camshaft sprocket and timing belt with a cord so that the position of the camshaft sprocket will not move with respect to the timing belt.

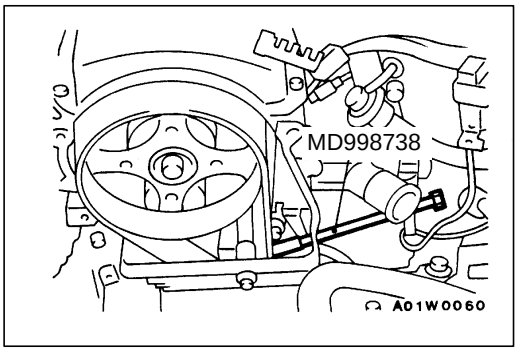

3. Insert the special tool into the rubber plug hole in the timing belt cover assembly rear and turn it gently. Stop turning the special tool when it can no longer be turned gently.

   NOTE
   This work will make the end of the special tool touch the tensioner arm. So the auto tensioner will stop and the timing belt tension will not vary.

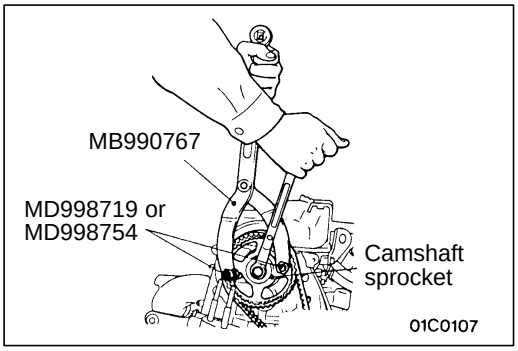

4. Use the special tool to remove the camshaft sprocket with the timing belt attached.

   Caution
   After removing the camshaft sprocket, be sure not to rotate the crankshaft.

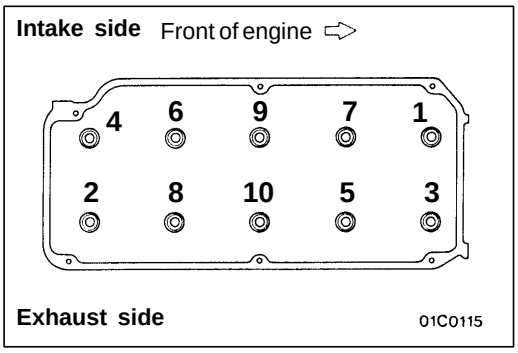

◀B▶ CYLINDER HEAD ASSEMBLY REMOVAL

Loosen the bolts in 2 or 3 steps in order of the numbers shown in the illustration, and remove the cylinder head assembly.

Caution
Because the plug guides cannot be replaced by themselves, be careful not to damage or deform the plug guides when removing the cylinder head bolts.

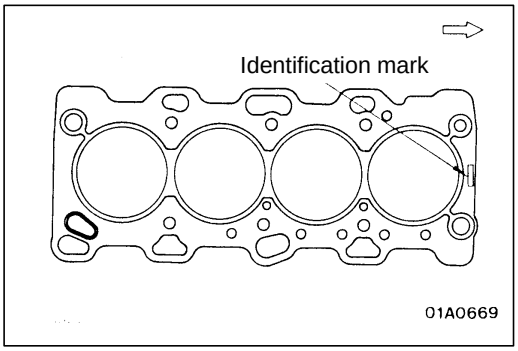

INSTALLATION SERVICE POINTS

▶A◀ CYLINDER HEAD GASKET INSTALLATION

1. Wipe off all oil and grease from the gasket mounting surface.
2. Install the gasket to the cylinder block with the identification mark facing upwards.

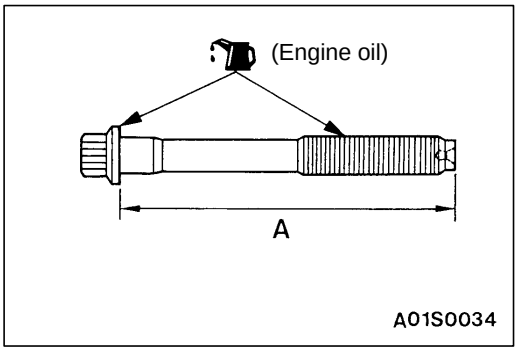

▶B◀ CYLINDER HEAD ASSEMBLY INSTALLATION

1. When installing the cylinder head bolts, the length below the head of the bolts should be within the limit.
   If it is outside the limit, replace the bolts.

   Limit (A): 99.4 mm
2. Apply a small amount of engine oil to the thread section and the washer of the cylinder head bolt.

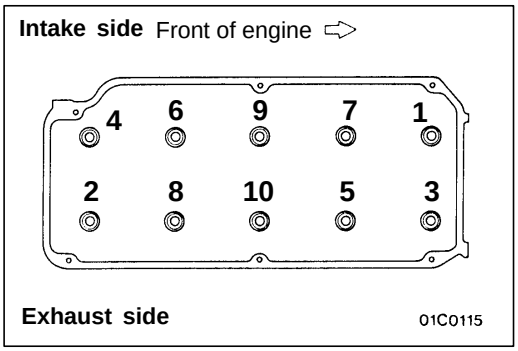

3. Tighten the bolts by the following procedure.

Step	Operation	Remarks
1	Tighten to 78 Nm.	Carry out in the order shown in the illustration.
2	Fully loosen.	Carry out in the reverse order of that shown in the illustration.
3	Tighten to 20 Nm.	Carry out in the order shown in the illustration.
4	Tighten 90° of a turn.	In the order shown in the illustration. Mark the head of the cylinder head bolt and cylinder head by paint.
5	Tighten 90° of a turn.	In the order shown in the illustration. Check that the painted mark of the head bolt is lined up with that of the cylinder head.

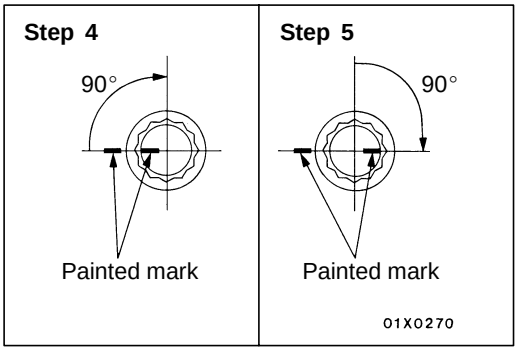

Caution

1. **Always make a tightening angle just 90°. If it is less than 90°, the head bolt will be loosened.**
2. **If it is more than 90°, remove the head bolt and repeat the procedure from step 1.**

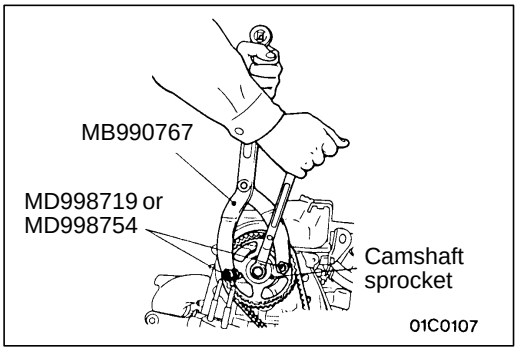

▶C◀ CAMSHAFT SPROCKET INSTALLATION

1. Use the special tool to stop the camshaft sprocket from turning, and then install the camshaft sprocket bolt.
2. Remove the special tool from the rubber plug hole.
3. Remove the cord which binds the camshaft sprocket and timing belt.

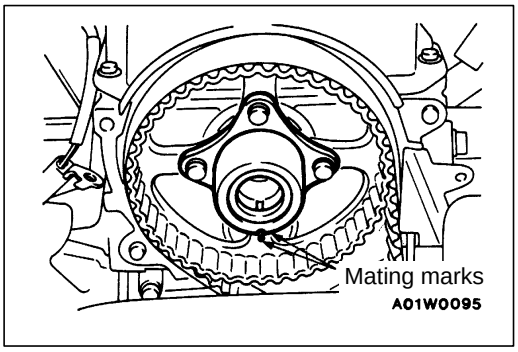

▶D◀ CAMSHAFT SPROCKET SPACER INSTALLATION

Align the mating marks on the camshaft sprocket and the camshaft sprocket spacer (groove), and then install them.

TIMING BELT, TIMING BELT B

11200430336

REMOVAL AND INSTALLATION

Pre-removal and Post-installation Operation
- Engine Coolant Draining and Refilling (Refer to GROUP 14 – On-vehicle Service.)
- Cooling Fan Removal and Installation (Refer to GROUP 14.)
- Distributor Removal and Installation

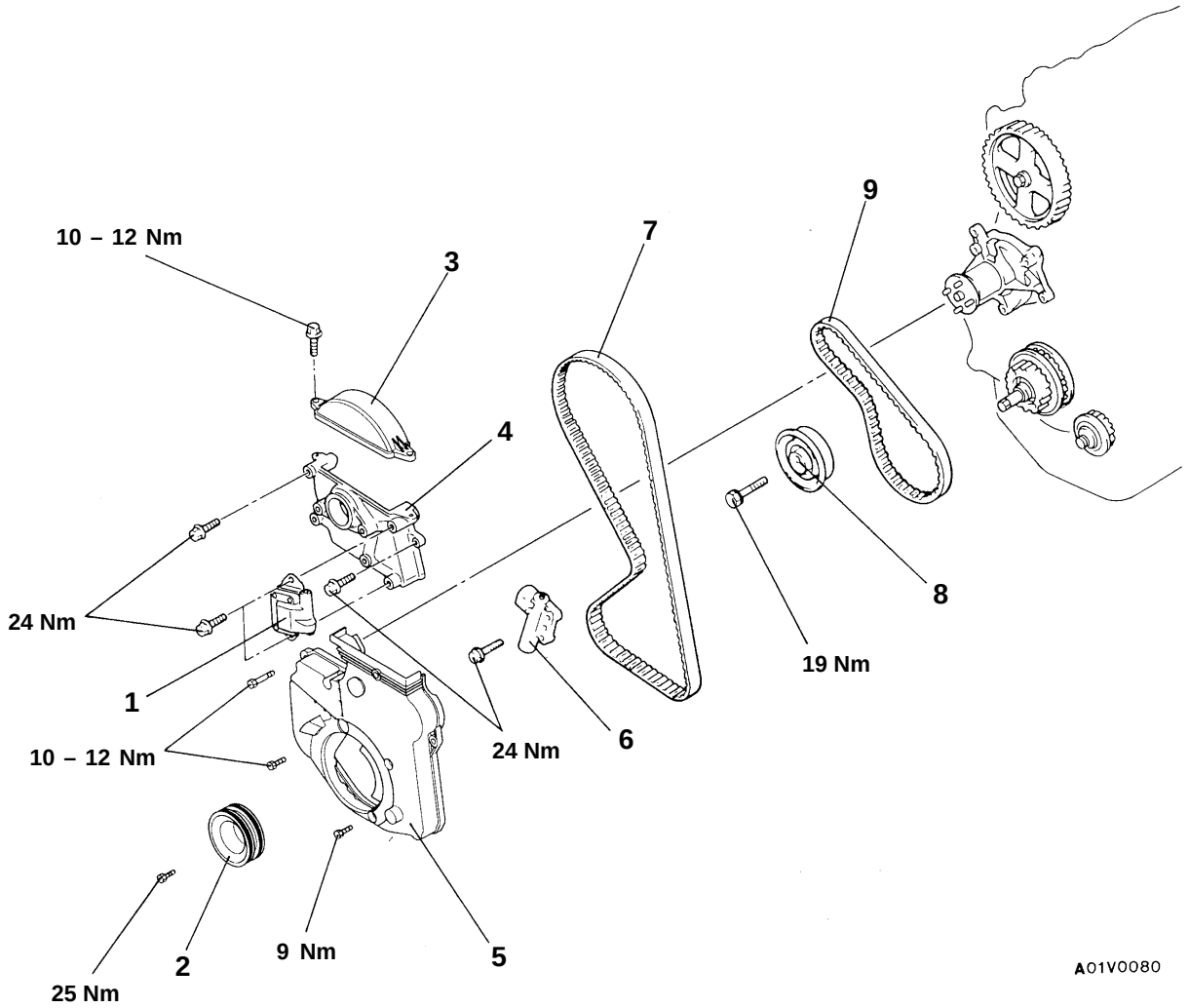

Removal steps

1. Ignition coil
2. Crankshaft pulley
3. Timing belt upper cover assembly
4. Distributor bracket
5. Timing belt lower cover assembly
   ▶E◀ ● Timing belt tension adjustment
   ◀A▶ ▶D◀ 6. Auto tensioner
   ◀B▶ ▶C◀ 7. Timing belt
   ▶B◀ ● Timing belt B tension adjustment
8. Timing belt B tensioner
   ◀B▶ ▶A◀ 9. Timing belt B

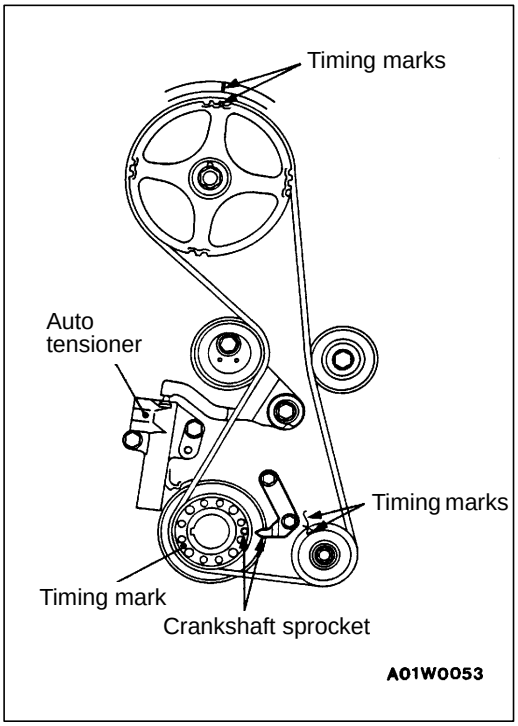

REMOVAL SERVICE POINTS

◀A▶ AUTO TENSIONER REMOVAL

1. Turn the crankshaft clockwise (right turn) to align each timing marks and to set the No. 1 cylinder to compression top dead centre.

   Caution
   Never turn the crankshaft anticlockwise.

2. Remove the auto tensioner.

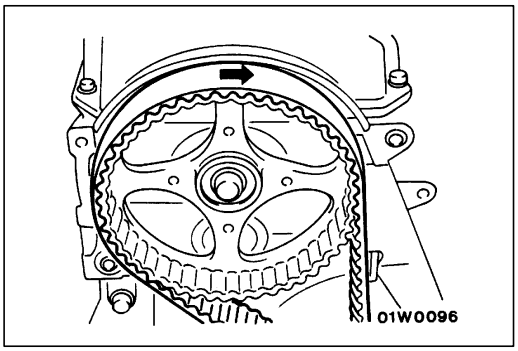

◀B▶ TIMING BELT/TIMING BELT B REMOVAL

Caution
If the belt is to be re-used, chalk the belt with an arrow indicating the clockwise direction of rotation.

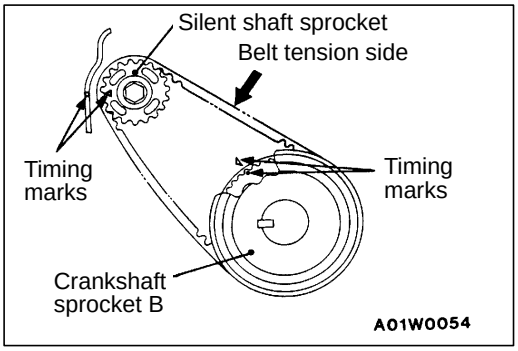

INSTALLATION SERVICE POINTS

▶A◀ TIMING BELT B INSTALLATION

1. Ensure that crankshaft sprocket ”B” timing marks and the silent shaft sprocket timing marks are aligned.
2. Fit timing belt ”B” over crankshaft sprocket B and the silent shaft sprocket. Ensure that there is no slack in the belt.

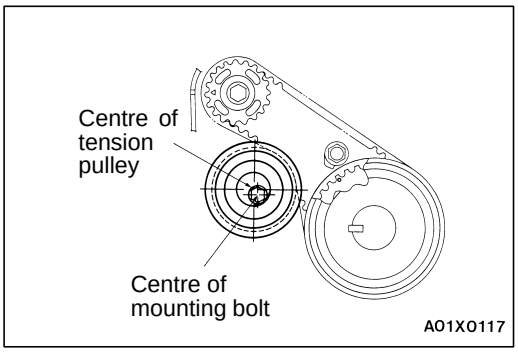

▶B◀ TIMING BELT B TENSION ADJUSTMENT

1. Temporarily fix the timing belt ”B” tensioner such that the centre of the tensioner pulley is to the left and above the centre of the installation bolt, and temporarily attach the tensioner pulley so that the flange is toward the front of the engine.

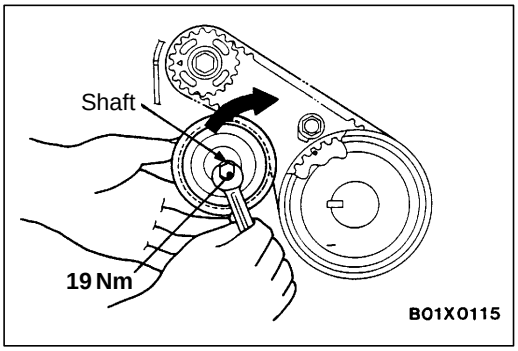

2. Holding the timing belt ”B” tensioner up with your finger in the direction of the arrow, apply pressure on the timing belt so that the tension side of the belt is taut. Now tighten the bolt to fix the tensioner.

   Caution
   When tightening the bolt, ensure that the tensioner pulley shaft does not rotate with the bolt. Allowing it to rotate with the bolt can cause excessive tension of the bolt.

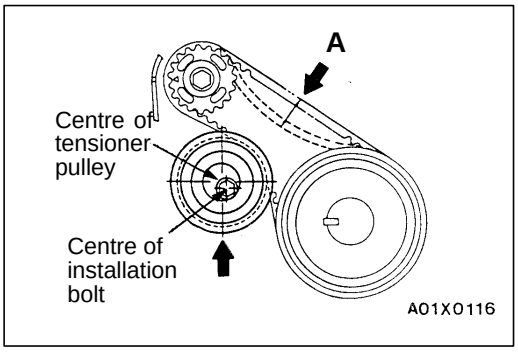

3. To ensure that the tension is correct, depress the belt (point A) with a finger. Adjust the belt tension if it is incorrect.

   Standard value: 5 – 7 mm

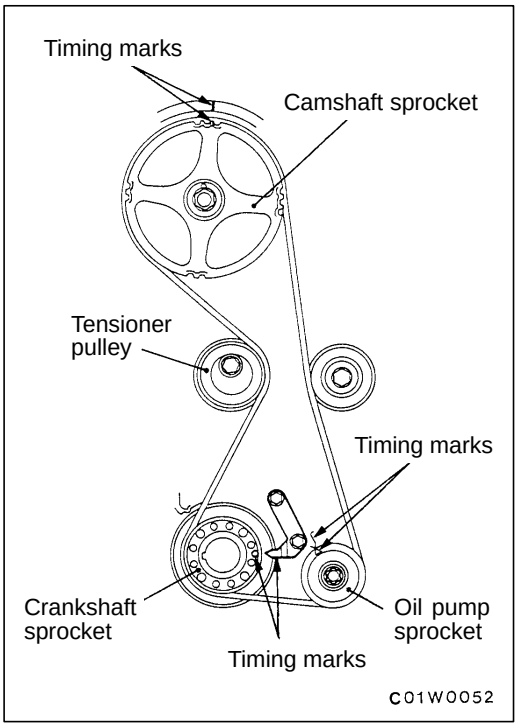

▶C◀ TIMING BELT INSTALLATION

1. Check that the timing marks of the camshaft sprocket, crankshaft sprocket and oil pump sprocket are all aligned.

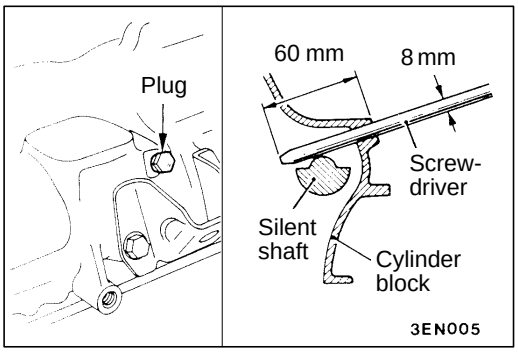

2. After aligning the timing marks on the oil pump sprocket, remove the cylinder block plug and insert a Phillips screwdriver with a diameter of 8 mm, and check to be sure that the screwdriver goes in 60 mm or more. If the screwdriver will only go in 20 – 25 mm before striking the silent shaft, turn the sprocket once, realign the timing mark and check that the screwdriver goes in 60 mm or more. The screwdriver should not be taken out until the timing belt is installed.

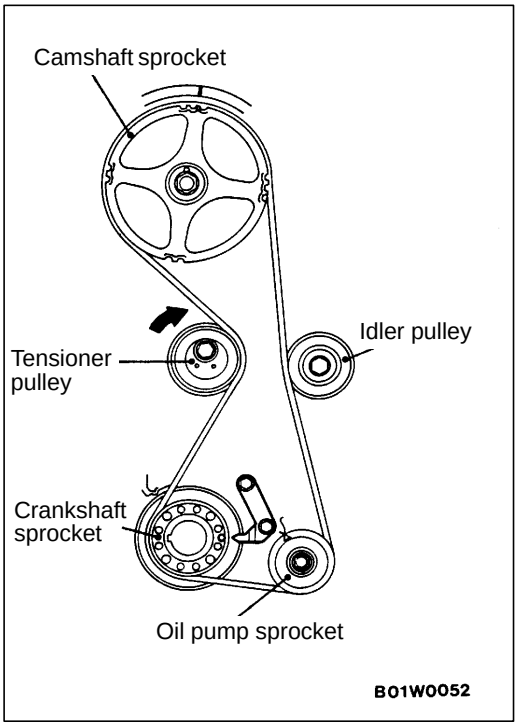

3. Install the timing belt by the following procedure.
   (1) Place the timing belt onto the tensioner pulley and crankshaft sprocket, and hold it with your left hand so that it doesn't slip.
   (2) While pulling the timing belt with your right hand, place it onto the oil pump sprocket.
   (3) Place the timing belt onto the idler pulley and camshaft sprocket.
   (4) Push the tensioner pulley in the direction shown by the arrow to apply tension to the timing belt, and then tighten the tensioner pulley fixing bolt.

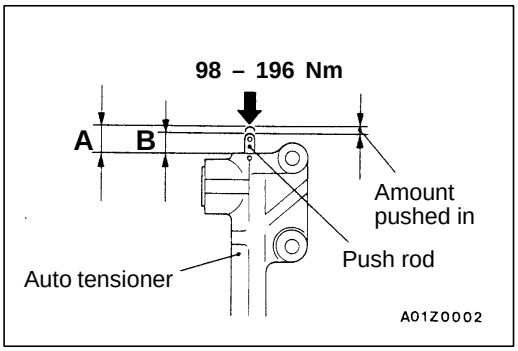

▶D◀ AUTO TENSIONER INSTALLATION

1. While holding the auto-tensioner by hand, press the end of the rod against a metal surface (such as the cylinder block) with a force of 98 – 196 Nm and measure how far the rod is pushed in.

   Standard value: Within 1 mm
   A: Length when no force is applied
   B: Length when force is applied
   A – B: Amount pushed in

2. If it is not within the standard value, replace the auto tensioner.

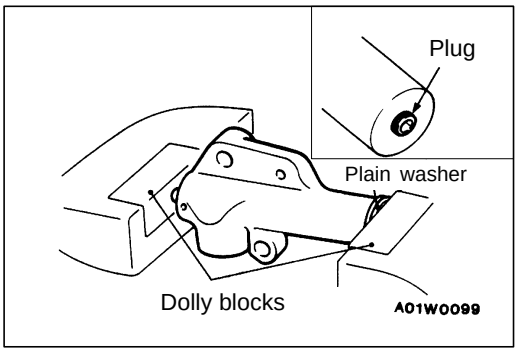

3. Place two dolly blocks in a vice as shown in the illustration, and then place the auto tensioner in the vice.

   Caution
   (1) Place the auto tensioner perpendicular to the jaws of the vice.
   (2) If there is a plug at the base of the auto tensioner, insert a plain washer onto the end of the auto tensioner to protect the plug.

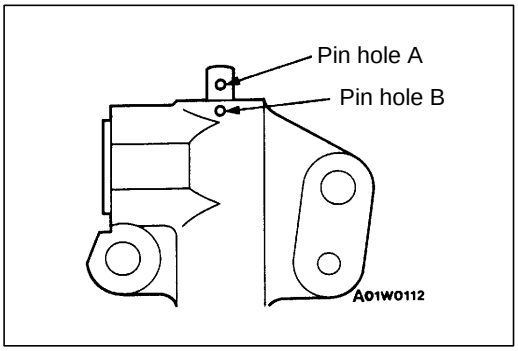

4. Slowly compress the push rod of the auto tensioner until pin hole A in the push rod is aligned with pin hole B in the cylinder.

   Caution
   Never compress the push rod too fast, or the push rod may be damaged.

5. Insert the setting pin into the pin holes once they are aligned.

   NOTE
   If replacing the auto tensioner, the pin will already be inserted into the pin holes.

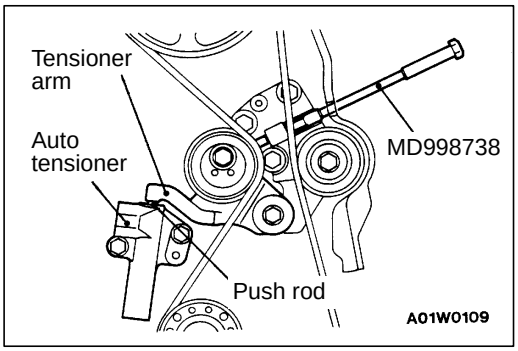

6. Install the auto tensioner to the engine.

   Caution
   Do not remove the setting pin from the auto tensioner.

7. Remove the rubber plug from the timing belt cover assembly rear. Then screw in the special tool by hand until the tensioner arm is touching the auto tensioner push rod.

   Caution
   Do not use a spanner or the similar tool to turn the special tool, otherwise, the auto tensioner setting pin may be broken. Turn the special tool by hand only.

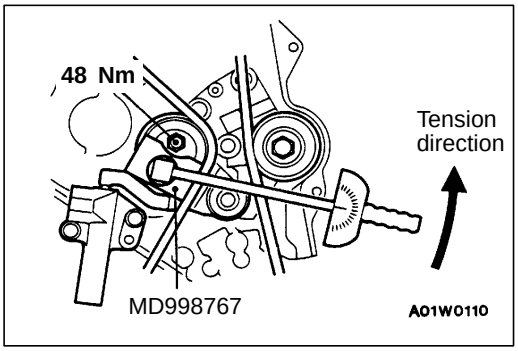

▶E◀ TIMING BELT TENSION ADJUSTMENT

1. Turn the crankshaft 1/4 of a revolution in the anticlockwise direction, then turn it in the clockwise direction until the timing marks are aligned.
2. Loosen the tension pulley fixing bolt, and then use the special tool and a torque wrench to tighten the fixing bolt to the specified torque while applying tension to the timing belt.

   Standard value: 3.5 Nm <Timing belt tension torque>

   Caution
   When tightening the fixing bolt, make sure that the tension pulley does not turn with the bolt.
3. Remove the setting pin that has been inserted into the auto tensioner, and then remove the special tool.
4. Turn the crankshaft two turns clockwise, and wait for approximately 15 minutes.

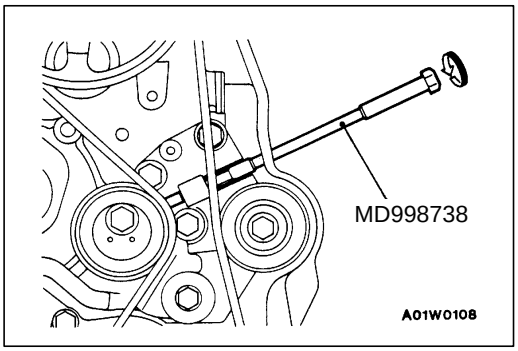

5. Insert the special tool again and turn it by hand until the end of the special tool touches the tensioner arm.

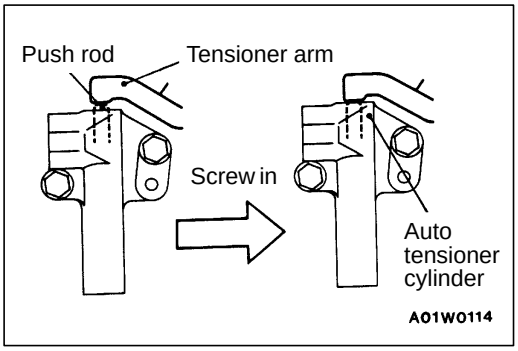

6. Once the end touches, keep turning the special tool until the auto tensioner push rod retracts and the tensioner arm contacts the auto tensioner cylinder.

   Caution
   Turn the special tool slowly 1/4 of a turn at a time.
7. Check that the amount by which the special tool has been screwed in is within the standard value range.

   Standard value: 2.5 – 3 turns
8. Remove the special tool and install the rubber plug.

CRANKSHAFT FRONT OIL SEAL

11200340226

REMOVAL AND INSTALLATION

Pre-removal and Post-installation Operation
- Timing Belt, Timing Belt B Removal and Installation (Refer to P.11A-26.)

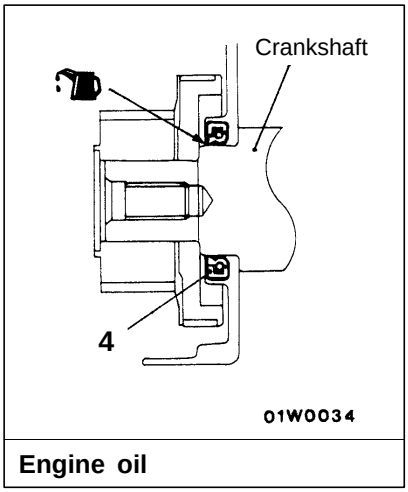

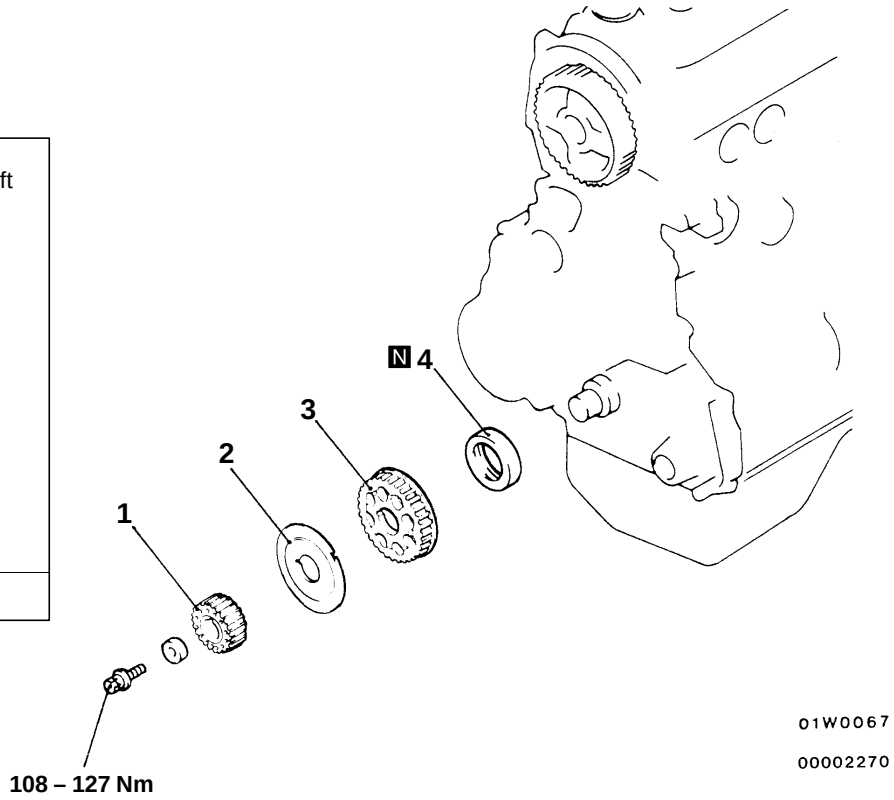

Removal steps

◀A▶ ▶B◀ 1. Crankshaft sprocket
▶B◀ 2. Flange
▶B◀ 3. Crankshaft sprocket B
▶A◀ 4. Crankshaft front oil seal

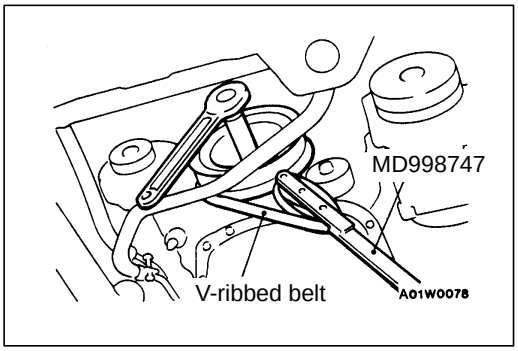

REMOVAL SERVICE POINT

◀A▶ CRANKSHAFT SPROCKET REMOVAL

1. Temporarily install the crankshaft pulley, and then use the V-ribbed belt and the special tool to stop the crankshaft pulley from turning.

   Caution
   (1) Do not use the vehicle's V-ribbed belt, or the belt may be damaged.
   (2) Do not use a damaged V-ribbed belt.

2. Loosen the crankshaft sprocket bolt, and then remove the sprocket.

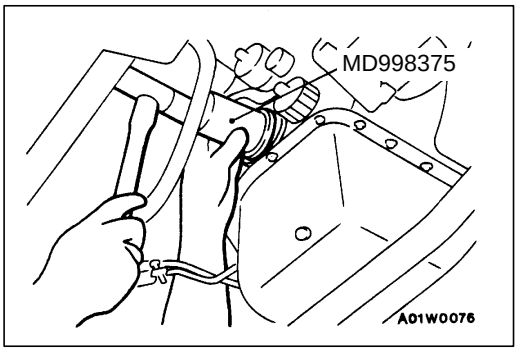

INSTALLATION SERVICE POINTS

▶A◀ CRANKSHAFT FRONT OIL SEAL INSTALLATION

1. Apply engine oil to the entire circumference of the oil seal lip.
2. Press-fit the oil seal until it is flush with the front case.

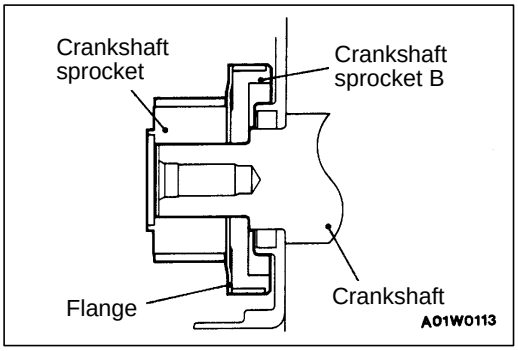

▶B◀ CRANKSHAFT SPROCKET B/FLANGE/ CRANKSHAFT SPROCKET INSTALLATION

1. Install the crankshaft sprocket B, flange and the crankshaft sprocket so that they face as shown in the illustration.

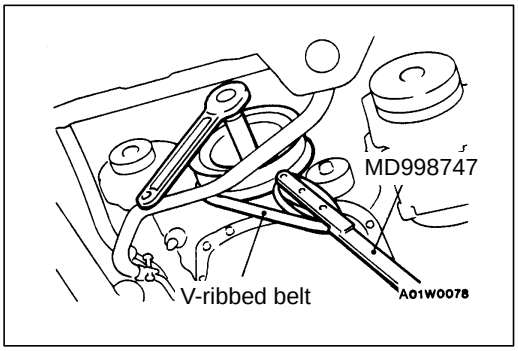

2. Temporarily install the crankshaft pulley, and then use the V-ribbed belt and the special tool to stop the crankshaft pulley from turning.

   Caution
   (1) Do not use the vehicle's V-ribbed belt, or the belt may be damaged.
   (2) Do not use a damaged V-ribbed belt.

3. Tighten the crankshaft sprocket bolt to the specified torque.

   Tightening torque: 108 – 127 Nm

CRANKSHAFT REAR OIL SEAL

11200370232

REMOVAL AND INSTALLATION

Pre-removal and Post-installation Operation
- Transmission Assembly Removal and Installation <2WD> (Refer to GROUP 22, 23.)
- Transmission and Transfer Assembly Removal and Installation <4WD> (Refer to GROUP 22.)

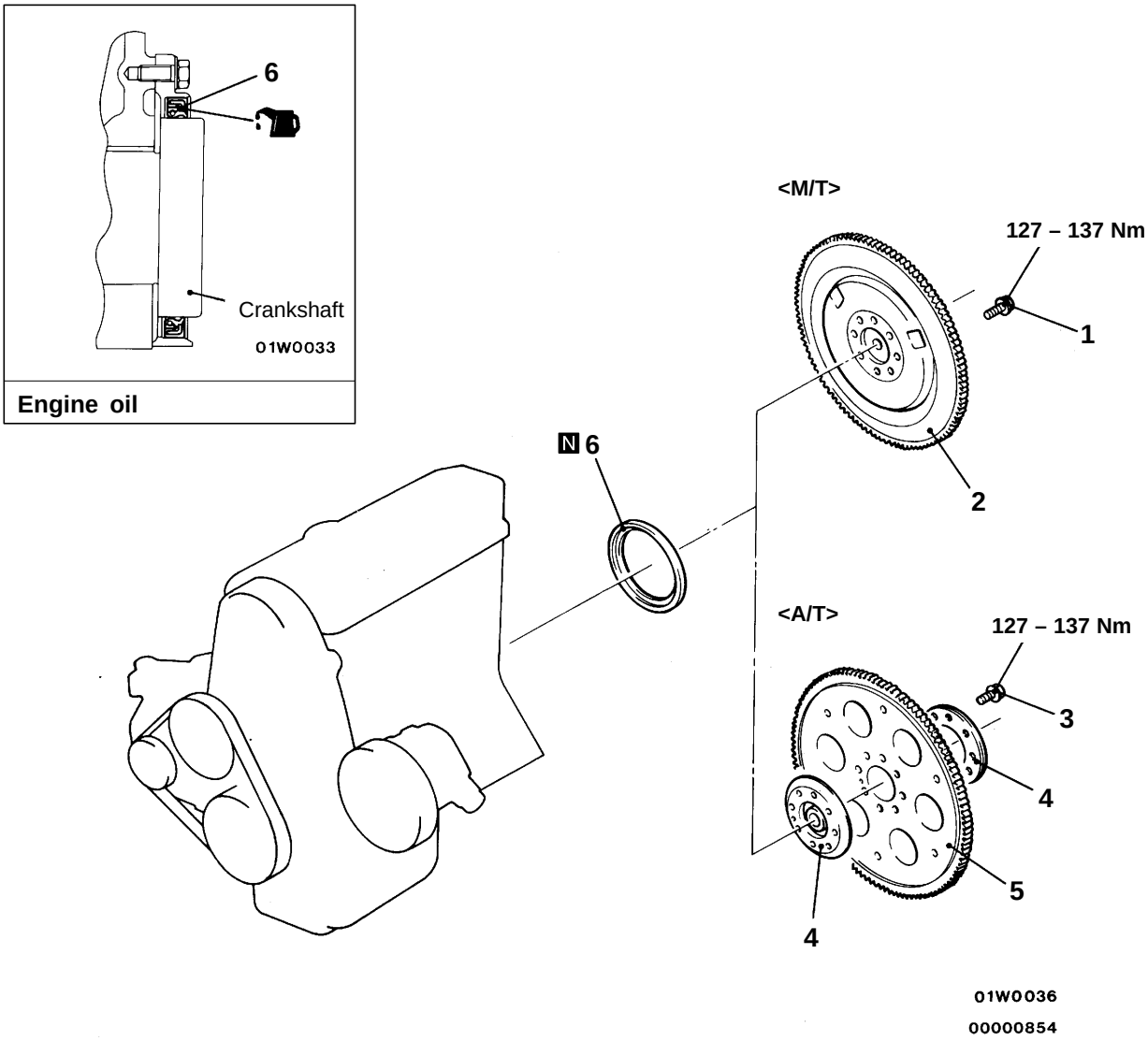

Removal steps
<M/T>
- Clutch cover and clutch disc

◀A▶ ▶B◀ 1. Flywheel bolt
2. Flywheel
▶A◀ 6. Crankshaft rear oil seal

<A/T>
◀A▶ ▶B◀ 3. Drive plate bolt
4. Adaptor plate
5. Drive plate
▶A◀ 6. Crankshaft rear oil seal

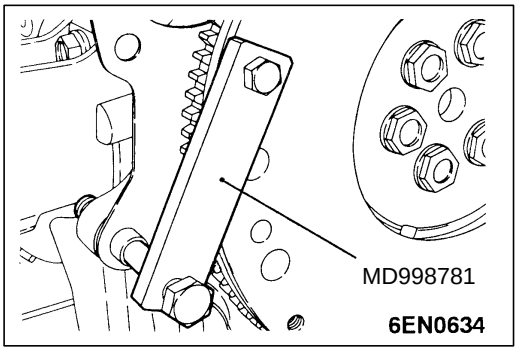

REMOVAL SERVICE POINT

◀A▶ FLYWHEEL BOLT <M/T>/DRIVE PLATE BOLT <A/T> REMOVAL

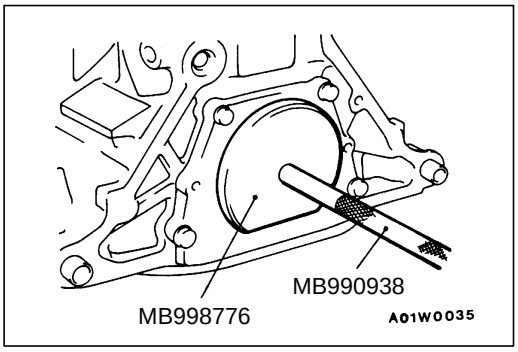

INSTALLATION SERVICE POINTS

▶A◀ CRANKSHAFT REAR OIL SEAL INSTALLATION

1. Apply a small amount of engine oil to the entire circumference of the oil seal lip.
2. Tap in the oil seal as shown in the illustration.

▶B◀ DRIVE PLATE BOLT <A/T>/FLYWHEEL BOLT <M/T> INSTALLATION

Use the special tool to install the drive bolt and flywheel bolt.

ENGINE ASSEMBLY

11200100350

REMOVAL AND INSTALLATION

Pre-removal Operation
- Hood Removal (Refer to GROUP 42.)
- Fuel Line Pressure Releasing (Refer to GROUP 13A – On-vehicle Service.)
- Air Cleaner and Air Intake Hose Removal (Refer to GROUP 15.)
- Battery Removal
- Radiator Removal (Refer to GROUP 14.)
- Transmission Assembly Removal <2WD> (Refer to GROUP 22, 23.)
- Transmission and Transfer Assembly Removal <4WD> (Refer to GROUP 22.)

Post-installation Operation
- Transmission and Transfer Assembly Installation <4WD> (Refer to GROUP 22.)
- Transmission Assembly Installation <2WD> (Refer to GROUP 22, 23.)
- Radiator Installation (Refer to GROUP 14.)
- Battery Installation
- Air Cleaner and Air Intake Hose installation (Refer to GROUP 15.)
- Hood Installation (Refer to GROUP 42.)
- Drive Belt Tension Adjustment (Refer to P. 11A-7.)
- Accelerator Cable Adjustment (Refer to GROUP 17 – On-vehicle Service.)
- Throttle Cable Adjustment <A/T> (Refer to GROUP 23 – On-vehicle Service.)

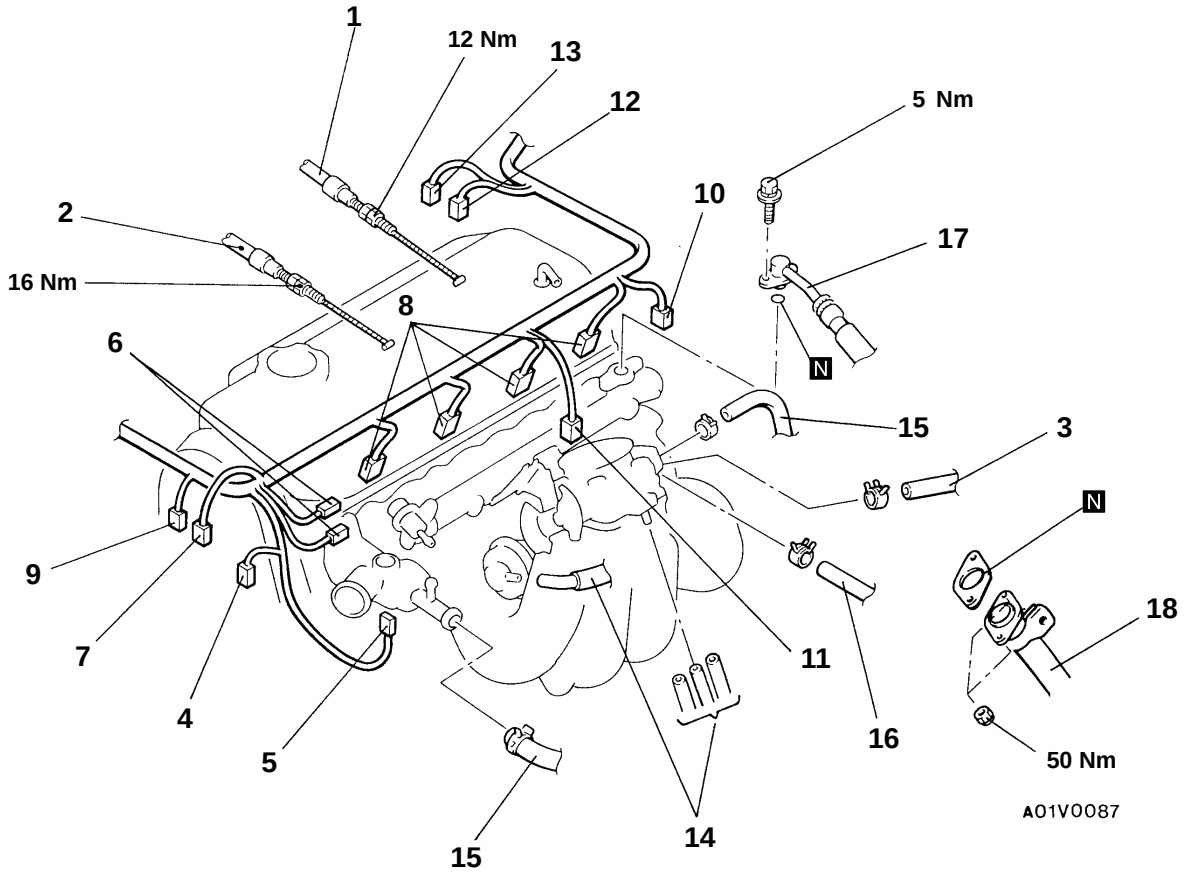

Removal steps

1. Accelerator cable connection
2. Throttle cable connection <A/T>
3. Brake booster vacuum connection
4. Ignition coil connector
5. Engine coolant temperature sensor connector
6. Noise filter connector
7. Power transistor connector
8. Injector connectors
9. Capacitor connector
10. Throttle position sensor connector
11. Idle speed control servo connector
12. Engine coolant temperature gauge unit connector
13. Engine coolant temperature switch connector <A/T>
14. Vacuum hose connection
15. Water hose connections
16. Fuel return hose connection
17. High-pressure fuel hose connection
18. Front exhaust pipe connection

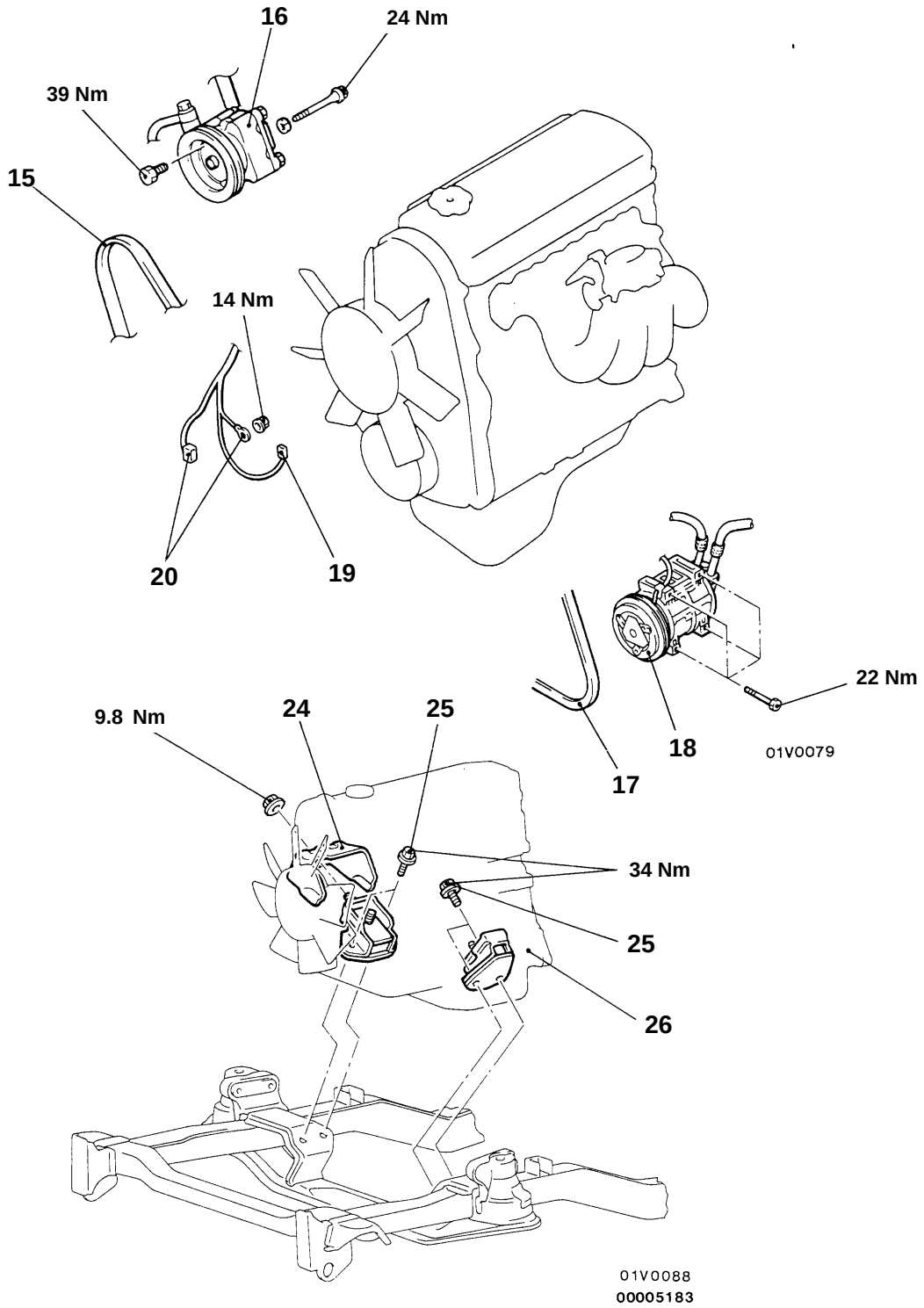

15. Drive belt (for Power steering)
◀A▶ 16. Power steering oil pump assembly
17. Drive belt (for A/C)
◀A▶ 18. A/C compressor assembly
19. Engine oil pressure switch connector
20. Alternator connector
24. Heat protector
25. Engine support front insulator attaching bolt
◀B▶ ▶A◀ 26. Engine assembly

REMOVAL SERVICE POINTS

◀A▶ POWER STEERING OIL PUMP ASSEMBLY AND A/C COMPRESSOR ASSEMBLY REMOVAL

1. Remove the oil pump and A/C compressor (with the hose attached).
2. Suspend the removed oil pump (by using wire or similar material) at a place where no damage will be caused during removal/installation of the engine assembly.

◀B▶ ENGINE ASSEMBLY REMOVAL

1. Check that all cables, hoses, harness connectors, etc. are disconnected from the engine.
2. Lift the chain block slowly to remove the engine assembly upward from the engine compartment.

INSTALLATION SERVICE POINT

▶A◀ ENGINE ASSEMBLY INSTALLATION

Install the engine assembly. When doing so, check carefully that all pipes and hoses are connected, and that none are twisted, damaged, etc.

NOTES

ENGINE <4G6>

CONTENTS

GENERAL 3
Outline of Change 3
SERVICE SPECIFICATIONS 3
SPECIAL TOOLS 3
ON-VEHICLE SERVICE 4
Ignition Timing Check 4
Compression Pressure Check 4
CAMSHAFT OIL SEAL 5
CYLINDER HEAD GASKET 6
TIMING BELT AND TIMING BELT B 8
CRANKSHAFT FRONT OIL SEAL 9

GENERAL

OUTLINE OF CHANGE

The following procedures have been established to correspond to the change of the ignition system. Other procedures are the same as before.

SERVICE SPECIFICATIONS

Item	Standard value	Limit
Idle speed r/min	750 ± 100	–
Basic ignition timing	5° BTDC ± 2°	–
Ignition timing	Approx. 10°BTDC	–
Compression pressure (250 r/min) kPa	1,324	Min. 1,000
Compression pressure difference of all cylinder kPa	–	Max. 100

SPECIAL TOOLS

Tool	Number	Name	Use
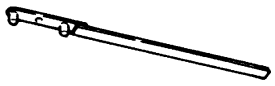	MD998747	Crankshaft pulley holder	Supporting of crankshaft sprocket
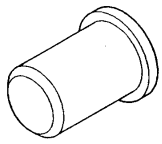	MD998375	Crankshaft front oil seal installer	Press-fitting the crankshaft front oil seal

ON-VEHICLE SERVICE

IGNITION TIMING CHECK

1. Before inspection, set the vehicle to the pre-inspection condition.
2. Turn the ignition switch to “LOCK” (OFF) position and then connect the MUT-II to the diagnosis connector.
3. Set up a timing light.
4. Start the engine and run at idle.
5. Check that engine idle speed is within the standard value.

   Standard value: 750 ± 100 r/min

6. Select No.17 of the MUT-II Actuator test.
7. Check that basic ignition timing is within the standard value.

   Standard value: 5° BTDC ± 2°

8. If the basic ignition timing is outside the standard value, inspect the MPI system while referring to GROUP 13A – Troubleshooting.
9. Press the MUT-II clear key (Select a forced driving cancel mode) to release the Actuator test.

   Caution
   If the test is not cancelled, a forced driving will continue for 27 minutes. Driving under this condition may damage the engine.

10. Check that ignition timing is at the standard value.

    Standard value: approx. 10°BTDC

    NOTE
    1. Ignition timing is variable within about ± 7°, even under normal operating.
    2. And it is automatically further advanced by about 5° from standard value at higher altitudes.

11. Remove the timing light.
12. Turn the ignition switch to “LOCK” (OFF) position and then remove the MUT-II.

COMPRESSION PRESSURE CHECK

The following values have been changed. The service procedure is the same as before.

Compression pressure (250 r/min)

Standard value (at engine speed of 250 r/min):
1,320 kPa

Limit (at engine speed of 250 r/min):
Min. 1,000 kPa

Compression pressure difference of all cylinder

Limit: Max. 98 kPa

CAMSHAFT OIL SEAL

REMOVAL AND INSTALLATION

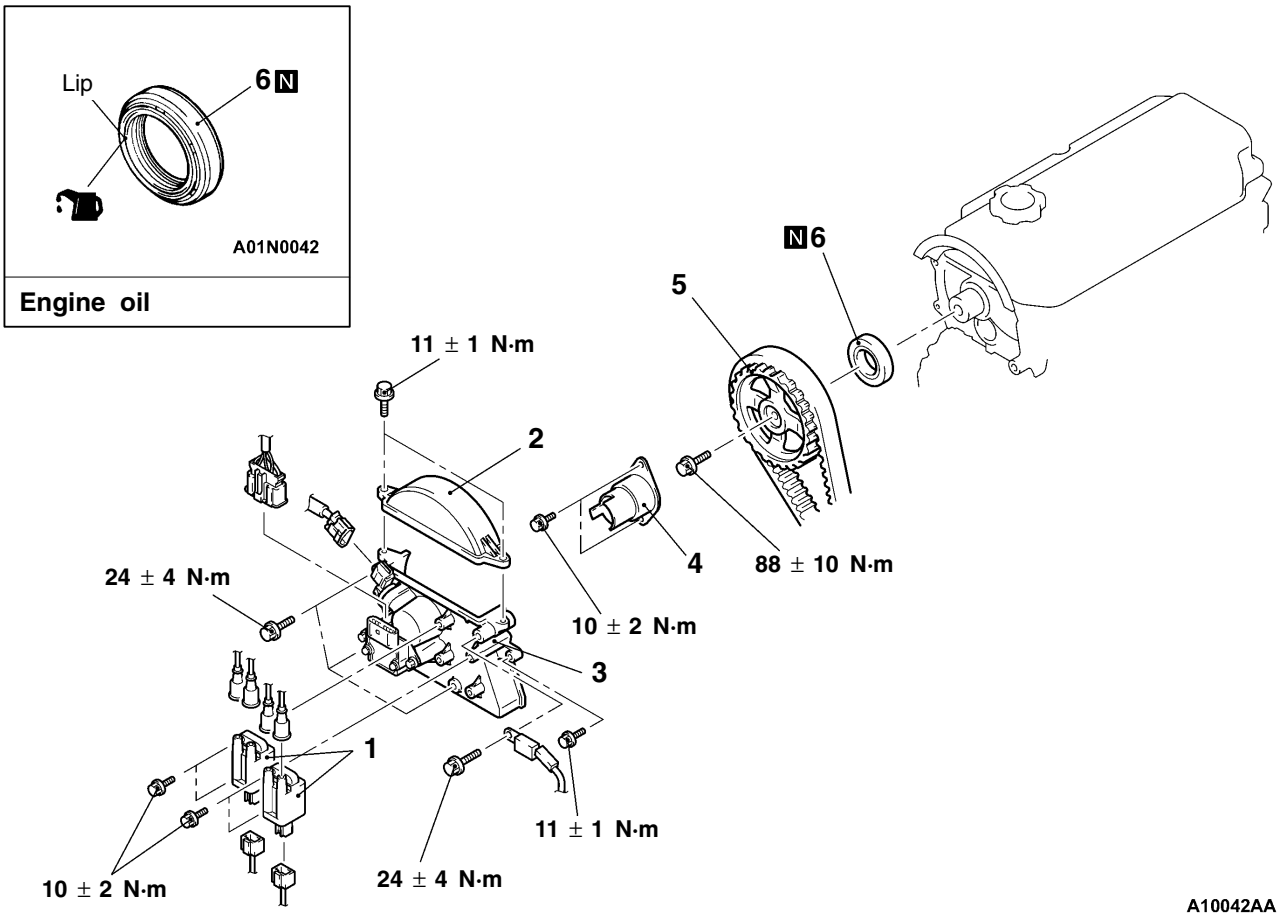

Removal steps

1. Ignition coil
2. Timing belt upper cover assembly
3. Ignition coil bracket, power transistor and camshaft position sensor assembly
4. Sensing cam-position cylinder

◀A▶ ▶B◀ 5. Camshaft sprocket

◀B▶ ▶A◀ 6. Camshaft oil seal

NOTE
Follow the conventional procedures for removal and installation service points.

CYLINDER HEAD GASKET

REMOVAL AND INSTALLATION

Pre-removal Operation
- Engine Coolant Draining
- Fuel Line Pressure Releasing
- Battery and Battery Tray Removal
- Air Cleaner Assembly Removal
- Resonance Tank Removal

Post-installation Operation
- Resonance Tank Installation
- Air Cleaner Assembly Installation
- Battery and Battery Tray Installation
- Engine Coolant Refilling
- Accelerator Cable Adjustment
- Throttle Cable Adjustment

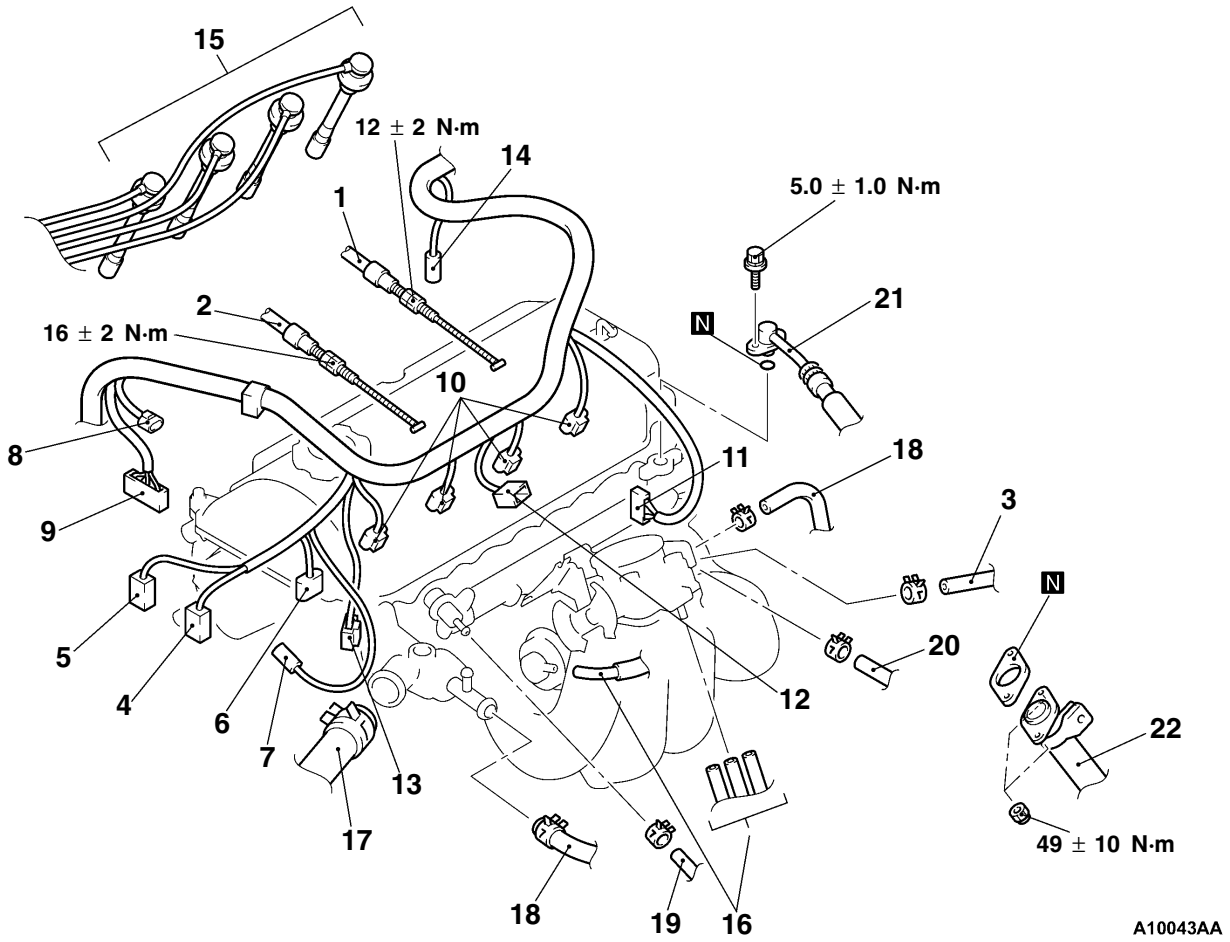

Removal steps

1. Accelerator cable connection
2. Throttle cable connection <A/T>
3. Brake booster vacuum hose connection
4. Ignition coil 1 connector
5. Ignition coil 2 connector
6. Engine coolant temperature sensor connector
7. Capacitor connector
8. Camshaft position sensor connector
9. Power transistor connector
10. Injector connectors
11. Throttle position sensor connector
12. Idle speed control servo connector
13. Crank angle sensor connector
14. Engine coolant temperature gauge unit connector
15. Spark plug cable
16. Vacuum hose connection
17. Radiator upper hose connection
18. Water hose connections
19. Fuel return hose connection
20. Fuel hose connection
21. High-pressure fuel hose connection
22. Front exhaust pipe connection

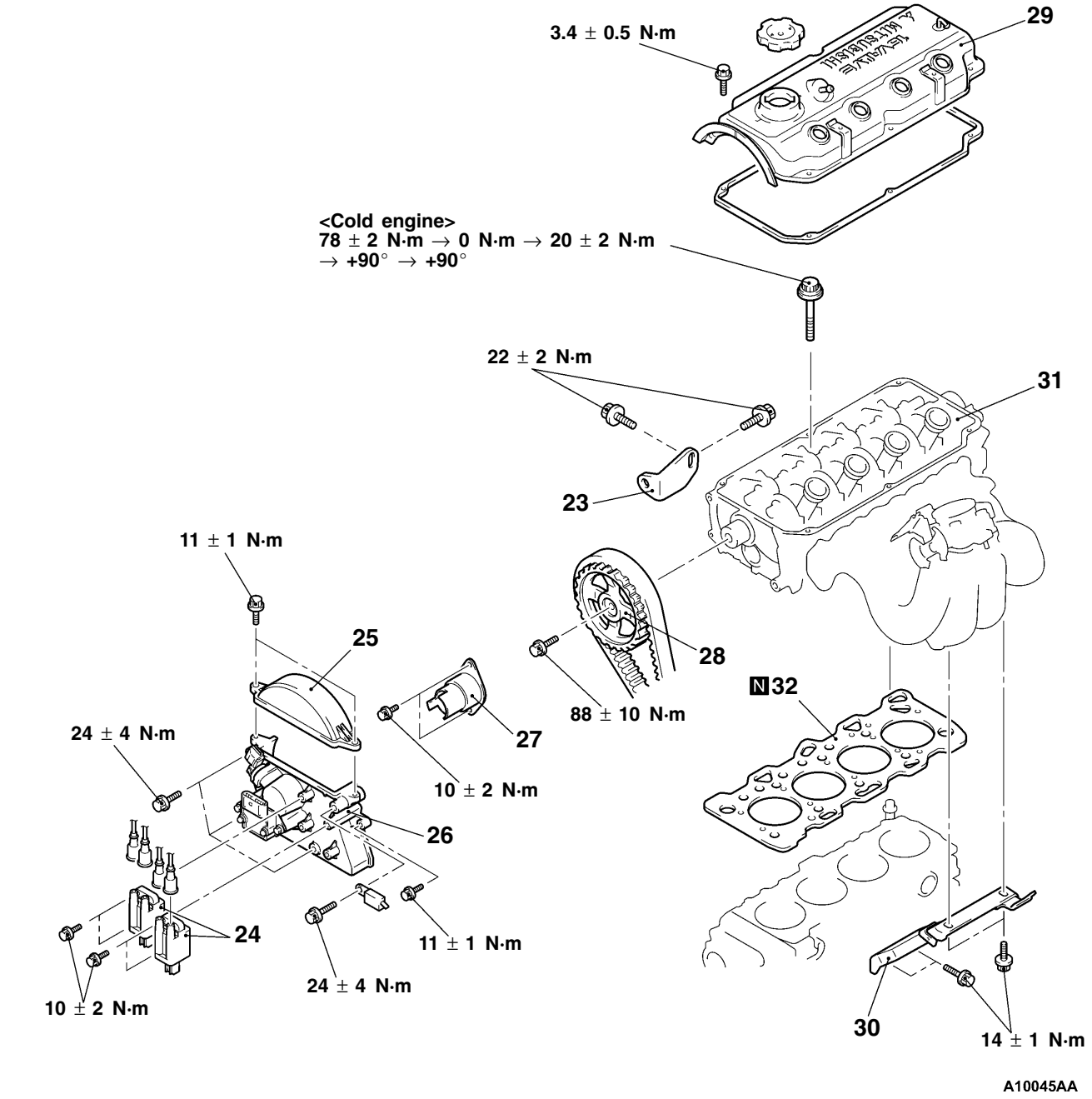

23. Power steering pump mount bracket
24. Ignition coil
25. Timing belt upper cover assembly
26. Ignition coil bracket, power transistor and camshaft position sensor assembly
27. Sensing cam-position cylinder
◀A▶ ▶C◀ 28. Camshaft sprocket
29. Rocker cover
30. Intake manifold stay
◀B▶ ▶B◀ 31. Cylinder head assembly
▶A◀ 32. Cylinder head gasket

NOTE
Follow the conventional procedures for removal and installation service points.

TIMING BELT AND TIMING BELT B

REMOVAL AND INSTALLATION

Pre-removal and Post-installation Operation
- Engine Coolant Draining and Refilling
- Cooling Fan Removal and Installation

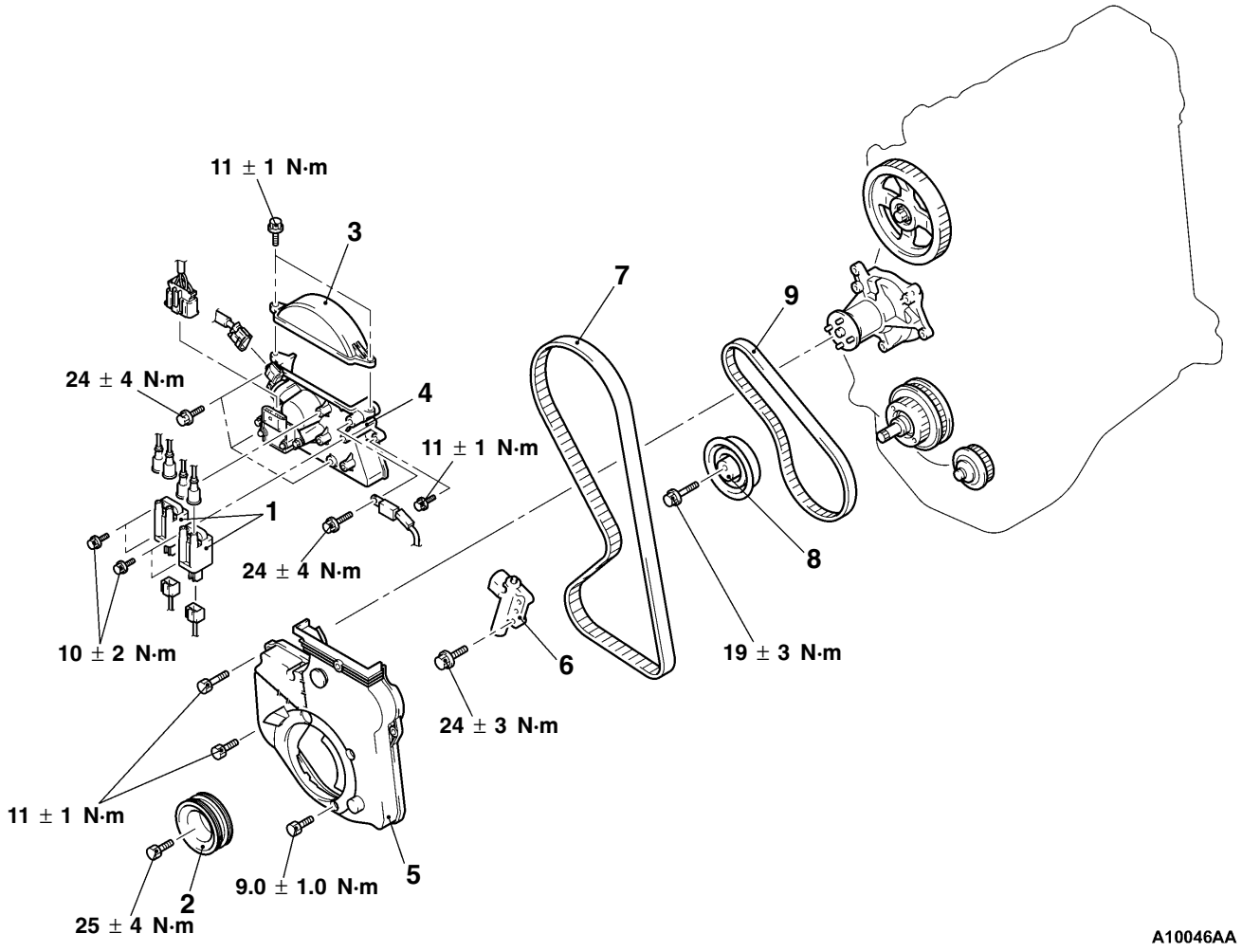

Removal steps

1. Ignition coil
2. Crankshaft pulley
3. Timing belt upper cover assembly
4. Ignition coil bracket, power transistor and camshaft position sensor assembly
5. Timing belt lower cover assembly
   ▶E◀ ● Timing belt tension adjustment
◀A▶ ▶D◀ 6. Auto tensioner
◀B▶ ▶C◀ 7. Timing belt
   ▶B◀ ● Timing belt B tension adjustment
8. Timing belt B tensioner
◀B▶ ▶A◀ 9. Timing belt B

NOTE
Follow the conventional procedures for removal and installation service points.

CRANKSHAFT FRONT OIL SEAL

REMOVAL AND INSTALLATION

Pre-removal and Post-installation Operation
- Timing Belt, Timing Belt B Removal and Installation (Refer to P.11A-8.)

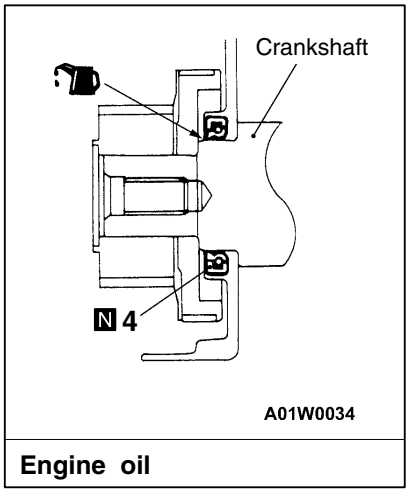

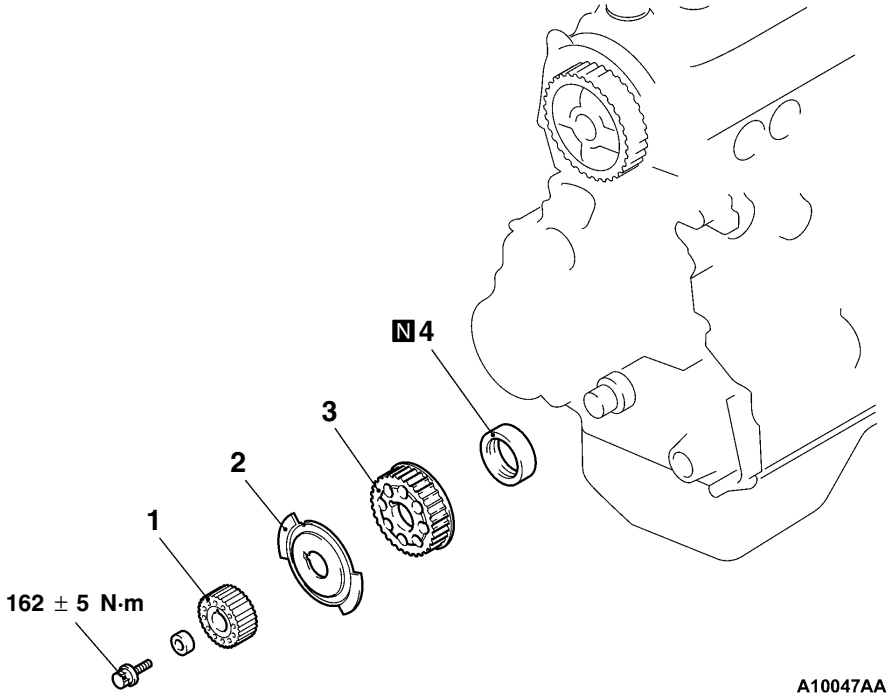

Removal steps

◀A▶ ▶B◀ 1. Crankshaft sprocket
▶B◀ 2. Crankshaft sensing blade
▶B◀ 3. Crankshaft sprocket B
▶A◀ 4. Crankshaft front oil seal

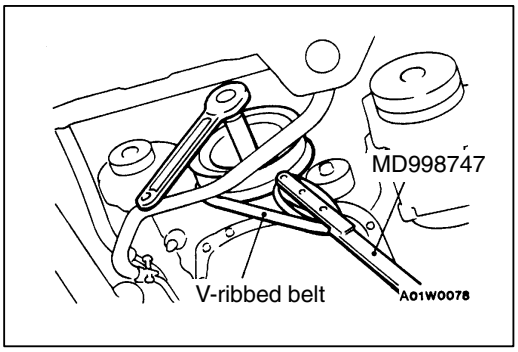

REMOVAL SERVICE POINT

◀A▶ CRANKSHAFT SPROCKET REMOVAL

1. Temporarily install the crankshaft pulley, and then use the V-ribbed belt and the special tool to stop the crankshaft pulley from turning.

   Caution
   (1) Do not use the vehicle's V-ribbed belt, or the belt may be damaged.
   (2) Do not use a damaged V-ribbed belt.

2. Loosen the crankshaft sprocket bolt, and then remove the sprocket.

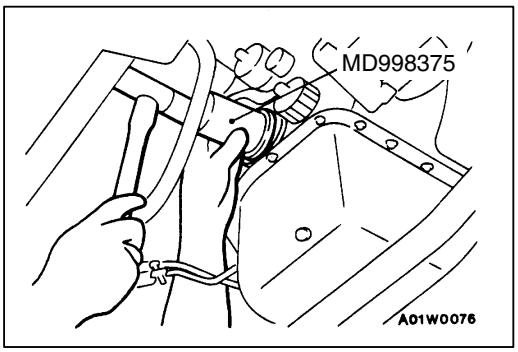

INSTALLATION SERVICE POINTS

▶A◀ CRANKSHAFT FRONT OIL SEAL INSTALLATION

1. Apply engine oil to the entire circumference of the oil seal lip.
2. Press-fit the oil seal until it is flush with the front case.

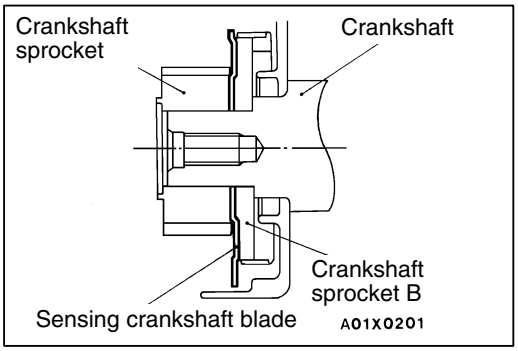

▶B◀ CRANKSHAFT SPROCKET B/CRANKSHAFT SENSING BLADE/CRANKSHAFT SPROCKET INSTALLATION

1. Install the crankshaft sprocket B, crankshaft sensing blade and the crankshaft sprocket so that they face as shown in the illustration.

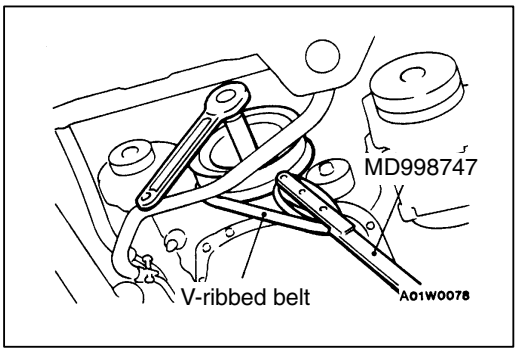

2. Temporarily install the crankshaft pulley, and then use the V-ribbed belt and the special tool to stop the crankshaft pulley from turning.

   Caution
   (1) Do not use the vehicle's V-ribbed belt, or the belt may be damaged.
   (2) Do not use a damaged V-ribbed belt.

3. Tighten the crankshaft sprocket bolt to the specified torque.

   Tightening torque: 162 ± 5 N·m

<4D5> ENGINE

Click on the applicable bookmark to selected the required model year

ENGINE <4D5>

CONTENTS

11109000405

GENERAL INFORMATION 2

SERVICE SPECIFICATIONS 3

SEALANTS 3

SPECIAL TOOLS 4

ON-VEHICLE SERVICE 5

- Drive Belt Tension Check and Adjustment 5
- Valve Clearance Check and Adjustment 8
- Injection Timing Check and Adjustment 9
- Idle Speed Check and Adjustment 11
- Idle-up Mechanism Check and Adjustment-For A/C 11
- Idle-up Mechanism Check and Adjustment-For ABS 11
- Compression Pressure Check 13
- Timing Belt Tension Adjustment 14
- Timing Belt "B" Tension Adjustment 15

CRANKSHAFT PULLEY 17

CAMSHAFT AND CAMSHAFT OIL SEAL ... 18

OIL PAN AND OIL SCREEN 21

CYLINDER HEAD GASKET 23

TIMING BELT AND TIMING BELT B 26

CRANKSHAFT FRONT OIL SEAL 30

CRANKSHAFT REAR OIL SEAL 31

ENGINE ASSEMBLY 33

GENERAL INFORMATION

11100010339

Items		4D56
Total displacement mℓ		2,477
Bore x Stroke mm		91.1 x 95.0
Compression ratio		21
Combustion chamber		Vortex chamber type
Camshaft arrangement		SOHC
Number of valve	Intake	4
	Exhaust	4
Valve timing	Intake	Opening BTDC 20°, Closing ABDC 49°
	Exhaust	Opening BBDC 55°, Closing ATDC 22°
Fuel system		Distribution type injection pump
Rocker arm		Roller type
Adjusting screw		Elephant foot type

SERVICE SPECIFICATIONS

11100030359

Items			Standard value	Limit
Alternator drive belt tension (for each belt)	Tension N	When checked	245 – 441	–
		When a used belt is installed	294 – 392	–
		When a new belt is installed	392 – 588	–
	Deflection (Reference value) mm	When checked	12.0 – 17.0	–
		When a used belt is installed	13.0 – 16.0	–
		When a new belt is installed	10.0 – 13.0	–
Power steering oil pump drive belt tension	Tension N	When checked	294 – 490	–
		When a used belt is installed	343 – 441	–
		When a new belt is installed	490 – 686	–
	Deflection (Reference value) mm	When checked	8.0 – 12.0	–
		When a used belt is installed	9.0 – 11.5	–
		When a new belt is installed	6.0 – 8.0	–
A/C compressor drive belt tension	Tension N	When checked	320 – 400	–
		When a used belt is installed	320 – 400	–
		When a new belt is installed	480 – 560	–
	Deflection (Reference value) mm	When checked	6.0 – 7.0	–
		When a used belt is installed	6.0 – 7.0	–
		When a new belt is installed	4.5 – 5.5	–
Valve clearance (at hot) mm			0.25	–
Injection timing (Value indicated on dial gauge mm)			9° ATDC (1 ± 0.03)	–
Idle speed r/min			750 ± 100	–
Idle up engine speed for ABS r/min			1,900 ± 100	–
Compression pressure kPa			3,040	Min. 2,200
Compression pressure difference of all cylinder (at engine speed of 280 r/min) kPa			–	Max. 300
Timing belt tension mm			4 – 5	–
Timing belt B tension mm			4 – 5	–

SEALANTS

11100050270

Items	Specified sealant	Remarks
Oil pan	MITSUBISHI GENUINE PART MD970389 or equivalent	Semi-drying sealant
Semi-circular packing and rocker cover seal, and cylinder head seal	3M ATD Part No. 8660 or equivalent	

SPECIAL TOOLS

11100060327

Tool	Number	Name	Use
	MD998384	Prestroke measuring adapter	Adjustment of the injection timing
	MD998721	Crankshaft pulley holder	Holding the crankshaft pulley
	MB990767	End yoke holder	Holding the camshaft sprocket
	MD998719	Crankshaft pulley holder pin	
	MD998381	Camshaft oil seal installer	Installing the camshaft oil seal
	MD998727	Oil pan remover	Removal of oil pan
	MD998051	Cylinder head bolt wrench	Removal and installation of the cylinder head bolt
	MD998382	Crankshaft front oil seal installer	Installing the crankshaft front oil seal
	MD998383	Crankshaft front oil seal guide	

Tool	Number	Name	Use
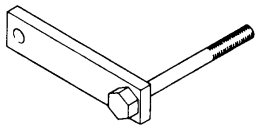	MD998781	Flywheel stopper	Securing the flywheel
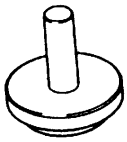	MD998376	Crankshaft rear oil seal installer	Press-fitting the crankshaft rear oil seal

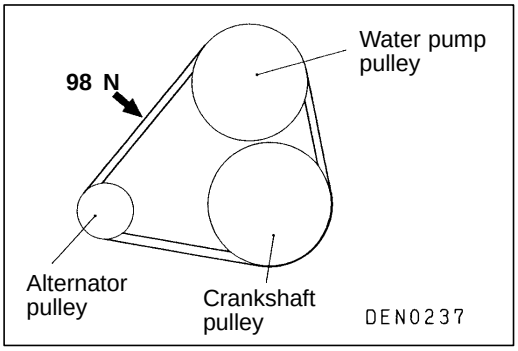

ON-VEHICLE SERVICE

11100090333

DRIVE BELT TENSION CHECK AND ADJUSTMENT

ALTERNATOR DRIVE BELT TENSION CHECK

Use a belt tension gauge to check that the belt tension is at the standard value at a point half-way between the two pulleys as shown in the illustration. In addition, press this section with a force of 98 N and check that the amount of belt deflection is at the standard value.

Standard value (for each belt):

Tension N	245 – 441
Deflection (Reference value) mm	12.0 – 17.0

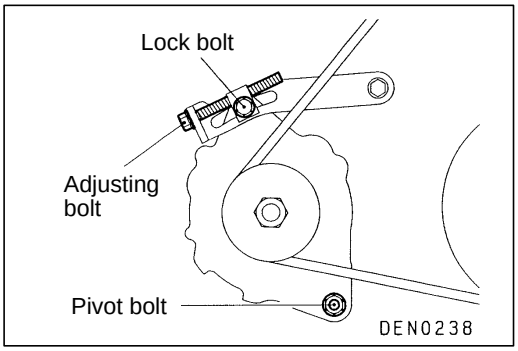

ALTERNATOR DRIVE BELT TENSION ADJUSTMENT

1. Loosen the nut of the alternator pivot bolt.
2. Loosen the lock bolt.
3. Use the adjusting bolt to adjust the belt tension and belt deflection to the standard values.

   Standard value (for each belt):

Items	When a used belt is installed	When a new belt is installed
Tension N	294 – 392	392 – 588
Deflection (Reference value) mm	13.0 – 16.0	10.0 – 13.0

4. Tighten the nut of the alternator pivot bolt.

   Tightening torque: 44 Nm
5. Tighten the lock bolt.

   Tightening torque: 22 Nm
6. Tighten the adjusting bolt.

   Tightening torque: 9.8 Nm

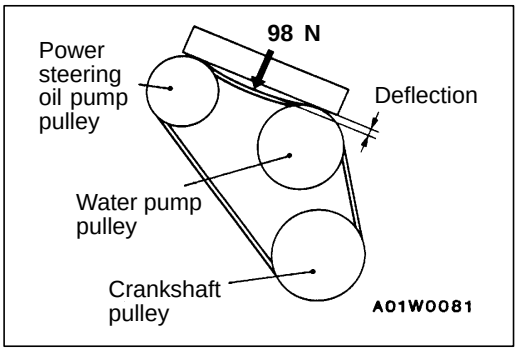

POWER STEERING OIL PUMP DRIVE BELT TENSION CHECK AND ADJUSTMENT

11100110152

1. Use a belt tention gauge to check that the belt tension is at the standard value at a point half-way between the two pulleys (indicated by an arrow in the illustration). In addition, press this section with a force of 98 N and check that the amount of belt deflection is at the standard value.

   Standard value:

Items	When checked	When a used belt is intalled	When a new belt is installed
Tension N	294 – 490	343 – 441	490 – 686
Deflection (Reference value) mm	8.0 – 12.0	9.0 – 11.5	6.0 – 8.0

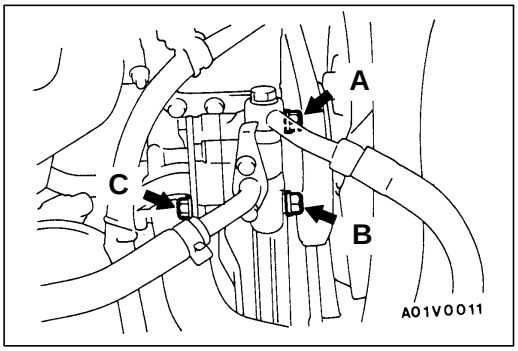

2. If the tension or deflection is outside the standard value, adjust by the following procedure.
   (1) Loosen power steering oil pump fixing bolts A, B and C.
   (2) Adjust the amount of belt deflection using adjusting bolt D.
   (3) Tighten fixing bolts A, B and C.

   Tightening torque: 22 Nm

   (4) Check the belt deflection amount and tension, and readjust if necessary.

   Caution
   Check after turning the crankshaft once or more clockwise (right turn).

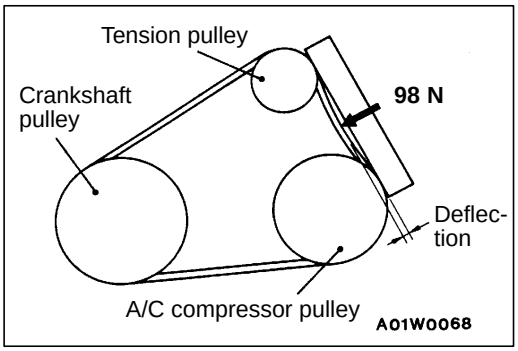

AIR CONDITIONER COMPRESSOR DRIVE BELT TENSION CHECK AND ADJUSTMENT

11100100142

1. Use a belt tention gauge to check that the belt tension is at the standard value at a point half-way between the two pulleys (indicated by an arrow in the illustration). In addition, press this section with a force of 98 N and check that the amount of belt deflection is at the standard value.

   Standard value:

Items	When checked	When a used belt is intalled	When a new belt is installed
Tension N	320 – 400	320 – 400	480 – 560
Deflection (Reference value) mm	6.0 – 7.0	6.0 – 7.0	4.5 – 5.5

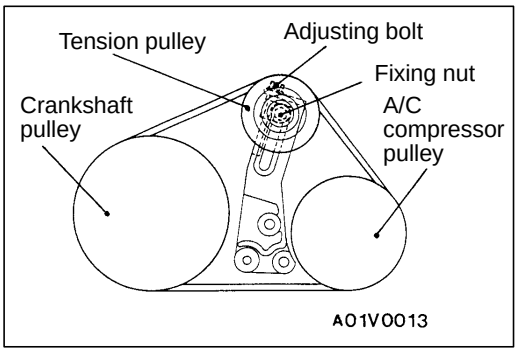

2. If the tension or deflection is outside the standard value, adjust by the following procedure.
   (1) Loosen tension pulley fixing nut.
   (2) Adjust belt tension with adjusting bolt.
   (3) Tighten fixing nut.

(4) Check the belt deflection amount and tension, and readjust if necessary.

Caution
Check after turning the crankshaft once or more clockwise (right turn).

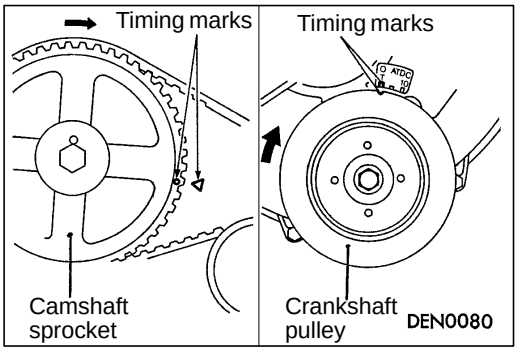

VALVE CLEARANCE CHECK AND ADJUSTMENT

11100150109

1. Start the engine and allow it to warm up until the engine coolant temperature reaches 80 to 90 °C.
2. Remove the timing belt upper cover.
3. Remove the rocker cover.
4. Align the camshaft sprocket timing marks and set the No. 1 cylinder at top dead centre.

   Caution
   The crankshaft should always be turned in a clockwise direction.

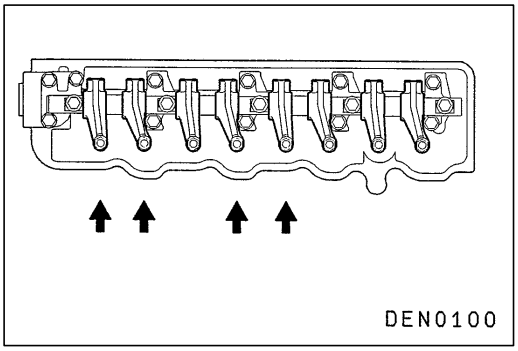

5. Measure the valve clearance at the places indicated by arrows in the illustration.

   Standard value: 0.25 mm

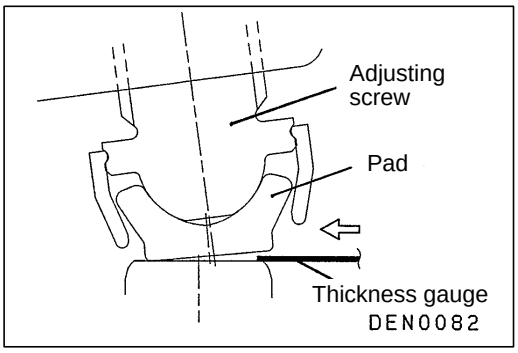

NOTE
Insert the thickness gauge from the centre of the cylinder head towards the outside so that it doesn't touch the pad.

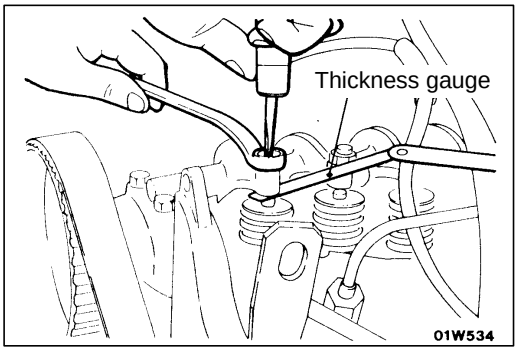

6. If the clearance is outside the standard value, loosen the lock nut of the rocker arm and adjust by turning the adjusting screw while using a thickness gauge to measure the clearance.
7. Tighten the lock nut while holding the adjusting screw with a screwdriver so that it doesn't turn.
8. Turn the crankshaft 360° clockwise to bring No. 4 cylinder to the top dead centre position.

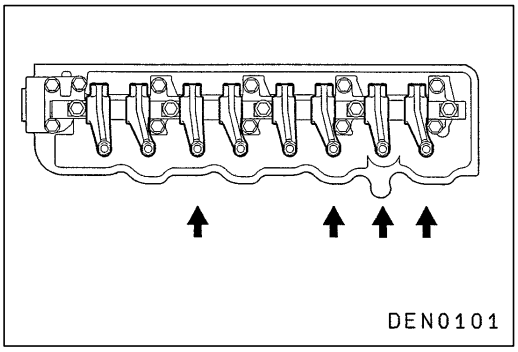

9. Measure the valve clearances at the places indicated by arrows in the illustration. If the clearance is not within the standard value, repeat steps 7 and 8 above.

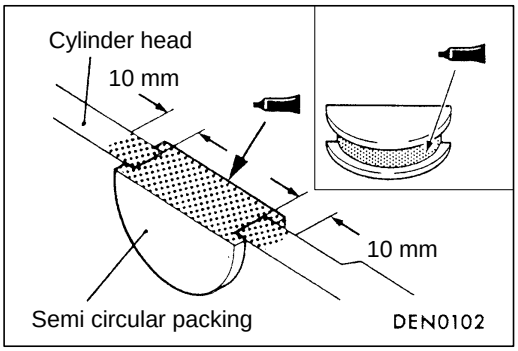

10. Apply specified sealant to the section of the semi-circular packing shown in the illustration.

    Specified sealant: 3M ATD Part No. 8660 or equivalent
11. Install the rocker cover.
12. Install the timing belt upper cover.

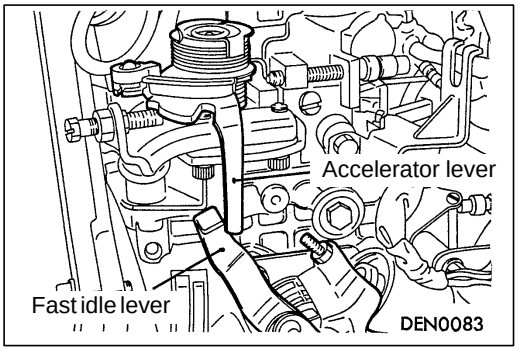

INJECTION TIMING CHECK AND ADJUSTMENT

11100180023

1. Warm up the engine and then check to be sure that the fast idle lever is separated from the throttle lever.
2. Remove all of the glow plugs.
3. Remove the timing belt upper cover.

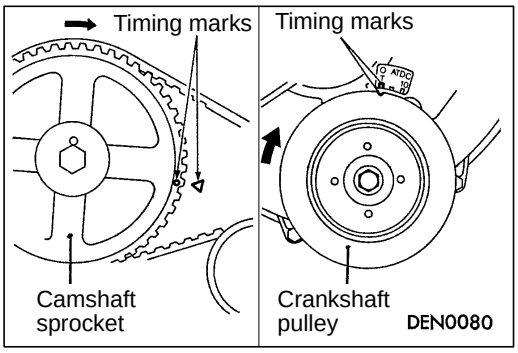

4. Align the timing marks of the camshaft sprocket and set the No. 1 cylinder to the top dead centre position.

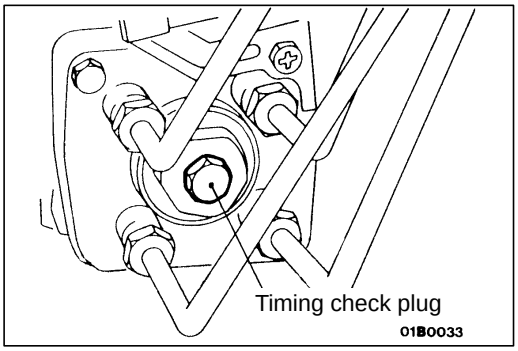

5. Remove the timing check plug at the rear of the injection pump.

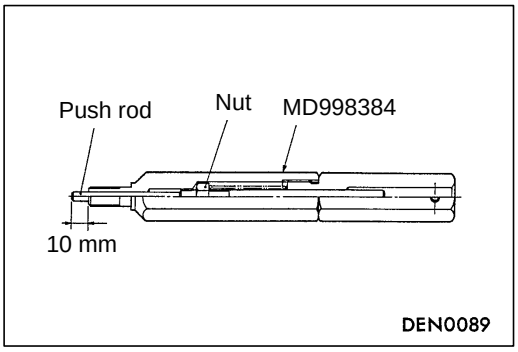

6. Before installation of special tool, make sure that push rod is protruding by 10 mm. Protrusion of push rod can be adjusted with an inner nut.
7. Connect the dial gauge to the special tool.

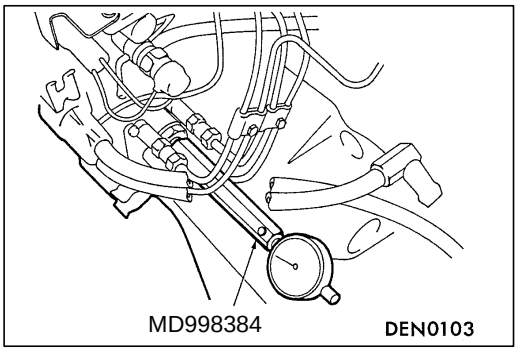

8. Install the special tool to the check plug at the rear of the injection pump.

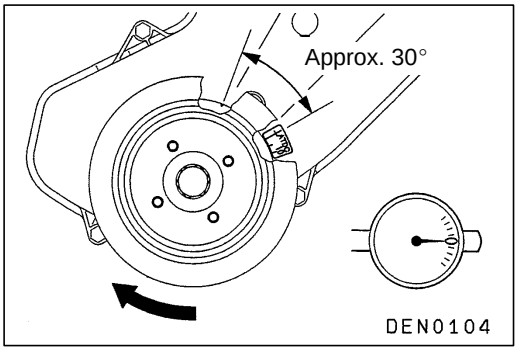

9. Turn the crankshaft clockwise to move the No. 1 cylinder approximately 30° before compression top dead centre.
10. Set the needle of the dial gauge to 0.
11. Check that the needle doesn't move even if the crankshaft is turned slightly (2 – 3°) in both clockwise and anti-clockwise direction.

    NOTE
    If the needle moves, the notch is not positioned properly, so once again move the No. 1 cylinder approximately 30° before compression top dead centre.

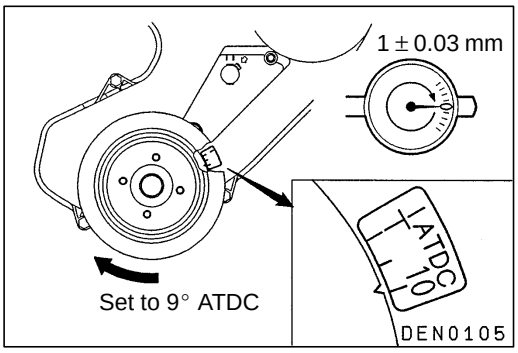

12. Turn the crankshaft clockwise to align the No. 1 cylinder to 9° ATDC.
13. Check that the value indicated on the dial gauge is at the standard value.

    Standard value: 1 ± 0.03 mm

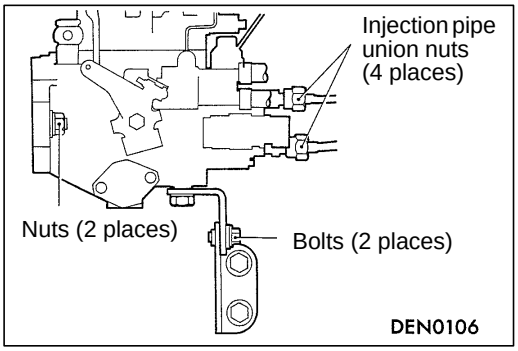

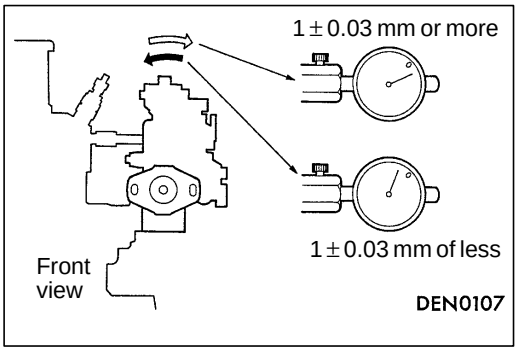

14. If the needle is outside the standard value, adjust the injection timing by the following procedure.
    (1) Loosen the injection pipe union nuts (4 places) on the injection pump. (Do not remove the union nuts.)

    Caution
    When loosening the nuts, hold the delivery valve holders with a spanner so that they don't turn at the same time.

    (2) Loosen the upper mounting nuts and the lower mounting bolts of the injection pump. (Do not remove the nut and bolt.)
    (3) Tilt the injection pump to the left and right and adjust the needle on the dial gauge so that the display value is uniform.
    (4) Provisionally tighten the mounting nut and bolt of the injection pump.
    (5) Repeat steps 9 – 13 to check if the adjustment has been made correctly.

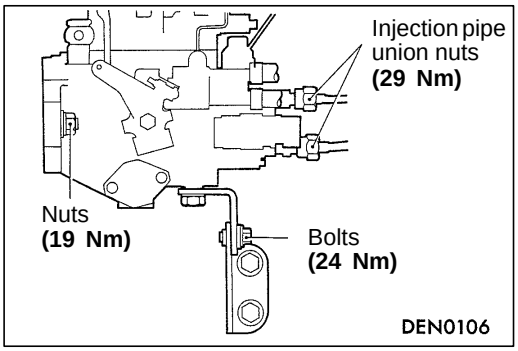

    (6) Tighten the mounting nuts and bolts to the specified torque.
    (7) Tighten the injection pump union nuts to the specified torque.

    Caution
    When tightening the nuts, hold the delivery valve holders with a spanner so that they don't turn at the same time.

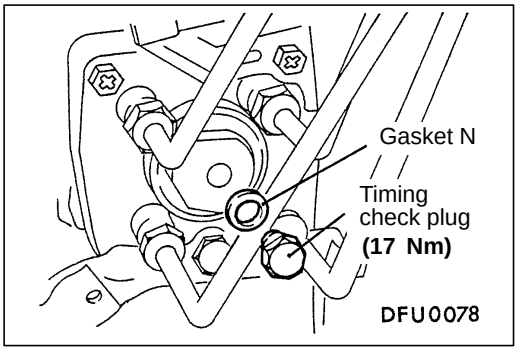

15. Remove the special tool.
16. Install a new gasket to the timing check plug.
17. Tighten the timing check plug to the specified torque.

IDLE SPEED CHECK AND ADJUSTMENT

11100190347

NOTE
Check that the injection timing is normal

1. Before inspection, set the vehicle to the pre-inspection condition.

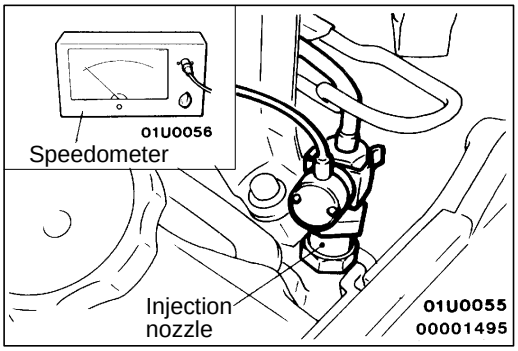

2. Connect the speedometer to the injection nozzle or the injection pipe.

   Caution
   When the speedometer is connected to the injection pipe, the pipe mounting clamps should all be removed.

3. Start the engine and run it at idle.
4. Check the idle speed.

   Standard value: 750 ± 100 r/min

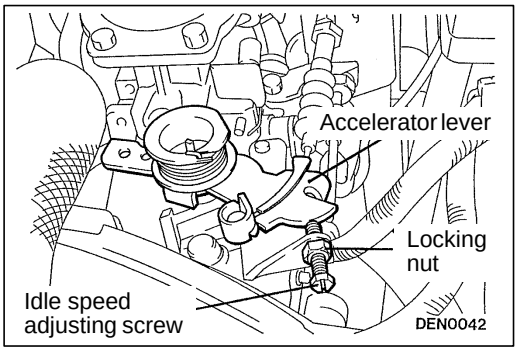

5. If not within the standard value, loosen idle adjusting screw lock nut and adjust the idle speed by rotating adjusting screw. And tighten locking nut.

IDLE-UP MECHANISM CHECK AND ADJUSTMENT-FOR A/C

11100230032

Refer to GROUP 55 – On-vehicle Service.

IDLE-UP MECHANISM CHECK AND ADJUSTMENT-FOR ABS

11100230025

1. Before inspection, set the vehicle to the pre-inspection condition.

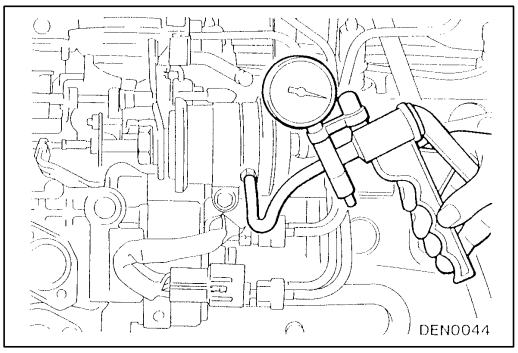

2. Inspect and adjust the idle speed.
3. Disconnect the vacuum hose (for anti-skid brakes: blue stripe) from the idle-up actuator.
4. Connect a hand vacuum pump to the nipple of the removed vacuum hose.
5. Connect the speedometer.
6. Start the engine and run it at idle.

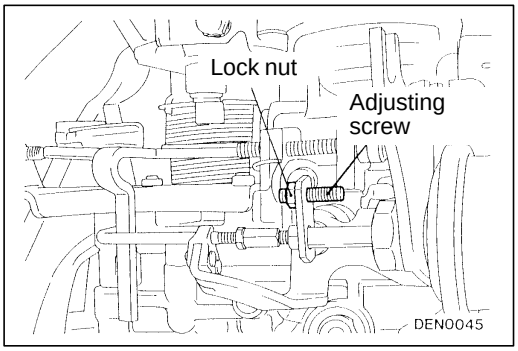

7. Check the engine speed when a negative pressure of 87 kPa is applied.

   Standard value: 1,900 ± 100 r/min

8. If the engine speed is outside the standard value, loosen the lock nut on the actuator rod and adjust by turning the adjusting screw.
9. Tighten the lock nut while making sure that the adjusting screw doesn't turn.

COMPRESSION PRESSURE CHECK 11100260369

1. Before inspection, check that the engine oil, starter and battery are normal. In addition, set the vehicle to the pre-inspection condition.
2. Remove all of the glow plugs.

   Caution
   Be careful not to subject the glow plugs to any shocks.

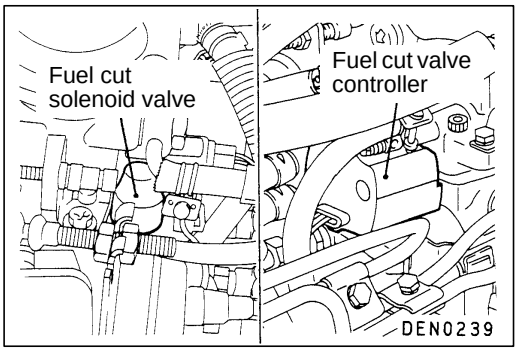

3. Disconnect the fuel cut solenoid valve connector or fuel cut valve controller.

   NOTE
   Doing this will prevent carrying out fuel injection.

4. Cover the glow plug hole with a shop towel etc., and after the engine has been cranked, check that no foreign material is adhering to the shop towel.

   Caution
   1. **Keep away from the glow plug hole when cranking**
   2. **If compression is measured with water, oil, fuel, etc., that has come from cracks inside the cylinder, these materials will become heated and will gush out from glow plug hole, which is dangerous.**

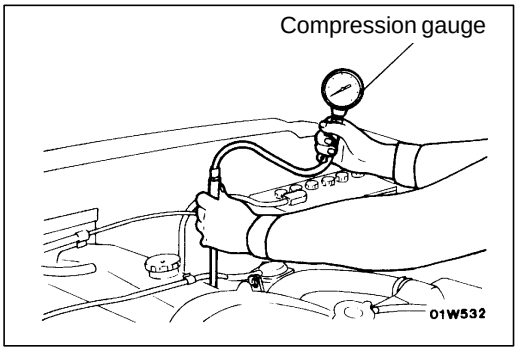

5. Set compression gauge to one of the glow plug holes.
6. Crank the engine and measure the compression pressure.

   Standard value (at engine speed of 280 r/min): 3,040 kPa

   Limit (at engine speed of 280 r/min): min. 2,200 kPa
7. Measure the compression pressure for all the cylinders, and check that the pressure differences of the cylinders are below the limit.

   Limit: max 300 kPa
8. If there is a cylinder with compression or a compression difference that is outside the limit, pour a small amount of engine oil through the glow plug hole, and repeat the operations in steps (6) and (7).
   (1) If the compression increses after oil is added, the cause of the malfunction is a worn or damaged piston ring and/or cylinder inner surface.
   (2) If the compression does not rise after oil is added, the cause is a burnt or defective valve seat, or pressure is leaking from the gasket.
9. Connect the fuel cut solenoid valve connector or fuel cut valve controller connector.
10. Install the glow plugs.

    Tightening torque: 18 Nm

TIMING BELT TENSION ADJUSTMENT 11100280136

1. Remove timing belt upper cover.
2. Turn the crankshaft in the clockwise direction and check the timing belt around its entire circumference for abnormalities.

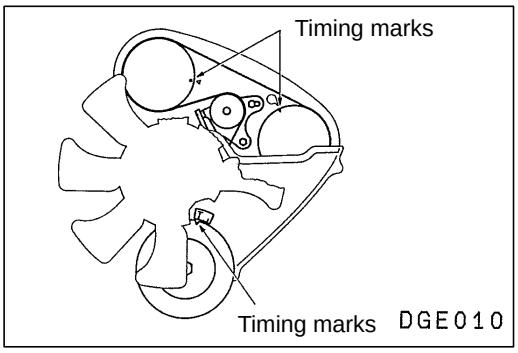

3. Align the timing marks on the sprockets with the timing marks on the front upper case.

   Caution
   When aligning the timing mark, be sure not to turn the crankshaft in the counterclockwise direction as this can cause improper belt tension.

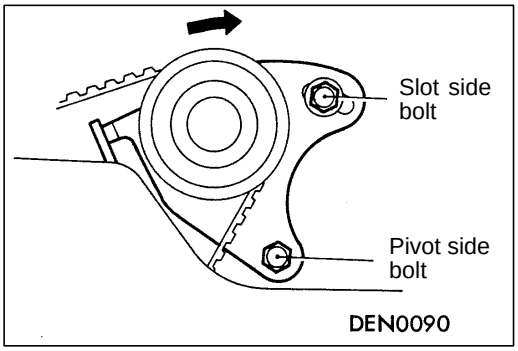

4. Loosen the tensioner pivot side bolt 1 turn and slot side bolt 1 or 2 turns.

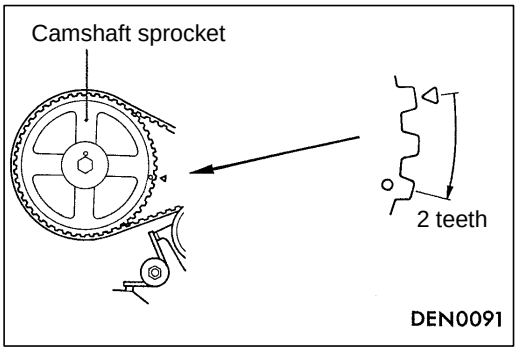

5. Turn the crankshaft clockwise and stop at the second lobe of the camshaft sprocket.
6. First tighten tensioner slot side bolt, and then tighten pivot side bolt to the specified torque.

   Tightening torque: 25 Nm

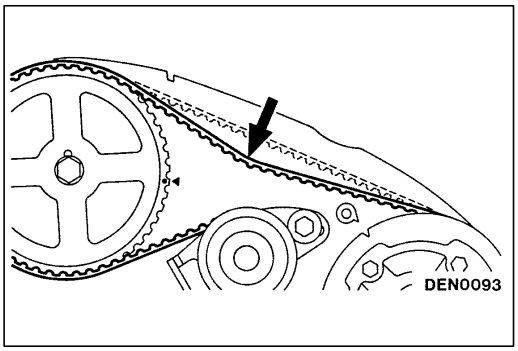

7. Turn the crankshaft anti-clockwise to align the timing marks.
8. Push down belt at a point halfway with a forefinger to check that tension of belt is up to standard value.

   Standard value: 4 – 5 mm

9. Mount the timing belt upper cover.

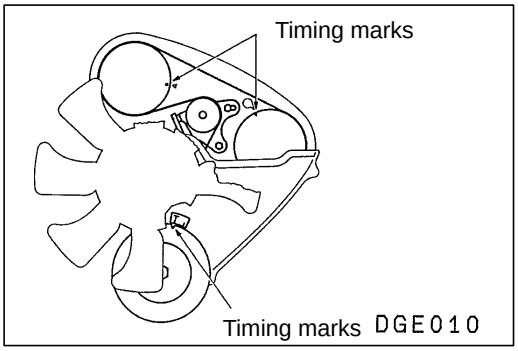

TIMING BELT “B” TENSION ADJUSTMENT

11100280143

1. Remove timing belt upper cover.
2. Turn the crankshaft in the clockwise direction and check the timing belt around its entire circumference for abnormalities.
3. Align the timing marks on the sprockets with the timing mark on the front upper case.

   Caution
   When aligning the timing mark, be sure not to turn the crankshaft in the counterclockwise direction as this can cause improper belt tension.

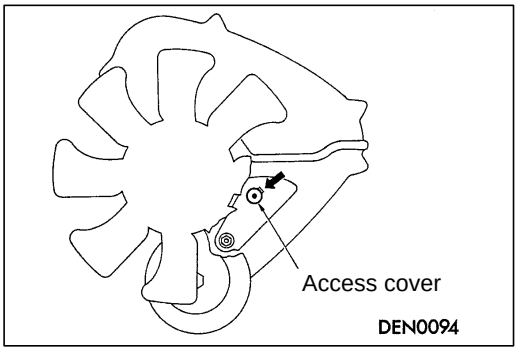

4. Remove the access cover.

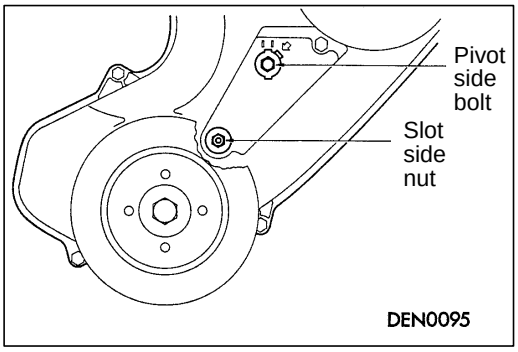

5. Loosen the tensioner pivot side bolt 1 mm and slot side nut 1 or 2 turns.
6. First tighten tensioner slot side nut, and then tighten pivot side bolt to the specified torque.

   Tightening torque:
   Pivot side bolt 24 Nm
   Slot side nut 25 Nm

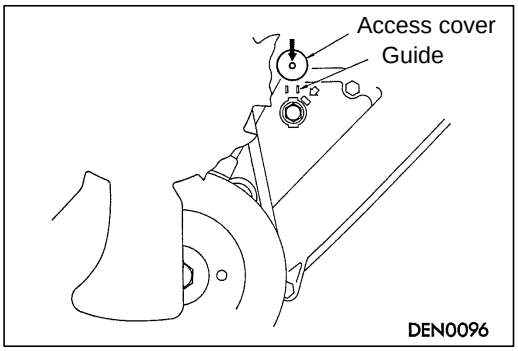

7. Install the access cover while sliding the front lower cover down along the two guides.
8. Install the timing belt upper cover.

CRANKSHAFT PULLEY

11200160242

REMOVAL AND INSTALLATION

Pre-removal Operation
- Under Cover Removal

Post-installation Operation
- Drive Belt Tension Adjustment (Refer to P.11B-5.)
- Under Cover Installation

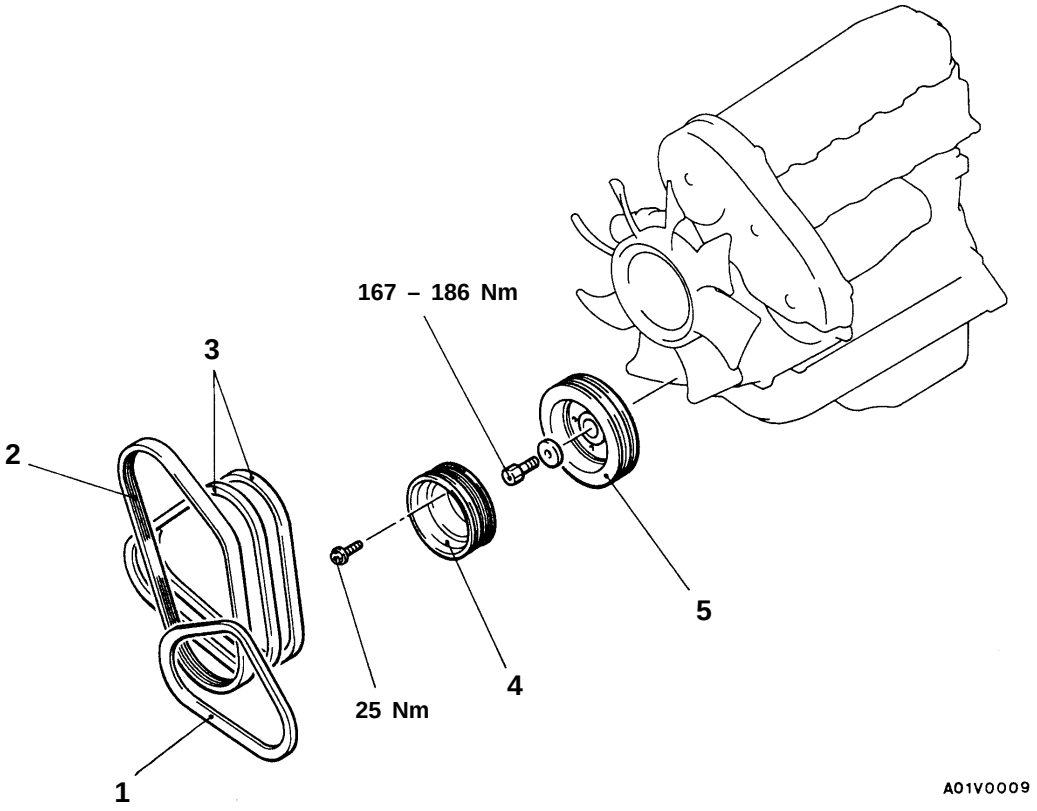

Removal steps

1. Drive belt (for A/C)
2. Drive belt (for power steering)
3. Drive belt (for alternator)

◀A▶ ▶A◀ 4. Crankshaft pulley (for power steering or A/C)

5. Crankshaft pulley

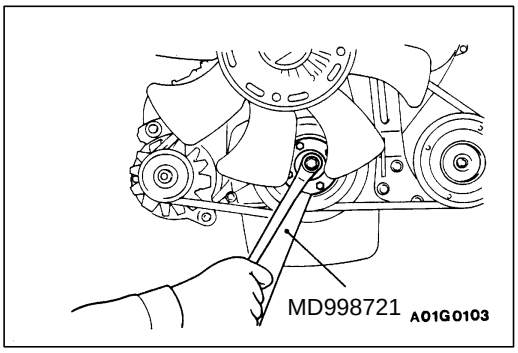

REMOVAL SERVICE POINT

◀A▶ CRANKSHAFT PULLEY REMOVAL

INSTALLATION SERVICE POINT

▶A◀ CRANKSHAFT PULLEY INSTALLATION

CAMSHAFT AND CAMSHAFT OIL SEAL

11200190289

REMOVAL AND INSTALLATION

Pre-removal and Post-installation Operation
- Intercooler Removal and Installation <4WD> (Refer to GROUP 15.)

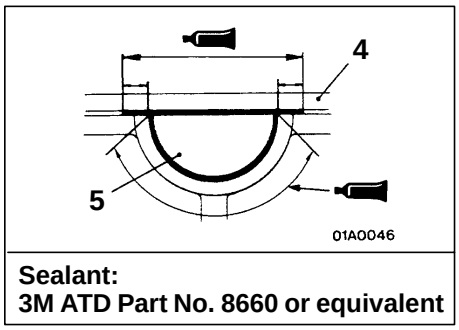

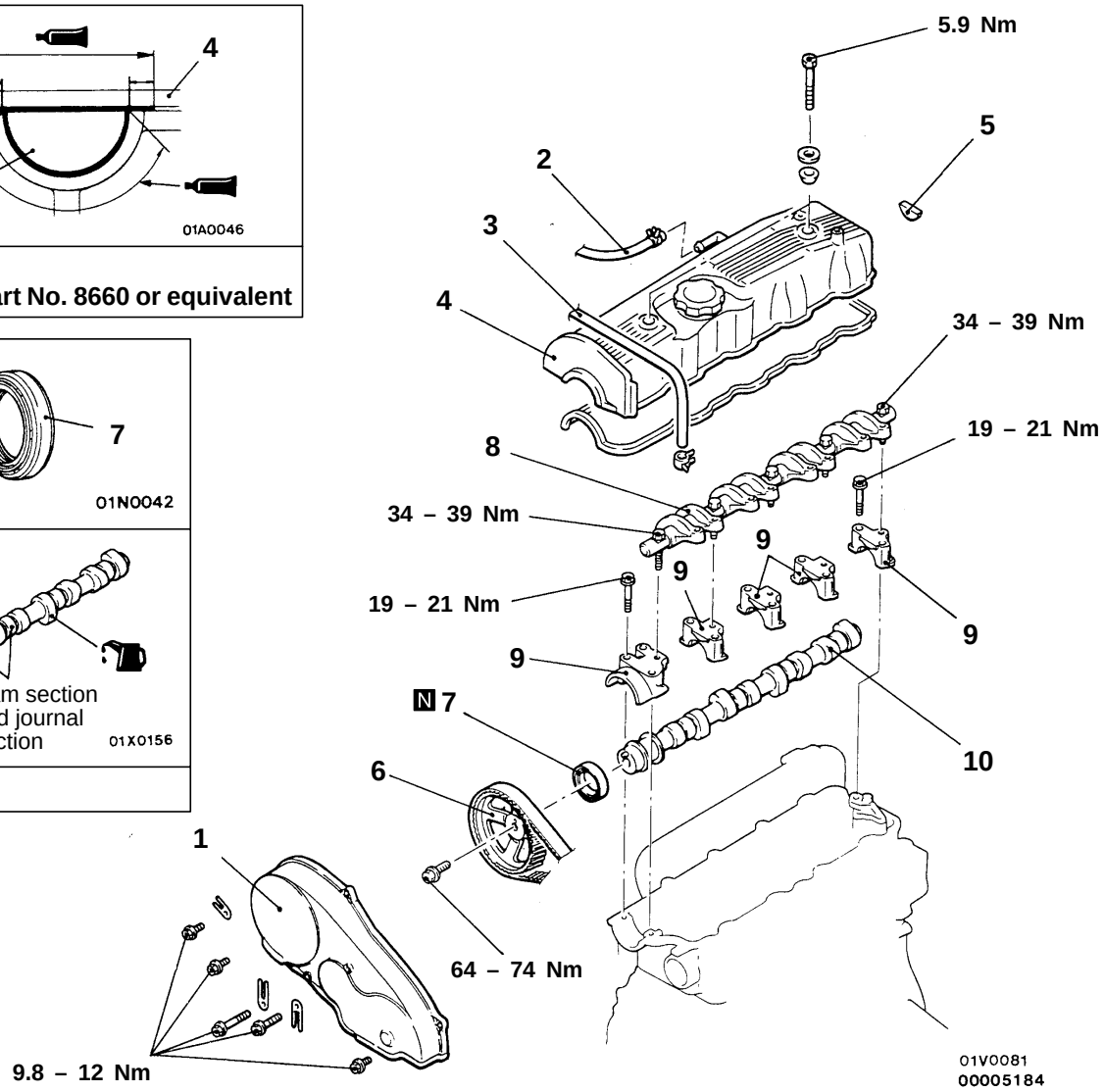

Camshaft removal steps

1. Timing belt upper cover assembly
2. Breather hose connection
3. Boost hose connection <4WD>
4. Rocker cover
5. Semi-circular packing
6. Camshaft sprocket ◀A▶ ▶D◀
7. Camshaft oil seal ◀B▶ ▶C◀
8. Rocker arm and shaft assembly ◀C▶ ▶B◀
9. Camshaft bearing cap ▶A◀
10. Camshaft

Camshaft oil seal removal steps

1. Timing belt upper cover assembly
6. Camshaft sprocket ◀A▶ ▶D◀
7. Camshaft oil seal ◀B▶ ▶C◀

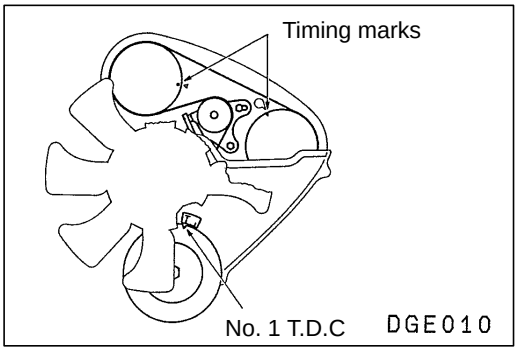

REMOVAL SERVICE POINTS

◀A▶ CAMSHAFT SPROCKET REMOVAL

1. Rotate crankshaft clockwise (to the right) and align timing marks.

   Caution
   Never turn the crankshaft anticlockwise.

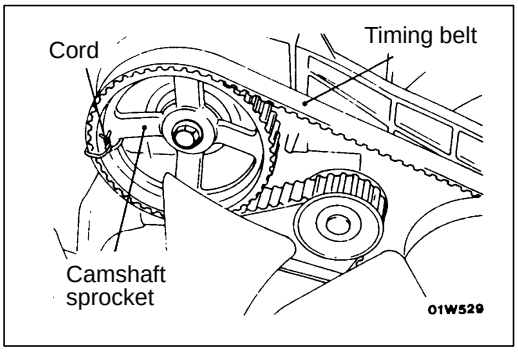

2. Tie the camshaft sprocket and timing belt together with cord so that timing mark is not maladjusted.

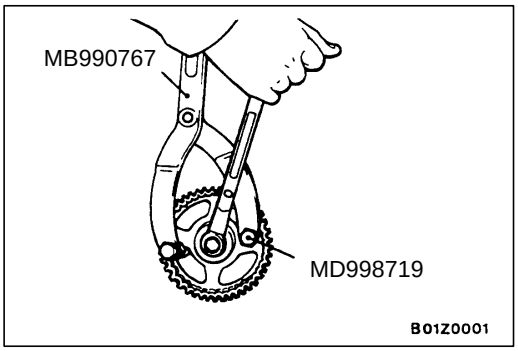

3. Use the special tool to stop the camshaft sprocket from turning, and then remove the camshaft sprocket with the timing belt still attached.

   Caution
   Do not rotate crankshaft after removing camshaft sprocket.

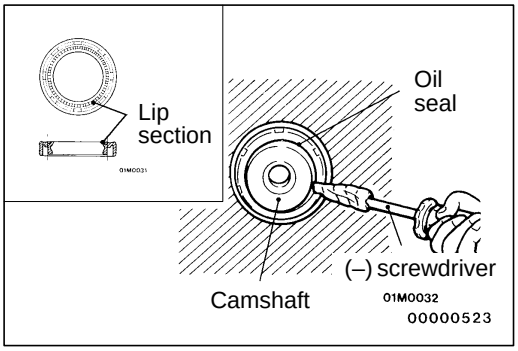

◀B▶ CAMSHAFT OIL SEAL REMOVAL

1. Make a notch in the oil seal lip section with a knife, etc.
2. Cover the end of a (–) screwdriver with a rag and insert into the notched section of the oil seal, and lever out the oil seal to remove it.

   Caution
   Be careful not to damage the camshaft and the cylinder head.

◀C▶ ROCKER ARM AND SHAFT ASSEMBLY REMOVAL

Loosen the rocker arm and shaft assembly mounting bolt, and then remove the rocker arm and shaft assembly with the bolt still attached.

Caution
Never disassemble the rocker arm and shaft assembly.

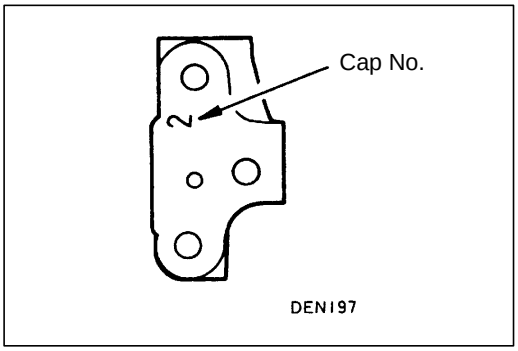

INSTALLATION SERVICE POINTS

▶A◀ CAMSHAFT BEARING CAP INSTALLATION

The cap numbers are embossed on the top surface of the bearing caps, so install in the order of the numbers. However, no numbers are embossed on bearing caps 1 and 5.

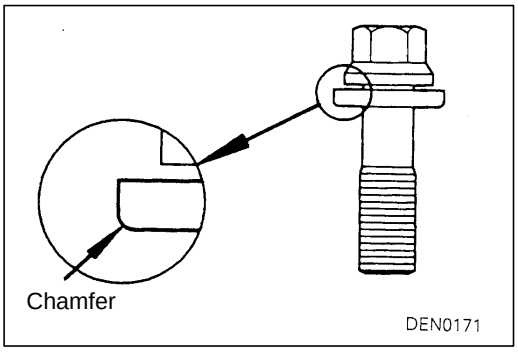

▶B◀ ROCKER ARM AND SHAFT ASSEMBLY INSTALLATION

1. Install the rocker arm and shaft assembly to the bearing caps.
2. Set the washer so that it faces in the direction shown in the illustration, and then install the bolt.
3. Check the valve clearance and adjust if necessary. (Refer to P.11B-8.)

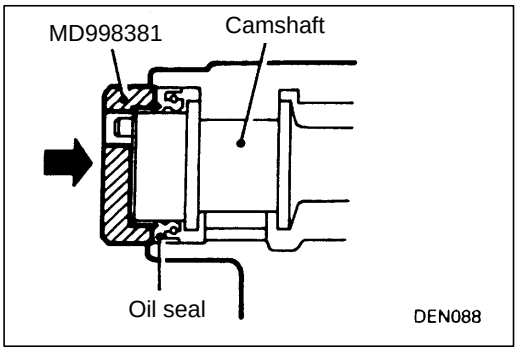

▶C◀ CAMSHAFT OIL SEAL INSTALLATION

1. Apply a small amount of engine oil to the entire circumference of the oil seal lip and camshaft.
2. Use the special tool to tap in the oil seal.

   NOTE
   The oil seal should be tapped in until the distance from the end of the camshaft to the end of the oil seal is as shown in the illustration.

▶D◀ CAMSHAFT SPROCKET INSTALLATION

1. Use the special tool in the same way as during removal to stop the camshaft sprocket from turning, and then tighten the bolt to the specified torque.

   Tightening torque: 64 – 67 Nm
2. Remove the cord which binds the camshaft sprocket and timing belt.

OIL PAN AND OIL SCREEN

11200250192

REMOVAL AND INSTALLATION

Pre-removal and Post-installation Operation
- Under Cover Removal and Installation
- Engine Oil Draining and Supplying
  (Refer to GROUP 12 – On-vehicle Service.)

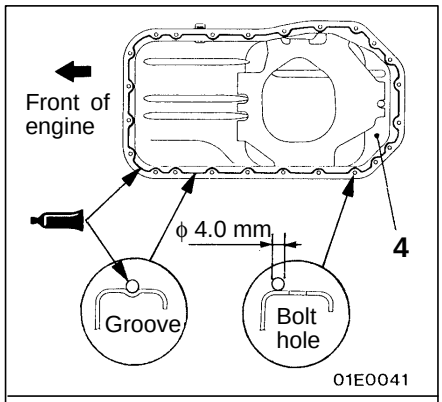

Sealant:
MITSUBISHI GENUINE Part No. MD970389 or equivalent

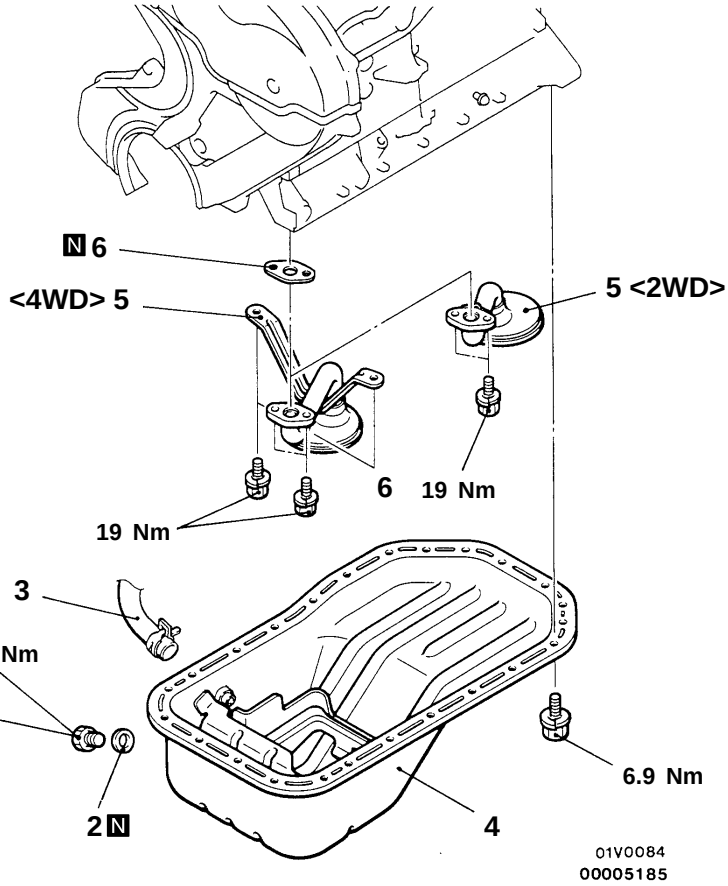

Removal steps

1. Drain plug
▶B◀ 2. Drain plug gasket
3. Oil return hose connection
◀A▶ ▶A◀ 4. Oil pan
5. Oil screen
6. Gasket

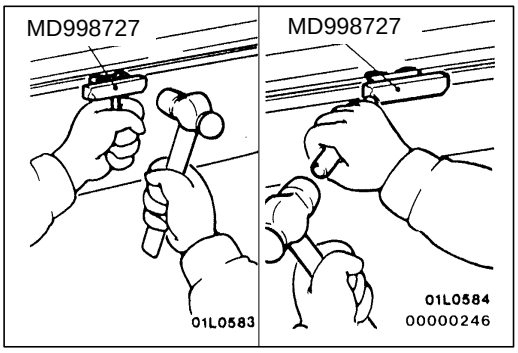

REMOVAL SERVICE POINT

◀A▶ OIL PAN REMOVAL

1. Remove oil pan bolts.
2. Tap the special tool in between the oil pan and cylinder block.
3. Slide the special tool by tapping it at an angle to remove the oil pan.

Caution
The use of a screwdriver or chisel in place of the special tool can damage the gasket seat surface and cause oil leakage.

INSTALLATION SERVICE POINTS

▶A◀ OIL PAN INSTALLATION

1. Remove sealant from oil pan and cylinder block mating surfaces.
2. Degrease the sealant-coated surface and the engine mating surface.
3. Apply the specified sealant around the gasket surface of oil pan.

   Specified sealant:
   MITSUBISHI GENUINE PART No. MD970389 or equivalent

   NOTE
   The sealant should be applied in a continuous bead approximately 4 mm in diameter.

4. Assemble oil pan to cylinder block within 15 minutes after applying the sealant.

   Caution
   After installing the oil pan, wait at least 1 hour before starting the engine.

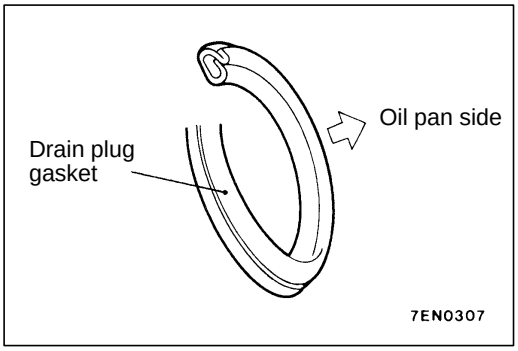

▶B◀ DRAIN PLUG GASKET INSTALLATION

Install a new gasket in the direction so that it faces as shown in the illustration.

INSPECTION

11200260041

- Check oil pan for cracks.
- Check oil pan sealant-coated surface for damage and deformation.
- Check oil screen for cracked, clogged or damaged wire net and pipe.

CYLINDER HEAD GASKET

11200400368

REMOVAL AND INSTALLATION

Pre-removal Operation
- Intake and Exhaust Manifold Removal (Refer to GROUP 15.)
- Timing Belt Removal (Refer to P.11B-26.)
- Engine Coolant Draining (Refer to GROUP 14 – On-vehicle Service.)

Post-installation Operation
- Timing Belt Installation (Refer to P.11B-26.)
- Intake and Exhaust Manifold Installation (Refer to GROUP 15.)
- Fuel Line Air Bleeding (Refer to GROUP 13E – On-vehicle Service.)
- Engine Coolant Filling (Refer to GROUP 14 – On-vehicle Service.)

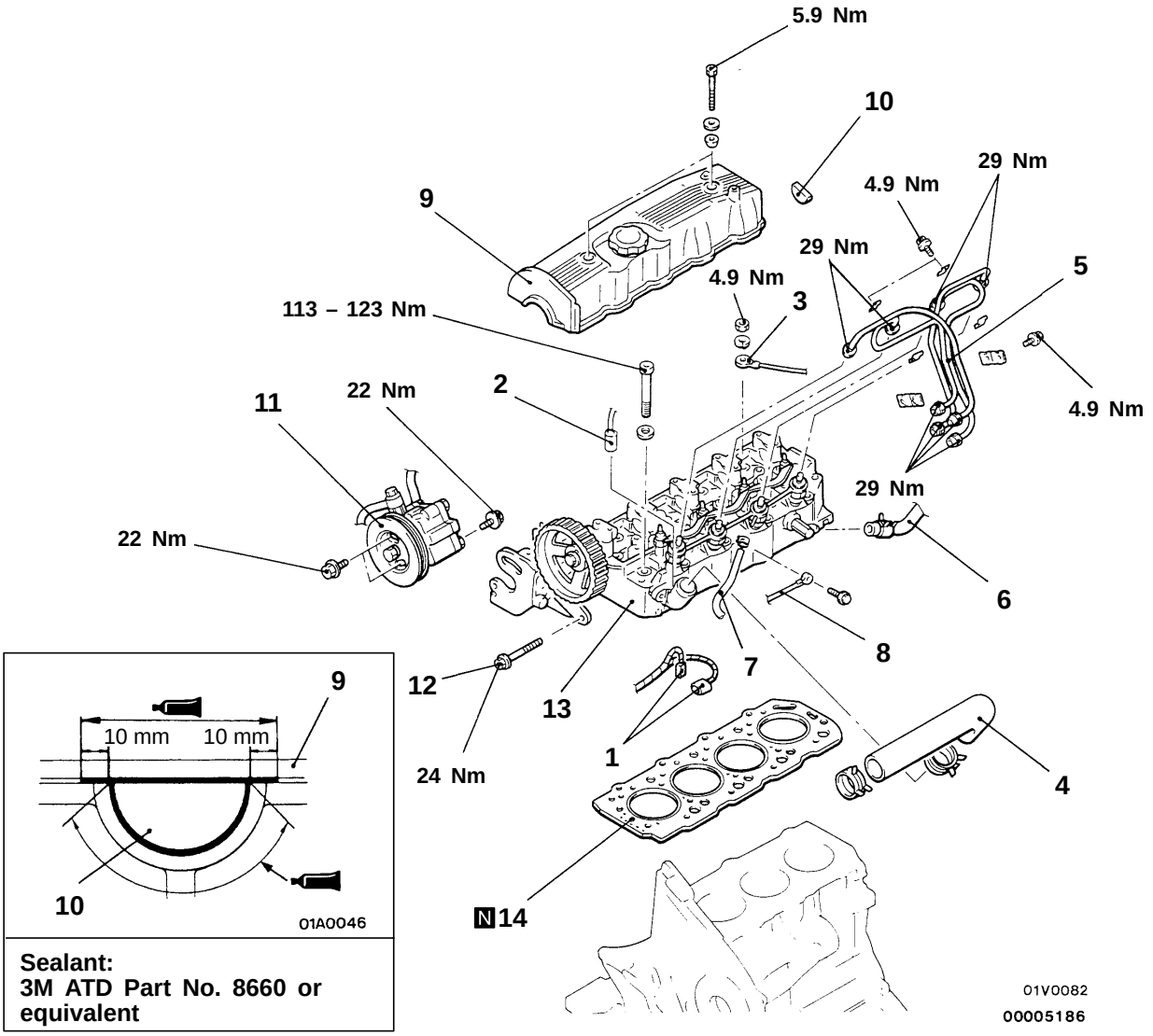

Sealant:
3M ATD Part No. 8660 or equivalent

Removal steps

1. Engine coolant temperature switch connector (for A/C)
2. Engine coolant temperature gauge unit and sensor connector
3. Glow plug terminal
4. ◀A▶ ▶C◀ Radiator upper hose
5. ◀B▶ ▶D◀ Fuel injection pipe
6. Heater hose or water by-pass hose connection
7. Fuel hose connection
8. Earth cable connection
9. Rocker cover
10. Semi-circular packing
11. ◀C▶ Power steering oil pump assembly
12. Power steering oil pump bracket bolt
13. ◀D▶ ▶B◀ Cylinder head assembly
14. ▶A◀ Cylinder head gasket

REMOVAL SERVICE POINTS

◀A▶ RADIATOR UPPER HOSE DISCONNECTION

After making mating marks on the radiator upper hose and the hose clamp, disconnect the radiator upper hose.

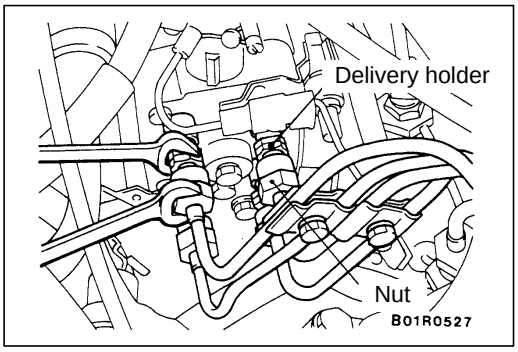

◀B▶ FUEL INJECTION PIPE REMOVAL

When loosening nuts at both ends of injection pipe, hold the delivery holder (for pump side) and the injection nozzle assembly (for nozzle side) with wrench and loosen nut.

Caution
After disconnecting the injection pipe, plug the opening so that no foreign particles get inside the pump or into the injection nozzle.

◀C▶ POWER STEERING OIL PUMP REMOVAL

Remove the power steering oil pump from the bracket with the hose attached.

NOTE
Place the removed power steering oil pump in a place where it will not be a hindrance when removing and installing the engine assembly, and tie it with a cord.

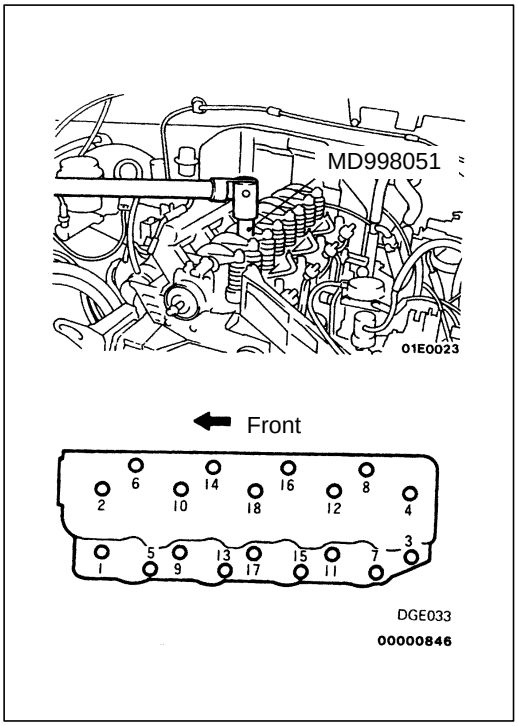

◀D▶ CYLINDER HEAD ASSEMBLY REMOVAL

Use the special tool to tighten each bolt 2 – 3 times in the order shown in the illustration.

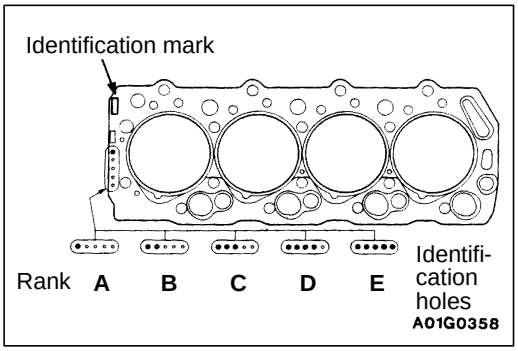

INSTALLATION SERVICE POINTS

▶A◀ CYLINDER HEAD GASKET INSTALLATION

1. Wipe off any oil or grease from the gasket mounting surface.
2. Check the rank from the number of identification holes on the cylinder head gasket that was removed, and select a cylinder head gasket of the same rank.

   NOTE
   The ranks are listed in the parts catalogue.
3. Place the cylinder head gasket on top of the cylinder block so that the identification mark is facing upwards as in the illustration.

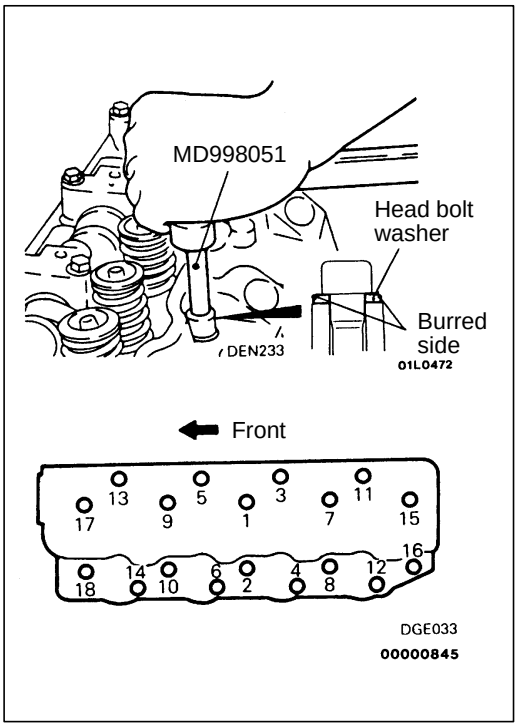

▶B◀ CYLINDER HEAD INSTALLATION

Use the special tool to tighten each bolt 2 – 3 times in the order shown in the illustration.

Caution
The head bolt washer should be installed so that the burred side is facing upwards.

▶C◀ RADIATOR UPPER HOSE CONNECTION

To reuse the radiator upper hose, align the mating marks that were made during removal, and then install the hose clamp.

▶D◀ FUEL INJECTION PIPE INSTALLATION

When tightening the nuts at both ends of the fuel injection pipe, hold the delivery holder (for pump side) and the injection nozzle assembly (for nozzle side) with a wrench, and tighten the nuts to the specified torque.

TIMING BELT AND TIMING BELT B

11200430343

REMOVAL AND INSTALLATION

Pre-removal Operation
- Cooling Fan Removal (Refer to GROUP 14.)

Post-installation Operation
- Cooling Fan Installation (Refer to GROUP 14.)
- Engine Adjustment (Refer to P.11B-5.)

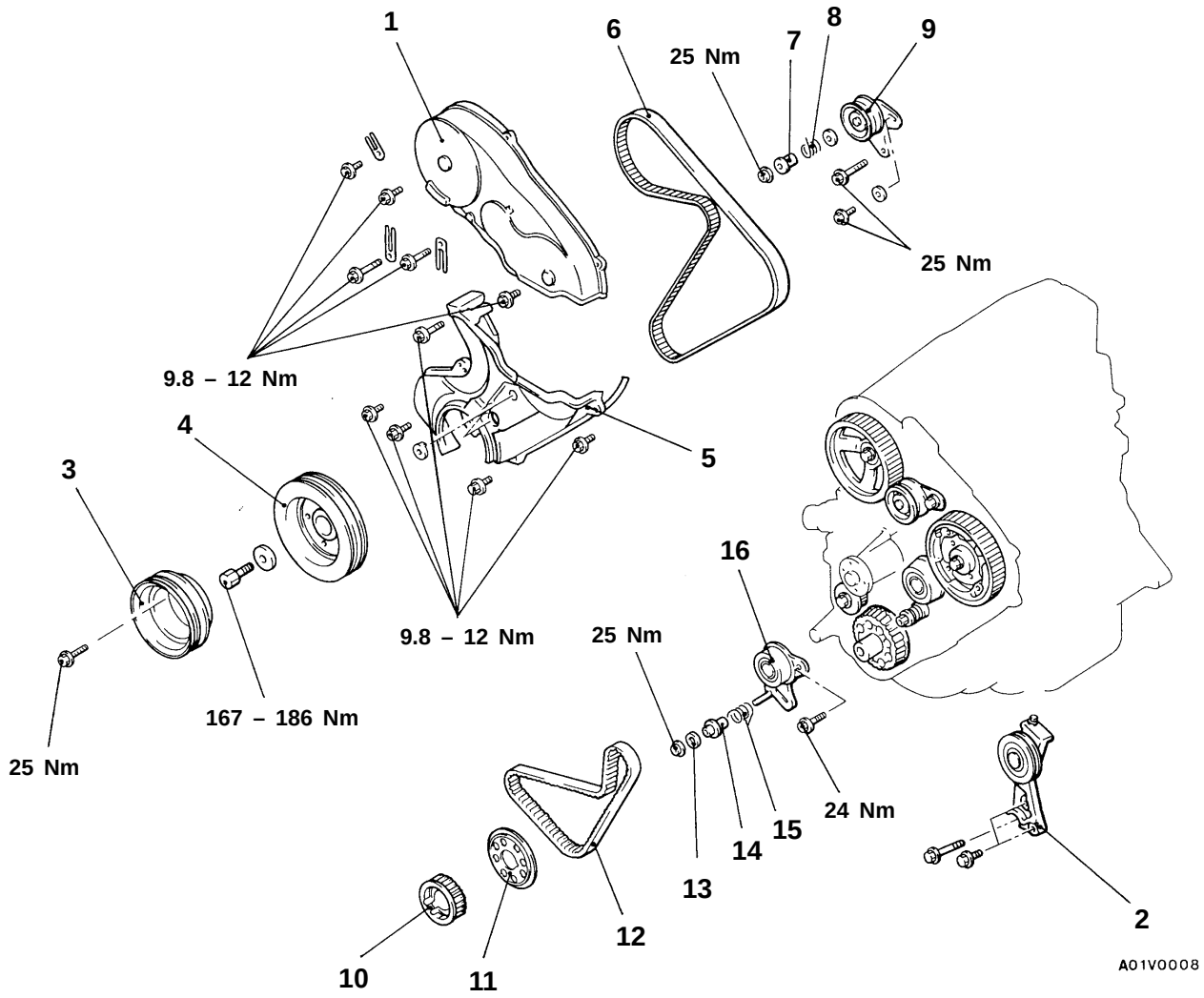

Removal steps

1. Timing belt front upper cover
2. Tension pulley bracket (for A/C)
3. Crankshaft pulley (for power steering and A/C)
◀A▶ ▶C◀ 4. Crankshaft pulley
5. Timing belt front lower cover
◀B▶ ▶B◀ 6. Timing belt
7. Tensioner spacer
8. Tensioner spring
9. Timing belt tensioner assembly
10. Crankshaft sprocket
11. Flange
◀C▶ ▶A◀ 12. Timing belt B
13. Gasket
14. Tensioner spacer B
15. Tensioner spring B
16. Timing belt tensioner B

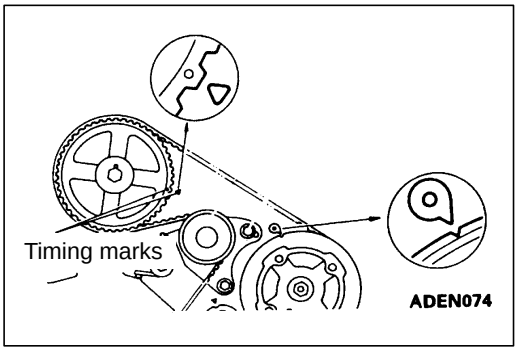

REMOVAL SERVICE POINTS

◀A▶ CRANKSHAFT PULLEY REMOVAL

1. Position the No. 1 cylinder at compression TDC and remove the crankshaft pulley.

   NOTE
   The No. 1 cylinder is at compression TDC when the marks are aligned as shown in the figure.

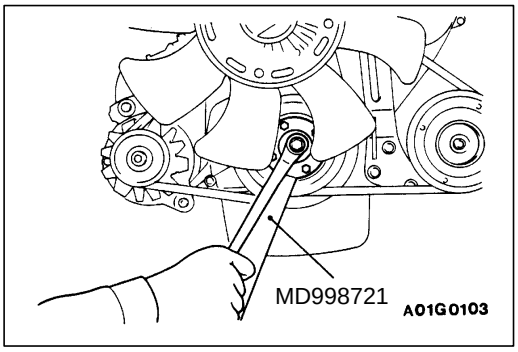

2. Use the special tool to keep crankshaft from turning and remove the bolts.

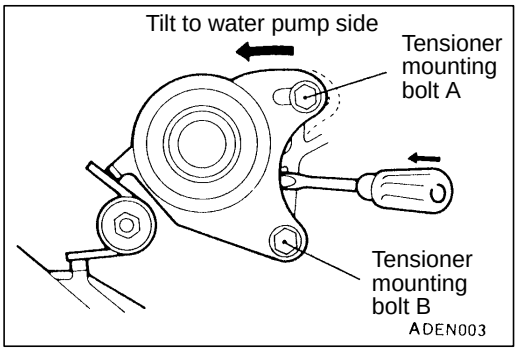

◀B▶ TIMING BELT REMOVAL

1. When reinstalling timing belt, mark an arrow at the belt to show rotation direction.
2. Loosen the tensioner mounting bolt A and B.
3. Push timing belt tensioner to water pump side and tighten the tensioner mounting bolt A and B. Secure so that tensioner will not move back.

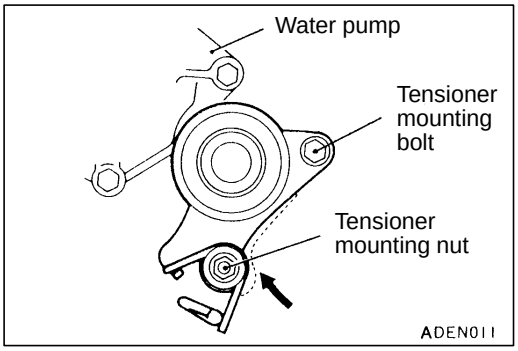

◀C▶ TIMING BELT B REMOVAL

1. When reinstalling timing belt ”B”, mark an arrow at the belt to show rotation direction.
2. Loosen the tensioner mounting bolt and nut.
3. Push timing belt tensioner to water pump side and tighten the tensioner mounting bolt and nut. Secure so that tensioner will not move back.

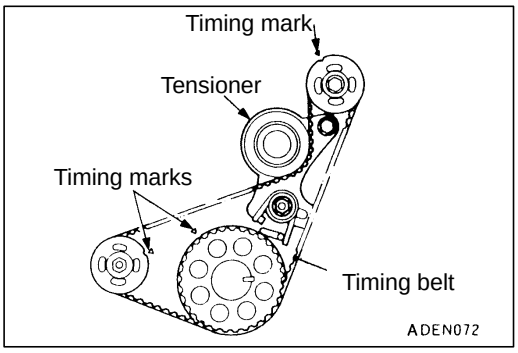

INSTALLATION SERVICE POINTS

▶A◀ TIMING BELT B INSTALLATION

1. Align the timing marks of the 3 sprockets.
2. When reusing timing belt ”B”, make sure the arrow mark is pointing in the same direction as when the belt was removed.

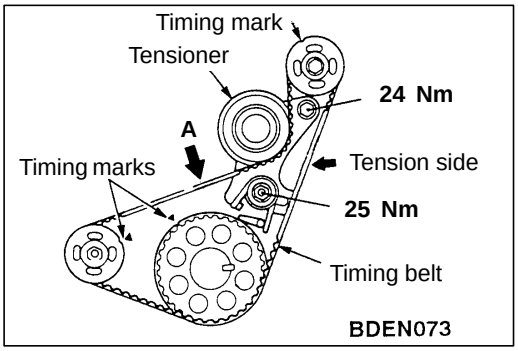

3. Install timing belt B and make sure there is no deflection on the tension side.
4. Press the deflection side of timing belt B (indicated by arrow (A)) with the hand and fully stretch the tensioner side.
5. Make sure that the timing marks are aligned.
6. Loosen the tensioner mounting bolt and nut so that only the pressure of the spring is applied to timing belt B.
7. Tighten the tensioner mounting bolt and nut, tightening the nut first. If the bolt is tightened first, the tensioner will move and tension the belt.

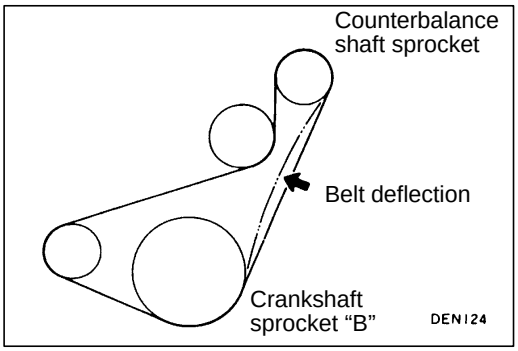

8. Press in the direction of the arrow in the figure with the index finger to check the amount of deflection.

   Standard value: 4 – 5 mm

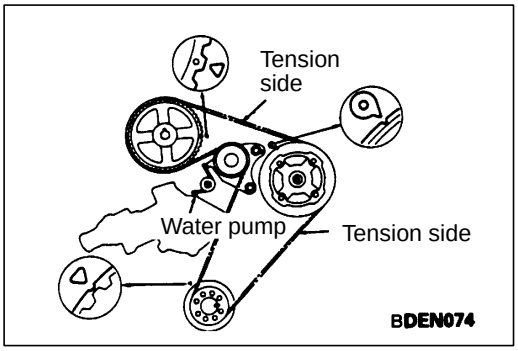

▶B◀ TIMING BELT INSTALLATION

1. Align the timing marks of the 3 sprockets.
2. When reusing timing belt, make sure the arrow mark is pointing in the same direction as when the belt was removed.
3. Install the timing belt to the crankshaft sprocket, to injection pump sprocket, to tensioner and to camshaft sprocket in that order. Being careful not to allow deflection on the tension side of the timing belt.

   Caution
   1. **Engage the belt on the various sprockets while maintaining tension on the belt of tension side.**
   2. **Align the injection pump sprocket with the timing mark, hold the sprocket so that is does not turn and engage the belt.**

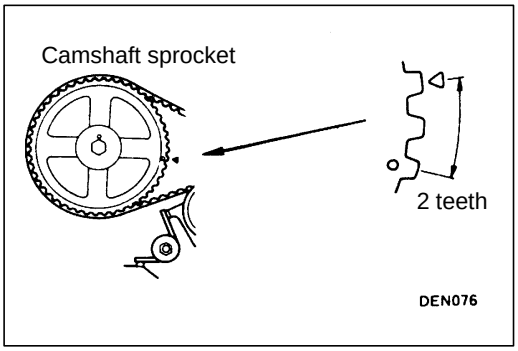

4. Loosen the tensioner mounting bolts and apply tension with the spring.
5. Turn the crankshaft clockwise and stop at the second lobe of the camshaft sprocket.

Caution
1. **When turning the crankshaft in item (5), strictly observe the specified amount of rotation (2 teeth on the camshaft sprocket) in order to apply a constant force to the tension side of the belt.**
2. **Do not turn the crankshaft counterclockwise.**
3. **Do not touch the belt during adjustment.**

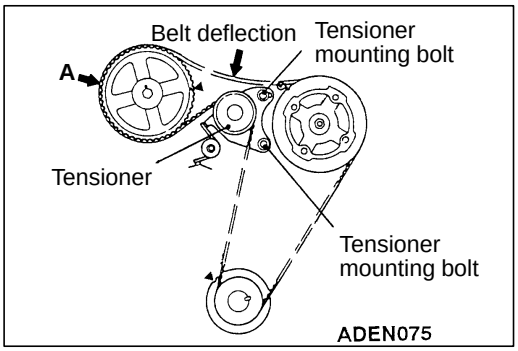

6. Make sure that the part indicated by arrow A does not float upward.
7. Tighten the tensioner mounting bolts, starting with the bolt in the elongated hole. If the lower bolt is tightened first, belt tension will become too tight.

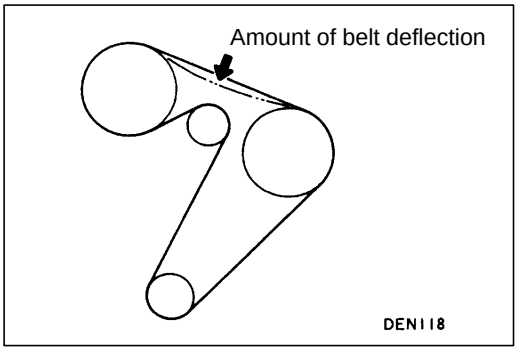

8. Turn the crankshaft anticlockwise and align the timing mark. Next, make sure that the timing marks of all sprockets are aligned.
9. Press on the centre of the bolt with an index finger to check the amount of deflection.

Standard value: 4 – 5 mm

▶C◀ CRANKSHAFT PULLEY INSTALLATION

Using the special tool to install the crankshaft pulley as same as removal procedure.

CRANKSHAFT FRONT OIL SEAL

11200340233

REMOVAL AND INSTALLATION

Pre-removal and Post-installation Operation
- Timing Belt and Timing Belt "B" Removal and Installation (Refer to P.11B-26.)

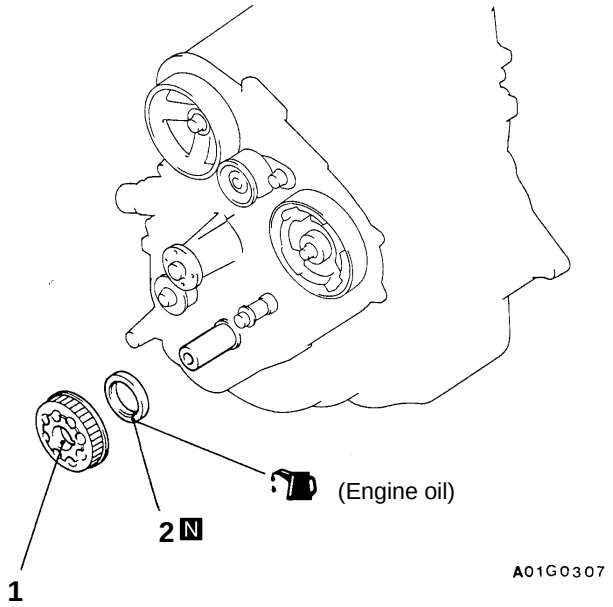

Removal steps

1. Crankshaft sprocket B
◀A▶ ▶A◀ 2. Oil seal

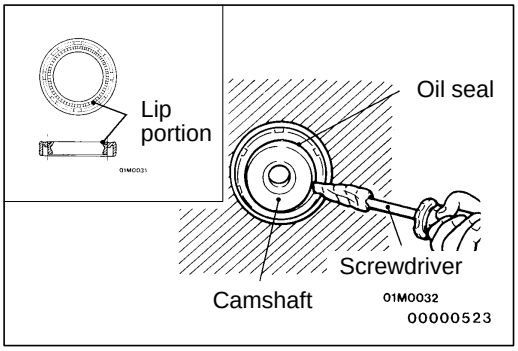

REMOVAL SERVICE POINT

◀A▶ OIL SEAL REMOVAL

1. Cut out a portion in the crankshaft oil seal lip.
2. Cover the tip of a screwdriver with a cloth and apply it to the cutout in the oil seal to pry off the oil seal.

Caution
Be careful not to damage the crankshaft and front case.

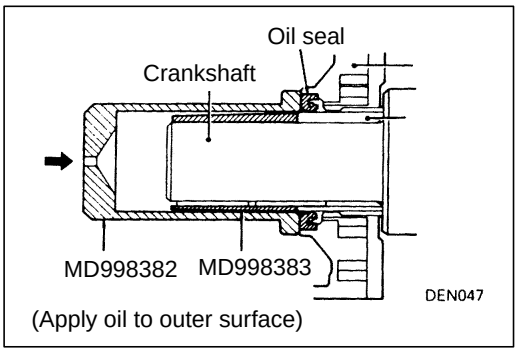

INSTALLATION SERVICE POINT

▶A◀ OIL SEAL INSTALLATION

Apply engine oil to the outside of the special tool (MD998383) and to the oil seal lip, and use the special tool to press-fit the oil seal.

CRANKSHAFT REAR OIL SEAL

11200370249

REMOVAL AND INSTALLATION

Pre-removal and Post-installation Operation
- Oil Pan Removal and Installation (Refer to P.11-21.)
- Transmission Assembly Removal and Installation (Refer to GROUP 22, 23.)

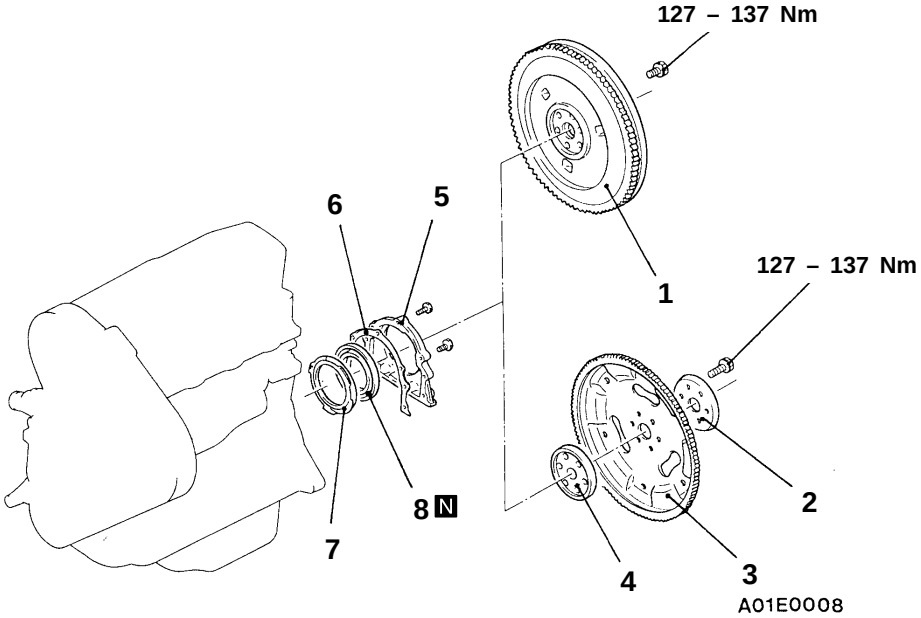

Removal steps

◀A▶ ▶C◀ 1. Flywheel assembly <M/T>
◀A▶ ▶C◀ 2. Adaptor plate <A/T>
3. Drive plate <A/T>
4. Crankshaft adaptor <A/T>
5. Oil seal case
6. Gasket
▶B◀ 7. Oil separator
▶A◀ 8. Oil seal

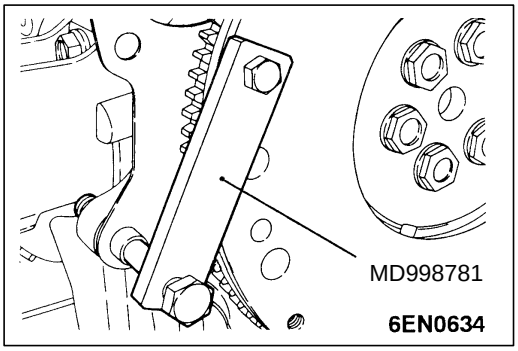

REMOVAL SERVICE POINT

◀A▶ FLYWHEEL <M/T>/ADAPTOR PLATE <A/T> REMOVAL

Use the special tool to secure the flywheel or adaptor plate and remove the bolt.

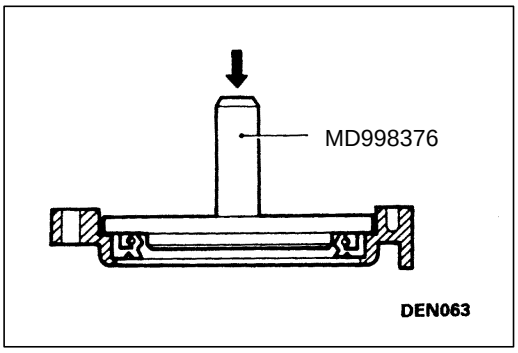

INSTALLATION SERVICE POINTS

▶A◀ OIL SEAL INSTALLATION

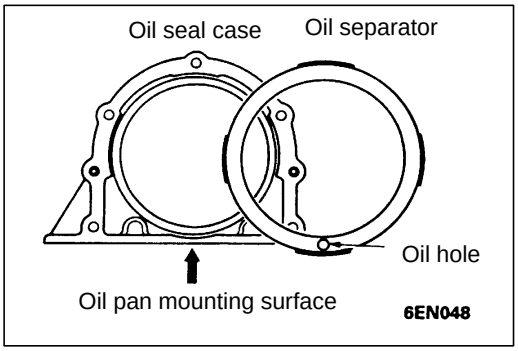

▶B◀ OIL SEPARATOR INSTALLATION

Install the oil separator in such a way that its oil hole come at the case bottom (indicated by an arrow in the illustration).

▶C◀ FLYWHEEL <M/T>/ADAPTOR PLATE <A/T> INSTALLATION

Use the special tool in the same way as during removal to stop the flywheel or adaptor plate assembly from turning, and then tighten the bolt to the specified torque.

Tightening torque: 127 – 137 Nm

ENGINE ASSEMBLY

11200100367

REMOVAL AND INSTALLATION

Pre-removal Operation
- Hood Removal (Refer to GROUP 42.)
- Intercooler Removal <4WD> (Refer to GROUP 15.)
- Air Cleaner and Air Intake Hose Removal (Refer to GROUP 15.)
- Brake Master Cylinder Heat Protector Removal <4WD>
- Battery Removal
- Radiator Removal (Refer to GROUP 14.)
- Transmission Assembly Removal <2WD> (Refer to GROUP 22.)
- Transmission and Transfer Assembly Removal <4WD> (Refer to GROUP 22, 23.)

Post-installation Operation
- Transmission and Transfer Assembly Installation <4WD> (Refer to GROUP 22, 23.)
- Transmission Assembly Installation <2WD> (Refer to GROUP 22.)
- Radiator Installation (Refer to GROUP 14.)
- Battery installation
- Brake Master Cylinder Heat Protector Installation <4WD>
- Air Cleaner and Air Intake Hose Installation (Refer to GROUP 15.)
- Intercooler Installation <4WD> (Refer to GROUP 15.)
- Hood Installation (Refer to GROUP 42.)
- Drive Belt Tension Adjustment (Refer to P.11B-5.)
- Accelerator Cable Adjustment (Refer to GROUP 17 – On-vehicle Service.)
- Throttle Cable Adjustment <A/T> (Refer to GROUP 23 – On-vehicle Service.)

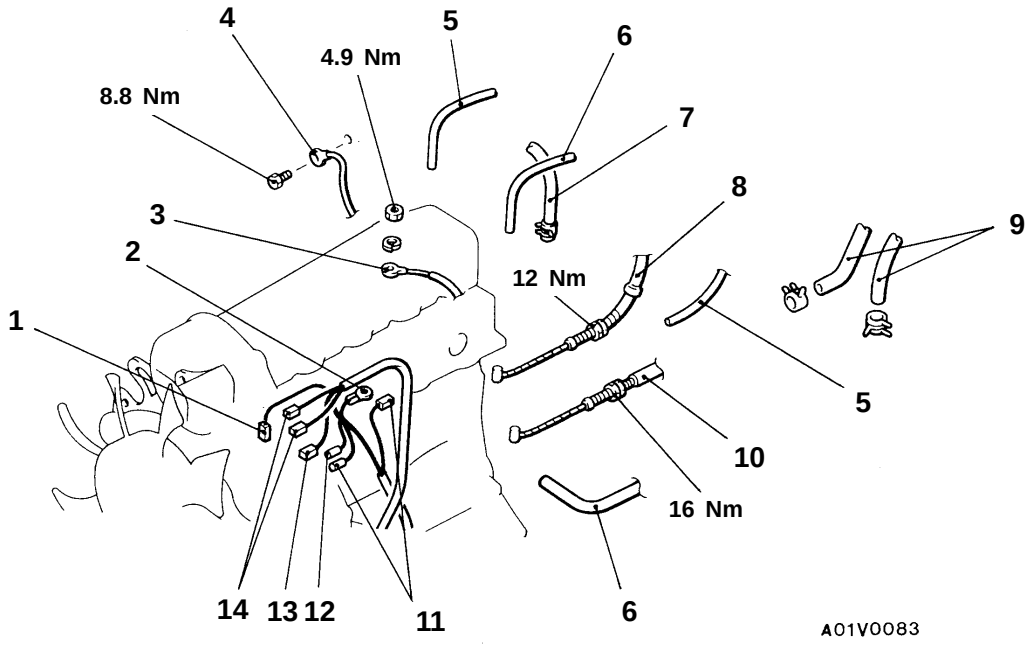

Removal steps

1. Engine coolant temperature sensor and gauge unit connector
2. Earth cable connector
3. Glow plug terminal
4. Earth cable connector
5. Vacuum hose connection (for A/C)
6. Vacuum hose connection (for ABS)
7. Brake booster vacuum hose connection
8. Accelerator cable connection
9. Heater hose connections
10. Throttle cable connection <A/T>
11. Fuel cut solenoid valve or fuel cut valve controller connector
12. Revolution pick-up sensor connector
13. Lever (throttle) position switch connector
14. Engine coolant temperature switch connector (for A/C)

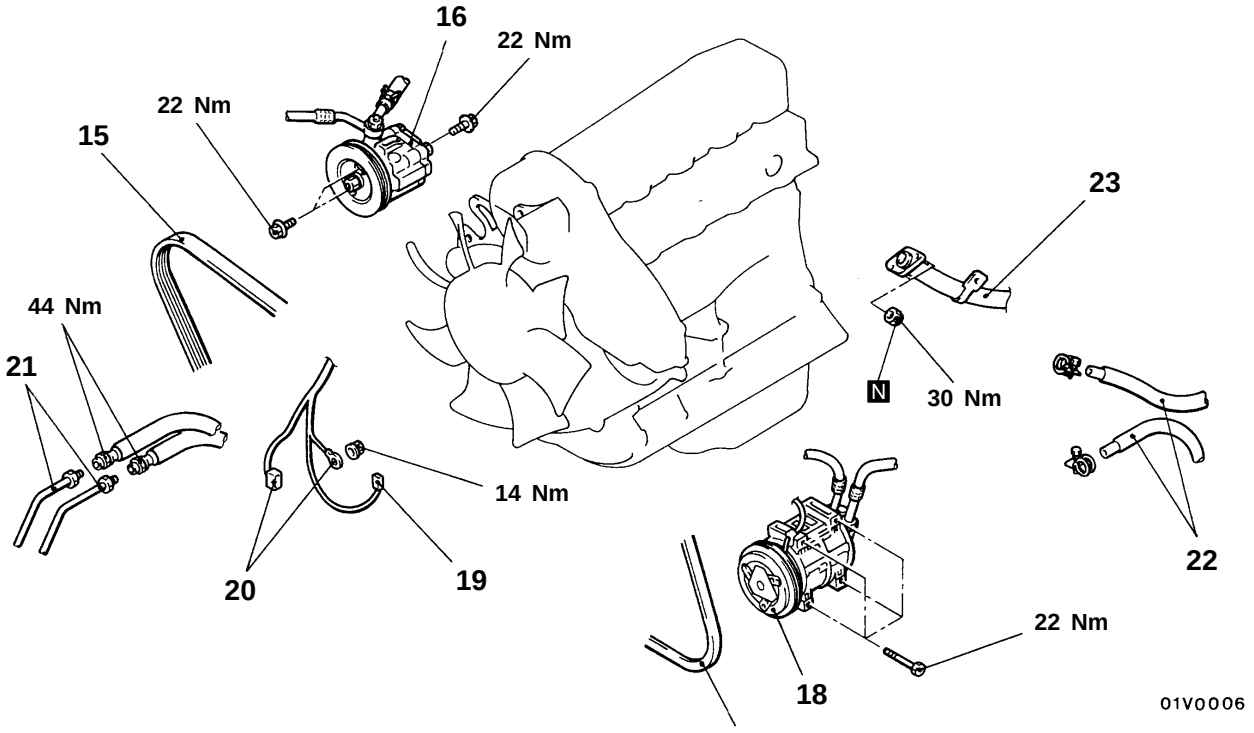

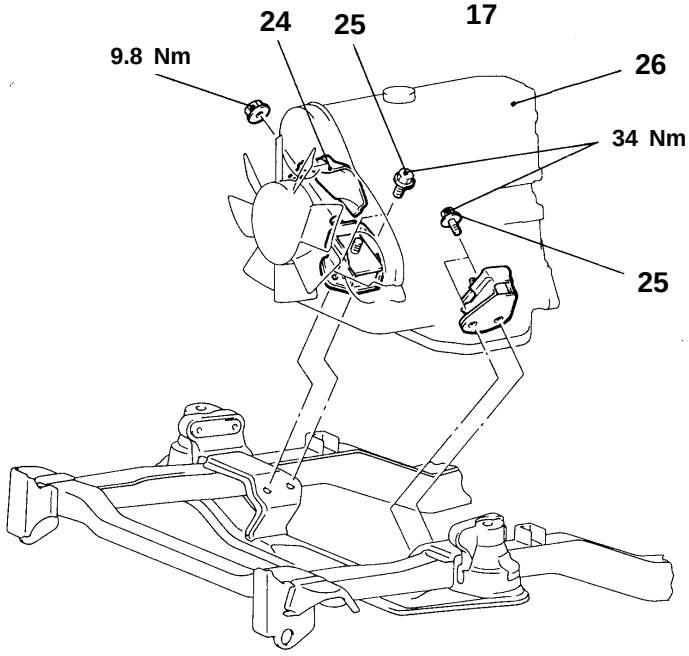

15. Drive belt (for Power steering)
◀A▶ 16. Power steering oil pump assembly
17. Drive belt (for A/C)
◀A▶ 18. A/C compressor assembly
19. Engine oil pressure switch connector
20. Alternator connector
21. Engine oil cooler hose connection
22. Fuel hose connections
23. Front exhaust pipe connection
24. Heat protector
25. Engine support front insulator attaching bolt
◀B▶ ▶A◀ 26. Engine assembly

REMOVAL SERVICE POINTS

◀A▶ POWER STEERING OIL PUMP ASSEMBLY AND A/C COMPRESSOR ASSEMBLY REMOVAL

1. Remove the oil pump and A/C compressor (with the hose attached).
2. Suspend the removed oil pump (by using wire or similar material) at a place where no damage will be caused during removal/installation of the engine assembly.

◀B▶ ENGINE ASSEMBLY REMOVAL

1. Check that all cables, hoses, harness connectors, etc. are disconnected from the engine.
2. Lift the chain block slowly to remove the engine assembly upward from the engine compartment.

INSTALLATION SERVICE POINT

▶A◀ ENGINE ASSEMBLY INSTALLATION

Install the engine assembly. When doing so, check carefully that all pipes and hoses are connected, and that none are twisted, damaged, etc.

NOTES

ENGINE <4D5>

CONTENTS

GENERAL 2
Outline of Changes 2
GENERAL INFORMATION 2
SERVICE SPECIFICATIONS 2
SPECIAL TOOLS 2
ON-VEHICLE SERVICE 3
Injection Timing Check and Adjustment 3
Idle Speed Check 3
OIL PAN <4D56-Step III> 4
CYLINDER HEAD GASKET <4D56-Step III> 5
TIMING BELT AND TIMING BELT B <4D56-Step III> 7

GENERAL

OUTLINE OF CHANGES

- The following service procedures have been established due to the introduction of the electronic-controlled injection pump. Other service procedures are the same as before. <4D56-Step III>
- Oil pan cover has been adopted. <4D56-Step III>
- The tightening torque of the cylinder head bolts and the cylinder head gasket have been changed.<4D56-Step III>

GENERAL INFORMATION

Items		4D56
Total displacement mL		2,477
Bore x Stroke mm		91.1 x 95.0
Compression ratio		21
Combustion chamber		Vortex chamber type
Camshaft arrangement		SOHC
Number of valve	Intake	4
	Exhaust	4
Valve timing	Intake	Opening BTDC 20°, Closing ABDC 49°
	Exhaust	Opening BBDC 55°, Closing ATDC 22°
Fuel system		Electronic-controlled injection pump
Rocker arm		Roller type
Adjusting screw		Elephant foot type

SERVICE SPECIFICATIONS

Items	Standard value	Limit
Idle speed r/min	750 ± 30	–

SPECIAL TOOLS

Tools	Number	Name	Use
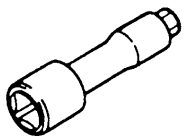	MD998051	Cylinder head bolt wrench	Removal and installation of the cylinder head bolt
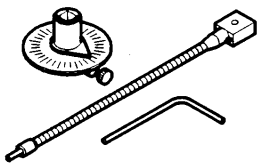	MB991614	Angle gauge	Tightening of the cylinder head bolts

ON-VEHICLE SERVICE

INJECTION TIMING CHECK AND ADJUSTMENT

Inspection and adjustment are the same as before. The electronic-controlled injection pump does not have a cold start device (wax-type).

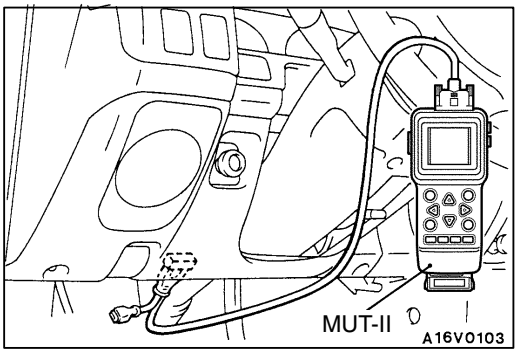

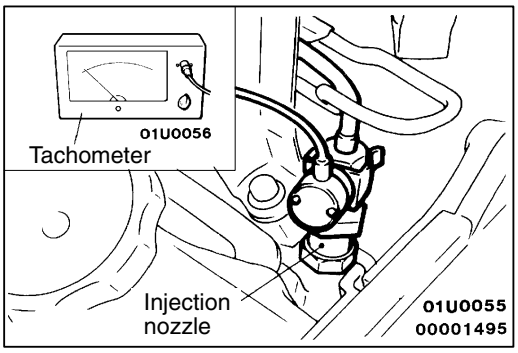

IDLE SPEED CHECK

1. Set the vehicle to the pre-inspection condition.
2. Turn the ignition switch to “LOCK” (OFF) position, and connect the diagnosis connector to the MUT-II. If the MUT-II is not used, connect a tachometer to the injection nozzle or the pipe.
3. Start the engine, and let it run at idle.
4. Check the idle speed.

   Standard value: 750 ± 30 r/min

5. If the idle speed is not within the standard value, refer to 13I – Troubleshooting to check the electronic-controlled fuel injection system.

   NOTE
   The idle speed is controlled by the engine-ECU.

OIL PAN <4D56-Step III>

REMOVAL AND INSTALLATION

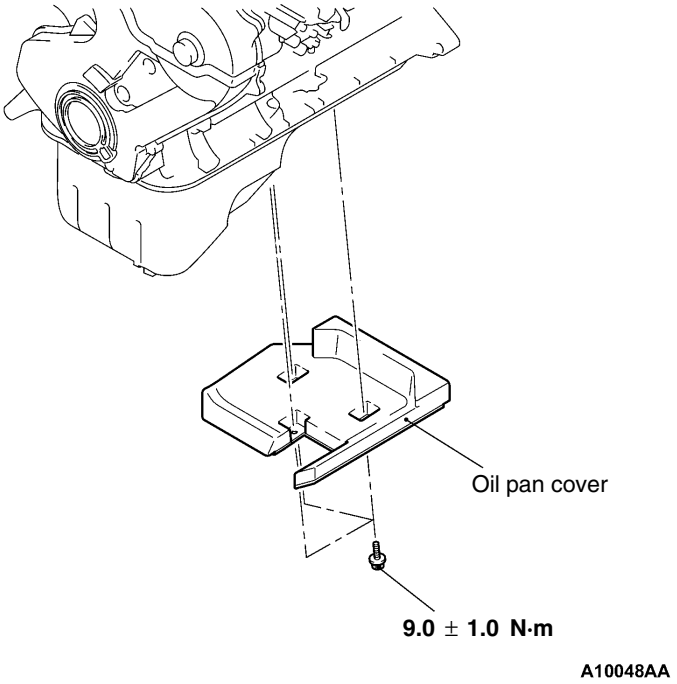

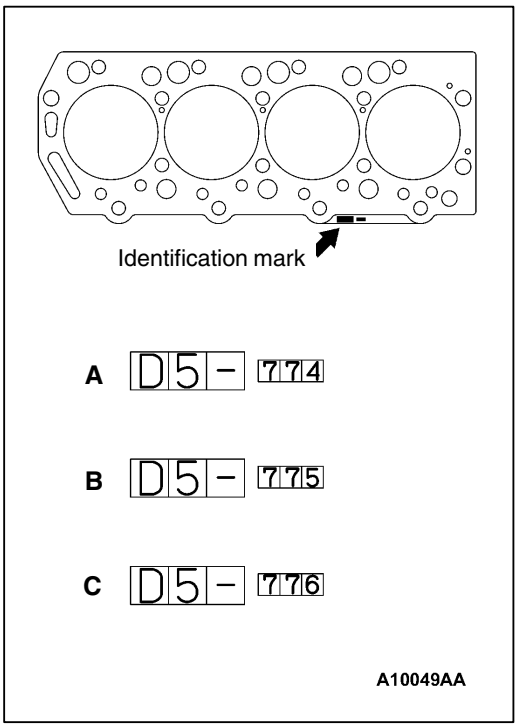

CYLINDER HEAD GASKET <4D56-Step III>

INSTALLATION SERVICE POINT

CYLINDER HEAD GASKET AND CYLINDER HEAD INSTALLATION

1. Wipe off any oil or grease from the gasket mounting surface.
2. If you replace the cylinder head gasket only, check the identification mark of the cylinder head gasket removed, select the cylinder head gasket that has same identification mark (size) from the table below.

Spec	Identification mark (size)	Parts number
A	D5–774 (Thickness on tightening:1.45 ± 0.04)	MD377774
B	D5–775 (Thickness on tightening:1.50 ± 0.04)	MD377775
C	D5–776 (Thickness on tightening:1.55 ± 0.04)	MD377776

Caution
The cylinder head gasket whose thickness is in size with piston projection is attached. So if you replace the piston or the connecting rod, the piston projection changes. Measure the piston projection, select the cylinder head gasket whose thickness is in size with piston projection should be fitted.

3. Install the cylinder head gasket in order to fit the cylinder head gasket bore to the cylinder head bore.
4. Clean the cylinder head assembly and the cylinder block mating surfaces with a scraper or a wire brush.

Caution
Do not allow foreign material to enter the engine coolant or oil passages and the cylinder.

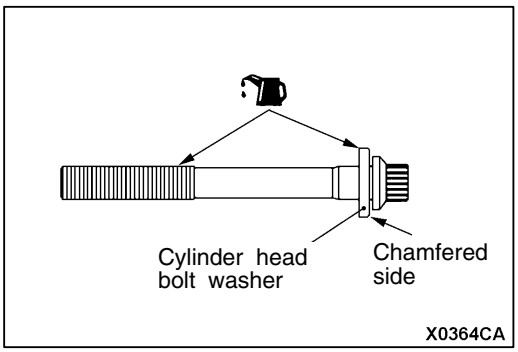

5. Install the cylinder head bolt washer to the cylinder head bolt so that the washer chamfered side faces as shown.
6. Apply a small amount of engine oil to the cylinder head bolt thread and the washer.

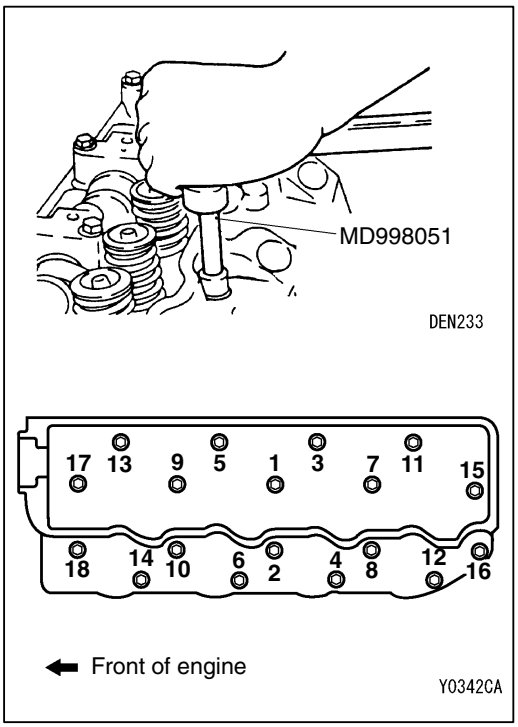

7. Tighten the cylinder head bolts according to the following procedure (angle-tightening procedure.)
   (1) Use the special tool to tighten the cylinder head bolts in the order of the illustrated numbers to 29 ± 2 N·m.

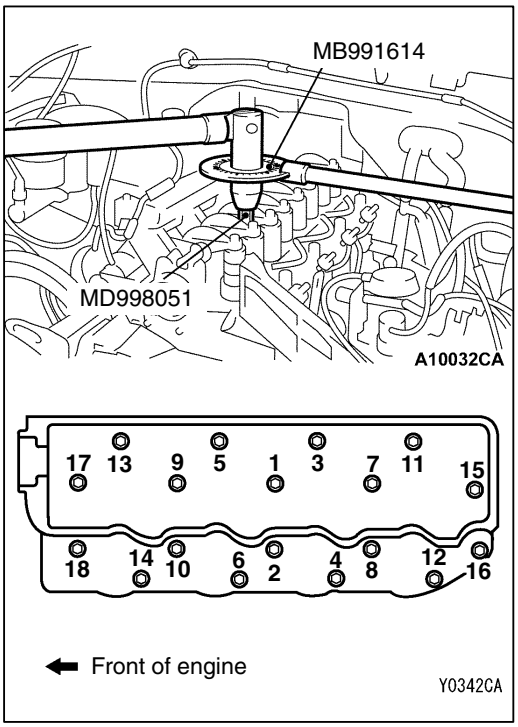

   (2) Place the special tool in a wrench to tighten the cylinder head bolt in the order of the illustrated numbers to 120°.

TIMING BELT AND TIMING BELT B <4D56-Step III>

REMOVAL AND INSTALLATION

Pre-removal Operation
- Cooling Fan Removal (Refer to GROUP 14.)

Post-installation Operation
- Cooling Fan Installation (Refer to GROUP 14.)
- Engine Adjustment

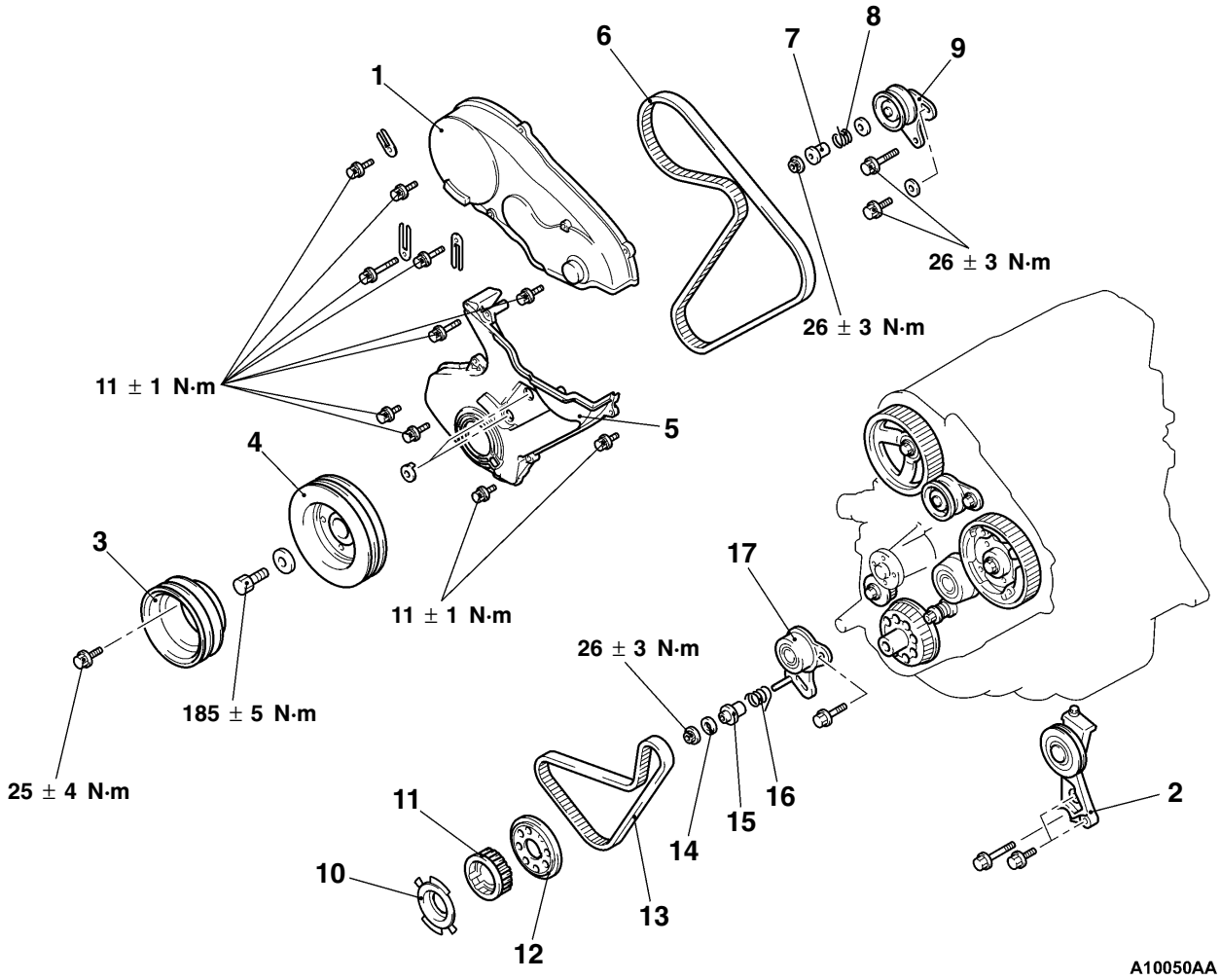

Removal steps

1. Timing belt front upper cover
2. Tension pulley bracket (for A/C)
3. Crankshaft pulley (for power steering and A/C)
4. ◀A▶ ▶C◀ Crankshaft pulley
5. Timing belt front lower cover
6. ◀B▶ ▶B◀ Timing belt
7. Tensioner spacer
8. Tensioner spring
9. Timing belt tensioner assembly
10. Crankshaft sensing blade
11. Crankshaft sprocket
12. Flange
13. ◀C▶ ▶A◀ Timing belt B
14. Gasket
15. Tensioner spacer B
16. Tensioner spring B
17. Timing belt tensioner B

NOTE
Follow the conventional procedures for removal and installation service points.

NOTES

ENGINE LUBRICATION

Click on the applicable bookmark to selected the required model year

ENGINE LUBRICATION

CONTENTS

12109000051

GENERAL INFORMATION 2
LUBRICANTS 3
SPECIAL TOOLS 3
ON-VEHICLE SERVICE 3
Engine Oil Check 3
Engine Oil Replacement 3
Oil Filter Replacement 4
ENGINE OIL COOLER <4D56> 6

GENERAL INFORMATION

12100010053

The lubrication method is a fully force-fed, full-flow filtration type.

The corrugate fin type of engine oil cooler have been adopted, and installed forward of the radiator. <4D56>

Items	4G63	4G64	4D56
Oil pump type	Involute gear type	Involute gear type	Trochoid type
Drive method	Timing belt	Timing belt	Crankshaft

ENGINE OILS

Health Warning

Prolonged and repeated contact with mineral oil will result in the removal of natural fats from the skin, leading to dryness, irritation and dermatitis. In addition, used engine oil contains potentially harmful contaminants which may cause skin cancer. Adequate means of skin protection and washing facilities must be provided.

Recommended Precautions

The most effective precaution is to adapt working practices which prevent, as far as practicable, the risk of skin contact with mineral oils, for example by using enclosed systems for handling used engine oil and by degreasing components, where practicable, before handling them.
Other precautions:

- Avoid prolonged and repeated contact with oils, particularly used engine oils.
- Wear protective clothing, including impervious gloves where practicable.
- Avoid contaminating clothes, particularly underpants, with oil.
- Do not put oily rags in pockets, the use of overalls without pockets will avoid this.
- Do not wear heavily soiled clothing and oil-impregnated foot-wear. Overalls must be cleaned regularly and kept separate from personal clothing.
- Where there is a risk of eye contact, eye protection should be worn, for example, chemical goggles or face shields; in addition an eye wash facility should be provided.
- Obtain First Aid treatment immediately for open cuts and wounds.
- Wash regularly with soap and water to ensure all oil is removed, especially before meals (skin cleansers and nail brushes will help). After cleaning, the application of preparations containing lanolin to replace the natural skin oils is advised.
- Do not use petrol, kerosine, diesel fuel, gas oil, thinners or solvents for cleaning skin.
- Use barrier creams, applying them before each work period, to help the removal of oil from the skin after work.
- If skin disorders develop, obtain medical advice without delay.

LUBRICANTS

12100040076

Items		4G63	4G64	4D56	4D56-Turbo
Engine oil API classification		SG or higher	SG or higher	CD or higher	CD or higher
Engine oil quantity ℓ	Oil filter	0.3	0.3	0.8	0.8
	Oil cooler	–	–	0.4	0.4
	Total	4.3	4.3	6.2	6.5

SPECIAL TOOLS

12100060065

Tool	Number	Name	Use
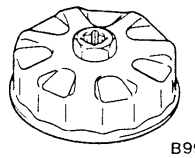 B991396	MB991396	Oil filter wrench	Removal and installation of engine oil filter (When using the oil filter of MD135737) <4G6>
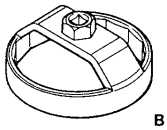 B991610	MB991610	Oil filter wrench	Removal and installation of engine oil filter (When using the oil filter of MD136466) <4G6>
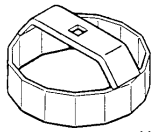 H061590	MH061590	Oil filter wrench	Removal and installation of engine oil filter (When using the oil filter of MD069782 or MD326489) <4D56>

ON-VEHICLE SERVICE

12100090057

ENGINE OIL CHECK

1. Check the engine oil using the oil level gauge.
2. Check that the oil is not excessively dirty, that there is no coolant or petrol mixed in, and that it has sufficient viscosity.

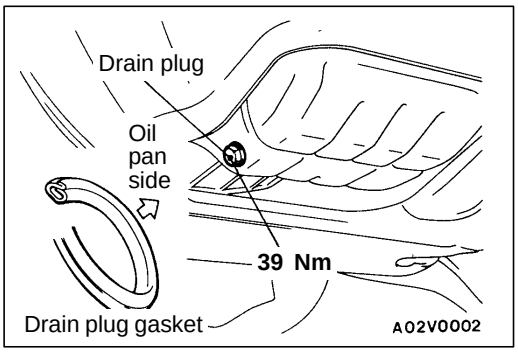

ENGINE OIL REPLACEMENT

12100100071

1. Start the engine and allow it to warm up until the temperature of the coolant reaches 80°C to 90°C.
2. Remove the engine oil filler cap.
3. Remove the drain plug to drain oil.

   Caution
   Use care as oil could be hot.

4. Install a new drain plug gasket so that it faces in the direction shown in the illustration, and then tighten the drain plug to the specified torque.

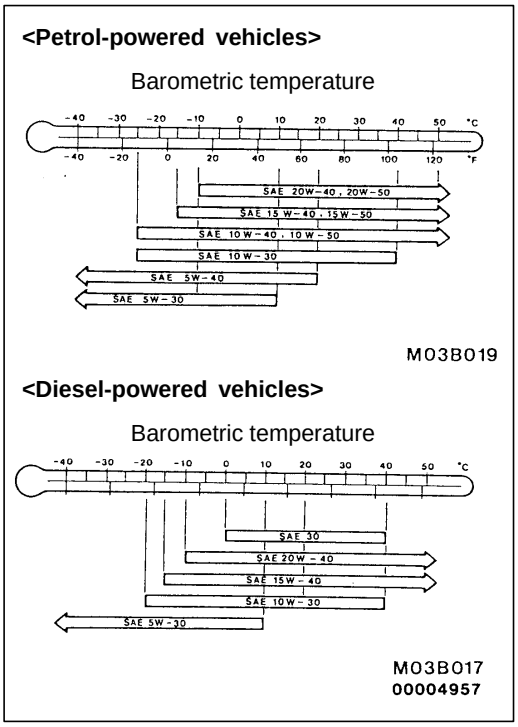

5. Refill with specified quantity of oil.

   Specified Engine Oil (API classification):
   <4G63, 4G64> SG or higher
   <4D56> CD or higher

   Total quantity (Includes volume inside oil filter and oil cooler):
   <4G63> 4.3 ℓ
   <4G64> 4.3 ℓ
   <4D56> 6.2 ℓ
   <4D56-Turbo> 6.5 ℓ

6. Install the engine oil filler cap.
7. Check oil level.

OIL FILTER REPLACEMENT

12100110067

1. Start the engine and allow it to warm up until the temperature of the coolant reaches 80°C to 90°C.
2. Remove the engine oil filler cap.
3. Remove the under cover.
4. Remove the drain plug to drain oil.

   Caution
   Use care as oil could be hot.

5. Remove the air cleaner, and cover the alternator with a rag so that oil will not get on the alternator. <4D56>

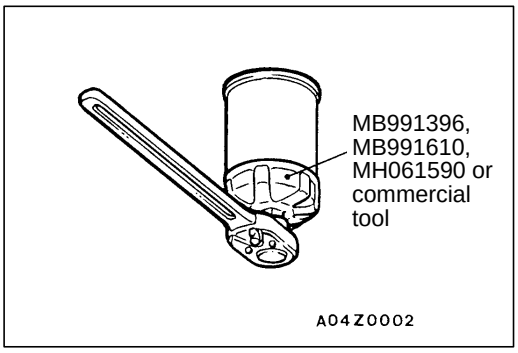

6. Use the following tools to remove the engine oil filter.
   - MB991396 or equivalent (when using the oil filter of MD135737) <4G6>
   - MB991610 or equivalent (when using the oil filter of MD136466) <4G6>
   - MH061590 or equivalent (when using the oil filter of MD069782 or MD326489) <4D56>
   - Commercial tool (other vehicles than above)
7. Clean the filter bracket side mounting surface.

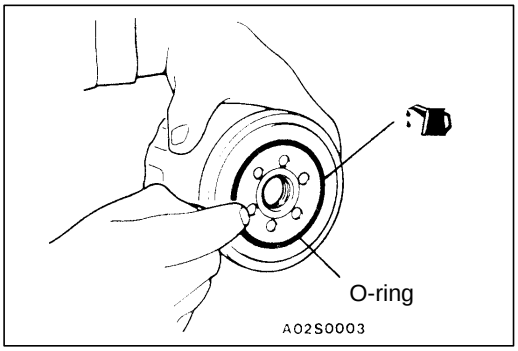

8. Apply a small amount of engine oil to the O-ring of the new oil filter.
9. Install the oil filter.

   NOTE
   Tightening torque:
   <4G6> When using the oil filter of MD135737: 14 Nm
   <4G6> When using the oil filter of MD325714 or MD332687: 16 Nm
   <4G6> When using the oil filter of MD136466 or MD322508: 17 Nm
   <4D56> When using the oil filter of MD069782 or MD184086: 20 Nm
   <4D56> When using the oil filter of MD326489: 22 Nm
10. Install the drain plug and refill the engine oil. (Refer to P.12-3, Engine Oil Replacement.)
11. Race the engine 2-3 times, and check to be sure that no engine oil leaks from installation section of the oil filter.

ENGINE OIL COOLER <4D56>

12100130087

REMOVAL AND INSTALLATION

Pre-removal Operation
- Radiator Grille Removal

Post-installation Operation
- Radiator Grille Installation
- Engine Oil Checking and Supplying (Refer to P.12-3.)

<M/T>

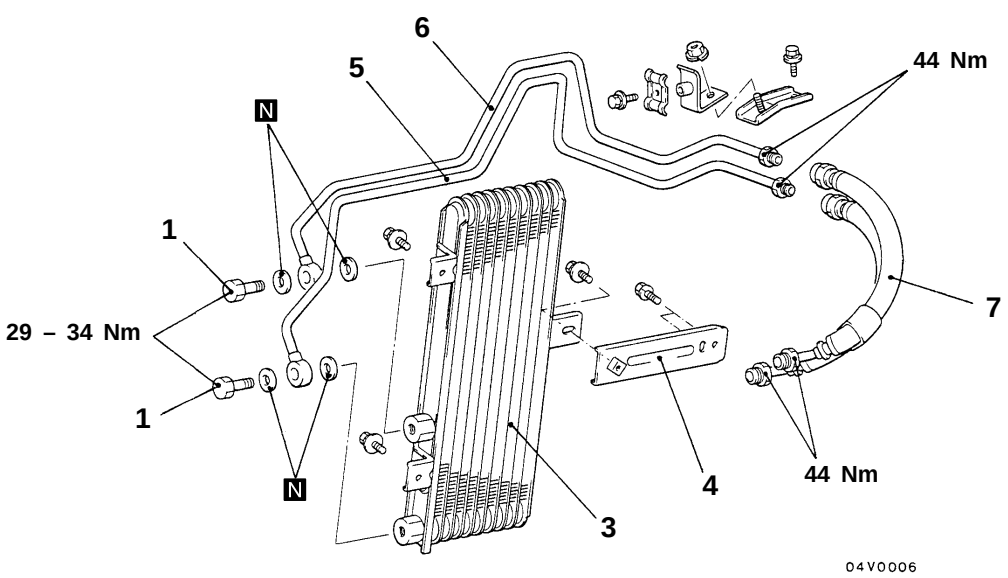

<A/T>

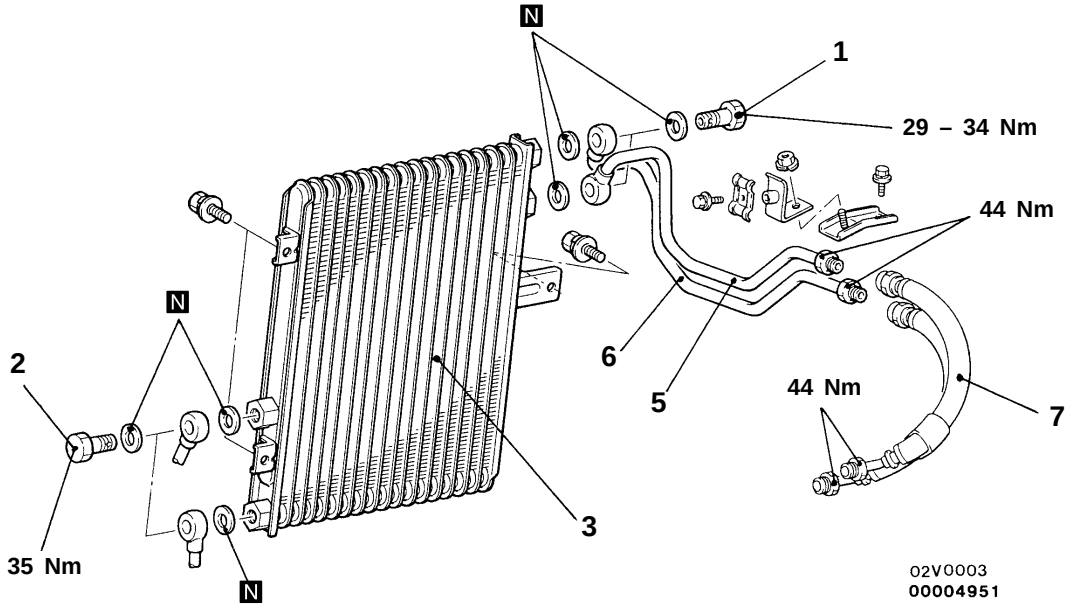

Oil cooler removal steps

◀A▶ ▶B◀ 1. Eye bolts (for engine oil cooler)
◀A▶ ▶B◀ 2. Eye bolts (for A/T oil cooler) <A/T>
3. Oil cooler assembly
4. Stay <M/T>

Oil cooler tube and hose removal steps

◀A▶ ▶B◀ 1. Eye bolts (for engine oil cooler)
5. Oil return tube
6. Oil feed tube
- Engine oil filter (Refer to P.12-4.)

▶A◀ 7. Oil cooler hose assembly

REMOVAL SERVICE POINT

◀A▶ EYE BOLTS REMOVAL

Caution
Be sure to hold the weld nut of the oil cooler while loosening the eye bolt.

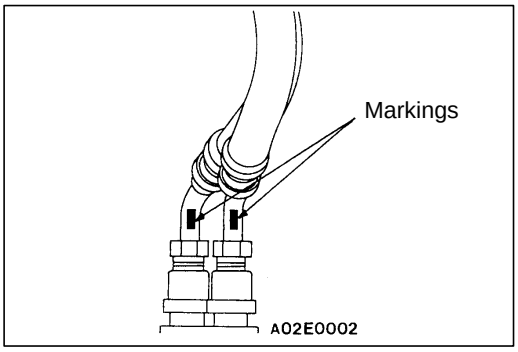

INSTALLATION SERVICE POINTS

▶A◀ OIL COOLER HOSE ASSEMBLY (ENGINE SIDE) INSTALLATION

Install the oil cooler hose assembly with the markings facing upwards.

▶B◀ EYE BOLT INSTALLATION

1. Provisionally tighten the eye bolt.
2. Align the white markings of the oil feed tube and oil return tube with the clamps, and then tighten them provisionally.
3. Tighten eye bolt to the specified torque.

   Caution
   Be sure to hold the weld nut of the oil cooler while tightening the eye bolt.

4. Tighten the clamp mounting bolt securely.

NOTES

SERVICE BULLETIN

MITSUBISHI MOTORS

QUALITY INFORMATION ANALYSIS
OVERSEAS SERVICE DEPT. MITSUBISHI MOTORS CORPORATION

SERVICE BULLETIN	**No.:** MSB-00E12-502	
	Date: 2001-07-11	

Subject:	CORRECTION OF DESCRIPTIONS CONCERNING OIL FILTER WRENCH	
Group:	ENGINE LUBRICATION	**Draft No.:** 00AL092714
CORRECTION	**INTERNATIONAL CAR ADMINISTRATION OFFICE**	J. MASAKI - MANAGER TECHNICAL SERVICE PLANNING

<Model>	<M/Y>
(EC)GALANT(EA0)	97-99
(EC)SPACE STAR (DG0A)	99-99
(EC)SPACE RUNNER/SPACE WAGON (N60,N80,N90)	99-99
(EC)PAJERO SPORT (K80W,K90W)	99-99
(EC)L200(K60,K70)	97-97

1. Description:

This Service Bulletin informs you that correction has been made of descriptions concerning the oil filter wrench.

2. Applicable Manuals:

Manual	Pub. No.	Language	Page(s)
'97 GALANT Workshop Manual chassis	PWDE9611	(English)	12-3, 4, 5
	PWDS9612	(Spanish)	
	PWDF9613	(French)	
	PWDG9614	(German)	
	PWDD9615	(Dutch)	
	PWDW9616	(Swedish)	
'99 GALANT Workshop Manual chassis	PWDE9611-A	(English)	12-2, 4
	PWDS9612-A	(Spanish)	
	PWDF9613-A	(French)	
	PWDG9614-A	(German)	
	PWDD9615-A	(Dutch)	
	PWDW9616-A	(Swedish)	
'99 GALANT Workshop Manual chassis CD-ROM	PWDH9821R	(English)	
	PWDH9821R	(Spanish)	
	PWDH9821R	(French)	
	PWDK9817R	(German)	
	PWDK9817R	(Dutch)	
	PWDK9817R	(Swedish)	

Manual	Pub. No.	Language	Page(s)
’99 SPACE STAR Workshop Manual chassis	CMXE99E1	(English)	12-3, 4, 5
	CMXS99E1	(Spanish)	
	CMXF99E1	(French)	
	CMXG99E1	(German)	
	CMXD99E1	(Dutch)	
	CMXW99E1	(Swedish)	
	CMXI99E1	(Italian)	
’99 SPACE RUNNER/SPACE WAGON Workshop Manual chassis	PWDE9803	(English)	12-3, 5
	PWDS9804	(Spanish)	
	PWDF9805	(French)	
	PWDG9806	(German)	
	PWDD9807	(Dutch)	
	PWDW9808	(Swedish)	
’99 SPACE RUNNER/SPACE WAGON Workshop Manual chassis CD-ROM	PWDH9816R	(English)	
	PWDH9816R	(Spanish)	
	PWDH9816R	(French)	
	PWDK9817R	(German)	
	PWDK9817R	(Dutch)	
	PWDK9817R	(Swedish)	
’99 PAJERO SPORT Workshop Manual chassis	PWJE9812	(English)	12-3, 4, 5
	PWJS9813	(Spanish)	
	PWJF9814	(French)	
	PWJG9815	(German)	
’99 PAJERO SPORT Workshop Manual chassis CD-ROM	PWJT9818R	(English)	
	PWJT9818R	(Spanish)	
	PWJT9818R	(French)	
	PWJT9818R	(German)	
’97 L200 Workshop Manual chassis	PWTE96E1	(English)	12-3, 4
	PWTS96E1	(Spanish)	
	PWTF96E1	(French)	
	PWTG96E1	(German)	

LUBRICANTS

12100040151

Items		4G6	6A1	4D6
Engine oil (API classification)		SG or higher	SG or higher	CD or higher
Engine oil quantity ℓ	Oil filter	0.3	0.3	0.8
	Oil cooler	-	0.1	0.3
	Total	4.3	4.3	5.1

SPECIAL TOOLS

12100100163

Tool	Number	Name	Use
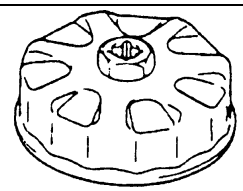 B991396	MB991396	Oil filter wrench	Removal and installation of engine oil filter (when using the oil filter of MD135737) <4G6>
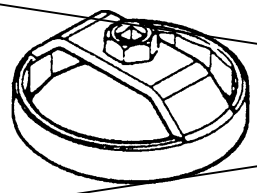 B991610	MB991610	Oil filter wrench	Removal and installation of engine oil filter (When using the oil filter of MD136466) <6A1>

<Deleted>

ON-VEHICLE SERVICE

12100090095

ENGINE OIL CHECK

1. Pull out the level gauge slowly and check that the oil level is in the illustrated range.
2. Check that the oil is not excessively dirty, that there is no coolant or gasoline mixed in, and that it has sufficient viscosity.

ENGINE OIL REPLACEMENT

12100100163

1. Start the engine and allow it to warm up until the temperature of the coolant reaches 80°C to 90°C.
2. Remove the engine oil filler cap.
3. Remove the drain plug to drain oil.

Caution
Use care as oil could be hot.

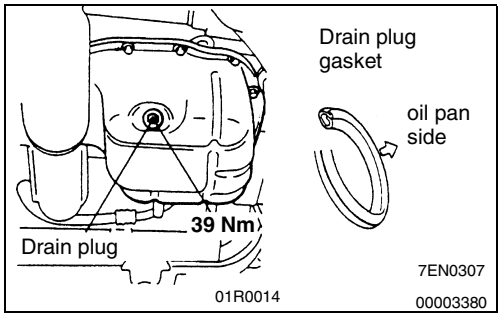

4. Install a new drain plug gasket so that it faces in the direction shown in the illustration, and then tighten the drain plug to the specified torque.

NOTE
Install the drain plug gasket so it faces in the direction shown in the illustration.

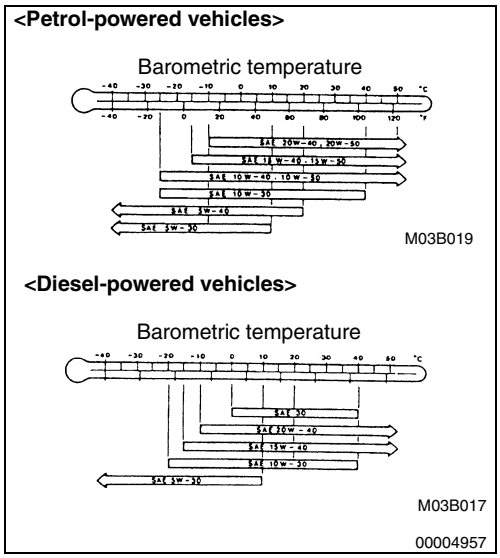

5. Refill with specified quantity of oil

   Specified Engine Oil (API classification):
   <4G6, 6A1> SG or higher
   <4D6> CD or higher

   Total quantity (includes volume inside oil filter and oil cooler):
   <4G6, 6A1> 4.3 ℓ
   <4D6> 5.1 ℓ

6. Install the engine oil filter cap.
7. Check oil level.

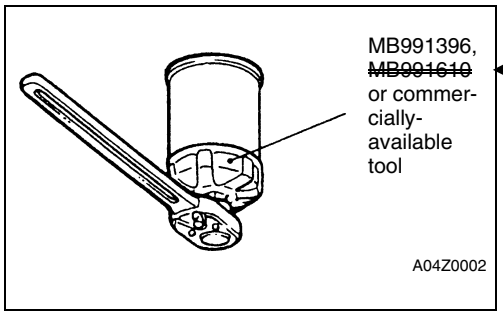

<Deleted>

OIL FILTER REPLACEMENT

12100110159

1. Start the engine and allow it to warm up until the temperature of the coolant reaches 80°C to 90°C.
2. Remove the engine oil filler cap.
3. Remove the drain plug to drain oil.

   Caution
   Use care as oil could be hot.

4. Use the respective tool in the following table to remove the engine oil filter.

   Caution
   For vehicles with 6A1 engine, the oil which is still inside the oil filter may overflow from the oil guide groove and get onto the starter motor. To prevent this, the oil inside the filter should be gradually removed while removing the oil filter.

5. Clean the filter bracket side mounting surface.

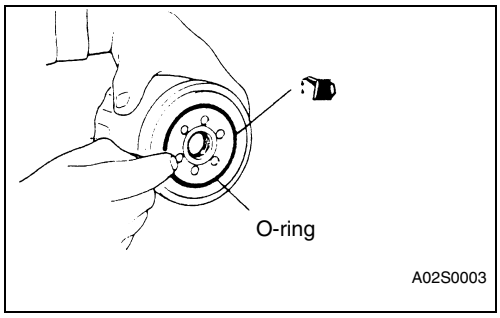

6. Apply a small amount of engine oil to the O-ring of the new oil filter.
7. Once the O-ring of the oil filter is touching the flange, use the respective tool in the following table to tighten to the specified torque.
8. Install the drain plug and refill engine oil. (Refer to Engine Oil Replacement on P.12-3.)
9. Race the engine 2-3 times, and check to be sure that no engine oil leaks from installation section of the oil filter.

Number	Engine	Tool	Tightening torque
MD135737	4G6	MB991396 or equivalent tool	Approx. 1 turn (14 Nm)
MD136466	6A1 **<Incorrect>**	~~MB991610 or equivalent tool~~	Approx. 3/4 turn (17 Nm)
MD336080	4D6	Commercially-available tool	Approx. 1-1/8 turns (20 Nm)

<Correct> Commercially-available tool

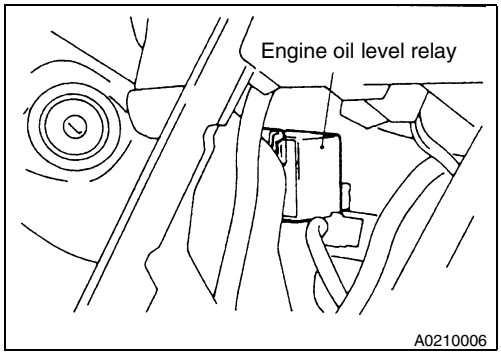

OIL LEVEL WARNING SYSTEM

12100200047

1. Check that the proper amount of oil has been filled.
2. When the ignition switch is turned to ON (do not start the engine), check that the oil level warning lamp illuminates.

   NOTE
   If the oil level warning lamp does not illuminate, the cause is probably a blown lamp, or a malfunction in the relay.

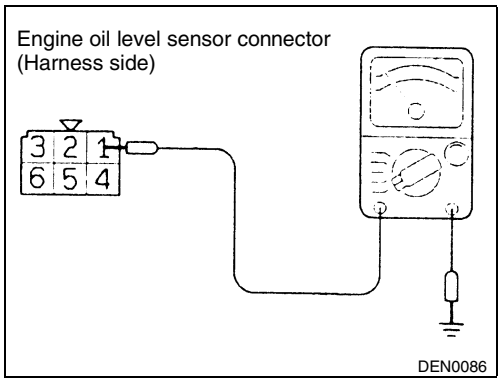

3. When the engine is started, check that the oil level warning lamp turns off.
   If the oil level warning lamp will not go out, disconnect the connector of the oil level relay and measure the voltage of the No. 1 terminal on the harness side of the connector while idling the engine in order to confirm that it is the same as the battery voltage.

   NOTE
   (1) If the voltage at the connector is the same as the battery voltage, the problem is probably a malfunction of either the oil level relay or the oil level sensor.
   (2) If the voltage at the connector is lower than the battery voltage, the problem is probably a malfunction of either the alternator or the wiring harness.

4. Disconnect the oil level sensor connector. Check that the oil level warning lamp illuminates after approximately 40 seconds.
   If the oil level warning lamp does not illuminate, replace the oil level relay.

<Deleted>

GENERAL

OUTLINE OF CHANGE

4G64-GDI engines have been introduced. Accordingly, service procedures have been added as follows.

LUBRICANTS

Items		4G64
Engine oil (API classification)		SG or higher
Engine oil quantity ℓ	Oil filter	0.3
	Total	4.3

~~SPECIAL TOOL~~

Tool	Number	Name	Use
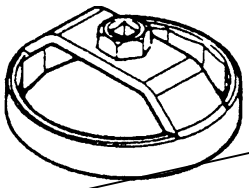 B991610	MB991610	Oil filter wrench	Removal and installation of engine oil filter (When using the oil filter of MD136466 and MD356000)

<Deleted>

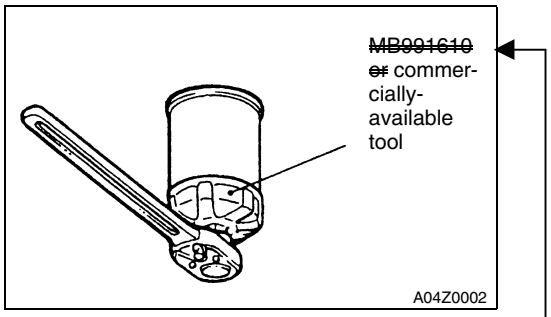

<Deleted>

OIL FILTER REPLACEMENT

1. Start the engine and warm it up until coolant reaches 80°C to 90°C.
2. Remove the engine oil filler cap.
3. Remove the drain plug to drain oil.

   Caution
   Use care as oil could be hot.

4. Remove the under cover.
5. Use the respective tool in the following table to remove the engine oil filter.
6. Clean the filter bracket side mounting surface.

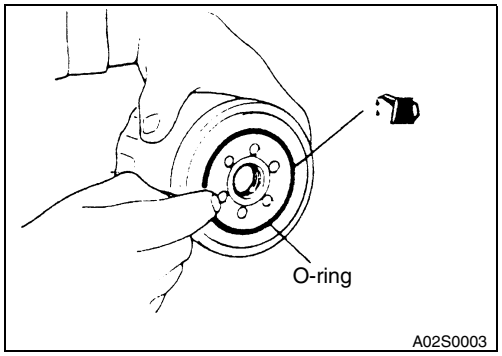

7. Apply a small amount of engine oil to the O-ring of the new oil filter.
8. Once the O-ring of the oil filter is touching the flange, use the respective tool in the following table to tighten to the specified torque.
9. Install the drain plug and refill engine oil. (Refer to Engine Oil Replacement on P.12-3.)
10. Race the engine 2-3 times, and check to be sure that no engine oil leaks from installation section of the oil filter.

Number	Tool <Incorrect>	Tightening torque
MD136466	~~MB991610 or equivalent tool~~	Approx. 3/4 turns (17 Nm)
MD322508	Commercially-available tool	Approx. 3/4 turns (17 Nm)
MD356000	~~MB991610 or equivalent tool~~	Approx. 3/4 turns (14 Nm)

<Incorrect>

<Correct>

Commercially-available tool

LUBRICANTS

12100040243

Items		Engine oil (API classification)	Quantity ℓ
Oil filter		SG or higher	0.3
Total quantity	GDI		3.8
	MPI		3.3

SPECIAL TOOLS

12100060140

Tool	Number	Name	Use
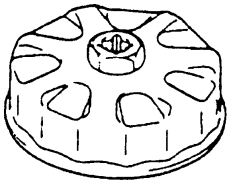 B991396	MB991396	Oil filter wrench	Removal and installation of engine oil filter (when using the oil filter of MD135737)
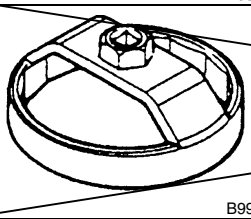 B991610	MB991610	Oil filter wrench	Removal and installation of engine oil filter (When using the oil filter of MD136466)

<Deleted>

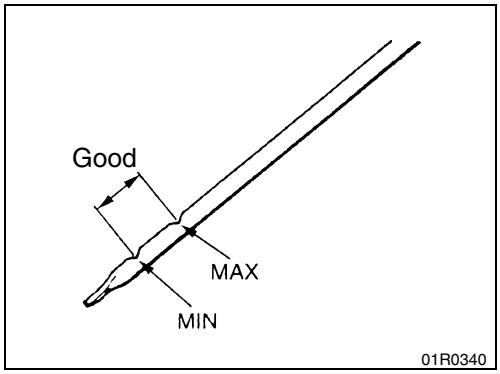

ON-VEHICLE SERVICE

12100090125

ENGINE OIL INSPECTION

1. Pull out the level gauge slowly and check that the oil level is in the illustrated range.
2. Check that the oil is not excessively dirty, that there is no coolant or gasoline mixed in, and that it has sufficient viscosity.

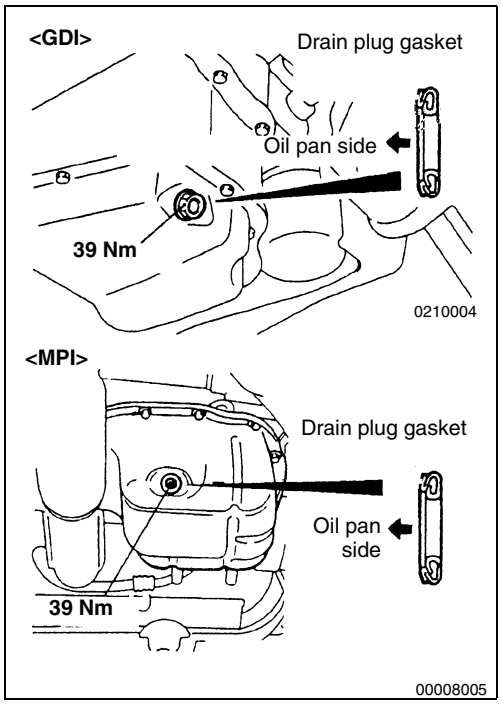

ENGINE OIL REPLACEMENT

12100100255

1. Start the engine and allow it to warm up until the temperature of the coolant reaches 80°C to 90°C.
2. Remove the engine oil filler cap.
3. Remove the drain plug to drain oil.

   Caution
   Use care as oil could be hot.

4. Install a new drain plug gasket so it faces in the direction shown in the illustration, and then tighten the drain plug to the specified torque.

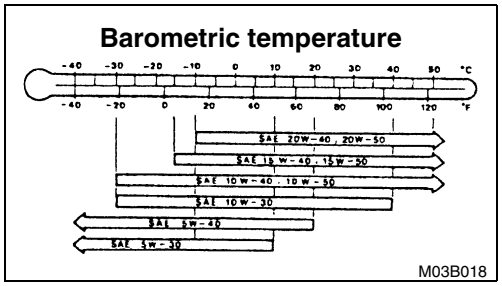

5. Refill with specified quantity of oil.
   Specified Engine Oil (API classification): SG or higher
   Total quantity (Includes volume inside oil filter):
   <GDI> 3.8 ℓ
   <MPI> 3.3 ℓ
6. Install the engine oil filler cap.
7. Check oil level.

<Deleted>

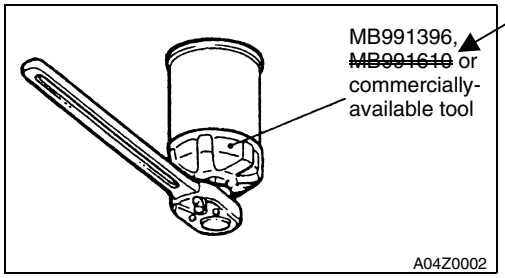

OIL FILTER REPLACEMENT

12100110241

1. Start the engine and allow it to warm up until the temperature of the coolant reaches 80°C to 90°C.
2. Remove the engine oil filler cap.
3. Remove the drain plug to drain oil.

   Caution
   Use care as oil could be hot.

4. Use the following tools to remove the engine oil filter from the underside of the vehicle.
   MB991396 or equivalent (When using the oil filter of MD135737)
   MB991610 or equivalent (When using the oil filter of MD136466)
   Commercial tool (When using the oil filter except MD135737 and MD136466)
5. Clean the bracket side mounting surface.

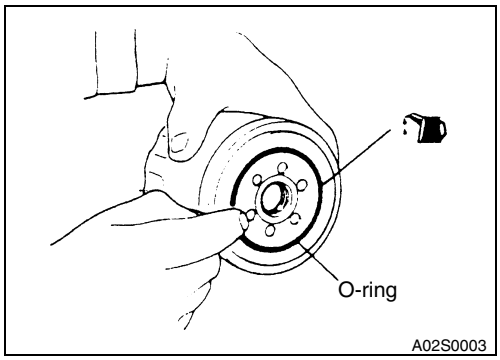

6. Apply a small amount of engine oil to the O-ring of a new oil filter
7. Once the O-ring of the oil filter is touching the flange, use the respective tool in the following table to tighten the oil filter to the specified torque.
8. Install the drain plug and refill engine oil. (Refer to Engine Oil Replacement in P.12-4.)
9. Race the engine 2-3 times, and check to be sure that no engine oil leaks from installation section of the oil filter.

Number	Tool	Tightening torque
MD135737	MB991396 or equivalent tool	Approx. 1 turn (14 Nm)
MD136466	~~MB991610 or equivalent tool~~	Approx. 3/4 turn (17 Nm)
MD322508	Commercially-available tool	
MD325714 and MD332687		Approx. 3/4 turn (16 Nm)

<Deleted>

SERVICE SPECIFICATIONS

Item		Standard value	Limit
Oil pressure kPa	at idle	29 or more	-
	at 3,500 r/min	294 – 686	-

SEALANT

Item	Specified sealant	Remark
Oil pressure switch	3M ATD Part No. 8660 or equivalent	-

LUBRICANTS

Items		Specifications
Engine oil (API classification)		SG or higher
Engine oil quantity ℓ	Oil filter	0.3
	Total	3.8

SPECIAL TOOLS

Tool	Number	Name	Use
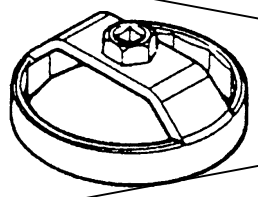 B991610	MB991610	Oil filter wrench	Removal and installation of engine oil filter (When using the oil filter of MD136466 and MD356000)
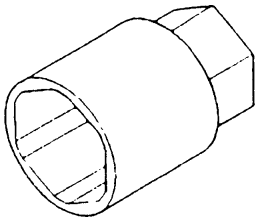	MD998054	Oil pressure switch wrench	Removal and installation of oil pressure switch

<Deleted>

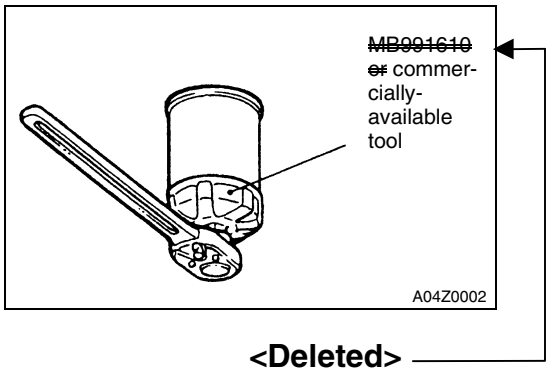

OIL FILTER REPLACEMENT

1. Start the engine and allow it to warm up until the temperature of the coolant reaches 80°C to 90°C.
2. Remove the engine oil filler cap.
3. Remove the drain plug to drain oil.

   Caution
   Use care as oil could be hot.

4. Remove the under cover.
5. Use the respective tool in the following table to remove the engine oil filter.
6. Clean the filter bracket side mounting surface.

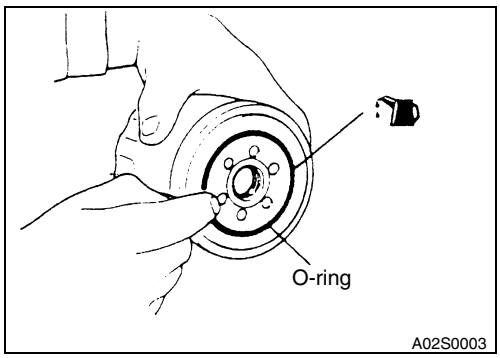

7. Apply a small amount of engine oil to the O-ring of the new oil filter.
8. Once the O-ring of the oil filter is touching the flange, use the respective tool in the following table to tighten to the specified torque.
9. Install the drain plug and refill engine oil. (Refer to Engine Oil Replacement on P.12-3.)
10. Race the engine 2-3 times, and check to be sure that no engine oil leaks from installation section of the oil filter.

Number	Tool <Incorrect>	Tightening torque
MD136466	~~MB991610 or equivalent tool~~	Approx. 3/4 turn (17 Nm)
MD322508	Commercially-available tool	Approx. 3/4 turn (17 Nm)
MD356000	~~MB991610 or equivalent tool~~	Approx. 3/4 turn (14 Nm)

<Incorrect>

<Correct>

Commercially-available tool

LUBRICANTS

12100040304

Items		6G7	4D5
Engine oil API classification		SG or higher	CD or higher
Engine oil quantity ℓ	Oil filter	0.3	0.8
	Oil cooler	-	0.4
	Total	4.5	6.5

SPECIAL TOOLS

12100060171

Tool	Number	Name	Use
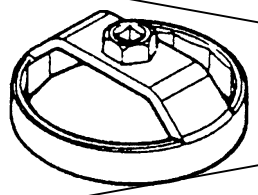 8991610	MB991610	Oil filter wrench	~~Removal and installation of engine oil filter (When using the oil filter of MD352626) <6G7>~~
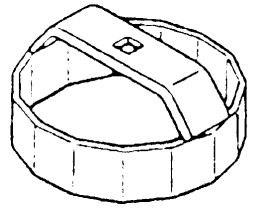 H061590	MH061590	Oil filter wrench	Removal and installation of engine oil filter (When using the oil filter of MD069782 or MD326489) <4D5>

<Deleted>

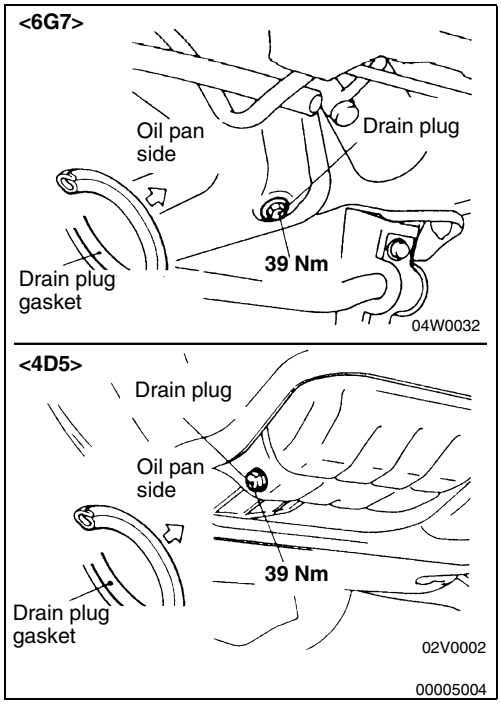

ON-VEHICLE SERVICE

12100090149

ENGINE OIL CHECK

1. Check the engine oil using the oil level gauge.
2. Check that the oil is not excessively dirty, that there is no coolant or petrol mixed in, and that it has sufficient viscosity.

ENGINE OIL REPLACEMENT

12100100286

1. Start the engine and allow it to warm up until the temperature of the coolant reaches 80°C to 90°C.
2. Remove the engine oil filler cap.
3. Remove the drain plug to drain oil.

   Caution
   Use care as oil could be hot.

4. Install a new drain plug gasket so that it faces in the direction shown in the illustration, and then tighten the drain plug to the specified torque.

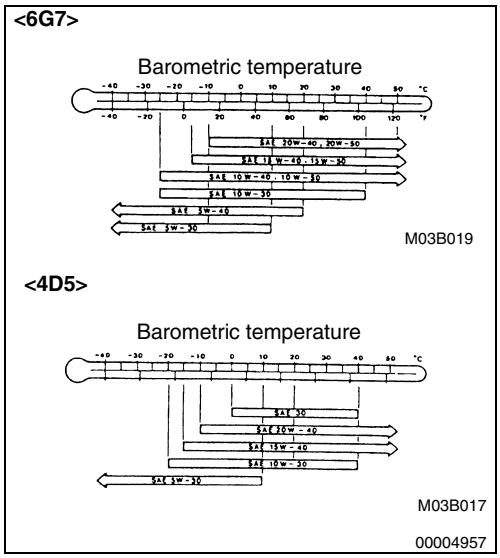

5. Refill with specified quantity of oil.

   Specified Engine Oil (API classification):
   <6G7> SG or higher
   <4D5> CD or higher

   Total quantity (includes volume inside oil filter and oil cooler):
   <4G7> 4.5 ℓ
   <4D5> 6.5 ℓ

6. Install the engine oil filter cap.
7. Check oil level.

OIL FILTER REPLACEMENT

12100110272

1. Start the engine and allow it to warm up until the temperature of the coolant reaches 80°C to 90°C.
2. Remove the engine oil filler cap.
3. Remove the under cover.
4. Remove the drain plug to drain oil

   Caution
   Use care as oil could be hot.

5. Remove the air cleaner, and cover the alternator with a rag so that oil will not get on the alternator. <4D56>

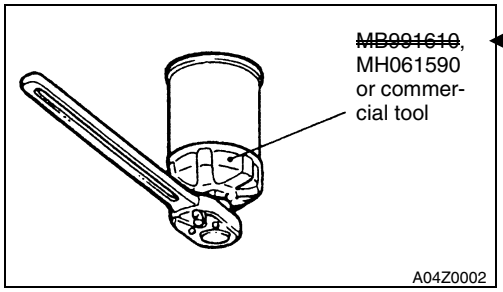

<Deleted>

6. Use the respective tool in the following table to remove the engine oil filter.
7. Clean the filter bracket side mounting surface and ensure the old O-ring has been removed.

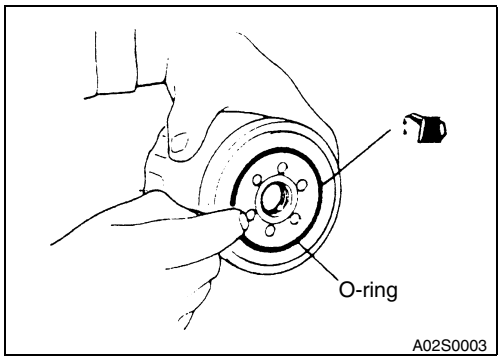

8. Apply a small amount of engine oil to the O-ring of the new oil filter
9. Once the O-ring of the oil filter is touching the flange, use the respective tool in the following table to tighten to the specified torque.
10. Install the drain plug and refill engine oil. (Refer to P.12-3, Engine Oil Replacement.)

    Specified Engine Oil (API classification):
    <6G7> SG or higher
    <4D5> CD or higher

    Total quantity (Includes volume inside oil filter and oil cooler):
    <6G7> 4.5 ℓ
    <4D5> 6.5 ℓ

11. Race the engine a few times, and check to be sure that no engine oil leaks from the installation section of the oil filter.

Number	Engine	Tool **<Incorrect>**	Tightening torque
MD352626	6G7	~~MB991610 or equivalent tool~~	Approx. 3/4 turn (14 Nm)
MD069782	4D5	MH061590 or equivalent tool	Approx. 5/8 turn (20 Nm)
MD326489			Approx. 3/4 turn (22 Nm)

<Correct>

Commercially-available tool

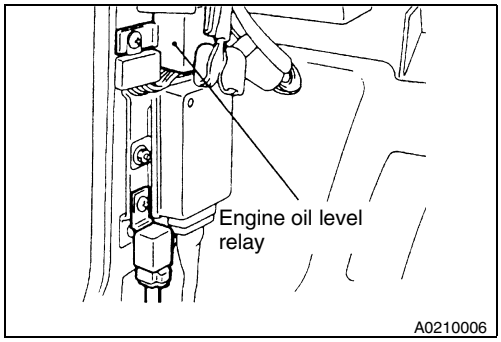

OIL LEVEL WARNING SYSTEM CHECK

12100200054

1. Check that the proper amount of oil has been filled.
2. When the ignition switch is turned to ON (do not start the engine), check that the oil level warning lamp illuminates.

   NOTE
   If the oil level warning lamp does not illuminate, the cause is probably a blown lamp, or a malfunction in the relay.

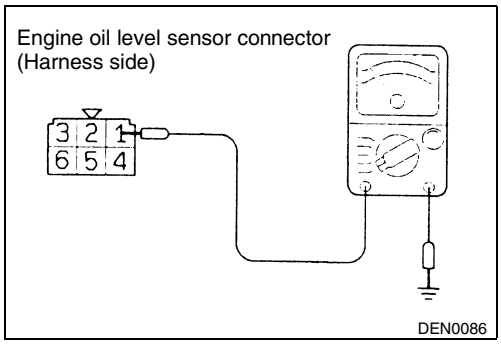

3. When the engine is started, check that the oil level warning lamp turns off.
   If the oil level warning lamp will not go out, disconnect the connector of the oil level relay and measure the voltage of the No.1 terminal on the harness side of the connector while idling the engine in order to confirm that it is the same as the battery voltage.
   NOTE
   (1) If the voltage at the connector is the same as the battery voltage, the problem is probably a malfunction of either the oil level relay or the oil level sensor.

LUBRICANTS

12100040076

Items		4G63	4G64	4D56	4D56-Turbo
Engine oil API classification		SG or higher	SG or higher	CD or higher	CD or higher
Engine oil quantity ℓ	Oil filter	0.3	0.3	0.8	0.8
	Oil cooler	-	-	0.4	0.4
	Total	4.3	4.3	6.2	6.5

SPECIAL TOOLS

12100050065

Tool	Number	Name	Use
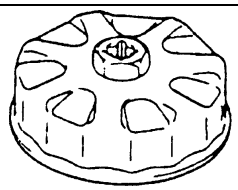 B991396	MB991396	Oil filter wrench	Removal and installation of engine oil filter (when using the oil filter of MD135737) <4G6>
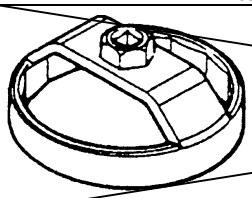 B991610	MB991610	Oil filter wrench	Removal and installation of engine oil filter (When using the oil filter of MD136466) <4G6>
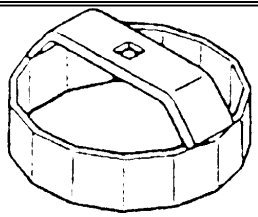 H061590	MH061590 **<Deleted>**	Oil filter wrench	Removal and installation of engine oil filter (When using the oil filter of MD069782 or MD326489) <4D56>

ON-VEHICLE SERVICE

12100090057

ENGINE OIL CHECK

1. Check the engine oil using the oil level gauge.
2. Check that the oil is not excessively dirty, that there is no coolant or petrol mixed in, and that it has sufficient viscosity.

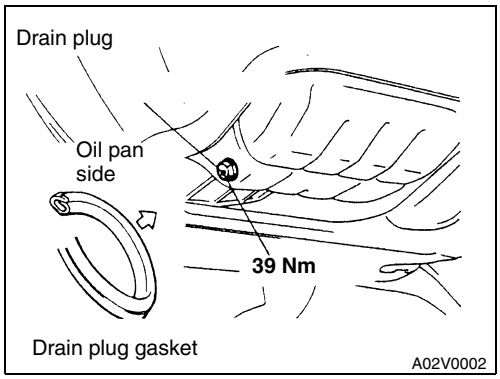

ENGINE OIL REPLACEMENT

12100100071

1. Start the engine and allow it to warm up until the temperature of the coolant reaches 80°C to 90°C.
2. Remove the engine oil filler cap.
3. Remove the drain plug to drain oil.

Caution
Use care as oil could be hot.

4. Install a new drain plug gasket so that it faces in the direction shown in the illustration, and then tighten the drain plug to the specified torque.

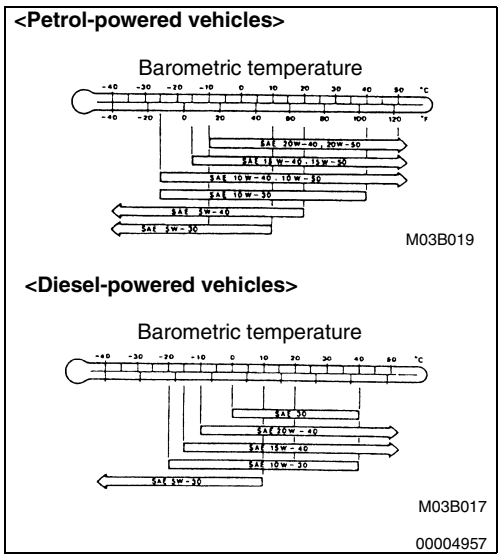

5. Refill with specified quantity of oil.

   Specified Engine Oil (API classification):
   <4G63, 4G64> SG or higher
   <4D56> CD or higher

   Total quantity (includes volume inside oil filter and oil cooler):
   <4G63> 4.3 ℓ
   <4G64> 4.3 ℓ
   <4D56> 6.2 ℓ
   <4D56-Turbo> 6.5 ℓ

6. Install the engine oil filler cap.
7. Check oil level.

OIL FILTER REPLACEMENT

12100110067

1. Start the engine and allow it to warm up until the temperature of the coolant reaches 80°C to 90°C.
2. Remove the engine oil filler cap.
3. Remove the under cover.
4. Remove the drain plug to drain oil.

   Caution
   Use care as oil could be hot.

5. Remove the air cleaner, and cover the alternator with a rag so that oil will not get on the alternator. <4D56>

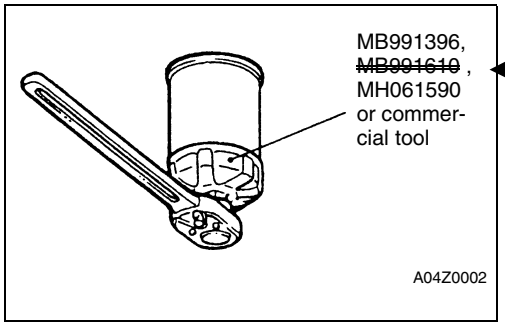

<Deleted>

6. Use the following tools to remove the engine oil filter.
   - MB991396 or equivalent (when using the oil filter of MD135737) <4G6>
   - MB991610 or equivalent (when using the oil filter of MD136466) <4G6>
   - MH061590 or equivalent (when using the oil filter of MD069782 or MD326489) <4D56>
   - Commercial tool (other vehicles than above)
7. Clean the filter bracket side mounting surface.

SERVICE BULLETIN

MITSUBISHI MOTORS

QUALITY INFORMATION ANALYSIS
OVERSEAS SERVICE DEPT. MITSUBISHI MOTORS CORPORATION

SERVICE BULLETIN	**No.:** MSB-00E00-003		
	Date: 2000-05-30	**<Model>**	**<M/Y>**
Subject:	YEAR MODEL CHANGES FOR 2001 L200	(EC)L200(K60, K70)	00-10
Group:	GENERAL	**Draft No.:** 00SY0022915	
INFORMATION/ CORRECTION	**INTERNATIONAL CAR ADMINISTRATIO OFFICE**	T.NITTA - PROJECT LEADER AFTER SALES SERVICE & CS PROMOTION	

1. Description:

This Service Bulletin informs you of the year model changes for the 2001 L200

2. Applicable Manuals:

Manual	Pub. No.	Language	Page(s)
2000 L200 Workshop Manual Chassis	PWTE96E1-D	(English)	
	PWTS96E1-D	(Spanish)	
	PWTF96E1-D	(French)	
	PWTG96E1-D	(German)	

3. Details:

L200

WORKSHOP MANUAL SUPPLEMENT

FOREWORD

This Manual outlines changes in servicing proc e-dures related to the chassis including vehicle i n-spections, adjustments and improvements in the newly equipped models.

TECHNICAL INFORMATION MANUAL	PYTE96E1
WORKSHOP MANUAL	
ENIGINE GROUP	PWEE___ (looseleaf edition)
CHASSIS GROUP	PWTE96E1
	PWTE96E1-B (SUPPLEMENT)
	PWTE96E1-C (SUPPLEMENT)
	PWTE96E1-D (SUPPLEMENT)
ELECTRICAL WIRING	PHTE96E1
	PHTE96E1-A
	PHTE96E1-B
	PHTE96E1-D
	PHTE96E1-D (SUPLEMTENT)
BODY REPAIR MANUAL	PBTE96E1
PARTS CATALOGUE	T603B00□D□

All information, illustrations and product d e-scriptions contained in this manual are current as at the time of publication. We, however, re-serve the right to make changes at any time without prior notice or obligation.

MITSUBISHI MOTORS CORPORATION

© Mitsubishi Motors Corporation 2000

General 00

Engine Lubrication 12

Body 42

Interior and Supplemental Restraint System (SRS) 52

Chassis Electrical 54

GROUP 00
GENERAL

VEHICLE IDENTIFICATION

MODELS

Model Code		Engine model	Transmission model	Fuel supply system
K62T	JERDEL6	4G63-SOHC (1,997mℓ)	R4AW2 (2WD-4A/T	MPI
	ENDEL6		R5M21 (2WD-5M/T)	
K64T	ENDL6	4D56 (2,477mℓ)	R5M21 (2WD-M/T)	Fuel injection
	ENDR6			
	CENDL6			
	JENDL6			
K75T	CENDEL6	4G64-SOHC (2,351 mℓ)	V5M21 (4WD-5M/T)	MPI
	GJENXEL6			
K74T	ENDFL6	4D56- Turbocharger with intercooler (2,477mℓ)	V5MT1 (4WD-5M/T	Fuel injection
	ENDFR6			
	JERDFL6		V4AW2 (AWD-4A/T	
	GJERXFL6		V5MT1 (4WD-5M/T	
	GJENXFL6			
	GJENXFR6			
	CENDFL6			
	GCENXFL6			
	JENDFL6			
	JENDFR6			
	JENHFL6			

CHASSIS NUMBER

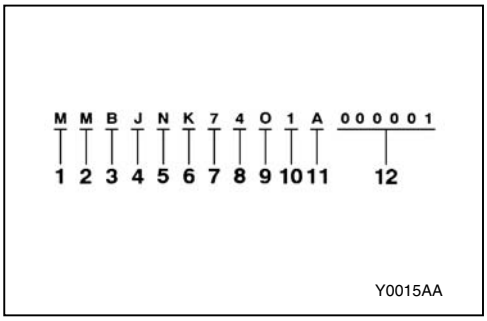

No.	Items		Contents
1	Continent	M	ASIA
2	Country	M	THAILAND
3	Register code	B	Follow register
4	Body shape	C	Club cab
		J	Double cab
		O	Single cab
		Y	Single cab without rear body
		Z	Double cab without rear body
5	Transmission type	N	5-speed manual transmission
		R	4-speed automatic transmission
6	Vehicle line	K	Mitsubushi L200
7	Body type	6	Long wheelbase
		7	4WD, Long wheelbase
8	Engine type	2	4G63: 1,997mℓ petrol engine
		4	4D56:2,477mℓ diesel engine
		5	4G64: 2,351 mℓ petrol engine
9	Internal production control code	A	A, B, C…etc 0 (zero): No meaning
10	Model year	1*	2001
11	Plant	A	A, C: LARDKRABANG factory D, F: LAEMCHABANG factory
12	Serial number	-	-

NOTE
*: Indicates changes.

NOTES

GROUP 12

ENGINE LUBRICATION

GENERAL

OUTLINE OF CHANGES

- A quality of the engine oil has been changed.

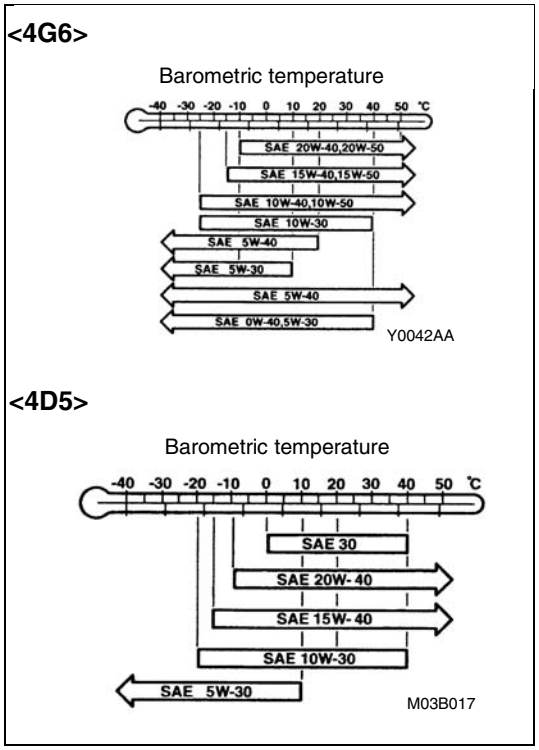

ON-VEHICLE SERVICE

specified engine oil (ACEA and API classification):
<4G6> ACEA A1, A2, A3/API SG or higher
<4D5> ACEA B1, B2, B3, B4/API CD or higher

NOTES

GROUP 42

BODY

GENERAL

OUTLINE OF CHANGES

The following service procedures have been added due to the introduction of the keyless entry system as an optional equipment <GLS>.

KEYLESS ENTRY SYSTEM

SPECIAL TOOL

Tool	Number	Name	Use
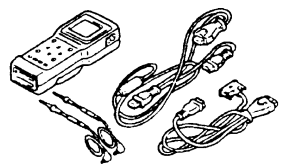	MB991502	MUT-II sub assembly	Encrypted codes recording

TROUBLESHOOTING

DIAGNOSIS FUNCTION

INPUT SIGNAL INSPECTION PROCEDURE

1. Connect the MUT-II to the diagnosis connector to check input signal. (Refer to ’97 L200 Workshop Manual GROUP 00 – How to Use Troubleshooting/Inspection Service Points.)
2. The following input signals can be checked:
   - Ignition switch (IG1, ACC)
   - Driver’s door switch
   - Every door switch
   - Key reminder switch
   - Driver’s door lock actuator
   - Keyless entry transmitter (LOCK, UNLOCK)

   NOTE
   If the MUT-II cannot check all the input signals, the diagnosis circuit may be defective.

ETACS FUNCTION ADJUSTMENT PROCEDURE

The following functions can be adjusted by operating input switches, The adjustments will be stored in th ECU memory even after a battery cable is disconnected:

- Switching of keyless entry answerback function (From activation to deactivation, or vice versa)
- Initialisation of the above function (From deactivation)

1. Entry conditions to the adjustment mode
   The ETACS-ECU sounds a buzzer once when all of the following conditions are satisfied, and then enters the adjustment mode:
   - Diagnosis control: ON (Connect the MUT-II.)
   - Key reminder switch: OFF
   - Ignition switch: LOCK (OFF
   - Door switch: OFF (Close the door)
   - If all of the conditions above are satisfied, the tailgate switch will be turned in for more than 10 seconds.

2. Exit conditions from the adjustment mode
   The ETACS-ECU cancels the adjustment mode when any of the following conditions is satisfied:
   - Diagnosis control: OFF (Disconnect the MUT-II>)
   - Key reminder switch: ON (Pull out the ignition key.)
   - Ignition switch: Other than LOCK (OFF)
   - Door switch: ON (Open the door)
   - After the ETACS_ECU has entered the adjustment mode, no adjustment is made within 3 minutes (If any adjustment is made within 3 minutes, the ETACS-ECU monitors an adjustment operation for other 3 minutes.
   - Other warning buzzer(s) sounds
3. Adjustment of functions

Function	Adjustment procedure
Keyless entry answerback function	When the transmitter lock switch is turned on twice continuously within 2 seconds, the lock answerback function toggles on and off. • If the function toggles on, the buzzer sounds once (default condition). • If the function toggles off, the buzzer sounds twice, When the transmitter unlock switch is turned on twice continuously within 2 seconds, the unlock answerback function toggles on and off. • If the function toggles on, the buzzer sounds once (default condition). • If the function toggles off, the buzzer sounds twice,
Initialisation of all the ETACS functions (From deactivation to activation)	When the tailgate switch remains on for more than 20 seconds, th buzzer sounds twice and he answer-back function of the keyless entry system is initialised. The buzzer will sound in 10 seconds (indicating that the ETACS-ECU enters the adjustment mode), but the washer switch must remains off for 20 seconds in order to initialise all the functions. If the tailgate switch remains on for more than 20 seconds without entering the adjustment mode, the system enters the adjustment mode in 10 seconds, but does not initialise all of the functions.

INSPECTION CHART FOR TROUBLE SYMPTOMS

Trouble symptom	Inspection procedure No.	Reference page
None of the doors can be locked or unlocked using th transmitter.	1	42-3
All of the doors can be locked and unlocked using th transmitter, but the room lamp or turn-signal lamp does not flash or illuminate. (However, the room lamp operates normally when the doors are opened and closed.)	2	42-4
Encrypted codes cannot be registered.	3	42-5

INSPECTION PROCEDURE FOR TROUBLE SYMPTOMS

INSPECTION PROCEDURE 1

None of the doors can be locked or unlocked using the transmitter.	Probable cause
The cause may be a malfunction of the transmitter or ETACS-ECU, defective connection between ETACS-ECU and junction block, defective power supply voltage to ETACS-ECU input line due to commercial equipment, or the lock and unlock signals are not being sent to the ETACS-ECU.	• Malfunction of transmitter • Malfunction of ETACS-ECU • Malfunction of key reminder switch • Malfunction of wiring harness or connector • Malfunction of door switch • Defective connection between ETACS-ECU and junction block • Defective power supply voltage to ETACS-ECU input line due to commercial equipment

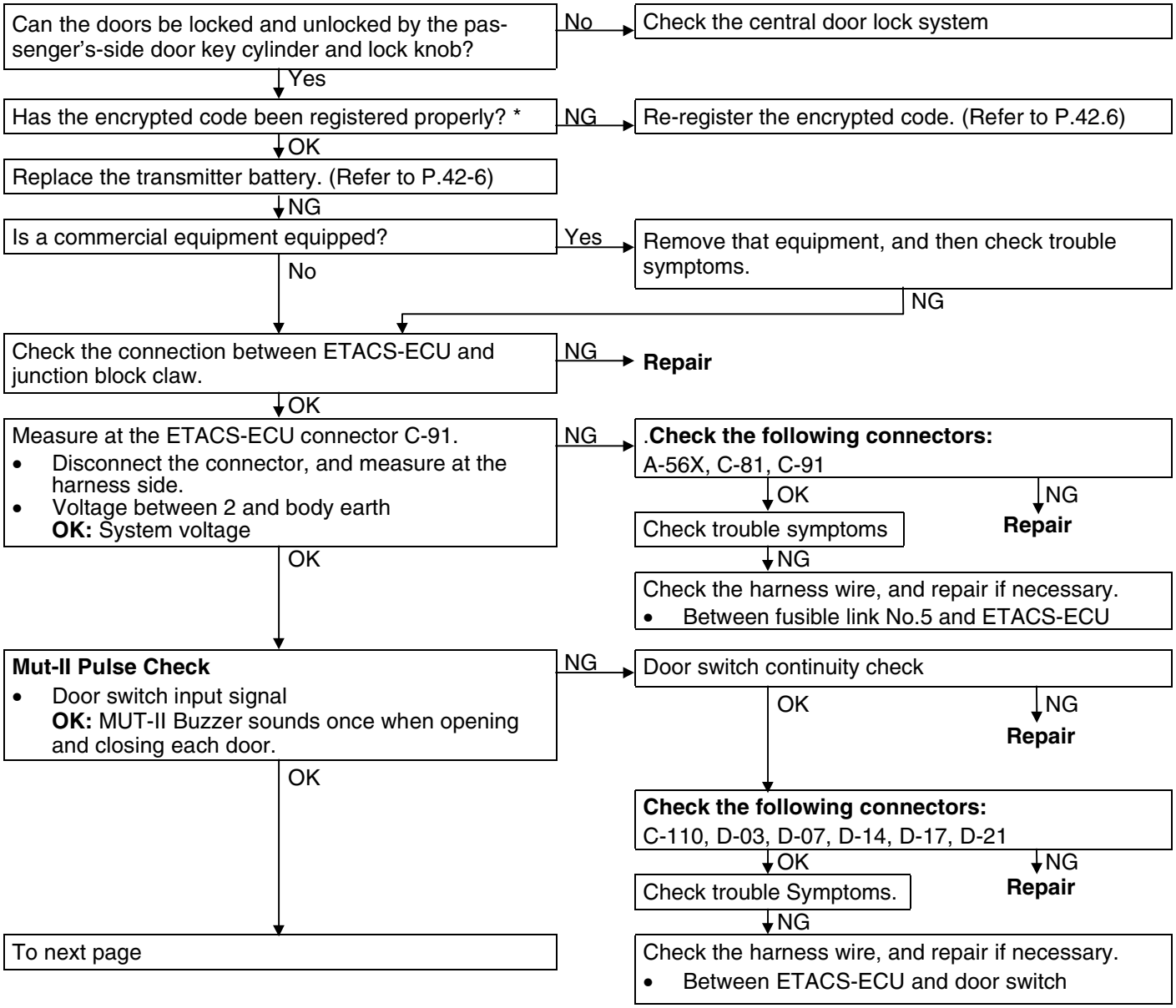

NOTE

*: This should be done if a transmitter, receiver or ETACS-ECU has been replaced, and if a secret cod has not been registered properly

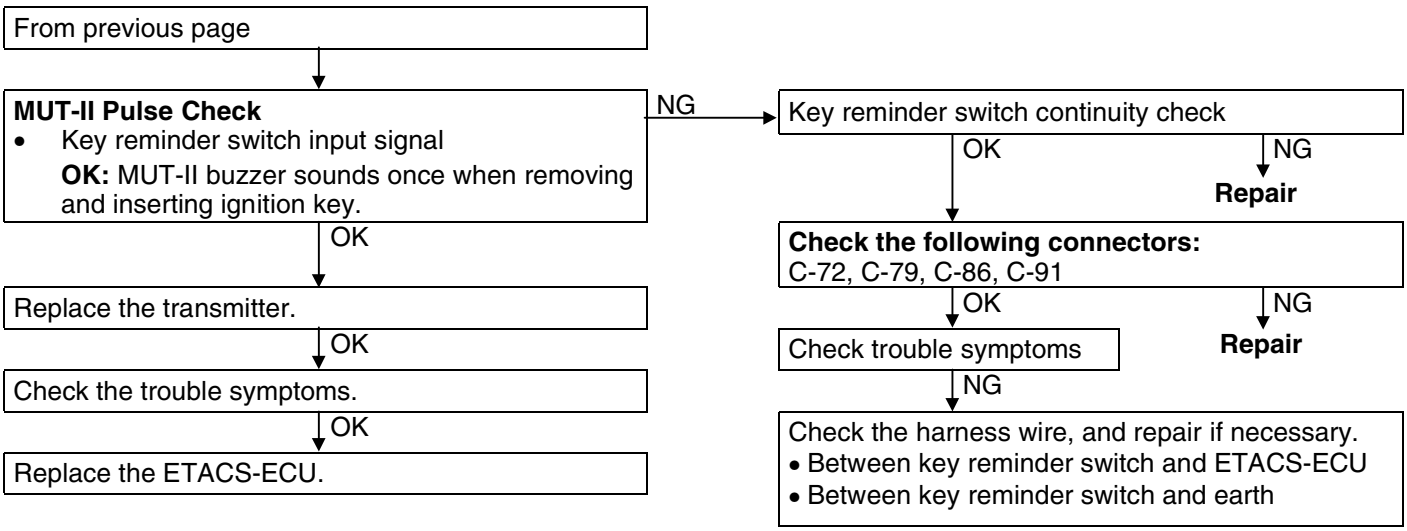

INSPECTION PROCEDURE 2

All of the doors can be locked and unlocked using th transmitter, but the room lamp or turn-signal lamp does not flash or illuminate. (However, the room lamp operates normally when the doors are opened and closed.)	Probable cause
If neither room lamp nor turn-signal lamp flash/illuminate, the cause may be a malfunction of the ETACS-ECU or driver's-side door lock actuator. If either room lamp or turn-signal lamp does not flash/illuminate, the cause may be a malfunction of the room lamp circuit or turn-signal lamp.	• Malfunction of ETACS-ECU • Malfunction of driver's door lock actuator • Burnt turn-signal lamp bulb • Malfunction of connector or wiring harness

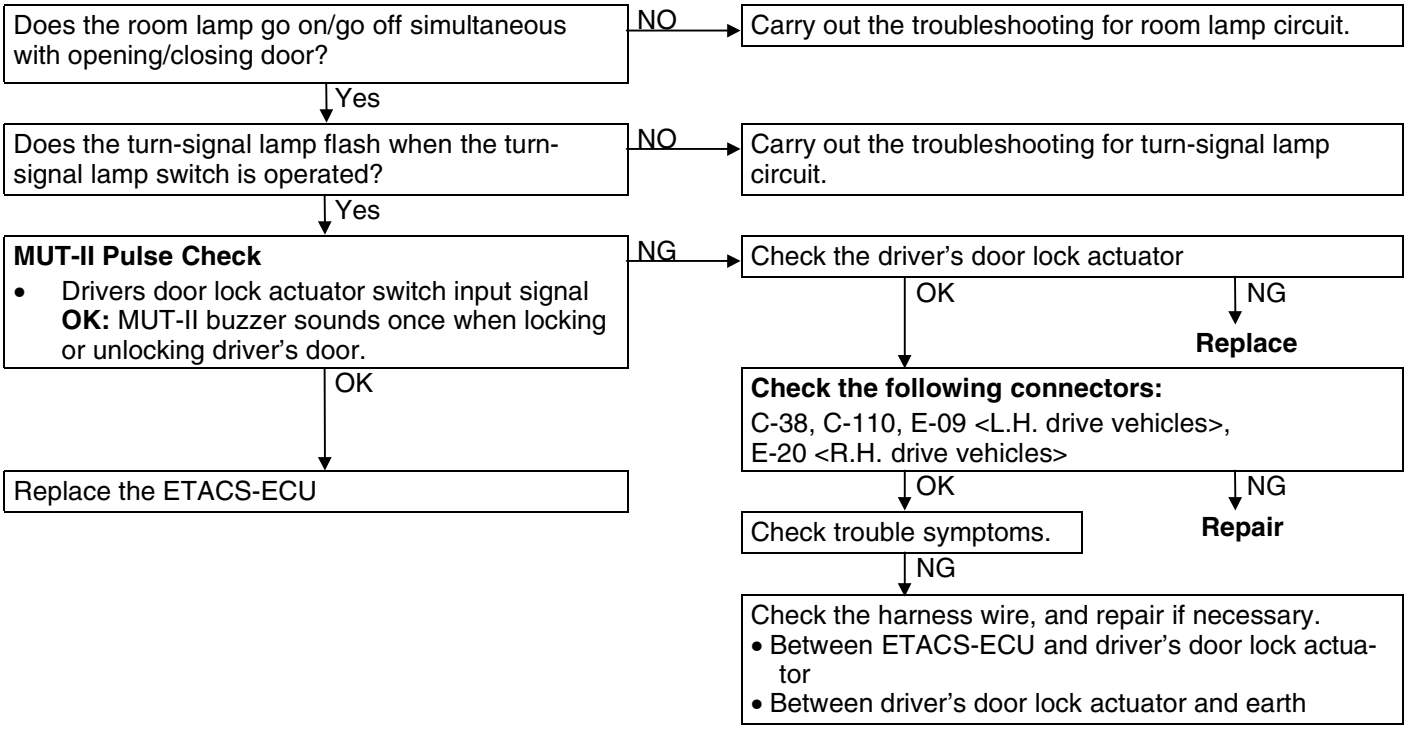

INSPECTION PROCEDURE 3

Encrypted codes cannot be registered	Probable cause
The cause may be a malfunction of the diagnosis connector, ETACS-ECU or diagnosis output circuit.	• Malfunction of MUT-II • Malfunction of connector or wiring harness • Malfunction of ETACS-ECU

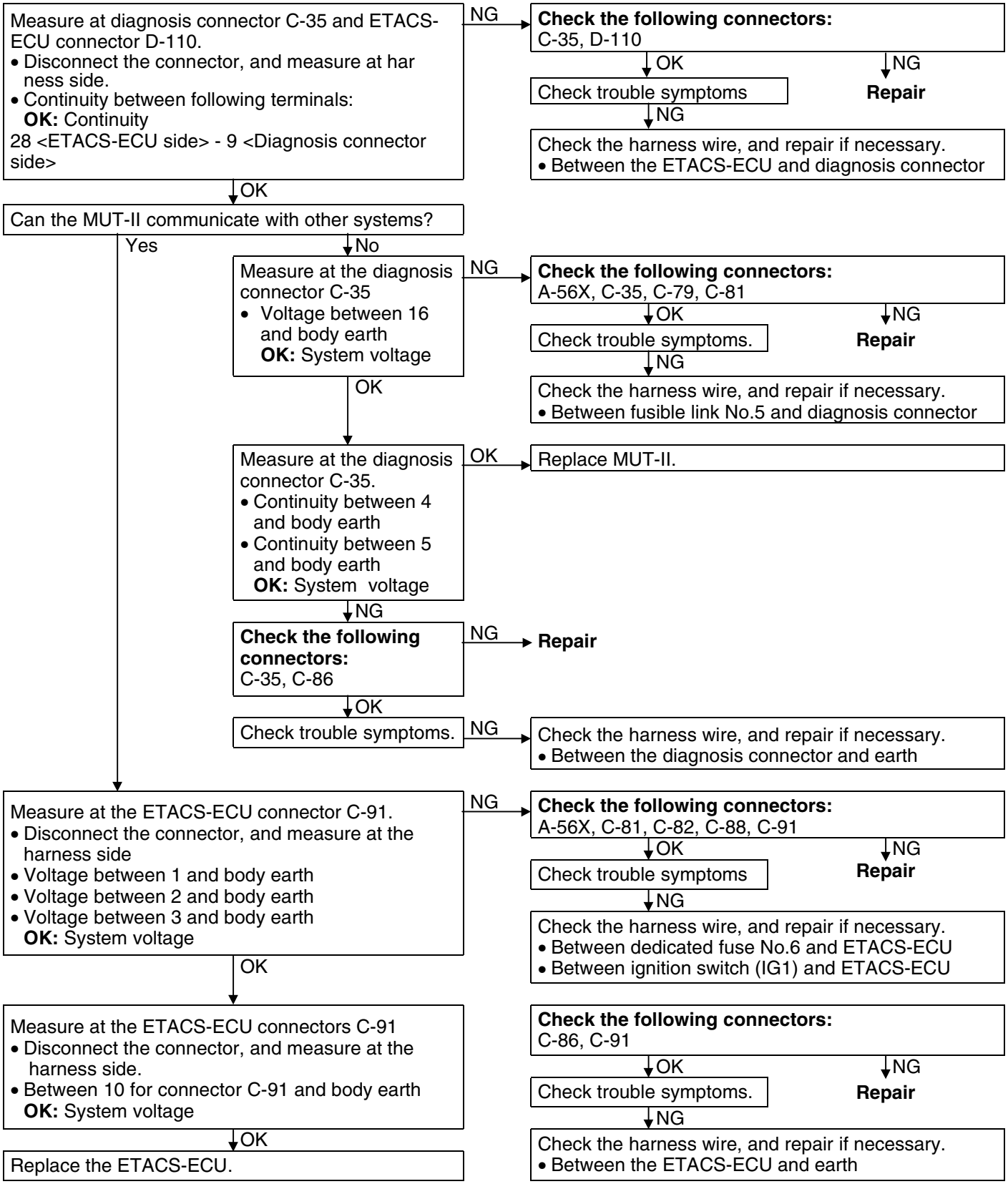

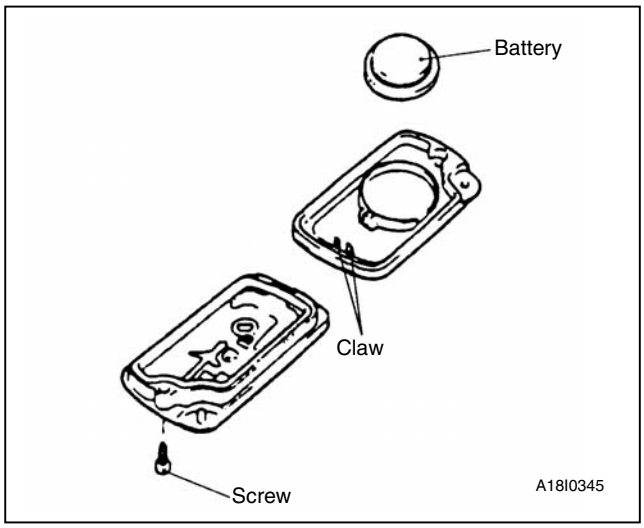

ON – VEHICLE SERVICE

HOW TO REPLACE A BATTERY OF THE TRANSMITTER

1. Remove the set screw to remove the battery from the transmitter.
   Install a battery with its (+) side face-down.
   Battery required for replacement:
   Coin type battery CR2032
3. Insert the claw, and then assemble the transmitter.
   Caution
   Do not let water or dust stick to the inside of the transmitter when it is open. Also, do not touch the precision electronic device.
4. Check to see if the keyless entry system operates.

SECRET CODE REGISTRATION METHOD

Each individual secret code is registered inside the transmitter, and so it is necessary to register these codes with the EEPROM inside the ETACS-ECU in the following cases.

- When either the transmitter or ETACS-ECU in the following cases.
- If a second transmitter is to be used;
- If it appears that a problem is occurring because of faulty registration of a code.

A maximum of two different codes can be stored in the memory area of the EEPROM (two different transmitters can be used).

When the code for the first transmitter is registered, th previously- registered codes for two transmitters are cleared.

Therefore, if you are using more than two or are addin a second transmitter, the codes for all the transmitters must be registered at the same time.

1. Check that the doors lock normally when the key is used.
2. Connect the MUT-II to the diagnosis connector
   NOTE
   This will connect terminal (1) of the diagnosis con nectar to earth, and the system will be in secret code registration standby mode.
   Caution
   Always turn the ignition switch to OFF before connecting and disconnecting the MUT-II

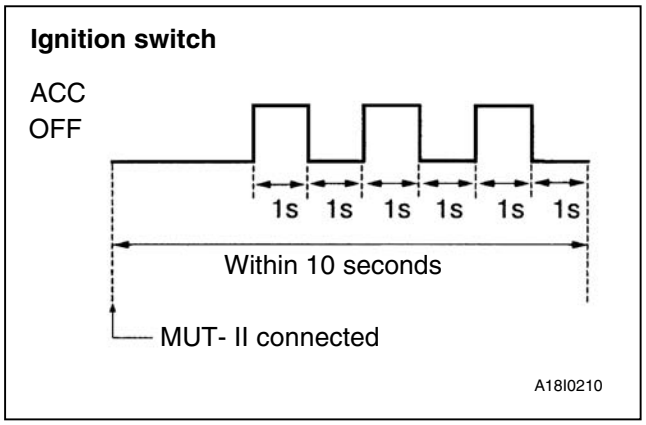

3. Within 10 seconds after connecting the MUT-II, turn the ignition switch to ACC ON for 1 second an then to OFF for 1 second; repeat this procedure three times.

   NOTE

   The doors will lock and unlock once at this tim and the system will switch to registration mode.
4. Press the lock switch or unlock switch; of th transmitter switch, and then press it two times within 10 seconds of the first press. This will register the code.
5. After registration is completed, the doors will be automatically locked and unlocked once.
6. If you are using two transmitters or have added a second transmitter, the same registration procedure should be carried out for the second transmitter, and it should be carried out within one minute after registration of the code for the first transmitter has been completed. After the second registration is completed, the doors will be automatically locked and unlocked once.
7. Registration mode will be terminated under the following conditions.

- When the secret codes for two transmitters hav been registered;
- When one minute has passed after registration mode started;
- If the MUT-II is disconnected (earth is released);
- If the ignition switch is tuned to ON;

8. After registration mode has been completed, carry out the followings to make sure that the keyless entry system operates.

- Pull the ignition key out.
- Close the all doors.

KEYLESS ENTRY SYSTEM

REMOVAL AND INSTALLATION

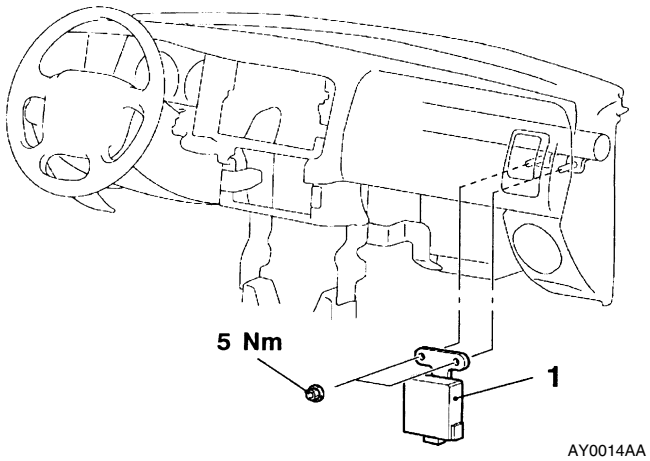

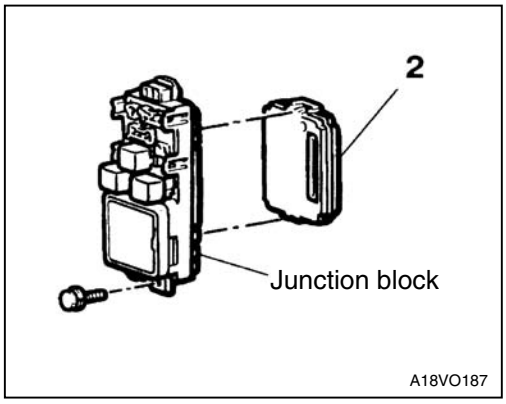

Keyless entry receiver-ECU removal steps

- Glove box assembly (Refer to GROUP 52A*.)

1. Keyless entry receiver-ECU

ETACS-ECU removal

2. ETACS-ECU

NOTE

*: Refer to ’97 L200 Workshop Manual <Pub. No. PWTE96E1>

GROUP 52A
INTERIOR

GENERAL
OUTLINE OF CHANGE

- The following service procedures have been added due to the introduction of the adjustable seat belt anchor.
- On dual cab models, three-point ELR/child seat fixing mechanism (ALR) seat belts have been added for rear seat as an optional equipment. The service procedures are the same as previous one.

FRONT SEAT BELT
REMOVAL AND INSTALLATION

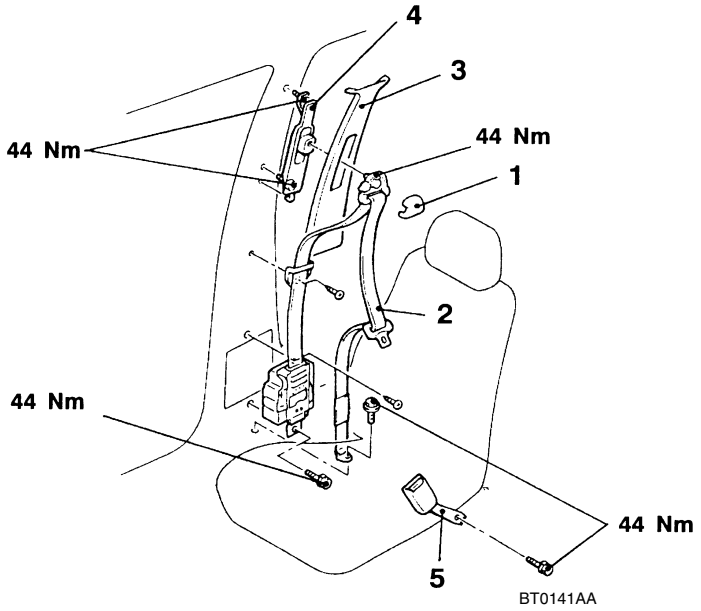

Outer seat belt removal steps

- Center pillar trim, lower or quarter trim, lower (refer to P.52A*.)

1. Sash guide cover
2. Outer seat belt
3. Center pillar trim, upper or quarter trim, upper (refer to P.52A*.)
4. Adjustable seat belt anchor.

Inner seat belt removal steps

- Front seat (refer to P.52A*.)

5. Inner seat belt

NOTE

*: Refer to ’97 L200 Workshop Manual <Pub. No. PWTE96E1>.

NOTES

GROUP 54
CHASSIS ELECTRAL

GENERAL
OUTLINE IF CHANGES
- The following procedure has been added due to the addition of the high-stop lamp <4WD>.

HIGH-MOUNTED STOP LAMP
REMOVAL AND INSTALLATION

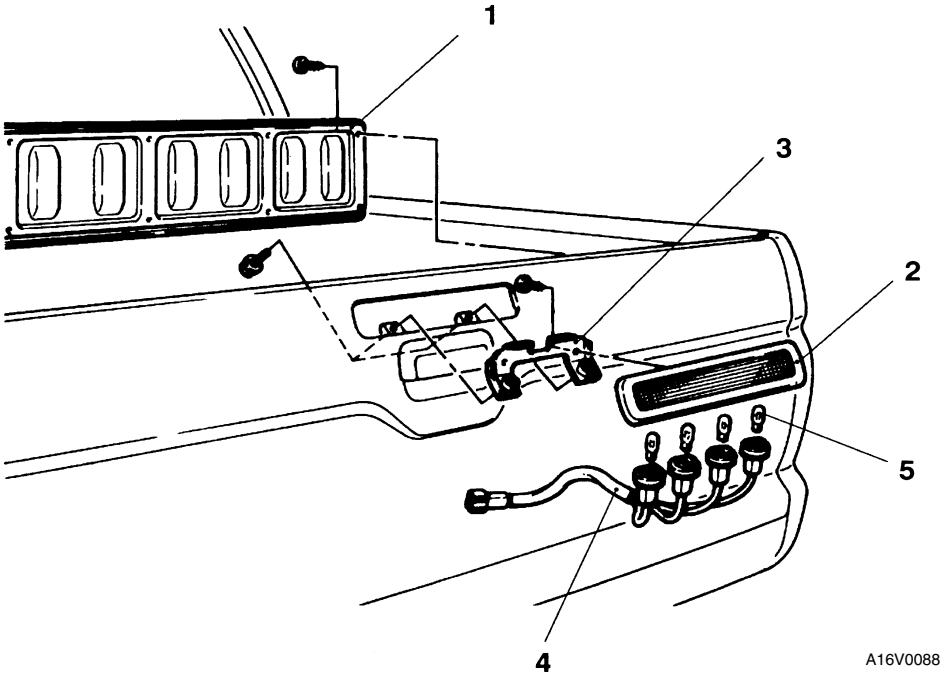

Removal steps
1. Rear gate panel
2. High mounted stop lamp
3. Lamp bracket
4. Bulb socket assembly
5. Bulb

GROUP 12
ENGINE LUBRICATION

GENERAL

OUTLINE OF CHANGE

- Due to the adoption of the VG (Variable Geometry) turbocharger, the engine oil quantity has been changed. <4WD vehicles with 4D56-Step III engine>

LUBRICANT

Items		4WD vehicles with 4D56-Step III engine
Engine oil quantity L	Oil filter	0.8
	Oil cooler	0.4
	Total	7.5

NOTES

MULTIPOINT FUEL INJECTION (MPI)

Click on the applicable bookmark to selected the required model year

MULTIPOINT FUEL INJECTION (MPI)

CONTENTS

13109000287

GENERAL INFORMATION 3

SERVICE SPECIFICATIONS 6

SEALANT 6

SPECIAL TOOLS 7

TROUBLESHOOTING 8

ON-VEHICLE SERVICE 78

Throttle Body (Throttle Valve Area) Cleaning 78

Idle Position Switch and Throttle Position Sensor Adjustment 78

Fixed SAS Adjustment 79

Basic Idle Speed Adjustment 79

Fuel Pressure Test 81

Fuel Pump Connector Disconnection (How to Reduce the Fuel Pressure) 84

Fuel Pump Operation Check 84

Component Location 85

Control Relay and Fuel Pump Relay Continuity Check 86

Intake Air Temperature Sensor Check 86

Engine Coolant Temperature Sensor Check 86

Throttle Position Sensor Check 87

Idle Position Switch Check 87

Oxygen Sensor Check 88

Injector Check 89

Idle Speed Control (ISC) Servo (Stepper Motor) Check 90

Purge Control Solenoid Valve Check 91

EGR Control Solenoid Valve Check 91

INJECTOR 92

THROTTLE BODY 94

MULTIPOINT FUEL INJECTION (MPI)

13100010265

GENERAL INFORMATION

The Multipoint Fuel Injection System consists of sensors which detect the engine conditions, the engine-ECU which controls the system based on signals from these sensors, and actuators which operate under the control of the engine-ECU. The engine-ECU carries out activities such as fuel injection control, idle speed control and ignition timing control. In addition, the engine-ECU is equipped with several diagnosis modes which simplify troubleshooting when a problem develops.

FUEL INJECTION CONTROL

The injector drive times and injector timing are controlled so that the optimum air/fuel mixture is supplied to the engine to correspond to the continually-changing engine operation conditions.

A single injector is mounted at the intake port of each cylinder. Fuel is sent under pressure from the fuel tank by the fuel pump, with the pressure being regulated by the fuel pressure regulator. The fuel thus regulated is distributed to each of the injectors.

Fuel injection is normally carried out once for each 2-cylinder group for every two rotations of the crankshaft. This is called group fuel injection. The engine-ECU provides a richer air/fuel mixture by carrying out “open-loop” control when the engine is cold or operating under high load conditions in order to maintain engine performance. In addition, when the engine is warm or operating under normal conditions, the engine-ECU controls the air/fuel mixture by using the oxygen sensor signal to carry out “closed-loop” control in order to obtain the theoretical air/fuel mixture ratio that provides the maximum cleaning performance from the three way catalyst.

IDLE AIR CONTROL

The idle speed is kept at the optimum speed by controlling the amount of air that bypasses the throttle valve in accordance with changes in idling conditions and engine load during idling. The engine-ECU drives the idle speed control (ISC) motor to keep the engine running at the pre-set idle target speed in accordance with the engine coolant temperature and air conditioner load. In addition, when the air conditioner switch is turned off and on while the engine is idling, the ISC motor operates to adjust the throttle valve bypass air amount in accordance with the engine load conditions in order to avoid fluctuations in the engine speed.

IGNITION TIMING CONTROL

The power transistor located in the ignition primary circuit turns ON and OFF to control the primary current flow to the ignition coil. This controls the ignition timing in order to provide the optimum ignition timing with respect to the engine operating conditions. The ignition timing is determined by the engine-ECU from the engine speed, intake air volume, engine coolant temperature and atmospheric pressure.

SELF-DIAGNOSIS FUNCTION

- When an abnormality is detected in one of the sensors or actuators related to emission control, the engine warning lamp (check engine lamp) illuminates as a warning to the driver.
- When an abnormality is detected in one of the sensors or actuators, a diagnosis code corresponding to the abnormality is output.
- The RAM data inside the ENGINE-ECU that is related to the sensors and actuators can be read by means of the MUT-II. In addition, the actuators can be force-driven under certain circumstances.

OTHER CONTROL FUNCTIONS

1. Fuel Pump Control
Turns the fuel pump relay ON so that current is supplied to the fuel pump while the engine is cranking or running.
2. A/C Relay Control
Turns the compressor clutch of the A/C ON and OFF.
3. Purge Control Solenoid Valve Control
Refer to GROUP 17.
4. EGR Control Solenoid Valve Control
Refer to GROUP 17.

GENERAL SPECIFICATIONS

Items		Specifications
Throttle body	Throttle bore mm	54
	Throttle position sensor	Variable resistor type
	Idle speed control servo	Stepper motor type (Stepper motor type by-pass air control system with the air volume limiter)
	Idle position switch	Rotary contact type, within throttle position sensor
Engine-ECU	Identification model No.	E2T64271 <4G63 - Vehicles without immobilizer system> E2T64277 <4G63 - Vehicles with immobilizer system> E2T64272 <4G64 - Vehicles without immobilizer system> E2T64276 <4G64 - Vehicles with immobilizer system>
Sensors	Air flow sensor	Karman vortex type
	Barometric pressure sensor	Semiconductor type
	Intake air temperature sensor	Thermistor type
	Engine coolant temperature sensor	Thermistor type
	Oxygen sensor	Zirconia type
	Vehicle speed sensor	Magnetic resistive element type
	Top dead centre sensor	Hall element type
	Crank angle sensor	Hall element type
	Power steering fluid pressure switch	Contact switch type
Actuators	Control relay type	Contact switch type
	Fuel pump relay type	Contact switch type
	Injector type and number	Electromagnetic type, 4
	Injector identification mark	CDH275
	EGR control solenoid valve	Duty cycle type solenoid valve
	Purge control solenoid valve	ON/OFF type solenoid valve
Fuel pressure regulator	Regulator pressure kPa	328

MULTIPOINT FUEL INJECTION SYSTEM DIAGRAM

*1 Oxygen sensor
*2 Air flow sensor
*3 Intake air temperature sensor
*4 Throttle position sensor
*5 Idle position switch
*6 Top dead centre sensor
*7 Crank angle sensor
*8 Barometric pressure sensor
*9 Engine coolant temperature sensor

- Power supply voltage
- Vehicle speed sensor
- A/C switch
- Inhibitor switch
- Power steering fluid pressure switch
- Ignition switch – ST
- Ignition switch – IG

⇨ Engine-ECU ⇨

☆1 Injector
☆2 Purge control solenoid valve
☆3 Idle speed control servo
☆4 EGR control solenoid valve

- Fuel pump relay
- Control relay
- A/C power relay
- Engine warning lamp
- Diagnosis signal
- Ignition coil, power transistor

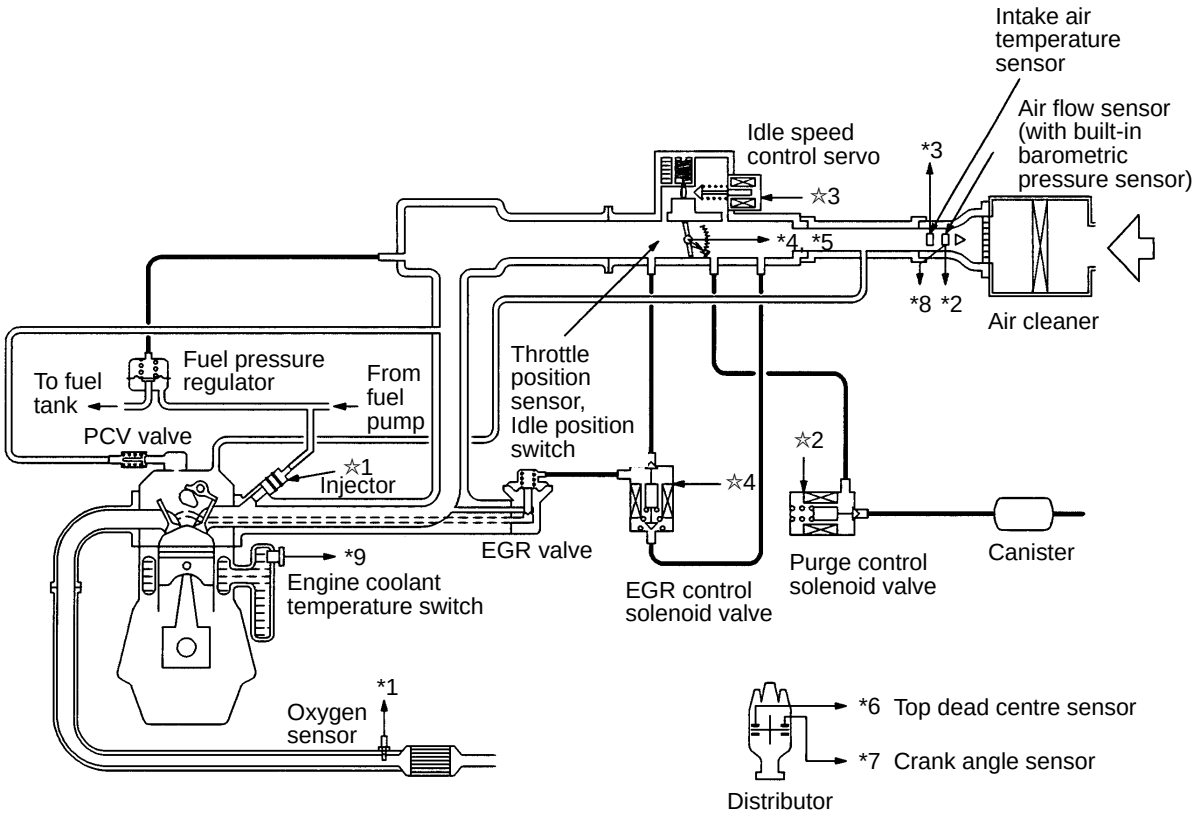

6FU2536

SERVICE SPECIFICATIONS

13100030216

Items		Specifications
Basic idle speed r/min		750±50
Idle speed when A/C is ON r/min		900 at neutral position
Throttle position sensor adjusting voltage mV		400–1,000
Throttle position sensor resistance kΩ		3.5–6.5
Idle speed control servo coil resistance Ω		28–33 (at 20°C)
Intake air temperature sensor resistance kΩ	20°C	2.3–3.0
	80°C	0.30–0.42
Engine coolant temperature sensor resistance kΩ	20°C	2.1–2.7
	80°C	0.26–0.36
Oxygen sensor output voltage V		0.6–1.0
Fuel pressure kPa	Vacuum hose disconnection	324–343 at curb idle
	Vacuum hose connection	Approx. 265 at curb idle
Injector coil resistance Ω		13–16 (at 20°C)

SEALANT

13100050038

Item	Specified sealant	Remark
Engine coolant temperature sensor threaded portion	3M Nut Locking Part No. 4171 or equivalent	Drying sealant

SPECIAL TOOLS

13100060208

Tool	Number	Name	Use
A 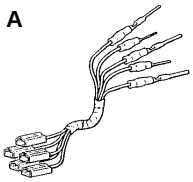 B 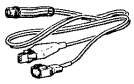 C 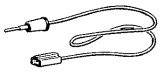 D 	MB991223 A: MB991219 B: MB991220 C: MB991221 D: MB991222	Harness set A: Test harness B: LED harness C: LED harness adapter D: Probe	Measurement of terminal voltage A: Connector pin contact pressure inspection B, C: Power circuit inspection D: Commercial tester connection
	MB991502	MUT-II sub assembly	● Reading diagnosis code ● MPI system inspection
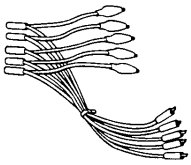	MB991348	Test harness set	● Adjustment of idle position switch and throttle position sensor ● Inspection using an analyzer
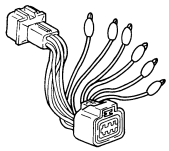	MD998463	Test harness (6-pin, square)	● Inspection of idle speed control servo ● Inspection using an analyzer
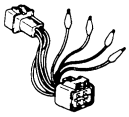	MD998464	Test harness (4-pin, triangle)	Inspection of oxygen sensor
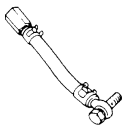	MD998709	Adaptor hose	Measurement of fuel pressure
	MD998742	Hose adaptor	

Tool	Number	Name	Use
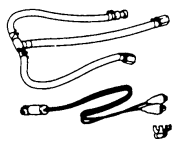	MD998706	Injector test set	Checking the spray condition of injectors
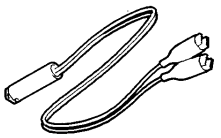	MB991607	Injector test harness	
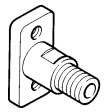	MD998741	Injector test adaptor	
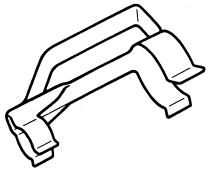	MB991608	Clip	

TROUBLESHOOTING

13100850034

DIAGNOSIS TROUBLESHOOTING FLOW

Refer to GROUP 00 – How to Use Troubleshooting/Inspection Service Points.

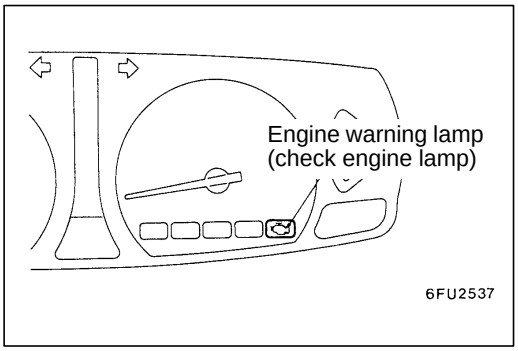

DIAGNOSIS FUNCTION

13100860211

ENGINE WARNING LAMP (CHECK ENGINE LAMP)

If an abnormality occurs in any of the following items related to the Multipoint Fuel Injection (MPI) system, the engine warning lamp will illuminate.
If the lamp remains illuminated or if the lamp illuminates while the engine is running, check the diagnosis code output.

Engine warning lamp inspection items

Engine-ECU
Oxygen sensor
Air flow sensor
Intake air temperature sensor
Throttle position sensor
Engine coolant temperature sensor
Crank angle sensor
Top dead centre sensor
Barometric pressure sensor
Ignition timing adjustment signal
Injector
Immobilizer system

Caution
Engine warning lamp will come on even when terminal for ignition timing adjustment is short-circuited. Therefore, it is not abnormal that the lamp comes on even when terminal for ignition timing adjustment is short-circuited at the time of ignition timing adjustment.

METHOD OF READING AND ERASING DIAGNOSIS CODES

Refer to GROUP 00 – How to Use Troubleshooting/Inspection Service Points.

INSPECTION USING MUT-II DATA LIST AND ACTUATOR TESTING

1. Carry out inspection by means of the data list and the actuator test function.
   If there is an abnormality, check and repair the chassis harnesses and components.
2. After repairing, re-check using the MUT-II and check that the abnormal input and output have returned to normal as a result of the repairs.
3. Erase the diagnosis code memory.
4. Remove the MUT-II.
5. Start the engine again and carry out a road test to confirm that the problem has disappeared.

FAIL-SAFE FUNCTION REFERENCE TABLE

13100910190

When the main sensor malfunctions are detected by the diagnosis function, the vehicle is controlled by means of the pre-set control logic to maintain safe conditions for driving.

Malfunctioning item	Control contents during malfunction
Air flow sensor	1. Uses the throttle position sensor signal and engine speed signal (crank angle sensor signal) to take reading of the basic injector drive time and basic ignition timing from the pre-set mapping. 2. Fixes the ISC servo in the appointed position so idle control is not performed.
Intake air temperature sensor	Controls as if the intake air temperature is 25°C.
Throttle position sensor (TPS)	No increase in fuel injection amount during acceleration due to the throttle position sensor signal.
Engine coolant temperature sensor	Controls as if the engine coolant temperature is 80°C.
Top dead centre sensor	Injects fuel to all cylinders simultaneously. (However, after the ignition switch is turned to ON, the No. 1 cylinder top dead centre is not detected at all.)
Barometric pressure sensor	Controls as if the barometric pressure is 101 kPa.
Oxygen sensor	Air/fuel ratio feedback control (closed loop control) is not performed.

INSPECTION CHART FOR DIAGNOSIS CODES

13100870214

Code No.	Diagnosis item	Reference page
11	Oxygen sensor system	13A-11
12	Air flow sensor system	13A-12
13	Intake air temperature sensor system	13A-12
14	Throttle position sensor system	13A-13
21	Engine coolant temperature sensor system	13A-14
22	Crank angle sensor system	13A-15
23	Top dead centre sensor system	13A-16
24	Vehicle speed sensor system	13A-17
25	Barometric pressure sensor system	13A-18
36*	Ignition timing adjustment signal system	13A-19
41	Injector system	13A-19
54	Immobilizer system	13A-20

NOTE
*: Malfunction code No. 36 is not memorized.

INSPECTION PROCEDURE FOR DIAGNOSIS CODES

Code No. 11 Oxygen sensor system	Probable cause
Range of Check ● 3 minutes have passed after engine was started. ● Engine coolant temperature is approx. 80°C or more. ● Intake air temperature is 20–50°C. ● Engine speed is approx. 2,000–3,000 r/min ● Vehicle is moving at constant speed on a flat, level road surface Set conditions ● The oxygen sensor output voltage is around 0.6 V for 30 seconds (does not cross 0.6 V for 30 seconds). ● When the range of check operations given above which accompany starting of the engine are carried out four time in succession, a problem is detected after each operation.	● Malfunction of the oxygen sensor ● Improper connector contact, open circuit or short-circuited harness wire ● Malfunction of the engine-ECU

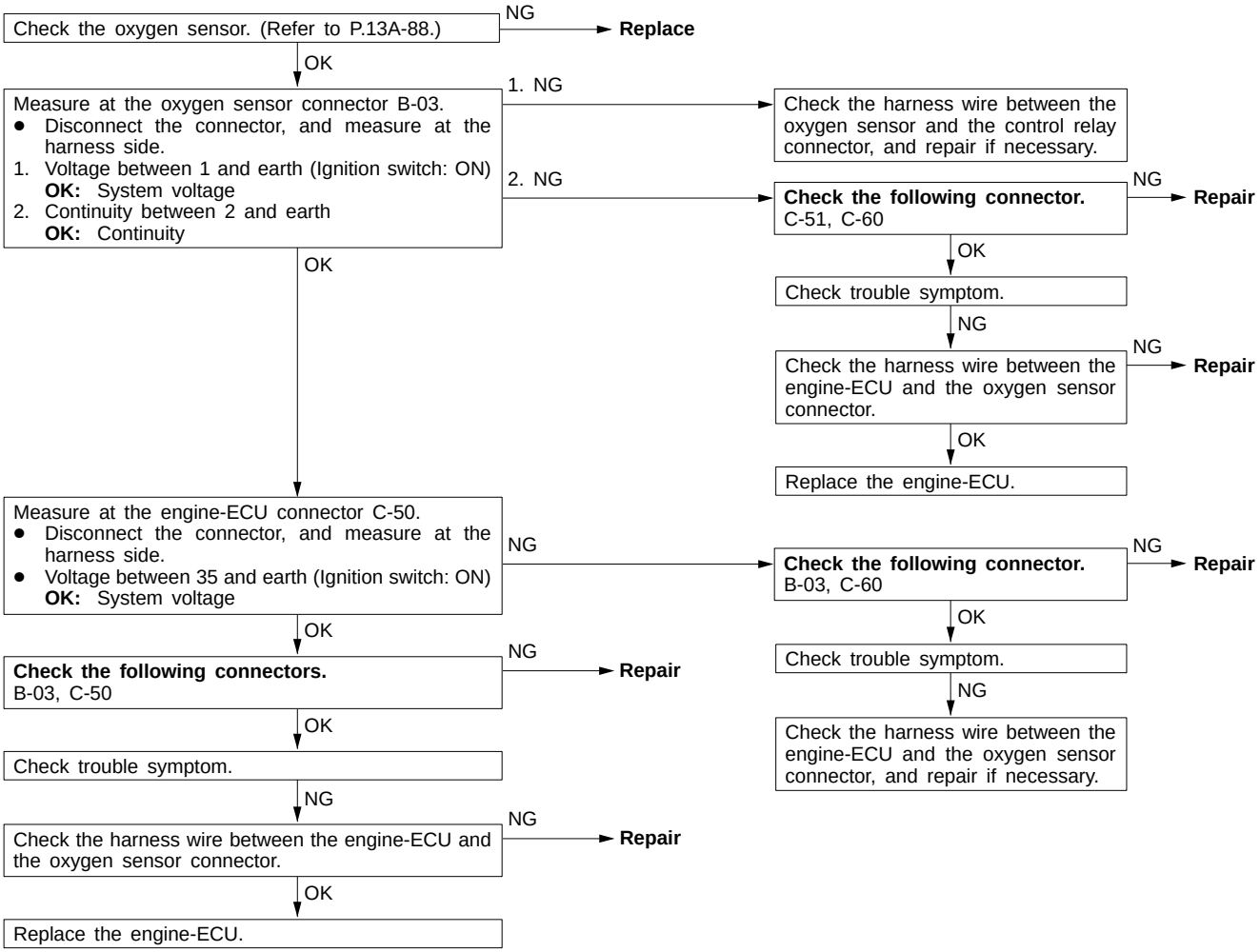

Code No. 12 Air flow sensor system	Probable cause
Range of Check ● Engine speed is 500 r/min or more. Set conditions ● Sensor output frequency is 3 Hz or less for 4 seconds.	● Malfunction of the air flow sensor ● Improper connector contact, open circuit or short-circuited harness wire of the air flow sensor ● Malfunction of the engine-ECU

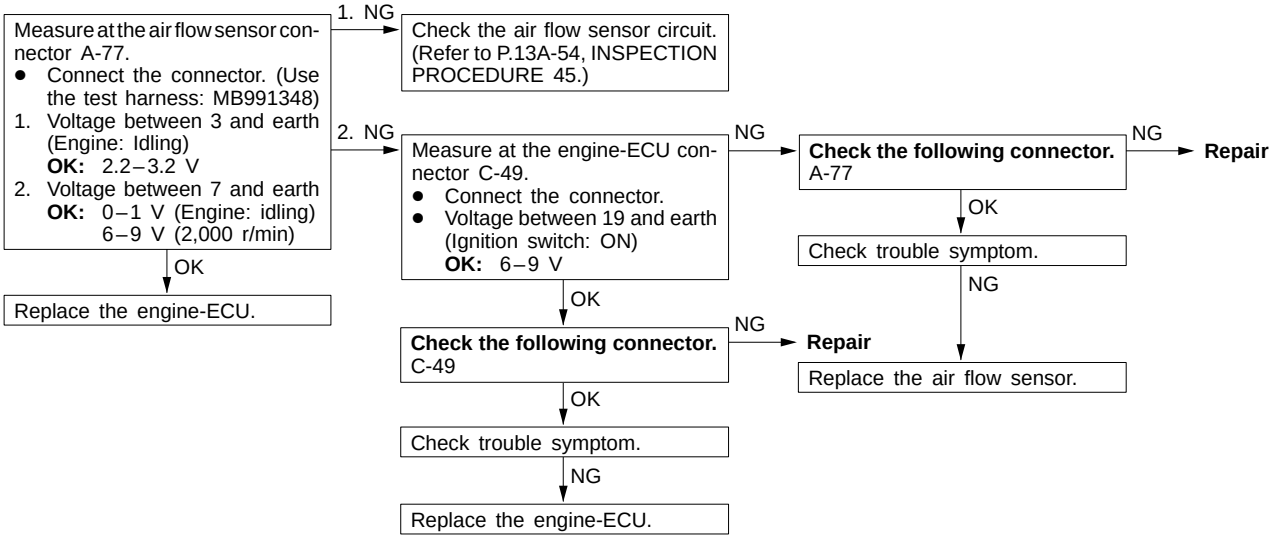

Code No. 13 Intake air temperature sensor system	Probable cause
Range of Check ● Ignition switch: ON ● Excluding 60 seconds after the ignition switch is turned to ON or immediately after the engine starts. Set conditions ● Sensor output voltage is 4.6 V or more (corresponding to an intake air temperature of –45°C or less) for 4 seconds. or ● Sensor output voltage is 0.2V or less (corresponding to an intake air temperature of 125°C or more) for 4 seconds.	● Malfunction of the intake air temperature sensor ● Improper connector contact, open circuit or short-circuited harness wire of the intake air temperature sensor circuit ● Malfunction of the engine-ECU

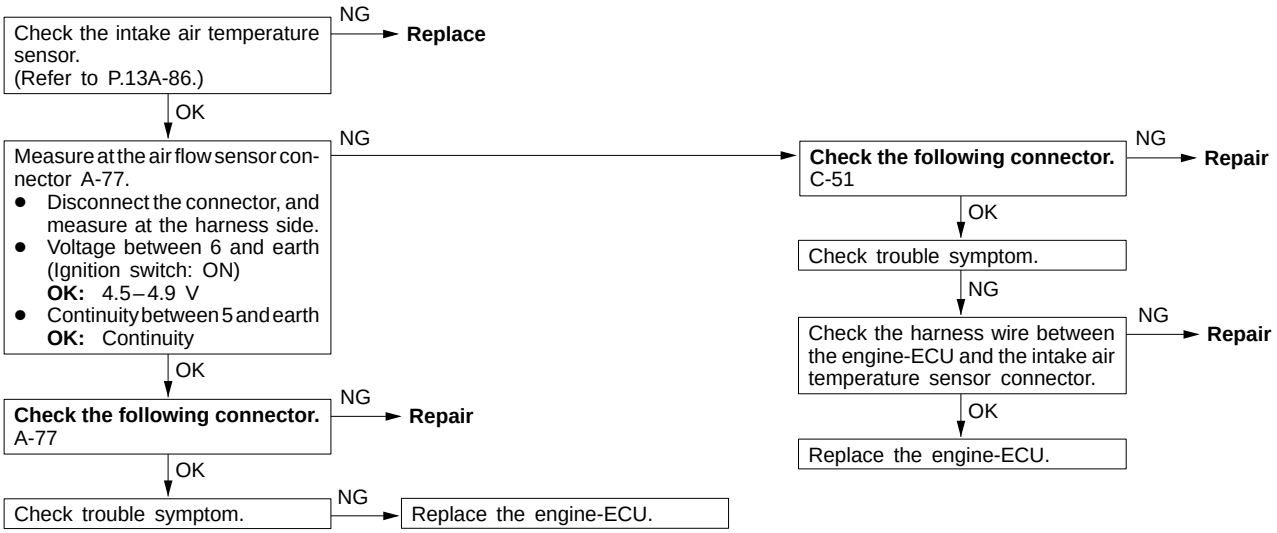

Code No. 14 Throttle position sensor system	Probable cause
Range of Check ● Ignition switch: ON ● Excluding 60 seconds after the ignition switch is turned to ON or immediately after the engine starts. Set conditions ● When the idle position switch is ON, the sensor output voltage is 2 V or more for 4 seconds. or ● The sensor output voltage is 0.2 V or less for 4 seconds.	● Malfunction of the throttle position sensor or maladjustment ● Improper connector contact, open circuit or short-circuited harness wire of the throttle position sensor circuit ● Improper "ON" state of idle position switch ● Short circuit of the idle position switch signal line ● Malfunction of the engine-ECU

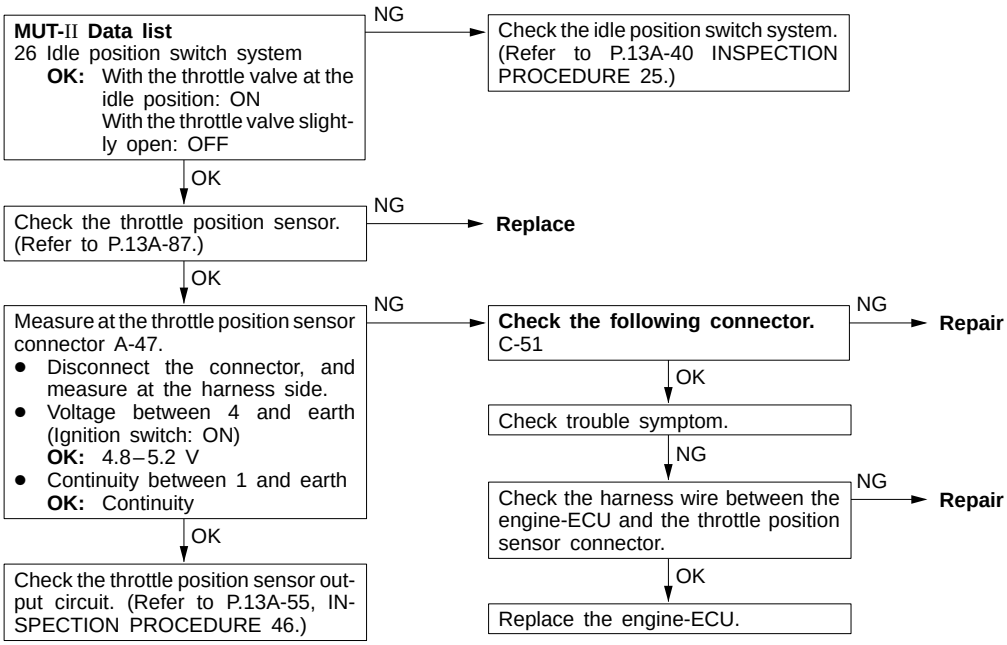

Code No. 21 Engine coolant temperature sensor system	Probable cause
Range of Check ● Ignition switch: ON ● Excluding 60 seconds after the ignition switch is turned to ON or immediately after the engine starts. Set conditions ● Sensor output voltage is 4.6 V or more (corresponding to an engine coolant temperature of –45°C or less) for 4 seconds. or ● Sensor output voltage is 0.1 V or less (corresponding to an engine coolant temperature of 140°C or more) for 4 seconds.	● Malfunction of the engine coolant temperature sensor ● Improper connector contact, open circuit or short-circuited harness wire of the engine coolant temperature sensor circuit ● Malfunction of the engine-ECU
Range of Check ● Ignition switch: ON ● Engine speed is approx. 50 r/min or more Set conditions ● The sensor output voltage increases from 1.6 V or less (corresponding to an engine coolant temperature of 40°C or more) to 1.6 V or more (corresponding to an engine coolant temperature of 40°C or less). ● After this, the sensor output voltage is 1.6 V or more for 5 minutes.	

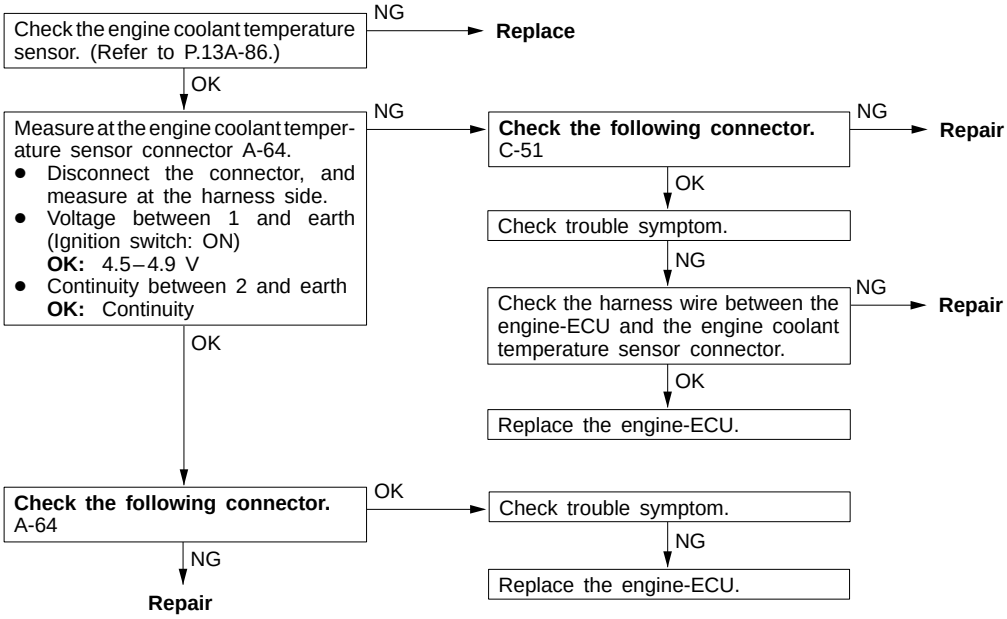

Code No. 22 Crank angle sensor system	Probable cause
Range of Check ● Engine is cranking. Set conditions ● Sensor output voltage does not change for 4 seconds (no pulse signal input.)	● Malfunction of the crank angle sensor ● Improper connector contact, open circuit or short-circuited harness wire of the crank angle sensor ● Malfunction of the engine-ECU

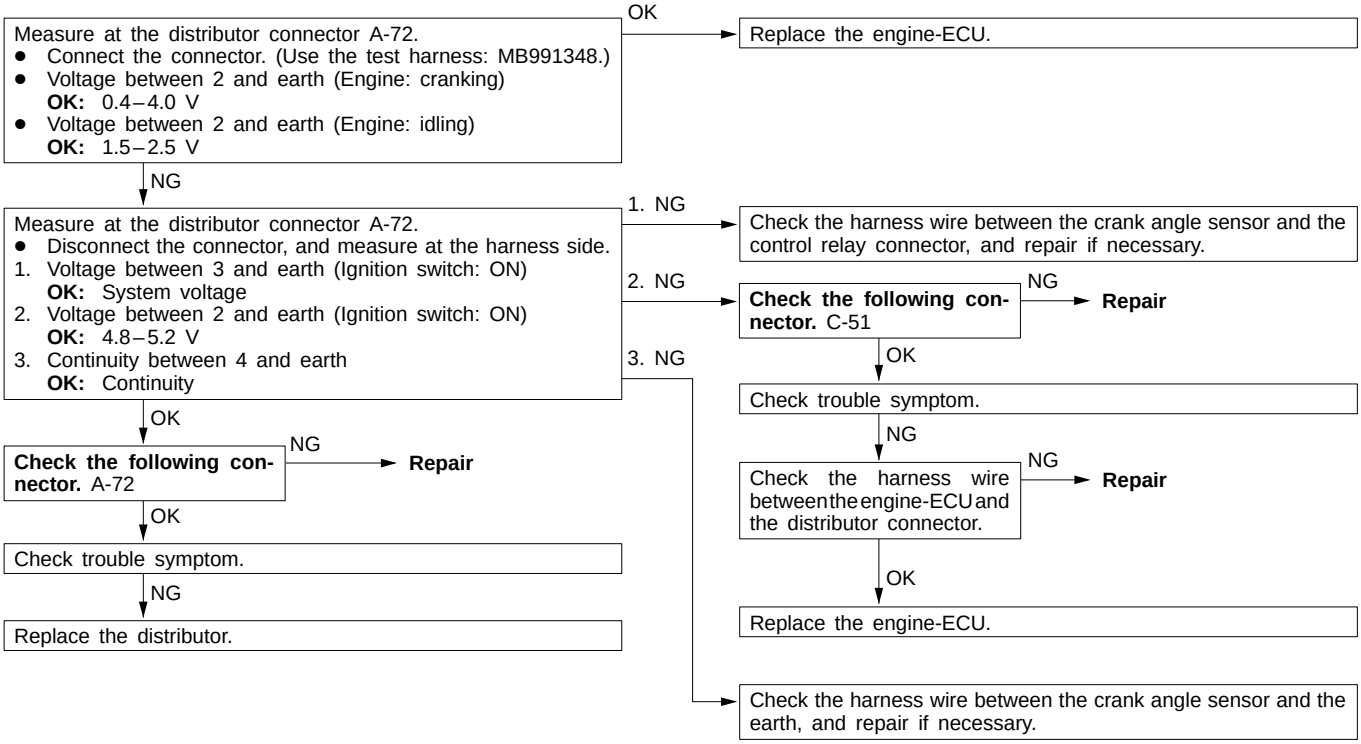

Code No. 23 Top dead centre sensor system	Probable cause
Range of Check ● Ignition switch: ON ● Engine speed is approx. 50 r/min or more. Set conditions ● Sensor output voltage does not change for 4 seconds (no pulse signal input.)	● Malfunction of the camshaft position sensor ● Improper connector contact, open circuit or short-circuited harness wire of the top dead centre sensor circuit ● Malfunction of the engine-ECU

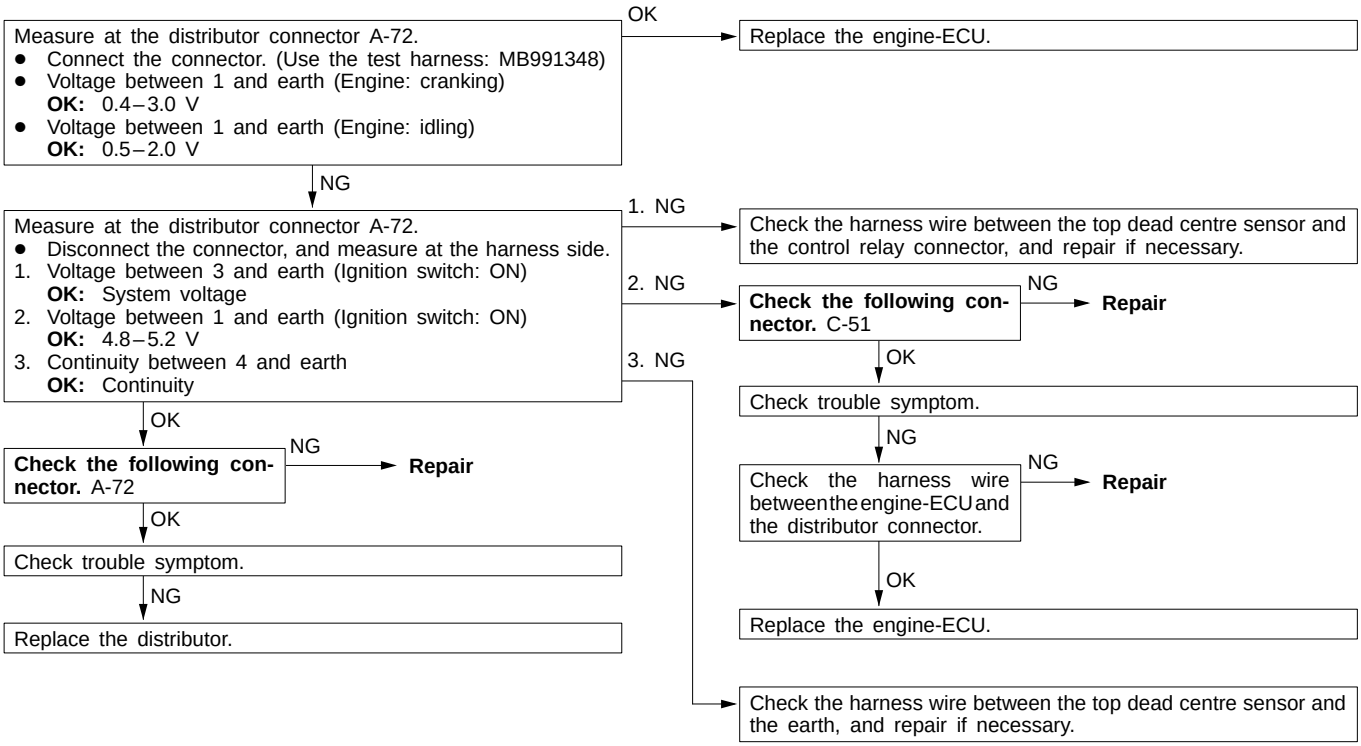

Code No. 24 Vehicles speed sensor system	Probable cause
Range of check ● Ignition switch: ON ● Excluding 60 seconds after the ignition switch is turned to ON or immediately after the engine starts. ● Idle position switch: OFF ● Engine speed is 3,000 r/min or more. ● Driving under high engine load conditions. Set conditions ● Sensor output voltage does not change for 4 seconds (no pulse signal input).	● Malfunction of the vehicle speed sensor ● Improper connector contact, open circuit or short-circuited harness wire of the vehicle speed sensor circuit ● Malfunction of the engine-ECU

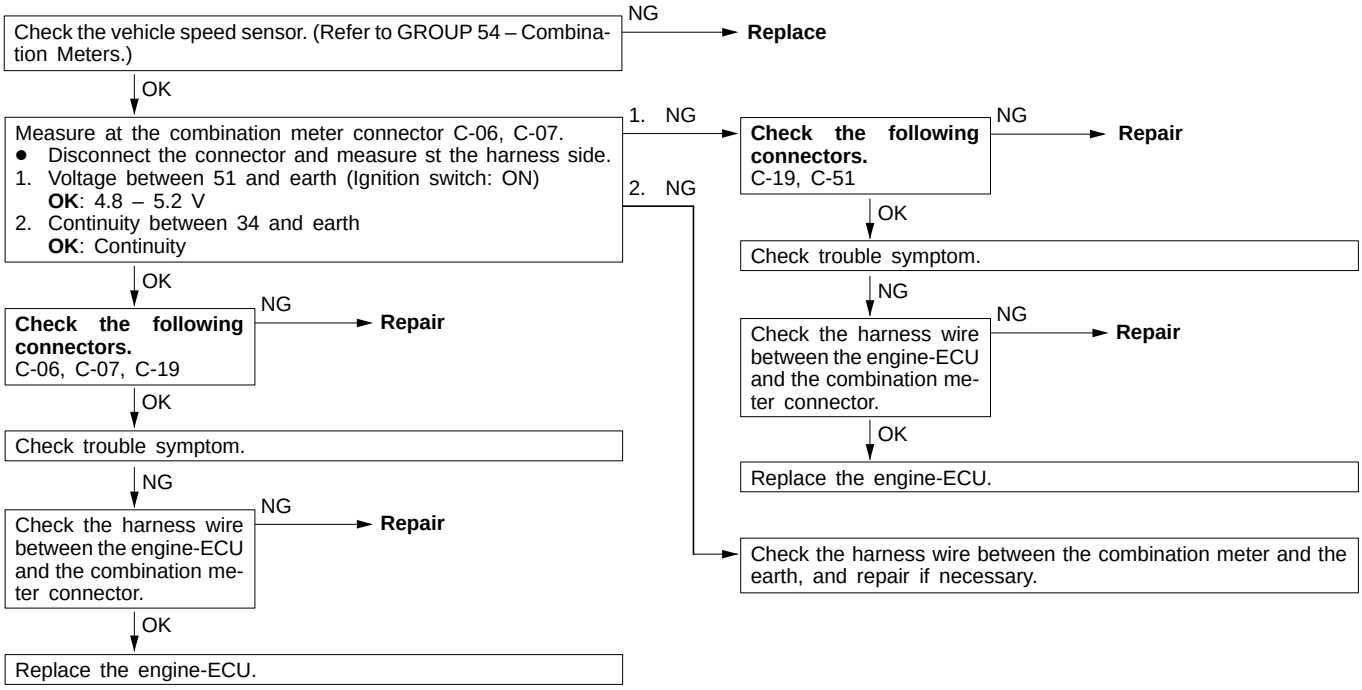

Code No. 25 Barometric pressure sensor system	Probable cause
Range of Check ● Ignition switch: ON ● Excluding 60 seconds after the ignition switch is turned to ON or immediately after the engine starts. ● Battery voltage is 8 V or more. Set conditions ● Sensor output voltage is 4.5 V or more (corresponding to a barometric pressure of 114 kPa or more) for 4 seconds. or ● Sensor output voltage is 0.2 V or less (corresponding to a barometric pressure of 5.33 kPa or less) for 4 seconds.	● Malfunction of the barometric pressure sensor ● Improper connector contact, open circuit or short-circuited harness wire of the barometric pressure sensor circuit ● Malfunction of the engine-ECU

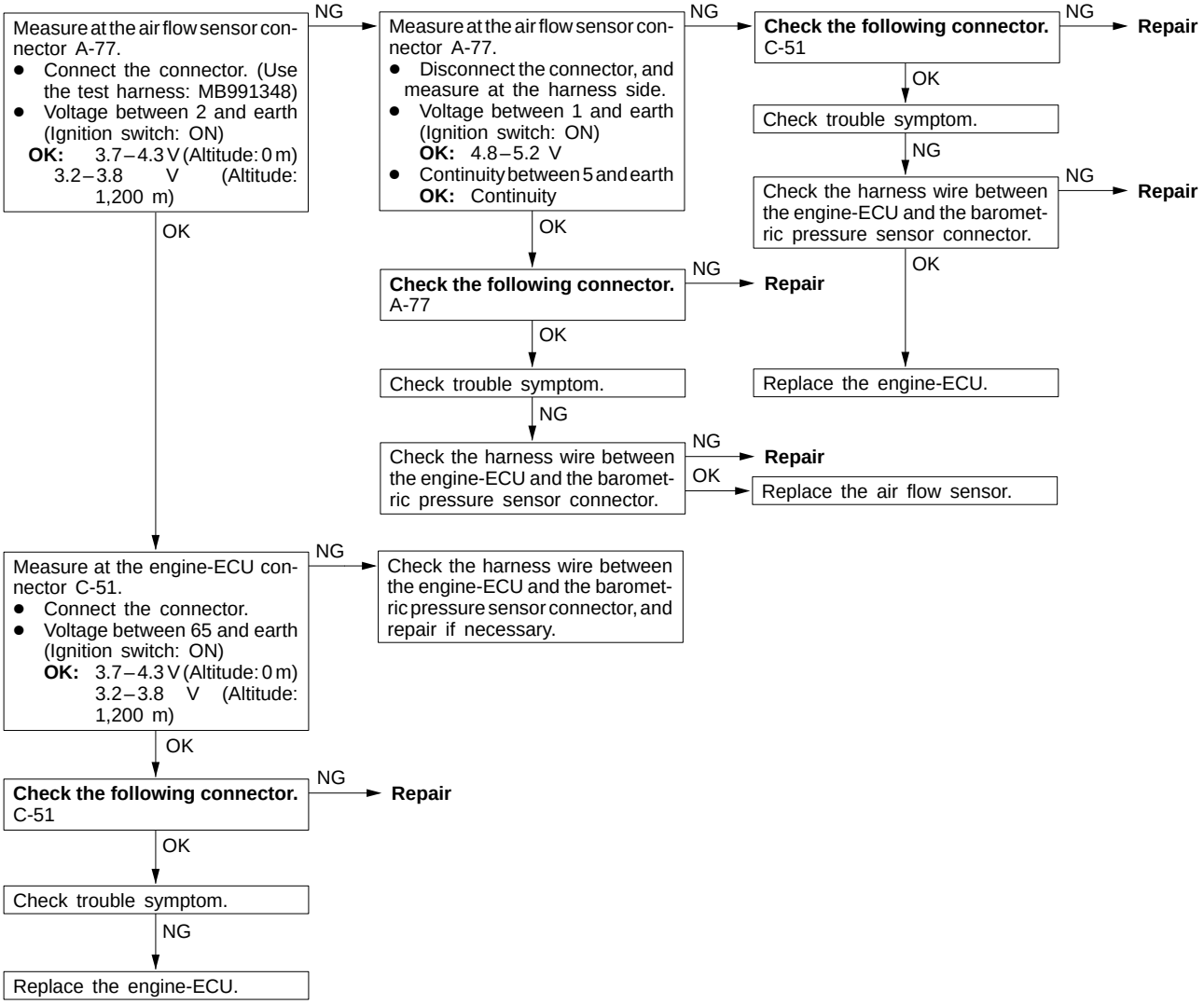

Code No. 36 Ignition timing adjustment signal system	Probable cause
Range of Check ● Ignition switch: ON Set conditions ● The ignition timing adjusting signal wire is shorted to the earth.	● Short circuit to earth of the ignition timing adjustment signal line ● Malfunction of the engine-ECU

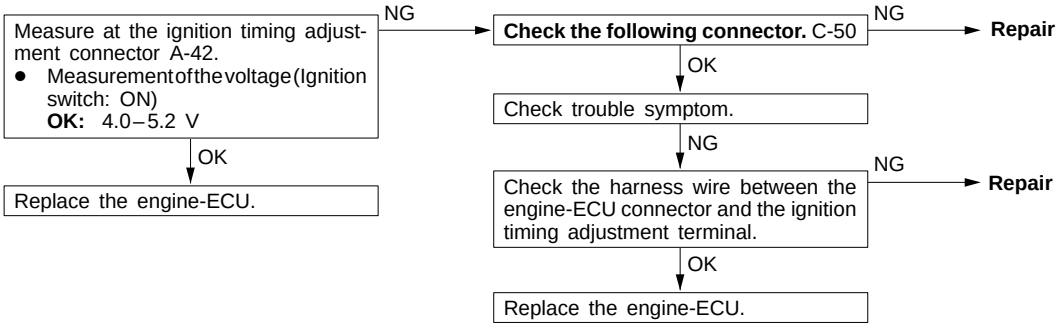

Code No. 41 Injector system	Probable cause
Range of Check ● Engine speed is approx. 50 – 1,000 r/min ● The throttle position sensor output voltage is 1.15 V or less. ● Actuator test by MUT-II is not carried out. Set conditions ● Surge voltage of injector coil is not detected for 4 seconds.	● Malfunction of the injector ● Improper connector contact, open circuit or short-circuited harness wire of the injector circuit ● Malfunction of the engine-ECU

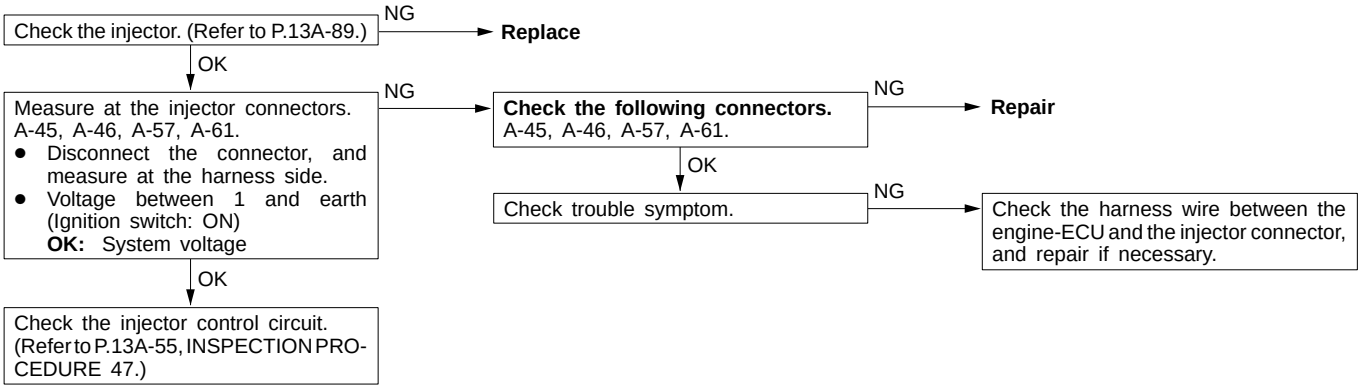

Code No.54 Immobilizer system	Probable cause
Range of Check ● Ignition switch: ON Set Conditions ● Improper communication between the engine-ECU and immobilizer-ECU	● Radio interference of ID codes ● Incorrect ID code ● Malfunction of harness or connector ● Malfunction of immobilizer-ECU ● Malfunction of engine-ECU

NOTE
(1) If the ignition switches are close each other when starting the engine, radio interference may cause this code to be displayed.
(2) This code may be displayed when registering the key ID code.

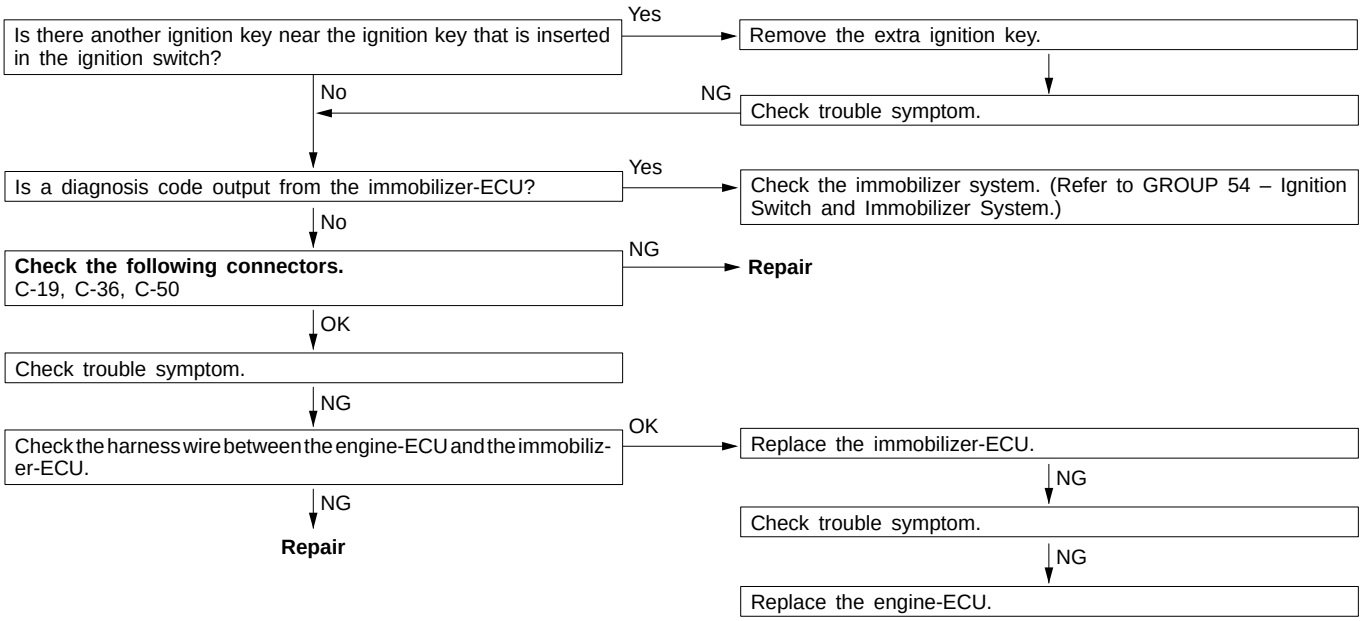

INSPECTION CHART FOR TROUBLE SYMPTOMS

13100880217

Trouble symptom		Inspection procedure No.	Reference page
Communication with MUT-II is impossible.	Communication with all systems is not possible.	1	13A-23
	Communication with engine-ECU only is not possible.	2	13A-24
Engine warning lamp and related parts	The engine warning lamp does not illuminate right after the ignition switch is turned to the ON position.	3	13A-25
	The engine warning lamp remains illuminating and never goes out.	4	13A-25
Starting	No initial combustion (starting impossible)	5	13A-26
	Initial combustion but no complete combustion (starting impossible)	6	13A-27
	Long time to start (improper starting)	7	13A-28
Idling stability (Improper idling)	Unstable idling (Rough idling, hunting)	8	13A-29
	Idling speed is high. (Improper idling speed)	9	13A-30
	Idling speed is low. (Improper idling speed)	10	13A-31
Idling stability (Engine stalls)	When the engine is cold, it stalls at idling. (Die out)	11	13A-32
	When the engine becomes hot, it stalls at idling. (Die out)	12	13A-33
	The engine stalls when starting the car. (Pass out)	13	13A-34
	The engine stalls when decelerating.	14	13A-34
Driving	Hesitation, sag or stumble	15	13A-35
	The feeling of impact or vibration when accelerating	16	13A-35
	The feeling of impact or vibration when decelerating	17	13A-36
	Poor acceleration	18	13A-36
	Surge	19	13A-37
	Knocking	20	13A-37
Dieseling		21	13A-37
Too high CO and HC concentration when idling		22	13A-38

PROBLEM SYMPTOMS TABLE (FOR YOUR INFORMATION)

Items		Symptom
Starting	Won't start	The starter is used to crank the engine, but there is no combustion within the cylinders, and the engine won't start.
	Fires up and dies	There is combustion within the cylinders, but then the engine soon stalls.
	Hard starting	Engine starts after cranking a while.
Idling stability	Hunting	Engine speed doesn't remain constant; changes at idle.
	Rough idle	Usually, a judgement can be based upon the movement of the tachometer pointer, and the vibration transmitted to the steering wheel, shift lever, body, etc. This is called rough idle.
	Incorrect idle speed	The engine doesn't idle at the usual correct speed.
	Engine stall (Die out)	The engine stalls when the foot is taken from the accelerator pedal, regardless of whether the vehicles is moving or not.
	Engine stall (Pass out)	The engine stalls when the accelerator pedal is depressed or while it is being used.
Driving	Hesitation Sag	"Hesitation" is the delay in response of the vehicle speed (engine speed) that occurs when the accelerator is depressed in order to accelerate from the speed at which the vehicle is now traveling, or a temporary drop in vehicle speed (engine speed) during such acceleration. Serious hesitation is called "sag". (Refer to Fig. 1)
	Poor acceleration	Poor acceleration is inability to obtain an acceleration corresponding to the degree of throttle opening, even though acceleration is smooth, or the inability to reach maximum speed.
	Stumble	Engine speed increase is delayed when the accelerator pedal is initially depressed for acceleration. (Refer to Fig. 2)
	Shock	The feeling of a comparatively large impact or vibration when the engine is accelerated or decelerated.
	Surge	This is repeated surging ahead during constant speed travel or during variable speed travel.
	Knocking	A sharp sound like a hammer striking the cylinder walls during driving and which adversely affects driving.
Stopping	Run on ("Dieseling")	The condition in which the engine continues to run after the ignition switch is turned to OFF. Also called "Dieseling".

Fig. 1

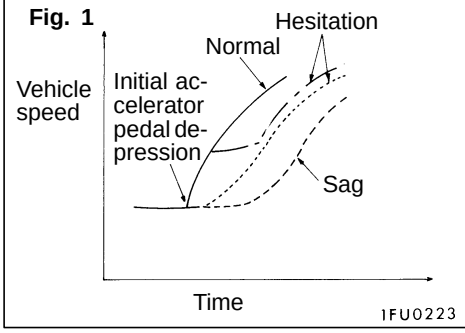

Fig. 2

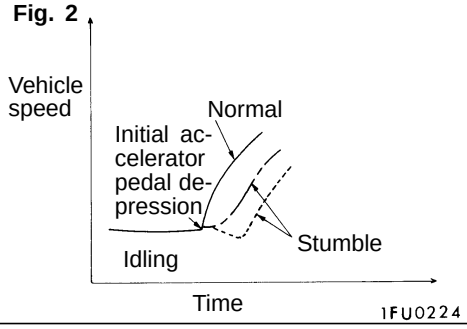

INSPECTION PROCEDURE FOR TROUBLE SYMPTOMS

INSPECTION PROCEDURE 1

Communication with MUT-II is not possible. (Communication with all systems is not possible.)	Probable cause
The cause is probably a defect in the power supply system (including earth) for the diagnosis line.	● Malfunction of the connector ● Malfunction of the harness wire

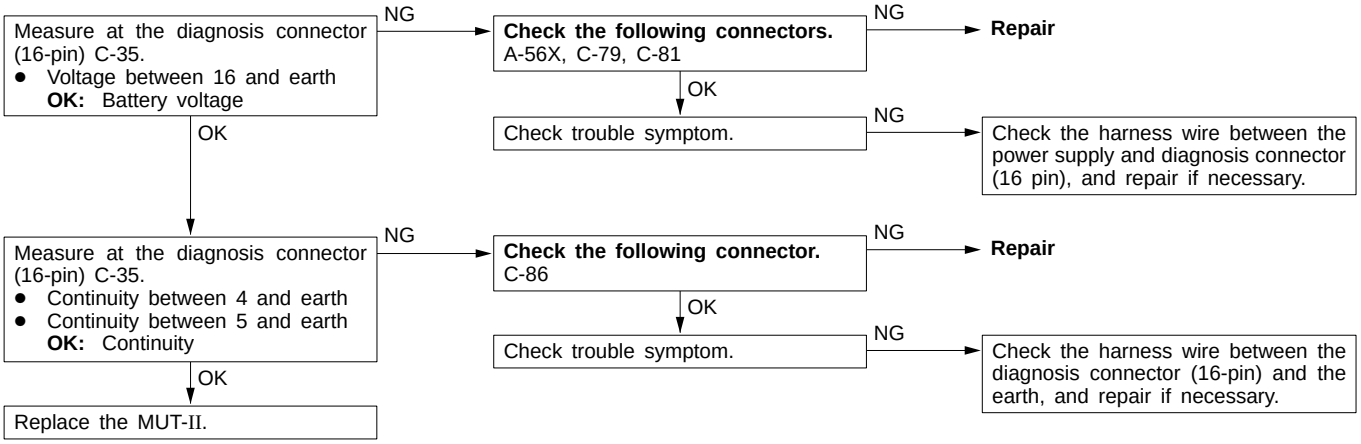

INSPECTION PROCEDURE 2

MUT-II communication with engine-ECU is impossible.	Probable cause
One of the following causes may be suspected. ● No power supply to engine-ECU. ● Defective earth circuit of engine-ECU. ● Defective engine-ECU. ● Improper communication line between engine-ECU and MUT-II	<Vehicles without immobilizer system> ● Malfunction of engine-ECU power supply circuit ● Malfunction of engine-ECU ● Open circuit between engine-ECU and diagnosis connector <Vehicles with immobilizer system> ● Malfunction of engine-ECU power supply circuit ● Malfunction of engine-ECU ● Malfunction of immobilizer-ECU ● Open circuit between immobilizer-ECU and diagnosis connector ● Open circuit between engine-ECU and immobilizer-ECU

<Vehicles without immobilizer system>

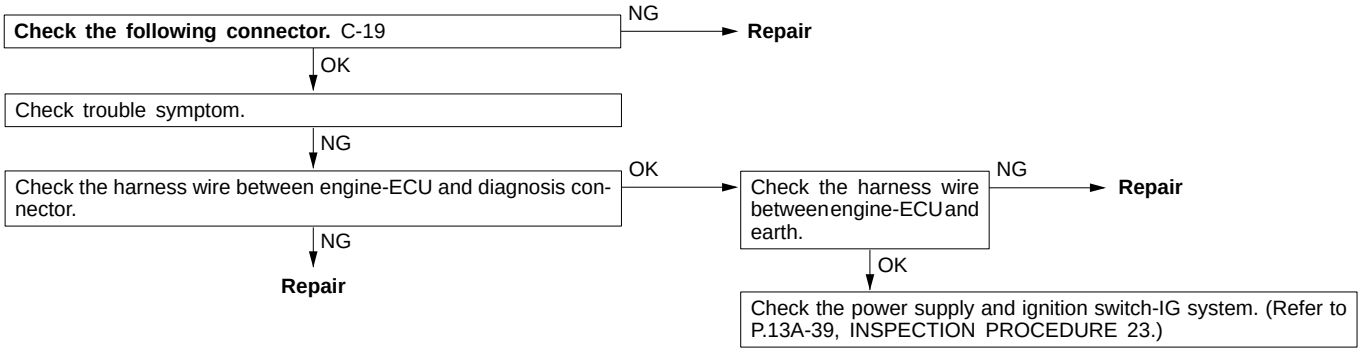

<Vehicles with immobilizer system>

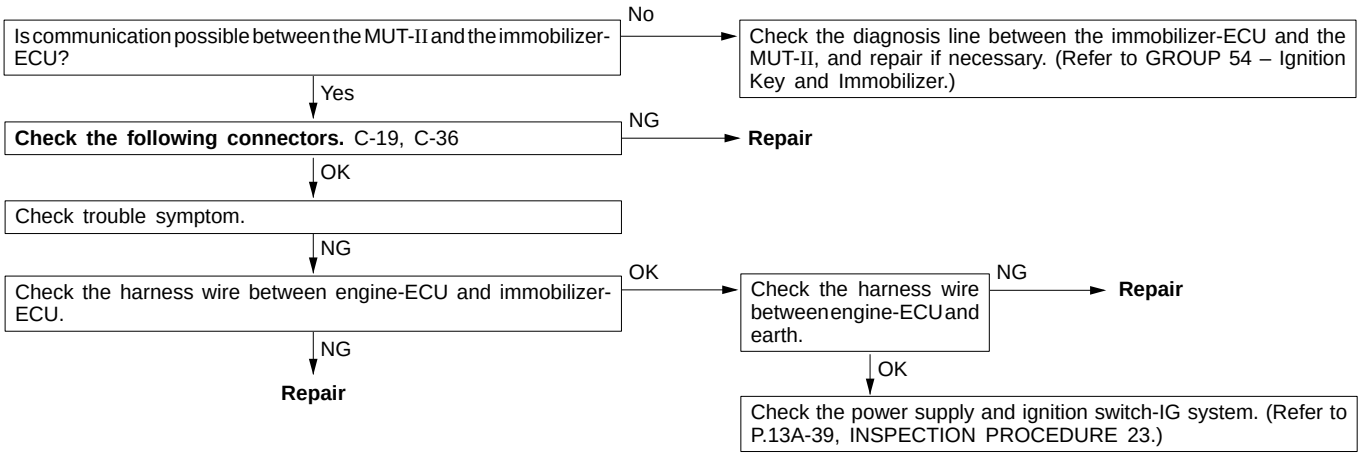

INSPECTION PROCEDURE 3

The engine warning lamp does not illuminate right after the ignition switch is turned to the ON position.	Probable cause
Because there is a burnt-out bulb, the engine-ECU causes the engine warning lamp to illuminate for five seconds immediately after the ignition switch is turned to ON. If the engine warning lamp does not illuminate immediately after the ignition switch is turned to ON, one of the malfunctions listed at right has probably occurred.	● Burnt-out bulb ● Defective warning lamp circuit ● Malfunction of the engine-ECU

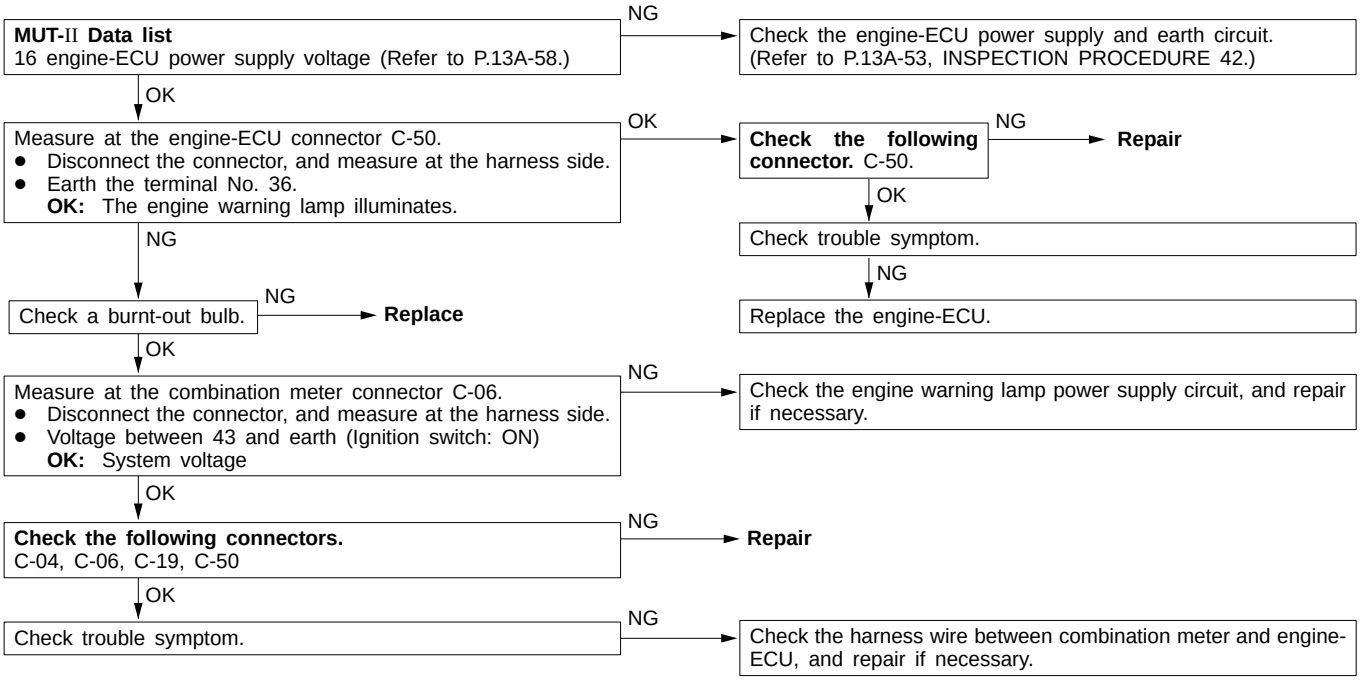

INSPECTION PROCEDURE 4

The engine warning lamp remains illuminating and never goes out.	Probable cause
In cases such as the above, the cause is probably that the engine-ECU is detecting a problem in a sensor or actuator, or that one of the malfunctions listed at right has occurred.	● Short-circuit between the engine warning lamp and engine-ECU ● Malfunction of the engine-ECU

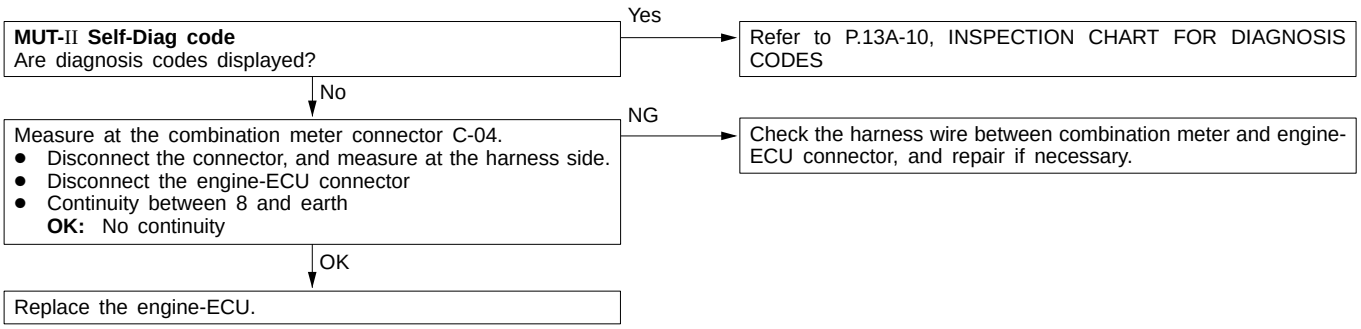

INSPECTION PROCEDURE 5

No initial combustion (starting impossible)	Probable cause
In cases such as the above, the cause is probably that a spark plug is defective, or that the supply of fuel to the combustion chamber is defective. In addition, foreign materials (water, kerosene, etc.) may be mixed with the fuel.	● Malfunction of the ignition system ● Malfunction of the fuel pump system ● Malfunction of the injectors ● Malfunction of the engine-ECU ● Malfunction of the immobilizer system <only vehicles with immobilizer system> ● Foreign materials in fuel

Check battery voltage when cranking.
OK: 8 V or higher

NG → Check the battery. (Refer to GROUP 54 – Battery.)

OK ↓

Is immobilizer-ECU diagnosis code displayed? <only vehicles with immobilizer system>

Yes → Check the immobilizer.
(Refer to GROUP 54 – Ignition Key and Immobilizer.)

No ↓

MUT-II: Inspection of no initial combustion.
(Refer to P.13A-47, INSPECTION PROCEDURE 34.)

OK ↓

Can any sound be heard from the injectors when cranking?

NG → Check the injector system. (Refer to P.13A-19, INSPECTION PROCEDURE FOR DIAGNOSIS CODE 41.)

OK ↓

Ignition system: Inspection of no initial combustion.
(Refer to P.13A-47, INSPECTION PROCEDURE 35.)

OK ↓

Check the following items.
- Check the ignition coil, spark plugs, spark plug cables. (Refer to GROUP 16 – On-vehicle service.)
- Check if the injectors are clogged.
- Check if foreign materials (water, alcohol, etc.) got into fuel.
- Check the compression pressure.
- Check the immobilizer system. (Refer to GROUP 54 – Ignition Key and Immobilizer.) <only vehicles with immobilizer system>

INSPECTION PROCEDURE 6

Initial combustion but no complete combustion (starting impossible)	Probable cause
In such cases as the above, the cause is probably that the spark plugs are generating sparks but the sparks are weak, or the initial mixture for starting is not appropriate.	● Malfunction of the ignition system ● Malfunction of the injector system ● Foreign materials in fuel ● Poor compression ● Malfunction of the engine-ECU

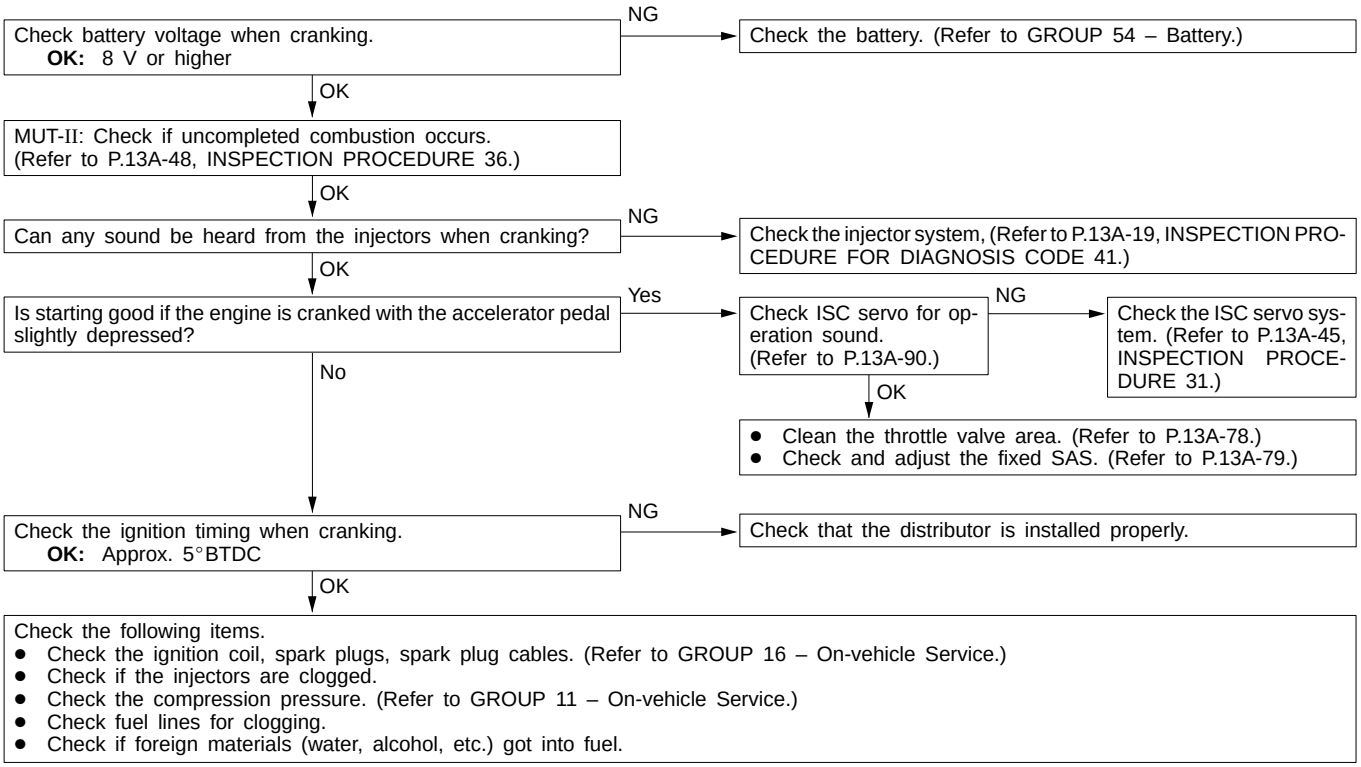

INSPECTION PROCEDURE 7

In takes too long time to start. (Incorrect starting)	Probable cause
In cases such as the above, the cause is probably that the spark is weak and ignition is difficult, the initial mixture for starting is not appropriate, or sufficient compression pressure is not being obtained.	● Malfunction of the ignition system ● Malfunction of the injector system ● Inappropriate gasoline use ● Poor compression

Check battery voltage when cranking
OK: 8 V or higher
→ NG: Check the battery. (Refer to GROUP 54 – Battery.)
↓ OK

MUT-II: Check if uncomplete combustion occurs.
(Refer to P.13A-48, INSPECTION PROCEDURE 36.)
↓ OK

Can any sound be heard from the injectors when cranking?
→ NG: Check the injector system. (Refer to P.13A-19, INSPECTION PROCEDURE FOR DIAGNOSIS CODE 41.)
↓ OK

Check the ignition timing when cranking.
OK: Approx. 5°BTDC
→ NG: Check that the distributor is installed properly.
↓ OK

Check the following items.
- Check the ignition coil, spark plugs, spark plug cables. (Refer to GROUP 16 – On-vehicle Service.)
- Check if the injectors are clogged.
- Check the compression pressure. (Refer to GROUP 11 – On-vehicle Service.)
- Check if foreign materials (water, alcohol, etc.) got into fuel.

INSPECTION PROCEDURE 8

Unstable idling (Rough idling, hunting)	Probable cause
In cases as the above, the cause is probably that the ignition system, air/fuel mixture, idle speed control (ISC) or compression pressure is defective. Because the range of possible causes is broad, inspection is narrowed down to simple items.	● Malfunction of the ignition system ● Malfunction of air-fuel ratio control system ● Malfunction of the ISC system ● Malfunction of the purge control solenoid valve system ● Malfunction of the EGR solenoid valve system ● Poor compression ● Drawing air into exhaust system

Were the battery terminals disconnected?
- Yes → After warming-up, let the engine run at idling for 10 minutes.
- No ↓

MUT-II Self-Diag code
Are diagnosis codes displayed?
- Yes → Refer to P.13A-10, INSPECTION CHART FOR DIAGNOSIS CODES.
- No ↓

Does idling speed fluctuate excessively?
- Yes → Check if hunting occurs. (Refer to P.13A-48, INSPECTION PROCEDURE 37.)
- No ↓

Check the ISC servo for operation sound. (Refer to P.13A-90.)
- NG → Check the ISC servo system. (Refer to P.13A-45, INSPECTION PROCEDURE 31.)
- OK ↓

Check the injector for operation sound.
- NG → Check the injector system. (Refer to P.13A-19, INSPECTION PROCEDURE FOR DIAGNOSIS CODE 41.)
- OK ↓

MUT-II: Check if idling speed is unstable.
(Refer to P.13A-49, INSPECTION PROCEDURE 38.)
- OK ↓

Check the ignition timing.
(Refer to GROUP 11 – On-vehicle Service.)
- NG → Check that the distributor is installed properly.
- OK ↓

Check the following items.
- Check the ignition coil, spark plugs, spark plug cables. (Refer to GROUP 16 – On-vehicle Service.)
- Check the purge control system. (Refer to GROUP 17 – Emission Control System.)
- Check the EGR control system. (Refer to GROUP 17 – Emission Control System.)
- Check the compression pressure. (Refer to GROUP 11 – On-vehicle Service.)
- Check if foreign materials (water, alcohol, etc.) got into fuel.

INSPECTION PROCEDURE 9

Idling speed is high. (Improper idling speed)	Probable cause
In such cases as the above, the cause is probably that the intake air volume during idling is too great.	● Malfunction of the ISC servo system ● Malfunction of the throttle body

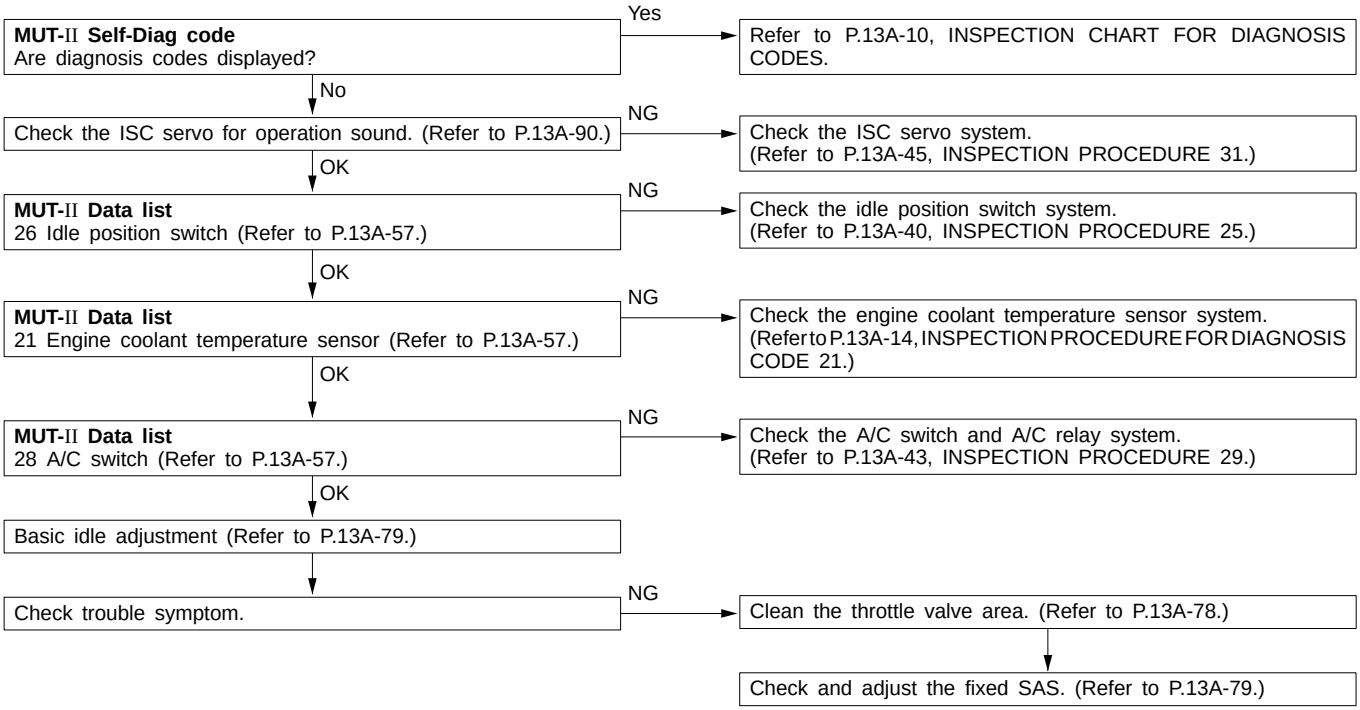

INSPECTION PROCEDURE 10

Idling speed is low. (Improper idling speed)	Probable cause
In cases such as the above, the cause is probably that the intake air volume during idling is too small.	● Malfunction of the ISC servo system ● Malfunction of the throttle body

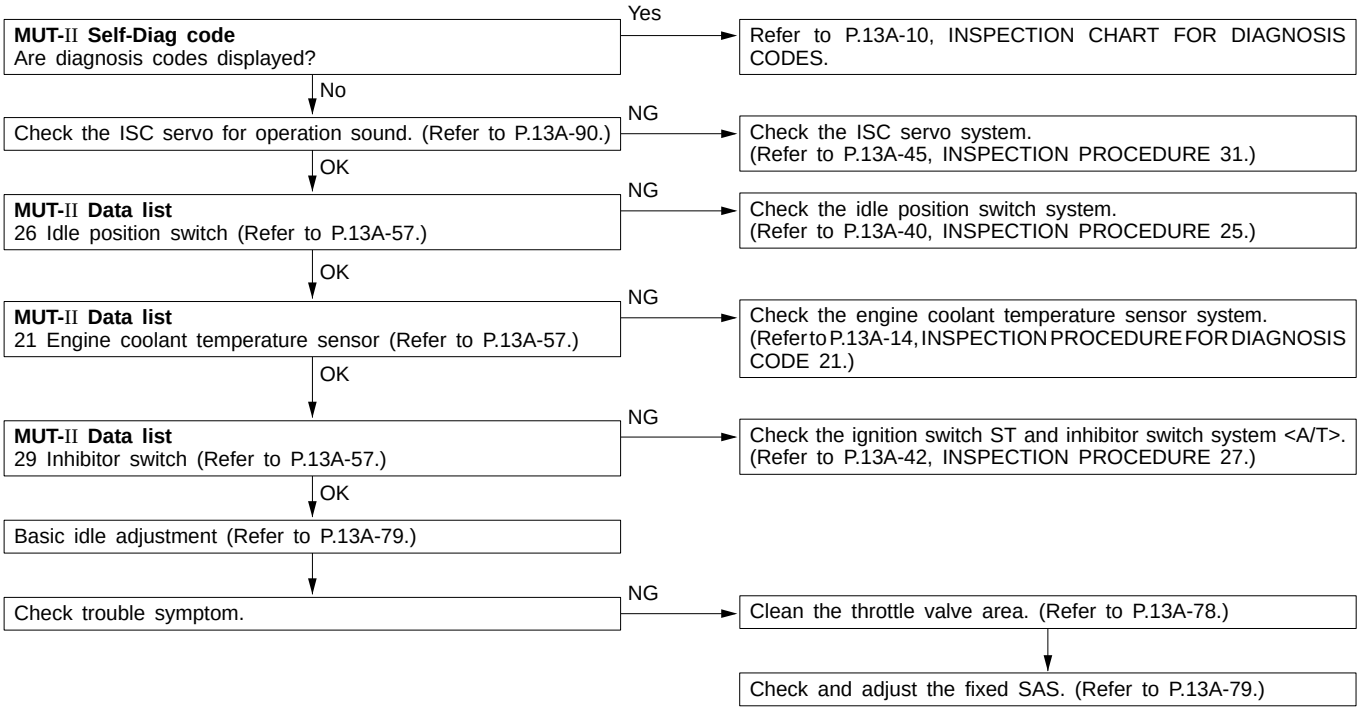

INSPECTION PROCEDURE 11

When the engine is cold, it stalls at idling. (Die out)	Probable cause
In such cases as the above, the cause is probably that the air/fuel mixture is inappropriate when the engine is cold, or that the intake air volume is insufficient.	● Malfunction of the ISC servo system ● Malfunction of the throttle body ● Malfunction of the injector system ● Malfunction of the ignition system

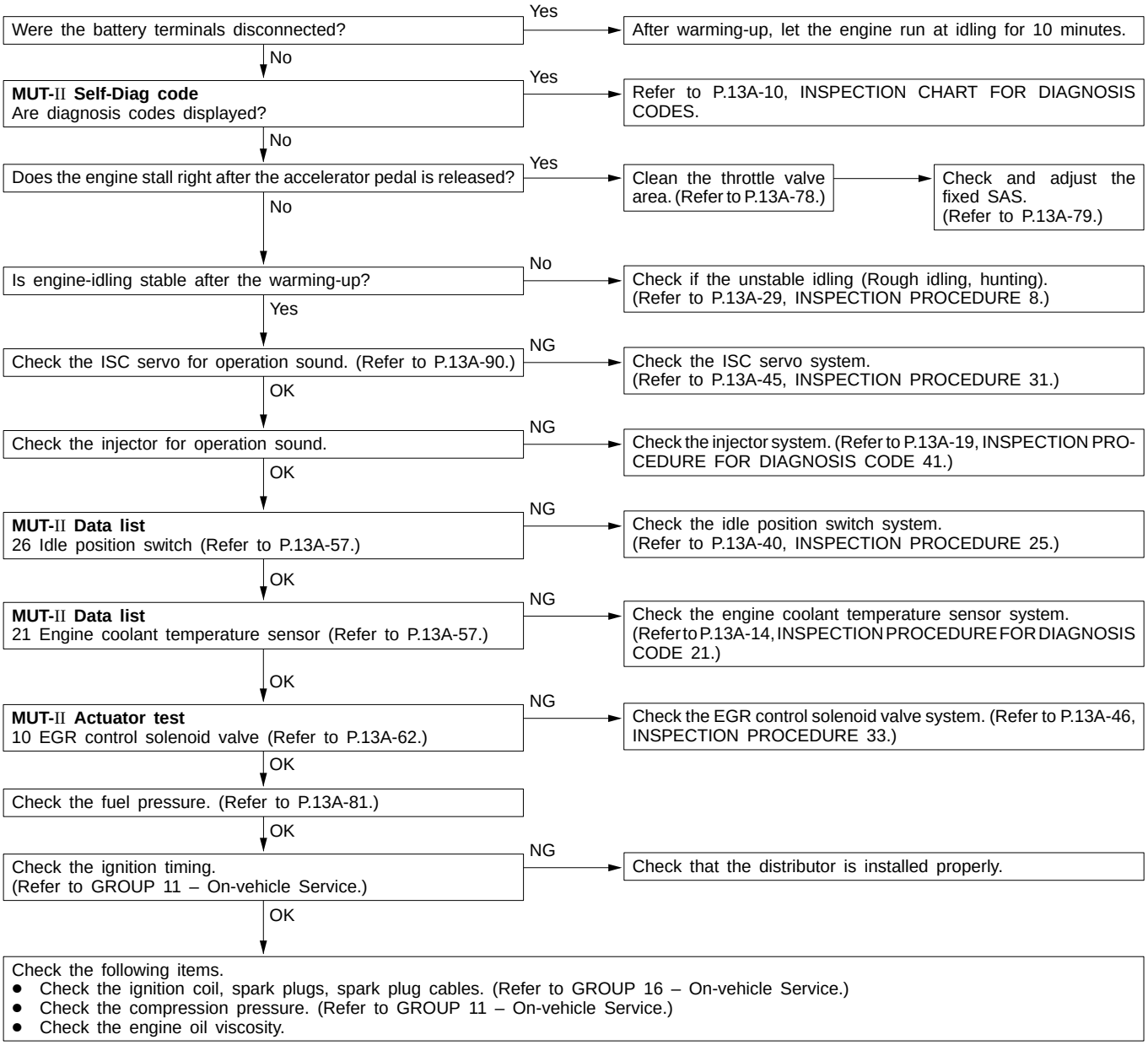

INSPECTION PROCEDURE 12

When the engine is hot, it stalls at idling. (Die out)	Probable cause
In such cases as the above, the cause is probably that ignition system, air/fuel mixture, idle speed control (ISC) or compression pressure is defective. In addition, if the engine suddenly stalls, the cause may also be a defective connector contact.	● Malfunction of the ignition system ● Malfunction of air-fuel ratio control system ● Malfunction of the ISC system ● Drawing air into intake system ● Improper connector contact

Were the battery terminals disconnected?
- Yes → After warming-up, let the engine run at idling for 10 minutes.
- No ↓

MUT-II Self-Diag code
Are diagnosis codes displayed?
- Yes → Refer to P.13A-10, INSPECTION CHART FOR DIAGNOSIS CODES.
- No ↓

Check the ISC servo for operation sound. (Refer to P.13A-90.)
- NG → Check the ISC servo system. (Refer to P.13A-45, INSPECTION PROCEDURE 31.)
- OK ↓

Check the injector for operation sound.
- NG → Check the injector system. (Refer to P.13A-19, INSPECTION PROCEDURE FOR DIAGNOSIS CODE 41.)
- OK ↓

Does the engine stall right after the accelerator pedal is released?
- Yes → Clean the throttle valve area. (Refer to P.13A-78.) → Check and adjust the fixed SAS. (Refer to P.13A-79.)
- No ↓

Does the engine stall easily again?
- No → While carrying out an intermittent malfunction simulation test (Refer to GROUP 00 – Points to Note for Intermittent Malfunctions.), check for sudden changes in the signals shown below.
  - Crank angle sensor signal
  - Air flow sensor signal
  - Injector drive signal
  - Primary and secondary ignition signal
  - Fuel pump drive signal
  - Engine-ECU power supply voltage
- Yes ↓

MUT-II: Engine stalling inspection when the engine is warm and idling. (Refer to P.13A-50, INSPECTION PROCEDURE 39.)
- OK ↓

Check the ignition timing.
(Refer to GROUP 11 – On-vehicle Service.)
- NG → Check that the distributor is installed properly.
- OK ↓

Check the following items.
- Check the ignition coil, spark plugs, spark plug cables. (Refer to GROUP 16 – On-vehicle Service.)
- Check if the injectors are clogged.
- Check the compression pressure. (Refer to GROUP 11 – On-vehicle Service.)
- Check if foreign materials (water, alcohol, etc.) got into fuel.

INSPECTION PROCEDURE 13

The engine stalls when starting the car. (Pass out)	Probable cause
In cases such as the above, the cause is probably misfiring due to a weak spark, or an inappropriate air/fuel mixture when the accelerator pedal is depressed.	● Drawing air into intake system ● Malfunction of the ignition system

MUT-II Self-Diag code
Are diagnosis codes displayed?
- Yes → Refer to P.13A-10, INSPECTION CHART FOR DIAGNOSIS CODES.
- No ↓

MUT-II Actuator test
10 EGR control solenoid valve (Refer to P.13A-62.)
- NG → Check the EGR control solenoid valve system. (Refer to P.13A-46, INSPECTION PROCEDURE 33.)
- OK ↓

Check the following items.
- Check the ignition coil, spark plugs, spark plug cables. (Refer to GROUP 16 – On-vehicle Service.)
- Check if air was drawn into the intake system.
  - Broken intake manifold gasket
  - Broken or disconnected vacuum hose
  - Improper operation of the PCV valve
  - Broken air intake hose

INSPECTION PROCEDURE 14

The engine stalls when decelerating.	Probable cause
In cases such as the above, the cause is probably that the intake air volume is insufficient due to a defective idle speed control (ISC) servo system.	● Malfunction of the ISC system

Were the battery terminals disconnected?
- Yes → After warming-up, let the engine run at idling for 10 minutes.
- No ↓

MUT-II Self-Diag code
Are diagnosis codes displayed?
- Yes → Refer to P.13A-10, INSPECTION CHART FOR DIAGNOSIS CODES.
- No ↓

MUT-II Data list
26 Idle position switch (Refer to P.13A-57.)
- NG → Check the idle position switch system. (Refer to P.13A-40, INSPECTION PROCEDURE 25.)
- OK ↓

MUT-II Data list
14 Throttle position sensor (Refer to P.13A-57.)
- NG → Check the throttle position sensor system. (Refer to P.13A-13, INSPECTION PROCEDURE FOR DIAGNOSIS CODE 14.)
- OK ↓

MUT-II Data list
45 ISC servo position
- Is the idle speed control (ISC) servo position drops to 0 – 2 steps when decelerating (engine r/min less than 1,000)?
- Yes → Check the vehicle speed sensor system. (Refer to P.13A-17, INSPECTION PROCEDURE FOR DIAGNOSIS CODE 24.)
- No ↓

MUT-II Actuator test
10 EGR control solenoid valve (Refer to P.13A-62.)
- NG → Check the EGR control solenoid valve system. (Refer to P.13A-46, INSPECTION PROCEDURE 33.)
- OK ↓

Check the following items.
- Check the ignition coil, spark plugs, spark plug cables. (Refer to GROUP 16 – On-vehicle Service.)
- Check the throttle valve area. (Refer to P.13A-78.)
- Check and adjust the fixed SAS. (Refer to P.13A-79.)

INSPECTION PROCEDURE 15

Hesitation, sag or stumble	Probable cause
In cases such as the above, the cause is probably that ignition system, air/fuel mixture or compression pressure is defective.	● Malfunction of the ignition system ● Malfunction of air-fuel ratio control system ● Malfunction of the fuel supply system ● Malfunction of the EGR control solenoid valve system ● Poor compression

MUT-II Self-Diag code
Are diagnosis codes displayed?
- Yes → Refer to P.13A-10, INSPECTION CHART FOR DIAGNOSIS CODES.
- No ↓

Check the injectors for operation sound.
- NG → Check the injector system. (Refer to P.13A-19, INSPECTION PROCEDURE FOR DIAGNOSIS CODE 41.)
- OK ↓

Check the ignition timing.
(Refer to GROUP 11 – On-vehicle Service.)
- NG → Check that the distributor is installed properly.
- OK ↓

MUT-II: Check if hesitation, sag, stumble or poor acceleration occur.
(Refer to P.13A-51, INSPECTION PROCEDURE 40.)
- OK ↓

Check the fuel pressure. (Refer to P.13A-81.)
- OK ↓

Check the following items.
- Check the ignition coil, spark plugs, spark plug cables. (Refer to GROUP 16 – On-vehicle Service.)
- Check the EGR control system. (Refer to GROUP 17 – Emission Control System.)
- Check the compression pressure. (Refer to GROUP 11 – On-vehicle Service.)
- Check the fuel filter or fuel line for clogging.

INSPECTION PROCEDURE 16

The feeling of impact or vibration when accelerating	Probable cause
In cases such as the above, the cause is probably that there is an ignition leak accompanying the increase in the spark plug demand voltage during acceleration.	● Malfunction of the ignition system

MUT-II Self-Diag code
Are diagnosis codes displayed?
- Yes → Refer to P.13A-10, INSPECTION CHART FOR DIAGNOSIS CODES.
- No ↓

Check the following items.
- Check the ignition coil, spark plugs, spark plug cables. (Refer to GROUP 16 – On-vehicle Service.)
- Check for occurrence of ignition leak.

INSPECTION PROCEDURE 17

The feeling of impact or vibration when decelerating.	Probable cause
Malfunction of the ISC system is suspected.	● Malfunction of the ISC system

MUT-II Self-Diag code
Are diagnosis codes displayed?
- Yes → Refer to P.13A-10, INSPECTION CHART FOR DIAGNOSIS CODES.
- No ↓

Check the ISC servo for operation sound. (Refer to P.13A-90.)
- NG → Check the ISC servo system. (Refer to P.13A-45, INSPECTION PROCEDURE 31.)
- OK ↓

MUT-II Data list
14 Throttle position sensor (Refer to P.13A-57.)
- NG → Check the throttle position sensor system. (Refer to P.13A-13, INSPECTION PROCEDURE FOR DIAGNOSIS CODE 14.)
- OK ↓

MUT-II Data list
26 Idle position switch (Refer to P.13A-57.)
- NG → Check the idle position switch system. (Refer to P.13A-40, INSPECTION PROCEDURE 25.)
- OK ↓

Clean the throttle valve area. (Refer to P.13A-78.)

INSPECTION PROCEDURE 18

Poor acceleration	Probable cause
Defective ignition system, abnormal air-fuel ratio, poor compression pressure, etc. are suspected.	● Malfunction of the ignition system ● Malfunction of air-fuel ratio control system ● Malfunction of the fuel supply system ● Poor compression pressure ● Clogged exhaust system

MUT-II Self-Diag code
Are diagnosis codes displayed?
- Yes → Refer to P.13A-10, INSPECTION CHART FOR DIAGNOSIS CODES.
- No ↓

Check the injectors for operation sound.
- NG → Check the injector system. (Refer to P.13A-19, INSPECTION PROCEDURE FOR DIAGNOSIS CODE 41.)
- OK ↓

Check the ignition timing.
(Refer to GROUP 11 – On-vehicle Service.)
- NG → Check that the distributor is installed properly.
- OK ↓

MUT-II: Check if hesitation, sag, stumble or poor acceleration occur.
(Refer to P.13A-51, INSPECTION PROCEDURE 40.)
- OK ↓

Check the fuel pressure. (Refer to P.13A-81.)
- OK ↓

Check the following items.
- Check the ignition coil, spark plugs, spark plug cables. (Refer to GROUP 16 – On-vehicle Service.)
- Check the compression pressure. (Refer to GROUP 11 – On-vehicle Service.)
- Check the fuel filter or fuel line for clogging.
- Broken air intake hose
- Clogged air cleaner

INSPECTION PROCEDURE 19

Surge	Probable cause
Defective ignition system, abnormal air-fuel ratio, etc. are suspected.	● Malfunction of the ignition system ● Malfunction of air-fuel ratio control system ● Malfunction of the EGR control solenoid valve system

MUT-II Self-Diag code
Are diagnosis codes displayed?
→ Yes: Refer to P.13A-10, INSPECTION CHART FOR DIAGNOSIS CODES.
↓ No

Check the injectors for operation sound.
→ NG: Check the injector system. (Refer to P.13A-19, INSPECTION PROCEDURE FOR DIAGNOSIS CODE 41.)
↓ OK

Check the ignition timing.
(Refer to GROUP 11 – On-vehicle Service.)
→ NG: Check that the distributor is installed properly.
↓ OK

MUT-II: Check if surge occurs.
(Refer to P.13-52, INSPECTION PROCEDURE 41.)
↓ OK

Check the fuel pressure. (Refer to P.13A-81.)
↓ OK

Check the following items.
- Check the ignition coil, spark plugs, spark plug cables. (Refer to GROUP 16 – On-vehicle Service.)
- Check the EGR control system. (Refer to GROUP 17 – Emission Control System.)

INSPECTION PROCEDURE 20

Knocking	Probable cause
In cases as the above, the cause is probably that the heat value of the spark plug is inappropriate.	● Inappropriate heat value of the spark plug

Check the following items.
- Spark plugs
- Check if foreign materials (water, alcohol, etc.) got into fuel.

INSPECTION PROCEDURE 21

Dieseling	Probable cause
Fuel leakage from injectors is suspected.	● Fuel leakage from injectors

Check the injectors for fuel leakage.

INSPECTION PROCEDURE 22

Too high CO and HC concentration when idling	Probable cause
Abnormal air-fuel ratio is suspected.	● Malfunction of the air-fuel ratio control system ● Deteriorated catalyst

MUT-II Self-Diag code
Are diagnosis codes displayed?
- Yes → Refer to P.13A-10, INSPECTION CHART FOR DIAGNOSIS CODES.
- No ↓

Check the ignition timing.
(Refer to GROUP 11 – On-vehicle Service.)
- NG → Check that the distributor is installed properly.
- OK ↓

MUT-II Data list
21 Engine coolant temperature sensor. (Refer to P.13A-57.)
- NG → Check the engine coolant temperature sensor system. (Refer to P.13A-14, INSPECTION PROCEDURE FOR DIAGNOSIS CODE 21.)
- OK ↓

MUT-II Data list
13 Intake air temperature sensor (Refer to P.13A-57.)
- NG → Check the intake air temperature sensor system. (Refer to P.13A-12, INSPECTION PROCEDURE FOR DIAGNOSIS CODE 13.)
- OK ↓

MUT-II Data list
25 Barometric pressure sensor (Refer to P.13A-57.)
- NG → Check the barometric pressure sensor system. (Refer to P.13A-18, INSPECTION PROCEDURE FOR DIAGNOSIS CODE 25.)
- OK ↓

MUT-II Data list
11 Oxygen sensor
OK: 600 – 1,000 mV when racing suddenly (Refer to P.13A-57.)
- NG → Check the oxygen sensor system. (Refer to P.13A-11, INSPECTION PROCEDURE FOR DIAGNOSIS CODE 11.)
- OK ↓

MUT-II Data list
11 Oxygen sensor
OK: Repeat 0 – 400 mV and 600 – 1,000 mV alternately when idling. (Refer to P.13A-57.)
- OK → Replace the oxygen sensor. → Check trouble symptom. → NG ↓
- NG ↓

Check the fuel pressure. (Refer to P.13A-81.)
- OK ↓

Check the following items.
- Check the injectors for operation sound.
- Check the injectors for fuel leakage.
- Check the ignition coil, spark plugs, spark plug cables. (Refer to GROUP 16 – On-vehicle Service.)
- Check the compression pressure. (Refer to GROUP 11 – On-vehicle Service.)
- Check the positive crankcase ventilation system. (Refer to GROUP 17 – Emission Control System.)
- Check the purge control system. (Refer to GROUP 17 – Emission Control System.)
- Check the EGR control system. (Refer to GROUP 17 – Emission Control System.)

↓

Check the trouble symptom.
- NG ↓

Replace the catalytic converter.

INSPECTION PROCEDURE 23

Power supply system and ignition switch-IG system	Probable cause
When an ignition switch ON signal is input to the engine-ECU, the engine-ECU turns the control relay ON. This causes battery voltage to be supplied to the engine-ECU, injectors and air flow sensor.	● Malfunction of the ignition switch ● Malfunction of the control relay ● Improper connector contact, open circuit or short-circuited harness wire ● Disconnected engine-ECU earth wire ● Malfunction of the engine-ECU

Check the control relay. (Refer to P.13A-86.)
- NG → **Replace**
- OK ↓

Measure at the control relay connector C-53.
- Disconnect the connector, and measure at the harness side.
- Voltage between 3, 4 and earth
  OK: System voltage

- NG → Check the harness wire between battery and control relay connector, and repair if necessary.
- OK ↓

Check the engine-ECU power supply and earth circuit. (Refer to P.13A-53, INSPECTION PROCEDURE 42.)

INSPECTION PROCEDURE 24

Fuel pump system	Probable cause
The engine-ECU turns the control relay ON when the engine is cranking or running, and this supplies power to drive the fuel pump.	• Malfunction of the fuel pump relay • Malfunction of the fuel pump • Improper connector contact, open circuit or short-circuited harness wire • Malfunction of the engine-ECU

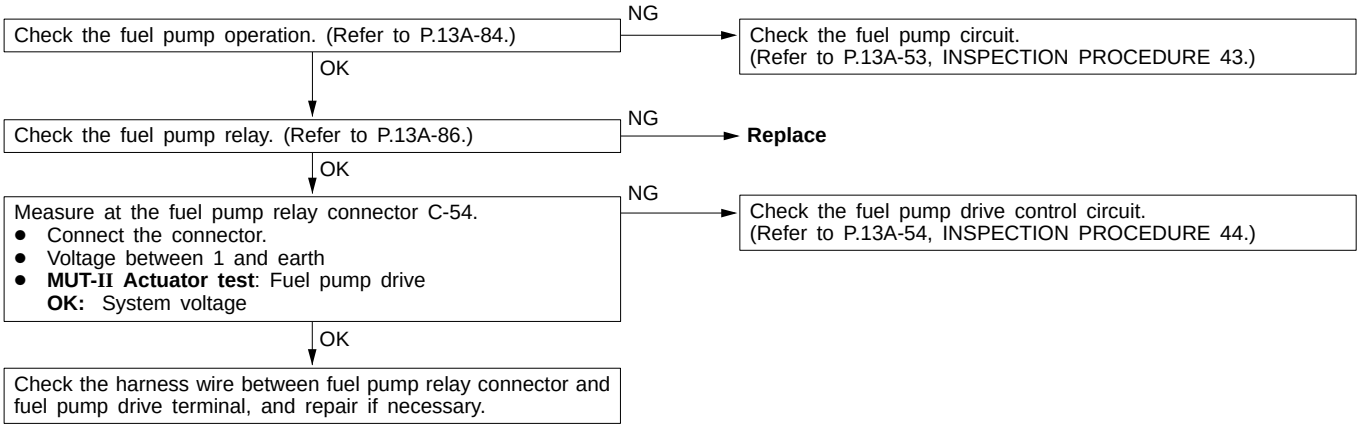

INSPECTION PROCEDURE 25

Idle position switch system	Probable cause
The idle position switch inputs the condition of the accelerator pedal, i.e. whether it is depressed or released (HIGH/LOW), to the engine-ECU. The engine-ECU controls the idle speed control servo based on this input.	• Maladjustment of the accelerator pedal • Maladjustment of the fixed SAS • Maladjustment of the idle position switch and throttle position sensor • Improper connector contact, open circuit or short-circuited harness wire • Malfunction of the engine-ECU

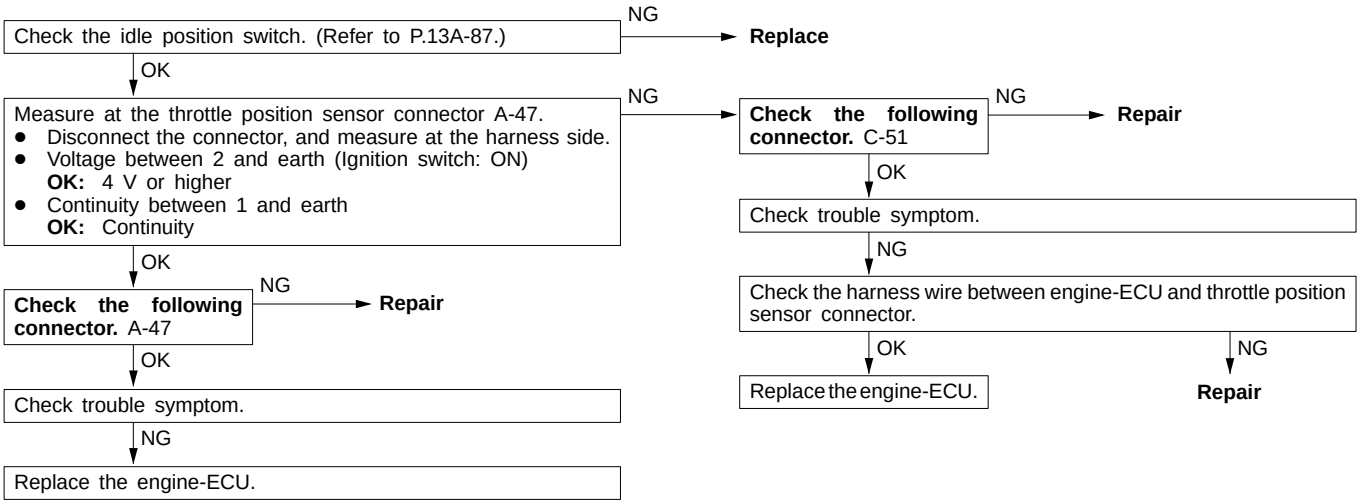

INSPECTION PROCEDURE 26

Ignition switch-ST system <M/T>	Probable cause
The ignition switch-ST inputs a HIGH signal to the engine-ECU while the engine is cranking. The engine-ECU controls fuel injection, etc. during starting based on this input.	● Malfunction of ignition switch ● Improper connector contact, open circuit or short-circuited harness wire ● Malfunction of the engine-ECU

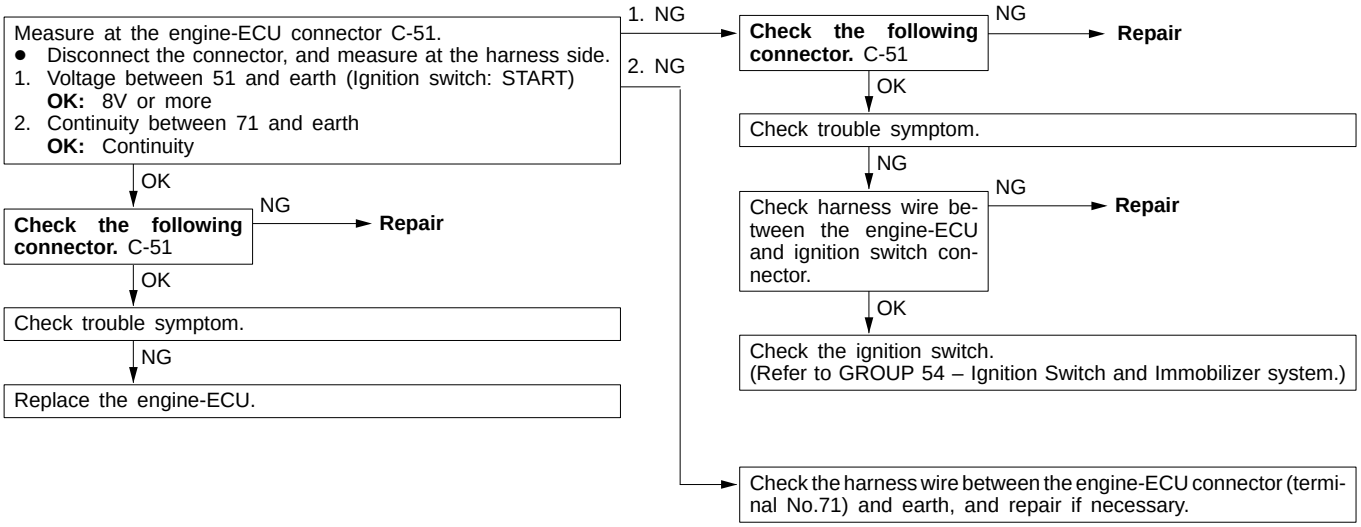

INSPECTION PROCEDURE 27

Ignition switch-ST and inhibitor switch system <A/T>	Probable cause
● The ignition switch-ST inputs a HIGH signal to the engine-ECU while the engine is cranking. The engine-ECU controls fuel injection, etc. during starting based on this input. ● The inhibitor switch inputs the condition of the select lever, i.e. whether it is in P or N range or in some other range, to the engine-ECU. The engine-ECU controls the idle speed control (ISC) servo based on this input.	● Malfunction of ignition switch ● Malfunction of inhibitor switch ● Improper connector contact, open circuit or short-circuited harness wire ● Malfunction of the engine-ECU.

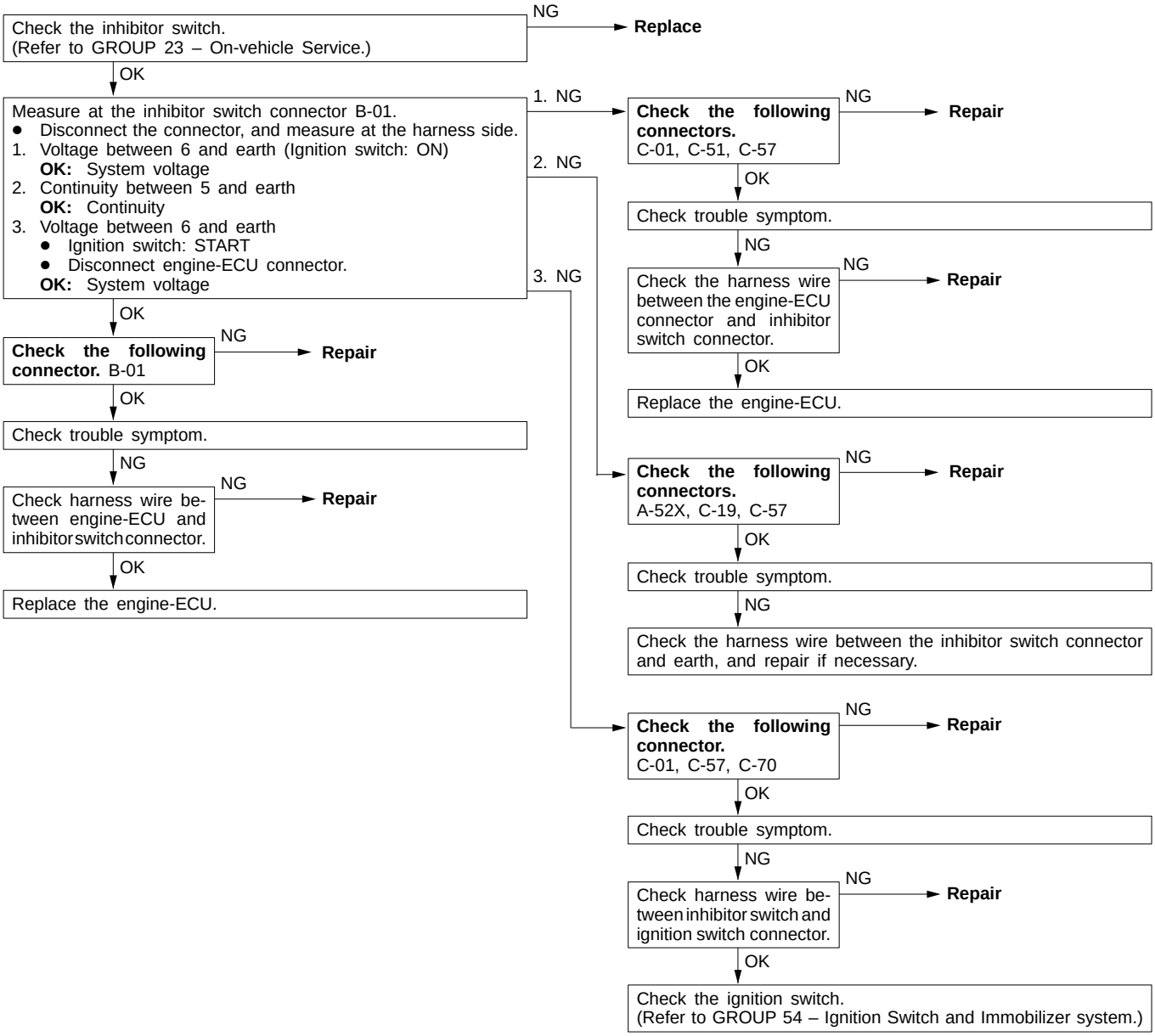

INSPECTION PROCEDURE 28

Power steering fluid pressure switch system	Probable cause
The presence or absence of power steering load is input to the engine-ECU. The engine-ECU controls the idle speed control (ISC) servo based on this input.	• Malfunction of power steering fluid pressure switch • Improper connector contact, open circuit or short-circuited harness wire • Malfunction of the engine-ECU

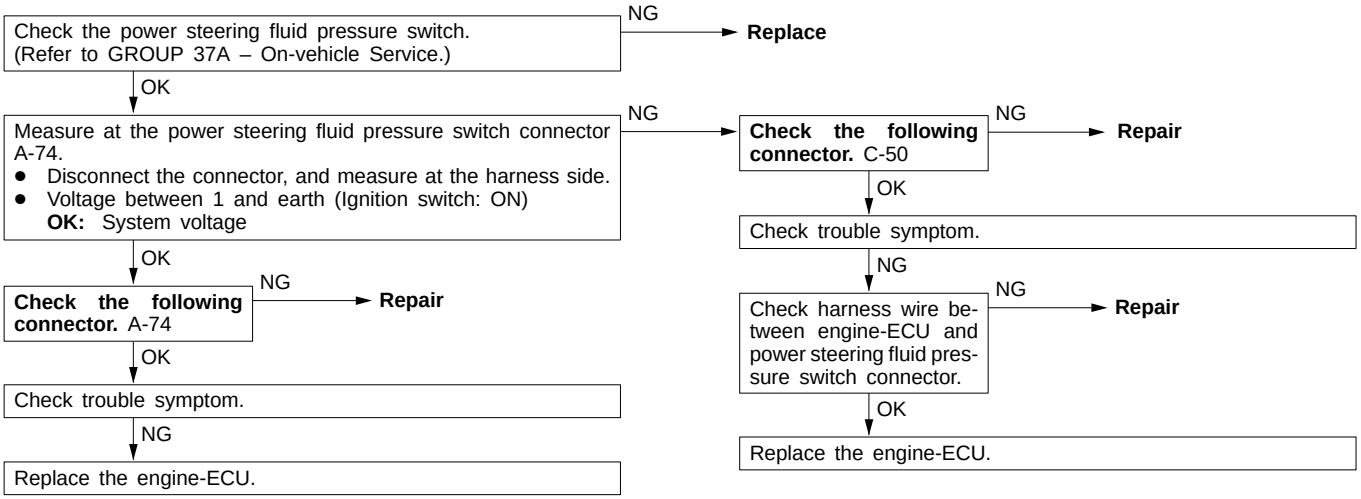

INSPECTION PROCEDURE 29

A/C switch and A/C relay system	Probable cause
When an A/C ON signal is input to the engine-ECU, the engine-ECU carries out control of the idle speed control (ISC) servo, and also operates the A/C compressor magnetic clutch.	• Malfunction of A/C control system • Malfunction of A/C switch • Improper connector contact, open circuit or short-circuited harness wire • Malfunction of the engine-ECU

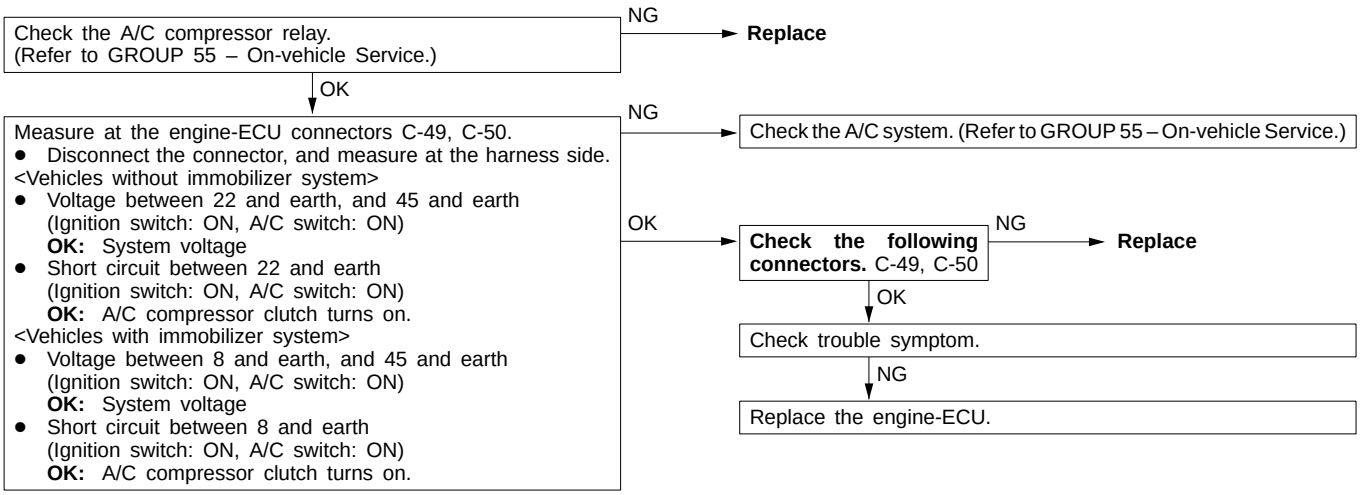

INSPECTION PROCEDURE 30

Ignition circuit system	Probable cause
The engine-ECU interrupts the ignition coil primary current by turning the power transistor inside the engine-ECU ON and OFF.	● Malfunction of ignition switch. ● Malfunction of power transistor unit ● Improper connector contact, open circuit or short-circuited harness wire ● Malfunction of the engine-ECU

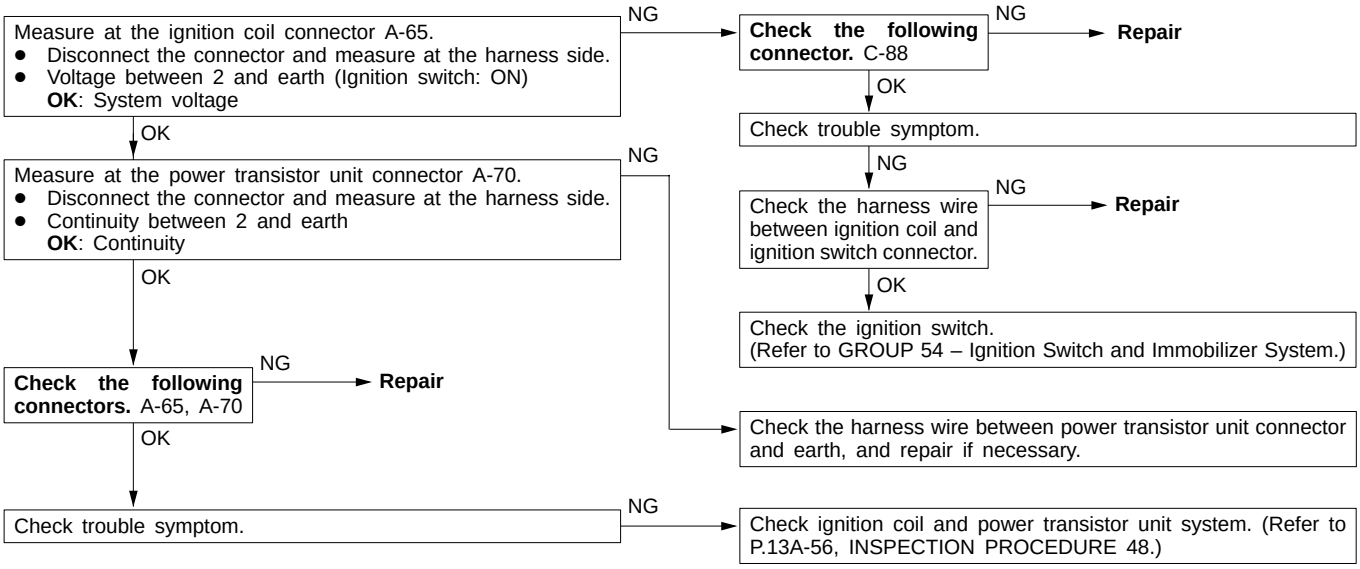

INSPECTION PROCEDURE 31

Idle speed control (ISC) servo (Stepper motor) system	Probable cause
The engine-ECU controls the intake air volume during idling by opening and closing the servo valve located in the bypass air passage.	• Malfunction of ISC servo • Improper connector contact, open circuit or short-circuited harness wire • Malfunction of the engine-ECU

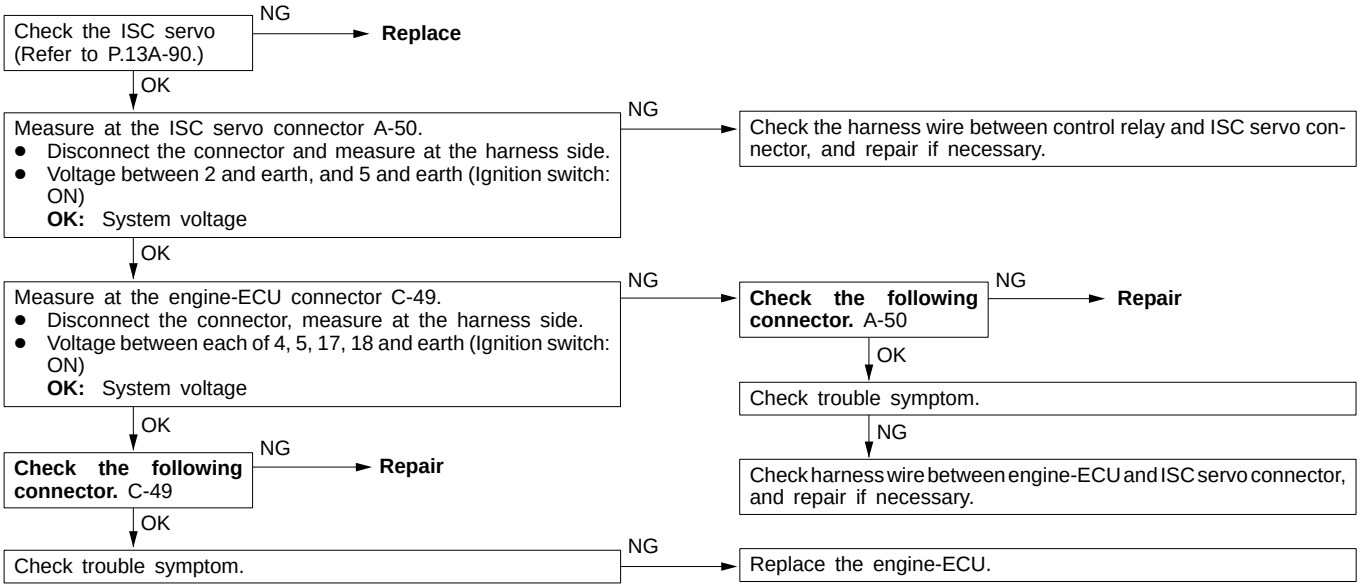

INSPECTION PROCEDURE 32

Purge control solenoid valve system	Probable cause
The purge control solenoid valve controls the purging of air from the canister located inside the intake manifold.	• Malfunction of solenoid valve • Improper connector contact, open circuit or short-circuited harness wire. • Malfunction of the engine-ECU

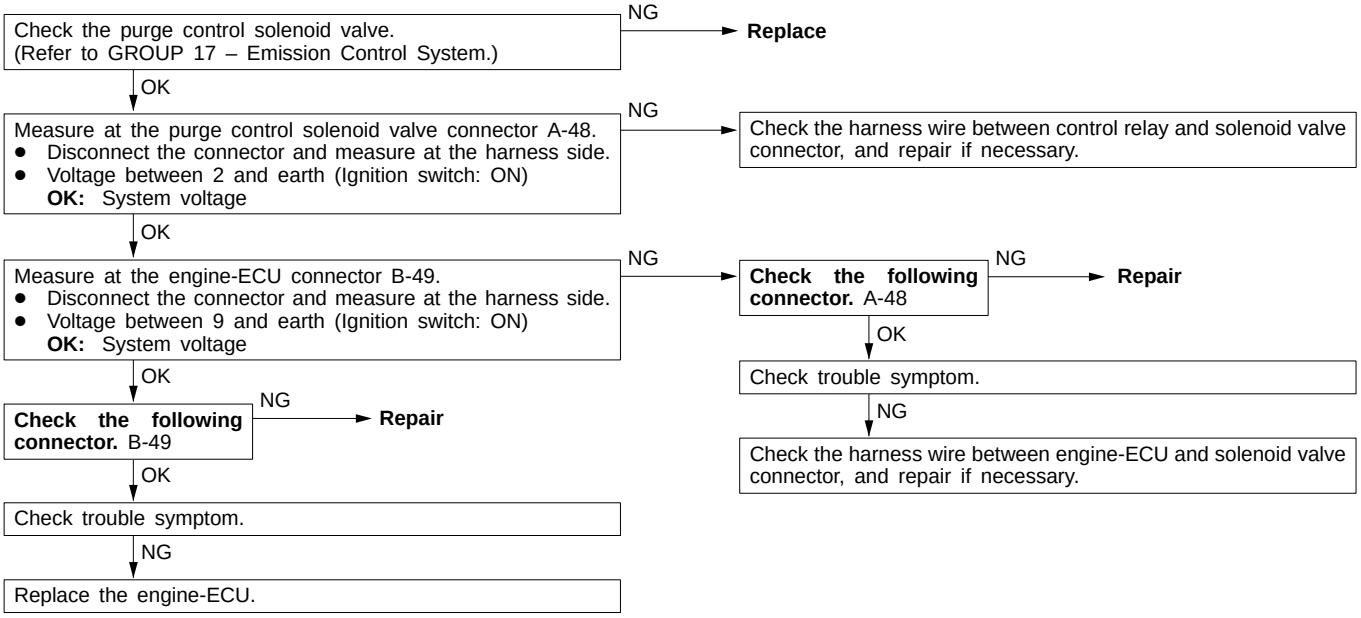

INSPECTION PROCEDURE 33

EGR control solenoid valve system	Probable cause
The EGR control solenoid valve is controlled by the negative pressure resulting from EGR operation leaking to port “A” of the throttle body.	● Malfunction of solenoid valve ● Improper connector contact, open circuit or short-circuited harness wire. ● Malfunction of the engine-ECU

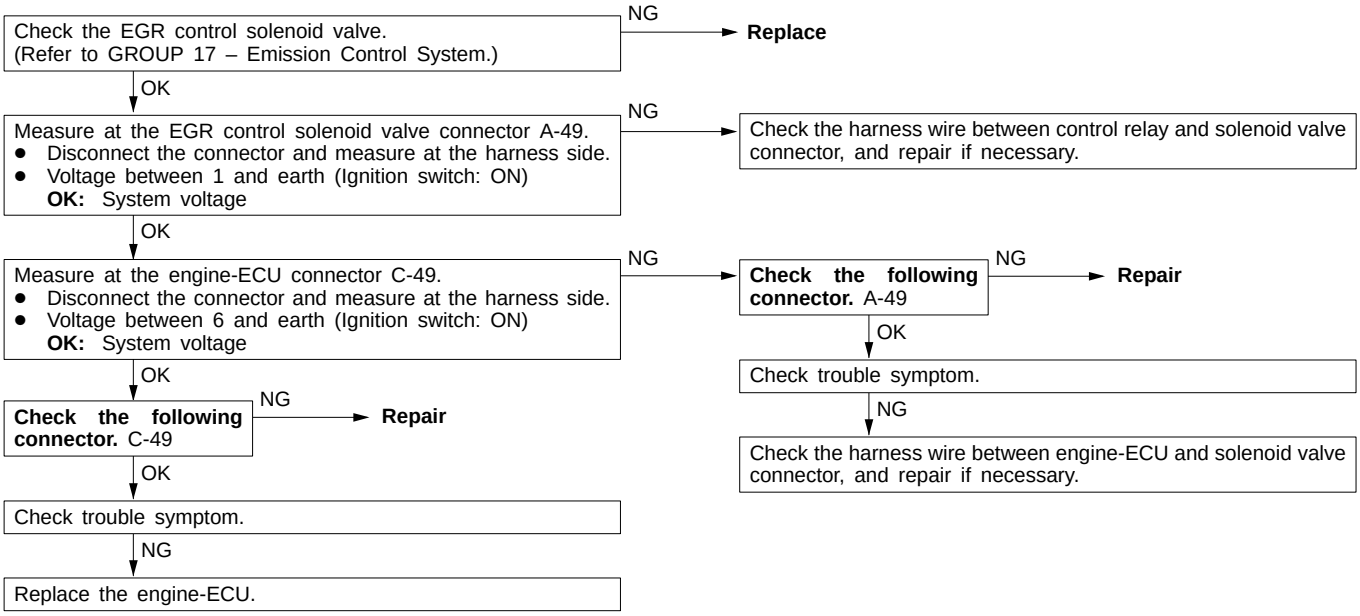

INSPECTION PROCEDURE 34

MUT-II: Inspection of no initial combustion

MUT-II Data list
16 Voltage of engine-ECU power source (Refer to P.13A-57.)
- NG → Check the power supply and ignition switch-IG system. (Refer to P.13A-39, INSPECTION PROCEDURE 23.)
- OK ↓

Does the camshaft rotate at the engine cranking? (When oil filler cap is removed.)
- No → Check timing belt for breakage.
- Yes ↓

MUT-II Self-Diag code
Are diagnosis codes displayed?
- Yes → Refer to P.13A-10, INSPECTION CHART FOR DIAGNOSIS CODES.
- No ↓

MUT-II Data list
22 Crank angle sensor
OK: Cranking speed is displayed.
- No → Check the crank angle sensor system. (Refer to P.13A-15, INSPECTION PROCEDURE FOR DIAGNOSIS CODE 22.)
- OK ↓

MUT-II Actuator test
07 Fuel pump (Refer to P.13A-62.)
- NG → Check the fuel pump system. (Refer to P.13A-40, INSPECTION PROCEDURE 24.)
- OK ↓

MUT-II Data list
21 Engine coolant temperature sensor (Refer to P.13A-57.)
- NG → Check the engine coolant temperature sensor system. (Refer to P.13A-14, INSPECTION PROCEDURE FOR DIAGNOSIS CODE 21.)

INSPECTION PROCEDURE 35

Ignition system: Inspection of no initial combustion.

Does the engine tachometer display the cranking speed?
- Set the tachometer of primary voltage detection type.
- NG → Check ignition circuit system. (Refer to P.13A-44, INSPECTION PROCEDURE 30.)
- OK ↓

Check the ignition timing when cranking.
OK: Approx. 5°BTDC
- NG → Check that the crank angle sensor is installed properly.

INSPECTION PROCEDURE 36

MUT-II: Check if uncomplete combustion occurs.

MUT-II Self-Diag code
Are diagnosis codes displayed?
- Yes → Refer to P.13A-10, INSPECTION CHART FOR DIAGNOSIS CODE
- No ↓

MUT-II Actuator test
07 Fuel pump (Refer to P.13A-62.)
- NG → Check the fuel pump system. (Refer to P.13A-40, INSPECTION PROCEDURE 24.)
- OK ↓

MUT-II Data list
21 Engine coolant temperature sensor (Refer to P.13A-57.)
- NG → Check the engine coolant temperature sensor system. (Refer to P.13A-14, INSPECTION PROCEDURES FOR DIAGNOSIS CODE 21.)
- OK ↓

MUT-II Data list
18 Ignition switch-ST (Refer to P.13A-57.)
- NG → Check the ignition switch-ST system <M/T>. (Refer to P.13A-41, INSPECTION PROCEDURE 26.)

INSPECTION PROCEDURE 37

Check if hunting occurs.

Clean the throttle body. (Refer to P.13A-78.)
↓
Check and adjust the fixed SAS. (Refer to P.13A-79.)
↓
Check trouble symptom.
- NG ↓

Inspect the intake of air into the air intake system
- Broken intake manifold gasket
- Broken air intake hose
- Broken vacuum hose
- Positive crankcase ventilation valve does not operate.

INSPECTION PROCEDURE 38

MUT-II: Check if idling speed is unstable.

MUT-II Data list
26 Idle position switch (Refer to P.13A-57.)
- NG → Check the idle position switch system. (Refer to P.13A-40, INSPECTION PROCEDURE 25.)
- OK ↓

MUT-II Data list
13 Intake air temperature sensor (Refer to P.13A-57.)
- NG → Check the intake air temperature sensor system. (Refer to P.13A-12, INSPECTION PROCEDURE FOR DIAGNOSIS CODE 13.)
- OK ↓

MUT-II Data list
25 Barometric pressure sensor (Refer to P.13A-57.)
- NG → Check the barometric pressure sensor system. (Refer to P.13A-18, INSPECTION PROCEDURE FOR DIAGNOSIS CODE 25.)
- OK ↓

MUT-II Data list
21 Engine coolant temperature sensor (Refer to P.13A-57.)
- NG → Check the engine coolant temperature sensor system. (Refer to P.13A-14, INSPECTION PROCEDURE FOR DIAGNOSIS CODE 21.)
- OK ↓

MUT-II Actuator test
08 Purge control solenoid valve (Refer to P.13A-62.)
- NG → Check the purge control solenoid valve system (Refer to P.13A-45, INSPECTION PROCEDURE 32.)
- OK ↓

MUT-II Actuator test
10 EGR control solenoid valve (Refer to P.13A-62.)
- NG → Check the EGR control solenoid valve system. (Refer to P.13A-46, INSPECTION PROCEDURE 33.)
- OK ↓

MUT-II Data list
11 Oxygen sensor
OK: 600–1,000 mV during sudden racing
- NG → Check the oxygen sensor system. (Refer to P.13A-11, INSPECTION PROCEDURE FOR DIAGNOSIS CODE 11.)
- OK ↓

MUT-II Data list
11 Oxygen sensor
OK: Changes between 0–400 mV and 600–1,000 mV during idling
- NG → Check the fuel pressure. (Refer to P.13A-81.)
  - OK → 1. Inspect the intake of air into the air intake system.
    - Broken intake manifold gasket
    - Broken vacuum hose
    - PCV valve does not operate.
    - Broken air intake hose
    2. Check the injector for clog.
- OK ↓

MUT-II Data list
27 Power steering fluid pressure switch (Refer to P.13A-57.)
- NG → Check the power steering fluid pressure switch system. (Refer to P.13A-43, INSPECTION PROCEDURE 28.)
- OK ↓

MUT-II Data list
28 A/C switch (Refer to P.13A-57.)
- NG → Check the A/C switch and A/C relay system. (Refer to P.13A-43. INSPECTION PROCEDURE 29.)
- OK ↓

MUT-II Data list
29 Inhibitor switch (Refer to P.13A-57.)
- NG → Check the ignition switch-ST and inhibitor switch system. <A/T> (Refer to P.13A-42, INSPECTION PROCEDURE 27.)
- OK ↓

MUT-II Data list
45 ISC Servo position (Refer to P.13A-57.)
- NG → Adjust the basic idle speed. (Refer to P.13A-79.)

INSPECTION PROCEDURE 39

MUT-II: Engine stalling inspection when the engine is warmed up and idling.

MUT-II Data list
26 Idle position switch (Refer to P.13A-57.)
- NG → Check the idle position switch system. (Refer to P.13A-40, INSPECTION PROCEDURE 25.)
- OK ↓

MUT-II Data list
13 Intake air temperature sensor (Refer to P.13A-57.)
- NG → Check the intake air sensor system. (Refer to P.13A-12, INSPECTION PROCEDURE FOR DIAGNOSIS CODE 13.)
- OK ↓

MUT-II Data list
25 Barometric pressure sensor (Refer to P.13A-57.)
- NG → Check the barometric pressure sensor system. (Refer to P.13A-18, INSPECTION PROCEDURE FOR DIAGNOSIS CODE 25.)
- OK ↓

MUT-II Data list
21 Engine coolant temperature sensor (Refer to P.13A-57.)
- NG → Check the engine coolant temperature sensor system. (Refer to P.13A-14, INSPECTION PROCEDURE FOR DIAGNOSIS CODE 21.)
- OK ↓

MUT-II Actuator test
10 EGR control solenoid valve (Refer to P.13A-62.)
- NG → Check the EGR control solenoid valve system. (Refer to P.13A-46, INSPECTION PROCEDURE 33.)
- OK ↓

MUT-II Data list
11 Oxygen sensor
OK: Changes between 600 – 1,000 mV during sudden racing
- NG → Check the oxygen sensor system. (Refer to P.13A-11, INSPECTION PROCEDURE FOR DIAGNOSIS CODE 11.)
- OK ↓

MUT-II Data list
11 Oxygen sensor
OK: Changes between 0 – 400 mV and 600 – 1,000 mV during idling
- NG → Check the fuel pressure. (Refer to P.13A-81.)
  - OK →
    1. Inspect the intake of air into the air intake system
       - Broken intake manifold gasket
       - Broken vacuum hose
       - PCV valve does not operate.
       - Broken air intake hose
    2. Check the injector for clog.
- OK ↓

MUT-II Data list
27 Power steering fluid pressure switch (Refer to P.13A-57.)
- NG → Check the power steering fluid pressure switch system. (Refer to P.13A-43, INSPECTION PROCEDURE 28.)
- OK ↓

MUT-II Data list
28 A/C switch (Refer to P.13A-57.)
- NG → Check the A/C switch and A/C relay system. (Refer to P.13A-43, INSPECTION PROCEDURE 29.)
- OK ↓

MUT-II Data list
29 Inhibitor switch (Refer to P.13A-57.)
- NG → Check the ignition switch-ST and inhibitor switch system. <A/T> (Refer to P.13A-42, INSPECTION PROCEDURE 27.)
- OK ↓

MUT-II Data list
45 ISC servo position (Refer to P.13A-57.)
- NG → Adjust the basic idle speed. (Refer to P.13A-79.)

INSPECTION PROCEDURE 40

MUT-II: Check if hesitation, sug, stumble or poor acceleration occurs.

MUT-II Data list
26 Idle position switch (Refer to P.13A-57.)

NG → Check the idle position switch system. (Refer to P.13A-40, INSPECTION PROCEDURE 25.)

OK ↓

MUT-II Data list
13 Intake air temperature sensor (Refer to P.13A-57.)

NG → Check the intake air sensor system. (Refer to P.13A-12, INSPECTION PROCEDURE FOR DIAGNOSIS CODE 13.)

OK ↓

MUT-II Data list
25 Barometric pressure sensor (Refer to P.13A-57.)

NG → Check the barometric pressure sensor system. (Refer to P.13A-18, INSPECTION PROCEDURE FOR DIAGNOSIS CODE 25.)

OK ↓

MUT-II Data list
21 Engine coolant temperature sensor (Refer to P.13A-57.)

NG → Check the engine coolant temperature sensor system. (Refer to P.13A-14, INSPECTION PROCEDURE FOR DIAGNOSTIC CODE 21.)

OK ↓

MUT-II Data list
14 Throttle position sensor (Refer to P.13A-57.)

NG → Check the throttle position sensor system. (Refer to P.13A-13, INSPECTION PROCEDURE FOR DIAGNOSIS CODE 14.)

OK ↓

MUT-II Actuator test
10 EGR control solenoid valve (Refer to P.13A-62.)

NG → Check the EGR control solenoid valve system. (Refer to P.13A-46, INSPECTION PROCEDURE 33.)

OK ↓

MUT-II Data list
11 Oxygen sensor
OK: Changes between 600 – 1,000 mV during sudden racing

NG → Check the oxygen sensor system. (Refer to P.13A-11, INSPECTION PROCEDURE FOR DIAGNOSIS CODE 11.)

OK ↓

MUT-II Data list
11 Oxygen sensor
OK: Changes between 0 – 400 mV and 600 – 1,000 mV during idling

NG → Check the fuel pressure. (Refer to P.13A-81.)

OK →
1. Inspect the intake of air into the air intake system
   - Broken intake manifold gasket
   - Broken vacuum hose
   - PCV valve does not operate.
   - Broken air intake hose
2. Check the injector for clog.

INSPECTION PROCEDURE 41

MUT-II: Check if surge occurs.

MUT-II Data list
26 Idle position switch (Refer to P.13A-57.)

NG → Check the idle position switch system. (Refer to P.13A-40, INSPECTION PROCEDURE 25.)

OK ↓

MUT-II Data list
13 Intake air temperature sensor (Refer to P.13A-57.)

NG → Check the intake air sensor system. (Refer to P.13A-12, INSPECTION PROCEDURE FOR DIAGNOSIS CODE 13.)

OK ↓

MUT-II Data list
25 Barometric pressure sensor (Refer to P.13A-57.)

NG → Check the barometric pressure sensor system. (Refer to P.13A-18, INSPECTION PROCEDURE FOR DIAGNOSIS CODE 25.)

OK ↓

MUT-II Data list
21 Engine coolant temperature sensor (Refer to P.13A-57.)

NG → Check the engine coolant temperature sensor system. (Refer to P.13A-14, INSPECTION PROCEDURE FOR DIAGNOSIS CODE 21.)

OK ↓

MUT-II Data list
14 Throttle position sensor (Refer to P.13A-57.)

NG → Check the throttle position sensor system. (Refer to P.13A-13, INSPECTION PROCEDURE FOR DIAGNOSIS CODE 14.)

OK ↓

MUT-II Actuator test
10 EGR control solenoid valve (Refer to P.13A-62.)

NG → Check the EGR control solenoid valve system. (Refer to P.s13A-46, INSPECTION PROCEDURE 33.)

OK ↓

MUT-II Data list
11 Oxygen sensor
OK: Changes between 600 – 1,000 mV during sudden racing

NG → Check the oxygen sensor system. (Refer to P.13A-11, INSPECTION PROCEDURE FOR DIAGNOSIS CODE 11.)

OK ↓

MUT-II Data list
11 Oxygen sensor
OK: Changes between 0 – 400 mV and 600 – 1,000 mV during idling

NG → Check the fuel pressure. (Refer to P.13A-81.)

OK →
1. Inspect the intake of air into the air intake system
   - Broken intake manifold gasket
   - Broken vacuum hose
   - PCV valve does not operate.
   - Broken air intake hose
2. Check the injector for clog.

INSPECTION PROCEDURE 42

Check the engine-ECU power supply and earth circuit.

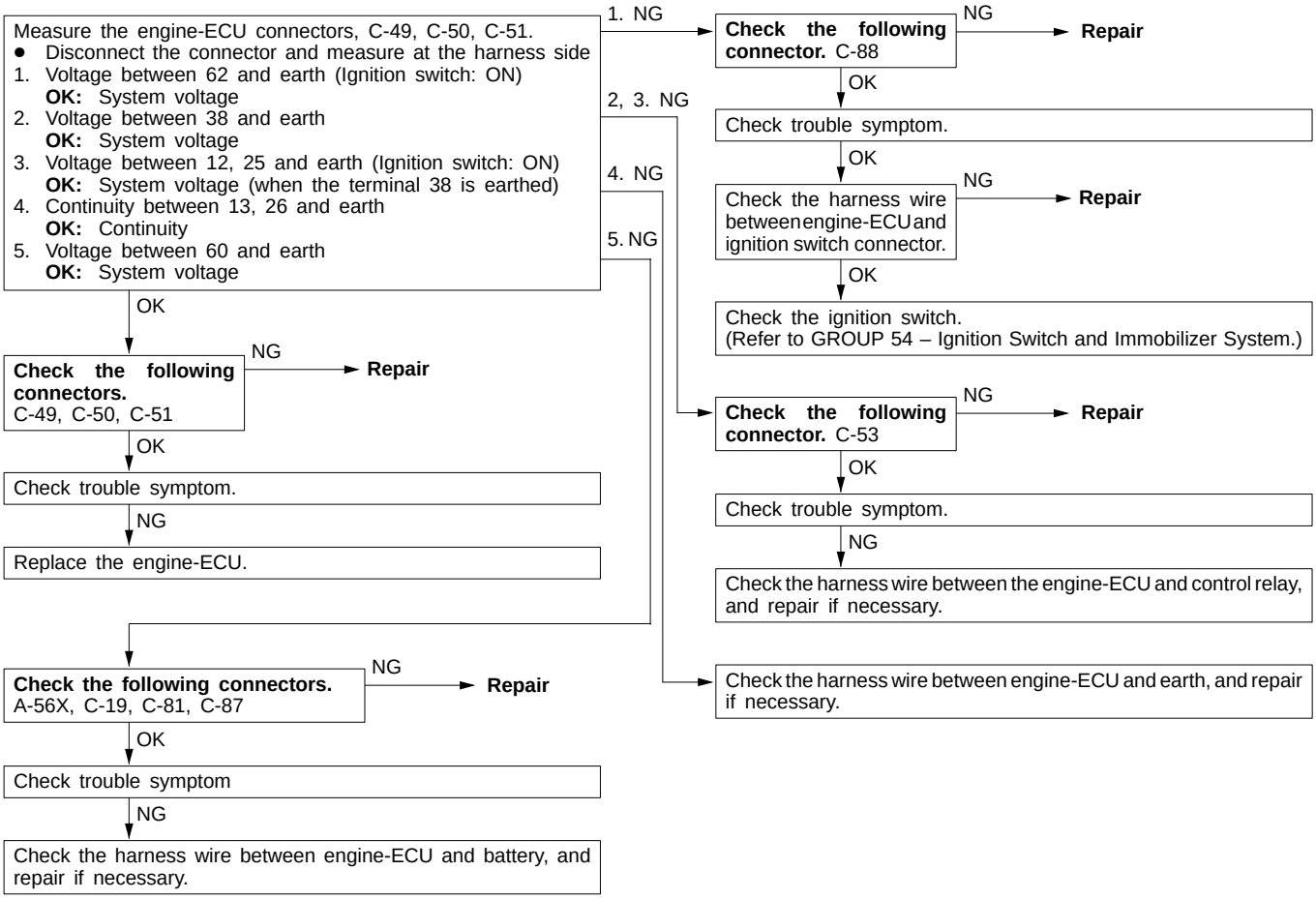

INSPECTION PROCEDURE 43

Check fuel pump circuit.

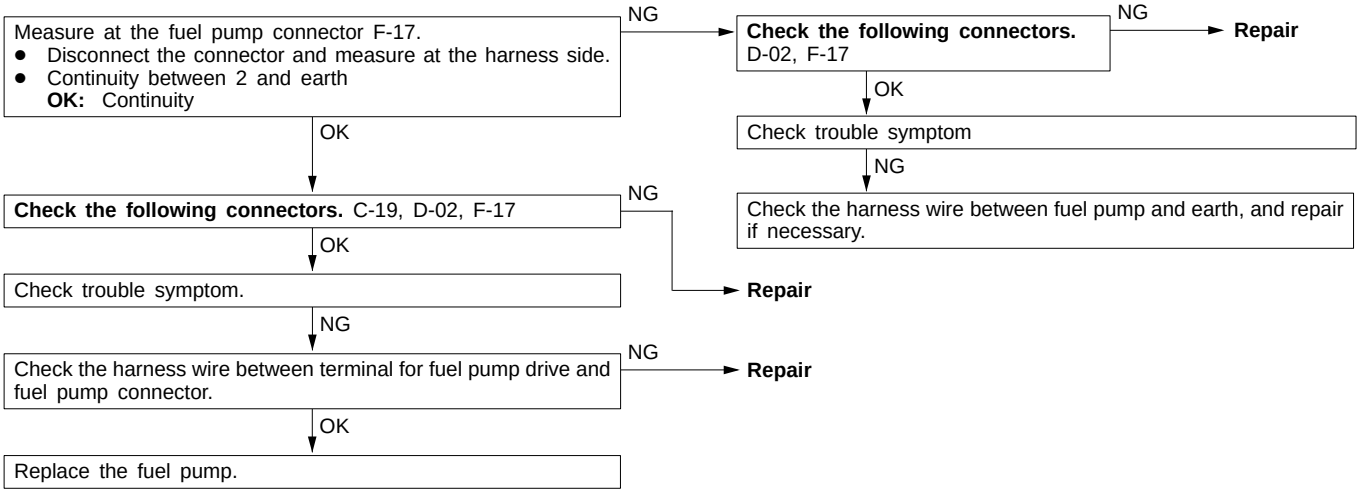

INSPECTION PROCEDURE 44

Check the fuel pump drive control circuit.

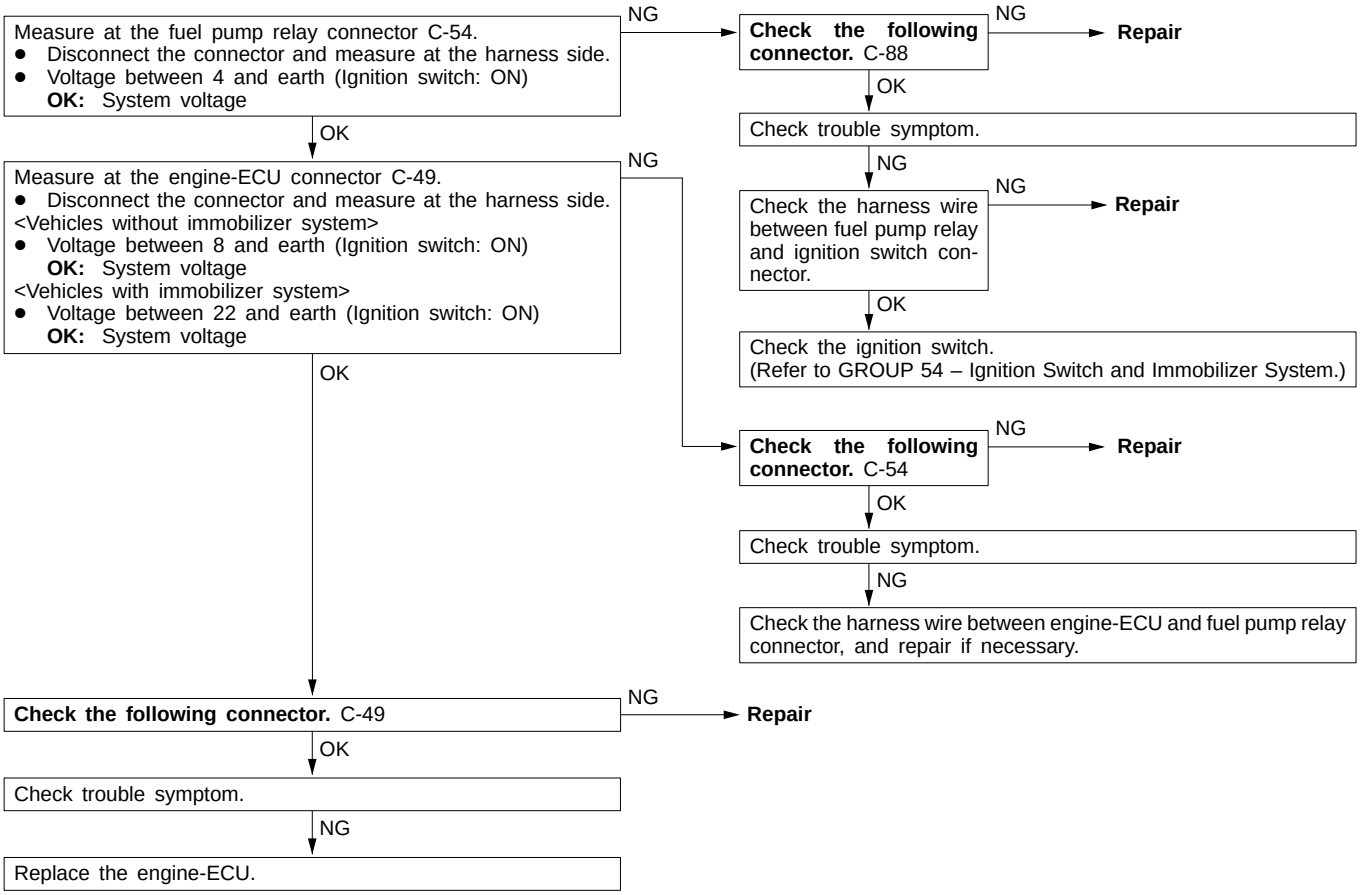

INSPECTION PROCEDURE 45

Check air flow sensor (AFS) control circuit.

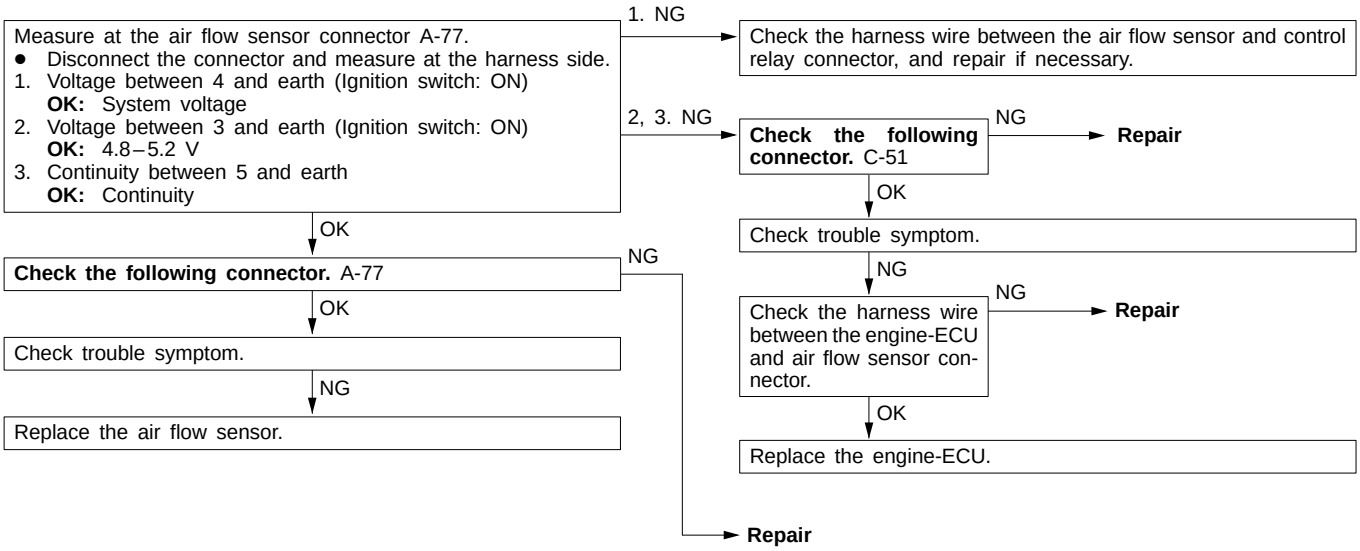

INSPECTION PROCEDURE 46

Check throttle position sensor (TPS) output circuit.

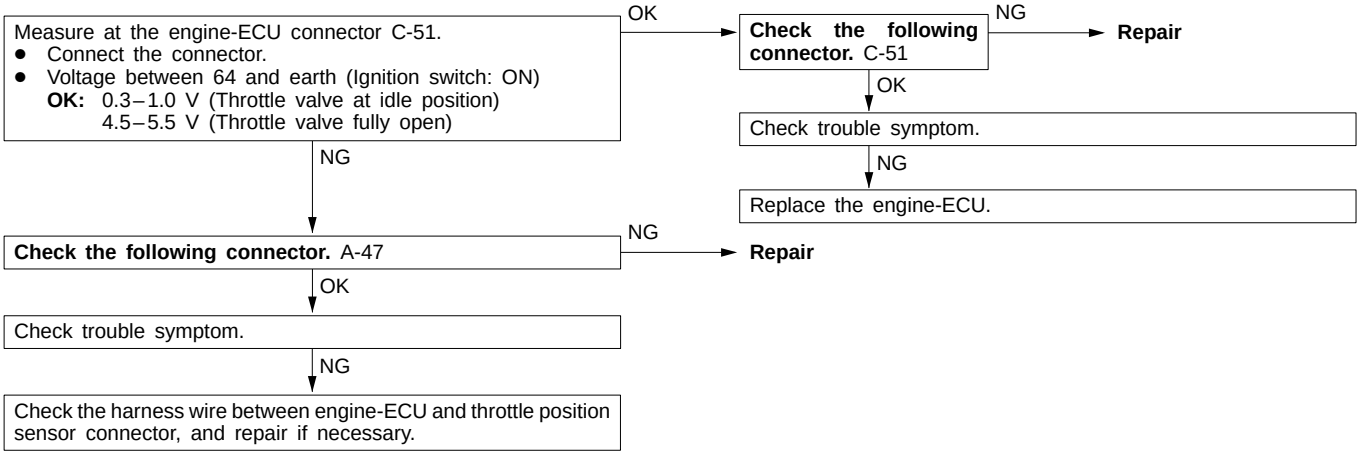

INSPECTION PROCEDURE 47

Check injector control circuit

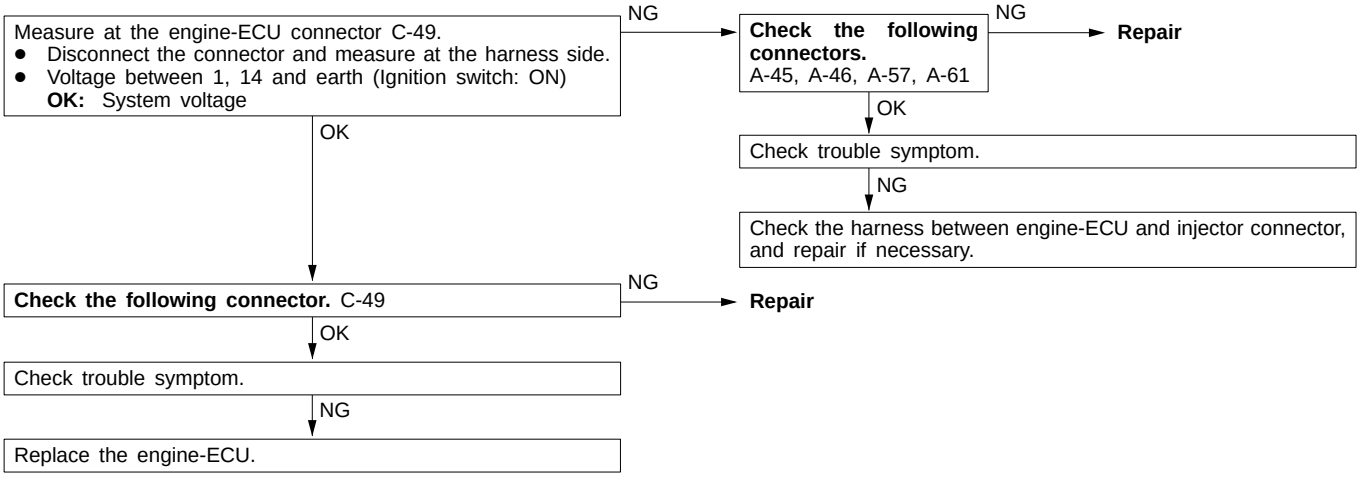

INSPECTION PROCEDURE 48

Check ignition coil and power transistor unit circuit.

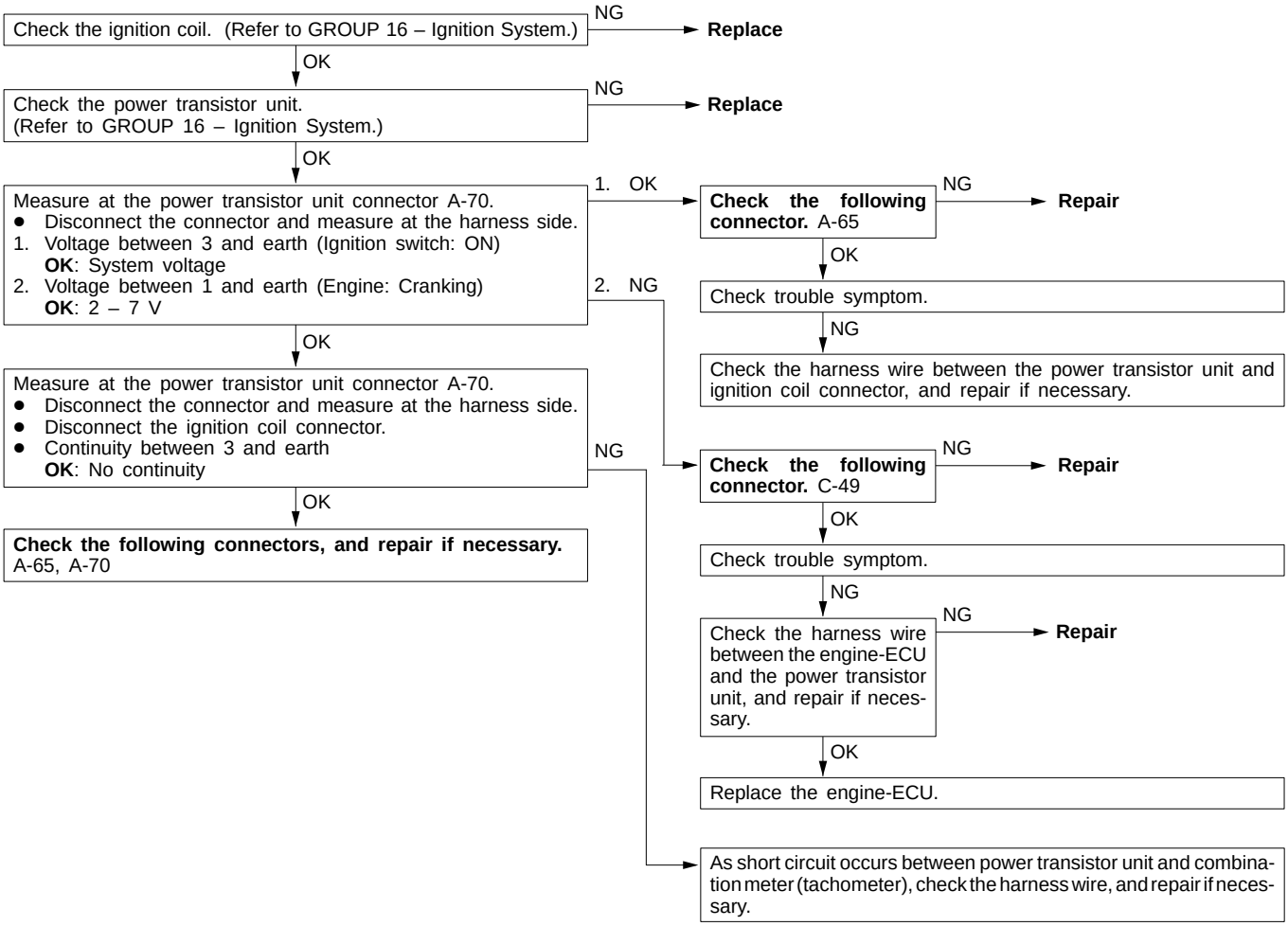

DATA LIST REFERENCE TABLE

13100890180

Caution

When shifting the select lever to D range, the brakes should be applied so that the vehicle does not move forward.

NOTE

*1. In a new vehicle [driven approximately 500 km or less], the air flow sensor output frequency is sometimes 10% higher than the standard frequency.

*2. The idle position switch normally turns off when the voltage of the throttle position sensor is 50 – 100 mV higher than the voltage at the idle position. If the idle position switch turns back on after the throttle position sensor voltage has been by 100 mV and the throttle valve has been opened, the idle position switch and the throttle position sensor need to be adjusted.

*3. The injector drive time represents the time when the cranking speed is at 250 r/min or below when the power supply voltage is 11 V.

*4. In a new vehicle [driven approximately 500 km or less], the injector drive time is sometimes 10% longer than the standard time.

*5. In a new vehicle [driven approximately 500 km or less], the step of the stepper motor is sometimes 30 steps greater than the standard value.

Item No.	Inspection item	Inspection contents		Normal condition	Inspection procedure No.	Reference page
11	Oxygen sensor	Engine: After having warmed up Air/fuel mixture is made leaner when decelerating, and is made richer when racing.	When at 4,000 r/min, engine is suddenly decelerated	200 mV or less	Code No. 11	13A-11
			When engine is suddenly raced	600 – 1,000 mV		
		Engine: After having warmed up The oxygen sensor signal is used to check the air/fuel mixture ratio, and control condition by the engine-ECU.	Engine is idling	400 mV or less (Changes) 600 – 1,000 mV		
			2,500 r/min	400 mV or less (Changes) 600 – 1,000 mV		
12	Air flow sensor*1	● Engine coolant temperature: 80 – 95°C ● Lamps and all accessories: OFF ● Transmission: Neutral (A/T: P range)	Engine is idling	22 – 48 Hz <4G63> 19 – 45 Hz <4G64>	–	–
			2,500 r/min	80 – 120 Hz <4G63> 67 – 107 Hz <4G64>		
			Engine is raced	Frequency increases in response to racing		

Item No.	Inspection item	Inspection contents		Normal condition	Inspection procedure No.	Reference page
13	Intake air temperature sensor	Ignition switch: ON or with engine running	When intake air temperature is –20°C	–20°C	Code No. 13	13A-12
			When intake air temperature is 0°C	0°C		
			When intake air temperature is 20°C	20°C		
			When intake air temperature is 40°C	40°C		
			When intake air temperature is 80°C	80°C		
14	Throttle position sensor	Ignition switch: ON	Set to idle position	300–1,000 mV	Code No. 14	13A-13
			Gradually open	Increases in proportion to throttle opening angle		
			Open fully	4,500–5,500 mV		
16	Power supply voltage	Ignition switch: ON		System voltage	Procedure No. 23	13A-39
18	Cranking signal (ignition switch-ST)	Ignition switch: ON	Engine: Stopped	OFF	Procedure No. 26 <M/T> Procedure No. 27 <A/T>	13A-41 <M/T> 13A-42 <M/T>
			Engine: Cranking	ON		
21	Engine coolant temperature sensor	Ignition switch: ON or with engine running	When engine coolant temperature is –20°C	–20°C	Code No. 21	13A-14
			When engine coolant temperature is 0°C	0°C		
			When engine coolant temperature is 20°C	20°C		
			When engine coolant temperature is 40°C	40°C		
			When engine coolant temperature is 80°C	80°C		

Item No.	Inspection item	Inspection contents		Normal condition	Inspection procedure No.	Reference page
22	Crank angle sensor	● Engine: Cranking ● Tachometer: Connected	Compare the engine speed readings on the tachometer and the MUT-II.	Accord	Code No. 22	13A-15
		● Engine: Idling ● Idle position switch: ON	When engine coolant temperature is –20°C	1,275 – 1,475 r/min		
			When engine coolant temperature is 0°C	1,225 – 1,425 r/min		
			When engine coolant temperature is 20°C	1,100 – 1,300 r/min		
			When engine coolant temperature is 40°C	950 – 1,150 r/min		
			When engine coolant temperature is 80°C	650 – 850 r/min		
25	Barometric pressure sensor	Ignition switch: ON	At altitude of 0 m	101 kPa	Code No. 25	13A-18
			At altitude of 600 m	95 kPa		
			At altitude of 1,200 m	88 kPa		
			At altitude of 1,800 m	81 kPa		
26	Idle position switch	Ignition switch: ON Check by operating accelerator pedal repeatedly	Throttle valve: Set to idle position	ON	Procedure No. 25	13A-40
			Throttle valve: Slightly open	OFF*2		
27	Power steering fluid pressure switch	Engine: Idling	Steering wheel stationary	OFF	Procedure No. 28	13A-43
			Steering wheel turning	ON		

Item No.	Inspection item	Inspection contents		Normal condition	Inspection procedure No.	Reference page
28	A/C switch	Engine: Idling (when A/C switch is ON, A/C compressor should be operating.)	A/C switch: OFF	OFF	Procedure No. 29	13A-43
			A/C switch: ON	ON		
29	Inhibitor switch <A/T>	Ignition switch: ON	P or N	P or N	Procedure No. 27	13A-42
			D, 2, L or R	D, 2, L or R		
41	Injectors *3	Engine: Cranking	When engine coolant temperature is 0°C	51 – 76 ms <4G63> 60 – 90 ms <4G64>	–	–
			When engine coolant temperature is 20°C	26 – 38 ms <4G63> 30 – 45 ms <4G64>		
			When engine coolant temperature is 80°C	5.7 – 8.5 ms <4G63> 6.7 – 10.1 ms <4G64>		
	Injectors*4	● Engine coolant temperature: 80–95°C ● Lamps and all accessories: OFF ● Transmission: Neutral (A/T : P range)	Engine is idling	1.9 – 3.1 ms <4G63> 2.2 – 3.4 ms <4G64>		
			2,500 r/min	1.8 – 3.0 ms <4G63> 1.9 – 3.1 ms <4G64>		
			When engine is suddenly raced	Increases		
44	Ignition coils and power transistors	● Engine: After having warmed up ● Timing lamp is set. (The timing lamp is set in order to check actual ignition timing.)	Engine is idling	2–18°BTDC	–	–
			2,500 r/min	23 – 43° BTDC <4G63> 27 – 47° BTDC <4G64>		

Item No.	Inspection item	Inspection contents		Normal condition	Inspection procedure No.	Reference page
45	ISC (stepper) motor position *5	● Engine coolant temperature: 80–95°C ● Lamps and all accessories: OFF ● Transmission: Neutral (A/T : P range) ● Idle position switch: ON ● Engine: Idling ● When A/C switch is ON, A/C compressor should be operating	A/C switch: OFF	2–25 STEP	–	–
			A/C switch: OFF → ON	Increases by 10–70 steps		
			● A/C switch: OFF ● Select lever: N range → D range	Increases by 5–50 steps		
49	A/C relay	Engine: After having warmed up/Engine is idling	A/C switch: OFF	OFF (Compressor clutch is not operating)	Procedure No. 29	13A-43
			A/C switch: ON	ON (Compressor clutch is operating)		

ACTUATOR TEST REFERENCE TABLE

13100900210

Item No.	Inspection item	Drive contents	Inspection contents		Normal condition	Inspection procedure No.	Reference page
01	Injectors	Cut fuel to No.1, No.3 injector	Engine: After having warmed up/Engine is idling (Cut the fuel supply to each injector in turn and check cylinders which don't affect idling.)		Idling condition becomes different (becomes unstable).	Code No. 41	13A-19
02		Cut fuel to No.2, No.4 injector					
07	Fuel pump	Fuel pump operates and fuel is recirculated.	● Engine: Cranking ● Fuel pump: Forced driving Inspect according to both the above conditions.	Pinch the return hose with fingers to feel the pulse of the fuel being recirculated.	Pulse is felt.	Procedure No. 24	13A-40
				Listen near the fuel tank for the sound of fuel pump operation.	Sound of operation is heard.		
08	Purge control solenoid valve	Solenoid valve turns from OFF to ON.	Ignition switch: ON		Sound of operation can be heard when solenoid valve is driven.	Procedure No. 32	13A-45
10	EGR control solenoid valve	Solenoid valve turns from OFF to ON.	Ignition switch: ON		Sound of operation can be heard when solenoid valve is driven.	Procedure No. 33	13A-46

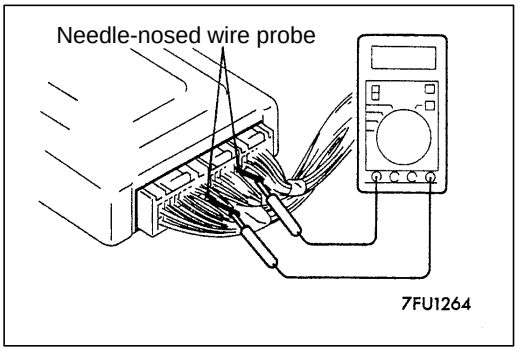

CHECK AT THE ENGINE-ECU TERMINALS

13100920186

TERMINAL VOLTAGE CHECK CHART

1. Connect a needle-nosed wire probe (test harness: MB991223 or paper clip) to a voltmeter probe.
2. Insert the needle-nosed wire probe into each of the engine-ECU connector terminals from the wire side, and measure the voltage while referring to the check chart.

   NOTE
   1. Make the voltage measurement with the engine-ECU connectors connected.
   2. You may find it convenient to pull out the engine-ECU to make it easier to reach the connector terminals.
   3. The checks can be carried out off the order given in the chart.

   Caution
   Short-circuiting the positive (+) probe between a connector terminal and earth could damage the vehicle wiring, the sensor, engine-ECU or all of them. Be careful to prevent this!
3. If voltmeter shows any division from standard value, check the corresponding sensor, actuator and related electrical wiring, then repair or replace.
4. After repair or replacement, recheck with the voltmeter to confirm that the repair has corrected the problem.

Engine-ECU Connector Terminal Arrangement

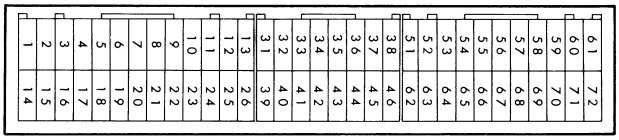

9FU0101

NOTE
*: Vehicles with immobilizer system

Terminal No.	Check item	Check condition (Engine condition)		Normal condition
1	No.1, No.3 injector	While engine is idling after having warmed up, suddenly depress the accelerator pedal.		From 11–14 V, momentarily drops slightly
14	No.2, No.4 injector			
4	Stepper motor coil <A1>	Engine: Soon after the warmed up engine is started		System voltage ↔ 0 – 3 V (Changes repeatedly)
17	Stepper motor coil <A2>			
5	Stepper motor coil <B1>			
18	Stepper motor coil <B2>			
6	EGR control solenoid valve	Ignition switch: ON		System Voltage
		While engine is idling, suddenly depress the accelerator pedal.		From system voltage, momentarily drops
8 or 22*	Fuel pump relay	Ignition switch: ON		System voltage
		Engine: Idle speed		0–3V
9	Purge control solenoid valve	Ignition switch: ON		System voltage
		Running at 3,000r/min while engine is warming up after having been started.		0–3V
10	Power transistor unit	Engine r/min: 3,000 r/min		0.3–3.0V
12	Power supply	Ignition switch: ON		System voltage
25				
19	Air flow sensor reset signal	Engine: Idle speed		0–1V
		Engine r/min: 3,000 r/min		6–9V
22 or 8*	A/C relay	• Engine: Idle speed • A/C switch: OFF → ON (A/C compressor is operating)		System voltage or momentarily 6V or more → 0–3V
34	Ignition timing adjustment terminal	Ignition switch: ON	Earth the ignition timing adjustment terminal	0 – 1 V
			Remove the earth from the ignition timing adjustment terminal	4.0 – 5.5 V

Terminal No.	Check item	Check condition (Engine condition)		Normal condition
35	Oxygen sensor heater	Engine: Idling after warming up		0–3V
		Engine r/min: 5,000r/min.		System voltage
36	Engine warning lamp	Ignition switch: OFF → ON		0–3V → 9–13V (After several seconds have elapsed)
37	Power steering fluid pressure switch	Engine: Idling after warming up	When steering wheel is stationary	System voltage
			When steering wheel is turned	0–3V
38	Control relay (Power supply)	Ignition switch: OFF		System voltage
		Ignition switch: ON		0–3V
45	A/C switch	Engine: Idle speed	Turn the A/C switch OFF	0–3V
			Turn the A/C switch ON (A/C compressor is operating)	System voltage
51	Ignition switch – ST	Engine: Cranking		8V or more
52	Intake air temperature sensor	Ignition switch: ON	When intake air temperature is 0°C	3.2–3.8V
			When intake air temperature is 20°C	2.3–2.9V
			When intake air temperature is 40°C	1.5–2.1V
			When intake air temperature is 80°C	0.4–1.0V
56	Oxygen sensor	Engine: Running at 2,500 r/min after warmed up (Check using a digital type voltmeter)		0 ↔ 0.8V (Changes repeatedly)
60	Backup power supply	Ignition switch: OFF		System voltage
61	Sensor impressed voltage	Ignition switch: ON		4.5–5.5V
62	Ignition switch – IG	Ignition switch: ON		System voltage

Terminal No.	Check item	Check condition (Engine condition)		Normal condition
63	Engine coolant temperature sensor	Ignition switch: ON	When engine coolant temperature is 0°C	3.2–3.8V
			When engine coolant temperature is 20°C	2.3–2.9V
			When engine coolant temperature is 40°C	1.3–1.9V
			When engine coolant temperature is 80°C	0.3–0.9V
64	Throttle position sensor	Ignition switch: ON	Set throttle valve to idle position	0.3–1.0V
			Fully open throttle valve	4.5–5.5V
65	Barometric pressure sensor	Ignition switch: ON	When altitude is 0m	3.7–4.3V
			When altitude is 1,200m	3.2–3.8V
66	Vehicle speed sensor	● Ignition switch: ON ● Move the vehicle slowly forward		0 ↔ 5V (Changes repeatedly)
67	Idle position switch	Ignition switch: ON	Set throttle valve to idle position	0–1V
			Slightly open throttle valve	4V or more
68	Top dead centre sensor	Engine: Cranking		0.4–3.0V
		Engine: Idle speed		0.5–2.0V
69	Crank angle sensor	Engine: Cranking		0.4–4.0V
		Engine: Idle speed		1.5–2.5V
70	Air flow sensor	Engine: Idle speed		2.2–3.2V
		Engine r/min: 2,500r/min		
71	Inhibitor switch <A/T>	Ignition switch: ON	Set selector lever to P or N	0–3V
			Set selector lever to Other than P or N	8–14V

CHECK CHART FOR RESISTANCE AND CONTINUITY BETWEEN TERMINALS

1. Turn the ignition switch to OFF.
2. Disconnect the engine-ECU connector.
3. Measure the resistance and check for continuity between the terminals of the engine-ECU harness-side connector while referring to the check chart.

   NOTE
   1. When measuring resistance and checking continuity, a harness for checking contact pin pressure should be used instead of inserting a test probe.
   2. Checking need not be carried out in the order given in the chart.

   Caution
   If the terminals that should be checked are mistaken, or if connector terminals are not correctly shorted to earth, damage may be caused to the vehicle wiring, sensors, engine-ECU and/or ohmmeter.
   Be careful to prevent this!

4. If the ohmmeter shows any deviation from the standard value, check the corresponding sensor, actuator and related electrical wiring, and then repair or replace.
5. After repair or replacement, recheck with the ohmmeter to confirm that the repair or replacement has corrected the problem.

Engine-ECU Harness Side Connector Terminal Arrangement

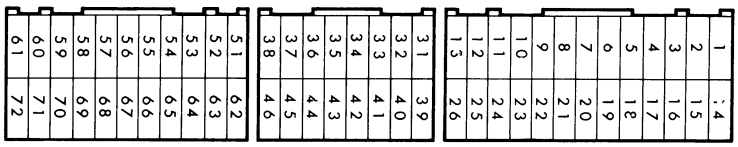

6AF0144

Terminal No.	Inspection item	Normal condition (Check condition)
1–12	No.1, No.3 injector	6.5 – 8.0 Ω (At 20°C)
14–12	No.2, No.4 injector	

Terminal No.	Inspection item	Normal condition (Check condition)
4–12	Stepper motor coil (A1)	28–33 Ω (At 20°C)
17–12	Stepper motor coil (A2)	
5–12	Stepper motor coil (B1)	
18–12	Stepper motor coil (B2)	
6–12	EGR control solenoid valve	36–44 Ω (At 20°C)
9–12	Purge control solenoid valve	36–44 Ω (At 20°C)
13–Body earth	Engine-ECU earth	Continuity (0Ω)
26–Body earth	Engine-ECU earth	
35–12	Oxygen sensor heater	Approx. 12 Ω (At 20°C)
52–72	Intake air temperature sensor	5.3–6.7 kΩ (When intake air temperature is 0°C)
		2.3–3.0 kΩ (When intake air temperature is 20°C)
		1.0–1.5 kΩ (When intake air temperature is 40°C)
		0.30–0.42 kΩ (When intake air temperature is 80°C)
63–72	Engine coolant temperature sensor	5.1–6.5 kΩ (When coolant temperature is 0°C)
		2.1–2.7 kΩ (When coolant temperature is 20°C)
		0.9–1.3 kΩ (When coolant temperature is 40°C)
		0.26–0.36 kΩ (When coolant temperature is 80°C)
67–72	Idle position switch	Continuity (when throttle valve is at idle position)
		No continuity (when throttle valve is slightly open)
71–Body earth	Inhibitor switch <A/T>	Continuity (when select lever is at P or N)
		No continuity (when select lever is at D, 2, L or R)

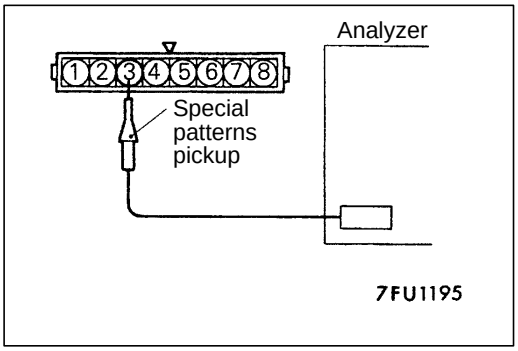

INSPECTION PROCEDURE USING AN ANALYZER

13100930127

AIR FLOW SENSOR (AFS)

Measurement Method

1. Disconnect the air flow sensor connector, and connect the special tool (test harness: MB991348) in between. (All terminals should be connected.)
2. Connect the analyzer special patterns pickup to air flow sensor connector terminal 3.

Alternate Method (Test harness not available)

1. Connect the analyzer special patterns pickup to engine-ECU terminal 70.

Standard Wave Pattern

Observation conditions

Function	Special patterns
Pattern height	Low
Pattern selector	Display
Engine r/min	Idle speed

Standard wave pattern

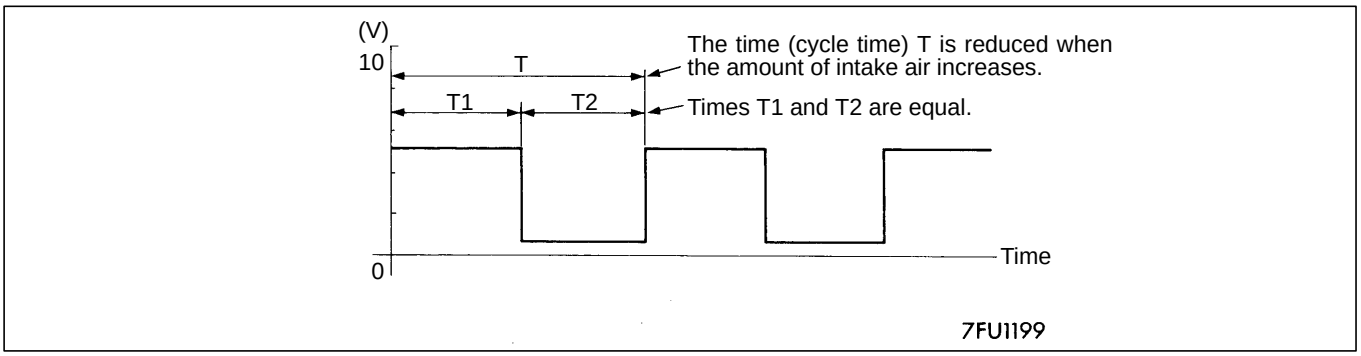

Observation conditions (from conditions above engine speed is increased by racing.)

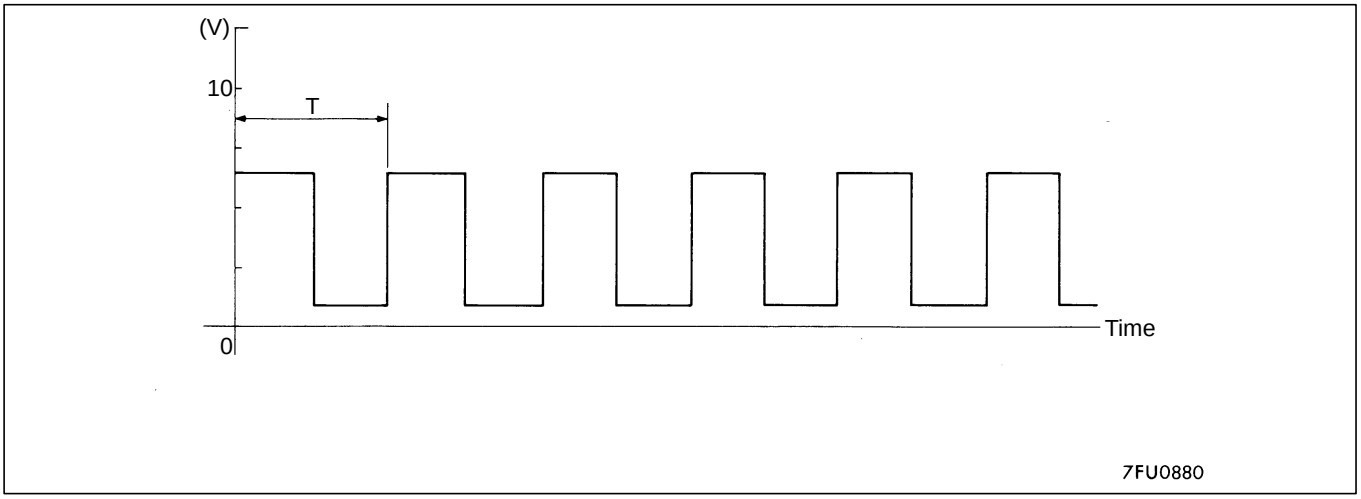

Wave Pattern Observation Points

Check that cycle time T becomes shorter and the frequency increases when the engine speed is increased.

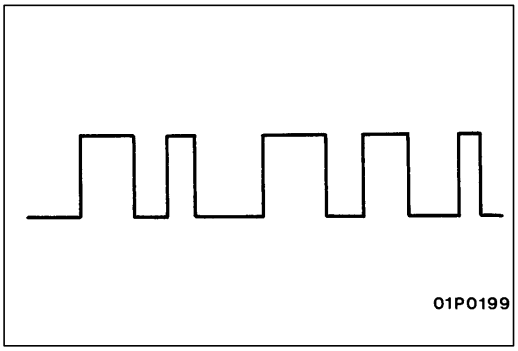

Examples of Abnormal Wave Patterns

- Example 1

  Cause of problem

  Sensor interface malfunction

  Wave pattern characteristics

  Rectangular wave pattern is output even when the engine is not started.

- Example 2

  Cause of problem

  Damaged rectifier or vortex generation column

  Wave pattern characteristics

  Unstable wave pattern with non-uniform frequency. However, when an ignition leak occurs during acceleration, the wave pattern will be distorted temporarily, even if the air flow sensor is normal.

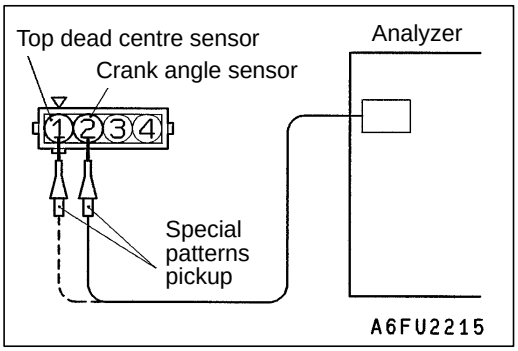

TOP DEAD CENTRE SENSOR AND CRANK ANGLE SENSOR

Measurement Method

1. Disconnect the top dead centre sensor connector and connect the special tool (test harness: MB9981348) in between. (All terminal should be connected.)
2. Connect the analyzer special patterns pickup to distributor terminal 1. (when checking the top dead centre sensor signal wave pattern.)
3. Connect the analyzer special patterns pickup to distributor terminal 2. (when checking the crank angle sensor signal wave pattern.)

Alternate Method (Test harness not available)

1. Connect the analyzer special patterns pickup to engine-ECU terminal 68. (when checking the top dead centre sensor signal wave pattern.)
2. Connect the analyzer special patterns pickup to engine-ECU terminal 69. (when checking the crank angle sensor signal wave pattern.)

Standard Wave Pattern

Observation conditions

Function	Special patterns
Pattern height	Low
Pattern selector	Display
Engine r/min	Idle speed

Standard wave pattern

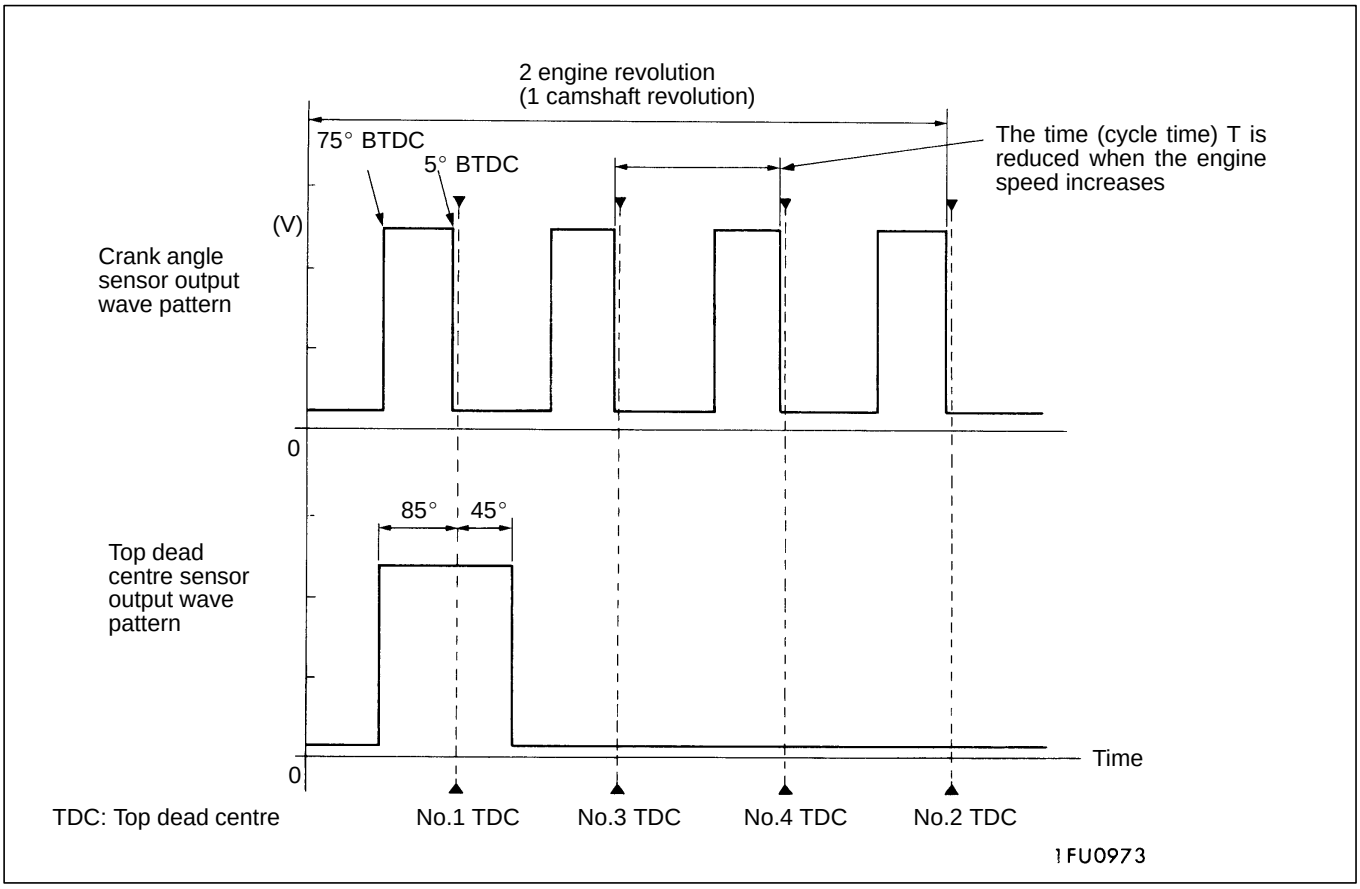

Wave Pattern Observation Points

Check that cycle time T becomes shorter when the engine speed increases.

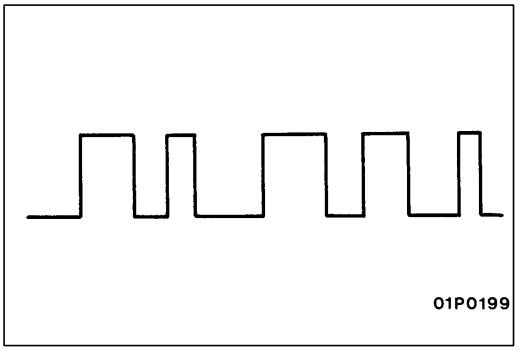

Examples of Abnormal Wave Patterns

- Example 1

  Cause of problem

  Sensor interface malfunction

  Wave pattern characteristics

  Rectangular wave pattern is output even when the engine is not started.

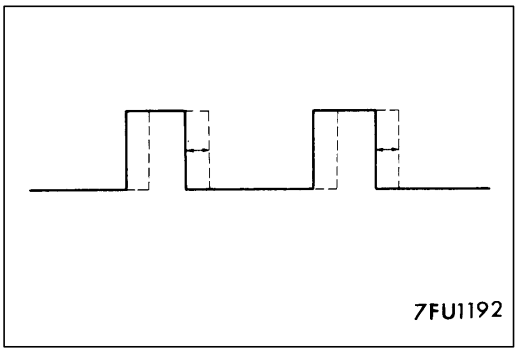

- Example 2

  Cause of problem

  Loose timing belt
  Abnormality in sensor disk

  Wave pattern characteristics

  Wave pattern is displaced to the left or right.

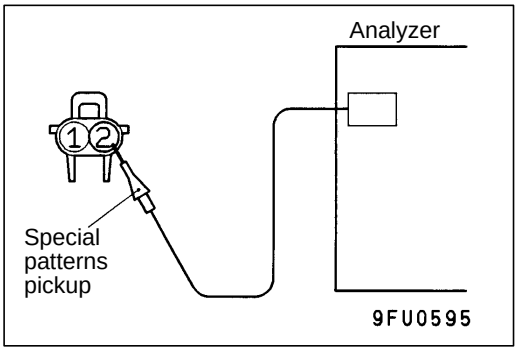

INJECTOR

Measurement Method

1. Disconnect the injector connector, and then connect the special tool (test harness: MB991348) in between. (Both the power supply side and engine-ECU side should be connected.)
2. Connect the analyzer special patterns pickup to terminal 2 of the injector connector.

Alternate Method (Test harness not available)

1. Connect the analyzer special patterns pickup to engine-ECU terminal 1. (when checking the No.1, No.3 cylinder.)
2. Connect the analyzer special patterns pickup to engine-ECU terminal 14. (when checking the No.2, No.4 cylinder.)

Standard Wave Pattern

Observation conditions

Function	Special patterns
Pattern height	Variable
Variable knob	Adjust while viewing the wave pattern
Pattern selector	Display
Engine r/min	Idle speed

Standard wave pattern

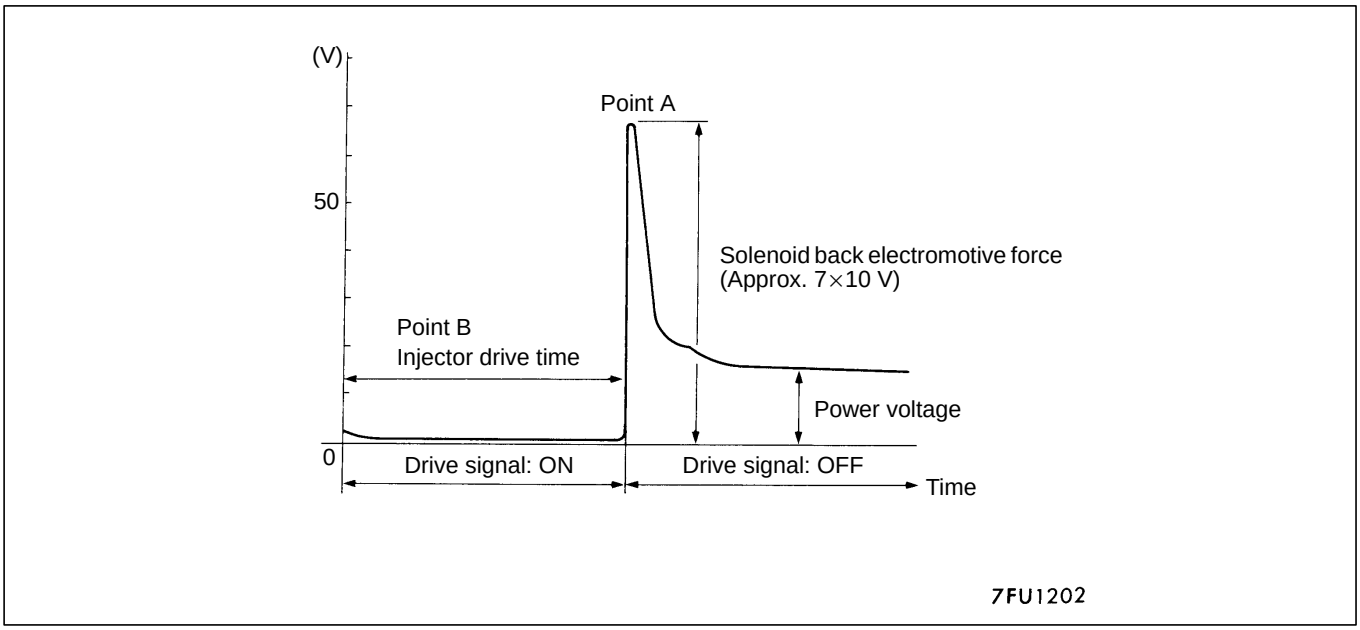

Wave Pattern Observation Points

Explanation of Wave Pattern

NOTE

- Because the fuel injection method is a group injection method (injection with injectors grouped together in sets of two). If there is an abnormality in the drive circuit or one of the injectors in a group, the drive circuit of the other injector may still the normal, and in this case a normal wave pattern will be output.
- If there is an abnormality in the engine-ECU power transistor that drives the injectors, an abnormal wave pattern will be output.

Wave Pattern Observation Points

Point A: Height of solenoid back electromotive force

Contrast with standard wave pattern	Probable cause
Solenoid coil back electromotive force is low or doesn't appear at all.	Short in the injector solenoid

Point B: Injector drive time

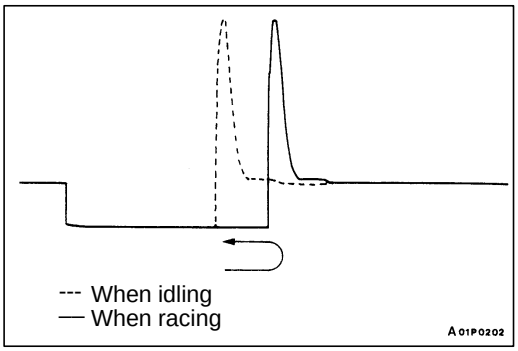

- The injector drive time will be synchronized with the MUT-II tester display.
- When the engine is suddenly raced, the drive time will be greatly extended at first, but the drive time will soon match the engine speed.

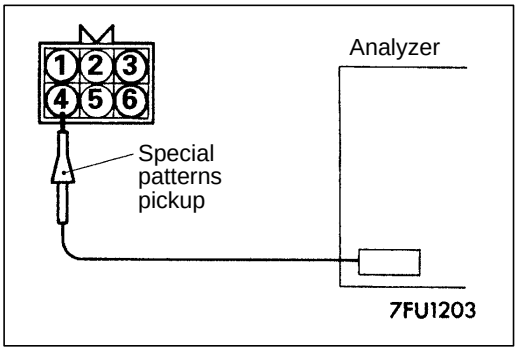

STEPPER MOTOR

Measurement Method

1. Disconnect the stepper motor connector, and connect the special tool (test harness: MD998463) in between.
2. Connect the analyzer special patterns pickup to the stepper motor-side connector terminal 1 (red clip of special tool), terminal 3 (blue clip), terminal 4 (black clip) and terminal 6 (yellow clip) respectively.

Alternate Method (Test harness not available)

1. Connect the analyzer special patterns pickup to engine-ECU terminal 4, connection terminal 5, connection terminal 17, and connection terminal 18 respectively.

Standard Wave Pattern

Observation conditions

Function	Special patterns
Pattern height	High
Pattern selector	Display
Engine condition	When the engine coolant temperature is 20°C or below, turn the ignition switch from OFF to ON (without starting the engine).
	While the engine is idling, turn the A/C switch to ON.
	Immediately after starting the warm engine (approx. 1 minute)

Standard wave pattern

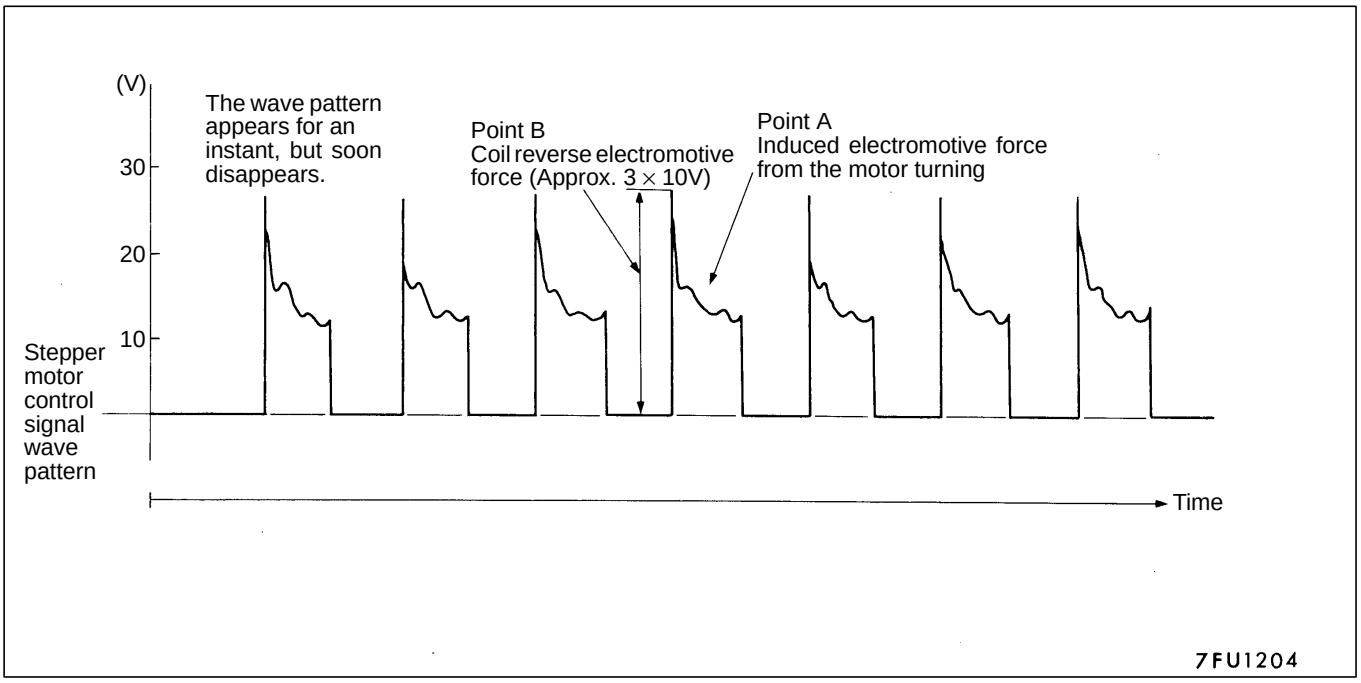

Wave Pattern Observation Points

Check that the standard wave pattern appears when the stepper motor is operating.
Point A: Presence or absence of induced electromotive force from the motor turning. (Refer to the abnormal wave pattern.)

Contrast with standard wave pattern	Probable cause
Induced electromotive force does not appear or is extremely small.	Motor is malfunctioning

Point B: Height of coil reverse electromotive force

Contrast with standard wave pattern	Probable cause
Coil reverse electromotive force does not appear or is extremely small.	Short in the coil

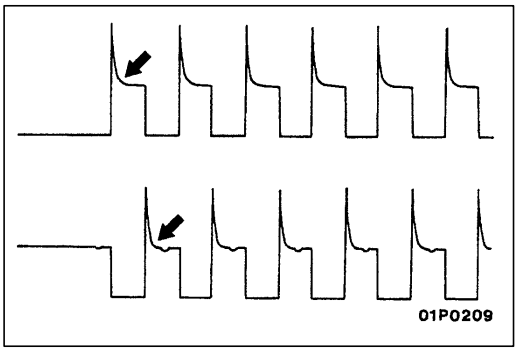

Examples of Abnormal Wave Pattern

- Example 1

  Cause of problem

  Motor is malfunctioning. (Motor is not operating.)

  Wave pattern characteristics

  Induced electromotive force from the motor turning does not appear.

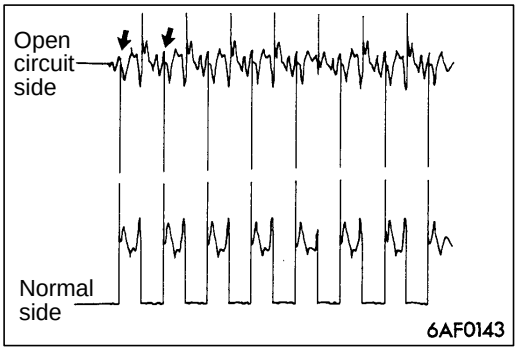

- Example 2

  Cause of problem

  Open circuit in the line between the stepper motor and the engine-ECU.

  Wave pattern characteristics

  Current is not supplied to the motor coil on the open circuit side. (Voltage does not drop to 0 V.)
  Furthermore, the induced electromotive force waveform at the normal side is slightly different from the normal waveform.

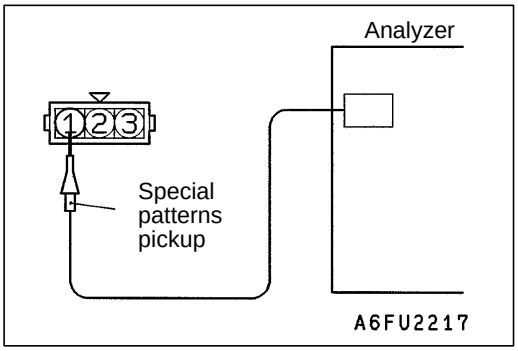

IGNITION COIL AND POWER TRANSISTOR

- Ignition coil primary signal
  Refer to GROUP 16 – Ignition System.
- Power transistor control signal

Measurement Method

1. Disconnect the distributor connector, and connect the special tool (test harness: MB991348) in between. (All terminals should be connected.)
2. Connect the analyzer special patterns pickup to power transistor unit connector terminal 1.

Alternate Method (Test harness not available)

1. Connect the analyzer special patterns pickup to engine-ECU terminal 10.

Standard Wave Pattern

Observation condition

Function	Special patterns
Pattern height	Low
Pattern selector	Display
Engine r/min	Approx. 1,200 r/min

Standard wave pattern

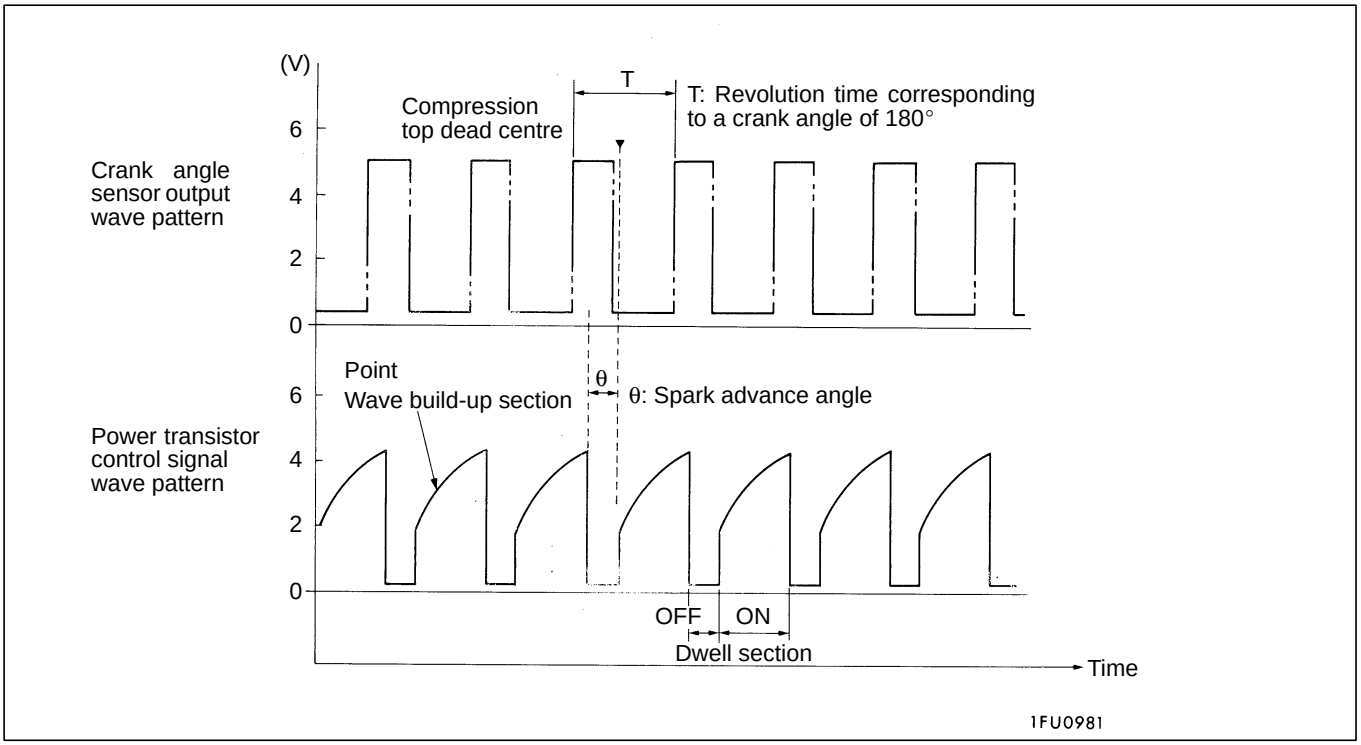

Wave Pattern Observation Points

Point: Condition of wave pattern build-up section and maximum voltage (Refer to abnormal wave pattern examples 1 and 2.)

Condition of wave pattern build-up section and maximum voltage	Probable cause
Rises from approx. 2V to approx. 4.5V at the top-right	Normal
2V rectangular wave	Open-circuit in ignition primary circuit
Rectangular wave at power voltage	Power transistor malfunction

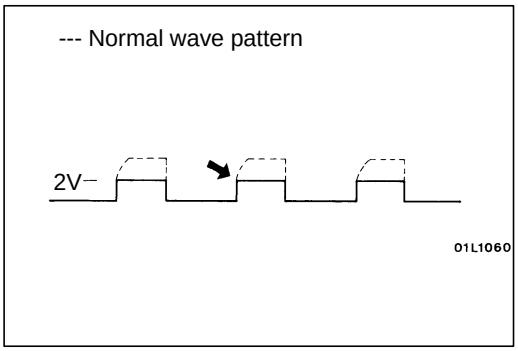

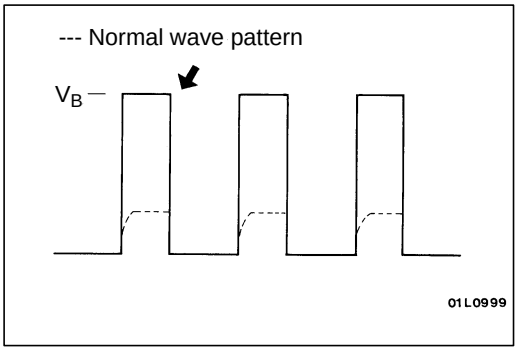

Examples of Abnormal Wave Patterns

- Example 1

  Wave pattern during engine cranking

  Cause of problem

  Open-circuit in ignition primary circuit

  Wave pattern characteristics

  Top-right part of the build-up section cannot be seen, and voltage value is approximately 2V too low.

- Example 2

  Wave pattern during engine cranking

  Cause of problem

  Malfunction in power transistor

  Wave pattern characteristics

  Power voltage results when the power transistor is ON.

ON-VEHICLE SERVICE 13100100115

THROTTLE BODY (THROTTLE VALVE AREA) CLEANING

1. Start the engine and warm it up until the coolant is heated to 80°C or higher and then stop the engine.
2. Remove the air intake hose from the throttle body.

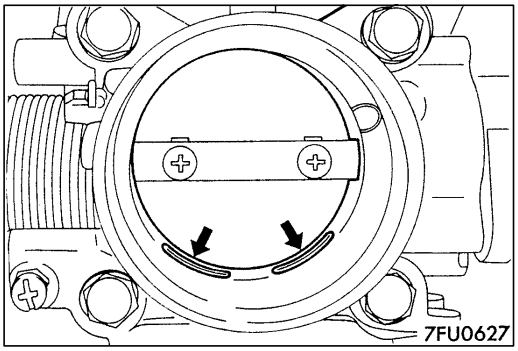

3. Plug the bypass passage inlet of the throttle body.

   Caution
   Do not allow cleaning solvent to enter the bypass passage.
4. Spray cleaning solvent into the valve through the throttle body intake port and leave it for about 5 minutes.
5. Start the engine, race it several times and idle it for about 1 minute. If the idling speed becomes unstable (or if the engine stalls) due to the bypass passage being plugged, slightly open the throttle valve to keep the engine running.
6. If the throttle valve deposits are not removed, repeat steps 4 and 5.
7. Unplug the bypass passage inlet.
8. Attach the air intake hose.
9. Use the MUT-II to erase the self-diagnosis code.
10. Adjust the basic idle speed. (Refer to P.13A-79.)

    NOTE
    If the engine hunts while idling after adjustment of the basic idle speed, disconnect the (–) cable from the battery for 10 seconds or more, and then reconnect it and run the engine at idle for about 10 minutes.

IDLE POSITION SWITCH AND THROTTLE POSITION SENSOR ADJUSTMENT 13100130183

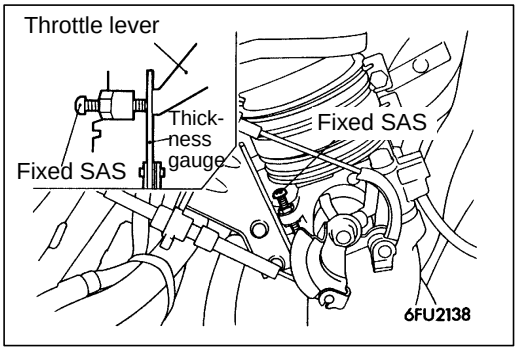

1. Connect the MUT-II to the diagnosis connector (16-pin).
2. Insert a thickness gauge with a thickness of 0.45 mm between the fixed SAS and the throttle lever.
3. Turn the ignition switch to ON (but do not start the engine).

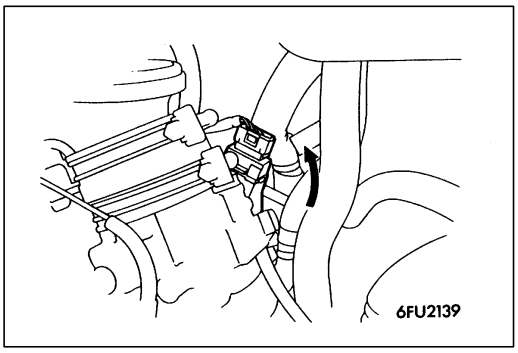

4. Use a 4 mm-Allen Key to loosen the throttle position sensor mounting bolt.
5. Turn the throttle position sensor anti-clockwise as far as it will go.
6. Check that the idle position switch is on at this position.

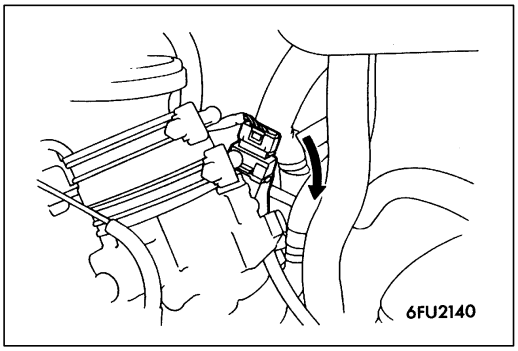

7. Slowly turn the throttle position sensor clockwise and find the point where the idle position switch turns off. Securely tighten the throttle position sensor mounting bolt at this point.
8. Check the throttle position sensor output voltage.

   Standard value: 400 – 1,000 mV
9. If there is a deviation from the standard value, check the throttle position sensor and the related harness.
10. Remove the thickness gauge.
11. Turn the ignition switch to OFF.
12. Disconnect the MUT-II.

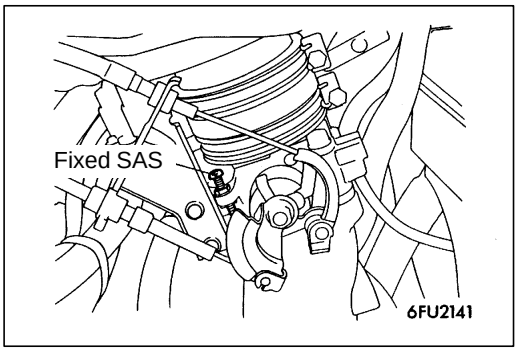

FIXED SAS ADJUSTMENT 13100150202

NOTE
1. The fixed SAS should not be moved unnecessarily; it has been precisely adjusted by the manufacturer.
2. If the adjustment is disturbed for any reason, readjust as follows.

1. Loosen the tension of the accelerator cable sufficiently.
2. Back out the fixed SAS lock nut.
3. Turn the fixed SAS counterclockwise until it is sufficiently backed out, and fully close the throttle valve.
4. Tighten the fixed SAS until the point where the throttle lever is touched (i.e., the point at which the throttle valve begins to open) is found.
   From that point, tighten the fixed SAS 1-1/4 turn.
5. While holding the fixed SAS so that it doesn't move, tighten the lock nut securely.
6. Adjust the tension of the accelerator cable.
7. Adjust the basic idling speed.
8. Adjust the idle position switch and the throttle position sensor (P.13A-78).

BASIC IDLE SPEED ADJUSTMENT 13100180128

NOTE
1. The standard idling speed has been adjusted, by the speed adjusting screw (SAS), by the manufacturer, and there should usually be no need for readjustment.
2. If the adjustment has been changed by mistake, the idle speed may become too high or the idle speed may drop too low when loads from components such as the A/C are placed on the engine. If this occurs, adjust by the following procedure.

3. The adjustment, if made, should be made after first confirming that the spark plugs, the injectors, the idle speed control servo, the compression pressure, etc., are all normal.

1. Before inspection and adjustment, set the vehicle to the pre-inspection condition.
2. Connect the MUT-II to the diagnosis connector (16-pin).

   NOTE
   When the MUT-II is connected, the diagnosis control terminal should be earthed.

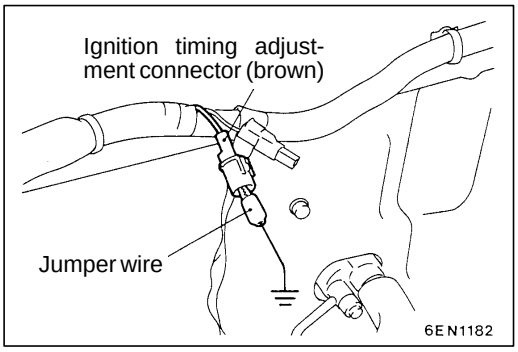

3. Remove the waterproof female connector from the ignition timing adjustment connector.
4. Use a jumper wire to earth the ignition timing adjustment terminal.

5. Start the engine and run at idle.
6. Check the idle speed.

   Standard value: 750 ± 50 r/min

   NOTE
   1. The engine speed may be 20 to 100 r/min lower than indicated above for a new vehicle [driven approximately 500 km or less], but no adjustment is necessary.
   2. If the engine stalls or the engine speed is low even though the vehicle has been driven approximately 500 km or more, it is probable that deposits are adhered to the throttle valve, so clean it. (Refer to P.13A-78.)

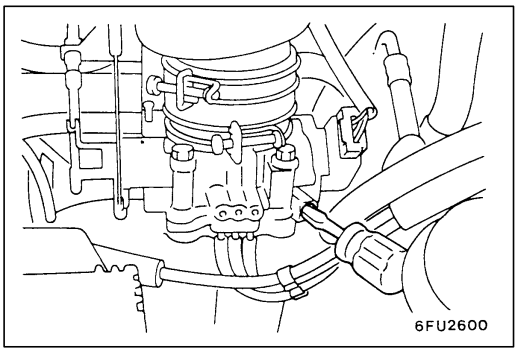

7. If not within the standard value range, turn the speed adjusting screw (SAS) to make the necessary adjustment.

   NOTE
   If the idling speed is higher than the standard value range even when the SAS is fully closed, check whether or not there is any indication that the fixed SAS has been moved. If there is an indication that it has been moved, adjust the fixed SAS.

8. Switch OFF the ignition switch.
9. Disconnect the jumper wire from the ignition timing adjustment terminal and return the connector to its original condition.
10. Disconnect the MUT-II.
11. Start the engine again and let it run at idle speed for about 10 minutes; check that the idling condition is normal.

FUEL PRESSURE TEST

13100190181

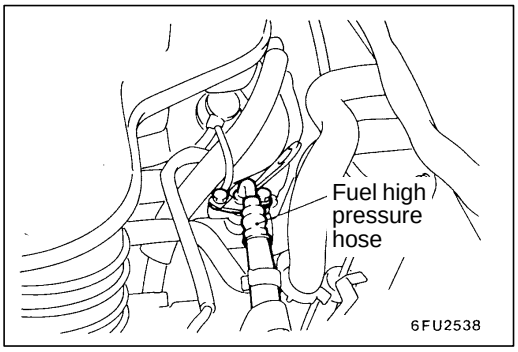

1. Release residual pressure from the fuel pipe line to prevent fuel gush out. (Refer to P.13A-84.)
2. Disconnect the fuel high pressure hose at the delivery pipe side.

   Caution
   Cover the hose connection with rags to prevent splash of fuel that could be caused by some residual pressure in the fuel pipe line.

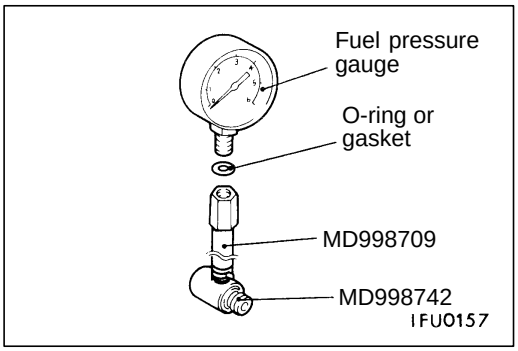

3. Remove the union joint and bolt from the special tool (adapter hose MD998709) and instead attach the special tool (hose adapter MD998742) to the adapter hose.
4. Install a fuel pressure gauge on the adapter hose that was set up in step 3.
   Use a suitable O-ring or gasket between the fuel pressure gauge and the special tool so as to seal in order to prevent fuel leakage at this time.

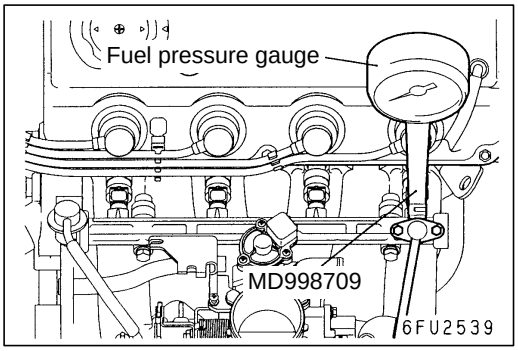

5. Install the special tool, which was set in place in steps 3 and 4 between the delivery pipe and the high pressure hose.

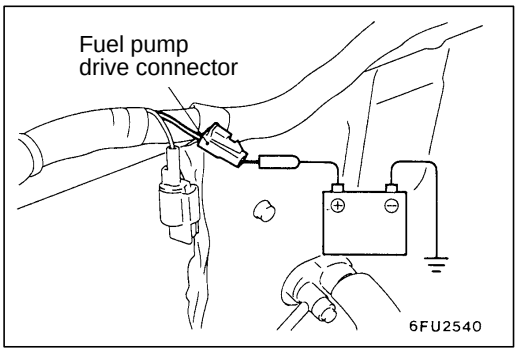

6. Connect the fuel pump drive connector with the battery (+) terminal using a jumper wire and drive the fuel pump. Under fuel pressure, check the fuel pressure gauge and special tool connections for leaks.

7. Disconnect the jumper wire from the fuel pump drive terminal to stop the fuel pump.
8. Start the engine and run at idle.
9. Measure fuel pressure while the engine is running at idle.

   Standard value:
   Approx. 265 kPa at curb idle

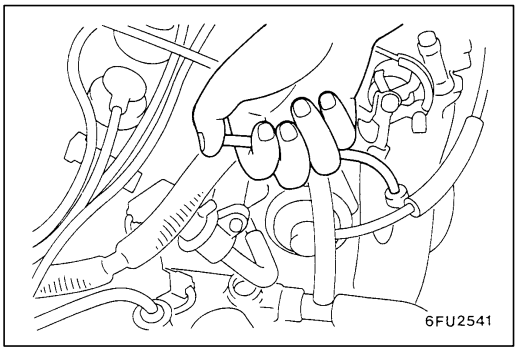

10. Disconnect the vacuum hose from the fuel pressure regulator and measure fuel pressure with the hose end closed by a finger.

    Standard value:
    324–343 kPa at kerb idle
11. Check to see that fuel pressure at idle does not drop even after the engine has been raced several times.
12. Racing the engine repeatedly, hold the fuel return hose lightly with fingers to feel that fuel pressure is present in the return hose.

    NOTE
    If the fuel flow rate is low, there will be no fuel pressure in the return hose.
13. If any of fuel pressure measured in steps 9 to 12 is out of specification, troubleshoot and repair according to the table below.

Symptom	Probable cause	Remedy
● Fuel pressure too low ● Fuel pressure drops after racing ● No fuel pressure in fuel return hose	Clogged fuel filter	Replace fuel filter
	Fuel leaking to return side due to poor fuel regulator valve seating or settled spring	Replace fuel pressure regulator
	Low fuel pump delivery pressure	Replace fuel pump
Fuel pressure too high	Binding valve in fuel pressure regulator	Replace fuel pressure regulator
	Clogged fuel return hose or pipe	Clean or replace hose or pipe
Same fuel pressure when vacuum hose is connected and when disconnected	Damaged vacuum hose or clogged nipple	Replace vacuum hose or clean nipple

14. Stop the engine and check change of fuel pressure gauge reading. Normal if the reading does not drop within 2 minutes. If it does, observe the rate of drop and troubleshoot and repair according to the table below.

Symptom	Probable cause	Remedy
Fuel pressure drops gradually after engine is stopped	Leaky injector	Replace injector
	Leaky fuel regulator valve seat	Replace fuel pressure regulator
Fuel pressure drops sharply immediately after engine is stopped	Check valve in fuel pump is held open	Replace fuel pump

15. Release residual pressure from the fuel pipe line. (Refer to P.13A-84.)
16. Remove the fuel pressure gauge and special tool from the delivery pipe.

    Caution
    Cover the hose connection with rags to prevent splash of fuel that could be caused by some residual pressure in the fuel pipe line.

17. Replace the O-ring at the end of the fuel high pressure hose with a new one. Furthermore, apply engine oil to the new O-ring before replacement.
18. Fit the fuel high pressure hose over the delivery pipe and tighten the bolt to specified torque.

    Tightening torque: 5 Nm

19. Check for fuel leaks.
    (1) Apply the battery voltage to the fuel pump drive terminal to drive the fuel pump.
    (2) Under fuel pressure, check the fuel line for leaks.

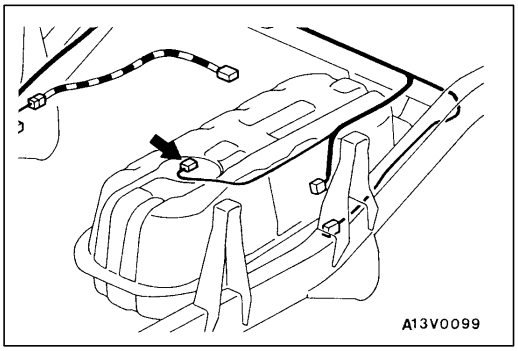

FUEL PUMP CONNECTOR DISCONNECTION (HOW TO REDUCE THE FUEL PRESSURE)

13100090191

When removing the fuel pipe, hose, etc., since fuel pressure in the fuel pipe line is high, do the following operation so as to release fuel pressure in the line and prevent fuel from running out.

(1) Disconnect the fuel pump connector.
(2) After starting the engine and letting it run until it stops naturally, turn the ignition switch to OFF.
(3) Connect the fuel pump connector.

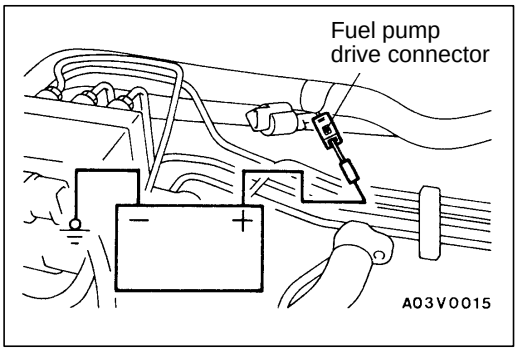

FUEL PUMP OPERATION CHECK

13100200167

1. Check the operation of the fuel pump by using the MUT-II to force-drive the fuel pump.
2. If the fuel pump will not operate, check by using the following procedure, and if it is normal, check the drive circuit.
   (1) Turn the ignition switch to OFF.
   (2) When the fuel pump drive connector (black) is attached directly to the battery, check if the sound of the fuel pump operation can be heard.

   NOTE
   As the fuel pump is an in-tank type, the fuel pump sound is hard to hear, so remove the fuel filler cap and check from the tank inlet.

   (3) Check the fuel pressure by pinching the fuel hose with the fingertips.

COMPONENT LOCATION

13100210238

Name	Symbol	Name	Symbol
A/C relay	G	Fuel pump check terminal	A
A/C switch	P	Idle speed control servo	D
Air flow sensor (with intake air temperature sensor and barometric pressure sensor)	B	Ignition coil and power transistor unit	J
Control relay and fuel pump relay	S	Inhibitor switch <A/T>	L
Diagnosis connector	R	Injectors	C
Distributor (with incorporated crank angle sensor and top dead centre sensor)	I	Oxygen sensor	N
EGR control solenoid valve	F	Power steering fluid pressure switch	H
Engine coolant temperature sensor	K	Purge control solenoid valve	F
Engine-ECU	Q	Throttle position sensor (with idle position switch)	E
Engine warning lamp (check engine lamp)	O	Vehicle speed sensor	M

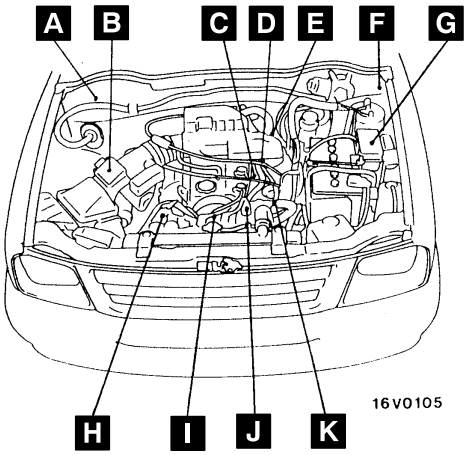

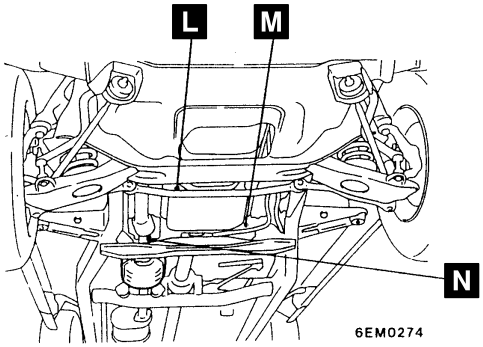

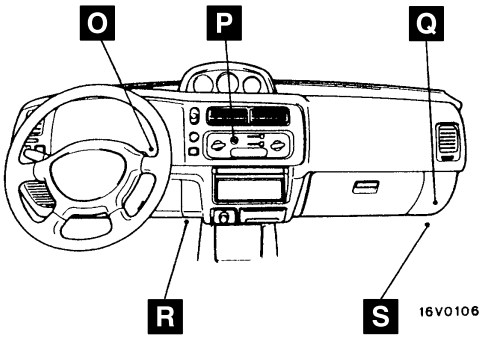

6FU2542

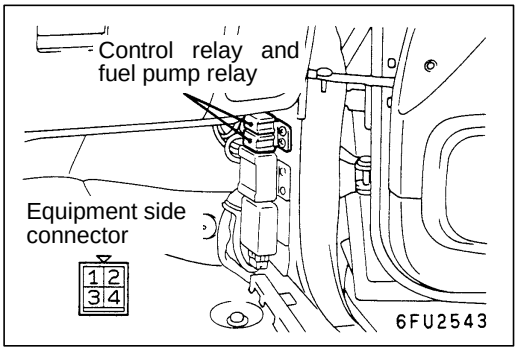

CONTROL RELAY AND FUEL PUMP RELAY CONTINUITY CHECK

13100990095

Battery voltage	Terminal No.			
	1	2	3	4
Not supplied		○	–	○
Supplied	○	⊖	○	⊕

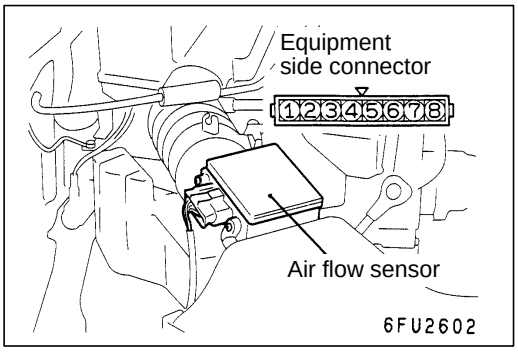

INTAKE AIR TEMPERATURE SENSOR CHECK

13100280147

1. Disconnect the air flow sensor connector.
2. Measure resistance between terminals 5 and 6.

   Standard value:
   2.3 – 3.0 kΩ (at 20°C)
   0.30 – 0.42 kΩ (at 80°C)

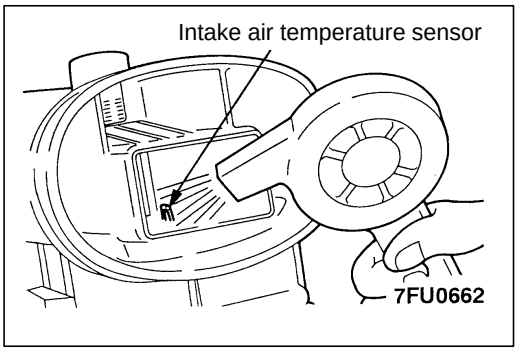

3. Measure resistance while heating the sensor using a hair drier.

   Normal condition:

Temperature (°C)	Resistance (kΩ)
Higher	Smaller

4. If the value divides from the standard value or the resistance remains unchanged, replace the air flow sensor.

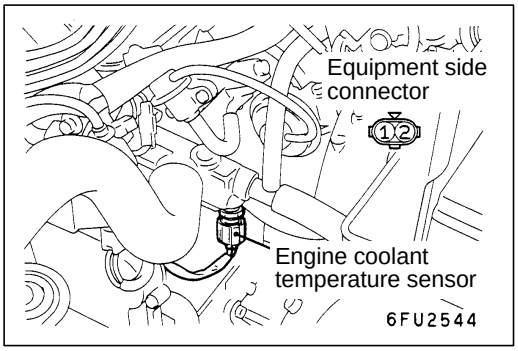

ENGINE COOLANT TEMPERATURE SENSOR CHECK

13100310150

Caution
Be careful not to touch the connector (resin section) with the tool when removing and installing.

1. Remove the engine coolant temperature sensor.

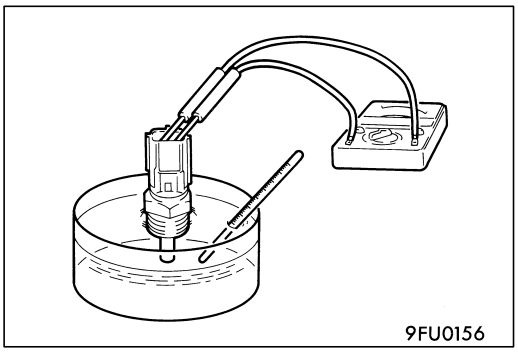

2. With temperature sensing portion of engine coolant temperature sensor immersed in hot water, check resistance.

   Standard value:
   2.1 – 2.7 kΩ (at 20°C)
   0.26 – 0.36 kΩ (at 80°C)

3. If the resistance deviates from the standard value greatly, replace the sensor.

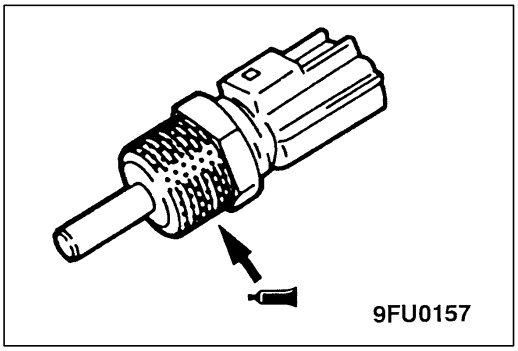

4. Apply sealant to threaded portion.

   Specified sealant:
   3M NUT Locking Part No.4171 or equivalent

5. Install the engine coolant temperature sensor and tighten it to the specified torque.

   Tightening torque: 29 Nm

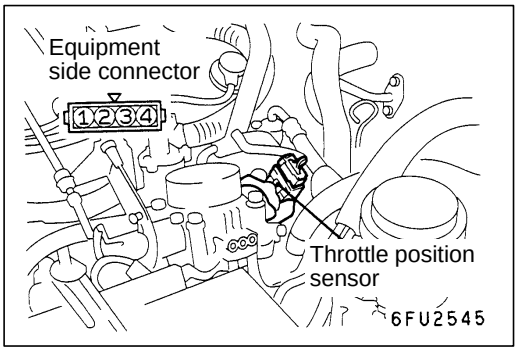

THROTTLE POSITION SENSOR CHECK 13100320177

1. Disconnect the throttle position sensor connector.
2. Measure the resistance between the throttle position sensor side connector terminal 1 and terminal 4.

   Standard value: 3.5–6.5 kΩ

3. Measure the resistance between the throttle position sensor side connector terminal 1 and terminal 3.

   Normal condition:

Throttle valve slowly open until fully open from the idle position	Changes smoothly in proportion to the opening angle of the throttle valve

4. If the resistance is outside the standard value, or if it doesn't change smoothly, replace the throttle position sensor.

   NOTE
   For the throttle position sensor adjustment procedure, refer to P.13A-78.

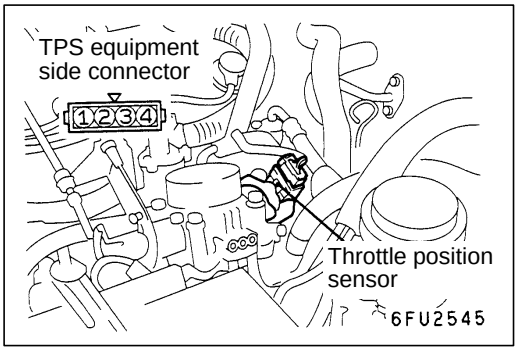

IDLE POSITION SWITCH CHECK 13100330187

1. Disconnect the throttle position sensor connector.
2. Check the continuity between the throttle position sensor connector side terminal 1 and terminal 2.

   Normal condition:

Accelerator pedal	Continuity
Depressed	Non-conductive (∞ Ω)
Released	Conductive (0 Ω)

3. If out of specification, replace the throttle position sensor.

   NOTE
   After replacement, the idle position switch and throttle position sensor should be adjusted. (Refer to P.13A-78.)

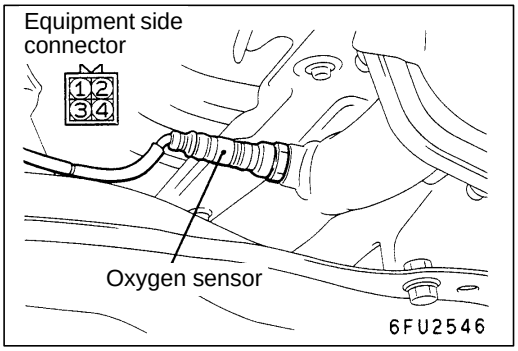

OXYGEN SENSOR CHECK

13100510116

1. Disconnect the oxygen sensor connector and connect the special tool (test harness) to the connector on the oxygen sensor side.
2. Make sure that there is continuity (7 – 40 Ω at 20°C) between terminal 1 (red clip of special tool) and terminal 3 (blue clip of special tool) on the oxygen sensor connector.

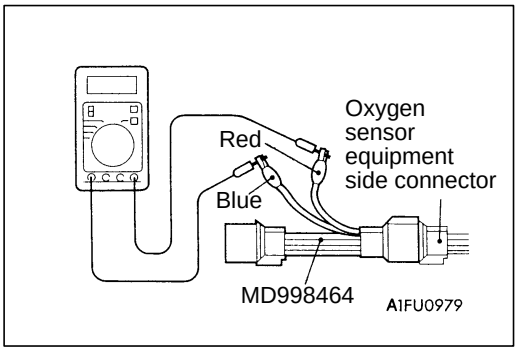

3. If there is no continuity, replace the oxygen sensor.
4. Warm up the engine until engine coolant is 80°C or higher.

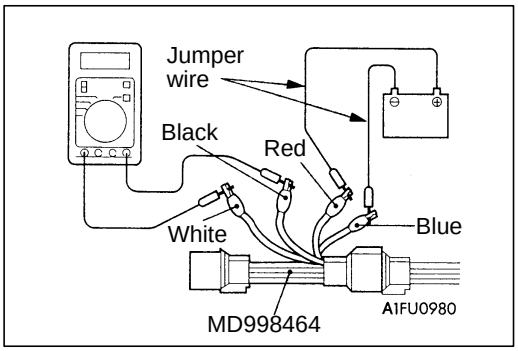

5. Use the jumper wire to connect terminal 1 (red clip) of the oxygen sensor connector to the battery (+) terminal and terminal 3 (blue clip) to the battery (–) terminal.

   Caution
   Be very careful when connecting the jumper wire; incorrect connection can damage the oxygen sensor.
6. Connect a digital voltage meter between terminal 2 (black clip) and terminal 4 (white clip).
7. While repeatedly racing the engine, measure the oxygen sensor output voltage.

   Standard value:

Engine	Oxygen sensor output voltage	Remarks
When racing the engine	0.6 – 1.0 V	If you make the air/fuel ratio rich by racing the engine repeatedly, a normal oxygen sensor will output a voltage of 0.6 – 1.0 V.

8. If the sensor is defective, replace the oxygen sensor.

   NOTE
   For removal and installation of the oxygen sensor, refer to GROUP 15 – Exhaust Pipe and Main Muffler.

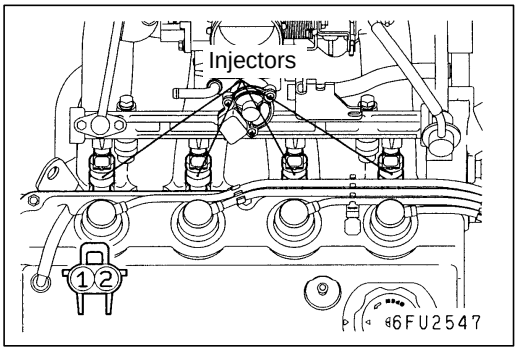

INJECTOR CHECK

13100520171

Measurement of Resistance between Terminals

1. Remove the injector connector.
2. Measure the resistance between terminals.

   Standard value: 13–16 Ω (at 20°C)

3. Install the injector connector.

Checking the Injection Condition

1. Following the steps below, bleed out the residual pressure within the fuel pipe line to prevent flow of the fuel. (Refer to P.13-84.)
2. Remove the injector.

3. Arrange the special tool (injector test set), adaptor, fuel pressure regulator and clips as shown in the illustration below.

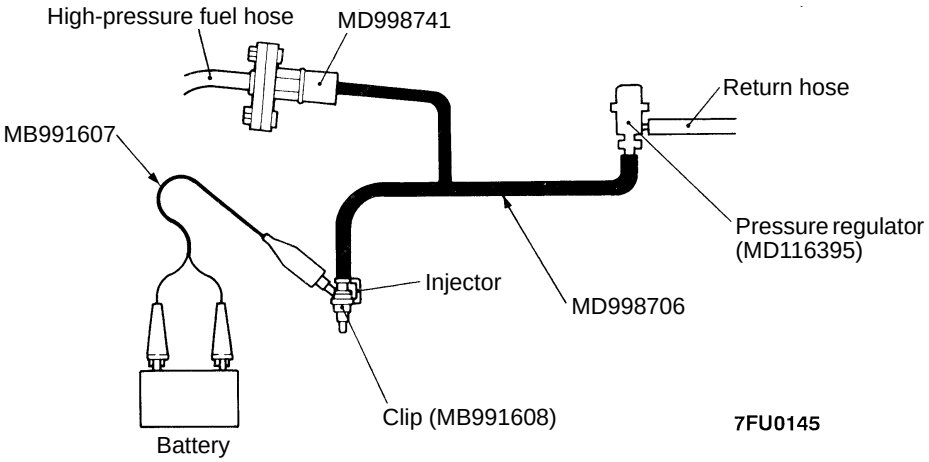

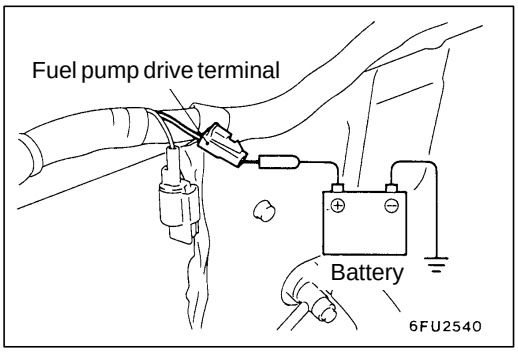

4. Apply battery voltage to the fuel pump drive terminal (black) and activate the fuel pump.

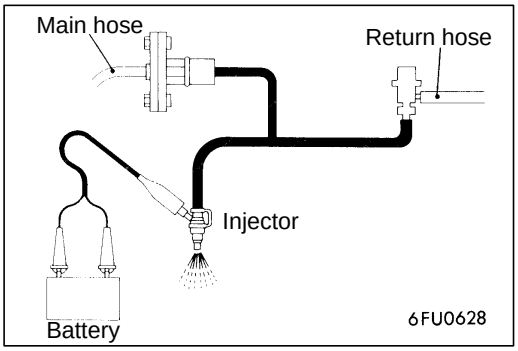

5. Activate the injector and check the atomized spray condition of the fuel.
   The condition can be considered satisfactory unless it is extremely poor.

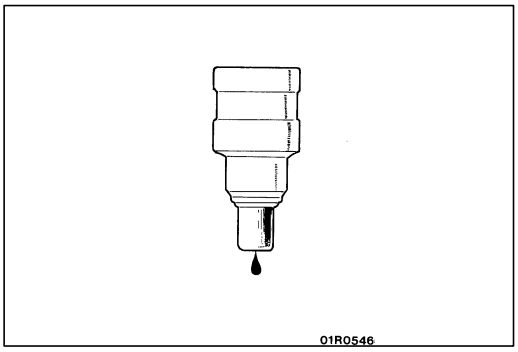

6. Stop the actuation of the injector, and check for leakage from the injector's nozzle.

   Standard value: 1 drop or less per minute

7. Activate the injector without activating the fuel pump; then, when the spray emission of fuel from the injector stops, disconnect the special tool and restore it to its original condition.

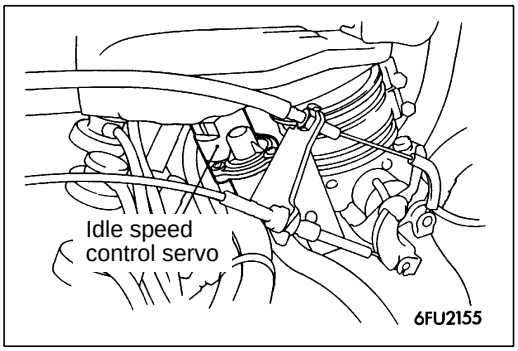

IDLE SPEED CONTROL (ISC) SERVO (STEPPER MOTOR) CHECK

13100540177

Checking the Operation Sound

1. Check that the engine coolant temperature is 20°C or below.

   NOTE
   Disconnecting the engine coolant temperature sensor connector and connecting the harness-side of the connector to another engine coolant temperature sensor that is at 20°C or below is also okay.

2. Check that the operation sound of the stepper motor can be heard after the ignition is switched ON. (but without starting the motor.)
3. If the operation sound cannot be heard, check the stepper motor's activation circuit.
   If the circuit is normal, it is probable that there is a malfunction of the stepper motor or of the engine control unit.

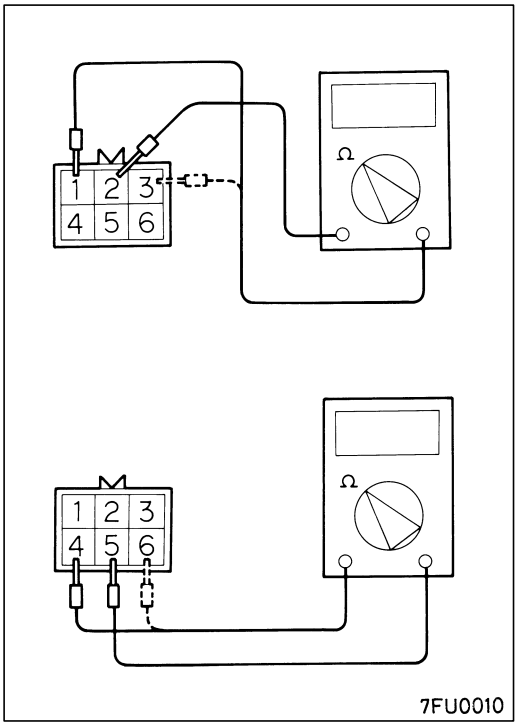

Checking the Coil Resistance

1. Disconnect the idle speed control servo connector and connect the special tool (test harness).
2. Measure the resistance between terminal 2 (white clip of the special tool) and either terminal 1 (red clip) or terminal 3 (blue clip) of the connector at the idle speed control servo side.

   Standard value: 28–33 Ω (at 20°C)

3. Measure the resistance between terminal 5 (green clip of the special tool) and either terminal 6 (yellow clip) or terminal 4 (black clip) of the connector at the idle speed control servo side.

   Standard value: 28–33 Ω (at 20°C)

PURGE CONTROL SOLENOID VALVE CHECK

13100560111

Refer to GROUP 17 – Emission Control System.

EGR CONTROL SOLENOID VALVE CHECK

13100570107

Refer to GROUP 17 – Emission Control System.

INJECTOR

13100710226

REMOVAL AND INSTALLATION

Pre-removal Operation
- Fuel Discharge Prevention (Refer to P.13A-84.)

Post-installation Operation
- Accelerator Cable Adjustment (Refer to GROUP 17 – On-vehicle Service.)
- Throttle Cable Adjustment (Refer to GROUP 23 – On-vehicle Service.)

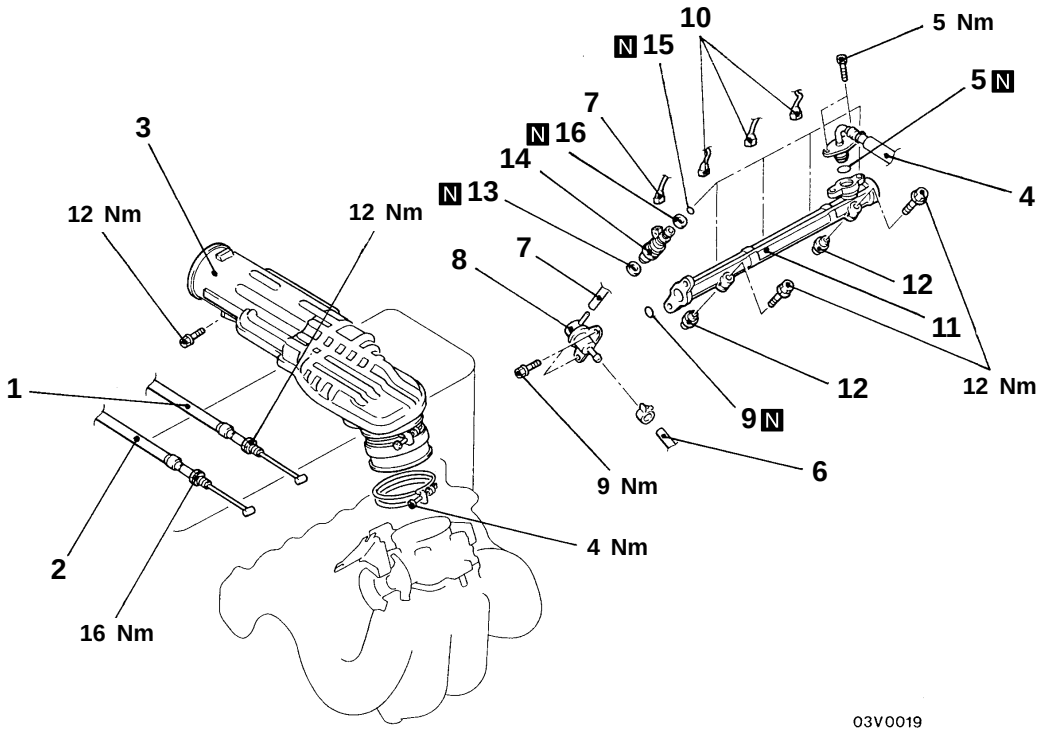

03V0019
00004973

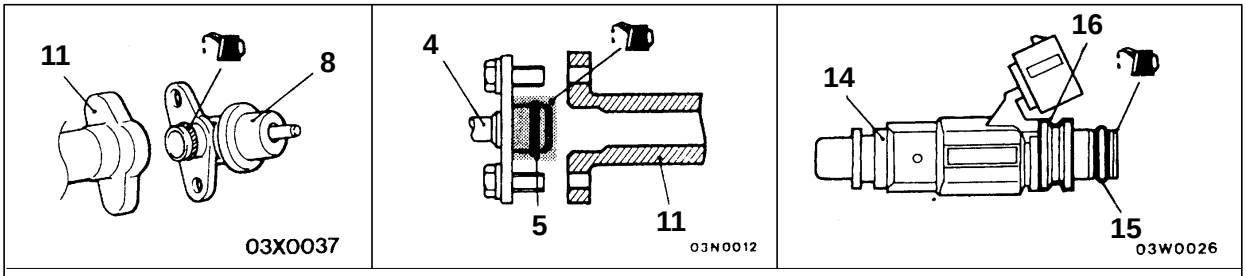

Engine oil

Removal steps

1. Accelerator cable connection
2. Throttle cable connection <A/T>
3. Resonance tank
▶A◀ 4. High-pressure fuel hose connection
5. O-ring
6. Fuel return hose connection
7. Vacuum hose connection
▶A◀ 8. Fuel pressure regulator
9. O-ring
10. Injector connectors
◀A▶ 11. Delivery pipe
12. Insulators
13. Insulators
◀A▶ ▶A◀ 14. Injectors
15. O-rings
16. Grommets

REMOVAL SERVICE POINT

◀A▶ DELIVERY PIPE/INJECTOR REMOVAL

Remove the delivery pipe (with the injectors attached to it).

Caution
Care must be taken, when removing the delivery pipe, not to drop the injector.

INSTALLATION SERVICE POINT

▶A◀ INJECTOR/FUEL PRESSURE REGULATOR/ HIGH-PRESSURE FUEL HOSE INSTALLATION

(1) Apply a drop of new engine oil to the O-ring.

Caution
Be sure not to let engine oil in the delivery pipe.

(2) While turning the injector, high-pressure fuel hose and fuel pressure regulator to the right and left, install the delivery pipe, while being careful not to damage the O-ring. After installing, check that the hose turns smoothly.
(3) If it does not turn smoothly, the O-ring may be trapped, remove the fuel pressure regulator and then re-insert it into the delivery pipe and check once again.
(4) Tighten the high-pressure fuel hose and fuel pressure regulator to the specified torque.

Tightening torque:
9 Nm (Fuel pressure regulator)
5 Nm (High-pressure fuel hose)

THROTTLE BODY

13100770200

REMOVAL AND INSTALLATION

Pre-removal Operation
- Engine Coolant Draining

Post-installation Operation
- Accelerator Cable Adjustment (Refer to GROUP 17 – On-vehicle Service.)
- Throttle Cable Adjustment (Refer to GROUP 23 – On-vehicle Service.)
- Engine Coolant Supplying

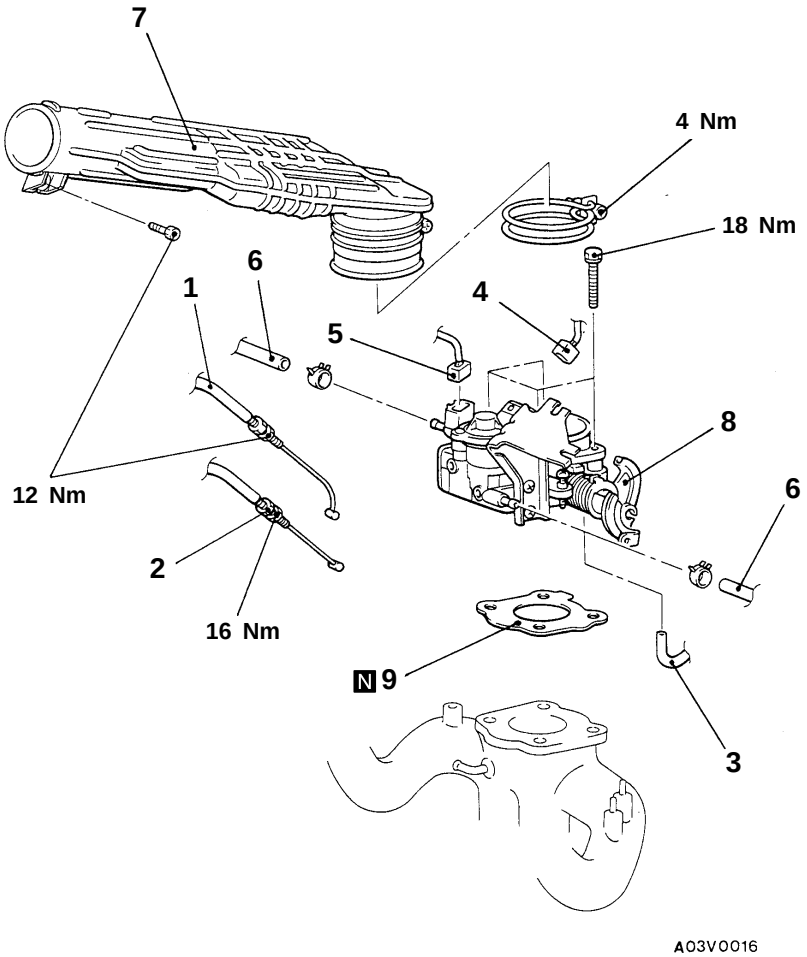

Removal steps

1. Accelerator cable connection
2. Throttle cable connection
3. Vacuum hose connection
4. Throttle position sensor connector
5. Idle speed control motor connector
6. Water hose connection
7. Resonance tank
8. Throttle body
9. Gasket

DISASSEMBLY AND REASSEMBLY

13100970204

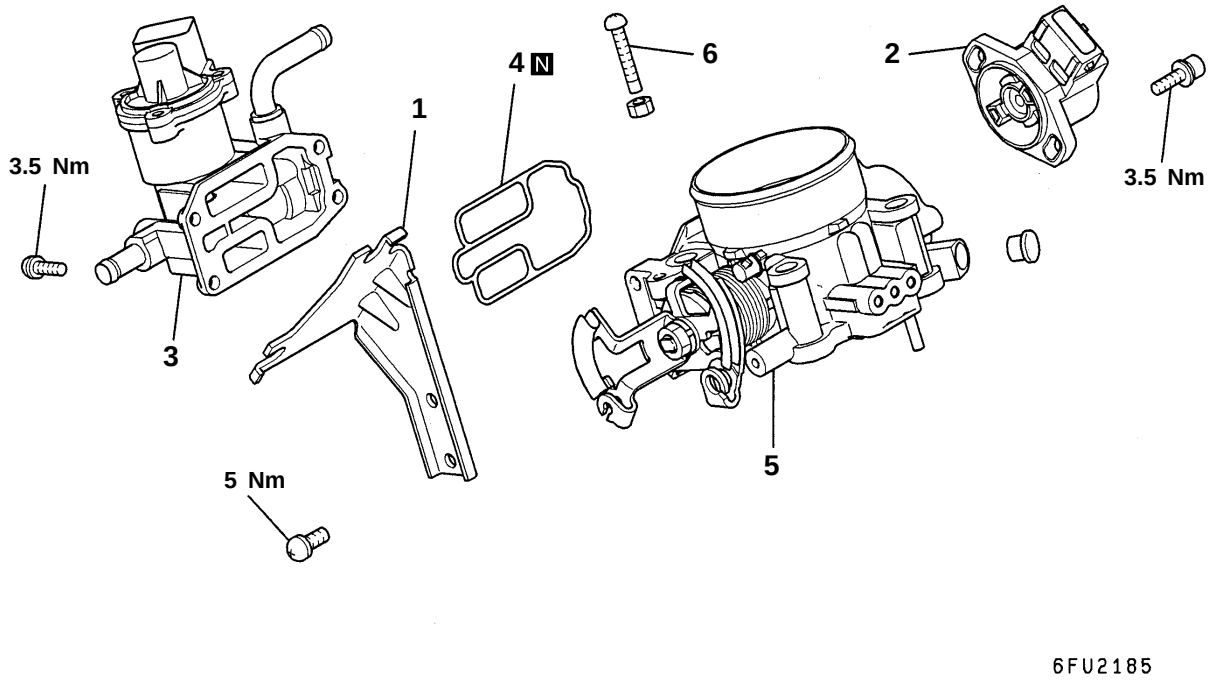

Disassembly steps

1. Bracket
▶A◀ 2. Throttle position sensor
3. Idle speed control body assembly
4. O-ring
5. Throttle body
6. Fixed SAS

NOTE
1. The fixed SAS is correctly adjusted at the factory and should not be removed.
2. If the fixed SAS should happen to have been removed, carry out fixed SAS adjustment. (Refer to page 13A-79.)

CLEANING THROTTLE BODY PARTS

1. Clean all throttle body parts.
   Do not use solvent to clean the following parts:
   - Throttle position sensor
   - Accelerator pedal position sensor
   - Idle speed control body assembly

   If these parts are immersed in solvent, their insulation will deteriorate.
   Wipe them with cloth only.
2. Check if the vacuum port or passage is clogged. Use compressed air to clean the vacuum passage.

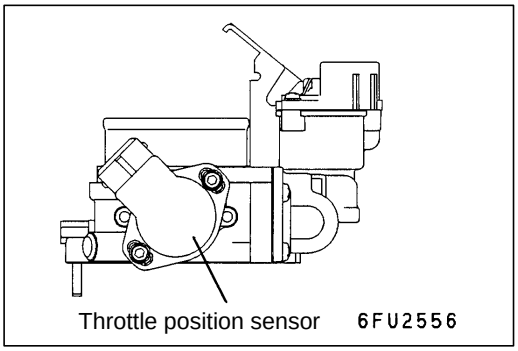

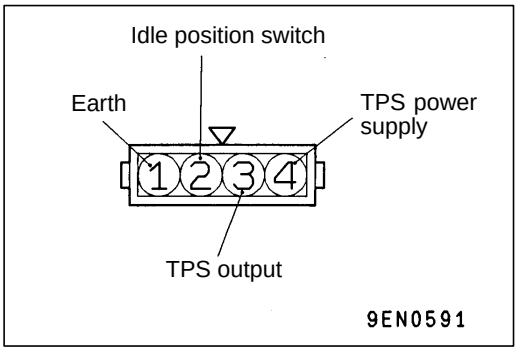

REASSEMBLY SERVICE POINT

▶A◀ THROTTLE POSITION SENSOR (TPS) INSTALLATION

1. Install the TPS so that it faces as shown in the illustration, and then tighten it with the screw.
2. Connect a multimeter between terminal (4) (TPS power supply) and terminal (3) (TPS output) of the TPS connector, and check that the resistance increases gradually as the throttle valve is opened slowly to the fully-open position.
3. Check the continuity between terminal (2) (idle position switch) and terminal (1) (earth) of the TPS connector when the throttle valve is fully closed and fully open.

   Normal condition:

Throttle valve condition	Continuity
Fully closed	Continuity
Fully open	No continuity

   If there is no continuity when the throttle valve is fully closed, turn the TPS body anti-clockwise and then check again.
4. If there is an abnormality, replace the TPS.

GROUP 13A
MULTIPOINT FUEL INJECTION (MPI)

GENERAL

OUTLINE OF CHANGES

- The 76-pin type engine-ECU has been adopted.
- The sequential fuel injection system has been adopted.

GENERAL INFORMATION

Items		Specifications
Engine-ECU	Identification model No.	E2T69171 <4G63> E2T69172 <4G63 – Vehicles with immobilizer system> E2T69173 <4G64> E2T69174 <4G64 – Vehicles with immobilizer system>

TROUBLESHOOTING

INSPECTION CHART FOR DIAGNOSIS CODES

Code No.	Diagnosis item	Reference page
11	Oxygen sensor system	13A-3
12	Air flow sensor system	13A-4
13	Intake air temperature sensor system	13A-4
14	Throttle position sensor system	13A-5
21	Engine coolant temperature sensor system	13A-6
22	Crank angle sensor system	13A-7
23	Top dead centre sensor system	13A-8
24	Vehicle speed sensor system	13A-9
25	Barometric pressure sensor system	13A-10
36*	Ignition timing adjustment signal system	13A-11
41	Injector system	13A-11
54	Immobilizer system	13A-12

NOTE
*: Malfunction code No. 36 is not memorized.

INSPECTION PROCEDURE FOR DIAGNOSIS CODES

Code No. 11 Oxygen sensor system	Probable cause
Range of Check • 3 minutes have passed after engine was started. • Engine coolant temperature is approx. 80°C or more. • Intake air temperature is 20–50°C. • Engine speed is approx. 2,000–3,000 r/min • Vehicle is moving at constant speed on a flat, level road surface Set conditions • The oxygen sensor output voltage is around 0.6 V for 30 seconds (does not cross 0.6 V for 30 seconds). • When the range of check operations given above which accompany starting of the engine are carried out four time in succession, a problem is detected after each operation.	• Malfunction of the oxygen sensor • Improper connector contact, open circuit or short-circuited harness wire • Malfunction of the engine-ECU

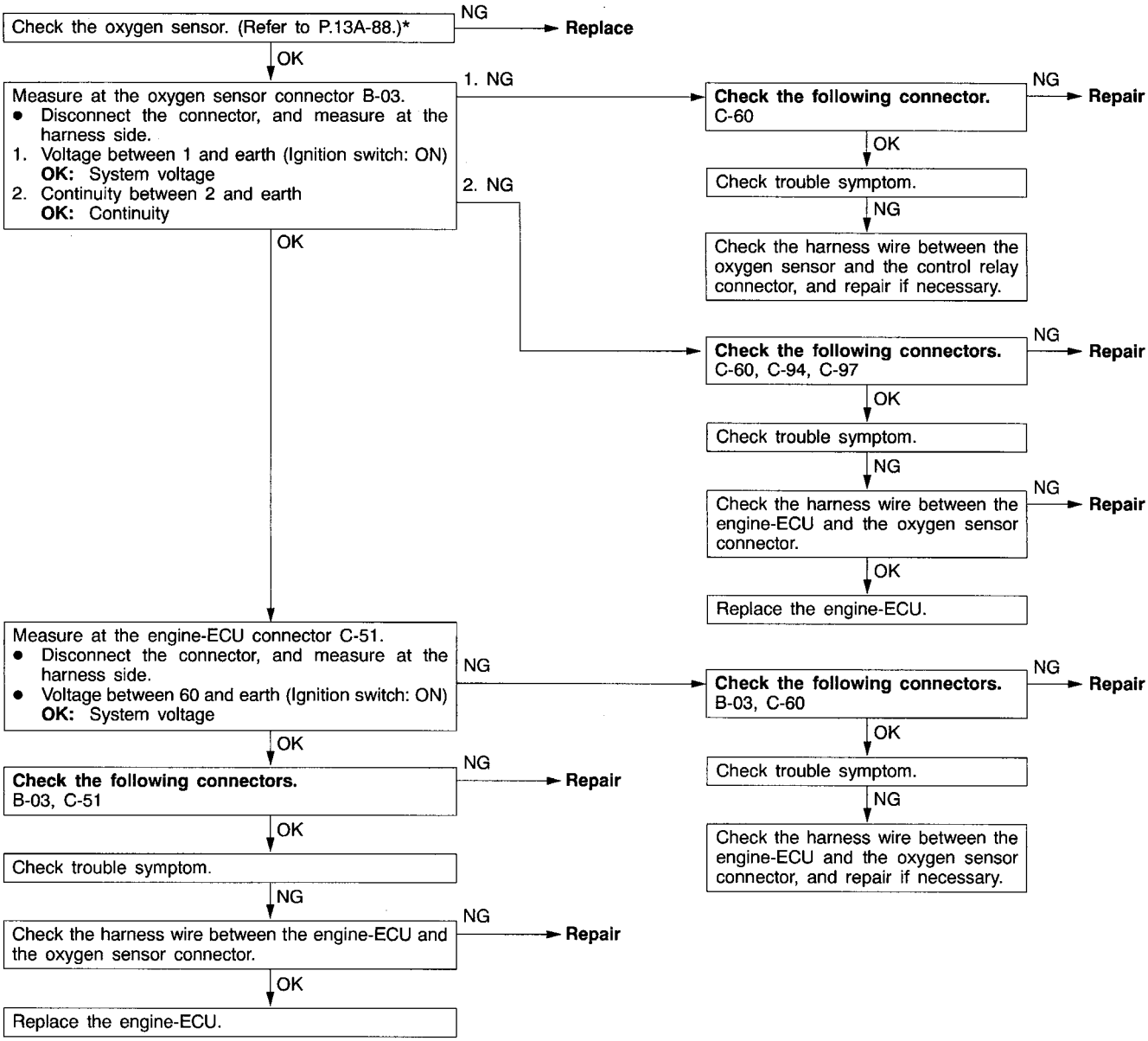

*: Refer to '97 L200 Workshop Manual (Pub. No. PWTE96E1).

Code No. 12 Air flow sensor system	Probable cause
Range of Check • Engine speed is 500 r/min or more. Set conditions • Sensor output frequency is 3 Hz or less for 4 seconds.	• Malfunction of the air flow sensor • Improper connector contact, open circuit or short-circuited harness wire of the air flow sensor • Malfunction of the engine-ECU

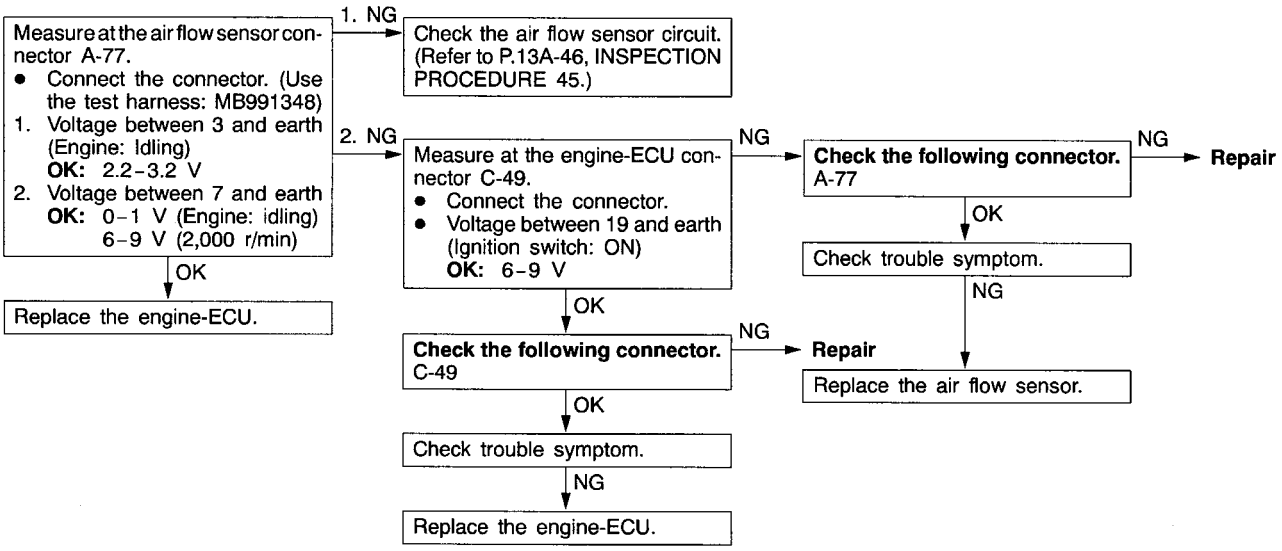

Code No. 13 Intake air temperature sensor system	Probable cause
Range of Check • Ignition switch: ON • Excluding 60 seconds after the ignition switch is turned to ON or immediately after the engine starts. Set conditions • Sensor output voltage is 4.6 V or more (corresponding to an intake air temperature of -45°C or less) for 4 seconds. or • Sensor output voltage is 0.2V or less (corresponding to an intake air temperature of 125°C or more) for 4 seconds.	• Malfunction of the intake air temperature sensor • Improper connector contact, open circuit or short-circuited harness wire of the intake air temperature sensor circuit • Malfunction of the engine-ECU

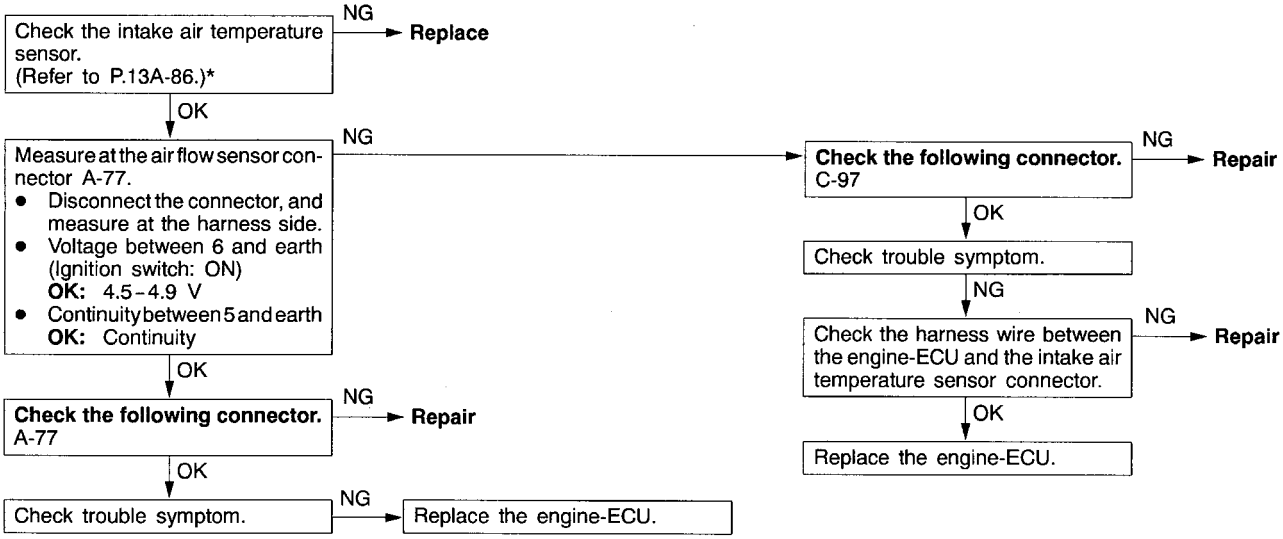

*: Refer to '97 L200 Workshop Manual (Pub. No. PWTE96E1).

Code No. 14 Throttle position sensor system	Probable cause
Range of Check • Ignition switch: ON • Excluding 60 seconds after the ignition switch is turned to ON or immediately after the engine starts. Set conditions • When the idle position switch is ON, the sensor output voltage is 2 V or more for 4 seconds. or • The sensor output voltage is 0.2 V or less for 4 seconds.	• Malfunction of the throttle position sensor or maladjustment • Improper connector contact, open circuit or short-circuited harness wire of the throttle position sensor circuit • Improper "ON" state of idle position switch • Short circuit of the idle position switch signal line • Malfunction of the engine-ECU

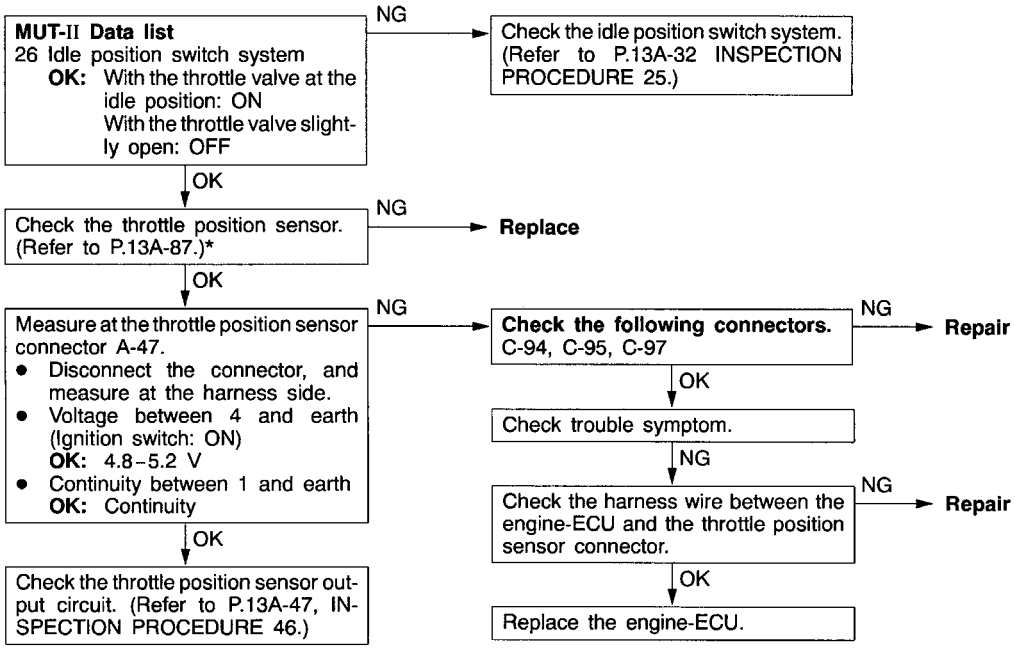

*: Refer to '97 L200 Workshop Manual (Pub. No. PWTE96E1).

Code No. 21 Engine coolant temperature sensor system	Probable cause
Range of Check • Ignition switch: ON • Excluding 60 seconds after the ignition switch is turned to ON or immediately after the engine starts. Set conditions • Sensor output voltage is 4.6 V or more (corresponding to an engine coolant temperature of -45°C or less) for 4 seconds. or • Sensor output voltage is 0.1 V or less (corresponding to an engine coolant temperature of 140°C or more) for 4 seconds.	• Malfunction of the engine coolant temperature sensor • Improper connector contact, open circuit or short-circuited harness wire of the engine coolant temperature sensor circuit • Malfunction of the engine-ECU
Range of Check • Ignition switch: ON • Engine speed is approx. 50 r/min or more Set conditions • The sensor output voltage increases from 1.6 V or less (corresponding to an engine coolant temperature of 40°C or more) to 1.6 V or more (corresponding to an engine coolant temperature of 40°C or less). • After this, the sensor output voltage is 1.6 V or more for 5 minutes.	

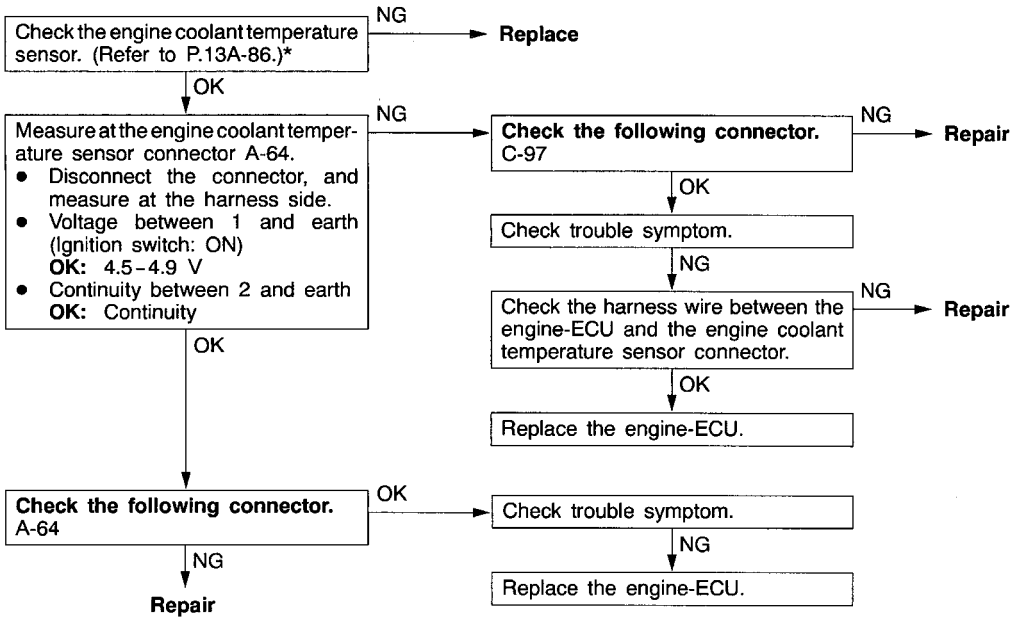

*: Refer to '97 L200 Workshop Manual (Pub. No. PWTE96E1).

Code No. 22 Crank angle sensor system	Probable cause
Range of Check • Engine is cranking. Set conditions • Sensor output voltage does not change for 4 seconds (no pulse signal input.)	• Malfunction of the crank angle sensor • Improper connector contact, open circuit or short-circuited harness wire of the crank angle sensor • Malfunction of the engine-ECU

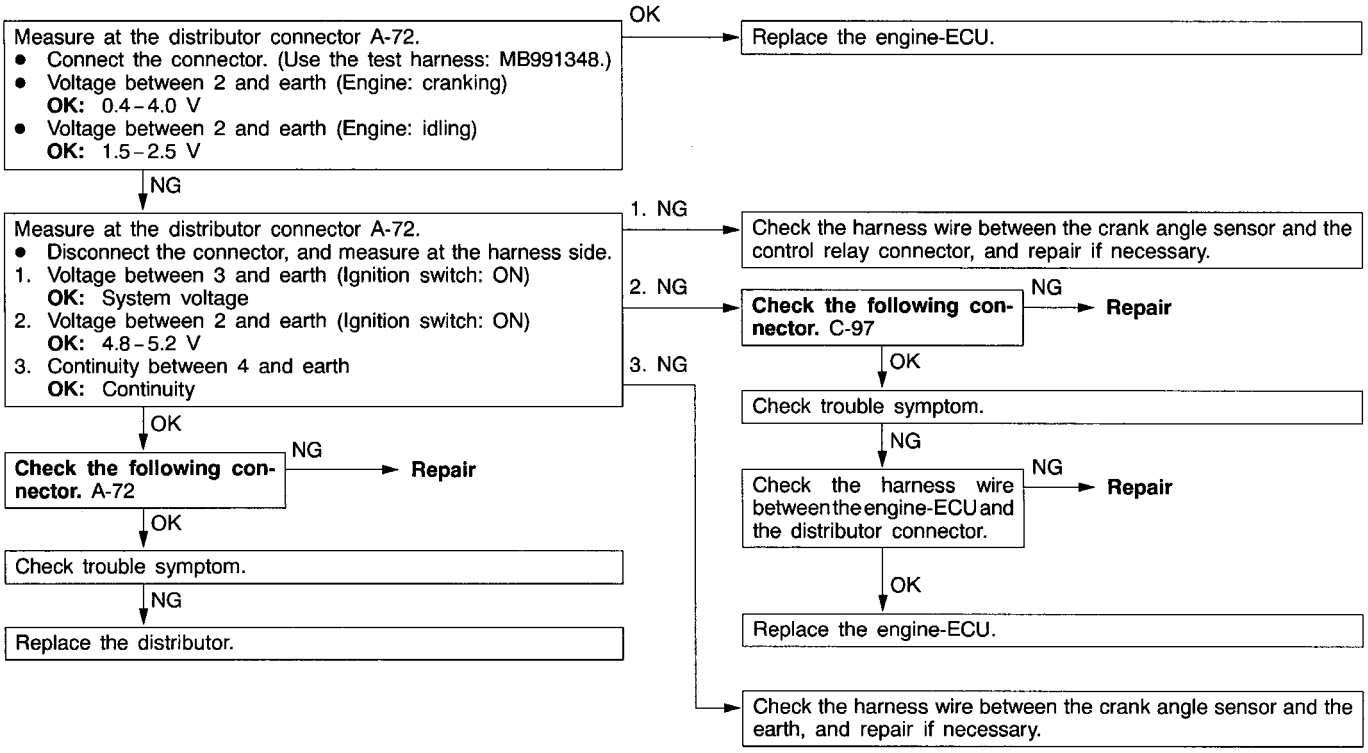

Code No. 23 Top dead centre sensor system	Probable cause
Range of Check • Ignition switch: ON • Engine speed is approx. 50 r/min or more. Set conditions • Sensor output voltage does not change for 4 seconds (no pulse signal input.)	• Malfunction of the camshaft position sensor • Improper connector contact, open circuit or short-circuited harness wire of the top dead centre sensor circuit • Malfunction of the engine-ECU

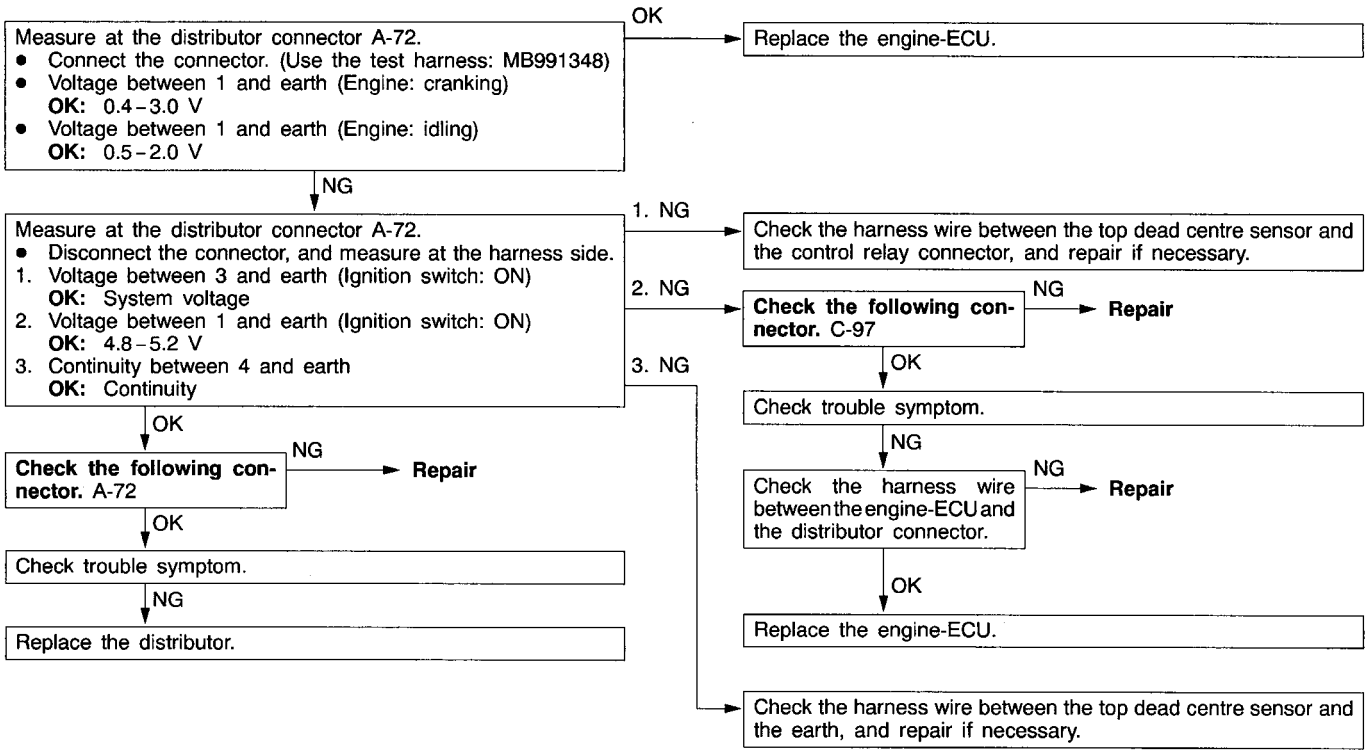

Code No. 24 Vehicles speed sensor system	Probable cause
Range of check • Ignition switch: ON • Excluding 60 seconds after the ignition switch is turned to ON or immediately after the engine starts. • Idle position switch: OFF • Engine speed is 3,000 r/min or more. • Driving under high engine load conditions. Set conditions • Sensor output voltage does not change for 4 seconds (no pulse signal input).	• Malfunction of the vehicle speed sensor • Improper connector contact, open circuit or short-circuited harness wire of the vehicle speed sensor circuit • Malfunction of the engine-ECU

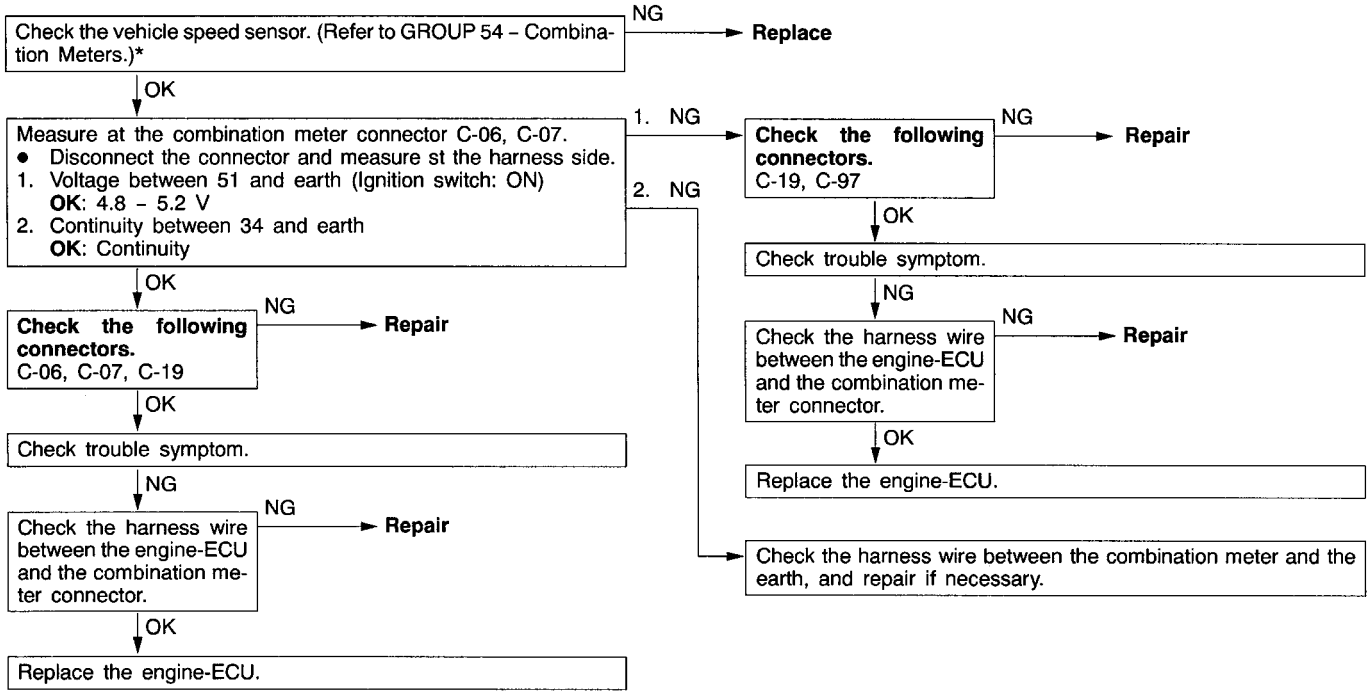

*: Refer to '97 L200 Workshop Manual (Pub. No. PWTE96E1).

Code No. 25 Barometric pressure sensor system	Probable cause
Range of Check • Ignition switch: ON • Excluding 60 seconds after the ignition switch is turned to ON or immediately after the engine starts. • Battery voltage is 8 V or more. Set conditions • Sensor output voltage is 4.5 V or more (corresponding to a barometric pressure of 114 kPa or more) for 4 seconds. or • Sensor output voltage is 0.2 V or less (corresponding to a barometric pressure of 5.33 kPa or less) for 4 seconds.	• Malfunction of the barometric pressure sensor • Improper connector contact, open circuit or short-circuited harness wire of the barometric pressure sensor circuit • Malfunction of the engine-ECU

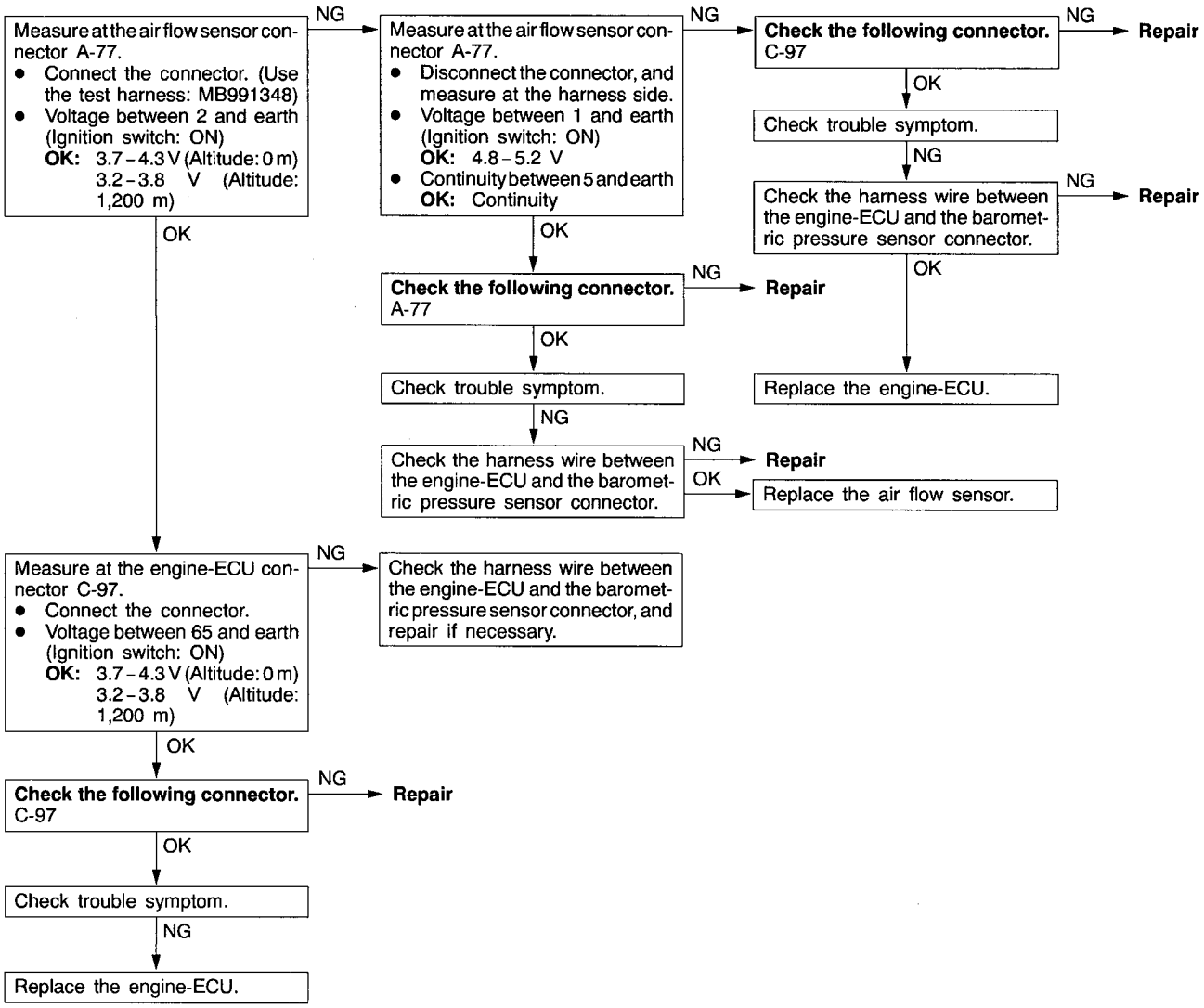

Code No. 36 Ignition timing adjustment signal system	Probable cause
Range of Check • Ignition switch: ON Set conditions • The ignition timing adjusting signal wire is shorted to the earth.	• Short circuit to earth of the ignition timing adjustment signal line • Malfunction of the engine-ECU

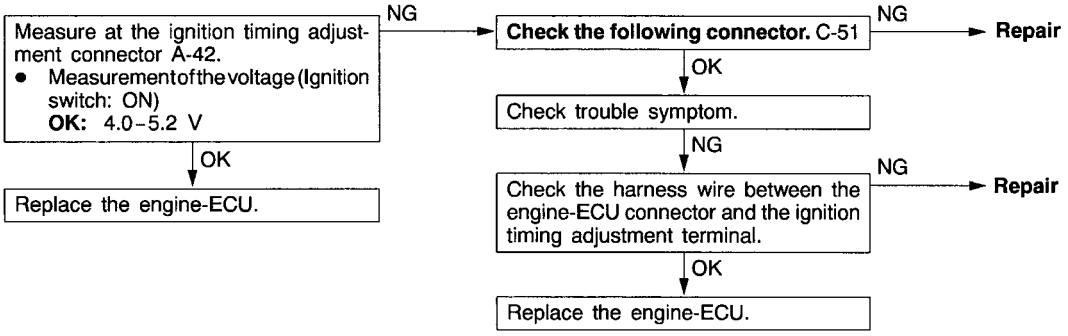

Code No. 41 Injector system	Probable cause
Range of Check • Engine speed is approx. 50-1,000 r/min • The throttle position sensor output voltage is 1.15 V or less. • Actuator test by MUT-II is not carried out. Set conditions • Surge voltage of injector coil is not detected for 4 seconds.	• Malfunction of the injector • Improper connector contact, open circuit or short-circuited harness wire of the injector circuit • Malfunction of the engine-ECU

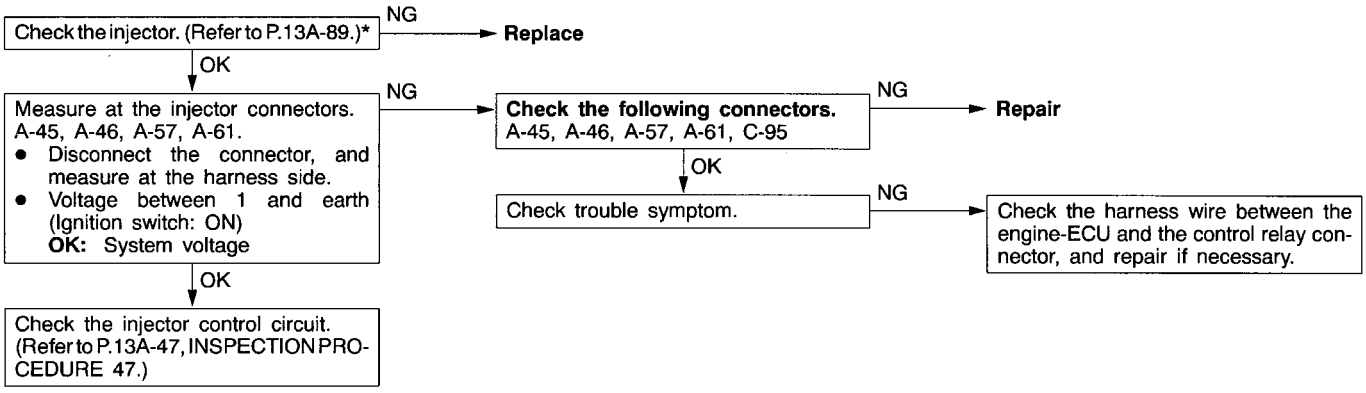

*: Refer to '97 L200 Workshop Manual (Pub. No. PWTE96E1).

Code No.54 Immobilizer system	Probable cause
Range of Check • Ignition switch: ON Set Conditions • Improper communication between the engine-ECU and immobilizer-ECU	• Radio interference of ID codes • Incorrect ID code • Malfunction of harness or connector • Malfunction of immobilizer-ECU • Malfunction of engine-ECU

NOTE
(1) If the ignition switches are close each other when starting the engine, radio interference may cause this code to be displayed.
(2) This code may be displayed when registering the key ID code.

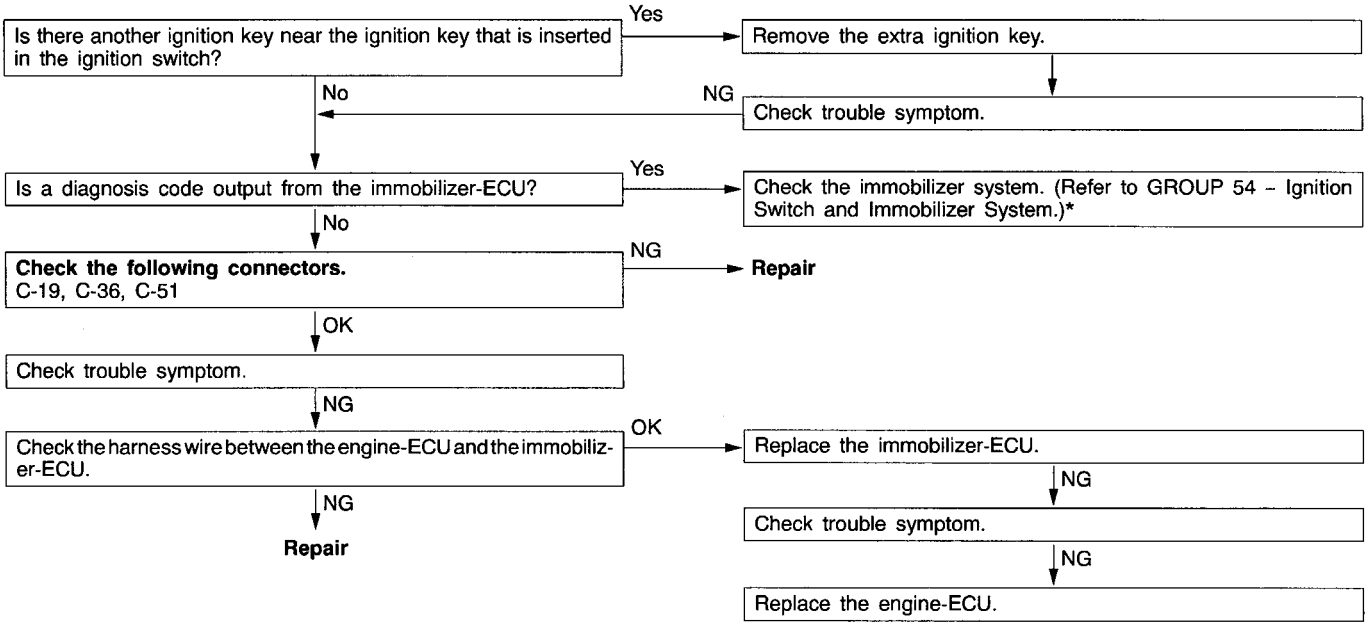

*: Refer to '97 L200 Workshop Manual (Pub. No. PWTE96E1).

INSPECTION CHART FOR TROUBLE SYMPTOMS

Trouble symptom		Inspection procedure No.	Reference page
Communication with MUT-II is impossible.	Communication with all systems is not possible.	1	13A-15
	Communication with engine-ECU only is not possible.	2	13A-16
Engine warning lamp and related parts	The engine warning lamp does not illuminate right after the ignition switch is turned to the ON position.	3	13A-17
	The engine warning lamp remains illuminating and never goes out.	4	13A-17
Starting	No initial combustion (starting impossible)	5	13A-18
	Initial combustion but no complete combustion (starting impossible)	6	13A-19
	Long time to start (improper starting)	7	13A-20
Idling stability (Improper idling)	Unstable idling (Rough idling, hunting)	8	13A-21
	Idling speed is high. (Improper idling speed)	9	13A-22
	Idling speed is low. (Improper idling speed)	10	13A-23
Idling stability (Engine stalls)	When the engine is cold, it stalls at idling. (Die out)	11	13A-24
	When the engine becomes hot, it stalls at idling. (Die out)	12	13A-25
	The engine stalls when starting the car. (Pass out)	13	13A-26
	The engine stalls when decelerating.	14	13A-26
Driving	Hesitation, sag or stumble	15	13A-27
	The feeling of impact or vibration when accelerating	16	13A-27
	The feeling of impact or vibration when decelerating	17	13A-28
	Poor acceleration	18	13A-28
	Surge	19	13A-29
	Knocking	20	13A-29
Dieseling		21	13A-29
Too high CO and HC concentration when idling		22	13A-30

PROBLEM SYMPTOMS TABLE (FOR YOUR INFORMATION)

Items		Symptom
Starting	Won't start	The starter is used to crank the engine, but there is no combustion within the cylinders, and the engine won't start.
	Fires up and dies	There is combustion within the cylinders, but then the engine soon stalls.
	Hard starting	Engine starts after cranking a while.
Idling stability	Hunting	Engine speed doesn't remain constant; changes at idle.
	Rough idle	Usually, a judgement can be based upon the movement of the tachometer pointer, and the vibration transmitted to the steering wheel, shift lever, body, etc. This is called rough idle.
	Incorrect idle speed	The engine doesn't idle at the usual correct speed.
	Engine stall (Die out)	The engine stalls when the foot is taken from the accelerator pedal, regardless of whether the vehicles is moving or not.
	Engine stall (Pass out)	The engine stalls when the accelerator pedal is depressed or while it is being used.
Driving	Hesitation Sag	"Hesitation" is the delay in response of the vehicle speed (engine speed) that occurs when the accelerator is depressed in order to accelerate from the speed at which the vehicle is now traveling, or a temporary drop in vehicle speed (engine speed) during such acceleration. Serious hesitation is called "sag". (Refer to Fig. 1)
	Poor acceleration	Poor acceleration is inability to obtain an acceleration corresponding to the degree of throttle opening, even though acceleration is smooth, or the inability to reach maximum speed.
	Stumble	Engine speed increase is delayed when the accelerator pedal is initially depressed for acceleration. (Refer to Fig. 2)
	Shock	The feeling of a comparatively large impact or vibration when the engine is accelerated or decelerated.
	Surge	This is repeated surging ahead during constant speed travel or during variable speed travel.
	Knocking	A sharp sound like a hammer striking the cylinder walls during driving and which adversely affects driving.
Stopping	Run on ("Dieseling")	The condition in which the engine continues to run after the ignition switch is turned to OFF. Also called "Dieseling".

Fig. 1

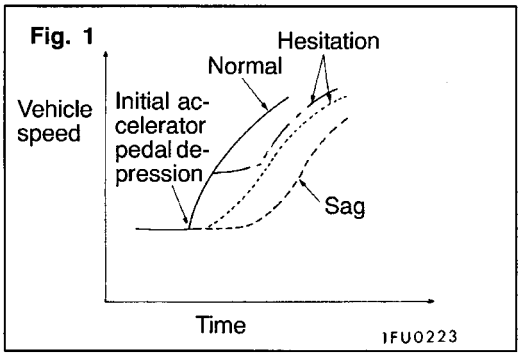

Fig. 2

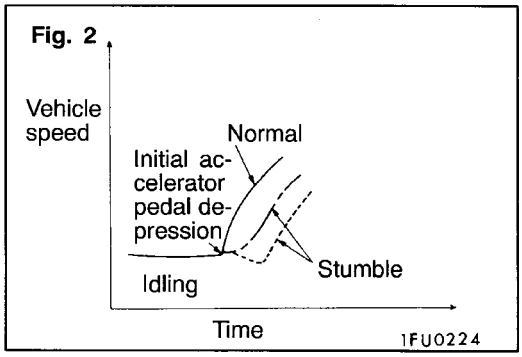

INSPECTION PROCEDURE FOR TROUBLE SYMPTOMS

INSPECTION PROCEDURE 1

Communication with MUT-II is not possible. (Communication with all systems is not possible.)	Probable cause
The cause is probably a defect in the power supply system (including earth) for the diagnosis line.	• Malfunction of the connector • Malfunction of the harness wire

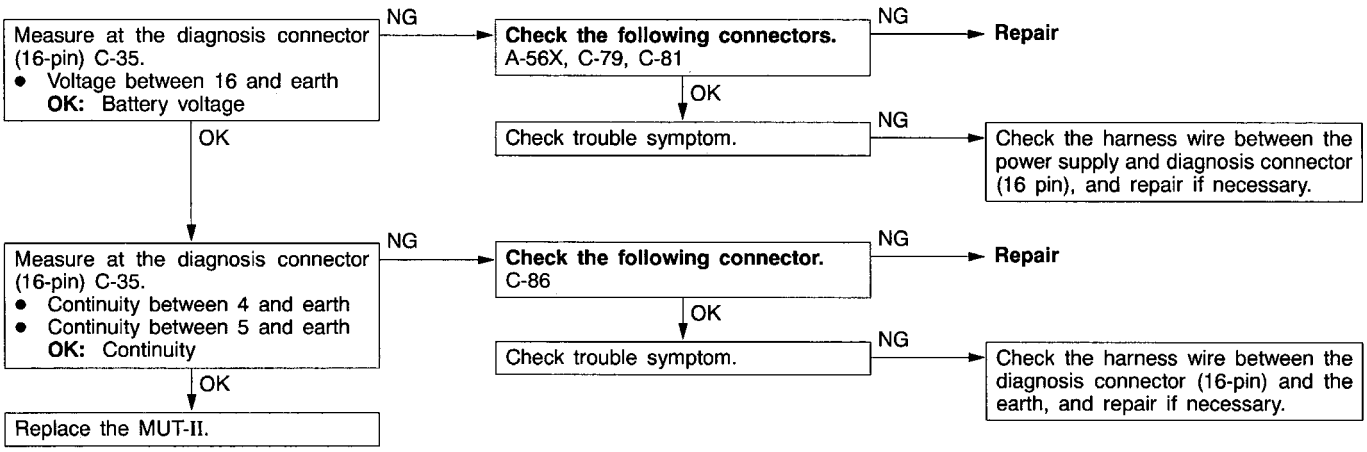

INSPECTION PROCEDURE 2

MUT-II communication with engine-ECU is impossible.	Probable cause
One of the following causes may be suspected. • No power supply to engine-ECU. • Defective earth circuit of engine-ECU. • Defective engine-ECU. • Improper communication line between engine-ECU and MUT-II	<Vehicles without immobilizer system> • Malfunction of engine-ECU power supply circuit • Malfunction of engine-ECU • Open circuit between engine-ECU and diagnosis connector <Vehicles with immobilizer system> • Malfunction of engine-ECU power supply circuit • Malfunction of engine-ECU • Malfunction of immobilizer-ECU • Open circuit between immobilizer-ECU and diagnosis connector • Open circuit between engine-ECU and immobilizer-ECU

<Vehicles without immobilizer system>

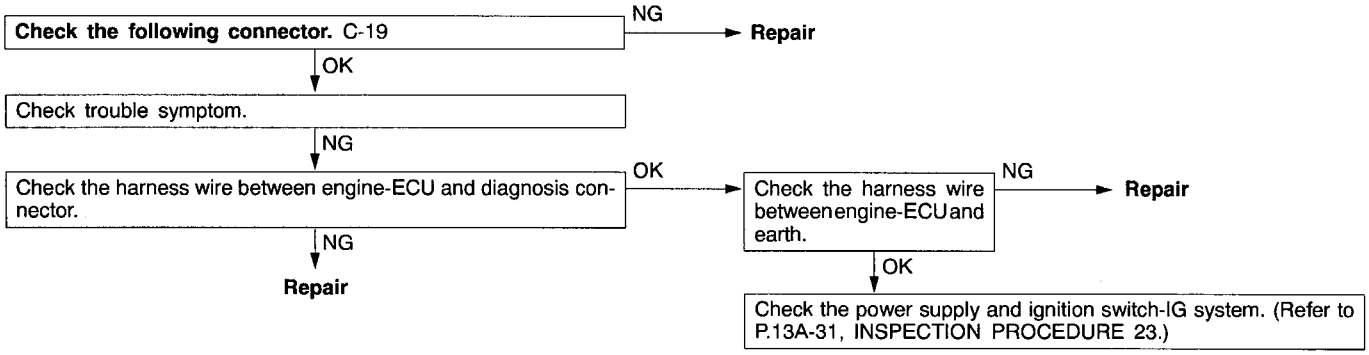

<Vehicles with immobilizer system>

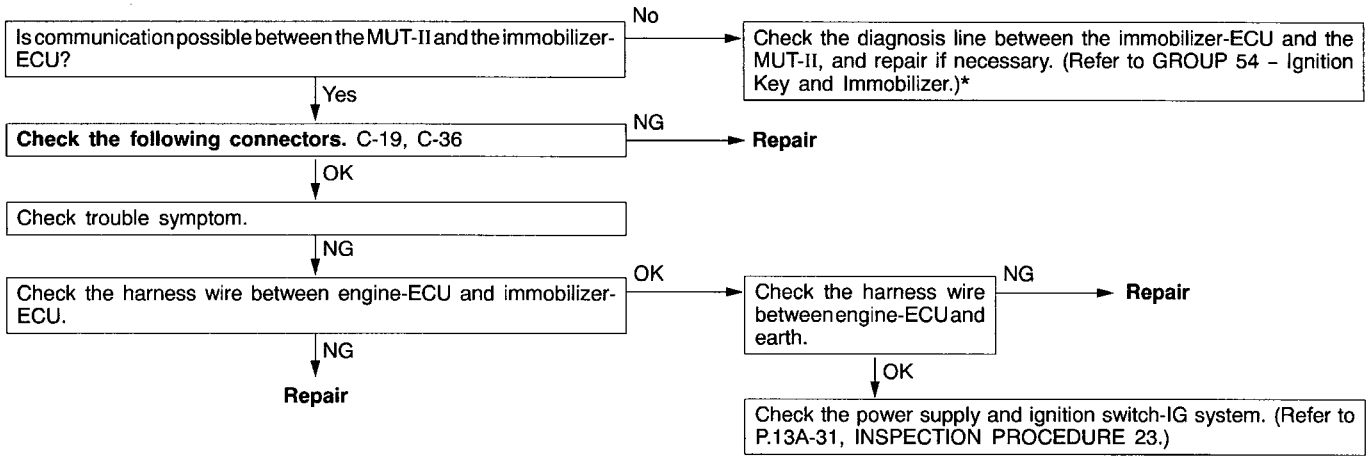

*: Refer to '97 L200 Workshop Manual (Pub. No. PWTE96E1).

INSPECTION PROCEDURE 3

The engine warning lamp does not illuminate right after the ignition switch is turned to the ON position.	Probable cause
Because there is a burnt-out bulb, the engine-ECU causes the engine warning lamp to illuminate for five seconds immediately after the ignition switch is turned to ON. If the engine warning lamp does not illuminate immediately after the ignition switch is turned to ON, one of the malfunctions listed at right has probably occurred.	• Burnt-out bulb • Defective warning lamp circuit • Malfunction of the engine-ECU

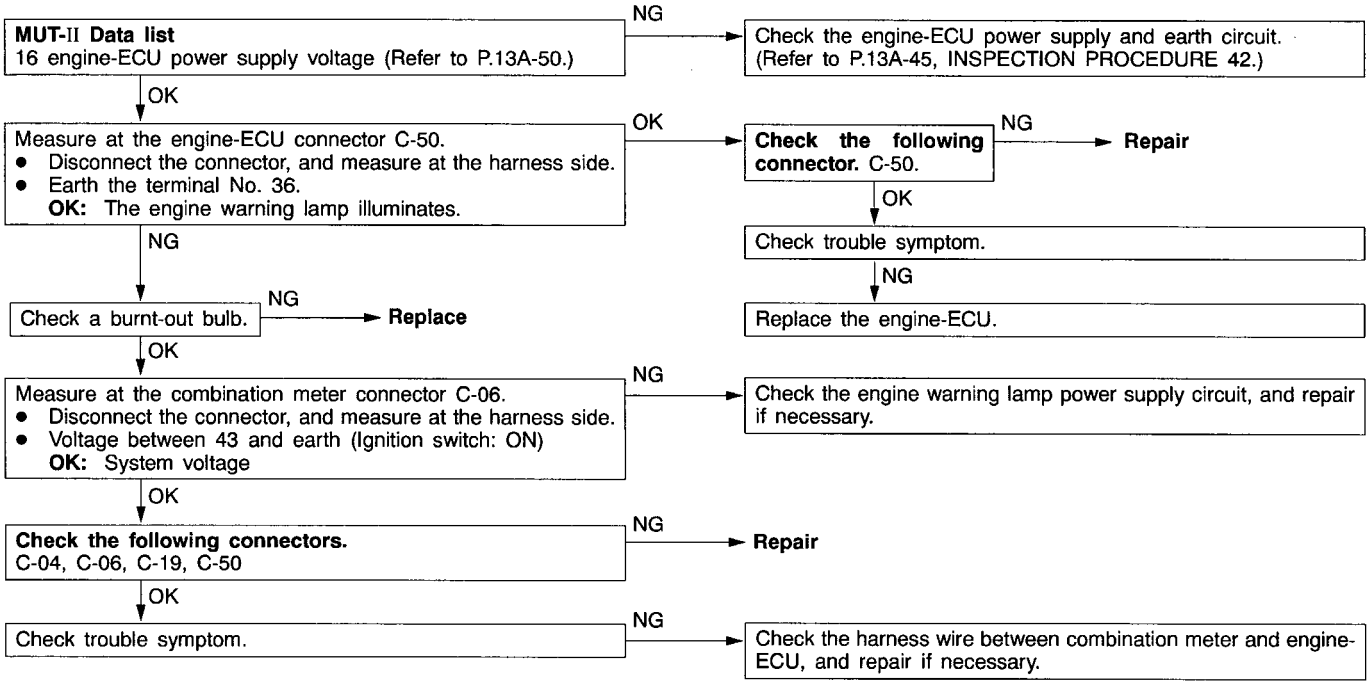

INSPECTION PROCEDURE 4

The engine warning lamp remains illuminating and never goes out.	Probable cause
In cases such as the above, the cause is probably that the engine-ECU is detecting a problem in a sensor or actuator, or that one of the malfunctions listed at right has occurred.	• Short-circuit between the engine warning lamp and engine-ECU • Malfunction of the engine-ECU

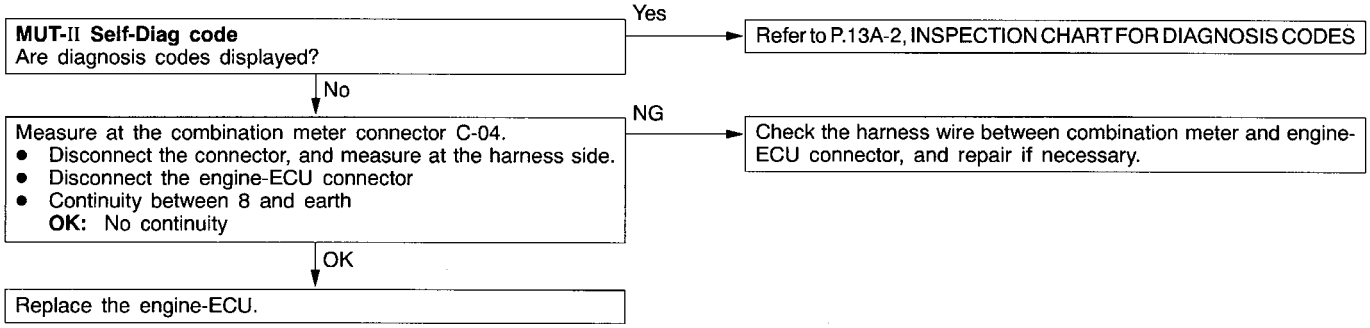

INSPECTION PROCEDURE 5

No initial combustion (starting impossible)	Probable cause
In cases such as the above, the cause is probably that a spark plug is defective, or that the supply of fuel to the combustion chamber is defective. In addition, foreign materials (water, kerosene, etc.) may be mixed with the fuel.	• Malfunction of the ignition system • Malfunction of the fuel pump system • Malfunction of the injectors • Malfunction of the engine-ECU • Malfunction of the immobilizer system <only vehicles with immobilizer system> • Foreign materials in fuel

Check battery voltage when cranking.
OK: 8 V or higher
→ NG: Check the battery. (Refer to GROUP 54 – Battery.)*
↓ OK

Is immobilizer-ECU diagnosis code displayed? <only vehicles with immobilizer system>
→ Yes: Check the immobilizer. (Refer to GROUP 54 – Ignition Key and Immobilizer.)*
↓ No

MUT-II: Inspection of no initial combustion. (Refer to P.13A-39, INSPECTION PROCEDURE 34.)
↓ OK

Can any sound be heard from the injectors when cranking?
→ NG: Check the injector system. (Refer to P.13A-11, INSPECTION PROCEDURE FOR DIAGNOSIS CODE 41.)
↓ OK

Ignition system: Inspection of no initial combustion. (Refer to P.13A-39, INSPECTION PROCEDURE 35.)
↓ OK

Check the following items.
- Check the ignition coil, spark plugs, spark plug cables. (Refer to GROUP 16 – On-vehicle service.)*
- Check if the injectors are clogged.
- Check if foreign materials (water, alcohol, etc.) got into fuel.
- Check the compression pressure.
- Check the immobilizer system. (Refer to GROUP 54 – Ignition Key and Immobilizer.)* <only vehicles with immobilizer system>

*: Refer to '97 L200 Workshop Manual (Pub. No. PWTE96E1).

INSPECTION PROCEDURE 6

Initial combustion but no complete combustion (starting impossible)	Probable cause
In such cases as the above, the cause is probably that the spark plugs are generating sparks but the sparks are weak, or the initial mixture for starting is not appropriate.	• Malfunction of the ignition system • Malfunction of the injector system • Foreign materials in fuel • Poor compression • Malfunction of the engine-ECU

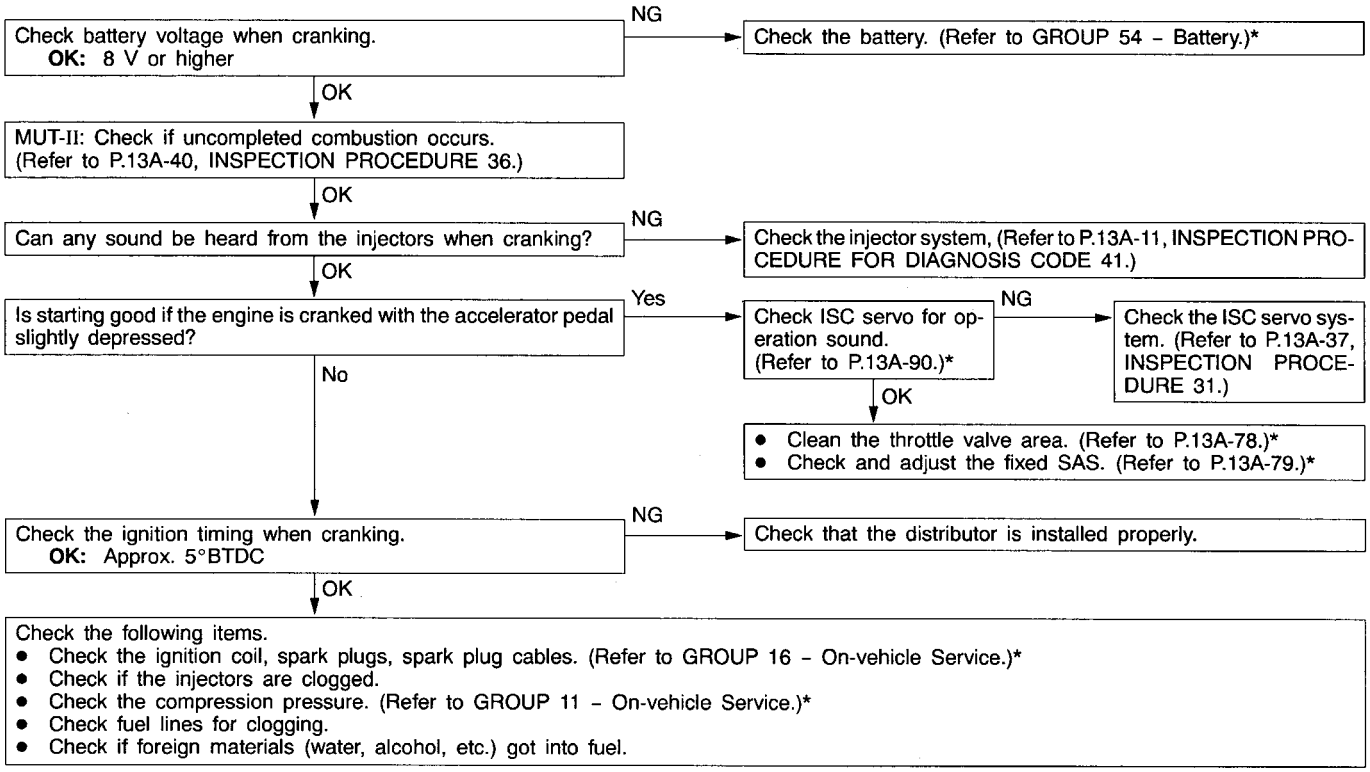

*: Refer to '97 L200 Workshop Manual (Pub. No. PWTE96E1).

INSPECTION PROCEDURE 7

In takes too long time to start. (Incorrect starting)	Probable cause
In cases such as the above, the cause is probably that the spark is weak and ignition is difficult, the initial mixture for starting is not appropriate, or sufficient compression pressure is not being obtained.	• Malfunction of the ignition system • Malfunction of the injector system • Inappropriate gasoline use • Poor compression

Check battery voltage when cranking
OK: 8 V or higher
→ NG: Check the battery. (Refer to GROUP 54 – Battery.)*
↓ OK

MUT-II: Check if uncomplete combustion occurs.
(Refer to P.13A-40, INSPECTION PROCEDURE 36.)
↓ OK

Can any sound be heard from the injectors when cranking?
→ NG: Check the injector system. (Refer to P.13A-11, INSPECTION PROCEDURE FOR DIAGNOSIS CODE 41.)
↓ OK

Check the ignition timing when cranking.
OK: Approx. 5°BTDC
→ NG: Check that the distributor is installed properly.
↓ OK

Check the following items.
- Check the ignition coil, spark plugs, spark plug cables. (Refer to GROUP 16 – On-vehicle Service.)*
- Check if the injectors are clogged.
- Check the compression pressure. (Refer to GROUP 11 – On-vehicle Service.)*
- Check if foreign materials (water, alcohol, etc.) got into fuel.

*: Refer to '97 L200 Workshop Manual (Pub. No. PWTE96E1).

INSPECTION PROCEDURE 8

Unstable idling (Rough idling, hunting)	Probable cause
In cases as the above, the cause is probably that the ignition system, air/fuel mixture, idle speed control (ISC) or compression pressure is defective. Because the range of possible causes is broad, inspection is narrowed down to simple items.	• Malfunction of the ignition system • Malfunction of air-fuel ratio control system • Malfunction of the ISC system • Malfunction of the purge control solenoid valve system • Malfunction of the EGR solenoid valve system • Poor compression • Drawing air into exhaust system

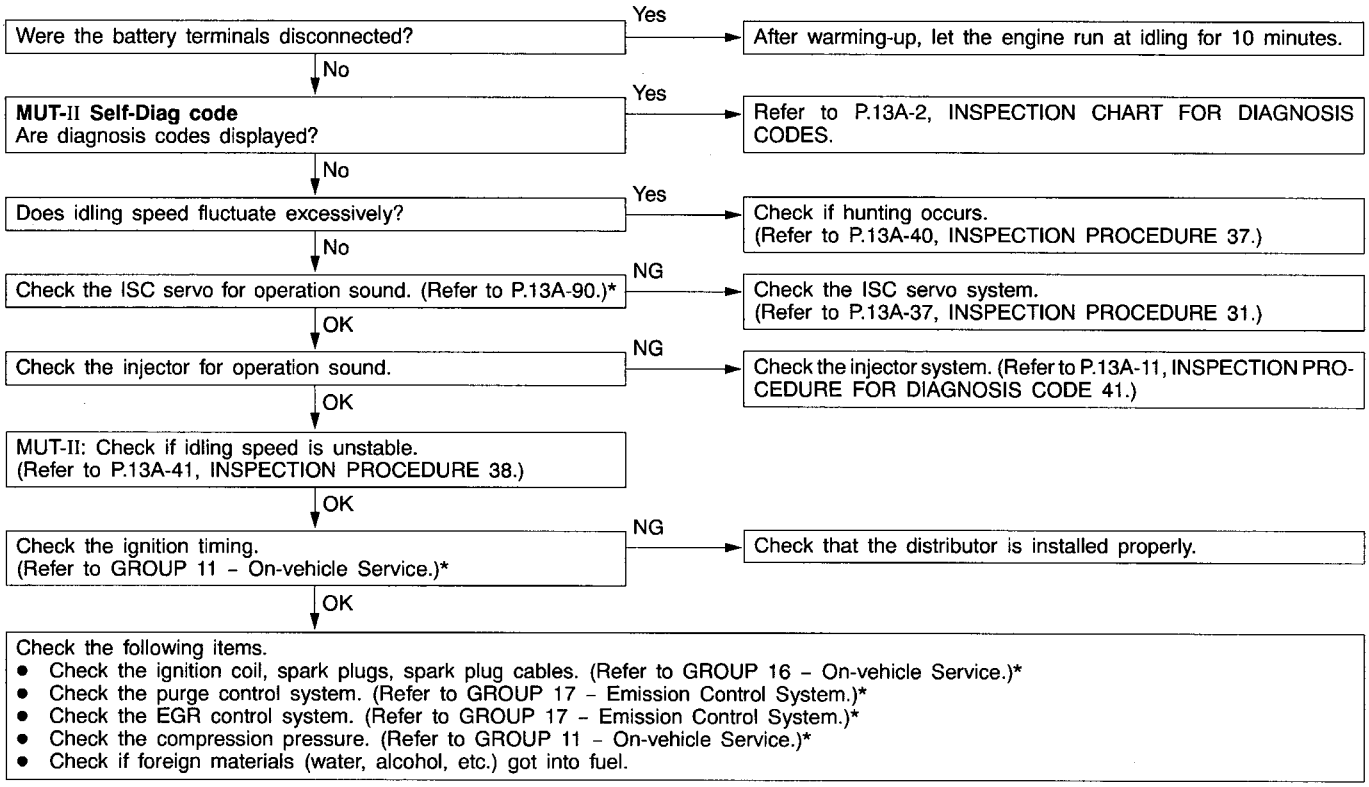

*: Refer to '97 L200 Workshop Manual (Pub. No. PWTE96E1).

INSPECTION PROCEDURE 9

Idling speed is high. (Improper idling speed)	Probable cause
In such cases as the above, the cause is probably that the intake air volume during idling is too great.	• Malfunction of the ISC servo system • Malfunction of the throttle body

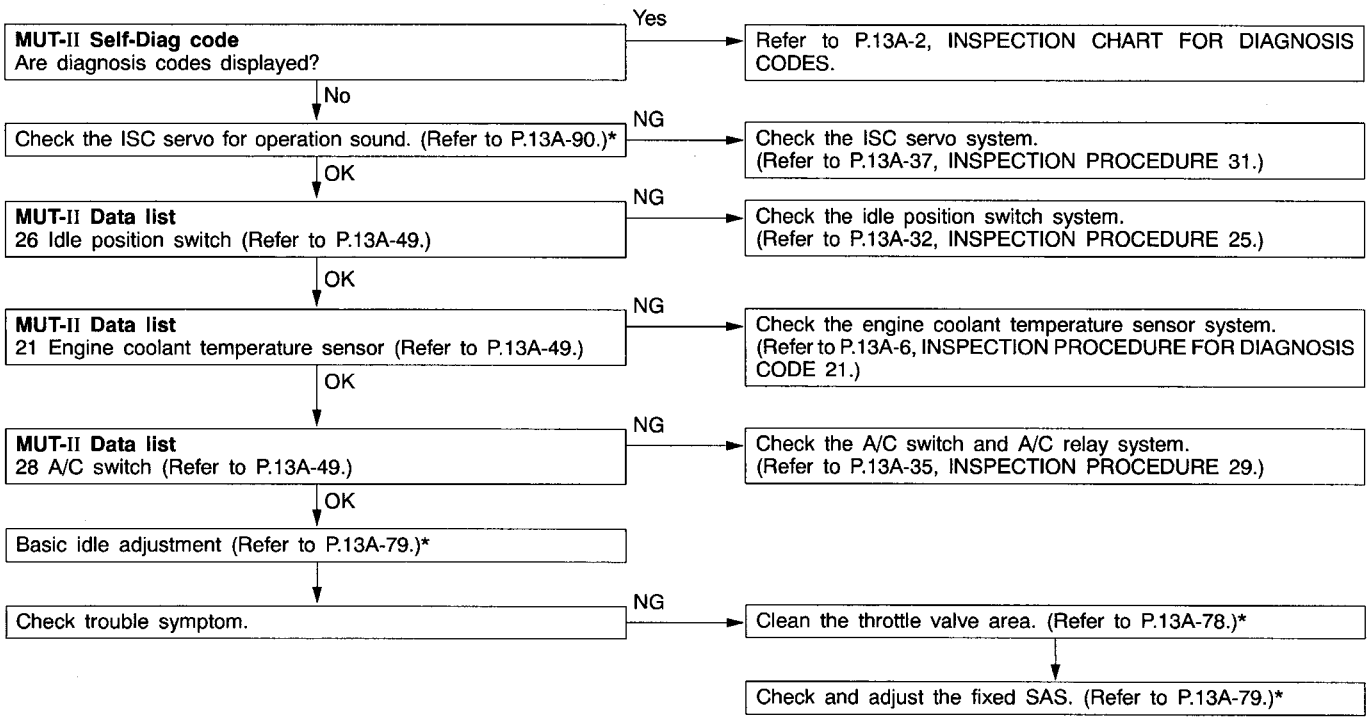

*: Refer to '97 L200 Workshop Manual (Pub. No. PWTE96E1).

INSPECTION PROCEDURE 10

Idling speed is low. (Improper idling speed)	Probable cause
In cases such as the above, the cause is probably that the intake air volume during idling is too small.	• Malfunction of the ISC servo system • Malfunction of the throttle body

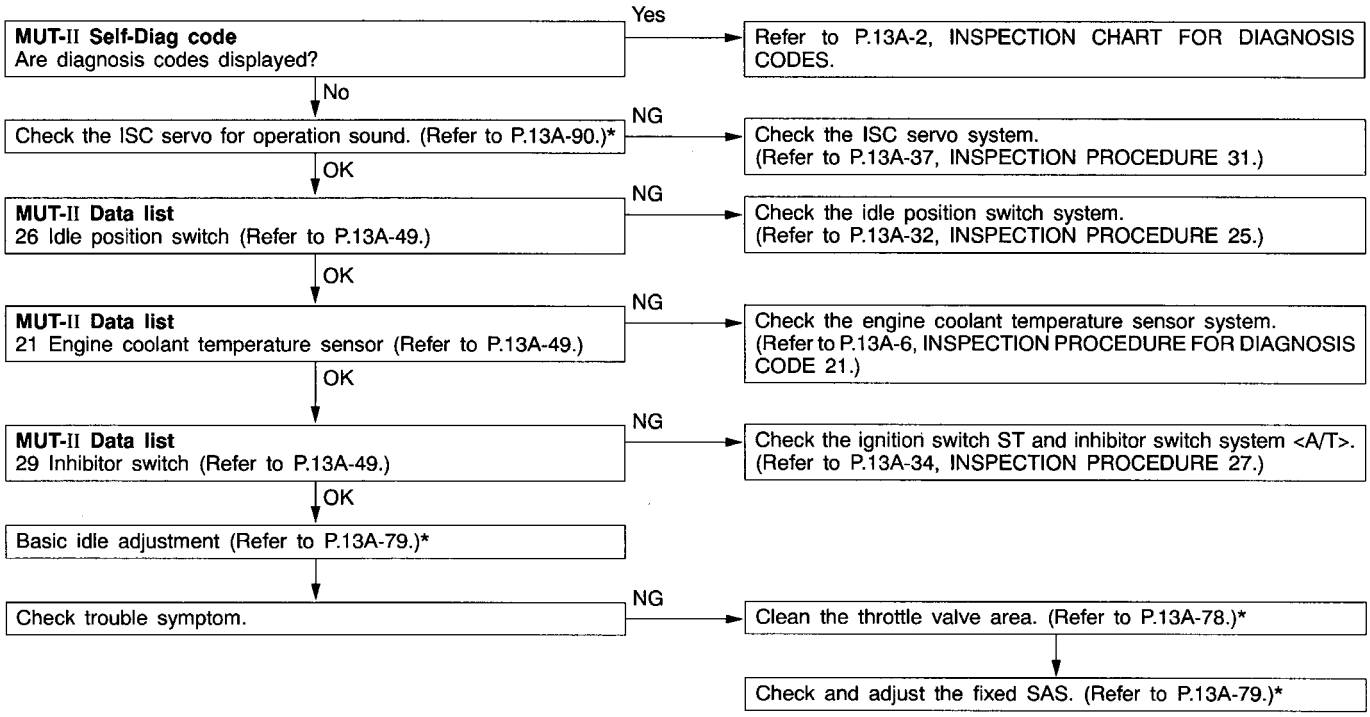

*: Refer to '97 L200 Workshop Manual (Pub. No. PWTE96E1).

INSPECTION PROCEDURE 11

When the engine is cold, it stalls at idling. (Die out)	Probable cause
In such cases as the above, the cause is probably that the air/fuel mixture is inappropriate when the engine is cold, or that the intake air volume is insufficient.	• Malfunction of the ISC servo system • Malfunction of the throttle body • Malfunction of the injector system • Malfunction of the ignition system

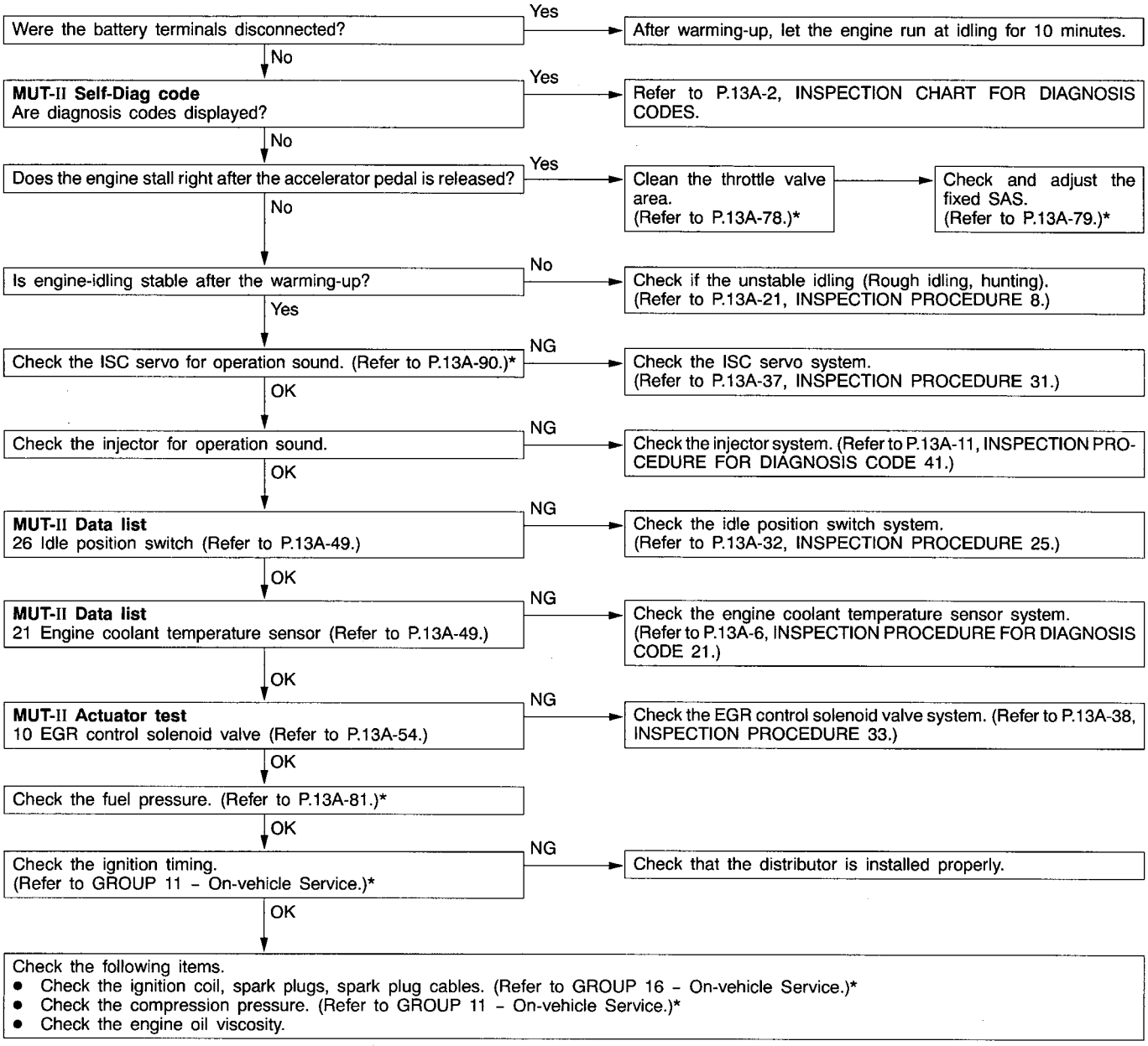

*: Refer to '97 L200 Workshop Manual (Pub. No. PWTE96E1).

INSPECTION PROCEDURE 12

When the engine is hot, it stalls at idling. (Die out)	Probable cause
In such cases as the above, the cause is probably that ignition system, air/fuel mixture, idle speed control (ISC) or compression pressure is defective. In addition, if the engine suddenly stalls, the cause may also be a defective connector contact.	• Malfunction of the ignition system • Malfunction of air-fuel ratio control system • Malfunction of the ISC system • Drawing air into intake system • Improper connector contact

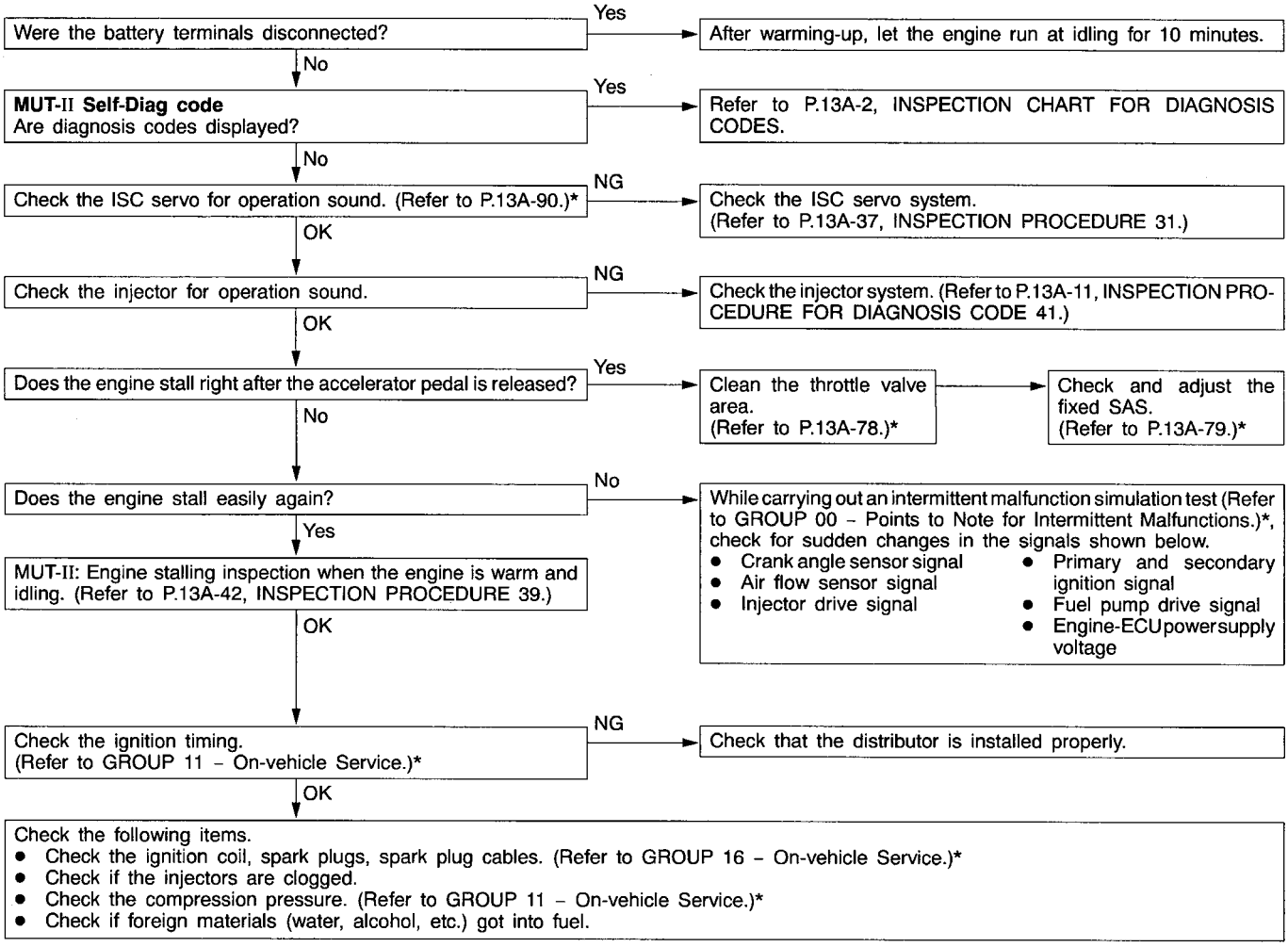

*: Refer to '97 L200 Workshop Manual (Pub. No. PWTE96E1).

INSPECTION PROCEDURE 13

The engine stalls when starting the car. (Pass out)	Probable cause
In cases such as the above, the cause is probably misfiring due to a weak spark, or an inappropriate air/fuel mixture when the accelerator pedal is depressed.	• Drawing air into intake system • Malfunction of the ignition system

MUT-II Self-Diag code
Are diagnosis codes displayed?
- Yes → Refer to P.13A-2, INSPECTION CHART FOR DIAGNOSIS CODES.
- No ↓

MUT-II Actuator test
10 EGR control solenoid valve (Refer to P.13A-54.)
- NG → Check the EGR control solenoid valve system. (Refer to P.13A-38, INSPECTION PROCEDURE 33.)
- OK ↓

Check the following items.
- Check the ignition coil, spark plugs, spark plug cables. (Refer to GROUP 16 – On-vehicle Service.)*
- Check if air was drawn into the intake system.
  - Broken intake manifold gasket
  - Broken or disconnected vacuum hose
  - Improper operation of the PCV valve
  - Broken air intake hose

INSPECTION PROCEDURE 14

The engine stalls when decelerating.	Probable cause
In cases such as the above, the cause is probably that the intake air volume is insufficient due to a defective idle speed control (ISC) servo system.	• Malfunction of the ISC system

Were the battery terminals disconnected?
- Yes → After warming-up, let the engine run at idling for 10 minutes.
- No ↓

MUT-II Self-Diag code
Are diagnosis codes displayed?
- Yes → Refer to P.13A-2, INSPECTION CHART FOR DIAGNOSIS CODES.
- No ↓

MUT-II Data list
26 Idle position switch (Refer to P.13A-49.)
- NG → Check the idle position switch system. (Refer to P.13A-32, INSPECTION PROCEDURE 25.)
- OK ↓

MUT-II Data list
14 Throttle position sensor (Refer to P.13A-49.)
- NG → Check the throttle position sensor system. (Refer to P.13A-5, INSPECTION PROCEDURE FOR DIAGNOSIS CODE 14.)
- OK ↓

MUT-II Data list
45 ISC servo position
- Is the idle speed control (ISC) servo position drops to 0–2 steps when decelerating (engine r/min less than 1,000)?
- Yes → Check the vehicle speed sensor system. (Refer to P.13A-9, INSPECTION PROCEDURE FOR DIAGNOSIS CODE 24.)
- No ↓

MUT-II Actuator test
10 EGR control solenoid valve (Refer to P.13A-54.)
- NG → Check the EGR control solenoid valve system. (Refer to P.13A-38, INSPECTION PROCEDURE 33.)
- OK ↓

Check the following items.
- Check the ignition coil, spark plugs, spark plug cables. (Refer to GROUP 16 – On-vehicle Service.)*
- Check the throttle valve area. (Refer to P.13A-78.)*
- Check and adjust the fixed SAS. (Refer to P.13A-79.)*

*: Refer to '97 L200 Workshop Manual (Pub. No. PWTE96E1).

INSPECTION PROCEDURE 15

Hesitation, sag or stumble	Probable cause
In cases such as the above, the cause is probably that ignition system, air/fuel mixture or compression pressure is defective.	• Malfunction of the ignition system • Malfunction of air-fuel ratio control system • Malfunction of the fuel supply system • Malfunction of the EGR control solenoid valve system • Poor compression

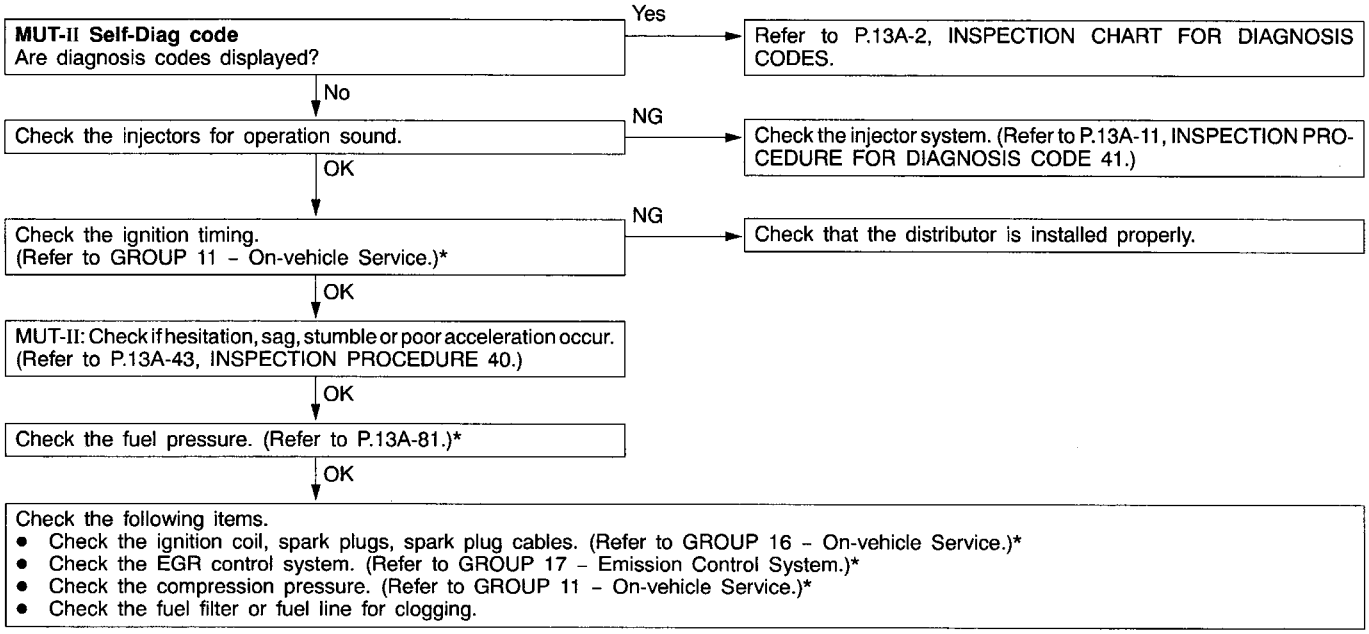

INSPECTION PROCEDURE 16

The feeling of impact or vibration when accelerating	Probable cause
In cases such as the above, the cause is probably that there is an ignition leak accompanying the increase in the spark plug demand voltage during acceleration.	• Malfunction of the ignition system

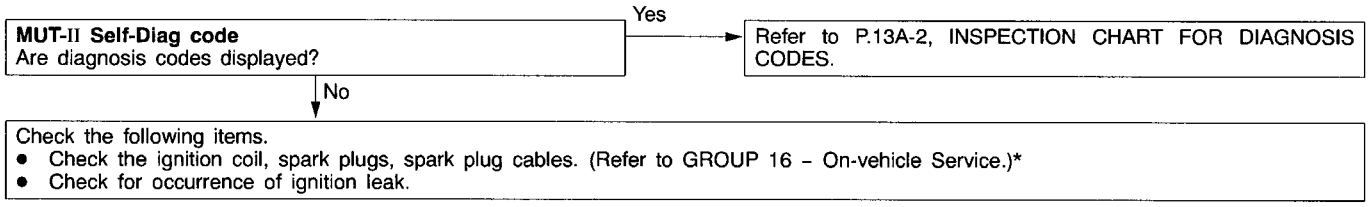

*: Refer to '97 L200 Workshop Manual (Pub. No. PWTE96E1).

INSPECTION PROCEDURE 17

The feeling of impact or vibration when decelerating.	Probable cause
Malfunction of the ISC system is suspected.	• Malfunction of the ISC system

MUT-II Self-Diag code
Are diagnosis codes displayed?
- Yes → Refer to P.13A-2, INSPECTION CHART FOR DIAGNOSIS CODES.
- No ↓

Check the ISC servo for operation sound. (Refer to P.13A-90.)*
- NG → Check the ISC servo system. (Refer to P.13A-37, INSPECTION PROCEDURE 31.)
- OK ↓

MUT-II Data list
14 Throttle position sensor (Refer to P.13A-49.)
- NG → Check the throttle position sensor system. (Refer to P.13A-5, INSPECTION PROCEDURE FOR DIAGNOSIS CODE 14.)
- OK ↓

MUT-II Data list
26 Idle position switch (Refer to P.13A-49.)
- NG → Check the idle position switch system. (Refer to P.13A-32, INSPECTION PROCEDURE 25.)
- OK ↓

Clean the throttle valve area. (Refer to P.13A-78.)*

INSPECTION PROCEDURE 18

Poor acceleration	Probable cause
Defective ignition system, abnormal air-fuel ratio, poor compression pressure, etc. are suspected.	• Malfunction of the ignition system • Malfunction of air-fuel ratio control system • Malfunction of the fuel supply system • Poor compression pressure • Clogged exhaust system

MUT-II Self-Diag code
Are diagnosis codes displayed?
- Yes → Refer to P.13A-2, INSPECTION CHART FOR DIAGNOSIS CODES.
- No ↓

Check the injectors for operation sound.
- NG → Check the injector system. (Refer to P.13A-11, INSPECTION PROCEDURE FOR DIAGNOSIS CODE 41.)
- OK ↓

Check the ignition timing. (Refer to GROUP 11 – On-vehicle Service.)*
- NG → Check that the distributor is installed properly.
- OK ↓

MUT-II: Check if hesitation, sag, stumble or poor acceleration occur. (Refer to P.13A-43, INSPECTION PROCEDURE 40.)
- OK ↓

Check the fuel pressure. (Refer to P.13A-81.)*
- OK ↓

Check the following items.
- Check the ignition coil, spark plugs, spark plug cables. (Refer to GROUP 16 – On-vehicle Service.)*
- Check the compression pressure. (Refer to GROUP 11 – On-vehicle Service.)*
- Check the fuel filter or fuel line for clogging.
- Broken air intake hose
- Clogged air cleaner

*: Refer to '97 L200 Workshop Manual (Pub. No. PWTE96E1).

INSPECTION PROCEDURE 19

Surge	Probable cause
Defective ignition system, abnormal air-fuel ratio, etc. are suspected.	• Malfunction of the ignition system • Malfunction of air-fuel ratio control system • Malfunction of the EGR control solenoid valve system

MUT-II Self-Diag code
Are diagnosis codes displayed?
- Yes → Refer to P.13A-2, INSPECTION CHART FOR DIAGNOSIS CODES.
- No ↓

Check the injectors for operation sound.
- NG → Check the injector system. (Refer to P.13A-11, INSPECTION PROCEDURE FOR DIAGNOSIS CODE 41.)
- OK ↓

Check the ignition timing.
(Refer to GROUP 11 - On-vehicle Service.)*
- NG → Check that the distributor is installed properly.
- OK ↓

MUT-II: Check if surge occurs.
(Refer to P.13-44, INSPECTION PROCEDURE 41.)
- OK ↓

Check the fuel pressure. (Refer to P.13A-81.)*
- OK ↓

Check the following items.
- Check the ignition coil, spark plugs, spark plug cables. (Refer to GROUP 16 - On-vehicle Service.)*
- Check the EGR control system. (Refer to GROUP 17 - Emission Control System.)*

INSPECTION PROCEDURE 20

Knocking	Probable cause
In cases as the above, the cause is probably that the heat value of the spark plug is inappropriate.	• Inappropriate heat value of the spark plug

Check the following items.
- Spark plugs
- Check if foreign materials (water, alcohol, etc.) got into fuel.

INSPECTION PROCEDURE 21

Dieseling	Probable cause
Fuel leakage from injectors is suspected.	• Fuel leakage from injectors

Check the injectors for fuel leakage.

*: Refer to '97 L200 Workshop Manual (Pub. No. PWTE96E1).

INSPECTION PROCEDURE 22

Too high CO and HC concentration when idling	Probable cause
Abnormal air-fuel ratio is suspected.	• Malfunction of the air-fuel ratio control system • Deteriorated catalyst

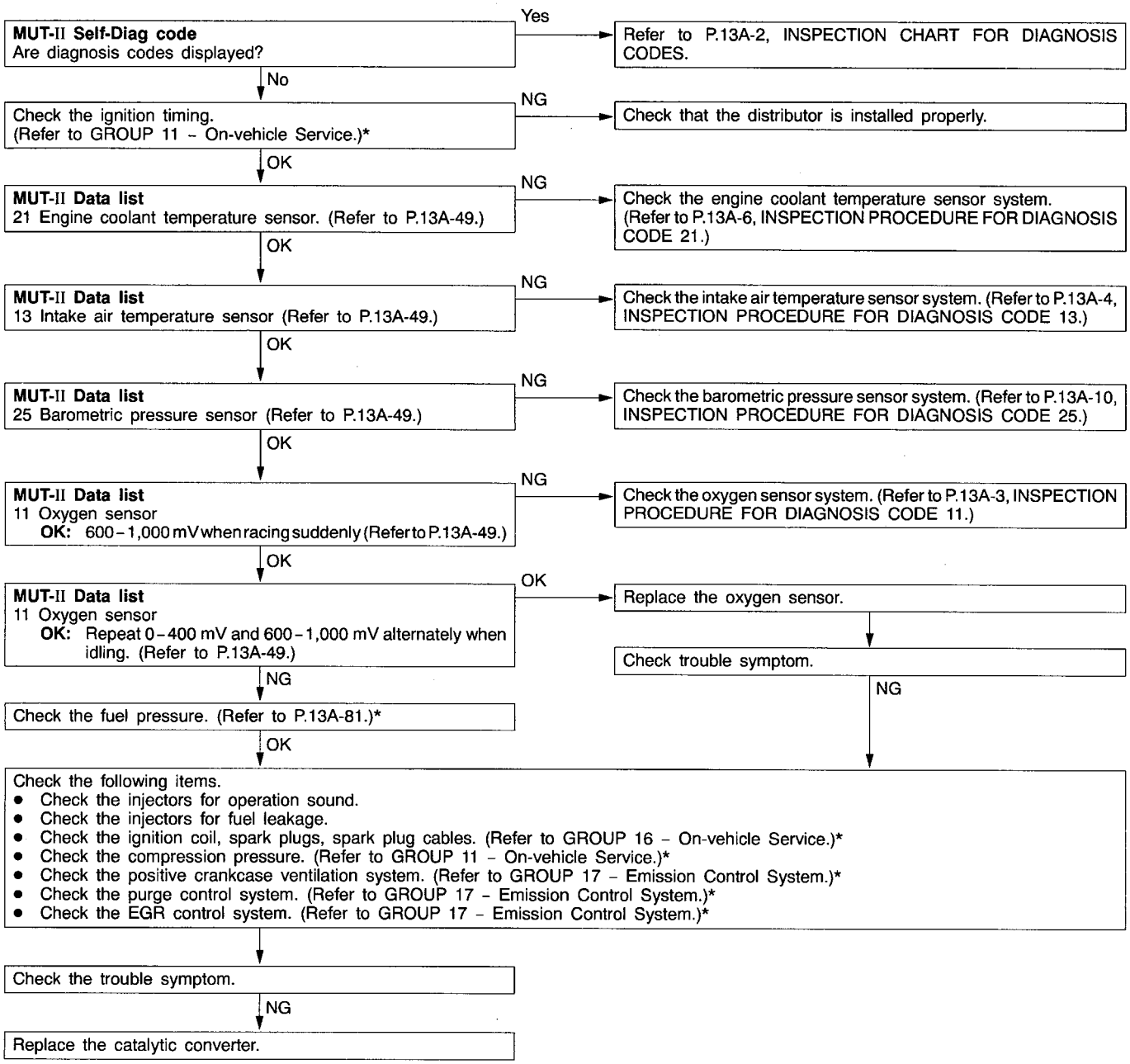

*: Refer to '97 L200 Workshop Manual (Pub. No. PWTE96E1).

INSPECTION PROCEDURE 23

Power supply system and ignition switch-IG system	Probable cause
When an ignition switch ON signal is input to the engine-ECU, the engine-ECU turns the control relay ON. This causes battery voltage to be supplied to the engine-ECU, injectors and air flow sensor.	• Malfunction of the ignition switch • Malfunction of the control relay • Improper connector contact, open circuit or short-circuited harness wire • Disconnected engine-ECU earth wire • Malfunction of the engine-ECU

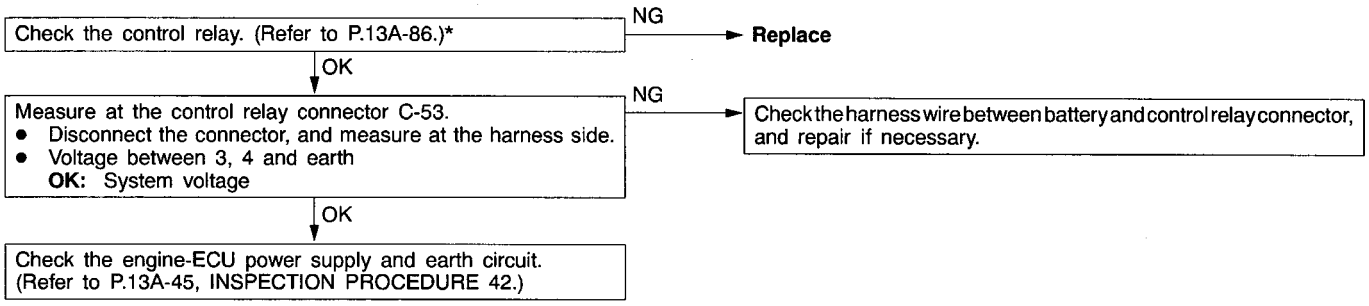

*: Refer to '97 L200 Workshop Manual (Pub. No. PWTE96E1).

INSPECTION PROCEDURE 24

Fuel pump system	Probable cause
The engine-ECU turns the control relay ON when the engine is cranking or running, and this supplies power to drive the fuel pump.	• Malfunction of the fuel pump relay • Malfunction of the fuel pump • Improper connector contact, open circuit or short-circuited harness wire • Malfunction of the engine-ECU

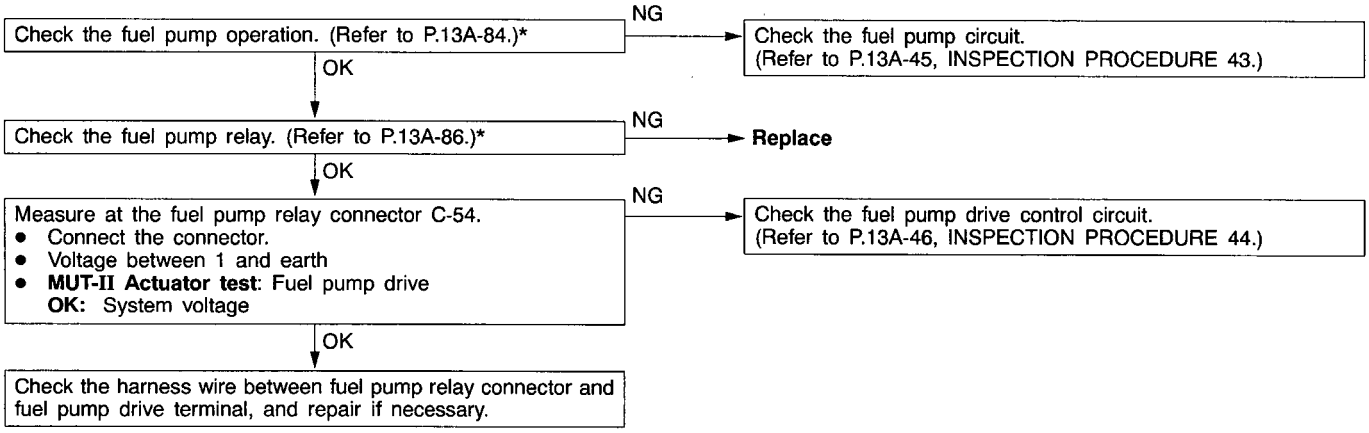

INSPECTION PROCEDURE 25

Idle position switch system	Probable cause
The idle position switch inputs the condition of the accelerator pedal, i.e. whether it is depressed or released (HIGH/LOW), to the engine-ECU. The engine-ECU controls the idle speed control servo based on this input.	• Maladjustment of the accelerator pedal • Maladjustment of the fixed SAS • Maladjustment of the idle position switch and throttle position sensor • Improper connector contact, open circuit or short-circuited harness wire • Malfunction of the engine-ECU

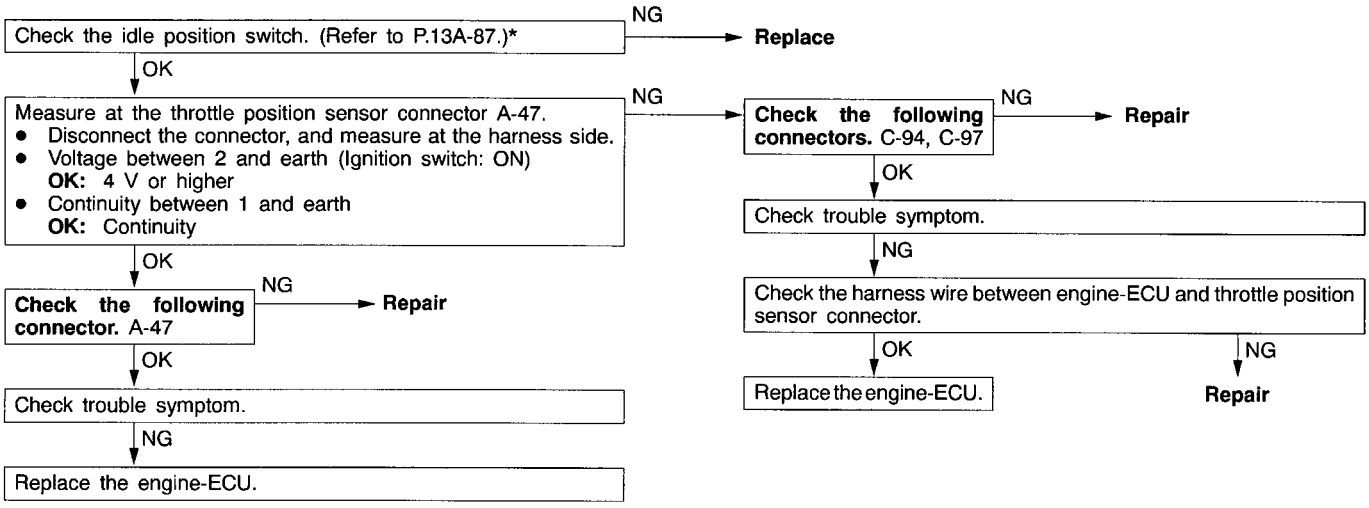

*: Refer to '97 L200 Workshop Manual (Pub. No. PWTE96E1).

INSPECTION PROCEDURE 26

Ignition switch-ST system <M/T>	Probable cause
The ignition switch-ST inputs a HIGH signal to the engine-ECU while the engine is cranking. The engine-ECU controls fuel injection, etc. during starting based on this input.	• Malfunction of ignition switch • Improper connector contact, open circuit or short-circuited harness wire • Malfunction of the engine-ECU

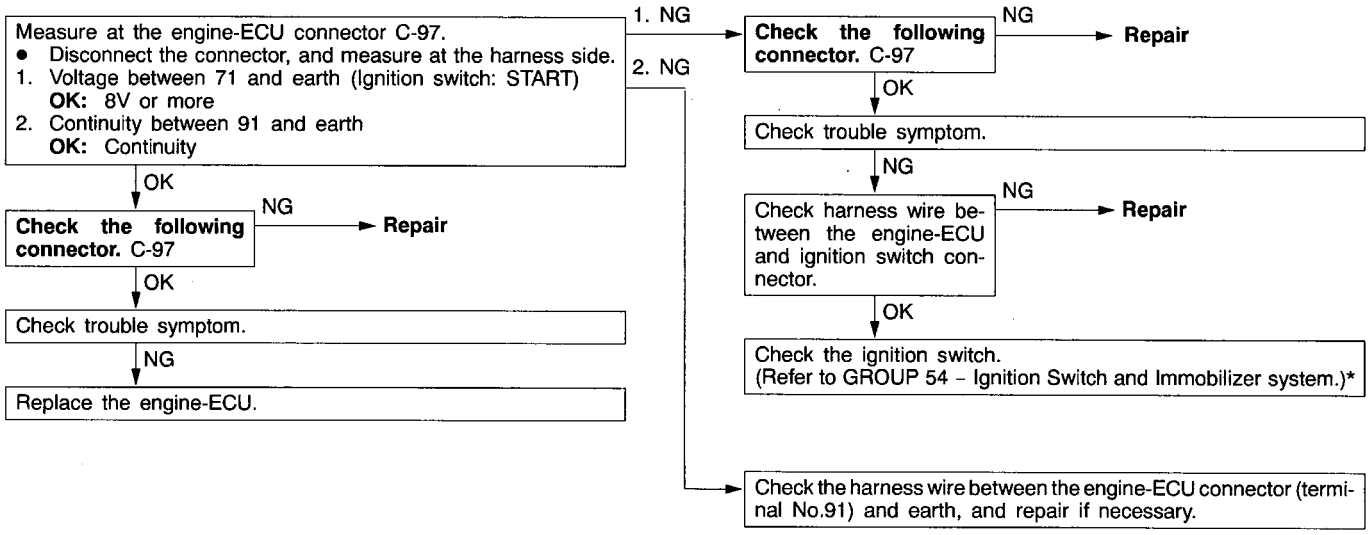

*: Refer to '97 L200 Workshop Manual (Pub. No. PWTE96E1).

INSPECTION PROCEDURE 27

Ignition switch-ST and inhibitor switch system <A/T>	Probable cause
• The ignition switch-ST inputs a HIGH signal to the engine-ECU while the engine is cranking. The engine-ECU controls fuel injection, etc. during starting based on this input. • The inhibitor switch inputs the condition of the select lever, i.e. whether it is in P or N range or in some other range, to the engine-ECU. The engine-ECU controls the idle speed control (ISC) servo based on this input.	• Malfunction of ignition switch • Malfunction of inhibitor switch • Improper connector contact, open circuit or short-circuited harness wire • Malfunction of the engine-ECU.

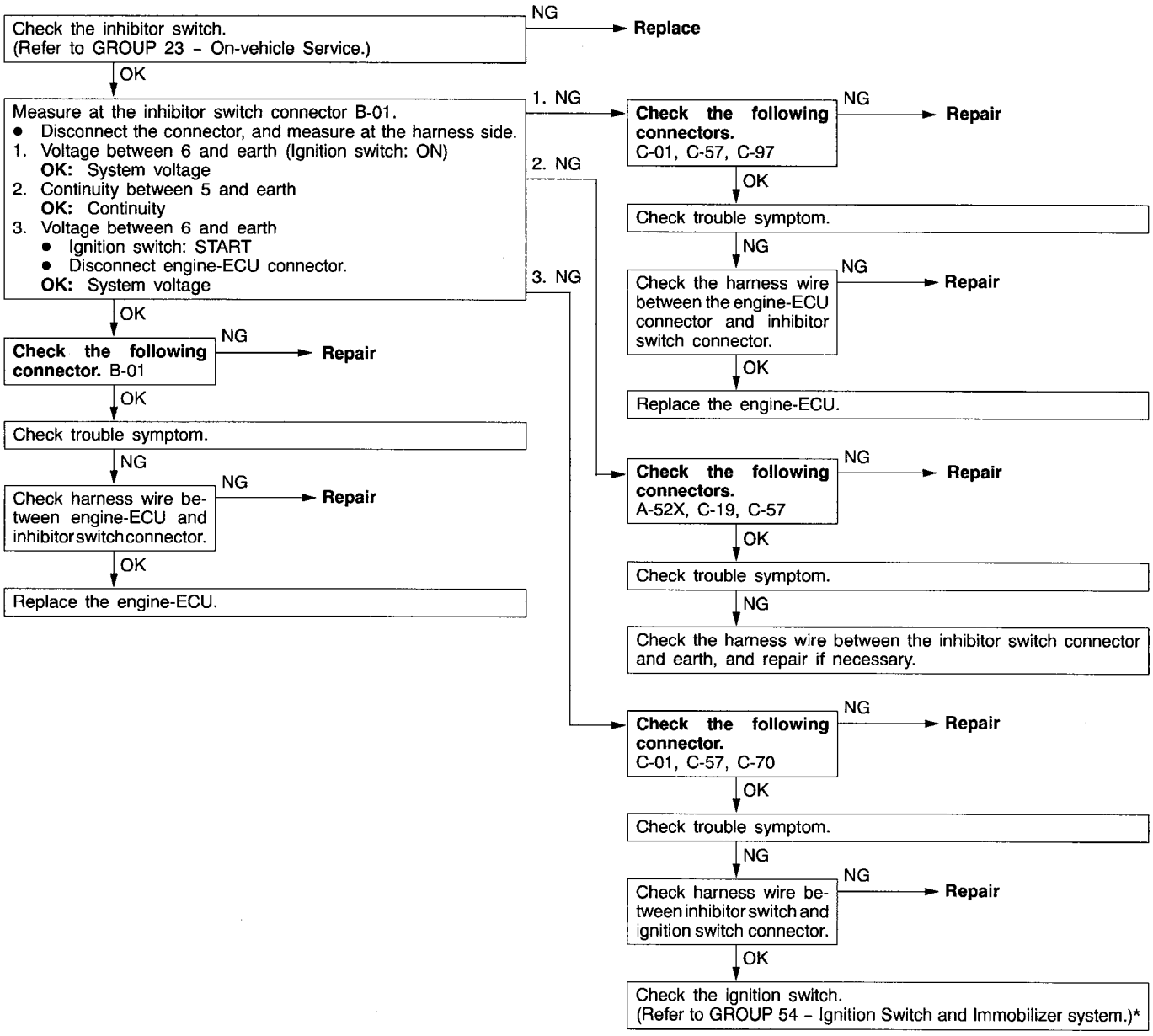

*: Refer to '97 L200 Workshop Manual (Pub. No. PWTE96E1).

INSPECTION PROCEDURE 28

Power steering fluid pressure switch system	Probable cause
The presence or absence of power steering load is input to the engine-ECU. The engine-ECU controls the idle speed control (ISC) servo based on this input.	• Malfunction of power steering fluid pressure switch • Improper connector contact, open circuit or short-circuited harness wire • Malfunction of the engine-ECU

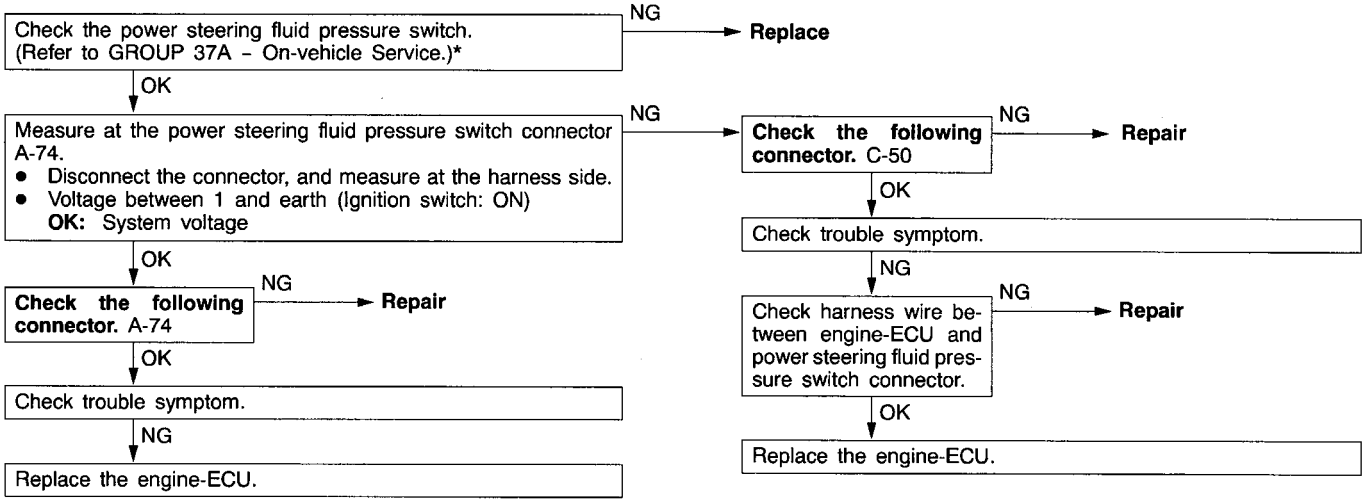

INSPECTION PROCEDURE 29

A/C switch and A/C relay system	Probable cause
When an A/C ON signal is input to the engine-ECU, the engine-ECU carries out control of the idle speed control (ISC) servo, and also operates the A/C compressor magnetic clutch.	• Malfunction of A/C control system • Malfunction of A/C switch • Improper connector contact, open circuit or short-circuited harness wire • Malfunction of the engine-ECU

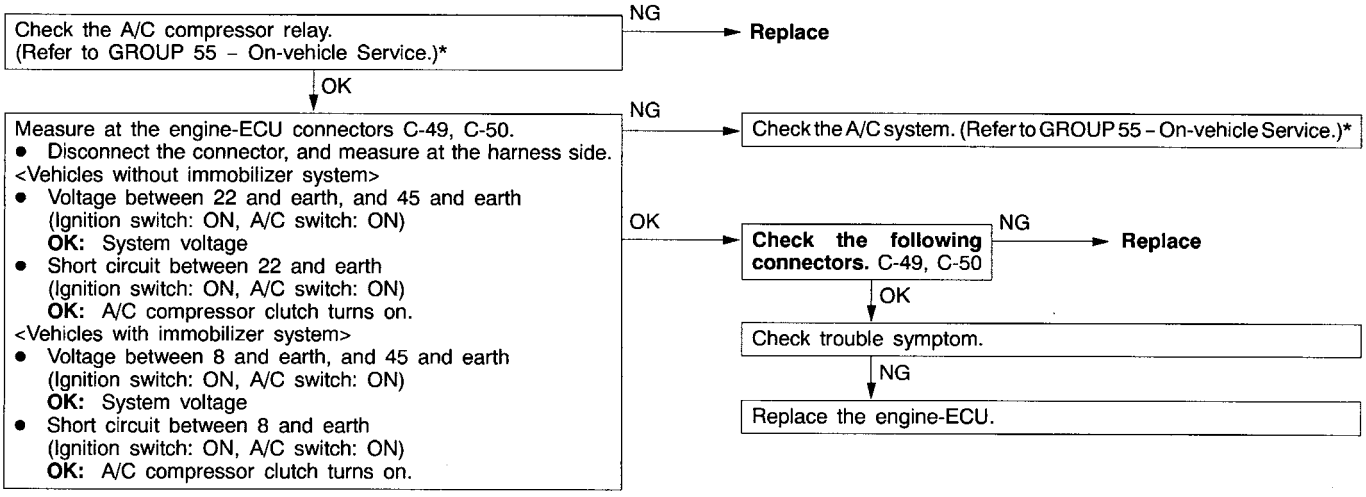

*: Refer to '97 L200 Workshop Manual (Pub. No. PWTE96E1).

INSPECTION PROCEDURE 30

Ignition circuit system	Probable cause
The engine-ECU interrupts the ignition coil primary current by turning the power transistor inside the engine-ECU ON and OFF.	• Malfunction of ignition switch. • Malfunction of power transistor unit • Improper connector contact, open circuit or short-circuited harness wire • Malfunction of the engine-ECU

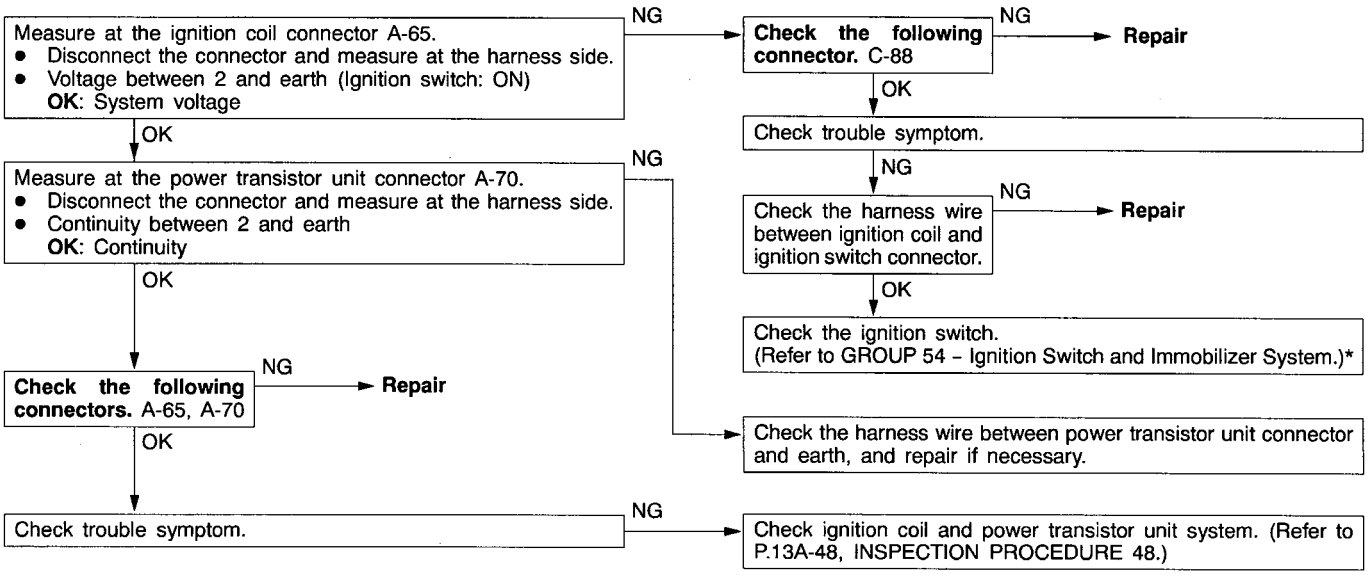

*: Refer to '97 L200 Workshop Manual (Pub. No. PWTE96E1).

INSPECTION PROCEDURE 31

Idle speed control (ISC) servo (Stepper motor) system	Probable cause
The engine-ECU controls the intake air volume during idling by opening and closing the servo valve located in the bypass air passage.	• Malfunction of ISC servo • Improper connector contact, open circuit or short-circuited harness wire • Malfunction of the engine-ECU

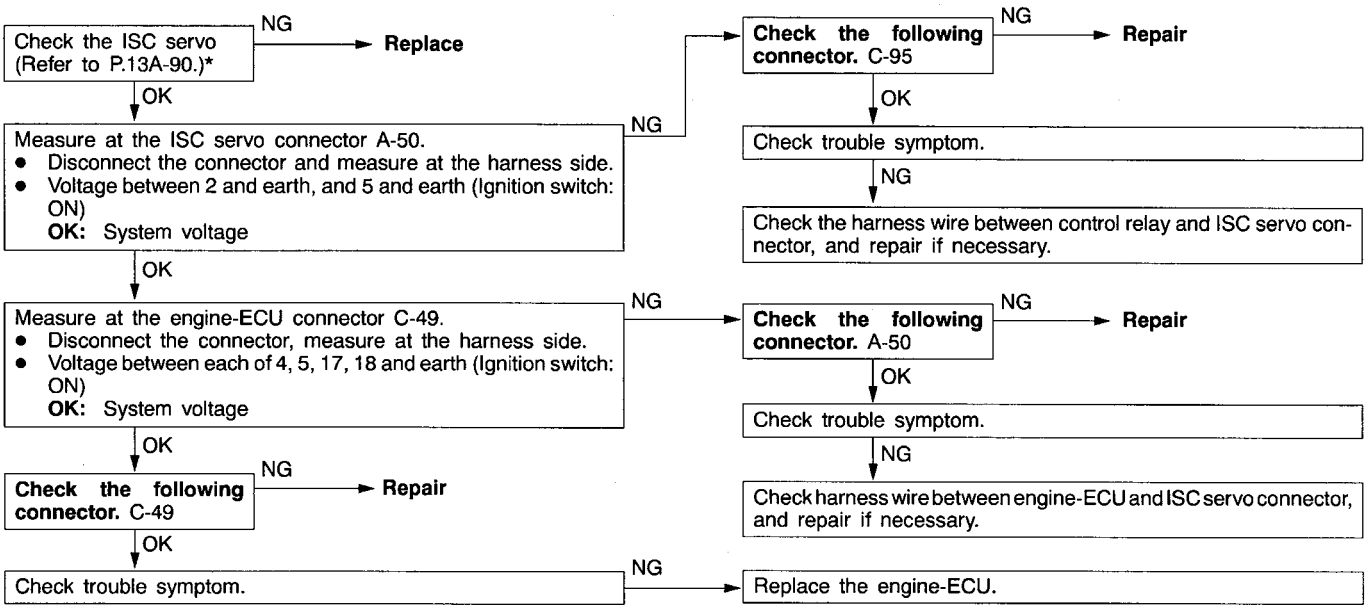

INSPECTION PROCEDURE 32

Purge control solenoid valve system	Probable cause
The purge control solenoid valve controls the purging of air from the canister located inside the intake manifold.	• Malfunction of solenoid valve • Improper connector contact, open circuit or short-circuited harness wire. • Malfunction of the engine-ECU

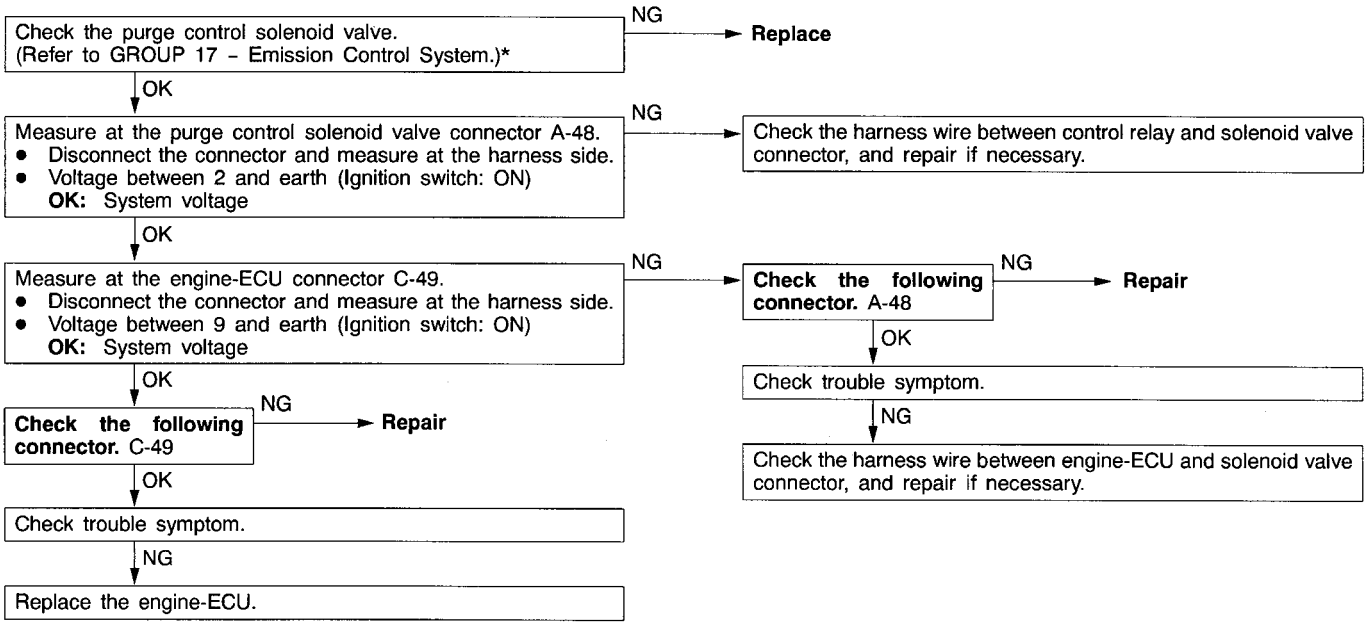

*: Refer to '97 L200 Workshop Manual (Pub. No. PWTE96E1).

INSPECTION PROCEDURE 33

EGR control solenoid valve system	Probable cause
The EGR control solenoid valve is controlled by the negative pressure resulting from EGR operation leaking to port "A" of the throttle body.	• Malfunction of solenoid valve • Improper connector contact, open circuit or short-circuited harness wire. • Malfunction of the engine-ECU

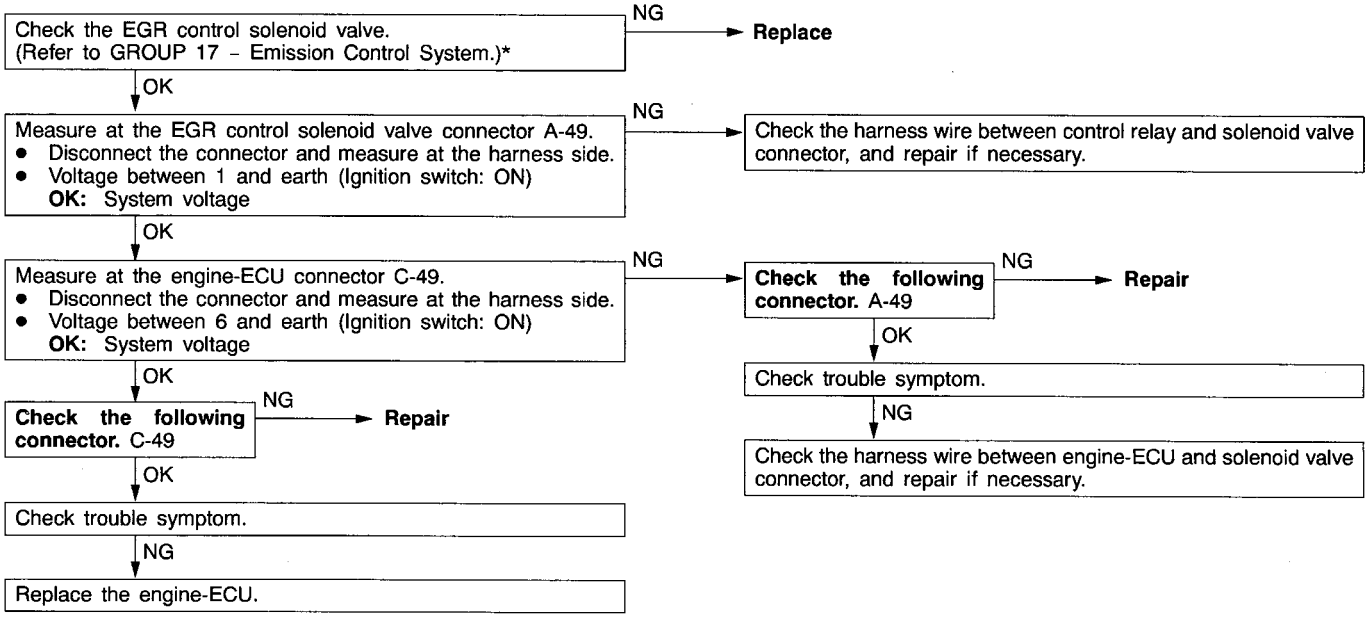

*: Refer to '97 L200 Workshop Manual (Pub. No. PWTE96E1).

INSPECTION PROCEDURE 34

MUT-II: Inspection of no initial combustion

MUT-II Data list
16 Voltage of engine-ECU power source (Refer to P.13A-49.)
- NG → Check the power supply and ignition switch-IG system. (Refer to P.13A-31, INSPECTION PROCEDURE 23.)
- OK ↓

Does the camshaft rotate at the engine cranking? (When oil filler cap is removed.)
- No → Check timing belt for breakage.
- Yes ↓

MUT-II Self-Diag code
Are diagnosis codes displayed?
- Yes → Refer to P.13A-2, INSPECTION CHART FOR DIAGNOSIS CODES.
- No ↓

MUT-II Data list
22 Crank angle sensor
OK: Cranking speed is displayed.
- No → Check the crank angle sensor system. (Refer to P.13A-7, INSPECTION PROCEDURE FOR DIAGNOSIS CODE 22.)
- OK ↓

MUT-II Actuator test
07 Fuel pump (Refer to P.13A-54.)
- NG → Check the fuel pump system. (Refer to P.13A-32, INSPECTION PROCEDURE 24.)
- OK ↓

MUT-II Data list
21 Engine coolant temperature sensor (Refer to P.13A-49.)
- NG → Check the engine coolant temperature sensor system. (Refer to P.13A-6, INSPECTION PROCEDURE FOR DIAGNOSIS CODE 21.)

INSPECTION PROCEDURE 35

Ignition system: Inspection of no initial combustion.

Does the engine tachometer display the cranking speed?
- Set the tachometer of primary voltage detection type.
- NG → Check ignition circuit system. (Refer to P.13A-36, INSPECTION PROCEDURE 30.)
- OK ↓

Check the ignition timing when cranking.
OK: Approx. 5°BTDC
- NG → Check that the crank angle sensor is installed properly.

INSPECTION PROCEDURE 36

MUT-II: Check if uncomplete combustion occurs.

MUT-II Self-Diag code
Are diagnosis codes displayed?
- Yes → Refer to P.13A-2, INSPECTION CHART FOR DIAGNOSIS CODE
- No ↓

MUT-II Actuator test
07 Fuel pump (Refer to P.13A-54.)
- NG → Check the fuel pump system. (Refer to P.13A-32, INSPECTION PROCEDURE 24.)
- OK ↓

MUT-II Data list
21 Engine coolant temperature sensor (Refer to P.13A-49.)
- NG → Check the engine coolant temperature sensor system. (Refer to P.13A-6, INSPECTION PROCEDURES FOR DIAGNOSIS CODE 21.)
- OK ↓

MUT-II Data list
18 Ignition switch-ST (Refer to P.13A-49.)
- NG → Check the ignition switch-ST system <M/T>. (Refer to P.13A-33, INSPECTION PROCEDURE 26.)

INSPECTION PROCEDURE 37

Check if hunting occurs.

Clean the throttle body. (Refer to P.13A-78.)*
↓
Check and adjust the fixed SAS. (Refer to P.13A-79.)*
↓
Check trouble symptom.
- NG ↓

Inspect the intake of air into the air intake system
- Broken intake manifold gasket
- Broken air intake hose
- Broken vacuum hose
- Positive crankcase ventilation valve does not operate.

*: Refer to '97 L200 Workshop Manual (Pub. No. PWTE96E1).

INSPECTION PROCEDURE 38

MUT-II: Check if idling speed is unstable.

MUT-II Data list
26 Idle position switch (Refer to P.13A-49.)
- NG → Check the idle position switch system. (Refer to P.13A-32, INSPECTION PROCEDURE 25.)
- OK ↓

MUT-II Data list
13 Intake air temperature sensor (Refer to P.13A-49.)
- NG → Check the intake air temperature sensor system. (Refer to P.13A-4, INSPECTION PROCEDURE FOR DIAGNOSIS CODE 13.)
- OK ↓

MUT-II Data list
25 Barometric pressure sensor (Refer to P.13A-49.)
- NG → Check the barometric pressure sensor system. (Refer to P.13A-10, INSPECTION PROCEDURE FOR DIAGNOSIS CODE 25.)
- OK ↓

MUT-II Data list
21 Engine coolant temperature sensor (Refer to P.13A-49.)
- NG → Check the engine coolant temperature sensor system. (Refer to P.13A-6, INSPECTION PROCEDURE FOR DIAGNOSIS CODE 21.)
- OK ↓

MUT-II Actuator test
08 Purge control solenoid valve (Refer to P.13A-54.)
- NG → Check the purge control solenoid valve system (Refer to P.13A-37, INSPECTION PROCEDURE 32.)
- OK ↓

MUT-II Actuator test
10 EGR control solenoid valve (Refer to P.13A-54.)
- NG → Check the EGR control solenoid valve system. (Refer to P.13A-38, INSPECTION PROCEDURE 33.)
- OK ↓

MUT-II Data list
11 Oxygen sensor
OK: 600–1,000 mV during sudden racing
- NG → Check the oxygen sensor system. (Refer to P.13A-3, INSPECTION PROCEDURE FOR DIAGNOSIS CODE 11.)
- OK ↓

MUT-II Data list
11 Oxygen sensor
OK: Changes between 0–400 mV and 600–1,000 mV during idling
- NG → Check the fuel pressure. (Refer to P.13A-81.)*
  - OK → 1. Inspect the intake of air into the air intake system.
    - Broken intake manifold gasket
    - Broken vacuum hose
    - PCV valve does not operate.
    - Broken air intake hose
    2. Check the injector for clog.
- OK ↓

MUT-II Data list
27 Power steering fluid pressure switch (Refer to P.13A-49.)
- NG → Check the power steering fluid pressure switch system. (Refer to P.13A-35, INSPECTION PROCEDURE 28.)
- OK ↓

MUT-II Data list
28 A/C switch (Refer to P.13A-49.)
- NG → Check the A/C switch and A/C relay system. (Refer to P.13A-35. INSPECTION PROCEDURE 29.)
- OK ↓

MUT-II Data list
29 Inhibitor switch (Refer to P.13A-49.)
- NG → Check the ignition switch-ST and inhibitor switch system. <A/T> (Refer to P.13A-34, INSPECTION PROCEDURE 27.)
- OK ↓

MUT-II Data list
45 ISC Servo position (Refer to P.13A-49.)
- NG → Adjust the basic idle speed. (Refer to P.13A-79.)*

*: Refer to '97 L200 Workshop Manual (Pub. No. PWTE96E1).

INSPECTION PROCEDURE 39

MUT-II: Engine stalling inspection when the engine is warmed up and idling.

MUT-II Data list
26 Idle position switch (Refer to P.13A-49.)
- NG → Check the idle position switch system. (Refer to P.13A-32, INSPECTION PROCEDURE 25.)
- OK ↓

MUT-II Data list
13 Intake air temperature sensor (Refer to P.13A-49.)
- NG → Check the intake air sensor system. (Refer to P.13A-4, INSPECTION PROCEDURE FOR DIAGNOSIS CODE 13.)
- OK ↓

MUT-II Data list
25 Barometric pressure sensor (Refer to P.13A-49.)
- NG → Check the barometric pressure sensor system. (Refer to P.13A-10, INSPECTION PROCEDURE FOR DIAGNOSIS CODE 25.)
- OK ↓

MUT-II Data list
21 Engine coolant temperature sensor (Refer to P.13A-49.)
- NG → Check the engine coolant temperature sensor system. (Refer to P.13A-6, INSPECTION PROCEDURE FOR DIAGNOSIS CODE 21.)
- OK ↓

MUT-II Actuator test
10 EGR control solenoid valve (Refer to P.13A-54.)
- NG → Check the EGR control solenoid valve system. (Refer to P.13A-38, INSPECTION PROCEDURE 33.)
- OK ↓

MUT-II Data list
11 Oxygen sensor
OK: Changes between 600 – 1,000 mV during sudden racing
- NG → Check the oxygen sensor system. (Refer to P.13A-3, INSPECTION PROCEDURE FOR DIAGNOSIS CODE 11.)
- OK ↓

MUT-II Data list
11 Oxygen sensor
OK: Changes between 0 – 400 mV and 600 – 1,000 mV during idling
- NG → Check the fuel pressure. (Refer to P.13A-81.)*
  - OK → 1. Inspect the intake of air into the air intake system
    - Broken intake manifold gasket
    - Broken vacuum hose
    - PCV valve does not operate.
    - Broken air intake hose
    2. Check the injector for clog.
- OK ↓

MUT-II Data list
27 Power steering fluid pressure switch (Refer to P.13A-49.)
- NG → Check the power steering fluid pressure switch system. (Refer to P.13A-35, INSPECTION PROCEDURE 28.)
- OK ↓

MUT-II Data list
28 A/C switch (Refer to P.13A-49.)
- NG → Check the A/C switch and A/C relay system. (Refer to P.13A-35, INSPECTION PROCEDURE 29.)
- OK ↓

MUT-II Data list
29 Inhibitor switch (Refer to P.13A-49.)
- NG → Check the ignition switch-ST and inhibitor switch system. <A/T> (Refer to P.13A-34, INSPECTION PROCEDURE 27.)
- OK ↓

MUT-II Data list
45 ISC servo position (Refer to P.13A-49.)
- NG → Adjust the basic idle speed. (Refer to P.13A-79.)*

*: Refer to '97 L200 Workshop Manual (Pub. No. PWTE96E1).

INSPECTION PROCEDURE 40

MUT-II: Check if hesitation, sug, stumble or poor acceleration occurs.

MUT-II Data list
26 Idle position switch (Refer to P.13A-49.)
- NG → Check the idle position switch system. (Refer to P.13A-32, INSPECTION PROCEDURE 25.)
- OK ↓

MUT-II Data list
13 Intake air temperature sensor (Refer to P.13A-49.)
- NG → Check the intake air sensor system. (Refer to P.13A-4, INSPECTION PROCEDURE FOR DIAGNOSIS CODE 13.)
- OK ↓

MUT-II Data list
25 Barometric pressure sensor (Refer to P.13A-49.)
- NG → Check the barometric pressure sensor system. (Refer to P.13A-10, INSPECTION PROCEDURE FOR DIAGNOSIS CODE 25.)
- OK ↓

MUT-II Data list
21 Engine coolant temperature sensor (Refer to P.13A-49.)
- NG → Check the engine coolant temperature sensor system. (Refer to P.13A-6, INSPECTION PROCEDURE FOR DIAGNOSTIC CODE 21.)
- OK ↓

MUT-II Data list
14 Throttle position sensor (Refer to P.13A-49.)
- NG → Check the throttle position sensor system. (Refer to P.13A-5, INSPECTION PROCEDURE FOR DIAGNOSIS CODE 14.)
- OK ↓

MUT-II Actuator test
10 EGR control solenoid valve (Refer to P.13A-54.)
- NG → Check the EGR control solenoid valve system. (Refer to P.13A-38, INSPECTION PROCEDURE 33.)
- OK ↓

MUT-II Data list
11 Oxygen sensor
OK: Changes between 600 – 1,000 mV during sudden racing
- NG → Check the oxygen sensor system. (Refer to P.13A-3, INSPECTION PROCEDURE FOR DIAGNOSIS CODE 11.)
- OK ↓

MUT-II Data list
11 Oxygen sensor
OK: Changes between 0 – 400 mV and 600 – 1,000 mV during idling
- NG → Check the fuel pressure. (Refer to P.13A-81.)*
  - OK →
    1. Inspect the intake of air into the air intake system
       - Broken intake manifold gasket
       - Broken vacuum hose
       - PCV valve does not operate.
       - Broken air intake hose
    2. Check the injector for clog.

*: Refer to '97 L200 Workshop Manual (Pub. No. PWTE96E1).

INSPECTION PROCEDURE 41

MUT-II: Check if surge occurs.

MUT-II Data list
26 Idle position switch (Refer to P.13A-49.)
- NG → Check the idle position switch system. (Refer to P.13A-32, INSPECTION PROCEDURE 25.)
- OK ↓

MUT-II Data list
13 Intake air temperature sensor (Refer to P.13A-49.)
- NG → Check the intake air sensor system. (Refer to P.13A-4, INSPECTION PROCEDURE FOR DIAGNOSIS CODE 13.)
- OK ↓

MUT-II Data list
25 Barometric pressure sensor (Refer to P.13A-49.)
- NG → Check the barometric pressure sensor system. (Refer to P.13A-10, INSPECTION PROCEDURE FOR DIAGNOSIS CODE 25.)
- OK ↓

MUT-II Data list
21 Engine coolant temperature sensor (Refer to P.13A-49.)
- NG → Check the engine coolant temperature sensor system. (Refer to P.13A-6, INSPECTION PROCEDURE FOR DIAGNOSIS CODE 21.)
- OK ↓

MUT-II Data list
14 Throttle position sensor (Refer to P.13A-49.)
- NG → Check the throttle position sensor system. (Refer to P.13A-5, INSPECTION PROCEDURE FOR DIAGNOSIS CODE 14.)
- OK ↓

MUT-II Actuator test
10 EGR control solenoid valve (Refer to P.13A-54.)
- NG → Check the EGR control solenoid valve system. (Refer to P.13A-38, INSPECTION PROCEDURE 33.)
- OK ↓

MUT-II Data list
11 Oxygen sensor
OK: Changes between 600 – 1,000 mV during sudden racing
- NG → Check the oxygen sensor system. (Refer to P.13A-3, INSPECTION PROCEDURE FOR DIAGNOSIS CODE 11.)
- OK ↓

MUT-II Data list
11 Oxygen sensor
OK: Changes between 0 – 400 mV and 600 – 1,000 mV during idling
- NG → Check the fuel pressure. (Refer to P.13A-81.)*
  - OK →
    1. Inspect the intake of air into the air intake system
       - Broken intake manifold gasket
       - Broken vacuum hose
       - PCV valve does not operate.
       - Broken air intake hose
    2. Check the injector for clog.

*: Refer to '97 L200 Workshop Manual (Pub. No. PWTE96E1).

INSPECTION PROCEDURE 42

Check the engine-ECU power supply and earth circuit.

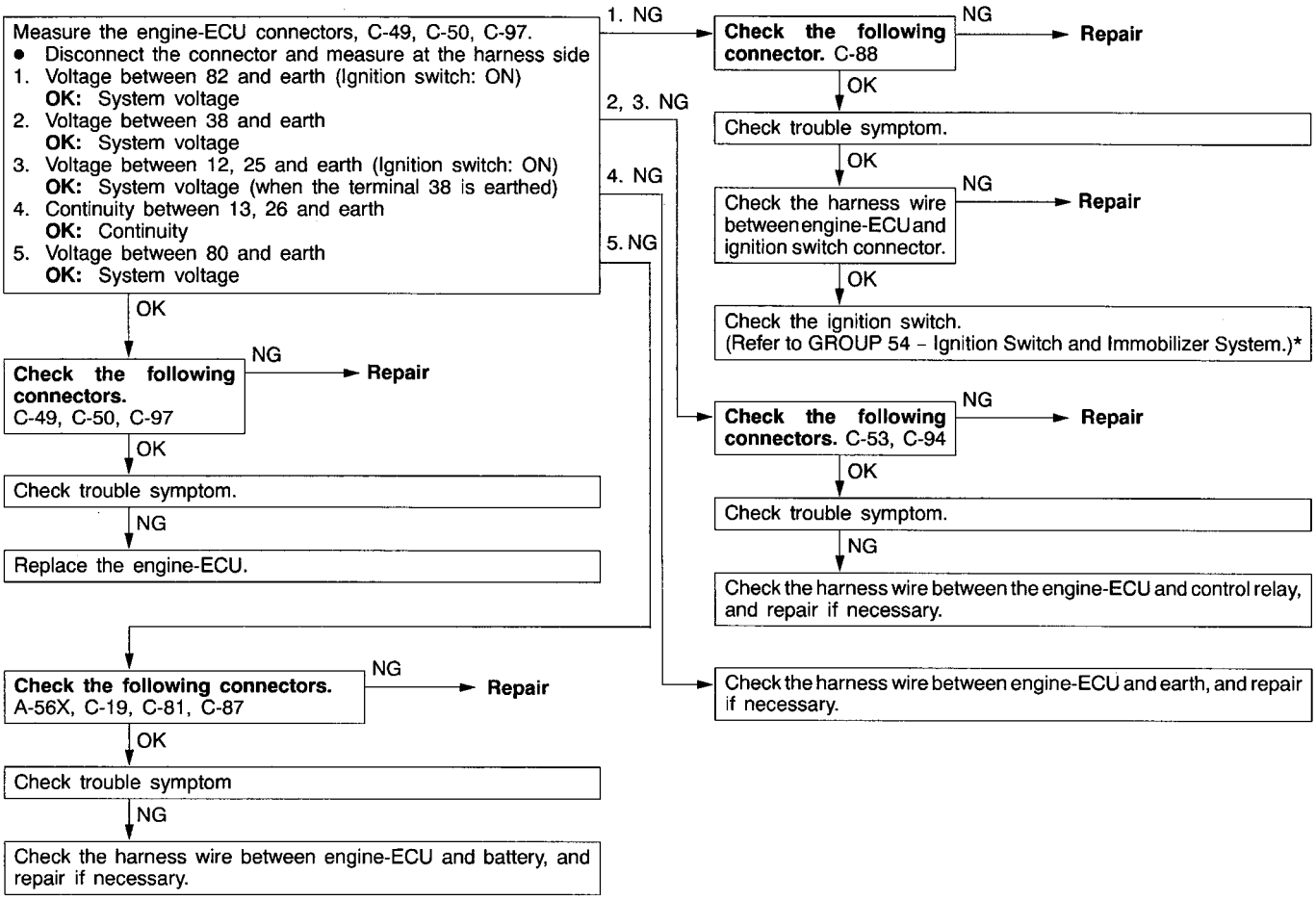

INSPECTION PROCEDURE 43

Check fuel pump circuit.

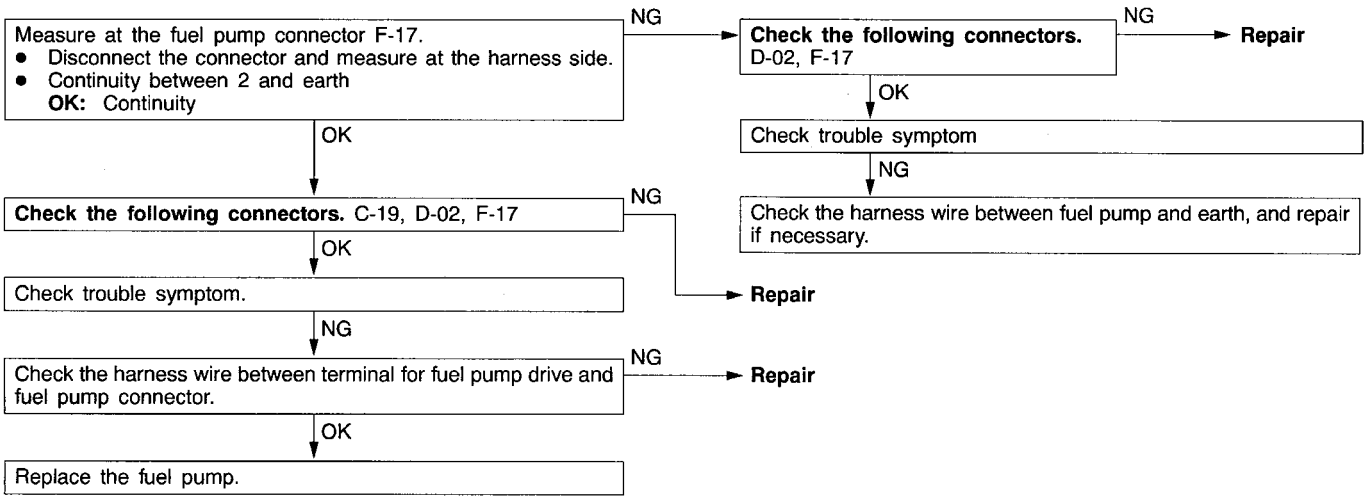

*: Refer to '97 L200 Workshop Manual (Pub. No. PWTE96E1).

INSPECTION PROCEDURE 44

Check the fuel pump drive control circuit.

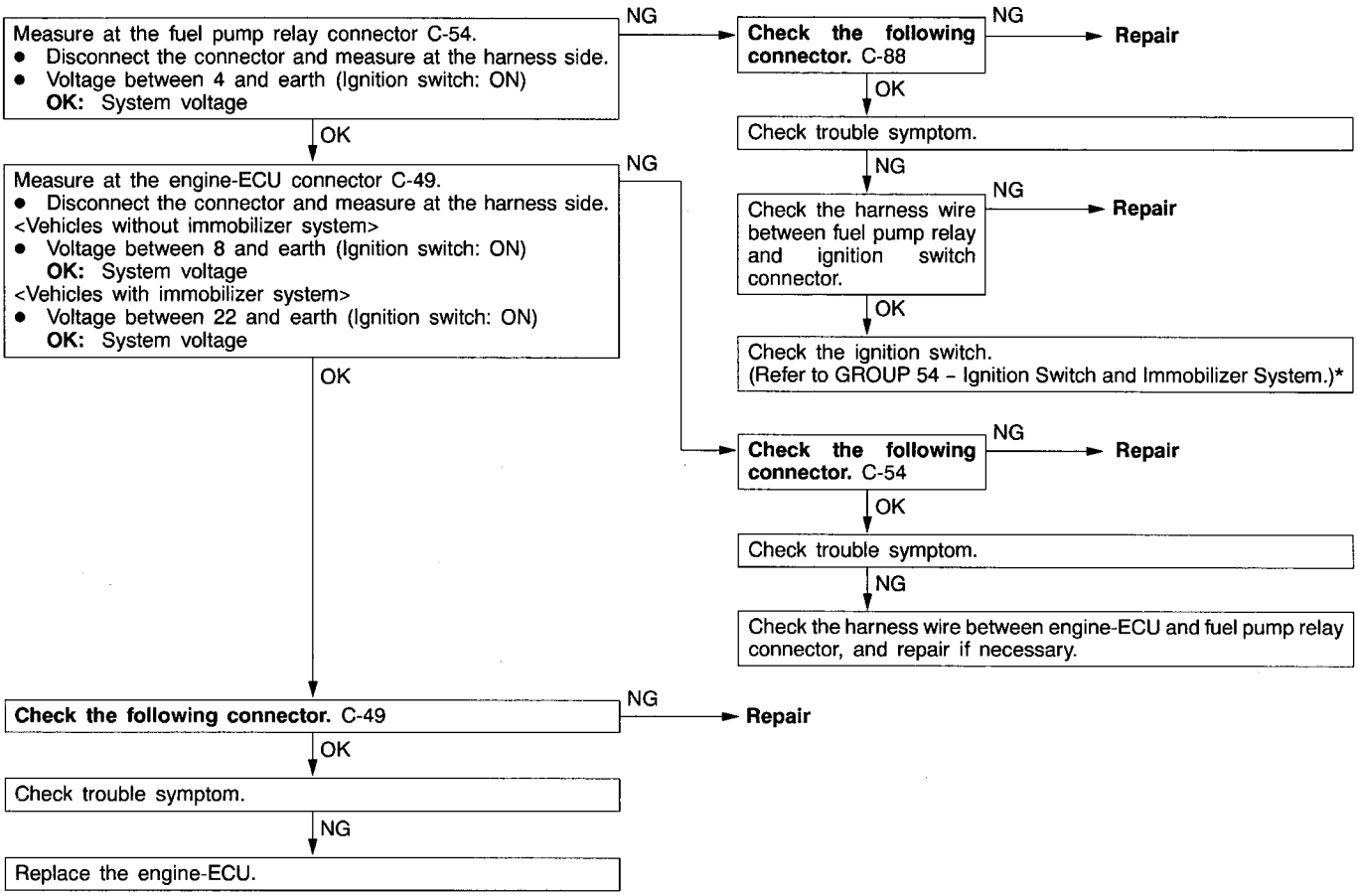

INSPECTION PROCEDURE 45

Check air flow sensor (AFS) control circuit.

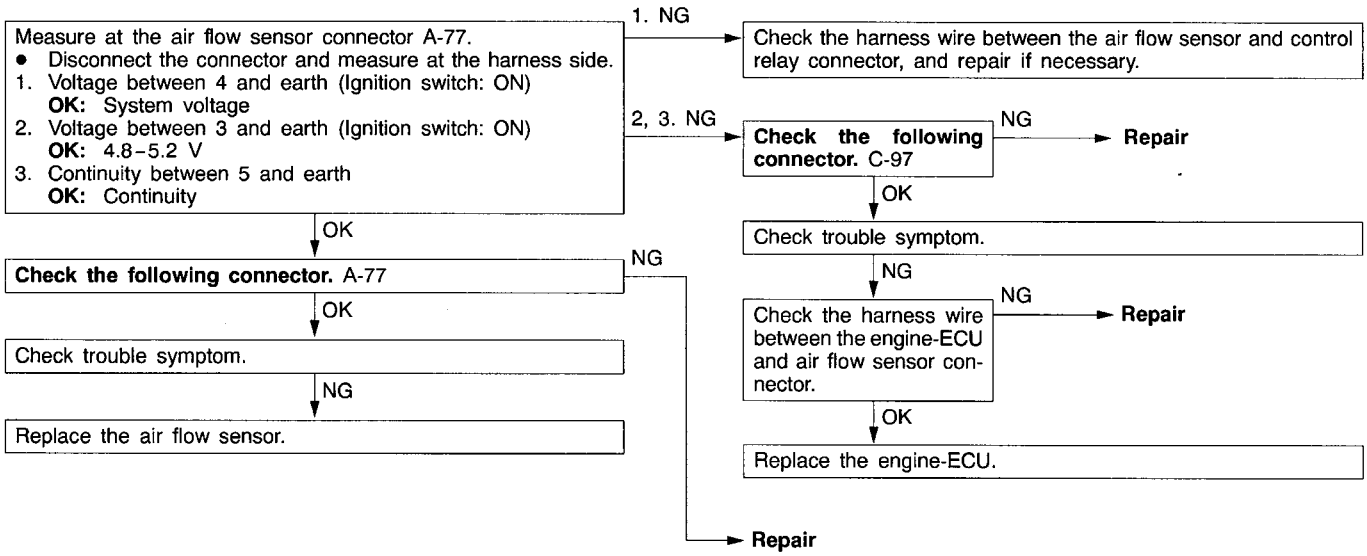

*: Refer to '97 L200 Workshop Manual (Pub. No. PWTE96E1).

INSPECTION PROCEDURE 46

Check throttle position sensor (TPS) output circuit.

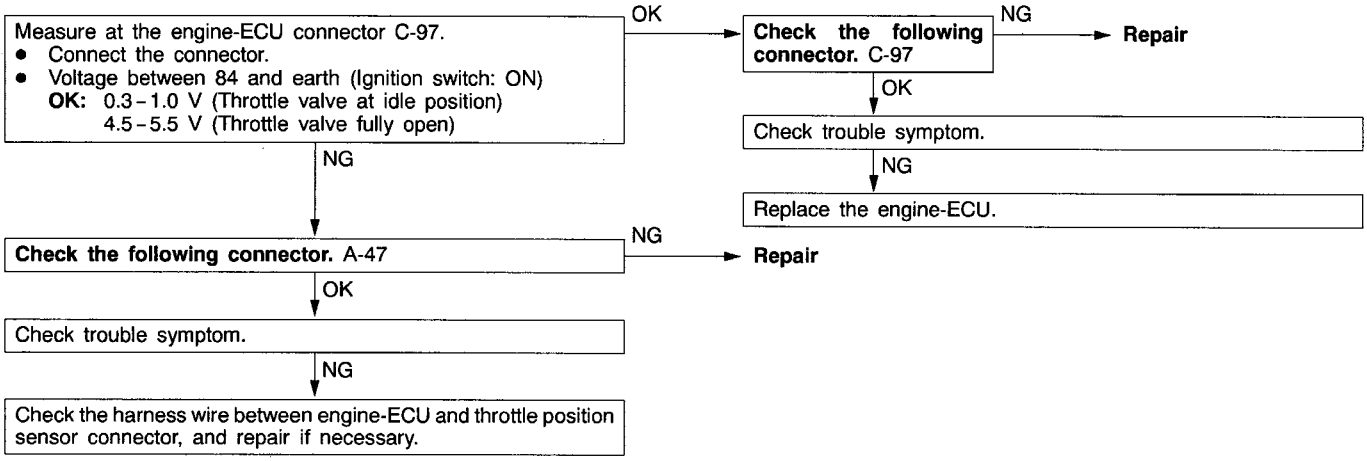

INSPECTION PROCEDURE 47

Check injector control circuit

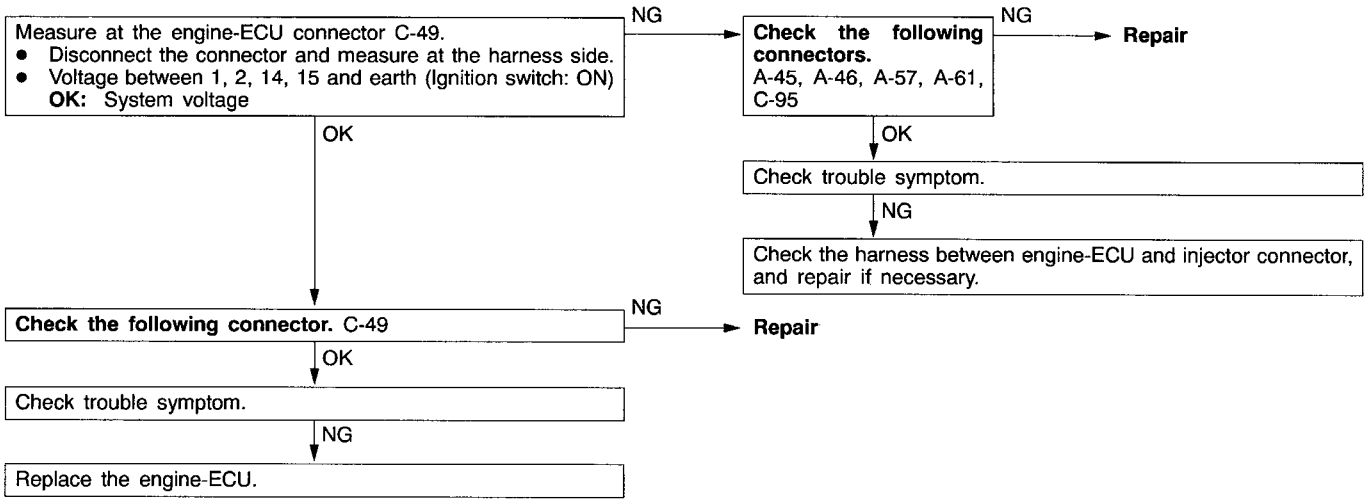

INSPECTION PROCEDURE 48

Check ignition coil and power transistor unit circuit.

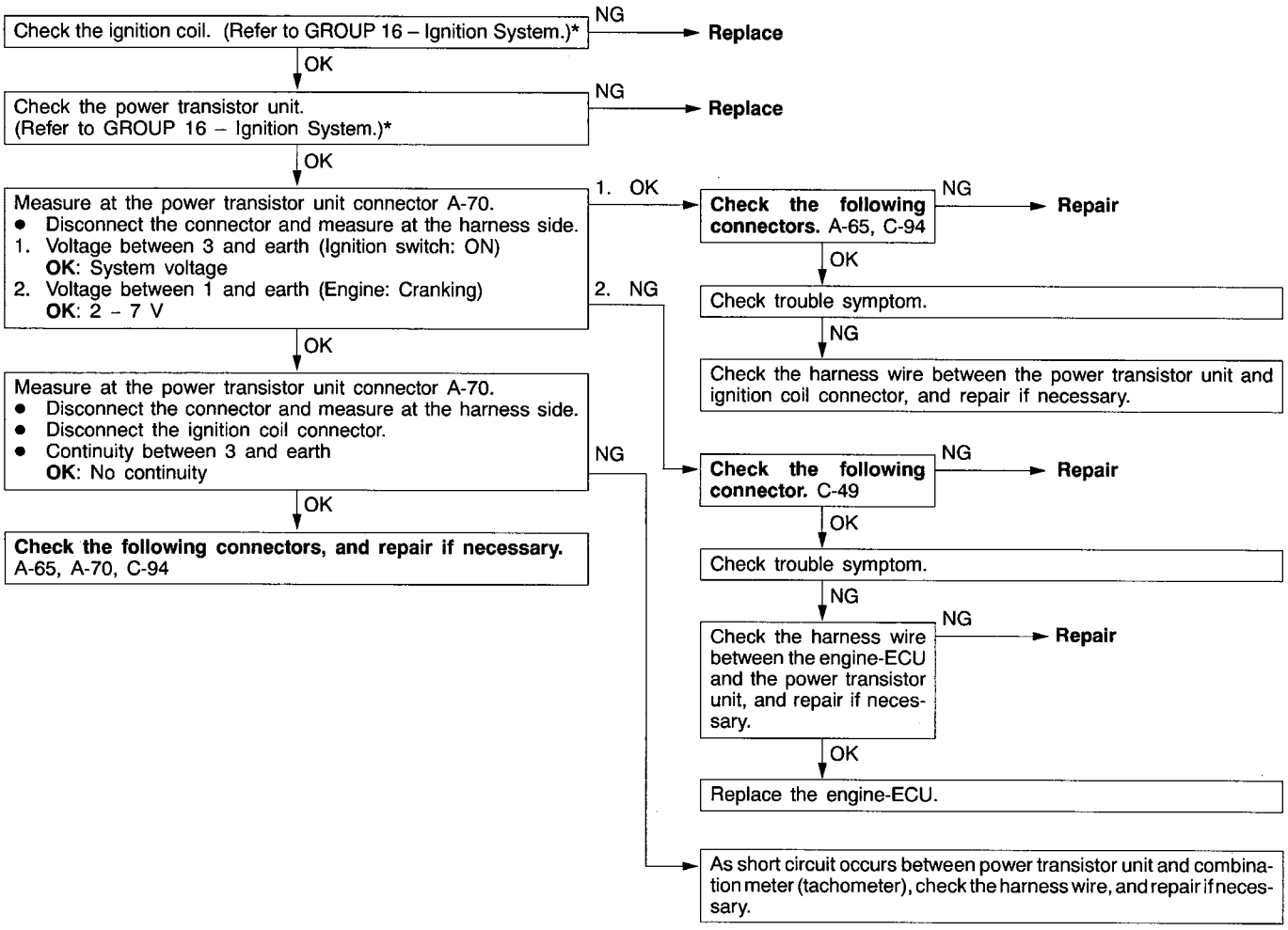

*: Refer to '97 L200 Workshop Manual (Pub. No. PWTE96E1).

DATA LIST REFERENCE TABLE

Caution

When shifting the select lever to D range, the brakes should be applied so that the vehicle does not move forward.

NOTE

*1. In a new vehicle [driven approximately 500 km or less], the air flow sensor output frequency is sometimes 10% higher than the standard frequency.

*2. The idle position switch normally turns off when the voltage of the throttle position sensor is 50 - 100 mV higher than the voltage at the idle position. If the idle position switch turns back on after the throttle position sensor voltage has been by 100 mV and the throttle valve has been opened, the idle position switch and the throttle position sensor need to be adjusted.

*3. The injector drive time represents the time when the cranking speed is at 250 r/min or below when the power supply voltage is 11 V.

*4. In a new vehicle [driven approximately 500 km or less], the injector drive time is sometimes 10% longer than the standard time.

*5. In a new vehicle [driven approximately 500 km or less], the step of the stepper motor is sometimes 30 steps greater than the standard value.

Item No.	Inspection item	Inspection contents		Normal condition	Inspection procedure No.	Reference page
11	Oxygen sensor	Engine:After having warmed up Air/fuel mixture is made leaner when decelerating, and is made richer when racing.	When at 4,000 r/min, engine is suddenly decelerated	200 mV or less	Code No. 11	13A-3
			When engine is suddenly raced	600 - 1,000 mV		
		Engine:After having warmed up The oxygen sensor signal is used to check the air/fuel mixture ratio, and control condition by the engine-ECU.	Engine is idling	400 mV or less (Changes) 600 - 1,000 mV		
			2,500 r/min	400 mV or less (Changes) 600 - 1,000 mV		
12	Air flow sensor*1	• Engine coolant temperature: 80 - 95°C • Lamps and all accessories: OFF • Transmission: Neutral (A/T: P range)	Engine is idling	22 - 48 Hz <4G63> 19 - 45 Hz <4G64>	-	-
			2,500 r/min	80 - 120 Hz <4G63> 67 - 107 Hz <4G64>		
			Engine is raced	Frequency increases in response to racing		

Item No.	Inspection item	Inspection contents		Normal condition	Inspection procedure No.	Reference page
13	Intake air temperature sensor	Ignition switch: ON or with engine running	When intake air temperature is -20°C	-20°C	Code No. 13	13A-4
			When intake air temperature is 0°C	0°C		
			When intake air temperature is 20°C	20°C		
			When intake air temperature is 40°C	40°C		
			When intake air temperature is 80°C	80°C		
14	Throttle position sensor	Ignition switch: ON	Set to idle position	300 – 1,000 mV	Code No. 14	13A-5
			Gradually open	Increases in proportion to throttle opening angle		
			Open fully	4,500 – 5,500 mV		
16	Power supply voltage	Ignition switch: ON		System voltage	Procedure No. 23	13A-31
18	Cranking signal (ignition switch-ST)	Ignition switch: ON	Engine: Stopped	OFF	Procedure No. 26 <M/T> Procedure No. 27 <A/T>	13A-33 <M/T> 13A-34 <A/T>
			Engine: Cranking	ON		
21	Engine coolant temperature sensor	Ignition switch: ON or with engine running	When engine coolant temperature is -20°C	-20°C	Code No. 21	13A-6
			When engine coolant temperature is 0°C	0°C		
			When engine coolant temperature is 20°C	20°C		
			When engine coolant temperature is 40°C	40°C		
			When engine coolant temperature is 80°C	80°C		

Item No.	Inspection item	Inspection contents		Normal condition	Inspection procedure No.	Reference page
22	Crank angle sensor	• Engine: Cranking • Tachometer: Connected	Compare the engine speed readings on the tachometer and the MUT-II.	Accord	Code No. 22	13A-7
		• Engine: Idling • Idle position switch: ON	When engine coolant temperature is –20°C	1,275 – 1,475 r/min		
			When engine coolant temperature is 0°C	1,225 – 1,425 r/min		
			When engine coolant temperature is 20°C	1,100 – 1,300 r/min		
			When engine coolant temperature is 40°C	950 – 1,150 r/min		
			When engine coolant temperature is 80°C	650 – 850 r/min		
25	Barometric pressure sensor	Ignition switch: ON	At altitude of 0 m	101 kPa	Code No. 25	13A-10
			At altitude of 600 m	95 kPa		
			At altitude of 1,200 m	88 kPa		
			At altitude of 1,800 m	81 kPa		
26	Idle position switch	Ignition switch: ON Check by operating accelerator pedal repeatedly	Throttle valve: Set to idle position	ON	Procedure No. 25	13A-32
			Throttle valve: Slightly open	OFF*2		
27	Power steering fluid pressure switch	Engine: Idling	Steering wheel stationary	OFF	Procedure No. 28	13A-35
			Steering wheel turning	ON		

Item No.	Inspection item	Inspection contents		Normal condition	Inspection procedure No.	Reference page
28	A/C switch	Engine: Idling (when A/C switch is ON, A/C compressor should be operating.)	A/C switch: OFF	OFF	Procedure No. 29	13A-35
			A/C switch: ON	ON		
29	Inhibitor switch <A/T>	Ignition switch: ON	P or N	P or N	Procedure No. 27	13A-34
			D, 2, L or R	D, 2, L or R		
41	Injectors *3	Engine: Cranking	When engine coolant temperature is 0°C	51 – 76 ms <4G63> 60 – 90 ms <4G64>	–	–
			When engine coolant temperature is 20°C	26 – 38 ms <4G63> 30 – 45 ms <4G64>		
			When engine coolant temperature is 80°C	5.7 – 8.5 ms <4G63> 6.7 – 10.1 ms <4G64>		
	Injectors*4	• Engine coolant temperature: 80–95°C • Lamps and all accessories: OFF • Transmission: Neutral (A/T : P range)	Engine is idling	1.9 – 3.1 ms <4G63> 2.2 – 3.4 ms <4G64>		
			2,500 r/min	1.8 – 3.0 ms <4G63> 1.9 – 3.1 ms <4G64>		
			When engine is suddenly raced	Increases		
44	Ignition coils and power transistors	• Engine: After having warmed up • Timing lamp is set. (The timing lamp is set in order to check actual ignition timing.)	Engine is idling	2 – 18°BTDC	–	–
			2,500 r/min	23 – 43° BTDC <4G63> 27 – 47° BTDC <4G64>		

Item No.	Inspection item	Inspection contents		Normal condition	Inspection procedure No.	Reference page
45	ISC (stepper) motor position *5	• Engine coolant temperature: 80 – 95°C • Lamps and all accessories: OFF • Transmission: Neutral (A/T : P range) • Idle position switch: ON • Engine: Idling • When A/C switch is ON, A/C compressor should be operating	A/C switch: OFF	2 – 25 STEP	–	–
			A/C switch: OFF → ON	Increases by 10 – 70 steps		
			• A/C switch: OFF • Select lever: N range → D range	Increases by 5 – 50 steps		
49	A/C relay	Engine: After having warmed up/Engine is idling	A/C switch: OFF	OFF (Compressor clutch is not operating)	Procedure No. 29	13A-35
			A/C switch: ON	ON (Compressor clutch is operating)		

ACTUATOR TEST REFERENCE TABLE

Item No.	Inspection item	Drive contents	Inspection contents		Normal condition	Inspection procedure No.	Reference page
01	Injectors	Cut fuel to No.1 injector	Engine: After having warmed up/Engine is idling (Cut the fuel supply to each injector in turn and check cylinders which don't affect idling.)		Idling condition becomes different (becomes unstable).	Code No. 41	13A-11
02		Cut fuel to No.2 injector					
03		Cut fuel to No.3 injector					
04		Cut fuel to No.4 injector					
07	Fuel pump	Fuel pump operates and fuel is recirculated.	• Engine: Cranking • Fuel pump: Forced driving Inspect according to both the above conditions.	Pinch the return hose with fingers to feel the pulse of the fuel being recirculated.	Pulse is felt.	Procedure No. 24	13A-32
				Listen near the fuel tank for the sound of fuel pump operation.	Sound of operation is heard.		
08	Purge control solenoid valve	Solenoid valve turns from OFF to ON.	Ignition switch: ON		Sound of operation can be heard when solenoid valve is driven.	Procedure No. 32	13A-37
10	EGR control solenoid valve	Solenoid valve turns from OFF to ON.	Ignition switch: ON		Sound of operation can be heard when solenoid valve is driven.	Procedure No. 33	13A-38

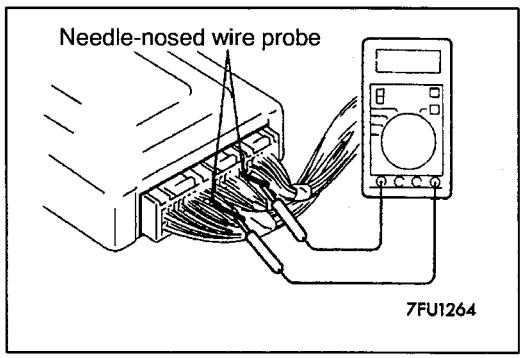

CHECK AT THE ENGINE-ECU TERMINALS

TERMINAL VOLTAGE CHECK CHART

1. Connect a needle-nosed wire probe (test harness: MB991223 or paper clip) to a voltmeter probe.
2. Insert the needle-nosed wire probe into each of the engine-ECU connector terminals from the wire side, and measure the voltage while referring to the check chart.

   NOTE
   1. Make the voltage measurement with the engine-ECU connectors connected.
   2. You may find it convenient to pull out the engine-ECU to make it easier to reach the connector terminals.
   3. The checks can be carried out off the order given in the chart.

   Caution
   Short-circuiting the positive (+) probe between a connector terminal and earth could damage the vehicle wiring, the sensor, engine-ECU or all of them. Be careful to prevent this!
3. If voltmeter shows any division from standard value, check the corresponding sensor, actuator and related electrical wiring, then repair or replace.
4. After repair or replacement, recheck with the voltmeter to confirm that the repair has corrected the problem.

Engine-ECU Connector Terminal Arrangement

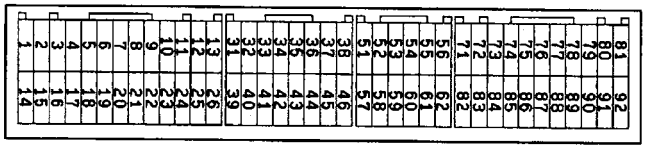

9FU0393

NOTE
*: Vehicles with immobilizer system

Terminal No.	Check item	Check condition (Engine condition)		Normal condition
1	No.1 injector	While engine is idling after having warmed up, suddenly depress the accelerator pedal.		From 11 – 14 V, momentarily drops slightly
14	No.2 injector			
2	No.3 injector			
15	No.4 injector			
4	Stepper motor coil <A1>	Engine: Soon after the warmed up engine is started		System voltage ↔ 0 – 3 V (Changes repeatedly)
17	Stepper motor coil <A2>			
5	Stepper motor coil <B1>			
18	Stepper motor coil <B2>			
6	EGR control solenoid valve	Ignition switch: ON		System Voltage
		While engine is idling, suddenly depress the accelerator pedal.		From system voltage, momentarily drops
8 or 22*	Fuel pump relay	Ignition switch: ON		System voltage
		Engine: Idle speed		0 – 3V
9	Purge control solenoid valve	Ignition switch: ON		System voltage
		Running at 3,000r/min while engine is warming up after having been started.		0 – 3V
10	Power transistor unit	Engine r/min: 3,000 r/min		0.3 – 3.0V
12	Power supply	Ignition switch: ON		System voltage
25				
19	Air flow sensor reset signal	Engine: Idle speed		0 – 1V
		Engine r/min: 3,000 r/min		6 – 9V
22 or 8*	A/C relay	• Engine: Idle speed • A/C switch: OFF → ON (A/C compressor is operating)		System voltage or momentarily 6V or more → 0 – 3V
52	Ignition timing adjustment terminal	Ignition switch: ON	Earth the ignition timing adjustment terminal	0 – 1 V
			Remove the earth from the ignition timing adjustment terminal	4.0 – 5.5 V

Terminal No.	Check item	Check condition (Engine condition)		Normal condition
60	Oxygen sensor heater	Engine: Idling after warming up		0 – 3V
		Engine r/min: 5,000r/min.		System voltage
36	Engine warning lamp	Ignition switch: OFF → ON		0 – 3V → 9 – 13V (After several seconds have elapsed)
37	Power steering fluid pressure switch	Engine: Idling after warming up	When steering wheel is stationary	System voltage
			When steering wheel is turned	0 – 3V
38	Control relay (Power supply)	Ignition switch: OFF		System voltage
		Ignition switch: ON		0 – 3V
45	A/C switch	Engine: Idle speed	Turn the A/C switch OFF	0 – 3V
			Turn the A/C switch ON (A/C compressor is operating)	System voltage
71	Ignition switch – ST	Engine: Cranking		8V or more
72	Intake air temperature sensor	Ignition switch: ON	When intake air temperature is 0°C	3.2 – 3.8V
			When intake air temperature is 20°C	2.3 – 2.9V
			When intake air temperature is 40°C	1.5 – 2.1V
			When intake air temperature is 80°C	0.4 – 1.0V
76	Oxygen sensor	Engine: Running at 2,500 r/min after warmed up (Check using a digital type voltmeter)		0 ↔ 0.8V (Changes repeatedly)
80	Backup power supply	Ignition switch: OFF		System voltage
81	Sensor impressed voltage	Ignition switch: ON		4.5 – 5.5V
82	Ignition switch – IG	Ignition switch: ON		System voltage

Terminal No.	Check item	Check condition (Engine condition)		Normal condition
83	Engine coolant temperature sensor	Ignition switch: ON	When engine coolant temperature is 0°C	3.2 – 3.8V
			When engine coolant temperature is 20°C	2.3 – 2.9V
			When engine coolant temperature is 40°C	1.3 – 1.9V
			When engine coolant temperature is 80°C	0.3 – 0.9V
84	Throttle position sensor	Ignition switch: ON	Set throttle valve to idle position	0.3 – 1.0V
			Fully open throttle valve	4.5 – 5.5V
85	Barometric pressure sensor	Ignition switch: ON	When altitude is 0m	3.7 – 4.3V
			When altitude is 1,200m	3.2 – 3.8V
86	Vehicle speed sensor	• Ignition switch: ON • Move the vehicle slowly forward		0 ↔ 5V (Changes repeatedly)
87	Idle position switch	Ignition switch: ON	Set throttle valve to idle position	0 – 1V
			Slightly open throttle valve	4V or more
88	Top dead centre sensor	Engine: Cranking		0.4 – 3.0V
		Engine: Idle speed		0.5 – 2.0V
89	Crank angle sensor	Engine: Cranking		0.4 – 4.0V
		Engine: Idle speed		1.5 – 2.5V
90	Air flow sensor	Engine: Idle speed		2.2 – 3.2V
		Engine r/min: 2,500r/min		
91	Inhibitor switch <A/T>	Ignition switch: ON	Set selector lever to P or N	0 – 3V
			Set selector lever to Other than P or N	8 – 14V

CHECK CHART FOR RESISTANCE AND CONTINUITY BETWEEN TERMINALS

1. Turn the ignition switch to OFF.
2. Disconnect the engine-ECU connector.
3. Measure the resistance and check for continuity between the terminals of the engine-ECU harness-side connector while referring to the check chart.

   NOTE
   1. When measuring resistance and checking continuity, a harness for checking contact pin pressure should be used instead of inserting a test probe.
   2. Checking need not be carried out in the order given in the chart.

   Caution
   If the terminals that should be checked are mistaken, or if connector terminals are not correctly shorted to earth, damage may be caused to the vehicle wiring, sensors, engine-ECU and/or ohmmeter.
   Be careful to prevent this!
4. If the ohmmeter shows any deviation from the standard value, check the corresponding sensor, actuator and related electrical wiring, and then repair or replace.
5. After repair or replacement, recheck with the ohmmeter to confirm that the repair or replacement has corrected the problem.

Engine-ECU Harness Side Connector Terminal Arrangement

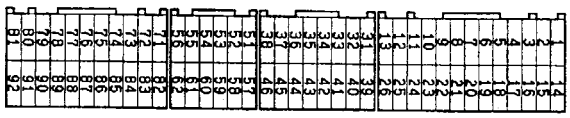

9FU0392

Terminal No.	Inspection item	Normal condition (Check condition)
1 – 12	No.1 injector	6.5 – 8.0 Ω (At 20°C)
14 – 12	No.2 injector	
2 – 12	No.3 injector	
15 – 12	No.4 injector	

Terminal No.	Inspection item	Normal condition (Check condition)
4 – 12	Stepper motor coil (A1)	28 – 33 Ω (At 20°C)
17 – 12	Stepper motor coil (A2)	
5 – 12	Stepper motor coil (B1)	
18 – 12	Stepper motor coil (B2)	
6 – 12	EGR control solenoid valve	36 – 44 Ω (At 20°C)
9 – 12	Purge control solenoid valve	36 – 44 Ω (At 20°C)
13 – Body earth	Engine-ECU earth	Continuity (0Ω)
26 – Body earth	Engine-ECU earth	
60 – 12	Oxygen sensor heater	Approx. 12 Ω (At 20°C)
72 – 92	Intake air temperature sensor	5.3 – 6.7 kΩ (When intake air temperature is 0°C)
		2.3 – 3.0 kΩ (When intake air temperature is 20°C)
		1.0 – 1.5 kΩ (When intake air temperature is 40°C)
		0.30 – 0.42 kΩ (When intake air temperature is 80°C)
83 – 92	Engine coolant temperature sensor	5.1 – 6.5 kΩ (When coolant temperature is 0°C)
		2.1 – 2.7 kΩ (When coolant temperature is 20°C)
		0.9 – 1.3 kΩ (When coolant temperature is 40°C)
		0.26 – 0.36 kΩ (When coolant temperature is 80°C)
87 – 92	Idle position switch	Continuity (when throttle valve is at idle position)
		No continuity (when throttle valve is slightly open)
91 –Body earth	Inhibitor switch <A/T>	Continuity (when select lever is at P or N)
		No continuity (when select lever is at D, 2, L or R)

INSPECTION PROCEDURE USING AN ANALYZER

AIR FLOW SENSOR (AFS)

Alternate Method (Test harness not available)

1. Connect the analyzer special patterns pickup to engine-ECU terminal 90.

TOP DEAD CENTRE SENSOR AND CRANK ANGLE SENSOR

Alternate Method (Test harness not available)

1. Connect the analyzer special patterns pickup to engine-ECU terminal 88. (when checking the top dead centre sensor signal wave pattern.)
2. Connect the analyzer special patterns pickup to engine-ECU terminal 89. (when checking the crank angle sensor signal wave pattern.)

INJECTOR

Alternate Method (Test harness not available)

1. Connect the analyzer special patterns pickup to engine-ECU terminal 1 (when checking the No.1 cylinder).
2. Connect the analyzer special patterns pickup to engine-ECU terminal 14 (when checking the No.2 cylinder).
3. Connect the analyzer special patterns pickup to engine-ECU terminal 2 (when checking the No.3 cylinder).
4. Connect the analyzer special patterns pickup to engine-ECU terminal 15 (when checking the No.4 cylinder).

STEPPER MOTOR

Alternate Method (Test harness not available)

1. Connect the analyzer special patterns pickup to engine-ECU terminal 4, connection terminal 5, connection terminal 17, and connection terminal 18 respectively.

IGNITION COIL AND POWER TRANSISTOR

- Ignition coil primary signal
  Refer to GROUP 16 – Ignition System.
- Power transistor control signal

Alternate Method (Test harness not available)

1. Connect the analyzer special patterns pickup to engine-ECU terminal 10.

GROUP 13A
MULTIPOINT FUEL INJECTION (MPI)

GENERAL

OUTLINE OF CHANGE

The service procedures have been revised due to the following change.
- The immobilizer system has been revised.

GENERAL INFORMATION

Item		Specifications
Engine-ECU	Identification model No.	E2T69184 <4G63–Vehicles with immobilizer system> E2T69185 <4G64–Vehicles with immobilizer system>

TROUBLESHOOTING

NOTE:
If the engine-ECU is replaced, the immobilizer-ECU and the ignition key should be replaced together with it.

INSPECTION CHART FOR DIAGNOSIS CODES

For vehicles with immobilizer system, the inspection procedure "Code No.54 – Immobilizer system" has been changed.

Code No.	Diagnosis system	Reference page
54	Immobilizer system	13A-2.

INSPECTION PROCEDURE FOR DIAGNOSIS CODES

Code No.54 Immobilizer system	Probable cause
Range of Check • Ignition switch: ON Set Conditions • Improper communication between the engine-ECU and immobilizer-ECU	• Radio interference of ID codes • Incorrect ID code • Malfunction of harness or connector • Malfunction of immobilizer-ECU • Malfunction of engine-ECU

NOTE
(1) If the ignition switches are close each other when starting the engine, radio interference may cause this code to be displayed.
(2) This code may be displayed when registering the key ID code.

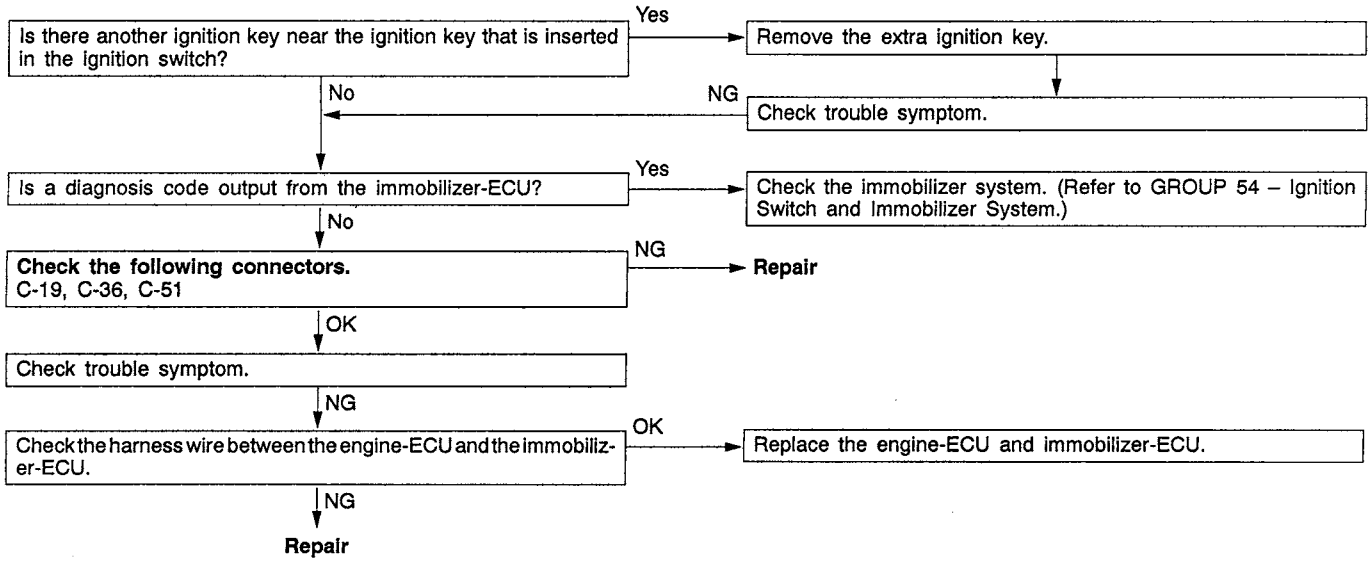

INSPECTION CHART FOR TROUBLE SYMPTOMS

For vehicles with immobilizer system, inspection procedure No.2 has been changed.

Trouble symptom		Inspection procedure No.	Reference page
Communication with MUT-II is impossible.	Communication with all systems is not possible.	1	13A-15*
	Communication with engine-ECU only is not possible.	2	13A-3

*: Refer to '98 L200 Workshop Manual (Pub.No. PWTE96E1-B).

INSPECTION PROCEDURE FOR TROUBLE SYMPTOMS

INSPECTION PROCEDURE 2

MUT-II communication with engine-ECU is impossible.	Probable cause
One of the following causes may be suspected. • No power supply to engine-ECU. • Defective earth circuit of engine-ECU. • Defective engine-ECU. • Improper communication line between engine-ECU and MUT-II	• Malfunction of engine-ECU power supply circuit • Malfunction of engine-ECU • Open circuit between engine-ECU and diagnosis connector

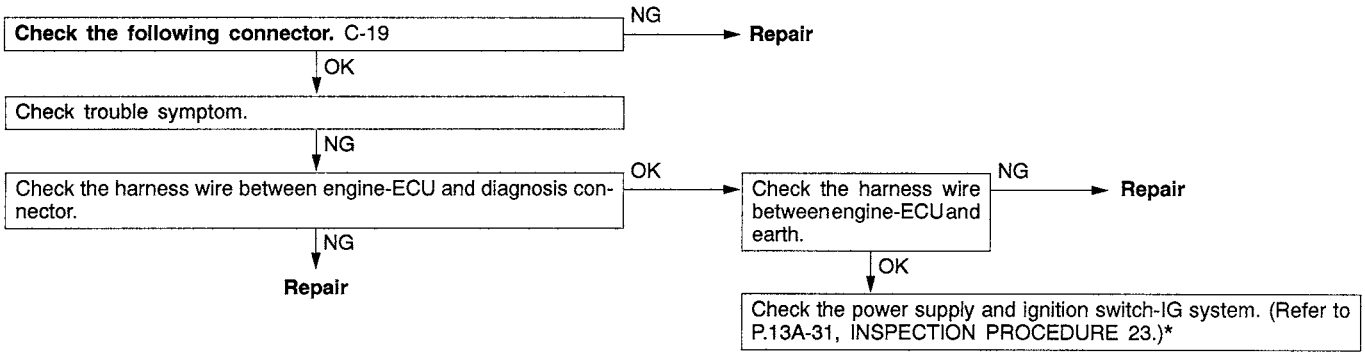

*: Refer to '98 L200 Workshop Manual (Pub. No. PWTE96E1-B).

MULTIPOINT FUEL INJECTION (MPI)

CONTENTS

GENERAL 3
Outline of Changes 3
GENERAL INFORMATION 3
Self-diagnosis Function 3
General Specifications 3
SERVICE SPECIFICATIONS 3
SPECIAL TOOLS 4
TROUBLESHOOTING 4
Diagnosis Function 4
Fail-safe Function Reference Table 8
Inspection Chart for Diagnosis Codes 9
Inspection Procedure Classified by Diagnosis Code 10
Inspection Chart for Trouble Symptoms 42
Inspection Procedure for Trouble Symptoms 43
Data List Reference Table 67
Actuator Test Reference Table 72
Check at the Engine-ECU Terminals 73
Inspection Procedure Using an Analyzer . . . 79
ON-VEHICLE SERVICE 83
Component Location 83
Oxygen Sensor Check 84

GENERAL

OUTLINE OF CHANGES

With the modification below, the service procedure of the part that is different from previous part has been established.

- Adopting On-board Diagnostics System filled out the diagnostic item and modified diagnostic code numbering system.
- The distributorless 2 coil ignition system has been adopted.
- The crank angle sensor has been adopted on the crank shaft.
- Camshaft position sensor has been added. (the function is same as the function of the previous top dead center sensor of distributor)
- Oxygen sensor (rear) has been added.
- Ignition timing adjustment terminal has been abolished.

GENERAL INFORMATION

SELF-DIAGNOSIS FUNCTION

The functions below have been added.

- The engine-ECU records the engine operating condition when the diagnosis code is set. This data is called “freeze frame” data. This data can be read by using the MUT-II, and can be used in simulation tests for troubleshooting.

GENERAL SPECIFICATIONS

Items		Specifications
Engine-ECU	Identification No.	E6T32473 <Vehicle without immobilizer system> E6T32474 <Vehicle with immobilizer system>
Sensors	Camshaft position sensor	Hall element type
	Crank angle sensor	Hall element type
Actuators	Injector identification mark	CDH240

SERVICE SPECIFICATIONS

Items		Standard value
Oxygen sensor output voltage (during revving) V		0.6 – 1.0
Oxygen sensor heater resistance (at 20°C) Ω	Front	4.5 – 8.0
	Rear	11 – 18

SPECIAL TOOLS

Tool	Number	Name	Use
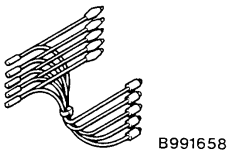 B991658	MB991658	Test harness set	• Measurement of voltage during troubleshooting
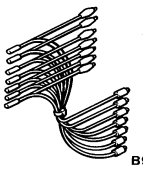 B991709	MB991709	Test harness	• Measurement of voltage during troubleshooting • Inspection using an analyzer
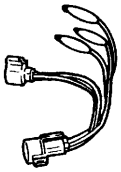	MD998478	Test harness (3-pin, triangle)	• Measurement of voltage during troubleshooting • Inspection using an analyzer

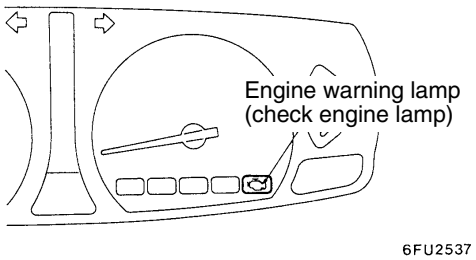

TROUBLESHOOTING

DIAGNOSIS FUNCTION

ENGINE WARNING LAMP (CHECK ENGINE LAMP)

If an abnormality occurs in any of the following items related to the MPI system, the engine warning lamp will illuminate or flash. If the lamp remains illuminated or if the lamp illuminates while the engine is running, check the diagnosis code output.
However, the warning lamp will illuminate as bulb check for five seconds whenever the ignition switch is turned to the ON position.

Engine warning lamp inspection items

Code No.	Diagnosis item
–	Engine-ECU
P0100	Air flow sensor system
P0105	Barometric pressure sensor system
P0110	Intake air temperature sensor system
P0115	Engine coolant temperature sensor system
P0120	Throttle position sensor system
P0125	Feedback system
P0130	Oxygen sensor (front) system <sensor 1>
P0135	Oxygen sensor heater (front) system <sensor 1>

Code No.	Diagnosis item
P0136	Oxygen sensor (rear) system <sensor 2>
P0141	Oxygen sensor heater (rear) system <sensor 2>
P0170	Abnormal fuel system
P0201	No. 1 injector system
P0202	No. 2 injector system
P0203	No. 3 injector system
P0204	No. 4 injector system
P0300★	Ignition coil (power transistor) system
P0301	No. 1 cylinder misfire detected
P0302	No. 2 cylinder misfire detected
P0303	No. 3 cylinder misfire detected
P0304	No. 4 cylinder misfire detected
P0335	Crank angle sensor system
P0340	Camshaft position sensor system
P0403	EGR valve system
P0420	Catalyst malfunction
P0443	Purge control solenoid valve system
P0505	Idle speed control system
P0510	Idle position switch system
P0551	Power steering fluid pressure switch system

NOTE
1. If the engine warning lamp illuminates because of a malfunction of the engine-ECU, communication between MUT-II and the engine-ECU <M/T> is impossible. In this case, the diagnosis code cannot be read.
2. After the engine-ECU has detected a malfunction, the engine warning lamp illuminates when the engine is next turned on and the same malfunction is re-detected. However, for items marked with a "★" in the diagnosis code number column, the engine warning lamp illuminates only on the first detection of the malfunction.
3. After the engine warning lamp illuminates, it will be switched off under the following conditions.
   (1) When the engine-ECU monitored the power train malfunction three times* and met set condition requirements, it detected no malfunction.
   *: In this case, "one time" indicates from engine start to stop.
   (2) For misfiring malfunction, when driving conditions (engine speed, engine coolant temperature, etc.) are similar to those when the malfunction was first recorded.
4. Sensor 1 indicates the sensor mounted at a position closest to the engine, and sensor 2 indicates the sensor mounted at the position second closest to the engine.

METHOD OF READING AND ERASING DIAGNOSIS CODES

Refer to GROUP 00 – How to Use Troubleshooting/Inspection Service Points on the '97 L200 Workshop Manual (Pub. No. PWTE96E1).

DIAGNOSIS USING DIAGNOSIS 2 MODE

1. Switch the diagnosis mode of the engine control unit to DIAGNOSIS 2 mode using the MUT-II.
2. Carry out a road test.
3. Take a reading of the diagnosis code and repair the problem location.
4. Turn the ignition switch to OFF and then back to ON again.

   NOTE
   By turning the ignition switch to OFF, the ENGINE-ECU will switch the diagnosis mode from DIAGNOSIS 2 mode to DIAGNOSIS 1 mode.
5. Erase the diagnosis codes.

INSPECTION USING MUT-II DATA LIST AND ACTUATOR TESTING

1. Carry out inspection by means of the data list and the actuator test function. If there is an abnormality, check and repair the chassis harnesses and components.
2. After repairing, re-check using the MUT-II and check that the abnormal input and output have returned to normal as a result of the repairs.
3. Erase the diagnosis code memory.
4. Remove the MUT-II, and then start the engine again and carry out a road test to confirm that the problem has disappeared.

FREEZE FRAME DATA

When the engine-ECU detects a malfunction and stores a diagnosis code, it also stores a current status of the engine. This function is called "Freeze frame data." By analyzing this "freeze frame" data with the MUT-II, an effective troubleshooting can be performed.
The display items of freeze frame data are shown below.

Display item list

Data item		Unit
Engine coolant temperature sensor		°C
Engine speed		r/min
Vehicle speed		km/h
Long-term fuel compensation (long-term fuel trim)		%
Short-term fuel compensation (short-term fuel trim)		%
Fuel control condition	Open loop	OL
	Closed loop	CL
	Open loop owing to drive condition	OL-DRV.
	Open loop owing to system malfunction	OL-SYS.
	Closed loop based on one oxygen sensor	CL-H02S
Calculation load value		%
Diagnosis code during data recording		–

NOTE
If malfunctions have been detected in multiple systems, store one malfunction only, which has been detected first.

READINESS TEST STATUS

The engine-ECU monitors the following main diagnosis items, judges if these items are in good condition or not, and the stores its history. This history can be read out by using MUT-II. (If the ECU has judged an item before, the MUT-II displays “Complete.”)
In addition, if diagnosis codes are erased or the battery cable is disconnected, this history will also be erased (the memory will be reset).

- Catalyst: P0420
- Oxygen sensor: P0130
- Oxygen sensor heater: P0135, P0141

FAIL-SAFE FUNCTION REFERENCE TABLE

When the main sensor malfunctions are detected by the diagnosis function, the vehicle is controlled by means of the pre-set control logic to maintain safe conditions for driving.

Malfunctioning item	Control contents during malfunction
Air flow sensor	1. Uses the throttle position sensor signal and engine speed signal (crank angle sensor signal) to take reading of the basic injector drive time and basic ignition timing from the pre-set mapping. 2. Fixes the ISC servo in the appointed position so idle control is not performed.
Intake air temperature sensor	Controls as if the intake air temperature is 25°C.
Throttle position sensor (TPS)	No increase in fuel injection amount during acceleration due to the throttle position sensor signal.
Engine coolant temperature sensor	Controls as if the engine coolant temperature is 80°C.
Camshaft position sensor	Injects fuel to all cylinders simultaneously. (However, after the ignition switch is turned to ON, the No. 1 cylinder top dead centre is not detected at all.)
Barometric pressure sensor	Controls as if the barometric pressure is 101 kPa.
Ignition coil, power transistor	Cuts off the fuel supply to cylinders with an abnormal ignition.
Oxygen sensor (front)	Air/fuel ratio feedback control (closed loop control) is not performed.
Oxygen sensor (rear)	Performs the feedback control (closed loop control) of the air/fuel ratio by using only the signal of the oxygen sensor (front) installed on the front of the catalytic converter.
Misfiring	If the detected misfiring causes damage to the catalyst, the misfiring cylinder will be shut down.

INSPECTION CHART FOR DIAGNOSIS CODES

Code No.	Diagnosis item	Reference page
P0100	Air flow sensor system	13A-10
P0105	Barometric pressure sensor system	13A-12
P0110	Intake air temperature sensor system	13A-14
P0115	Engine coolant temperature sensor system	13A-16
P0120	Throttle position sensor system	13A-18
P0125	Feedback system	13A-20
P0130	Oxygen sensor (front) system <sensor 1>	13A-21
P0135	Oxygen sensor heater (front) system <sensor 1>	13A-23
P0136	Oxygen sensor (rear) system <sensor 2>	13A-24
P0141	Oxygen sensor heater (rear) system <sensor 2>	13A-25
P0170	Abnormal fuel system	13A-26
P0201	No. 1 injector system	13A-27
P0202	No. 2 injector system	13A-27
P0203	No. 3 injector system	13A-27
P0204	No. 4 injector system	13A-27
P0300★	Ignition coil (power transistor) system	13A-28
P0301	No. 1 cylinder misfire detected	13A-29
P0302	No. 2 cylinder misfire detected	13A-29
P0303	No. 3 cylinder misfire detected	13A-29
P0304	No. 4 cylinder misfire detected	13A-29
P0335	Crank angle sensor system	13A-31
P0340	Camshaft position sensor system	13A-32
P0403	EGR valve system	13A-33
P0420	Catalyst malfunction	13A-34
P0443	Purge control solenoid valve system	13A-35
P0500	Vehicle speed sensor system	13A-36
P0505	Idle speed control system	13A-37
P0510	Idle position switch system	13A-39
P0551	Power steering fluid pressure switch system	13A-40
P1610	Immobilizer system	13A-41

NOTE
1. Do not replace the engine-ECU until a through terminal check reveals there are no short/open circuit.
2. Check that the engine-ECU earth circuit is normal before checking for the cause of the problem.
3. After the engine-ECU has detected a malfunction, a diagnosis code is recorded the next time the engine is started and the same malfunction is re-detected. However, for items marked with a "★", the diagnosis code is recorded on the first detection of the malfunction.
4. Sensor 1 indicates the sensor mounted at a position closest to the engine, and sensor 2 indicates the sensor mounted at the position second closest to the engine.

INSPECTION PROCEDURE CLASSIFIED BY DIAGNOSIS CODE

Code No. P0100 Air flow sensor system	Probable cause
Range of Check ● Engine speed: 500 r/min or more Set Conditions ● The sensor output frequency is 3.3 Hz or less for four seconds.	● Malfunction of air flow sensor ● Open or short circuit in air flow sensor circuit or loose connector contact ● Malfunction of engine-ECU

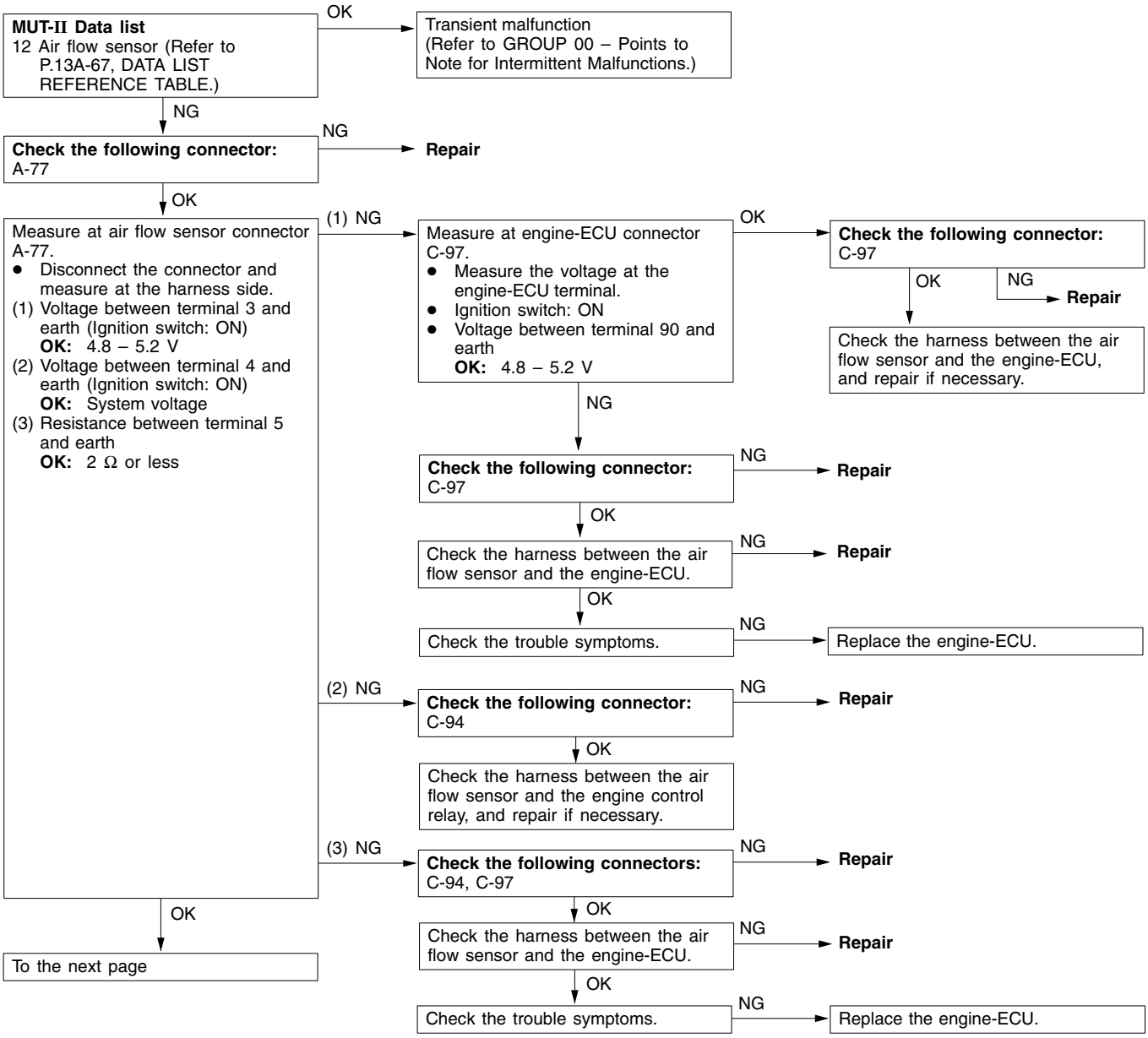

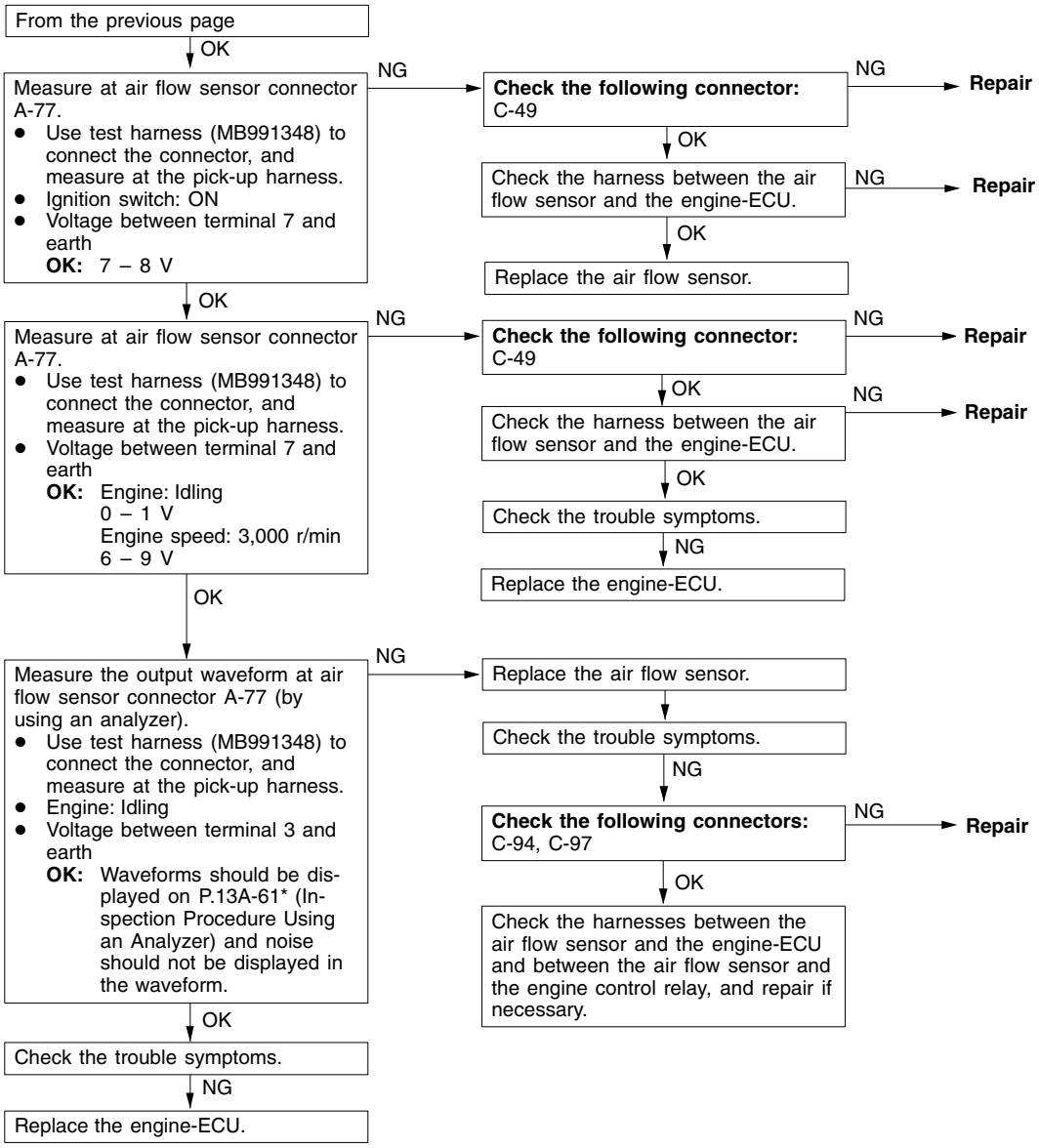

NOTE:
*: Refer to the '98 L200 Workshop Manual (Pub. No. PWTE96E1-B)

Code No. P0105 Barometric pressure sensor system	Probable cause
Range of Check ● Two seconds have passed since the ignition switch is turned ON or the engine starting process is completed. ● Battery voltage: 8 V or more Set Conditions ● The sensor output voltage is 4.5 V or more for four seconds (equivalent to 114 kPa of barometric pressure) or ● The sensor output voltage is 0.2 V or less (equivalent to 53 kPa of barometric pressure)	● Malfunction of barometric pressure sensor ● Open or short circuit in barometric pressure sensor circuit or loose connector contact ● Malfunction of engine-ECU

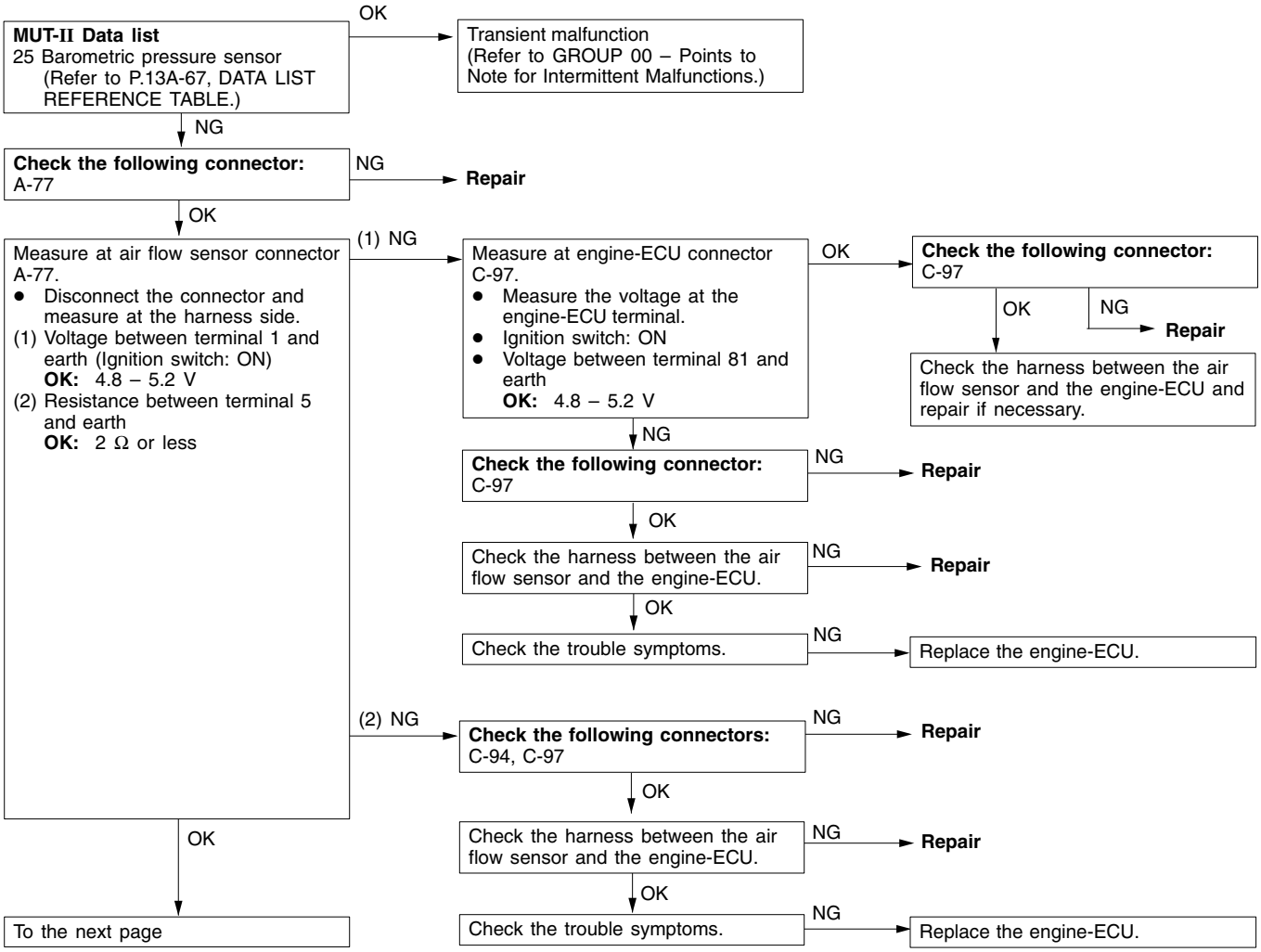

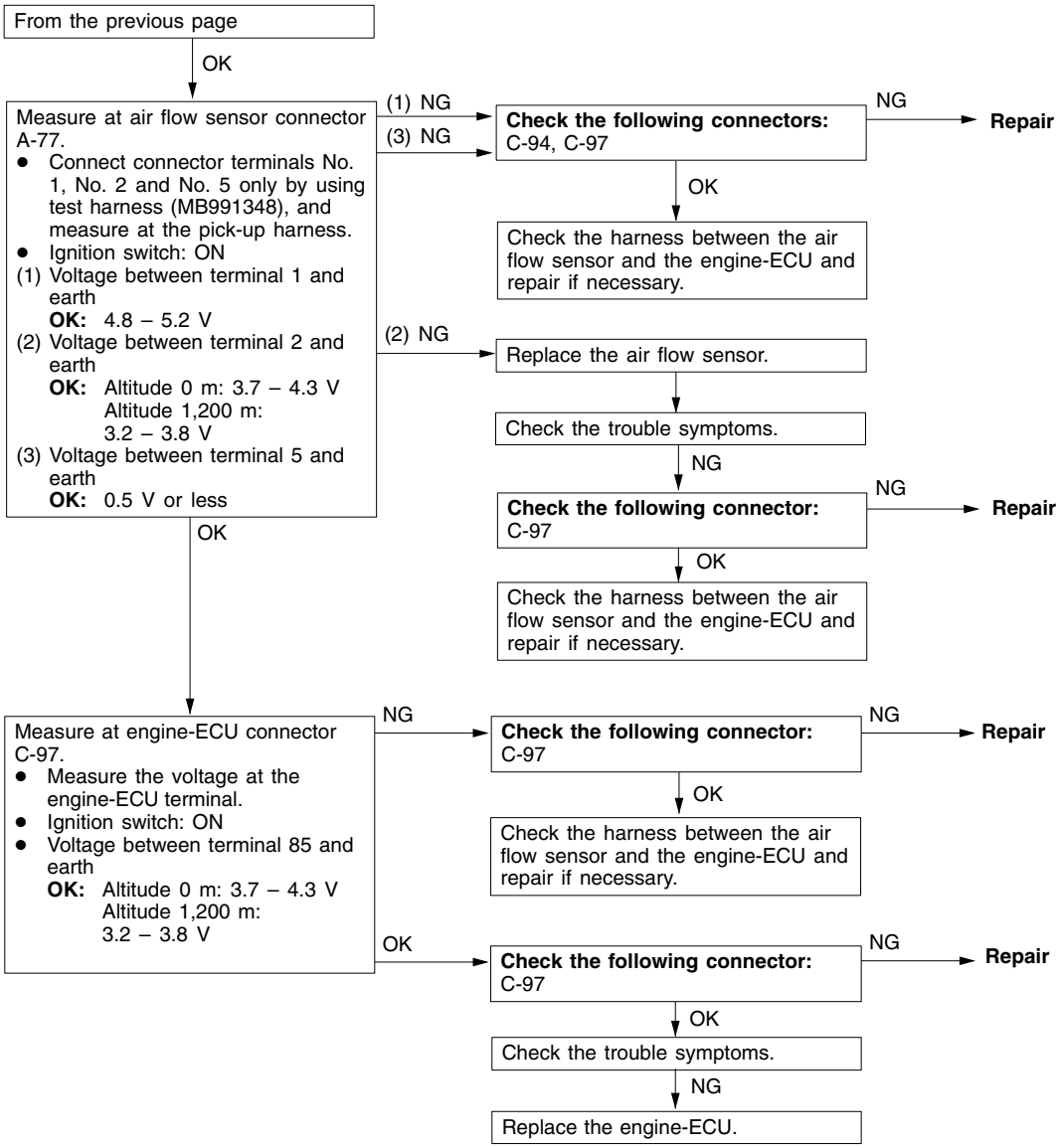
From the previous page
OK
Measure at air flow sensor connector A-77.
● Connect connector terminals No. 1, No. 2 and No. 5 only by using test harness (MB991348), and measure at the pick-up harness.
● Ignition switch: ON
(1) Voltage between terminal 1 and earth
OK: 4.8 – 5.2 V
(2) Voltage between terminal 2 and earth
OK: Altitude 0 m: 3.7 – 4.3 V
Altitude 1,200 m: 3.2 – 3.8 V
(3) Voltage between terminal 5 and earth
OK: 0.5 V or less
(1) NG
(3) NG
Check the following connectors: C-94, C-97
NG
Repair
OK
Check the harness between the air flow sensor and the engine-ECU and repair if necessary.
(2) NG
Replace the air flow sensor.
Check the trouble symptoms.
NG
Check the following connector: C-97
NG
Repair
OK
Check the harness between the air flow sensor and the engine-ECU and repair if necessary.
OK
Measure at engine-ECU connector C-97.
● Measure the voltage at the engine-ECU terminal.
● Ignition switch: ON
● Voltage between terminal 85 and earth
OK: Altitude 0 m: 3.7 – 4.3 V
Altitude 1,200 m: 3.2 – 3.8 V
NG
Check the following connector: C-97
NG
Repair
OK
Check the harness between the air flow sensor and the engine-ECU and repair if necessary.
OK
Check the following connector: C-97
NG
Repair
OK
Check the trouble symptoms.
NG
Replace the engine-ECU.

Code No. P0110 Intake air temperature sensor system	Probable cause
Range of Check ● Two seconds have passed since the ignition switch is turned ON or the engine starting process is completed. Set Conditions ● The sensor output voltage is 4.6 V or more for four seconds (equivalent to –45°C of intake air temperature) or ● The sensor output voltage is 0.2 V or more for four seconds (equivalent to 125°C of intake air temperature)	● Malfunction of intake air temperature sensor ● Open or short circuit in intake air temperature sensor or loose connector contact ● Malfunction of engine-ECU

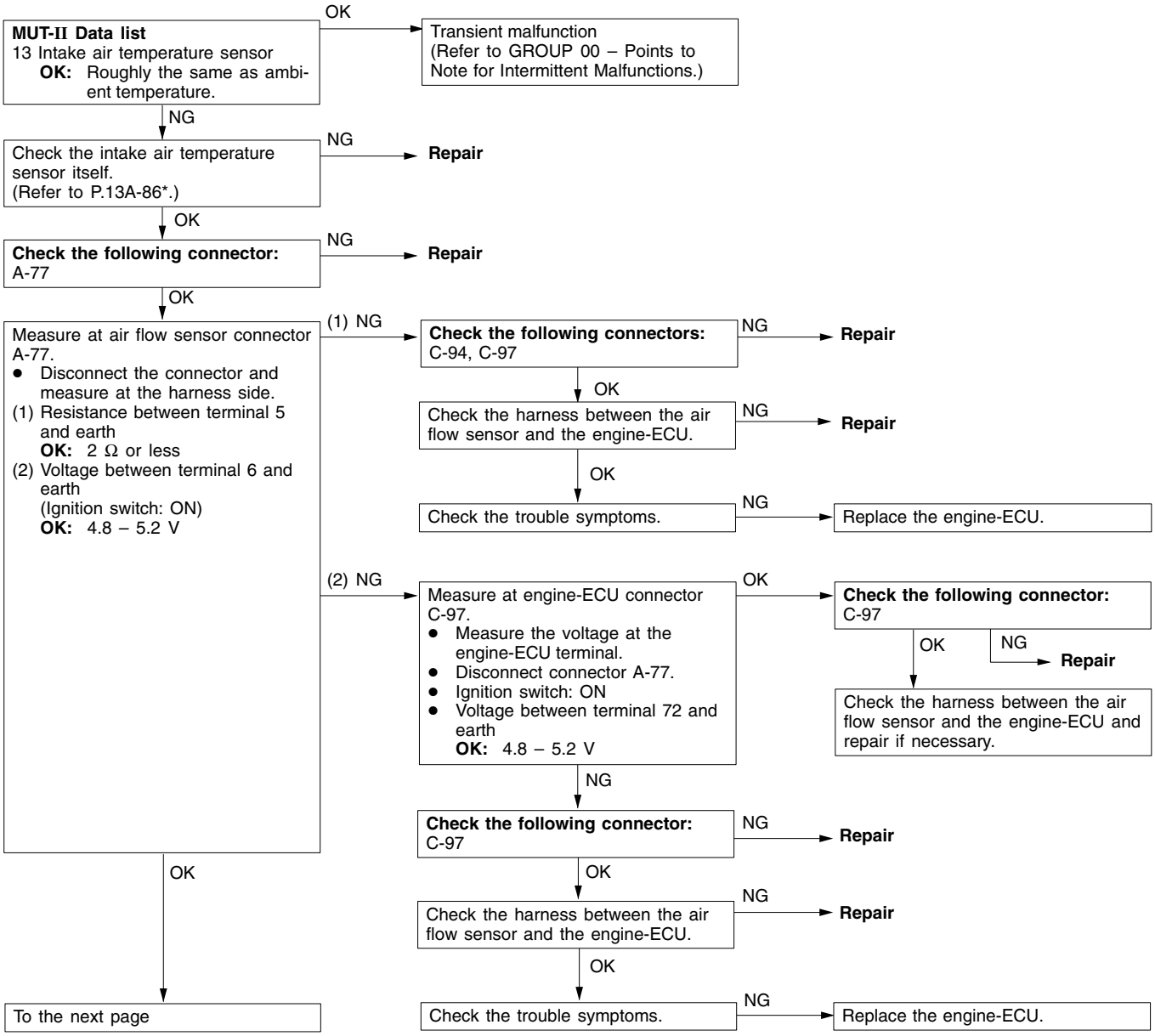

NOTE:
*: Refer to the '97 L200 Workshop Manual (Pub. No. PWTE96E1)

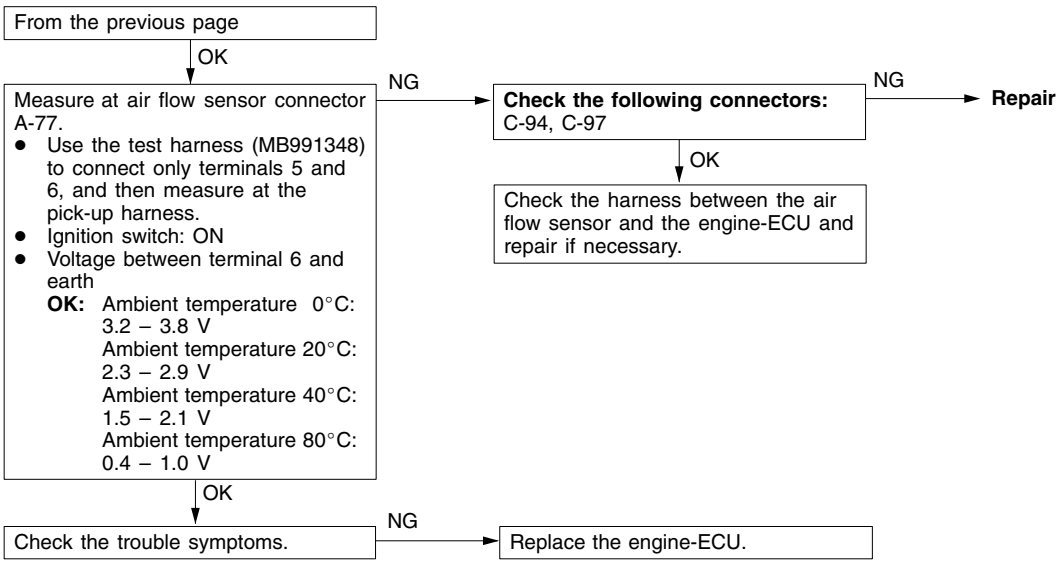
From the previous page
OK
Measure at air flow sensor connector A-77.
● Use the test harness (MB991348) to connect only terminals 5 and 6, and then measure at the pick-up harness.
● Ignition switch: ON
● Voltage between terminal 6 and earth
OK: Ambient temperature 0°C: 3.2 – 3.8 V
Ambient temperature 20°C: 2.3 – 2.9 V
Ambient temperature 40°C: 1.5 – 2.1 V
Ambient temperature 80°C: 0.4 – 1.0 V
NG
Check the following connectors: C-94, C-97
NG
Repair
OK
Check the harness between the air flow sensor and the engine-ECU and repair if necessary.
OK
Check the trouble symptoms.
NG
Replace the engine-ECU.

Code No. P0115 Engine coolant temperature sensor system	Probable cause
Range of Check ● Engine: Two seconds after the engine has been started Set Conditions ● The sensor output voltage is 4.6 V or more for four seconds (equivalent to –45°C or lower of engine coolant temperature) or ● The sensor output voltage is 0.1 V or less for four seconds (equivalent to 140°C or higher of engine coolant temperature)	● Malfunction of engine coolant temperature sensor ● Open or short circuit in the engine coolant temperature sensor circuit or loose connector contact ● Malfunction of engine-ECU
Range of Check ● Engine: After starting Set Conditions ● The engine coolant temperature has reduced from over 40°C to less than 40°C, and that condition has lasted for five minutes or more.	

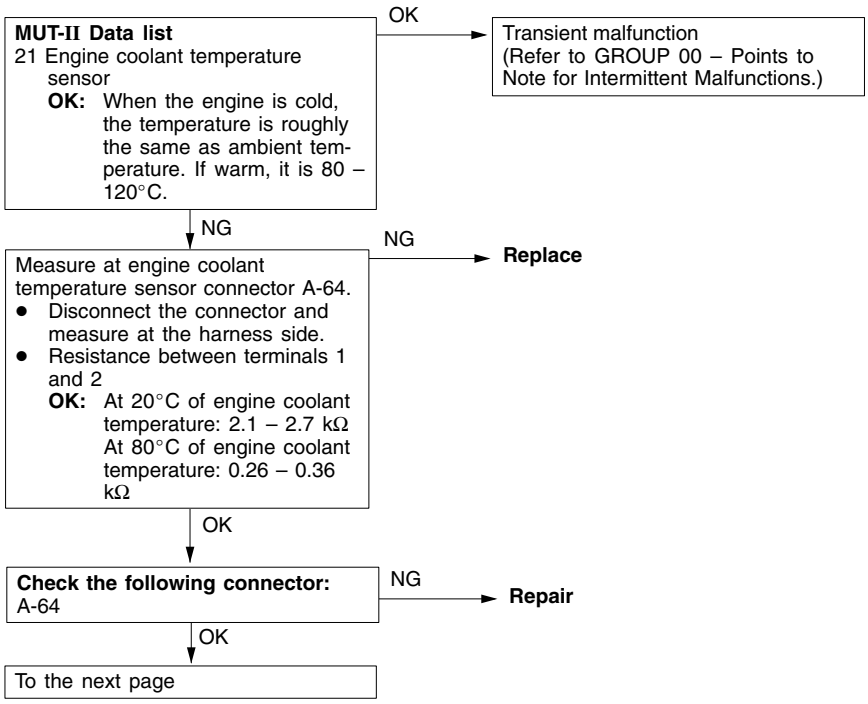

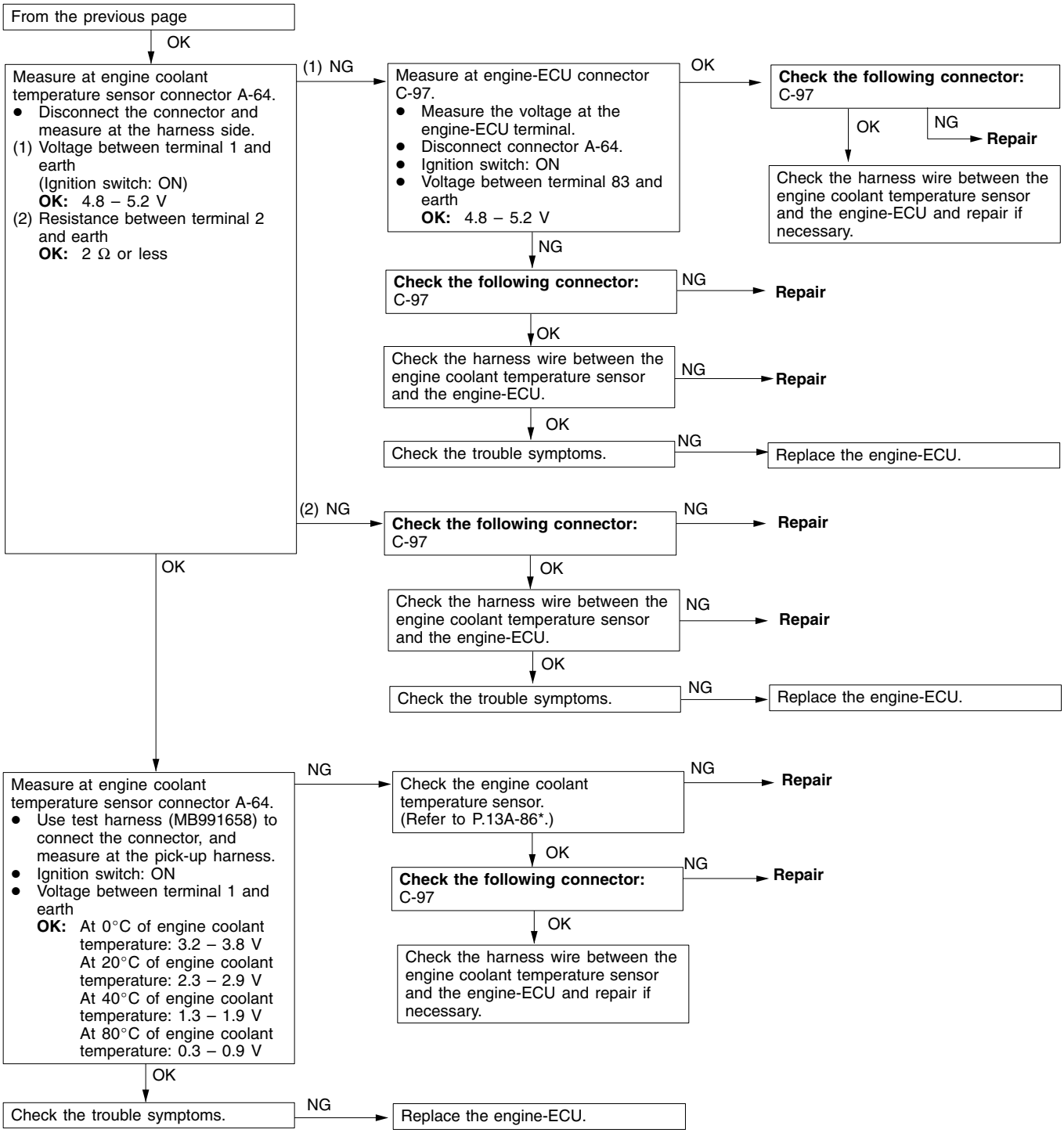

NOTE:
*: Refer to the '97 L200 Workshop Manual (Pub. No. PWTE96E1)

Code No. P0120 Throttle position sensor system	Probable cause
Range of Check ● Excluding two seconds after the ignition switch is turned ON or immediately after the engine starts. Set Conditions ● When the idle position switch is ON, the sensor output voltage is 2 V or more for 4 seconds or ● The sensor output voltage is 0.2 V or less for 4 seconds	● Malfunction of throttle position sensor ● Improper connector contact, open circuit or short-circuited harness wire ● Improper "ON" state of idle position switch ● Short circuit of the idle position switch signal line ● Malfunction of engine-ECU

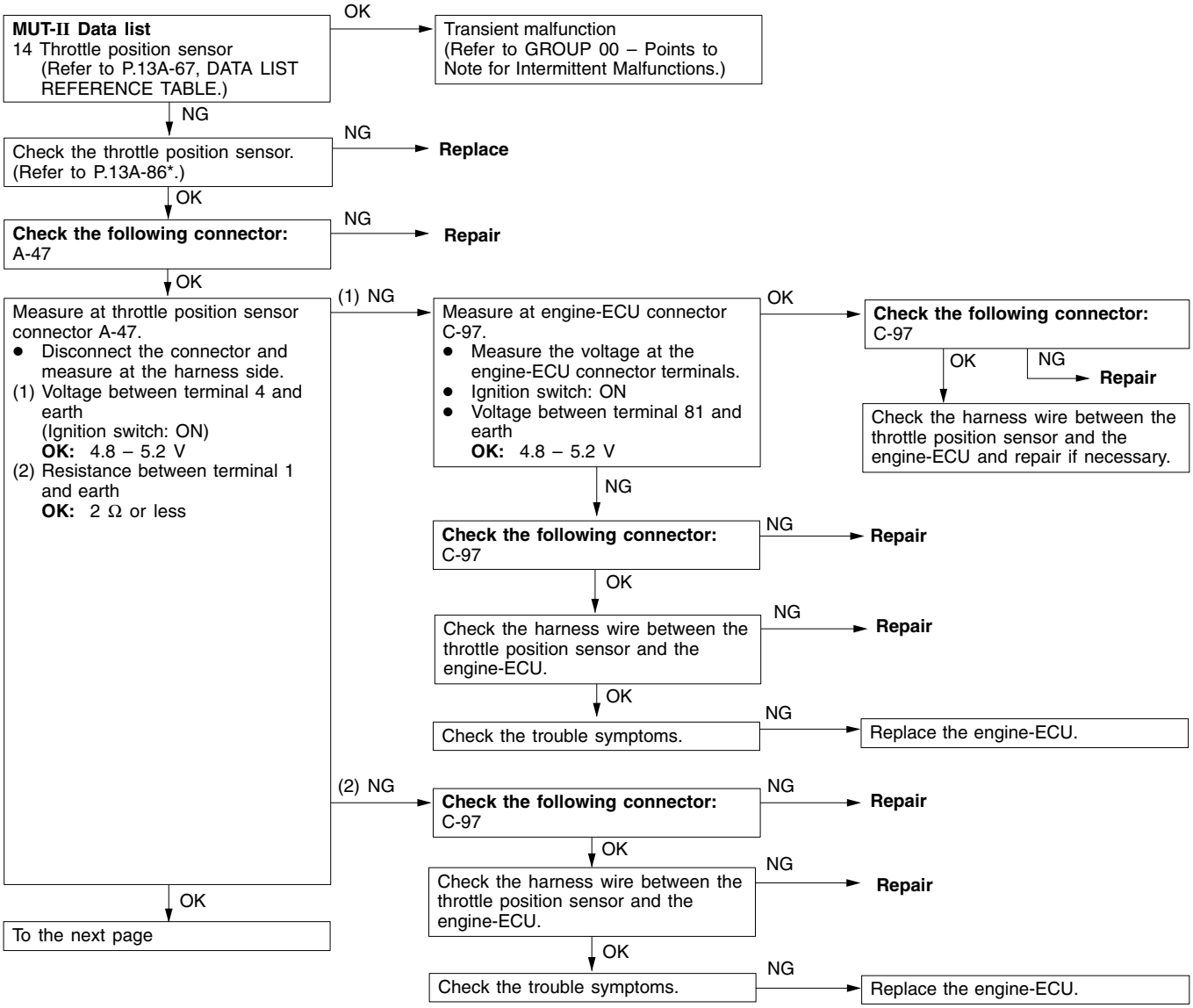

NOTE:
*: Refer to the '97 L200 Workshop Manual (Pub. No. PWTE96E1)

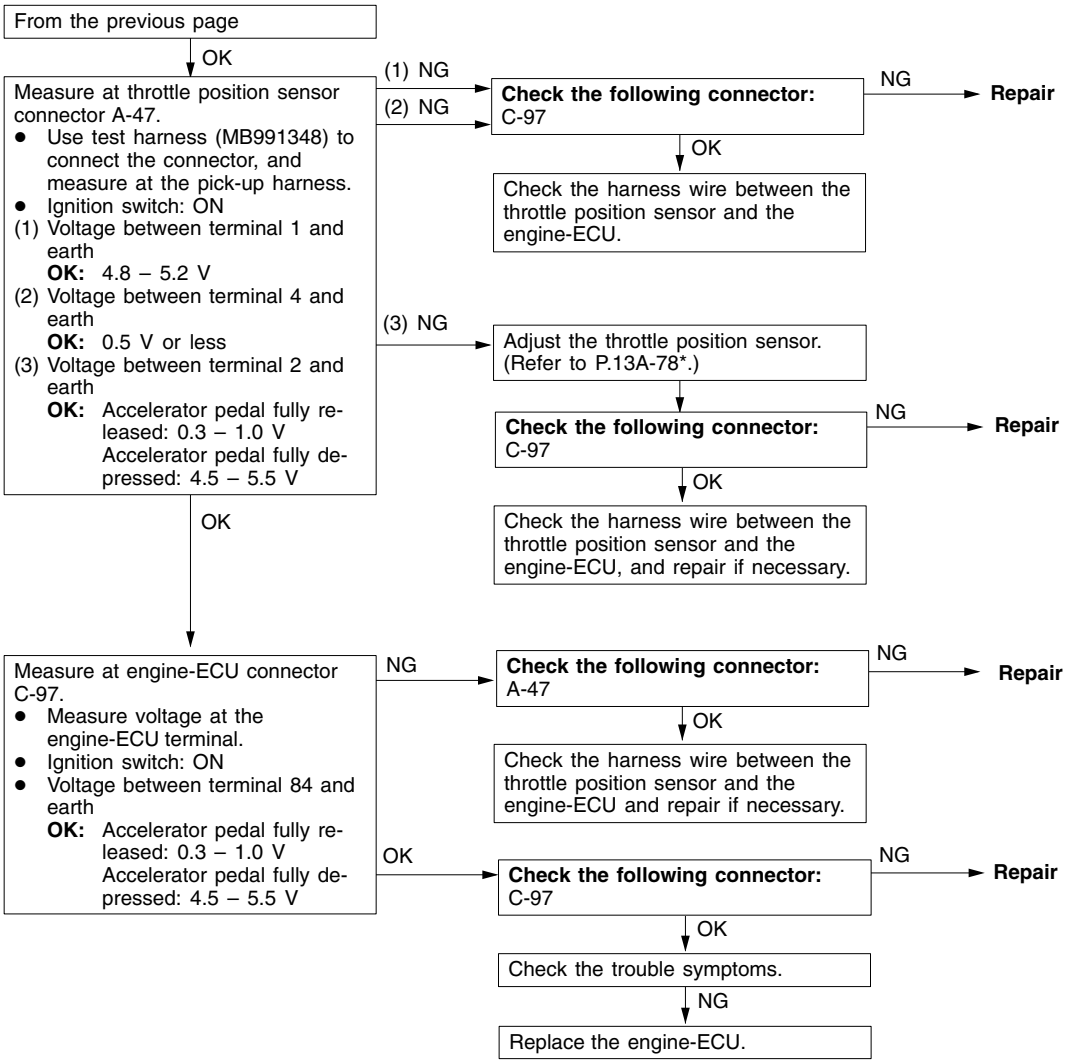

NOTE:
*: Refer to the ’97 L200 Workshop Manual (Pub. No. PWTE96E1)

Code No. P0125 Feedback system	Probable cause
Range of Check ● The engine coolant temperature is approx. 80°C or more. ● During stoichiometric feedback control ● The vehicle is not being decelerated. Set Conditions ● Oxygen sensor (front) output voltage has been higher or lower than 0.5 V for at least thirty seconds.	● Malfunction of oxygen sensor (front) ● Open or short circuit in the oxygen sensor (front) circuit or loose connector contact ● Malfunction of engine-ECU

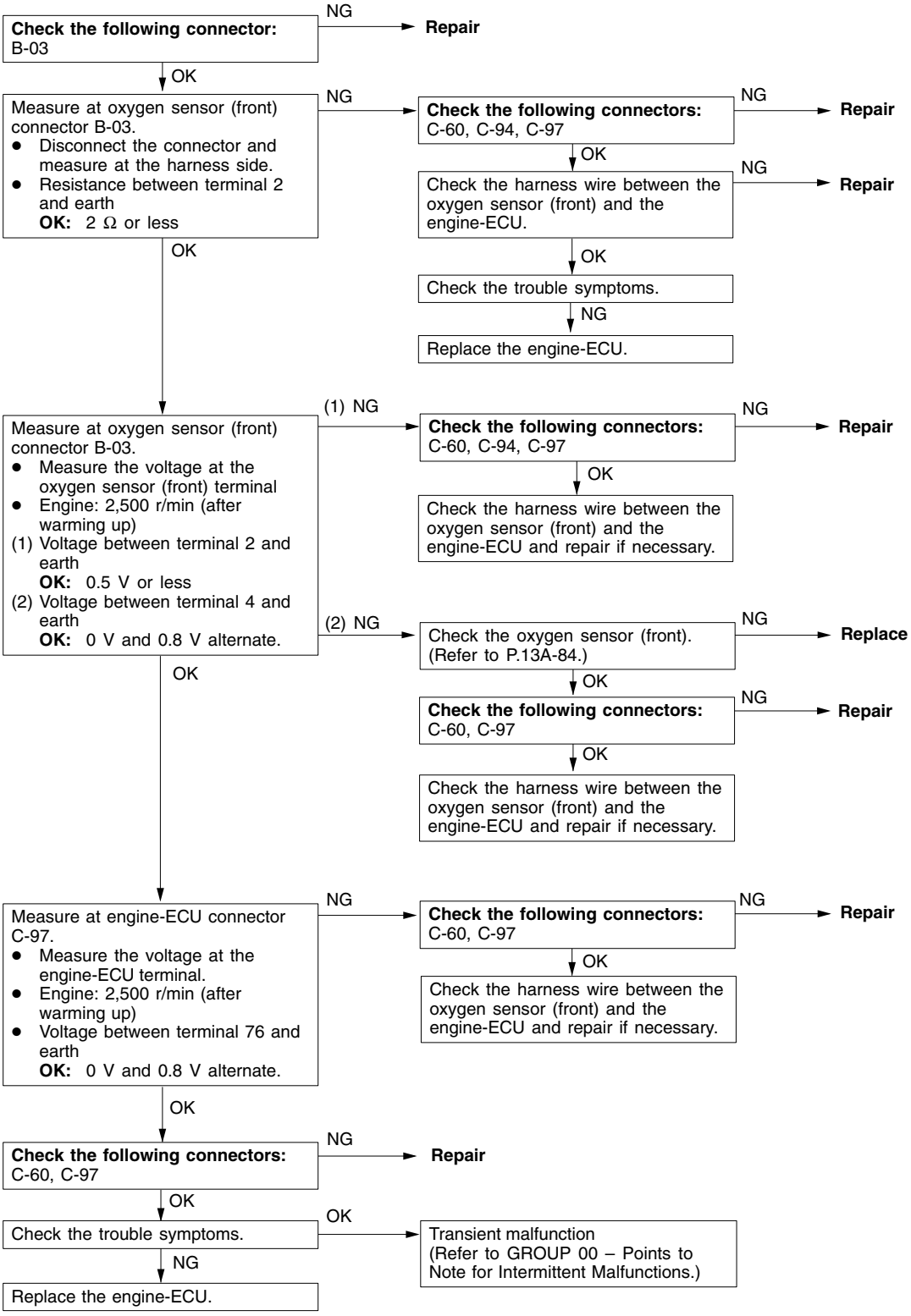

Code No. P0130 Oxygen sensor (front) system <sensor 1>	Probable cause
Range of Check ● Three minutes have been passed since the engine has been started. ● The engine coolant temperature is approx. 80°C or more. ● Engine speed is 1,200 r/min or more ● Driving on a level surface at constant speed. Set Conditions ● The oxygen sensor (front) output voltage is 4.5 V or more when the sensor output voltage is 0.2 V or less and a voltage of 5 V is applied to the oxygen sensor (front) inside the engine-ECU.	● Malfunction of oxygen sensor (front) ● Open or short circuit in the oxygen sensor (front) circuit or loose connector contact ● Malfunction of engine-ECU
Range of Check ● Engine speed is 2,800 r/min or less ● During driving ● During air/fuel ratio feedback control Set Conditions ● The oxygen sensor (front) output frequency is six or less per 10 seconds on average.	

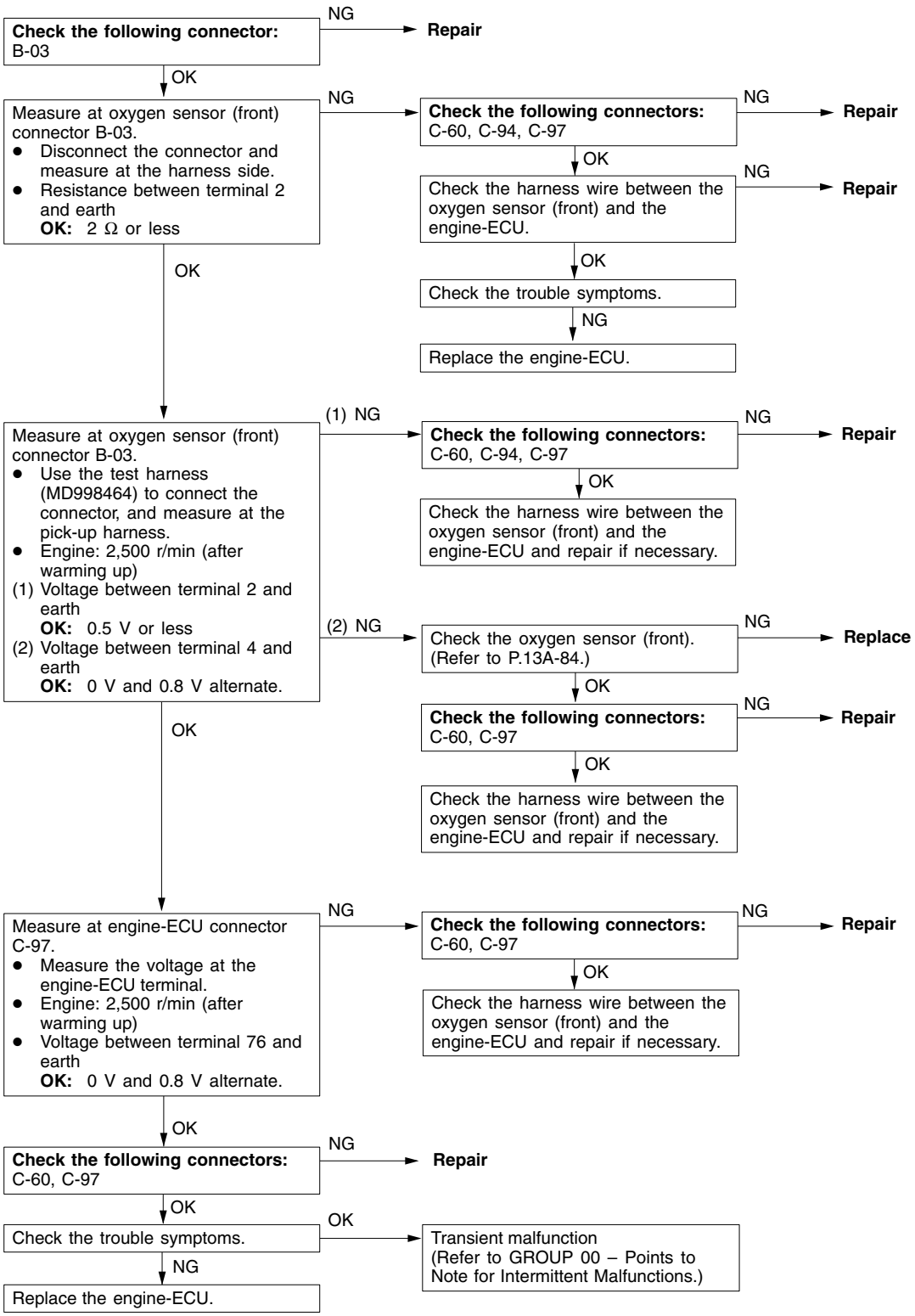
Check the following connector: B-03
NG
Repair
OK
Measure at oxygen sensor (front) connector B-03.
● Disconnect the connector and measure at the harness side.
● Resistance between terminal 2 and earth
OK: 2 Ω or less
NG
Check the following connectors: C-60, C-94, C-97
NG
Repair
OK
Check the harness wire between the oxygen sensor (front) and the engine-ECU.
NG
Repair
OK
Check the trouble symptoms.
NG
Replace the engine-ECU.
OK
Measure at oxygen sensor (front) connector B-03.
● Use the test harness (MD998464) to connect the connector, and measure at the pick-up harness.
● Engine: 2,500 r/min (after warming up)
(1) Voltage between terminal 2 and earth
OK: 0.5 V or less
(2) Voltage between terminal 4 and earth
OK: 0 V and 0.8 V alternate.
(1) NG
Check the following connectors: C-60, C-94, C-97
NG
Repair
OK
Check the harness wire between the oxygen sensor (front) and the engine-ECU and repair if necessary.
(2) NG
Check the oxygen sensor (front). (Refer to P.13A-84.)
NG
Replace
OK
Check the following connectors: C-60, C-97
NG
Repair
OK
Check the harness wire between the oxygen sensor (front) and the engine-ECU and repair if necessary.
OK
Measure at engine-ECU connector C-97.
● Measure the voltage at the engine-ECU terminal.
● Engine: 2,500 r/min (after warming up)
● Voltage between terminal 76 and earth
OK: 0 V and 0.8 V alternate.
NG
Check the following connectors: C-60, C-97
NG
Repair
OK
Check the harness wire between the oxygen sensor (front) and the engine-ECU and repair if necessary.
OK
Check the following connectors: C-60, C-97
NG
Repair
OK
Check the trouble symptoms.
OK
Transient malfunction (Refer to GROUP 00 – Points to Note for Intermittent Malfunctions.)
NG
Replace the engine-ECU.

Code No. P0135 Oxygen sensor heater (front) system <sensor 1>	Probable cause
Range of Check ● The engine coolant temperature is approx. 20°C or more. ● The oxygen sensor heater (front) remains on. ● The engine speed is 50 r/min or more. ● Battery voltage is 11 – 16 V. Set Conditions ● The current, which flows through the oxygen sensor heater (front), is 0.2 A or less or 3.5 A or more for six seconds.	● Malfunction of oxygen sensor heater (front) ● Open or short circuit in the oxygen sensor heater (front) circuit or loose connector contact ● Malfunction of engine-ECU

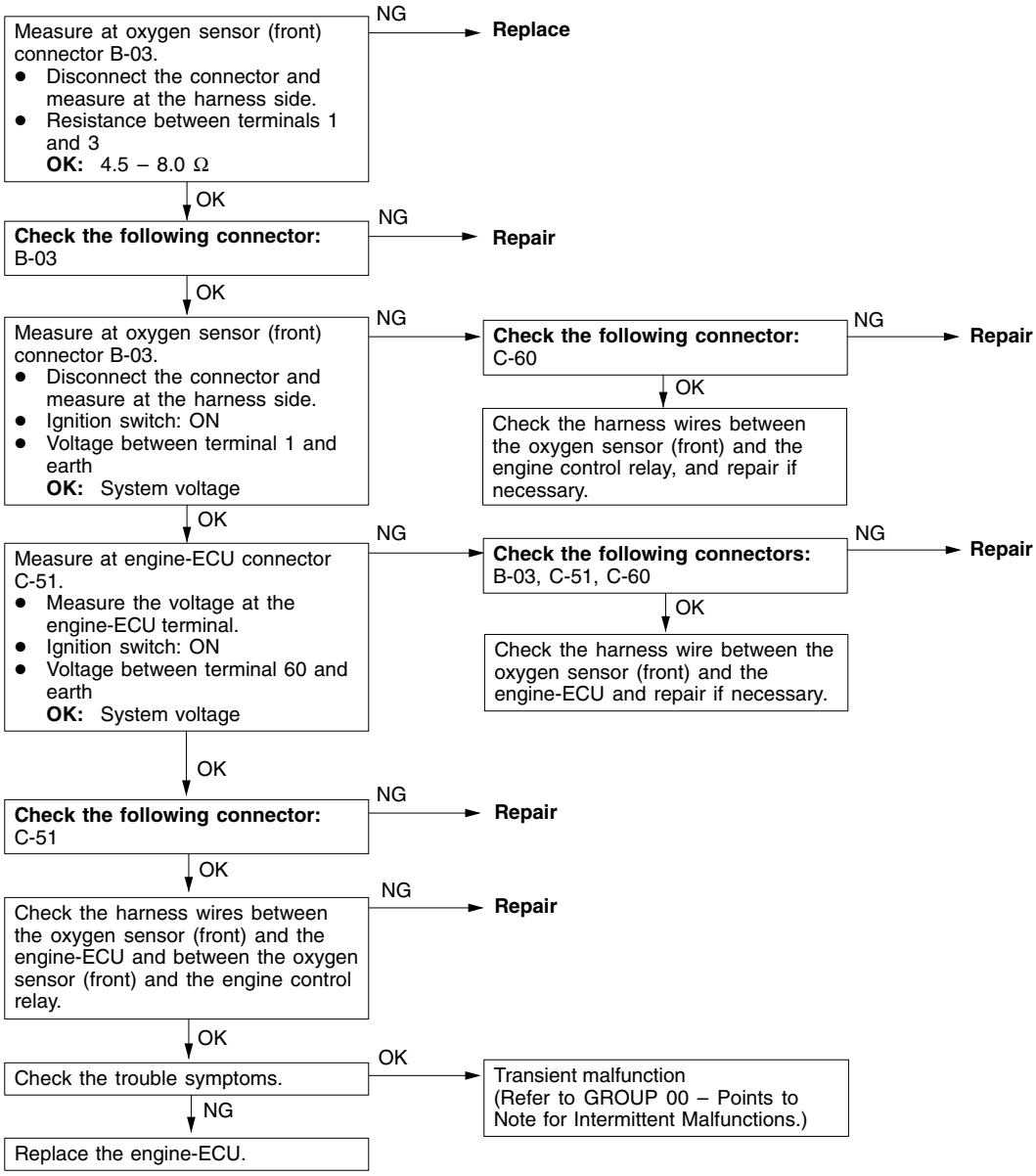

Code No. P0136 Oxygen sensor (rear) system <sensor 2>	Probable cause
Range of Check ● Three minutes have been passed since the engine has been started. ● The engine coolant temperature is approx. 80°C or more. ● Engine speed is 1,200 r/min or more ● Driving on a level surface at constant speed. Set Conditions ● The oxygen sensor (rear) output voltage is 4.5 V or more when the sensor output voltage is 0.2 V or less and a voltage of 5 V is applied to the oxygen sensor (rear) inside the engine-ECU <M/T> or engine-A/T-ECU <A/T>.	● Malfunction of oxygen sensor (rear) ● Open or short circuit in the oxygen sensor (rear) circuit or loose connector contact ● Malfunction of engine-ECU

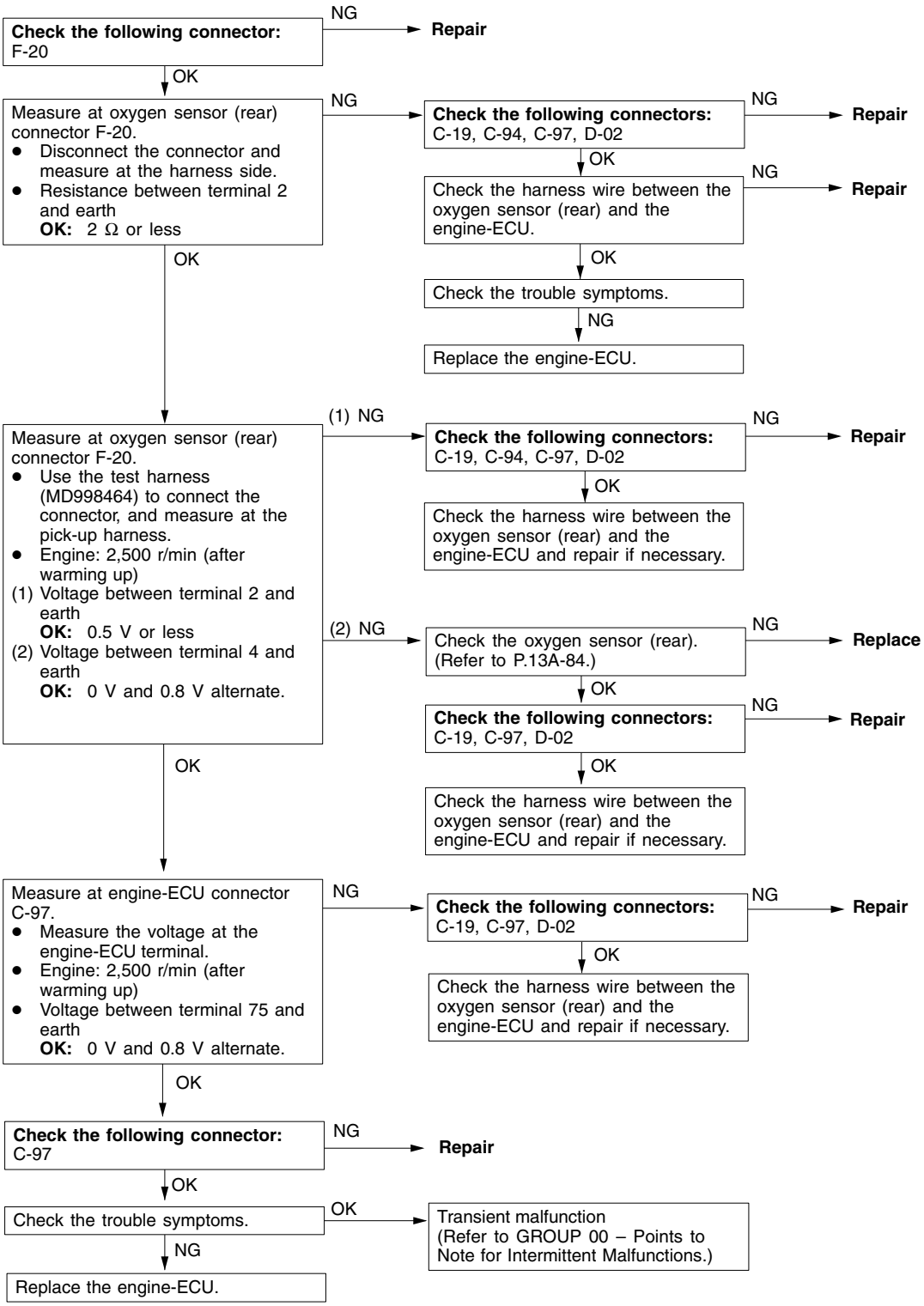

Code No. P0141 Oxygen sensor heater (rear) system <sensor 2>	Probable cause
Range of Check ● The engine coolant temperature is approx. 20°C or more. ● The oxygen sensor heater (rear) remains on. ● The engine speed is 50 r/min or more. ● Battery voltage is 11 – 16 V. Set Conditions ● The current, which flows through the oxygen sensor heater (rear), is 0.2 A or less or 3.5 A or more for six seconds.	● Malfunction of oxygen sensor heater (rear) ● Open or short circuit in the oxygen sensor heater (rear) circuit or loose connector contact ● Malfunction of engine-ECU

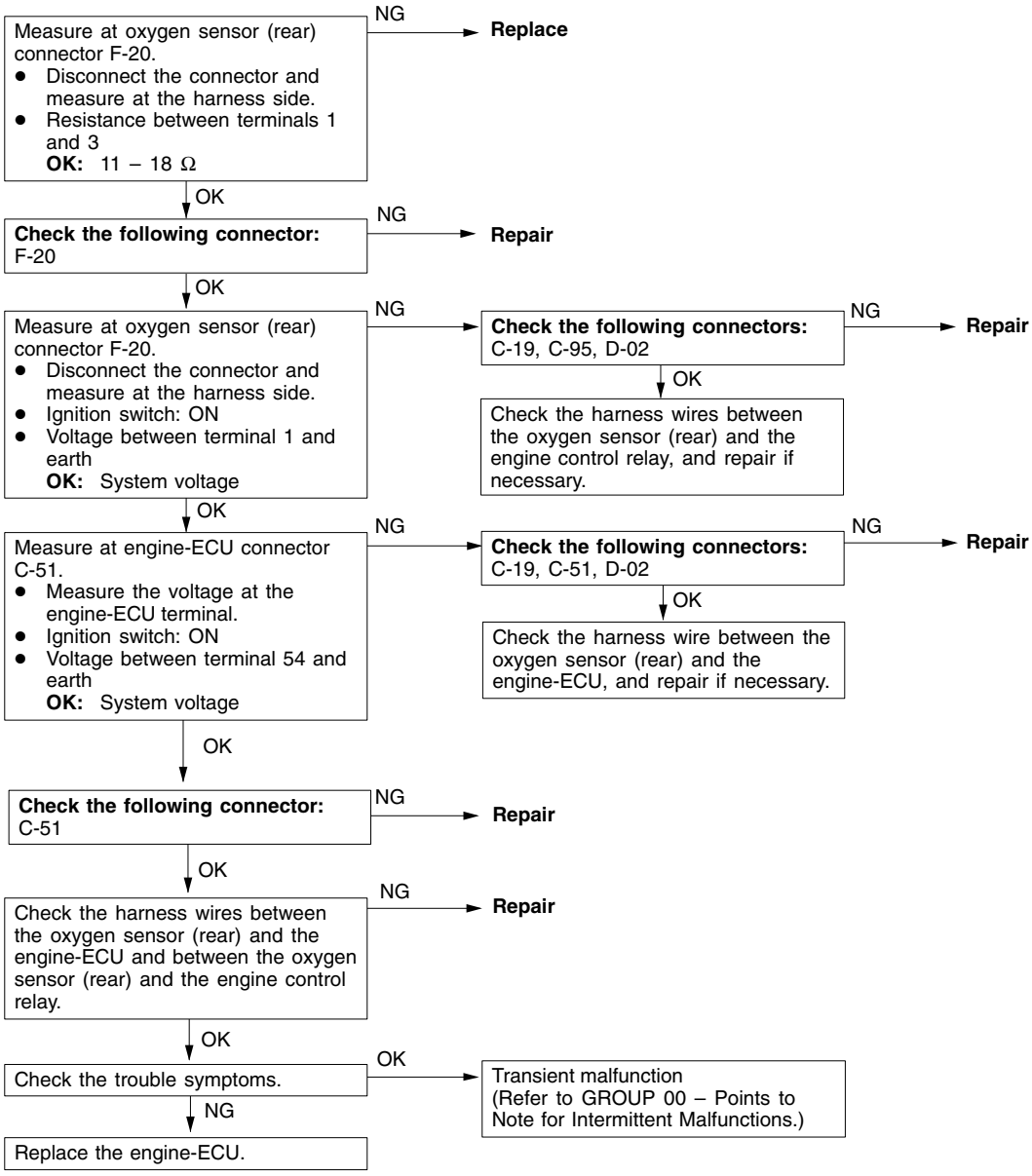

Code No. P0170 Abnormal fuel system	Probable cause
Range of Check ● Engine: Being learning the air/fuel ratio Set Conditions ● Ten seconds or more have been passed while the fuel injection amount compensation value is too low. or ● Ten seconds or more have been passed while the fuel injection amount compensation value is too high.	● Incorrect fuel pressure ● Malfunction of fuel supply system ● Malfunction of oxygen sensor (front) ● Malfunction of intake air temperature sensor ● Malfunction of barometric pressure sensor ● Malfunction of air flow sensor ● Malfunction of engine-ECU

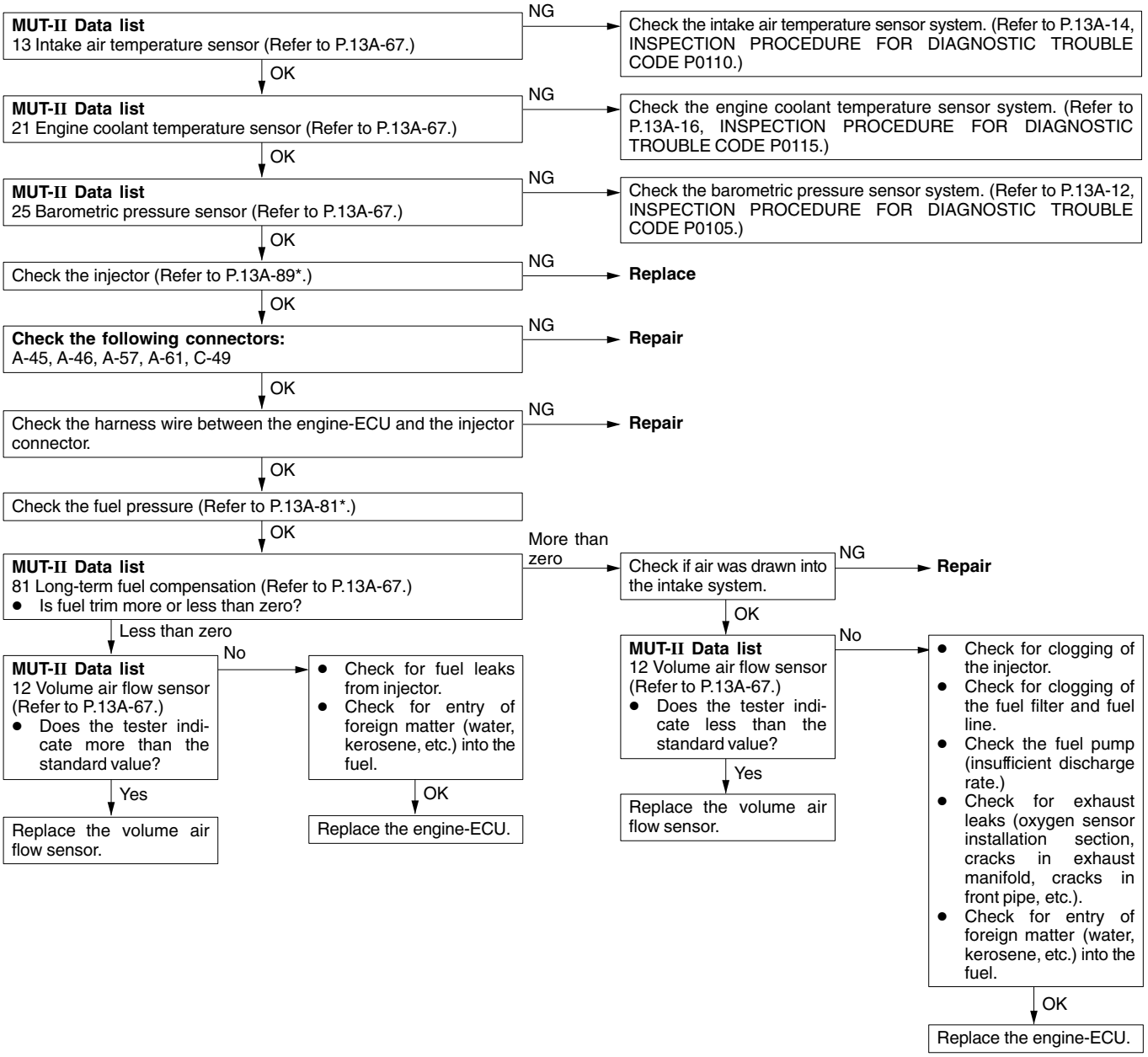

NOTE:
*: Refer to the '97 L200 Workshop Manual (Pub. No. PWTE96E1)

Code No. P0201 No. 1 injector system Code No. P0202 No. 2 injector system Code No. P0203 No. 3 injector system Code No. P0204 No. 4 injector system	Probable cause
Range of Check ● Engine speed is approx. 50 – 1,000 r/min ● The throttle position sensor output voltage is 1.15 V or less. ● Actuator test by MUT-II is not carried out. Set Conditions ● Surge voltage of injector coil is not detected for 4 seconds.	● Malfunction of the injector ● Improper connector contact, open circuit or short-circuited harness wire of the injector circuit ● Malfunction of engine-ECU

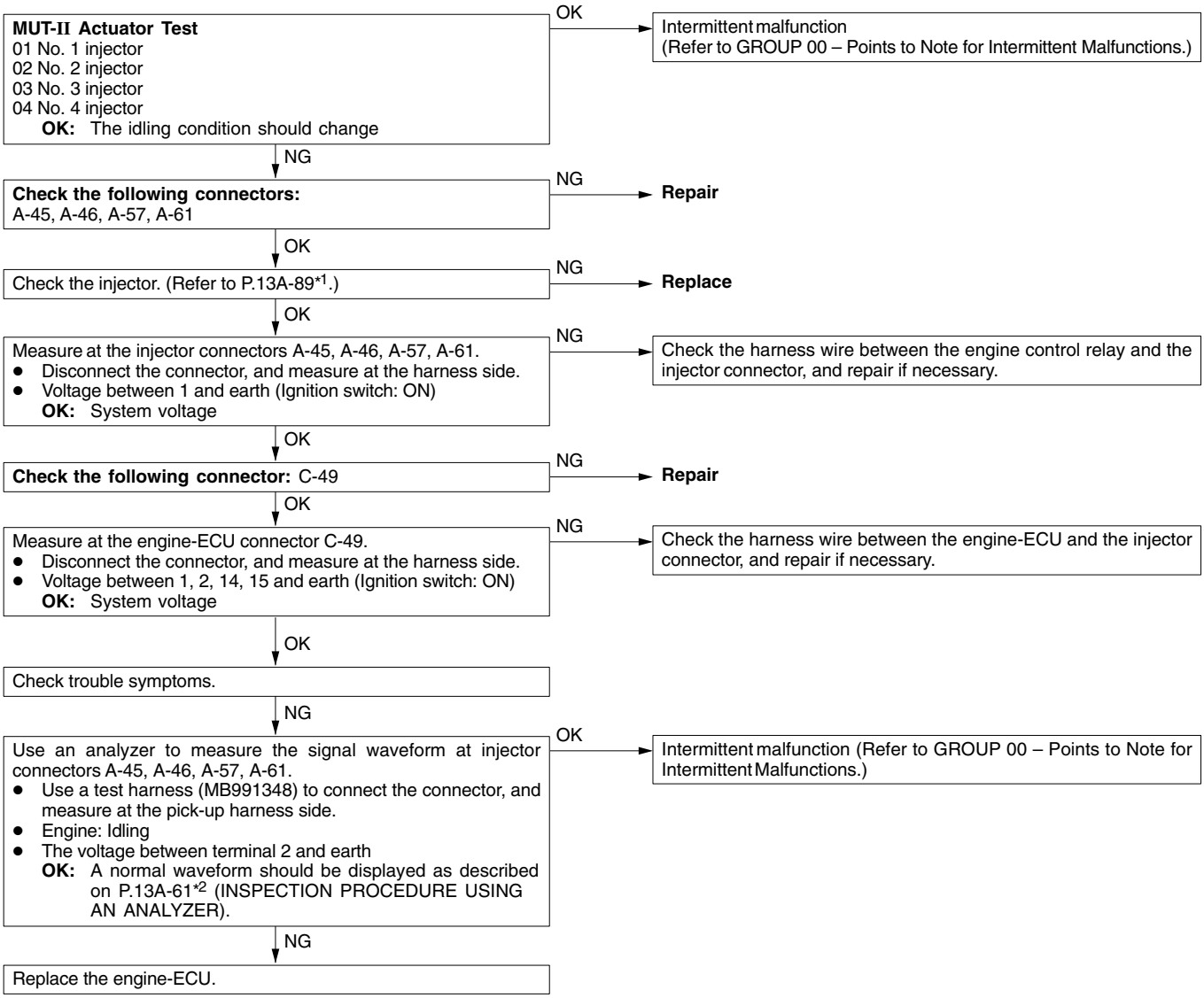

NOTE:
*1: Refer to the '97 L200 Workshop Manual (Pub. No. PWTE96E1)
*2: Refer to the '98 L200 Workshop Manual (Pub. No. PWTE96E1-B)

Code No. P0300 Random cylinder misfire detected	Probable cause
Range of Check ● Engine speed is approx. 50 – 4,500 r/min. ● When the engine is running except deceleration and sudden acceleration Set Conditions ● The number of misfire exceeds a predetermined number per 200 engine revolutions. ● The number of misfire exceeds a predetermined number per 1,000 engine revolutions.	● Malfunction of the ignition system ● Abnormal compression ● Malfunction of injector ● Abnormal signal from the crank angle sensor ● Malfunction of the air/fuel mixture ratio control system ● Malfunction of the engine coolant temperature sensor ● Missing timing belt teeth ● Malfunction of the EGR valve ● Malfunction of engine-ECU

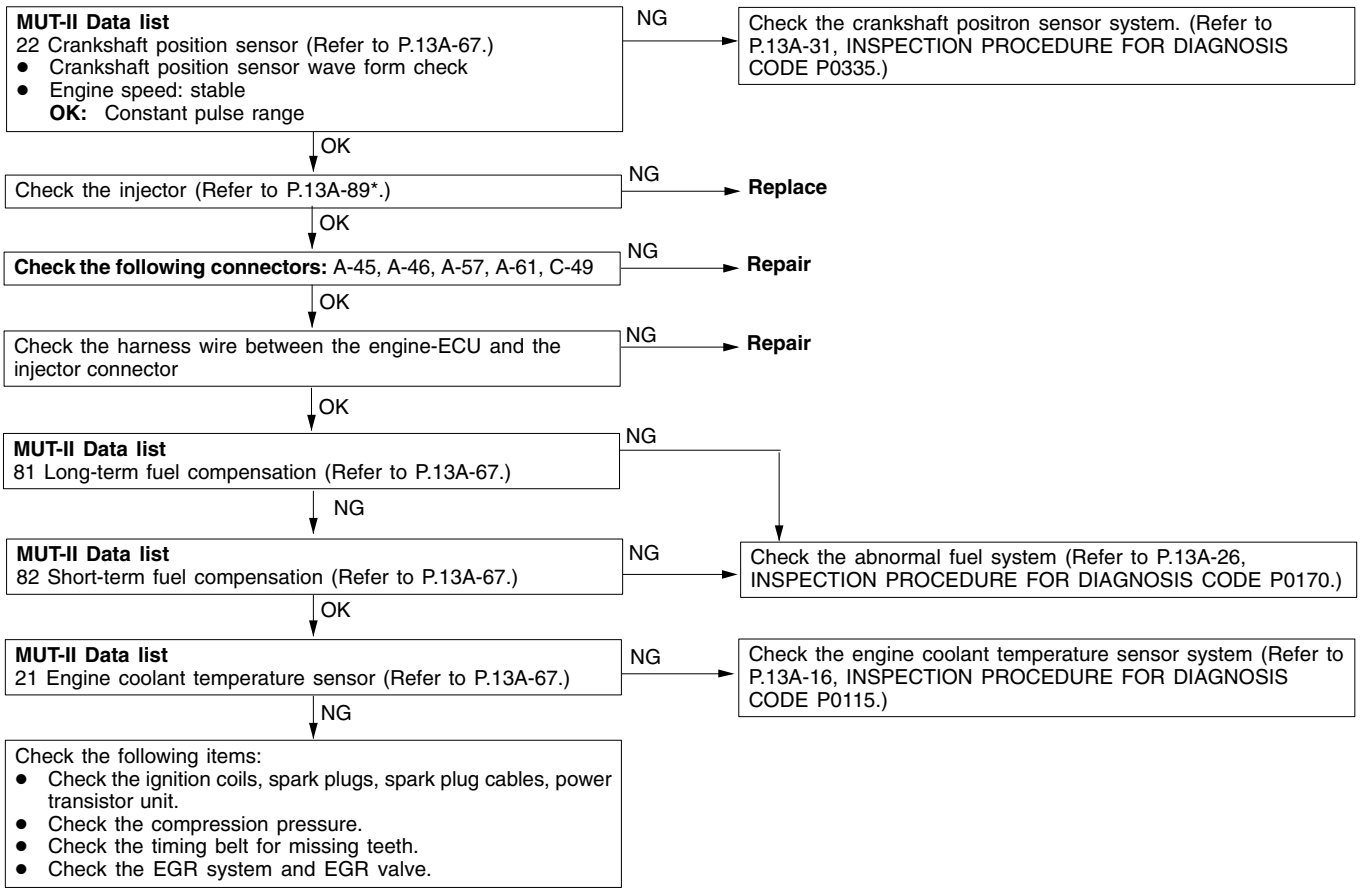

NOTE:
*: Refer to the '97 L200 Workshop Manual (Pub. No. PWTE96E1)

Code No. P0301 No. 1 cylinder misfire detected Code No. P0302 No. 2 cylinder misfire detected Code No. P0303 No. 3 cylinder misfire detected Code No. P0304 No. 4 cylinder misfire detected	Probable cause
Range of Check ● The engine speed is 500 – 4,500 r/min. ● While the engine is running except deceleration and sudden acceleration. Set Conditions ● The number of misfires exceeds a predetermined number per 200 engine revolutions (Misfire has occurred in only one cylinder). or ● The number of misfires exceeds a predetermined number per 1000 engine revolutions (Misfire has occurred in only one cylinder).	● Malfunction of the ignition system ● Abnormal compression ● Malfunction of injector ● Malfunction of engine-ECU

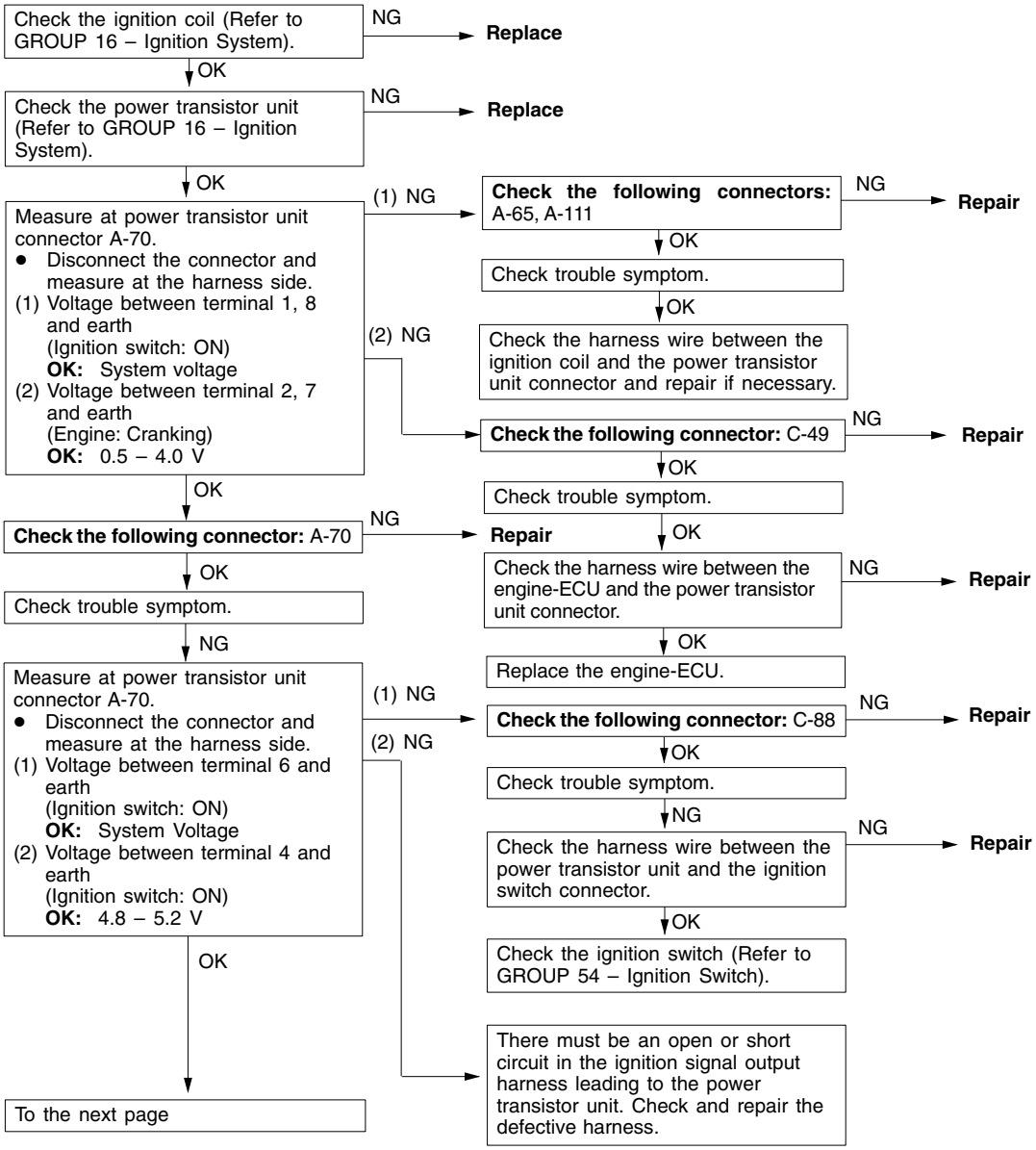

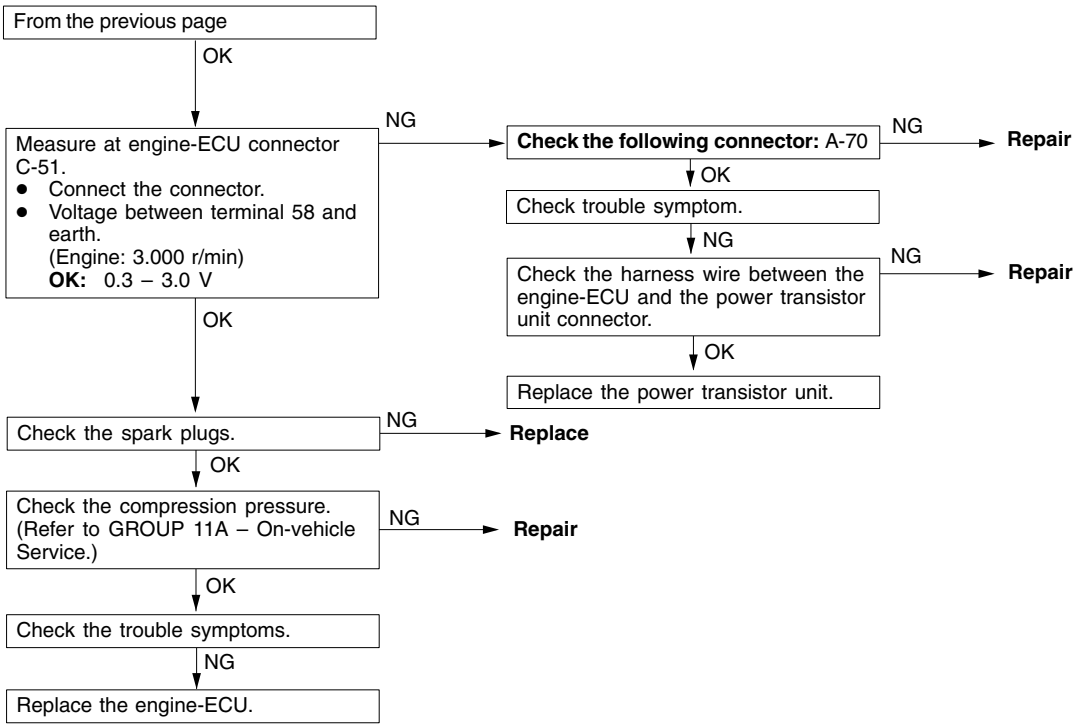
From the previous page
OK
Measure at engine-ECU connector C-51.
● Connect the connector.
● Voltage between terminal 58 and earth.
(Engine: 3.000 r/min)
OK: 0.3 – 3.0 V
NG
Check the following connector: A-70
NG
Repair
OK
Check trouble symptom.
NG
Check the harness wire between the engine-ECU and the power transistor unit connector.
NG
Repair
OK
Replace the power transistor unit.
OK
Check the spark plugs.
NG
Replace
OK
Check the compression pressure. (Refer to GROUP 11A – On-vehicle Service.)
NG
Repair
OK
Check the trouble symptoms.
NG
Replace the engine-ECU.

Code No. P0335 Crank angle sensor system	Probable cause
Range of Check ● Engine is cranking Set Conditions ● Sensor output voltage does not change for 4 seconds (no pulse signal input).	● Malfunction of the crank angle sensor. ● Open or short circuit in the crank angle sensor circuit or loose connector contact. ● Malfunction of engine-ECU

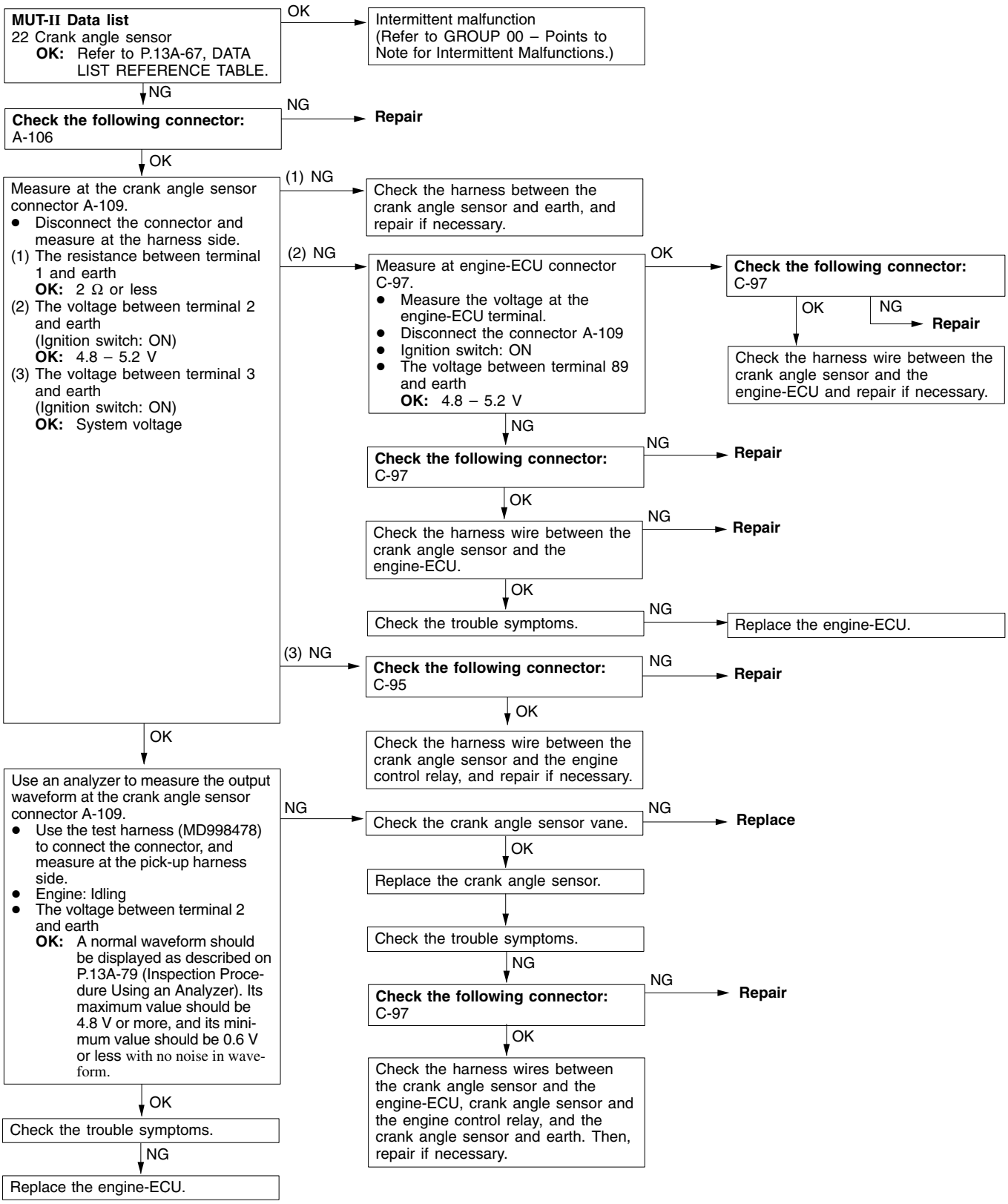

Code No. P0340 Camshaft position sensor system	Probable cause
Range of Check ● Ignition switch: ON ● Engine speed: 50 r/min or more Set Conditions ● The sensor output voltage does not change for 4 seconds (no pulse signal input).	● Malfunction of the camshaft position sensor ● Open or short circuit in the camshaft position sensor circuit or loose connector contact. ● Malfunction of engine-ECU

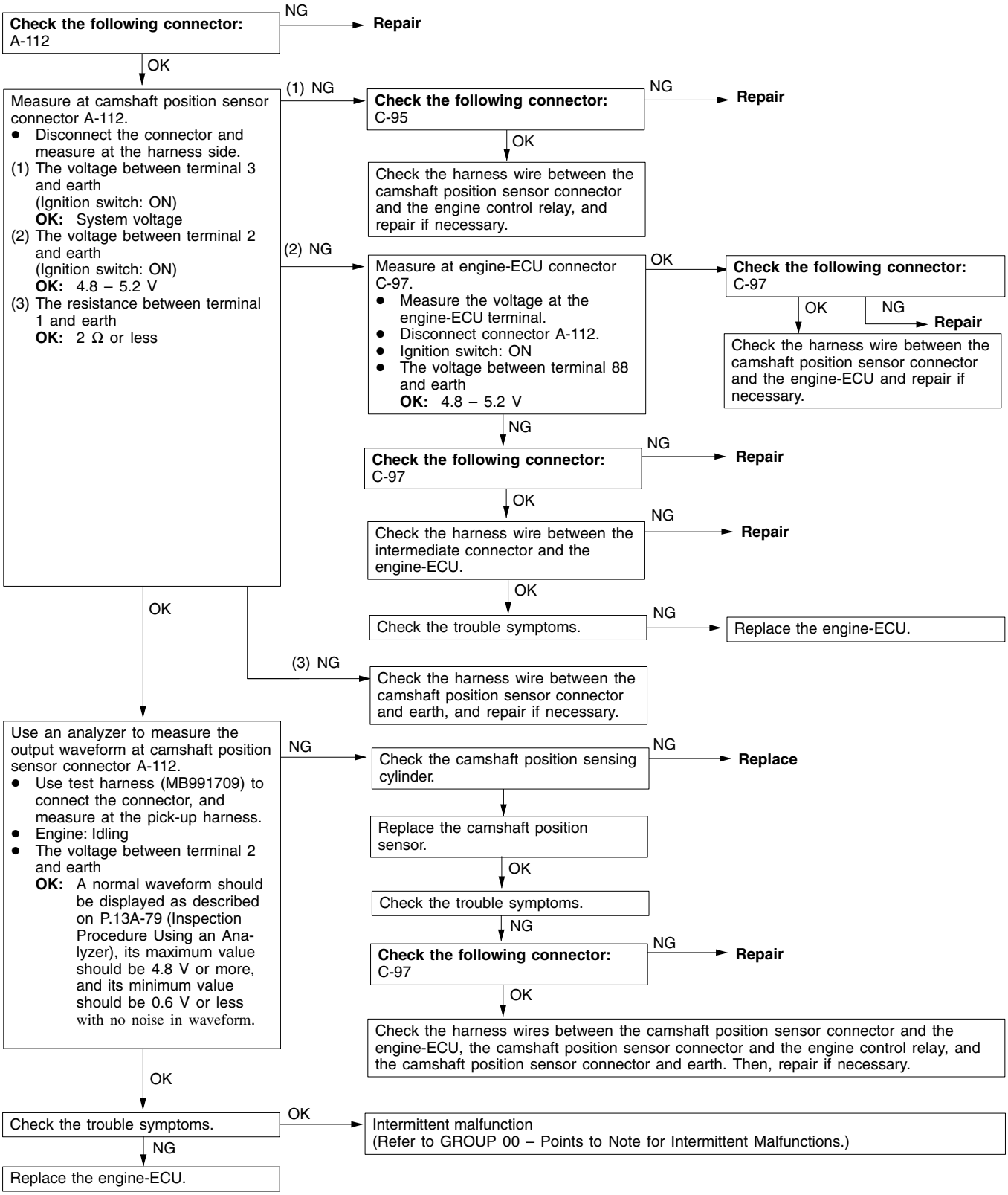

Code No. P0403 EGR control solenoid valve system	Probable cause
Range of Check ● Ignition switch: ON ● Battery voltage is 10 V or more. Set Conditions ● The solenoid coil surge voltage (battery voltage + 2 V) is not detected when the EGR control solenoid valve is turned from on to off.	● Malfunction of the EGR control solenoid valve ● Open or short circuit in the EGR control solenoid valve circuit or loose connector contact ● Malfunction of engine-ECU

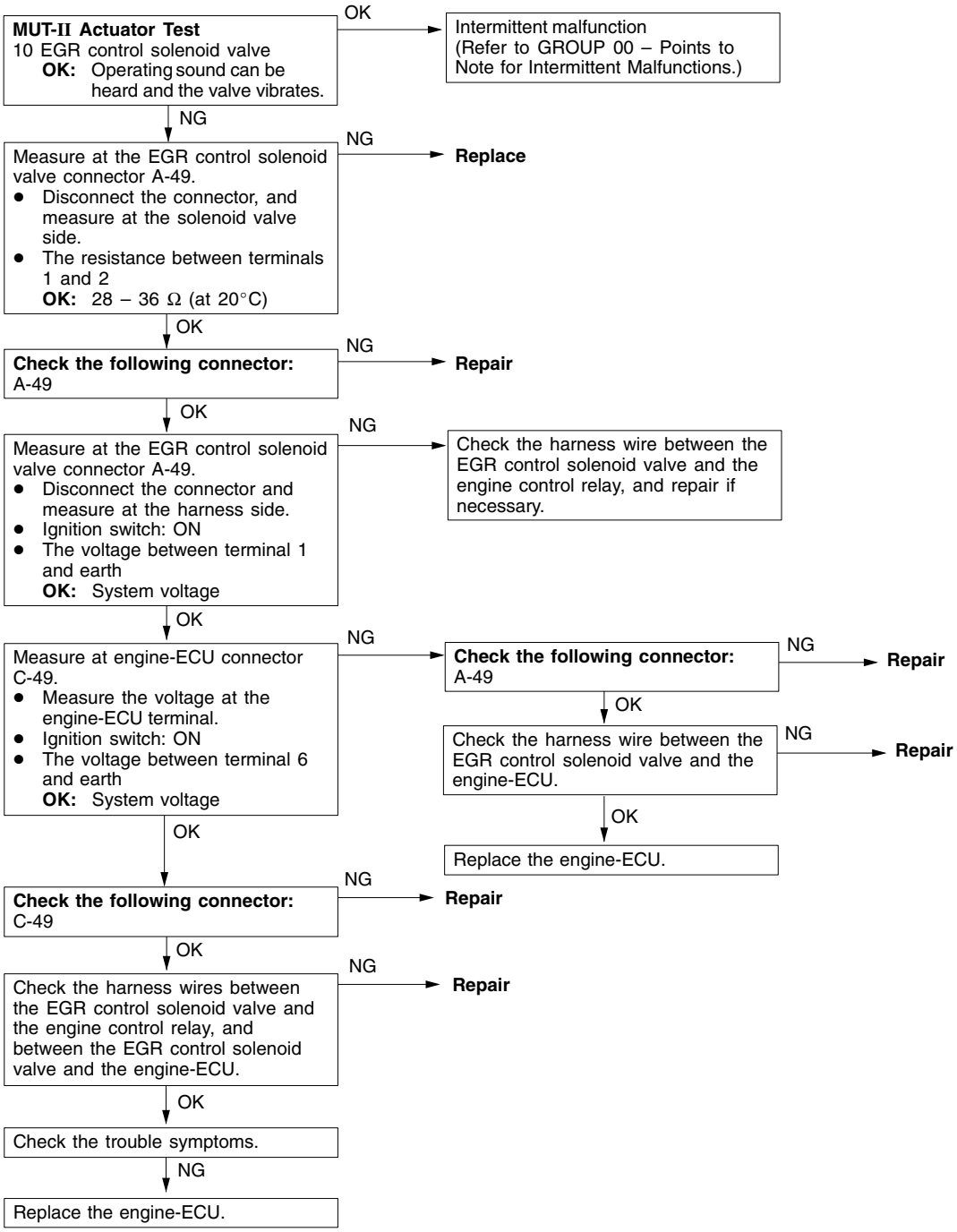

Code No. P0420 Catalyst malfunction	Probable cause
Range of Check ● The engine speed is 3,000 r/min or less. ● During driving ● During air/fuel ratio feedback control Set Conditions ● The ratio between the oxygen sensor (rear) and the oxygen sensor (front) output frequencies reaches 0.8 per 12 seconds on average.	● Malfunction of catalyst ● Malfunction of the oxygen sensor (front) ● Malfunction of the oxygen sensor (rear) ● Malfunction of engine-ECU

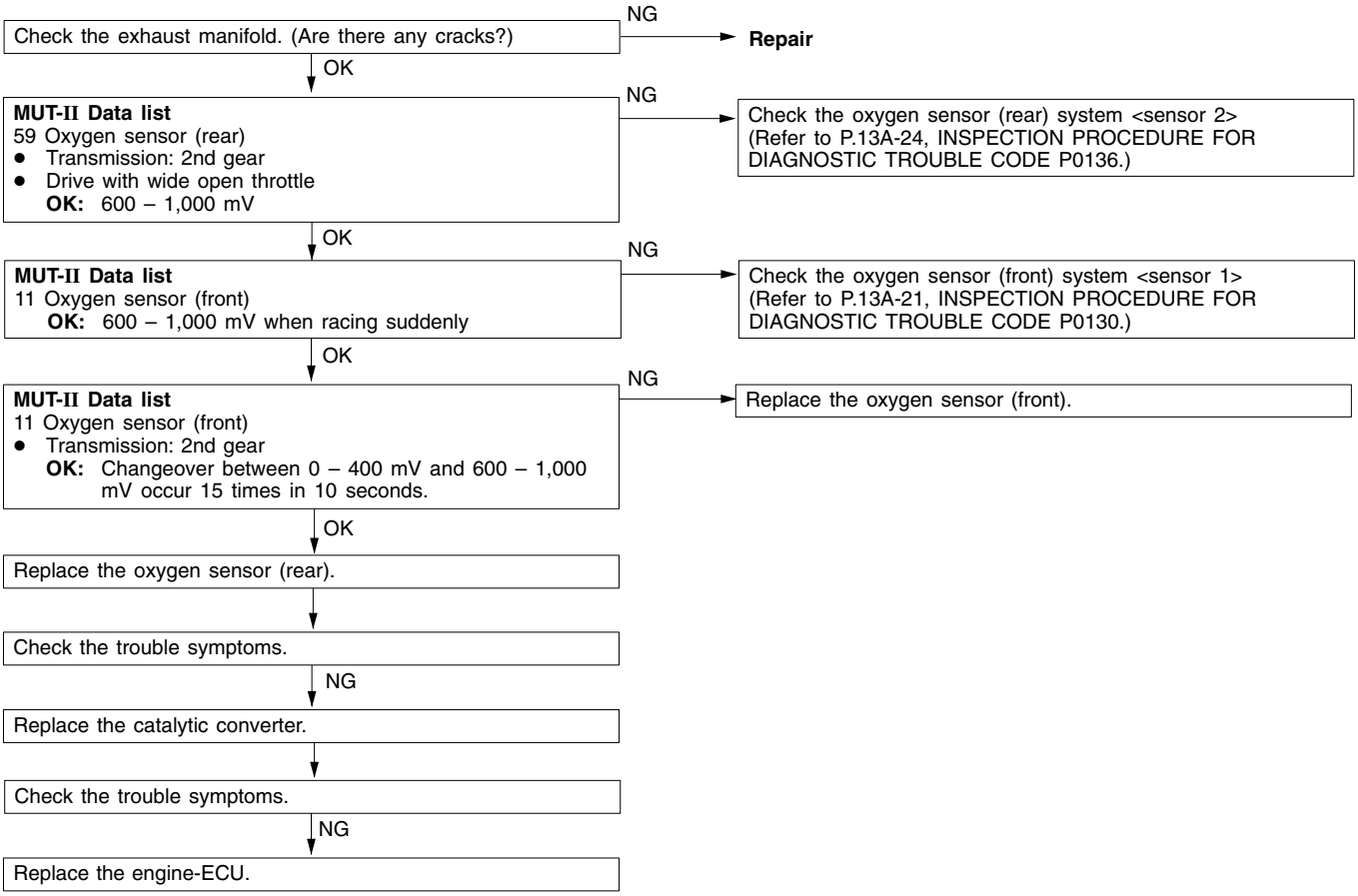

Code No. P0443 Purge control solenoid valve system	Probable cause
Range of Check ● Ignition switch: ON ● Battery voltage is 10 V or more. Set Conditions ● The solenoid coil surge voltage (battery voltage + 2 V) is not detected when the purge control solenoid valve is turned from on to off.	● Malfunction of the purge control solenoid valve ● Open or short circuit in the purge control solenoid valve circuit or loose connector contact ● Malfunction of engine-ECU

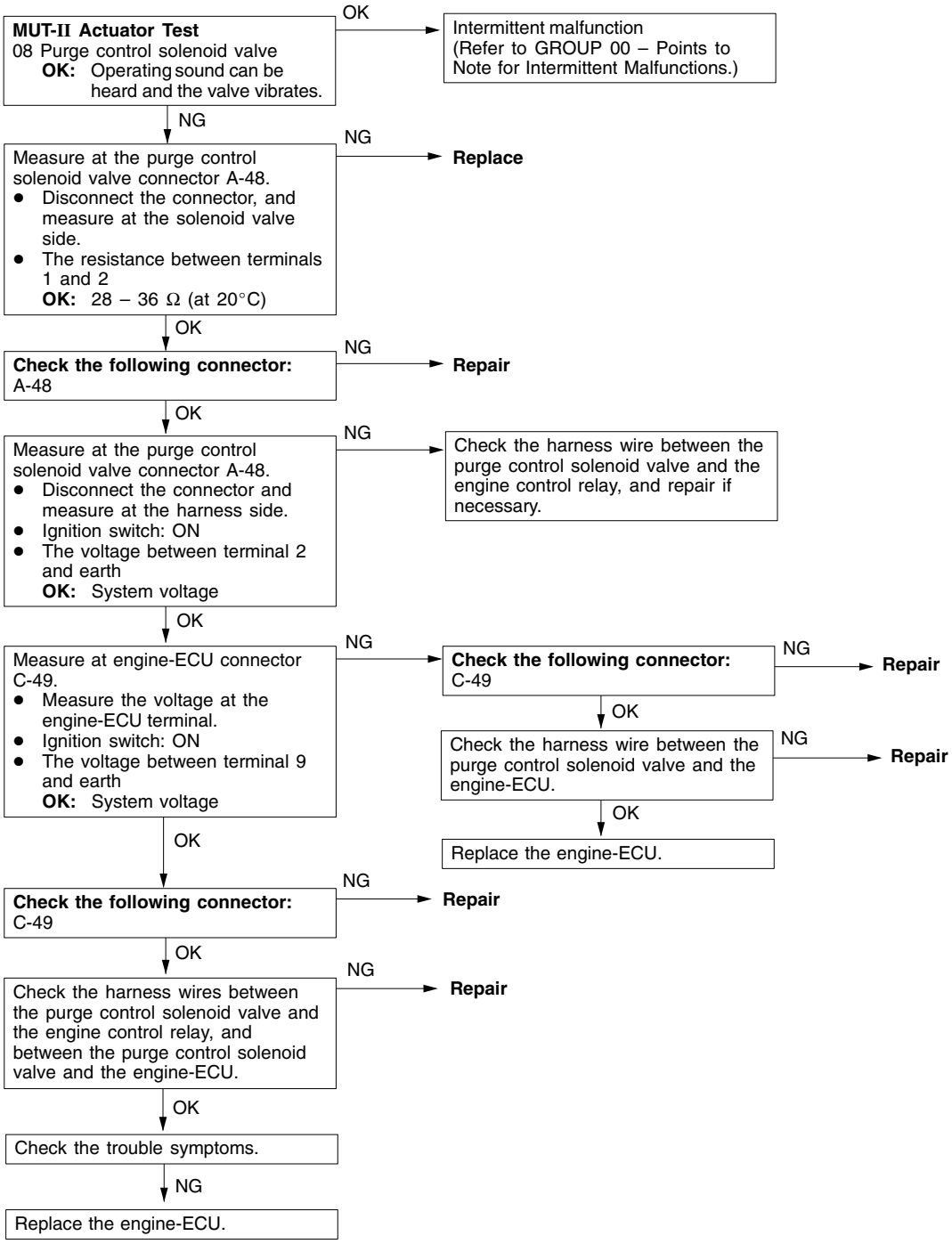

Code No. P0500 Vehicle speed sensor system	Probable cause
Range of Check ● Engine: Two seconds after the engine was started ● Idle switch: OFF ● Engine speed: 2,500 r/min or more ● During high engine load Set Conditions ● The sensor output voltage does not change for 2 seconds (no pulse signal input).	● Malfunction of the vehicle speed sensor (reed switch) ● Open or short circuit in the vehicle speed sensor circuit or loose connector contact ● Malfunction of engine-ECU

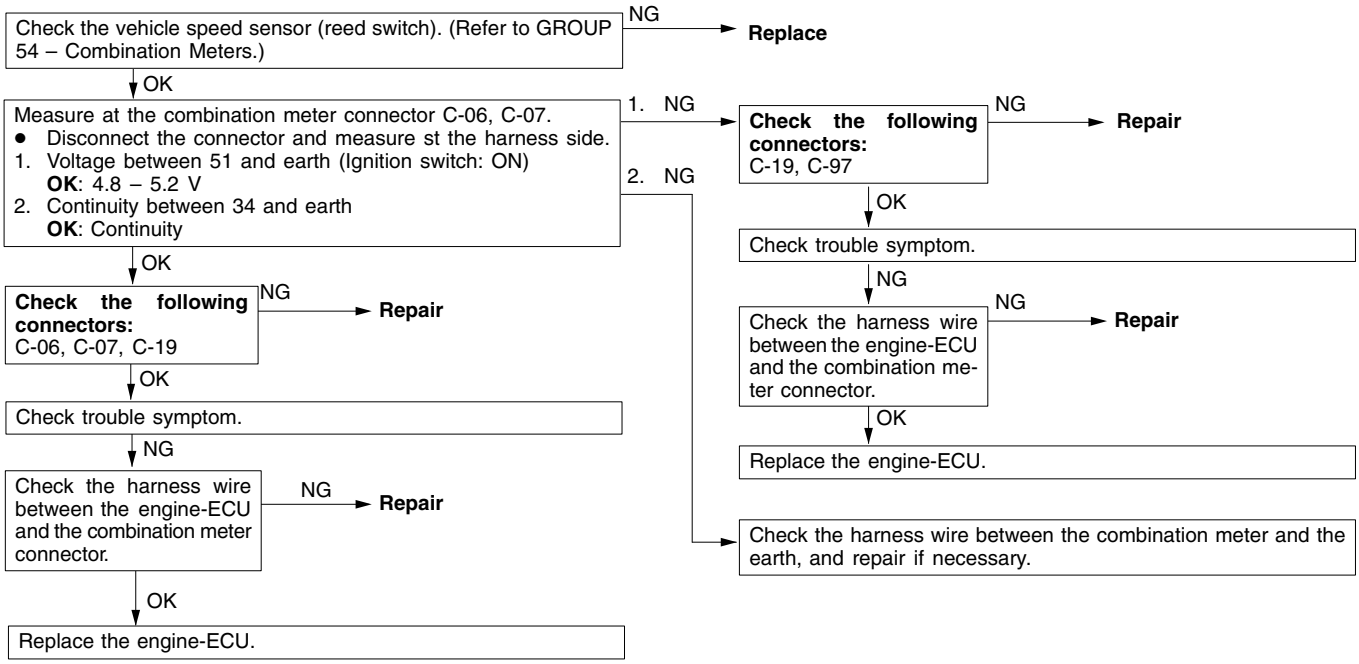

*: Refer to the ’97 L200 Workshop Manual (Pub. No. PWTE96E1)

Code No. P0505 Idle speed control (ISC) system	Probable cause
Check Area ● Vehicle speed has reached 1.5 km/h at least once. ● Under the closed loop idle speed control. Judgment Criteria ● Actual idle speed has continued to be higher than the target idle speed by 300 r/min or more for 10 sec. Check Area ● Vehicle speed has reached 1.5 km/h at least once. ● During idle speed closed loop control. ● The highest temperature at the last drive is 45°C or less. ● Engine coolant temperature is approx. 80°C or more. ● Battery voltage is 10 V or more. ● Barometric pressure is 76 kPa or higher. ● Intake air temperature is –10°C or more. Judgment Criteria ● Actual idle speed has been minimum 200 r/min higher than the target idle speed for ten seconds. Check Area ● During idle speed closed loop control. ● Engine coolant temperature is about 80°C or higher. ● Battery voltage is 10 V or higher. ● Power steering switch is off. ● Volumetric efficiency is 40 % or lower. ● Barometric pressure is 76 kPa or higher. ● Intake air temperature is –10°C or more. Judgment Criteria ● Actual idle speed has been minimum 100 r/min higher than the target idle speed for ten seconds.	● Malfunction of idle speed control (ISC) servo ● Improper connector contact, open circuit or short-circuit harness wire ● Malfunction of engine-ECU

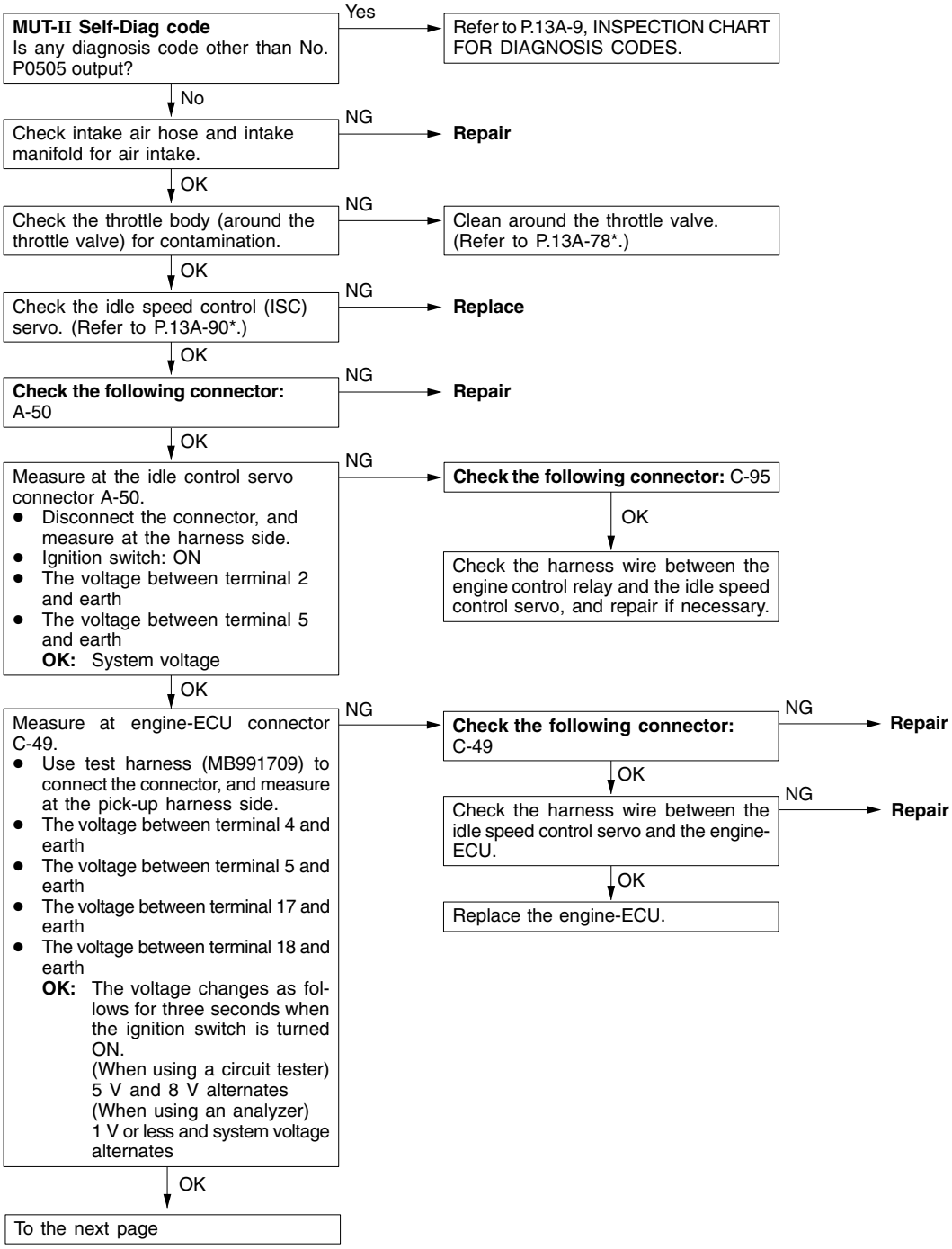

NOTE:
*: Refer to the '97 L200 Workshop Manual (Pub. No. PWTE96E1)

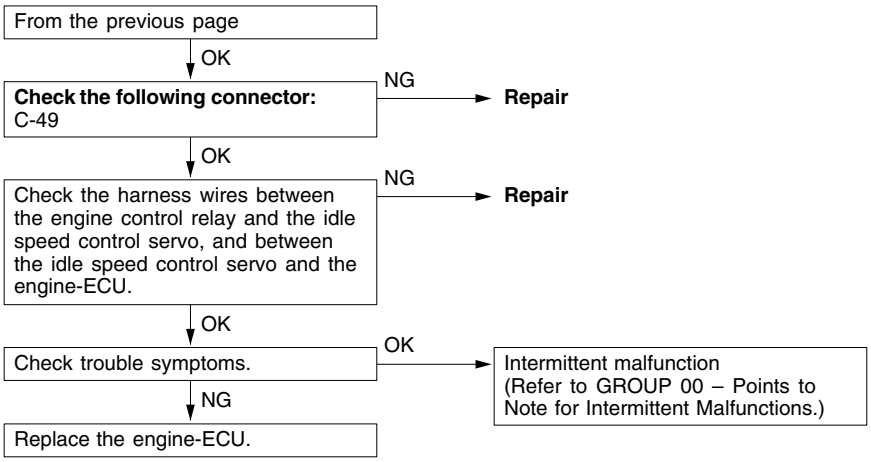

Code No. P0510 Idle position switch system	Probable cause
Check Area ● Throttle position sensor output voltage is 2.0 V or more. Judgment Criteria ● Idle position switch has been turned on. Check Area ● Repeat the *1 drive and *2 stop 15 times or more. *1 drive: The vehicle remains under the following conditions for at least two seconds; engine speed is 1,500 rpm or higher, air flow sensor output waveform is 100 Hz or higher, and vehicle speed is more than 30 km/h for two seconds. *2 stop: The vehicle remains under the following conditions for at least two seconds; engine speed is 800 rpm or lower, and vehicle speed is less than 1.5 km/h. Judgment Criteria ● Idle position switch remains off.	● Malfunction of idle position switch ● Open or shorted idle position switch circuit, or loose connector ● Malfunction of engine-ECU

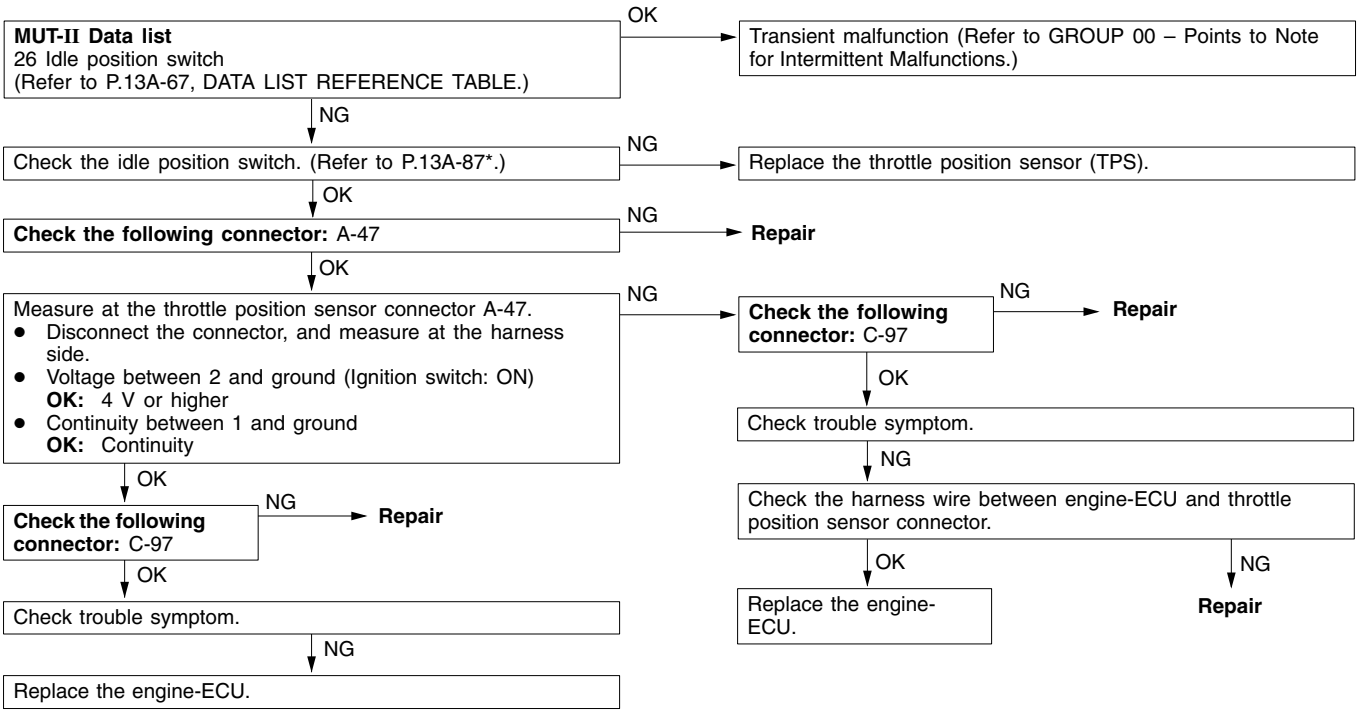

NOTE:
*: Refer to the '97 L200 Workshop Manual (Pub. No. PWTE96E1)

Code No. P0551 Power steering fluid pressure switch system	Probable cause
Check Area ● Intake air temperature is –10°C or higher. ● Barometric pressure is 76 kPa or higher. ● Engine coolant temperature is 30°C or more. ● Repeat the *1 drive and *2 stop ten times or more. *1: Engine speed is 2,500 r/min or higher, volumetric efficiency is 55 % or higher and vehicle speed is 5 km/h or higher for 4 seconds or more. *2: Vehicle speed is 1.5 km/h or lower. Judgment Criteria ● Power steering pressure switch remains on.	● Power steering fluid pressure switch failed. ● Open or shorted power steering fluid pressure switch circuit or loose connector ● Malfunction of the engine-ECU

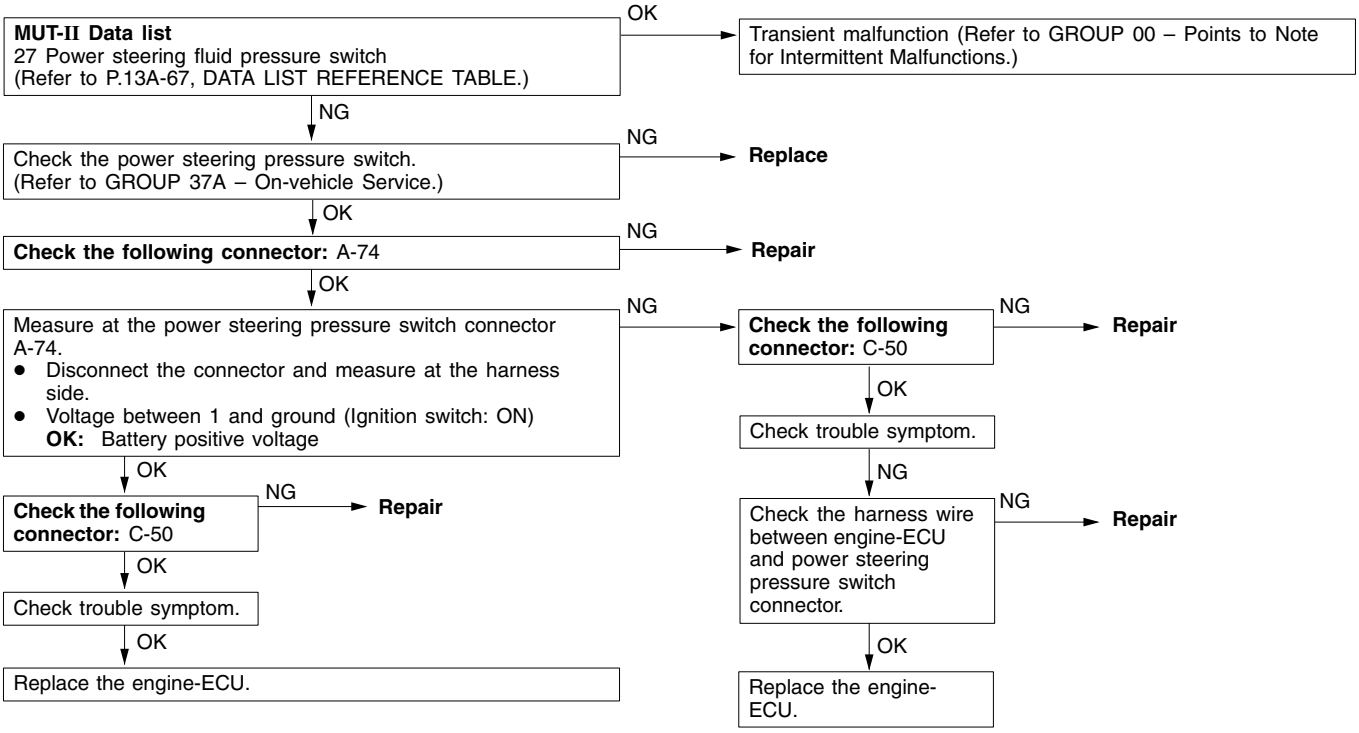

Code No. P1610 Immobilizer system	Probable cause
Range of Check ● Ignition switch: ON Set Conditions ● Improper communication between the engine-ECU and the immobilizer-ECU	● Open or short circuit, or loose connector contact ● Malfunction of the immobilizer-ECU ● Malfunction of the engine-ECU

NOTE
(1) If the registered ignition keys are close each other when starting the engine, radio interference may cause this code to be displayed.
(2) This code may be displayed when registering the key ID code.

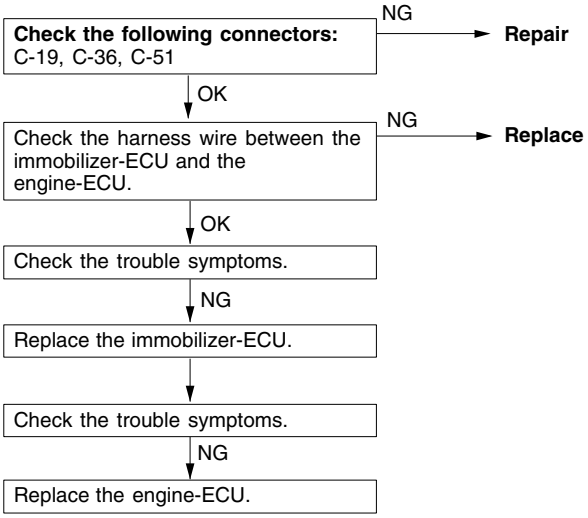

INSPECTION CHART FOR TROUBLE SYMPTOMS

Trouble symptom		Inspection procedure No.	Reference page
Communication with MUT-II is impossible.	Communication with all systems is not possible.	1	13A-43
	Communication with engine-ECU is not possible.	2	13A-43
Engine warning lamp and related parts	The engine warning lamp does not illuminate right after the ignition switch is turned to the ON position.	3	13A-44
	The engine warning lamp remains illuminating and never goes out.	4	13A-44
Starting	No initial combustion (Starting impossible)	5	13A-45
	Initial combustion but no complete combustion (Starting impossible)	6	13A-46
	Long time to start (Improper starting)	7	13A-47
Idling stability (Improper idling)	Unstable idling (Rough idling, hunting)	8	13A-48
	Idling speed is high. (Improper idling speed)	9	13A-50
	Idling speed is low. (Improper idling speed)	10	13A-50
Idling stability (Engine stalls)	When the engine is cold, it stalls at idling. (Die out)	11	13A-51
	When the engine becomes hot, it stalls at idling. (Die out)	12	13A-52
	The engine stalls when starting the car. (Pass out)	13	13A-54
	The engine stalls when decelerating.	14	13A-54
Driving	Hesitation, sag or stumble	15	13A-55
	The feeling of impact or vibration when accelerating	16	13A-56
	The feeling of impact or vibration when decelerating	17	13A-56
	Poor acceleration	18	13A-57
	Surge	19	13A-59
	Knocking	20	13A-60
Dieseling		21	13A-60
Too high CO and HC concentration when idling		22	13A-61

INSPECTION PROCEDURE FOR TROUBLE SYMPTOMS

INSPECTION PROCEDURE 1

Communication with MUT-II is not possible. (Communication with all systems is not possible.)	Probable cause
The cause is probably a defect in the power supply system (including earth) for the diagnosis line.	• Malfunction of the connector • Malfunction of the harness wire

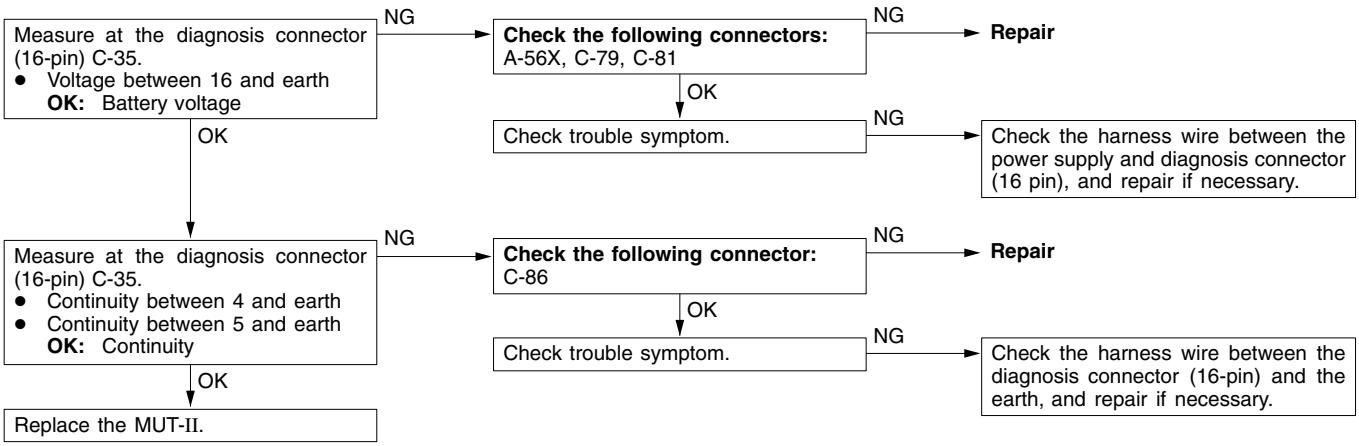

INSPECTION PROCEDURE 2

MUT-II communication with engine-ECU is impossible.	Probable cause
One of the following causes may be suspected. • No power supply to engine-ECU. • Defective earth circuit of engine-ECU. • Defective engine-ECU. • Improper communication line between engine-ECU and MUT-II	• Malfunction of engine-ECU power supply circuit • Malfunction of engine-ECU • Open circuit between the engine-ECU and diagnosis connector

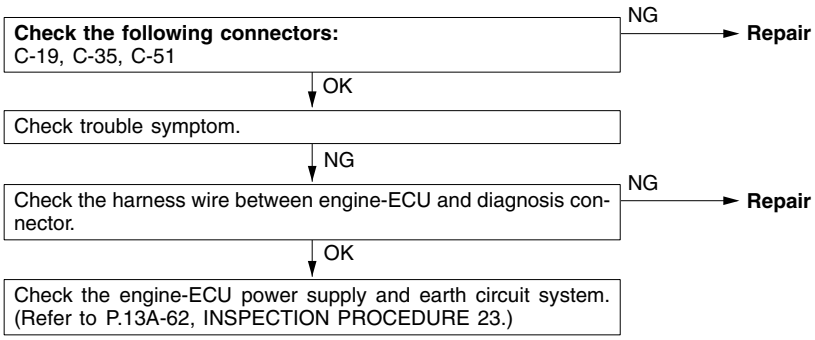

INSPECTION PROCEDURE 3

The engine warning lamp does not illuminate right after the ignition switch is turned to the ON position.	Probable cause
Because there is a burnt-out bulb, the engine-ECU causes the engine warning lamp to illuminate for five seconds immediately after the ignition switch is turned to ON. If the engine warning lamp does not illuminate immediately after the ignition switch is turned to ON, one of the malfunctions listed at right has probably occurred.	• Burnt-out bulb • Defective warning lamp circuit • Malfunction of the engine-ECU

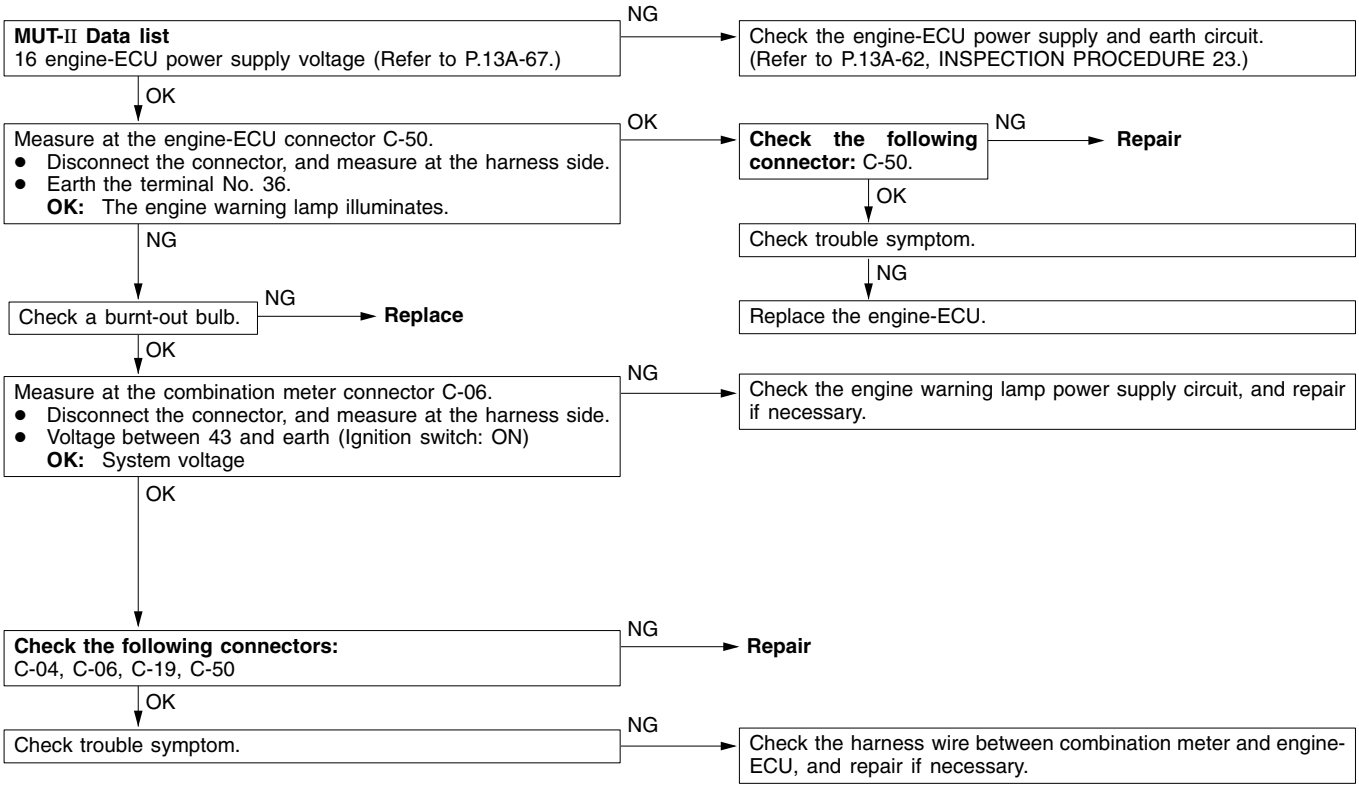

INSPECTION PROCEDURE 4

The engine warning lamp remains illuminating and never goes out.	Probable cause
In cases such as the above, the cause is probably that the engine-ECU is detecting a problem in a sensor or actuator, or that one of the malfunctions listed at right has occurred.	• Short-circuit between the engine warning lamp and engine-ECU • Malfunction of the engine-ECU

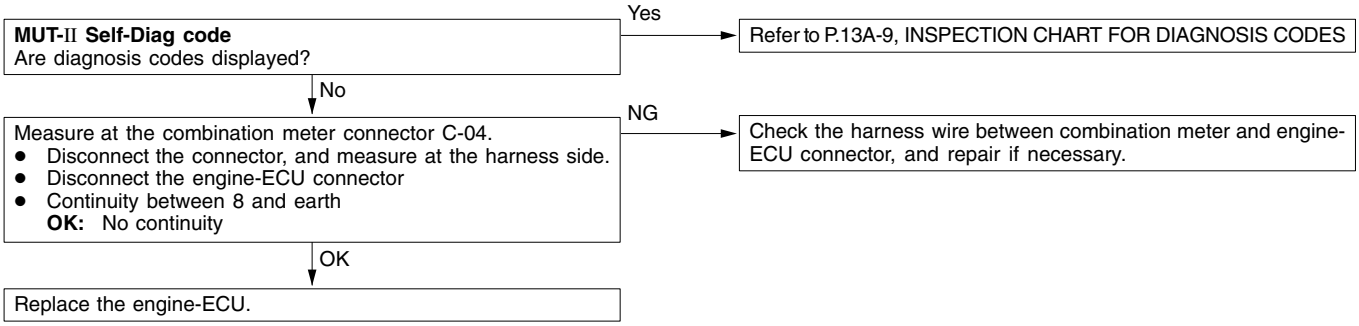

INSPECTION PROCEDURE 5

No initial combustion (Starting impossible)	Probable cause
In cases such as the above, the cause is probably that a spark plug is defective, or that the supply of fuel to the combustion chamber is defective. In addition, foreign materials (water, kerosene, etc.) may be mixed with the fuel.	• Malfunction of the ignition system • Malfunction of the fuel pump system • Malfunction of the injectors • Malfunction of the engine-ECU • Malfunction of the immobilizer system • Foreign materials in fuel

Check battery voltage when cranking.
OK: 8 V or higher
- NG → Check the battery. (Refer to GROUP 54 – Battery.)
- OK ↓

Is immobilizer-ECU diagnosis code displayed?
- Yes → Check the immobilizer. (Refer to GROUP 54 – Ignition Key and Immobilizer.)
- No ↓

MUT-II Data list
16 Power supply voltage (Refer to P.13A-67.)
- NG → Check the power supply and ignition switch-IG system. (Refer to P.13A-62, INSPECTION PROCEDURE 23.)
- OK ↓

Does the camshaft rotate at the engine cranking? (When oil filler cap is removed.)
- No → Check timing belt for breakage.
- Yes ↓

MUT-II Self-Diag code
Are diagnosis codes displayed?
- Yes → Refer to P.13A-9, INSPECTION CHART FOR DIAGNOSIS CODES.
- No ↓

MUT-II Data list
22 Crank angle sensor
OK: Cranking speed is displayed
- No → Check the crank angle sensor system. (Refer to P.13A-31, INSPECTION PROCEDURE FOR DIAGNOSIS CODE P0335.)
- OK ↓

MUT-II Actuator test
07 Fuel pump (Refer to P.13A-72.)
- NG → Check the fuel pump system. (Refer to P.13A-63, INSPECTION PROCEDURE 25.)
- OK ↓

MUT-II Data list
21 Engine coolant temperature sensor (Refer to P.13A-67.)
- NG → Check the engine coolant temperature sensor system. (Refer to P.13A-16, INSPECTION PROCEDURE FOR DIAGNOSIS CODE P0115.)
- OK ↓

Can any sound be heard from the injectors when cranking?
- No → Check the injector system. (Refer to P.13A-27, INSPECTION PROCEDURE FOR DIAGNOSIS CODE P0201, P0202, P0203, P0204.)
- Yes ↓

Measure at the ignition coil connectors A-65 and A-111.
- Connectors connected
- Check by connecting the timing light to terminal 1 of each connector (Engine: Cranking)

OK: The timing light flashes.
- No → Check the ignition circuit system. (Refer to P.13A-66, INSPECTION PROCEDURE 28.)
- OK ↓

Check the following items.
- Check the ignition coil, spark plugs, spark plug cables.
- Check if the injectors are clogged.
- Check if foreign materials (water, alcohol, etc.) got into fuel.
- Check the compression pressure.
- Check the immobilizer system.

INSPECTION PROCEDURE 6

Initial combustion but no complete combustion (Starting impossible)	Probable cause
In such cases as the above, the cause is probably that the spark plugs are generating sparks but the sparks are weak, or the initial mixture for starting is not appropriate.	• Malfunction of the ignition system • Malfunction of the injector system • Foreign materials in fuel • Poor compression • Malfunction of the engine-ECU

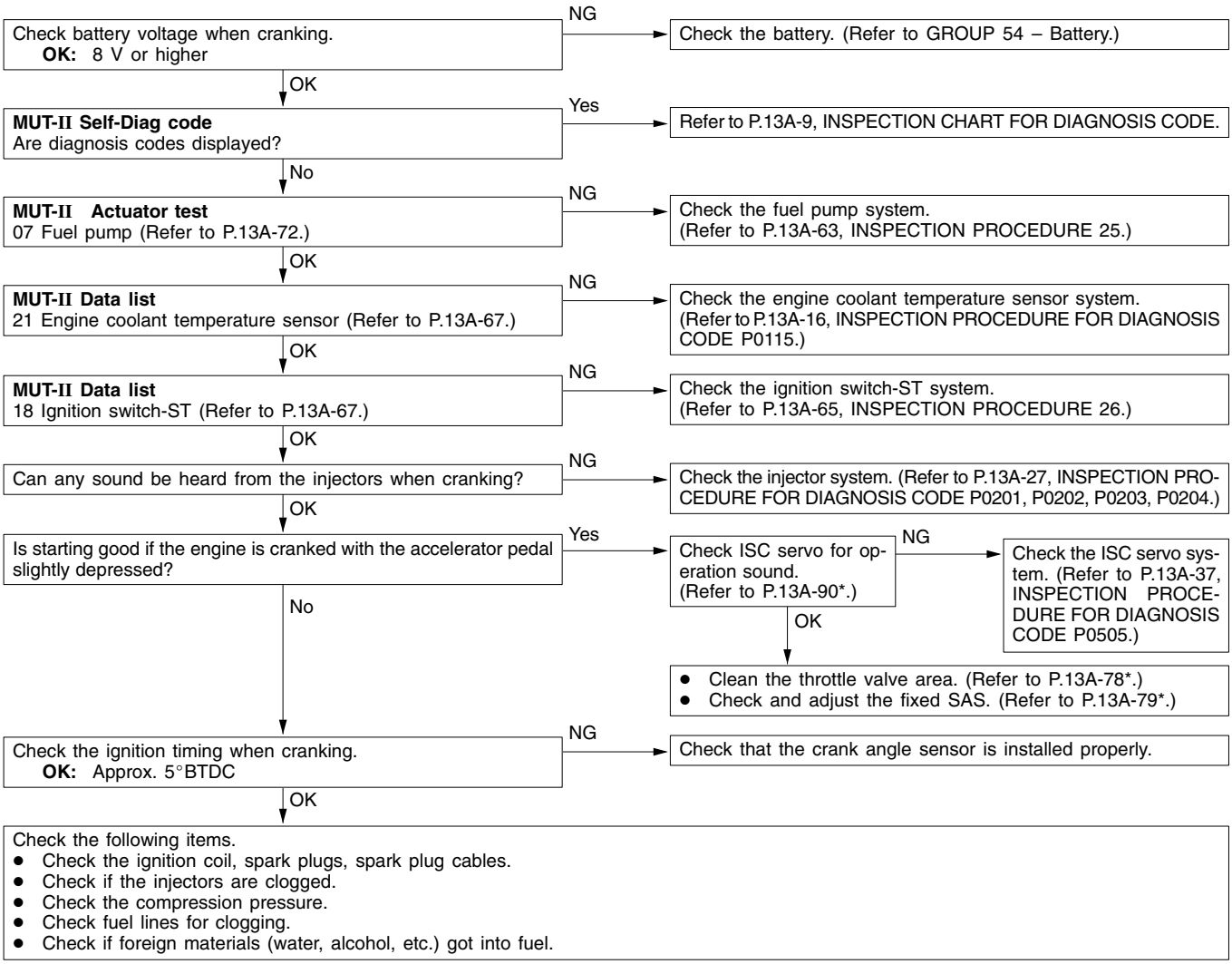

NOTE:
*: Refer to the '97 L200 Workshop Manual (Pub. No. PWTE96E1)

INSPECTION PROCEDURE 7

It takes too long time to start. (Incorrect starting)	Probable cause
In cases such as the above, the cause is probably that the spark is weak and ignition is difficult, the initial mixture for starting is not appropriate, or sufficient compression pressure is not being obtained.	• Malfunction of the ignition system • Malfunction of the injector system • Inappropriate gasoline use • Poor compression

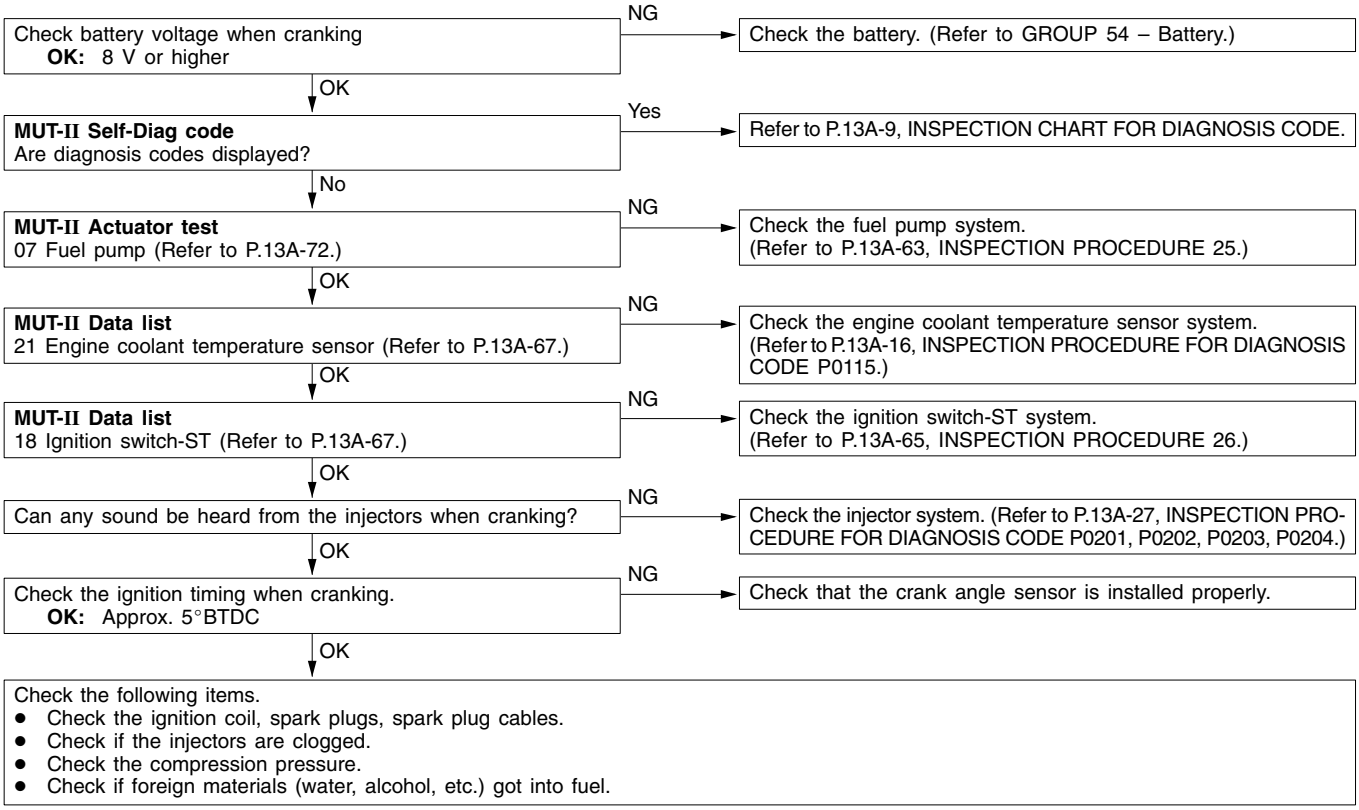

INSPECTION PROCEDURE 8

Unstable idling (Rough idling, hunting)	Probable cause
In cases as the above, the cause is probably that the ignition system, air/fuel mixture, idle speed control (ISC) or compression pressure is defective. Because the range of possible causes is broad, inspection is narrowed down to simple items.	• Malfunction of the ignition system • Malfunction of air/fuel ratio control system • Malfunction of the ISC system • Malfunction of the purge control solenoid valve system • Malfunction of the EGR solenoid valve system • Poor compression • Drawing air into exhaust system

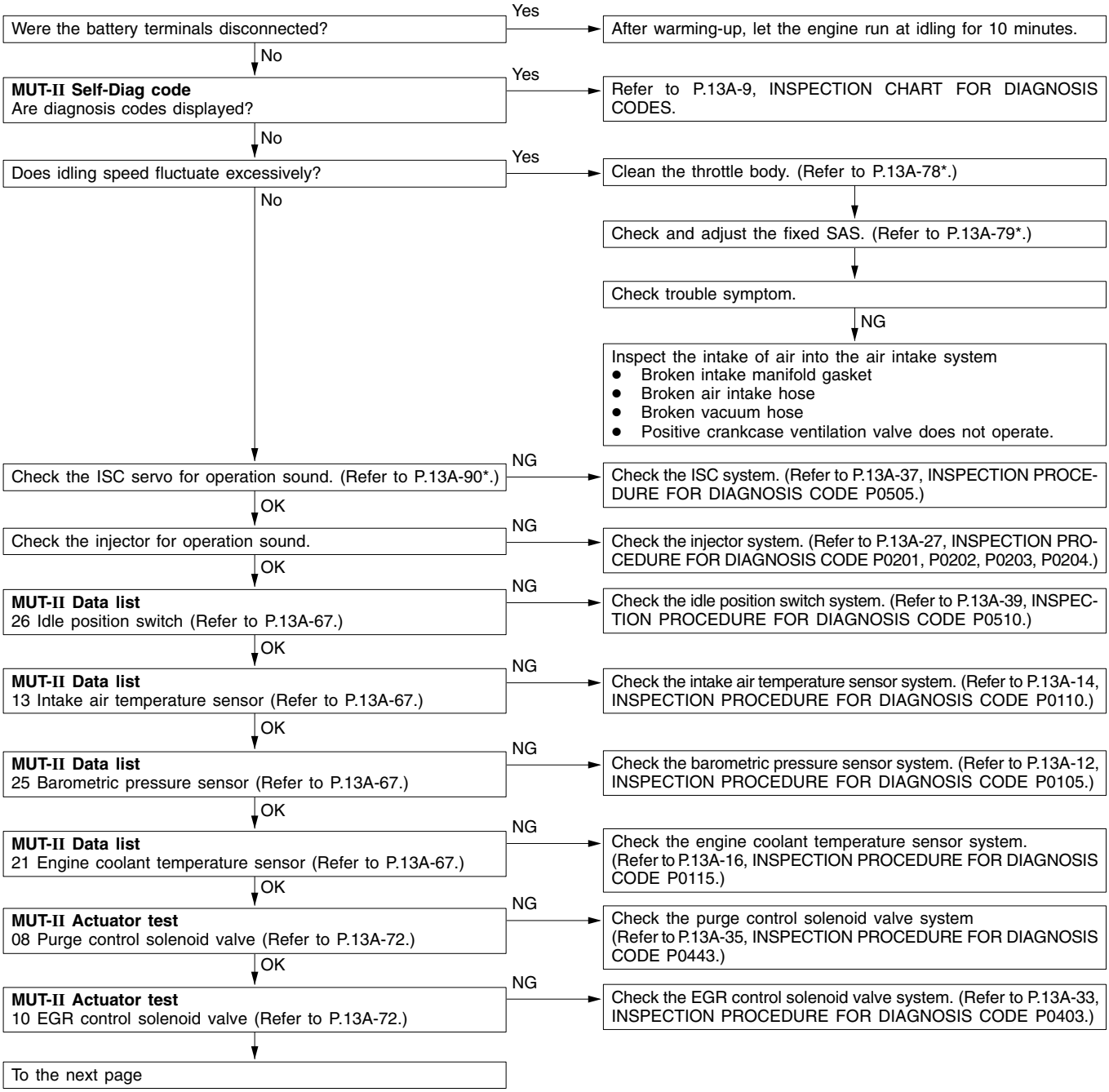

NOTE:
*: Refer to the '97 L200 Workshop Manual (Pub. No. PWTE96E1)

From the previous page

OK ↓

MUT-II Data list
59 Oxygen sensor (rear)
- Transmission: 2nd gear
- Driving with throttle widely open

OK: 600 – 1,000 mV

NG → Check the oxygen sensor (rear) system. (Refer to P.13A-24, INSPECTION PROCEDURE FOR DIAGNOSIS CODE P0136.)

OK ↓

MUT-II Data list
11 Oxygen sensor
OK: 600 – 1,000 mV during sudden racing

NG → Check the oxygen sensor (front) system. (Refer to P.13A-21, INSPECTION PROCEDURE FOR DIAGNOSIS CODE P0130.)

OK ↓

MUT-II Data list
11 Oxygen sensor
OK: Changes between 0 – 400 mV and 600 – 1,000 mV during idling

NG → Check the fuel pressure. (Refer to P.13A-81*.)
OK →
1. Inspect the intake of air into the air intake system.
   - Broken intake manifold gasket
   - Broken vacuum hose
   - PCV valve does not operate.
   - Broken air intake hose
2. Check the injector for clog.

OK ↓

MUT-II Data list
27 Power steering fluid pressure switch (Refer to P.13A-67.)

NG → Check the power steering fluid pressure switch system. (Refer to P.13A-40, INSPECTION PROCEDURE FOR DIAGNOSIS CODE P0551.)

OK ↓

MUT-II Data list
28 A/C switch (Refer to P.13A-67.)

NG → Check the A/C switch and A/C relay system. (Refer to P.13A-65, INSPECTION PROCEDURE 27.)

OK ↓

MUT-II Data list
45 ISC Servo position (Refer to P.13A-67.)

NG → Adjust the basic idle speed. (Refer to P.13A-79*.)

OK ↓

Check the ignition timing.
(Refer to GROUP 11A – On-vehicle Service.)

NG → Check that the crank angle sensor is installed properly.

OK ↓

Check the following items.
- Check the ignition coil, spark plugs, spark plug cables.
- Check the purge control system.
- Check the EGR control system.
- Check the compression pressure.
- Check if foreign materials (water, alcohol, etc.) got into fuel.

NOTE:
*: Refer to the '97 L200 Workshop Manual (Pub. No. PWTE96E1)

INSPECTION PROCEDURE 9

Idling speed is high. (Improper idling speed)	Probable cause
In such cases as the above, the cause is probably that the intake air volume during idling is too great.	• Malfunction of the ISC system • Malfunction of the throttle body

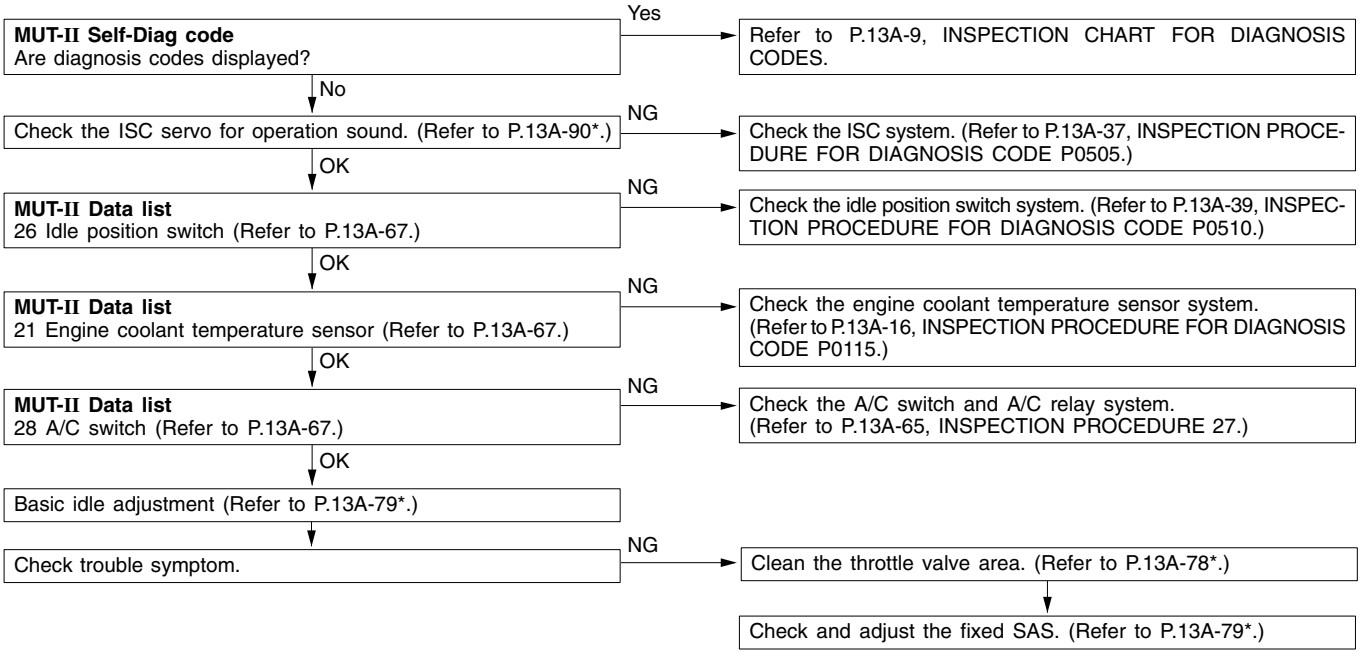

NOTE:
*: Refer to the '97 L200 Workshop Manual (Pub. No. PWTE96E1)

INSPECTION PROCEDURE 10

Idling speed is low. (Improper idling speed)	Probable cause
In cases such as the above, the cause is probably that the intake air volume during idling is too small.	• Malfunction of the ISC system • Malfunction of the throttle body

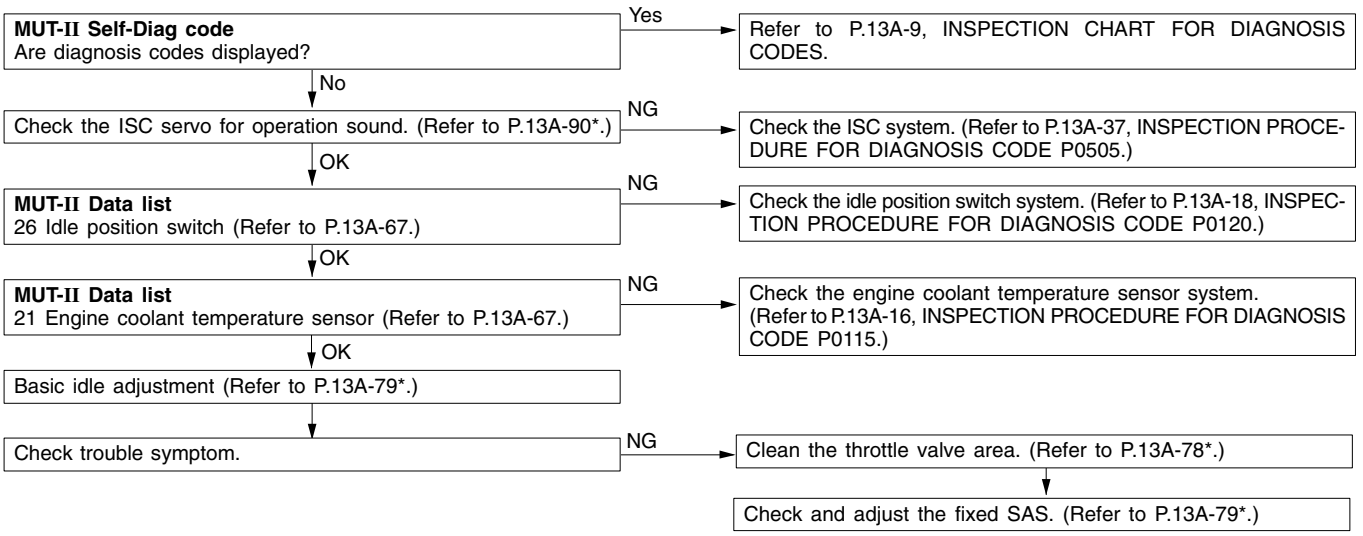

NOTE:
*: Refer to the '97 L200 Workshop Manual (Pub. No. PWTE96E1)

INSPECTION PROCEDURE 11

When the engine is cold, it stalls at idling. (Die out)	Probable cause
In such cases as the above, the cause is probably that the air/fuel mixture is inappropriate when the engine is cold, or that the intake air volume is insufficient.	• Malfunction of the ISC system • Malfunction of the throttle body • Malfunction of the injector system • Malfunction of the ignition system

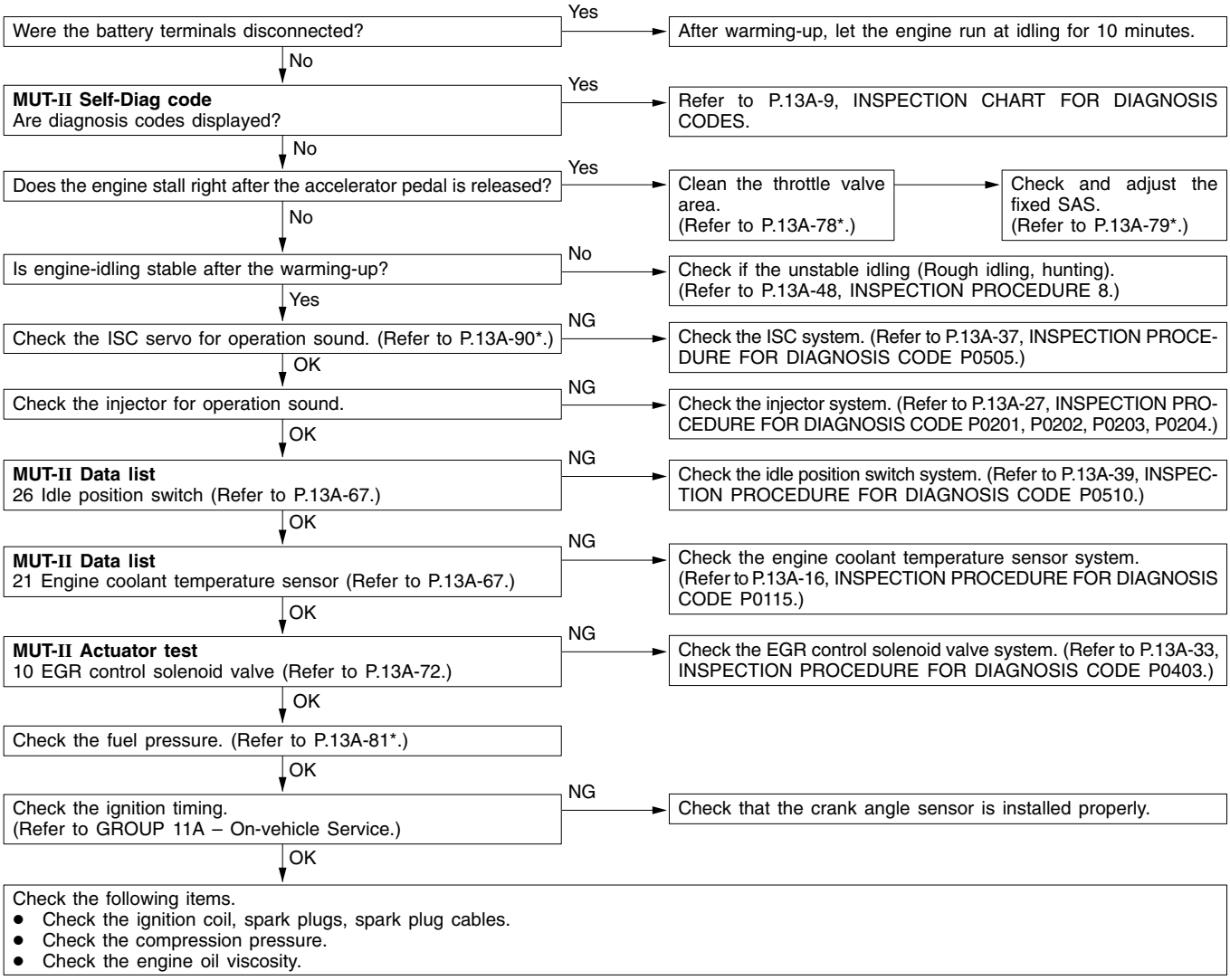

NOTE:
*: Refer to the '97 L200 Workshop Manual (Pub. No. PWTE96E1)

INSPECTION PROCEDURE 12

When the engine is hot, it stalls at idling. (Die out)	Probable cause
In such cases as the above, the cause is probably that ignition system, air/fuel mixture, idle speed control (ISC) or compression pressure is defective. In addition, if the engine suddenly stalls, the cause may also be a defective connector contact.	• Malfunction of the ignition system • Malfunction of air/fuel ratio control system • Malfunction of the ISC system • Drawing air into intake system • Improper connector contact

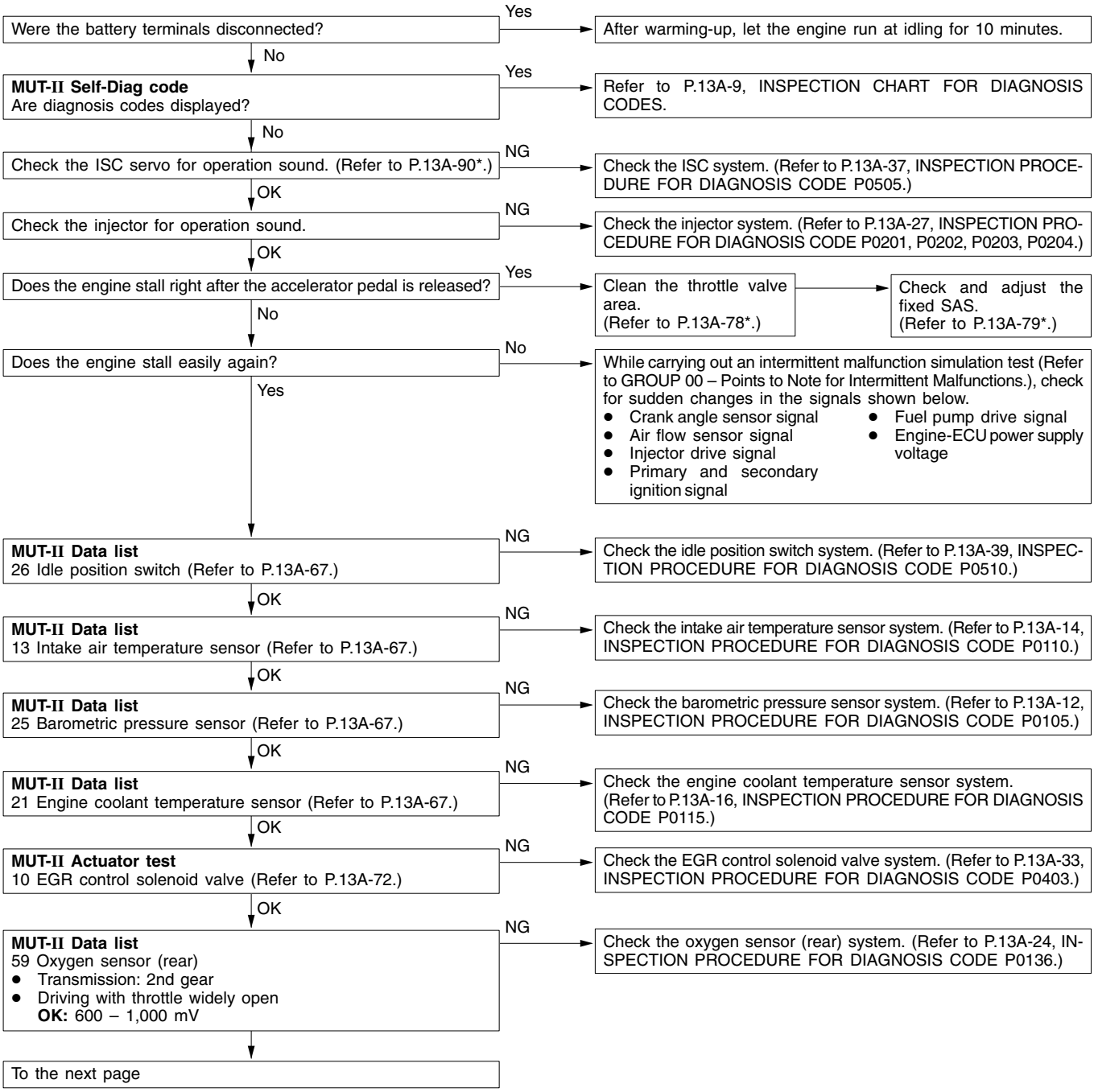

NOTE:
*: Refer to the '97 L200 Workshop Manual (Pub. No. PWTE96E1)

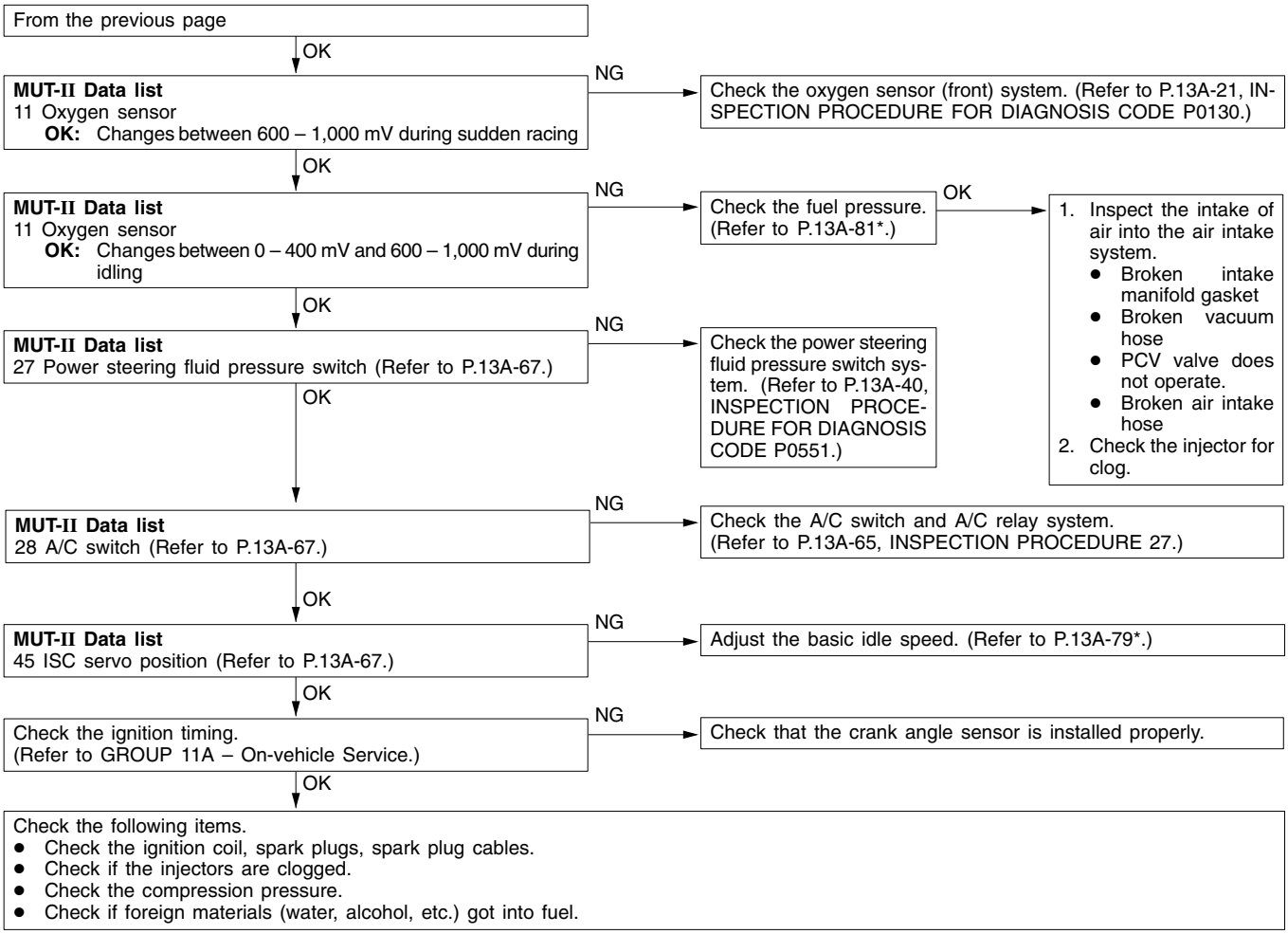

NOTE:
*: Refer to the '97 L200 Workshop Manual (Pub. No. PWTE96E1)

INSPECTION PROCEDURE 13

The engine stalls when starting the car. (Pass out)	Probable cause
In cases such as the above, the cause is probably misfiring due to a weak spark, or an inappropriate air/fuel mixture when the accelerator pedal is depressed.	• Drawing air into intake system • Malfunction of the ignition system

MUT-II Self-Diag code
Are diagnosis codes displayed?
- Yes → Refer to P.13A-9, INSPECTION CHART FOR DIAGNOSIS CODES.
- No ↓

MUT-II Actuator test
10 EGR control solenoid valve (Refer to P.13A-72.)
- NG → Check the EGR control solenoid valve system. (Refer to P.13A-33, INSPECTION PROCEDURE FOR DIAGNOSIS CODE P0403.)
- OK ↓

Check the following items.
- Check the ignition coil, spark plugs, spark plug cables.
- Check if air was drawn into the intake system.
  - Broken intake manifold gasket
  - Broken or disconnected vacuum hose
  - Improper operation of the PCV valve
  - Broken air intake hose

INSPECTION PROCEDURE 14

The engine stalls when decelerating.	Probable cause
In cases such as the above, the cause is probably that the intake air volume is insufficient due to a defective idle speed control (ISC) system.	• Malfunction of the ISC system

Were the battery terminals disconnected?
- Yes → After warming-up, let the engine run at idling for 10 minutes.
- No ↓

MUT-II Self-Diag code
Are diagnosis codes displayed?
- Yes → Refer to P.13A-9, INSPECTION CHART FOR DIAGNOSIS CODES.
- No ↓

MUT-II Data list
26 Idle position switch (Refer to P.13A-67.)
- NG → Check the idle position switch system. (Refer to P.13A-39, INSPECTION PROCEDURE FOR DIAGNOSIS CODE P0510.)
- OK ↓

MUT-II Data list
14 Throttle position sensor (Refer to P.13A-67.)
- NG → Check the throttle position sensor system. (Refer to P.13A-18, INSPECTION PROCEDURE FOR DIAGNOSIS CODE P0120.)
- OK ↓

MUT-II Data list
45 ISC servo position
- Is the idle speed control (ISC) servo position drops to 0 – 2 steps when decelerating (engine r/min less than 1,000)?
- Yes → Check the vehicle speed sensor system. (Refer to P.13A-36, INSPECTION PROCEDURE FOR DIAGNOSIS CODE P0500.)
- No ↓

MUT-II Actuator test
10 EGR control solenoid valve (Refer to P.13A-72.)
- NG → Check the EGR control solenoid valve system. (Refer to P.13A-33, INSPECTION PROCEDURE FOR DIAGNOSIS CODE P0403.)
- OK ↓

Check the following items.
- Check the ignition coil, spark plugs, spark plug cables.
- Clean the throttle valve area.
- Check and adjust the fixed SAS.

INSPECTION PROCEDURE 15

Hesitation, sag or stumble	Probable cause
In cases such as the above, the cause is probably that ignition system, air/fuel mixture or compression pressure is defective.	• Malfunction of the ignition system • Malfunction of air/fuel ratio control system • Malfunction of the fuel supply system • Malfunction of the EGR control solenoid valve system • Poor compression

MUT-II Self-Diag code
Are diagnosis codes displayed?
- Yes → Refer to P.13A-9, INSPECTION CHART FOR DIAGNOSIS CODES.
- No ↓

Check the injectors for operation sound.
- NG → Check the injector system. (Refer to P.13A-27, INSPECTION PROCEDURE FOR DIAGNOSIS CODE P0201, P0202, P0203, P0204.)
- OK ↓

Check the ignition timing.
(Refer to GROUP 11A – On-vehicle Service.)
- NG → Check that the crank angle sensor is installed properly.
- OK ↓

MUT-II Data list
26 Idle position switch (Refer to P.13A-67.)
- NG → Check the idle position switch system. (Refer to P.13A-39, INSPECTION PROCEDURE FOR DIAGNOSIS CODE P0510.)
- OK ↓

MUT-II Data list
13 Intake air temperature sensor (Refer to P.13A-67.)
- NG → Check the intake air temperature sensor system. (Refer to P.13A-14, INSPECTION PROCEDURE FOR DIAGNOSIS CODE P0110.)
- OK ↓

MUT-II Data list
25 Barometric pressure sensor (Refer to P.13A-67.)
- NG → Check the barometric pressure sensor system. (Refer to P.13A-12, INSPECTION PROCEDURE FOR DIAGNOSIS CODE P0105.)
- OK ↓

MUT-II Data list
21 Engine coolant temperature sensor (Refer to P.13A-67.)
- NG → Check the engine coolant temperature sensor system. (Refer to P.13A-16, INSPECTION PROCEDURE FOR DIAGNOSIS CODE P0115.)
- OK ↓

MUT-II Data list
14 Throttle position sensor (Refer to P.13A-67.)
- NG → Check the throttle position sensor system. (Refer to P.13A-18, INSPECTION PROCEDURE FOR DIAGNOSIS CODE P0120.)
- OK ↓

MUT-II Actuator test
10 EGR control solenoid valve (Refer to P.13A-72.)
- NG → Check the EGR control solenoid valve system. (Refer to P.13A-33, INSPECTION PROCEDURE FOR DIAGNOSIS CODE P0403.)
- OK ↓

MUT-II Data list
59 Oxygen sensor (rear)
- Transmission: 2nd gear
- Driving with throttle widely open

OK: 600 – 1,000 mV
- NG → Check the oxygen sensor (rear) system. (Refer to P.13A-24, INSPECTION PROCEDURE FOR DIAGNOSIS CODE P0136.)
- OK ↓

MUT-II Data list
11 Oxygen sensor
OK: Changes between 600 – 1,000 mV during sudden racing
- NG → Check the oxygen sensor (front) system. (Refer to P.13A-21, INSPECTION PROCEDURE FOR DIAGNOSIS CODE P0130.)

To the next page

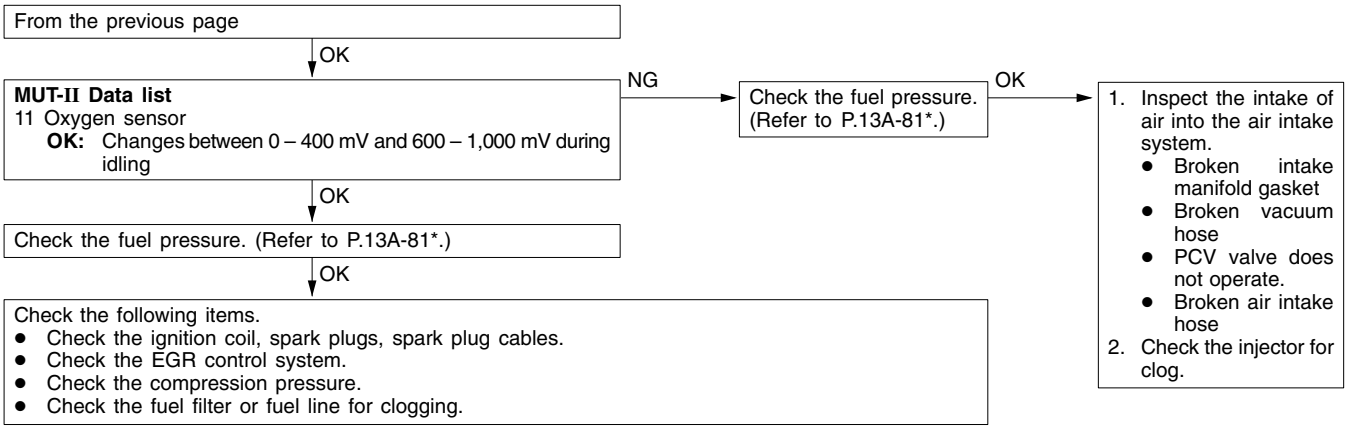

NOTE:
*: Refer to the '97 L200 Workshop Manual (Pub. No. PWTE96E1)

INSPECTION PROCEDURE 16

The feeling of impact or vibration when accelerating	Probable cause
In cases such as the above, the cause is probably that there is an ignition leak accompanying the increase in the spark plug demand voltage during acceleration.	● Malfunction of the ignition system

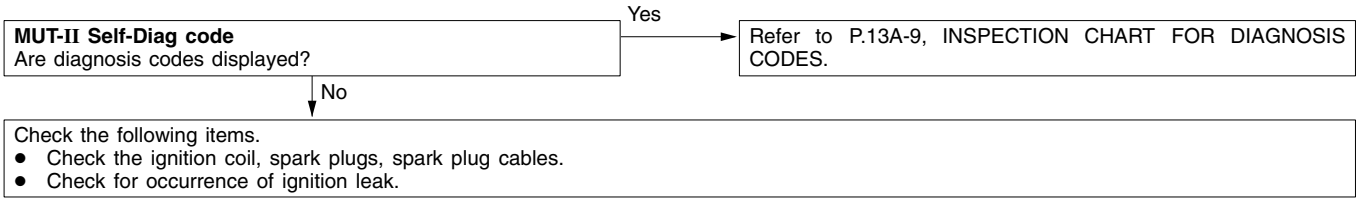

INSPECTION PROCEDURE 17

The feeling of impact or vibration when decelerating.	Probable cause
Malfunction of the ISC system is suspected.	● Malfunction of the ISC system

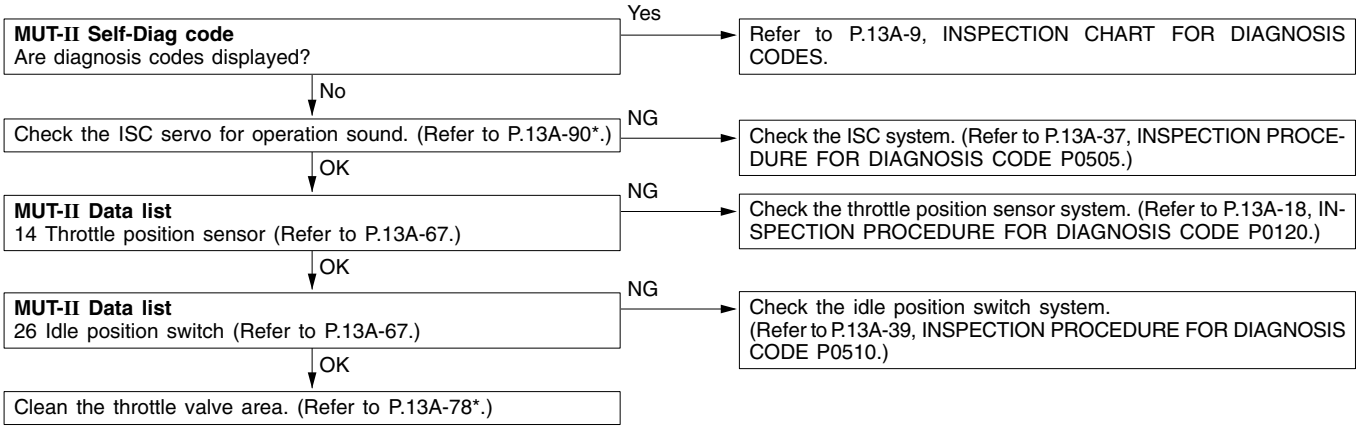

NOTE:
*: Refer to the '97 L200 Workshop Manual (Pub. No. PWTE96E1)

INSPECTION PROCEDURE 18

Poor acceleration	Probable cause
Defective ignition system, abnormal air/fuel ratio, poor compression pressure, etc. are suspected.	• Malfunction of the ignition system • Malfunction of air/fuel ratio control system • Malfunction of the fuel supply system • Poor compression pressure • Clogged exhaust system

MUT-II Self-Diag code
Are diagnosis codes displayed?
- Yes → Refer to P.13A-9, INSPECTION CHART FOR DIAGNOSIS CODES.
- No ↓

Check the injectors for operation sound.
- NG → Check the injector system. (Refer to P.13A-27, INSPECTION PROCEDURE FOR DIAGNOSIS CODE P0201, P0202, P0203, P0204.)
- OK ↓

Check the ignition timing.
(Refer to GROUP 11A – On-vehicle Service.)
- NG → Check that the crank angle sensor is installed properly.
- OK ↓

MUT-II Data list
26 Idle position switch (Refer to P.13A-67.)
- NG → Check the idle position switch system. (Refer to P.13A-39, INSPECTION PROCEDURE FOR DIAGNOSIS CODE P0510.)
- OK ↓

MUT-II Data list
13 Intake air temperature sensor (Refer to P.13A-67.)
- NG → Check the intake air temperature sensor system. (Refer to P.13A-14, INSPECTION PROCEDURE FOR DIAGNOSIS CODE P0110.)
- OK ↓

MUT-II Data list
25 Barometric pressure sensor (Refer to P.13A-67.)
- NG → Check the barometric pressure sensor system. (Refer to P.13A-12, INSPECTION PROCEDURE FOR DIAGNOSIS CODE P0105.)
- OK ↓

MUT-II Data list
21 Engine coolant temperature sensor (Refer to P.13A-67.)
- NG → Check the engine coolant temperature sensor system. (Refer to P.13A-16, INSPECTION PROCEDURE FOR DIAGNOSIS CODE P0115.)
- OK ↓

MUT-II Data list
14 Throttle position sensor (Refer to P.13A-67.)
- NG → Check the throttle position sensor system. (Refer to P.13A-18, INSPECTION PROCEDURE FOR DIAGNOSIS CODE P0120.)
- OK ↓

MUT-II Actuator test
10 EGR control solenoid valve (Refer to P.13A-72.)
- NG → Check the EGR control solenoid valve system. (Refer to P.13A-33, INSPECTION PROCEDURE FOR DIAGNOSIS CODE P0403.)
- OK ↓

MUT-II Data list
59 Oxygen sensor (rear)
- Transmission: 2nd gear
- Driving with throttle widely open

OK: 600 – 1,000 mV
- NG → Check the oxygen sensor (rear) system. (Refer to P.13A-24, INSPECTION PROCEDURE FOR DIAGNOSIS CODE P0136.)
- OK ↓

MUT-II Data list
11 Oxygen sensor
OK: Changes between 600–1,000 mV during sudden racing
- NG → Check the oxygen sensor (front) system. (Refer to P.13A-21, INSPECTION PROCEDURE FOR DIAGNOSIS CODE P0130.)
- ↓

To the next page

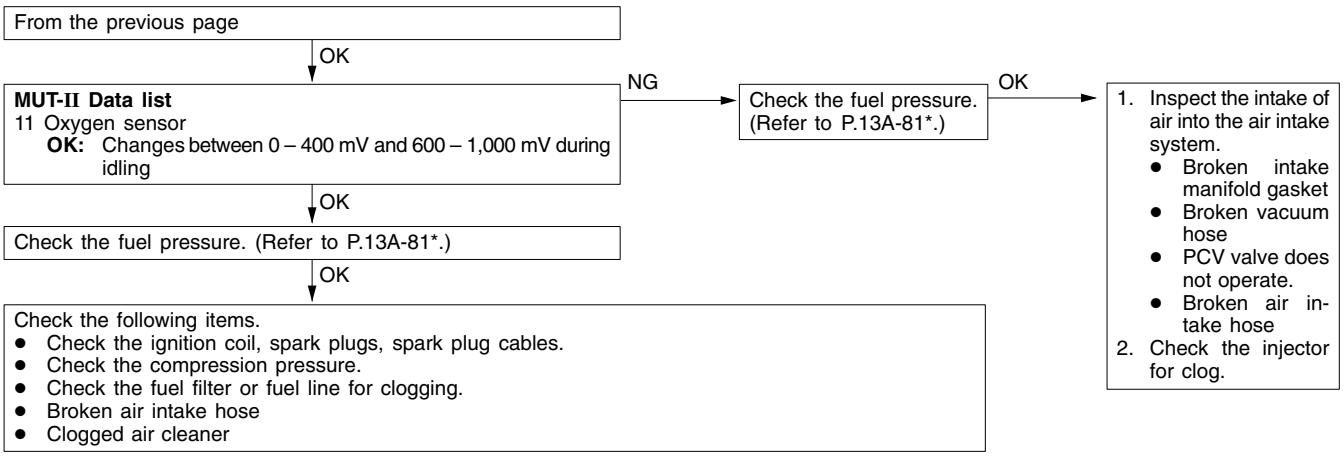

NOTE:
*: Refer to the '97 L200 Workshop Manual (Pub. No. PWTE96E1)

INSPECTION PROCEDURE 19

Surge	Probable cause
Defective ignition system, abnormal air/fuel ratio, etc. are suspected.	• Malfunction of the ignition system • Malfunction of air/fuel ratio control system • Malfunction of the EGR control solenoid valve system

MUT-II Self-Diag code
Are diagnosis codes displayed?
- Yes → Refer to P.13A-9, INSPECTION CHART FOR DIAGNOSIS CODES.
- No ↓

Check the injectors for operation sound.
- NG → Check the injector system. (Refer to P.13A-27, INSPECTION PROCEDURE FOR DIAGNOSIS CODE P0201, P0202, P0203, P0204.)
- OK ↓

Check the ignition timing.
(Refer to GROUP 11A – On-vehicle Service.)
- NG → Check that the crank angle sensor is installed properly.
- OK ↓

MUT-II Data list
26 Idle position switch (Refer to P.13A-67.)
- NG → Check the idle position switch system. (Refer to P.13A-39, INSPECTION PROCEDURE FOR DIAGNOSIS CODE P0510.)
- OK ↓

MUT-II Data list
13 Intake air temperature sensor (Refer to P.13A-67.)
- NG → Check the intake air temperature sensor system. (Refer to P.13A-14, INSPECTION PROCEDURE FOR DIAGNOSIS CODE P0110.)
- OK ↓

MUT-II Data list
25 Barometric pressure sensor (Refer to P.13A-67.)
- NG → Check the barometric pressure sensor system. (Refer to P.13A-12, INSPECTION PROCEDURE FOR DIAGNOSIS CODE P0105.)
- OK ↓

MUT-II Data list
21 Engine coolant temperature sensor (Refer to P.13A-67.)
- NG → Check the engine coolant temperature sensor system. (Refer to P.13A-16, INSPECTION PROCEDURE FOR DIAGNOSIS CODE P0115.)
- OK ↓

MUT-II Data list
14 Throttle position sensor (Refer to P.13A-67.)
- NG → Check the throttle position sensor system. (Refer to P.13A-18, INSPECTION PROCEDURE FOR DIAGNOSIS CODE P0120.)
- OK ↓

MUT-II Actuator test
10 EGR control solenoid valve (Refer to P.13A-72.)
- NG → Check the EGR control solenoid valve system. (Refer to P.13A-33, INSPECTION PROCEDURE FOR DIAGNOSIS CODE P0403.)
- OK ↓

MUT-II Data list
59 Oxygen sensor (rear)
- Transmission: 2nd gear
- Driving with throttle widely open

OK: 600 – 1,000 mV
- NG → Check the oxygen sensor (rear) system. (Refer to P.13A-24, INSPECTION PROCEDURE FOR DIAGNOSIS CODE P0136.)
- OK ↓

MUT-II Data list
11 Oxygen sensor (front)
OK: Changes between 600 – 1,000 mV during sudden racing
- NG → Check the oxygen sensor (front) system. (Refer to P.13A-21, INSPECTION PROCEDURE FOR DIAGNOSIS CODE P0130.)
- OK ↓

MUT-II Data list
11 Oxygen sensor (front)
OK: Changes between 0 – 400 mV and 600 – 1,000 mV during idling
- NG → Check the fuel pressure. (Refer to P.13A-81*.)
  - OK → 1. Inspect the intake of air into the air intake system.
    - Broken intake manifold gasket
    - Broken vacuum hose
    - PCV valve does not operate.
    - Broken air intake hose
    2. Check the injector for clog.
- OK ↓

Check the fuel pressure. (Refer to P.13A-81*.)
- OK ↓

Check the following items.
- Check the ignition coil, spark plugs, spark plug cables.
- Check the EGR control system.

NOTE:
*: Refer to the '97 L200 Workshop Manual (Pub. No. PWTE96E1)

INSPECTION PROCEDURE 20

Knocking	Probable cause
In cases as the above, the cause is probably that the heat value of the spark plug is inappropriate.	• Inappropriate heat value of the spark plug

Check the following items.
- Spark plugs
- Check if foreign materials (water, alcohol, etc.) got into fuel.

INSPECTION PROCEDURE 21

Dieseling	Probable cause
Fuel leakage from injectors is suspected.	• Fuel leakage from injectors

Check the injectors for fuel leakage.

INSPECTION PROCEDURE 22

Too high CO and HC concentration when idling	Probable cause
Abnormal air/fuel ratio is suspected.	● Malfunction of the air/fuel ratio control system ● Deteriorated catalyst

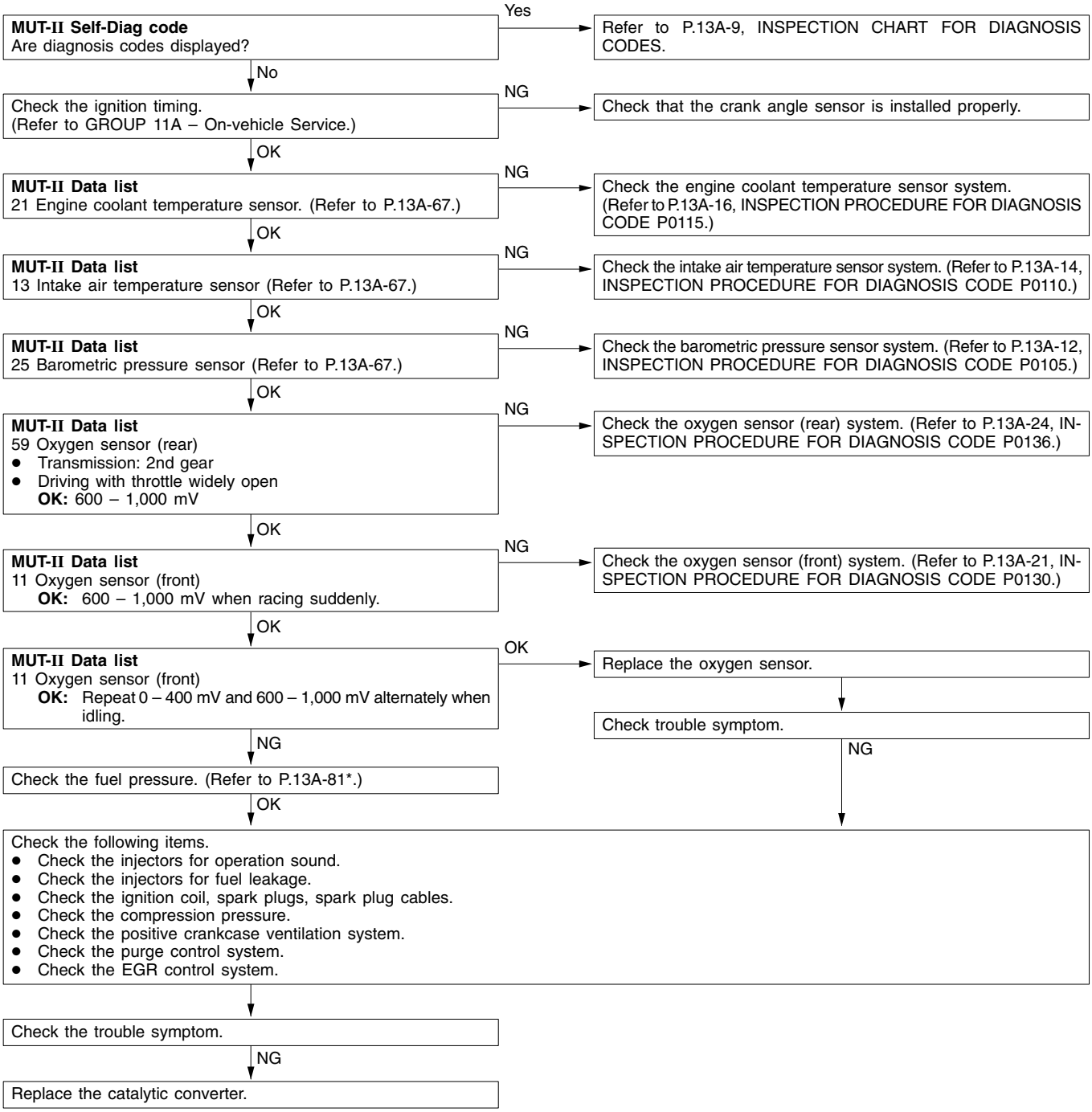

NOTE:
*: Refer to the '97 L200 Workshop Manual (Pub. No. PWTE96E1)

INSPECTION PROCEDURE 23

Engine-ECU power supply and earth circuit system	Probable cause
The engine-ECU may be defective, or that one of the malfunctions listed at right has occurred.	• Improper connector contact, open circuit or short-circuited harness wire in the engine-ECU power supply circuit. • Open circuit or short-circuited harness wire in the engine-ECU earth circuit • Malfunction of the engine-ECU

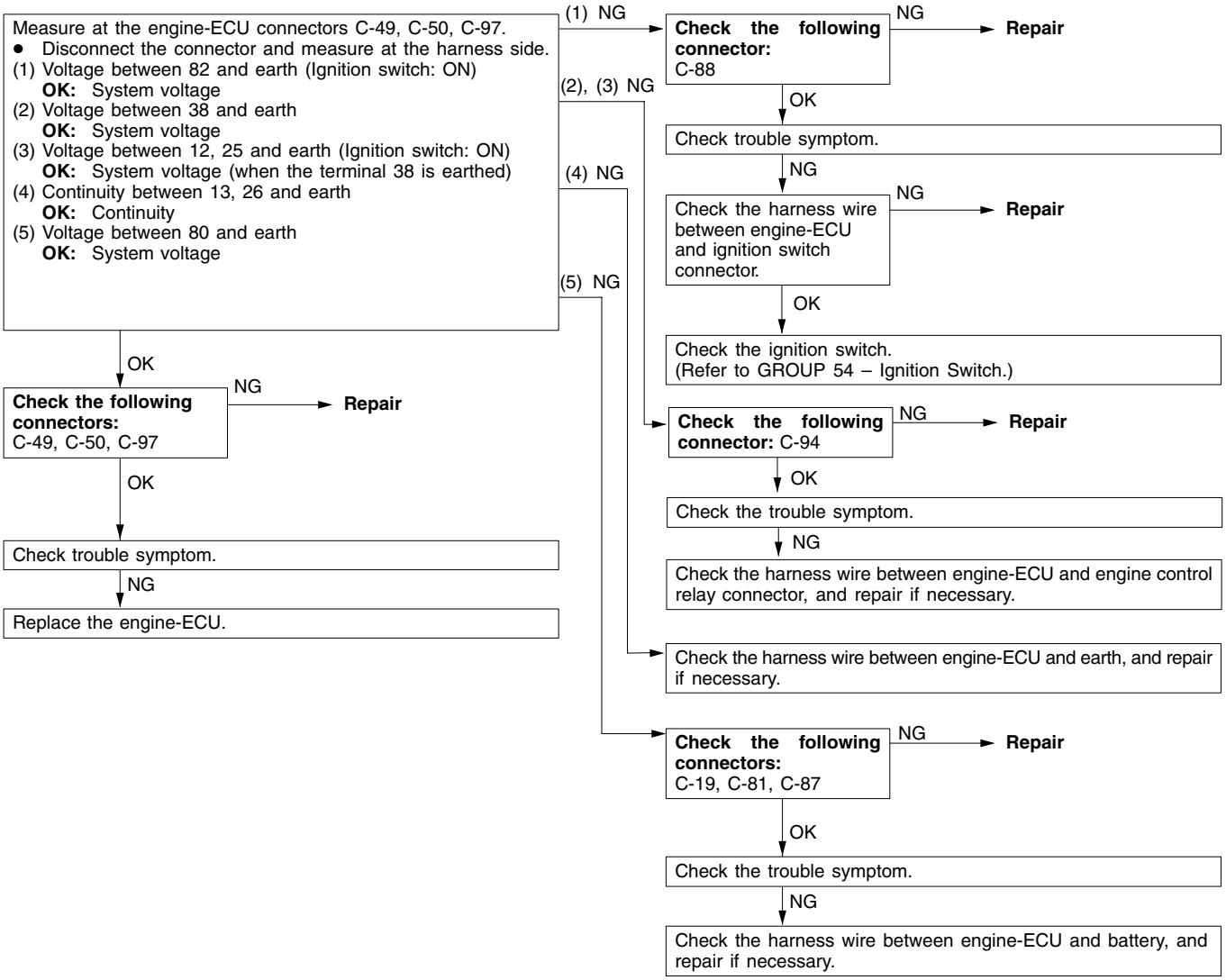

INSPECTION PROCEDURE 24

Power supply system and ignition switch-IG system	Probable cause
When an ignition switch ON signal is input to the engine-ECU, the engine-ECU turns the engine control relay ON. This causes battery voltage to be supplied to the engine-ECU, injectors and air flow sensor.	• Malfunction of the ignition switch • Malfunction of the engine control relay • Improper connector contact, open circuit or short-circuited harness wire • Disconnected engine-ECU earth wire • Malfunction of the engine-ECU

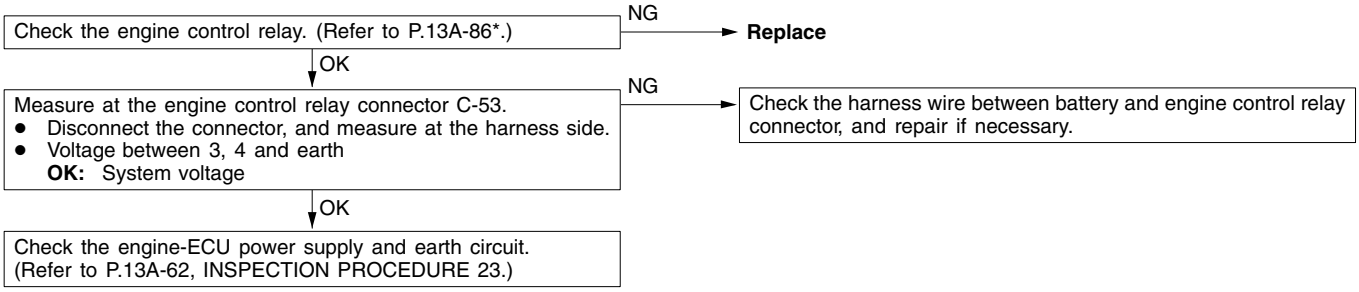

NOTE:
*: Refer to the '97 L200 Workshop Manual (Pub. No. PWTE96E1)

INSPECTION PROCEDURE 25

Fuel pump system	Probable cause
The engine-ECU turns the control relay ON when the engine is cranking or running, and this supplies power to drive the fuel pump.	• Malfunction of the fuel pump relay • Malfunction of the fuel pump • Improper connector contact, open circuit or short-circuited harness wire • Malfunction of the engine-ECU

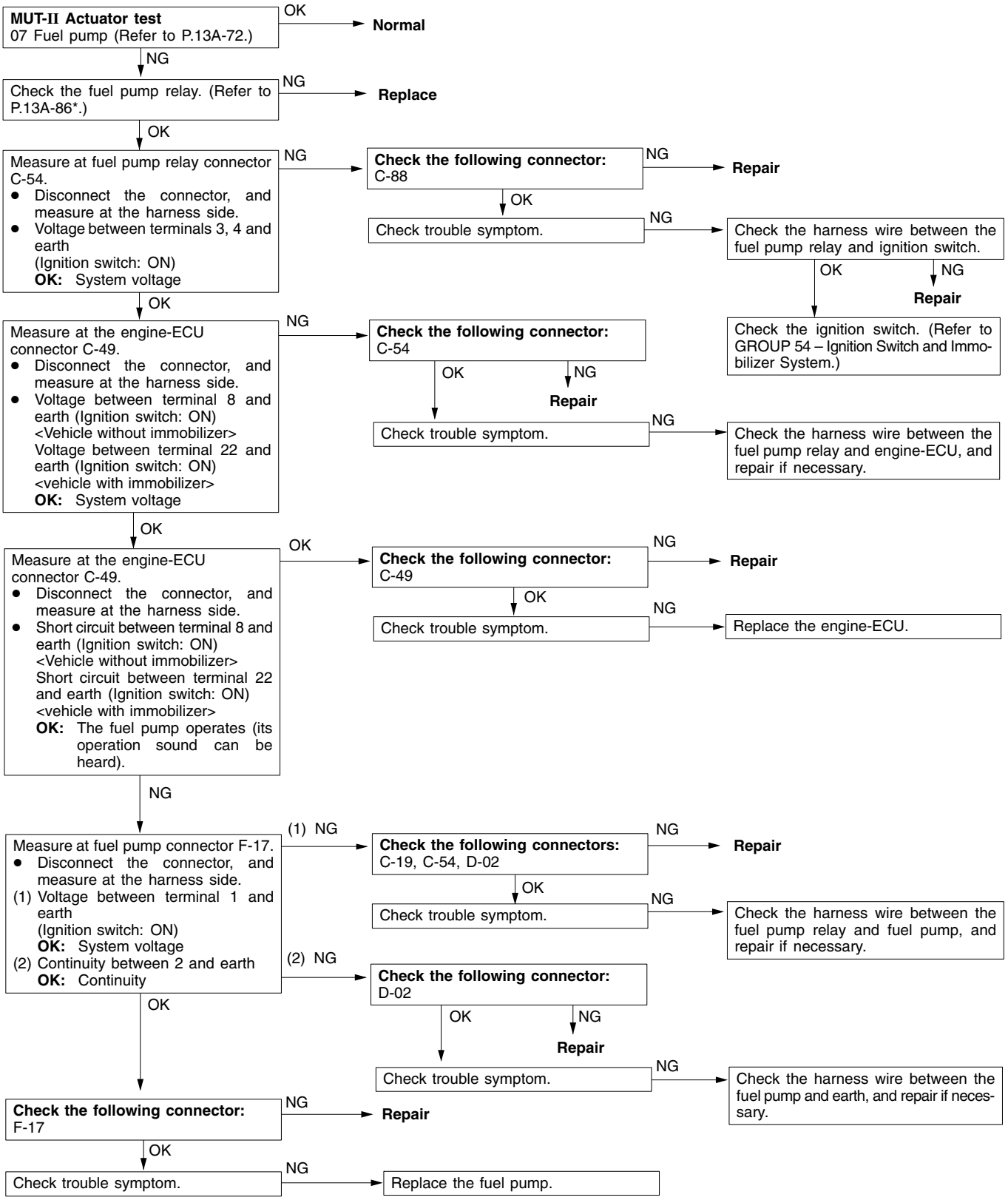

NOTE:
*: Refer to the '97 L200 Workshop Manual (Pub. No. PWTE96E1)

INSPECTION PROCEDURE 26

Ignition switch-ST system	Probable cause
The ignition switch-ST inputs a HIGH signal to the engine-ECU while the engine is cranking. The engine-ECU controls fuel injection, etc. during starting based on this input.	• Malfunction of ignition switch • Improper connector contact, open circuit or short-circuited harness wire • Malfunction of the engine-ECU

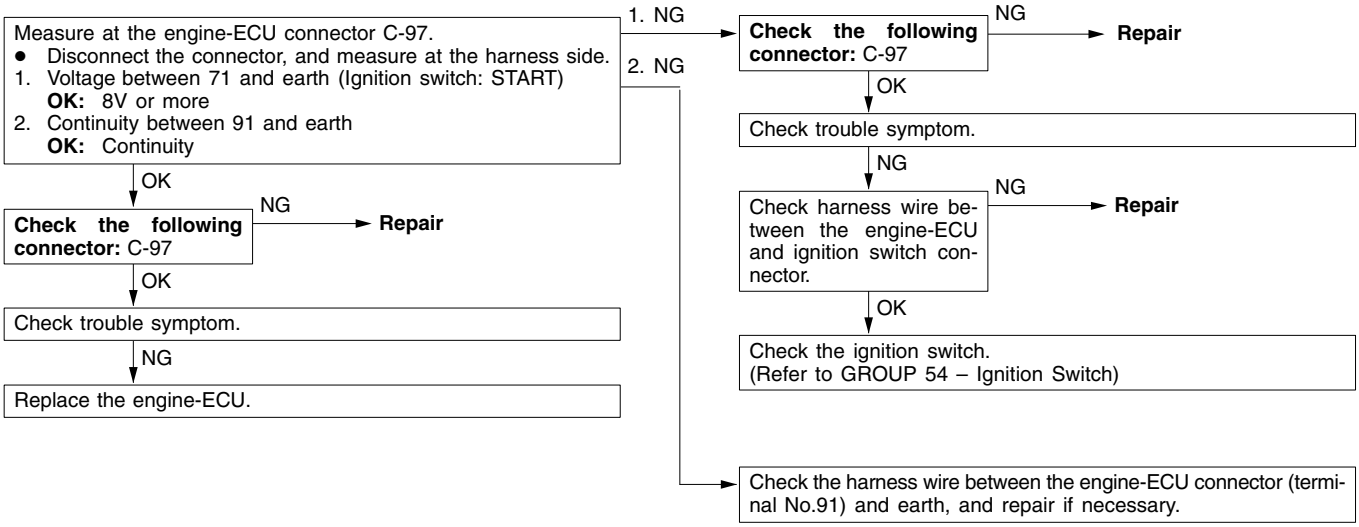

INSPECTION PROCEDURE 27

A/C switch and A/C relay system	Probable cause
When an A/C ON signal is input to the engine-ECU, the engine-ECU carries out control of the idle speed control (ISC) servo, and also operates the A/C compressor magnetic clutch.	• Malfunction of A/C control system • Malfunction of A/C switch • Improper connector contact, open circuit or short-circuited harness wire • Malfunction of the engine-ECU

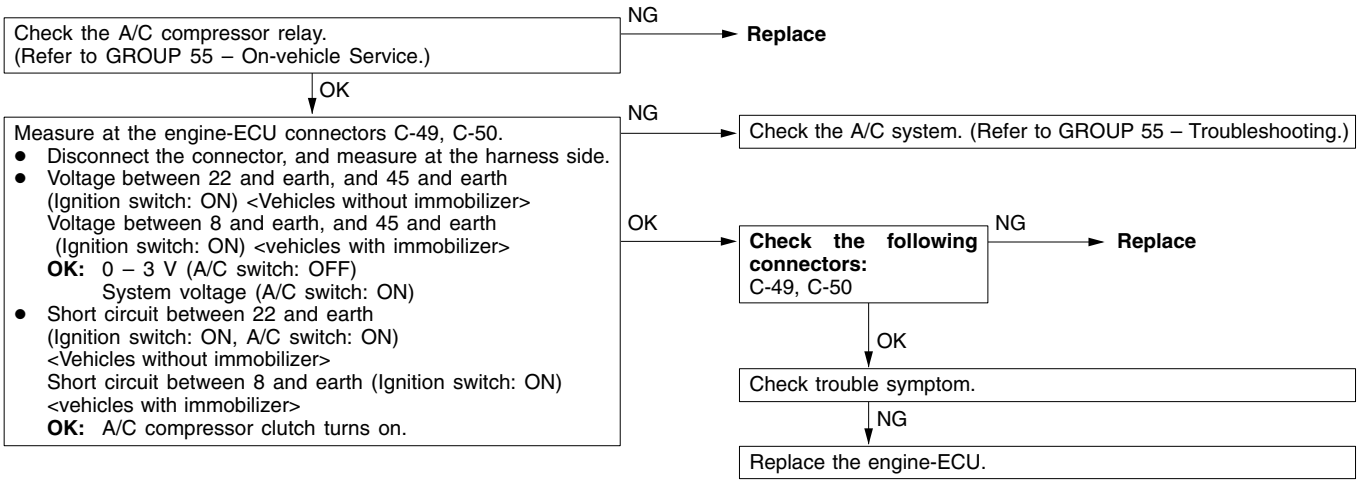

INSPECTION PROCEDURE 28

Ignition circuit system	Probable cause
The engine-ECU interrupts the ignition coil primary current by turning the power transistor inside the engine-ECU ON and OFF.	• Malfunction of ignition coil. • Malfunction of power transistor unit. • Improper connector contact, open circuit or short-circuited harness wire • Malfunction of the engine-ECU

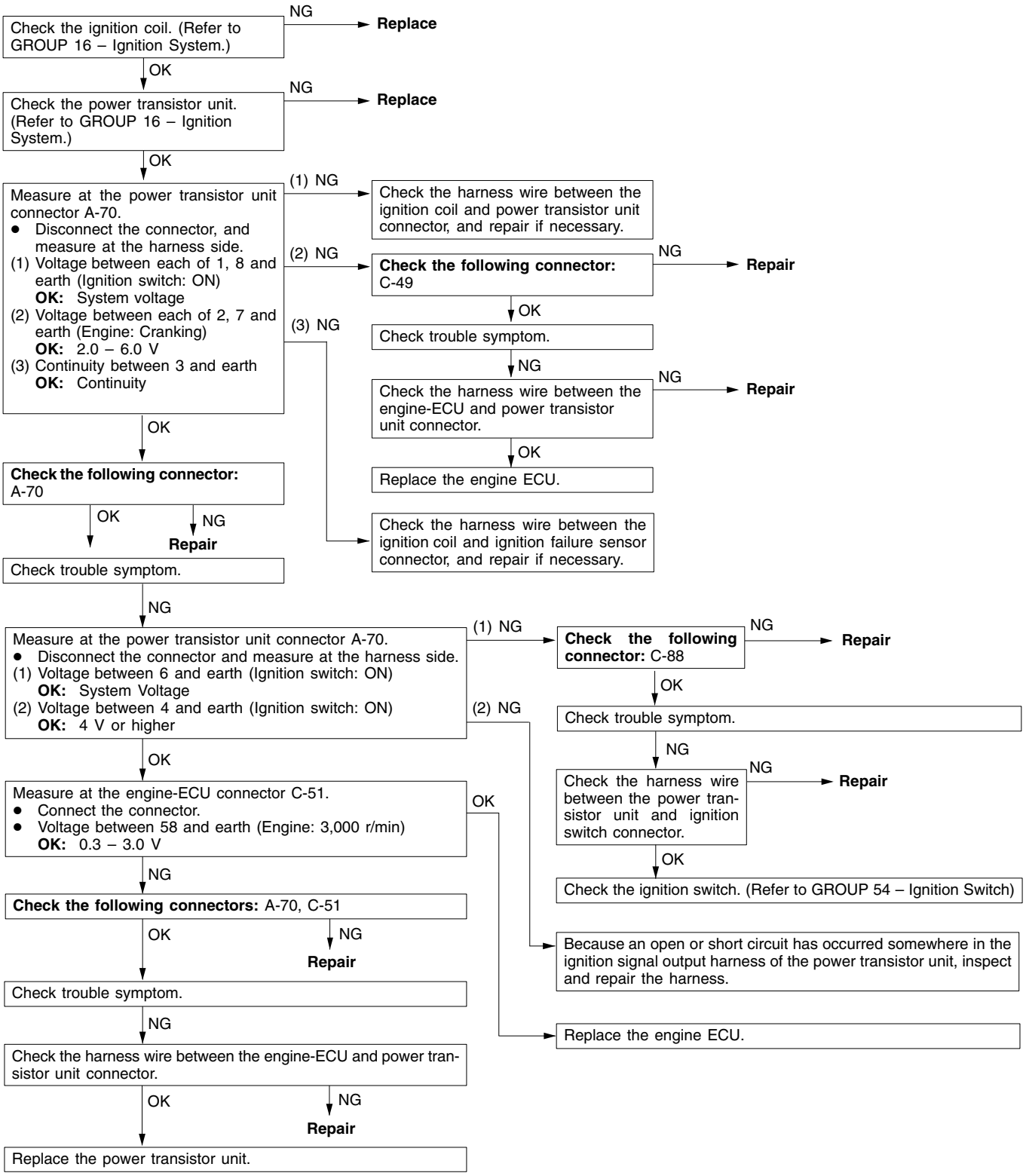

DATA LIST REFERENCE TABLE

Caution

When shifting the select lever to D range, the brakes should be applied so that the vehicle does not move forward.

NOTE

*1. In a new vehicle [driven approximately 500 km or less], the air flow sensor output frequency is sometimes 10 % higher than the standard frequency.
*2. The idle position switch normally turns off when the voltage of the throttle position sensor is 50 – 100 mV higher than the voltage at the idle position. If the throttle position switch turns back on after the throttle position sensor voltage has risen by 100 mV and the throttle valve has opened, the idle position switch and the throttle position sensor need to be adjusted.
*3. The injector drive time represents the time when the cranking speed is at 250 r/min or below when the power supply voltage is 11 V.
*4. In a new vehicle [driven approximately 500 km or less], the injector drive time is sometimes 10 % longer than the standard time.
*5. In a new vehicle [driven approximately 500 km or less], the step of the stepper motor is sometimes 30 steps greater than the standard value.

Item No.	Inspection item	Inspection contents		Normal condition	Inspection procedure No.	Reference page
11	Oxygen sensor (front)	Engine: After having warmed up Air/fuel mixture is made leaner when decelerating, and is made richer when racing.	When at 4,000 r/min, engine is suddenly decelerated	200 mV or less	Code No. P0130	13A-21
			When engine is suddenly raced	600 – 1,000 mV		
		Engine: After having warmed up The oxygen sensor signal is used to check the air/fuel mixture ratio, and control condition is also checked by the ECU.	Engine is idling	400 mV or less (Changes) 600 – 1,000 mV		
			2,500 r/min			
12	Air flow sensor*1	• Engine coolant temperature: 80 – 95°C • Lamps, electric cooling fan and all accessories: OFF • Transmission: Neutral	Engine is idling	19 – 45 Hz	–	–
			2,500 r/min	67 – 107 Hz		
			Engine is raced	Frequency increases in response to racing		

Item No.	Inspection item	Inspection contents		Normal condition	Inspection procedure No.	Reference page
13	Intake air temperature sensor	Ignition switch: ON or with engine running	When intake air temperature is –20°C	–20°C	Code No. P0110	13A-14
			When intake air temperature is 0°C	0°C		
			When intake air temperature is 20°C	20°C		
			When intake air temperature is 40°C	40°C		
			When intake air temperature is 80°C	80°C		
14	Throttle position sensor	Ignition switch: ON	Set to idle position	300 – 1,000 mV	Code No. P0120	13A-18
			Gradually open	Increases in proportion to throttle opening angle		
			Open fully	4,500 – 5,500 mV		
16	Power supply voltage	Ignition switch: ON		System voltage	Procedure No. 23	13A-62
18	Cranking signal (ignition switch-ST)	Ignition switch: ON	Engine: Stopped	OFF	Procedure No. 26	13A-65
			Engine: Cranking	ON		
21	Engine coolant temperature sensor	Ignition switch: ON or with engine running	When engine coolant temperature is –20°C	–20°C	Code No. P0115	13A-16
			When engine coolant temperature is 0°C	0°C		
			When engine coolant temperature is 20°C	20°C		
			When engine coolant temperature is 40°C	40°C		
			When engine coolant temperature is 80°C	80°C		

Item No.	Inspection item	Inspection contents		Normal condition	Inspection procedure No.	Reference page
22	Crank angle sensor	● Engine: Cranking ● Tachometer: Connected	Compare the engine speed readings on the tachometer and the MUT-II.	Accord	Code No. P0335	13A-31
		● Engine: Idling ● Idle position switch: ON	When engine coolant temperature is –20°C	1,275 – 1,475 rpm		
			When engine coolant temperature is 0°C	1,225 – 1,425 rpm		
			When engine coolant temperature is 20°C	1,100 – 1,300 rpm		
			When engine coolant temperature is 40°C	950 – 1,150 rpm		
			When engine coolant temperature is 80°C	650 – 850 rpm		
24	Vehicle speed sensor	Drive at 40 km/h		Approximately 40 km/h	Code No. P0500	13A-36
25	Barometric pressure sensor	Ignition switch: ON	At altitude of 0 m	101 kPa	Code No. P0105	13A-12
			At altitude of 600 m	95 kPa		
			At altitude of 1,200 m	88 kPa		
			At altitude of 1,800 m	81 kPa		
26	Idle position switch	Ignition switch: ON Check by operating accelerator pedal repeatedly	Throttle valve: Set to idle position	ON	Code No. P0510	13A-39
			Throttle valve: Slightly open	OFF*2		
27	Power steering fluid pressure switch	Engine: Idling	Steering wheel stationary	OFF	Code No. P0551	13A-40
			Steering wheel turning	ON		
28	A/C switch	Engine: Idling (when A/C switch is ON, A/C compressor should be operating.)	A/C switch: OFF	OFF	Procedure No. 27	13A-65
			A/C switch: ON	ON		

Item No.	Inspection item	Inspection contents		Normal condition	Inspection procedure No.	Reference page
41	Injectors*3	Engine: Cranking	When engine coolant temperature is 0°C (injection is carried out for all cylinders simultaneously)	60 – 90 ms	–	–
			When engine coolant temperature is 20°C	30 – 45 ms		
			When engine coolant temperature is 80°C	6.7 – 10.1 ms		
	Injectors*4	• Engine coolant temperature: 80 – 95°C • Lamps, electric cooling fan and all accessories: OFF • Transmission: Neutral (A/T: P range)	Engine is idling	2.2 – 3.4 ms		
			2,500 r/min	1.9 – 3.1 ms		
			When engine is suddenly raced	Increases		
44	Ignition coils and power transistors	• Engine: After having warmed up • Timing lamp is set. (The timing lamp is set in order to check actual ignition timing.)	Engine is idling	2 – 18°BTDC	Code No. P0300	13A-28
			2,500 r/min	27 – 47°BTDC		
45	ISC (stepper) motor position*5	• Engine coolant temperature: 80 – 95°C • Lamps, electric cooling fan and all accessories: OFF • Transmission: Neutral • Idle position switch: ON • Engine: Idling • When A/C switch is ON, A/C compressor should be operating	A/C switch: OFF	2 – 25 STEP	–	–
			A/C switch: OFF → ON	Increases by 10 – 70 steps		
49	A/C relay	Engine: After having warmed up/Engine is idling	A/C switch: OFF	OFF (Compressor clutch is not operating)	Procedure No. 27	13A-65
			A/C switch: ON	ON (Compressor clutch is operating)		

Item No.	Inspection item	Inspection contents		Normal condition	Inspection procedure No.	Reference page
59	Oxygen sensor (rear)	• Transmission: 2nd gear • Drive with throttle widely open	3,500 r/min	600 – 1,000 mV	Code No. P0136	13A-24
81	Long-term fuel compensation	Engine: Warm, 2,500 r/min without any load (during closed loop)		–12.5 – 12.5 %	Code No. P0170	13A-26
82	Short-term fuel compensation	Engine: Warm, 2,500 r/min without any load (during closed loop)		–30 – 25 %	Code No. P0170	13A-26
87	Calculation load value	Engine: Warm	Engine: Idling	15 – 35 %	–	–
			2,500 r/min	15 – 35 %		
88	Fuel control condition	Engine: Warm	2,500 r/min	Closed loop	Code No. P0125	13A-20
			When engine is suddenly raced	Open loop – drive condition		
A1	Oxygen sensor (sensor 1)	Engine: After having warmed up	Idling	0 V	Code No. P0130	13A-21
			Sudden racing	0.6 – 1.0 V		
			2,500 r/min	0.4 V or less and 0.6 – 1.0 V alternates		
A2	Oxygen sensor (sensor 2)	• Transmission: 2nd gear • Drive with throttle widely open	3,500 r/min	0.6 – 1.0 V	Code No. P0136	13A-24
8A	Throttle position sensor (Throttle valve opening angle)	• Engine coolant temperature: 80 – 95°C • Ignition switch: ON (Engine: Stopped)	Release the accelerator pedal.	6 – 12 %	Code No. P0120	13A-18
			Depress the accelerator pedal gradually	Increase in response to pedal depression stroke.		
			Depress the accelerator pedal fully.	80 – 100 %		

ACTUATOR TEST REFERENCE TABLE

Item No.	Inspection item	Drive contents	Inspection contents		Normal condition	Inspection procedure No.	Reference page
01	Injectors	Cut fuel to No. 1 injector	Engine: After having warmed up/Engine is idling (Cut the fuel supply to each injector in turn and check cylinders which don't affect idling.)		Idling condition becomes different (becomes unstable).	Code No. P0201	13A-27
02		Cut fuel to No. 2 injector				Code No. P0202	13A-27
03		Cut fuel to No. 3 injector				Code No. P0203	13A-27
04		Cut fuel to No. 4 injector				Code No. P0204	13A-27
07	Fuel pump	Fuel pump operates and fuel is recirculated.	• Engine: Cranking • Fuel pump: Forced driving Inspect according to both the above conditions.	Pinch the return hose with fingers to feel the pulse of the fuel being recirculated.	Pulse is felt.	Procedure No. 25	13A-63
				Listen near the fuel tank for the sound of fuel pump operation.	Sound of operation is heard.		
08	Purge control solenoid valve	Solenoid valve turns from OFF to ON.	Ignition switch: ON		Sound of operation can be heard when solenoid valve is driven.	Code No. P0443	13A-35
10	EGR control solenoid valve	Solenoid valve turns from OFF to ON.	Ignition switch: ON		Sound of operation can be heard when solenoid valve is driven.	Code No. P0403	13A-33
17	Basic ignition timing	Set to ignition timing adjustment mode	Engine: Idling Timing light is set		5°BTDC	–	–

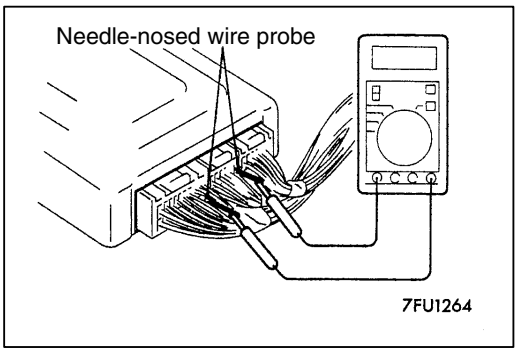

CHECK AT THE ENGINE-ECU TERMINALS

TERMINAL VOLTAGE CHECK CHART

1. Connect a needle-nosed wire probe (test harness: MB991223 or paper clip) to a voltmeter probe.
2. Insert the needle-nosed wire probe into each of the engine-ECU connector terminals from the wire side, and measure the voltage while referring to the check chart.

   NOTE
   (1) Make the voltage measurement with the engine-ECU connectors connected.
   (2) You may find it convenient to pull out the engine-ECU to make it easier to reach the connector terminals.
   (3) The checks can be carried out off the order given in the chart.

   Caution
   Short-circuiting the positive (+) probe between a connector terminal and earth could damage the vehicle wiring, the sensor, engine-ECU or all of them. Be careful to prevent this!

3. If voltmeter shows any division from standard value, check the corresponding sensor, actuator and related electrical wiring, then repair or replace.
4. After repair or replacement, recheck with the voltmeter to confirm that the repair has corrected the problem.

Engine-ECU Connector Terminal Arrangement

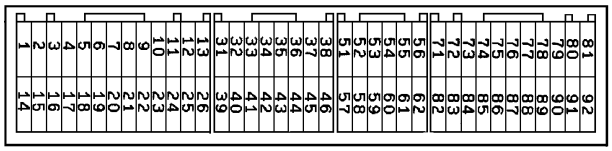

9FU0393

NOTE:
*: Vehicles with immobilizer system

Terminal No.	Check item	Check condition (Engine condition)	Normal condition
1	No. 1 injector	While engine is idling after having warmed up, suddenly depress the accelerator pedal.	From 11 – 14 V, momentarily drops slightly
14	No. 2 injector		
2	No. 3 injector		
15	No. 4 injector		
4	Stepper motor coil <A1>	Engine: Soon after the warmed up engine is started	System voltage ↔ 0 – 3 V (Changes repeatedly)
17	Stepper motor coil <A2>		
5	Stepper motor coil <B1>		
18	Stepper motor coil <B2>		
6	EGR control solenoid valve	Ignition switch: ON	System Voltage
		While engine is idling, suddenly depress the accelerator pedal.	From system voltage, momentarily drops
8 or 22*	Fuel pump relay	Ignition switch: ON	System voltage
		Engine: Idle speed	0 – 3 V
9	Purge control solenoid valve	Ignition switch: ON	System voltage
		Running at 3,000 r/min while engine is warming up after having been started.	0 – 3 V
10	Power transistor (Ignition coil–No. 1, No. 4)	Engine r/min: 3,000 r/min	0.3 – 3.0 V
23	Power transistor (Ignition coil–No. 2, No. 3)		
12	Power supply	Ignition switch: ON	System voltage
25			
19	Air flow sensor reset signal	Engine: Idle speed	0 – 1 V
		Engine r/min: 3,000 r/min	6 – 9 V
22 or 8*	A/C relay	• Engine: idle speed • A/C switch: OFF → ON (A/C compressor is operating)	System voltage or momentarily 6 V or more → 0 – 3 V

Terminal No.	Check item	Check condition (Engine condition)		Normal condition
36	Engine warning lamp	Ignition switch: OFF → ON		0 – 3 V → 9 – 13 V (After several seconds have elapsed)
37	Power steering fluid pressure switch	Engine: Idling after warming up	When steering wheel is stationary	System voltage
			When steering wheel is turned	0 – 3 V
38	Control relay (Power supply)	Ignition switch: OFF		System voltage
		Ignition switch: ON		0 – 3 V
45	A/C switch	Engine: Idle speed	Turn the A/C switch OFF	0 – 3 V
			Turn the A/C switch ON (A/C compressor is operating)	System voltage
54	Oxygen sensor (rear) heater	Engine: Idling after having warmed up		0 – 3 V
		Engine r/min: 5,000 r/min.		System voltage
58	Spark check signal	Engine r/min: 3,000 r/min		0.3 – 3.0 V
60	Oxygen sensor (front) heater	Engine: Idling after warming up		0 – 3 V
		Engine r/min: 5,000 r/min.		System voltage
71	Ignition switch-ST	Engine: Cranking		8 V or more
72	Intake air temperature sensor	Ignition switch: ON	When intake air temperature is 0°C	3.2 – 3.8 V
			When intake air temperature is 20°C	2.3 – 2.9 V
			When intake air temperature is 40°C	1.5 – 2.1 V
			When intake air temperature is 80°C	0.4 – 1.0 V
75	Oxygen sensor (rear)	● Transmission: 2nd gear ● Engine r/min: 3,500 r/min ● Driving with the throttle valve widely open		0.6 – 1.0 V
76	Oxygen sensor (front)	Engine: Running at 2,500 r/min after warmed up (Check using a digital type voltmeter)		0 ↔ 0.8 V (Changes repeatedly)

Terminal No.	Check item	Check condition (Engine condition)		Normal condition
80	Backup power supply	Ignition switch: OFF		System voltage
81	Sensor impressed voltage	Ignition switch: ON		4.5 – 5.5 V
82	Ignition switch-IG	Ignition switch: ON		System voltage
83	Engine coolant temperature sensor	Ignition switch: ON	When engine coolant temperature is 0°C	3.2 – 3.8 V
			When engine coolant temperature is 20°C	2.3 – 2.9 V
			When engine coolant temperature is 40°C	1.3 – 1.9 V
			When engine coolant temperature is 80°C	0.3 – 0.9 V
84	Throttle position sensor	Ignition switch: ON	Set throttle valve to idle position	0.3 – 1.0 V
			Fully open throttle valve	4.5 – 5.5 V
85	Barometric pressure sensor	Ignition switch: ON	When altitude is 0 m	3.7 – 4.3 V
			When altitude is 1,200 m	3.2 – 3.8 V
86	Vehicle speed sensor	• Ignition switch: ON • Move the vehicle slowly forward		0 ↔ 5 V (Changes repeatedly)
87	Idle position switch	Ignition switch: ON	Set throttle valve to idle position	0 – 1 V
			Slightly open throttle valve	4 V or more
88	Camshaft position sensor	Engine: Cranking		0.4 – 3.0 V
		Engine: Idle speed		0.5 – 2.0 V
89	Crank angle sensor	Engine: Cranking		0.4 – 4.0 V
		Engine: Idle speed		1.5 – 2.5 V
90	Air flow sensor	Engine: Idle speed		2.2 – 3.2 V
		Engine r/min: 2,500 r/min		

CHECK CHART FOR RESISTANCE AND CONTINUITY BETWEEN TERMINALS

1. Turn the ignition switch to OFF.
2. Disconnect the engine-ECU connector.
3. Measure the resistance and check for continuity between the terminals of the engine-ECU harness-side connector while referring to the check chart.

   NOTE
   (1) When measuring resistance and checking continuity, a harness for checking contact pin pressure should be used instead of inserting a test probe.
   (2) Checking need not be carried out in the order given in the chart.

   Caution
   If the terminals that should be checked are mistaken, or if connector terminals are not correctly shorted to earth, damage may be caused to the vehicle wiring, sensors, engine-ECU and/or ohmmeter.
   Be careful to prevent this!

4. If the ohmmeter shows any deviation from the standard value, check the corresponding sensor, actuator and related electrical wiring, and then repair or replace.
5. After repair or replacement, recheck with the ohmmeter to confirm that the repair or replacement has corrected the problem.

Engine-ECU Harness Side Connector Terminal Arrangement

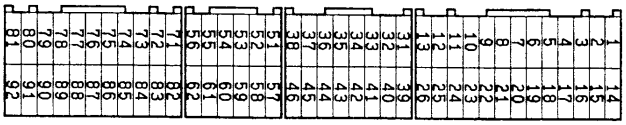

9FU0392

Terminal No.	Inspection item	Normal condition (Check condition)
1 – 12	No. 1 injector	13 – 16 Ω (At 20°C)
14 – 12	No. 2 injector	
2 – 12	No. 3 injector	
15 – 12	No. 4 injector	

Terminal No.	Inspection item	Normal condition (Check condition)
4 – 12	Stepper motor coil (A1)	28 – 33 Ω (At 20°C)
17 – 12	Stepper motor coil (A2)	
5 – 12	Stepper motor coil (B1)	
18 – 12	Stepper motor coil (B2)	
6 – 12	EGR control solenoid valve	36 – 44 Ω (At 20°C)
9 – 12	Purge control solenoid valve	30 – 34 Ω (At 20°C)
13 – Body earth	Engine-ECU earth	Continuity (0 Ω)
26 – Body earth	Engine-ECU earth	
54 – 12	Oxygen sensor (rear) heater	11 – 18 Ω (At 20°C)
60 – 12	Oxygen sensor (front) heater	4.5 – 8.0 Ω (At 20°C)
72 – 92	Intake air temperature sensor	5.3 – 6.7 kΩ (When intake air temperature is 0°C)
		2.3 – 3.0 kΩ (When intake air temperature is 20°C)
		1.0 – 1.5 kΩ (When intake air temperature is 40°C)
		0.30 – 0.42 kΩ (When intake air temperature is 80°C)
83 – 92	Engine coolant temperature sensor	5.1 – 6.5 kΩ (When coolant temperature is 0°C)
		2.1 – 2.7 kΩ (When coolant temperature is 20°C)
		0.9 – 1.3 kΩ (When coolant temperature is 40°C)
		0.26 – 0.36 kΩ (When coolant temperature is 80°C)
87 – 92	Idle position switch	Continuity (When throttle valve is at idle position)
		No continuity (When throttle valve is slightly open)

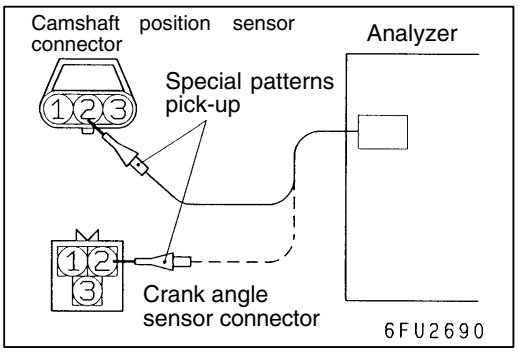

INSPECTION PROCEDURE USING AN ANALYZER

CAMSHAFT POSITION SENSOR AND CRANK ANGLE SENSOR

Measurement Method

1. Disconnect the camshaft position sensor connector and connect the special tool (test harness: MB991709) in between. (All terminals should be connected.)
2. Connect the analyzer special patterns pickup to camshaft position sensor terminal 2.
3. Disconnect the crank angle sensor connector and connect the special tool (test harness: MD998478) in between.
4. Connect the analyzer special patterns pickup to crank angle sensor terminal 2.

Alternate Method (Test harness not available)

1. Connect the analyzer special patterns pickup to engine-ECU terminal 88. (When checking the camshaft position sensor signal wave pattern.)
2. Connect the analyzer special patterns pickup to engine-ECU terminal 89. (When checking the crank angle sensor signal wave pattern.)

Standard Wave Pattern

Observation conditions

Function	Special patterns
Pattern height	Low
Pattern selector	Display
Engine r/min	Idle speed

Standard wave pattern

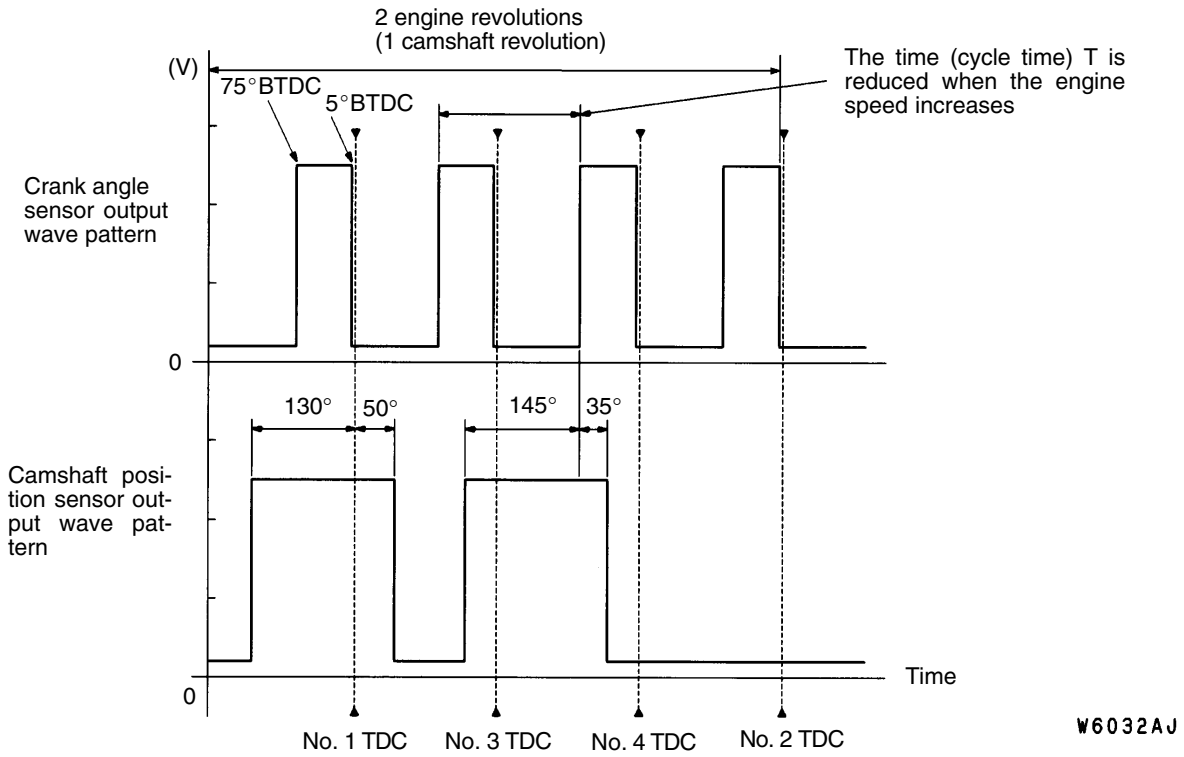

TDC: Top dead centre

Wave Pattern Observation Points

Check that cycle time T becomes shorter when the engine speed increases.

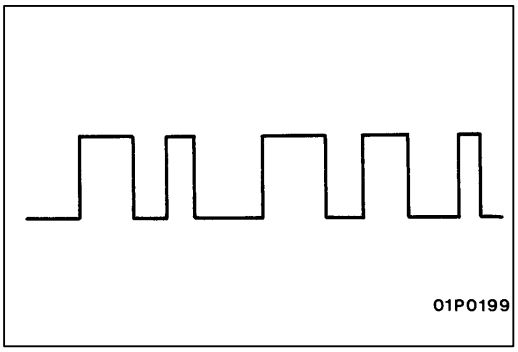

Examples of Abnormal Wave Patterns

- Example 1

  Cause of problem

  Sensor interface malfunction

  Wave pattern characteristics

  Rectangular wave pattern is output even when the engine is not started.

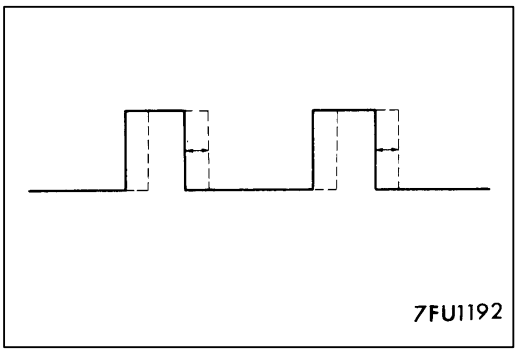

- Example 2

  Cause of problem

  Loose timing belt
  Abnormality in sensor disk

  Wave pattern characteristics

  Wave pattern is displaced to the left or right.

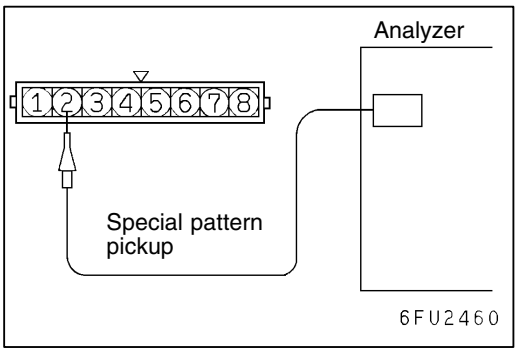

IGNITION COIL AND POWER TRANSISTOR

- Ignition coil primary signal
  Refer to 16 – Ignition System.
- Power transistor control signal

Measurement Method

1. Disconnect the power transistor connector, and connect the special tool (test harness: MB991348) in between. (All terminals should be connected.)
2. Connect the analyzer special pattern pickup to the power transistor connector terminal 2 (No.2 – No.3) and terminal 7 (No.1 – No.4) respectively.

Alternate Method (Test harness not available)

1. Connector the analyzer special pattern pickup to engine ECU terminal 10 (No.1 – No.4), terminal 23 (No.2 – No.3) respectively.

Standard Wave Pattern

Observation condition

Function	Special patterns
Pattern height	Low
Pattern selector	Display
Engine r/min	Approx. 1,200 r/min

Standard wave pattern

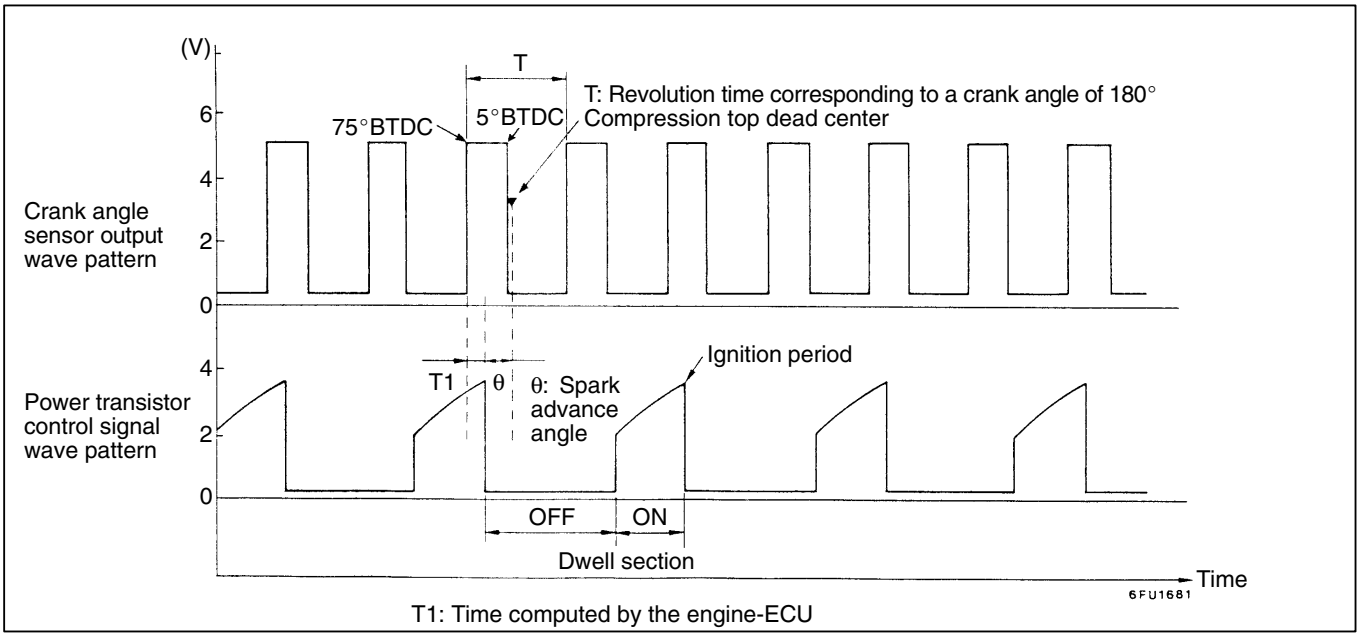

Wave Pattern Observation Points

Point: Condition of wave pattern build-up section and maximum voltage (Refer to abnormal wave pattern examples 1 and 2.)

Condition of wave pattern build-up section and maximum voltage	Probable cause
Rises from approx. 2V to approx. 4.5V at the top-right	Normal
2V rectangular wave	Open-circuit in ignition primary circuit
Rectangular wave at power voltage	Power transistor malfunction

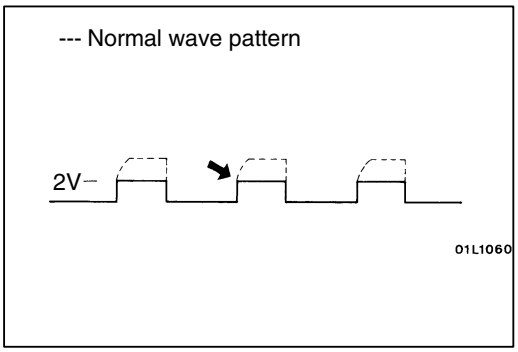

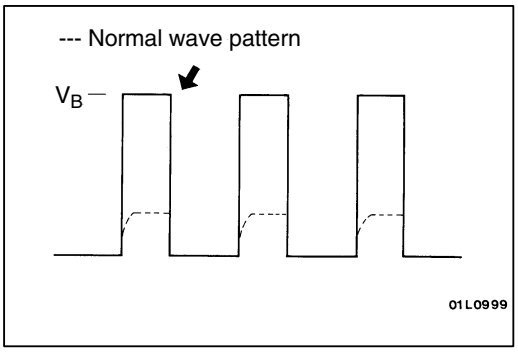

Examples of Abnormal Wave Patterns

- Example 1

  Wave pattern during engine cranking

  Cause of problem

  Open-circuit in ignition primary circuit

  Wave pattern characteristics

  Top-right part of the build-up section cannot be seen, and voltage value is approximately 2V too low.

- Example 2

  Wave pattern during engine cranking

  Cause of problem

  Malfunction in power transistor

  Wave pattern characteristics

  Power voltage results when the power transistor is ON.

ON-VEHICLE SERVICE

COMPONENT LOCATION

Name	Symbol	Name	Symbol
Camshaft position sensor	A	Oxygen sensor (front)	D
Crank angle sensor	B	Oxygen sensor (rear)	E
Ignition coil	C	Power transistor unit	A

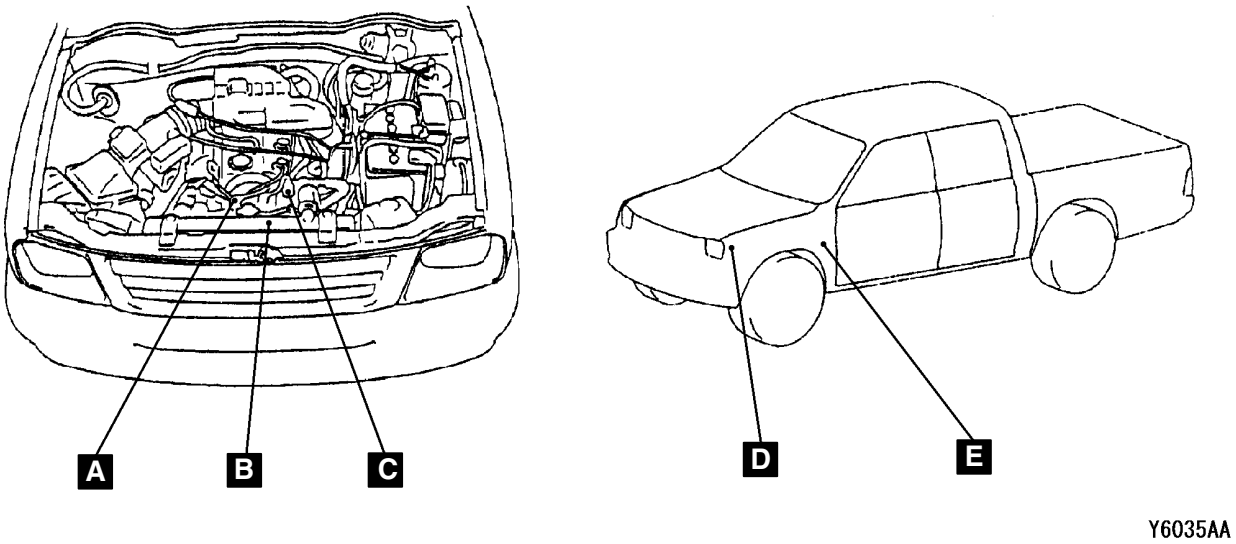

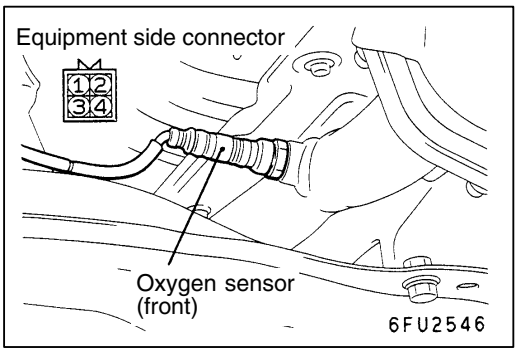

OXYGEN SENSOR CHECK

<Oxygen sensor (front)>

1. Disconnect the oxygen sensor connector and connect the special tool (test harness) to the connector on the oxygen sensor side.

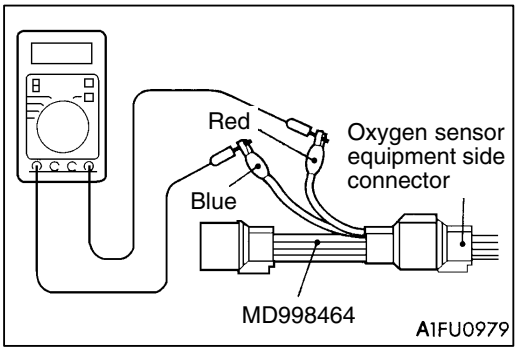

2. Make sure that there is continuity (4.5 – 8.0 Ω at 20°C) between terminal 1 (red clip of special tool) and terminal 3 (blue clip of special tool) on the oxygen sensor connector.
3. If there is no continuity, replace the oxygen sensor.
4. Warm up the engine until engine coolant is 80°C or higher.

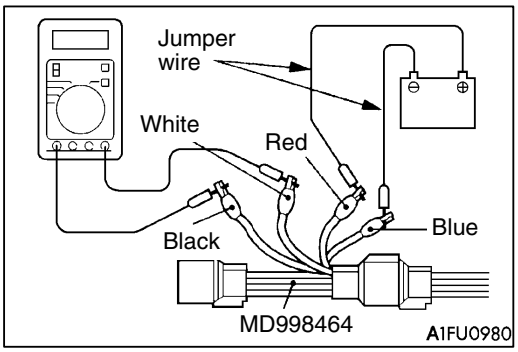

5. Use a jumper wire to connect terminal 1 (red clip) of the oxygen sensor connector to the battery (+) terminal and terminal 3 (blue clip) to the battery (–) terminal.

   Caution
   Be very careful when connecting the jumper wire; incorrect connection can damage the oxygen sensor.

6. Connect a digital voltage meter between terminal 2 (black clip) and terminal 4 (white clip).

7. While repeatedly racing the engine, measure the oxygen sensor output voltage.

   Standard value:

Engine	Oxygen sensor output voltage	Remarks
When racing the engine	0.6 – 1.0 V	If you make the air/fuel ratio rich by racing the engine repeatedly, a normal oxygen sensor will output a voltage of 0.6 – 1.0 V.

8. If the sensor is defective, replace the oxygen sensor.

   NOTE
   For removal and installation of the oxygen sensor, refer to GROUP 15 – Exhaust Pipe and Main Muffler.

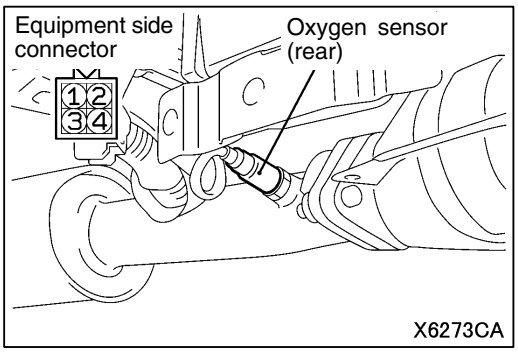

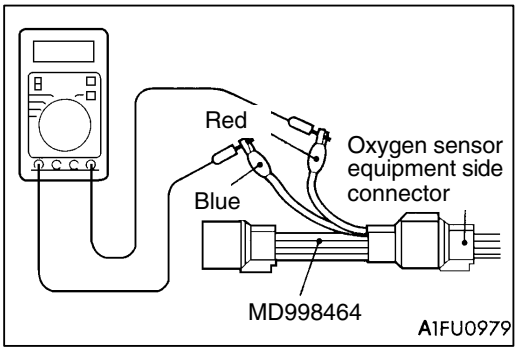

<Oxygen sensor (rear)>

1. Disconnect the oxygen sensor connector and connect the special tool (test harness set) to the connector on the oxygen sensor side.
2. Make sure that there is continuity (11 – 18 Ω at 20°C) between terminal 1 (red clip of special tool) and terminal 3 (blue clip of special tool) on the oxygen sensor connector.
3. If there is no continuity, replace the oxygen sensor.

   NOTE
   (1) If the MUT-II does not display the standard value although no abnormality is found by the above mentioned continuity test and harness check, replace the oxygen sensor (rear).
   (2) For removal and installation of the oxygen sensor, refer to GROUP 15 – Exhaust Pipe and Main Muffler.

NOTES

DIESEL FUEL

Click on the applicable bookmark to selected the required model year

DIESEL FUEL

CONTENTS

13309000023

GENERAL INFORMATION **2**

SERVICE SPECIFICATIONS **2**

SPECIAL TOOL **2**

ON-VEHICLE SERVICE **2**

Fuel Injection Timing Check and Adjustment ... 2

Engine Idle Speed Check and Adjustment 2

Evacuation of Water from Fuel Filter 2

Evacuation of Air from Fuel Line 3

Fuel Filter Cartridge Replacement 3

Fuel Injection Pump Check 3

Boost Compensator Check 4

Injection Nozzle Check and Adjustment 4

INJECTION NOZZLE **6**

INJECTION PUMP **10**

GENERAL INFORMATION

13300010025

The fuel is drawn out of the fuel tank by means of the feed pump which is built into the fuel injection pump. It then passes through the fuel filter and is fed to the injection pump.
The fuel is pressurized by the feed pump, and this fuel pressure is controlled by the regulating valve which is built into the pump. Then, the fuel is compressed by the plunger and injected from the nozzles at high pressure in accordance with the injection sequence.

Engine speed (fuel injection amount) control is carried out by means of a centrifugal-type governor using a flyweight.
Fuel injection timing control is carried out by a hydraulic timer. The hydraulic timer operates by the fuel pressure inside the pump chamber. This pressure is controlled by the regulating valve.

SERVICE SPECIFICATIONS

13300030021

Items	Standard value
Fuel cut solenoid valve coil resistance Ω	8 – 10
Fuel injection initial pressure kPa	14,710 – 15,690

SPECIAL TOOL

13300060020

Tool	Number	Name	Use
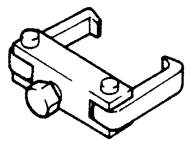	MD998388	Injection pump sprocket puller	Fuel injection pump sprocket removal

ON-VEHICLE SERVICE

13300090012

FUEL INJECTION TIMING CHECK AND ADJUSTMENT

Refer to GROUP 11B – On-vehicle Service.

ENGINE IDLE SPEED CHECK AND ADJUSTMENT

13300100012

Refer to GROUP 11B – On-vehicle Service.

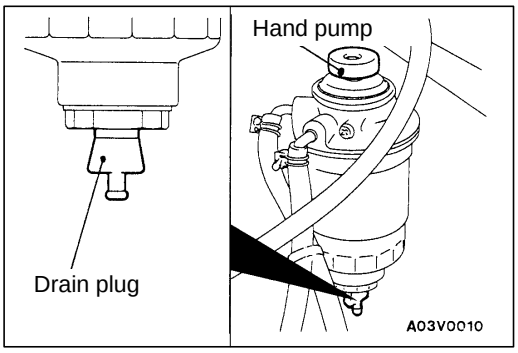

EVACUATION OF WATER FROM FUEL FILTER

13300120025

Water is in the filter when fuel filter warning lamp lights. Evacuate water by the following procedures.

1. Remove the intercooler assembly. <4WD> (Refer to GROUP 15.)
2. Loosen drain plug.
3. Drain water with hand pump. Finger-tighten drain plug.

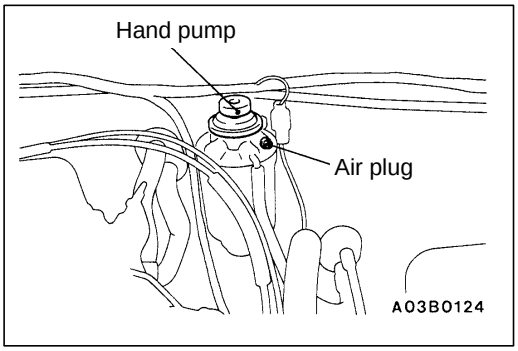

EVACUATION OF AIR FROM FUEL LINE 13300130028

Bleed the air from the fuel line after refilling the fuel.

- When fuel is drained for service.
- When fuel filter is replaced.
- When main fuel line is removed.

1. Remove the intercooler assembly. <4WD> (Refer to GROUP 15.)
2. Loosen fuel filter air plug.
3. Place rags around air plug hole. Operate hand pump repeatedly until no bubbles come from plug hole. Tighten air plug.
4. Repeat until hand pump operation becomes stiff.

FUEL FILTER CARTRIDGE REPLACEMENT

13300320029

Refer to GROUP 13F.

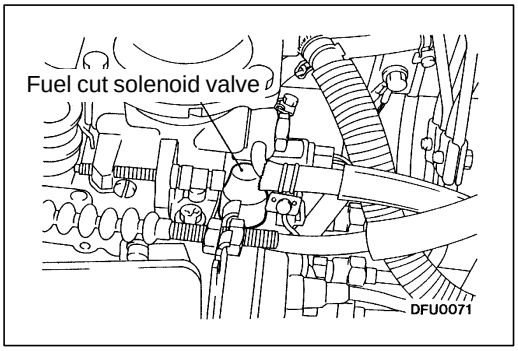

FUEL INJECTION PUMP CHECK 13300140021

FUEL CUT SOLENOID VALVE OPERATION CHECK <Vehicles without immobilizer system>

When a sound scope is held against the fuel cut solenoid valve and the ignition switch is turned to “ON”, check that the sound of the valve operating can be heard.

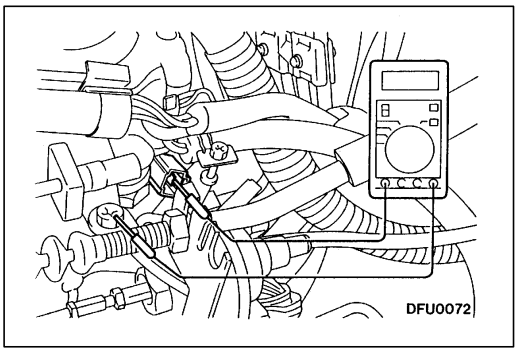

FUEL CUT SOLENOID VALVE COIL RESISTANCE CHECK <Vehicles without immobilizer system>

Measure the resistance between the fuel cut solenoid valve terminal and the injection pump body.

Standard value: 8 – 10 Ω

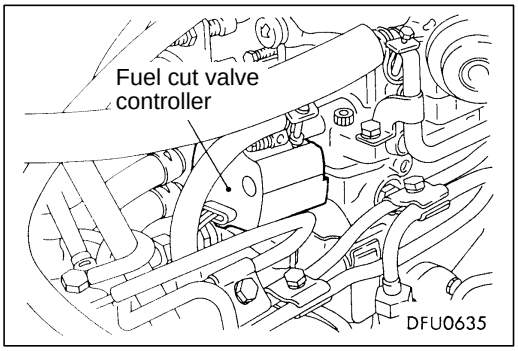

FUEL CUT VALVE CONTROLLER OPERATION CHECK <Vehicles with immobilizer system>

When a sound scope is held against the fuel cut valve controller and the ignition switch is turned to “ON”, check that the sound of the valve operating can be heard.
If no operating sound can be heard, check the immobilizer system while referring to GROUP 54.

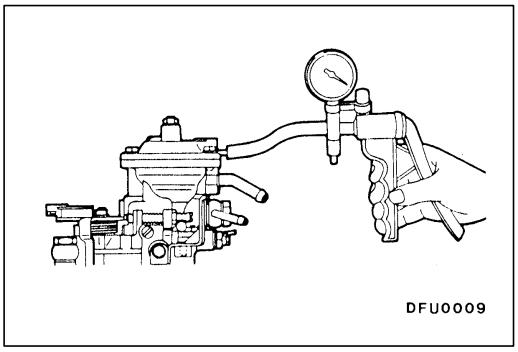

BOOST COMPENSATOR CHECK

13300150024

1. Connect a hand pump (pressurization type) to the nipple of the boost compensator.
2. Apply 30 kPa of pressure and check to be sure that the pressure is maintained.

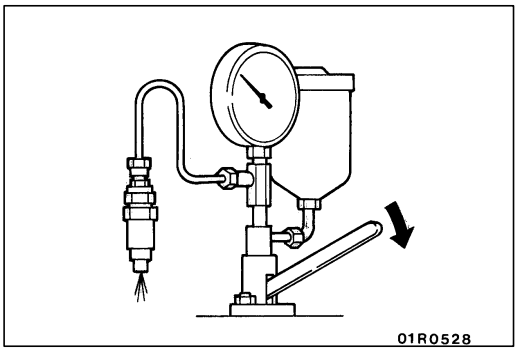

INJECTION NOZZLE CHECK AND ADJUSTMENT

13300160027

Caution
Never touch the injection spray that is injected from the nozzle.

FUEL INJECTION INITIAL PRESSURE CHECK

1. Install the injection nozzle to a nozzle tester.
2. Move the lever of the nozzle tester 2 – 3 times to inject fuel and to bleed the air.
3. Gently press down the lever of the nozzle tester, and take a reading of the indication value on the pressure gauge at the point where the needle slowly rises and then suddenly drops.

   Standard value (Fuel injection initial pressure): 14,710 – 15,690 kPa

4. If the fuel injection initial pressure is outside the standard value, disassembly the nozzle holder to clean it, and then change the thickness of the shim to adjust the fuel injection initial pressure.

   NOTE
   1. For disassembly, reassembly and adjustment of the nozzle holder, refer to P.13E-8.
   2. There are 10 shims for adjustment, with thicknesses in the range of 0.10 – 0.80 mm.
   3. When the shim thickness is increased by 0.1 mm, the fuel injection initial pressure increases by 2,350 kPa.

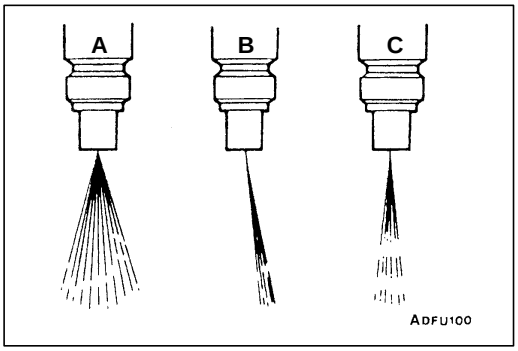

INJECTION SPRAY CONDITION CHECK

1. Move the lever of the nozzle tester rapidly (4 – 6 times per second) to eject the fuel continuously. Check to be sure that the injection spray comes out evenly in a cone shape (injection spray angle is 10 °C). The injection spray patterns shown in the illustration at left are wrong.
   A. Injection angle is tool large
   B. Bias
   C. Intermittent fuel injection

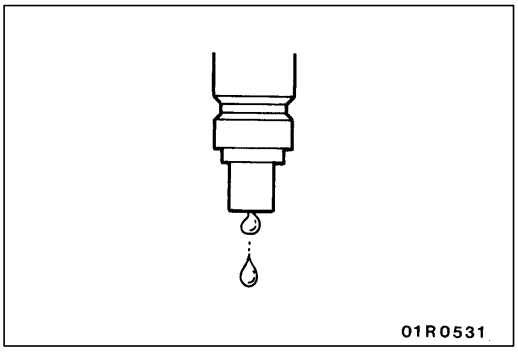

2. Check to be sure that no fuel drips after injection is completed.
3. If there are any drips, disassemble the nozzle, clean it and reinspect, or replace the nozzle.

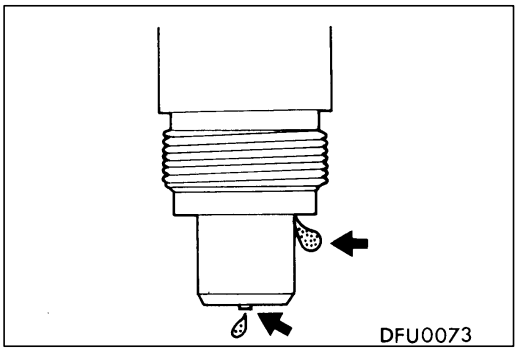

NOZZLE FUEL-TIGHT CHECK

1. Gently raise the lever of the nozzle tester until the pressure inside the nozzle (value displayed on pressure gauge) becomes 12,750 – 13,730 kPa, and after holding this pressure for approximately 10 seconds, check to be sure that there are no fuel leaks from the nozzle.
2. If there are any leaks, disassemble the injection nozzle, clean it and re-inspect, or replace the nozzle.

INJECTION NOZZLE

13300270010

REMOVAL AND INSTALLATION

Pre-removal and
- Intercooler Removal <4WD> (Refer to GROUP 15.)

Post-installation Operation
- Intercooler installation <4WD> (Refer to GROUP 15.)
- Accelerator Cable Adjustment (Refer to GROUP 17 – On-vehicle Service.)
- Throttle Cable Adjustment (Refer to GROUP 23 – On-vehicle Service.)

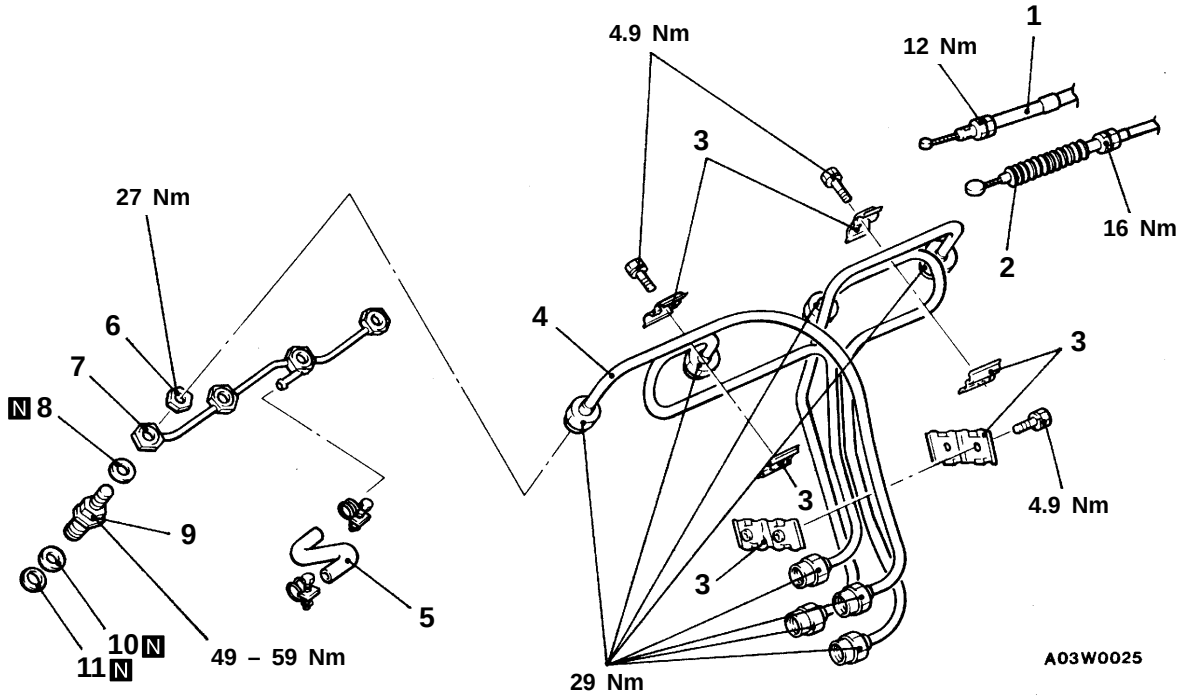

Removal steps

1. Accelerator cable connection
2. Throttle cable connection <A/T>
3. Injection pipe clamp

◀A▶ 4. Injection pipe
5. Fuel return hose

◀B▶ 6. Nut

◀B▶ 7. Fuel return pipe
8. Fuel return pipe gasket

◀C▶ 9. Injection nozzle assembly

▶A◀ 10. Holder gasket

▶A◀ 11. Nozzle gasket

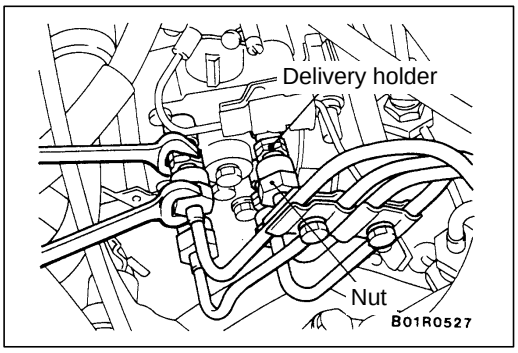

REMOVAL SERVICE POINTS

◀A▶ INJECTION PIPE DISCONNECTION

When loosening nuts at both ends of injection pipe, hold the delivery holder (for pump side) and the injection nozzle assembly (for nozzle side) with wrench and loosen nut.

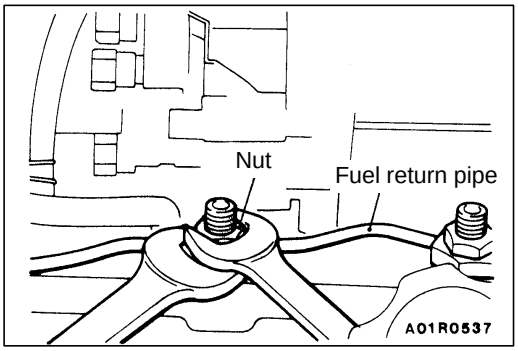

◀B▶ NUT/FUEL RETURN PIPE REMOVAL

1. While using a spanner or similar tool to hold the hexagonal nut of the fuel return pipe, remove the nut.

   Caution
   If an attempt is made to loosen the nut without first holding the fuel return pipe, the pipe may be broken or otherwise damaged.

2. Disconnect the fuel return pipe.

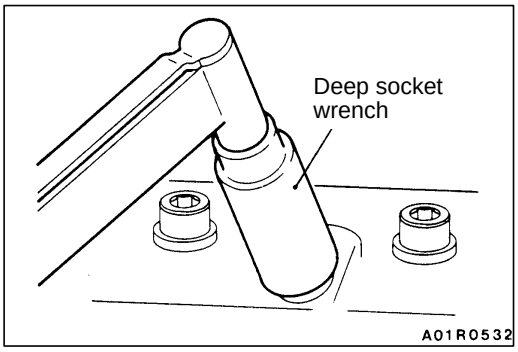

◀C▶ INJECTION NOZZLE ASSEMBLY REMOVAL

Using a deep socket wrench, remove the injection nozzle assembly.

Caution
1. **Make a mark on the removed injection nozzle assembly (the cylinder No.).**
2. **Use a cap to prevent foreign material, etc. from entering the injection nozzle hole.**

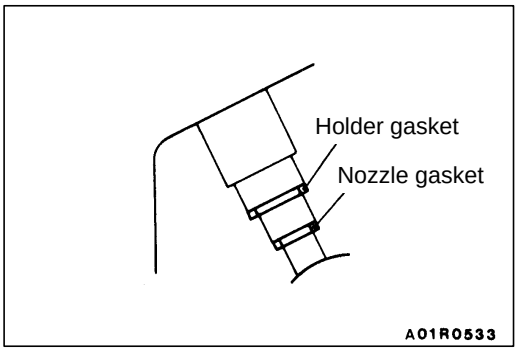

INSTALLATION SERVICE POINT

▶A◀ NOZZLE GASKET/HOLDER GASKET INSTALLATION

Clean the cylinder head's injection nozzle hole, and insert a new gasket.

DISASSEMBLY AND REASSEMBLY

13300350011

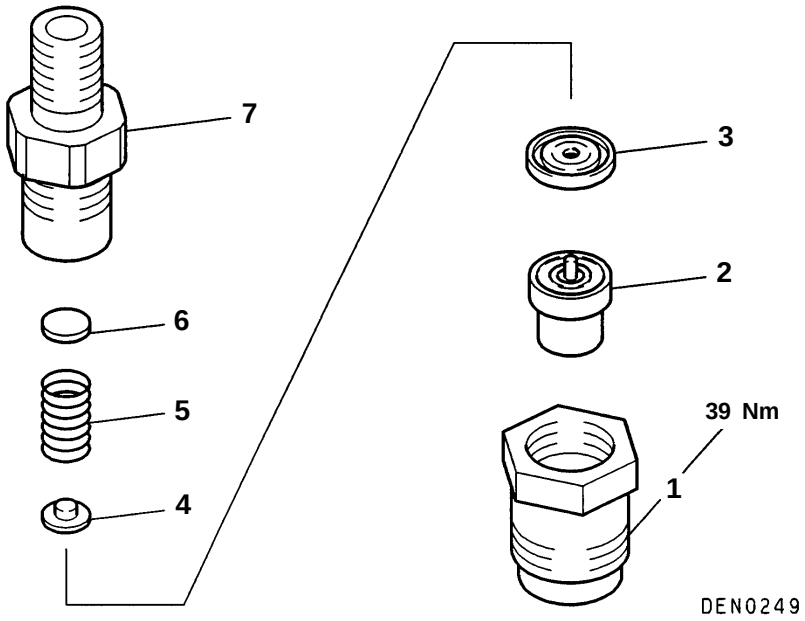

Disassembly steps

◀A▶ ▶A◀ 1. Retaining nut
2. Nozzle tip
3. Distance piece
4. Retaining pin
5. Pressure ring
6. Shim
7. Nozzle holder body

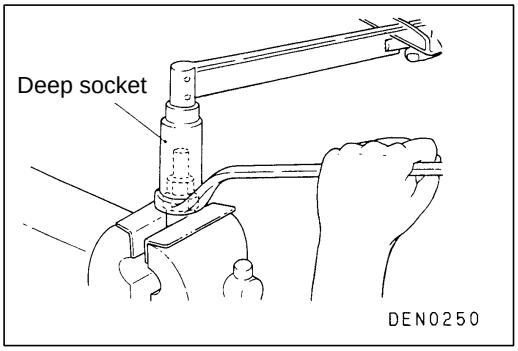

DISASSEMBLY SERVICE POINT

◀A▶ RETAINING NUT REMOVAL

1. Lightly clamp the retaining nut in a vise with soft jaws.
2. Hold the retaining nut with a box wrench, and loosen the nozzle holder body using a deep socket.

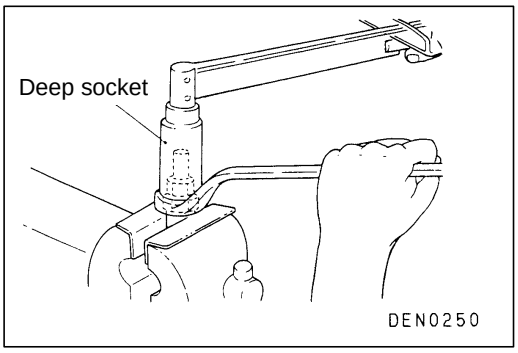

REASSEMBLY SERVICE POINT

▶A◀ RETAINING NUT INSTALLATION

1. Finger-tighten the nozzle holder body.
2. Lightly clamp the retaining nut in a vise with soft jaws.
3. While holding the retaining nut with a box wrench, tighten the nozzle holder body to the specified torque with a deep socket.

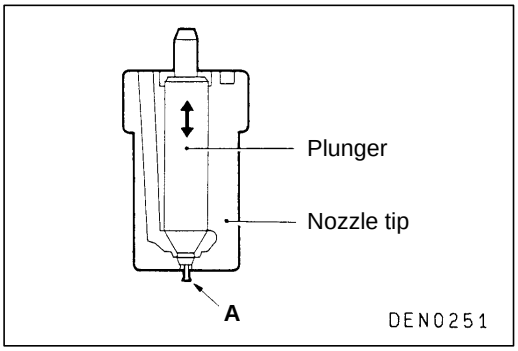

INSPECTION

13300360014

NOZZLE TIP

1. Check the nozzle tip for carbon deposits. Scape off carbon deposits with a piece of wood and clean each part with petrol. After cleaning, keep parts submerged in diesel fuel. Take particular care to protect the nozzle tip needle valve from damage.
2. While the nozzle tip is submerged in diesel fuel, check that the needle valve slides smoothly.
   If the needle valve does not slide smoothly, replace the nozzle tip.
   When replacing the nozzle tip, completely wash off the anticorrosive oil from the new nozzle tip with clean diesel fuel before using it.
3. Check plunger tip “A” for deformation and breakage. If “A” is damaged or broken, replace it.

DISTANCE PIECE

Check the surface in contact with the nozzle holder body by using minium.

PRESSURE SPRING

Check spring for weakness and breakage.

INJECTION PUMP

13300240011

REMOVAL AND INSTALLATION

Pre-removal Operation
- Engine Coolant Draining
- Intercooler Removal <4WD> (Refer to GROUP 15.)
- Timing Belt Removal (Refer to GROUP 11B.)

Post-installation Operation
- Timing Belt Installation (Refer to GROUP 11B.)
- Intercooler Installation <4WD> (Refer to GROUP 15.)
- Engine Coolant Supplying
- Injection Timing Adjustment (Refer to GROUP 11B – On-vehicle Service.)
- Accelerator Cable Adjustment (Refer to GROUP 17 – On-vehicle Service.)
- Throttle Cable Adjustment (Refer to GROUP 23 – On-vehicle Service.)
- Lever Position Switch Adjustment (Refer to GROUP 55.)

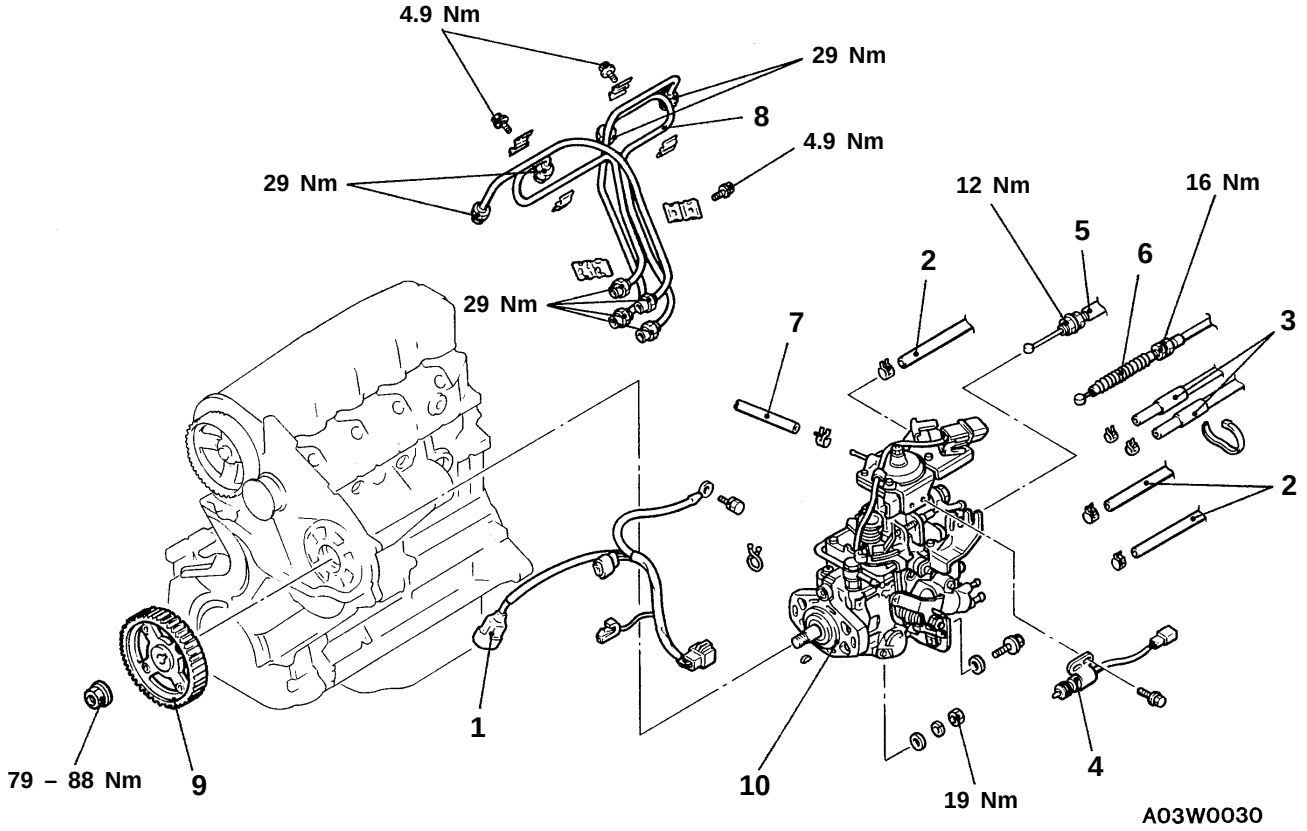

Removal steps

1. Fuel injection pump wiring harness
2. Water hose connection <Vehicles with cold start device>
3. Fuel hoses
4. Lever position switch <A/T, A/C>
5. Accelerator cable connection
6. Throttle cable connection <A/T>
7. Boost hose connection <4WD>
8. Fuel injection pipe
9. Fuel injection pump sprocket
10. Fuel injection pump

◀A▶
◀B▶

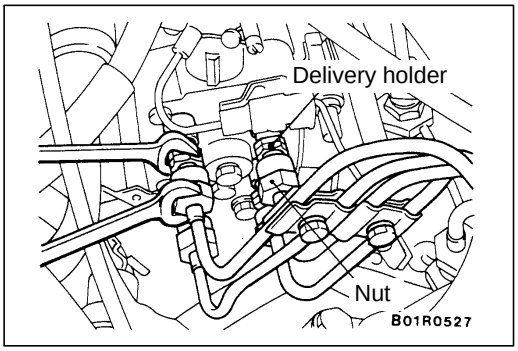

REMOVAL SERVICE POINTS

◀A▶ INJECTION PIPE REMOVAL

Loosen the nuts at the end of the injection pipe with the delivery holder (for pump side) and injection nozzle assembly (for nozzle side) retained by a spanner, etc.

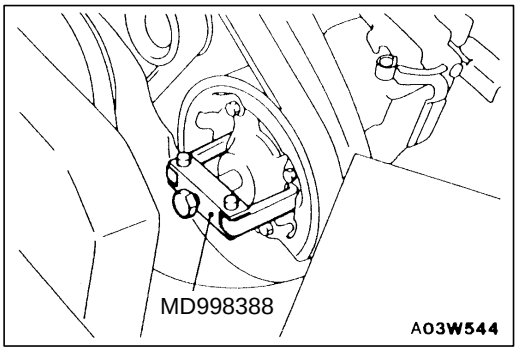

◀B▶ FUEL INJECTION PUMP SPROCKET REMOVAL

Remove sprocket installing nut and remove sprocket from pump drive shaft with special tool.

Caution

1. **Do not hit pump drive shaft with hammer, etc.**
2. **When holding injection pump, do not allow to dangle by holding accelerator lever or fast idle lever. Do not remove these levers. Removal will cause injection pump malfunction.**

NOTES

GROUP 13E
DIESEL FUEL

GENERAL

OUTLINE OF CHANGE(S)

Fuel injector pumps with the injection timing control solenoid (solenoid timer) have been newly used. Therefore, service procedure has been added.

SERVICE SPECIFICATIONS

Item	Standard value
Injection timing control solenoid coil resistance Ω	8 – 10

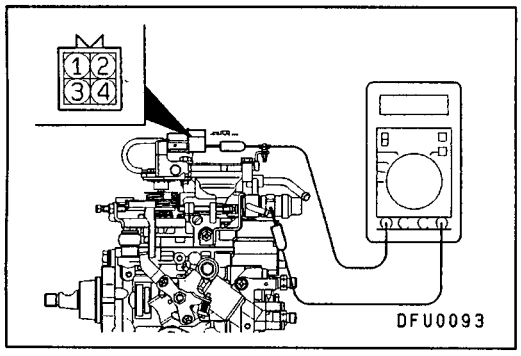

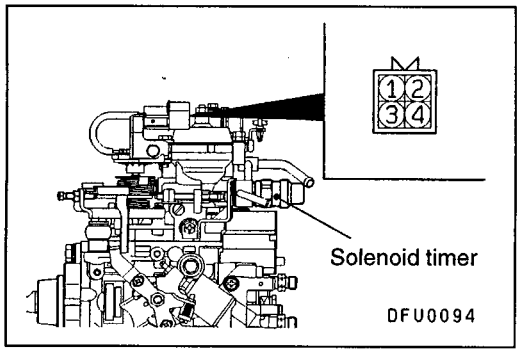

ON-VEHICLE SERVICE

FUEL INJECTION PUMP CHECK

INJECTION TIMING CONTROL SOLENOID COIL RESISTANCE CHECK

Measure resistance between injection pump connector terminal No.4 (injection timing control solenoid terminal) and the injection pump body.

Standard value: 8 – 10 Ω (at 20°C)

INJECTION TIMING CONTROL SOLENOID OPERATION CHECK

Check that an operating sound can be heard from the injection timing control solenoid when connecting injection pump connector terminal No.4 (injection timing control solenoid terminal) to the battery positive terminal.

GROUP 13E
DIESEL FUEL

GENERAL

OUTLINE OF CHANGE

A protector has been added to protect the injection pump.

INJECTION PUMP

REMOVAL AND INSTALLATION

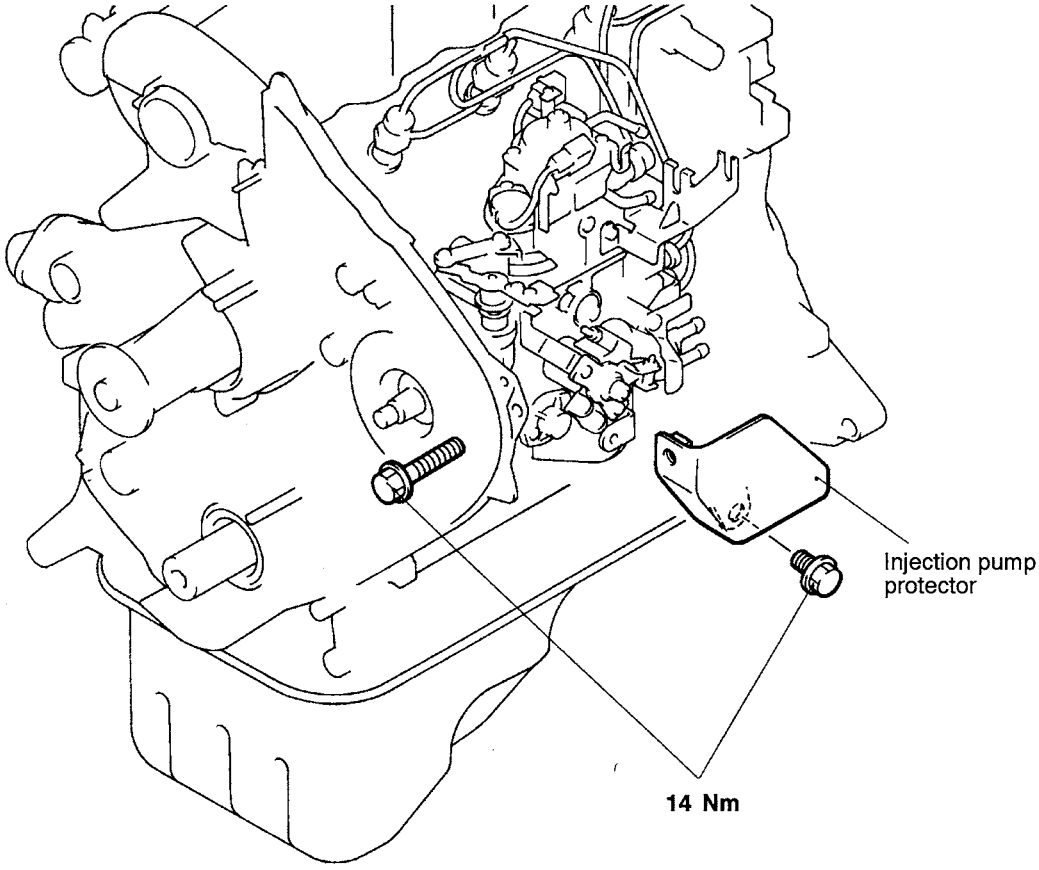

AW0467AA

FUEL SUPPLY

Click on the applicable bookmark to selected the required model year

FUEL SUPPLY

CONTENTS

13509000111

GENERAL INFORMATION 2
FUEL TANK 3
FUEL FILTER <Diesel-powered Vehicles> 6

GENERAL INFORMATION

13500010083

The fuel tank is equipped with a valve assembly (roll-over valve). It prevents fuel from leaking out of the fuel tank if the vehicle rolls over.

FUEL TANK

13500190152

REMOVAL AND INSTALLATION

Pre-removal Operation
- Fuel Draining
- Rear Body Side Gate Stay (LH) Removal

Post-installation Operation
- Fuel Refilling
- Fuel Line Air Bleeding
  (Refer to GROUP 13E – On-vehicle Service.)
- Fuel Leakage Inspection
- Rear Body Side Gate Stay (LH) Installation

<Petrol-powered vehicles>

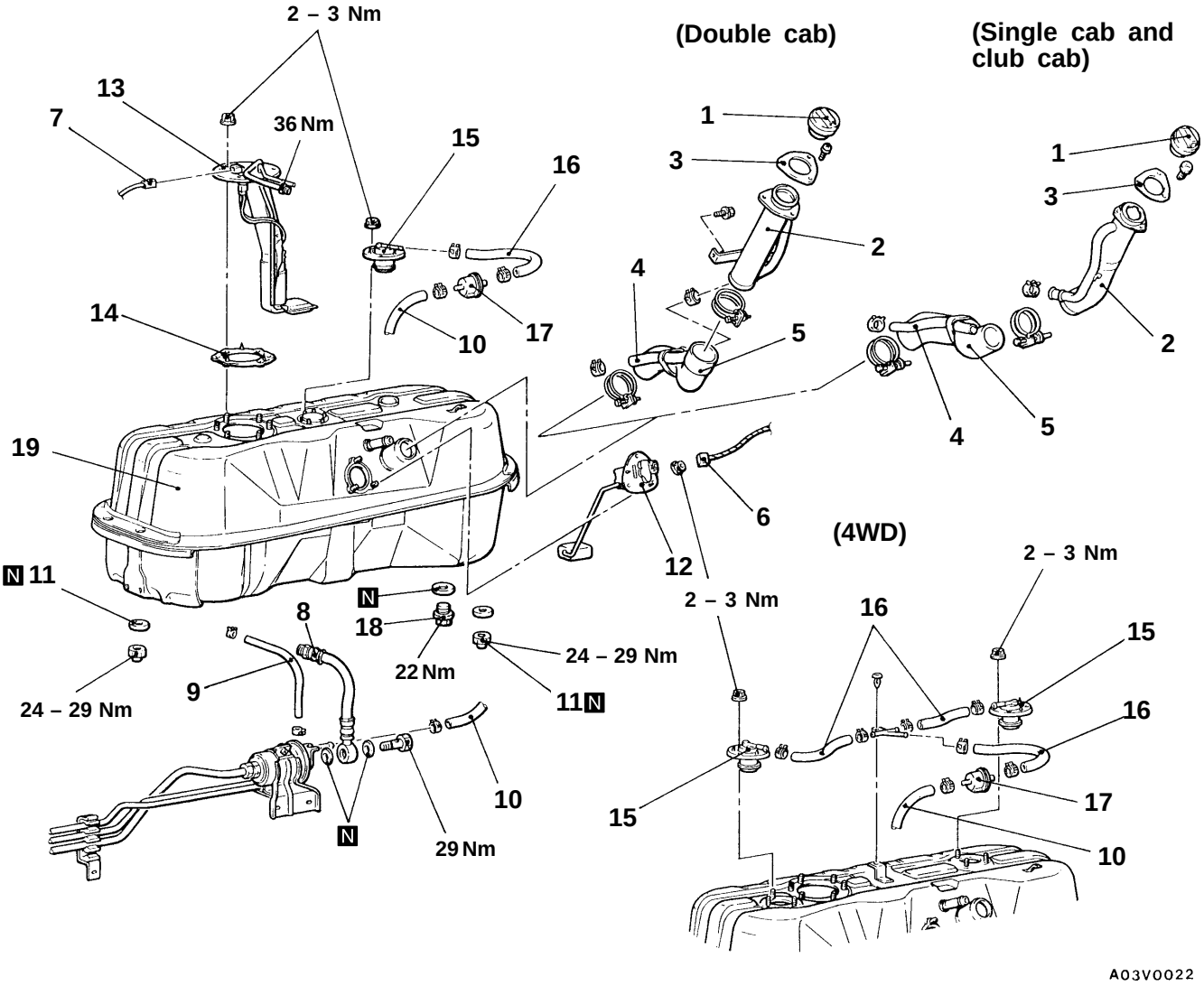

Removal steps

1. Fuel filler cap
2. Filler neck
3. Packing
4. Leveling hose
▶B◀ 5. Filler hose
6. Fuel gauge unit connector
7. Fuel pump connector
8. Fuel high pressure hose
9. Return hose
10. Vapor hose
11. Fuel tank nuts
12. Fuel gauge unit
13. Fuel pump assembly
14. Packing
15. Valve assembly
16. Vapor hose
▶A◀ 17. 2-way valve
18. Drain plug
19. Fuel tank

<Diesel-powered vehicles>

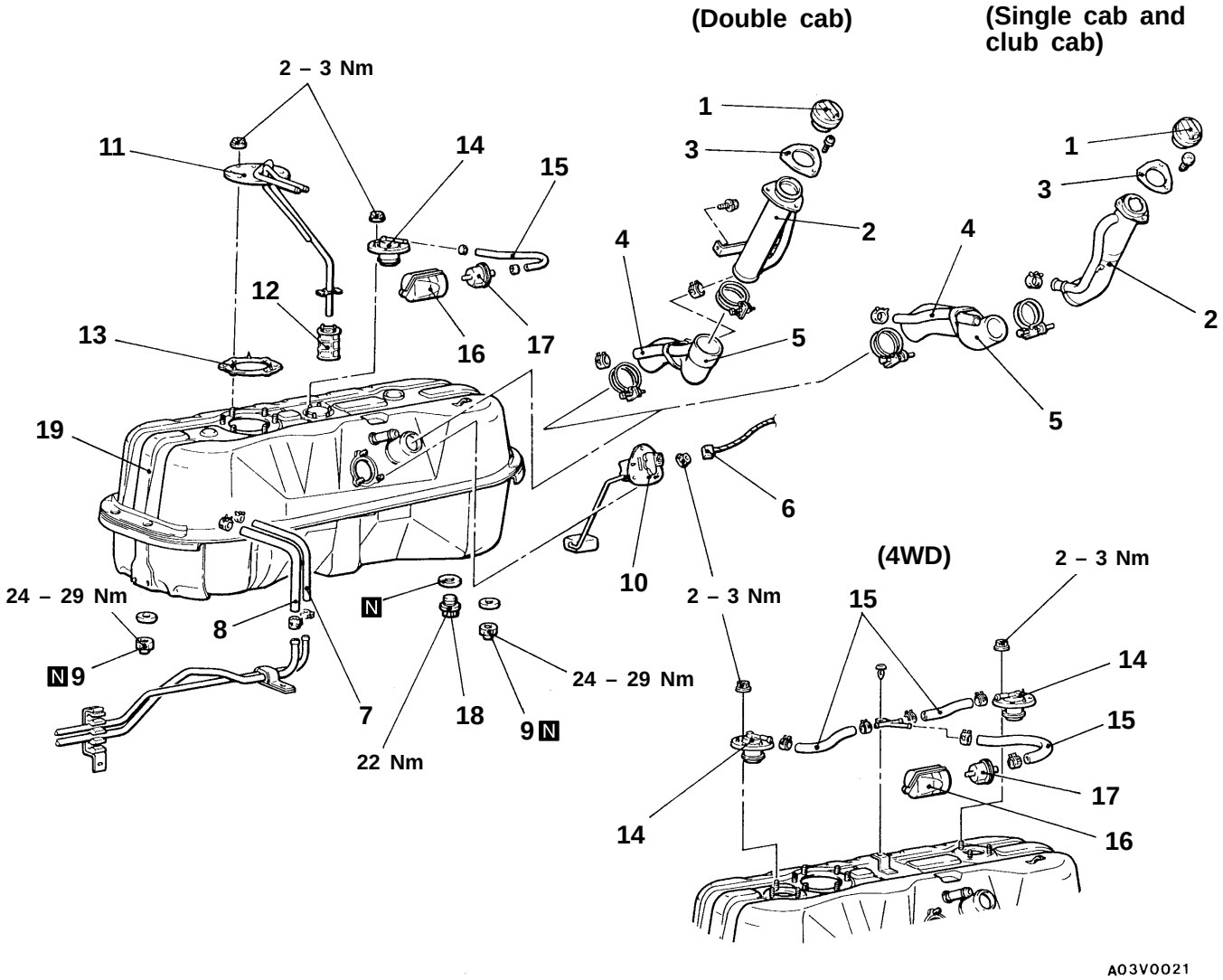

Removal steps

1. Fuel filler cap
2. Filler neck
3. Packing
4. Leveling hose
▶B◀ 5. Filler hose
6. Fuel gauge unit connector
7. Return hose
8. Main hose
9. Fuel tank nuts
10. Fuel gauge unit
11. Pipe assembly
12. Fuel filter
13. Packing
14. Valve assembly
15. Vapor hose
16. Breather case
▶A◀ 17. 2-way valve
18. Drain plug
19. Fuel tank

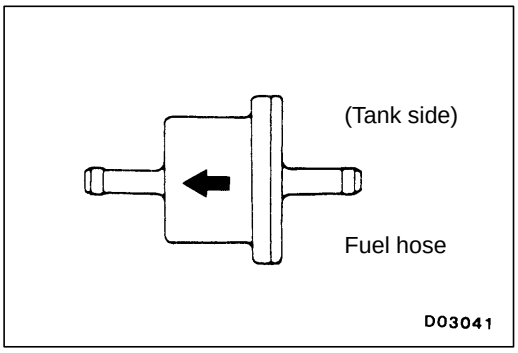

INSTALLATION SERVICE POINTS

▶A◀ 2-WAY VALVE INSTALLATION

Install the 2-way valve, being careful not to mistake the direction.

▶B◀ FILLER HOSE INSTALLATION

Align the mating marks and install.

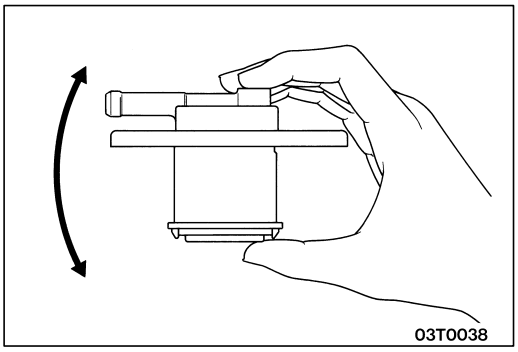

INSPECTION

13500300074

FUEL CUT-OFF VALVE CHECK

If the sound of the float valve moving (knocking sound) can be heard when the valve assembly is gently shaken up and down, then the valve is okay.

FUEL GAUGE UNIT CHECK

Refer to GROUP 54 – Combination Meter.

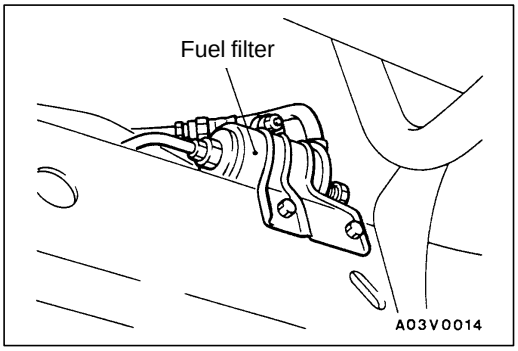

FUEL FILTER REPLACEMENT

13500130086

1. Bleed the residual pressure from inside the fuel line. (Refer to GROUP 13A – On-vehicle Service.)
2. Hold the fuel filter with a spanner and remove the eye bolt. Then remove the high-pressure hose.

   Caution
   As there will be some pressure remaining in the fuel pipe line, cover it with a rag to prevent fuel from spraying out.

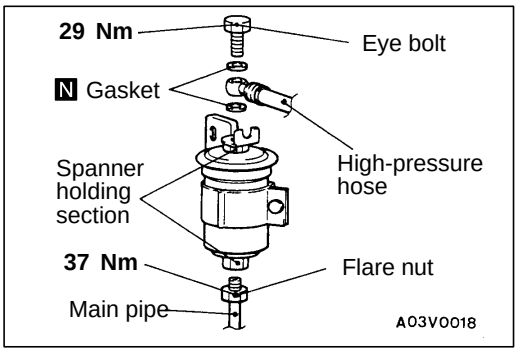

3. Hold the fuel filter with a spanner and loosen the flare nut. Then disconnect the main pipe connection.
4. Remove the fuel filter.
5. When installing the fuel filter, use a new gasket, and tighten the flare nut of the high-pressure hose and the main pipe to the specified torque.
6. After installation, check that there are no fuel leaks.
   (1) Apply battery voltage to the fuel pump drive terminal to operate the fuel pump. (Refer to GROUP 13A – On-vehicle Service.)
   (2) Check for leaks when fuel pressure is applied.

FUEL FILTER <DIESEL-POWERED VEHICLES>

13500270016

REMOVAL AND INSTALLATION

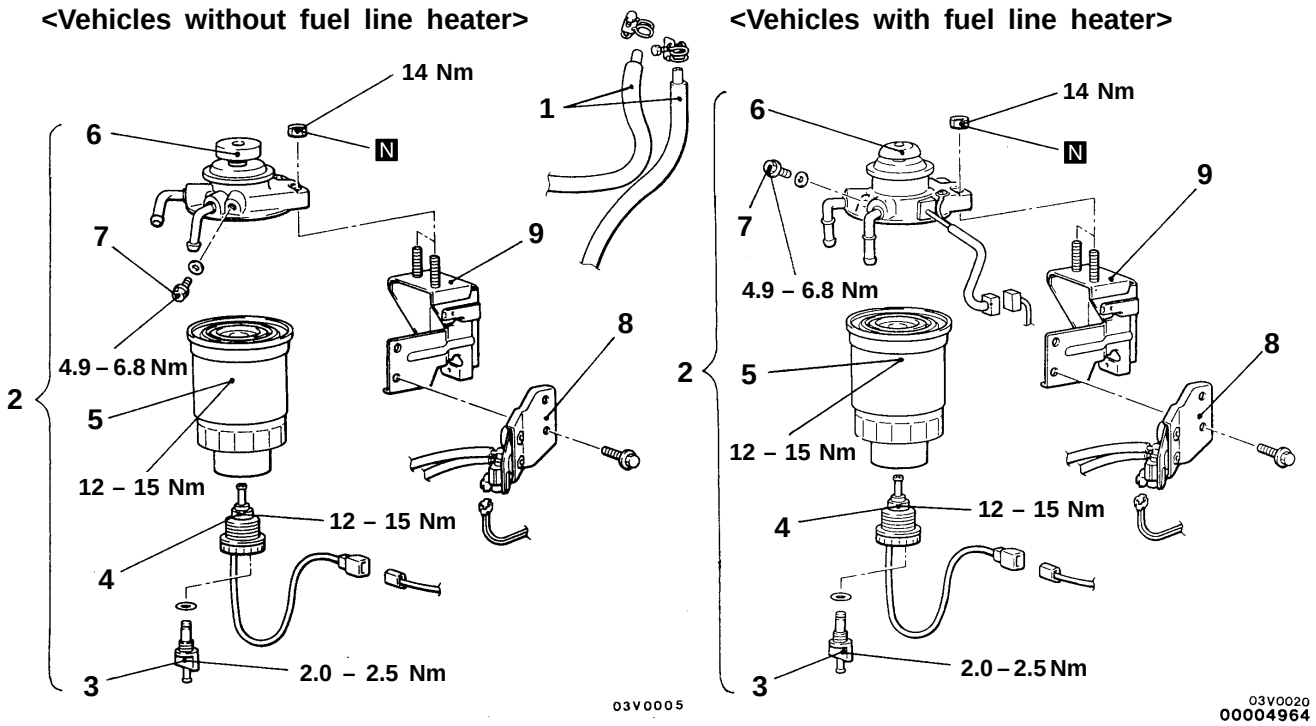

Removal steps

- Intercooler assembly <4WD> (Refer to GROUP 15.)

▶A◀ 1. Main hose connection
2. Fuel filter
3. Drain plug
4. Water level sensor
5. Fuel filter cartridge
6. Fuel filter pump
7. Breather screw
8. Solenoid valve assembly (for A/C)
9. Fuel filter bracket

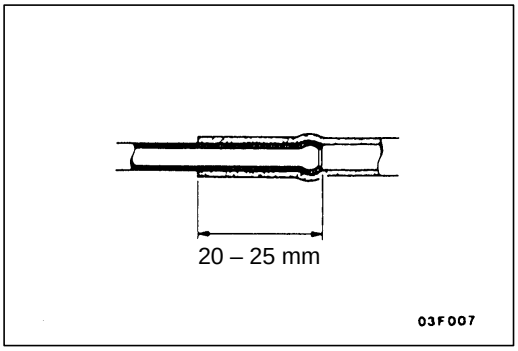

INSTALLATION SERVICE POINT

▶A◀ FUEL MAIN HOSE INSTALLATION

If the pipe has a stepped part, connect securely up to the stepped part. If the pipe has no stepped part, insert so that the inserted portion is 20 – 25 mm long.

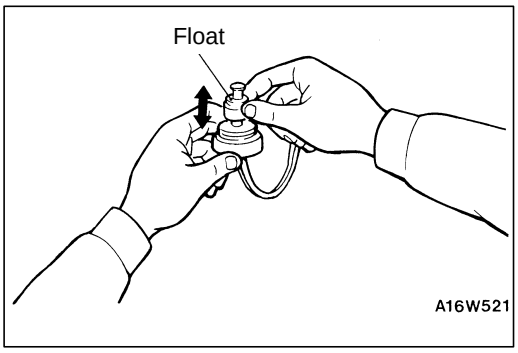

INSPECTION

13500290012

WATER LEVEL SENSOR CHECK

Connect the circuit tester to the water level sensor connector. The water level sensor is operating correctly if there is continuity when the float is raised, and no continuity when it is lowered.

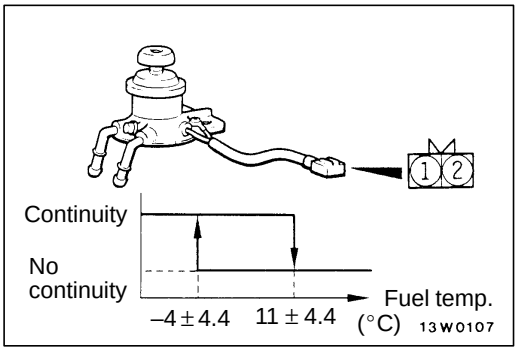

FUEL LINE HEATER CONTINUITY CHECK

There should be continuity between the terminals when the fuel filter pump is cooled –4°C or bellow and continuity should disappear when the pump is gradually heated. If this is true then the heater is working properly.

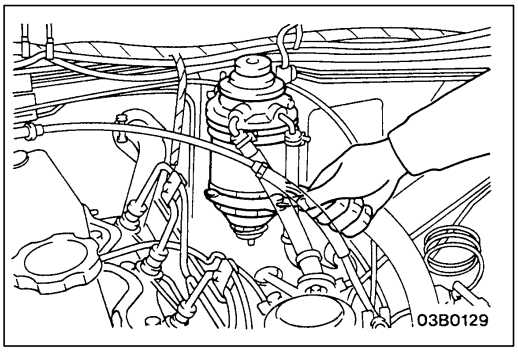

FUEL FILTER CARTRIDGE REPLACEMENT

13500130093

1. Remove the intercooler assembly. <4WD> (Refer to GROUP 15.)
2. Remove the fuel tank cap to release the pressure inside the fuel tank.
3. Disconnect the water level sensor connector.
4. Use an oil filter wrench to remove the fuel filler cartridge from the fuel filter pump body.

   Caution
   Cover with a rag to prevent fuel from spraying out.

5. Install a new filter, and bleed the air from fuel line. (Refer to GROUP 13E – On-vehicle Service.)
6. Start the engine, and check that there are no fuel leakage.

NOTES

DIESEL FUEL
<4D5-Step III>

DIESEL FUEL <4D5-Step III>

CONTENTS

GENERAL 2
Outline of Change 2
GENERAL INFORMATION 2
SERVICE SPECIFICATIONS 5
SEALANT 5
SPECIAL TOOLS 6
TROUBLESHOOTING 7
ON-VEHICLE SERVICE 57
Injection Timing Check and Adjustment 57
Idle Speed Check and Adjustment 57
Injection Nozzle Check and Adjustment 57
Accelerator Pedal Position Sensor (APS) Adjustment 58
Control Relay Continuity Check 59
Accelerator Pedal Position Sensor (APS) Check 59
Idle Switch Check 59
Boost Air Temperature Sensor (Intake Air Temperature Sensor) Check 60
Engine Coolant Temperature Sensor Check 60
Evacuation of Water from Fuel Filter 61
Evacuation of Air from Fuel Filter 61
Fuel Filter Cartridge Replacement 61
EGR Valve Position Sensor Check 62
Fuel Injection Pump Check 62
Throttle Solenoid Valve Check 64
Throttle Actuator Check 64
Variable Geometry Solenoid Valve Check 65
EGR Control Solenoid Valve Check 65
INJECTION NOZZLE 66
INJECTION PUMP 66

GENERAL

OUTLINE OF CHANGE

Service procedures have been established since the electronic-controlled fuel injection pump specifications has been added to comply with emission regulation step III.

GENERAL INFORMATION

The electronic-controlled fuel injection system consists of sensors which detect the condition of the diesel engine, an engine-ECU which controls the system based on signals from these sensors, and actuators which operate according to control commands from the engine-ECU.
The engine-ECU carries out operations such as fuel injection rate control, fuel injection timing control and idle up control. In addition, the engine-ECU is equipped with several self-diagnosis functions which make troubleshooting easier in the event that a problem develops.

FUEL INJECTION RATE CONTROL

The fuel injection completion timing is controlled by means of a solenoid-type spill valve to ensure that the optimum amount of fuel is supplied to the engine in accordance with gradual changes in the engine running condition.
Before fuel injection starts, the solenoid-type spill valve is on (energized), so that the valve is closed. As the plunger turns and rises, fuel is sent out under pressure, and when the fuel flow rate reaches the target value for fuel injection, the solenoid-type spill valve turns off. When the solenoid-type spill valve turns off, the fuel under high pressure inside the plunger is leaked out into the pump chamber and fuel injection is completed.

FUEL INJECTION TIMING CONTROL

The position of the injection pump timer piston is controlled so that fuel injection is carried out at the optimum timing in accordance with the engine running condition.
The timer piston position is determined by duty control of the timing control solenoid valve which is located in the line between the high-pressure chamber and the low-pressure chamber of the timer piston.
The fuel injection timing is advanced by increasing the control duty of the timing control solenoid valve.

IDLE SPEED CONTROL

Controlling the fuel injection rate in accordance with the engine running condition maintains the idle speed at the optimum condition.

SELF-DIAGNOSIS FUNCTION

- When an abnormality is detected in any of the sensors or actuators, the engine warning lamp illuminates to warn the driver.
- When an abnormality is detected in any of the sensors or actuators, a diagnosis code number corresponding to the problem which occurred is output.
- The RAM data relating to the sensors and actuators which is stored in the engine-ECU can be read using the MUT-II. In addition, the actuators can be force-driven under certain conditions.

OTHER CONTROL FUNCTIONS

1. Power Supply Control
   When the ignition switch is turned to ON, the relay turns on and power is supplied to components such as the timing control solenoid valve.
2. Intake Air Throttle Control
   When the engine-ECU detects an abnormality in any of the sensors or actuator, the throttle valve is half opened to restrict the amount of intake air in order to prevent the vehicle from running away.
3. A/C Relay Control
   Turns the compressor clutch of the A/C ON and OFF
4. Condenser Fan Motor Relay Control
   Controls the condenser fan motor relay based on the A/C switch, engine coolant temperature and vehicle speed input signals.
5. Intercooler Fan Motor Relay Control
   Controls the intercooler fan motor relay based on the boost air temperature and vehicle speed input signals.
6. Glow Control
   Refer to GROUP 16.
7. EGR Control
   Refer to GROUP 17.

CONTROL SYSTEM DIAGRAM

★1. Pump speed sensor
★2. Crank angle sensor
★3. Engine coolant temperature sensor
★4. Boost sensor
★5. Fuel temperature sensor
★6. Boost air temperature sensor
★7. Control sleeve position sensor
★8. Timer piston position sensor
★9. EGR valve position sensor
★10. Variable geometry control pressure sensor*

- Accelerator pedal position sensor (main)
- Accelerator pedal position sensor (sub)
- Idle switch
- Power supply
- Ignition switch-IG
- Ignition switch-ST
- Vehicle speed sensor
- A/C switch
- A/C relay switch
- Fuel injection amount correction ROM
- Barometric pressure sensor (ECU built-in)

⇨ Engine -ECU ⇨

☆1. GE actuator (electronic governor)
☆2. Timing control valve
☆3. EGR control solenoid valve No. 1
☆4. EGR control solenoid valve No. 2
☆5. Throttle solenoid valve
☆6. Fuel cut solenoid valve
☆7. Variable geometry solenoid valve*

- Control relay
- A/C relay
- Condenser fan relay
- Intercooler fan relay
- Glow indicator lamp
- Glow plug relay
- Engine warning lamp
- Diagnosis output

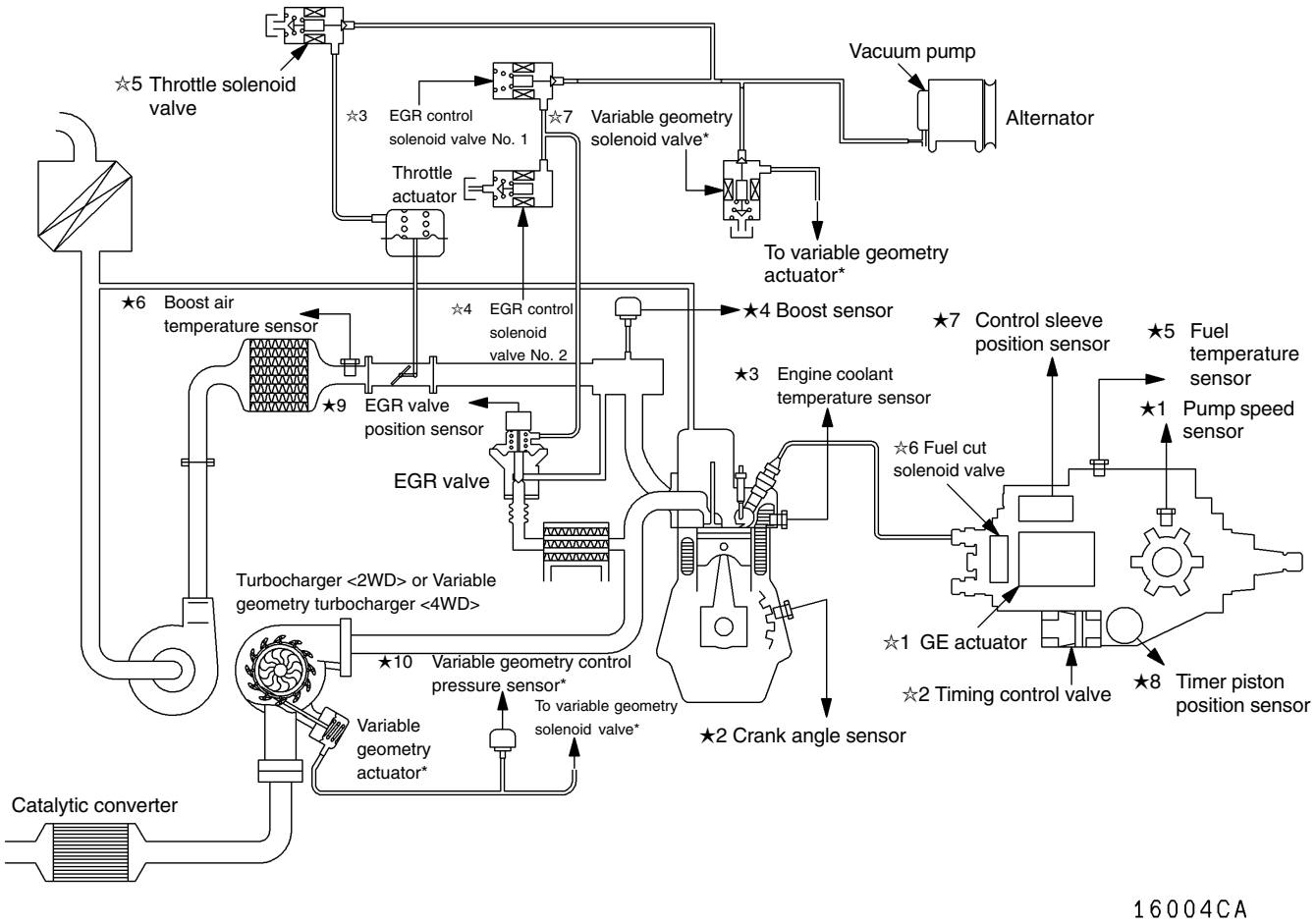

NOTE
*: 4WD vehicles only.

SERVICE SPECIFICATIONS

Item		Standard value
Fuel injection initial pressure kPa		14,710 – 15,490
Accelerator pedal position sensor reference voltage V		0.985 – 1.085
Accelerator pedal position sensor resistance kΩ		3.5 – 6.5
Boost air temperature sensor (Intake air temperature sensor) resistance kΩ	When the temperature is 20°C	2.3 – 3.0
	When the temperature is 80°C	0.30 – 0.42
Engine coolant temperature sensor resistance kΩ	When the temperature is 20°C	2.1 – 2.7
	When the temperature is 80°C	0.26 – 0.36
Fuel cut solenoid valve resistance Ω		6.8 – 9.2
Timing control valve resistance Ω		10.8 – 11.2
Timer piston position sensor resistance Ω	Connector terminals No. 1 – No. 2	160 – 168
	Connector terminals No. 1 – No. 3	80 – 84
	Connector terminals No. 2 – No. 3	80 – 84
Control sleeve position sensor resistance Ω	Connector terminals No. 4 – No. 12	11.2 – 12.4
	Connector terminals No. 4 – No. 8	5.6 – 6.2
	Connector terminals No. 8 – No. 12	5.6 – 6.2
GE actuator (electronic governor) resistance Ω	Connector terminals No. 6 – No. 10	0.64 – 0.72
Fuel temperature sensor resistance kΩ	Connector terminals No. 7 – No. 11	1.4 – 2.6
Pump speed sensor resistance kΩ		1.36 – 1.84
Throttle solenoid valve resistance Ω		36 – 44

SEALANT

Item	Specified sealant
Engine coolant temperature sensor	3M Nut Locking Part No. 4171 or equivalent

SPECIAL TOOLS

Tools	Number	Name	Application
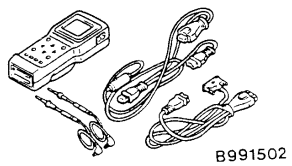	MB991502	MUT-II sub assembly	Electronically controlled fuel injection system check
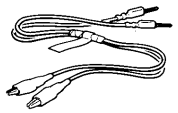	MB991529	Diagnosis code check harness	Diagnosis code reading
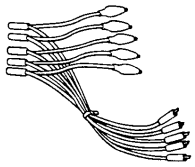	MB991348	Test harness set	● Boost pressure sensor check ● Variable geometry control pressure sensor check
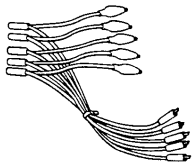	MB991658	Test harness set	● APS adjustment ● Checking using an analyzer
	MD998478	Test harness	● Crank angle sensor check ● Checking using an analyzer
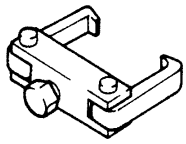	MD998388	Injection pump sprocket puller	Fuel injection pump sprocket removal
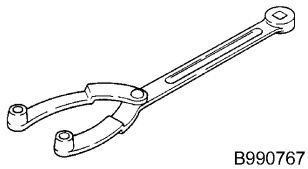	MB990767	End yoke holder	Holding the fuel injection pump sprocket
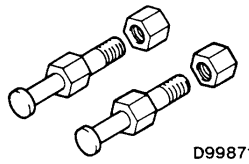	MD998719	Crankshaft pulley holder pin	

TROUBLESHOOTING

STANDARD FLOW OF DIAGNOSTIC TROUBLESHOOTING

Refer to GROUP 00 – How to Use Troubleshooting/Inspection Service Points.

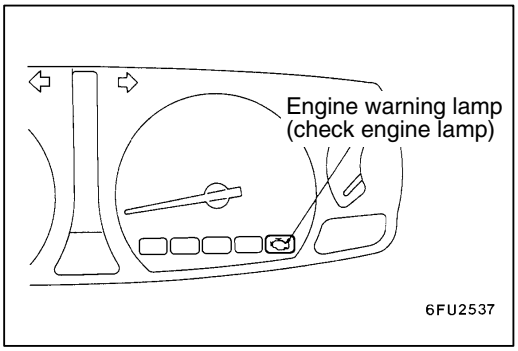

DIAGNOSIS FUNCTION

ENGINE WARNING LAMP (CHECK ENGINE LAMP)

Engine warning lamp is lit when any abnormality takes place in the item related to electronically controlled fuel injection system shown in the following table.
If the malfunction indicator lamp has been on and/or is lit when the engine is in operation, check the diagnosis output.

Engine warning lamp check items

Accelerator pedal position sensor (main)
Accelerator pedal position sensor (sub)
Boost pressure sensor (Boost sensor)
Crank angle sensor
Control sleeve position sensor
Timer piston position sensor
Main throttle solenoid valve
GE actuator
Variable geometry control pressure sensor
Barometric pressure sensor
Timing control valve
Idle switch (built-in)
Engine-ECU

METHOD OF ERASING AND ERASING DIAGNOSIS CODES

Refer to GROUP 00 – How to Use Troubleshooting/Inspection Service Points.

INSPECTION USING MUT-II DATA LIST AND ACTUATOR TESTING

1. Carry out inspection by means of the data list and the actuator test function.
   If there is an abnormality, check and repair the chassis harnesses and components.
2. After repairing, re-check using MUT-II and check that the abnormal input and output have returned to normal as a result of the repairs.
3. Erase the diagnosis code memory.
4. Remove the MUT-II.
5. Start the engine again and carry out a road test to confirm that the problem has disappeared.

FAIL-SAFE, BACKUP FUNCTIONS

When abnormalities in the major sensors are detected by diagnosis functions, pre-set control logic operates to maintain a safe driving condition for the vehicle.

Diagnosis item	Control features in malfunction
Accelerator pedal position sensor	● Accelerator pedal released (idle switch ON) Acceleration opening degree = 0 % ● Accelerator pedal applied (idle switch OFF) Engine controlled at low speed Acceleration opening degree = 30 % fixed ● Void EGR control
Idle switch	Void idling speed control.
Engine speed sensor	● Engine controlled at low speed ● Void EGR control. ● Void variable geometry turbo control.
Boost air temperature sensor	● Maintain the intake air temperature at 50°C. ● Void EGR control.
Vehicle speed sensor	● Void idling speed control. ● Void EGR control.
Engine coolant temperature sensor	● Maintain the engine coolant temperature at 80°C. (However, at 0°C during engine) ● Void EGR control.
Control sleeve position sensor	● Engine controlled at low speed ● Void EGR control. ● Void variable geometry turbo control.
Timer piston position sensor	● Injection timing stabilizing control ● Void EGR control.
Barometric pressure sensor (ECU built-in)	● Keep the barometric pressure at 101 kPa. ● Void EGR control. ● Void variable geometry turbo control.
Fuel temperature sensor	Maintain the fuel temperature at 40°C.
Boost pressure sensor	● Keep the boost pressure as barometric pressure (101 kPa). ● Void EGR control. ● Void variable geometry turbo control.
Injection correction ROM	Void correction.
GE actuator	● Engine controlled at low speed ● Void EGR control. ● Void variable geometry turbo control.
Over boost	● Void variable geometry turbo control. ● Engine controlled at low fuel injection
Timing control valve	● Injection timing stabilizing control ● Void EGR control.
EGR position sensor	Void EGR control.
Variable geometry control pressure sensor	● Void EGR control. ● Void variable geometry turbo control.

INSPECTION CHART FOR DIAGNOSIS CODES

Code No.	Diagnosis item	Reference page
11	Accelerator pedal position sensor (main) system	13I-10
12*	Boost pressure sensor system	13I-11
13	Barometric pressure sensor (ECU built-in) system	13I-12
14	Fuel temperature sensor system	13I-12
15	Engine coolant temperature sensor system	13I-13
16	Boost air temperature sensor system	13I-13
17	Vehicle speed sensor system	13I-14
18	Pump speed sensor system	13I-15
21	Crank angle sensor system	13I-16
23	Idle switch (accelerator pedal position sensor built-in) system	13I-17
25*	Timer piston position sensor system	13I-18
26*	Control sleeve position sensor system	13I-19
27	Accelerator pedal position sensor (sub) system	13I-20
41*	Main throttle solenoid valve system	13I-21
43	Timing control valve system	13I-22
46	Injection correction ROM system	13I-23
48*	GE actuator (in the middle of control sleeve position sensor inoperative) system	13I-24
49*	Over boost (variable geometry control pressure sensor system malfunction) <4WD>	13I-25
51	EGR valve position sensor system	13I-26
52	Variable geometry control pressure sensor system	13I-27
54	Immobilizer system	13I-28

Caution
If the the above-mentioned diagnosis code number with the asterisks can be displayed along with another code number in parentheses simultaneously, check the other code number before replacing the engine-ECU.
12 (41, 49), 26 (48), 25 (43), 41 (12, 49), 48 (26), 49 (12, 41)

INSPECTION PROCEDURE FOR DIAGNOSIS CODE

Code No. 11 Accelerator pedal position sensor (main) system	Probable cause
Range of Check ● Ignition switch: ON, accelerator pedal position sensor (sub) operative, except for during engine cranking Set Conditions ● Accelerator pedal position sensor output voltage for 1 second Sub side: 0.2 V or higher, lower than 2.5 V Main side: 4.5 V or higher or Sub or main: Lower than 0.2 V Range of Check ● Ignition switch: ON, except for during engine cranking Set Conditions ● The output voltage of accelerator pedal position sensor (main and sub) for 0.2 second is 0.2 V or higher, or lower than 4.5 V and the difference in sensor output voltage between the main and sub is 1 V or higher, or idle switch: ON, and sensor main output voltage is 1.875 V or higher.	● Accelerator pedal position sensor inoperative ● Accelerator pedal position sensor open circuit, short circuit, or connector contact inoperative ● Engine-ECU inoperative

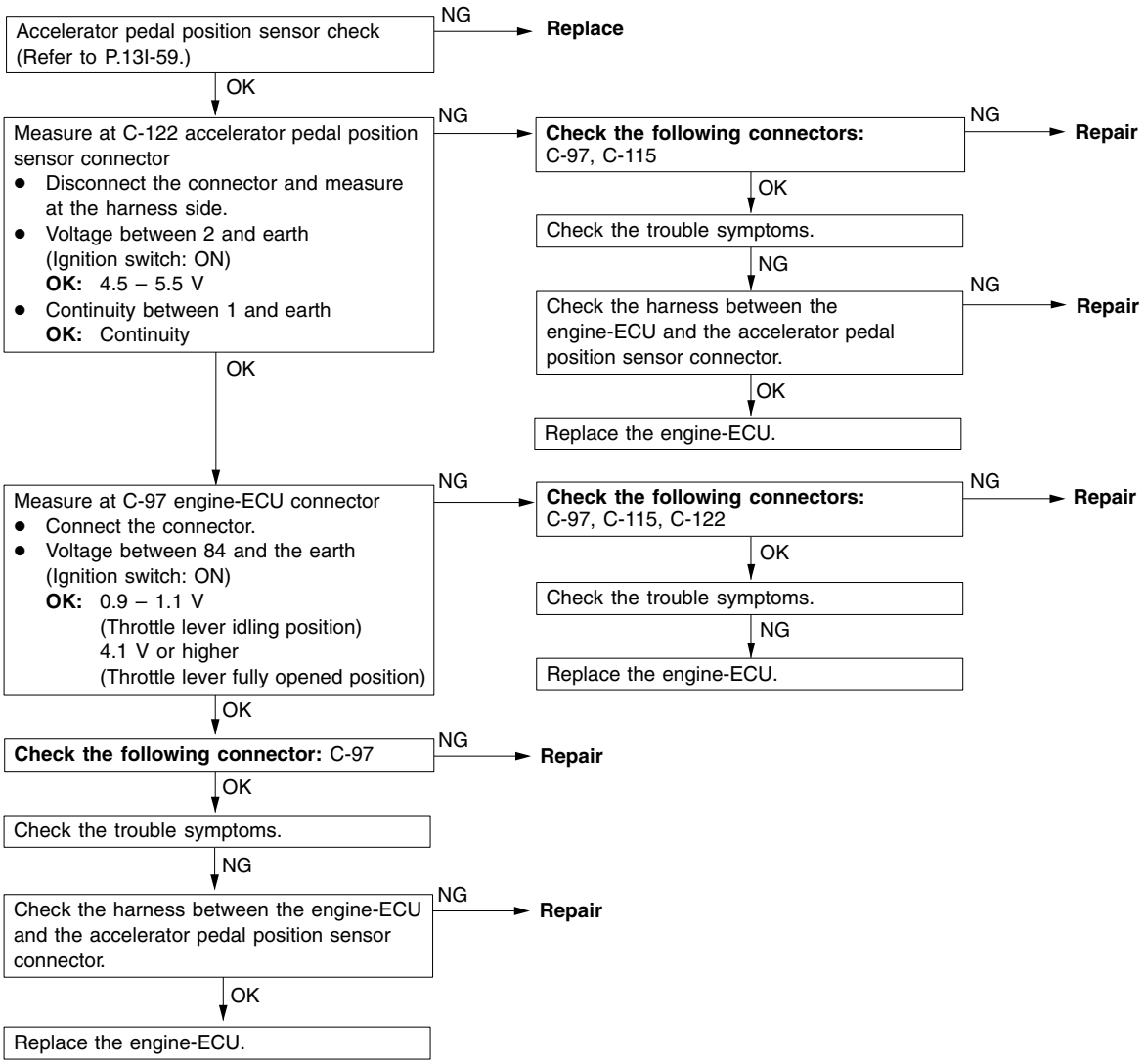

Code No. 12 Boost pressure sensor (boost sensor) system	Probable cause
Range of Check ● Ignition switch: ON, except for during engine cranking Set Conditions ● Sensor output voltage for one second is 4.5 V or higher (boost pressure is approximately 267 kPa). or ● Sensor output voltage for one second is 0.2 V or lower (boost pressure is approximately 51.7 kPa or lower) Range of Check ● Engine speed is 2000 r/min or higher, barometric pressure is 69.7 kPa or lower (equivalent to 3000m) and under high load Set Conditions ● Boost pressure is lower than the barometric pressure + 13 kPa for 3 seconds.	● Boost pressure sensor inoperative ● Boost pressure sensor open circuit, short circuit, or connector contact inoperative ● Boost pressure sensor hose disconnected ● Engine-ECU inoperative

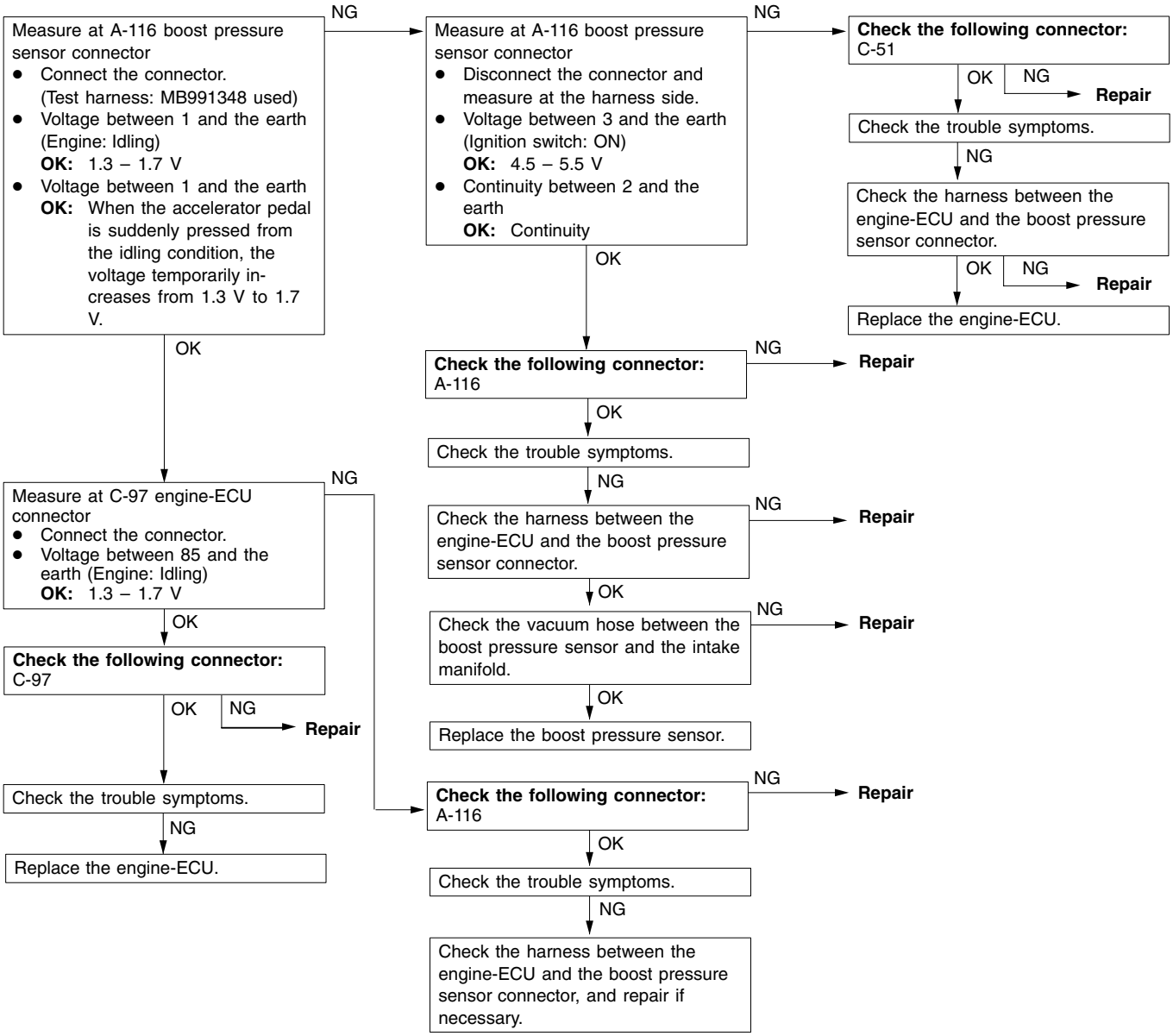

Code No. 13 Barometric pressure sensor system	Probable cause
Range of Check ● Ignition switch: ON, except for during engine cranking Set Conditions ● The sensor output voltage is for 3 seconds is 4.5 V or higher (the barometric pressure is approximately 114 kPa or over). or ● The sensor output voltage is for 3 seconds is 1.5 V or lower (the barometric pressure is approximately 40 kPa or under). Range of Check ● Ignition switch: ON, engine is stopped and the engine coolant temperature is 40°C or lower Set Conditions ● The pressure difference between the barometric sensor and the boost sensor is 13.3 kPa or more.	Engine-ECU inoperative

Check the trouble symptoms. → NG → Replace the engine-ECU.

Code No. 14 Fuel temperature sensor system	Probable cause
Range of Check ● Ignition switch: ON, except for during engine cranking Set Conditions ● The sensor output voltage for 3 seconds is 0.2 V or lower (the fuel temperature is approximately 125°C or higher). or ● The sensor output voltage for 3 seconds is 4.6 V or higher (the fuel temperature is approximately –47°C or lower).	● Fuel temperature sensor inoperative ● Fuel temperature sensor open circuit, short circuit, or connector contact inoperative ● Engine-ECU inoperative

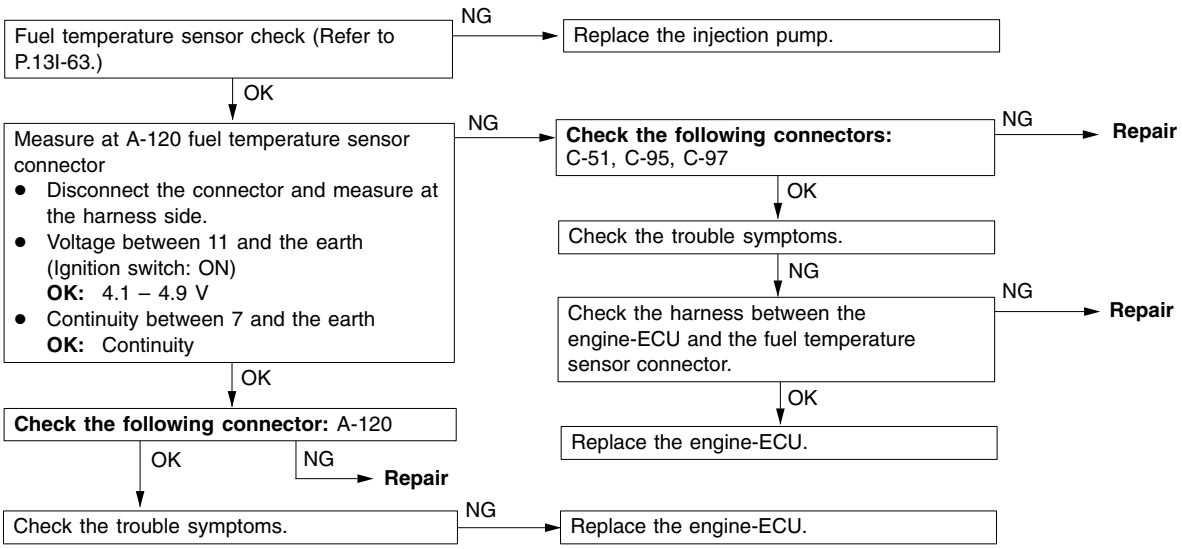

Code No. 15 Engine coolant temperature sensor system	Probable cause
Range of Check ● Ignition switch: ON, except for during engine cranking Set Conditions ● The sensor output voltage for 3 seconds is 4.9 V or higher (the coolant temperature is approximately –45°C or lower). or ● The sensor output voltage for 3 seconds is 0.2 V or lower (the coolant temperature is approximately 140°C or higher).	● Engine coolant temperature sensor inoperative ● Engine coolant temperature sensor open circuit, short circuit, or connector contact inoperative ● Engine-ECU inoperative

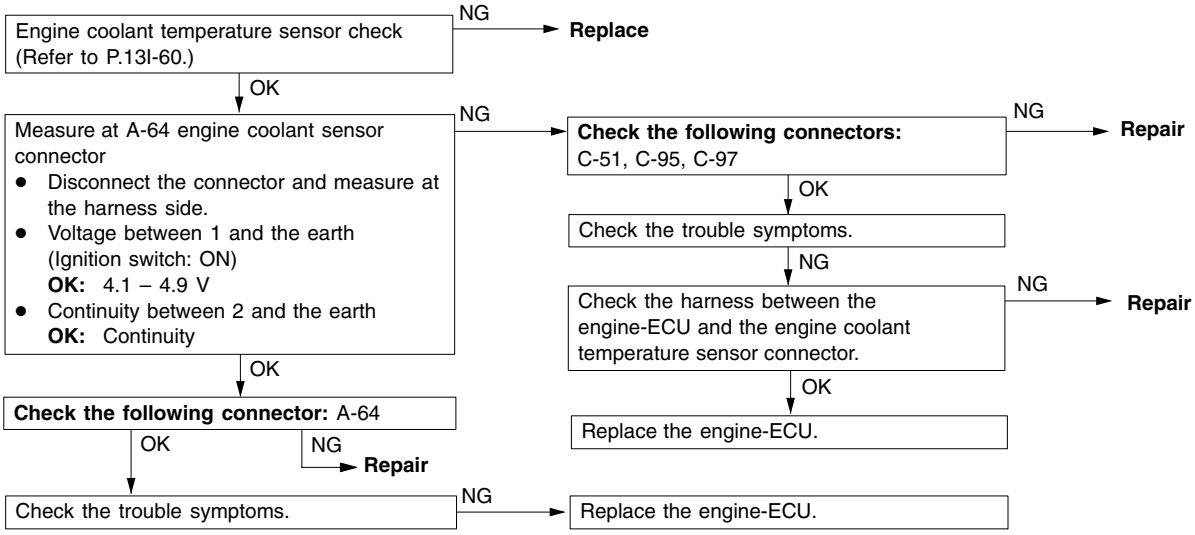

Code No. 16 Boost air temperature sensor (intake air sensor) system	Probable cause
Range of Check ● Ignition switch:ON, except for during engine cranking Set Conditions ● The sensor output voltage for 3 seconds is 4.6 V or higher (the intake air temperature is approximately –45°C or lower). or ● The sensor output voltage for 3 seconds is 0.3 V or lower (the intake air temperature is approximately 110°C or higher).	● Boost air temperature sensor inoperative ● Boost air temperature sensor open circuit, short circuit, or connector contact inoperative ● Engine-ECU inoperative

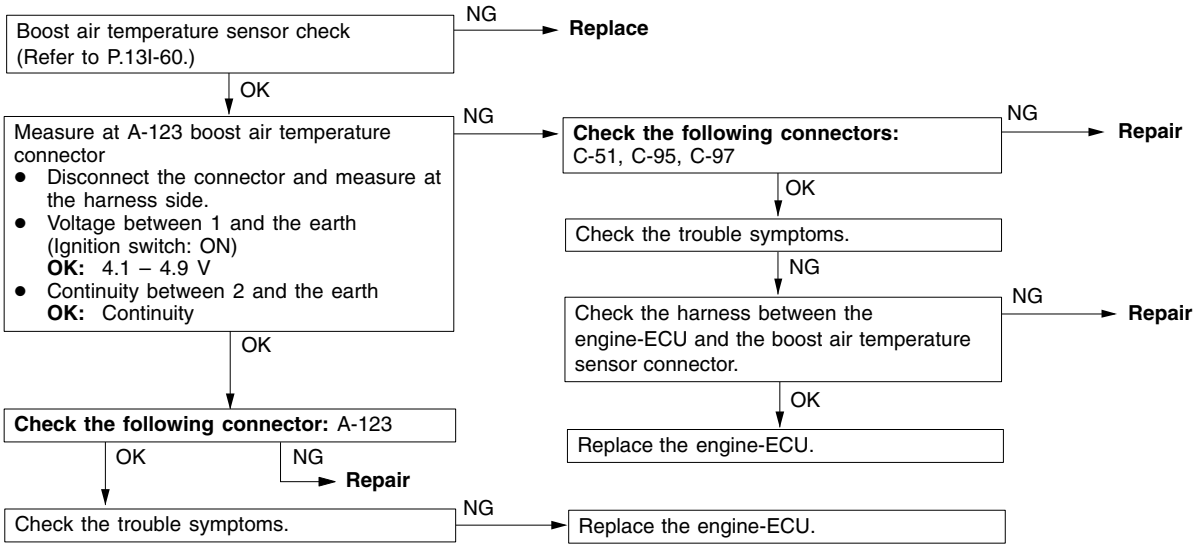

Code No. 17 Vehicle speed sensor system	Probable cause
Range of Check ● Ignition switch: ON ● Engine speed: 2800 r/min or higher ● Driving with heavy load Set Conditions ● Slower than vehicle speed of 3 km/h	● Vehicle speed sensor inoperative ● Vehicle speed sensor open circuit, short circuit, or connector contact inoperative ● Engine-ECU inoperative

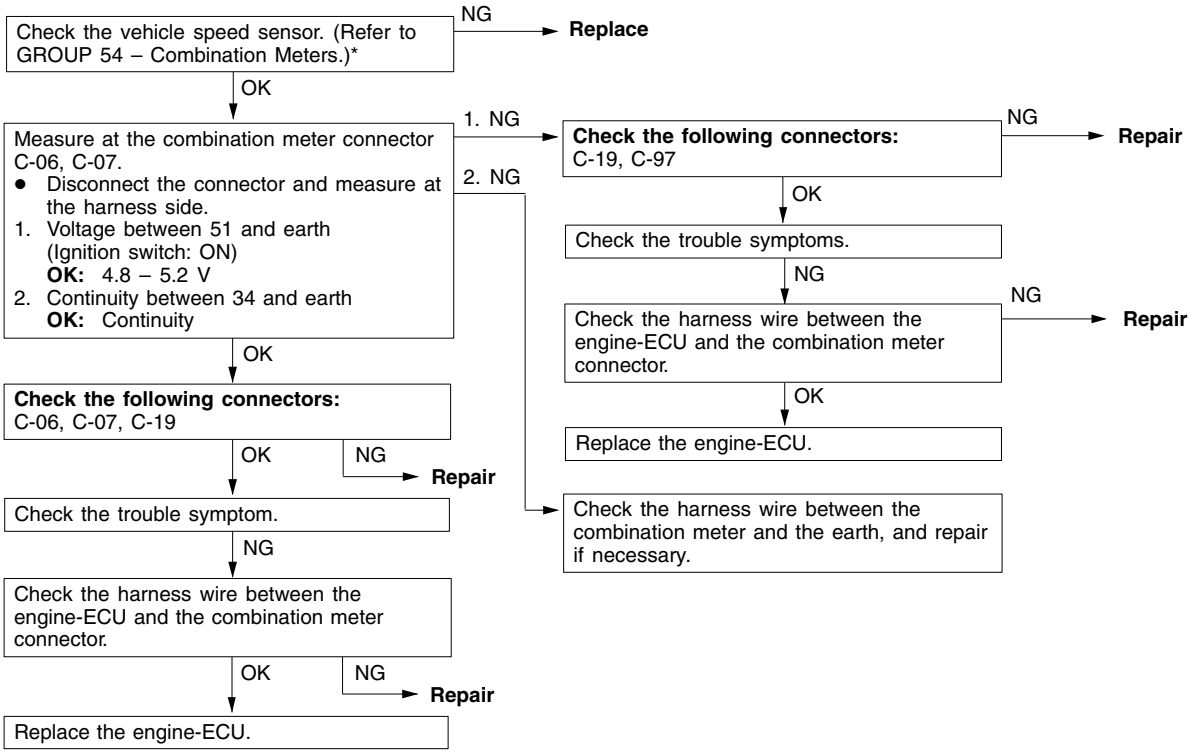

*: Refer to '97 L200 Workshop Manual (Pub. No. PWTE96E1).

Code No. 18 Pump speed sensor system	Probable cause
Range of Check ● Ignition switch: ON ● Not during the engine cranking Set Conditions ● The difference between the pump speed and the crank angle sensor output value is 500 r/min or higher for 4 seconds	● Malfunction of pump speed sensor ● Open circuit or short-circuit in pump speed sensor circuit, or poor sensor contact ● Engine-ECU inoperative

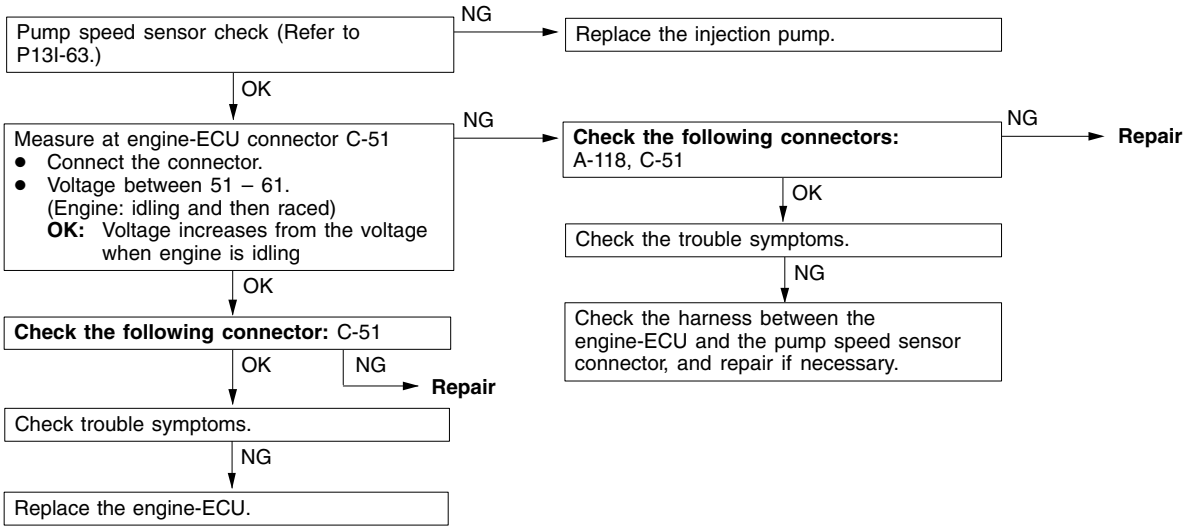

Code No. 21 Crank angle sensor system	Probable cause
Range of Check ● Engine cranking Set Conditions ● Sensor output voltage does not change for 2 seconds (no pulse signal input)	● Malfunction of crank angle sensor ● Open circuit or short-circuit in crank angle sensor circuit, or poor connector contact ● Engine-ECU inoperative
Range of Check ● Ignition switch: ON ● Not during the engine cranking ● Pump speed sensor circuit: Normal Set Conditions ● When crank angle sensor signal is being input normally, suddenly no sensor signal is input for 0.3 seconds or more	

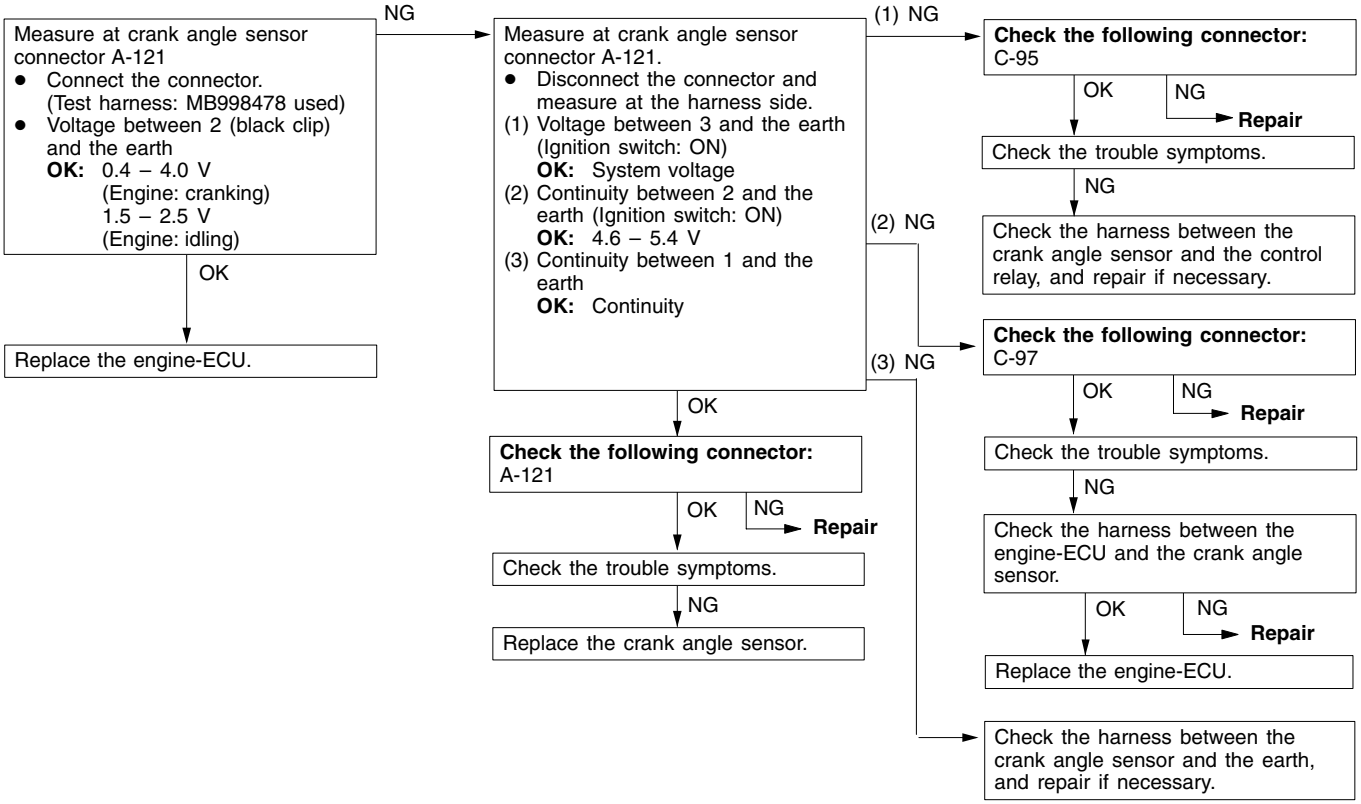

Code No. 23 Idle switch (accelerator pedal position sensor built-in) system	Probable cause
Range of Check Ignition switch: ON, accelerator pedal position sensor (main, sub) operative, except for during engine cranking Set Conditions ● For 1 minute idle switch (built-in): ON for 0.8 sec, accelerator pedal position sensor (main, sub) output voltage 1.875 V or higher or 10 minutes ● Idle switch (built-in): OFF for 10 min, accelerator pedal position sensor (main, sub) opening degrees less than 1.17 %	● Accelerator pedal position sensor inoperative ● Accelerator pedal position sensor open circuit, short circuit, or connector contact inoperative ● Idle switch “ON” inoperative ● Idle switch signal line short circuit ● Engine-ECU inoperative

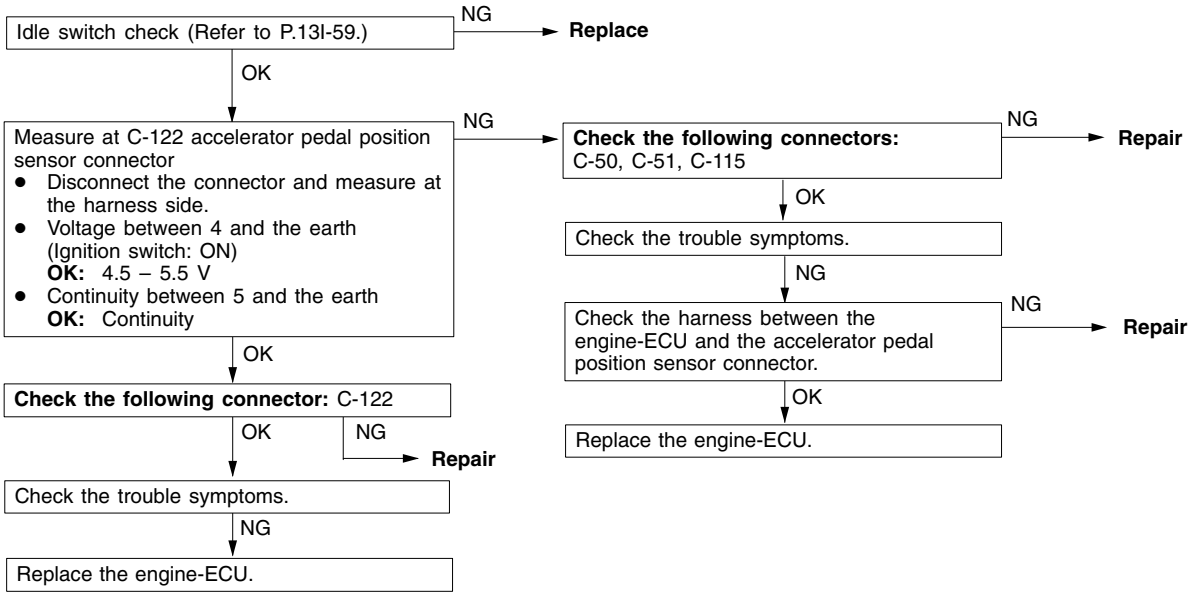

Code No. 25 Timer piston position sensor system	Probable cause
Range of Check ● Ignition switch: OK ● Not during the engine cranking Set Conditions ● The sensor output voltage for 1 second is 4.9 V* or more or ● The sensor output voltage for 1 second is 0.25 V* or less	● Timer piston position sensor inoperative ● Timer piston position sensor open circuit, short circuit, or connector contact inoperative ● Engine-ECU inoperative

NOTE:
*: This voltage is derived from the input pulse signal converted in the engine-ECU and cannot be measured.

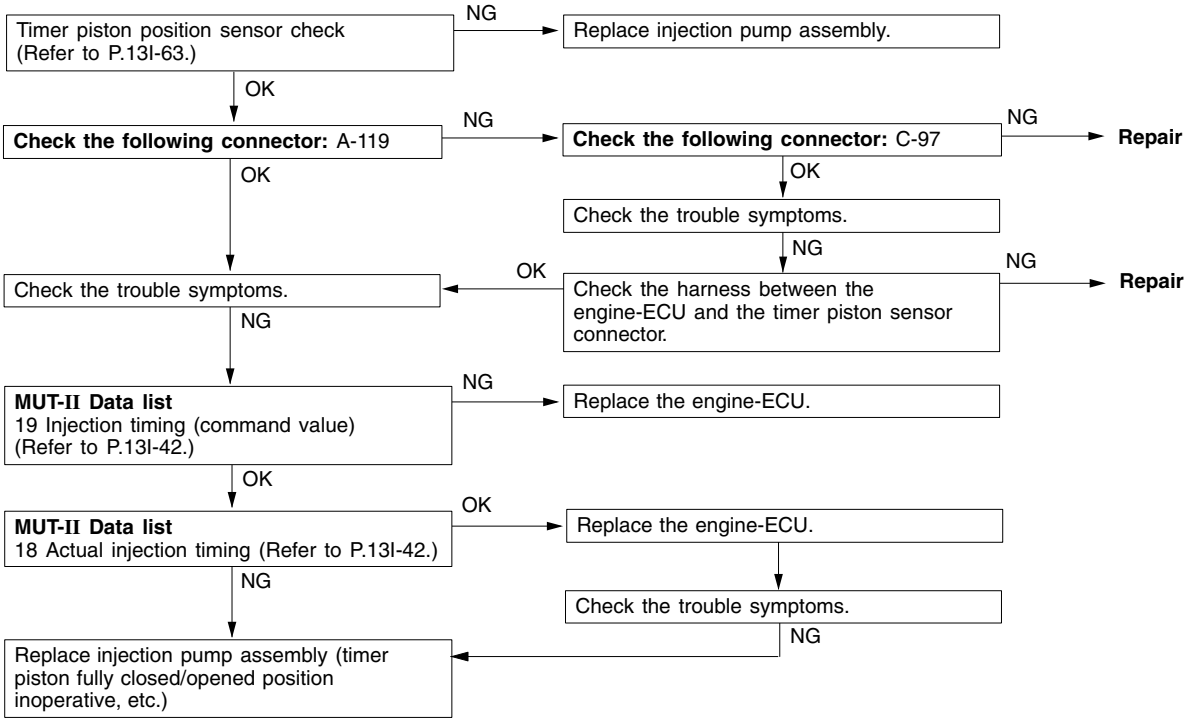

Code No. 26 Control sleeve position sensor system	Probable cause
Range of Check ● Ignition switch: ON Set Conditions ● The sensor output voltage for 0.3 second is 4.5 V* or more or ● The sensor output voltage for 0.3 second is 0.25 V* or less	● Control sleeve position sensor inoperative ● Control sleeve position sensor open circuit, short circuit, or connector contact inoperative ● Engine-ECU inoperative

NOTE:
*: This voltage is derived from the input pulse signal converted in the engine-ECU and cannot be measured.

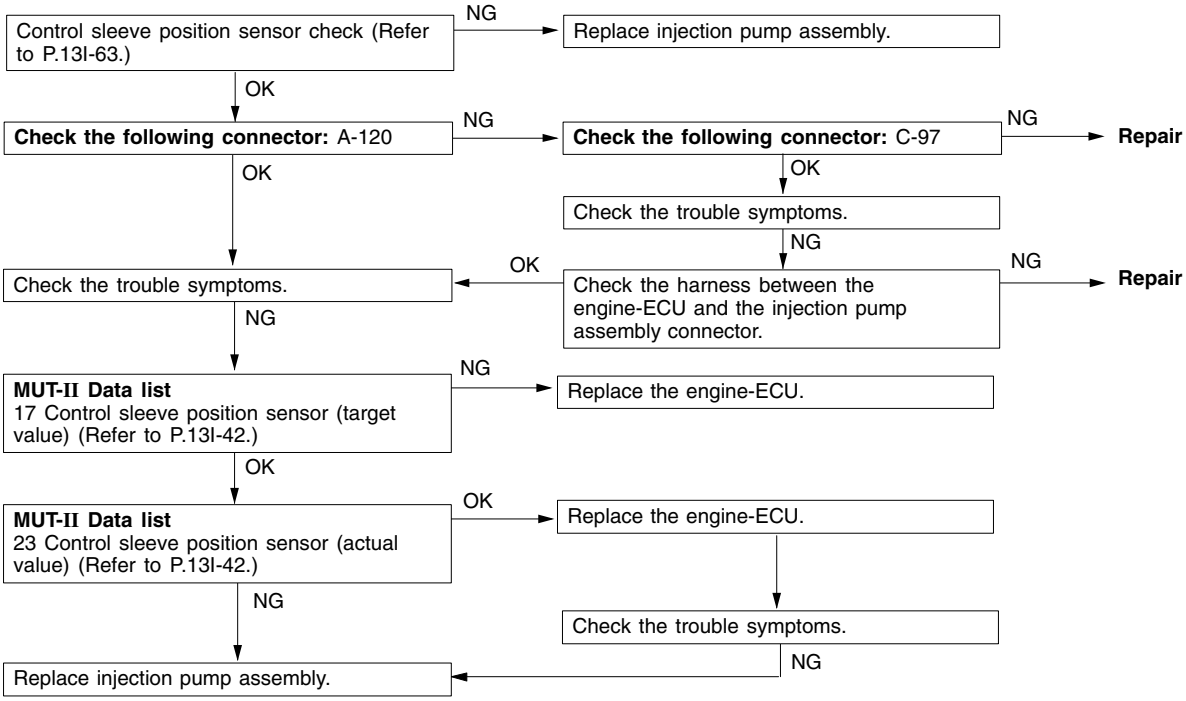

Code No. 27 Accelerator pedal position sensor (sub) system	Probable cause
Range of Check ● Ignition switch: ON, accelerator pedal position sensor (main) operative, except for during engine cranking Set Conditions ● Accelerator pedal position sensor output voltage for 1 second Sub side: 0.2 V or higher, lower than 2.5 V Main side: 4.5 V or higher or Sub or main: Lower than 0.2 V Range of Check ● Ignition switch: ON, except for during engine cranking Set Conditions ● The difference in the output sensor voltage between the main and the sub sensor is 1 V or higher, or the idle switch ON, and sensor main output voltage is 1.875 V or higher.	● Accelerator pedal position sensor inoperative ● Accelerator pedal position sensor open circuit, short circuit, or connector contact inoperative ● Engine-ECU inoperative

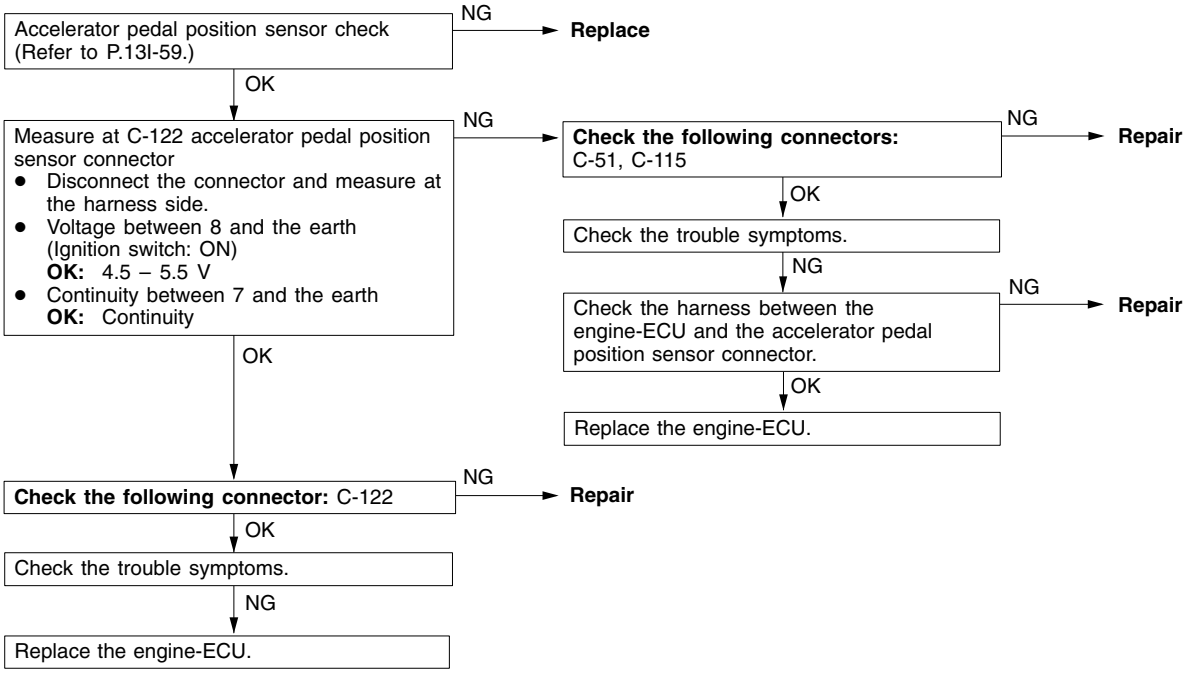

Code No. 41 Throttle solenoid valve system	Probable cause
Range of Check ● Ignition switch: OFF ● Barometric pressure is 95.4 kPa or over (equivalent to 500m). Set Conditions ● Boost sensor output does not change.	● Throttle solenoid valve inoperative ● Throttle solenoid valve open circuit, short circuit, or connector contact inoperative ● Engine-ECU inoperative ● Malfunction of throttle actuator

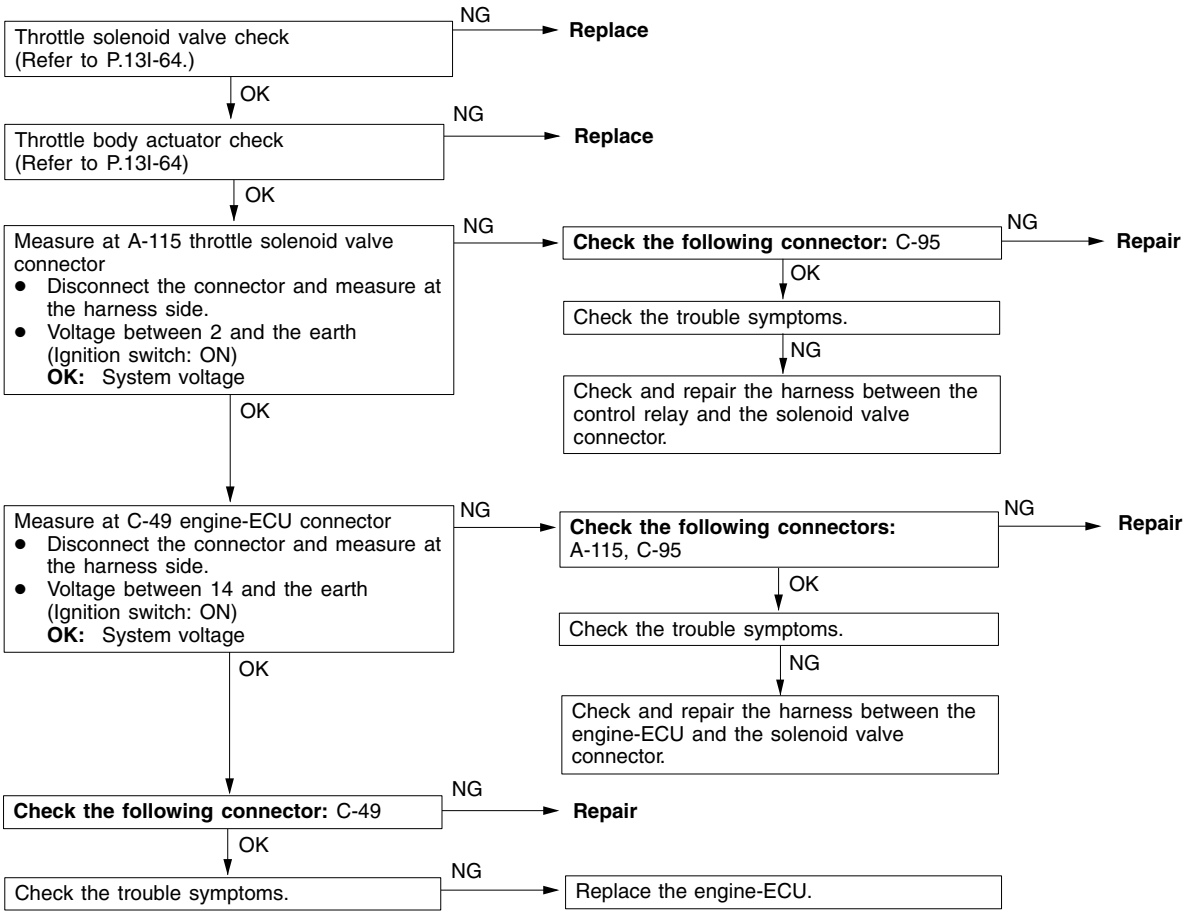

Code No. 43 Timing control valve system	Probable cause
Range of Check ● Engine coolant temperature 80°C or higher and the engine running Set Conditions ● Target value minus actual value is 0.64 V or more (duty ratio) for 5 seconds.	● Timing control valve inoperative ● Timing control valve open circuit, short circuit, or connector contact inoperative ● Engine-ECU inoperative ● Blockage in fuel system

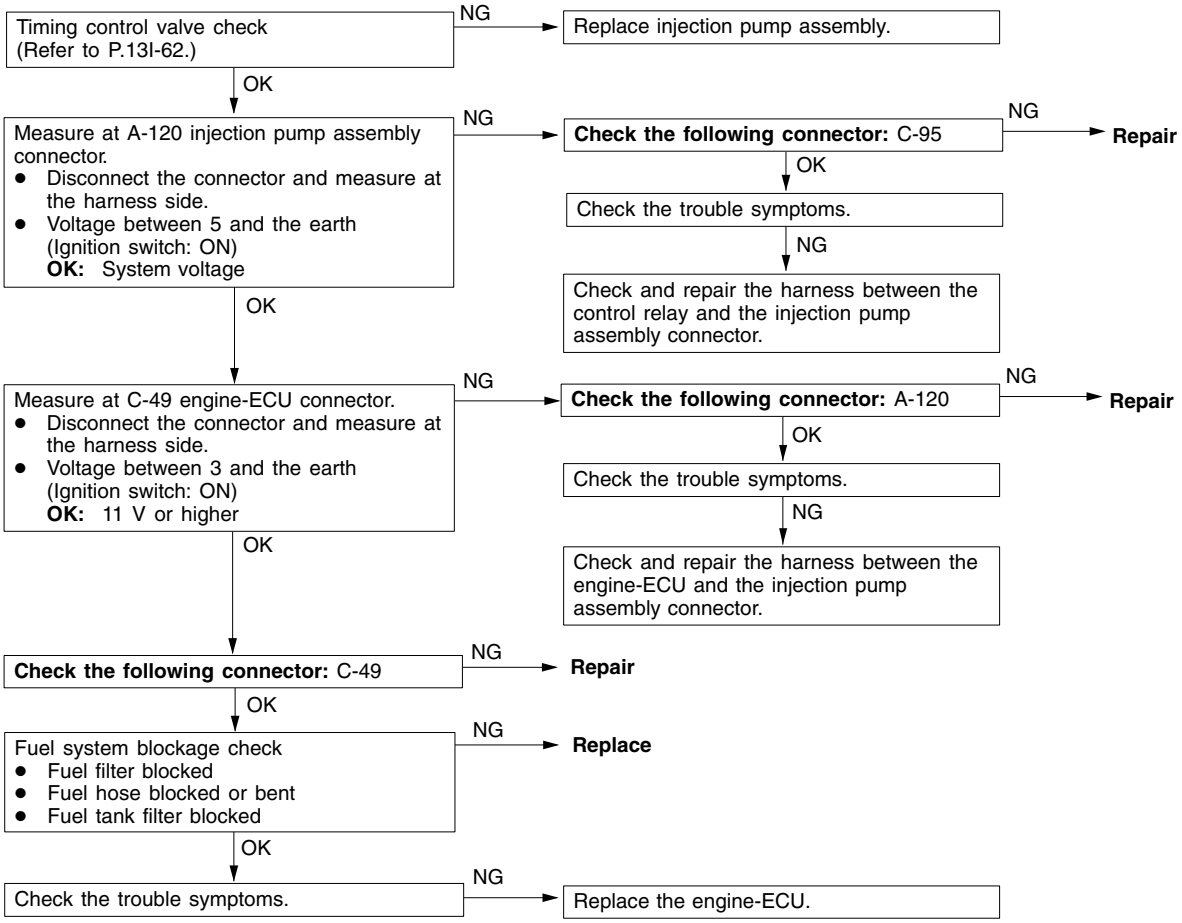

Code No. 46 Injection correction ROM system	Probable cause
Range of Check ● Ignition switch: ON Set Conditions ● When communication fails	● Injection correction ROM inoperative ● Engine-ECU inoperative

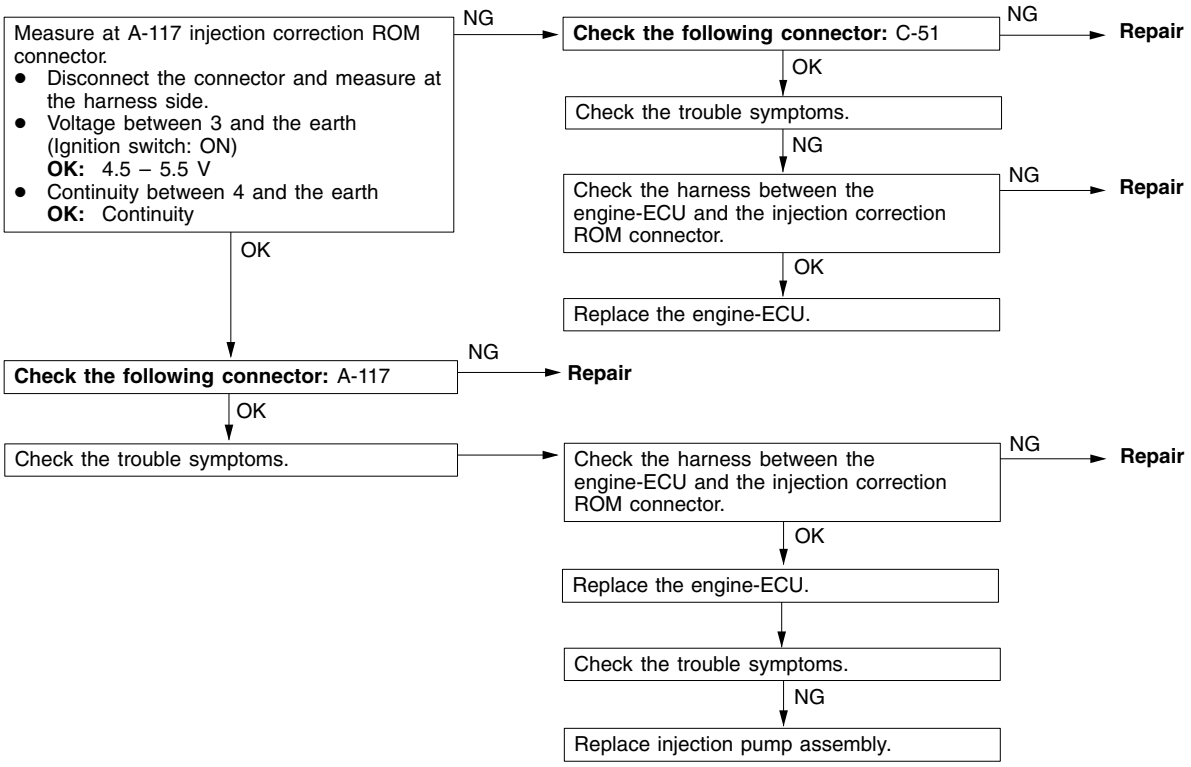

Code No. 48 GE actuator (in the middle of control sleeve position sensor inoperative) system	Probable cause
Range of Check ● Ignition switch: ON Set Conditions ● Target value minus actual value is 1 V or more (duty ratio) for 1 second	● Control sleeve position sensor inoperative ● GE actuator inoperative ● Control sleeve position sensor open circuit, short circuit, or connector contact inoperative ● Engine-ECU inoperative

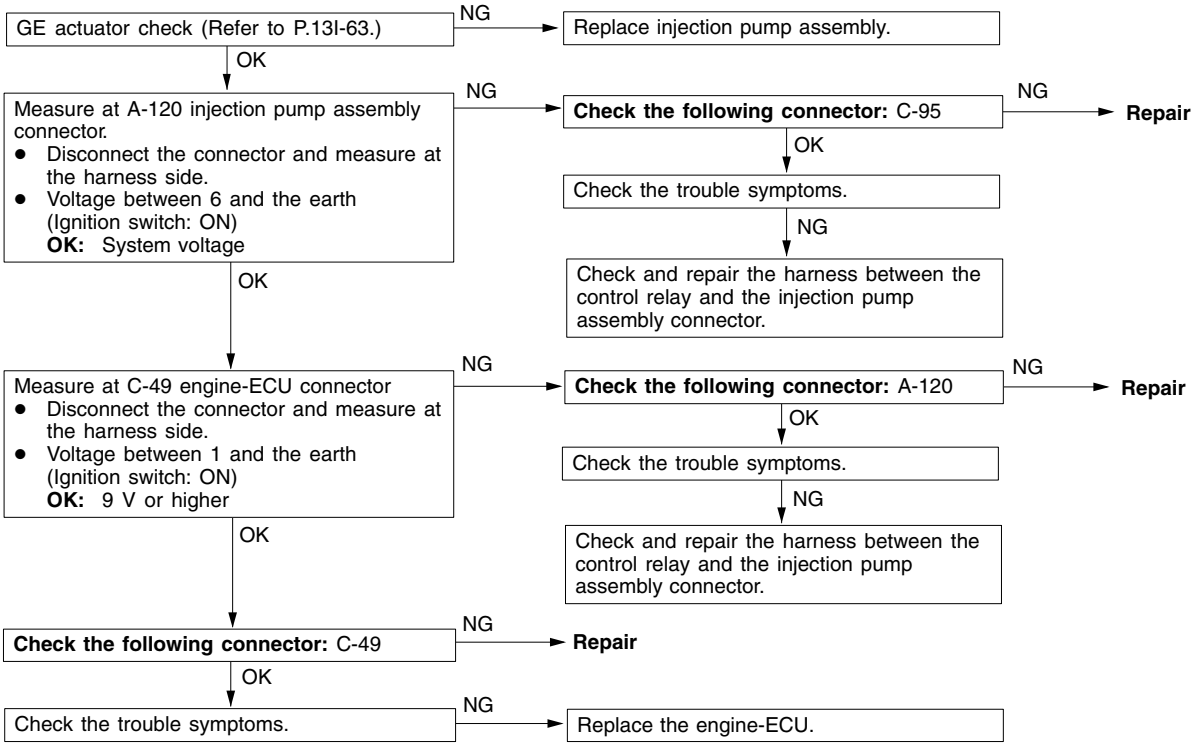

Code No. 49 Over boost <4WD>	Probable cause
Range of Check ● Ignition switch: ON Set Conditions ● Boost pressure is higher than the barometric pressure + 133 kPa.	● Malfunction of the variable geometry actuator ● Malfunction of variable geometry solenoid valve ● Variable geometry solenoid valve open circuit, short circuit, or connector contact inoperative ● Engine-ECU inoperative

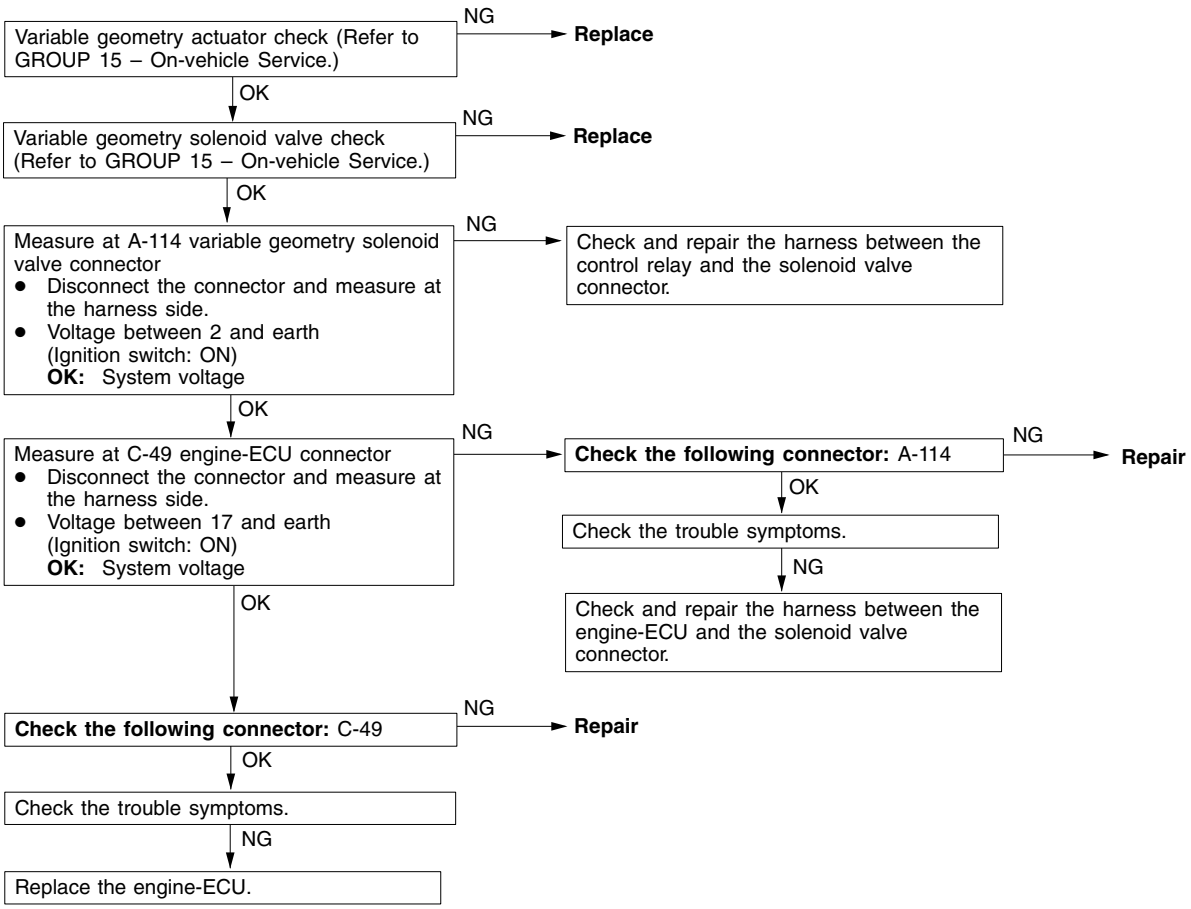

Code No. 51 EGR valve position sensor system	Probable cause
Range of Check ● Ignition switch: ON, except during engine cranking Set Condition ● Output voltage of EGR valve position sensor for 3 seconds is 4.85 V or higher, or lower than 0.15 V.	● EGR valve position sensor inoperative ● EGR valve position sensor open circuit, short circuit or connector circuit inoperative ● Engine-ECU inoperative

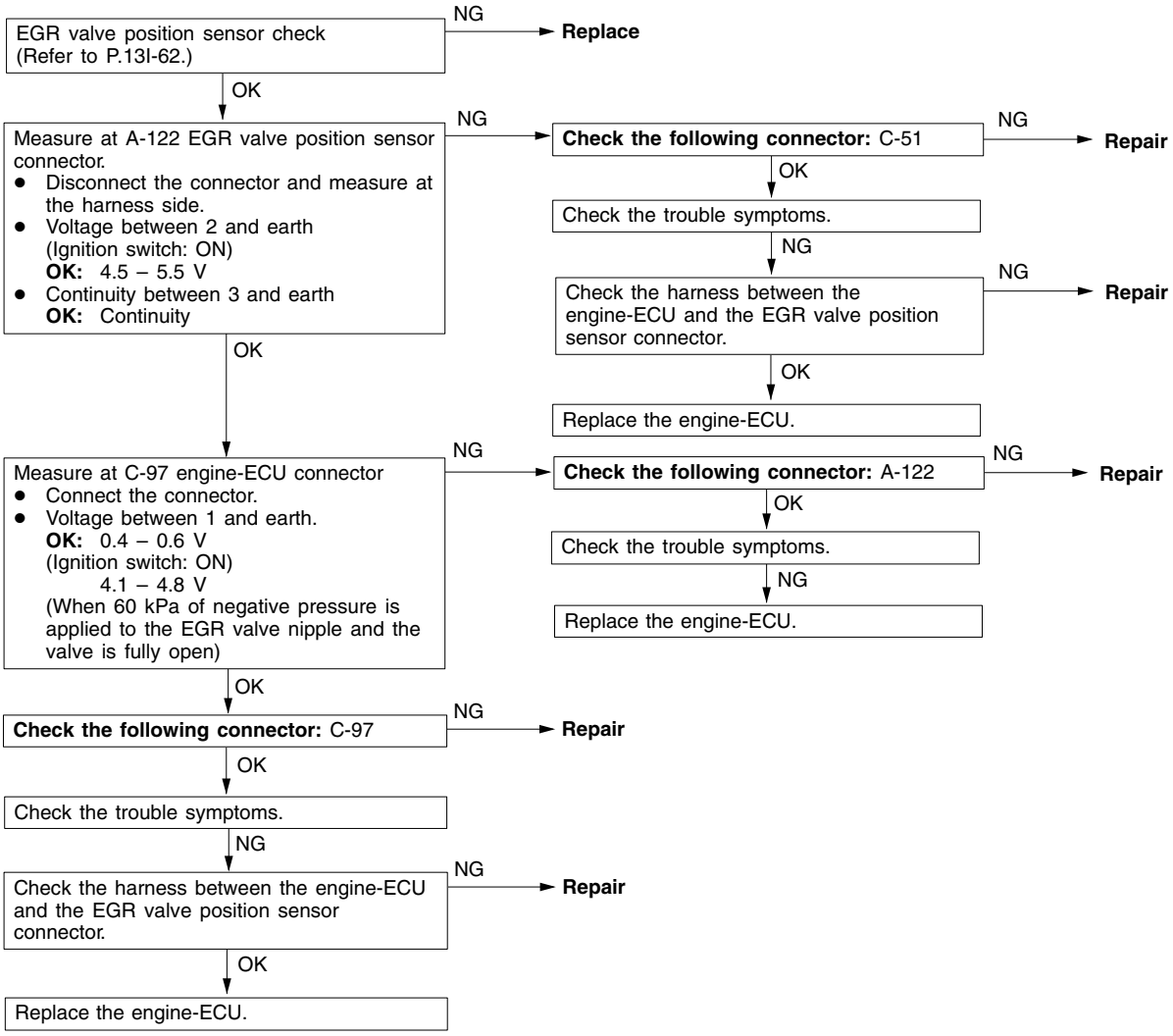

Code No. 52 Variable geometry control pressure sensor system	Probable cause
Range of Check ● Ignition switch: ON, except during engine cranking Set Condition ● 4.5 V or higher, or 0.2 V or lower Range of Check ● Engine idling Set Condition ● The difference between target and actual negative pressures remains 10.6 kPa or more for 10 seconds.	● Variable geometry control pressure sensor inoperative ● Variable geometry control pressure sensor open circuit, short circuit or connector contact inoperative ● Vacuum hose disconnected or ruptured ● Engine-ECU inoperative

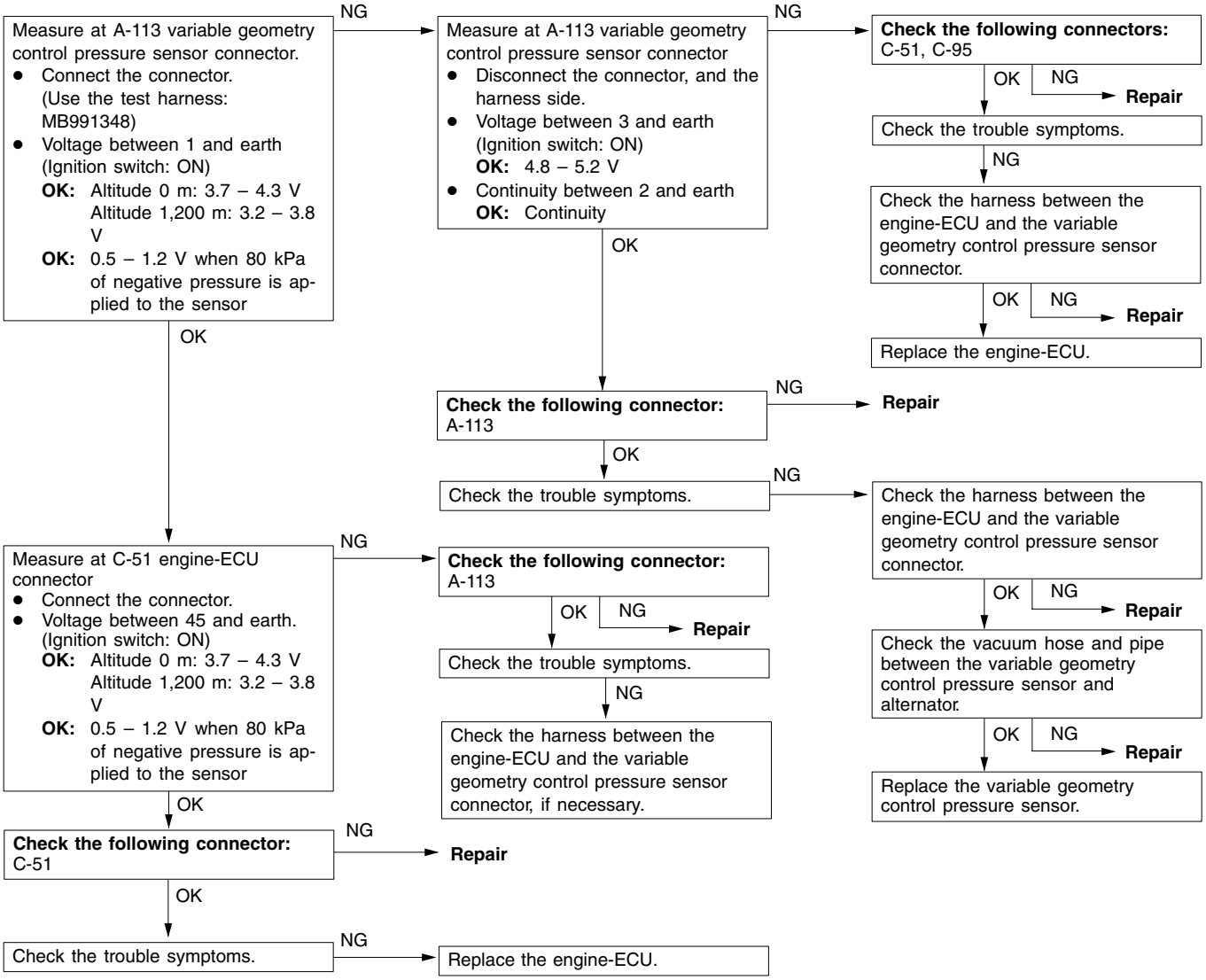

Code No. 54 Immobilizer system	Probable cause
Range of Check ● Ignition switch: ON Set Conditions ● Improper communication between the engine-ECU and immobilizer-ECU	● Radio interference of encrypted codes ● Incorrect encrypted code ● Malfunction of harness or connector ● Malfunction of immobilizer-ECU ● Engine-ECU inoperative

NOTE
(1) If the ignition switches are close each other when starting the engine, radio interference may cause this code to be displayed.
(2) This code may be displayed when registering the key encrypted code.

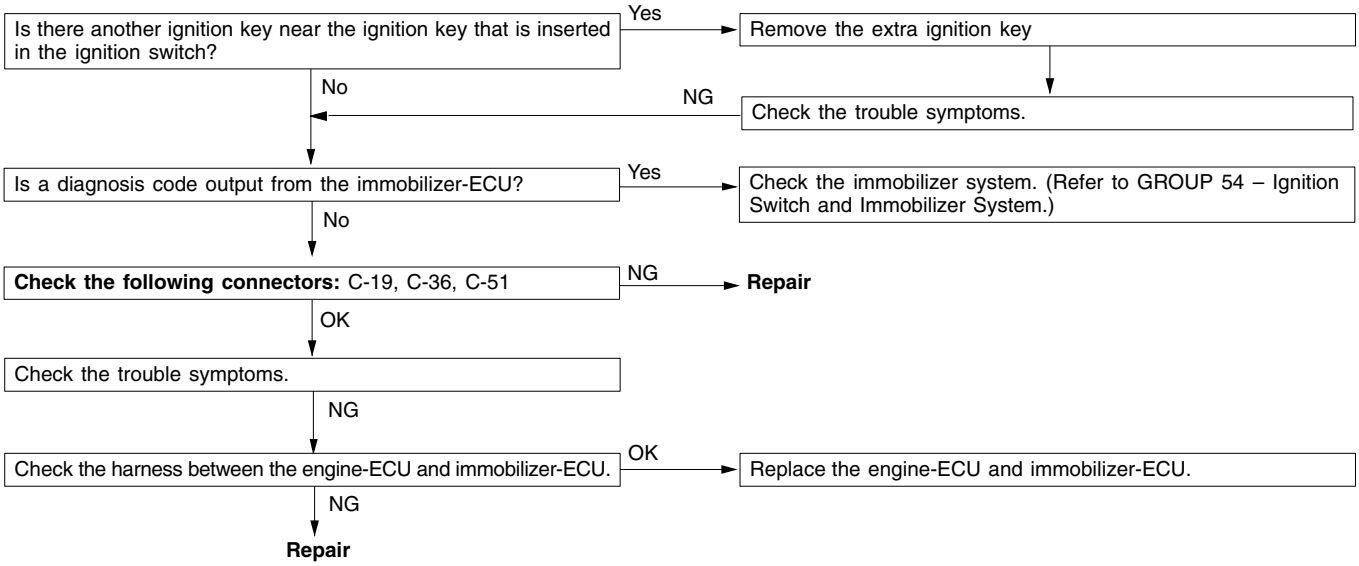

INSPECTION CHART FOR TROUBLE SYMPTOMS

Trouble Symptom		Inspection procedure No.	Reference page
No communication can be established between MUT-II and the engine-ECU.	No communication can be established with all systems.	1	13I-30
	No communication can be established only with the engine-ECU.	2	13I-30
Engine warning lamp related	Immediately after the ignition switch is “ON”, the engine warning lamp does not turn on.	3	13I-31
	The engine warning lamp keeps on and does not turn off.	4	13I-31
Starting performance	No initial combustion (unable to start)	5	13I-32
	Starting performance is bad when the engine is cold (difficult to start)	6	13I-32
	Starting performance is bad regardless of when the engine is hot or cold (difficult to start)	7	13I-33
Idling stability (idling inoperative)	Low idling speed when the engine is cold (improper idling speed)	8	13I-33
	High idling speed (improper idling speed)	9	13I-33
	Low idling speed (improper idling speed)	10	13I-34
	Idling instable (rough idling, hunting)	11	13I-34
Idling stability (idling sustainment inoperative)	The engine halts after running for a while.	12	13I-34
	The engine halts during idling.	13	13I-35
Driveability	Lack of output power	14	13I-35
	Occurrence of abnormal knocking	15	13I-35
	Abnormal black smoke	16	13I-36
	Abnormal white smoke	17	13I-36
	Hunting during driving	18	13I-36
A/C condenser fan operating problem		19	13I-37
Intercooler fan operating problem		20	13I-38

INSPECTION PROCEDURES FOR TROUBLE SYMPTOMS

INSPECTION PROCEDURE 1

No communication can be established between MUT-II and all systems.	Probable cause
Probable cause can be found in troubles with the power supply circuit and the earth circuit to the diagnosis connector.	• Diagnosis connector inoperative • Harness inoperative

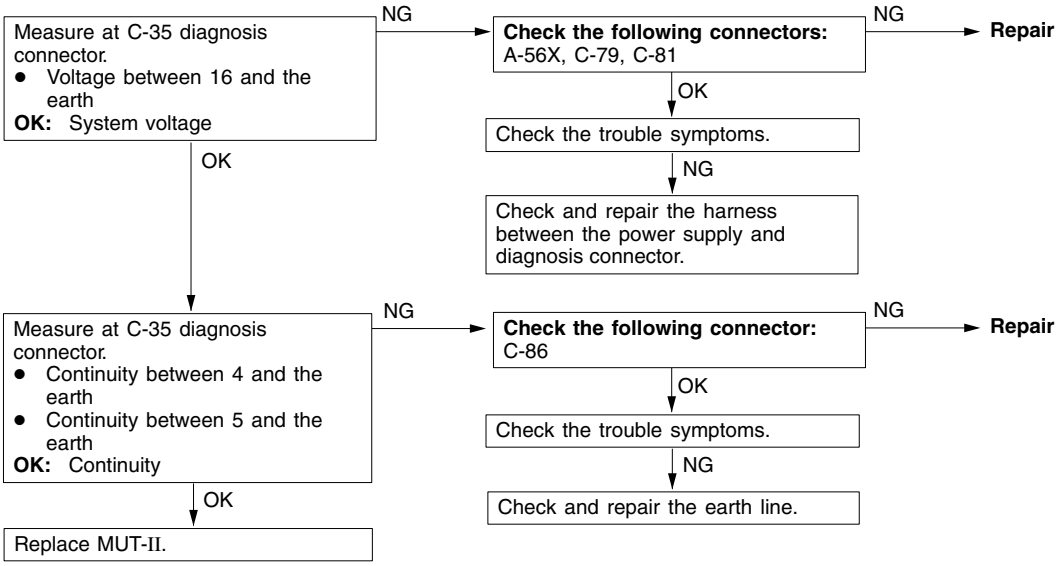

INSPECTION PROCEDURE 2

No communication can be established between MUT-II and the engine-ECU.	Probable cause
Probable causes are shown in the following: • The power is not supplied to the engine-ECU. • The earth circuit of the engine-ECU inoperative • The engine-ECU inoperative • Communication between the engine-ECU and MUT-II inoperative	• The power supply circuit of the engine-ECU inoperative • Engine-ECU inoperative • Open circuit at the harness between the engine-ECU and the diagnosis connector

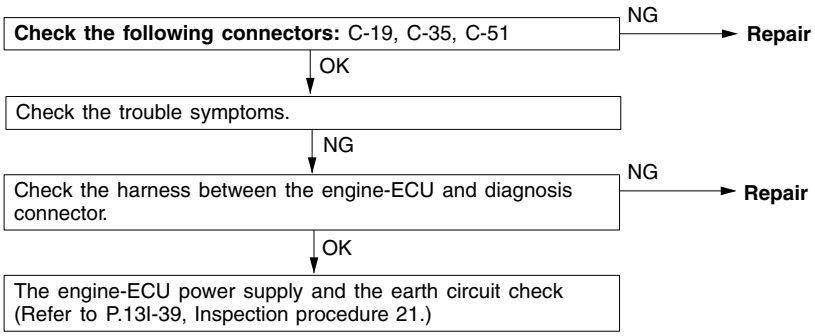

INSPECTION PROCEDURE 3

Immediately after the ignition switch is "ON", the engine warning lamp does not turn on.	Probable cause
The engine-ECU turns on the engine warning lamp for 5 seconds immediately after turning on the ignition switch to check the bulb for being blown. If the engine warning lamp does not turn on immediately after turning the ignition switch ON, problems shown in the right could exist.	• The engine warning lamp blown • The engine warning lamp circuit inoperative • Engine-ECU inoperative

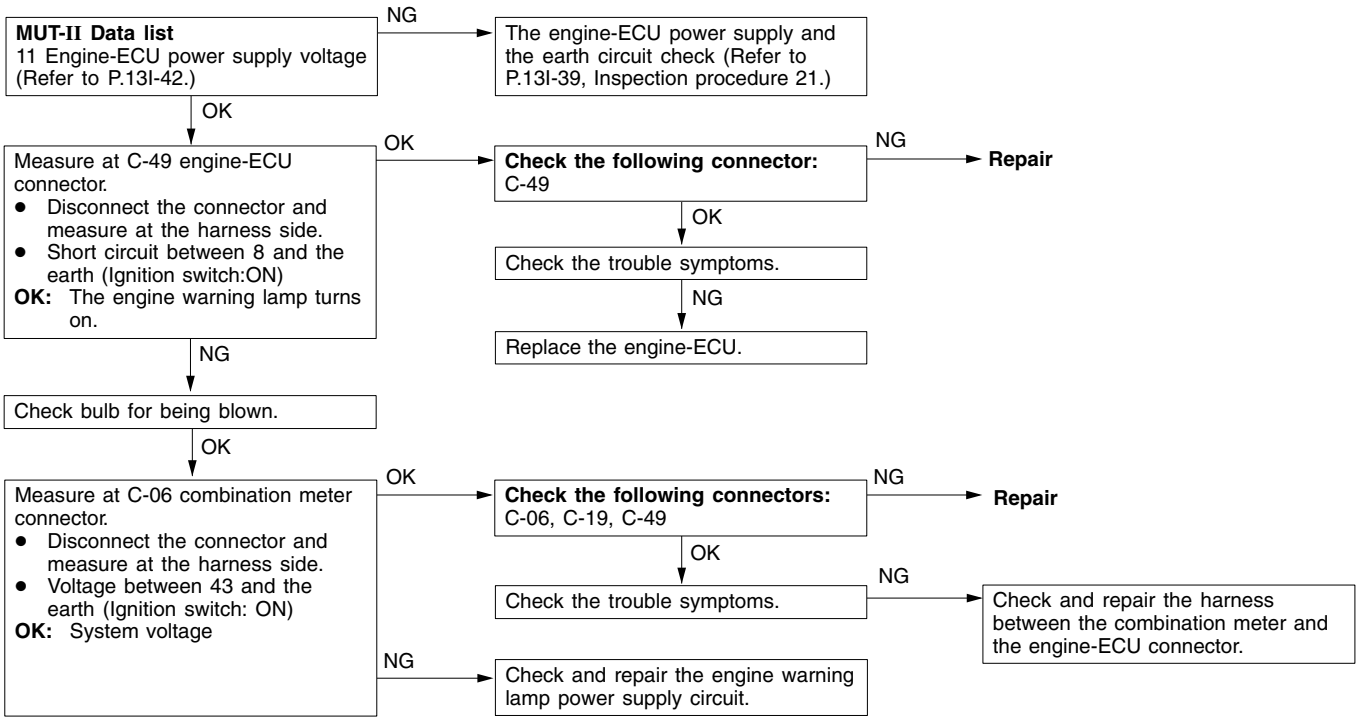

INSPECTION PROCEDURE 4

The engine warning lamp keeps on and does not turn off.	Probable cause
The probable causes can be found in either the engine-ECU detecting the malfunction in the sensor and/or the actuator, or the problem shown in the right takes place.	• Short circuit at the harness between the engine warning lamp and the engine-ECU • Engine-ECU inoperative

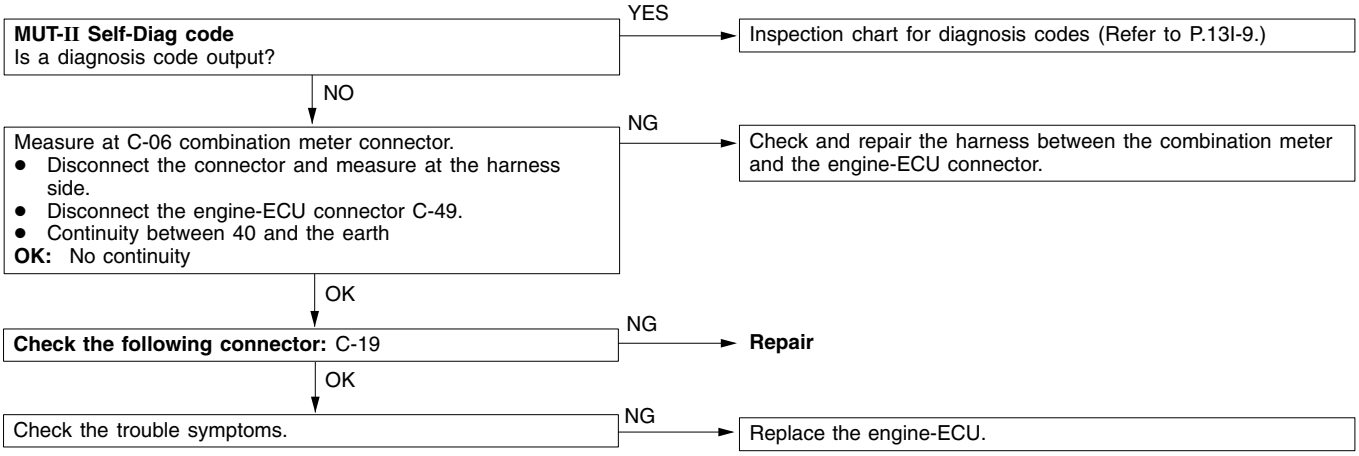

INSPECTION PROCEDURE 5

No initial combustion (unable to start)	Probable cause
Probable causes can be found in troubles with control system, injection pump, glow system, and power supply system.	• Control system inoperative • Injection pump inoperative • Intake system inoperative • Glow system inoperative • Engine-ECU inoperative

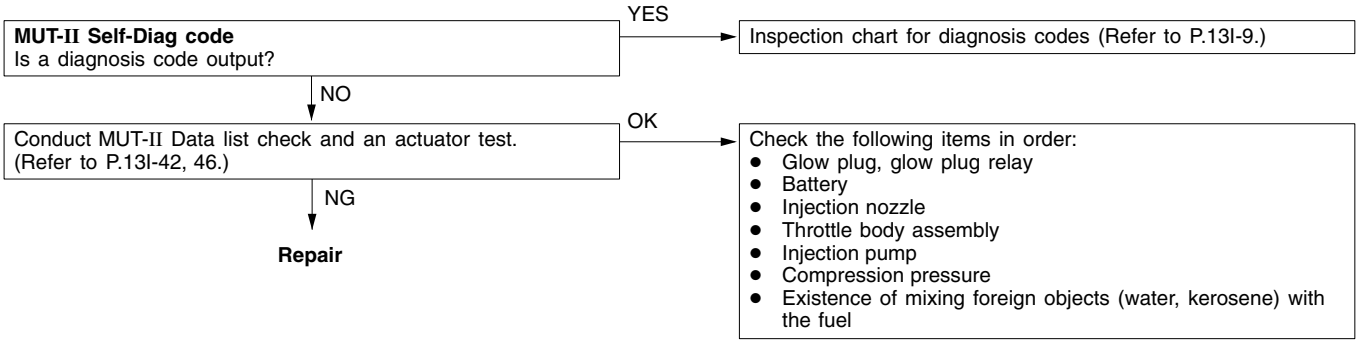

INSPECTION PROCEDURE 6

Starting performance is bad when the engine is cold (unable to start)	Probable cause
Probable causes can be found in troubles with control system, injection pump, fuel system, intake system, and glow system.	• Control system inoperative • Injection pump inoperative • Fuel system inoperative • Intake system inoperative • Glow system inoperative • Engine-ECU inoperative

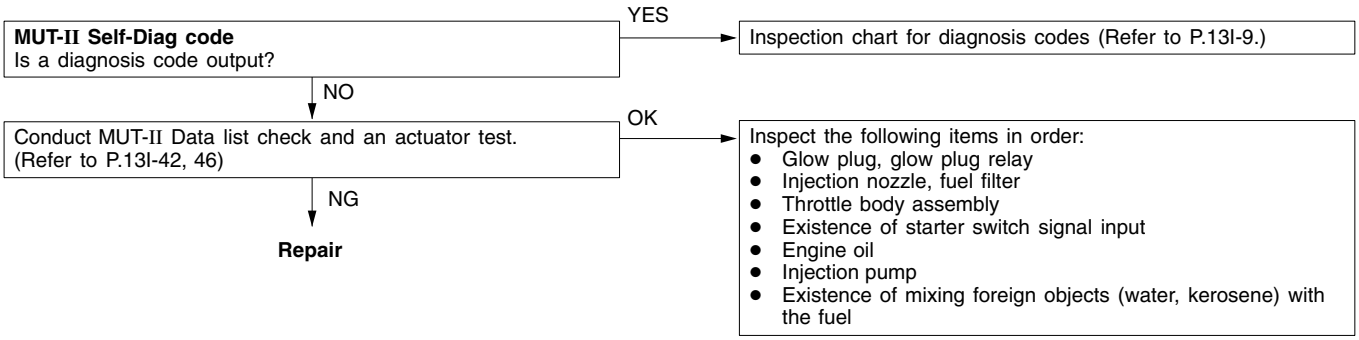

INSPECTION PROCEDURE 7

Starting performance is bad regardless of whether the engine is hot or cold (unable to start)	Probable cause
Probable causes can be found in troubles with control system, injection pump, fuel system, and intake system.	• Control system inoperative • Injection pump inoperative • Fuel system inoperative • Intake system inoperative • Engine-ECU inoperative

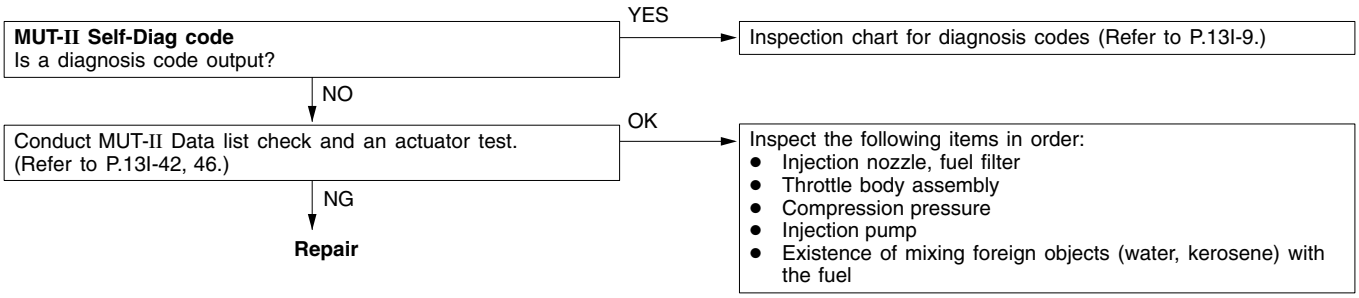

INSPECTION PROCEDURE 8

Low idling speed when the engine is cold (improper idling speed)	Probable cause
Probable causes can be found in troubles with control system, injection pump, and fuel system.	• Control system inoperative • Injection pump inoperative • Fuel system inoperative • Engine-ECU inoperative

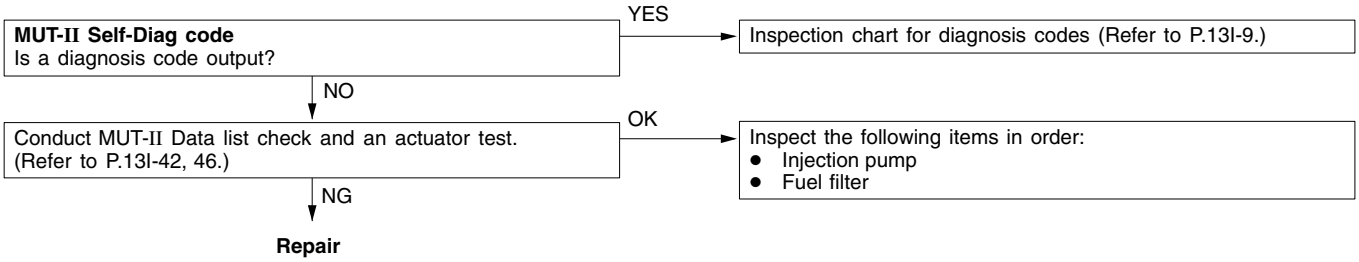

INSPECTION PROCEDURE 9

High idling speed (improper idling speed)	Probable cause
Probable causes can be found in troubles with control system and injection pump.	• Control system inoperative • Injection pump inoperative • Engine-ECU inoperative

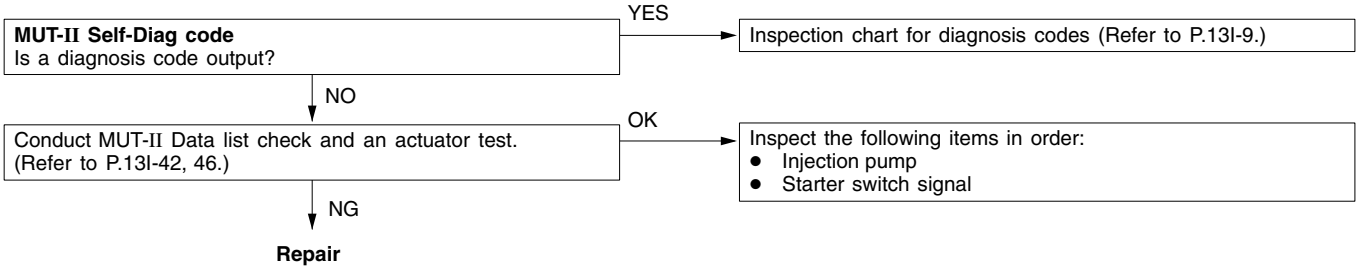

INSPECTION PROCEDURE 10

Low idling speed (improper idling speed)	Probable cause
Probable causes can be found in troubles with control system, injection pump, and fuel.	• Control system inoperative • Injection pump inoperative • Fuel system inoperative • Engine-ECU inoperative

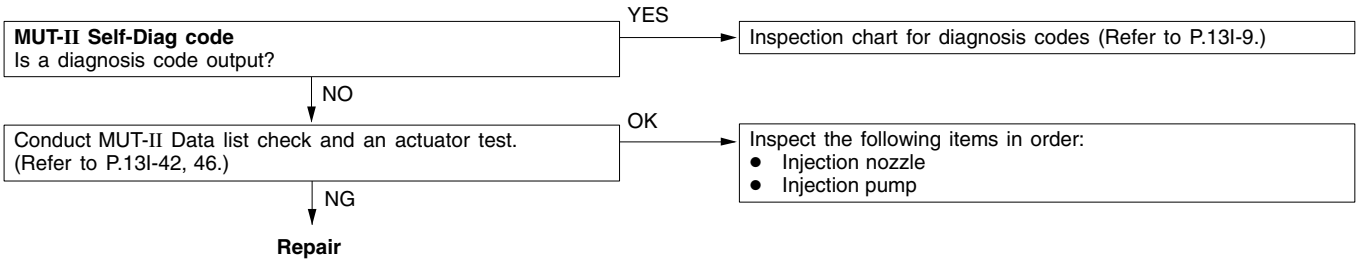

INSPECTION PROCEDURE 11

Idling instable (rough idling, hunting)	Probable cause
Probable causes can be found in troubles with control system, injection pump, fuel system, glow system, intake system, and EGR system.	• Control system inoperative • Injection pump inoperative • Fuel system inoperative • Intake system inoperative • Glow system inoperative • EGR system inoperative • Engine-ECU inoperative

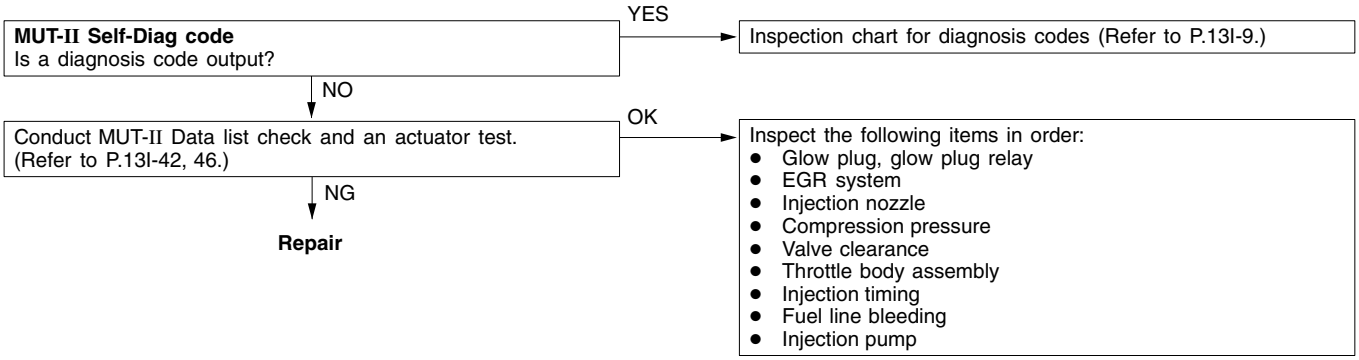

INSPECTION PROCEDURE 12

The engine stalls after running for a while.	Probable cause
Probable causes can be found in troubles with control system, injection pump, fuel system, and intake system.	• Control system inoperative • Injection pump inoperative • Fuel system inoperative • Intake system inoperative • Engine-ECU inoperative

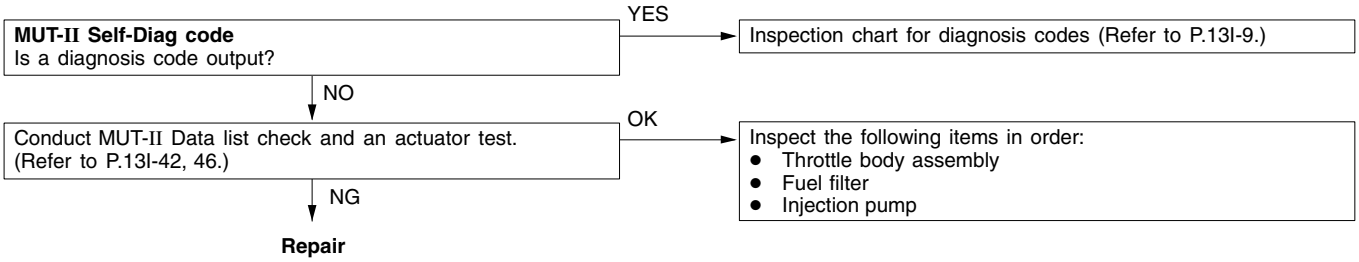

INSPECTION PROCEDURE 13

The engine stalls during idling.	Probable cause
Probable causes can be found in troubles with control system, injection pump, intake system, EGR system, and power supply.	• Control system inoperative • Injection pump inoperative • Fuel system inoperative • Intake system inoperative • EGR system inoperative • Engine-ECU inoperative

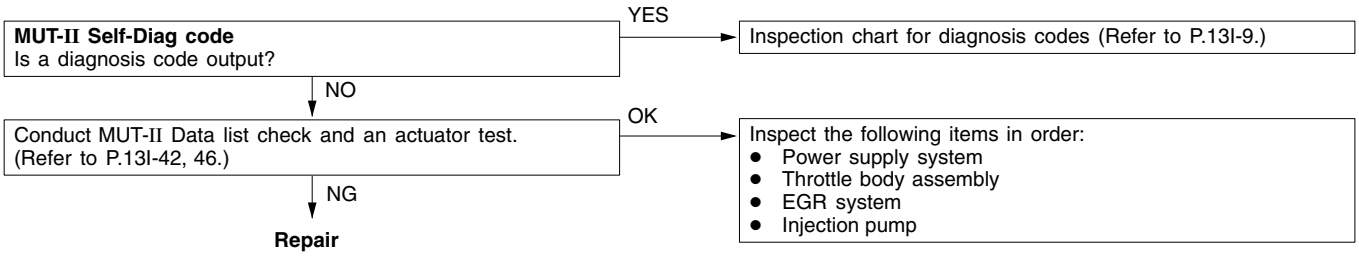

INSPECTION PROCEDURE 14

Lack of output power	Probable cause
Probable causes can be found in troubles with control system, injection pump, fuel system, intake system, and EGR system.	• Control system inoperative • Injection pump inoperative • Fuel system inoperative • Intake system inoperative • EGR system inoperative • Engine-ECU inoperative

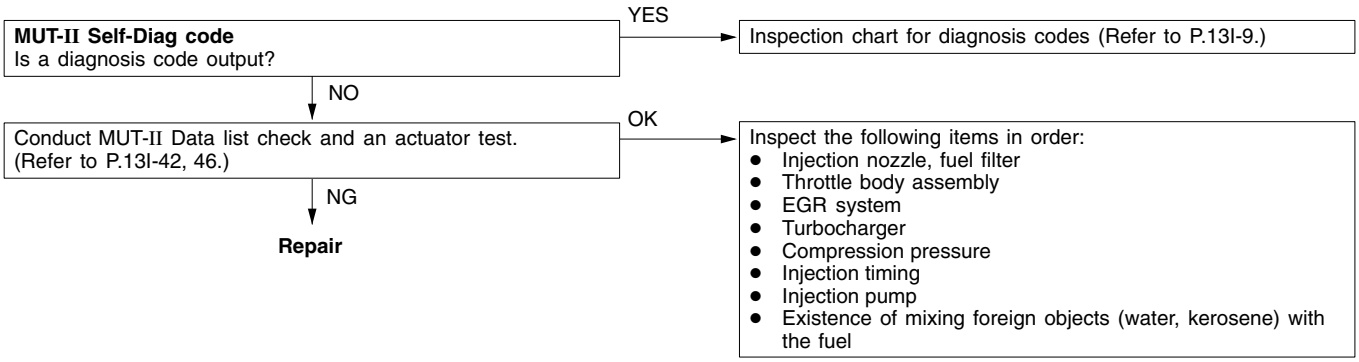

INSPECTION PROCEDURE 15

Occurrence of abnormal knocking	Probable cause
Probable causes can be found in troubles with control system, injection pump, fuel system, and EGR system.	• Control system inoperative • Injection pump inoperative • Fuel system inoperative • EGR system inoperative • Engine-ECU inoperative

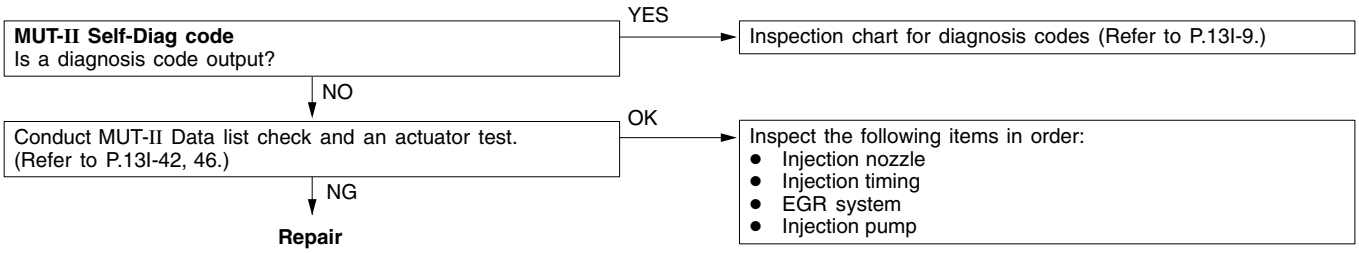

INSPECTION PROCEDURE 16

Abnormal black smoke	Probable cause
Probable causes can be found in troubles with control system, injection pump, fuel system, intake system, and EGR system.	• Control system inoperative • Injection pump inoperative • Fuel system inoperative • Intake system inoperative • EGR system inoperative • Engine-ECU inoperative

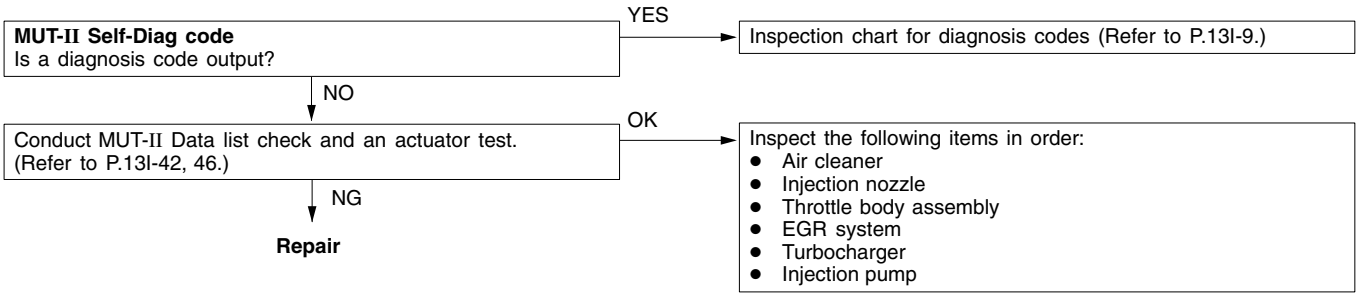

INSPECTION PROCEDURE 17

Abnormal white smoke	Probable cause
Probable causes can be found in troubles with control system, injection pump, fuel system, intake system, EGR system, and glow system.	• Control system inoperative • Injection pump inoperative • Fuel system inoperative • Intake system inoperative • EGR system inoperative • Glow system inoperative • Engine-ECU inoperative

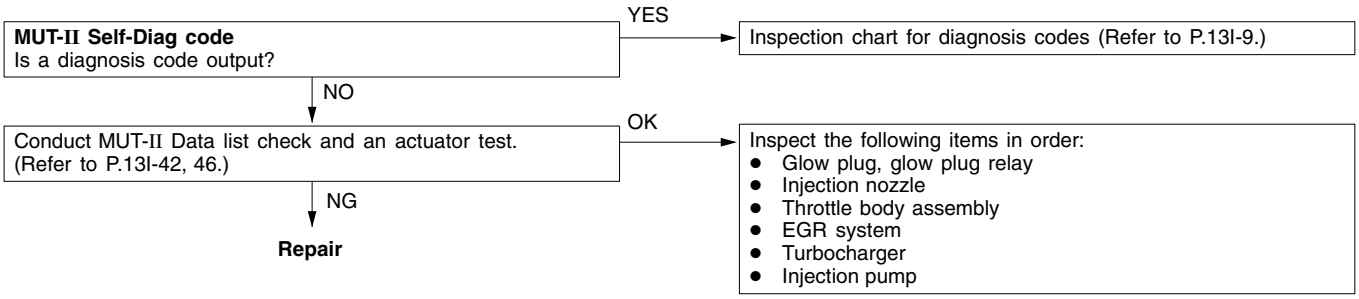

INSPECTION PROCEDURE 18

Hunting during driving	Probable cause
Probable causes can be found in troubles with control system, injection pump, and fuel system.	• Control system inoperative • Injection pump inoperative • Fuel system inoperative • Engine-ECU inoperative

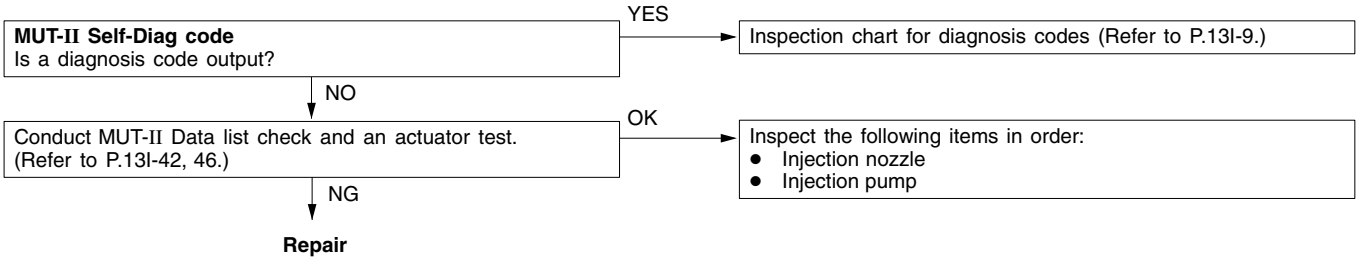

INSPECTION PROCEDURE 19

A/C condenser fan operating problem	Probable cause
The power transistor inside the engine-ECU turns on and off to control the A/C condenser fan motor relay.	• Malfunction of A/C condenser fan motor relay • Malfunction of A/C condenser fan motor • Malfunction of thermostat • Open circuit or short-circuit in circuit, or poor connector contact • Malfunction of engine-ECU

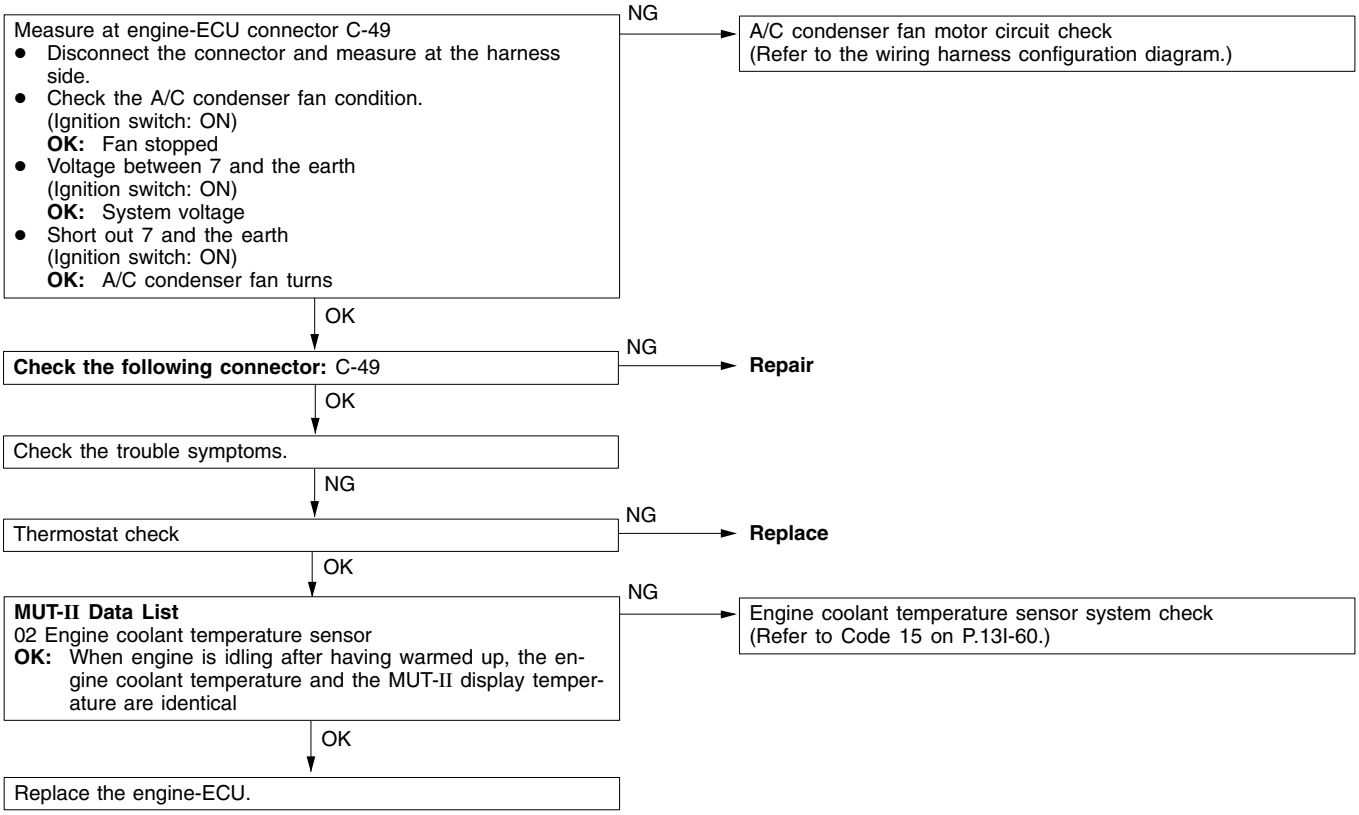

INSPECTION PROCEDURE 20

Intercooler fan operating problem	Probable cause
The power transistor inside the engine-ECU turns on and off to control the intercooler fan motor relay.	• Malfunction of intercooler fan motor relay • Malfunction of intercooler fan motor • Open circuit or short–circuit in circuit, or poor connector contact • Engine-ECU inoperative

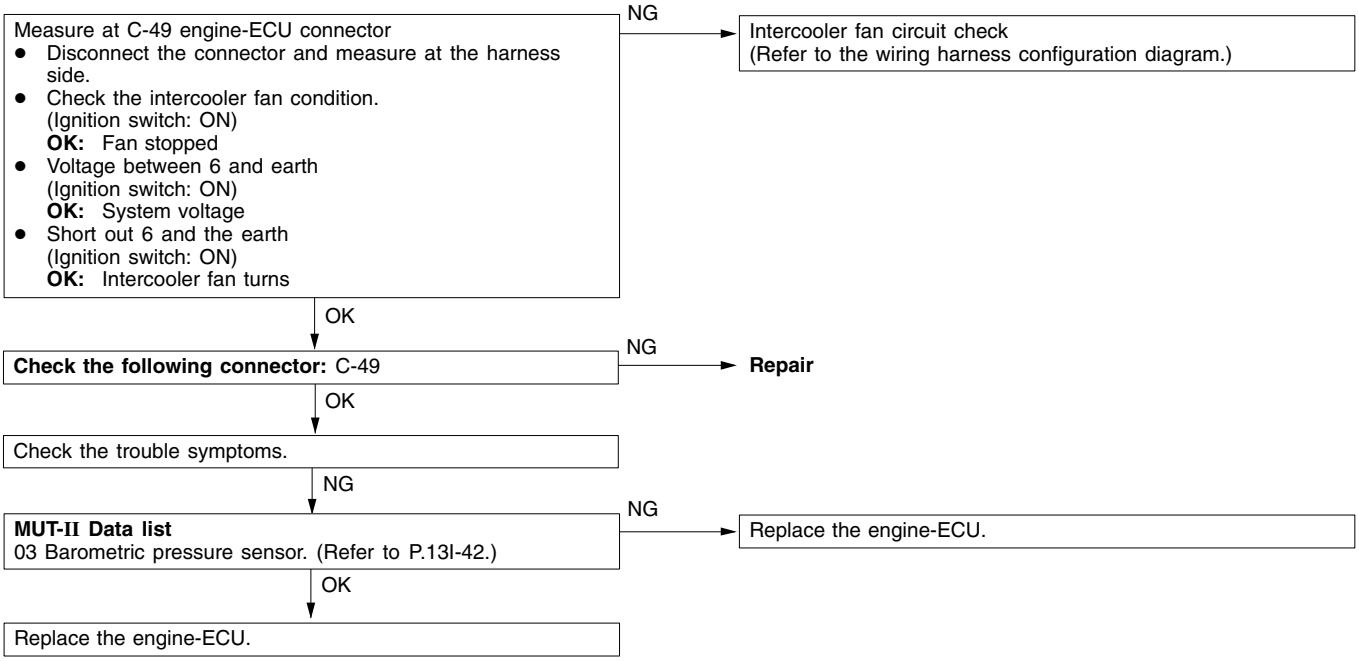

INSPECTION PROCEDURE 21

Engine-ECU power supply and earth circuit check

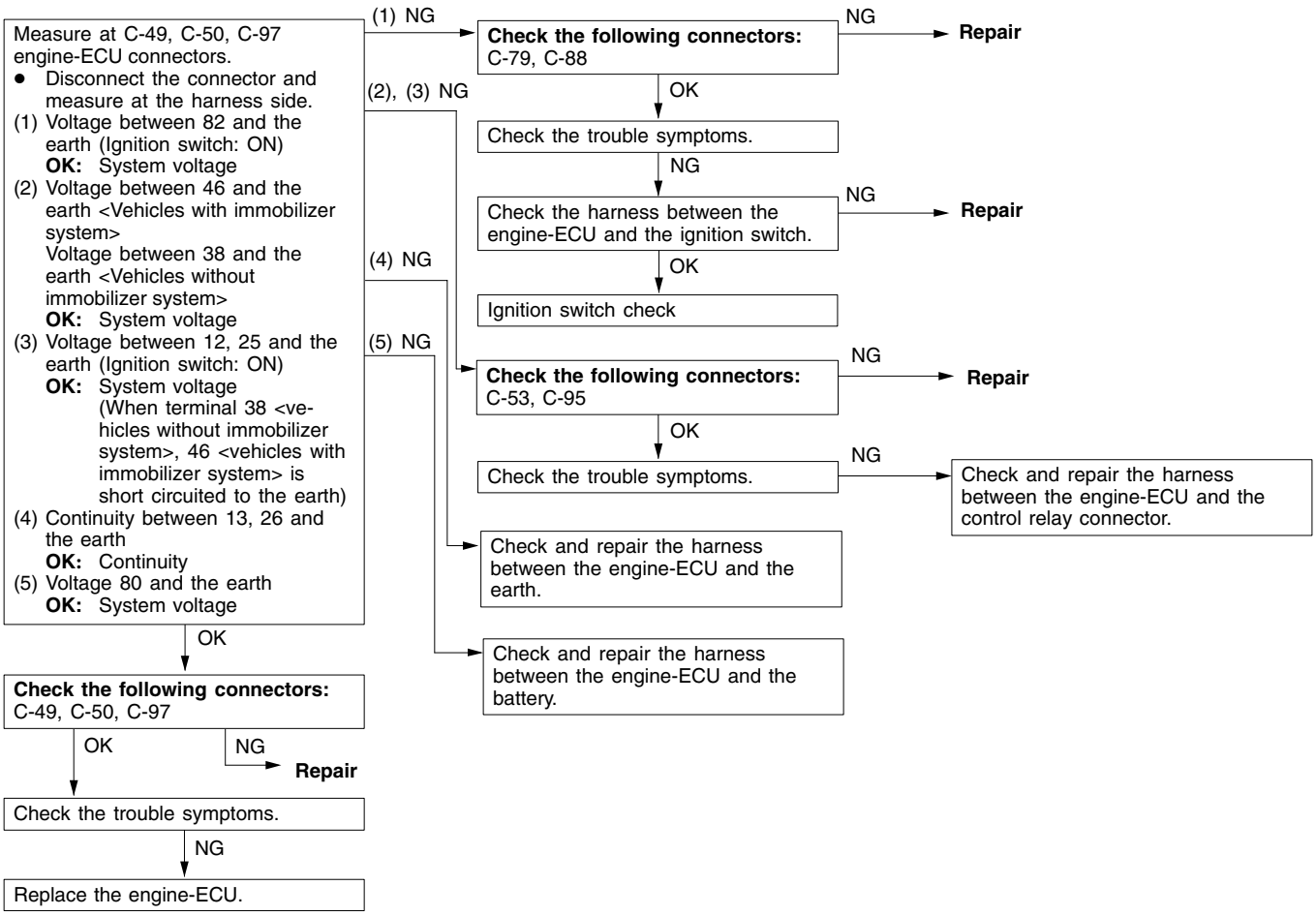

INSPECTION PROCEDURE 22

Fuel cut solenoid valve circuit inspection

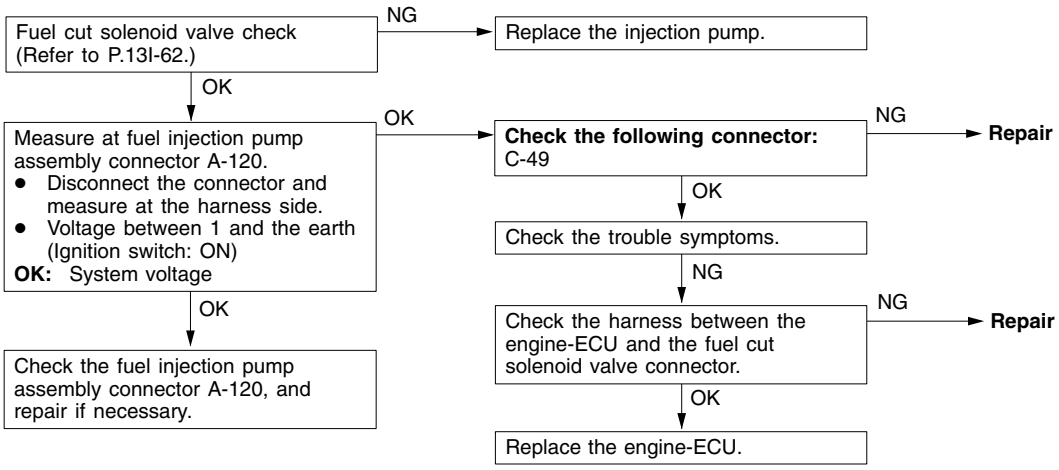

INSPECTION PROCEDURE 23

EGR control solenoid valve No. 1 circuit inspection

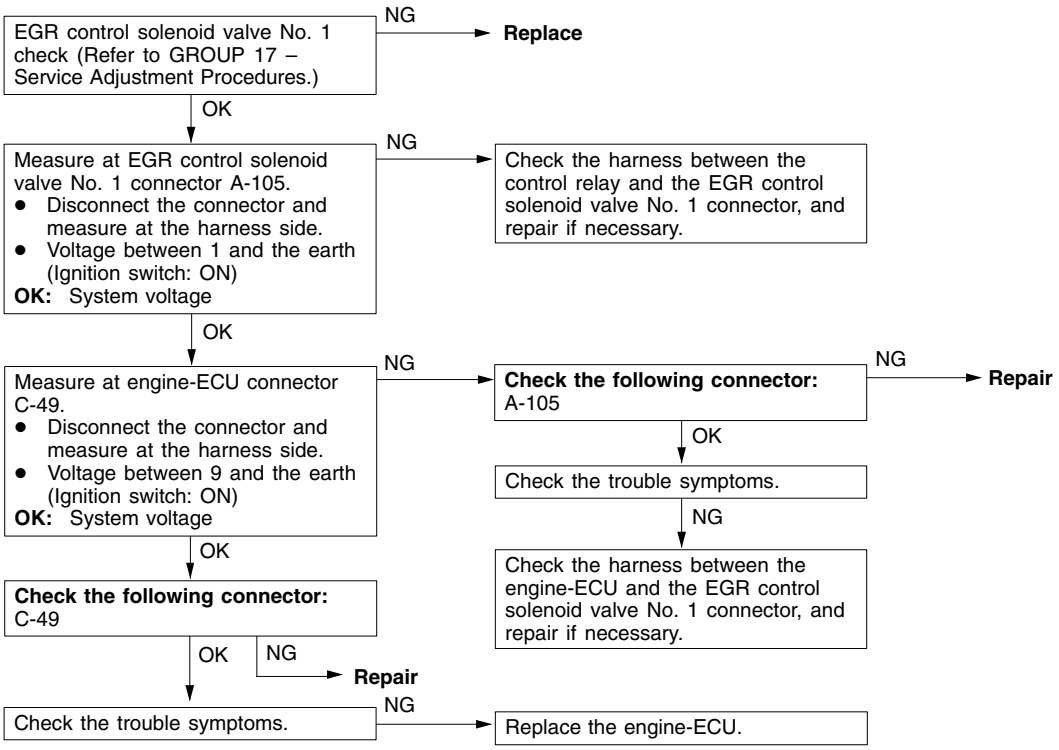

INSPECTION PROCEDURE 24

EGR control solenoid valve No. 2 circuit inspection

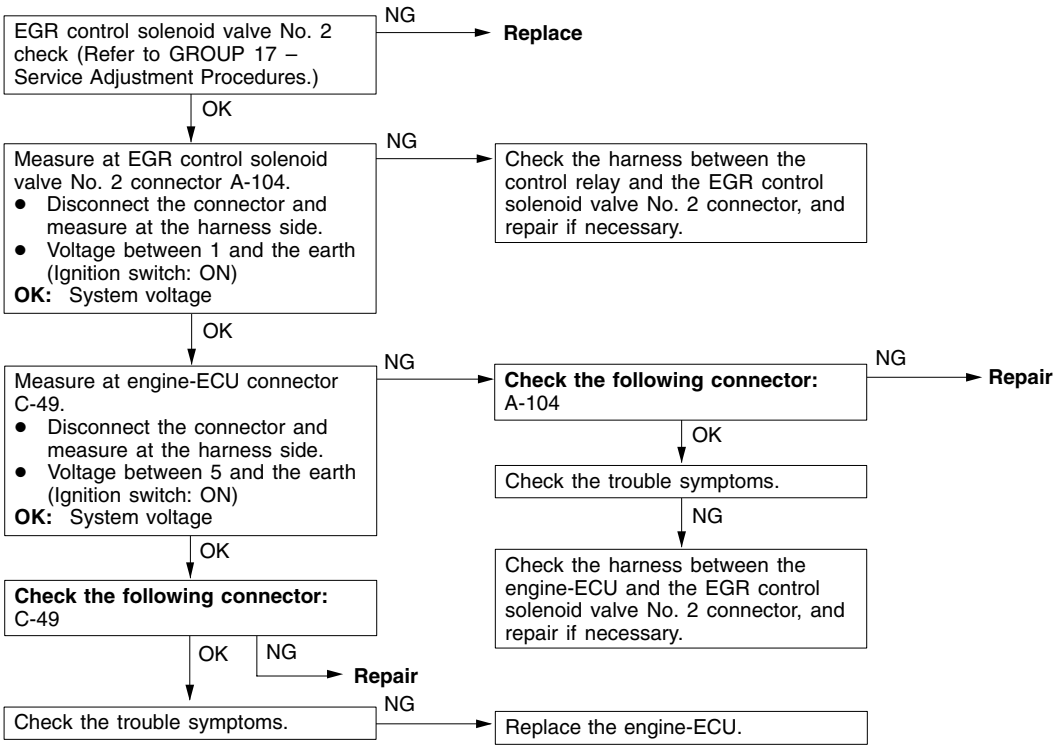

INSPECTION PROCEDURE 25

Glow plug relay inspection

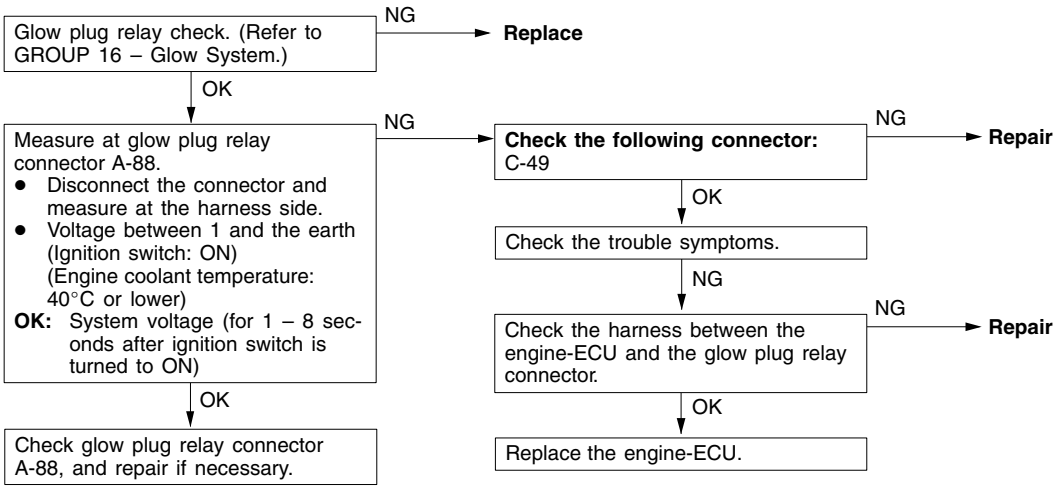

INSPECTION PROCEDURE 26

A/C switch and A/C relay inspection

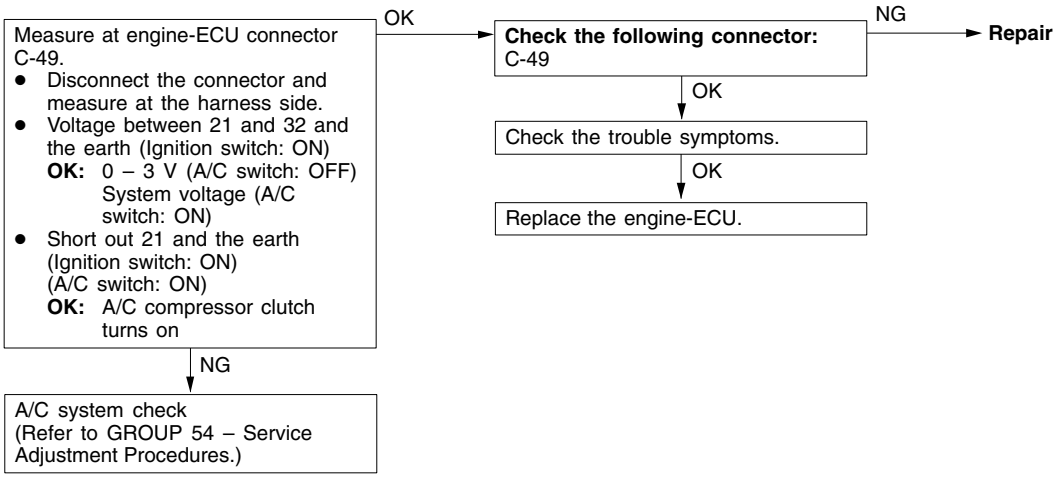

DATA LIST REFERENCE TABLE

VARIABLE

Item No.	Check item	Inspection conditions		Value to be determined as normal	Code No. or inspection procedure No.	Reference page
01	Boost air temperature sensor	Ignition switch: ON or the engine running	When the intake air temperature is –20°C	–20°C	Code No. 16	13I-13
			When the intake air temperature is 0°C	0°C		
			When the intake air temperature is 20°C	20°C		
			When the intake air temperature is 40°C	40°C		
			When the intake air temperature is 80°C	80°C		
02	Engine coolant temperature sensor	Ignition switch: ON or the engine running	When the engine coolant temperature is –20°C	–20°C	Code No. 15	13I-13
			When the engine coolant temperature is 0°C	0°C		
			When the engine coolant temperature is 20°C	20°C		
			When the engine coolant temperature is 40°C	40°C		
			When the engine coolant temperature is 80°C	80°C		
03	Barometric pressure sensor	Ignition switch: ON	Altitude 0 m	101 kPa	Code No. 13	13I-12
			Altitude 600 m	95 kPa		
			Altitude 1,200 m	88 kPa		
			Altitude 1,800 m	81 kPa		
04	Boost pressure sensor	• Engine coolant temperature: 80 – 95°C • Lamps, electrical cooling fan, and accessories: OFF • Transmission: P range • Ignition switch: ON	Altitude 0 m	101 kPa	Code No. 12	13I-11
			Altitude 600 m	95 kPa		
			Altitude 1,200 m	88 kPa		
			Altitude 1,800 m	81 kPa		
			Idling	81– 109 kPa		
			When sudden racing is done	Increased		
05	Fuel temperature sensor	Ignition switch: ON or the engine running	When the fuel temperature is –20°C	–20°C	Code No. 14	13I-12
			When the fuel temperature is 0°C	0°C		
			When the fuel temperature is 20°C	20°C		
			When the fuel temperature is 40°C	40°C		
			When the fuel temperature is 80°C	80°C		

Item No.	Check item	Inspection conditions		Value to be determined as normal	Code No. or inspection procedure No.	Reference page
06	Vehicle speed sensor	When driving	Compare the engine speed displayed in the speed meter with that in MUT-II	Matched	Code No. 17	13I-14
07	Pump speed sensor	Engine: Cranking	Compare the engine speed displayed in the tachometer with that in MUT-II	Matched	Code No. 18	13I-15
		Engine: Idling				
08	Crank angle sensor	Engine: Cranking	Compare the engine speed displayed in the tachometer with that in MUT-II	Matched	Code No. 21	13I-16
		Engine: Idling				
09	Accelerator pedal position sensor (main)	Ignition switch: ON	Accelerator pedal: Idling position	1,015 – 1,055 mV	Code No. 11	13I-10
			Accelerator pedal: Fully opened position	4,035 – 4,500 mV or higher		
10	Accelerator pedal position sensor (main)	Ignition switch: ON	Accelerator pedal: Idling position	0 %	Code No. 11	13I-10
			Accelerator pedal: Fully opened position	99 – 100 %		
11	System voltage	Ignition switch: ON		System voltage	Procedure No. 21	13I-39
13	Timing control valve*1	Engine: After warming up the engine	Idling	70 – 90 %	Code No. 25 or No. 43	13I-18 13I-22
			When engine is suddenly raced	Changes		
14	EGR command value	Engine: After warming up the engine	Idling	0 – 100%*2	–	–
			When engine is suddenly raced	Momentarily decreases		
17	Control sleeve position (target value)	Engine: After warming up the engine	Idling	2.1 – 2.5 V	Code No. 26	13I-19
			2,500 r/min (no load)	1.8 – 2.2 V		
18	Actual injection timing	Engine: After warming up the engine	Idling	0.7 – 1.2 V	–	–
			When engine is suddenly raced	Increases		
19	Injection timing command value	Engine: After warming up the engine	Idling	0.7 – 1.2 V	–	–
			When engine is suddenly raced	Increases		
21	GE actuator	Engine: After warming up the engine	Idling	0 %	Code No. 26 or No. 48	13I-19 13I-24
			2,500 r/min	18 – 38 %		
23	Control sleeve position (actual value)	Engine: After warming up the engine	Idling	2.1 – 2.5 V	Code No. 26	13I-19
			2,500 r/min (no load)	1.8 – 2.2 V		
24	Accelerator pedal position sensor (sub)	Ignition switch: ON	Accelerator pedal: Idling position	1,015 – 1,055 mV	Code No. 27	13I-20
			Accelerator pedal: Fully opened position	4,035 – 4,500 mV or higher		

Item No.	Check item	Inspection conditions		Value to be determined as normal	Code No. or inspection procedure No.	Reference page
25	Accelerator pedal position sensor (sub)	Ignition switch: ON	Accelerator pedal: Idling position	0%	Code No. 27	13I-20
			Accelerator pedal: Fully opened position	99 – 100%		
31	EGR valve position sensor (target value)	Engine: After warming up the engine	Idling under no load	2.3 – 3.3 V	Code No. 51	13I-26
			Engine is suddenly raced	Momentarily decreases (0.3 – 0.7V)		
32	EGR valve position sensor (actual value)	Engine: After warming up the engine	Idling under no load	2.3 – 3.3 V	Code No. 51	13I-26
			Engine is suddenly raced	Momentarily decreases (0.3 – 0.7 V)		
33	Variable geometry control pressure sensor <4WD>	Engine: After warming up the engine	Idling	53 – 59 kPa	Code No. 52	13I-27
			Engine is suddenly raced	Momentarily increases		

NOTE
*1: The opening degree of the timing control valve is converted into percentage. (0%: timer non-advanced angle, 100%: timer maximum advanced angle)
*2: The opening degree of the EGR solenoid valve is converted into percentage.

SWITCH

Item No.	Check item	Inspection conditions		Value to be determined as normal	Code No. or inspection procedure No.	Reference page
41	Idle switch	Ignition switch: ON (check by repeated accelerator operation)	Release the foot from the accelerator pedal.	ON	Code No. 23	13I-17
			Step on the accelerator pedal slightly.	OFF		
43	A/C switch	Engine: Idling (The A/C compressor should be in operation when the A/C switch is "ON")	A/C switch: ON	ON	Procedure No. 26	13I-41
			A/C switch: OFF	OFF		
44	Ignition switch-ST	Ignition switch: ON	Engine: Stop	OFF	–	–
			Engine: Cranking	ON		
45	Ignition switch-IG	Ignition switch: ON		ON	–	–
46	Control relay	Ignition switch: ON		ON	–	–
47	A/C relay	Engine: Idling after warming up the engine	A/C switch: OFF	OFF (A/C compressor clutch not in operation)	Procedure No. 26	13I-41
			A/C switch: ON	ON (A/C compressor clutch in operation)		

Item No.	Check item	Inspection conditions		Value to be determined as normal	Code No. or inspection procedure No.	Reference page
50	Condenser fan relay	Ignition switch: ON	A/C switch: OFF (engine coolant temperature at 102°C or higher) A/C switch: ON (engine coolant temperature at 102°C or higher, or outside temperature at 15°C or higher)	ON	Procedure No. 19	13I-37
			A/C switch: OFF (engine coolant temperature at 95°C or lower) A/C switch: ON (engine coolant temperature at 95°C or lower, or outside temperature at 15°C or lower)	OFF		
52	Glow plug relay	• Ignition switch: ON • Select actuator test item No. 02.	Relay not driven	OFF	Procedure No. 25	13I-41
			Relay is forcibly driven	ON		
53	Throttle solenoid valve	Ignition switch: ON (Engine stops)		OFF	Code No. 41	13I-21
		Engine: main sensor or actuator is failed		ON		
55	Engine warning lamp	• Ignition switch: ON • Select actuator test item No. 16.	Engine warning lamp off	OFF	Procedure No. 3	13I-31
			Engine warning lamp is forced on	ON		
56	Glow lamp	• Ignition switch: ON • Select actuator test item No. 15.	Glow lamp off	OFF	–	–
			Glow lamp is forced on	ON		
58	Neutral switch	Ignition switch: ON	N, P range	N, P	–	–
			None of the above	D, R		
60	Fuel cut relay	• Ignition switch: ON • Select actuator test item No. 27.	Relay not driven	OFF	Procedure No. 22	13I-39
			Relay is forcibly driven	ON		
62	AT/MT switch	Ignition switch: ON	Vehicles with A/T	A/T	–	–
			Vehicles with M/T	M/T		
72	Intercooler fan relay	Ignition switch: ON	Boost air temperature at 45°C or lower	OFF	Procedure No. 20	13I-38
			Boost air temperature at 60°C or higher	ON		
73	EGR control solenoid valve No. 1	Engine: After warming up the engine	Idling under no load (stable condition)	OFF	Procedure No. 23	13I-40
			Engine is suddenly raced (EGR amount decreasing)	OFF		
			Engine is suddenly raced (EGR amount increasing)	ON (momentarily)		

Item No.	Check item	Inspection conditions		Value to be determined as normal	Code No. or inspection procedure No.	Reference page
74	EGR control solenoid valve No. 2	Engine: After warming up the engine	Idling (stable condition)	ON	Procedure No. 24	13I-40
			When engine is suddenly raced (EGR amount decreasing)	OFF (momentarily)		
			When engine is suddenly raced (EGR amount increasing)	ON		

ACTUATOR TEST TABLE

Item No.	Check item	Drive Contents	Inspection conditions	Value to be determined as normal	Code No. or inspection procedure No.	Reference page
02	Glow plug relay	Turning the relay from OFF to ON or from ON to OFF	Ignition switch: ON	Battery charge is energized to the glow plug when the glow plug relay is ON.	Procedure No. 25	13I-41
03	A/C compressor relay	Turning the relay from OFF to ON or from ON to OFF	Ignition switch: ON	The A/C compressor clutch makes an audible sound.	Procedure No. 26	13I-41
11	Timing control valve	Turn the timing control valve to ON	• Ignition switch: ON • Engine: Idling • Timer piston position sensor: Normal	Makes an audible sound	Code No. 43	13I-22
12		Turn the timing control valve to OFF				
15	Glow lamp	Turn the glow lamp on or off	Ignition switch: ON	The glow lamp turns on.	–	–
16	Warning lamp	Turn the warning lamp on or off	Ignition switch: ON	The warning lamp turns on.	Procedure No. 3, 4	13I-31
22	Condenser fan relay	Turning the relay from OFF to ON or from ON to OFF	Ignition switch: ON	The condenser fan rotates.	Procedure No. 19	13I-37
23	Throttle solenoid valve	Turn the solenoid valve from OFF to ON or from ON to OFF	• Ignition switch: ON • Vehicle speed: 0 km/h • Engine speed: 1,000 r/min or lower	Makes an audible sound	Code No. 41	13I-21

Item No.	Check item	Drive Contents	Inspection conditions	Value to be determined as normal	Code No. or inspection procedure No.	Reference page
25	GE actuator	Turn the GE actuator to ON	• Ignition switch: ON • Engine speed: 0 r/min or lower • Control sleeve position sensor: Normal	Measure the wave pattern between engine-ECU connector terminals (1) and (15) using an analyzer and check the change in the duty ratio.	Code No. 48	13I-24
26		Turn the GE actuator to OFF				
27	Fuel cut solenoid valve	Turn the solenoid valve to from OFF to ON or from ON to OFF.	• Ignition switch: ON • Vehicle speed: 0 km/h	Makes an audible sound	–	–
34	Middle position of GE actuator	Hold the injection governor in its middle position.	• Ignition switch: ON	When the crankshaft is turned clockwise during the adjustment of the injection timing, the injection pipes spray out fuel.	Code No. 48	13I-24
35	Variable geometry solenoid valve <4WD>	Turn the solenoid valve to ON	Ignition switch: ON	Makes an audible sound	Code No. 49	13I-25
36		Turn the solenoid valve to OFF	Engine: Idling	Operating sound and vibration, which accompany with the duty activation, cease.		
37	EGR control solenoid valve No. 1	Turn the solenoid valve from OFF to ON from ON to OFF	Ignition switch: ON	Makes an audible sound	Procedure No. 23	13I-40
38	EGR control solenoid valve No. 2	Turn the solenoid valve from OFF to ON from ON to OFF	Ignition switch: ON	Makes an audible sound	Procedure No. 24	13I-40
39	Intercooler fan relay	Turn the solenoid valve from OFF to ON from ON to OFF	Ignition switch: ON	Makes an audible sound	Procedure No. 20	13I-38

CHECK AT THE ENGINE-ECU TERMINALS

TERMINAL VOLTAGE CHECK CHART

Engine-ECU Connector Terminal Arrangement

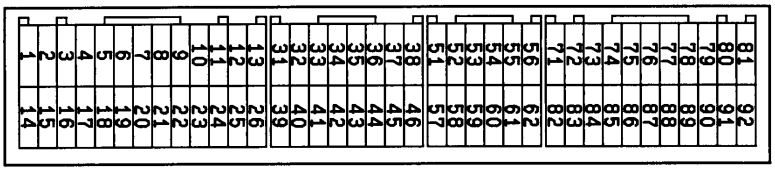

W6106AQ

NOTE
*: Vehicles with immobilizer system

Terminal No.	Check item	Inspection conditions (engine status)		Normal condition:
1	GE actuator	Ignition switch: ON (Engine stops)		9 V or higher
2	Fuel cut solenoid valve	Other than below		0 – 1 V
		Engine: Idling → Stop (in about 1 – 3 second)		System voltage (for 3 – 5 seconds)
3	Timing control valve	Ignition switch: ON (Engine stops)		11 V or higher
4	Glow lamp	Ignition switch: OFF → ON		0 – 1 V (In few seconds) → System voltage
5	EGR control solenoid valve No. 2	Engine: Idling after warming up the engine (stable condition)		System voltage
		When any one of the following conditions is satisfied: ● Engine speed: 3,700 r/min <M/T>, 3,100 r/min <A/T> or higher ● Engine speed: 450 r/min or lower ● Vehicle speed: 176 km/h or higher ● When accelerator pedal is fully depressed ● When engine speed is 2,700 r/min or higher and vehicle speed is 140 km/h or higher ● Engine coolant temperature: 112°C or higher Accelerator pedal is released during one of the above.		System voltage
6	Intercooler fan relay	Ignition switch: ON	Boost air temperature at 45°C or lower	System voltage
			Boost air temperature at 60°C or higher	0 – 1 V
7	Condenser fan relay	Condenser fan in operation		0 – 1 V
8	Engine warning lamp	Ignition switch: OFF → ON		0 –1 V (In few seconds) → System voltage
9	EGR control solenoid valve No. 1	Ignition switch: ON		System voltage
		Engine: After warming up the engine, conduct sudden racing from idling.		Very briefly rises from voltage during idling
12	Power supply	Ignition switch: ON		System voltage
25				
14	Throttle solenoid valve	Ignition switch: ON (Engine stops)		System voltage
		Engine: Idling after warming up the engine.		0 – 1 V
15	GE actuator power supply	Ignition switch: ON		System voltage
16	Glow plug relay	● Engine coolant temperature: 40°C or lower ● Ignition switch: OFF → ON		System voltage (In about 8 seconds: at 20°C) → 0 – 1 V

Terminal No.	Check item	Inspection conditions (engine status)		Normal condition:
17	Variable geometry solenoid valve <4WD>	Engine: After warming up the engine	Engine is idling	4.4 – 10.1 V
			Engine is suddenly raced	Voltage rises
21	A/C relay	A/C switch: OFF → ON		System voltage → 0 – 1 V
31	Idle switch	Ignition switch: ON	Release the foot from the accelerator pedal.	0 – 1 V
			Step on the accelerator pedal slightly	3 V or higher
32	A/C switch	A/C in operation (compressor in operation)		System voltage
36	Selector switch between A/T and M/T	Ignition switch: ON		0 – 1 V (A/T)
				System voltage (M/T)
38 or 46*	Control relay	Ignition switch: ON		0 – 1 V
		Ignition switch: ON → OFF (in about 8 seconds)		System voltage
51	Pump speed sensor	Engine: Idling (Use a digital voltage meter to check.)		0 V ↔ 5 V (repeat the change)
55	Accelerator pedal position sensor (sub)	Ignition switch: ON	Accelerator pedal: Idling position	0.9 – 1.1 V
			Accelerator pedal: Fully opened position	3.7 V or higher
60	Sensor power supply	Ignition switch: ON		4.6 – 5.4 V
71	Ignition switch-ST	Engine: Cranking		8 V or higher
80	Back-up power supply	Ignition switch: OFF		System voltage
81	Power supply to accelerator pedal position sensor (1st channel)	Ignition switch: ON		4.6 – 5.4 V
82	Ignition switch-IG	Ignition switch: ON		System voltage
83	Engine coolant temperature sensor	Ignition switch: ON	Engine coolant temperature: 0°C	3.7 – 4.3 V
			Engine coolant temperature: 20°C	2.8 – 3.4 V
			Engine coolant temperature: 40°C	1.9 – 2.5 V
			Engine coolant temperature: 80°C	0.6 – 1.2 V
84	Accelerator pedal position sensor (main)	Ignition switch: ON	Accelerator pedal: Idling position	0.9 – 1.1 V
			Accelerator pedal: Fully opened position	3.7 V or higher
85	Boost pressure sensor	Ignition switch: ON (101 kPa)		1.0 – 1.4 V
86	Vehicle speed sensor	• Ignition switch: ON • Move the vehicle forward slowly		0 V ↔ 8 – 12 V (repeat the change)
87	Fuel temperature sensor	Ignition switch: ON	Fuel temperature: 0°C	3.2 – 3.6 V
			Fuel temperature: 20°C	2.3 – 2.7 V
			Fuel temperature: 40°C	1.5 – 1.9 V
			Fuel temperature: 80°C	0.4 – 0.8 V

Terminal No.	Check item	Inspection conditions (engine status)		Normal condition:
88	Boost air temperature sensor	Ignition switch: ON	Intake air temperature: 0°C	3.2 – 3.8 V
			Intake air temperature: 20°C	2.3 – 2.9 V
			Intake air temperature: 40°C	1.4 – 2.0 V
			Intake air temperature: 80°C	0.4 – 1.0 V
89	Crank angle sensor	Engine: Idling (Use a digital voltage meter to check.)		0 V ↔ 5 V (repeat the change)
90	EGR valve position sensor	Engine: After warming up the engine	Idling under no load	2.3 – 3.3 V
			Engine is suddenly raced	Momentarily drops from voltage during idling
91	Neutral switch <A/T>	Ignition switch: ON (Engine stops)	Set the selector lever to P or N	0 – 1 V
			Set the selector lever to D, 2, L, or R	System voltage
	Parking switch <M/T>	Ignition switch: ON (Engine stops)	Parking brake: ON	0 – 1 V
			Parking brake: OFF	System voltage

CHECK CHART FOR RESISTANCE AND CONTINUITY BETWEEN TERMINALS

1. Turn the ignition switch to OFF.
2. Disconnect the engine-ECU connector.
3. Measure the resistance and check for continuity between the terminals of the engine-ECU harness-side connector while referring to the check chart.

   NOTE
   (1) When measuring resistance and checking continuity, a harness for checking contact pin pressure should be used instead of inserting a test probe.
   (2) Checking need not be carried out in the order given in the chart.

   Caution
   If the terminals that should be checked are mistaken, or if connector terminals are not correctly shorted to earth, damage may be caused to the vehicle wiring, sensors, engine-ECU and/or ohmmeter.
   Be careful to prevent this!

4. If the ohmmeter shows any deviation from the standard value, check the corresponding sensor, actuator and related electrical wiring, and then repair or replace.
5. After repair or replacement, recheck with the ohmmeter to confirm that the repair or replacement has corrected the problem.

Engine-ECU Harness Side Connector Terminal Arrangement

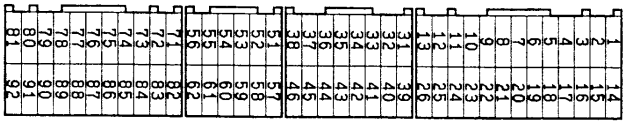

9FU0392

Terminal No.	Inspection item	Normal condition (Check condition)
1 – 15	GE actuator	0.64 – 0.72 Ω
2 – Body earth	Fuel cut solenoid valve	6.8 – 9.2 Ω
3 – 12	Timing control valve	10.8 – 11.2 Ω
5 – 12	EGR control solenoid valve No. 2	36 – 44 Ω (at 20°C)
9 – 12	EGR control solenoid valve No. 1	36 – 44 Ω (at 20°C)
13 – Body earth	Engine-ECU earth	Continuity (0 Ω)
26 – Body earth		
14 – 12	Throttle solenoid valve	29 – 35 Ω (at 20°C)
31 – 61	Idle switch	Continuity (Replace the foot from the accelerator pedal)
		No continuity (when accelerator pedal is fully depressed)
51 – 61	Pump speed sensor	1.36 – 1.84 kΩ
73 – 74	Control sleeve position sensor	5.6 – 6.2 Ω
73 – 75		5.6 – 6.2 Ω
74 – 75		11.2 – 12.4 Ω
77 – 78	Timer piston position sensor	160 – 168 Ω
76 – 77		80 – 84 Ω
76 – 78		80 – 84 Ω

Terminal No.	Inspection item	Normal condition (Check condition)
83 – 61	Engine coolant temperature sensor	5.1 – 6.5 kΩ (when the engine coolant temperature is 0°C)
		2.1 – 2.7 kΩ (when the engine coolant temperature is 20°C)
		0.9 – 1.3 kΩ (when the engine coolant temperature is 40°C)
		0.26 – 0.36 kΩ (when the engine coolant temperature is 80°C)
87 – 61	Fuel temperature sensor	5.1 – 6.5 kΩ (when the fuel temperature is 0°C)
		2.1 – 2.7 kΩ (when the fuel temperature is 20°C)
		0.9 – 1.3 kΩ (when the fuel temperature is 40°C)
		0.26 – 0.36 kΩ (when the fuel temperature is 80°C)
88 – 61	Boost air temperature sensor	5.3 – 6.7 kΩ (when the intake air temperature is 0°C)
		2.3 – 3.0 kΩ (when the intake air temperature is 20°C)
		1.0 – 1.5 kΩ (when the intake air temperature is 40°C)
		0.30 – 0.42 kΩ (when the intake air temperature is 80°C)

INSPECTION PROCEDURE USING AN ANALYZER

CRANK ANGLE SENSOR

An analyzer can be used to observe the wave pattern in order to visually check the crankshaft rotation and abnormalities in the sensor output.

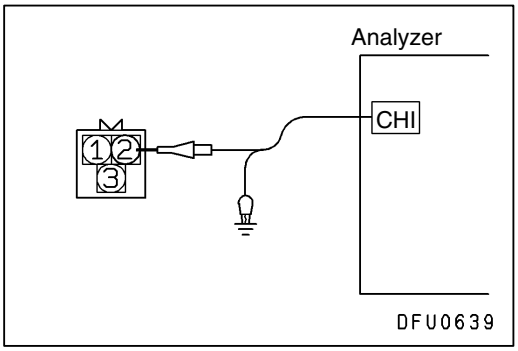

Measurement Method

1. Disconnect the crank angle sensor connector and connect the special tool (test harness: MD998478) in between.
2. Connect the analyzer probe to terminal No. 2 of the crank angle sensor connector (black clip of special tool).

   NOTE
   - When measuring at the engine-ECU connector, connect the analyzer probe to terminal No. 89.

Standard Wave Pattern

Observation conditions

	Crank angle sensor
Probe select switch	× 1
TIME/DIV.	10 ms
VOLTS/DIV.	2 V
AC – GND – DC	DC
Other	–
Engine r/min	Idle speed

Standard wave pattern

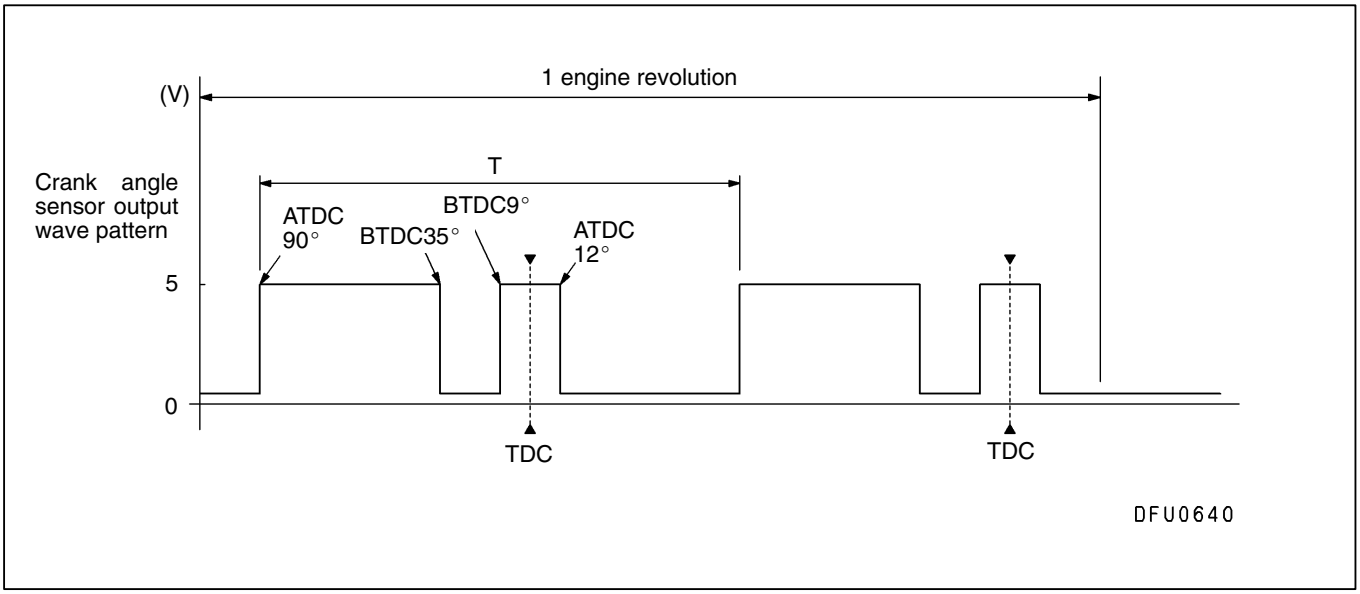

Explanation of Wave Pattern

The crank angle sensor detects the rotation of a sensing plate. Accordingly, the period T (seconds) can be measured and the engine speed can be calculated from the following formula.

$$\text{Engine speed (r/min)} = \frac{2}{4T\ (\text{sec})} \times 60 = \frac{30}{T\ (\text{sec})}$$

Wave Pattern Observation Points

Check that cycle time T becomes shorter and the frequency increases when the engine speed is increased.

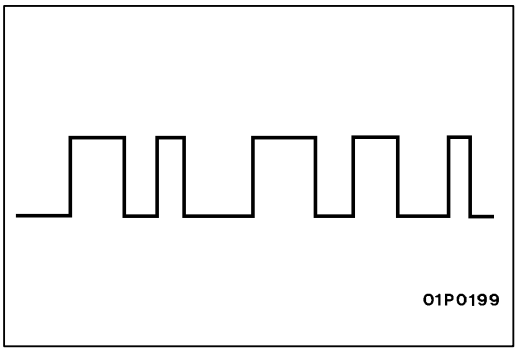

Examples of Abnormal Wave Patterns

- Example 1

  Cause of problem

  Sensor interface malfunction

  Wave pattern characteristics

  Rectangular wave pattern is output even when the engine is not started.

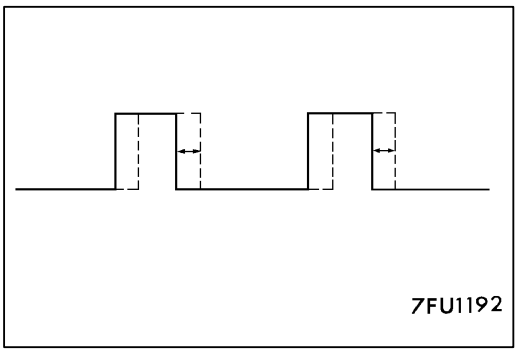

- Example 2

  Cause of problem

  Abnormality in sensor disk

  Wave pattern characteristics

  Wave pattern is displaced to the left or right.

PUMP SPEED SENSOR

An analyzer can be used to observe the wave pattern in order to visually check the pump shaft rotation and abnormalities in the sensor output.

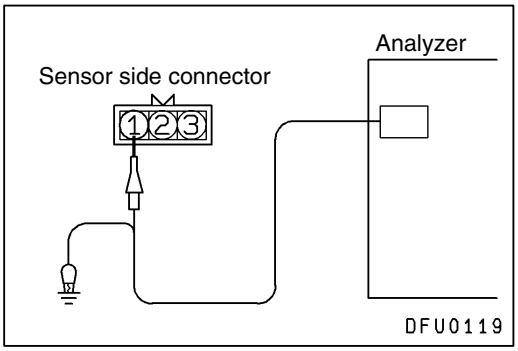

Measurement Method

1. Disconnect the pump speed sensor connector and connect the special tool (test harness: MD991658) in between. (All terminals should be connected.)
2. Connect the analyzer probe to terminal No. 1 of the pump speed sensor connector (black clip of special tool).

   NOTE
   - When measuring at the engine-ECU connector, connect the analyzer probe to terminal No. 51.

Standard Wave Pattern

Observation conditions

	Pump speed sensor
Probe select switch	Set according to the probe.
TIME/DIV.	About 10 msec
VOLTS/DIV.	About 0.5 V
AC – GND – DC	DC
Engine r/min	Idle speed

Standard wave pattern

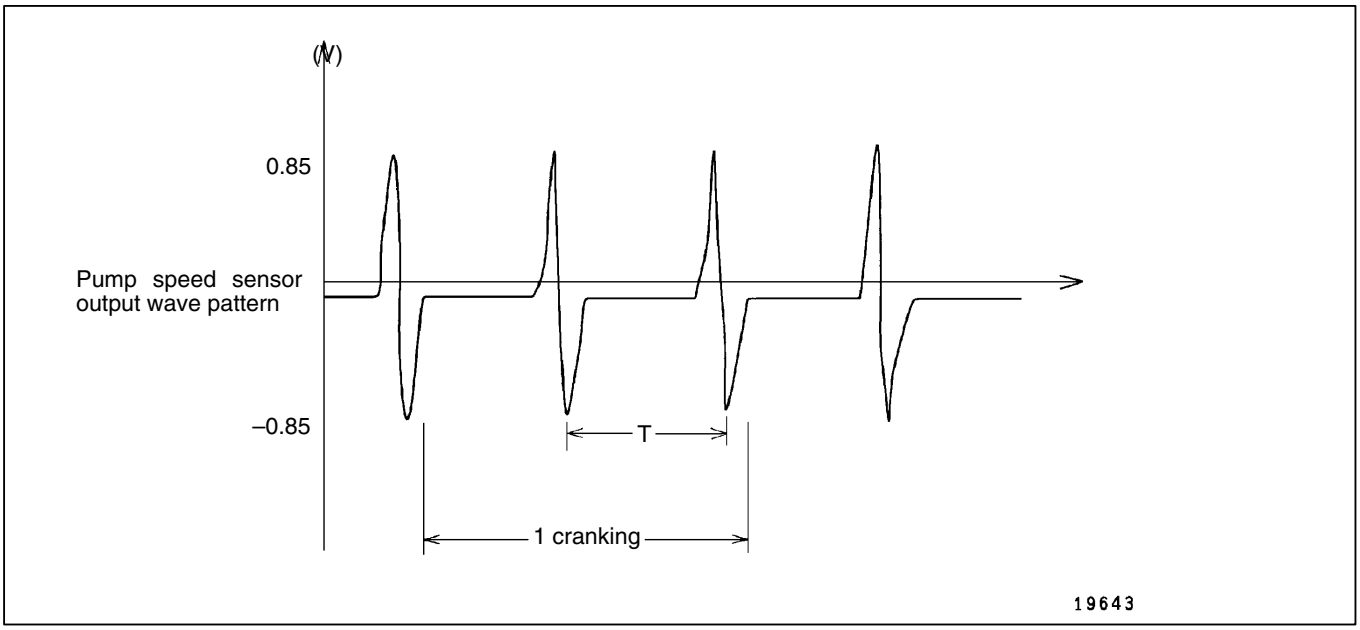

Explanation of Wave Pattern

The pump speed sensor detects the rotation of the pump shaft. Accordingly, the period T (seconds) can be measured and the engine speed can be calculated from the following formula.

$$\text{Engine speed} = \frac{2}{4 \times T\,(\text{sec})} \times 60$$

Wave Pattern Observation Points

Check that cycle time T becomes shorter and the frequency increases when the engine speed is increased.

Examples of Abnormal Wave Patterns

- Example 1

  Cause of problem

  Malfunction or open circuit in sensor

  Wave pattern characteristics

  No signal is output even when engine is started.

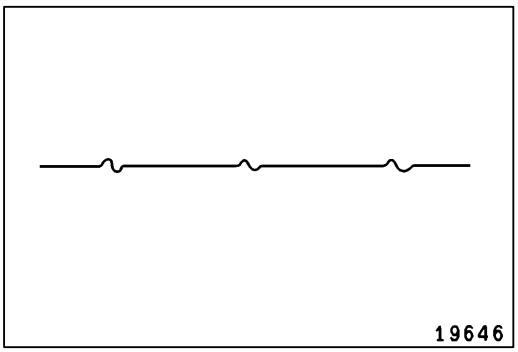

- Example 2

  Cause of problem

  Incorrect gap between sensor and sensing gear plate

  Wave pattern characteristics

  No signal is output even when engine is started, or signal amplitude is small.

ON-VEHICLE SERVICE

INJECTION TIMING CHECK AND ADJUSTMENT

Refer to GROUP 11B – Engine Adjustment.

IDLE SPEED CHECK AND ADJUSTMENT

Refer to GROUP 11B – Engine Adjustment.

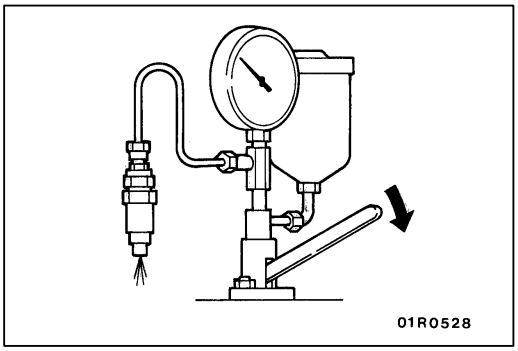

INJECTION NOZZLE CHECK AND ADJUSTMENT

Caution
Never touch the injection spray that is injected from the nozzle.

FUEL INJECTION INITIAL PRESSURE CHECK

1. Install the injection nozzle to a nozzle tester.
2. Move the lever of the nozzle tester 2 – 3 times to inject fuel and to bleed the air.
3. Gently press down the lever of the nozzle tester, and take a reading of the indication value on the pressure gauge at the point where the needle slowly rises and then suddenly drops.

   Standard value (Fuel injection initial pressure): 14,710 – 15,490 kPa

4. If the fuel injection initial pressure is outside the standard value, disassembly the nozzle holder to clean it, and then change the thickness of the shim to adjust the fuel injection initial pressure.

   NOTE
   (1) For disassembly, reassembly and adjustment of the nozzle holder, refer to P.13B-8.
   (2) There are 10 shims for adjustment, with thicknesses in the range of 0.10 – 0.80 mm.
   (3) When the shim thickness is increased by 0.1 mm, the fuel injection initial pressure increases by 2,350 kPa.

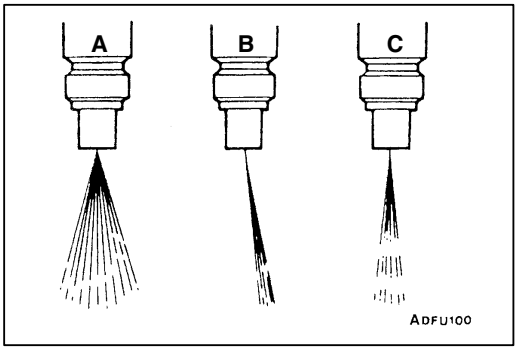

INJECTION SPRAY CONDITION CHECK

1. Move the lever of the nozzle tester rapidly (4 – 6 times per second) to eject the fuel continuously. Check to be sure that the injection spray comes out evenly in a cone shape (injection spray angle is 0°). The injection spray patterns shown in the illustration at left are wrong.
   A. Injection angle is tool large
   B. Bias
   C. Intermittent fuel injection

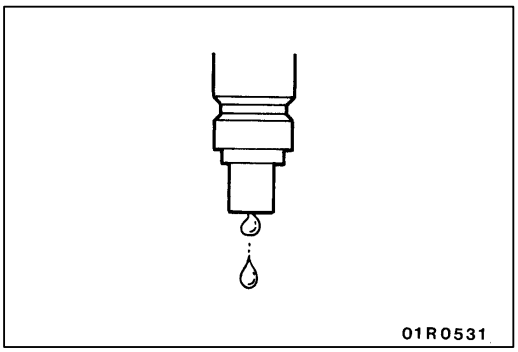

2. Check to be sure that no fuel drips after injection is completed.
3. If there are any drips, disassemble the nozzle, clean it and reinspect, or replace the nozzle.

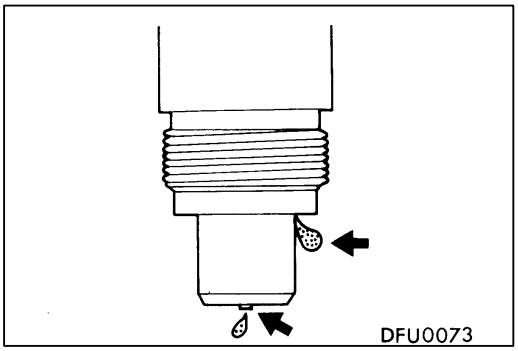

NOZZLE FUEL-TIGHT CHECK

1. Gently raise the lever of the nozzle tester until the pressure inside the nozzle (value displayed on pressure gauge) becomes 12,750 – 13,730 kPa, and after holding this pressure for approximately 10 seconds, check to be sure that there are no fuel leaks from the nozzle.
2. If there are any leaks, disassemble the injection nozzle, clean it and re-inspect, or replace the nozzle.

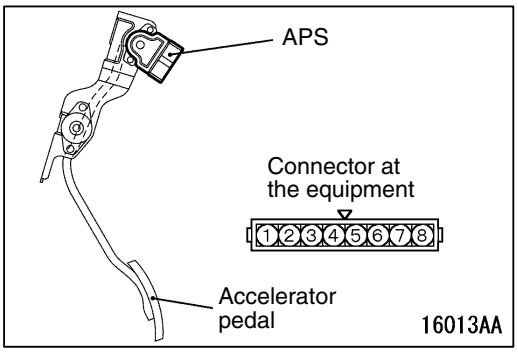

ACCELERATOR PEDAL POSITION SENSOR (APS) ADJUSTMENT

Caution

(1) APS is properly adjusted in the factory. Therefore, APS should not be moved carelessly.

(2) If the adjustment is not done correctly, carry out a new adjustment in the following procedure:

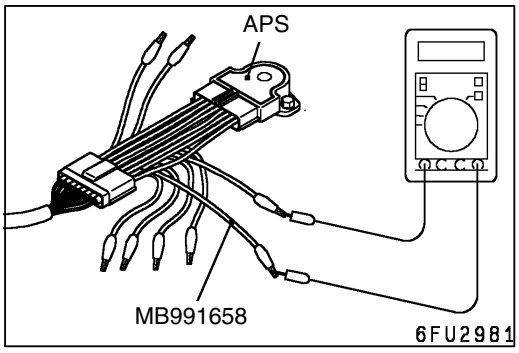

1. Connect MUT-II to the diagnosis connector. If MUT-II is not used, the following operation should be done:
   (1) Disconnect APS connector and connect the special tool (test harness: MB991658) between two connectors.
   (Be careful not to take a wrong terminal No.)
   (2) Connect a digital voltmeter between APS connector terminal No. 3 (APS1 output) and terminal No. 1 (APS1 earth).
2. Loosen the APS mounting bolt to make it temporarily tightened.
3. Ensure that the accelerator pedal arm contacts the closing stopper.
4. Turn on the ignition switch. (Engine does not start.)
5. Turn APS to make APS1 output the standard value.

   Standard value: 0.985 – 1.085 V
6. Tighten the APS mounting bolt securely.

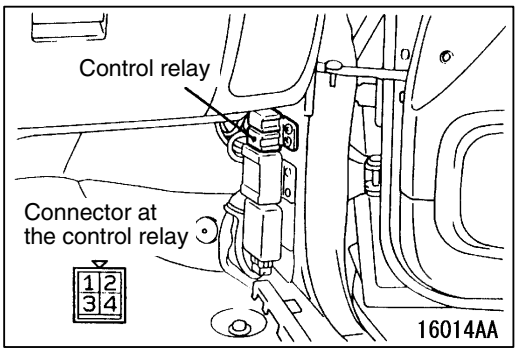

CONTROL RELAY CONTINUITY CHECK

System voltage	Terminal No.			
	1	2	3	4
When no current is supplied		○		○
When current is supplied	○	⊕	○	⊖

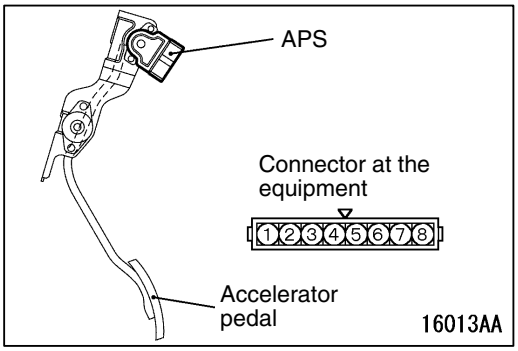

ACCELERATOR PEDAL POSITION SENSOR (APS) CHECK

1. Disconnect the APS connector.
2. Measure the resistance between APS connector terminal No. 2 [APS (main) power supply] and the terminal No. 1 [APS (main) earth] as well as the resistance between terminal No. 8 [APS (sub) power supply] and terminal No. 7 [APS (sub) earth].

   Standard value: 3.5 – 6.5 kΩ
3. Measure the resistance between APS connector terminal No. 2 [APS (main) power supply] and the terminal No. 3 [APS (main) output] as well as the resistance between terminal No. 8 [APS (sub) power supply] and terminal No. 6 [APS (sub) output].

   Normal condition:

Step on the accelerator pedal slowly.	Resistance smoothly changes in proportion to the travel of the accelerator pedal.

4. If the APS is out of the range of the standard value or the resistance does not change smoothly, replace APS.

   NOTE
   Make an adjustment on APS after replacement. (Refer to P.13I-58.)

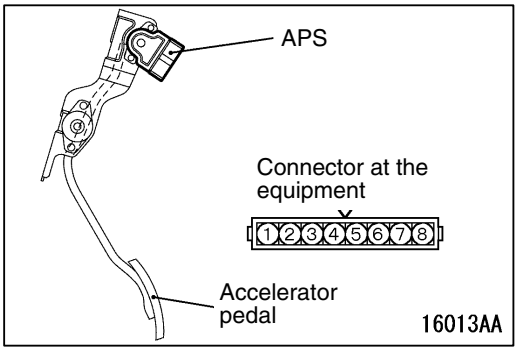

IDLE SWITCH CHECK

1. Disconnect the accelerator pedal position sensor (APS) connector.
2. Check the continuity between the idle switch connector terminal No. 4 (idle switch) and terminal No. 5 (earth).

Normal condition:

Accelerator pedal	Continuity
Step on	None
Release	Yes

3. Replace APS if it is inoperative.

   NOTE
   Make an adjustment on APS after replacement.(Refer to P.13I-58.)

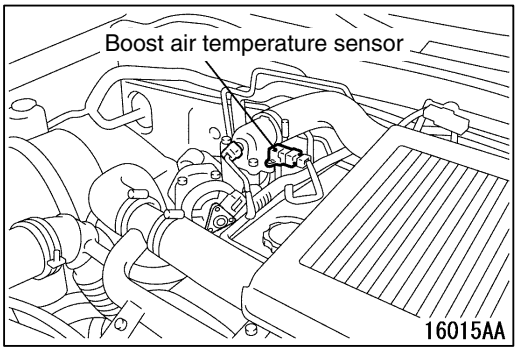

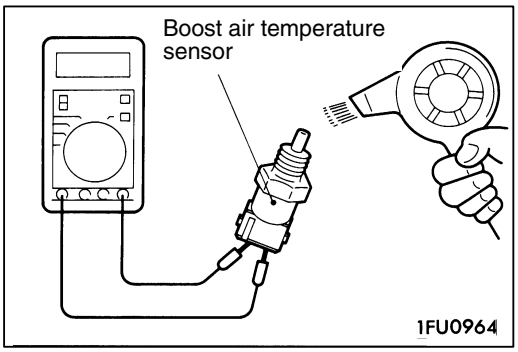

BOOST AIR TEMPERATURE SENSOR (INTAKE AIR TEMPERATURE SENSOR) CHECK

1. Remove the boost air temperature sensor.
2. Measure the resistance at the boost air temperature sensor connector terminal.

   Standard value:
   2.3 – 3.0 kΩ (at 20°C)
   0.30 – 0.42 kΩ (at 80°C)

3. Measure the resistance at the sensor part being warmed up by a hair dryer.

   Normal condition:

Temperature (°C)	Resistance value (kΩ)
Rising	Become smaller

4. If the resistance is not within the range of the standard value or does not change at all, replace the boost air temperature sensor.

   NOTE
   Replace the gasket as well.

5. Tighten the boost air temperature sensor to the specified torque.

   Tightening torque: 14 ± 1 N·m

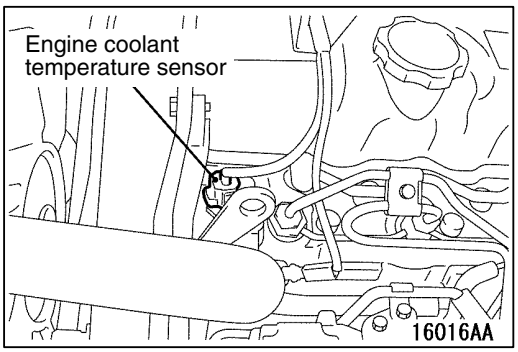

ENGINE COOLANT TEMPERATURE SENSOR CHECK

1. Remove the engine coolant temperature sensor.

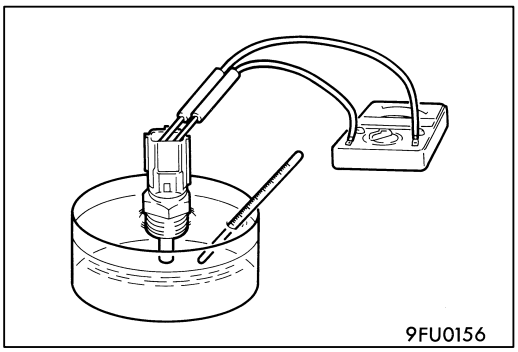

2. Measure the resistance between the terminals of the connectors while immersing the sensor part of the engine coolant temperature sensor in the hot water.

   Standard value:
   2.1 – 2.7 kΩ (at 20°C)
   0.26 – 0.36 kΩ (at 80°C)

3. If the resistance is not within the range of the standard value, replace the engine coolant temperature sensor.

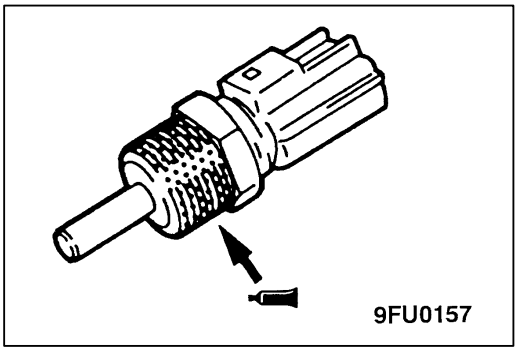

4. Apply the sealant to the thread of the engine coolant temperature sensor and tighten it to the specified torque.

   Sealant:
   3M Nut Locking Part No. 4171 or equivalent

   Tightening torque: 36 ± 6 N·m

EVACUATION OF WATER FROM FUEL FILTER

Refer to GROUP 13E of the '97 L200 Workshop Manual (Pub. No. PWTE96E1)

EVACUATION OF AIR FROM FUEL FILTER

Refer to GROUP 13E of the '97 L200 Workshop Manual (Pub. No. PWTE96E1).

FUEL FILTER CARTRIDGE REPLACEMENT

Refer to GROUP 13F of the '97 L200 Workshop Manual (Pub. No. PWTE96E1).

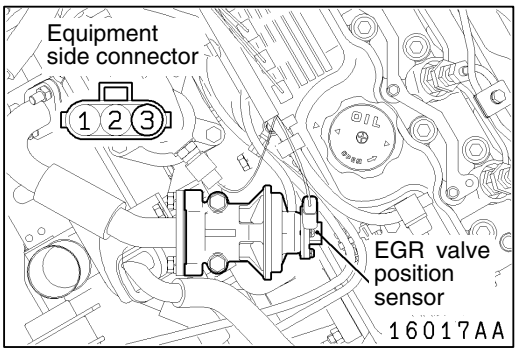

EGR VALVE POSITION SENSOR CHECK

1. Disconnect the EGR valve position sensor connector.
2. Measure the resistance between the EGR valve position sensor side connector terminal No. 2 and terminal No. 3.

   Standard value: 3.5 – 6.5 kΩ

3. Install a hand vacuum pump to the EGR valve nipple.
4. Measure the resistance between the EGR valve position sensor-side connector terminal No. 1 and terminal No. 3 when a negative pressure is applied.

   Normal condition:

Slowly increase the negative pressure to 60 kPa.	Changes smoothly in proportion to the negative pressure

5. If the resistance is outside the standard value, or if it doesn't change smoothly, replace the EGR valve position sensor.

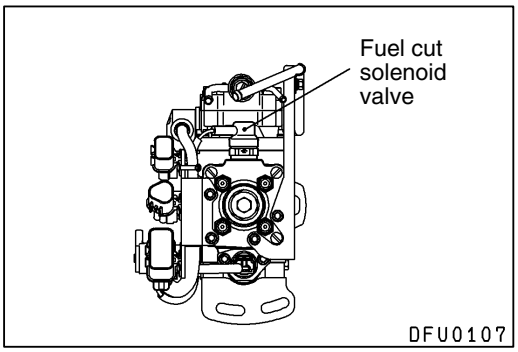

FUEL INJECTION PUMP CHECK

FUEL CUT SOLENOID VALVE CHECK

Operation noise check

1. Attach the sound scope to the fuel cut solenoid valve to check for running noise when the ignition switch is "ON".

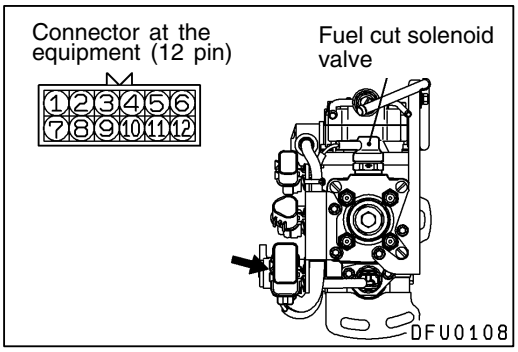

Coil resistance check

1. Disconnect the injection pump connector (12 pin).
2. Measure the resistance between terminal No. 1 (fuel cut solenoid valve) and the injection pump body.

   Standard value: 6.8 – 9.2 Ω

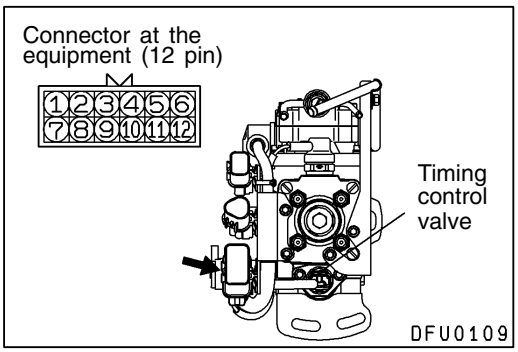

TIMING CONTROL VALVE CHECK

1. Disconnect the injection pump connector (12 pin).
2. Measure the resistance between terminal No. 5 and terminal No. 9.

   Standard value: 10.8 – 11.2 Ω

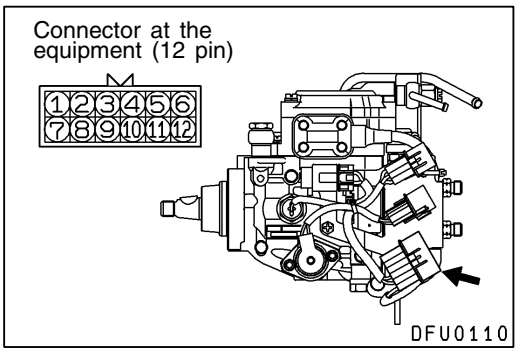

GE ACTUATOR (ELECTRONIC GOVERNOR) CHECK

1. Disconnect the injection pump connector (12 pin).
2. Measure the resistance between terminal No. 6 and terminal No. 10.

   Standard value: 0.64 – 0.72 Ω

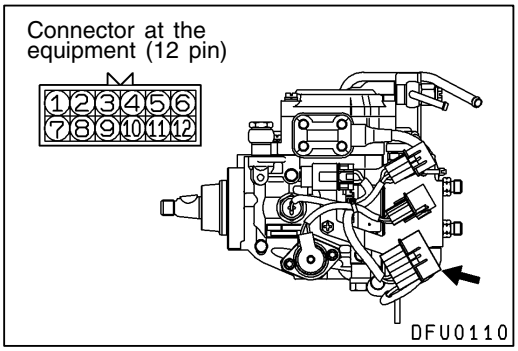

FUEL TEMPERATURE SENSOR CHECK

1. Disconnect the injection pump connector (12 pin).
2. Measure the resistance between terminal No. 7 and terminal No. 11.

   Standard value: 1.4 – 2.6 kΩ

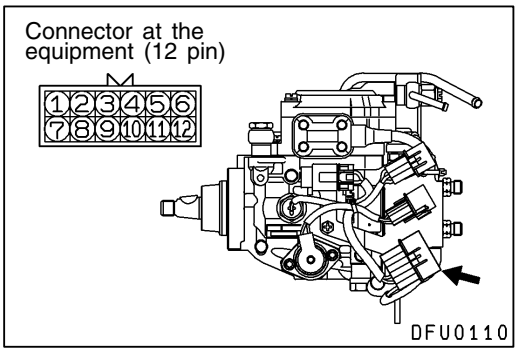

CONTROL SLEEVE POSITION SENSOR CHECK

1. Disconnect the injection pump connector (12 pin).
2. Measure the resistance between the following terminals.

   Standard value:

Terminal No. 4 – Terminal No. 12	11.2 – 12.4 Ω
Terminal No. 4 – Terminal No. 8	5.6 – 6.2 Ω
Terminal No. 8 – Terminal No. 12	5.6 – 6.2 Ω

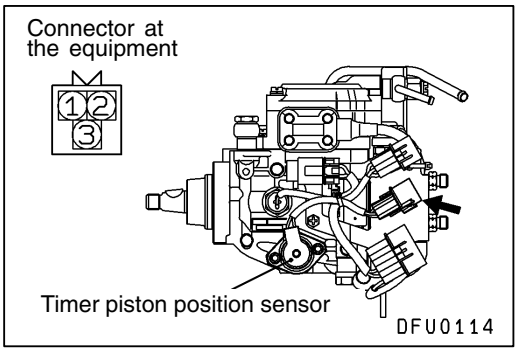

TIMER PISTON POSITION SENSOR CHECK

1. Disconnect the timer piston position sensor connector.
2. Measure the resistance between the following terminals.

   Standard value:

Terminal No. 1 – Terminal No. 2	160 – 168 Ω
Terminal No. 1 – Terminal No. 3	80 – 84 Ω
Terminal No. 2 – Terminal No. 3	80 – 84 Ω

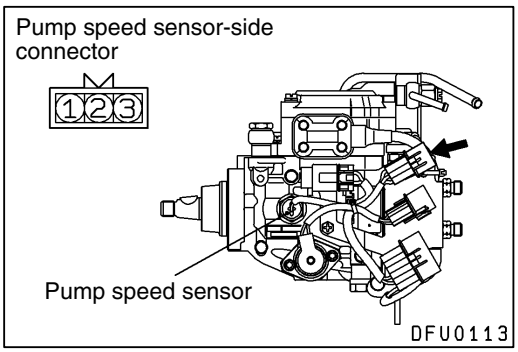

PUMP SPEED SENSOR CHECK

1. Disconnect the pump speed sensor connector.
2. Measure the resistance between terminals No. 1 and No. 2.

   Standard value: 1.36 – 1.84 kΩ

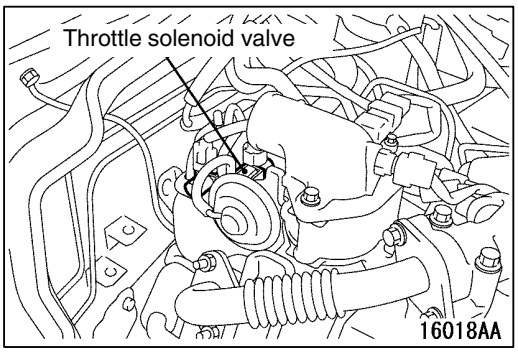

THROTTLE SOLENOID VALVE CHECK

INSPECTION PROCEDURE

1. Disconnect the vacuum hose (white stripe and yellow stripe) from the solenoid valve.
2. Disconnect the harness connector.

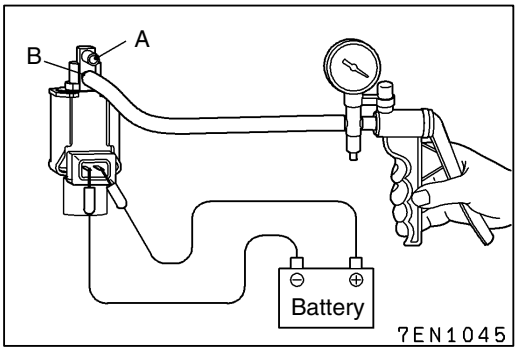

3. Install a hand vacuum pump to solenoid valve nipple B.
4. Use jumper leads to connect the solenoid valve terminals and the battery terminals.
5. Disconnect the jumper lead from the battery (–) terminal, and then apply negative pressure to check the air-tightness.

Standard value:

Jumper lead	Nipple A	Normal condition
Connected	Open	Negative pressure leaks
	Closed	Negative pressure maintained
Disconnected	Open	Negative pressure maintained

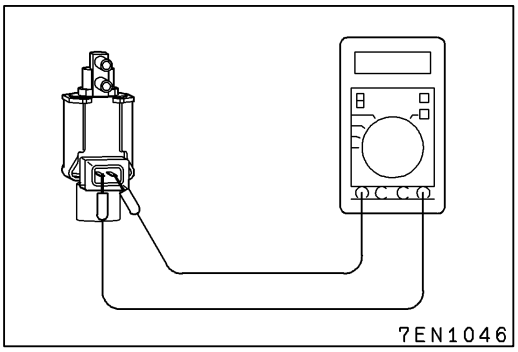

COIL RESISTANCE CHECK

1. Measure the resistance between the solenoid valve terminals.

   Standard value: 29 – 35 Ω (at 20°C)

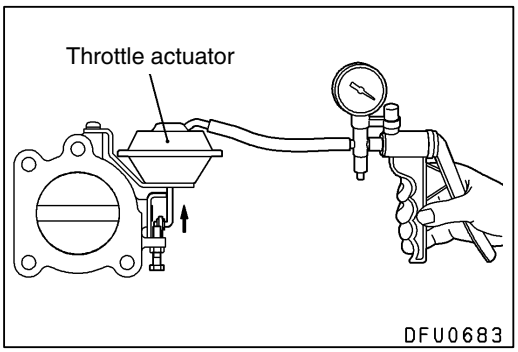

THROTTLE ACTUATOR CHECK

1. Remove the vacuum hose (yellow stripe) from the throttle actuator and connect a hand vacuum pump to the throttle actuator nipple.
2. Check that the actuator rod moves smoothly when applying vacuum gradually.
   Also, check that the vacuum is maintained when applying 53 kPa of vacuum.

VARIABLE GEOMETRY SOLENOID VALVE CHECK

Refer to GROUP 15 – On-vehicle Service.

EGR CONTROL SOLENOID VALVE CHECK

Refer to GROUP 17 – Emission Control System <4D5>.

INJECTION NOZZLE

REMOVAL AND INSTALLATION

Refer to GROUP 13E of the '97 L200 Workshop Manual (Pub. No. PWTE96E1).

INJECTION PUMP

REMOVAL AND INSTALLATION

Pre-removal Operation
- Engine Coolant Draining
- Battery and Battery Tray Removal
- Intercooler Removal (Refer to GROUP 15.)
- Timing Belt Removal

Post-installation Operation
- Timing Belt Installation
- Intercooler Installation (Refer to GROUP 15.)
- Battery and Battery Installation
- Engine Coolant Refilling
- Injection Timing Adjustment (Refer to GROUP 11B – On-vehicle Service.)
- Accelerator Cable and Throttle Cable Adjustment (Refer to GROUP 23 – On-vehicle Service.)

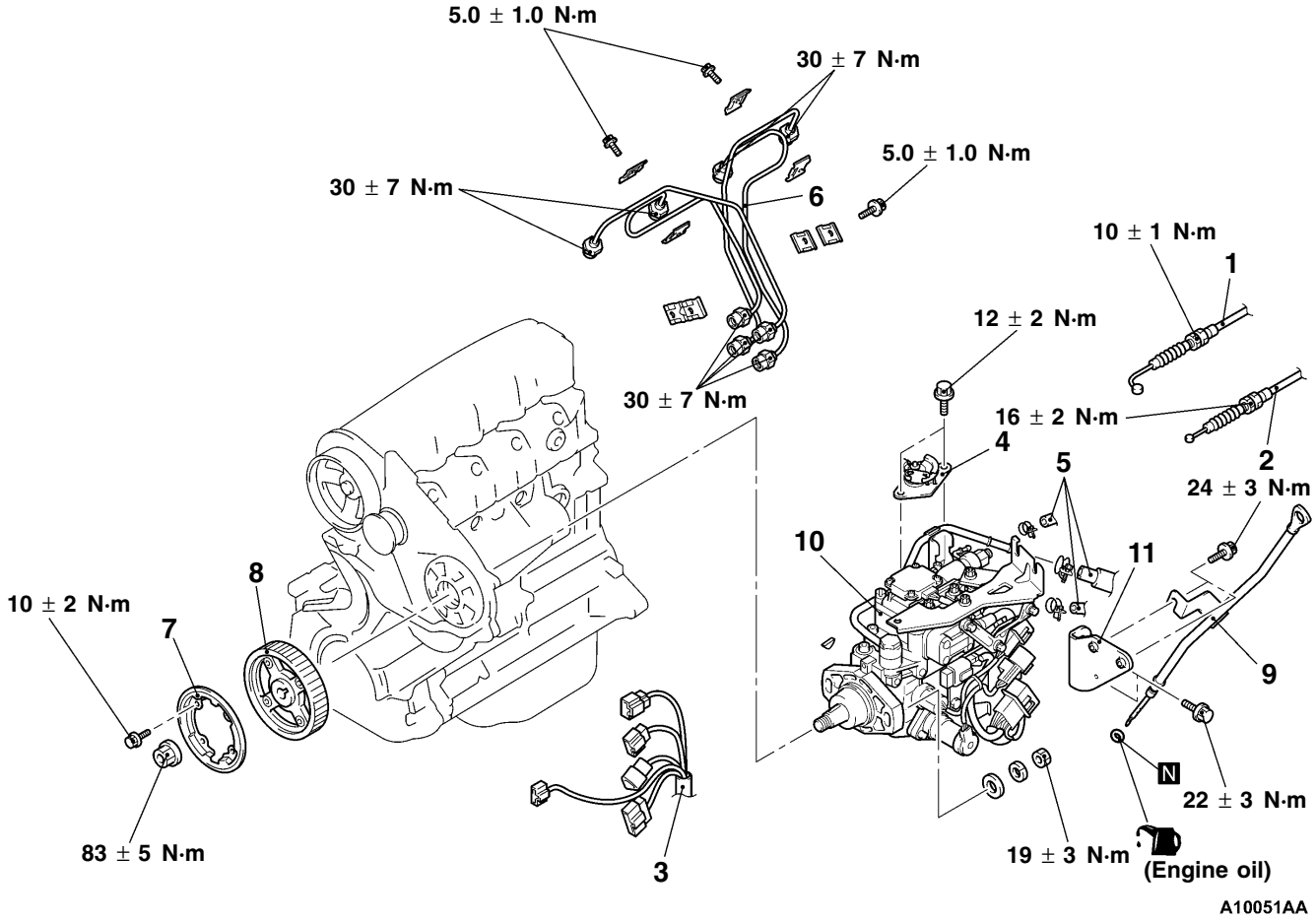

Removal steps

1. Accelerator cable connection
2. Throttle cable connection <A/T>
3. Fuel injection pump wiring harness
4. A/T throttle control cable link assembly <A/T>
5. Fuel hoses

◀A▶

◀B▶

6. Injection pipe
7. Flange
8. Fuel injection pump sprocket
9. Engine oil level gauge and guide
10. Fuel injection pump
11. Bracket

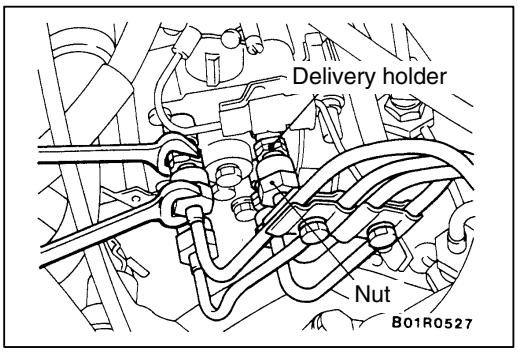

REMOVAL SERVICE POINTS

◀A▶ INJECTION PIPE REMOVAL

Loosen the nuts at the end of the injection pipe with the delivery holder (for pump side) and injection nozzle assembly (for nozzle side) retained by a spanner, etc.

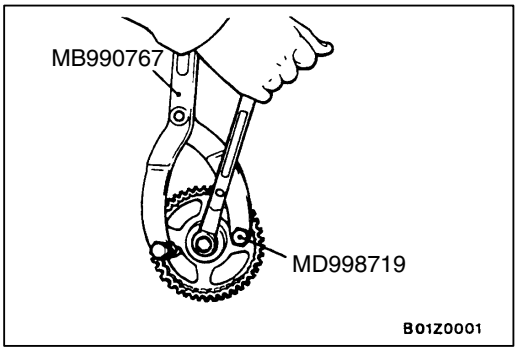

◀B▶ FUEL INJECTION PUMP SPROCKET REMOVAL

1. Use the special tool to stop the fuel injection pump sprocket from turning, and remove the fuel injection pump sprocket mounting bolt.

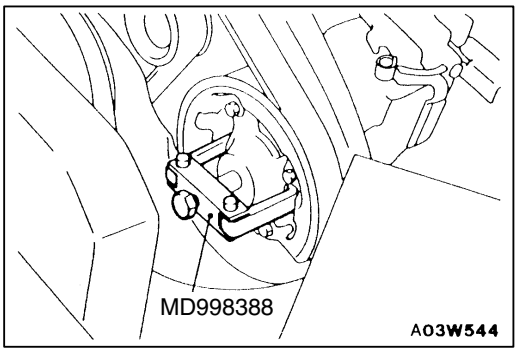

2. Use the special tool to remove the fuel injection pump sprocket.

   Caution
   (1) Do not hit pump drive shaft with hammer, etc.
   (2) When holding injection pump, do not allow to dangle by holding accelerator lever or fast idle lever.
   Do not remove these levers. Removal will cause injection pump malfunction.

NOTES

ENGINE COOLING

Click on the applicable bookmark to selected the required model year

ENGINE COOLING

CONTENTS

14109000130

GENERAL INFORMATION 2
SERVICE SPECIFICATIONS 2
LUBRICANT 2
SEALANTS 2
ON-VEHICLE SERVICE 3
Engine Coolant Leak Checking 3
Radiator Cap Valve Opening Pressure Check 3
Engine Coolant Replacement 3
Concentration Measurement 4
COOLING FAN 5
THERMOSTAT 7
WATER PUMP 9
WATER HOSE AND WATER PIPE 11
RADIATOR 14

GENERAL INFORMATION

14100010125

The cooling system is designed to keep every part of the engine at appropriate temperature in whatever condition the engine may be operated. The cooling method is of the water-cooled, pressure forced circulation type in which the water pump pressurizes coolant and circulates it throughout the engine. If the coolant temperature exceeds the prescribed temperature, the thermostat opens to circulate the coolant through the radiator as well so that the heat absorbed by the coolant may be radiated into the air.

The water pump is of the centrifugal type and is driven by the drive belt from the crankshaft.
The radiator is the corrugated fin, down flow type.

Items			Specifications
Radiator	Performance kJ/h	4G63 <M/T>	114,700
		4G63 <A/T>	126,800
		4G64, 4D56 <2WD>	170,000
		4D56 <4WD>	227,300
Automatic transmission oil cooler	Performance kJ/h	4G63 <A/T>	6,400
		4D56 <A/T>	6,300

SERVICE SPECIFICATIONS

14100030121

Items		Standard value	Limit
High pressure valve opening pressure of radiator cap kPa		75 – 105	65
Range of coolant antifreeze concentration of radiator %		30 – 60	–
Thermostat	Valve opening temperature of thermostat °C	82 ± 1.5	–
	Full-opening temperature of thermostat °C	95	–
Valve lift (at 95°C) mm	4G6, 4D56 <4WD>	8.5 or more	–
	4D56 <2WD>	8 or more	–

LUBRICANT

14100040100

Items		Quantity ℓ
HIGH QUALITY ETHYLENE GLYCOL ANTIFREEZE COOLANT	4G63	7.4
	4G64, 4D56 <2WD>	7.7
	4D56 <4WD>	7.8

SEALANTS

14100050110

Items	Specified sealant	Remarks
Cylinder block drain plug	3M Nut Locking Part No. 4171 or equivalent	Drying sealant
Water by-pass fitting <4G6>	Mitsubishi Genuine Parts No. MD970389 or equivalent	Semi-drying sealant

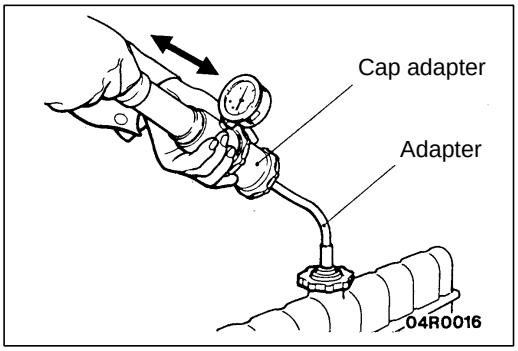

ON-VEHICLE SERVICE

14100100082

ENGINE COOLANT LEAK CHECKING

1. Confirm that the coolant level is up to the filler neck. Install a radiator cap tester and apply 160 kPa pressure, and then check for leakage from the radiator hose or connections.

   Caution
   1. **Be sure to completely clean away any moisture from the places checked.**
   2. **When the tester is taken out, be careful not to spill any coolant from it.**
   3. **Be careful, when installing and removing the tester and when testing, not to deform the filler neck of the radiator.**

2. If there is leakage, repair or replace the appropriate part.

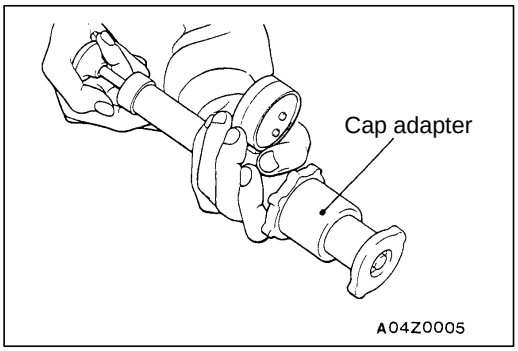

RADIATOR CAP VALVE OPENING PRESSURE CHECK

14100130111

1. Use a cap adapter to attach the cap to the tester.
2. Increase the pressure until the indicator of the gauge stops moving.

   Limit: 65 kPa
   Standard value: 75 – 105 kPa

3. Replace the radiator cap if the reading does not remain at or above the limit.

   NOTE
   Be sure that the cap is clean before testing, since rust or other foreign material on the cap seal will cause an improper indication.

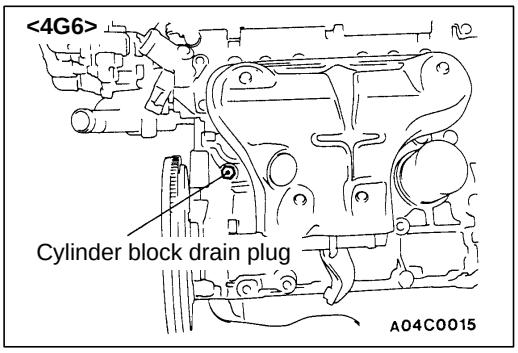

ENGINE COOLANT REPLACEMENT

14100120156

1. Drain the engine coolant by removing the drain plug and then the radiator cap.
2. Remove the cylinder block drain plug from the cylinder block to drain the engine coolant.
3. Remove the reserve tank to drain the engine coolant.
4. When the engine coolant has drained, pour in water from the radiator cap to clean the engine coolant line.

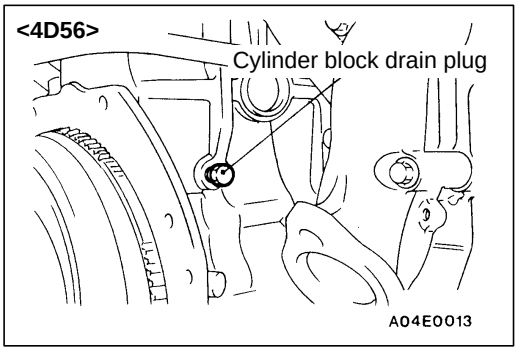

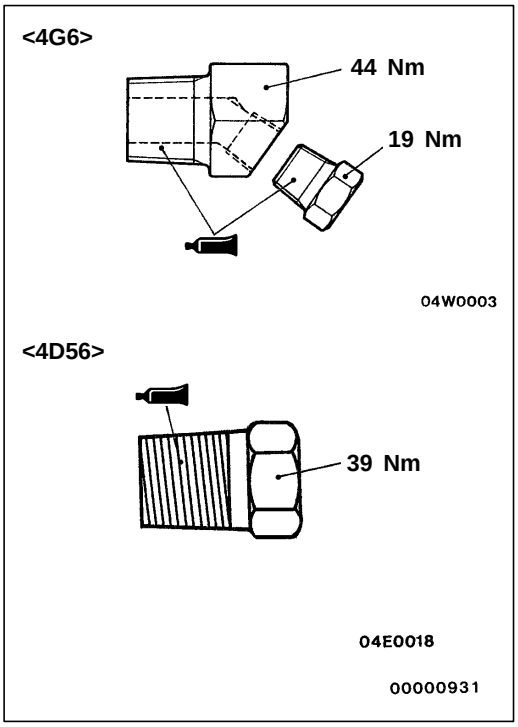

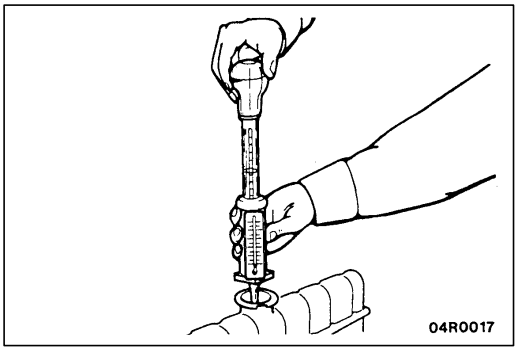

5. Coat the thread of the cylinder block drain plug with the specified sealant and tighten to the specified torque.

   Specified sealant:
   3M Nut Locking Part No. 4171 or equivalent

6. Securely tighten the radiator drain plug.
7. Install the reserve tank.
8. Remove the air bleed bolt and replace the seal washer.
9. Fill the radiator until the engine coolant flows from the air bleed bolt section, and then close the air bleed bolt.
10. Slowly pour the engine coolant into the mouth of the radiator until the radiator is full, and pour also into the reserve tank up to the FULL line.

    Recommended antifreeze:
    HIGH QUALITY ETHYLENE GLYCOL ANTIFREEZE COOLANT

    Quantity:
    <4G63> 7.4 ℓ
    <4G64, 4D56-2WD> 7.7 ℓ
    <4D56-4WD> 7.8 ℓ

    NOTE
    For Norway, the non-amine type of antifreeze should be used.

11. Install the radiator cap securely.
12. Start the engine and warm the engine until the thermostat opens. (Touch the radiator hose with your hand to check that warm water is flowing.)
13. After the thermostat opens, race the engine several times, and then stop the engine.
14. Cool down the engine, and then pour engine coolant into the reserve tank until the level reaches the FULL line. If the level is low, repeat the operation from step 11.

CONCENTRATION MEASUREMENT 14100110146

Measure the temperature and specific gravity of the engine coolant to check the antifreeze concentration.

Standard value: 30 – 60 % (allowable concentration range)

RECOMMENDED ANTIFREEZE

Antifreeze	Allowable concentration
HIGH QUALITY ETHYLENE GLYCOL ANTIFREEZE COOLANT	30 – 60 %

Caution
If the concentration of the anti-freeze is below 30 %, the anti-corrosion property will be adversely affected. In addition, if the concentration is above 60 %, both the anti-freezing and engine cooling propertiers will decrease, affecting the engine adversely. For these reasons, be sure to maintain the concentration level within the specified range.

COOLING FAN

14100210020

REMOVAL AND INSTALLATION

Pre-removal and Post-installation Operation
- Engine Coolant Draining and Supplying (Refer to P.14-3.)
- Radiator Upper Hose Removal and Installation (Refer to P. 14-14.)

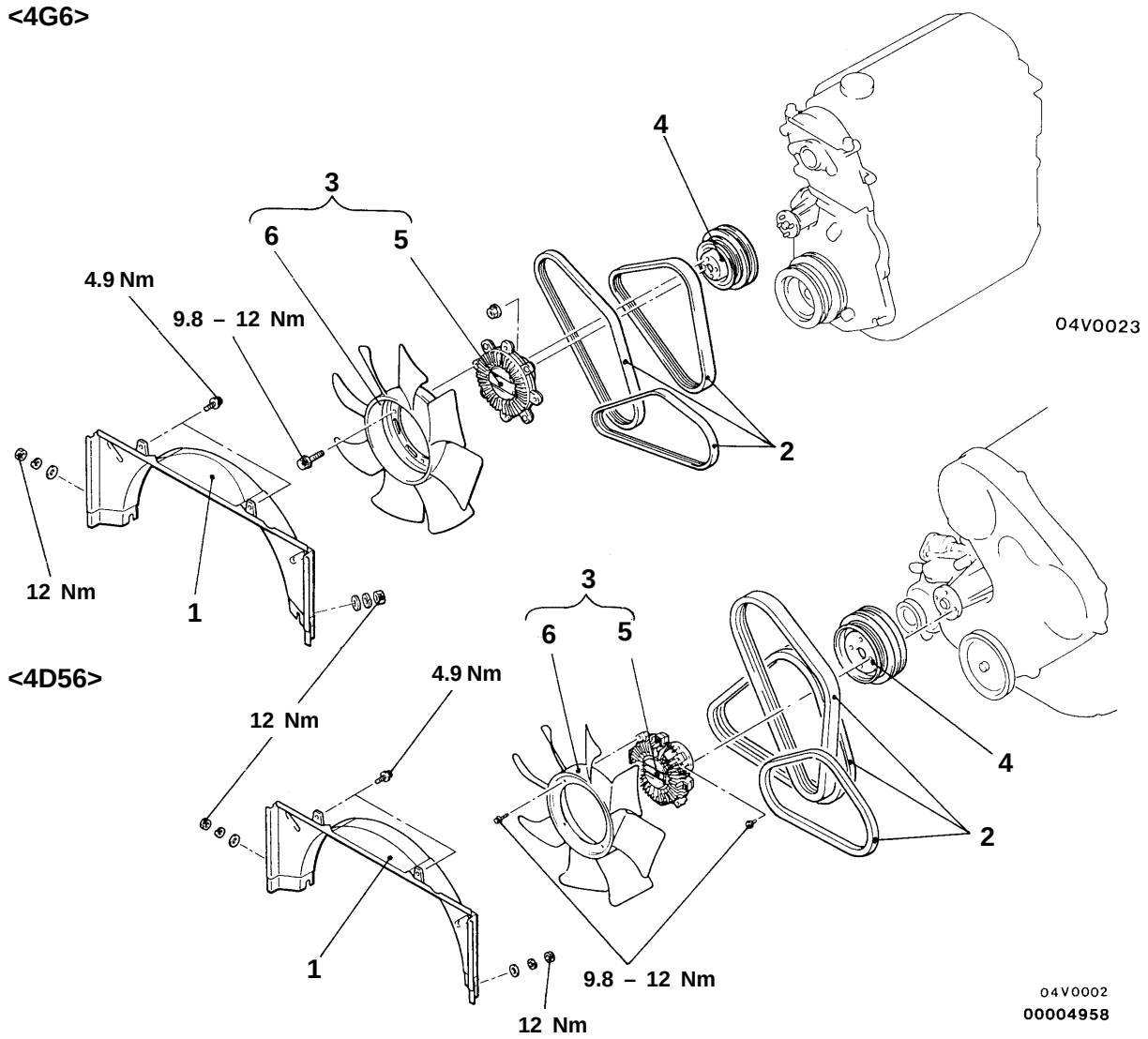

Removal steps

1. Radiator upper shroud
2. Drive belts
3. Cooling fan and fan clutch
4. Pulley
5. Fan Clutch
6. Cooling fan

INSPECTION

14100220023

COOLING FAN CHECK

- Check blades for damage and cracks.
- Check for cracks and damage around bolt holes in fan hub.
- If any portion of fan is damaged or cracked, replace cooling fan.

FAN CLUTCH CHECK

- Check to ensure that fluid in fan clutch is not leaking at case joint and seals. If fluid quantity decreases due to leakage, fan speed will decrease and engine overheating might result.
- When a fan attached to an engine is turned by hand, it should give a sense of some resistance. If fan turns lightly, it is faulty.
- Check bimetal strip for damage.

THERMOSTAT

14100240166

REMOVAL AND INSTALLATION

Pre-removal and Post-installation Operation
- Engine Coolant Draining and Supplying (Refer to P. 14-3.)

<4G6>

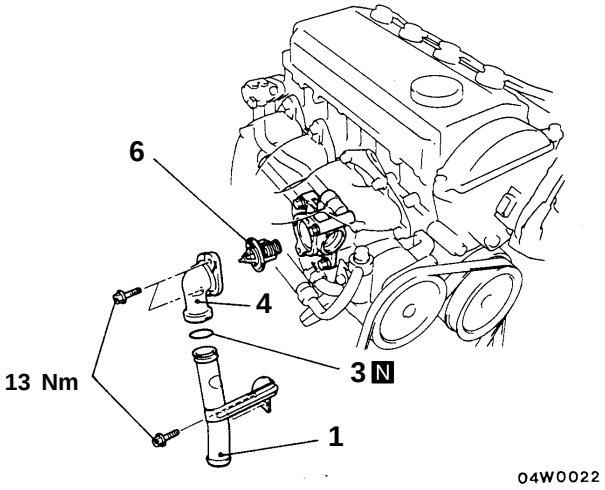

<4D56>

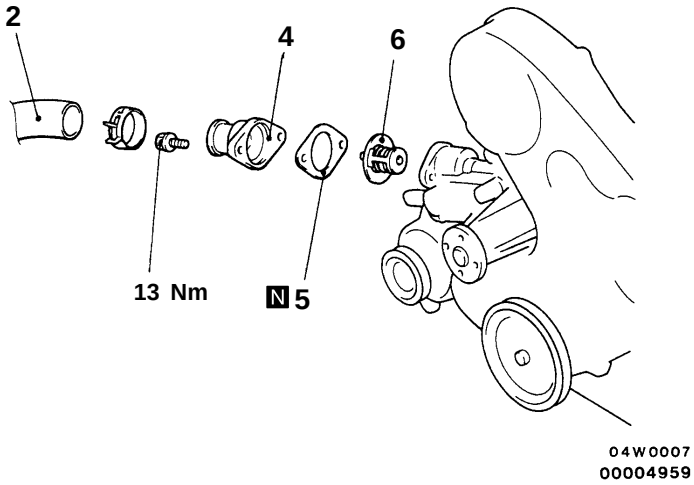

Removal steps

1. Radiator lower pipe assembly <4G6>
2. Radiator lower hose connection <4D56>

▶B◀ 3. O-ring <4G6>
4. Water inlet fitting
5. Water inlet fitting gasket <4D56>

▶A◀ 6. Thermostat

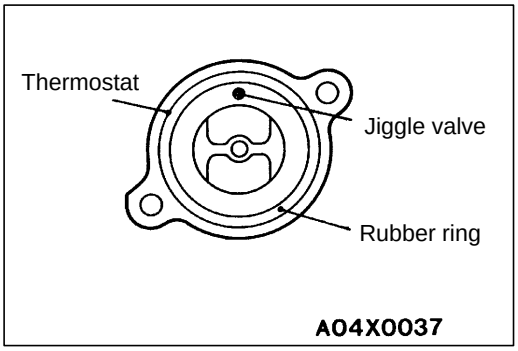

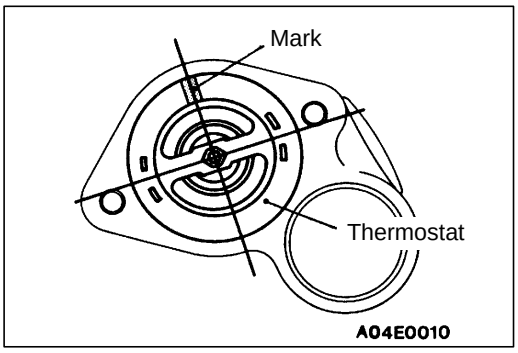

INSTALLATION SERVICE POINTS

▶A◀ THERMOSTAT INSTALLATION

<4G6>

Install the thermostat so that the jiggle valve is facing straight up, while being careful not to fold over or scratch the rubber ring.

Caution

Make absolutely sure that no oil is adhering to the rubber ring of the thermostat. In addition, be careful not to fold over or scratch the rubber ring when inserting.

<4D56-2WD>

Install the thermostat so that the mark is facing straight up.

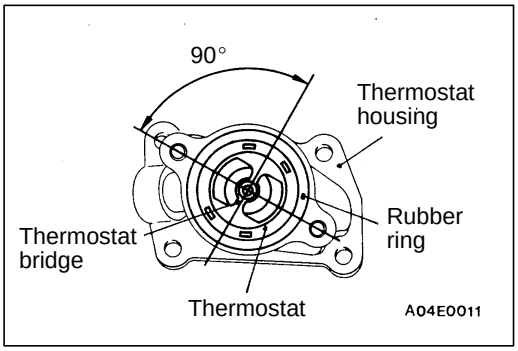

<4D56-4WD>

Hold the thermostat at the angle shown in the illustration, and install it while being careful not to wrinkle or damage the rubber ring.

Caution

Do not apply any oil or grease to the rubber ring of the thermostat under any circumstances.

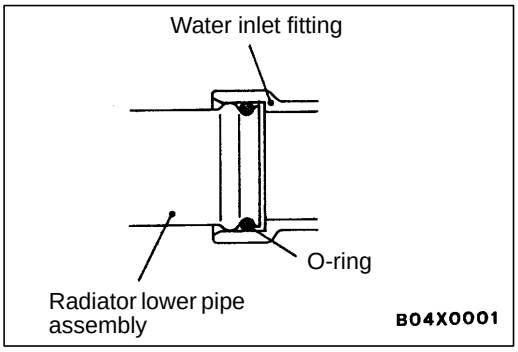

▶B◀ O-RING INSTALLATION

Insert the O-ring into the groove in the radiator lower pipe assembly, and then apply water to the outer inside diameter of the O-ring.

Caution

1. **Do not apply oil and grease to water pipe O-ring.**
2. **Keep the water pipe connections free of sand, dust, etc.**

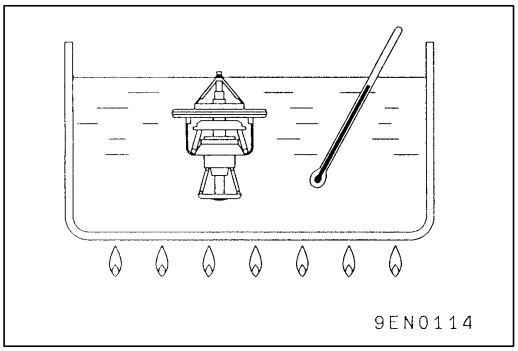

INSPECTION

14100250190

THERMOSTAT CHECK

1. Immerse the thermostat in water, and heat the water while stirring. Check the thermostat valve opening temperature.

   Standard value:

   Valve opening temperature: 82±1.5°C

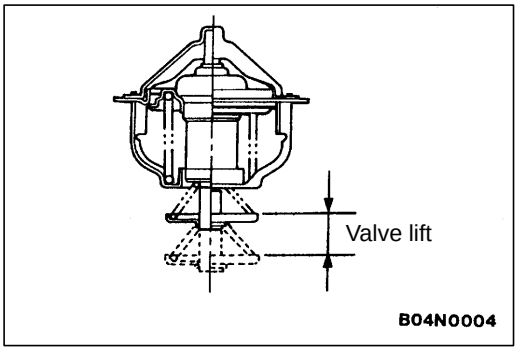

2. Check that the amount of valve lift is at the standard value when the water is at the full-opening temperature.

   Standard value:

Items	4G6 and 4D56-4WD	4D56-2WD
Full-opening temperature °C	95	95
Amount of valve lift mm	8.5 or more	8 or more

NOTE
Measure the valve height when the thermostat is fully closed, and use this measurement to calculate the valve height when the thermostat is fully open.

WATER PUMP

14100270271

REMOVAL AND INSTALLATION

Pre-removal and Post-installation Operation
- Engine Coolant Draining and Supplying (Refer to P. 14-3.)
- Timing Belt Removal and Installation (Refer to GROUP 11.)

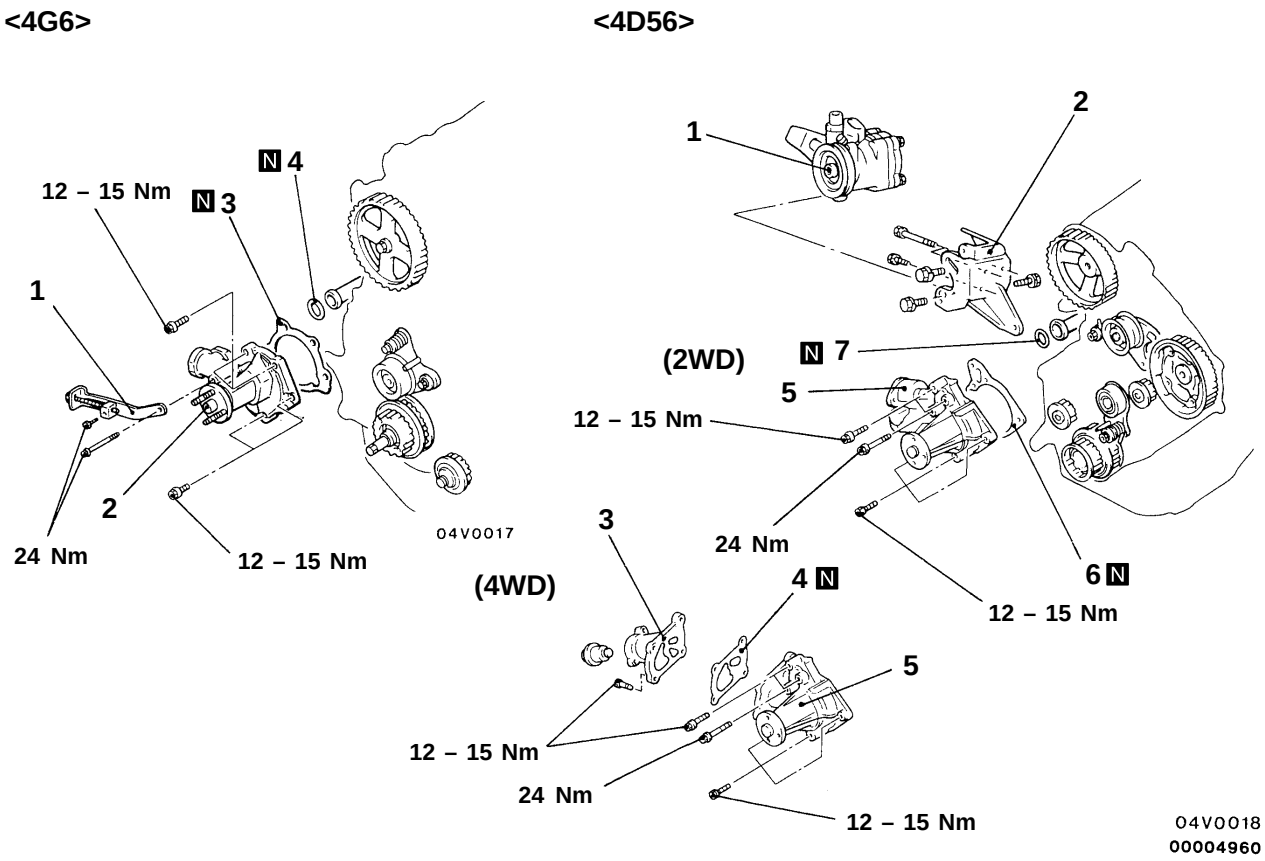

Removal steps

<4G6>

1. Alternator brace
▶B◀ 2. Water pump assembly
3. Water pump gasket
▶A◀ 4. O-ring

<4D56>

- Air intake hose (Refer to GROUP 15 – Air Cleaner.)
- Thermostat (Refer to P. 14-7.)

◀A▶ 1. Power steering oil pump
2. Power steering oil pump bracket
3. Thermostat housing
4. Thermostat housing gasket
▶B◀ 5. Water pump assembly
6. Gasket
▶A◀ 7. O-ring

REMOVAL SERVICE POINT

◀A▶ POWER STEERING OIL PUMP REMOVAL

1. Remove the power steering oil pump from the bracket with the hose still attached.
2. Place the power steering oil pump somewhere where it will not to be a hindrance to working, being careful not to put too much strain on the hose.

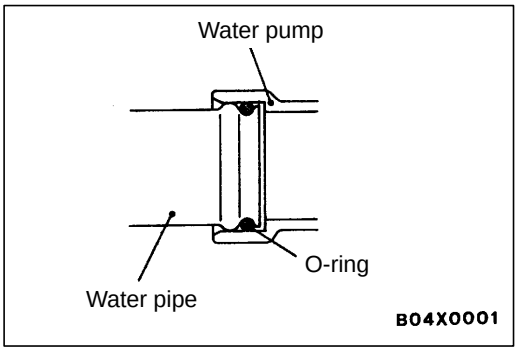

INSTALLATION SERVICE POINTS

▶A◀ O-RING INSTALLATION

Rinse the mounting location of the O-ring and water pipe with water, and install the O-ring and water pipe.

Caution

1. **Care must be taken not to permit engine oil or other greases to adhere to the O-ring.**
2. **When inserting the pipe, check to be sure that there is no sand, dirt, etc. on its inner surface.**

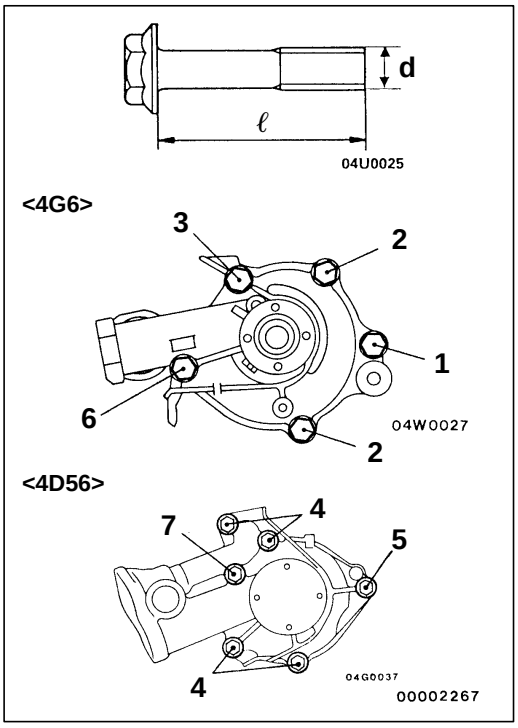

▶B◀ WATER PUMP ASSEMBLY INSTALLATION

No.	Hardness category (Head mark)	Bolt diameter x length mm
1	4T	8 x 14
2		8 x 22
3		8 x 28
4		8 x 40
5		8 x 25
6	7T	8 x 65
7		8 x 70

WATER HOSE AND WATER PIPE

14100330221

REMOVAL AND INSTALLATION

<4G6>

Pre-removal and Post-installation Operation
- Engine Coolant Draining and Supplying (Refer to P. 14-3.)
- Thermostat Removal and Installation (Refer to P. 14-7.)
- Exhaust Manifold Removal and Installation (Refer to GROUP 15.)

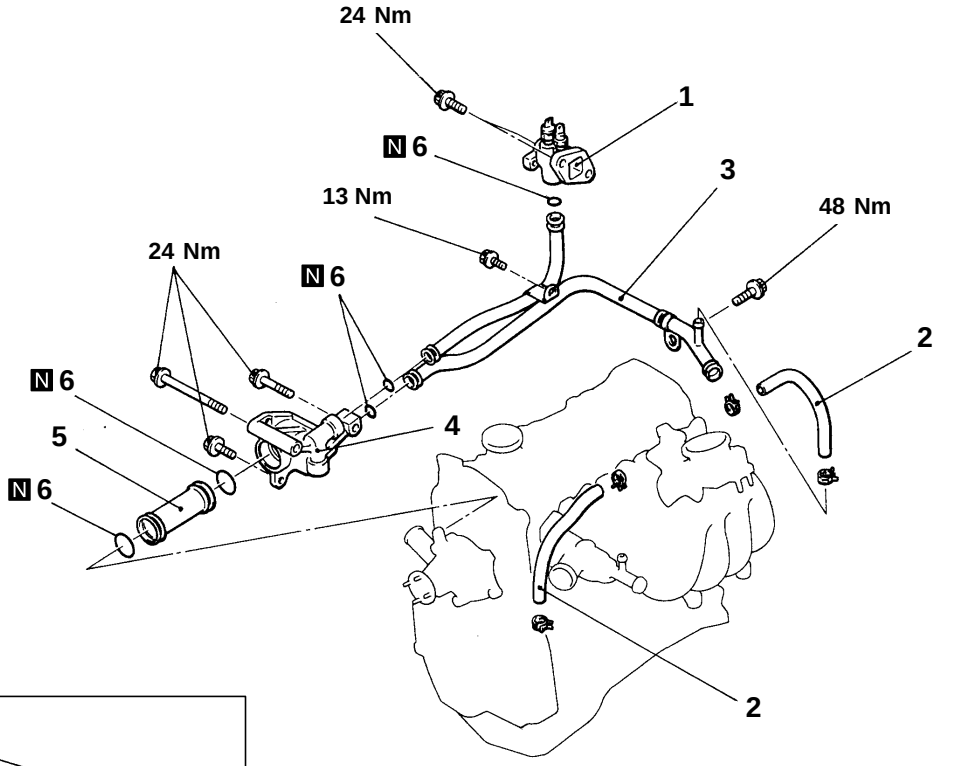

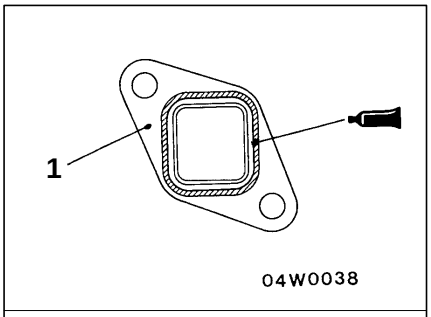

Sealant:
Mitsubishi Genuine Parts No. MD970389 or equivalent

Removal steps

1. Water bypass fitting
2. Water hose
3. Water pipe assembly
4. Thermostat housing assembly
5. Water inlet pipe
6. ▶A◀ O-ring

<4D56>

Pre-removal and Post-installation Operation
- Engine Coolant Draining and Supplying (Refer to P.14-3.)
- Injection Pipe Removal and Installation (Refer to GROUP 13E – Injection Nozzle.)
- Intake, Exhaust Manifold Removal and Installation (Refer to GROUP 15.)

(2WD)

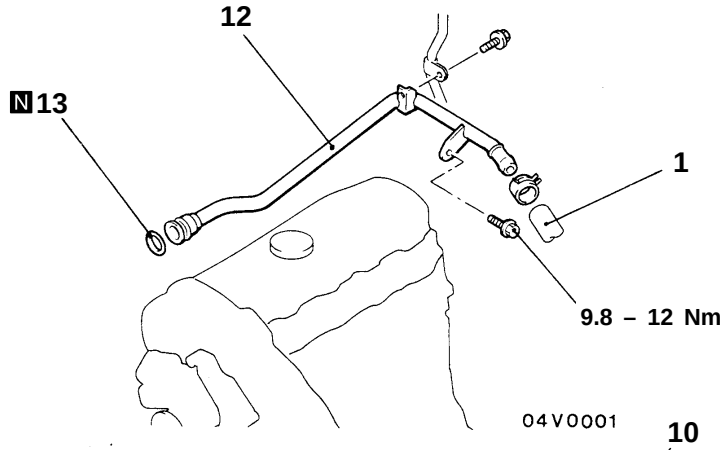

(4WD)

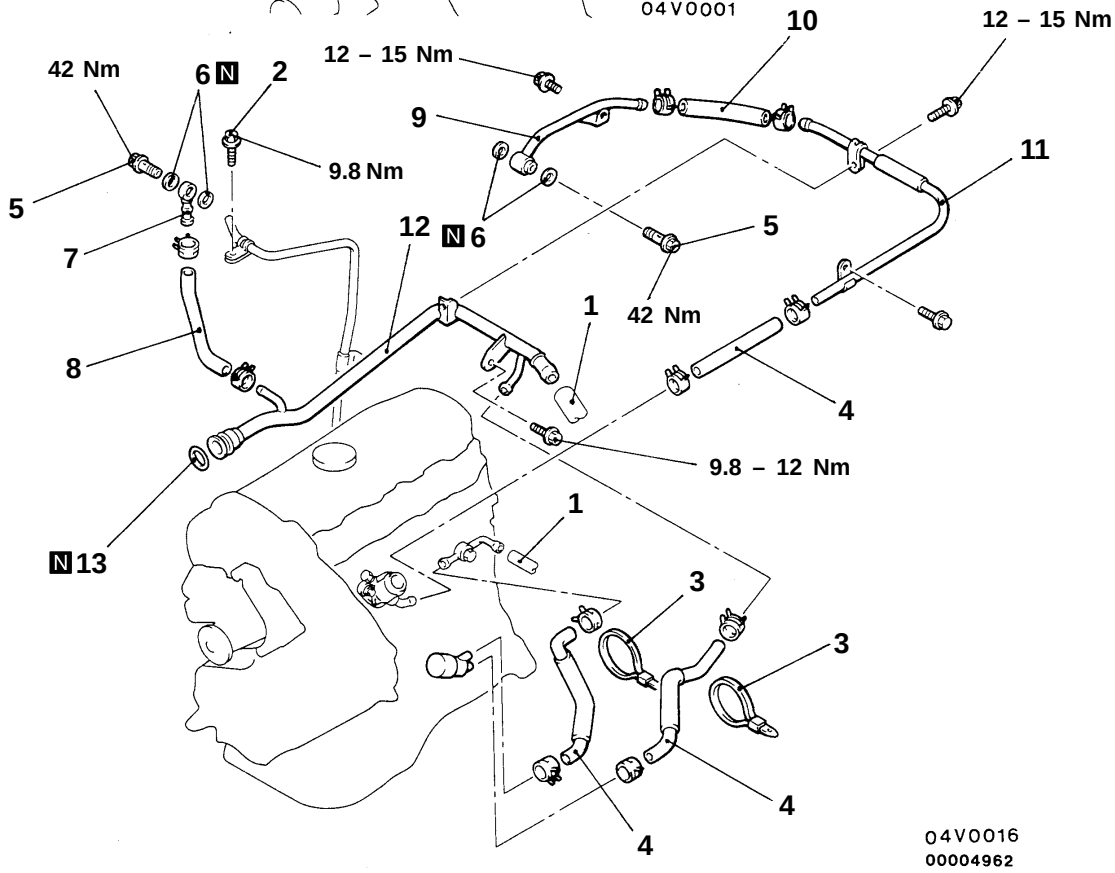

Removal steps

1. Heater hose connection
2. Vacuum pipe installation bolt
3. Cable band
4. Water hose
5. Eye bolt
6. Gasket
7. Water pipe assembly A
8. Water hose
9. Water pipe assembly B
10. Water hose
11. Water pipe assembly C
12. Water pipe assembly
▶A◀ 13. O-ring

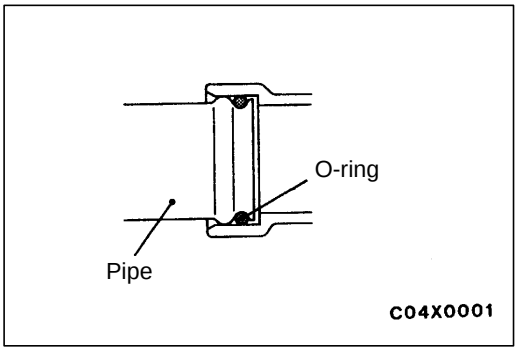

INSTALLATION SERVICE POINTS

▶A◀ O-RING INSTALLATION

Insert the O-ring to pipe, and coat the outer circumference of the O-ring with water.

Caution
Care must be taken not to permit engine oil or other greases to adhere to the o-ring.

INSPECTION

14100340132

WATER PIPE AND HOSE CHECK

Check the water pipe and hose for cracks, damage, clog and replace them if necessary.

RADIATOR

14100150162

REMOVAL AND INSTALLATION

Pre-removal Operation
- Engine Coolant Draining (Refer to P. 14-3.)

Post-installation Operation
- Engine Coolant Supplying (Refer to P. 14-3.)
- A/T Fluid Supplying and Checking (Refer to GROUP 23 – On-vehicle Service.)

<4G6, 4D56-2WD>

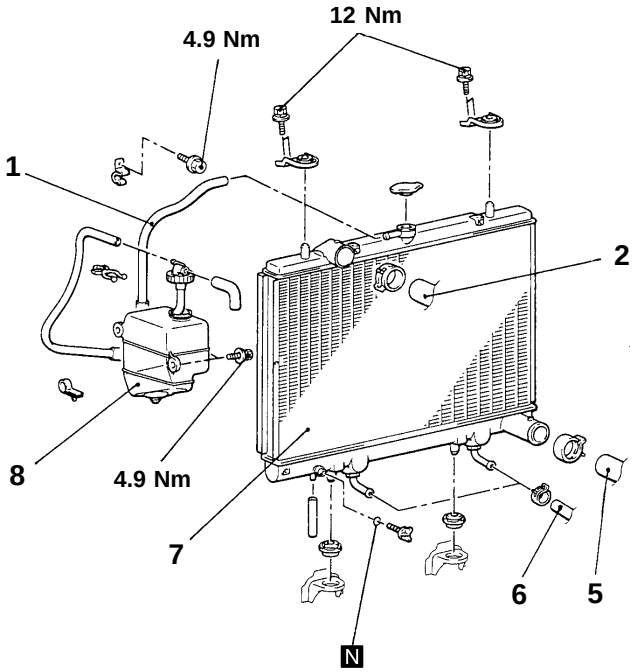

<4D56-4WD>

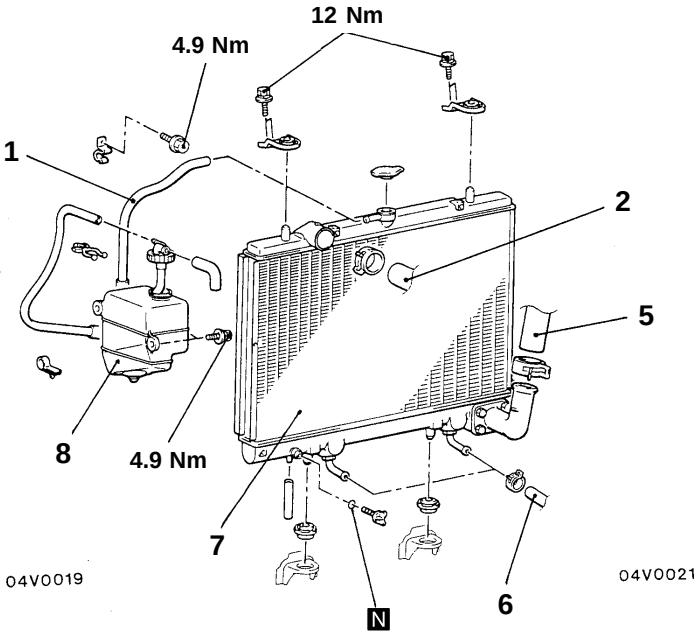

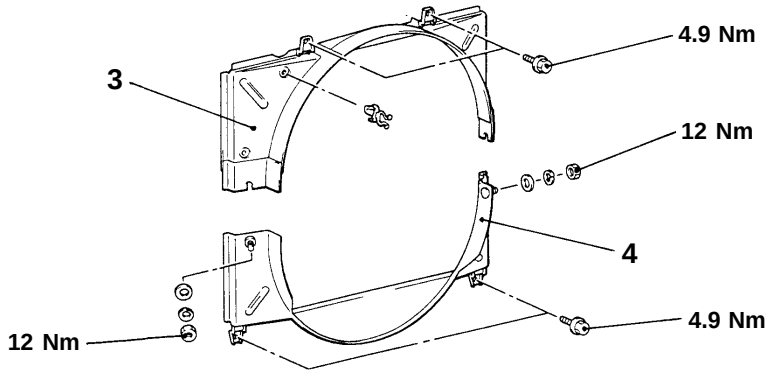

Radiator removal steps

1. Rubber hose connection
2. Radiator upper hose connection
3. Radiator upper shroud
4. Radiator lower shroud
5. Radiator lower hose connection
6. ◀A▶ Transmission fluid cooler hose connection <A/T>
7. Radiator assembly

Reserve tank removal steps

1. Rubber hose connection
8. Reserve tank assembly

REMOVAL SERVICE POINT

◀A▶ TRANSMISSION FLUID COOLER HOSE REMOVAL

After removing the hose from the radiator, plug the hose and the radiator nipple to prevent dust or foreign particles from getting in.

NOTES

GROUP 14
ENGINE COOLING

GENERAL

OUTLINE OF CHANGE(S)

The specifications of the radiator have been changed.

GENERAL SPECIFICATIONS

Item			Specification
Radiator	Performance kJ/h	4G63 <M/T, A/T>	170,000
		4D56 <A/T>	236,900

ENGINE COOLING

CONTENTS

GENERAL 2
Outline of Change 2
GENERAL SPECIFICATIONS <4D56-Step III> 2
SERVICE SPECIFICATION <4D56-Step III> 2
COOLING FAN <4D56-Step III> 3
THERMOSTAT <4D56-Step III> 4
WATER PUMP <4D56-Step III> 5
WATER HOSE AND WATER PIPE <4D56-Step III> 7
RADIATOR <4D56-Step III> 8

GENERAL

OUTLINE OF CHANGES

With the modification below by additional emission regulation step III compatible 4D56 engine, the service procedure of the part that is different from previous service procedure has been established.

- The integrated radiator shroud of resin has been adopted for lightness.
- With additional turbocharger, the thermostat of vehicle with 2WD has been modified to the thermostat of vehicle with 4WD.
- With additional or modifiable turbocharger and additional EGR cooler, the water hose and pipe have been changed.
- To improve the cooling performance, the radiator has been modified.

GENERAL SPECIFICATIONS <4D56-Step III>

Items			Specifications
Radiator	Performance kJ/h	2WD-M/T	201,768
		2WD-A/T	233,535
		4WD	295,200
Automatic transmission oil cooler	Performance kJ/h	2WD-A/T	6,446
		4WD-A/T	6,876

SERVICE SPECIFICATION <4D56-Step III>

Items	Standard value	Limit
Thermostat valve lift (at 95°C) mm	8.5 or more	–

COOLING FAN <4D56-Step III>

REMOVAL AND INSTALLATION

Pre-removal Operation
- Engine Coolant Draining

Post-installation Operation
- Engine Coolant Refilling
- Drive Belt Tension Adjustment

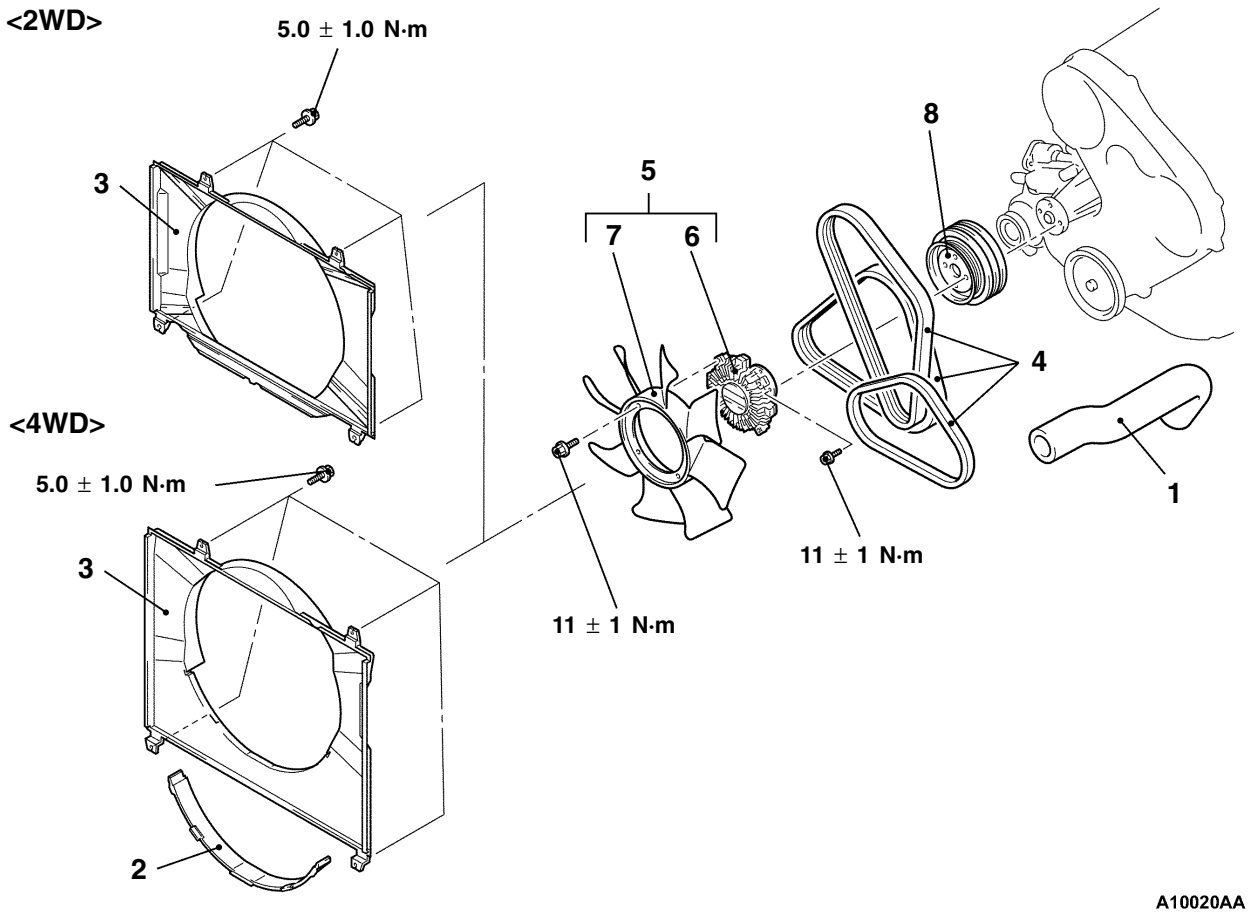

Removal steps

1. Radiator upper hose
2. Cover <4WD>
3. Radiator Shroud
4. Drive belts
5. Cooling fan and fan clutch
6. Fan clutch
7. Cooling fan
8. Pulley

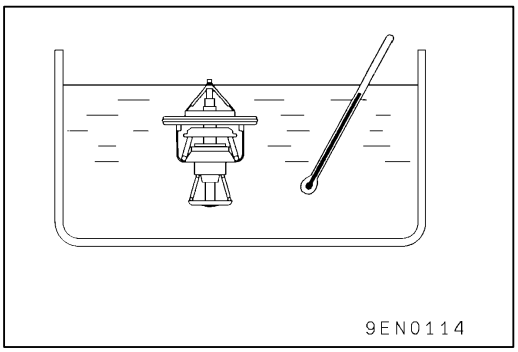

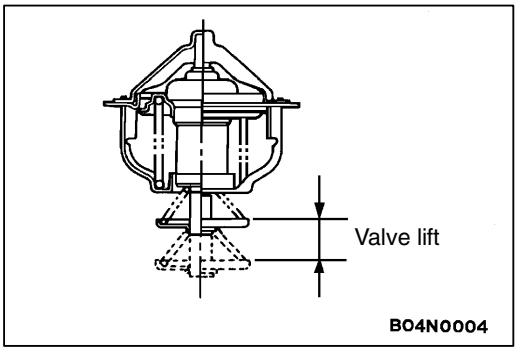

THERMOSTAT <4D56-Step III>

INSPECTION

THERMOSTAT CHECK

Check that the amount of valve lift is at the standard value when the water is at the full-opening temperature.

Standard value:

Items	4D56-Step III
Full-opening temperature °C	95
Amount of valve lift mm	8.5 or more

NOTE
Measure the valve height when the thermostat is fully closed, and use this measurement to calculate the valve height when the thermostat is fully open.

WATER PUMP <4D56-Step III>

REMOVAL AND INSTALLATION

Pre-removal and Post-installation Operation
- Engine Coolant Draining and Refilling
- Thermostat Removal and Installation
- Timing Belt Removal and Installation

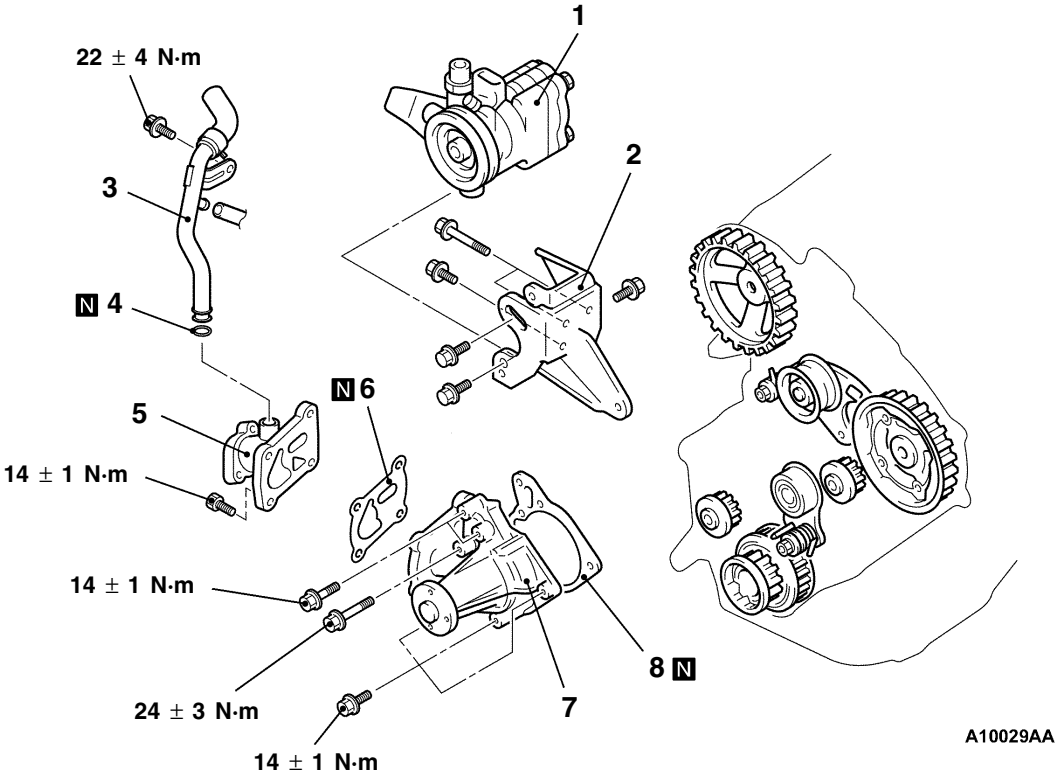

Removal steps

◀A▶ 1. Power steering oil pump
2. Power steering oil pump bracket
3. Water pipe E and hose assembly
▶B◀ 4. O-ring
5. Thermostat housing
6. Thermostat housing gasket
▶A◀ 7. Water pump assembly
8. Gasket

REMOVAL SERVICE POINT

◀A▶ POWER STEERING OIL PUMP REMOVAL

1. Remove the power steering oil pump from the bracket with the hose still attached.
2. Place the power steering oil pump somewhere where it will not to be a hindrance to working, being careful not to put too much strain on the hose.

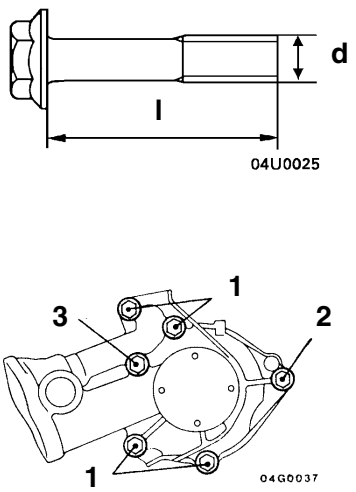

INSTALLATION SERVICE POINTS

▶A◀ WATER PUMP ASSEMBLY INSTALLATION

No.	Hardness category (Head mark)	Bolt diameter (d) x length (l) mm
1	4T	8 x 40
2		8 x 25
3	7T	8 x 70

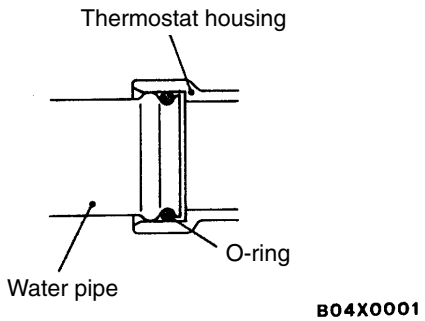

▶B◀ O-RING INSTALLATION

Rinse the mounting location of the O-ring and water pipe with water, and install the O-ring and water pipe.

Caution

1. **Care must be taken not to permit engine oil or other greases to adhere to the O-ring.**
2. **When inserting the pipe, check to be sure that there is no sand, dirt, etc. on its inner surface.**

WATER HOSE AND WATER PIPE <4D56-Step III>

REMOVAL AND INSTALLATION

Pre-removal and Post-installation Operation
- Engine Coolant Draining and Refilling
- Air Cleaner Removal and Installation (Refer to GROUP 15.)
- Intercooler Removal and Installation (Refer to GROUP 15.)
- EGR Valve, EGR Cooler Removal and Installation (Refer to GROUP 17.)
- Intake, Exhaust Manifold Removal and Installation (Refer to GROUP 15.)
- Injection Pipe Removal and Installation

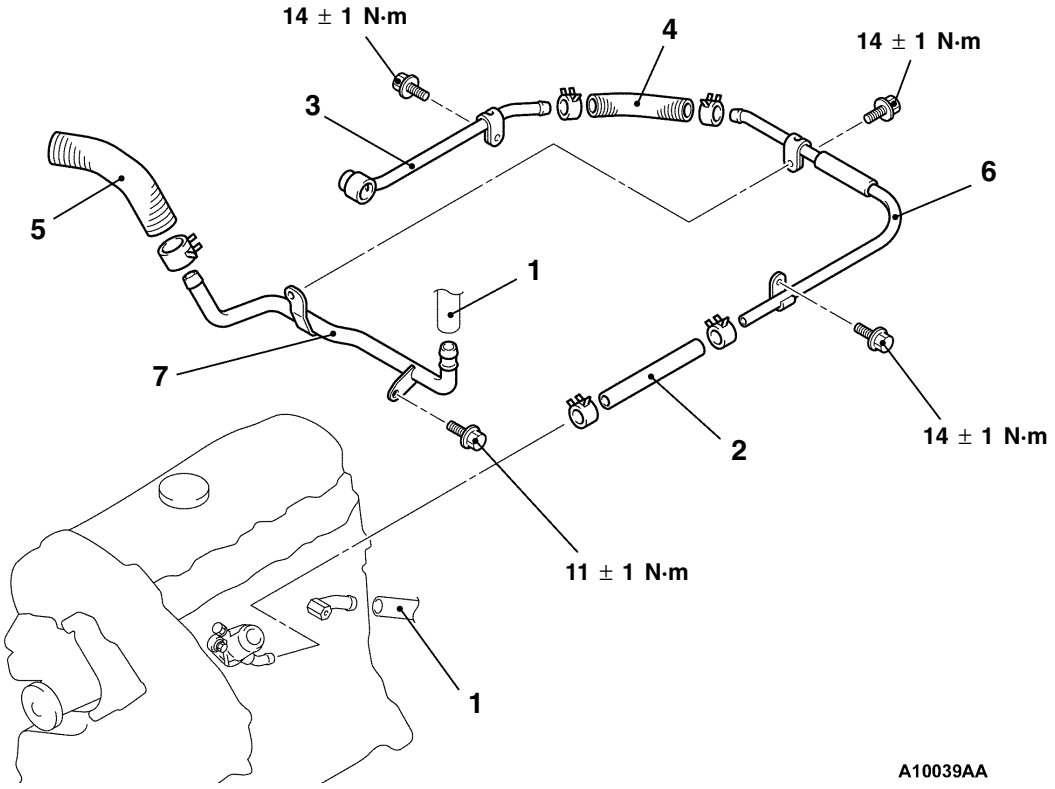

Removal steps

1. Heater hose connection
2. Water hose
3. Water pipe B
4. Water hose (turbocharger return)

▶A◀ 5. Water hose (EGR cooler return)
6. Water pipe C
7. Water pipe D

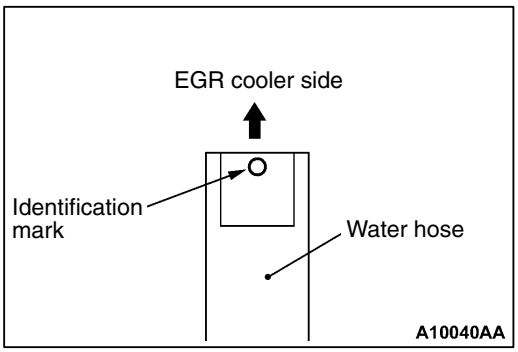

INSTALLATION SERVICE POINT

▶A◀ WATER HOSE INSTALLATION

Install the water hose so that its identification mark faces toward the EGR cooler.

RADIATOR <4D56-Step III>

REMOVAL AND INSTALLATION

Pre-removal Operation
- Engine Coolant Draining

Post-installation Operation
- Engine Coolant Refilling
- A/T Fluid Supplying and Checking

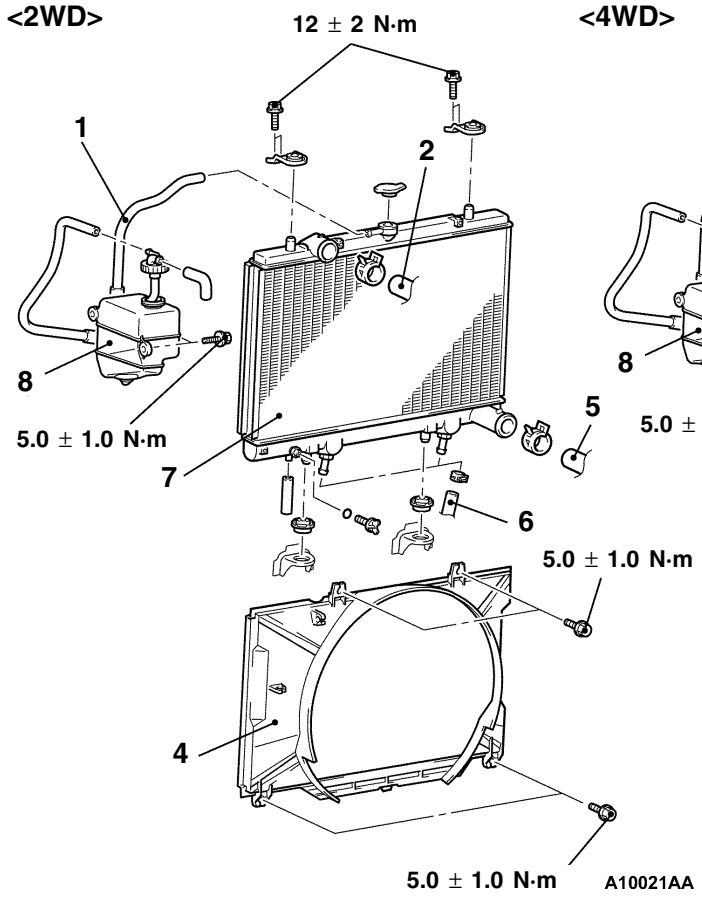

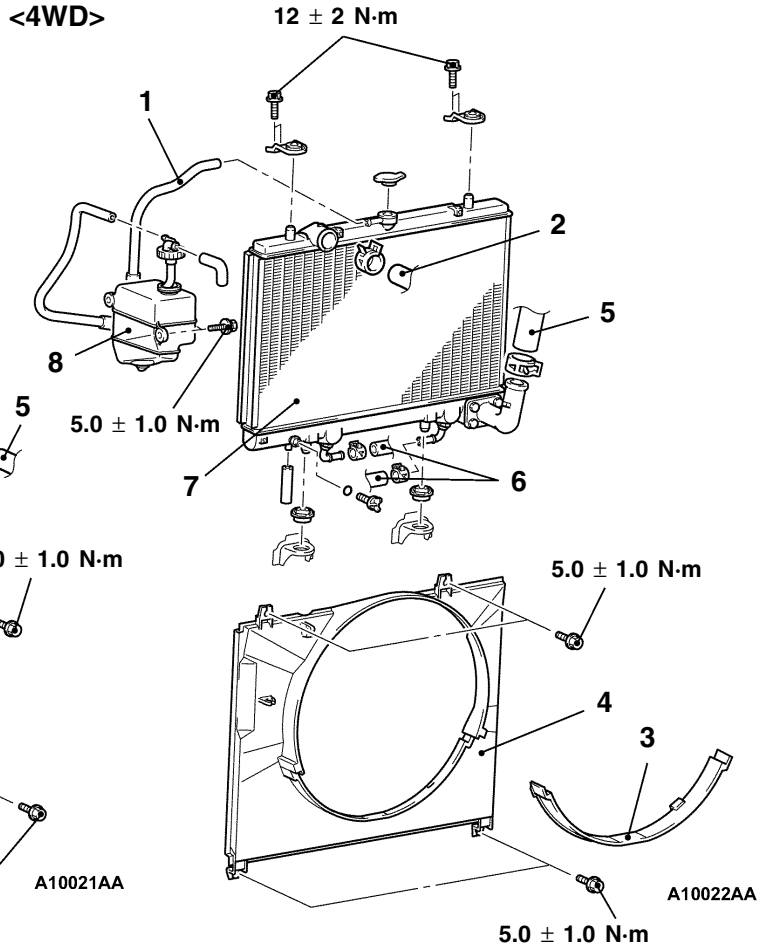

Radiator removal steps
1. Rubber hose connection
2. Radiator upper hose connection
3. Cover <4WD>
4. Radiator shroud
5. Radiator lower hose connection
◀A▶ 6. Transmission fluid cooler hose connection <A/T>
7. Radiator assembly

Reserve tank removal steps
1. Rubber hose connection
8. Reserve tank assembly

REMOVAL SERVICE POINT

◀A▶ TRANSMISSION FLUID COOLER HOSE REMOVAL

After removing the hose from the radiator, plug the hose and the radiator nipple to prevent dust or foreign particles from getting in.

INTAKE AND EXHAUST

Click on the applicable bookmark to selected the required model year

INTAKE AND EXHAUST

CONTENTS

15109000168

SERVICE SPECIFICATIONS 2

SEALANT 2

ON-VEHICLE SERVICE 2
- Intake Manifold Vacuum Check 2
- Turbocharger Supercharging Check 2
- Waste Gate Actuator Check 3
- Power Relay Check 3

AIR CLEANER 4

INTERCOOLER AND INTERCOOLER FAN-ECU 6

INTAKE MANIFOLD <4G6> 9

INTAKE AND EXHAUST <4D56-2WD> 11

TURBOCHARGER AND EXHAUST MANIFOLD <4D56-4WD> 12

TURBOCHARGER 15

EXHAUST MANIFOLD <4G6> 18

EXHAUST PIPE AND MAIN MUFFLER 19

SERVICE SPECIFICATIONS

15100030128

Items		Standard value	Limit
Waste gate actuator activation pressure kPa		Approx. 83	–
Intake air temperature switch °C	OFF (no continuity)	55 or less	–
	ON (continuity)	57 or more	–
Manifold distortion of the installation surface mm		0.15 or less	0.20

SEALANT

15100050025

Item	Specified sealant	Remark
Water outlet fitting <4G6>	MITSUBISHI GENUINE PART MD970389 or equivalent	Semi-drying sealant

ON-VEHICLE SERVICE

15100180137

INTAKE MANIFOLD VACUUM CHECK <4G6>

Refer to GROUP 11A – On-vehicle Service

TURBOCHARGER SUPERCHARGING CHECK <4D56 with turbocharger>

15100100041

Caution
Conduct the driving test in a location where driving at full acceleration can be done with safety. Two person should be in the vehicle when the test is conducted; the person in the passenger seat should read the indications shown by the pressure meter.

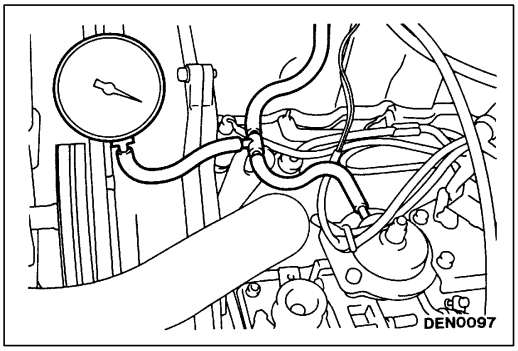

1. Remove the boost compensator hose from the fuel injection pump, and install a pressure gauge as shown in the illustration.
2. Drive at full-throttle acceleration in second gear and then measure the supercharging when the engine speed in about 3,000 r/min.
3. When the indicated supercharging does not become positive pressure, check the following items.
   - Malfunction of the waste gate actuator.
   - Leakage of supercharging pressure.
   - Malfunction of the turbocharger.
4. When the indicated supercharging is 84 kPa or more, supercharging control may be faulty, therefore check the followings.
   - Disconnection or cracks of the waste gate actuator rubber hose.
   - Malfunction of the waste gate actuator.
   - Malfunction of the waste gate valve.

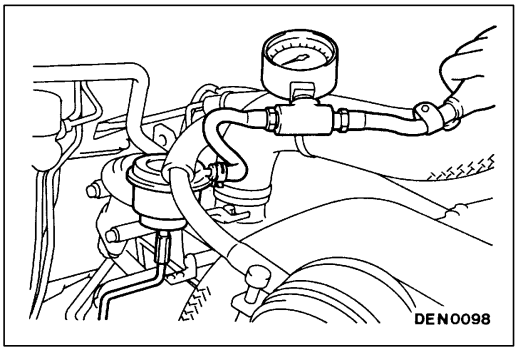

WASTE GATE ACTUATOR CHECK <4D56-with turbocharger>

15100120023

1. Connect a manual pump (pressure-application type) to nipple.
2. While gradually applying pressure, check the pressure that begins to activate (approx. 1 mm stroke) the waste gate actuator rod.

   Standard value: Approx. 83 kPa

   Caution
   In order to avoid damage to the diaphragm, do not apply a pressure of 91 kPa or higher.
3. If there is a significant deviation from the standard value, check the actuator or the waste gate valve: replace if necessary.

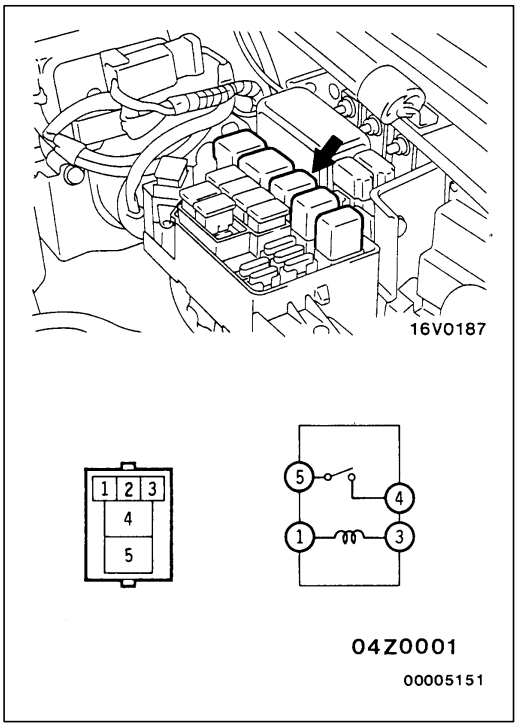

POWER RELAY CHECK

15100620011

INTERCOOLER FAN MOTOR RELAY CONTINUITY CHECK

Battery voltage	Terminal No.			
	1	3	4	5
Power is not supplied	○	○		
Power is supplied	⊕	⊖	○	○

AIR CLEANER

15100210058

REMOVAL AND INSTALLATION

<4G63>

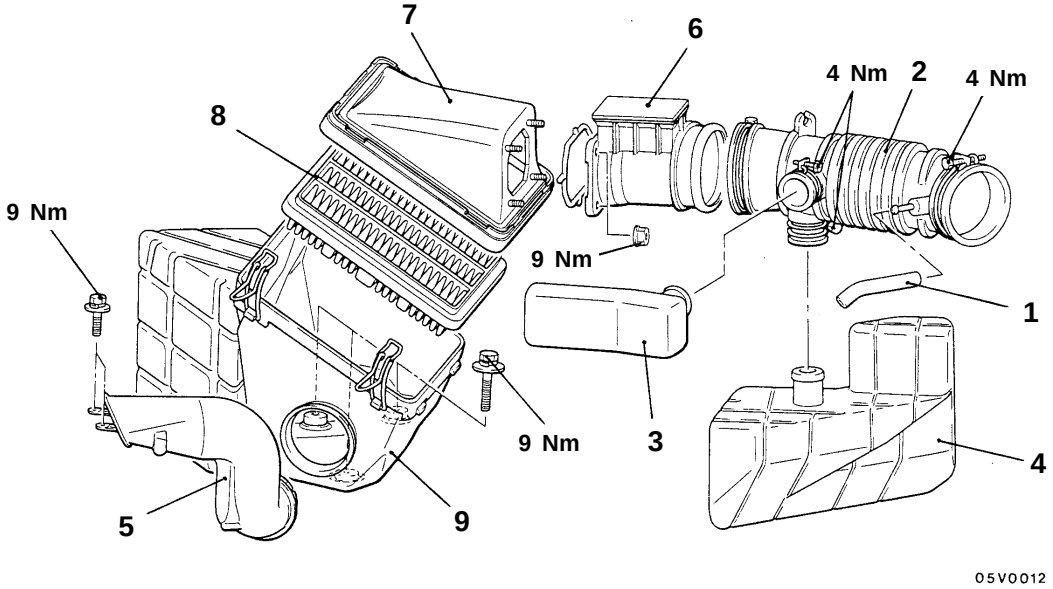

<4G64>

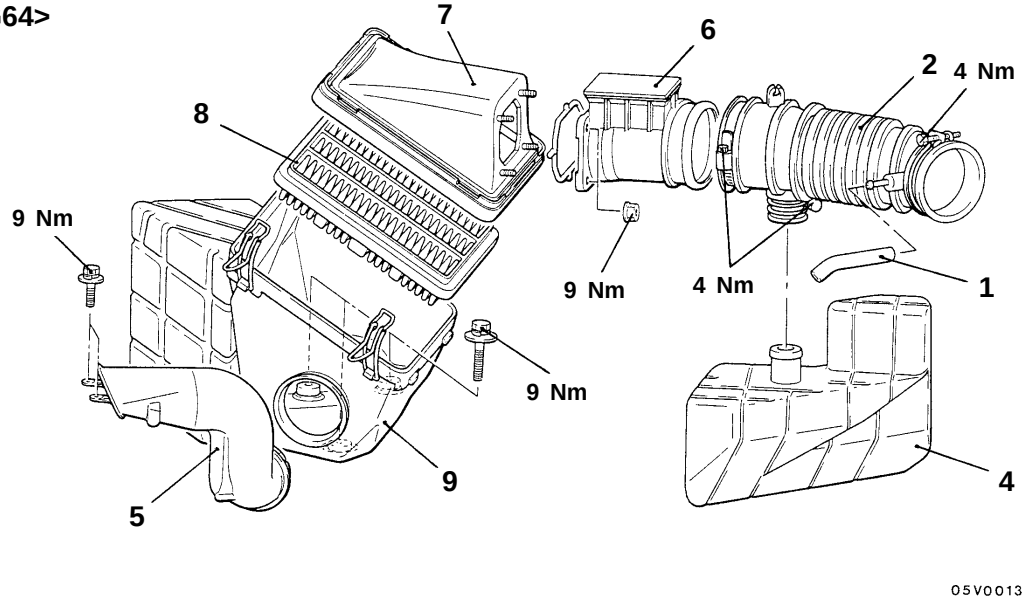

00005152

Removal steps

1. Breather hose connection
2. Air intake hose
3. Resonator <4G63>
4. Resonator
5. Air duct
6. Air flow sensor assembly
7. Air cleaner cover
8. Air cleaner element
9. Air cleaner body

<4D56-2WD>

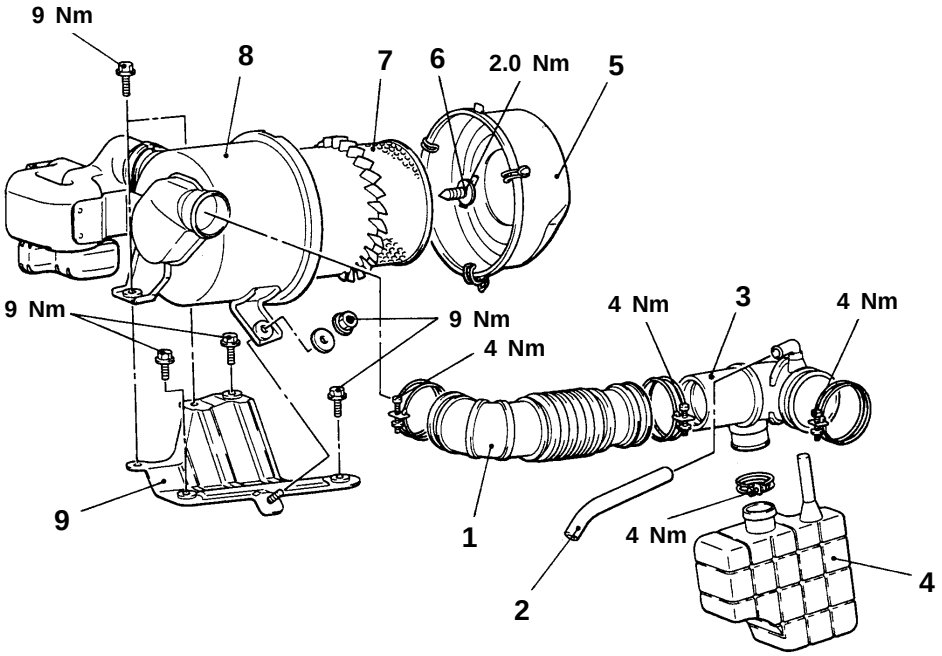

<4D56-4WD>

05V0001

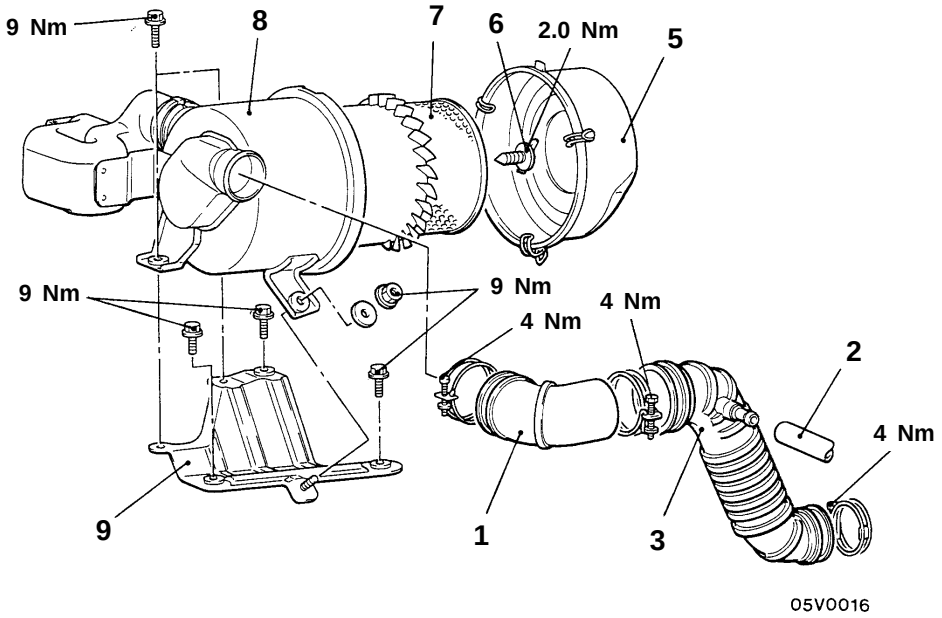

05V0016

00005153

Removal steps

1. Air intake hose A
2. Breather hose connection
3. Air intake hose B
4. Resonator <2WD>
5. Air cleaner cover
6. Bolt
7. Air cleaner element
8. Air cleaner body
9. Air cleaner bracket

INTERCOOLER AND INTERCOOLER FAN-ECU

15100420031

REMOVAL AND INSTALLATION

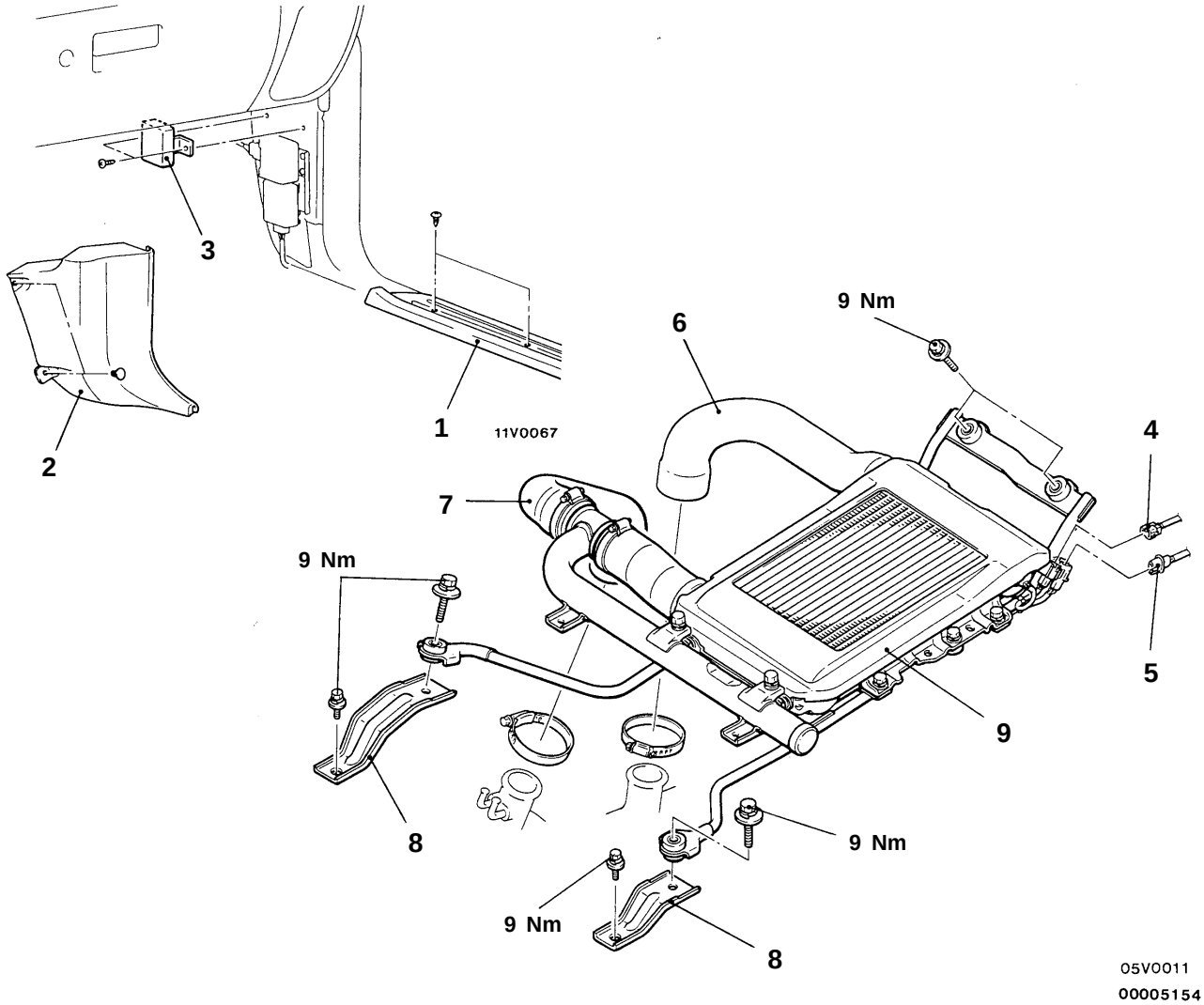

Intercooler fan-ECU removal steps

1. Scuff plate
2. Cowl side trim
3. Intercooler fan-ECU

Intercooler removal steps

4. Intake air temperature switch connector
5. Intercooler fan motor connector
6. Air hose B connection (Intake manifold side)
7. Air hose A-2 connection (Turbocharger side)
8. Front bracket
9. Intercooler and bracket assembly

DISASSEMBLY AND REASSEMBLY

15100660013

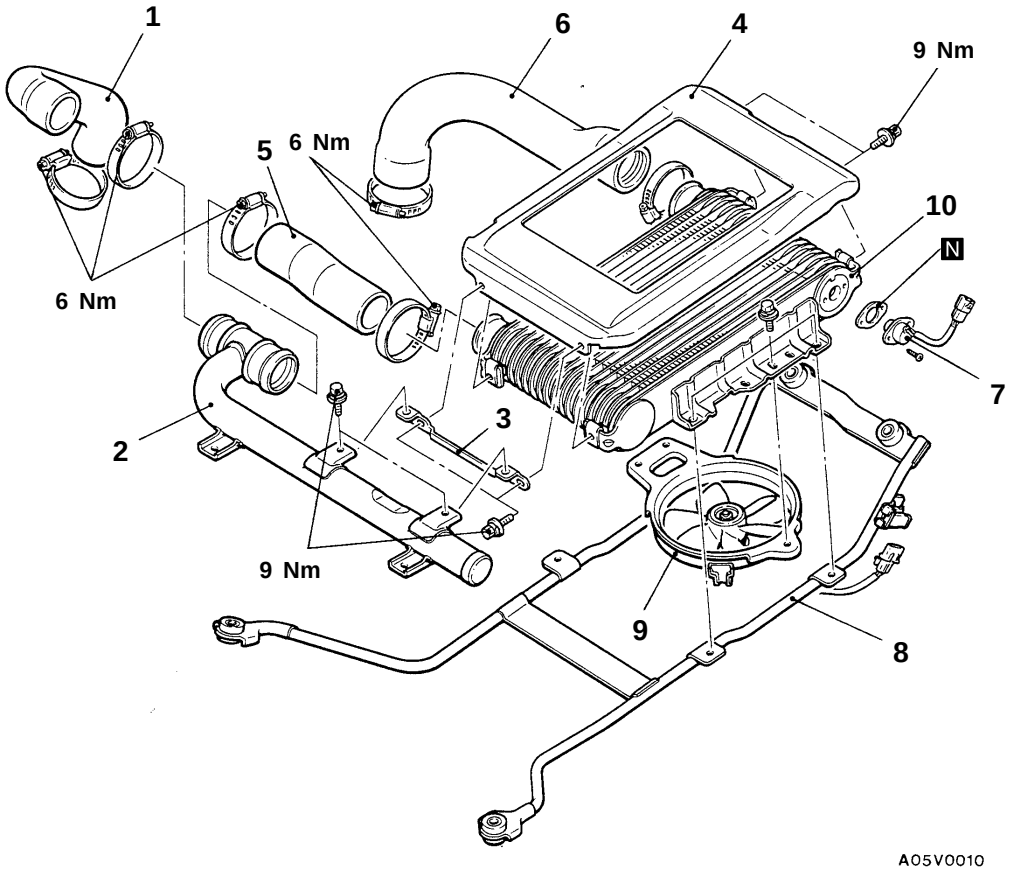

Disassembly steps

1. Air hose A-2
2. Blanch tube
3. Blanch tube bracket
4. Intercooler cover
5. Air hose A-1
6. Air hose B
7. Intake air temperature switch
8. Intercooler bracket
9. Fan and motor assembly
10. Intercooler

INSPECTION

15100430027

- Check the intercooler fins for bending damage or foreign matter.
- Check the intercooler hoses for cracking, damage or wear.

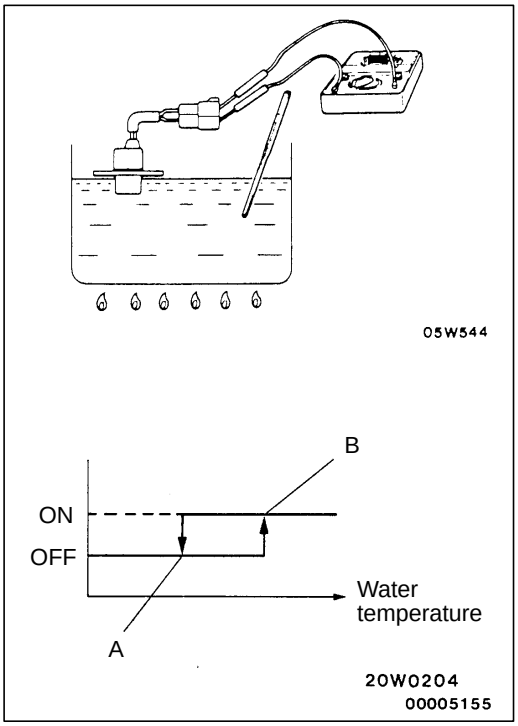

INTAKE AIR TEMPERATURE SWITCH CHECK

15100630014

1. Immerse the intake air temperature switch in the hot water shown in the figure.
2. When changing the water temperature, check for continuity between the terminals with the circuit tester.

Standard value:

Temperature	Continuity
Less than 55 °C (Temperature at point A)	OFF (No continuity)
More than 57 °C (Temperature at point B)	ON (Continuity)

INTAKE MANIFOLD <4G6>

15100300274

REMOVAL AND INSTALLATION

Pre-removal Operation
- Fuel Discharge Prevention (Refer to GROUP 13A – On-vehicle Service)
- Engine Coolant Draining
- Air Cleaner Removal (Refer to P. 15-4.)
- Battery and Battery Tray Removal

Post -installation Operation
- Engine Coolant Supplying
- Battery and Battery Tray Installation
- Air Cleaner Installation (Refer to P.15-4.)

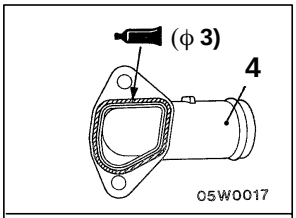

Sealant:
MITSUBISHI GENUINE PART MD970389 or equivalent

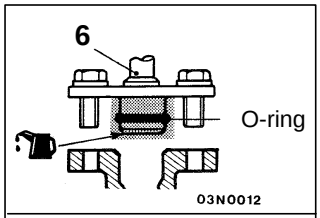

Engine Oil

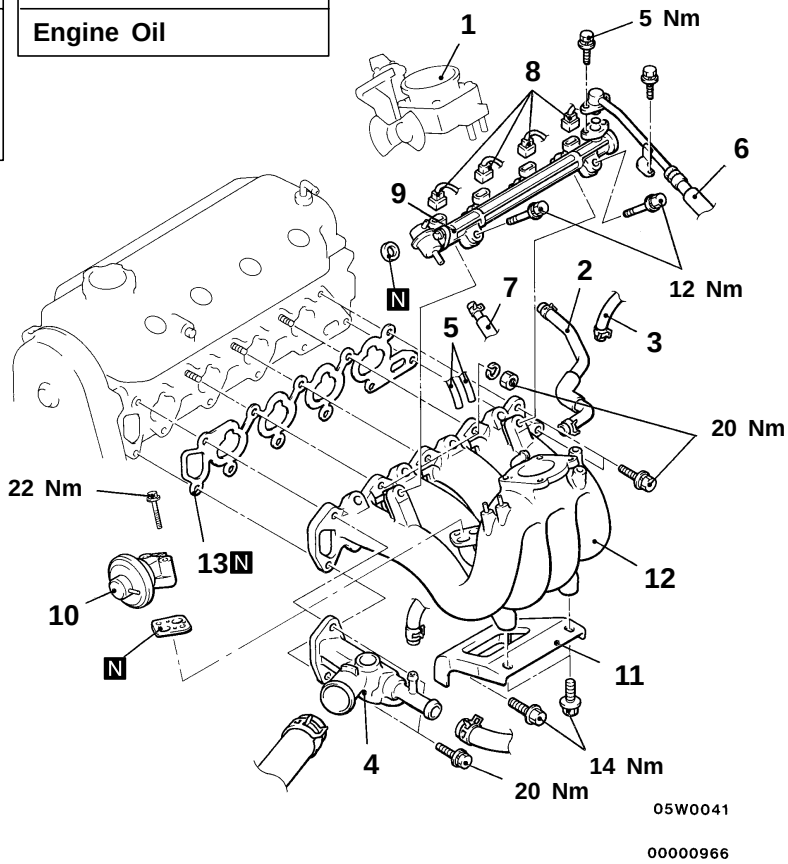

Removal steps

1. Throttle body (Refer to GROUP 13A – Throttle Body.)
2. PCV hose
3. Brake booster vacuum hose connection
4. Water outlet fitting
5. Vacuum hose connection
6. ▶A◀ High-pressure fuel hose connection
7. Fuel return hose connection
8. Injector connector
9. ◀A▶ Injector and delivery pipe assembly
10. EGR valve
11. Intake manifold stay
12. Intake manifold
13. Intake manifold gasket

REMOVAL SERVICE POINT

◀A▶ DELIVERY PIPE AND INJECTOR REMOVAL

Remove the delivery pipe (with the injectors and pressure regulator attached to it).

Caution
Care must be taken, when removing the delivery pipe, not to drop the injector.

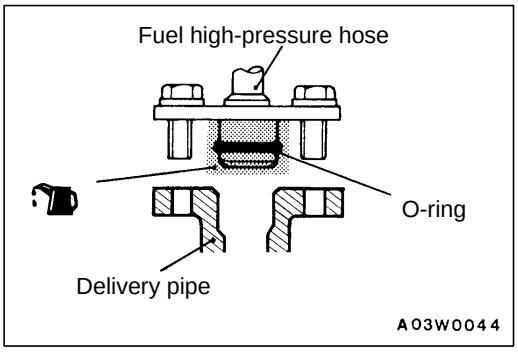

INSTALLATION SERVICE POINT

▶A◀ HIGH-PRESSURE FUEL HOSE INSTALLATION

1. When connecting the high-pressure fuel hose to the delivery pipe, apply a small amount of new engine oil to the O-ring and then insert the high-pressure fuel hose, being careful not to damage the O-ring.

   Caution
   Be careful not to let any engine oil get into the delivery pipe.

INSPECTION

15100310161

Check the following points; replace the part if a problem is found.

INTAKE MANIFOLD CHECK

1. Check for damage or cracking of any part.
2. Check for obstruction of the negative pressure (vacuum) outlet port, and for obstruction of the water passage or gas passage.
3. Using a straight edge and thickness gauge, check for distortion of the cylinder head installation surface.

   Standard value: 0.15 mm or less

   Limit: 0.20 mm

INTAKE AND EXHAUST MANIFOLD <4D56-2WD>

15100360029

REMOVAL AND INSTALLATION

Pre-removal and Post-installation Operation
- Front Exhaust Pipe Removal and Installation (Refer to P.15-19.)

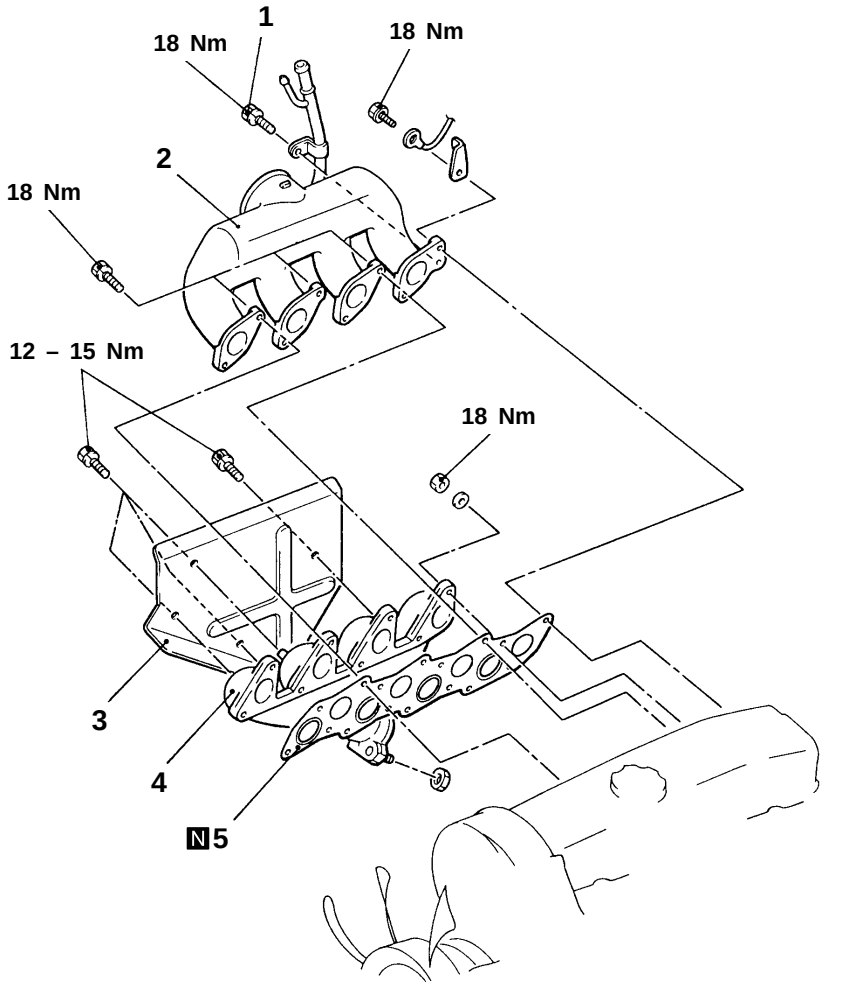

Removal steps

1. Vacuum pipe attaching bolt
2. Intake manifold
3. Heat protector
4. Exhaust manifold
5. Intake and exhaust manifold gasket

INSPECTION

15100370022

Check the following points; replace the part if a problem is found.

INTAKE AND EXHAUST MANIFOLD CHECK

1. Check for damage or cracking of any part.
2. Using a straight edge and thickness gauge, check for distortion of the cylinder head installation surface.

   Standard valve: 0.15 mm or less

   Limit: 0.20 mm

TURBOCHARGER AND EXHAUST MANIFOLD <4D56-4WD>

15100450023

REMOVAL AND INSTALLATION

Pre-removal and Post-installation Operation
- Engine Coolant Draining and Supplying
- Air Cleaner Cover and Air Intake Hose Removal and Installation (Refer to P. 15-4.)
- Intercooler Removal and Installation (Refer to P. 15-6.)
- Brake Master Cylinder Heat Protector Removal and Installation

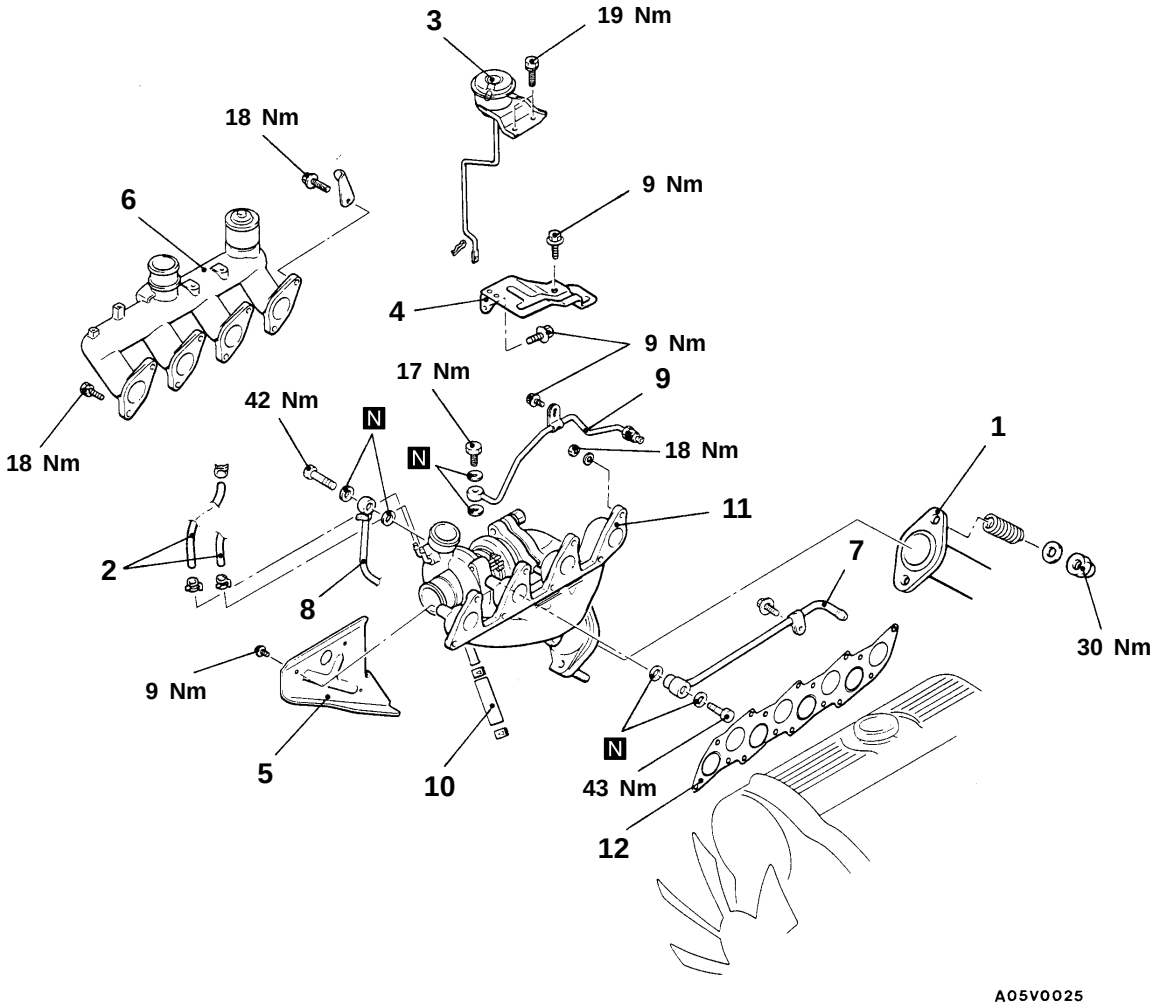

Removal steps

1. Front exhaust pipe connection
2. Boost hose
3. Waste gate actuator
4. Heat protector A
5. Heat protector
6. Intake manifold
7. Water pipe B
8. Water pipe A
9. Oil pipe
10. Oil return hose connection
11. Exhaust manifold and turbocharger assembly
12. Intake and exhaust manifold gasket

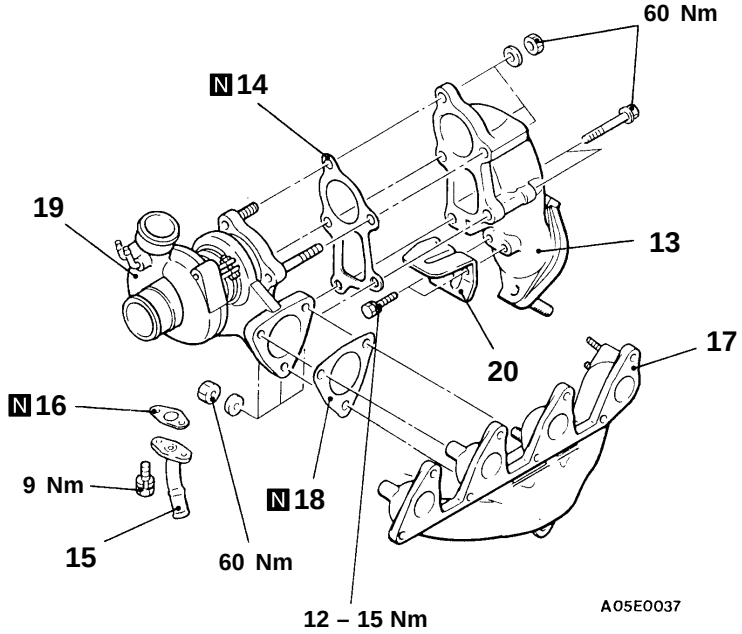

13. Exhaust fitting
14. Exhaust fitting gasket
15. Oil-return pipe
16. Oil-return pipe gasket
17. Exhaust manifold
18. Turbocharger gasket
▶A◀ 19. Turbocharger assembly
20. Heat protector

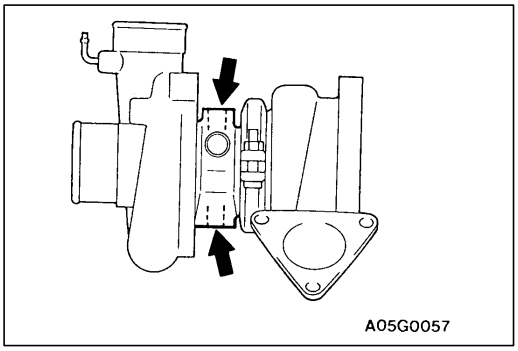

INSTALLATION SERVICE POINT

▶A◀ TURBOCHARGER ASSEMBLY INSTALLATION

1. Clean the alignment surfaces shown in the illustration.
2. Supply clean engine oil from the oil pipe mounting hole of the turbocharger assembly.

   Caution
   When cleaning, take care that no foreign material gets into the engine coolant or oil passages hole.

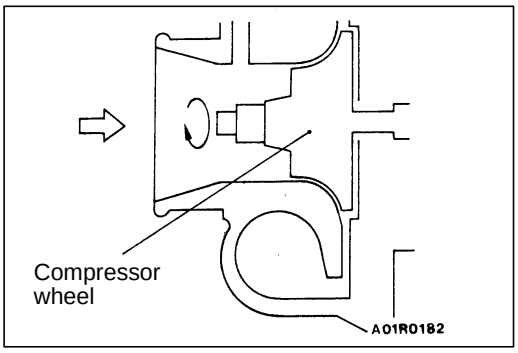

INSPECTION

15100640017

TURBOCHARGER ASSEMBLY CHECK

- Visually check the turbine wheel and the compressor wheel for cracking or other damage.
- Check whether the turbine wheel and the compressor wheel can be easily turned by hand.
- Check for oil leakage from the turbocharger assembly.
- Check whether or not the waste gate valve remains open. If any problem is found, replace the part after disassembly.

OIL PIPE AND OIL RETURN PIPE CHECK 15100650010

Check the oil pipe and oil return pipe for clogging, bending, or other damage. If there is clogging, clean it.

EXHAUST MANIFOLD CHECK 15100340108

Damage or cracking of any part.

TURBOCHARGER

15100600015

DISASSEMBLY AND REASSEMBLY

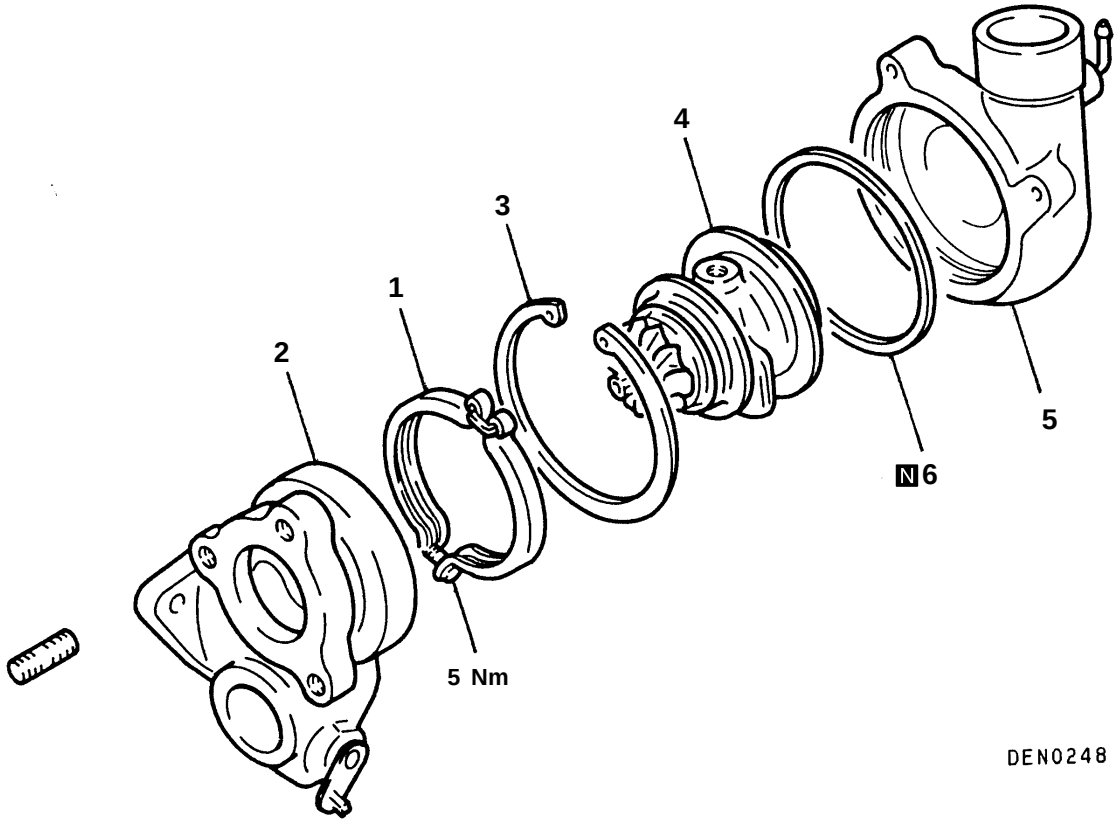

Disassembly steps

	▶E◀	1. Coupling
	▶D◀	2. Turbine housing
◀A▶	▶C◀	3. Snap ring
◀B▶	▶B◀	4. Turbine wheel assembly
		5. Compressor cover
	▶A◀	6. O-ring

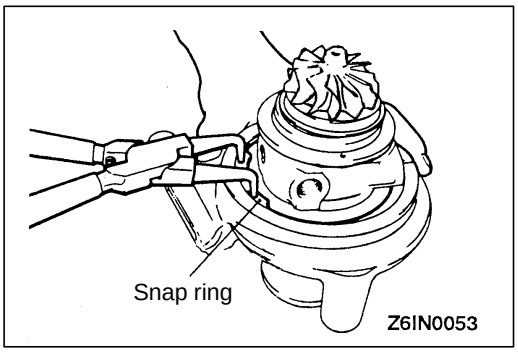

DISASSEMBLY SERVICE POINTS

◀A▶ SNAP RING REMOVAL

Lay the unit with the compressor cover side facing down and using snap ring pliers, remove the compressor cover attaching snap ring.

Caution

When removing the snap ring, hold it with fingers to prevent it from springing away.

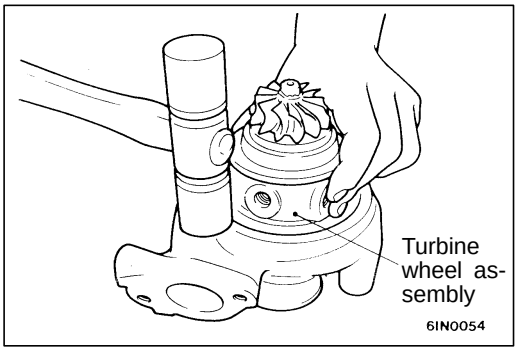

◀B▶ TURBINE WHEEL ASSEMBLY REMOVAL

Remove the turbine wheel assembly, striking the circumference of the compressor cover with a plastic hammer. The turbine wheel assembly may be a little hard to remove due to an O-ring put on the outer circumference.

CLEANING

(1) Use a clean cleaning oil commercially available. Do not use corrosive cleaning oils as they could damage to some parts.
(2) Use a plastic scraper or hard brush to clean aluminum parts.

REASSEMBLY SERVICE POINTS

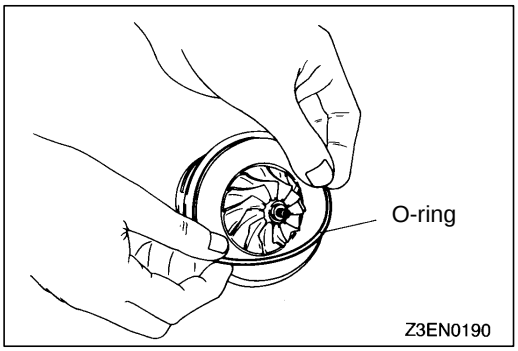

▶A◀ O-RING INSTALLATION

Apply a light coat of engine oil to a new O-ring and fit in the turbine wheel assembly groove.

Caution
When installing the O-ring, use care not to damage it. A damaged O-ring causes oil leaks.

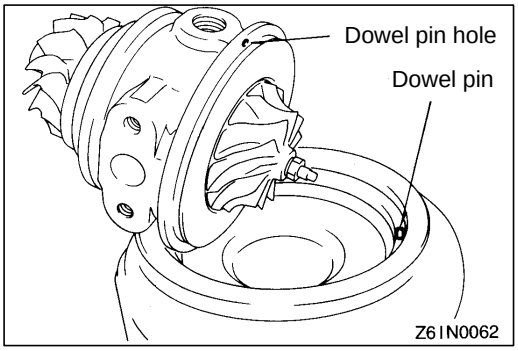

▶B◀ TURBINE WHEEL ASSEMBLY

1. Apply a light coat of engine oil to the periphery of the O-ring.
2. Install the turbine wheel assembly to the compressor cover in relation to the dowel pin.

   Caution
   Use care not to damage the blades of turbine wheel and compressor wheel.

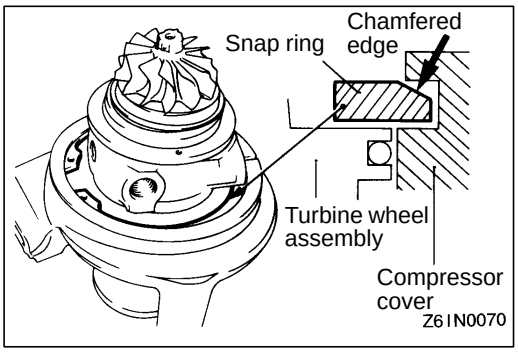

▶C◀ SNAP RING INSTALLATION

Lay the assembly with the compressor cover facing down and fit the snap ring.

Caution
Fit the snap ring with its chamfered side facing up.

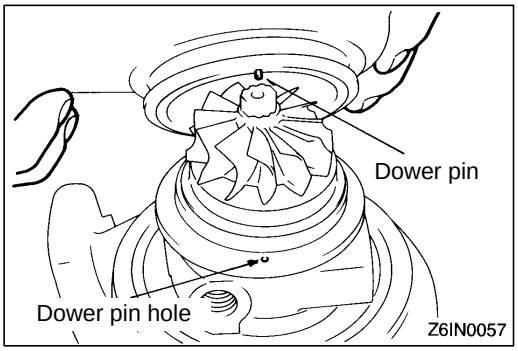

▶D◀ TURBINE HOUSING INSTALLATION

Install the turbine housing in relation to the dowel pin.

Caution
Use care not to damage the blades of turbine wheel.

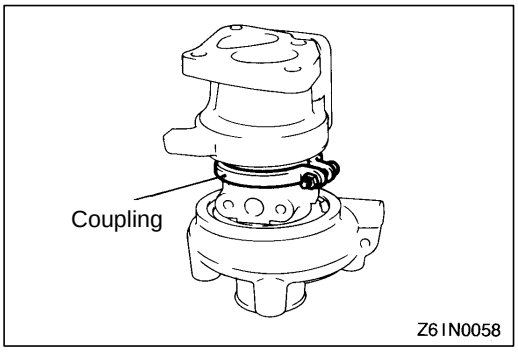

▶E◀ COUPLING INSTALLATION

Install the coupling and tighten to specified torque.

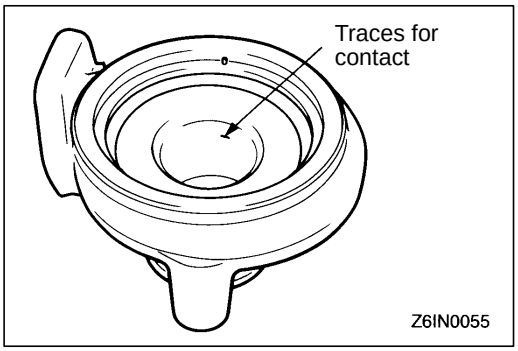

INSPECTION

15100610018

TURBINE HOUSING

1. Check the housing for traces of contact with the turbine wheel, cracks due to overheating, pitching, deformation and other damage. Replace with a new turbine housing if cracked.
2. Operate the waste gate valve lever manually to check that the gate can be operated and closed smoothly.

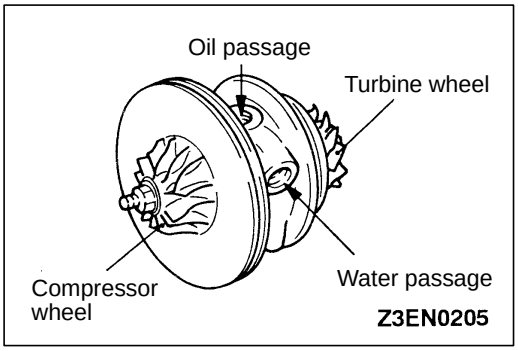

COMPRESSOR COVER

Check the compressor cover for traces of contact with the compressor wheel and other damage.

TURBINE WHEEL ASSEMBLY

1. Check the turbine and compressor wheel blades for bend, burr, damage, corrosion and traces of contact on the back side and replace if defective.
2. Check the oil passage of the turbine wheel assembly for deposit and clogging.
3. In the case of water cooled type, check also the water passage for deposit and clogging.
4. Check the turbine wheel and compressor wheel for light and smooth turning.

OIL PIPE/OIL RETURN PIPE

Correct or replace the oil pipe and oil return pipe if clogged, collapsed, deformed or otherwise damaged.

EXHAUST MANIFOLD <4G6>

15100330327

REMOVAL AND INSTALLATION

Pre-removal and Post-installation Operation
- Front Exhaust Pipe Removal and Installation (Refer to P. 15-19.)
- Air Cleaner Removal and Installation (Refer to P. 15-4.)

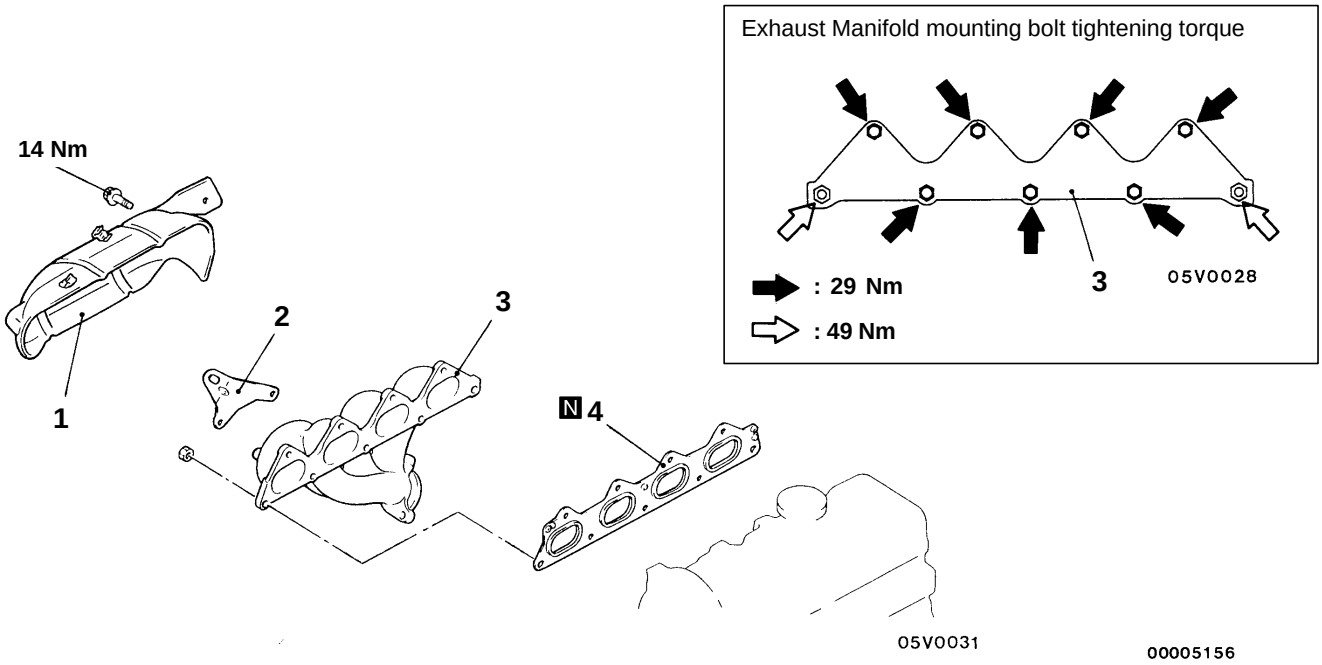

Removal steps

1. Heat protector
2. Engine hanger
3. Exhaust manifold
4. Exhaust manifold gasket

INSPECTION

15100340115

Check the following points; replace the part if a problem is found.

EXHAUST MANIFOLD CHECK

1. Check for damage or cracking of any part.
2. Using a straight edge and a thickness gauge, check for distortion of the cylinder head installation surface.

   Standard value: 0.15 mm or less

   Limit: 0.20 mm

EXHAUST PIPE AND MAIN MUFFLER

15100540249

REMOVAL AND INSTALLATION

Pre-removal and Post-installation Operation
- Front Under Cover Removal and Installation <2WD>
- Front Under Cover and Transfer Case Protector Removal and Installation <4WD>

<4G63>

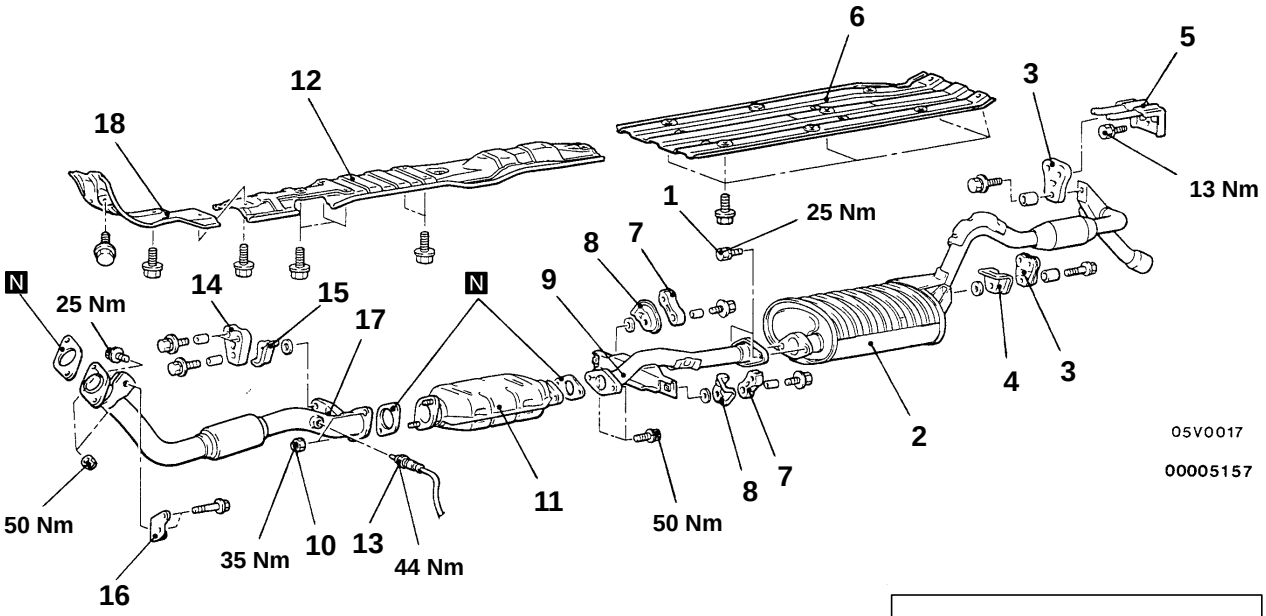

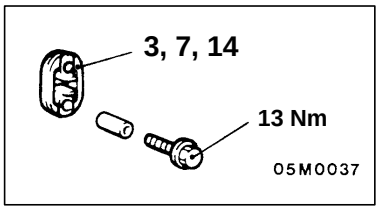

Main muffler removal steps
1. Bolt
2. Main muffler
3. Hanger
4. Heat protector
5. Hanger bracket
6. Rear body floor heat protector

Main muffler removal steps
1. Bolt
7. Hanger
8. Heat protector
9. Center exhaust pipe
10. Nut
11. Catalytic converter
12. Front floor heat protector B

Front exhaust pipe removal steps
10. Nut
13. Oxygen sensor
14. Hanger
15. Heat protector
16. Exhaust support bracket
17. Front exhaust pipe
18. Front floor heat protector A

<4D56>

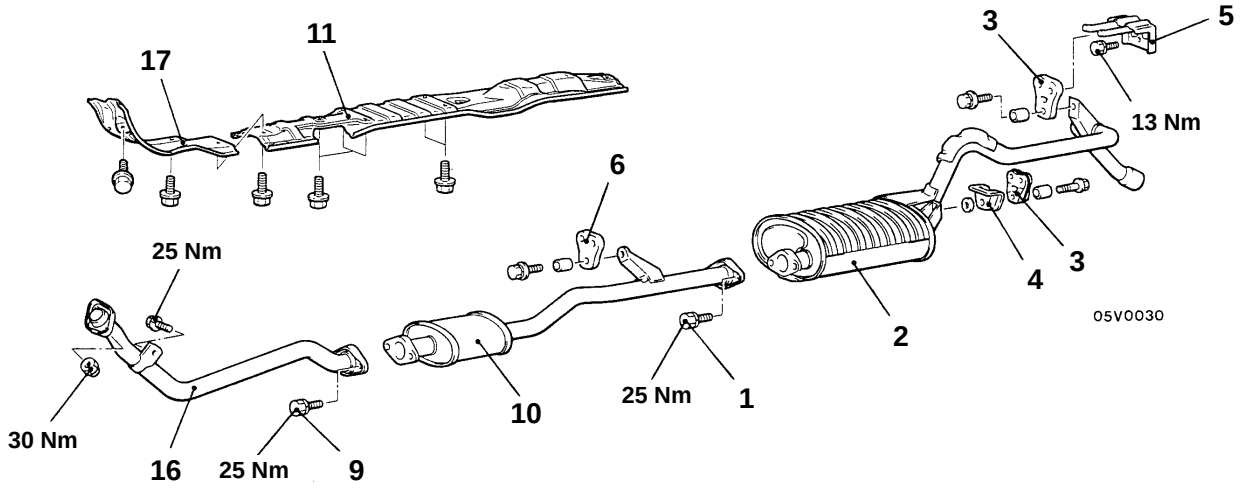

<4G64>

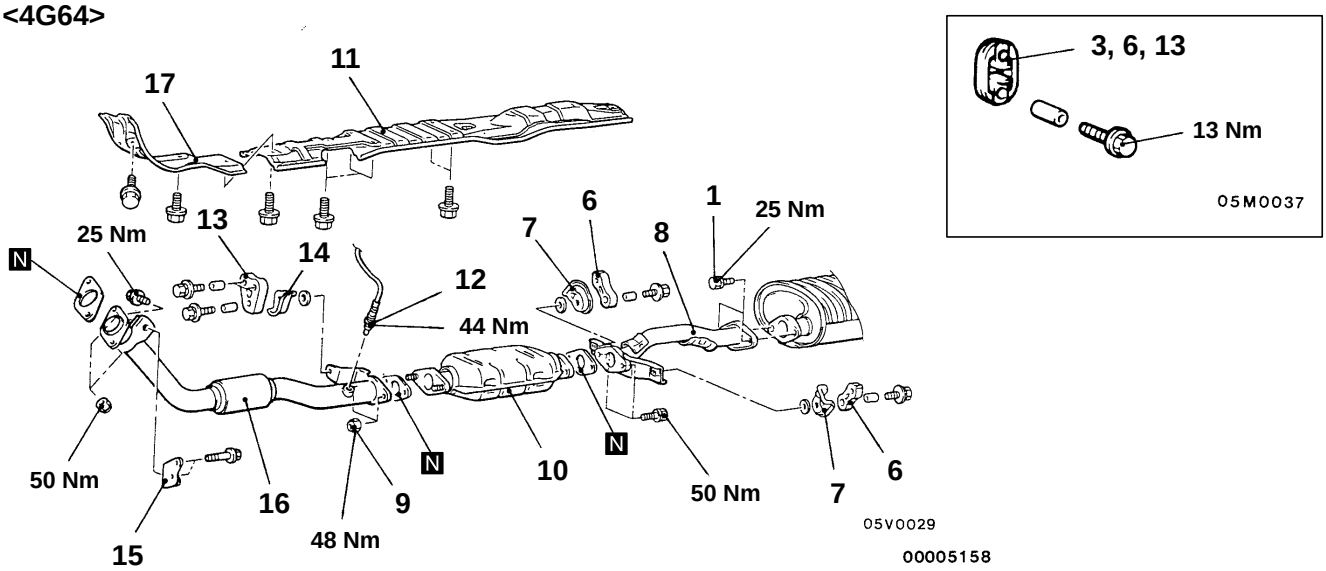

Main muffler removal steps

1. Bolt
2. Main muffler
3. Hanger
4. Heat protector
5. Hanger bracket

Center exhaust pipe removal steps

1. Bolt
6. Hanger
7. Heat protector
8. Center exhaust pipe
9. Bolt <4D56> or nut <4G64>
10. Catalytic converter
11. Front floor heat protector B

Front exhaust pipe removal steps

9. Bolt <4D56> or nut <4G64>
12. Oxygen sensor
13. Hanger
14. Heat protector
15. Exhaust support bracket
16. Front exhaust pipe
17. Front floor heat protector A

GROUP 15
INTAKE AND EXHAUST

GENERAL

OUTLINE OF CHANGE(S)

The service procedures have been changed due to the following modification.

- The air cleaner in the vehicles with 4D56 has been modified.
- EGR valves have been newly used in the vehicles with 4D56. Also, the manifold in the 2WD models has been modified.
- A catalytic converter and a flexible tube have been newly used in the 2WD models with 4D56.

AIR CLEANER

REMOVAL AND INSTALLATION

<4D56-2WD>

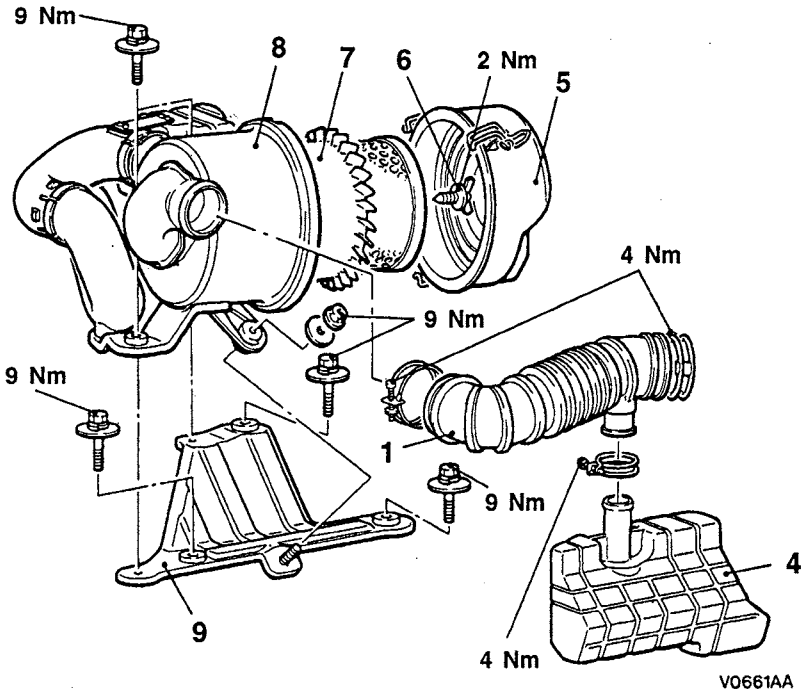

<4D56-4WD>

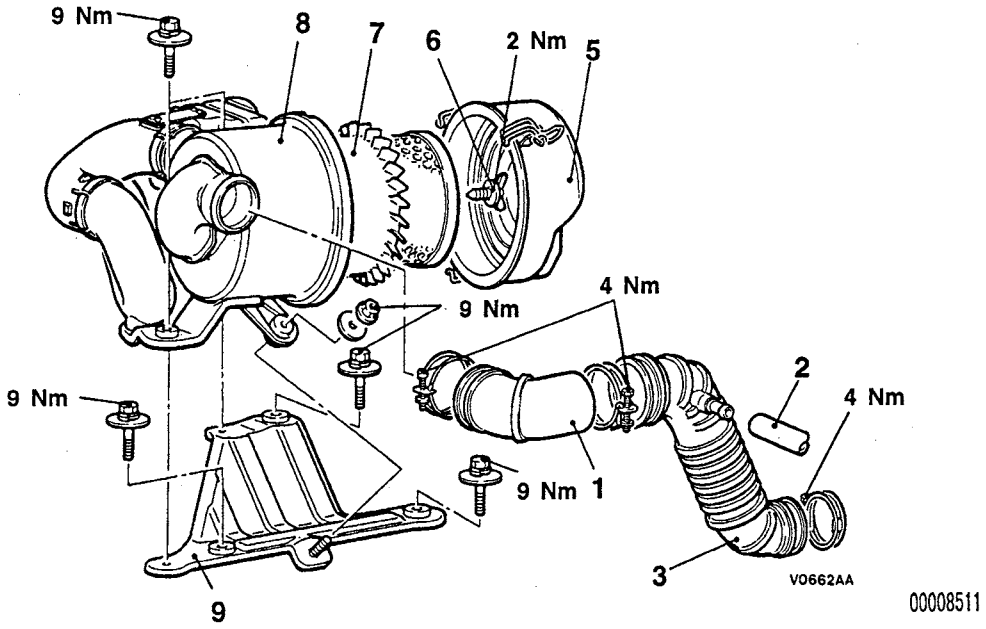

Removal steps

1. Air intake hose A
2. Breather hose connection <4WD>
3. Air intake hose B <4WD>
4. Resonator <2WD>
5. Air cleaner cover
6. Bolt
7. Air cleaner element
8. Air cleaner body
9. Air cleaner bracket

INTAKE AND EXHAUST MANIFOLD <4D56-2WD>

REMOVAL AND INSTALLATION

Pre-removal and Post-installation Operation
- Front Exhaust Pipe Removal and Installation (Refer to P.15-5.)

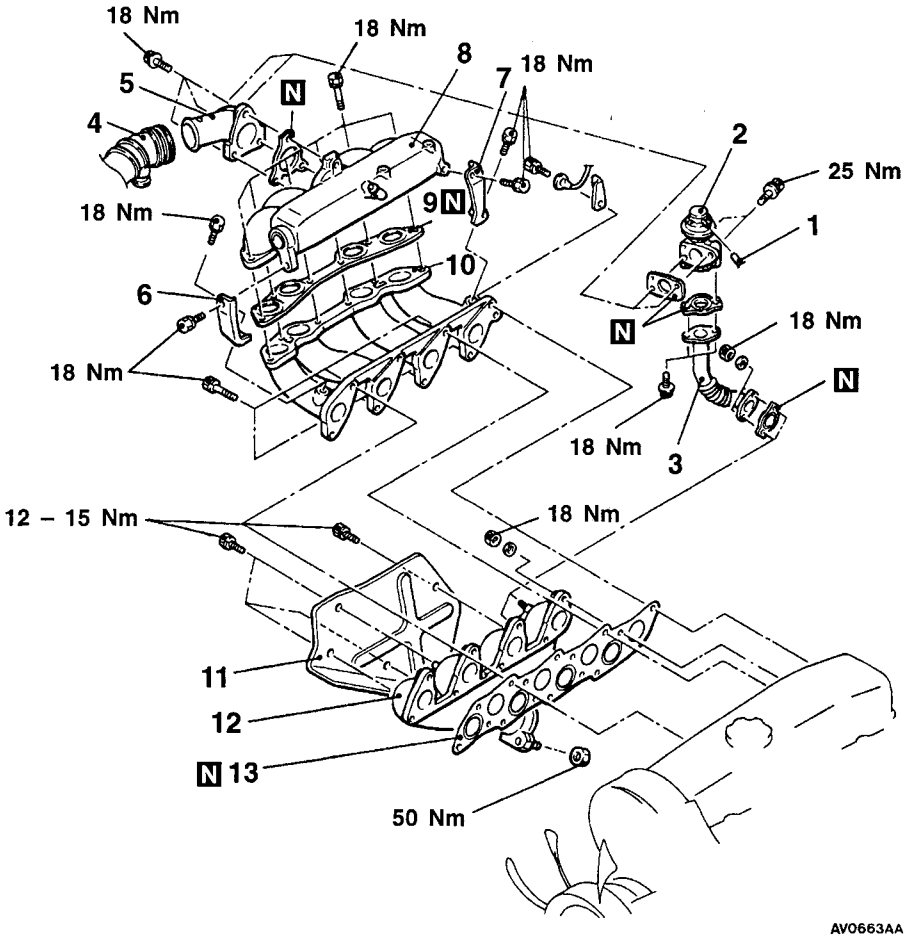

Removal steps

1. Vacuum hose
2. EGR valve
3. EGR pipe
4. Air intake hose A
5. Air intake fitting
6. Front intake manifold stay
7. Rear intake manifold stay
8. Upper intake manifold
9. Intake manifold gasket
10. Lower intake manifold
11. Heat protector
12. Exhaust manifold
13. Intake and exhaust manifold gasket

TURBOCHARGER AND EXHAUST MANIFOLD <4D56-4WD>

REMOVAL AND INSTALLATION

Pre-removal and Post-installation Operation
- Engine Coolant Draining and Supplying
- Air Cleaner Cover and Air Intake Hose Removal and Installation (Refer to P.15-2.)
- Intercooler Removal and Installation
- Brake Master Cylinder Heat Protector Removal and Installation

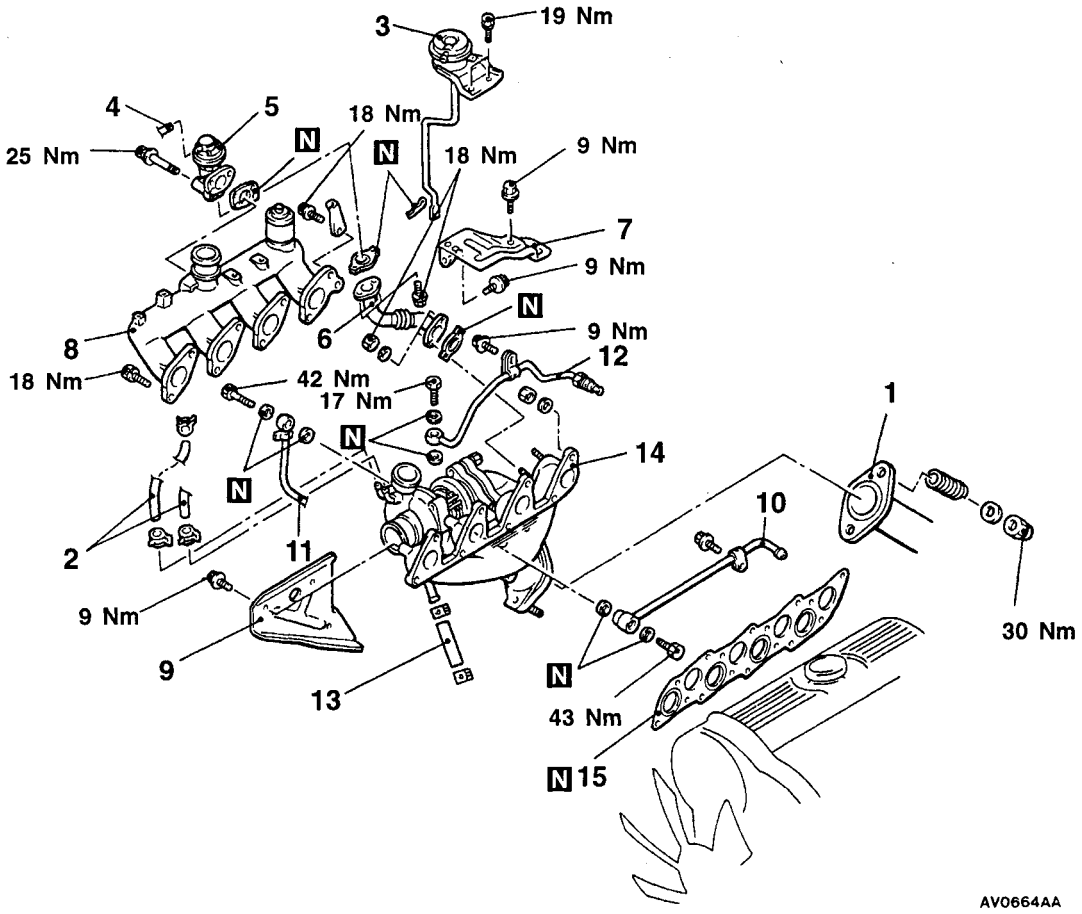

Removal steps

1. Front exhaust pipe connection
2. Boost hoses
3. Waste gate actuator
4. Vacuum hose
5. EGR valve
6. EGR pipe
7. Heat protector A
8. Intake manifold
9. Heat protector
10. Water pipe B
11. Water pipe A
12. Oil pipe
13. Oil return hose connection
14. Exhaust manifold and turbocharger assembly
15. Intake and exhaust manifold gasket

EXHAUST PIPE AND MAIN MUFFLER

REMOVAL AND INSTALLATION

Pre-removal and Post-installation Operation
- Front Under Cover Removal and Installation

<4D56-2WD>

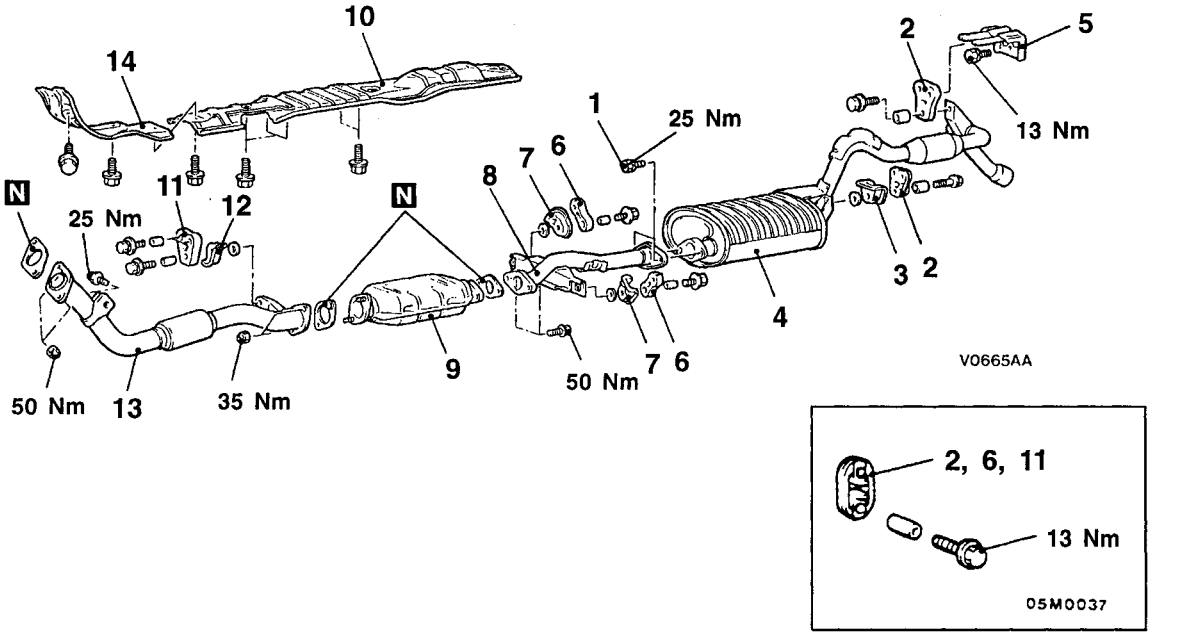

00008512

Main muffler removal steps

1. Bolt
2. Hangers
3. Heat cover
4. Main muffler
5. Hanger bracket

Center exhaust pipe removal steps

1. Bolt
6. Hangers
7. Heat covers
8. Center exhaust pipe
9. Catalytic converter
10. Front floor heat protector B

Front exhaust pipe removal steps

11. Hanger
12. Heat cover
13. Front exhaust pipe
14. Front floor heat protector A

INTAKE AND EXHAUST

CONTENTS

GENERAL 2
Outline of Changes 2
SPECIAL TOOL <4G64> 2
SERVICE SPECIFICATIONS 2
ON-VEHICLE SERVICE 3
Turbocharger Supercharging Pressure Check . . . 3
Supercharging Pressure Control System Check 4
Variable Geometry Actuator Check 5
Variable Geometry Solenoid Valve Check 5
Waste Gate Actuator Check 6
AIR CLEANER <4D56-Step III> 6
INTERCOOLER <4D56-Step III> 6
INTAKE AND EXHAUST MANIFOLD AND TURBOCHARGER <4D56-Step III> 7
EXHAUST PIPE AND MAIN MUFFLER <4G64> 11

GENERAL

OUTLINE OF CHANGES

With the modification below by additional emission regulation step III compatible 4D56 engine, the service procedure of the part that is different from previous service procedure has been established.
As the VG (Variable Geometry) turbocharger cannot be disassembled, the service procedure for the VG turbocharger is not described.

- The turbocharger and intercooler have been added to the vehicle with 2WD.
- The turbocharger of the vehicle with 4WD has been modified to VG (Variable Geometry) turbocharger.

With additional oxygen sensor by compatible emission regulation step III, the service procedure of 4G64 engine that is different from previous service procedure has been established.

NOTE
For description of structure and operation of VG (Variable Geometry) turbocharger, refer to '02 MY PAJERO Workshop Manual.

SPECIAL TOOL <4G64>

Tool	Number	Name	Use
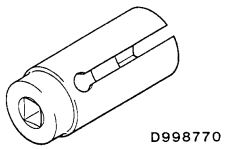	MD998770	Oxygen sensor wrench	Removal/Installation of oxygen sensor

SERVICE SPECIFICATIONS

Items	Standard Value
Variable geometry actuator activation vacuum (Approximately 1 mm stroke) kPa <Step III compatible 4D56-4WD>	Approximately 10.5 – 12.5
Waste gate actuator activation pressure (Approximately 1 mm stroke) kPa <Step III compatible 4D56-2WD>	Approximately 92
Variable geometry solenoid valve coil resistance (at 20°C) Ω <Step III compatible 4D56-4WD>	29 – 35

ON-VEHICLE SERVICE

TURBOCHARGER SUPERCHARGING PRESSURE CHECK

<Step III compatible 4D56-2WD and Step III compatible 4D56-4WD>

Caution
Conduct the driving test in a location where driving at full acceleration can be done with safety. Two person should be in the vehicle when the test is conducted; the person in the passenger seat should read the indications shown by the MUT-II.

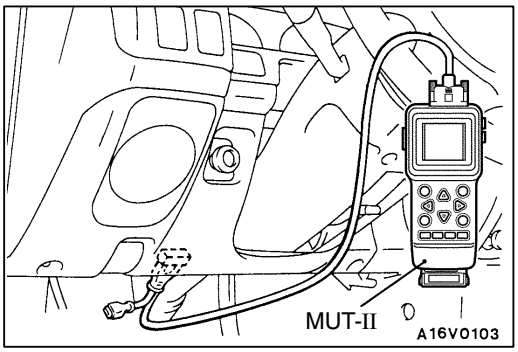

1. Set the vehicle to the pre-inspection condition.
2. Turn the ignition switch to “LOCK” (OFF) position, and connect the diagnosis connector to the MUT-II.
3. Use the data list function named ”Item No. 04” boost pressure sensor of the MUT-II to check the supercharging pressure when the engine speed increases to approximately 3,000 r/min or more by driving at full acceleration in 2nd.
4. When the indicated supercharging pressure does not become positive pressure, check the following items.
   - Malfunction of the waste gate actuator <Step III compatible 4D56-2WD>
   - Malfunction of the boost pressure sensor
   - Leakage of supercharging pressure
   - Malfunction of the turbocharger
5. When the indicated supercharging pressure is 133 kPa or more <Step III compatible 4D56-4WD> or 84 kPa or more <Step III compatible 4D56-2WD>, supercharging control may be faulty, therefore check the followings.
   - Disconnection or cracks of the waste gate actuator rubber hose <Step III compatible 4D56-2WD>
   - Malfunction of the variable geometry actuator <Step III compatible 4D56-4WD>
   - Malfunction of the waste gate actuator <Step III compatible 4D56-2WD>
   - Malfunction of the variable nozzle <Step III compatible 4D56-4WD>
   - Malfunction of the waste gate valve <Step III compatible 4D56-2WD>
   - Malfunction of the variable geometry solenoid valve <Step III compatible 4D56-4WD>
   - Malfunction of the boost pressure sensor
   - Malfunction of the variable geometry control pressure sensor <Step III compatible 4D56-4WD>

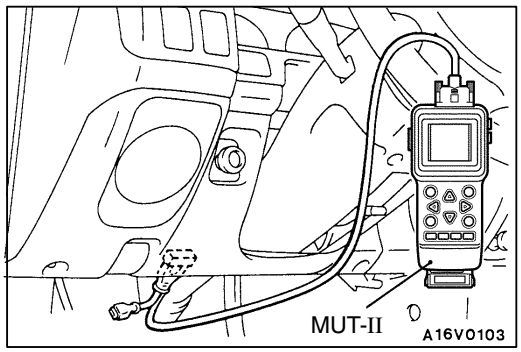

SUPERCHARGING PRESSURE CONTROL SYSTEM CHECK

<Step III compatible 4D56-4WD>

1. Set the vehicle to the pre-inspection condition.
2. Turn the ignition switch to “LOCK” (OFF) position, and connect the diagnosis connector to the MUT-II.
3. Start the engine, and let it run at idle.
4. Select the actuator testing function named “Item No. 35 or No. 36” of the MUT-II to check that the variable geometry actuator vacuum and the supercharging pressure increase when the variable geometry solenoid valve is activated.

Variable geometry solenoid valve condition	Variable geometry actuator vacuum	Supercharging pressure
OFF	0 kPa	Approximately –1 kPa
ON	Approximately 80 kPa	Approximately 3 kPa

NOTE
(1) If the variable geometry actuator vacuum is not in a normal condition, the variable geometry actuator, variable geometry solenoid valve, variable geometry control pressure sensor, vacuum pump or hose may be faulty.
(2) If the variable geometry actuator vacuum is in a normal condition but the supercharging pressure is not in a normal condition, the variable geometry turbocharger nozzle, boost pressure sensor, or hose may be faulty.

Caution
Be careful not to forcibly activate the variable geometry solenoid valve to the fullest degree when running at a high speed. Too much supercharging pressure could damage the engine or the turbocharger.

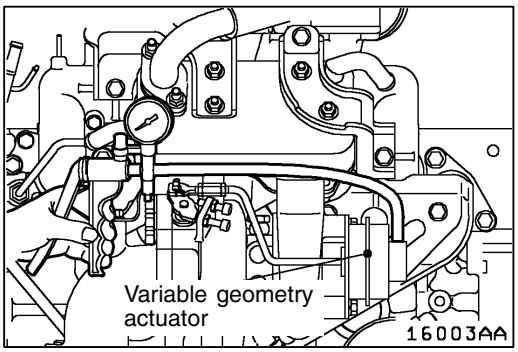

VARIABLE GEOMETRY ACTUATOR CHECK

<Step III compatible 4D56-4WD>

1. Connect the hand vacuum pump to nipple.
2. While gradually applying vacuum, check the vacuum that begins to active (approximately 1 mm stroke) the variable geometry actuator rod.

Standard value: Approximately 10.5 – 12.5 kPa

Caution
In order to avoid damage to the diaphragm, do not apply a vacuum of 59 kPa or higher.

3. If there is a significant deviation from the standard value, check the actuator or the variable nozzle: replace if necessary.

VARIABLE GEOMETRY SOLENOID VALVE CHECK

<Step III compatible 4D56-4WD>

NOTE
When disconnecting the vacuum hose, always make a mark so that it can be reconnected at original position.

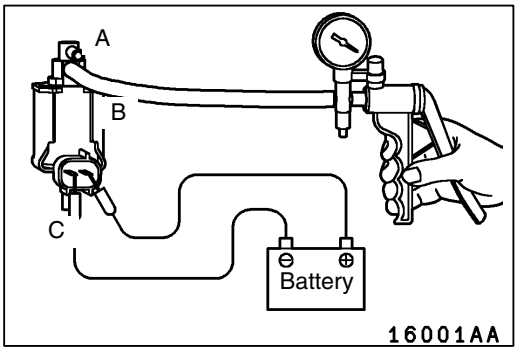

1. Disconnect the vacuum hose (black, red stripe) from the solenoid valve.
2. Disconnect the harness connector.
3. Connect a hand vacuum pump to the nipple to which the red striped vacuum hose was connected.
4. Check airtightness by applying a vacuum with voltage applied directly from the battery to the variable geometry solenoid valve and without applying voltage.

Battery voltage	Nipple condition	Normal condition
Applied	Both nipples are opened.	Vacuum leaks.
	Nipple A is closed.	Vacuum is maintained.
Not applied	Both nipples are opened.	Vacuum leaks.
	Nipple C is closed.	Vacuum is maintained.

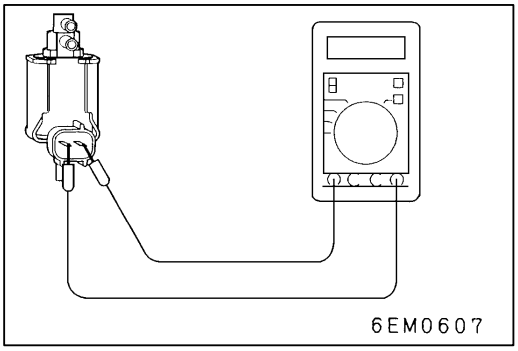

5. Measure the resistance between the terminals of the solenoid valve.

Standard value: 29 – 35 Ω (at 20°C)

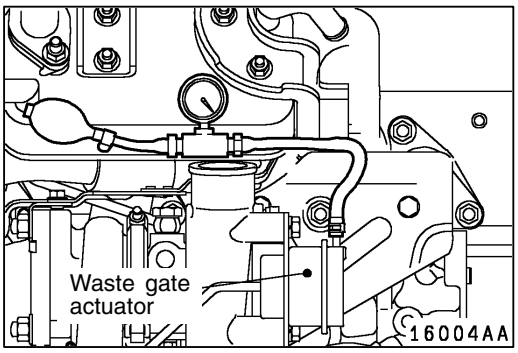

WASTE GATE ACTUATOR CHECK

<Step III compatible 4D56-2WD>

1. Connect a manual pump (pressure-application type) to nipple.
2. While gradually applying pressure, check the pressure that begins to activate (approx. 1 mm stroke) the waste gate actuator rod.

   Standard value: Approximately 92 kPa

   Caution
   In order to avoid damage to the diaphragm, do not apply a pressure of 105 kPa or higher.
3. If there is a significant deviation from the standard value, check the actuator or the waste gate valve: replace if necessary.

AIR CLEANER <4D56-Step III>

With additional turbocharger of the vehicle with 2WD, the air cleaner is modified to the air cleaner of the vehicle with 4WD. The service procedure is same as one of the vehicle with 4WD.

INTERCOOLER <4D56-Step III>

With additional air temperature sensor by adopting electronic-controlled injection pump, the air temperature switch of the intercooler is not adopted. The service procedure is same as previous service procedure except for the air temperature sensor.
On new models, the engine-ECU controls the intercooler fan. Due to this change, the intercooler fan-ECU has been discontinued.

INTAKE AND EXHAUST MANIFOLD AND TURBOCHARGER <4D56-Step III>

REMOVAL AND INSTALLATION

Pre-removal and Post-installation Operation
- Intercooler Removal and Installation (Refer to P.15-6.)
- Air Cleaner Cover and Air Intake Hose Removal and Installation (Refer to P.15-6.)
- EGR Valve and EGR Cooler Removal and Installation (Refer to GROUP 17.)

<2WD>

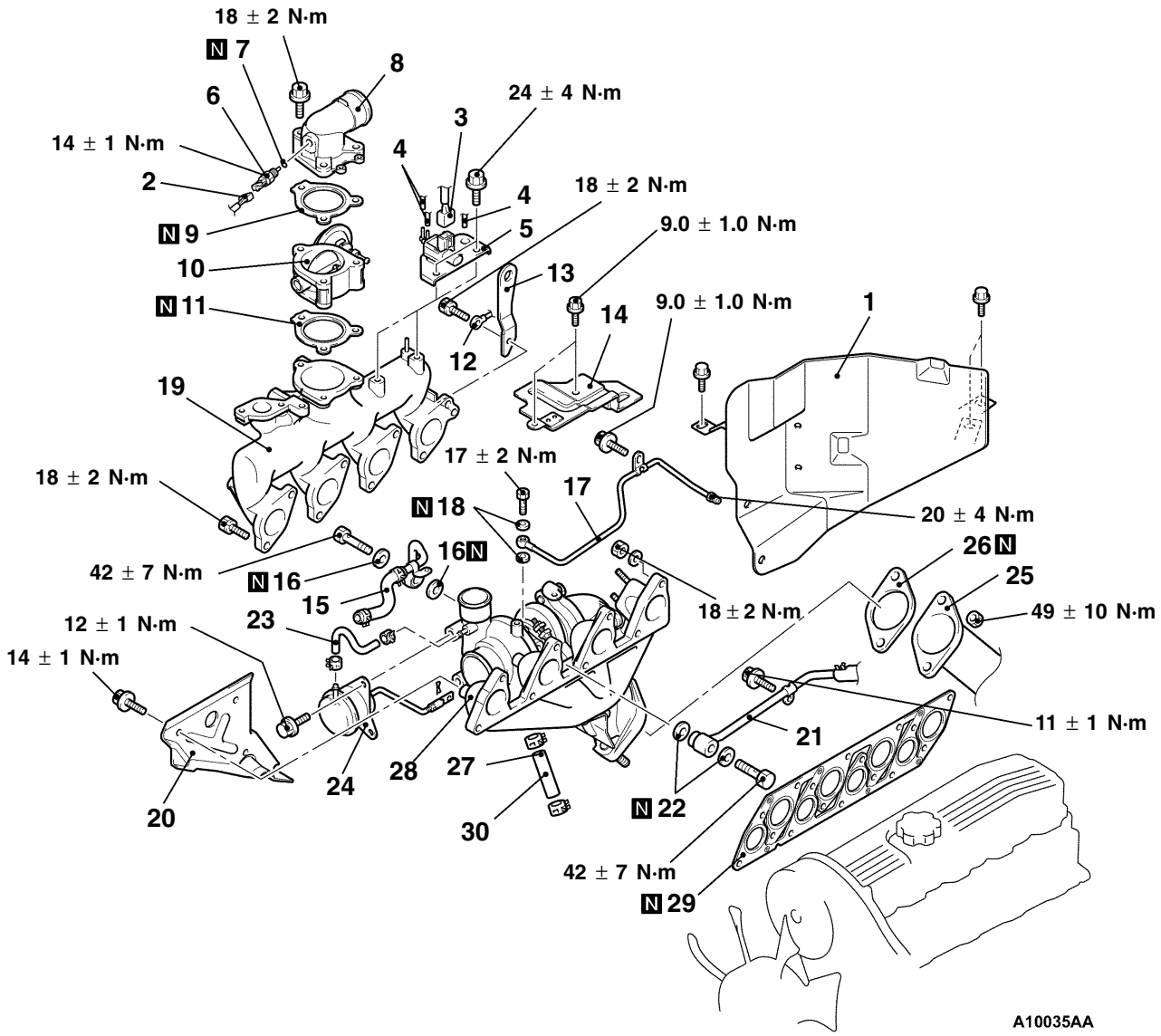

Removal steps

1. Brake master cylinder heat protector
2. Air temperature sensor connector
3. Throttle solenoid valve connector
4. Vacuum hose connection
5. Throttle valve solenoid assembly
6. Air temperature sensor
7. Gasket
8. Air intake fitting
9. Gasket
10. Throttle body assembly
11. Gasket
12. Earth cable connection
13. Engine hanger
14. Turbocharger heat protector
15. Water pipe A and water hose assembly
16. Gasket
17. Oil pipe assembly
18. Gasket
19. Intake manifold
20. Exhaust manifold heat protector
21. Water pipe B connection
22. Gasket
23. Boost hose
24. Waste gate actuator
25. Front exhaust pipe connection
26. Gasket
27. Oil return hose connection
28. Exhaust manifold and turbocharger assembly
29. Intake and exhaust manifold gasket
30. Oil return hose

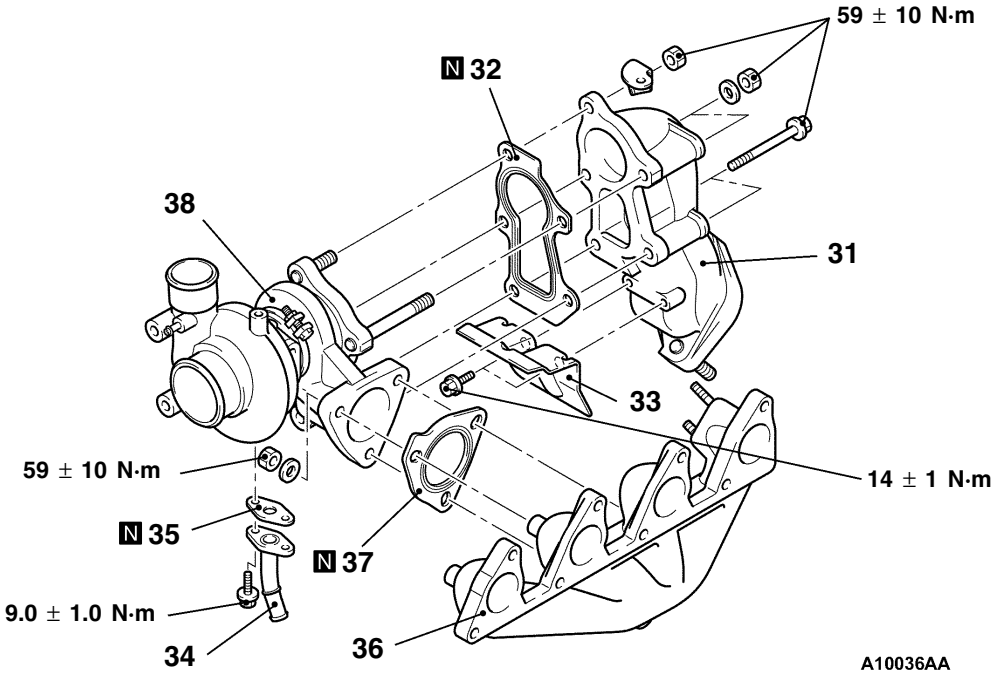

31. Exhaust fitting
32. Exhaust fitting gasket
33. Heat protector
34. Oil return pipe
35. Oil return pipe gasket
36. Exhaust manifold
37. Turbocharger gasket
▶A◀ 38. Turbocharger assembly

<4WD>

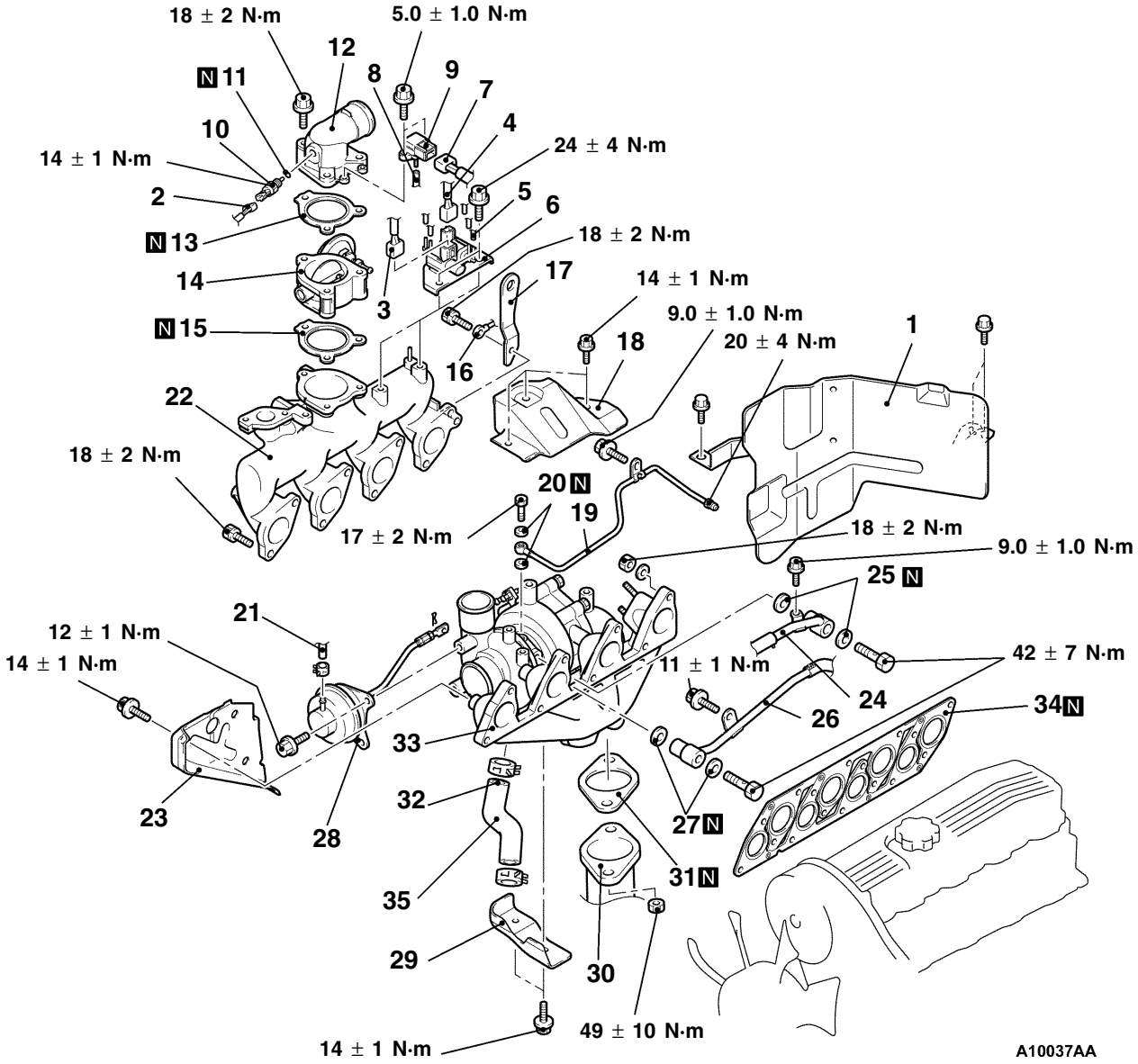

Removal steps

1. Brake master cylinder heat protector
2. Air temperature sensor connector
3. Throttle solenoid valve connector
4. VGT solenoid valve connector
5. Vacuum hose connection
6. Solenoid valve assembly
7. VG control pressure sensor connector
8. Vacuum hose connection
9. VG control pressure sensor
10. Air temperature sensor
11. Gasket
12. Air intake fitting
13. Gasket
14. Throttle body assembly
15. Gasket
16. Earth cable connection
17. Engine hanger
18. Turbocharger upper heat protector
19. Oil pipe assembly
20. Gasket
21. Vacuum hose connection
22. Intake manifold
23. Exhaust manifold heat protector
24. Water pipe A and water hose assembly
25. Gasket
26. Water pipe B connection
27. Gasket
28. VG actuator
29. Turbocharger lower heat protector
30. Front exhaust pipe connection
31. Gasket
32. Oil return hose connection
33. Exhaust manifold and turbocharger assembly
34. Intake and exhaust manifold gasket
35. Oil return hose

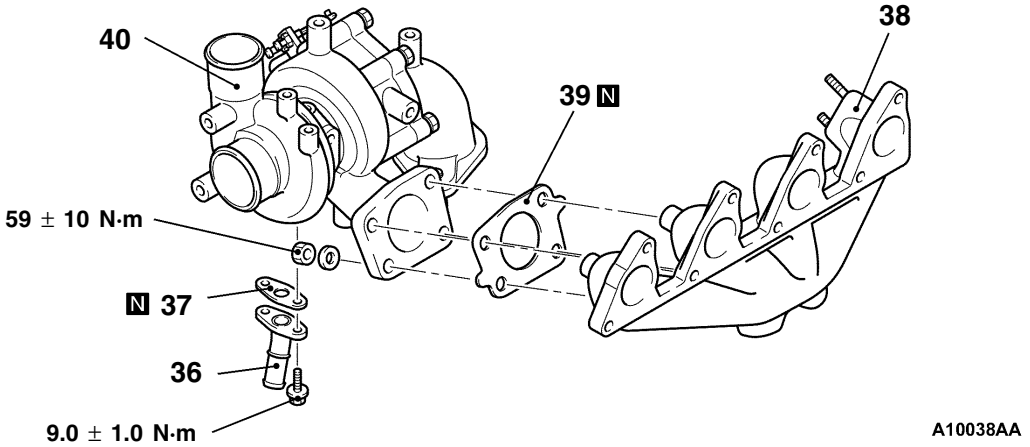

36. Oil return pipe
37. Oil return pipe gasket
38. Exhaust manifold
39. Turbocharger gasket
▶A◀ 40. Turbocharger assembly

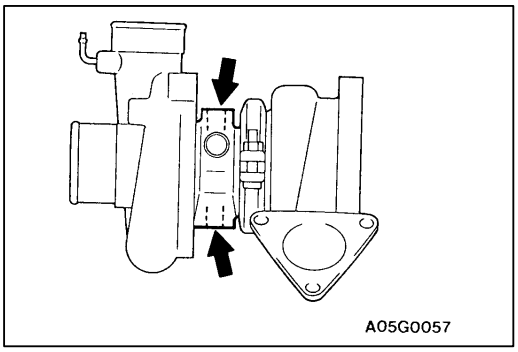

INSTALLATION SERVICE POINT

▶A◀ TURBOCHARGER ASSEMBLY INSTALLATION

1. Clean the alignment surfaces shown in the illustration.
2. Supply clean engine oil from the oil pipe mounting hole of the turbocharger assembly.

Caution
When cleaning, take care that no foreign material gets into the engine coolant or oil passages hole.

EXHAUST PIPE AND MAIN MUFFLER <4G64>

REMOVAL AND INSTALLATION

Pre-removal and Post-installation Operation
- Front Under Cover Removal and Installation <2WD>
- Front Under Cover and Transfer Case Protector Removal and Installation <4WD>

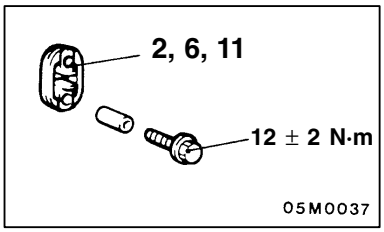

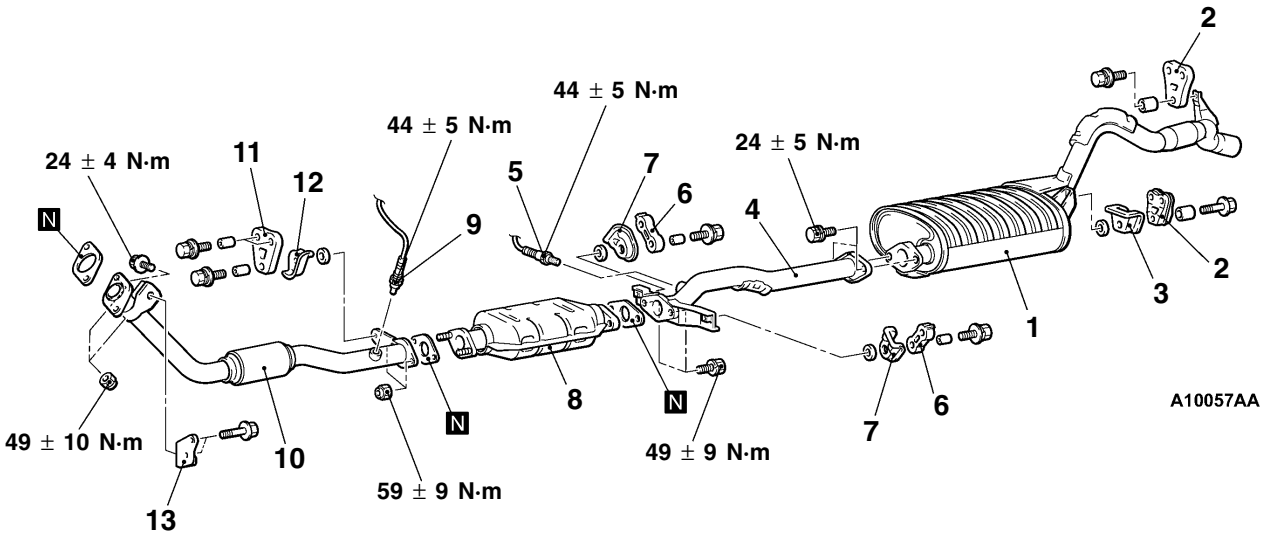

Main muffler removal steps

1. Main muffler
2. Hanger
3. Heat protector

Center exhaust pipe removal steps

4. Center exhaust pipe
◀A▶ ▶A◀ 5. Oxygen sensor
6. Hanger
7. Heat protector
8. Catalytic converter

Front exhaust pipe removal steps

◀A▶ ▶A◀ 9. Oxygen sensor
10. Front exhaust pipe
11. Hanger
12. Heat protector
13. Exhaust support bracket

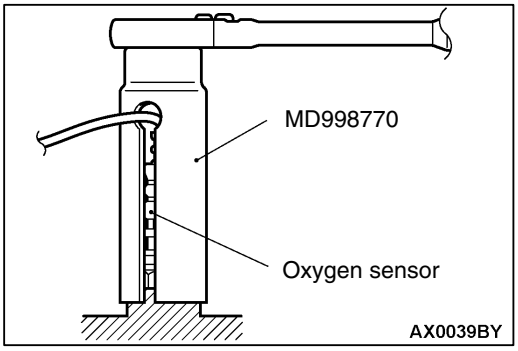

REMOVAL SERVICE POINT

◀A▶ OXYGEN SENSOR REMOVAL

Use special tool to remove the oxygen sensor.

INSTALLATION SERVICE POINT

▶A◀ OXYGEN SENSOR INSTALLATION

Use special tool to install the oxygen sensor.

NOTES

ENGINE ELECTRICAL

Click on the applicable bookmark to selected the required model year

ENGINE ELECTRICAL

CONTENTS

16109000134

CHARGING SYSTEM 2
- GENERAL INFORMATION 2
- SERVICE SPECIFICATIONS 3
- SPECIAL TOOL 3
- ON-VEHICLE SERVICE 4
  - Alternator Output Line Voltage Drop Test ... 4
  - Output Current Test 5
  - Regulated Voltage Test 7
  - Waveform Check Using An Analyzer 9
- ALTERNATOR 11

STARTING SYSTEM 18
- GENERAL INFORMATION 18
- SERVICE SPECIFICATIONS 19
- STARTER MOTOR 19

IGNITION SYSTEM 29
- GENERAL INFORMATION 29
- SERVICE SPECIFICATIONS 30
- LUBRICANT 30
- SPECIAL TOOL 30
- ON-VEHICLE SERVICE 31
  - Ignition Coil Check 31
  - Power Transistor Continuity Check 31
  - Resistive Cord Check 31
  - Spark Plug Check and Cleaning 32
  - Crank Angle Sensor, Top Dead Centre Sensor Check 32
  - Waveform Check Using An Analyzer 33
- DISTRIBUTOR 40

GLOW SYSTEM 43
- GENERAL INFORMATION 43
- SERVICE SPECIFICATIONS 44
- SEALANT 44
- ON-VEHICLE SERVICE 45
  - Self-regulating Glow System Check 45
  - Glow Control Unit Check 46
  - Glow Plug Relay Check 48
  - Glow Plug Check 48
  - Engine Coolant Temperature Sensor Check 49
- GLOW PLUG 50

CHARGING SYSTEM

GENERAL INFORMATION

16100010228

The charging system uses the alternator output to keep the battery charged at a constant level under various electrical loads.

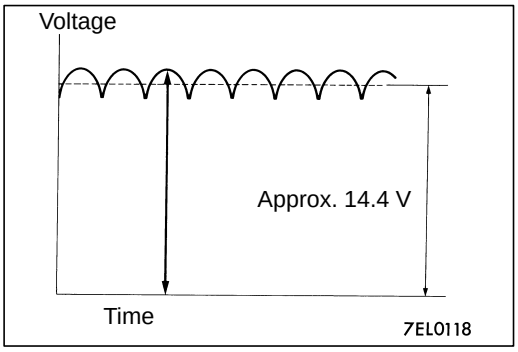

OPERATION

Rotation of the excited field coil generates AC voltage in the stator.
This alternating current is rectified through diodes to DC voltage having a waveform shown in the illustration at left. The average output voltage fluctuates slightly with the alternator load condition.

When the ignition switch is turned on, current flows in the field coil and initial excitation of the field coil occurs.
When the stator coil begins to generate power after the engine is started, the field coil is excited by the output current of the stator coil.
The alternator output voltage rises as the field current increases and it falls as the field current decreases. When the battery voltage (alternator S terminal voltage) reaches a regulated voltage of approx. 14.4 V, the field current is cut off. When the battery voltage drops below the regulated voltage, the voltage regulator regulates the output voltage to a constant level by controlling the field current.
In addition, when the field current is constant, the alternator output voltage rises as the engine speed increases.

SYSTEM DIAGRAM

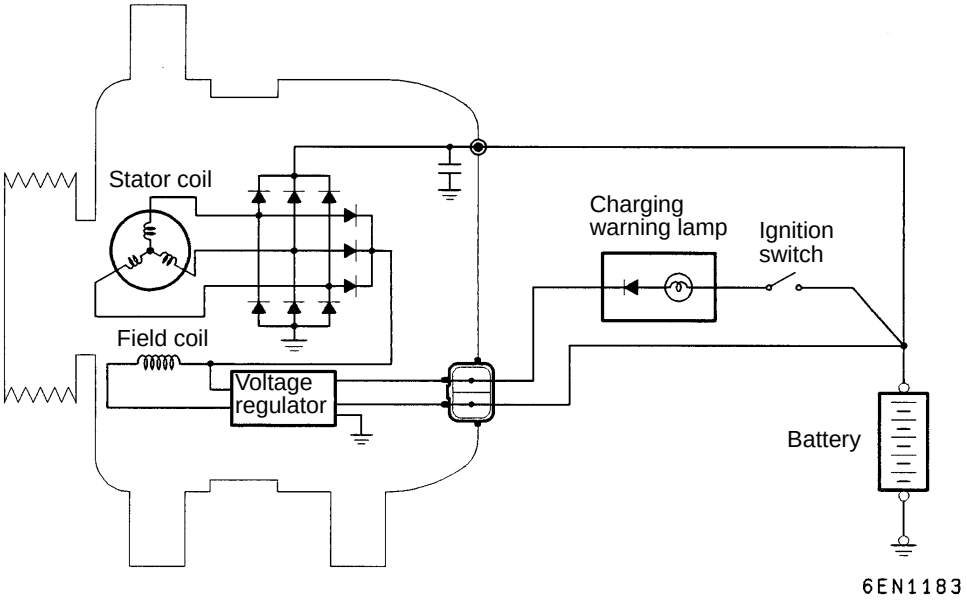

ALTERNATOR SPECIFICATIONS

Items	4G63, 4G64	4D56
Type	Battery voltage sensing	Battery voltage sensing
Rated output V/A	12/60	12/65, 12/75*
Voltage regulator	Electronic built-in type	Electronic built-in type

NOTE
*: Vehicles with over fender

SERVICE SPECIFICATIONS

16100030149

Items		Standard value	Limit
Alternator output line voltage drop (at 30A) V		–	max. 0.3
Regulated voltage ambient temp. at voltage regulator V	–20°C	14.2 – 15.4	–
	20°C	13.9 – 4.9	–
	60°C	13.4 – 14.6	–
	80°C	13.1 – 14.5	–
Output current		–	70% of normal output current
Rotor coil resistance Ω		Approx. 2 – 5	–
Maximum vacuum (at 3,000 r/min) <4D56> kPa		80	–
Protrusion length of brush mm		–	2

SPECIAL TOOL

16100060087

Tool	Number	Name	Use
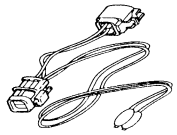	MD998467	Alternator test harness	Checking the alternator (S terminal voltage)

ON-VEHICLE SERVICE

16100090192

ALTERNATOR OUTPUT LINE VOLTAGE DROP TEST

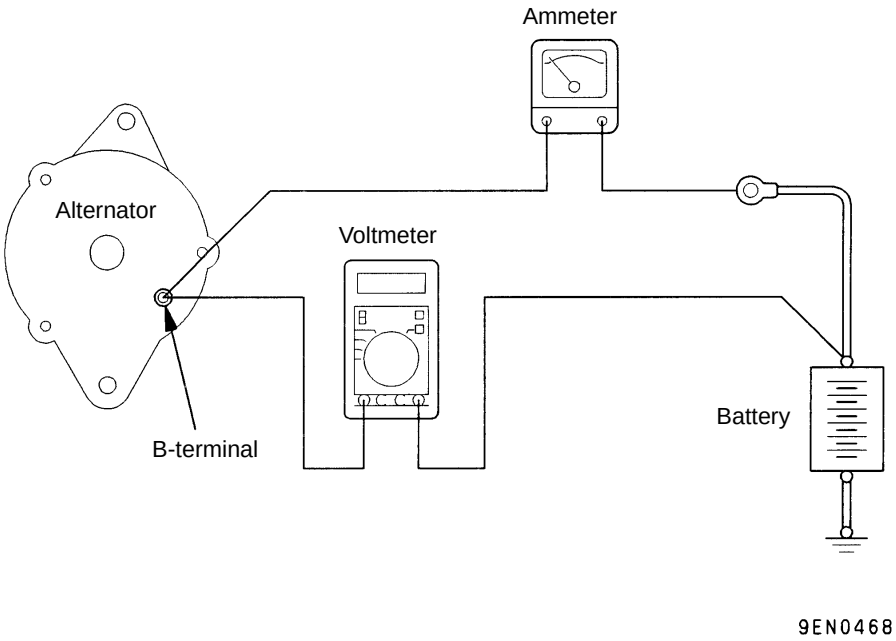

This test determines whether the wiring from the alternator “B” terminal to the battery (+) terminal (including the fusible line) is in a good condition or not.

(1) Always be sure to check the following before the test.
- Alternator installation
- Alternator drive belt tension (Refer to GROUP 11 – On-vehicle Service.)
- Fusible link
- Abnormal noise from the alternator while the engine is running

(2) Turn the ignition switch off.

(3) Disconnect the negative battery cable.

(4) Disconnect the alternator output wire from the alternator “B” terminal and connect a DC test ammeter with a range of 0–100 A in series between the “B” terminal and the disconnected output wire. (Connect the (+) lead of the ammeter to the “B” terminal, and then connect the (–) lead of the ammeter to the disconnected output wire.)

NOTE
An inductive-type ammeter which enables measurements to be taken without disconnecting the alternator output wire should be recommended. Using this equipment will lessen the possibility of a voltage drop caused by a loose “B” terminal connection.

(5) Connect a digital-type voltmeter between the alternator “B” terminal and the battery (+) terminal. (Connect the (+) lead of the voltmeter to the “B” terminal and the connect the (–) lead of the voltmeter to the battery (+) cable.)

(6) Connect a tachometer. (Refer to GROUP 11 – On-vehicle Service.)
(7) Reconnect the negative battery cable.
(8) Leave the hood open.
(9) Start the engine.
(10) With the engine running at 2,500 r/min, turn the headlamps and other lamps on and off to adjust the alternator load so that the value displayed on the ammeter is slightly above 30 A.
Adjust the engine speed by gradually decreasing it until the value displayed on the ammeter is 30 A. Take a reading of the value displayed on the voltmeter at this time.

Limit: max. 0.3 V

NOTE
When the alternator output is high and the value displayed on the ammeter does not decrease until 30 A, set the value to 40 A. Read the value displayed on the voltmeter at this time. When the value range is 40 A, the limit is max. 0.4 V.

(11) If the value displayed on the voltmeter is above the limit value, there is probably a malfunction in the alternator output wire, so check the wiring between the alternator "B" terminal and the battery (+) terminal (including fusible link).
If a terminal is not sufficiently tight or if the harness has become discolored due to overheating, repair and then test again.
(12) After the test, run the engine at idle.
(13) Turn off all lamps and the ignition switch.
(14) Remove the tachometer.
(15) Disconnect the negative batter cable.
(16) Disconnect the ammeter and voltmeter.
(17) Connect the alternator output wire to the alternator "B" terminal.
(18) Connect the negative battery cable.

OUTPUT CURRENT TEST

16100100192

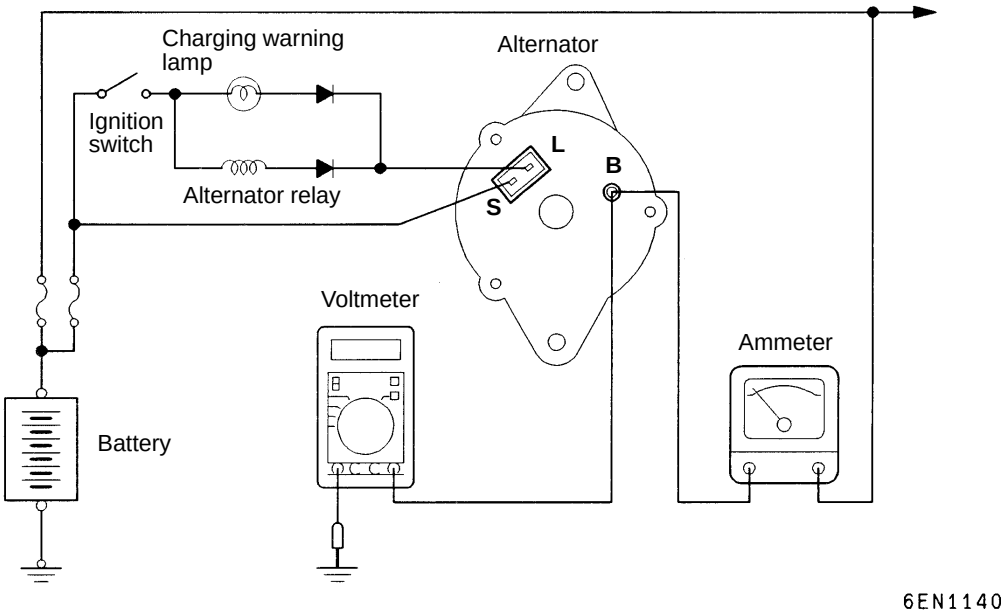

This test determines whether the alternator output current is normal.

(1) Before the test, always be sure to check the following.
- Alternator installation
- Battery (Refer to GROUP 54 – Battery.)

  NOTE
  The battery should be slightly discharged. The load needed by a fully-charged battery is insufficient for an accurate test.
- Alternator drive belt tension (Refer to GROUP 11 – On-vehicle Service.)
- Fusible link
- Abnormal noise from the alternator while the engine is running.

(2) Turn the ignition switch off.
(3) Disconnect the negative battery cable.
(4) Disconnect the alternator output wire from the alternator “B” terminal. Connect a DC test ammeter with a range of 0–100 A in series between the “B” terminal and the disconnected output wire. (Connect the (+) lead of the ammeter to the “B” terminal. Connect the (–) lead of the ammeter to the disconnected output wire.)

  Caution
  Never use clips but tighten bolts and nuts to connect the line. Otherwise loose connections (e.g. using clips) will lead to a serious accident because of high current.

  NOTE
  An inductive-type ammeter which enables measurements to be taken without disconnecting the alternator output wire should be recommended.

(5) Connect a voltmeter with a range of 0–20 V between the alternator “B” terminal and the earth. (Connect the (+) lead of the voltmeter to the “B” terminal, and then connect the (–) lead of the voltmeter to the earth.)
(6) Connect the negative battery cable.
(7) Connect a tachometer. (Refer to GROUP 11 – On-vehicle Service.)
(8) Leave the hood open.
(9) Check that the reading on the voltmeter is equal to the battery voltage.

  NOTE
  If the voltage is 0 V, the cause is probably an open circuit in the wire or fusible link between the alternator “B” terminal and the battery (+) terminal.

(10) Turn the light switch on to turn on headlamps and then start the engine.
(11) Immediately after setting the headlamps to high beam and turning the heater blower switch to the high revolution position, increase the engine speed to 2,500 r/min and read the maximum current output value displayed on the ammeter.

  Limit: 70% of normal current output

  NOTE
- For the nominal current output, refer to the Alternator Specifications.
- Because the current from the battery will soon drop after the engine is started, the above step should be carried out as quickly as possible in order to obtain the maximum current output value.
- The current output value will depend on the electrical load and the temperature of the alternator body.
- If the electrical load is small while testing, the specified level of current may not be output even though the alternator is normal. In such cases, increase the electrical load by leaving the headlamps turned on for some time to discharge the battery or by using the lighting system in another vehicle, and then test again.
- The specified level of current also may not be output if the temperature of the alternator body or the ambient temperature is too high. In such cases, cool the alternator and then test again.

(12) The reading on the ammeter should be above the limit value. If the reading is below the limit value and the alternator output wire is normal, remove the alternator from the engine and check the alternator.
(13) Run the engine at idle after the test.
(14) Turn the ignition switch off.
(15) Remove the tachometer.
(16) Disconnect the negative battery cable.
(17) Disconnect the ammeter and voltmeter.
(18) Connect the alternator output wire to the alternator “B” terminal.
(19) Connect the negative battery cable.

REGULATED VOLTAGE TEST

16100110195

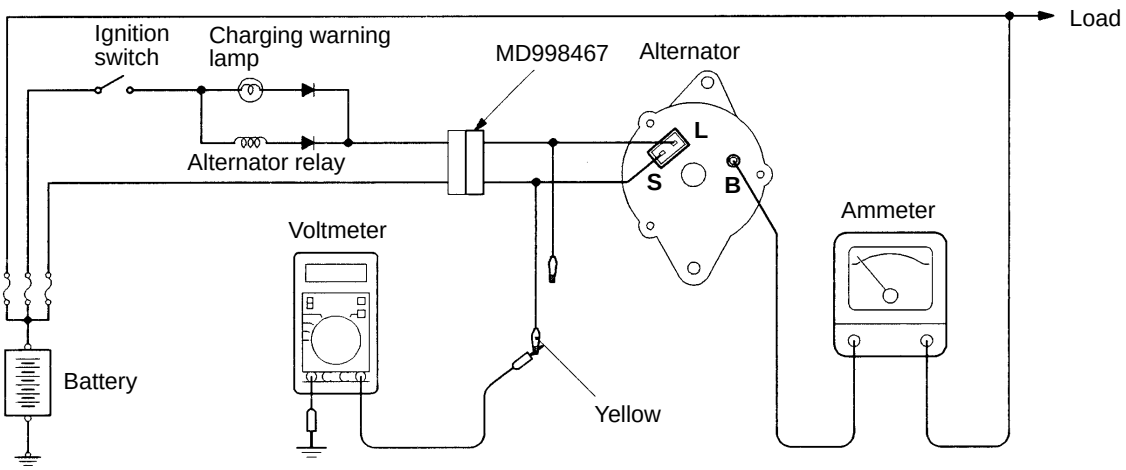

6EN1141

This test determines whether the voltage regulator is correctly controlling the alternator output voltage.

(1) Always be sure to check the following before the test.
- Alternator installation
- Check that the battery installed in the vehicle is fully charged. (Refer to GROUP 54 – Battery.)
- Alternator drive belt tension (Refer to GROUP 11 – On-vehicle Service.)
- Fusible link
- Abnormal noise from the alternator while the engine is running

(2) Turn the ignition switch to the OFF position.
(3) Disconnect the negative battery cable.
(4) Use the special tool to connect a digital voltmeter between the alternator S terminal and earth. (Connect the (+) lead of the voltmeter to the “S” terminal, and then connect the (–) lead of the voltmeter to a secure earth or to the battery (–) terminal.)
(5) Disconnect the alternator output wire from the alternator “B” terminal.
(6) Connect a DC test ammeter with a range of 0–100 A in series between the “B” terminal and the disconnected output wire. (Connect the (+) lead of the ammeter to the “B” terminal. Connect the (–) lead of the ammeter to the disconnected output wire.)
(7) Reconnect the negative battery cable.
(8) Connect a tachometer or the MUT-II. (Refer to GROUP 11 – On-vehicle Service.)
(9) Turn the ignition switch to the ON position and check that the reading on the voltmeter is equal to the battery voltage.

NOTE
If the voltage is 0 V, the cause is probably an open circuit in the wire or fusible link between the alternator “S” terminal and the battery (+) terminal.

(10) Turn all lamps and accessories off.
(11) Start the engine.
(12) Increase the engine speed to 2,500 r/min.
(13) Read the value displayed on the voltmeter when the alternator output current alternator becomes 10 A or less.

(14) If the voltage reading conforms to the value in the voltage regulation, then the voltage regulator is operating normally.
If the voltage is not within the standard value, there is a malfunction of the voltage regulator or of the alternator.
(15) After the test, lower the engine speed to the idle speed.
(16) Turn the ignition switch off.
(17) Remove the tachometer.
(18) Disconnect the negative battery cable.
(19) Disconnect the ammeter and voltmeter.
(20) Connect the alternator output wire to the alternator “B” terminal.
(21) Remove the special tool, and return the connector to the original condition.
(22) Connect the negative battery cable.

Voltage Regulation Table

Standard value:

Inspection terminal	Voltage regulator ambient temperature °C	Voltage V
Terminal “S”	–20	14.2 – 15.4
	20	13.9 – 14.9
	60	13.4 – 14.6
	80	13.1 – 14.5

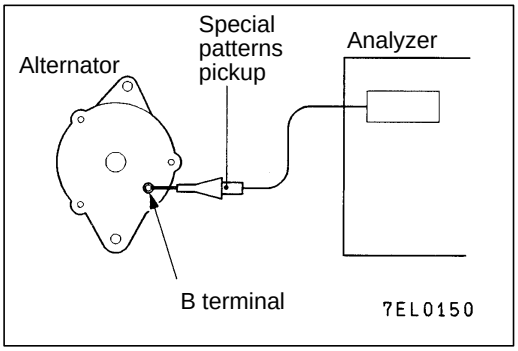

WAVEFORM CHECK USING AN ANALYZER

16100120143

MEASUREMENT METHOD

Connect the analyzer special patterns pick-up to the alternator B terminal.

STANDARD WAVEFORM

Observation Conditions

FUNCTION	SPECIAL PATTERNS
PATTERN HEIGHT	VARIABLE
VARIABLE knob	Adjust while viewing the waveform.
PATTERN SELECTOR	RASTER
Engine speed	Curb idle speed

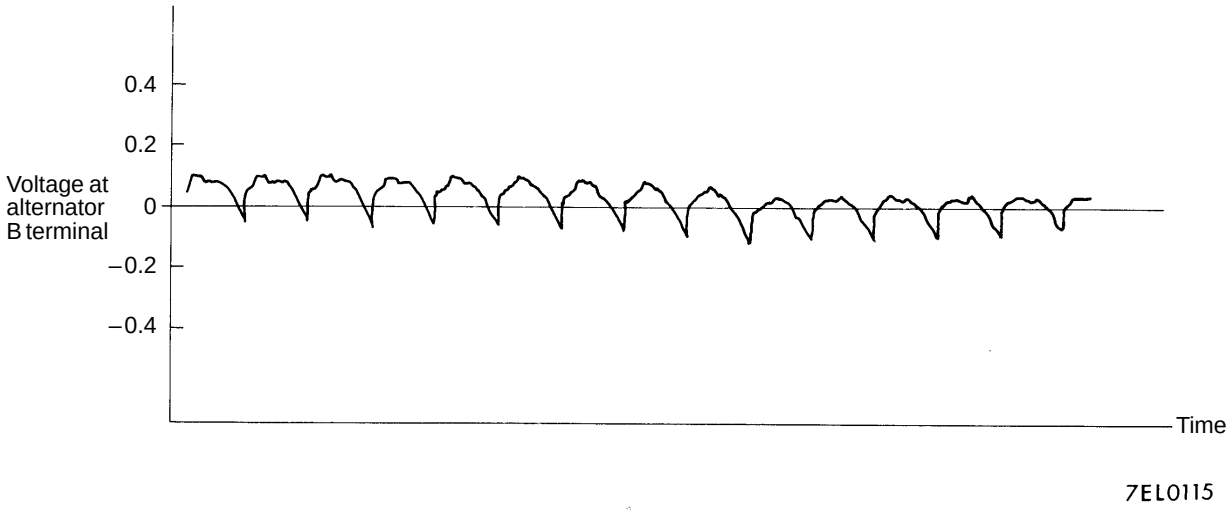

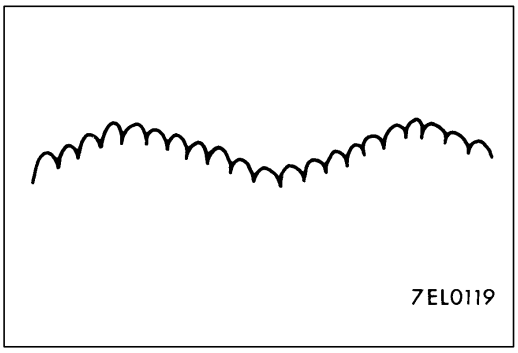

NOTE
The voltage waveform of the alternator B terminal can undulate as shown at left. This waveform is produced when the regulator operates according to fluctuations in the alternator load (current), and is normal for the alternator.
In addition, when the voltage waveform reaches an excessively high value (approx. 2 V or higher at idle), it often indicates an open circuit due to a brown fuse between alternator B terminal and battery, but not a defective alternator.

EXAMPLES OF ABNORMAL WAVEFORMS

NOTE
1. The size of the waveform patterns differs largely, depending on the adjustment of the variable knob on the analyzer.
2. Identification of abnormal waveforms is easier when there is a large output current (regulator is not operating). (Waveforms can be observed when the headlamps are illuminated.)
3. Check the conditions of the charging warning lamp (illuminated/not illuminated). Also, check the charging system totally.

Abnormal waveforms	Problem cause	Abnormal waveforms	Problem cause
Example 1	● Open diode	Example 4	● Short in stator coil
Example 2 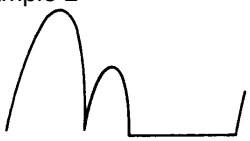	● Short in diode	Example 5 At this time, the charging warning lamp is illuminated.	● Open supple-mentary diode
Example 3	● Broken wire in stator coil	Example 5 At this time, the charging warning lamp is illuminated.	

ALTERNATOR

16100140187

REMOVAL AND INSTALLATION

Pre-removal Operation
- Under Cover Removal

Post-installation Operation
- Drive Belt Tension Adjustment (Refer to GROUP 11 – On-vehicle Service.)
- Under Cover Installation

<4G6>

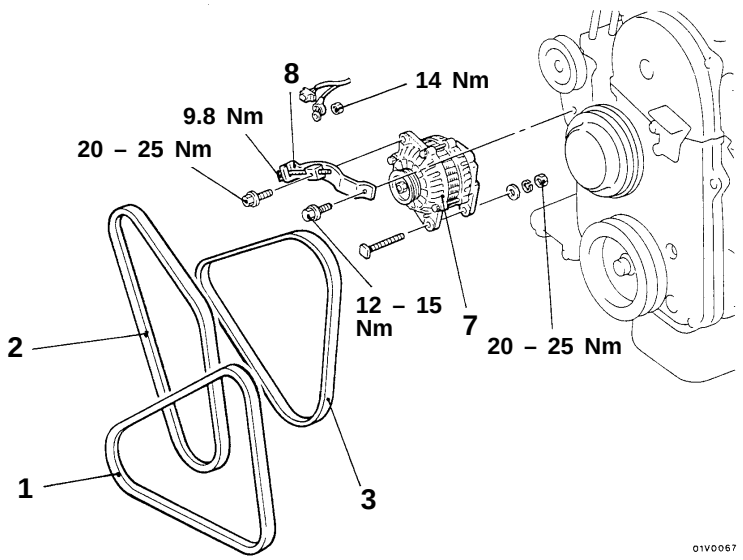

<4D56>

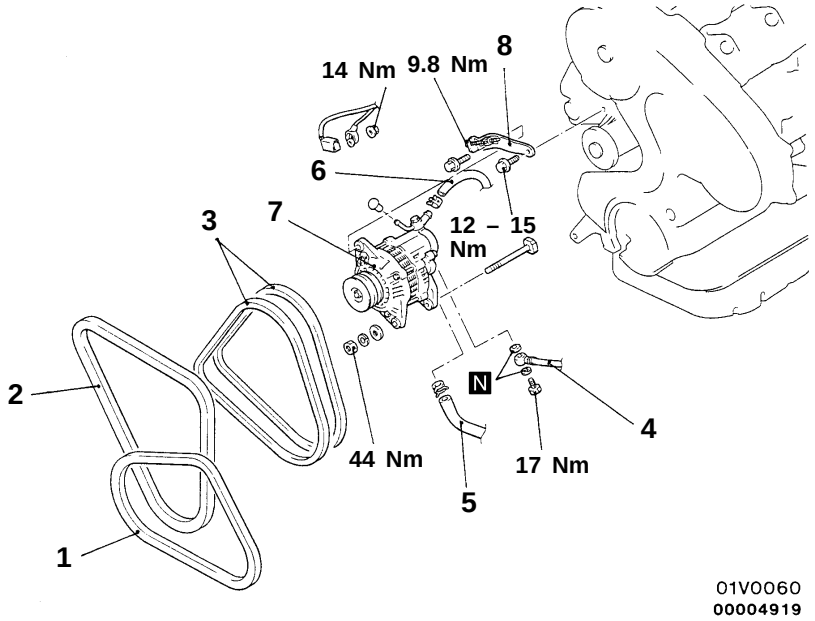

Removal steps

1. Drive bolt (for A/C)
2. Drive belt (for power steering)
3. Drive belt (for alternator)
4. Oil pipe connection
5. Oil return hose connection
6. Vacuum hose connection
7. Alternator
8. Alternator brace assembly

DISASSEMBLY AND REASSEMBLY

16100160169

<4G6>

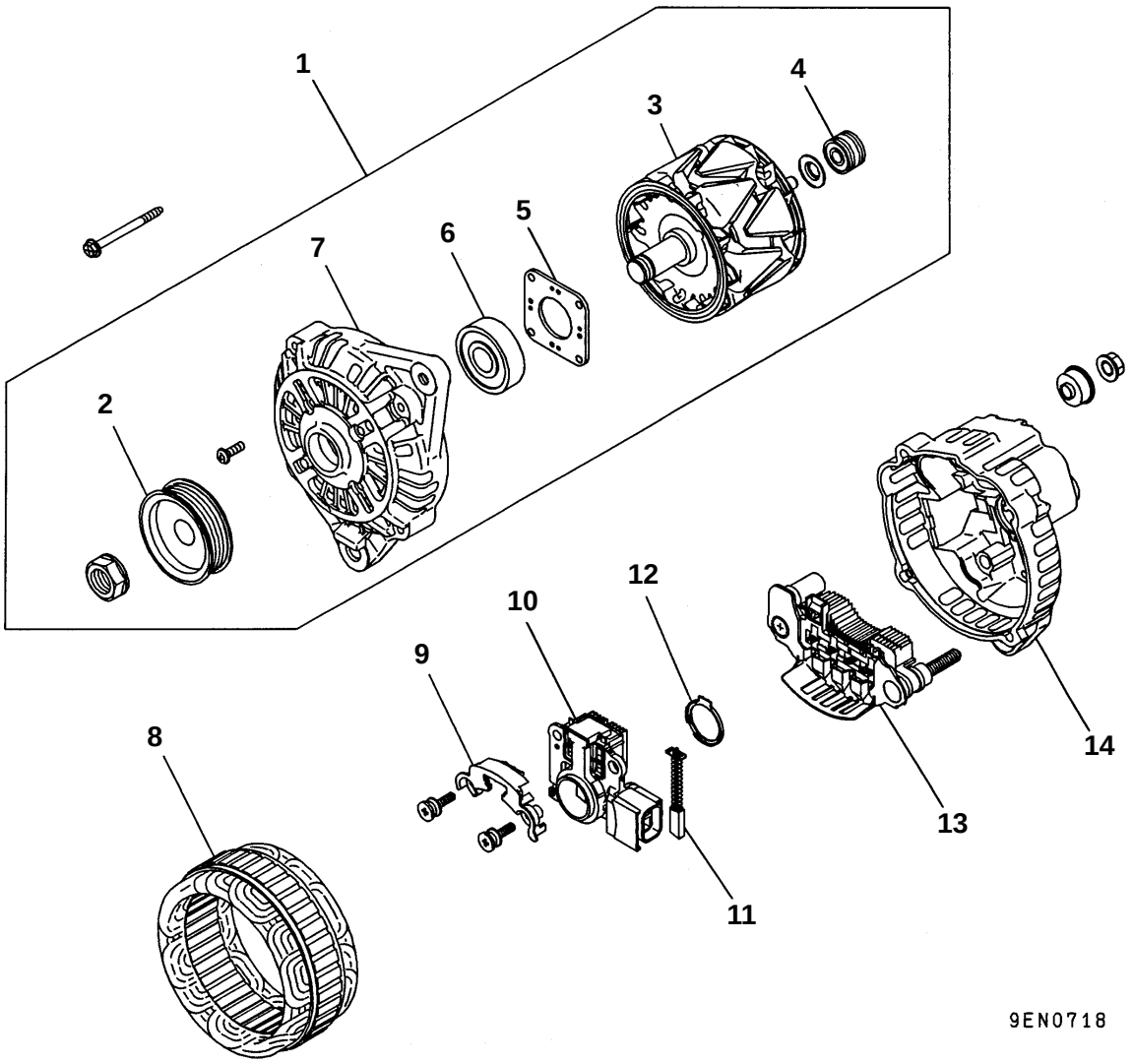

Disassembly steps

◀A▶ 1. Front bracket assembly
◀B▶ 2. Pulley
▶B◀ 3. Rotor
4. Rear bearing
5. Bearing retainer
6. Front bearing
7. Front bracket
◀C▶ 8. Stator
9. Plate
◀C▶ ▶A◀ 10. Regulator assembly
11. Brush
12. Slinger
13. Rectifier assembly
14. Rear bracket

DISASSEMBLY AND REASSEMBLY

<4D56>

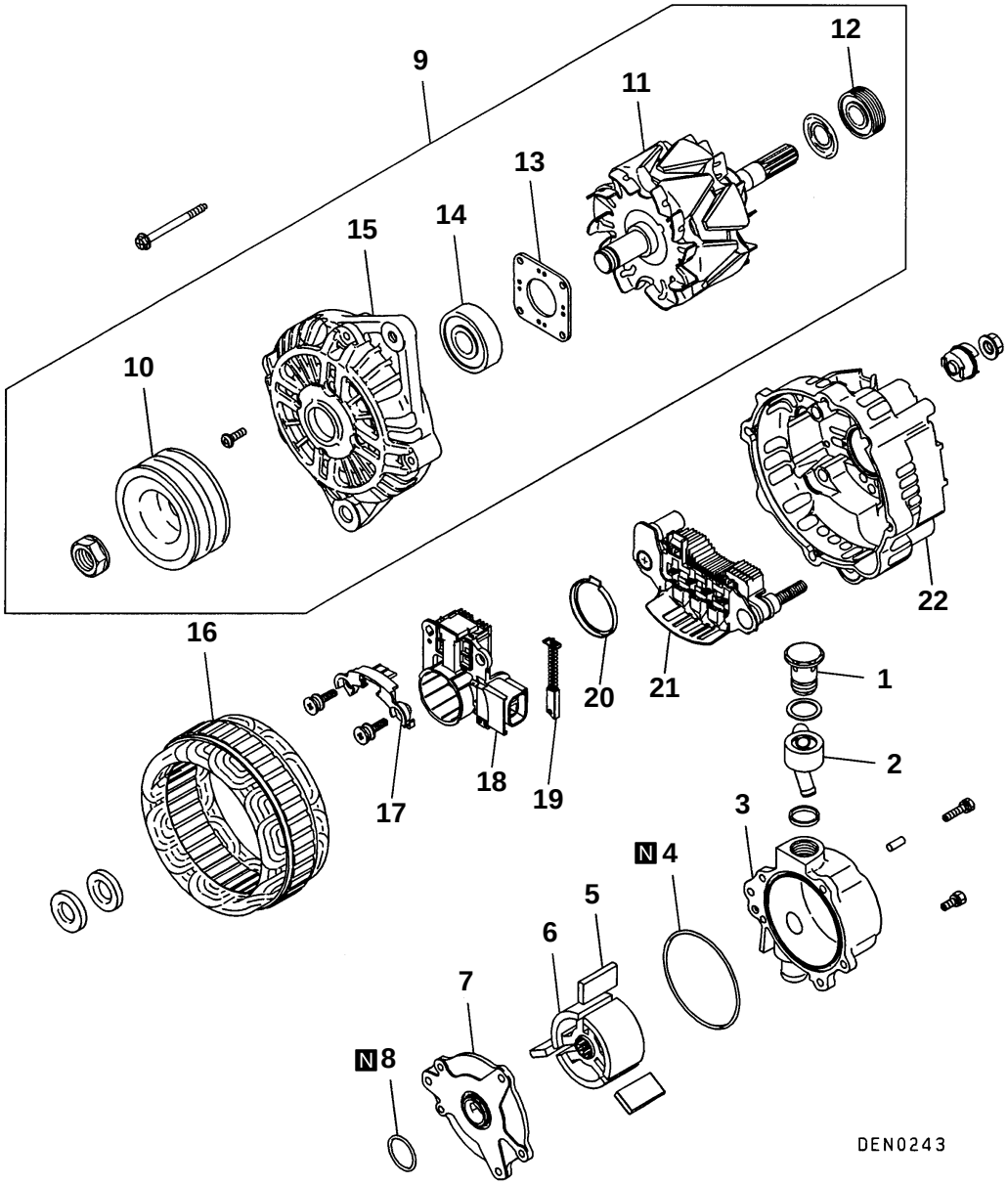

Disassembly steps

1. Check valve
2. Nipple
3. Vacuum pump housing
4. O-ring
5. ▶C◀ Vane
6. ▶C◀ Rotor
7. Vacuum pump plate
8. O-ring
9. ◀A▶ Front bracket assembly
10. ◀B▶ Pulley
11. ▶B◀ Rotor
12. Rear bearing
13. Bearing retainer
14. Front bearing
15. Front bracket
16. ◀C▶ Stator
17. Plate
18. ◀C▶ ▶A◀ Regulator assembly
19. Brush
20. Slinger
21. Rectifier assembly
22. Rear bracket

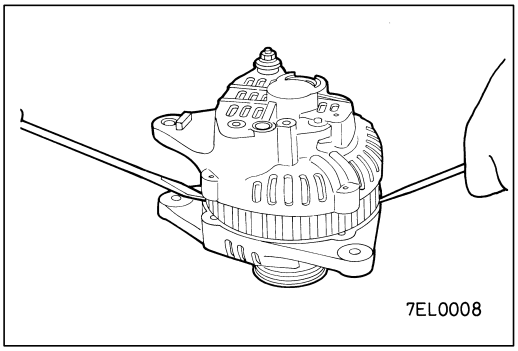

DISASSEMBLY SERVICE POINTS

◀A▶ FRONT BRACKET REMOVAL

1. Remove the bolts.
2. Insert a flat-tipped screwdriver between front bracket and stator core and pry downwards.

   Caution
   Do not insert a screwdriver too deep, as the stator coil will be damaged.

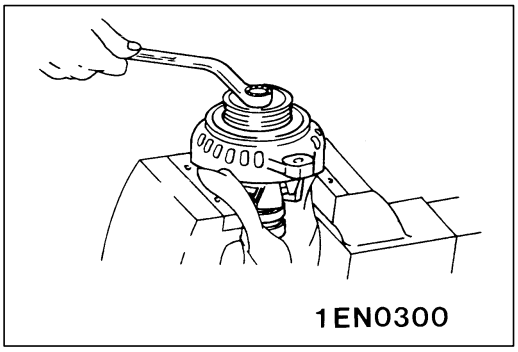

◀B▶ PULLEY REMOVAL

With the pulley side facing up, hold the rotor in a vice and remove the pulley.

Caution
Use care not to damage the rotor.

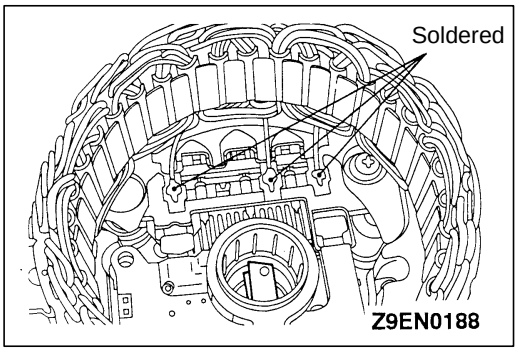

◀C▶ STATOR REMOVAL/REGULATOR ASSEMBLY REMOVAL

1. When removing stator, unsolder three stator leads soldered to main diodes on rectifier.
2. When removing rectifier from brush holder, unsolder two soldered points to rectifier.

   Caution
   1. **When soldering or unsoldering, use care to make sure that heat of soldering iron is not transmitted to diodes for a long period. Finish soldering or unsoldering in as short a time as possible.**
   2. **Use care that no undue force is exerted to leads of diodes.**

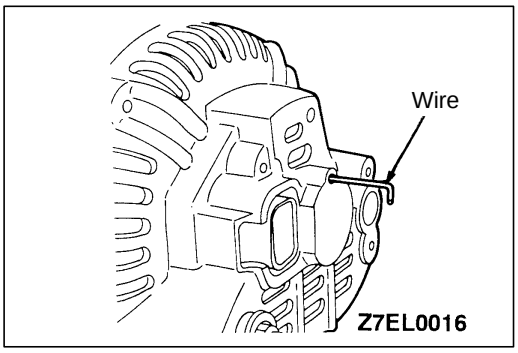

REASSEMBLY SERVICE POINT

▶A◀ REGULATOR ASSEMBLY INSTALLATION

Install the regulator assembly, insert a wire into the rear bracket hole while pushing in the brush, and hold the brush.

NOTE
Inserting a wire holds the brush, so that the rotor can be replaced easily.

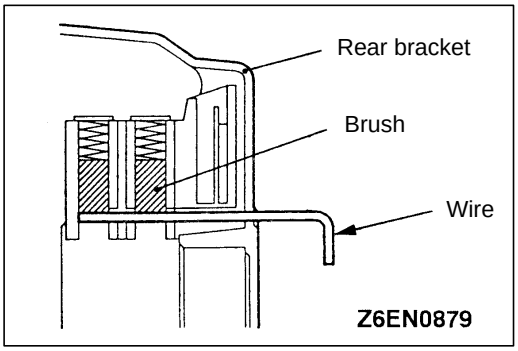

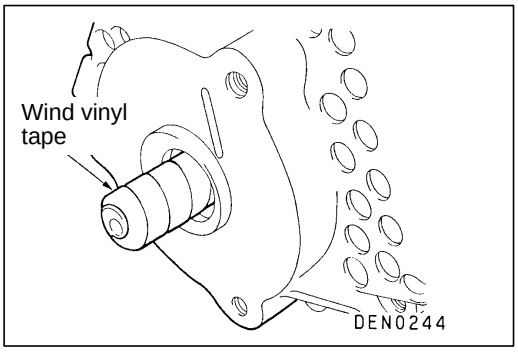

▶B◀ ROTOR INSTALLATION

1. When installing the rotor on the alternator rear bracket, wrap vinyl tape around the splined shaft to prevent damage to the oil seal. <4D56>

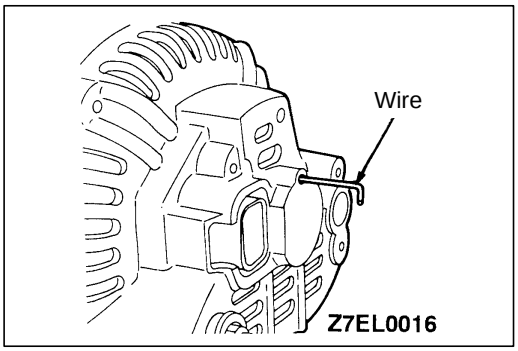

2. After rotor has been installed, remove the wire.

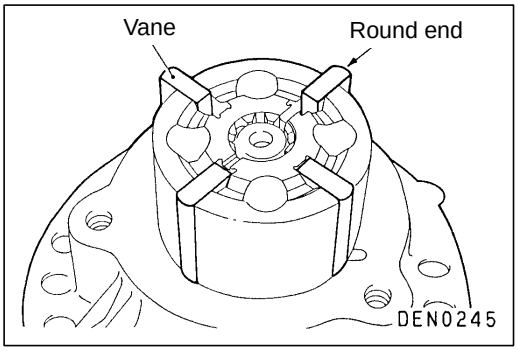

▶C◀ ROTOR/VANES INSTALLATION <4D56>

1. Carefully check the housing, rotor, etc. for chips and foreign matter. Then, apply engine oil and install.
2. Install the vanes with the round end facing outward.
3. Apply grease to the O-ring and fit in the housing groove so that it will not come out from the groove when the bolts are tightened.

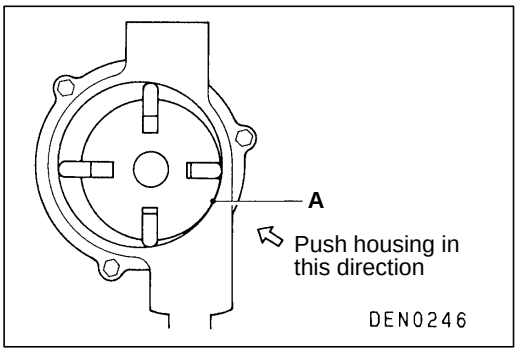

4. When tightening the housing, lightly push it in the direction of arrow so as to minimize the clearance at “A” and tighten the bolts uniformly.

   NOTE
   After assembly, be sure to conduct a performance test to check to see that the maximum vacuum is as specified below.

   Standard value of maximum vacuum:
   80.00 kPa or greater at 3,000 r/min

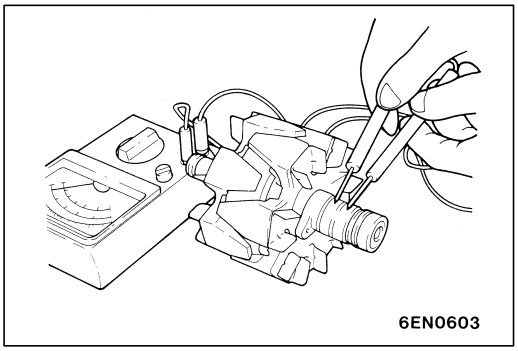

INSPECTION

16100170162

ROTOR

1. Check rotor coil for continuity. Check that there is no continuity between slip rings. If resistance is too small, it means that there is a short circuit. If there is no continuity or if there is a short circuit, replace rotor assembly.

   Resistance value: Approx. 2 – 5 Ω

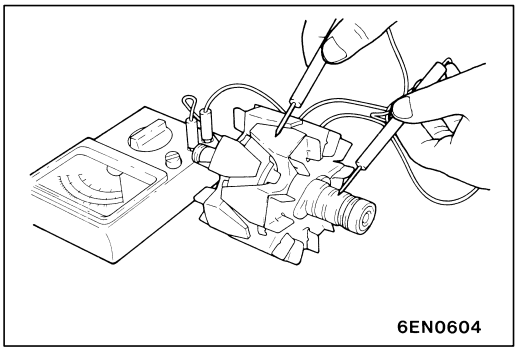

2. Check rotor coil for earthing. Check that there is no continuity between slip ring and core. If there is continuity, replace rotor assembly.

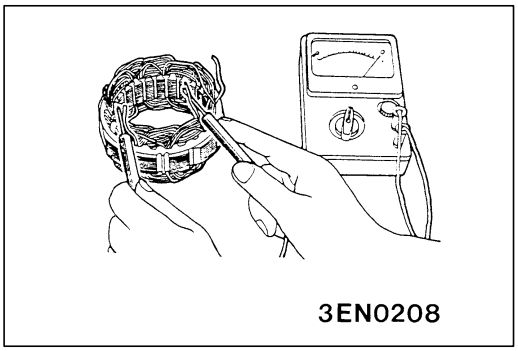

STATOR

1. Make continuity test on stator coil. Check that there is continuity between coil leads. If there is no continuity, replace stator assembly.

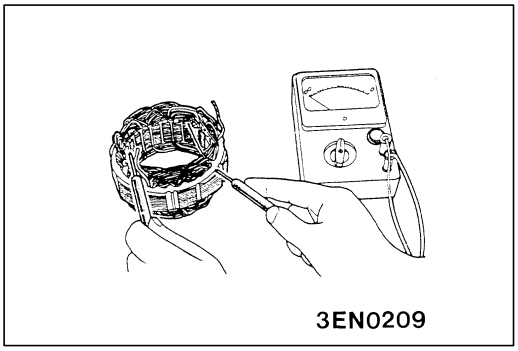

2. Check coil for earthing. Check that there is no continuity between coil and core. If there is continuity, replace stator assembly.

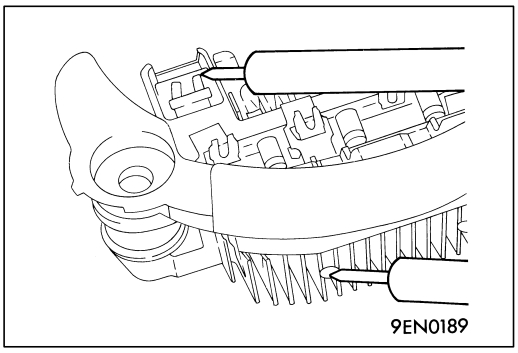

RECTIFIERS

1. Check for continuity between positive rectifier and stator coil lead connection terminal with an ohmmeter. If there is continuity in both directions, diode is shorted. Replace rectifier assembly.

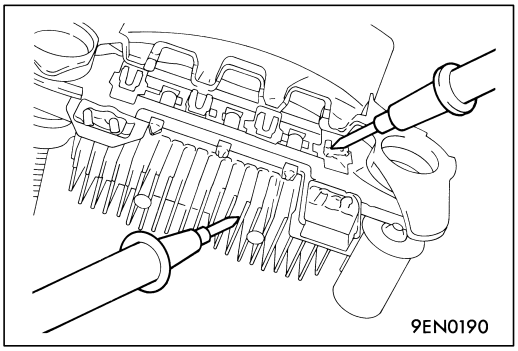

2. Check for continuity between negative rectifier and stator coil lead connection terminal. If there is continuity in both directions, diode is shorted, and rectifier assembly must be replaced.

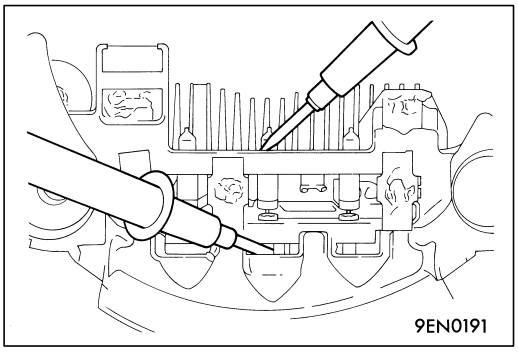

3. Check three diodes for continuity by connecting an ammeter to both ends of each diode. If there is no continuity in both directions, diode is faulty and heatsink assembly must be replaced.

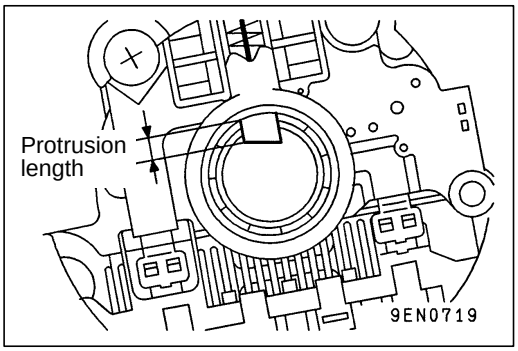

BRUSH

1. Replace the brush if its protrusion length is less than the limit.

   Limit: min. 2 mm

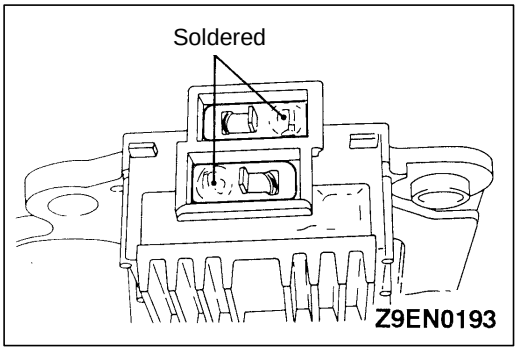

2. Unsolder pigtail and remove old brush and spring.

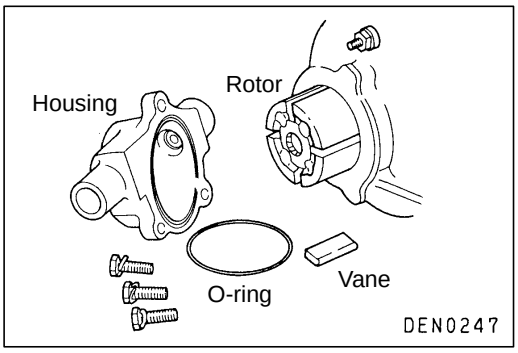

VACUUM PUMP

Check the following and replace if defective.

1. Check the rotor ends for streaks or damage.
2. Check the housing surface in contact with the rotor for streaks or damage.
3. Check the vanes for damage or breaks.

STARTING SYSTEM

16200010191

GENERAL INFORMATION

If the ignition switch is turned to the “START” position, current flows in the pull-in and holding provided inside magnetic switch, attracting the plunger. When the plunger is attracted, the lever connected to the plunger is actuated to engage the starter clutch.
On the other hand, attracting the plunger will turn on the magnetic switch, allowing the B terminal and M terminal to conduct. Thus, current flows to engage the starter motor.
When the ignition switch is returned to the ”ON” position after starting the engine, the starter clutch is disengaged from the ring gear.
An overrunning clutch is provided between the pinion and the armature shaft, to prevent damage to the starter.

SYSTEM DIAGRAM

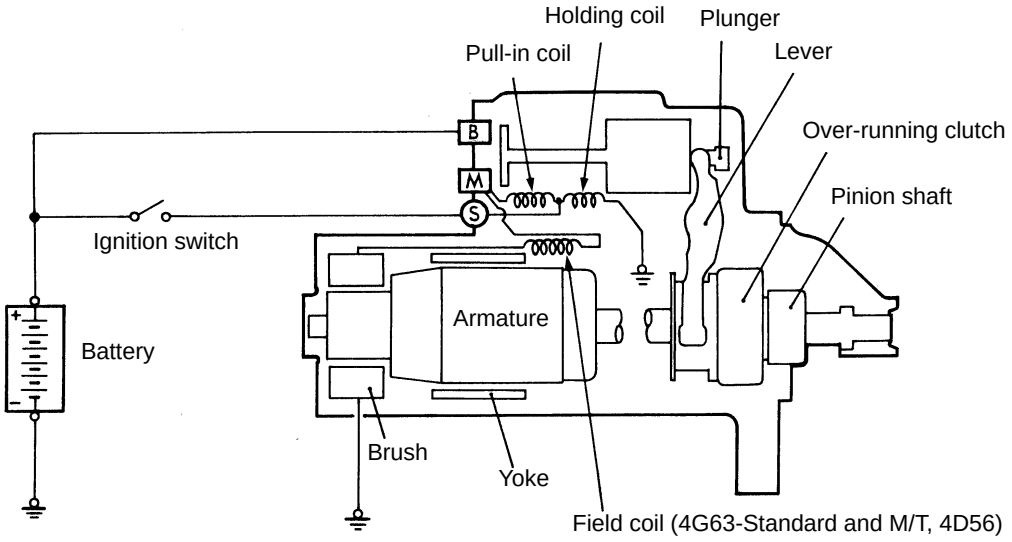

STARTER MOTOR SPECIFICATIONS

<4G63, 4G64>

Items	4G63 – M/T – standard models	4G63 – A/T – models for cold climate, 4G64
Type	Direct drive	Reduction drive with planetary gear
Rated output kW/V	0.9/12	1.2/12
No. of pinion teeth	8	8

<4D56>

Items	Standard and M/T	Cold climate zone and A/T
Type	Reduction drive with planetary gear	Reduction drive with planetary gear
Rated output kw/V	2.0	2.2
No. of pinion teeth	10	10

SERVICE SPECIFICATIONS

Items	Standard value	Limit
Pinion gap mm	0.5 – 2.0	–
Commutator outer diameter mm	32.0	31.0
Commutator runout mm	0.05	0.1
Commutator undercut mm	0.5	–

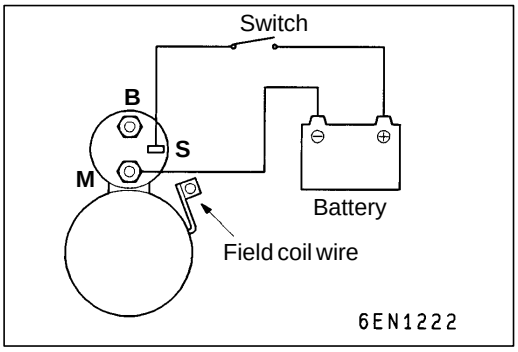

STARTER MOTOR

16200110174

INSPECTION

PINION GAP ADJUSTMENT

1. Disconnect field coil wire from M-terminal of magnetic switch.
2. Connect a 12V battery between S-terminal and M-terminal.
3. Set switch to “ON”, and pinion will move out.

   Caution
   This test must be performed quickly (in less than 10 seconds) to prevent coil from burning.

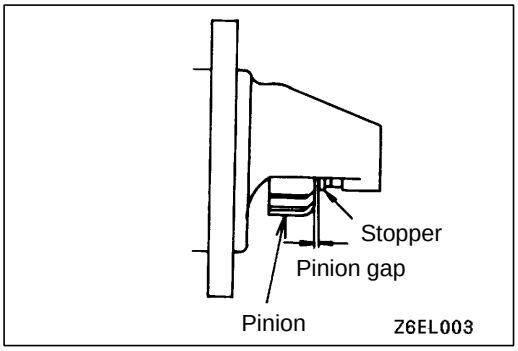

4. Check pinion to stopper clearance (pinion gap) with a thickness gauge.

   Pinion gap: 0.5 – 2.0 mm

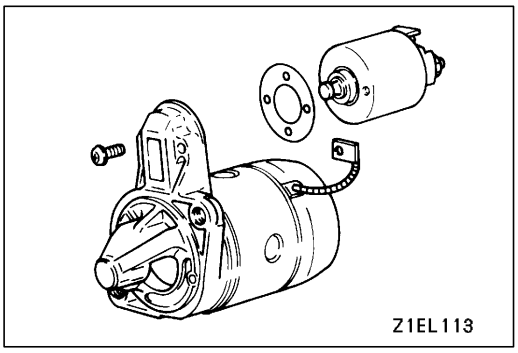

5. If pinion gap is out of specification, adjust by adding or removing gaskets between magnetic switch and front bracket.

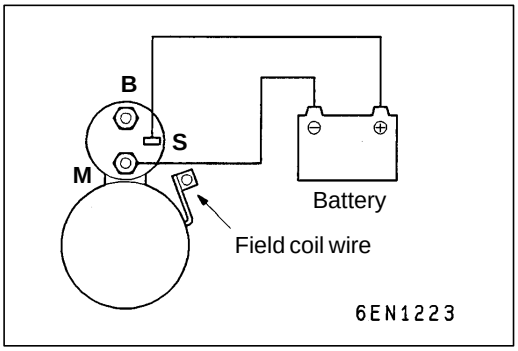

MAGNETIC SWITCH PULL-IN TEST

1. Disconnect field coil wire from M-terminal of magnetic switch.
2. Connect a 12V battery between S-terminal and M-terminal.

   Caution
   This test must be performed quickly (in less than 10 seconds) to prevent coil from burning.

3. If pinion moves out, then pull-in coil is good. If it doesn't, replace magnetic switch.

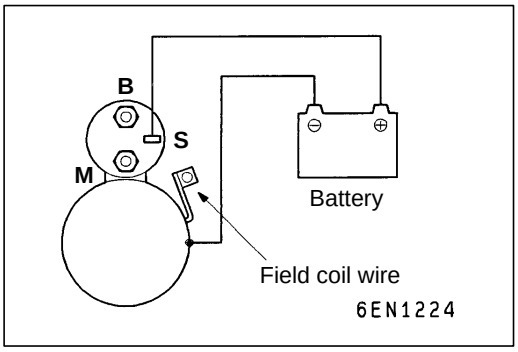

MAGNETIC SWITCH HOLD-IN TEST

1. Disconnect field coil wire from M-terminal of magnetic switch.
2. Connect a 12V battery between S-terminal and body.

   Caution
   This test must be performed quickly (in less than 10 seconds) to prevent coil from burning.

3. Manually pull out the pinion as far as the pinion stopper position.
4. If pinion remains out, everything is in order. If pinion moves in, hold-in circuit is open. Replace magnetic switch.

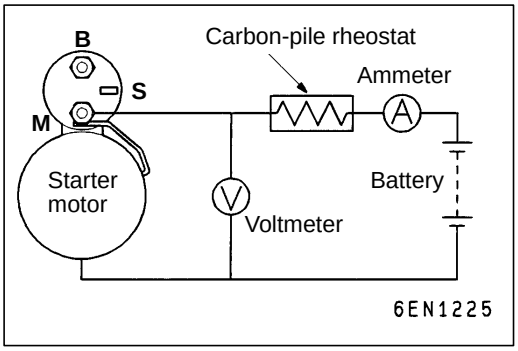

FREE RUNNING TEST

1. Place starter motor in a vise equipped with soft jaws and connect a fully-charged 12-volt battery to starter motor as follows:
2. Connect a test ammeter (100-ampere scale) and carbon pile rheostat in series with battery positive post and starter motor terminal.
3. Connect a voltmeter (15-volt scale) across starter motor.
4. Rotate carbon pile to full-resistance position.
5. Connect battery cable from battery negative post to starter motor body.
6. Adjust the rheostat until the battery voltage shown by the voltmeter is 11.5 V (for the direct drive type) or 11 V (for reduction drive type).
7. Confirm that the maximum amperage is within the specifications and that the starter motor turns smoothly and freely.

   Current:
   max. 60 Amps (Direct drive type)
   max. 90 Amps (Reduction drive type)

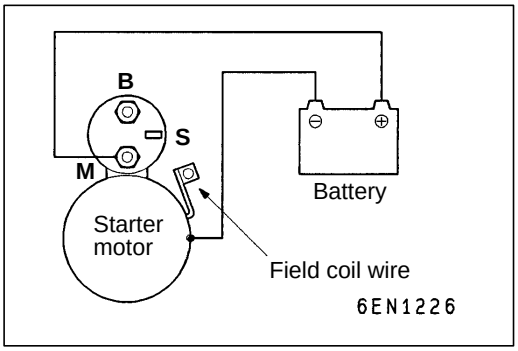

MAGNETIC SWITCH RETURN TEST

1. Disconnect field coil wire from M-terminal of magnetic switch.
2. Connect a 12V battery between M-terminal and body.

   Caution
   This test must be performed quickly (in less than 10 seconds) to prevent coil from burning.

3. Pull pinion out and release. If pinion quickly returns to its original position, everything is in order. If it doesn't, replace magnetic switch.

   Caution
   Be careful not to get your fingers caught when pulling out the pinion.

DISASSEMBLY AND REASSEMBLY <DIRECT DRIVE TYPE>

16200120214

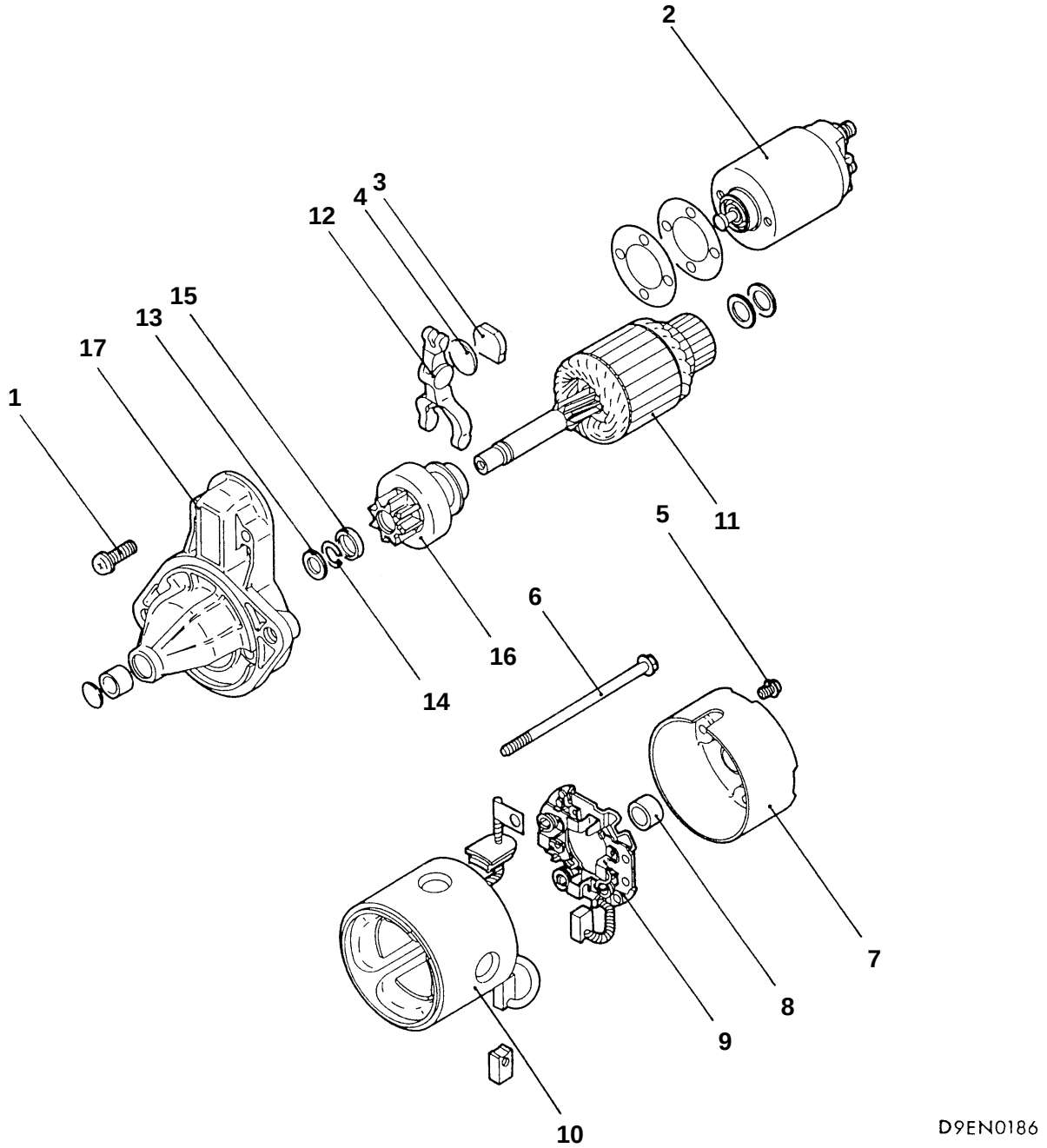

Disassembly steps

1. Screw
◀A▶ 2. Magnetic switch
3. Packing
4. Plate
5. Screw
6. Through bolt
7. Rear bracket
8. Rear bearing
9. Brush holder assembly
10. Yoke assembly
11. Armature
12. Lever
13. Washer
◀C▶ ▶A◀ 14. Snap ring
◀C▶ ▶A◀ 15. Stop ring
16. Overrunning clutch
17. Front bracket

DISASSEMBLY AND REASSEMBLY <REDUCTION DRIVE TYPE – 4G6>

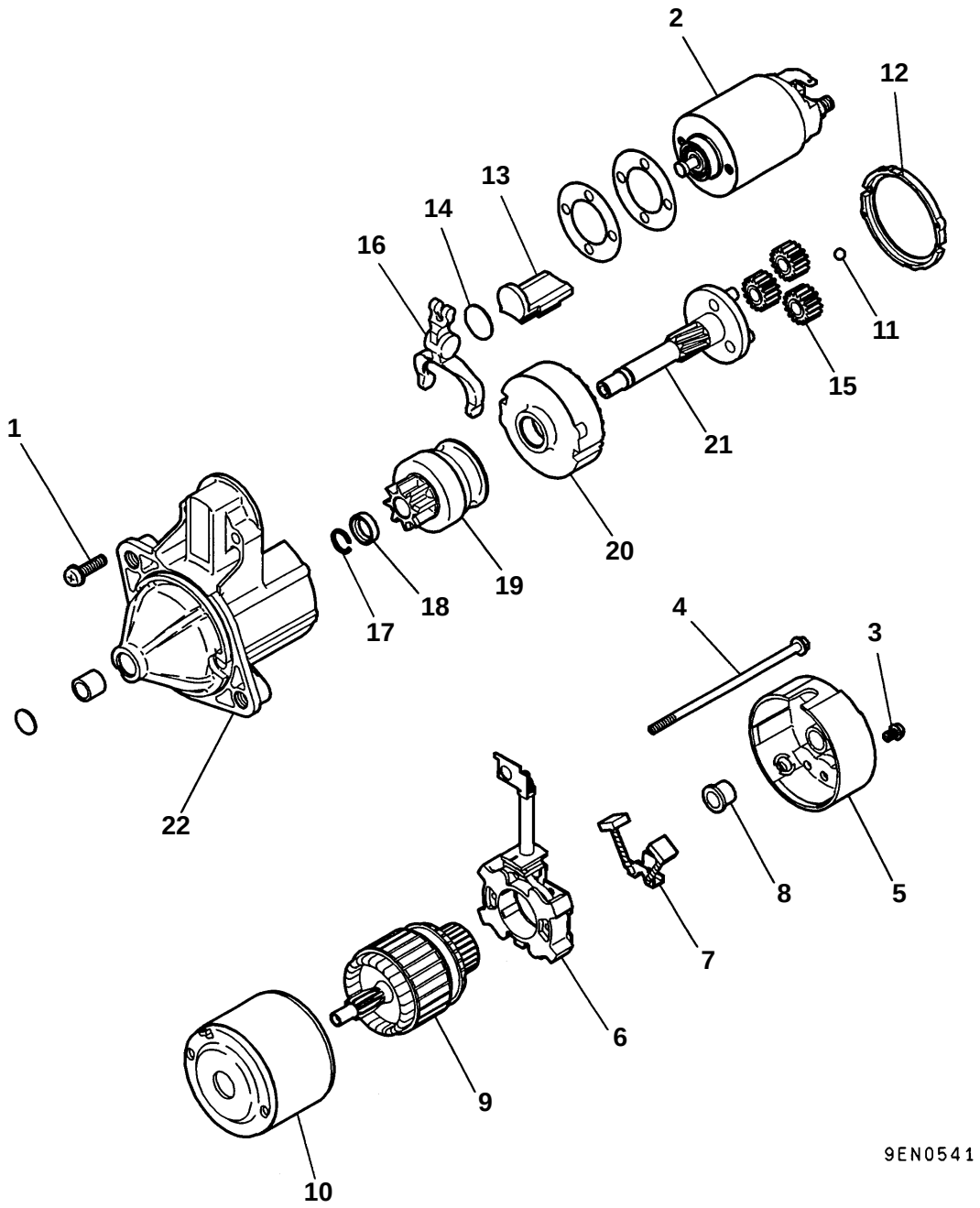

Disassembly steps

1. Screw
◀A▶ 2. Magnetic switch
3. Screw
4. Screw
5. Rear bracket
6. Brush holder
7. Brush
8. Rear bearing
◀A▶ 9. Armature
10. Yoke assembly
◀A▶ 11. Ball
12. Packing A
13. Packing B
14. Plate
15. Planetary gear
16. Lever
◀C▶ ▶A◀ 17. Snap ring
◀C▶ ▶A◀ 18. Stop ring
19. Overrunning clutch
20. Internal gear
21. Planetary gear holder
22. Front bracket

DISASSEMBLY AND REASSEMBLY <REDUCTION DRIVE TYPE – 4D56>

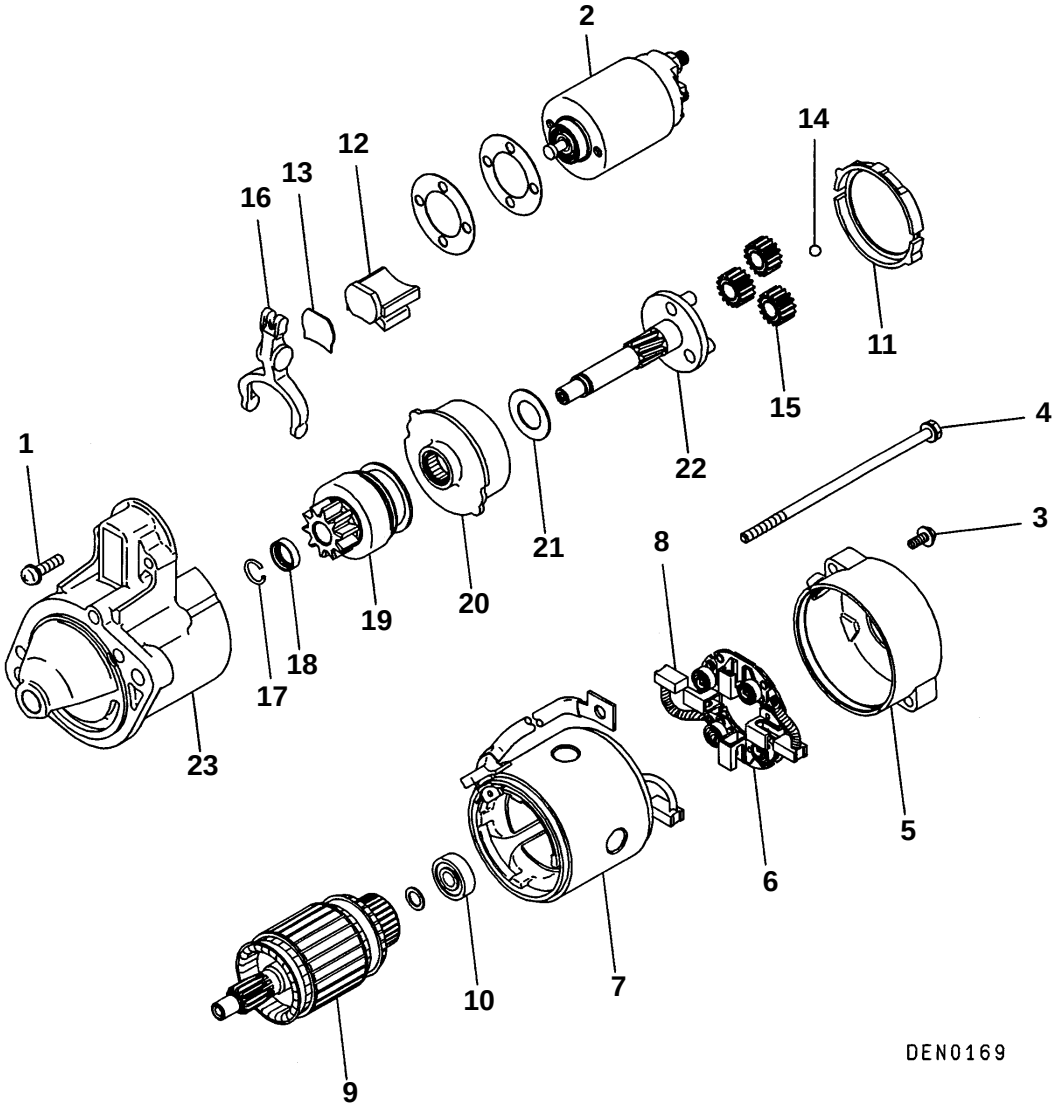

Disassembly steps

1. Screw
◀A▶ 2. Magnetic switch
3. Screw
4. Screw
5. Rear bracket
6. Brush holder
7. Yoke assembly
8. Brush
◀B▶ 9. Armature
10. Bearing
11. Packing A
12. Packing B
13. Plate
◀B▶ 14. Ball
15. Planetary gear
16. Lever
◀C▶ ▶A◀ 17. Snap ring
◀C▶ ▶A◀ 18. Stop ring
19. Overrunning clutch
20. Internal gear
21. Washer
22. Planetary gear holder
23. Front bracket

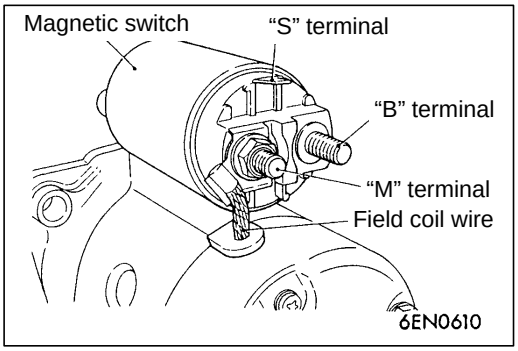

DISASSEMBLY SERVICE POINTS

◀A▶ MAGNETIC SWITCH REMOVAL

Disconnect field coil wire from "M" terminal of magnetic switch.

◀B▶ ARMATURE/BALL REMOVAL

Caution
When removing the armature, take care not to lose the ball (which is used as a bearing) in the armature end.

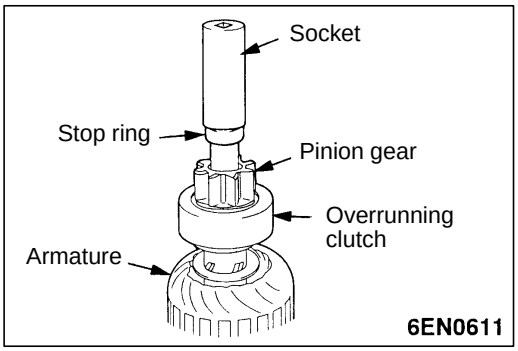

◀C▶ SNAP RING/STOP RING REMOVAL

1. Press stop ring off snap ring with a suitable socket.

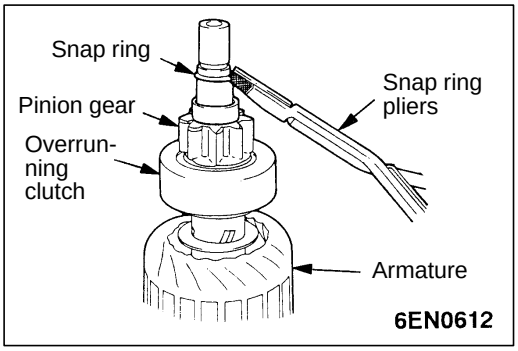

2. Remove snap ring with snap ring pliers and then remove stop ring and overrunning clutch.

STARTER MOTOR PARTS CLEANING

1. Do not immerse parts in cleaning solvent. Immersing the yoke and field coil assembly and/or armature will damage insulation. Wipe motor assembly with a cloth only.
2. Do not immerse drive unit in cleaning solvent. Overrunning clutch is pre-lubricated at the factory and solvent will wash lubrication from clutch.
3. The drive unit may be cleaned with a brush moistened with cleaning solvent and wiped dry with a cloth.

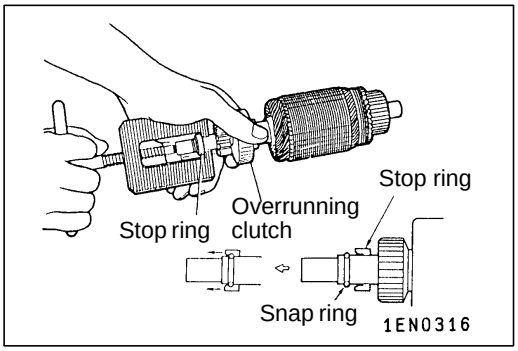

REASSEMBLY SERVICE POINTS

▶A◀ STOP RING/SNAP RING INSTALLATION

Using a suitable pulling tool, pull overrunning clutch stop ring over snap ring.

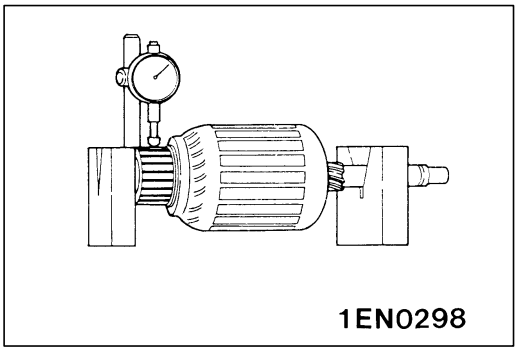

INSPECTION

16200130194

COMMUTATOR CHECK

1. Place the armature in a pair of “V” blocks and check the runout with a dial indicator.

   Standard value: 0.05 mm

   Limit: 0.1 mm

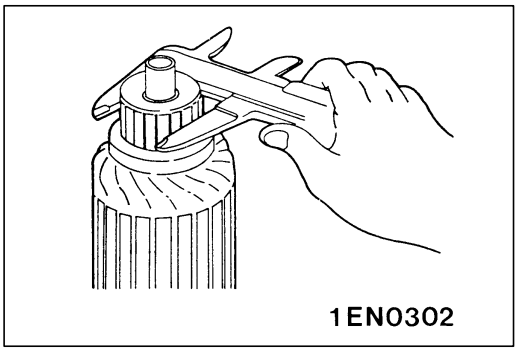

2. Measure the commutator outer diameter.

   Standard value: 32.0 mm

   Limit: 31.0 mm

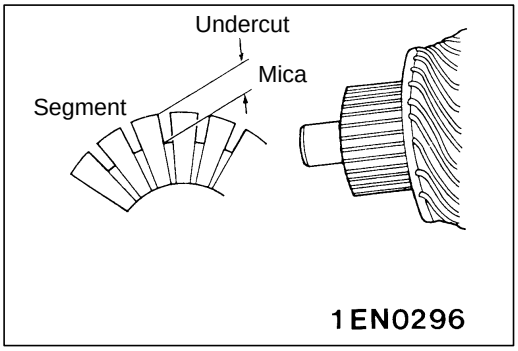

3. Check the undercut depth between segments.

   Standard value: 0.5 mm

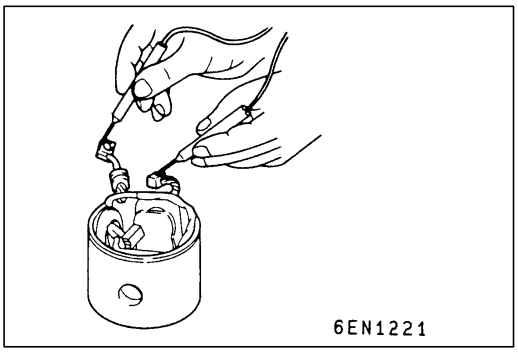

FIELD COIL OPEN-CIRCUIT TEST <DIRECT DRIVE TYPE>, <REDUCTION DRIVE TYPE-4D56>

Check the continuity between field brushes. If there is continuity, the field coil is in order.

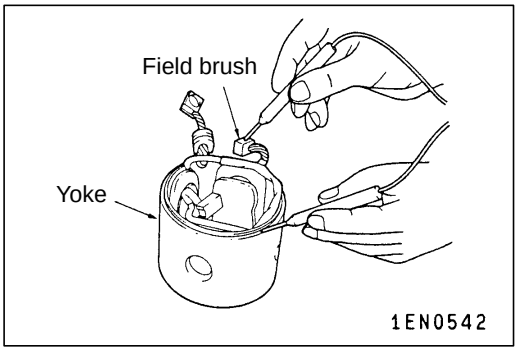

FIELD COIL GROUND TEST <DIRECT DRIVE TYPE>, <REDUCTION DRIVE TYPE-4D56>

Check the continuity between field coil brush and yoke. If there is no continuity, the field coil is free from earth.

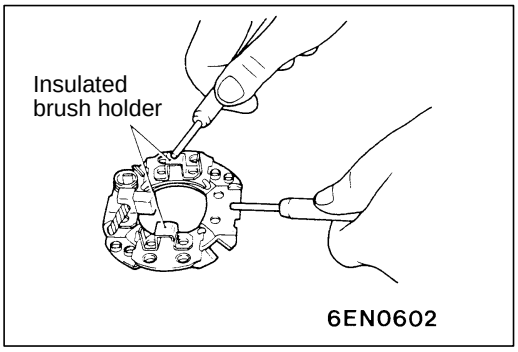

BRUSH HOLDER CHECK

Check the continuity between brush holder plate and brush holder.
If there is no continuity, the brush holder is in order.

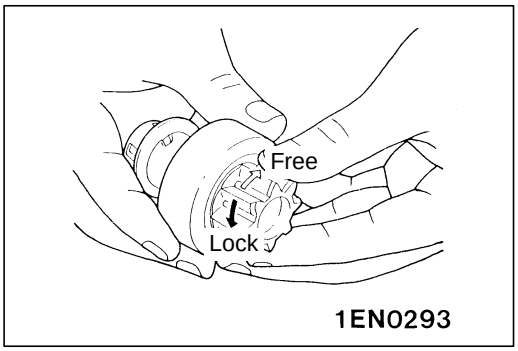

OVERRUNNING CLUTCH CHECK

1. While holding clutch housing, rotate the pinion. Drive pinion should rotate smoothly in one direction, but should not rotate in opposite direction. If clutch does not function properly, replace overrunning clutch assembly.
2. Inspect pinion for wear or burrs. If pinion is worn or burred, replace overrunning clutch assembly. If pinion is damaged, also inspect ring gear for wear or burrs.

FRONT AND REAR BRACKET BUSHING CHECK

Inspect bushing for wear or burrs. If bushing is worn or burred, replace front bracket assembly or rear bracket assembly.

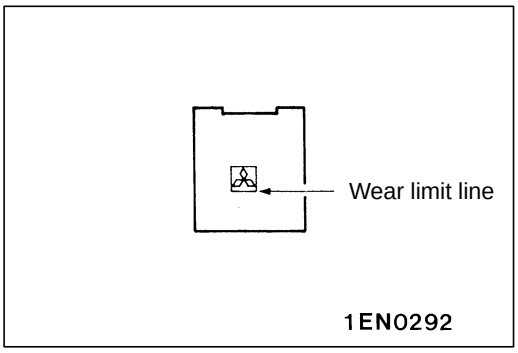

BRUSH AND SPRING REPLACEMENT

<REDUCTION DRIVE TYPE-4G6>

1. Brushes that are worn beyond wear limit line, or oil-soaked, should be replaced.
2. When replacing ground brush, slide the brush from brush holder by prying retaining spring back.

<DIRECT DRIVE TYPE>, <REDUCTION DRIVE TYPE-4D56>

1. Brushes that are worn beyond wear limit line, or are oil-soaked, should be replaced.
2. When replacing field coil brushes, crush worn brush with pliers, taking care not to damage pigtail.

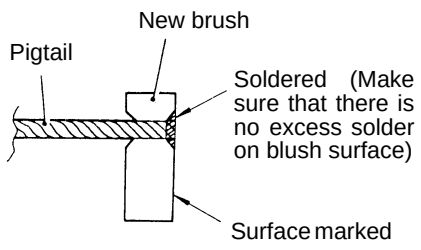

1EN0295

3. Sand pigtail end with sandpaper to ensure good soldering.
4. Insert pigtail into hole provided in new brush and solder it.
   Make sure that pigtail and excess solder do not come out onto brush surface.
5. When replacing ground brush, slide the brush from brush holder by prying retainer spring back.

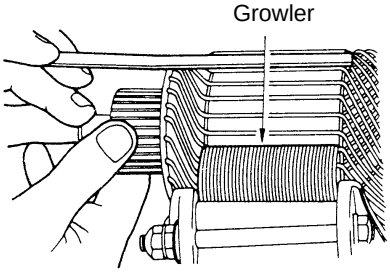

6EN0600

ARMATURE TEST

ARMATURE SHORT-CIRCUIT TEST

1. Place armature in a growler.
2. Hold a thin steel blade parallel and just above while rotating armature slowly in growler. A shorted armature will cause blade to vibrate and be attracted to the core. Replace shorted armature.

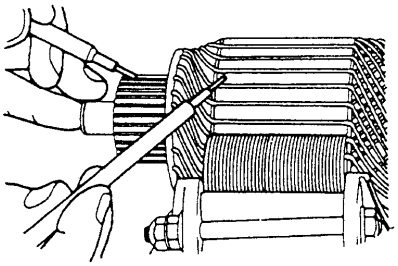
6EN0601

ARMATURE COIL EARTH TEST

Check the insulation between each commutator segment and armature coil core.
If there is no continuity, the insulation is in order.

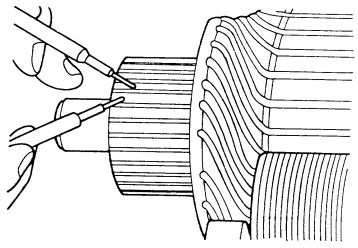
1EN0299

ARMATURE COIL OPEN-CIRCUIT INSPECTION

Check the continuity between segments. If there is continuity, the coil is in order.

IGNITION SYSTEM

16300010194

GENERAL INFORMATION

When the primary current stops suddenly in the ignition coil, high voltage appears in the secondary side of the coil. The distributor supplies the high voltage to the applicable spark plug. The engine firing order is 1-3-4-2 cylinders.
The high voltage ignites the compressed air fuel mixture in the combustion chamber through the spark plugs.
The engine-ECU makes and breaks the primary current of the ignition coil to regulate the ignition timing.
The engine-ECU detects the crankshaft position by the crank angle sensor incorporated in the distributor to provide ignition at the most appropriate timing for the engine operating condition.
When the engine is cold or operated at a high altitude, the ignition timing is slightly advanced to provide optimum performance to the operating condition.

SYSTEM DIAGRAM

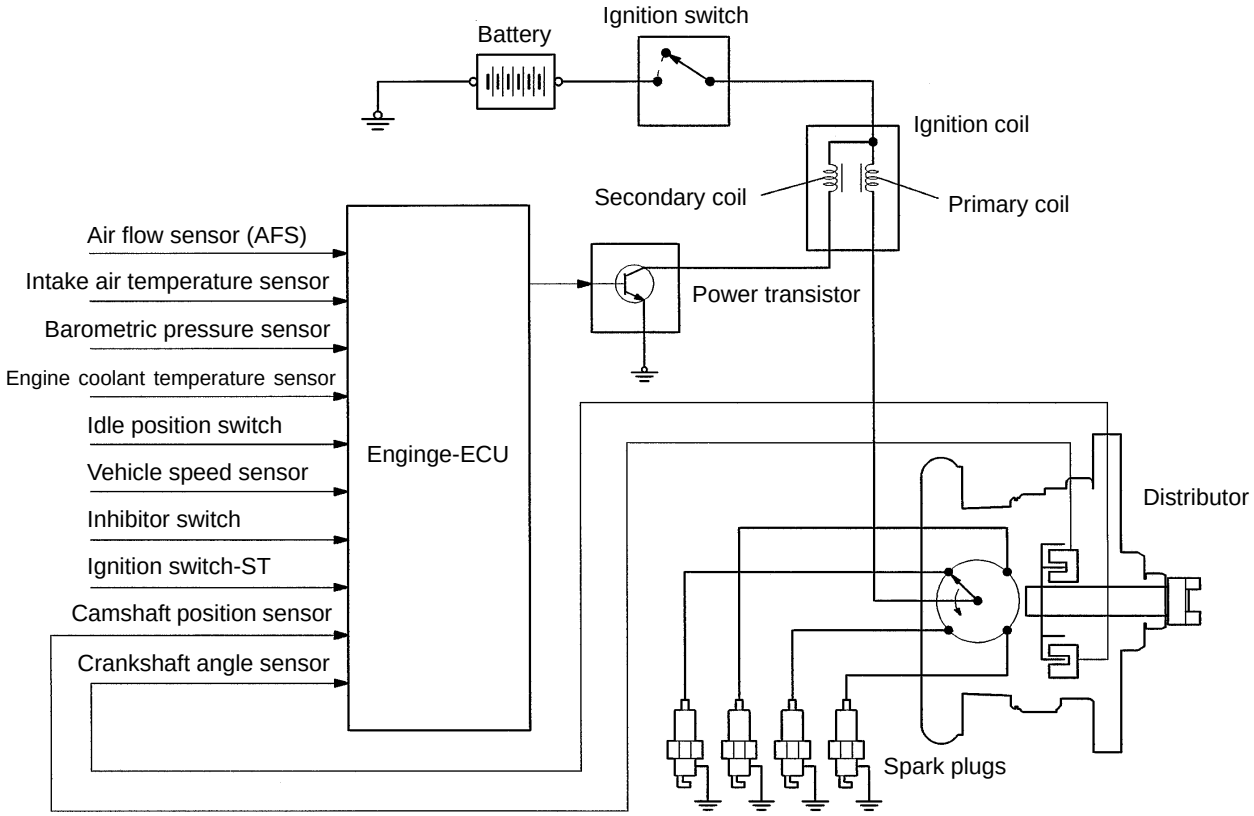

6EN1009

DISTRIBUTOR SPECIFICATIONS

Items	Specifications
Type	Contact pointless
Advance mechanism	Electronic
Firing order	1–3–4–2

IGNITION COIL SPECIFICATIONS

Items	Specifications
Type	Molded single-coil

SPARK PLUG SPECIFICATIONS

Items	Specifications
NGK	BKR5E-11
NIPPON DENSO	K16PR-U11

SERVICE SPECIFICATIONS

16300030190

Items		Standard value	Limit
Ignition coil	Primary coil resistance Ω	0.67 – 0.81	–
	Secondary coil resistance kΩ	11.3 – 15.3	–
Spark plug gap mm		1.0 – 1.1	–
Resistive cord resistance kΩ		–	Max. 22

LUBRICANT

Items	Specified lubricant	Quantity
Distributor cupping	Multipurpose grease SAE J310, NLGI No.3	2 g

SPECIAL TOOL

16300060151

Tool	Number	Name	Use
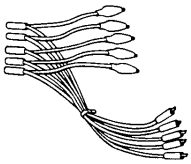	MB991348	Test harness set	Inspection of ignition primary voltage (power transistor connection)

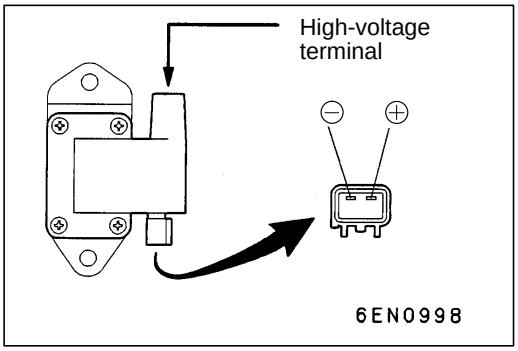

ON-VEHICLE SERVICE

16300120231

IGNITION COIL CHECK

1. Measurement of the primary coil resistance
   Measure the resistance between (+) terminal and (–) terminal.

   Standard value: 0.67 – 0.81 Ω
2. Measurement of secondary coil resistance
   Measure the resistance between the high-voltage terminals and (+) terminal.

   Standard value: 11.3 – 15.3 kΩ

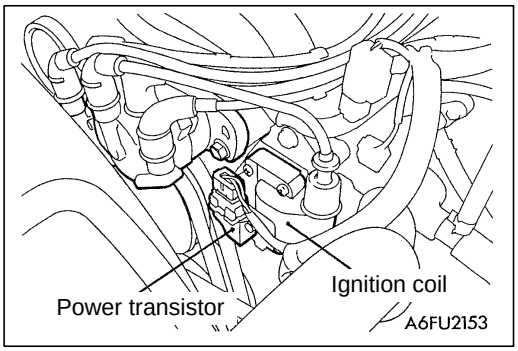

POWER TRANSISTOR CONTINUITY CHECK

16300130159

NOTE
An analogue-type circuit tester should be used.

Voltage: 1.5V	Terminal No.		
	1	2	3
Applied	⊕	⊖	
		○	○
Not applied			

Replace the power transistor if there is a malfunction.

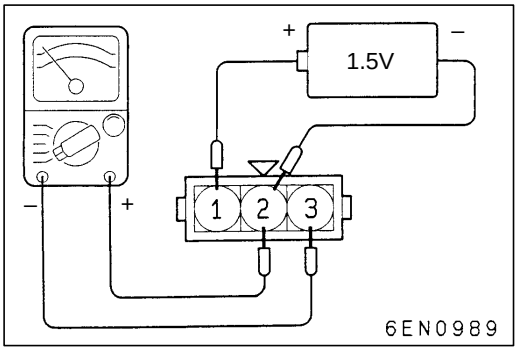

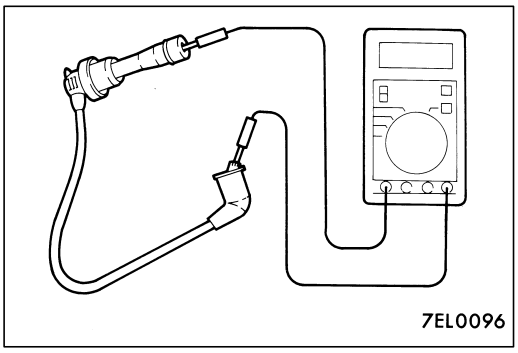

RESISTIVE CORD CHECK

16300140091

Measure the resistance of the all spark plug cables.
1. Check cap and coating for cracks.
2. Measure resistance.

   Limit: Max. 22 kΩ

SPARK PLUG CHECK AND CLEANING 16300150056

1. Remove the spark plug cables.

   Caution
   When pulling off the spark plug cable from the plug always hold the cable cap, not the cable.

2. Remove the spark plugs.
3. Check for burned out electrode or damaged insulator. Check for even burning.
4. Remove carbon deposits with wire brush or plug cleaner. Remove sand from plug screw with compressed air.

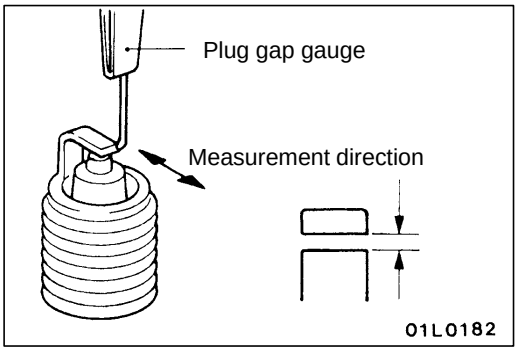

5. Use a plug gap gauge to check that the plug gap is within the standard value range.

   Standard value: 1.0 – 1.1 mm

   If the plug gap is not within the standard value range, adjust by bending the earth electrode.
6. Clean the engine plug holes.

   Caution
   Be careful not to allow foreign matter in cylinders.

7. Install the spark plugs.

CRANK ANGLE SENSOR, TOP DEAD SENSOR CHECK 16300260308

Refer to GROUP 13A – Troubleshooting.

WAVEFORM CHECK USING AN ANALYZER

16300170274

Ignition Secondary Voltage Check

MEASUREMENT METHOD

1. Clamp the high-tension cable with the secondary pickup.
2. Clamp the spark plug cable with the trigger pickup. (Basically, clamp the spark plug cable of the No.1 cylinder.)

   NOTE
   The waveform of the cylinder clamped to the trigger pickup appears at the left edge of the screen.

STANDARD WAVEFORM

Observation Conditions

FUNCTION	SECONDARY
PATTERN HEIGHT	HIGH (or LOW)
PATTERN SELECTOR	RASTER
Engine Speed	Curb idle speed

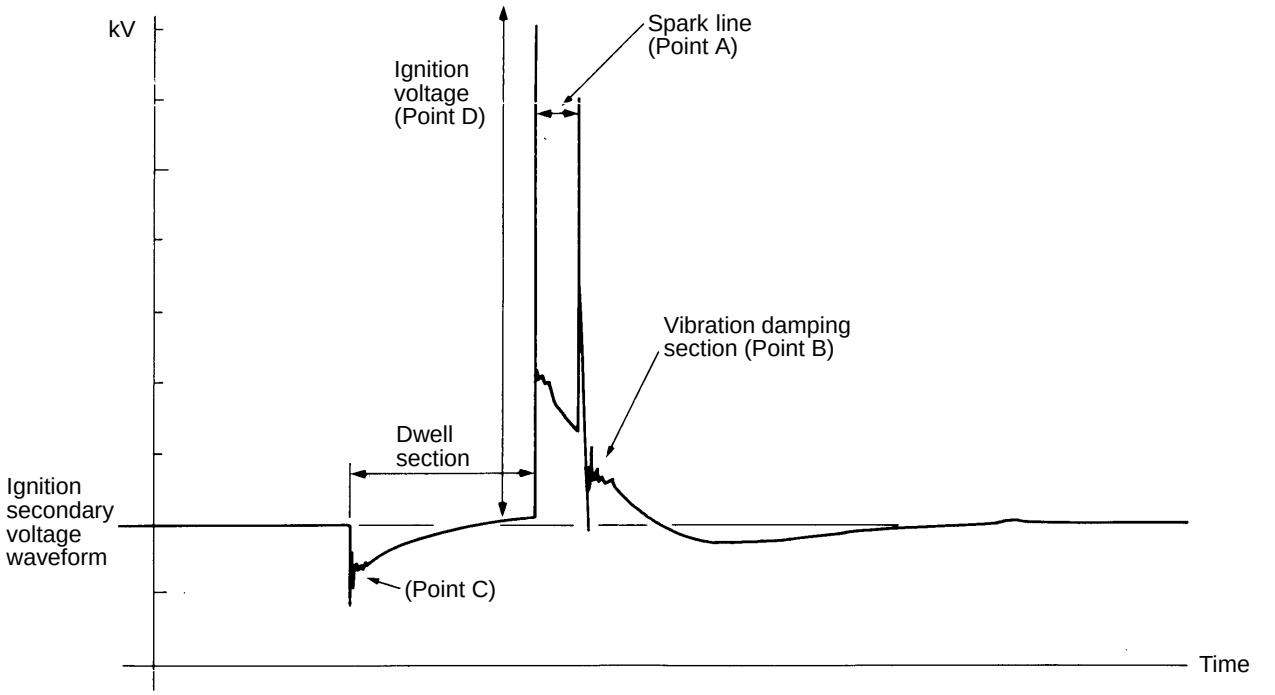

7EL0128

WAVEFORM OBSERVATION POINTS

Point A: The height, length and slope of the spark line show the following trends (Refer to abnormal waveform examples, 1, 2, 3 and 4).

Spark line		Plug gap	Condition of electrode	Compression force	Concentration of air mixture	Ignition timing	Spark plug cable
Length	Long	Small	Normal	Low	Rich	Advanced	Leak
	Short	Large	Large wear	High	Lean	Retarded	High resistance
Height	High	Large	Large wear	High	Lean	Retarded	High resistance
	Low	Small	Normal	Low	Rich	Advanced	Leak
Slope		Large	Plug is fouled	–	–	–	–

Point B: Number of vibration in reduction vibration section (Refer to abnormal waveform example 5)

Number of vibrations	Coil and condenser
Three or more	Normal
Except above	Abnormal

Point C: Number of vibrations at beginning of dwell section (Refer to abnormal waveform example 5)

Number of vibrations	Coil
5–6 or higher	Normal
Except above	Abnormal

Point D: Ignition voltage height (distribution per each cylinder) shows the following trends.

Ignition voltage	Plug gap	Condition of electrode	Compression force	Concentration of air mixture	Ignition timing	Spark plug cable
High	Large	Large wear	High	Lean	Retarded	High resistance
Low	Small	Normal	Low	Rich	Advanced	Leak

EXAMPLES OF ABNORMAL WAVEFORMS

Abnormal waveform	Wave characteristics	Cause of problem
Example 1 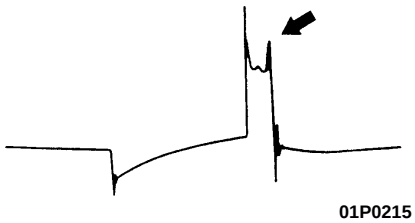 01P0215	Spark line is high and short.	Spark plug gap is too large.
Example 2 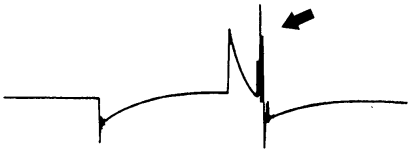 01P0216	Spark line is low and long, and is sloping. Also, the second half of the spark line is distorted. This could be a result of misfiring.	Spark plug gap is too small.
Example 3 01P0217	Spark line is low and long, and is sloping. However, there is almost no spark line distortion.	Spark plug gap is fouled.
Example 4 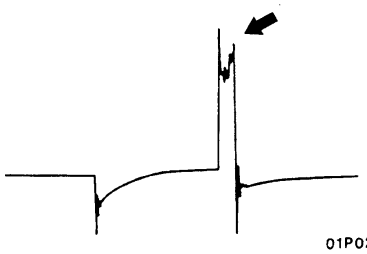 01P0218	Spark line is high and short. Difficult to distinguish between this and abnormal waveform example 1.	Spark plug cable is nearly falling off. (Causing a dual ignition)
Example 5 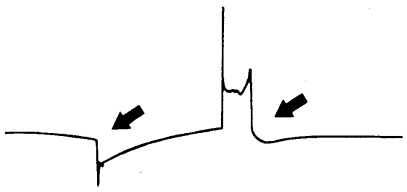 01P0219	No waves in wave damping section.	Layer short in ignition coil

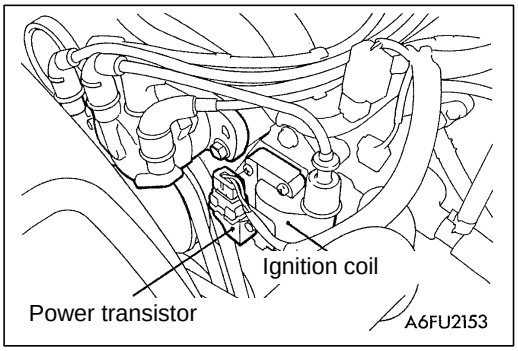

Ignition Primary Voltage Waveform Check

MEASUREMENT METHOD

1. Disconnect the power transistor connector and connect the special tool (test harness: MB991348) in between. (All of the terminals should be connected.)

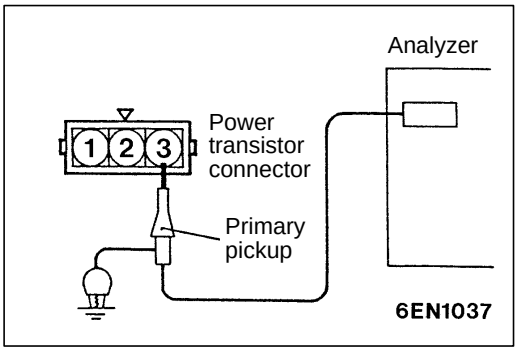

2. Connect the analyzer primary pickup to the power transistor connector terminal 3.
3. Connect the primary pickup earth terminal.
4. Clamp the spark plug cable with the trigger pickup.

   NOTE
   The waveform of the cylinder clamped to the trigger pickup will appear at the left edge of the screen.

STANDARD WAVEFORM

Observation conditions

FUNCTION	SECONDARY
PATTERN HEIGHT	HIGH (or LOW)
PATTERN SELECTOR	RASTER
Engine Speed	Curb idle speed

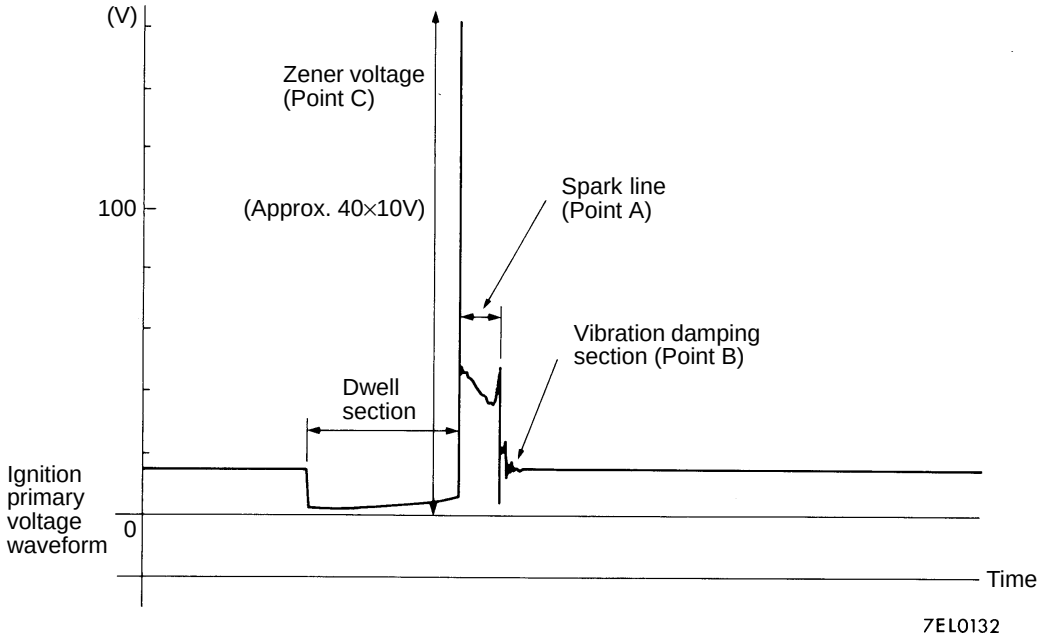

Observation conditions

(Only the pattern selector shown below changes from the previous conditions)

PATTERN SELECTOR	DISPLAY

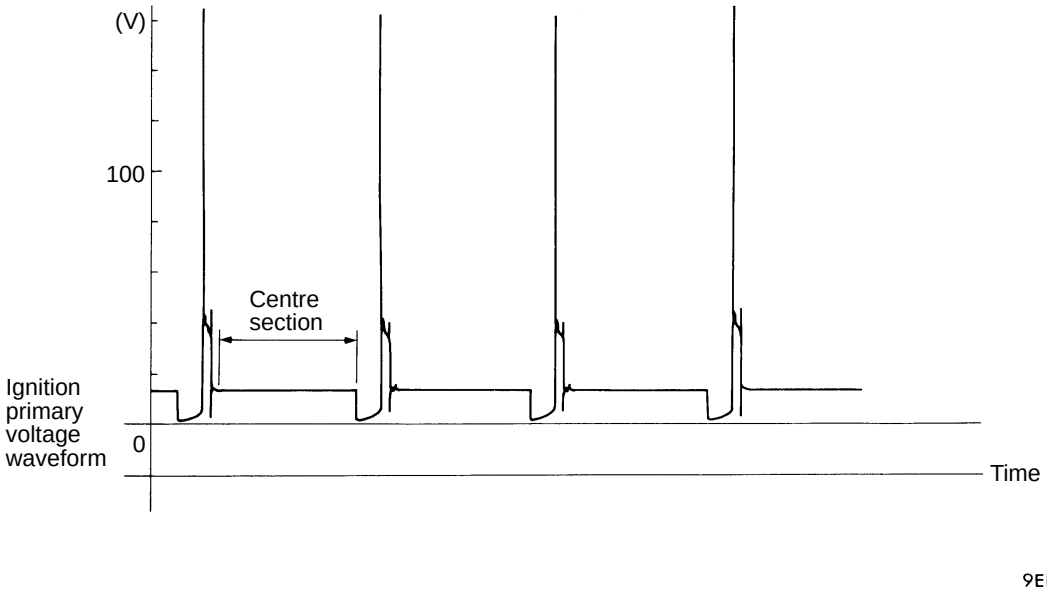

WAVEFORM OBSERVATION POINTS

Point A: The height, length and slope of the spark line (refer to abnormal waveform examples 1, 2, 3 and 4) show the following trends.

Spark line		Plug gap	Condition of electrode	Compression force	Concentration of air mixture	Ignition timing	High tension cable
Length	Long	Small	Normal	Low	Rich	Advanced	Leak
	Short	Large	Large wear	High	Lean	Retarded	High resistance
Height	High	Large	Large wear	High	Lean	Retarded	High resistance
	Low	Small	Normal	Low	Rich	Advanced	Leak
Slope		Large	Plug is fouled	–	–	–	–

Point B: Number of vibration in reduction vibration section (Refer to abnormal waveform example 5)

Number of vibrations	Coil, condenser
3 or higher	Normal
Except above	Abnormal

Point C: Height of Zener voltage

Height of Zener voltage	Probable cause
High	Problem in Zener diode
Low	Abnormal resistance in primary coil circuit

EXAMPLES OF ABNORMAL WAVEFORMS

Abnormal waveform	Wave characteristics	Cause of problem
Example 1 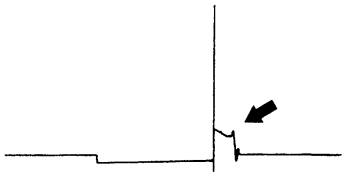 01P0210	Spark line is high and short.	Spark plug gap is too large.
Example 2 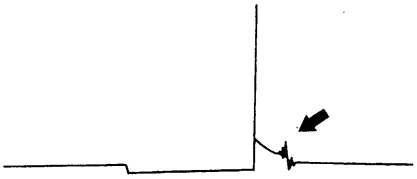 01P0211	Spark line is low and long, and is sloping. Also, the second half of the spark line is distorted. This could be a result of misfiring.	Spark plug gap is too small.
Example 3 01P0212	Spark line is low and long, and is sloping. However, there is almost no spark line distortion.	Spark plug gap is fouled.
Example 4 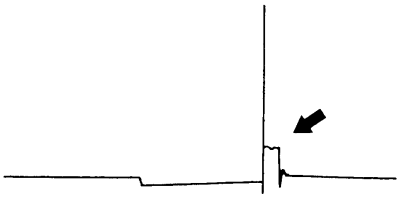 01P0213	Spark line is high and short.	Spark plug cable is nearly falling off. (Causing a dual ignition)
Example 5 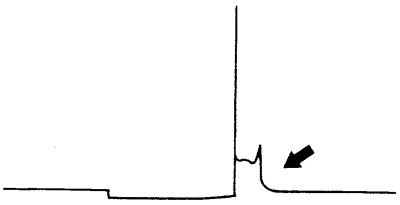 01P0214	No waves in wave damping section	Layer short in ignition coil

DISTRIBUTOR

16300200140

REMOVAL AND INSTALLATION

Post-installation Operation
- Engine Adjustment (Refer to GROUP 11A – On-vehicle Service.)

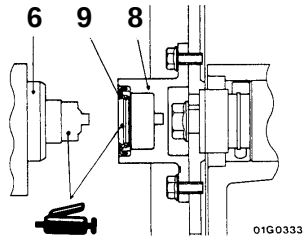

Grease: SAE J310, NLGI No.3

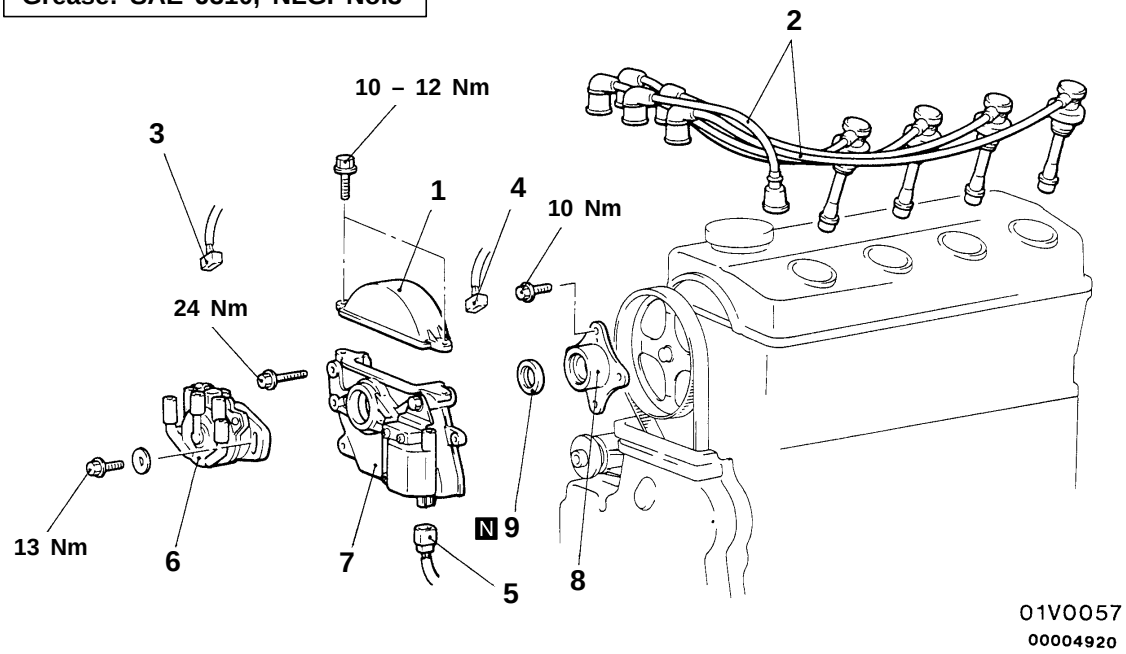

Removal steps

1. Timing belt upper cover
2. Spark plug cable and high tension cable ▶C◀
3. Distributor connector ▶B◀
4. Power transistor connector ▶A◀
5. Ignition coil connector
6. Distributor assembly
7. Distributor bracket
8. Camshaft sprocket spacer
9. Oil seal

INSTALLATION SERVICE POINTS

▶A◀ OIL SEAL INSTALLATION

Tap in the oil seal until it is flush with the camshaft sprocket spacer.

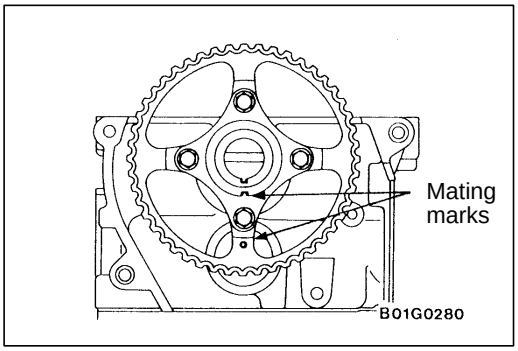

▶B◀ CAMSHAFT SPROCKET SPACER INSTALLATION

Install the camshaft sprocket spacer so that the mating marks on the camshaft sprocket spacer and the camshaft sprocket are aligned.

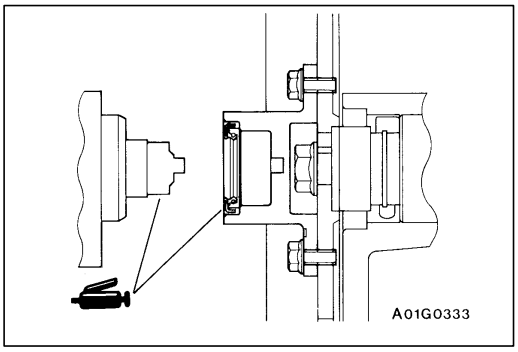

▶C◀ DISTRIBUTOR ASSEMBLY INSTALLATION

1. Apply 2 grams of grease in the places shown in the illustration.

   Specified grease:
   Multipurpose grease SAE J310, NLGI No.3

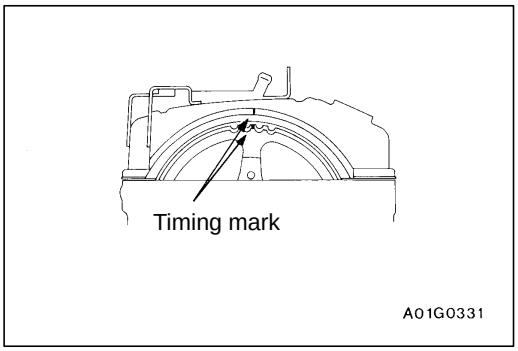

2. Turn the crankshaft clockwise to align the timing marks.

   NOTE
   The No.1 cylinder will be at compression top dead centre if the timing mark on the camshaft sprocket is aligned with the timing mark on the cylinder head.

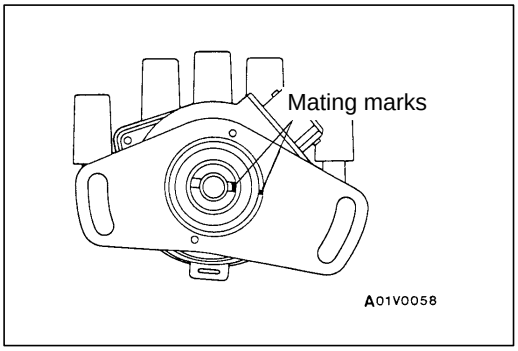

3. Align the mating mark on the distributor housing side with the mating mark on the coupling side.
4. Install the distributor to the engine while aligning the distributor fixing bolt with the oblong hole on the distributor mounting flange.

DISASSEMBLY AND REASSEMBLY

16300220122

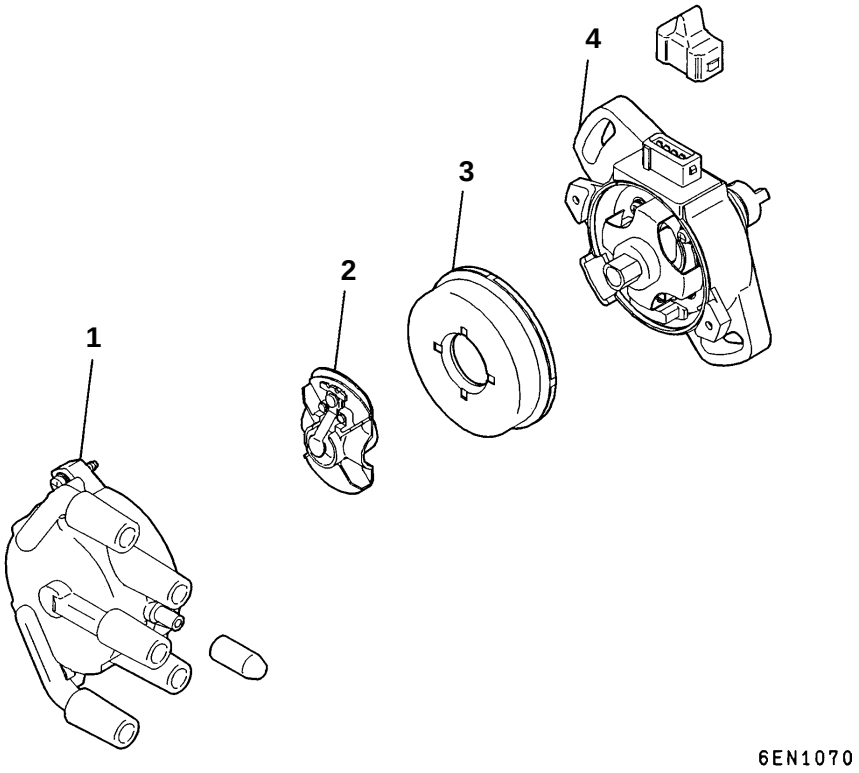

Disassembly steps

1. Distributor cap
2. Rotor
3. Cover
4. Distributor housing

GLOW SYSTEM

16400010029

GENERAL INFORMATION

SELF-REGULATING GLOW SYSTEM

The self-regulating glow system reduces the time required for starting at low temperatures to provide a degree of starting and operation that is identical to petrol-engine vehicles by preheating the glow plugs at super-quick speed.
The glow control unit controls both the time during which current is supplied to the glow plugs after the ignition switch is turned to the ON position and also the glow indicator lamp illumination time in accordance with the engine coolant temperature. The resistances of the heating coils which are built into the glow plugs increase as the glow plug temperatures become higher. As a result of this, the flow of current gradually decreases, thus stabilizing the glow plug temperature at the specified temperature.

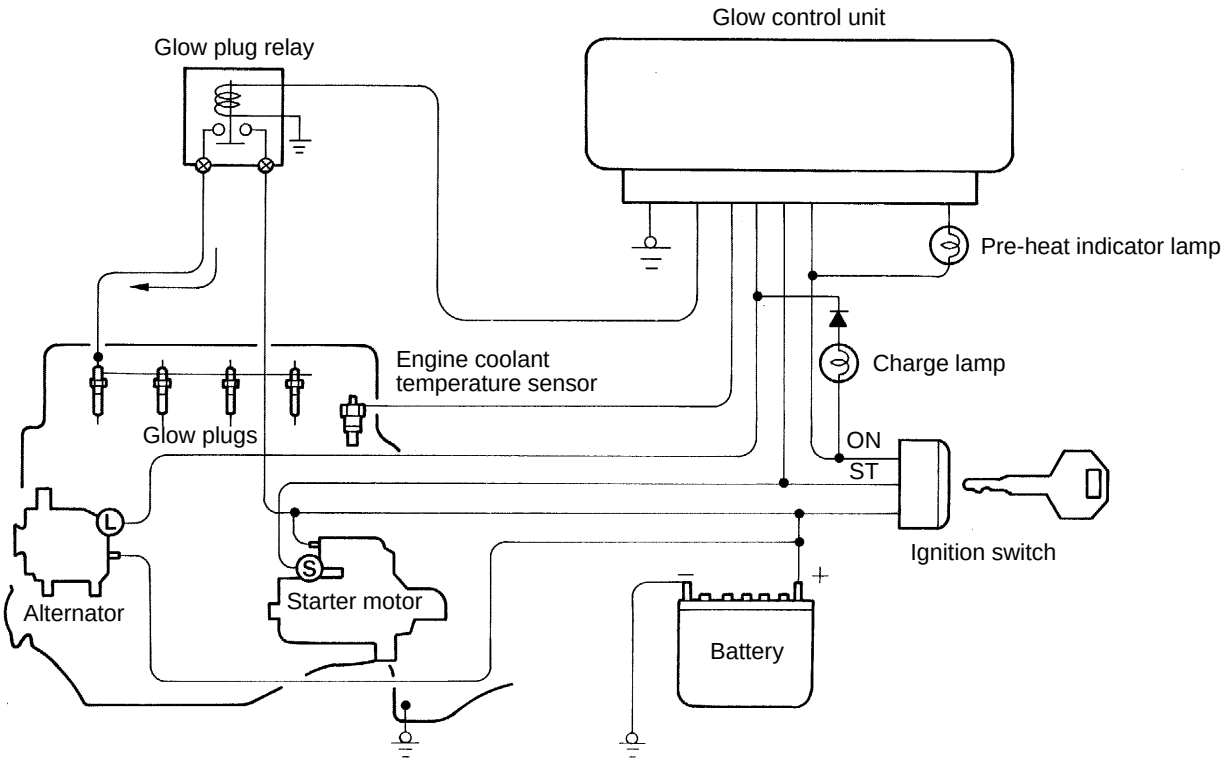

SERVICE SPECIFICATIONS

16400030025

Item		Standard value
Resistance between glow plug plate and glow plug body (parallel resistance for 4 glow plugs) (at 20 °C) Ω		0.10 – 0.15
Voltage between glow plug plate and glow plug body V	Immediately after ignition switch is turned to ON (without starting the engine)	9 – 11 (Drops to 0 V after 4 – 8 seconds have passed)
	While engine is cranking	6 or more
	While engine is warming up	12 – 15 (Drops to 0 V when the engine coolant temperature increases to 60 °C or more or if 180 seconds have passed since the engine was started)
Glow plug resistance (at 20 °C) Ω		0.4 – 0.6

SEALANT

16400050021

Item	Specified sealant	Remark
Engine coolant temperature sensor	3M Nut Locking Part No.4171 or equivalent	Drying sealant

ON-VEHICLE SERVICE

16400100023

SELF-REGULATING GLOW SYSTEM CHECK

1. Check that the battery voltage is 11 – 13 V.
2. Check that the engine coolant temperature is 40 °C or less.

   NOTE
   If the engine coolant temperature is too high, disconnect the engine coolant temperature sensor connector.

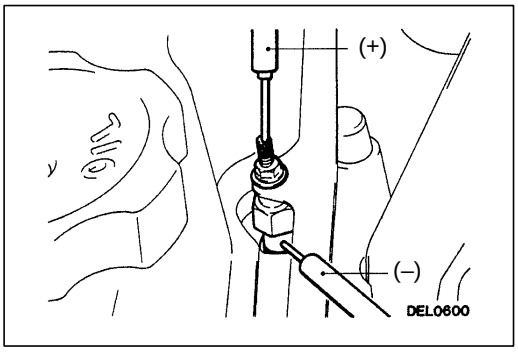

3. Measure the resistance between the glow plug plate and the glow plug body (earth).

   Standard value: 0.10 – 0.15 Ω (at 20 °C)

   NOTE
   The resistance value is the parallel resistance value for the four glow plugs.
4. Connect a voltmeter between the glow plug plate and the glow plug body (earth).
5. Measure the voltage immediately after the ignition switch is turned to ON (without starting the engine).

   Standard value:
   9 – 11 V (Drops to 0 V after 4 – 8 seconds have passed)

   In addition, check to be sure that the glow indicator lamp (red) illuminates immediately after the ignition switch is turned to ON.

   NOTE
   The time during which the voltage appears (energizing time) will depend on the engine coolant temperature.
6. Measure the voltage while the engine is cranking.

   Standard value: 6 V or more
7. Start the engine and measure the voltage while the engine is warming up.
   However, if the engine coolant temperature rises above 60 °C or when 180 seconds have passed since the engine was started, the voltage will always return to 0 V. (Refer to the Glow Plug Energization Timing Chart.)

   Standard value: 12 – 15 V

<Reference>

Glow Plug Energization Timing Chart

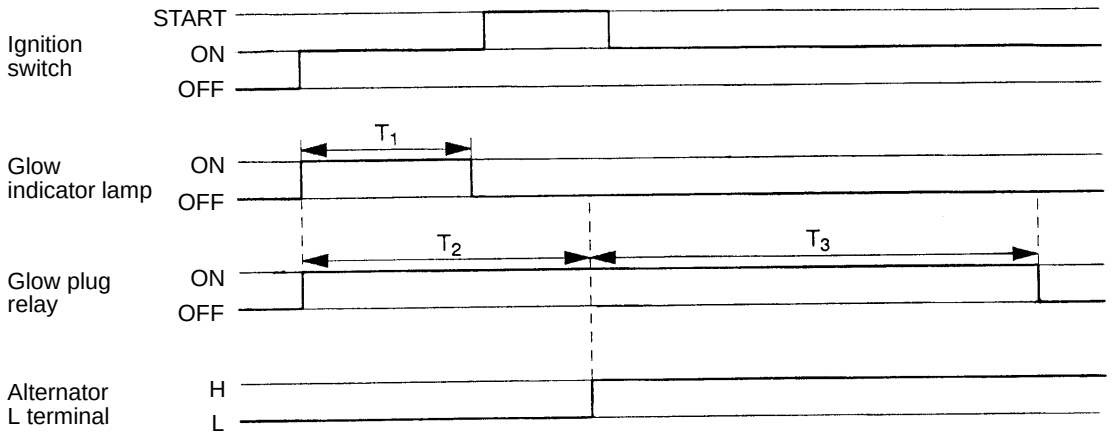

T_1: Glow indicator lamp
T_2: Glow plug relay drive time after ignition switch is turned ON
T_3: Glow plug relay drive time after engine starts (after glow)

DEN0063

NOTE
After glow time T_3 becomes longer as the engine coolant temperature drops.

GLOW CONTROL UNIT CHECK

16400220033

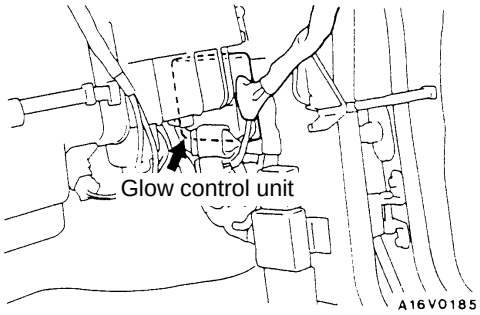

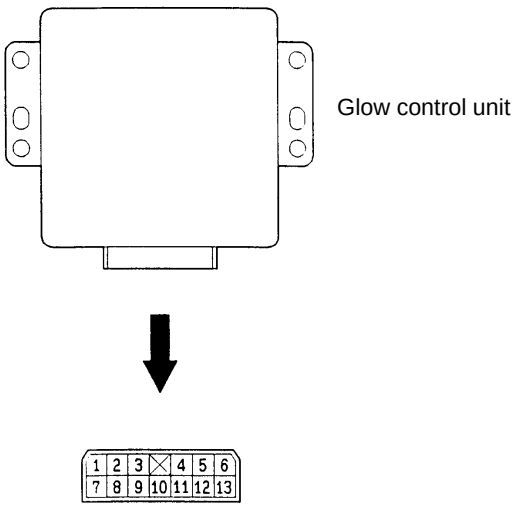

DEN0236
DEN0240

1. Measure the voltage at the control unit terminals.

   NOTE
   1. Inspect with the control unit connector connected.
   2. When measuring the voltage, connect the control unit terminal (10) to the earth.

Terminal Voltage Reference Table

Inspection terminal	Inspection item	Inspection condition		Standard value
13	Engine coolant temperature sensor (Engine coolant temperature detection)	Ignition switch "ON" → "OFF"	Engine coolant temperature: – 20 °C	4.3 – 4.5 V
			Engine coolant temperature: 0 °C	3.7 – 3.9 V
			Engine coolant temperature: 20 °C	2.8 – 3.0 V
			Engine coolant temperature: 40 °C	1.9 – 2.1 V
			Engine coolant temperature: 80 °C	0.5 – 0.7 V
2	Ignition switch (power supply)	Ignition switch "OFF" → "START"		8 V or more
7	Glow plug relay (glow time control)	Ignition switch "OFF" → "ON" Engine coolant temperature: 40 °C or less (Pre-glow function inspection)		9 – 12 V 0 – 0.5 V after approx. 8 sec. (when engine coolant temperature is 20 °C)
3	Glow indicator lamp	Ignition switch "OFF" → "ON" Engine coolant temperature: 40 °C or less		0 – 1 V 11 – 13 V after approx. 1 sec. (when engine coolant temperature is 20 °C)
6	Alternator charging signal ("L" terminal)	Ignition switch "OFF" → "ON"		1 – 4 V
		Engine is idling		11 V or more
10	Earth	–		–

Glow control unit harness-side connector as seen from the terminal side

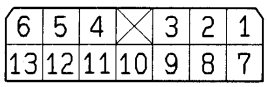

DEN0241

2. Remove the control unit connector and check the continuity between the harness-side connector terminals.

Inspection terminal	Inspection item	Continuity (resistance value)
7 – 10	Glow plug relay	Continuity (approx. 3Ω)

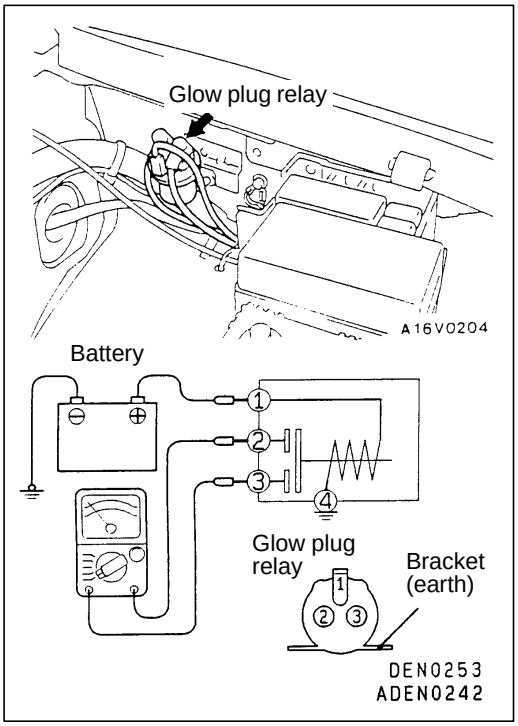

GLOW PLUG RELAY CHECK

16400250032

1. Check to be sure that there is continuity (approx. 3 Ω) between glow plug relay terminal (1) and the bracket (earth).
2. Use jumper cables to connect terminal (1) of the glow plug relay to the battery (+) terminal and the bracket to the battery (–) terminal

   Caution
   (1) Always be sure to disconnect the harnesses connected to glow plug relay terminals (2) and (3) before using the jumper cables.
   (2) The terminals of the disconnected harnesses must not be shorted to earth.
   (3) When connecting the jumper cables, be very careful not to make a mistake in connecting the terminals, as this will cause damage to the relay.
3. Check the continuity between glow plug relay terminals (2) and (3) while disconnecting and connecting the jumper cable at the battery (+) terminal

Jumper cable at battery (+) terminal	Continuity between terminals (2) – (3)
Connected	Continuity (0.01 Ω or less)
Disconnected	No continuity (infinite resistance)

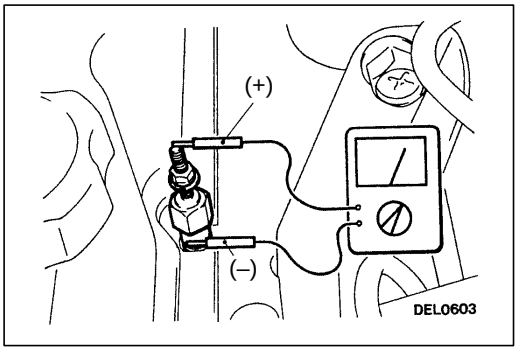

GLOW PLUG CHECK

16400190051

1. Remove the glow plug plate.
2. Measure the resistance between the glow plug terminals and the body.

   Standard value: 0.4 – 0.6 Ω (at 20 °C)

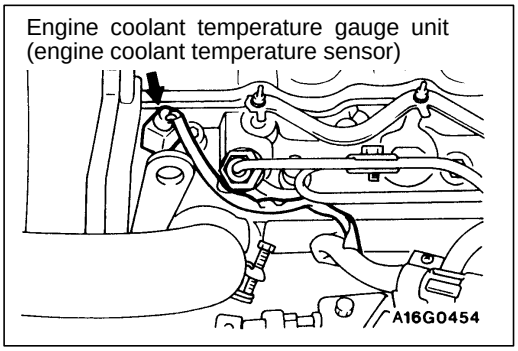

ENGINE COOLANT TEMPERATURE SENSOR CHECK

16400280031

1. Remove the engine coolant temperature sensor.

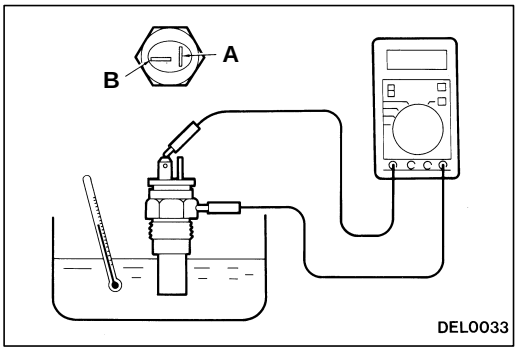

2. While the sensor section of the engine coolant temperature sensor is immersed, measure the resistance between (B) terminal and the body.

Temperature (°C)	Resistance value (kΩ)
0	8.6
20	3.25 ± 0.33
40	1.5
80	0.3

3. After applying specified sealant to the threaded portion, tighten to the specified torque.

   Specified sealant:
   3M Nut Locking Part No. 4171 or equivalent

   Tightening torque: 35 Nm

GLOW PLUG

16400180027

REMOVAL AND INSTALLATION

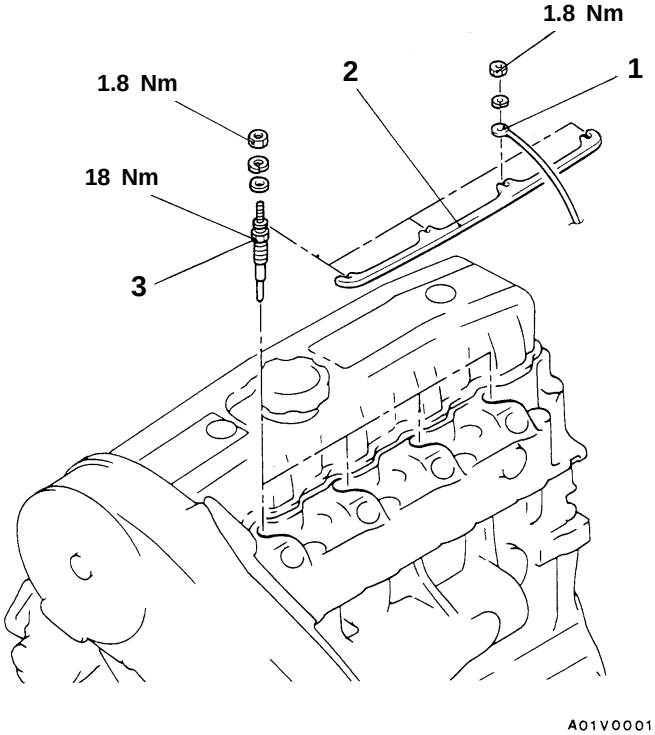

Removal steps

1. Connector connection
2. Glow plug plate
◀A▶ 3. Glow plug

REMOVAL SERVICE POINT

◀A▶ GLOW PLUG REMOVAL

Remove glow plug by hand after loosening with tool as its ceramic part is fragile.

INSPECTION

16400190044

- Check for rust on glow plug plate.
- Check glow plug for damage.

Caution

Do not use a plug that has been dropped from a height of 10 cm or more.

GROUP 16
ENGINE ELECTRICAL

CHARGING SYSTEM

GENERAL INFORMATION

The alternator output has been revised.

ALTERNATOR SPECIFICATIONS

Items	4G63	4G64	4D56-N/A	4D56-T/C
Type	Battery voltage sensing	Battery voltage sensing	Battery voltage sensing	Battery voltage sensing
Rated output V/A	12/70, 12/80*1	12/70	12/75	12/65, 12/75*2, 12/80*3
Voltage regulator	Electronic built-in type	Electronic built-in type	Electronic built-in type	Electronic built-in type

NOTE
*1: Vehicles with A/T
*2: GLS and vehicles with enhanced alternator (optional)
*3: Vehicles for cold climate zone

GROUP 16
ENGINE ELECTRICAL

GLOW SYSTEM

GENERAL

OUTLINE OF CHANGE(S)

The engine with the exhaust gas recirculation (EGR) system has been newly used. Therefore, procedure to check the glow & EGR control unit has been added.

ON-VEHICLE SERVICE

GLOW & EGR CONTROL UNIT CHECK

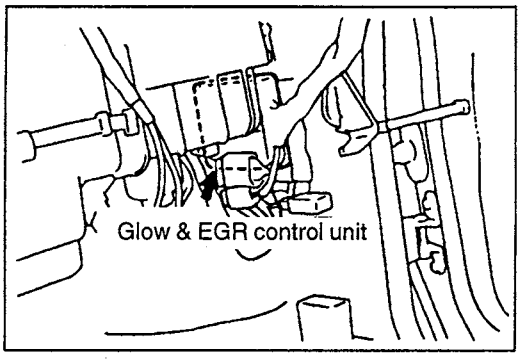

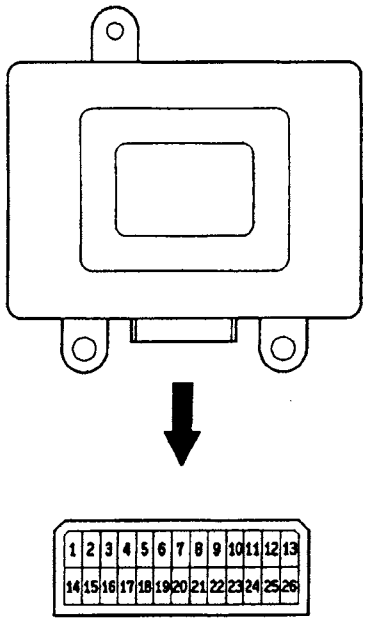

DEN0294

1. Measure voltage at the control unit terminal.

   NOTE
   1. Check with the control unit connector connected.
   2. When measuring the voltage, connect the control unit terminal (26) (terminal (10) for vehicles without EGR) to the earth.

Terminal Voltage Reference Table

Inspection terminal	Inspection item	Inspection condition		Standard value
5	Engine coolant temperature sensor (Engine coolant temperature detection)	Ignition switch "ON" to "off"	Engine coolant temperature: – 20°C	4.3 – 4.5 V
			Engine coolant temperature: 0°C	3.7 – 3.9 V
			Engine coolant temperature: 20°C	2.8 – 3.0 V
			Engine coolant temperature: 40°C	1.9 – 2.1 V
			Engine coolant temperature: 80°C	0.5 – 0.7 V
12	Ignition switch (power supply)	Ignition switch "off" to "START"		8 V or more
14	Glow plug relay (glow time control)	Ignition switch "off" to "ON" Engine coolant temperature: 40°C or less (Pre-glow function inspection)		9 – 12 V 0 – 0.5 V after approx. 8 sec. (when engine coolant temperature is 20°C)
17	Glow indicator lamp	Ignition switch "off" to "ON" Engine coolant temperature: 40°C or less		0 – 1 V 11 – 13 V after approx. 1 sec. (when engine coolant temperature is 20°C)
23	Alternator charging signal ("L" terminal)	Ignition switch "off" to "ON"		1 – 4 V
		Engine is idling		11 V or more
26	Earth	–		–

Glow control unit harness-side connector as seen from the terminal side

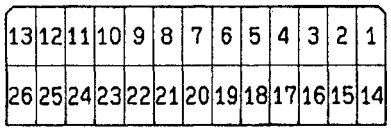

DEM0026

2. Remove the control unit connector and check continuity between the harness-side connector terminals.

Inspection terminal	Inspection item	Continuity (resistance value)
14 – 26	Glow plug relay	Continuity (approx. 3 Ω)

ENGINE ELECTRICAL

CONTENTS

IGNITION SYSTEM 2

GENERAL 2

Outline of Change 2

GENERAL INFORMATION 2

ON-VEHICLE SERVICE 3

Ignition Coil Check 3

Power Transistor Continuity Check 3

Waveform Check Using an Analyzer 4

IGNITION COIL AND POWER TRANSISTOR <4G6> 11

CRANK ANGLE SENSOR 12

CAMSHAFT POSITION SENSOR <4G6> 13

GLOW SYSTEM 13

GENERAL 13

Outline of Change 13

IGNITION SYSTEM

GENERAL

OUTLINE OF CHANGE

The following service procedures have been established to correspond to the change of the ignition system. Other procedures are the same as before.

GENERAL INFORMATION

This system is provided with two ignition coils (A and B) and two power transistors (A and B) for the No. 1 and No. 4 cylinders, and No. 2 and No. 3 cylinders respectively.
Interruption of the primary current flowing in the primary side of ignition coil A generates a high voltage in the secondary side of ignition coil A. The high voltage thus generated is applied to the spark plugs of No. 1 and No. 4 cylinders to generate sparks. At the time that the sparks are generated at both spark plugs, if one cylinder is at the compression stroke, the other cylinder is at the exhaust stroke, so that ignition of the compressed air/fuel mixture occurs only for the cylinder which is at the compression stroke.
In the same way, when the primary current flowing in ignition coil B is interrupted, the high voltage thus generated is applied to the spark plugs of No. 2 and No. 3 cylinders.
The engine-ECU controls the two power transistors (A and B) to turn them alternately ON and OFF. This causes the primary currents in the ignition coils (A and B) to be alternately interrupted and allowed to flow to fire the cylinders in the order 1-3-4-2.
The engine-ECU determines which ignition coil should be controlled by means of the signals from the camshaft position sensor which is incorporated in the camshaft and from the crank angle sensor which is incorporated in the crankshaft. It also detects the crankshaft position in order to provide ignition at the most appropriate timing in response to the engine operation conditions.
When the engine is cold or operated at high altitudes, the ignition timing is slightly advanced to provide optimum performance.
Furthermore, if knocking occurs, the ignition timing is gradually retarded until knocking ceases.

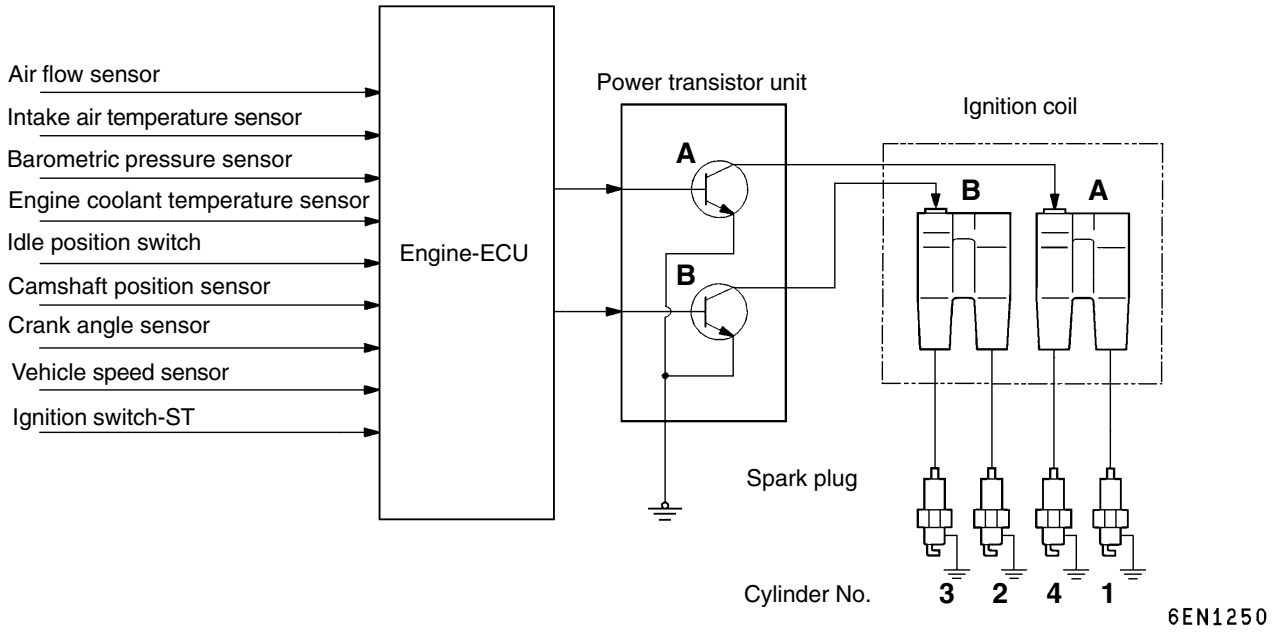

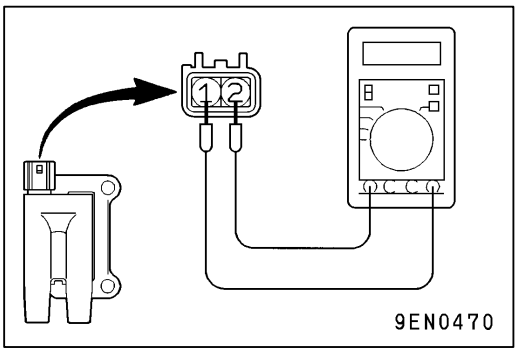

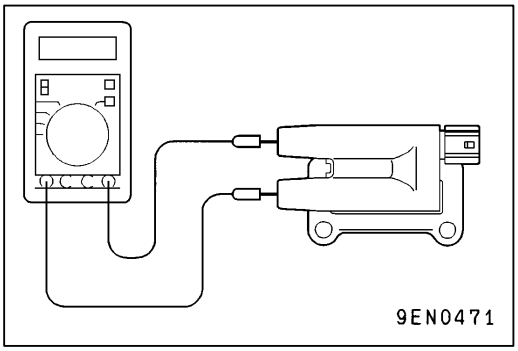

ON-VEHICLE SERVICE

IGNITION COIL CHECK

1. Measurement of the primary coil resistance
   Measure the resistance between (+) terminal and (–) terminal.

   Standard value: 0.74 – 0.90 Ω

2. Measurement of secondary coil resistance
   Measure the resistance between the high-voltage terminals and (+) terminal.

   Standard value: 20.1 – 27.3 kΩ

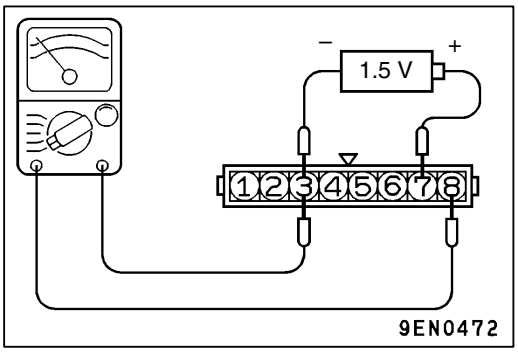

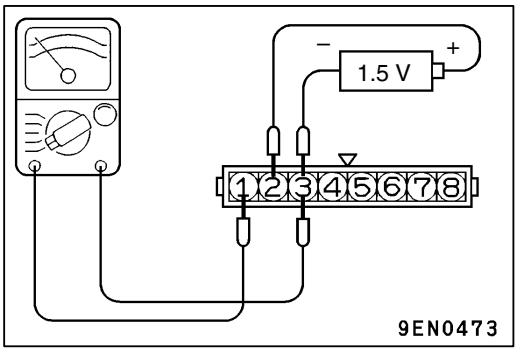

POWER TRANSISTOR CONTINUITY CHECK

NOTE
An analogue-type circuit tester should be used.

No. 1 – No. 4 cylinder side

Voltage: 1.5V	Terminal No.		
	3	7	8
Applied	⊖	⊕	
	○		○
Not applied			

No. 2 – No. 3 cylinder side

Voltage: 1.5V	Terminal No.		
	1	2	3
Applied		⊕	⊖
	○		○
Not applied			

Replace the power transistor if there is a malfunction.

WAVEFORM CHECK USING AN ANALYZER

Ignition Secondary Voltage Waveform Check

MEASUREMENT METHOD

1. Clamp the secondary pickup around the spark plug cable.

   NOTE
   (1) The peak ignition voltage will be reversed when the spark cables No. 2 and No. 4, or No. 1 and No. 3 cylinders are clamped.
   (2) Because of the two-cylinder simultaneous ignition system, the waveforms for two cylinders in each group appear during waveform observation (No. 1 cylinder – No. 4 cylinder, No. 2 cylinder – No. 3 cylinder). However, waveform observation is only applicable for the cylinder with the spark plug cable clamped by the secondary pickup.
   (3) Identifying which cylinder waveform is displayed can be difficult. For reference, remember that the waveform of the cylinder attached to the secondary pickup will be displayed as stable.

2. Clamp the spark plug cable with the trigger pickup.

   NOTE
   Clamp the trigger pickup to the same spark plug cable clamped by the secondary pickup.

STANDARD WAVEFORM

Observation Conditions

Function	Secondary
Pattern height	High (or Low)
Pattern selector	Raster
Engine revolutions	Curb idle speed

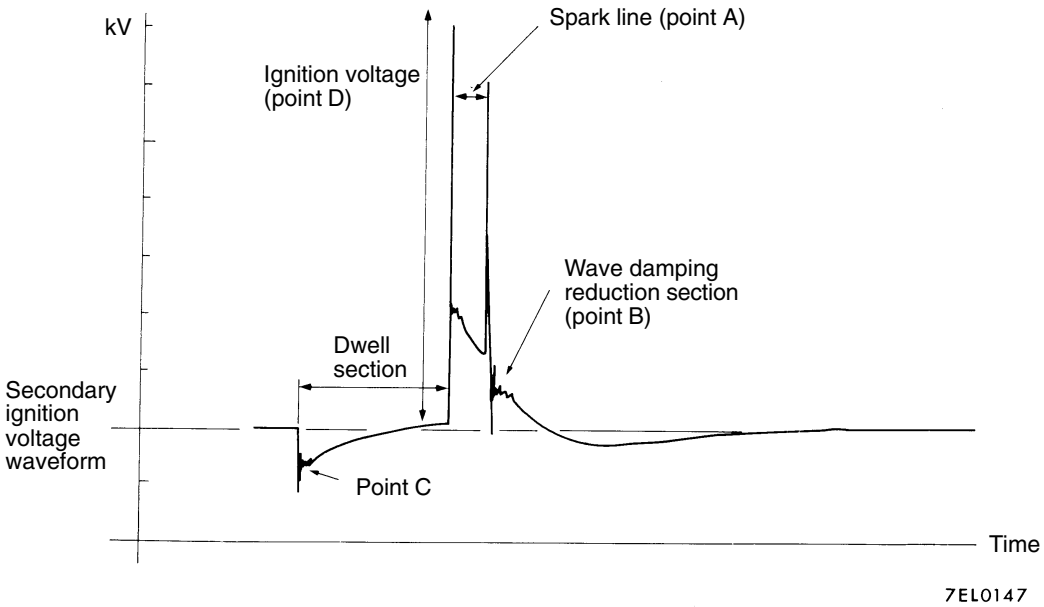

Observation Condition (The only change from above condition is the pattern selector.)

Pattern selector	Display

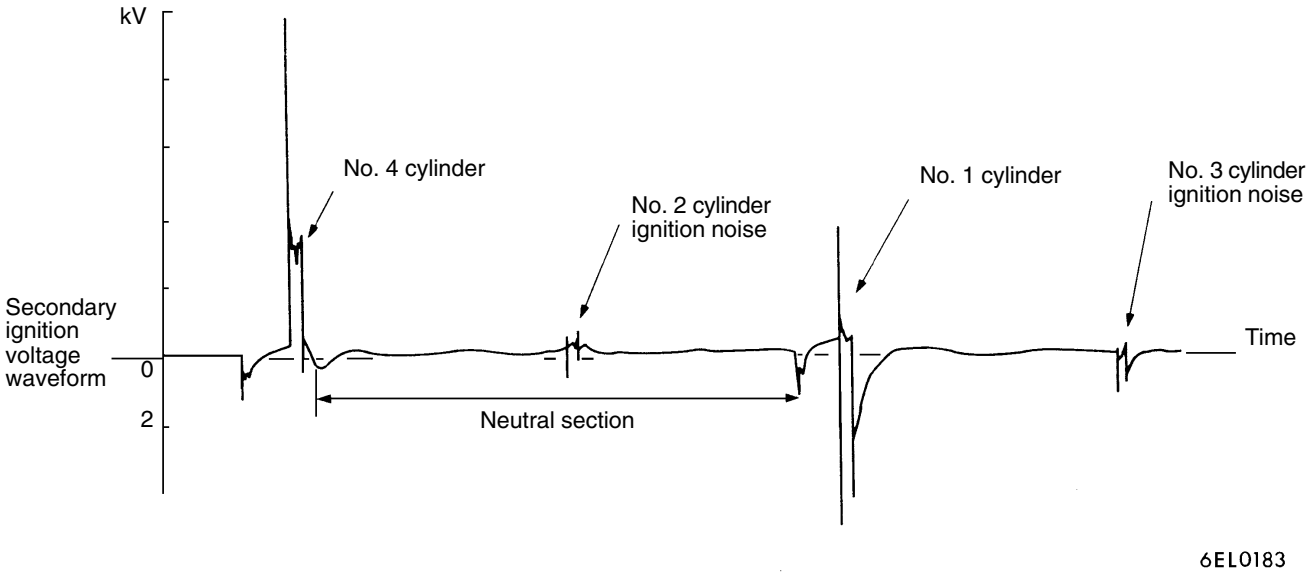

WAVEFORM OBSERVATION POINTS

Point A: The height, length and slope of the spark line show the following trends (Refer to abnormal waveform examples, 1, 2, 3 and 4).

Spark line		Plug gap	Condition of electrode	Compression force	Concentration of air mixture	Ignition timing	Spark plug cable
Length	Long	Small	Normal	Low	Rich	Advanced	Leak
	Short	Large	Large wear	High	Lean	Retarded	High resistance
Height	High	Large	Large wear	High	Lean	Retarded	High resistance
	Low	Small	Normal	Low	Rich	Advanced	Leak
Slope		Large	Plug is fouled	–	–	–	–

Point B: Number of vibration in reduction vibration section (Refer to abnormal waveform example 5)

Number of vibrations	Coil and condenser
Three or more	Normal
Except above	Abnormal

Point C: Number of vibrations at beginning of dwell section (Refer to abnormal waveform example 5)

Number of vibrations	Coil
5–6 or higher	Normal
Except above	Abnormal

Point D: Ignition voltage height (distribution per each cylinder) shows the following trends.

Ignition voltage	Plug gap	Condition of electrode	Compression force	Concentration of air mixture	Ignition timing	Spark plug cable
High	Large	Large wear	High	Lean	Retarded	High resistance
Low	Small	Normal	Low	Rich	Advanced	Leak

EXAMPLES OF ABNORMAL WAVEFORMS

Abnormal waveform	Wave characteristics	Cause of problem
Example 1 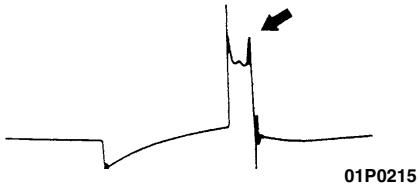 01P0215	Spark line is high and short.	Spark plug gap is too large.
Example 2 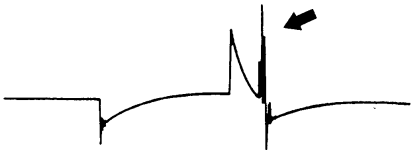 01P0216	Spark line is low and long, and is sloping. Also, the second half of the spark line is distorted. This could be a result of misfiring.	Spark plug gap is too small.
Example 3 01P0217	Spark line is low and long, and is sloping. However, there is almost no spark line distortion.	Spark plug gap is fouled.
Example 4 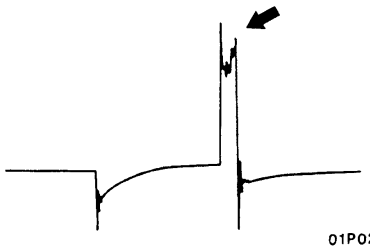 01P0218	Spark line is high and short. Difficult to distinguish between this and abnormal waveform example 1.	Spark plug cable is nearly falling off. (Causing a dual ignition)
Example 5 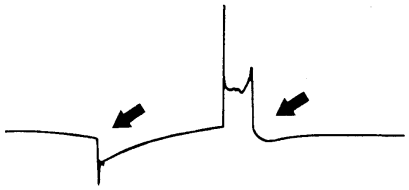 01P0219	No waves in wave damping section.	Layer short in ignition coil

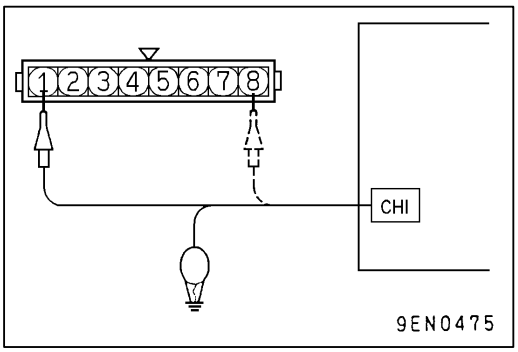

Ignition Primary Voltage Waveform Check

MEASUREMENT METHOD

(1) Disconnect the power transistor connector and connect the special tool (harness connector: MB991348) in between. (Connect all the terminals.)
(2) Connect the analyzer primary pickup to the power transistor connector terminal 8 when observing the No. 1 – No. 4 cylinder group, terminal 1 for the No. 2 – No. 3 cylinder group.
(3) Connect the primary pickup earth terminal.
(4) Clamp the spark plug with the trigger pickup.

NOTE
1. Clamp the spark plug cable for No.1 and No.3 cylinders of the same group with the cylinder that is connected to the primary pickup.
2. The wave pattern of either cylinder in the same group will appear at the left edge of the screen.

STANDARD WAVEFORM

Observation Conditions

Function	Secondary
Pattern height	High (or Low)
Pattern selector	Raster
Engine revolutions	Curb idle speed

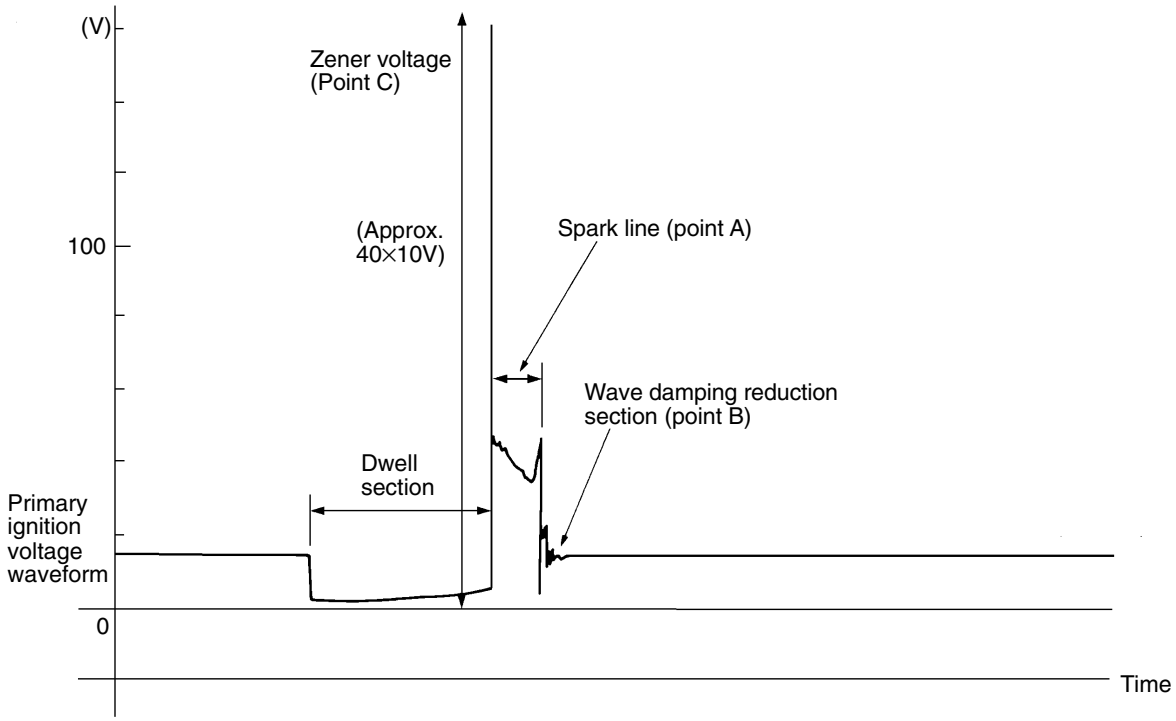

Observation Conditions (The only change from above condition is the pattern selector.)

Pattern selector	Display

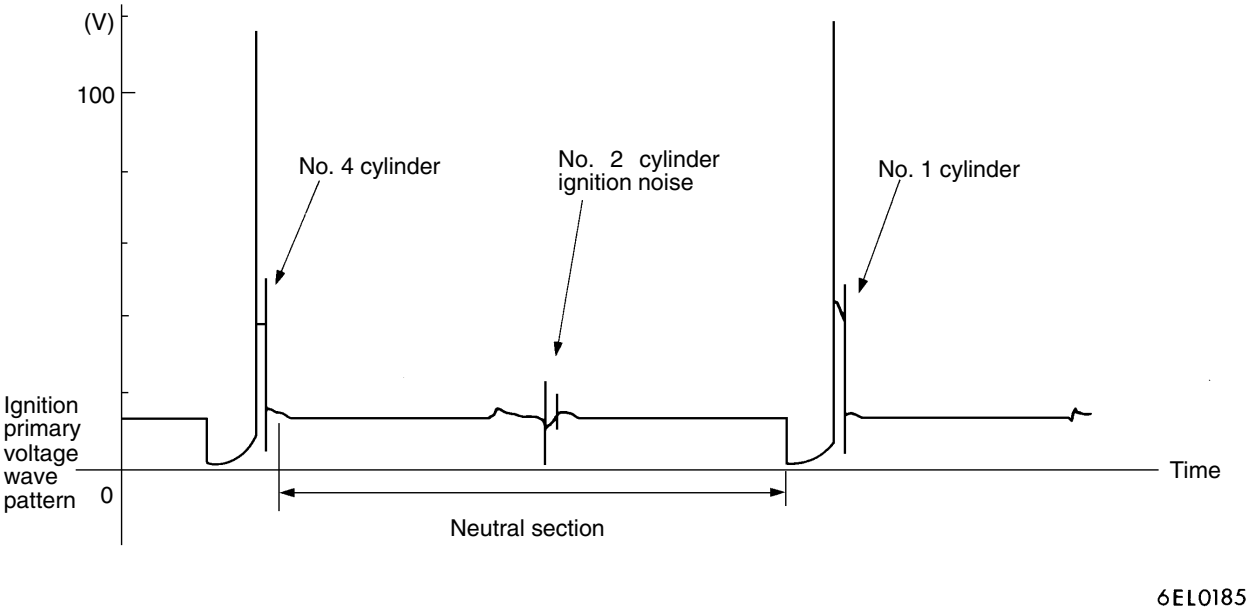

WAVEFORM OBSERVATION POINTS

Point A: The height, length and slope of the spark line (refer to abnormal waveform examples 1, 2, 3 and 4) show the following trends.

Spark line		Plug gap	Condition of electrode	Compression force	Concentration of air mixture	Ignition timing	High tension cable
Length	Long	Small	Normal	Low	Rich	Advanced	Leak
	Short	Large	Large wear	High	Lean	Retarded	High resistance
Height	High	Large	Large wear	High	Lean	Retarded	High resistance
	Low	Small	Normal	Low	Rich	Advanced	Leak
Slope		Large	Plug is fouled	–	–	–	–

Point B: Number of vibrations in reduction vibration section (Refer to abnormal waveform example 5)

Number of vibrations	Coil, condenser
3 or higher	Except above
Normal	Abnormal

Point C: Height of Zener voltage

Height of Zener voltage	Probable cause
High	Problem in Zener diode
Low	Abnormal resistance in primary coil circuit

ABNORMAL WAVEFORMS EXAMPLES

Abnormal waveform	Wave characteristics	Cause of problem
Example 1 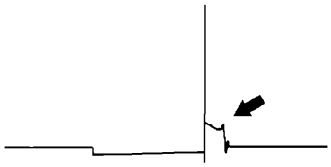 01P0210	Spark line is high and short.	Spark plug gap is too large.
Example 2 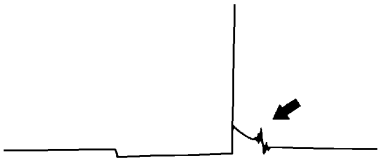 01P0211	Spark line is low, long, and sloping. Also, the second half of the spark line is distorted. This could be a result of misfiring.	Spark plug gap is too small.
Example 3 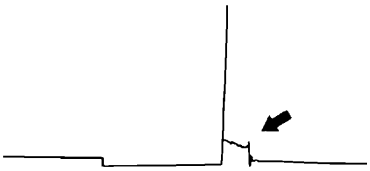 01P0212	Spark line is low, long, and sloping. However, there is almost no spark line distortion.	Spark plug gap is fouled.
Example 4 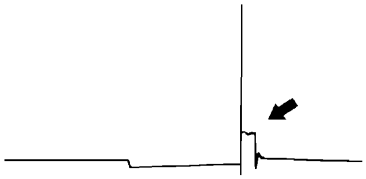 01P0213	Spark line is high and short.	Spark plug cable is not properly connected, creating more than one spark from the plug.
Example 5 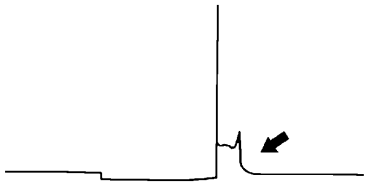 01P0214	No waves in wave damping section	Layer short in ignition coil.

IGNITION COIL AND POWER TRANSISTOR <4G6>

REMOVAL AND INSTALLATION

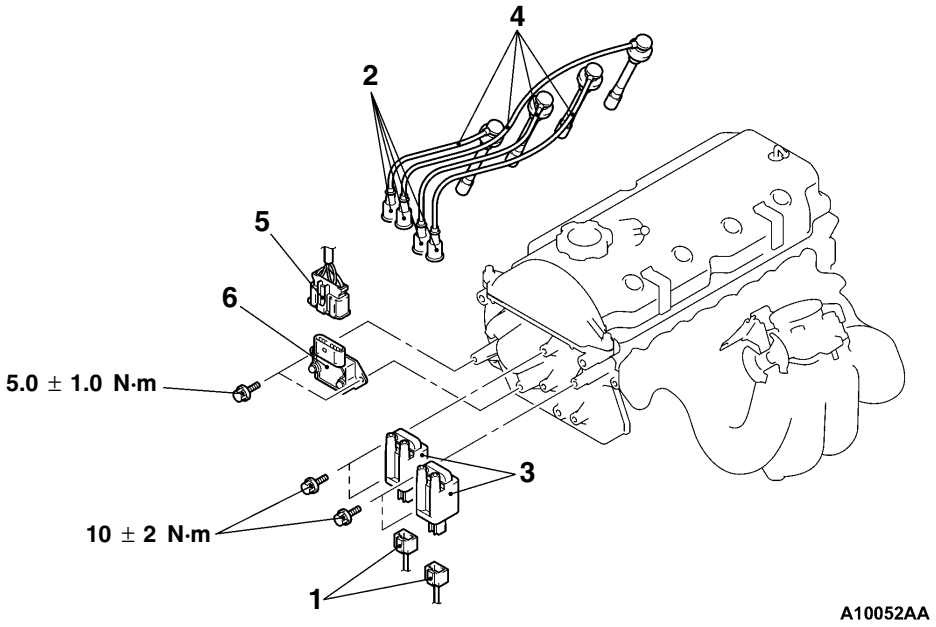

Ignition coil removal steps

1. Ignition coil connector connection
2. Spark plug cable connection
3. Ignition coil
- Resonance tank
4. Spark plug cable

Power transistor removal steps

5. Power transistor connector connection
6. Power transistor

CRANK ANGLE SENSOR

REMOVAL AND INSTALLATION

Pre-removal and Post-installation Operation
- Timing Belt Removal and Installation <4G6> (Refer to GROUP 11A.)
- Timing Belt Cover Removal and Installation <4D56-Step III> (Refer to GROUP 11B.)

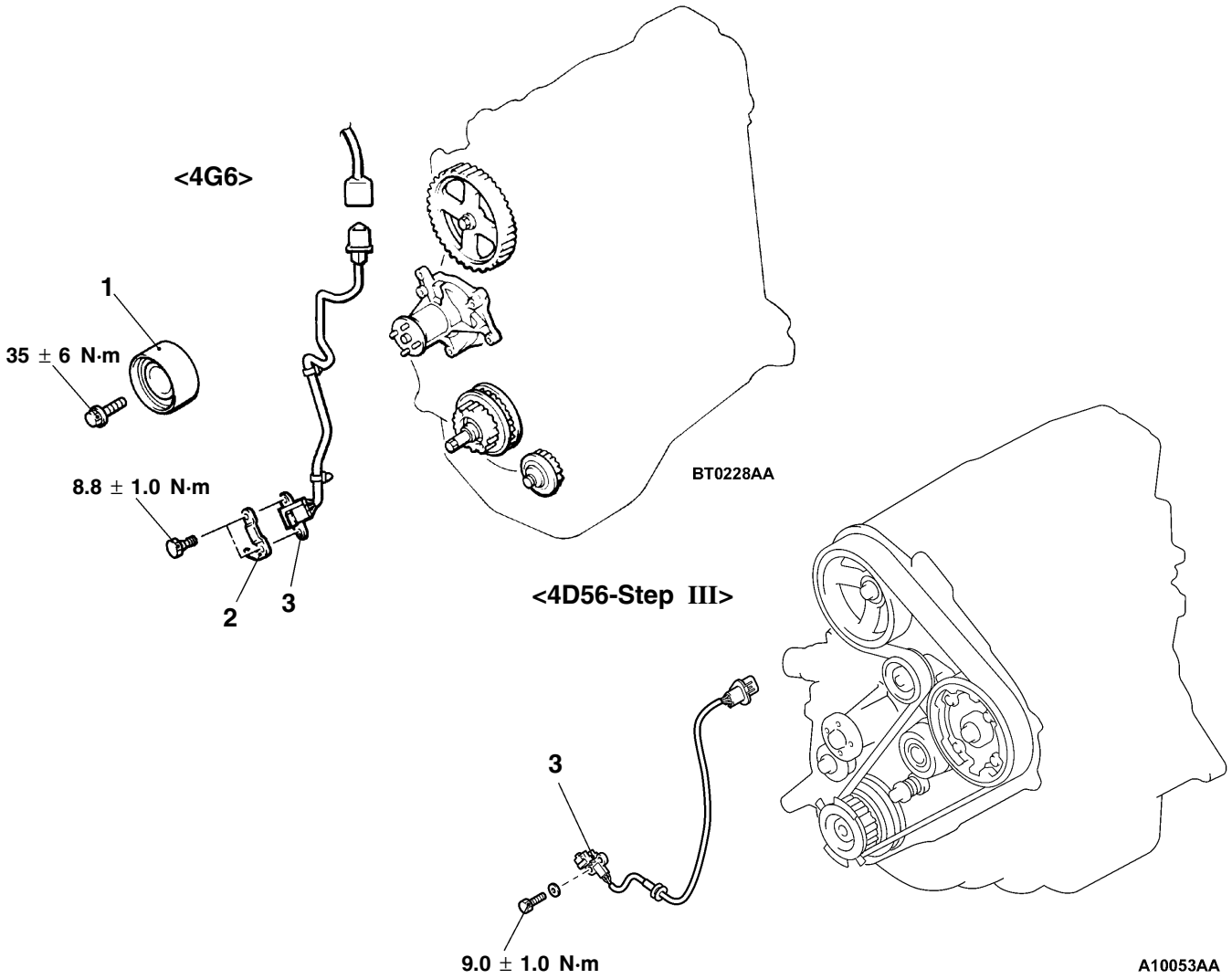

Removal steps

1. Idler pulley <4G6>
2. Timing indicator bracket <4G6>
3. Crank angle sensor

CAMSHAFT POSITION SENSOR <4G6>

REMOVAL AND INSTALLATION

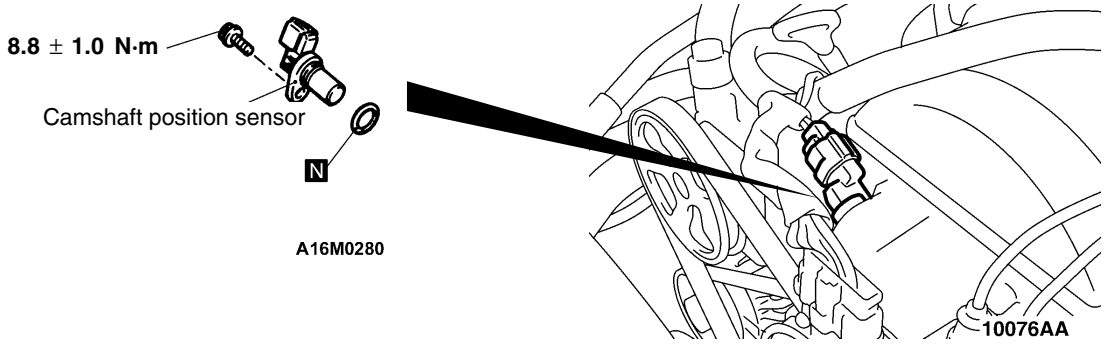

GLOW SYSTEM

GENERAL

OUTLINE OF CHANGE

Due to the introduction of the electronic-controlled injection system, the engine-ECU controls the glow system. As for the ECU terminal voltage measurement, refer to GROUP 13I – Troubleshooting.

NOTES

ENGINE AND EMISSION CONTROL

Click on the applicable bookmark to selected the required model year

ENGINE AND EMISSION CONTROL

CONTENTS

17109000094

ENGINE CONTROL SYSTEM 3

GENERAL INFORMATION 3

SERVICE SPECIFICATIONS 3

SEALANT 3

ON-VEHICLE SERVICE 3

Accelerator Cable Check and Adjustment ... 3

ACCELERATOR CABLE AND PEDAL 4

EMISSION CONTROL SYSTEM <MPI> 6

GENERAL INFORMATION 6

Emission Control Device Reference Table ... 6

SERVICE SPECIFICATIONS 7

SPECIAL TOOL 7

VACUUM HOSE 7

Vacuum Hose Piping Diagram 7

Vacuum Circuit Diagram 8

Vacuum Hose Check 9

Vacuum Hose Installation 9

CRANKCASE EMISSION CONTROL SYSTEM 9

General Information 9

System Diagram 9

Component Location 10

Positive Crankcase Ventilation System Check 10

PCV Valve Check 10

EVAPORATIVE EMISSION CONTROL SYSTEM 11

General Information 11

System Diagram 11

Component Location 11

Purge Control System Check 12

Purge Port Vacuum Check 12

Purge Control Solenoid Valve Check 13

CONTINUED ON NEXT PAGE

EXHAUST GAS RECIRCULATION (EGR) SYSTEM 14
General Information 14
Operation 14
System Diagram 14
Component Location 14
Exhaust Gas Recirculation (EGR) Control System Check 15
EGR Valve Check 15
EGR Port Vacuum Check 16
EGR Control Solenoid Valve Check 16
CATALYTIC CONVERTER 17
General Information 17
CANISTER AND TWO-WAY VALVE 18

ENGINE CONTROL SYSTEM

17100010027

GENERAL INFORMATION

A Cable-type accelerator mechanism and a suspended-type pedal have been adopted.

SERVICE SPECIFICATIONS

17100020013

Items	Standard value
Accelerator cable play mm	1 – 2
Engine idle speed r/min	750 ± 100

SEALANT

17300050018

Items	Specified sealant	Remarks
Accelerator arm bracket mounting bolt	3M Nut Locking Part No. 4171 or equivalent	Drying sealant

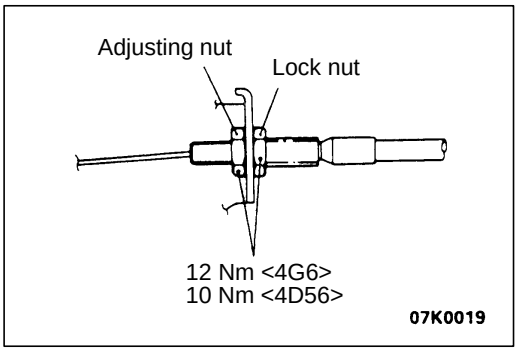

ON-VEHICLE SERVICE

17100090168

ACCELERATOR CABLE CHECK AND ADJUSTMENT

1. Turn A/C and lamps OFF.
   Inspect and adjust at no load.
2. Warm engine until stabilized at idle.
3. Confirm idle speed is at prescribed value.

   Standard value: 750 ± 100 r/min
4. Stop engine (ignition switch OFF).
5. Confirm there are no sharp bends in accelerator cable.
6. Check inner cable for correct slack.

   Standard value: 1 – 2 mm
7. If there is too much slack or no slack, adjust play by the following procedures.
   (1) Loosen the lock nut and fully close the throttle lever.
   (2) Tighten the adjusting nut until immediately before the throttle lever starts to move.
   (3) By loosening the adjusting nut one turn, the accelerator cable play will be brought to the standard value.
   (4) Fix the adjusting nut with the lock nut.
   (5) After adjusting, check that the throttle lever is touching the stopper.

ACCELERATOR CABLE AND PEDAL

17100120164

REMOVAL AND INSTALLATION

Post-installation Operation
- Adjusting the Accelerator Cable (Refer to P. 17-3.)

<L.H. drive vehicles>

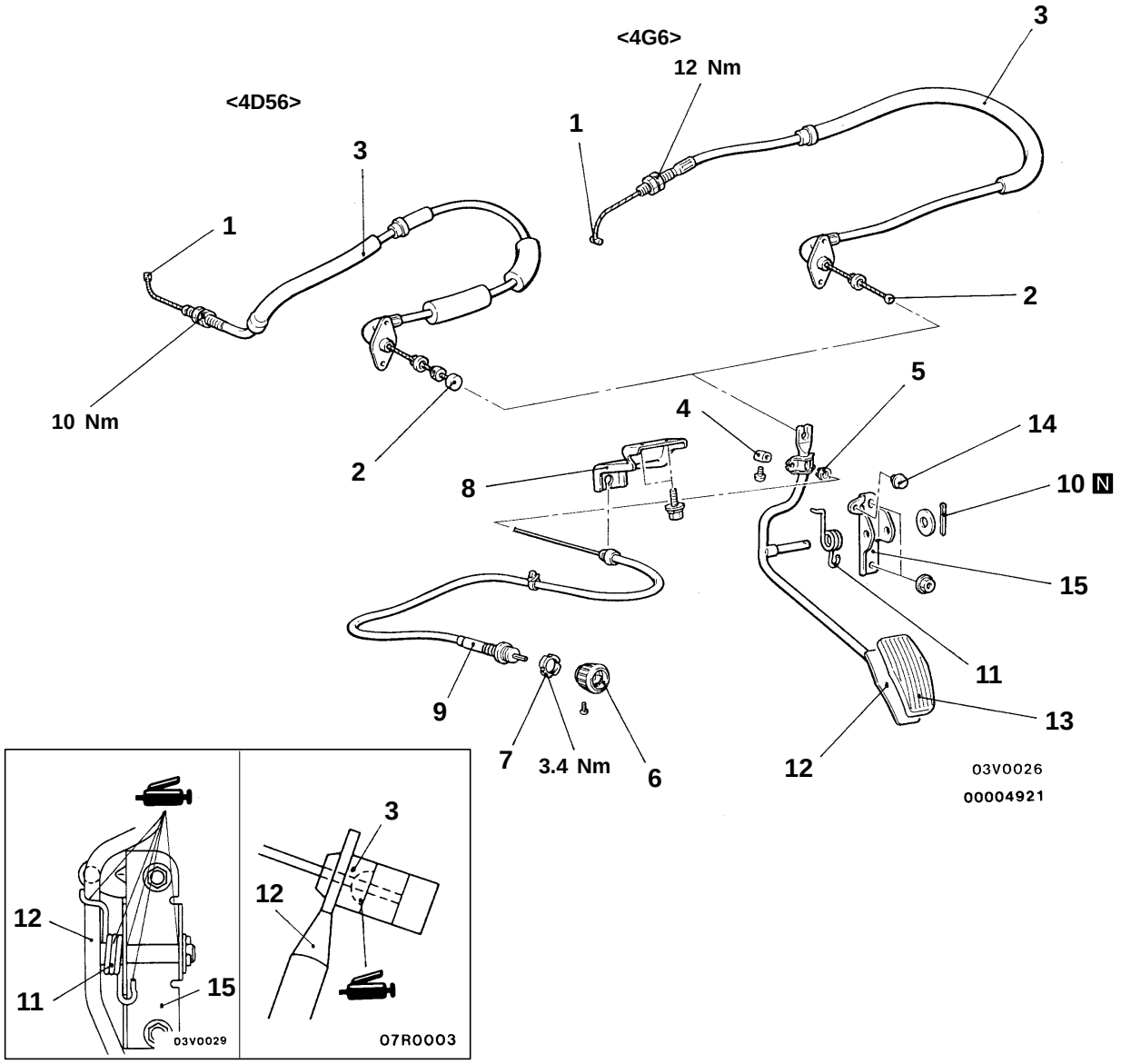

Accelerator cable removal steps

1. Inner cable connection (Injection pump side or throttle body side)
2. Inner cable connection (Accelerator pedal side)
3. Accelerator cable

Throttle control cable removal steps

4. Wire stopper
5. Bush
6. Knob
7. Nut
8. Cable bracket
9. Throttle cable

Accelerator pedal removal steps

2. Inner cable connection (Accelerator pedal side)
4. Wire stopper
10. Split pin
11. Spring
12. Accelerator arm
13. Pedal pad
14. Stopper
15. Bracket

<R.H. drive vehicles>

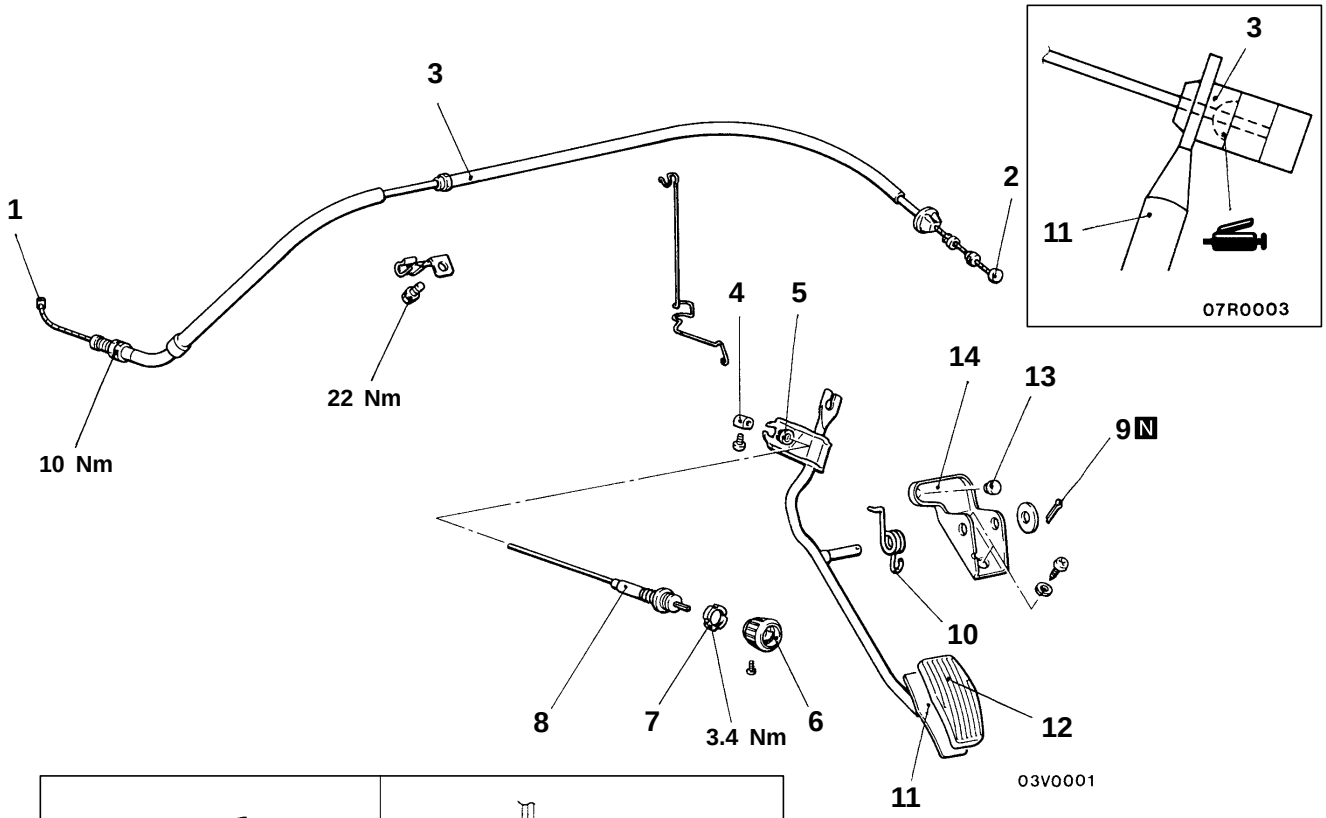

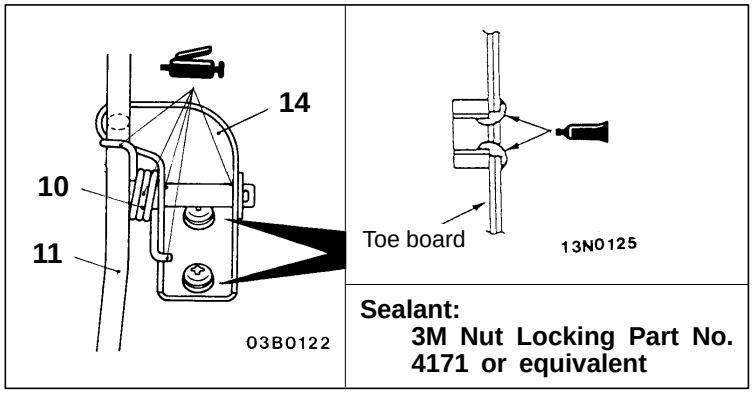

00004922

Accelerator cable removal steps

1. Inner cable connection (Injection pump side)
2. Inner cable connection (Accelerator pedal side)
3. Accelerator cable

Throttle control cable removal steps

4. Wire stopper
5. Bush
6. Knob
7. Nut
8. Throttle control cable

Accelerator pedal removal steps

2. Inner cable connection (Accelerator pedal side)
4. Wire stopper
9. Split pin
10. Spring
11. Accelerator arm
12. Pedal pad
13. Stopper
14. Bracket

EMISSION CONTROL SYSTEM <MPI>

17300010184

GENERAL INFORMATION

The emission control system consists of the following subsystems:
- Crankcase emission control system
- Evaporative emission control system
- Exhaust emission control system

Items	Name	Specification
Crankcase emission control system	Positive crankcase ventilation (PCV) valve	Variable flow type (Purpose: HC reduction)
Evaporative emission control system	Canister Purge control solenoid valve	Equipped ON/OFF type solenoid valve (Purpose: HC reduction)
Exhaust emission control system	Air-fuel ratio control device–MPI system	Oxygen sensor feedback type (Purpose: CO, HC, NOx reduction)
	Exhaust gas recirculation system ● EGR valve ● EGR control solenoid valve	Equipped Single type Duty cycle type solenoid valve (Purpose: NOx reduction)
	Catalytic converter	Monolith type (Purpose: CO, HC, NOx reduction)

EMISSION CONTROL DEVICE REFERENCE TABLE

Related parts	Crankcase emission control system	Evaporative emission control system	Air/fuel ratio control system	Catalytic converter	Exhaust gas recircula-tion system	Reference page
PCV valve	×					17-
Purge control solenoid valve		×				17-
MPI system component		×	×			GROUP 13A
Catalytic converter				×		17-
EGR valve					×	17-
EGR control solenoid valve					×	17-

SERVICE SPECIFICATIONS

17300030173

Items	Standard value
Purge control solenoid valve coil resistance (at 20°C) Ω	36–44
EGR control solenoid valve coil resistance (at 20°C) Ω	36–44

SPECIAL TOOL

17100060022

Tool	Number	Name	Use
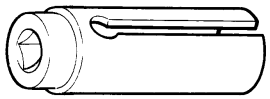	MD998770	Oxygen sensor wrench	Removal/Installation of oxygen sensor

VACUUM HOSE

17300090201

VACUUM HOSE PIPING DIAGRAM

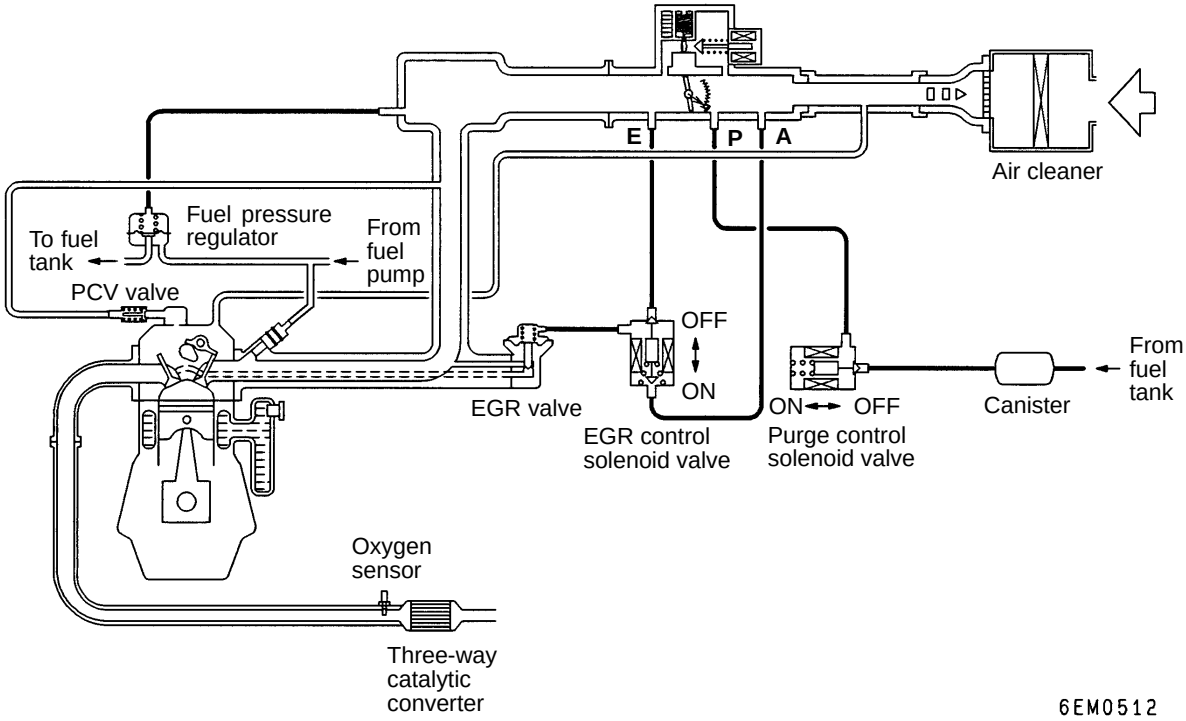

VACUUM CIRCUIT DIAGRAM

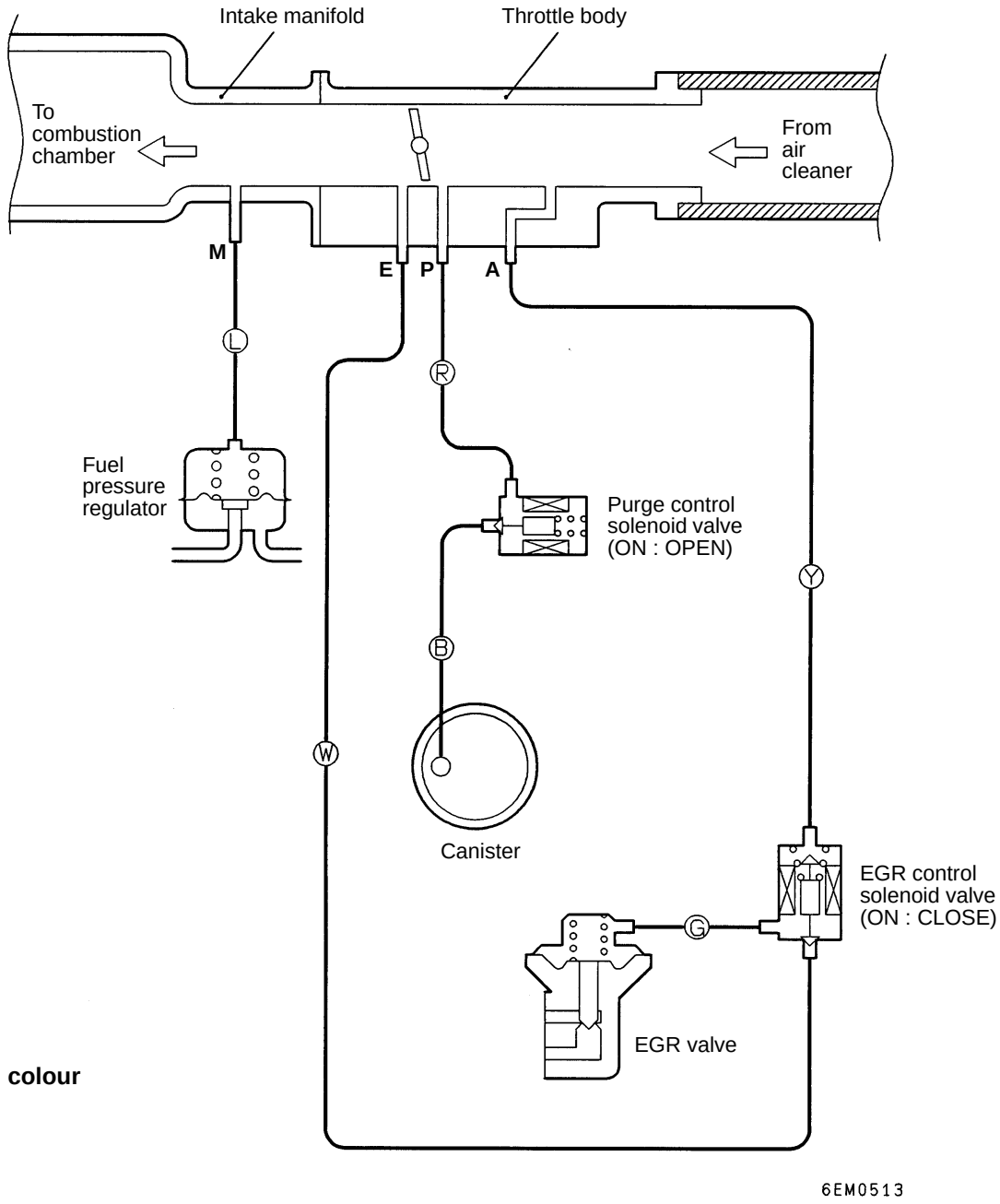

Vacuum hose colour
B: Black
G: Green
L: Light blue
R: Red
Y: Yellow

VACUUM HOSE CHECK

1. Using the piping diagram as a guide, check to be sure that the vacuum hoses are correctly connected.
2. Check the connection condition of the vacuum hoses, (removed, loose, etc.) and check to be sure that there are no bends or damage.

VACUUM HOSE INSTALLATION

1. When connecting the vacuum hoses, they should be securely inserted onto the nipples.
2. Connect the hoses correctly, using the vacuum hose piping diagram as a guide.

CRANKCASE EMISSION CONTROL SYSTEM

17300500162

GENERAL INFORMATION

The crankcase emission control system prevents blow-by gases from escaping inside the crankcase into the atmosphere.
Fresh air is sent from the air cleaner into the crankcase through the breather hose. The air becomes mixed with the blow-by gases inside the crankcase.
The blow-by gas inside the crankcase is drawn into the intake manifold through the positive crankcase ventilation valve.
The positive crankcase ventilation valve lifts the plunger according to the intake manifold vacuum so as to regulate the flow of blow-by gas properly. In other words, the blow-by gas flow is regulated during low load engine operation to maintain engine stability, while the flow is increased during high load operation to improve the ventilation performance.

SYSTEM DIAGRAM

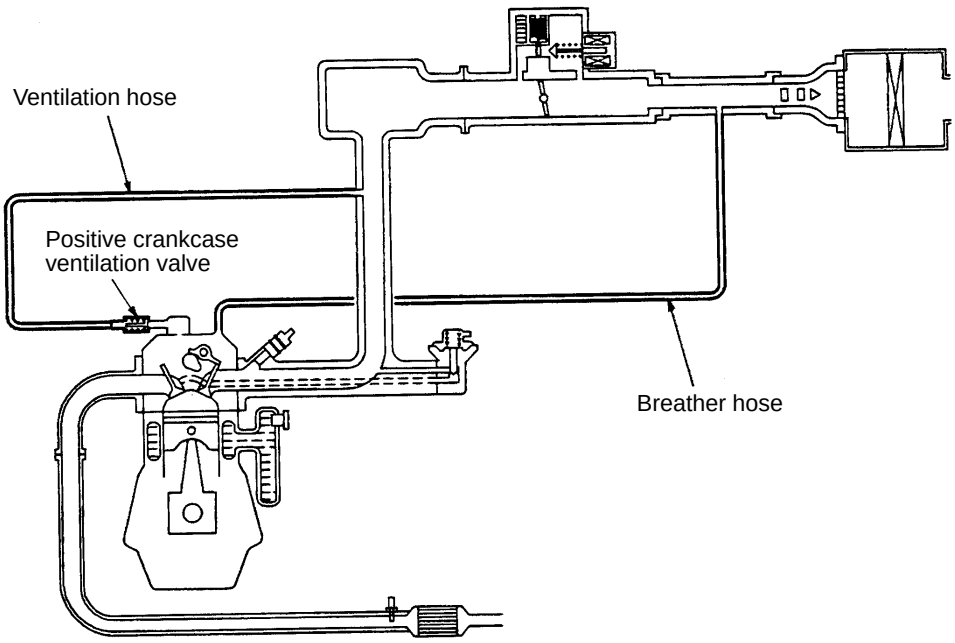

6EM0514

COMPONENT LOCATION

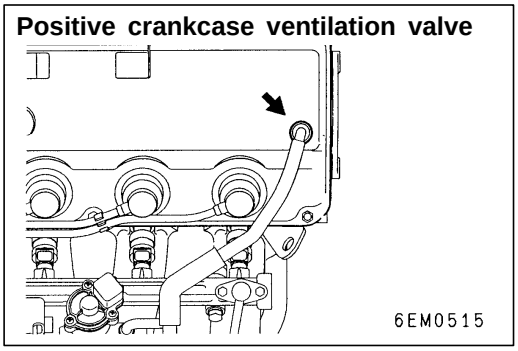

POSITIVE CRANKCASE VENTILATION SYSTEM CHECK

17300110044

1. Remove the ventilation hose from the positive crankcase ventilation valve.
2. Remove the positive crankcase ventilation valve from the rocker cover.
3. Reinstall the positive crankcase ventilation valve at the ventilation hose.
4. Start the engine and run at idle.

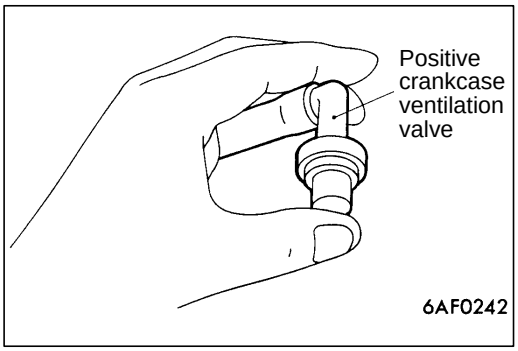

5. Place a finger at the opening of the positive crankcase ventilation valve and check that vacuum of the intake manifold is felt.

   NOTE
   At this moment, the plunger in the positive crankcase ventilation valve moves back and forth.

6. If vacuum is not felt, clean the positive crankcase ventilation valve or replace it.

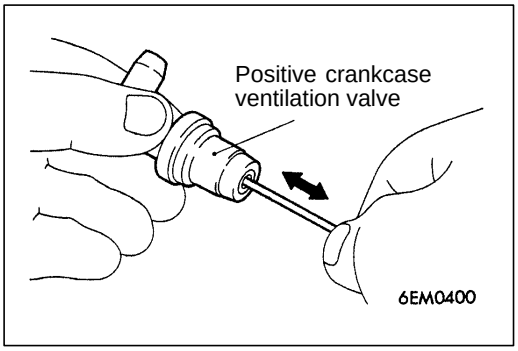

PCV VALVE CHECK

17300120047

1. Insert a thin rod into the positive crankcase ventilation valve from the side shown in the illustration (rocker cover installation side), and move the rod back and forth to check that the plunger moves.
2. If the plunger does not move, there is a clogging in the positive crankcase ventilation valve. In this case, clean or replace the valve.

EVAPORATIVE EMISSION CONTROL SYSTEM

17300510240

GENERAL INFORMATION

The evaporative emission control system prevents fuel vapours generated in the fuel tank from escaping into the atmosphere.
Fuel vapours from the fuel tank flow through the fuel tank pressure control valve and vapour pipe/hose to be stored temporarily in the canister.
When driving the vehicle, fuel vapours stored in the canister flow through the purge solenoid and purge port and go into the intake manifold to be sent to the combustion chamber.
When the engine coolant temperature is low or when the intake air quantity is small (when the engine is at idle, for example), the engine control unit turns the purge solenoid off to shut off the fuel vapour flow to the intake manifold.
This does not only insure the driveability when the engine is cold or running under low load but also stabilize the emission level.

SYSTEM DIAGRAM

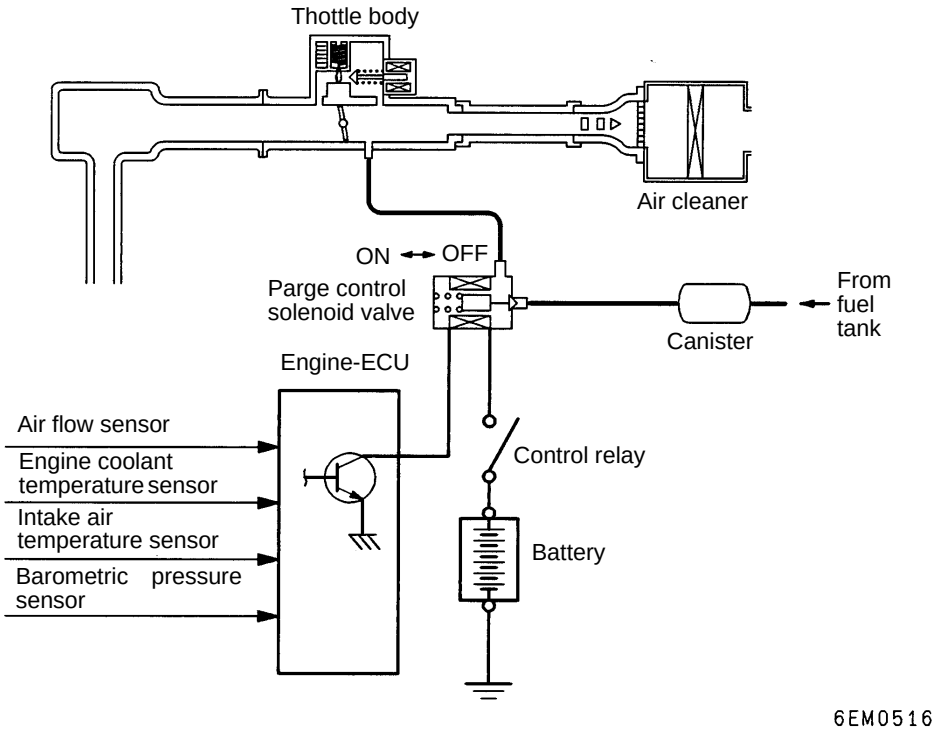

COMPONENT LOCATION

Purge control solenoid valve

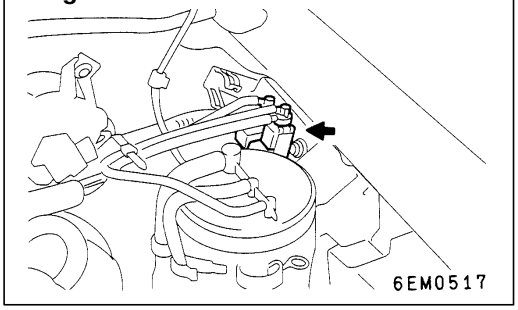

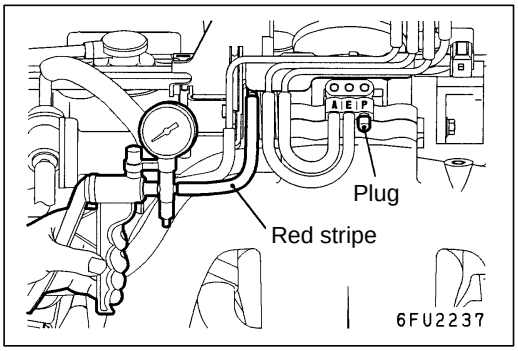

PURGE CONTROL SYSTEM CHECK 17300140241

1. Disconnect the vacuum hose (red stripe) from the throttle body and connect it to a hand vacuum pump.
2. Plug the nipple from which the vacuum hose was removed.
3. When the engine is cold or hot, apply a vacuum while the engine is idling, and check the condition of the engine and the vacuum.

When engine is cold
(Engine coolant temperature: 40°C or less)

Vacuum	Engine condition	Normal condition
53 kPa	3,000 r/min	Vacuum is maintained

When engine is hot
(Engine coolant temperature: 80°C or higher)

Vacuum	Engine condition	Normal condition
53 kPa	At idle	Vacuum is maintained
	3,000 r/min	Vacuum will leak for approximately 3 minutes after the engine is started. After 3 minutes have passed, the vacuum will be maintained momentarily, after which it will again leak.*

NOTE
*: The vacuum will leak continuously if the atmospheric pressure is approximately 77 kPa or less, or the temperature of the intake air is approximately 50°C or higher.

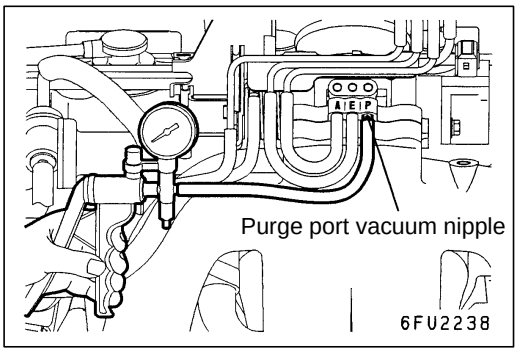

PURGE PORT VACUUM CHECK 17300150183

1. Disconnect the vacuum hose (red stripe) from the throttle body purge vacuum nipple and connect a hand vacuum pump to the nipple.

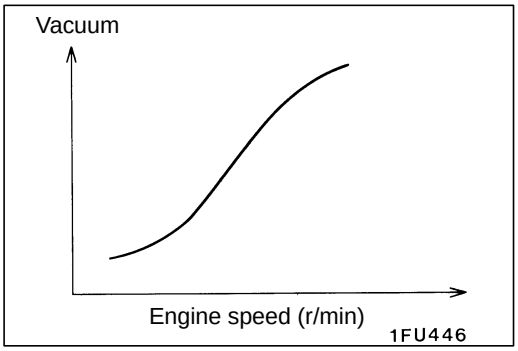

2. Start the engine and check that, after raising the engine speed by racing the engine, purge vacuum raises according to engine speed.

   NOTE
   If there is a problem with the change in vacuum, the throttle body purge port may be clogged and require cleaning.

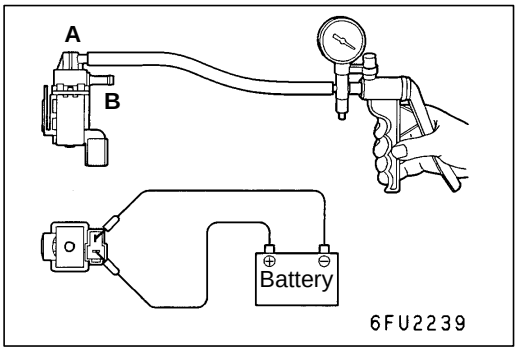

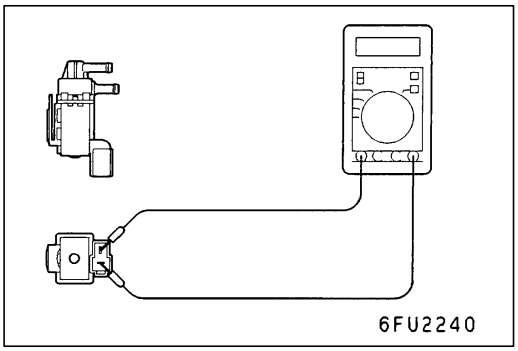

PURGE CONTROL SOLENOID VALVE CHECK

17300170172

NOTE
When disconnecting the vacuum hose, always make a mark so that it can be reconnected at original position.

1. Disconnect the vacuum hose (black stripe, red stripe) from the solenoid valve.
2. Disconnect the harness connector.
3. Connect a hand vacuum pump to nipple (A) of the solenoid valve (refer to the illustration at left).
4. Check airtightness by applying a vacuum with voltage applied directly from the battery to the purge control solenoid valve and without applying voltage.

Battery voltage	Normal condition
Applied	Vacuum leaks
Not applied	Vacuum maintained

5. Measure the resistance between the terminals of the solenoid valve.

   Standard value: 36 – 44 Ω (at 20°C)

EXHAUST GAS RECIRCULATION (EGR) SYSTEM

17300520182

GENERAL INFORMATION

The exhaust gas recirculation (EGR) system lowers the nitrogen oxide (NOx) emission level. When the air/fuel mixture combustion temperature is high, a large quantity of nitrogen oxides (NOx) is generated in the combustion chamber. Therefore, this system recirculates part of emission gas from the exhaust port of the cylinder head to the combustion chamber through the intake manifold to decrease the air/fuel mixture combustion temperature, resulting in reduction of NOx.
The EGR flow rate is controlled by the EGR valve so as not to decrease the driveability.

OPERATION

The EGR valve is being closed and does not recirculate exhaust gases under one of the following conditions. Otherwise, the EGR valve is opened and recirculates exhaust gases.

- The engine coolant temperature is low.
- The engine is at idle.
- The throttle valve is widely opened.

SYSTEM DIAGRAM

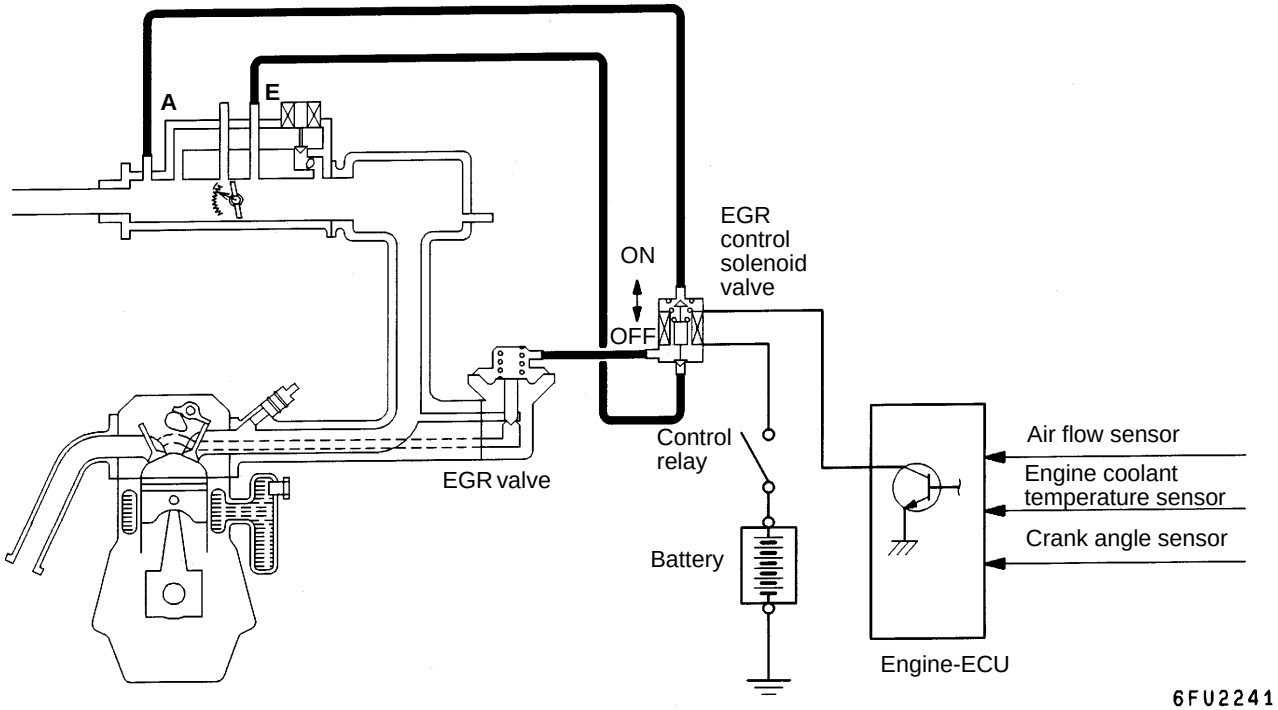

COMPONENT LOCATION

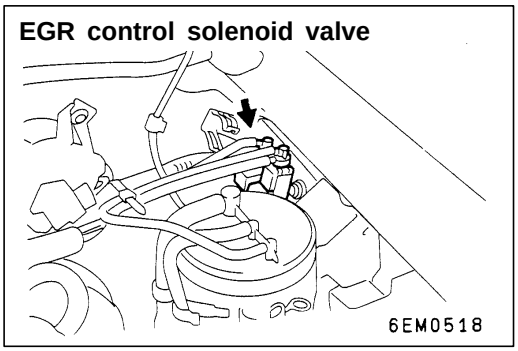

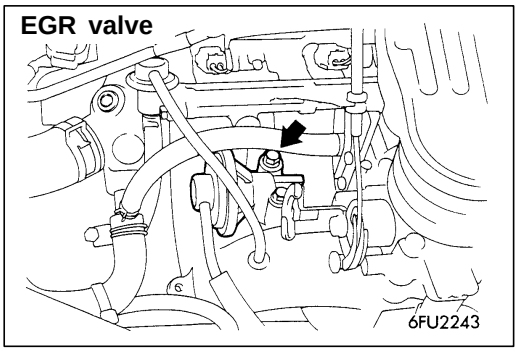

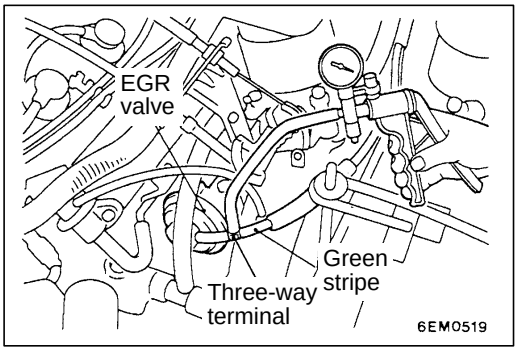

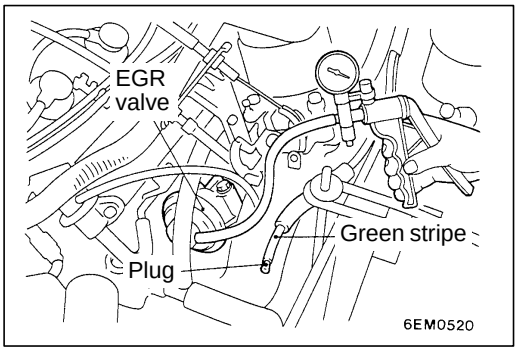

EXHAUST GAS RECIRCULATION (EGR) CONTROL SYSTEM CHECK

17300260206

1. Disconnect the vacuum hose (green stripe) from the EGR valve, and then connect a hand vacuum pump via the three-way terminal.
2. When the engine is hot or cold, check the condition of vacuum by racing the engine.

When engine is cold
(Engine coolant temperature: 20°C or less)

Throttle valve	Normal vacuum condition
Open quickly	No vacuum will generate (the same as barometric pressure.)

When engine is hot
(Engine coolant temperature: 80°C or higher)

Throttle valve	Normal vacuum condition
Open quickly	It will momentarily rise over 13 kPa

3. Disconnect the three-way terminal.
4. Connect the hand vacuum pump to the EGR valve.
5. Check whether the engine stalls or the idling is unstable when a vacuum of 30 kPa or higher is applied during idling.

EGR VALVE CHECK

17300280042

1. Remove the EGR valve and inspect for sticking, carbon deposits, etc. If found, clean with a suitable solvent so that the valve seats correctly.
2. Connect a hand vacuum pump to the EGR valve.
3. Apply 67 kPa of vacuum, and check that the vacuum is maintained.

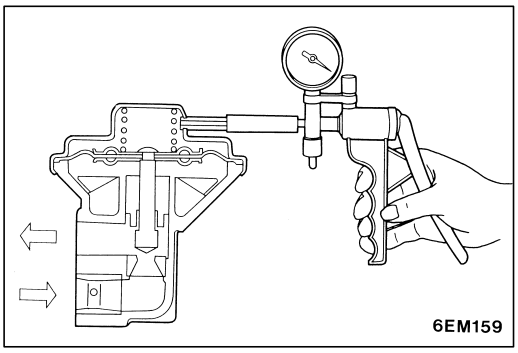

4. Apply a vacuum and check the passage of air by blowing through one side of the EGR passage.

Vacuum	Passage of air
5.3 kPa or less	Air is not blown out
26 kPa or more	Air is blown out

5. Replace the gasket, and tighten to the specified torque.

Specified torque: 22 Nm

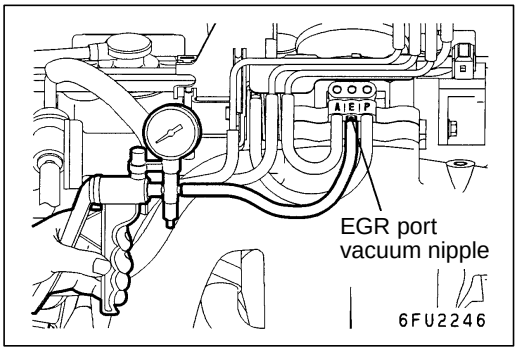

EGR PORT VACUUM CHECK

17300290144

1. Disconnect the vacuum hose (green stripe) from the throttle body EGR vacuum nipple and connect a hand vacuum pump to the nipple.

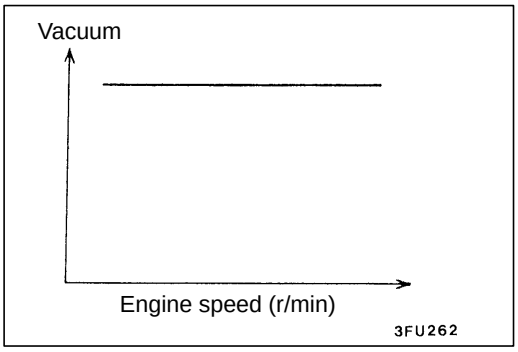

2. Start the engine and check vacuum remains fairly constant after racing the engine.

   NOTE
   If the vacuum fluctuates, the throttle body EGR port may be clogged and need cleaning.

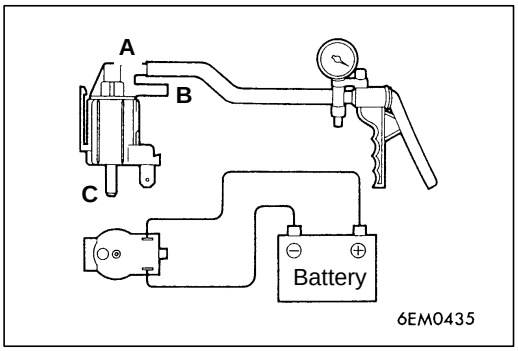

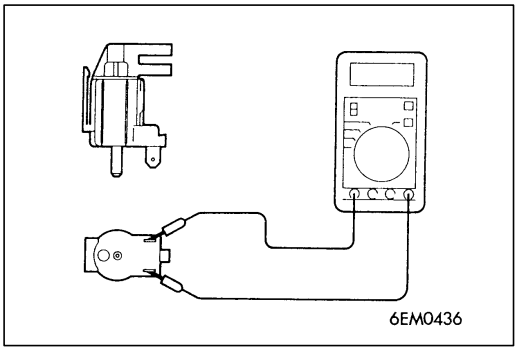

EGR CONTROL SOLENOID VALVE CHECK

17300310161

NOTE
When disconnecting the vacuum hose, always make a mark so that it can be reconnected at original position.

1. Disconnect the vacuum hose (yellow stripe, white stripe, green stripe) from the solenoid valve.
2. Disconnect the harness connector.
3. Connect a hand vacuum pump to the nipple to which the white-striped vacuum hose was connected.
4. Check airtightness by applying a vacuum with voltage applied directly from the battery to the EGR control solenoid valve and without applying voltage.

Battery voltage	B nipple condition	Normal condition
Not applied	Open	Vacuum maintained
Applied	Open	Vacuum leaks
	Closed	Vacuum maintained

5. Measure the resistance between the terminals of the solenoid valve.

   Standard value: 36 – 44Ω (at 20°C)

CATALYTIC CONVERTER

17300530123

GENERAL INFORMATION

The three-way catalytic converter, together with the closed loop air-fuel ration control based on the oxygen sensor signal, oxidizes carbon monoxides (CO) and hydrocarbons (HC) and reduces nitrogen oxides (NOx).

When the mixture is controlled at stoichiometric air-fuel ratio, the three-way catalytic converter provides the highest purification against the three constituents, namely, CO, HC and Nox.

REMOVAL AND INSTALLATION

17300390141

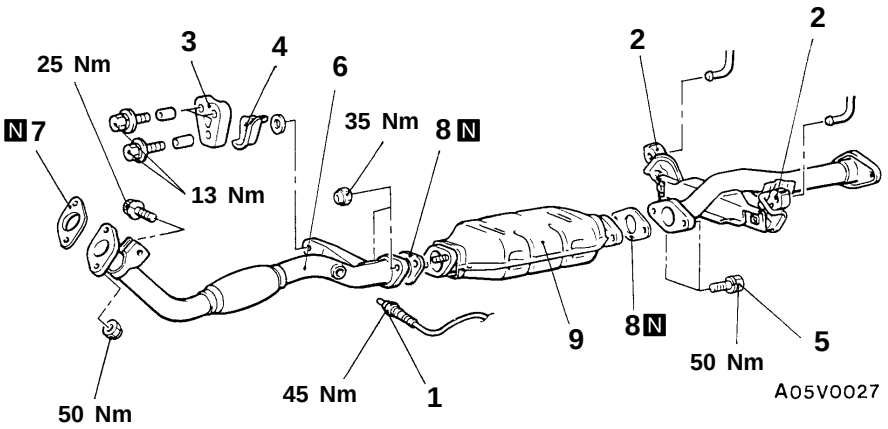

Removal steps

◀A▶ ▶A◀ 1. Oxygen sensor
2. Center exhaust pipe hanger connection
3. Front exhaust pipe hanger
4. Heat protector
5. Catalytic converter attaching bolt
6. Front exhaust pipe
7. Gasket
8. Gasket
9. Catalytic converter

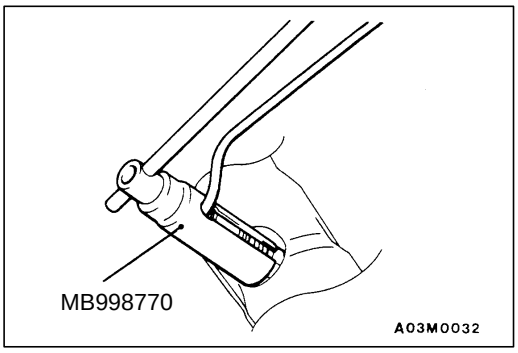

REMOVAL SERVICE POINT

◀A▶ OXYGEN SENSOR REMOVAL

INSTALLATION SERVICE POINT

▶A◀ OXYGEN SENSOR INSTALLATION

INSPECTION

17300400066

Check for damage, cracking or deterioration. Replace if failty.

Caution

1. **Stop the engine immediately if engine misfiring occurs, otherwise an abnormally hot exhaust system will damage the catalytic converter or other underbody parts.**
2. **Correct and repair the ignition or fuel system if there are malfunctions, otherwise engine misfiring may occur which will damage the catalytic converter.**
3. **Observe manufacturer's specifications when doing service work.**

CANISTER AND TWO-WAY VALVE

17300480121

REMOVAL AND INSTALLATION

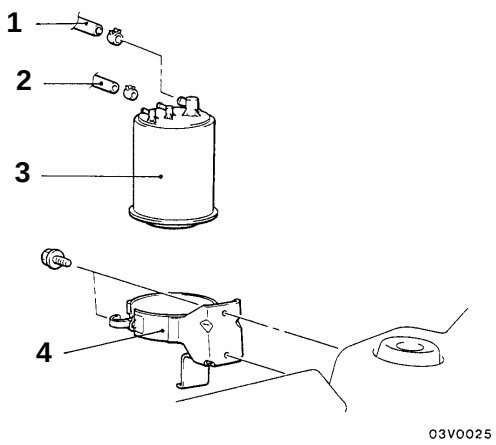

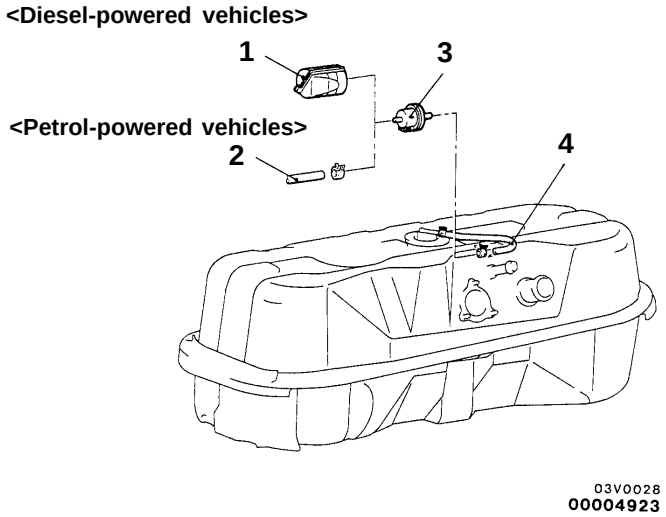

Canister removal steps

1. Breather hose connection
2. Vapour hose connection
3. Canister
4. Canister holder

Two-way valve removal steps

- Rear body side gate stay (L.H.)
1. Breather case
2. Vapour hose connection
3. ▶A◀ Two-way valve
4. Vapour hose

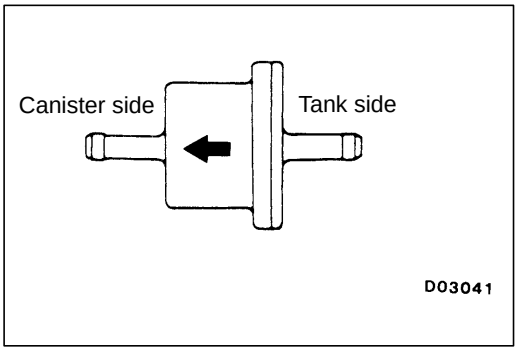

INSTALLATION SERVICE POINT

▶A◀ TWO-WAY VALVE INSTALLATION

Be careful about the installation direction of the two-way valve.

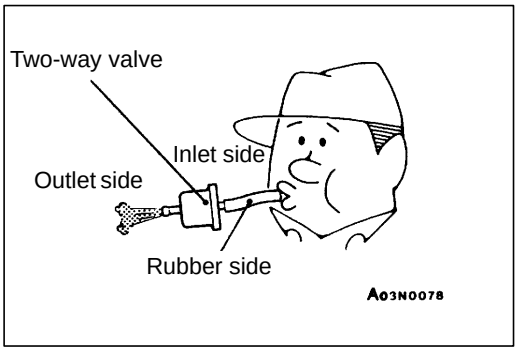

INSPECTION

17300490063

TWO-WAY VALVE SIMPLE CHECK

Attach a clean hose and check the operation of the two-way valve.

Lightly blow from inlet side (fuel tank side.)	Air passes through with a slight feeling of resistance.
Lightly blow from outlet side.	Air passes through.

NOTES

GROUP 17
ENGINE AND EMISSION CONTROL
EMISSION CONTROL SYSTEM <DIESEL>

GENERAL

OUTLINE OF CHANGE(S)

The engine with the exhaust gas recirculation (EGR) system has been newly used. Therefore, service procedure has been added.

GENERAL INFORMATION

The electronically-controlled EGR system and the fuel injection timing control system (load timer) reduce the level of exhaust gases (NOx).

Item	Name	Specification
Exhaust emission control system	Exhaust gas recirculation system • EGR valve • EGR solenoid valve No.1 • EGR solenoid valve No.2	Electronically-controlled EGR system Single type Duty cycle solenoid valve ON-OFF solenoid valve

SERVICE SPECIFICATIONS

Item		Standard value
EGR solenoid valve Nos.1 and 2 resistance (at 20°C) Ω		36 – 44
Lever position sensor output voltage V	Idle position	0.8 – 1.0
	Fully open	3.7 – 5.0
Engine speed sensor resistance kΩ		1.3 – 1.9
Engine coolant temperature sensor resistance kΩ	At 20°C	2.9 – 3.6
	At 80°C	0.26 – 0.35

SEALANT

Item	Specified sealant	Remark
Engine coolant temperature sensor threaded portion	3M Nut Locking Part No. 4171 or equivalent	Drying sealant

SPECIAL TOOL

Tool	Number	Name	Use
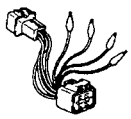	MD998464	Test harness (4P, square)	Inspection of lever position sensor

EXHAUST GAS RECIRCULATION (EGR) SYSTEM

GENERAL INFORMATION

The electronically-controlled EGR system consists of an EGR valve, a vacuum pump, EGR solenoid valves Nos.1 and 2, a glow & EGR control unit and various sensors.
The EGR valve is controlled by the negative pressure inside the valve, which is controlled by EGR solenoid valves Nos.1 and 2.

EGR solenoid valves Nos. 1 and 2 are optimally controlled by the glow & EGR control unit in response to the engine operation conditions, based on data received from each sensor.
In this way, the EGR is controlled to reduce NOx emissions while maintaining good engine performance.

SYSTEM DIAGRAM

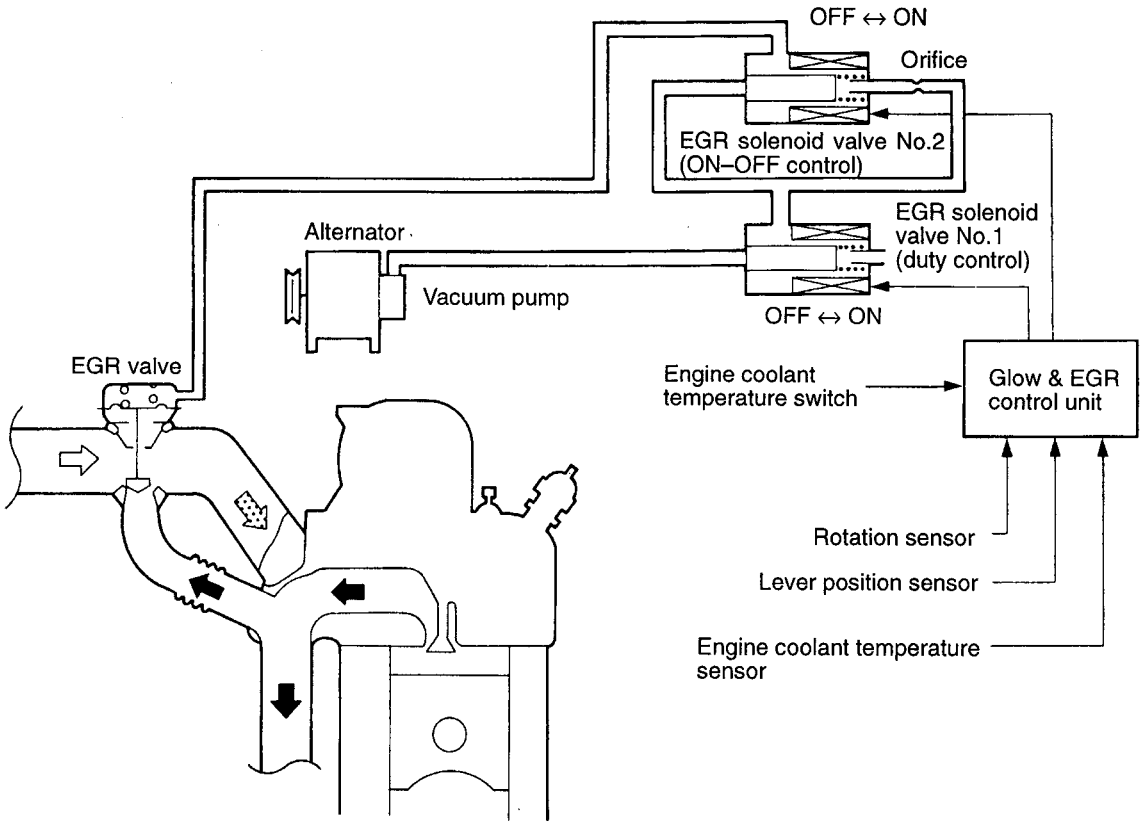

DEM0662

COMPONENT LOCATION

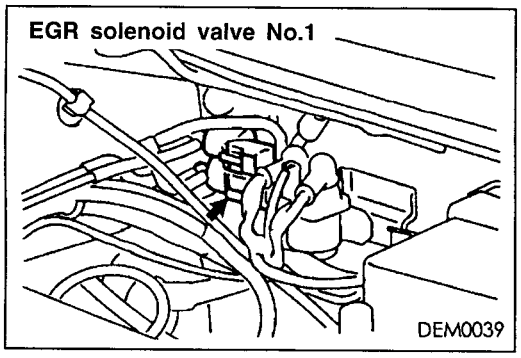

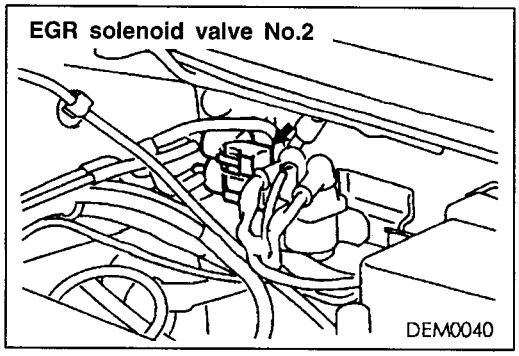

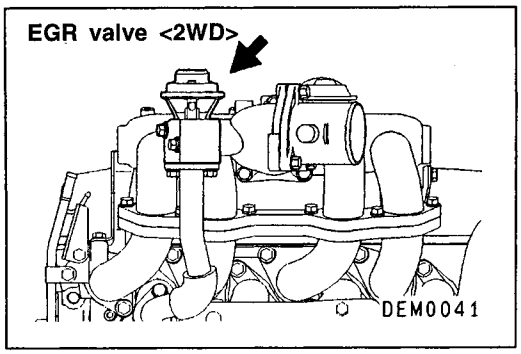

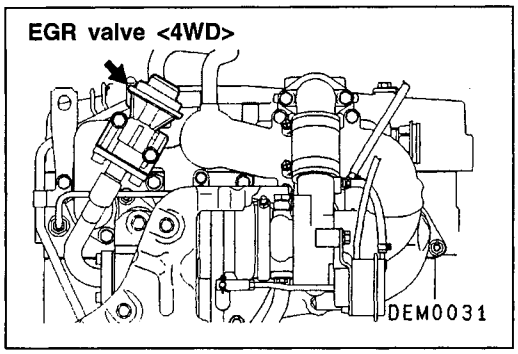

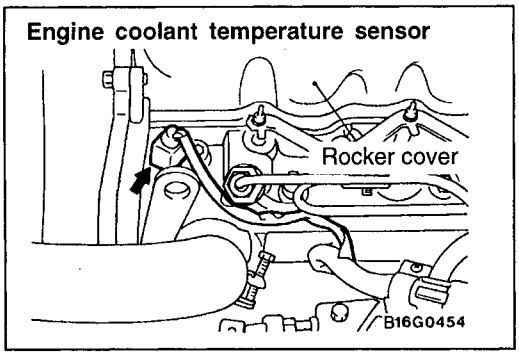

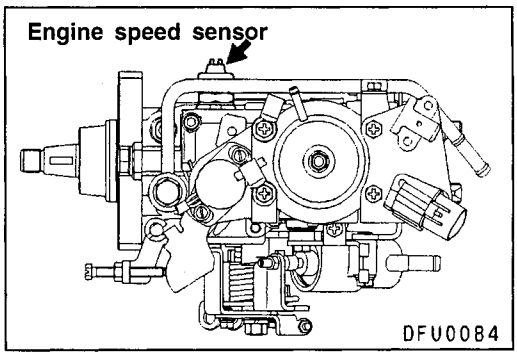

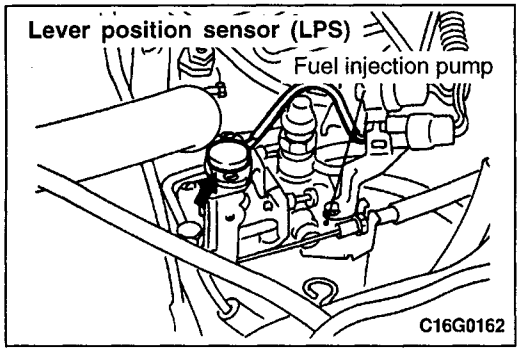

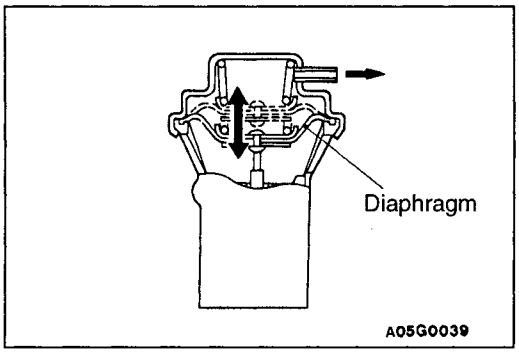

FUNCTION INSPECTION

1. Start the engine and warm it up until the engine coolant temperature reaches 65°C or above.
2. Race the engine by suddenly depressing the accelerator pedal, then check that the EGR valve diaphragm lifts.

EGR SOLENOID VALVE OPERATION INSPECTION

1. Remove EGR solenoid valve Nos. 1 and 2 connectors and vacuum hoses.
2. Attach a vacuum pump to each nipple of the EGR solenoid valve Nos. 1 and 2 connectors and apply negative pressure. Check that the valves are airtight both when voltage is applied to each terminal of the EGR solenoid valve Nos. 1 and 2 and when it is not applied.

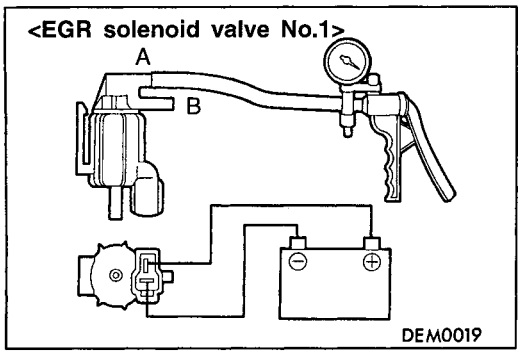

EGR solenoid valve No.1

Battery voltage	Normal condition
When current is flowing	Vacuum leaks (Vacuum is maintained when nipple B is plugged)
When current is not flowing	Vacuum is maintained

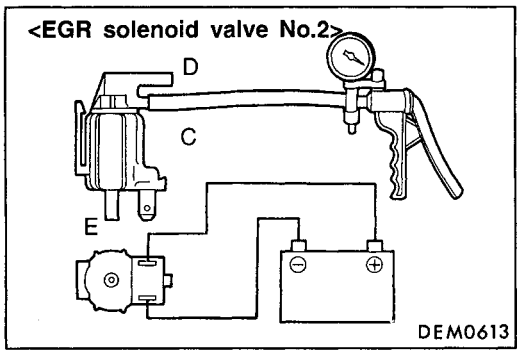

EGR solenoid valve No.2

Battery voltage	Normal condition
When current is flowing	Vacuum leaks (Vacuum is maintained when nipple D is plugged)
When current is not flowing	Vacuum leaks (Vacuum is maintained when nipple E is plugged)

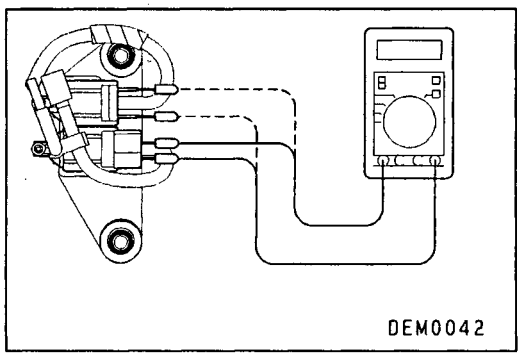

EGR SOLENOID VALVE RESISTANCE INSPECTION

Measure terminal resistance of EGR solenoid valves Nos.1 and 2 with a circuit tester.

Standard value: 36 – 44 Ω (at 20°C)

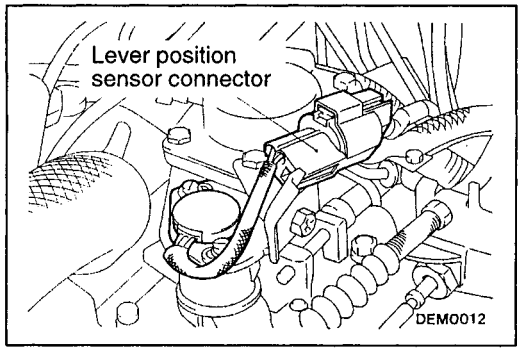

LEVER POSITION SENSOR (LPS) ADJUSTMENT

1. Run the engine until the engine coolant temperature reaches 80°C or above, and then release the fast idle.
2. Loosen the accelerator cable tension sufficiently.
3. Connect the special tool (test harness) to the lever position sensor connector, as shown.

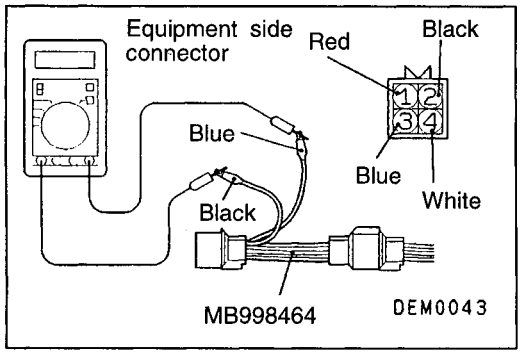

4. Connect a digital-type voltmeter between lever position sensor terminals 1 (red clip) and 3 (blue clip).
5. Turn the ignition switch "ON". (Do not start the engine.)
6. Measure output voltage of the lever position sensor.

Standard value:

Lever condition	Voltage V
Idle position	0.8 – 1.0
Fully open	3.7 – 5.0

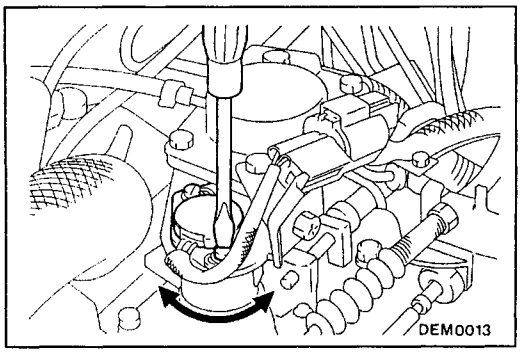

7. If the voltage is outside the standard value, adjust by loosening the lever position sensor mounting screw and turning the lever position sensor body. After adjustment, tighten the screw.

   NOTE
   Voltage increases when the lever position sensor body is turned clockwise.
8. Turn the ignition switch off.
9. Adjust the accelerator cable play.

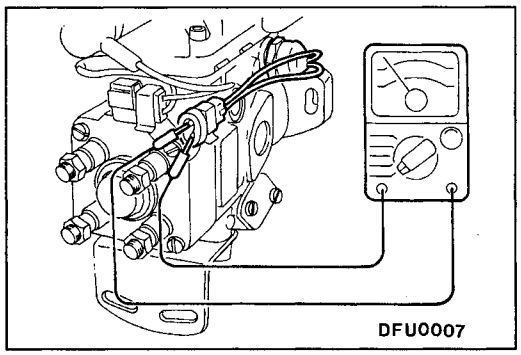

ENGINE SPEED SENSOR INSPECTION

1. Disconnect the engine speed sensor connector.
2. Measure resistance between the engine speed sensor terminals.

   Standard value: 1.3 – 1.9 kΩ

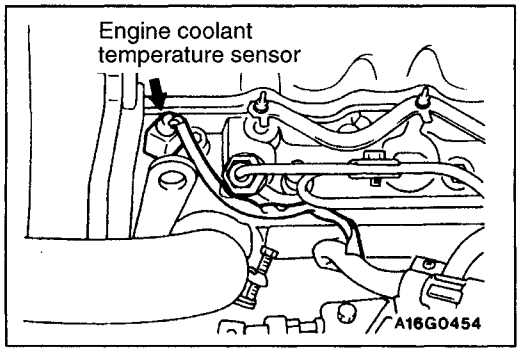

ENGINE COOLANT TEMPERATURE SENSOR INSPECTION

1. Remove the engine coolant temperature sensor.

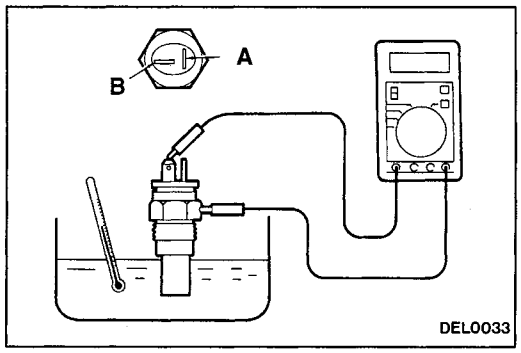

2. Measure resistance between terminal (B) and the body earth when the temperature sensing portion of the engine coolant temperature sensor is immersed in hot water.

Temperature (°C)	Resistance (kΩ)
0	7.7 – 9.5
20	2.9 – 3.6
40	1.3 – 1.7
80	0.26 – 0.35

3. If the resistance deviates from the standard value greatly, replace the sensor.
4. Apply sealant to the threaded portion.

   Specified sealant: 3M NUT Locking Part No. 4171 or equivalent
5. Install the engine coolant temperature sensor and tighten it to the specified torque.

   Sensor tightening torque: 35 Nm
6. Connect the wiring harness connectors.

CHECK AT THE GLOW & EGR CONTROL UNIT

TERMINAL VOLTAGE CHECK CHART

Glow & EGR Control Unit Connector Terminal Arrangement

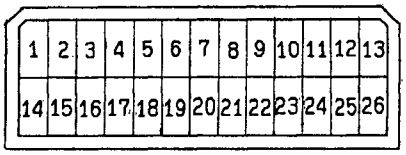

DEM0029

Terminal No.	Check item	Check condition (Engine condition)		Normal condition
3	EGR solenoid valve No.1	Ignition switch: ON		Battery voltage
		While engine is idle after having warmed up, suddenly depress the accelerator pedal.		Momentarily increases
6	Lever position sensor	Ignition switch: ON	Set throttle lever to idle position	0.8 – 1.0 V
			Fully open throttle lever	3.5 – 5.0 V
7	Sensor impressed voltage	Ignition switch: ON		4.5 – 5.5 V
16	EGR solenoid valve No.2	Ignition switch: ON		Battery voltage
		While engine is idle after having warmed up, suddenly depress the accelerator pedal.		Momentarily decreases

HARNESS-SIDE CONNECTOR TERMINAL RESISTANCE AND CONTINUITY CHECK CHART

Glow & EGR Control Unit Harness-Side Connector Terminal Arrangement

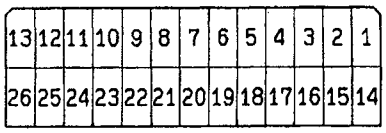

DEM0026

Terminal No.	Check item	Normal condition (Check condition)
3 – 1	EGR solenoid valve No.1	36 – 44 Ω (At 20°C)
5 – Body earth	Engine coolant temperature sensor	7.7 – 9.5 kΩ (Coolant temperature at 0°C)
		2.9 – 3.6 kΩ (Coolant temperature at 20°C)
		1.3 – 1.7 kΩ (Coolant temperature at 40°C)
		0.26 – 0.35 kΩ (Coolant temperature at 80°C)
11 – 24	Engine speed sensor	1.3 – 1.9 kΩ
16 – 1	EGR solenoid valve No.2	36 – 44 Ω (At 20°C)

ENGINE AND EMISSION CONTROL

CONTENTS

ENGINE CONTROL SYSTEM <DIESEL> 2

GENERAL 2

Outline of Change 2

SEALANT <4D56-Step III> 2

ACCELERATOR PEDAL <4D56-Step III> 3

EMISSION CONTROL SYSTEM <MPI> 4

GENERAL 4

Outline of Change 4

SERVICE SPECIFICATIONS 4

EVAPORATIVE EMISSION CONTROL SYSTEM 4

Purge Control Solenoid Valve Check 4

EMISSION CONTROL SYSTEM <DIESEL> 5

GENERAL 5

Outline of Change 5

SERVICE SPECIFICATION 5

EXHAUST GAS RECIRCULATION (EGR) SYSTEM <4D56-Step III> 5

General Information 5

System Diagram 5

Component Location 6

Function Check 6

EGR Solenoid Valve Operation Check 6

EGR Solenoid Valve Resistance Check 7

Accelerator Pedal Position Sensor (APS), Engine Coolant Temperature Sensor, Boost Air Temperature Sensor, Fuel Temperature Sensor, EGR Valve Position Sensor Check 7

Check at the Engine-ECU Terminals 7

EGR VALVE, EGR COOLER <4D56-Step III> 8

ENGINE CONTROL SYSTEM <DIESEL>

GENERAL

OUTLINE OF CHANGE

Since the emission regulation step III compatible 4D56 engine has been added, the following has been changed. Due to this, the service procedures regarding the different description from the previous version have been established.

- Due to the introduction of the electronic-controlled injection pump, the accelerator cable has been abolished, and the accelerator pedal position sensor has been added.

SEALANT <4D56-Step III>

Items	Specified sealant	Remarks
Accelerator arm bracket mounting bolt	3M Nut Locking Part No. 4171 or equivalent	Drying sealant

ACCELERATOR PEDAL <4D56-Step III>

REMOVAL AND INSTALLATION

Post-installation Operation
- Accelerator Pedal Position Sensor Check and Adjustment
  (Refer to GROUP 13I – On-vehicle Service.)

<L.H. drive vehicles>

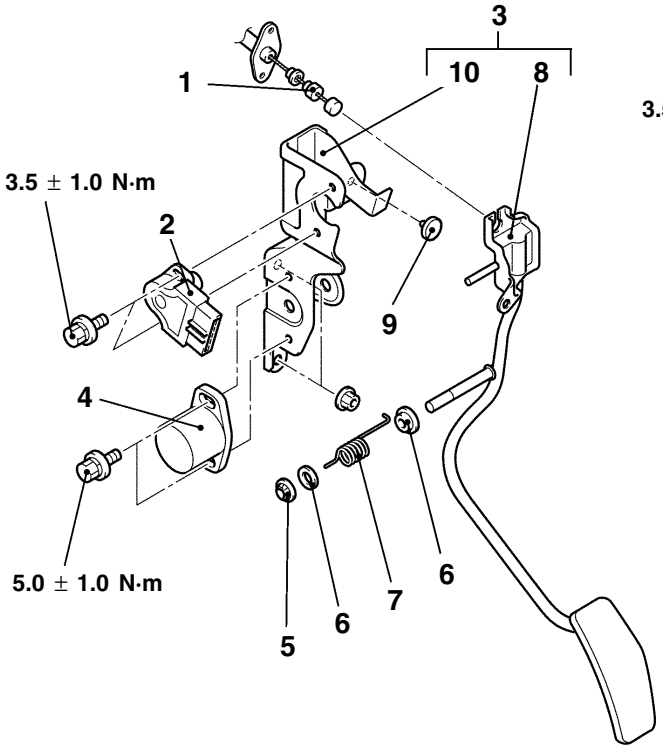

A10030AA

<R.H. drive vehicles>

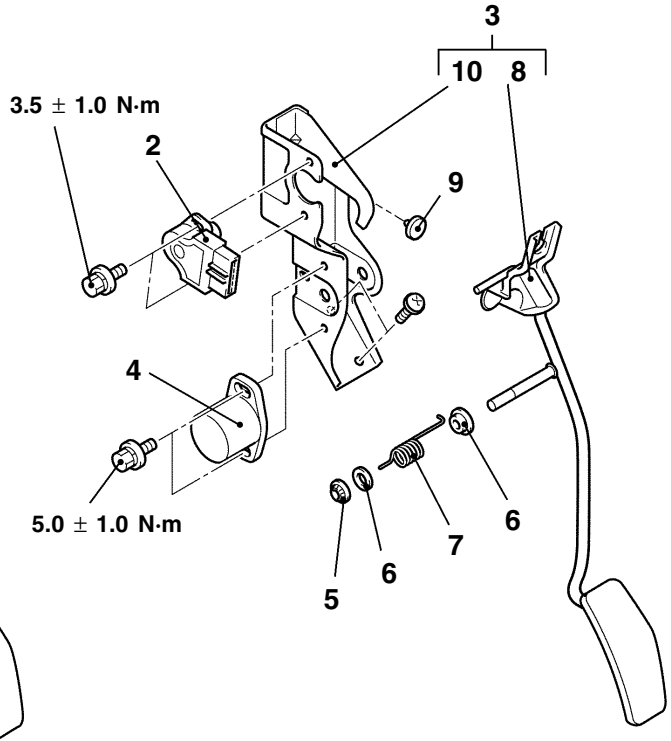

A10031AA

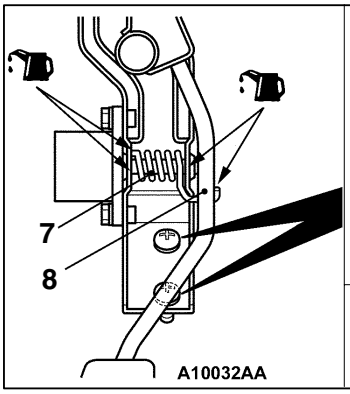

A10032AA

<R.H. drive vehicles>

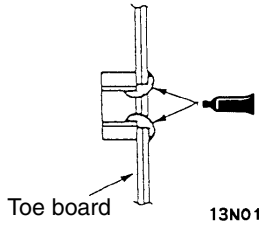

Sealant:
3M Nut Locking Part No. 4171 or equivalent

<A/T>

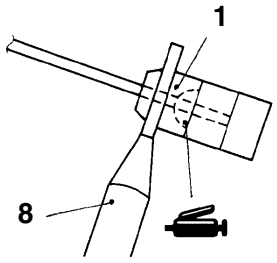

07R0003

Removal steps

1. Accelerator cable connection (for automatic transmission kickdown) <A/T>
2. Accelerator pedal position sensor
3. Accelerator pedal assembly
4. Hysteresis assembly <M/T>
5. Push-on spring nut
6. Bushing
7. Spring
8. Accelerator pedal
9. Pedal stopper
10. Accelerator pedal bracket

EMISSION CONTROL SYSTEM <MPI>

GENERAL

OUTLINE OF CHANGE

A new purge control solenoid valve, which flow rate is enhanced, has been used. Due to this, the service procedures regarding the different description from the previous version have been established.

SERVICE SPECIFICATIONS

Item	Standard value
Purge control solenoid valve coil resistance (at 20°C) Ω	30 – 34

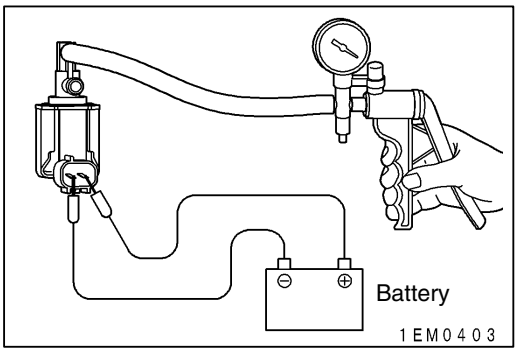

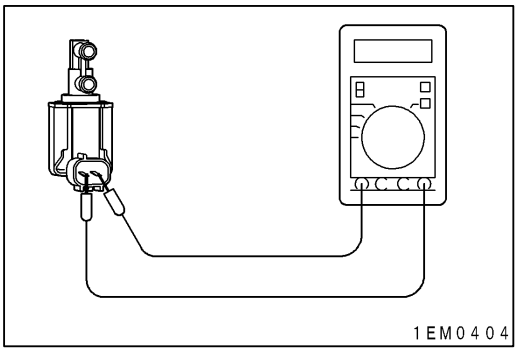

EVAPORATIVE EMISSION CONTROL SYSTEM

PURGE CONTROL SOLENOID VALVE CHECK

NOTE
When disconnecting the vacuum hose, always make a mark so that it can be reconnected at original position.

1. Disconnect the vacuum hoses from the solenoid valve.
2. Disconnect the harness connector.
3. Connect a hand vacuum pump to nipple (A) of the solenoid valve (refer to the illustration at left).
4. Check airtightness by applying a vacuum with voltage applied directly from the battery to the purge control solenoid valve and without applying voltage.

Battery voltage	Normal condition
Applied	Vacuum leaks.
Not applied	Vacuum is maintained.

5. Measure the resistance between the terminals of the solenoid valve.

   Standard value: 30 – 34 kΩ (at 20°C)

EMISSION CONTROL SYSTEM <DIESEL>

GENERAL

OUTLINE OF CHANGE

Since the emission regulation step III compatible 4D56 engine has been added, the following has been changed. Due to this, the service procedures regarding the different description from the previous version have been established.

- The electronic-controlled EGR valve has been adopted, and EGR cooler has been added.

SERVICE SPECIFICATION

Item	Standard value
EGR solenoid valve No.1/No.2 resistance (at 20°C) Ω	36 – 44

EXHAUST GAS RECIRCULATION (EGR) SYSTEM <4D56-Step III>

GENERAL INFORMATION

The electronic-controlled EGR system consists of an EGR valve, vacuum pump, EGR solenoid valves No. 1 and No.2, EGR valve position sensor and engine-ECU and various sensors.
The EGR valve is controlled by the negative pressure inside the valve, which is controlled by EGR solenoid valves No. 1 and No.2.
In order to obtain EGR amount corresponding to each operating condition, the appropriate opening of the EGR valve is calculated based on the input signal from each sensor.
Feedback control of the EGR solenoid valves No. 1 and No. 2 operation is carried out based on the signal from EGR valve position sensor so that the opening of the EGR valve can be quickly adjusted to the target angle.
In this way, the EGR is controlled to reduce NO_X emissions while maintaining good engine performance.

SYSTEM DIAGRAM

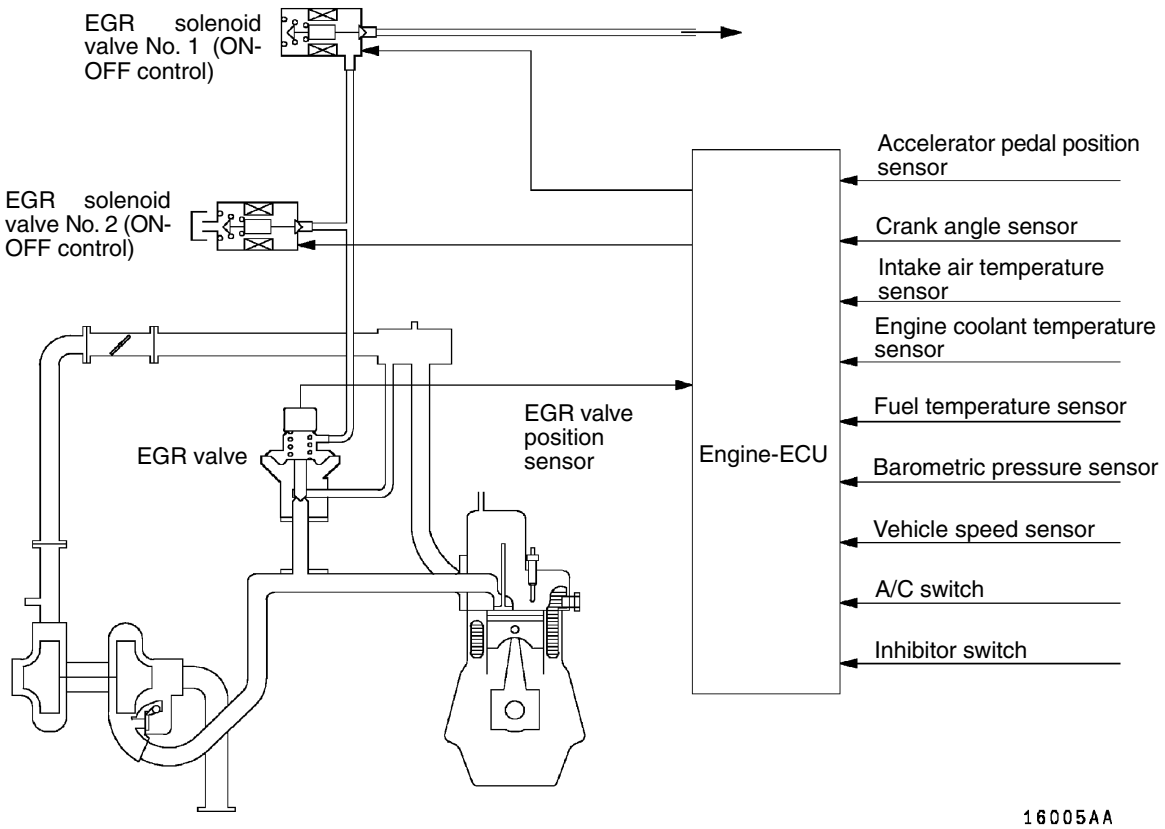

COMPONENT LOCATION

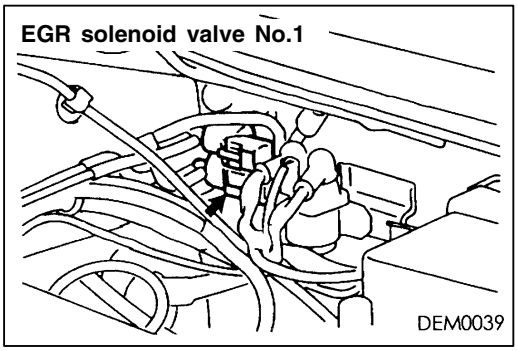

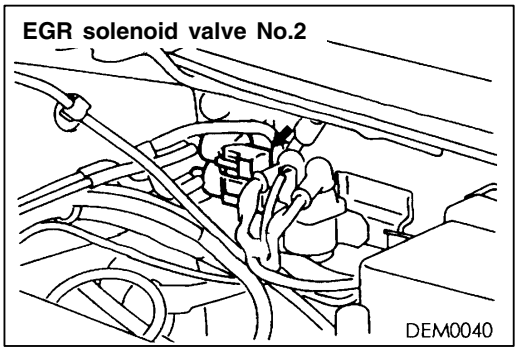

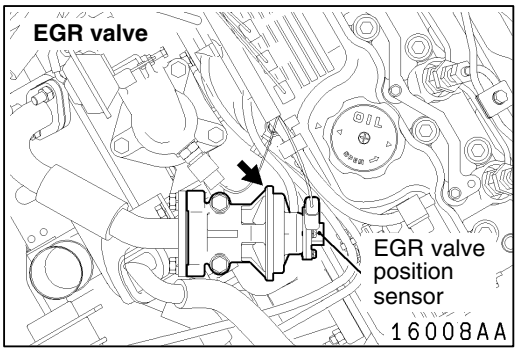

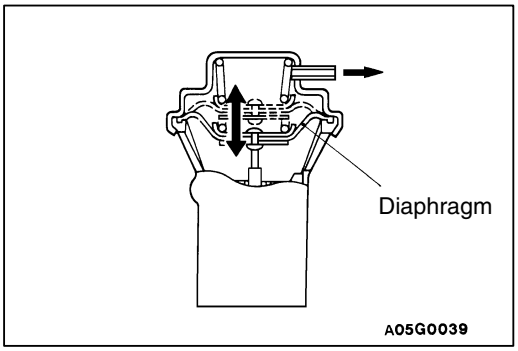

FUNCTION CHECK

1. Start the engine and warm it up until the engine coolant temperature reaches 65°C or above.
2. Race the engine by suddenly depressing the accelerator pedal, then check that the EGR valve diaphragm lifts.

EGR SOLENOID VALVE OPERATION CHECK

1. Remove EGR solenoid valve Nos.1 and 2 connectors and vacuum hoses.
2. Attach a vacuum pump to each nipple of the EGR solenoid valve Nos. 1 and 2. Then connect the each connector of EGR solenoid valve to battery and apply negative pressure. Check that the valves are airtight both when voltage is applied to each terminal of the EGR solenoid valve Nos.1 and 2 and when it is not applied.

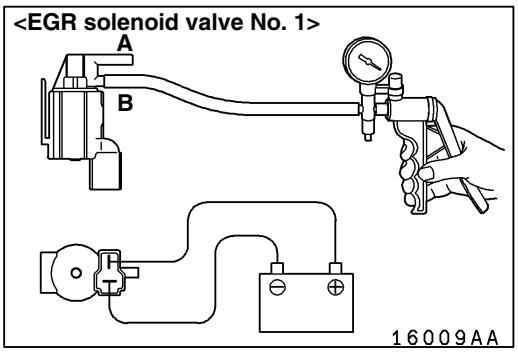

EGR solenoid valve No. 1

Battery voltage	Normal condition
When current is flowing	Vacuum leaks (Vacuum is maintained when nipple B is plugged).
When current is not flowing	Vacuum is maintained.

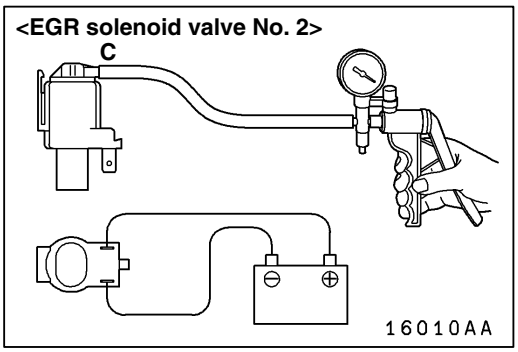

EGR solenoid valve No. 2

Battery voltage	Normal condition
When current is flowing	Vacuum is maintained.
When current is not flowing	Vacuum leaks.

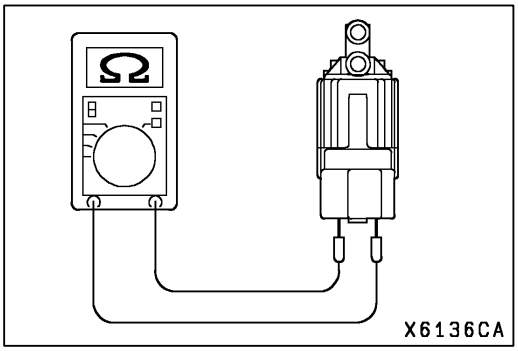

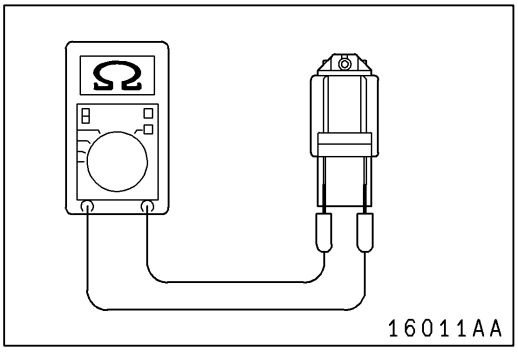

EGR SOLENOID VALVE RESISTANCE CHECK

Measure terminal resistance of EGR solenoid valves Nos. 1 and 2 with a circuit tester.

Standard value: 36 – 44 Ω (at 20°C)

ACCELERATOR PEDAL POSITION SENSOR (APS), ENGINE COOLANT TEMPERATURE SENSOR, BOOST AIR TEMPERATURE SENSOR, FUEL TEMPERATURE SENSOR, EGR VALVE POSITION SENSOR CHECK

Refer to GROUP 13I – On-vehicle Service.

CHECK AT THE ENGINE-ECU TERMINALS

Refer to GROUP 13I – Troubleshooting.

EGR VALVE, EGR COOLER <4D56-Step III>

REMOVAL AND INSTALLATION

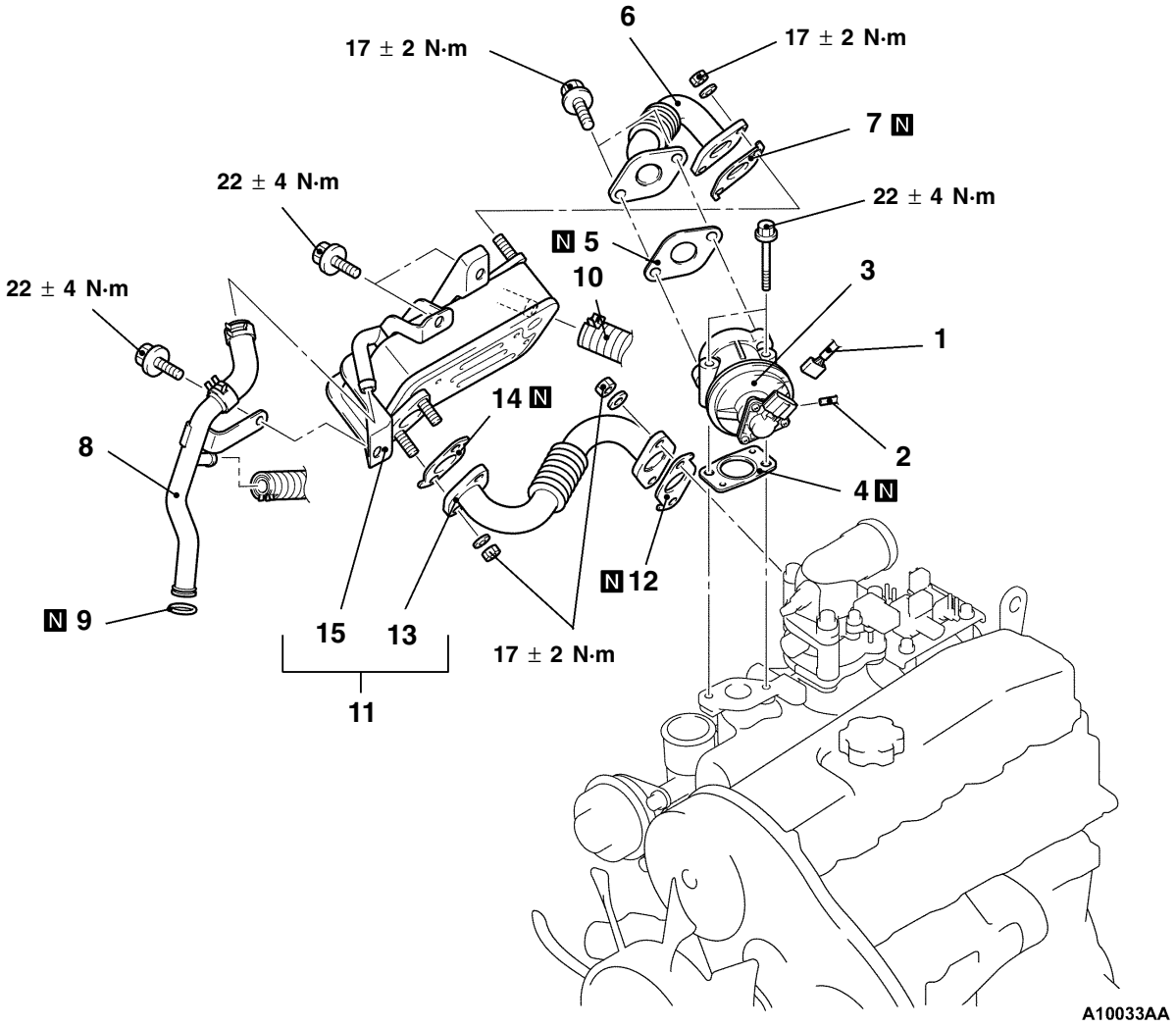

Removal steps

1. EGR valve connector
2. Vacuum hose connection
3. EGR valve
4. EGR gasket
5. EGR pipe gasket
6. EGR upper pipe
- ▶A◀ 7. EGR pipe gasket
- ▶C◀ 8. Water pipe and hose assembly
- ▶B◀ 9. O-ring
10. Water hose connection
11. EGR cooler and EGR lower pipe assembly
- ▶A◀ 12. EGR pipe gasket
13. EGR lower pipe
- ▶A◀ 14. EGR pipe gasket
15. EGR cooler

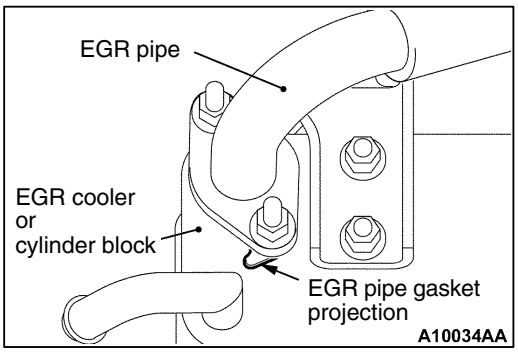

INSTALLATION SERVICE POINT

▶A◀ EGR PIPE GASKET INSTALLATION

Make sure that the projection of the EGR pipe gasket is installed in the location shown.

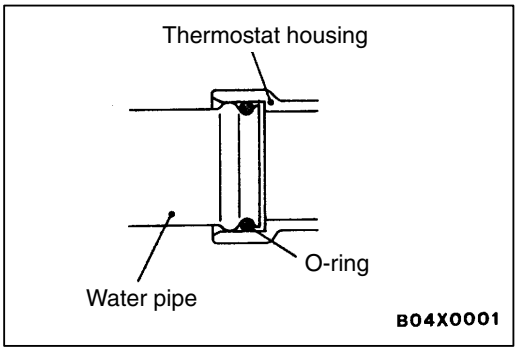

▶B◀ O-RING INSTALLATION

Rinse the mounting location of the O-ring and water pipe with water, and install the O-ring and water pipe.

Caution

1. **Care must be taken not to permit engine oil or other greases to adhere to the O-ring.**
2. **When inserting the pipe, check to be sure that there is no sand, dirt, etc. on its inner surface.**

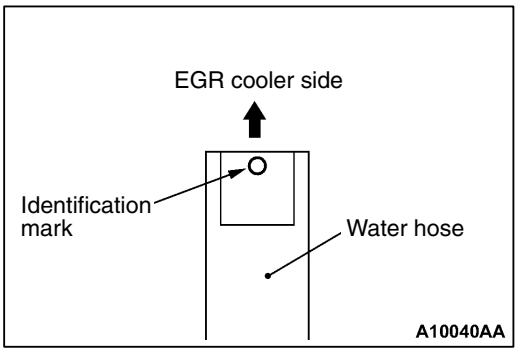

▶C◀ WATER PIPE AND HOSE ASSEMBLY INSTALLATION

When the water hose is separated from the water pipe, reconnect the water hose so that its identification mark faces toward the EGR cooler.

NOTES

CLUTCH

Click on the applicable bookmark to selected the required model year

CLUTCH

CONTENTS

21109000152

GENERAL INFORMATION 2
SERVICE SPECIFICATIONS 2
LUBRICANTS 2
ON-VEHICLE SERVICE 2
Clutch Pedal Inspection and Adjustment 2
Bleeding 3
CLUTCH PEDAL 4
CLUTCH CONTROL 5
Clutch Master Cylinder 6

GENERAL INFORMATION

21100010093

The clutch is a dry single-disc, diaphragm type; hydraulic pressure is used for the clutch control.

SERVICE SPECIFICATIONS

21100030136

Items	Standard value
Clutch pedal height mm	176 – 181
Clutch pedal clevis pin play mm	1 – 3
Clutch pedal free play mm	6 – 13
Distance between the clutch pedal and the toeboard when the clutch is disengaged mm	56 or more

LUBRICANTS

21100040078

Items	Specified lubricants	Quantity
Clutch fluid	Brake fluid DOT 3 or DOT 4	As required
Push rod assembly	Rubber grease	
Boot		
Release cylinder push rod	MITSUBISHI genuine grease Part No. 0101011	

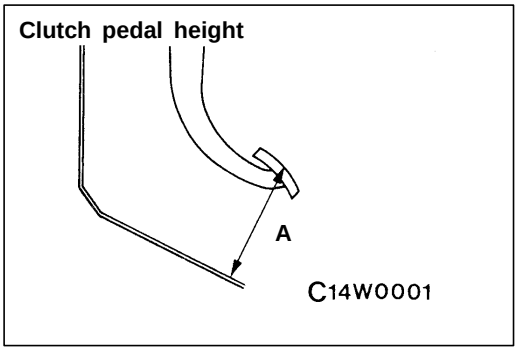

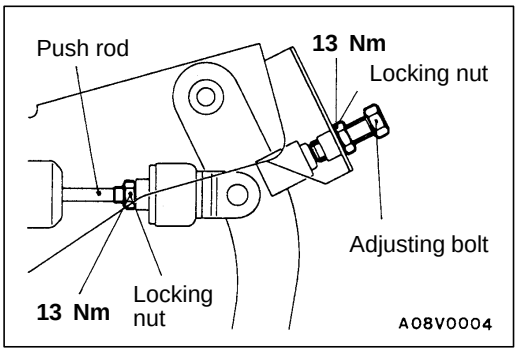

ON-VEHICLE SERVICE

21100090127

CLUTCH PEDAL INSPECTION AND ADJUSTMENT

1. Turn up the carpet, etc. under the clutch pedal.
2. Measure the clutch pedal height.
   Standard value (A): 176 – 181 mm
3. If the height of the clutch pedal is outside the standard value, loosen the lock nut and adjust the pedal height to the standard value using the adjusting bolt or push rod.

Clutch pedal clevis pin play

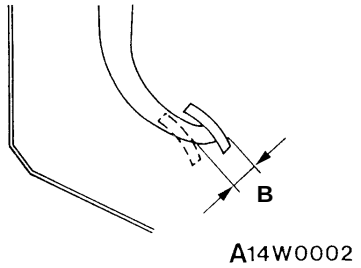

4. Measure the clutch pedal play.

   Standard value (B): 1 – 3 mm
5. If the clutch pedal play is not within the standard value, loosen the locking nut and move the push rod to adjust.

   Caution
   Do not push in the master cylinder push rod at this time.

Clutch pedal free play

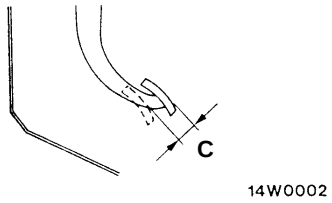

Distance between the clutch pedal and the toeboard when the clutch is disengaged

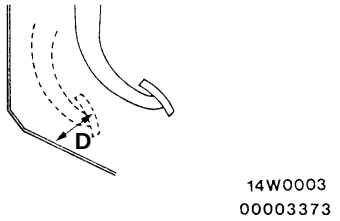

6. After completing the adjustments, confirm that the clutch pedal free play (measured at the face of the pedal pad) and the distance between the clutch pedal (the face of the pedal pad) and the toeboard when the clutch is disengaged are within the standard value ranges.

   Standard value (C): 6 – 13 mm
   Standard value (D): 56 mm or more
7. If the clutch pedal free play and the distance between the clutch pedal and the toeboard when the clutch is disengaged do not agree with the standard values, it is probably the result of either air in the hydraulic system or a faulty master cylinder or clutch. Bleed the air, or disassembly and inspect the master cylinder or clutch.
8. Turn back the carpet, etc.

BLEEDING

21100140099

Specified fluid: Brake fluid DOT 3 or DOT 4

Caution
Use the specified brake fluid. Avoid using a mixture of the specified fluid and other fluid.

CLUTCH PEDAL

21100160163

REMOVAL AND INSTALLATION

Pre-removal Operation
- Removal of Relay Box in Passenger Compartment <L.H. drive vehicles>

Post-installation Operation
- Clutch Pedal Adjustment (Refer to P.21-2.)
- Installation of Relay Box in Passenger Compartment <L.H. drive vehicles>

<2WD, 4WD (4G64)>

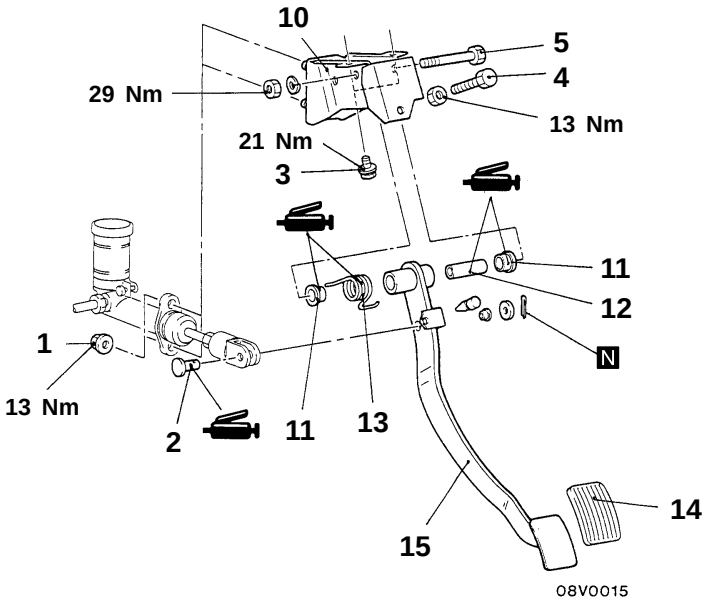

<4WD (4D56)>

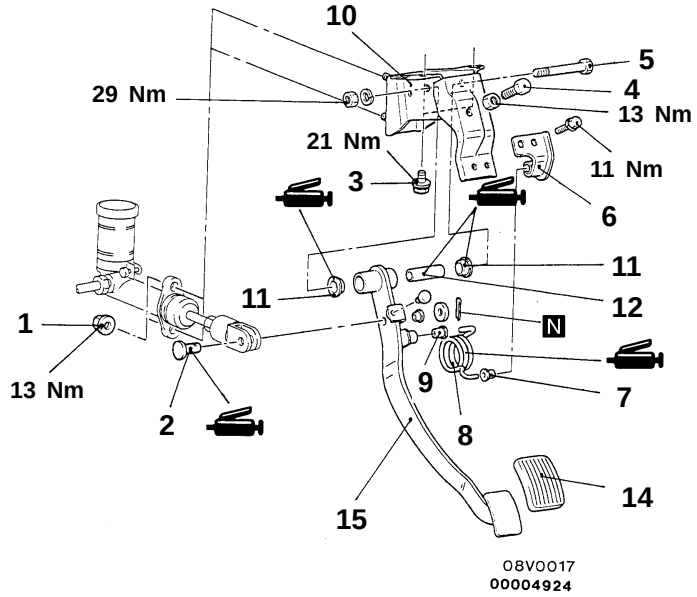

Removal steps

1. Clutch master cylinder installation nut
2. Clevis pin
3. Clutch support member mounting bolt
4. Adjusting bolt
5. Clutch pedal mounting bolt
6. Turnover spring bracket
7. Bushing
8. Turnover spring
9. Bushing
10. Clutch support member
11. Bushing
12. Spacer
13. Pedal return spring
14. Pedal pad
15. Clutch pedal

CLUTCH CONTROL

21100190162

REMOVAL AND INSTALLATION

Pre-removal Operation
- Clutch Fluid Draining

Post-installation Operation
- Clutch Fluid Supplying
- Clutch Fluid Bleeding (Refer to P. 21-3.)
- Clutch Pedal Adjustment (Refer to P. 21-2.)

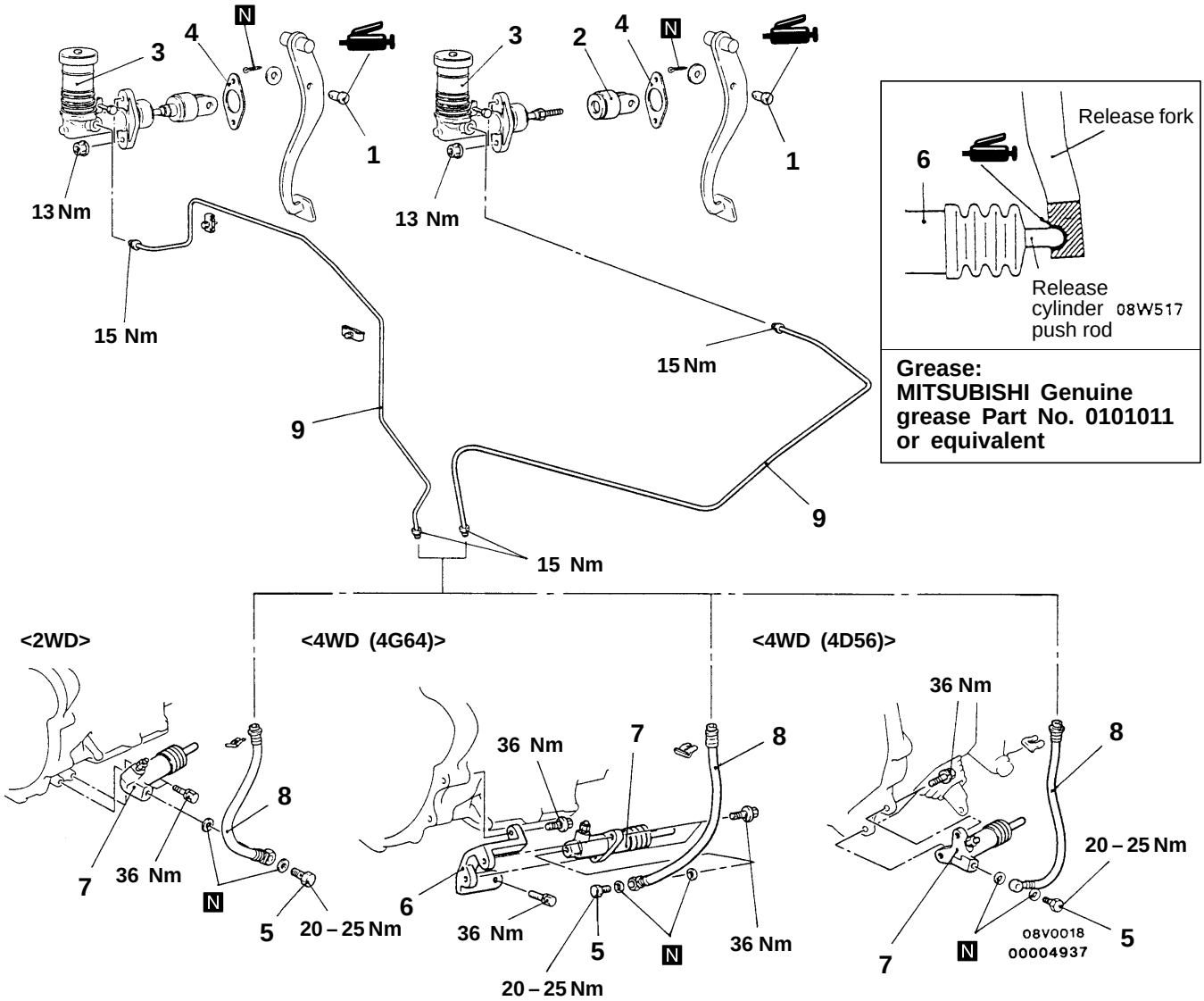

Clutch master cylinder removal steps

- Hydraulic unit <L.H. drive diesel-powered vehicles with ABS>
1. Clevis pin
2. Push rod damper <L.H. drive diesel-powered vehicles with ABS>
3. Clutch master cylinder
4. Sealer

Clutch release cylinder removal steps

5. Eye bolt
6. Bracket <4WD (4G64)>
7. Clutch release cylinder

Clutch line removal steps

5. Eye bolt
8. Clutch hose
9. Clutch tube

DISASSEMBLY AND REASSEMBLY

21100210134

CLUTCH MASTER CYLINDER

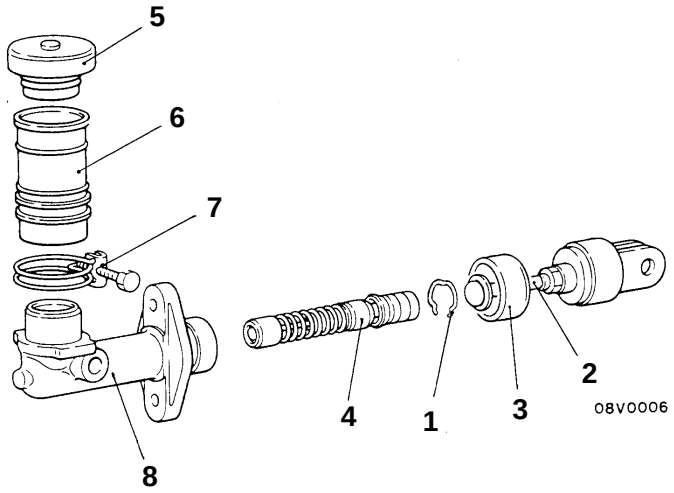

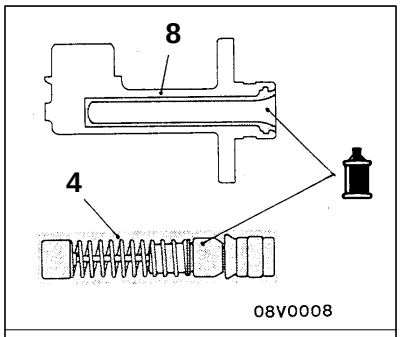

Clutch fluid:
Brake fluid DOT 3 or DOT 4

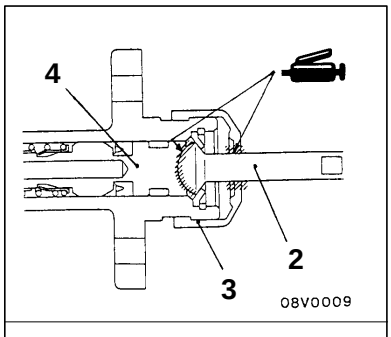

Grease: Rubber grease

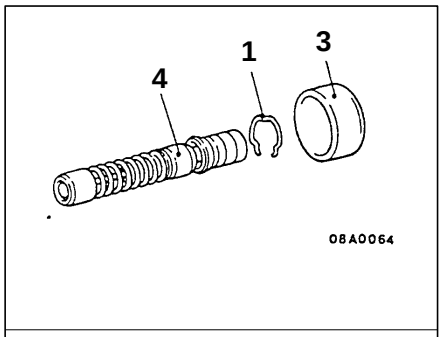

Piston repair kit

00004938

Disassembly steps

1. Piston stop ring
2. Damper and push rod
3. Boot
4. Piston assembly
5. Reservoir cap
6. Reservoir
7. Reservoir band
8. Master cylinder body

Caution
Do not disassemble piston assembly.

MANUAL TRANSMISSION

Click on the applicable bookmark to selected the required model year

MANUAL TRANSMISSION

CONTENTS

22109000234

GENERAL INFORMATION 2

LUBRICANTS 3

SEALANTS 3

ON-VEHICLE SERVICE 3

- Transmission Oil Check 3
- Oil Replacement 4
- 4WD Detection Switch Continuity Check <4WD> 5
- High/Low Detection Switch Continuity Check <4WD> 5

TRANSMISSION CONTROL* <2WD> 6

TRANSMISSION CONTROL*<4WD> 8

TRANSMISSION ASSEMBLY <2WD> 10

TRANSMISSION ASSEMBLY <4WD> 12

4WD INDICATOR-ECU 15

WARNING REGARDING SERVICING OF SUPPLEMENTAL RESTRAINT SYSTEM (SRS) EQUIPPED VEHICULES

WARNING!

(1) Improper service or maintenance of any component of the SRS, or any SRS-related component, can lead to personal injury or death to service personnel (from inadvertent firing of the air bag) or to driver (from rendering the SRS inoperative).

(2) Service or maintenance of any SRS component or SRS-related component must be performed only at an authorized MITSUBISHI dealer.

(3) MITSUBISHI dealer personnel must thoroughly review this manual, and especially its GROUP 52B – Supplemental Restraint System (SRS) before beginning any service or maintenance of any component of the SRS or any SRS-related component.

NOTE

The SRS includes the following components:impact sensors, SRS diagnosis unit, SRS warning lamp, air bag module, clock spring and interconnecting wiring. Other SRS-related components (that may have to be removed/installed in connection with SRS service or maintenance) are indicated in the table of contents by an asterisk (*).

GENERAL INFORMATION

22100010113

Items		Vehicles with 4G63 engine	Vehicles with 4D56 engine
Transmission model		R5M21-5	R5M21-5
Type		5-speed, floor-shift	5-speed, floor-shift
Gear ratio	1st	4.330	4.330
	2nd	2.355	2.355
	3rd	1.509	1.509
	4th	1.000	1.000
	5th	0.827	0.827
	Reverse	4.142	4.142
Speedometer gear ratio (driven/drive)		29/8	26/8

Items		Vehicles with 4G64 engine	Vehicles with 4D56 engine
Transmission model		V5M21-9	V5MT1-4
Type		5-speed, floor-shift	5-speed, floor-shift
Gear ratio	1st	3.967	3.918
	2nd	2.136	2.261
	3rd	1.360	1.395
	4th	1.000	1.000
	5th	0.856	0.829
	Reverse	3.578	3.925
Transfer type		2-speed	2-speed
Gear ratio	High	1.000	1.000
	Low	1.925	1.925
Speedometer gear ratio (driven/drive)		27/8	25/8

LUBRICANTS

22100040167

Items	Specified lubricants	Quantity ℓ
Transmission oil	Hypoid gear oil SAE 75W-90, 75W-85W or 80W conforming to API GL-4	<R5M21> 2.3 <V5M21,V5MT1> 2.2
Transfer oil	Hypoid gear oil SAE 75W-90, 75W-85W or 80W conforming to API GL-4	2.3

SEALANTS

22100050054

Items	Specified sealant	Remarks
Oil filler plug <V5MT1>	3M ATD Part No. 8660 or equivalent	Semi-drying sealant
Oil drain plug <V5MT1>	3M ATD Part No. 8660 or equivalent	Semi-drying sealant
Control lever gasket	3M ATD Part No. 8661 or equivalent	Semi-drying sealant
Control lever assembly mounting bolt	3M Stud Locking No. 4170 or equivalent	Anaerobic sealant

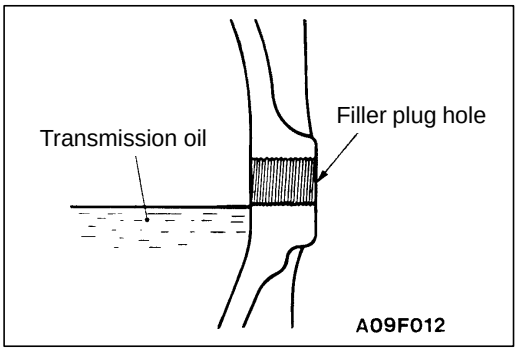

ON-VEHICLE SERVICE

22100090193

TRANSMISSION OIL CHECK

1. Remove the oil filler plug.
2. Oil level should be at the lower portion of the filler plug hole.
3. Check that the transmission oil is not noticeably dirty, and that it has a suitable viscosity.
4. Tighten the filler plug to the specified torque.

   Tightening torque:
   <R5M21, V5M21> 32 Nm
   <V5MT1> 70 Nm

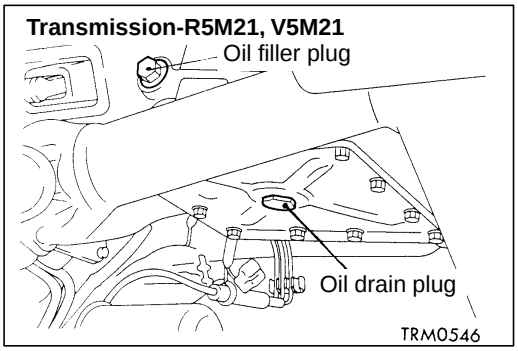

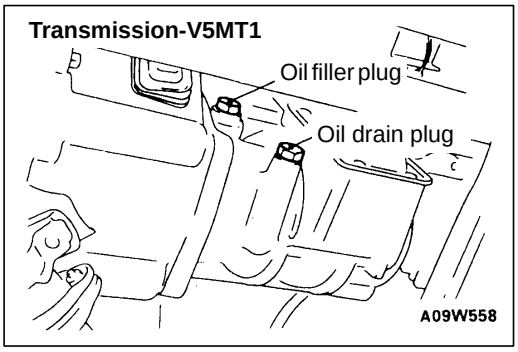

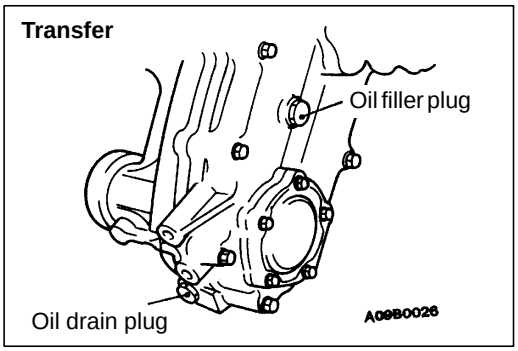

OIL REPLACEMENT

22100100179

1. Remove oil filler plug and oil drain plug.
2. Drain oil.
3. Tighten the oil drain plug to the specified torque.

   Specified torque:
   <R5M21,V5M21> 32 Nm
   <V5MT1> 70 Nm

   NOTE (Only V5MT1)
   Apply sealant to the oil drain plug threads.

   Specified sealant:
   3M ATD Part No. 8660 or equivalent

4. Fill with specified oil till the level comes to the lower portion of oil filler plug hole.

   Specified transmission oil:
   Hypoid gear oil SAE 75W-90, 75W-85W or 80W conforming to API GL-4

   Quantity:
   Transmission
   <R5M21> 2.3 ℓ
   <V5M21, V5MT1> 2.2 ℓ

   Transfer 2.3 ℓ

5. Tighten the oil filler plug to the specified torque.

   Specified torque:
   <R5M21, V5M21> 32 Nm
   <V5MT1> 70 Nm

   NOTE (Only V5MT1)
   Apply sealant to the oil filler plug threads.

   Specified sealant:
   3M ATD Part No. 8660 or equivalent

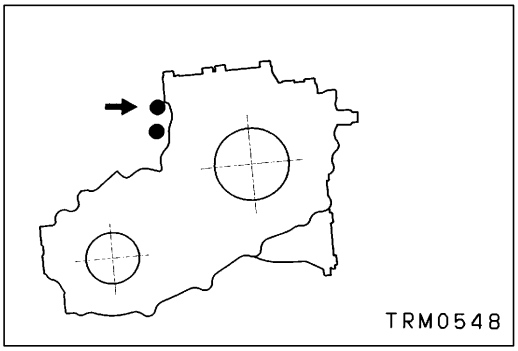

4WD DETECTION SWITCH CONTINUITY CHECK <4WD>

22100170026

Check the continuity between terminals of the black connector indicated in the illustration.

Transfer lever position	Terminal No.	
	1	2
2H		
4H	○	○

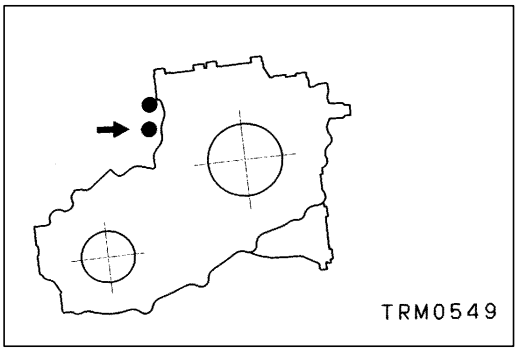

HIGH/LOW DETECTION SWITCH CONTINUITY CHECK <4WD>

22100210025

Check the continuity between terminals of the gray connector indicated in the illustration.

Transfer lever position	Terminal No.	
	1	2
4H	○	○
4L	○	○
4H-4L		

TRANSMISSION CONTROL <2WD>

22100380146

REMOVAL AND INSTALLATION

Pre-removal Operation
(1) Front Console Removal (Refer to GROUP 52A.)
(2) Shift the Control Lever to the N position

Post-installation Operation
(1) Check the Operation of the Transmission Control Lever and the Movement in Each Lever Position
(2) Front Console Installation (Refer to GROUP 52A.)

Caution: SRS
Be careful not to subject the SRS-diagnosis unit to any shocks during removal and installation of the control lever assembly.

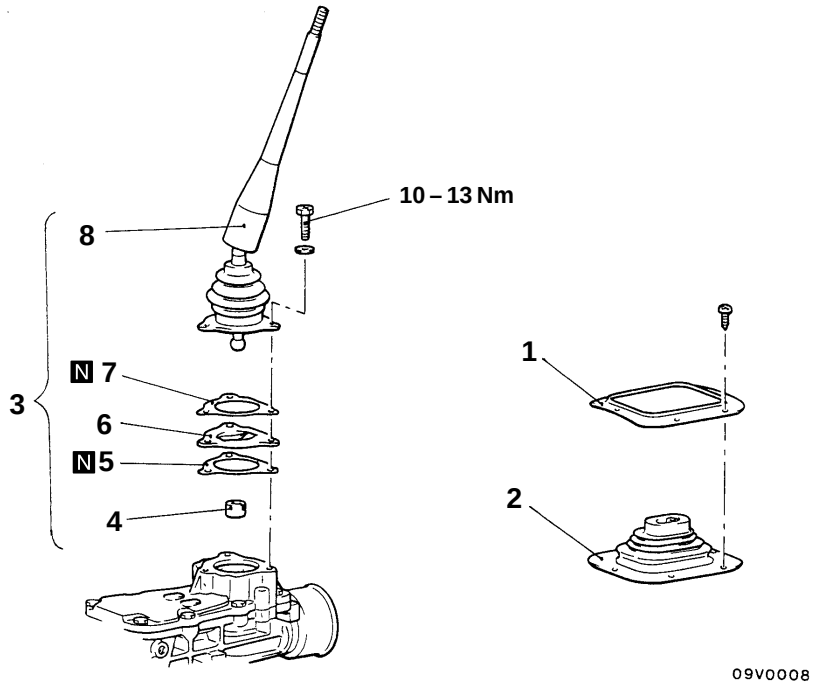

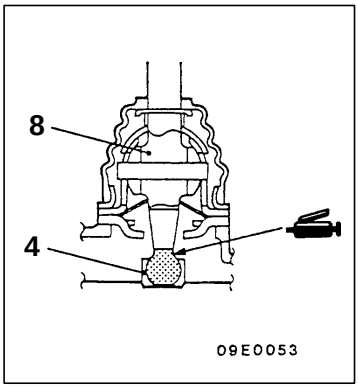

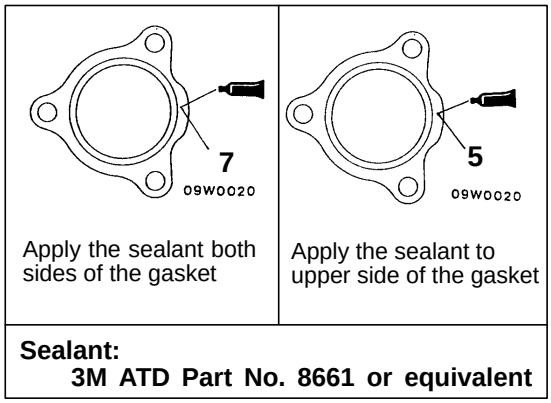

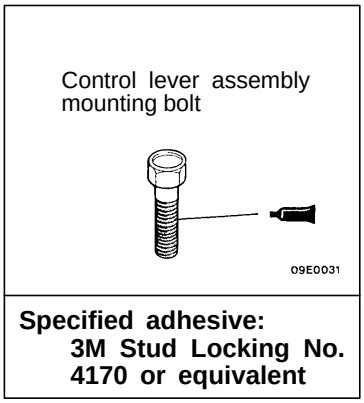

00004939

Removal steps

1. Retainer plate
▶B◀ 2. Dust Cover
▶A◀ 3. Control lever assembly
4. Control lever bushing
5. Gasket
6. Stopper plate
7. Gasket
8. Control lever

INSTALLATION SERVICE POINTS

▶A◀ CONTROL LEVER ASSEMBLY INSTALLATION

1. Remove the adhesive sticking to the control lever assembly mounting bolts.
2. Use a tap (M8 x 1.25) to remove the adhesive sticking to the bolt holes in the control housing, and clean it by blowing in air.
3. Apply specified adhesive to the threads of the control lever assembly mounting bolts.

   Specified adhesive:
   3M Stud Locking No. 4170 or equivalent

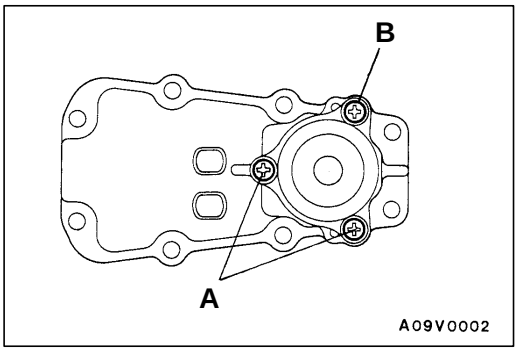

4. The dimensions of the mounting bolts vary according to their mounting locations, so do not confuse them when installing.

Bolt	Diameter x Length mm
A	8 x 23
B	8 x 22

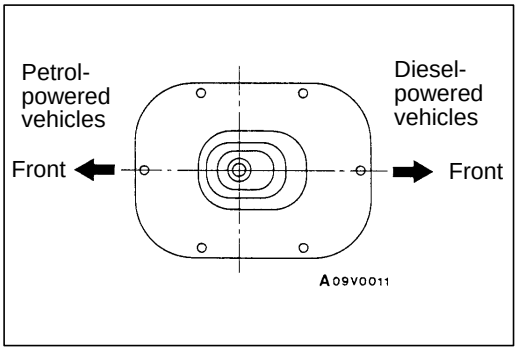

▶B◀ DUST COVER INSTALLATION

Install the dust cover so that they face as shown in the illustration.

TRANSMISSION CONTROL <4WD>

22100380153

REMOVAL AND INSTALLATION

Pre-removal Operation
(1) Front Floor Console Assembly Removal (Refer to GROUP 52A.)
(2) Shift the Transmission Control Lever to the N Position.
(3) Shift the Transfer Control Lever to the 4H Position.

Post-installation Operation
(1) Check the Operation of the Transmission and Transfer Control Levers and the Movement in Each Lever Position.
(2) Front Floor Console Assembly Installation (Refer to GROUP 52A.)

Caution: SRS
Be careful not to subject the SRS-diagnosis unit to any shocks during removal and installation of the control lever assembly.

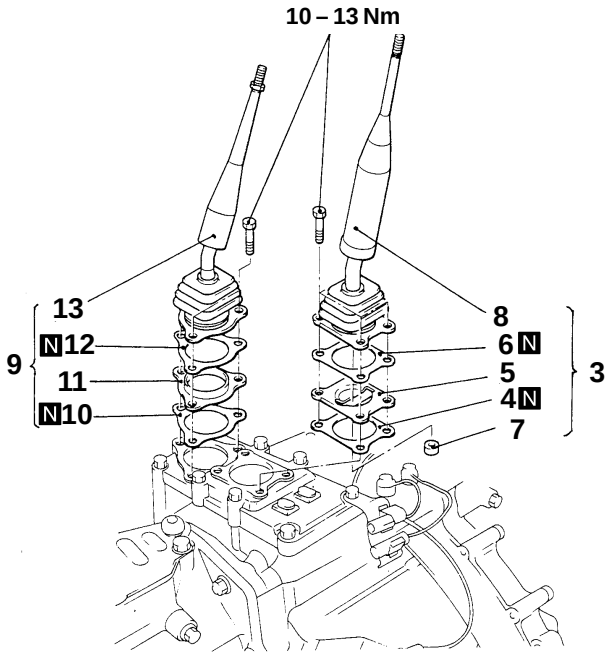

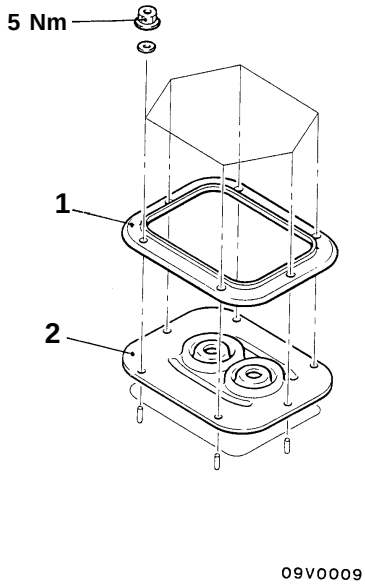

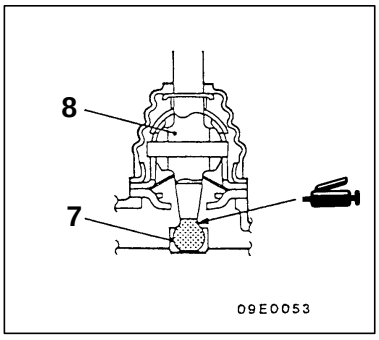

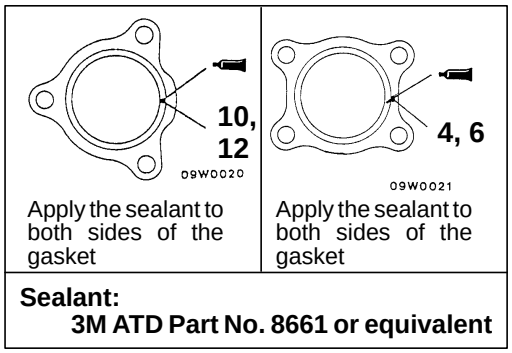

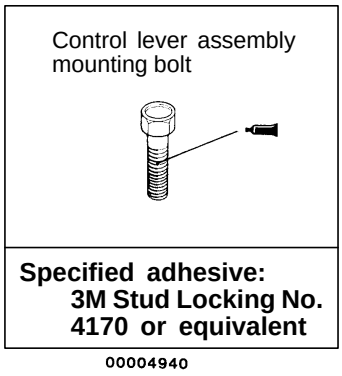

Transmission control lever assembly removal steps

1. Retainer
▶C◀ 2. Dust cover
▶B◀ 3. Transmission control lever assembly
4. Gasket
▶A◀ 5. Stopper plate
6. Gasket
7. Control lever bushing
8. Transmission control lever

Transfer control lever assembly removal steps

1. Retainer plate
▶C◀ 2. Dust cover
▶B◀ 9. Transfer control lever assembly
10. Gasket
▶A◀ 11. Stopper plate
12. Gasket
13. Transfer control lever

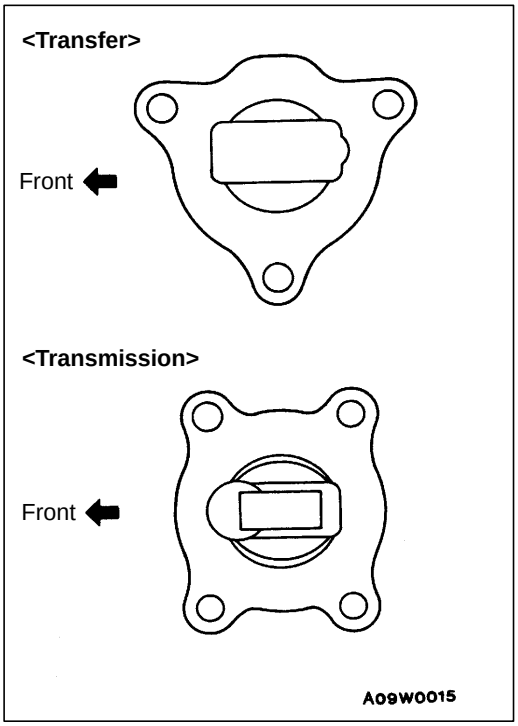

INSTALLATION SERVICE POINTS

▶A◀ STOPPER PLATE INSTALLATION

Install the stopper plates so that they face as shown in the illustration.

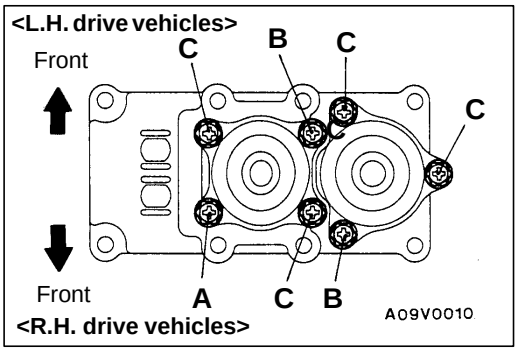

▶B◀ TRANSFER CONTROL LEVER ASSEMBLY/ TRANSMISSION CONTROL LEVER ASSEMBLY

1. Remove the adhesive sticking to the control lever assembly mounting bolts.
2. Use a tap (M8 x 1.25) to remove the adhesive sticking to the bolt holes in the control housing, and clean it by blowing in air.
3. Apply specified adhesive to the threads of the control lever assembly mounting bolts.

   Specified adhesive:
   3M Stud Locking No. 4170 or equivalent
4. The dimensions of the mounting bolts vary according to their mounting locations, so do not confuse them when installing.

Bolt	Diameter x Length mm
A	8 x 18
B	8 x 22
C	8 x 23

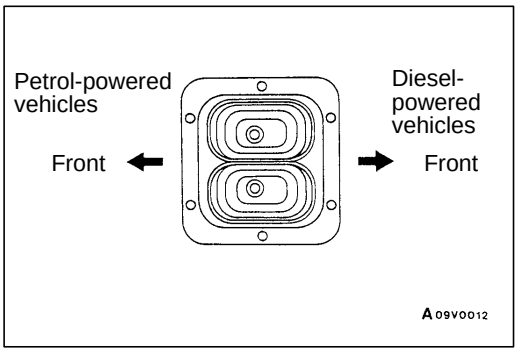

▶C◀ DUST COVER INSTALLATION

Install the dust cover so that they face as shown in the illustration.

TRANSMISSION ASSEMBLY <2WD>

22100270191

REMOVAL AND INSTALLATION

Pre-removal Operation
(1) Transmission Control Lever Removal (Refer to P. 22-6.)
(2) Transmission Oil Draining (Refer to P. 22-4.)
(3) Propeller Shaft Removal (Refer to GROUP 25.)

Post-installation Operation
(1) Propeller Shaft Installation (Refer to GROUP 25.)
(2) Transmission Oil Filling (Refer to 22-4.)
(3) Transmission Shift Lever Installation (Refer to P. 22-6.)
(4) Shift Lever Operation Check
(5) Speedometer Operation Check

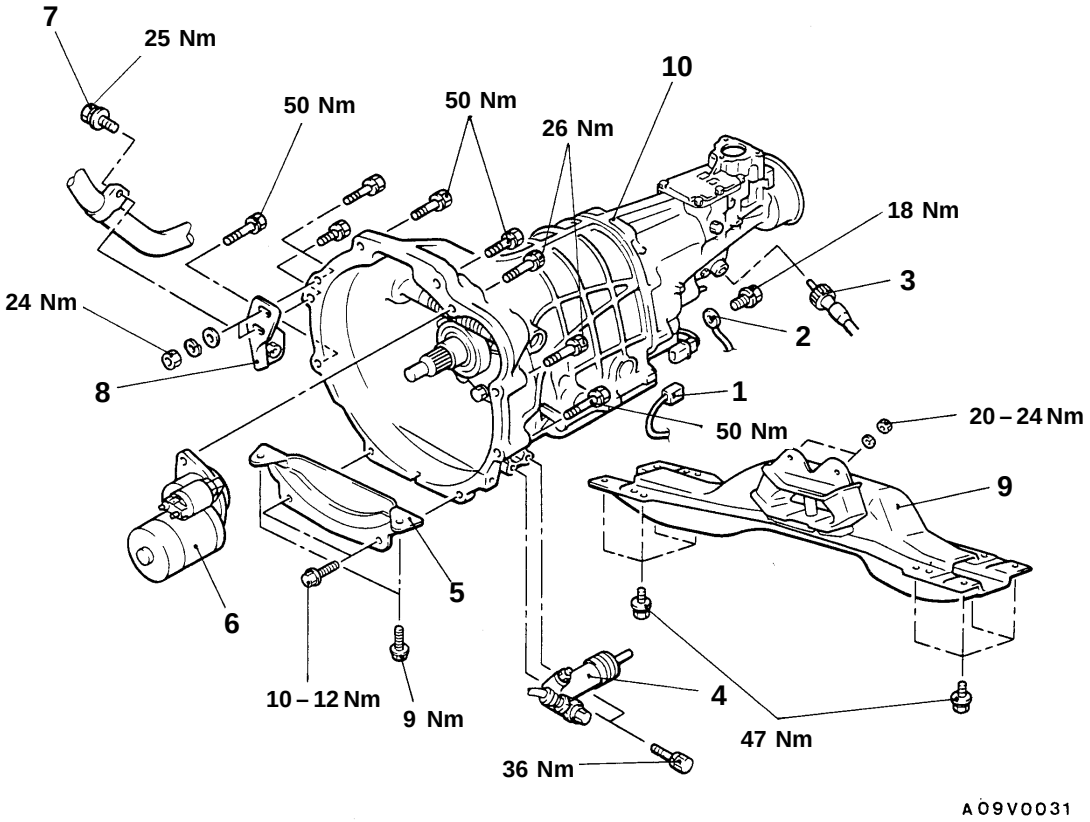

Removal steps

1. Back-up lamp switch connector
2. Earth cable connection
3. Speedometer cable connection
◀A▶ 4. Clutch release cylinder
5. Bell housing cover
◀B▶ 6. Starter motor
7. Exhaust pipe clamp mounting bolt
8. Exhaust pipe clamp mounting bracket
   - Support the transmission with a transmission jack
9. No. 2 crossmember assembly
◀C▶ ▶A◀ 10. Transmission assembly

REMOVAL SERVICE POINTS

◀A▶ CLUTCH RELEASE CYLINDER REMOVAL

Remove the clutch release cylinder without disconnecting the fluid line. Then suspend them with a cord.

◀B▶ STARTER MOTOR REMOVAL

Remove the starter motor with the starter motor harnesses still connected, and secure it inside the engine compartment.

◀C▶ TRANSMISSION ASSEMBLY REMOVAL

Caution

When removing the transmission assembly from the engine, care must be taken not to shake or rock with force, because to do so might cause damage to the end of the main drive gear, the pilot bearing, or the clutch disc, etc.

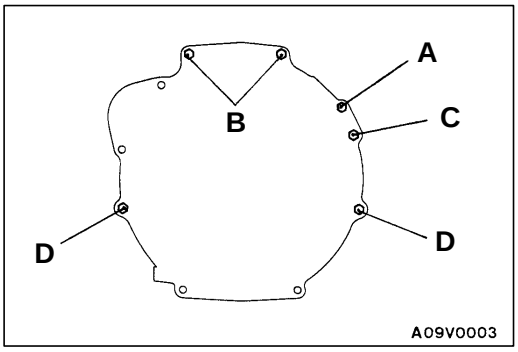

INSTALLATION SERVICE POINT

▶A◀ TRANSMISSION ASSEMBLY INSTALLATION

The sizes of the mounting bolts are different. So be sure not to confuse them.

Bolt	Diameter x Length mm
A	8 x 55
B	10 x 44
C	10 x 55
D	10 x 65

TRANSMISSION ASSEMBLY <4WD>

22100350031

REMOVAL AND INSTALLATION

Pre-removal Operation
(1) Transmission and Transfer Control Lever Removal (Refer to P. 22-8.)
(2) Transfer Case Protector Removal
(3) Transmission and Transfer Oil Draining (Refer to P. 22-4.)
(4) Front and Rear Propeller Shaft Removal (Refer to GROUP 25.)

Post-installation Operation
(1) Front and Rear Propeller Shaft Installation (Refer to GROUP 25.)
(2) Transmission and Transfer Oil Filling (Refer to P. 22-4.)
(3) Transfer Case Protector Installation
(4) Transmission and Transfer Control Lever Installation (Refer to P.22-8)
(5) Transmission and Transfer Control Lever Operation Check
(6) Speedometer Operation Check

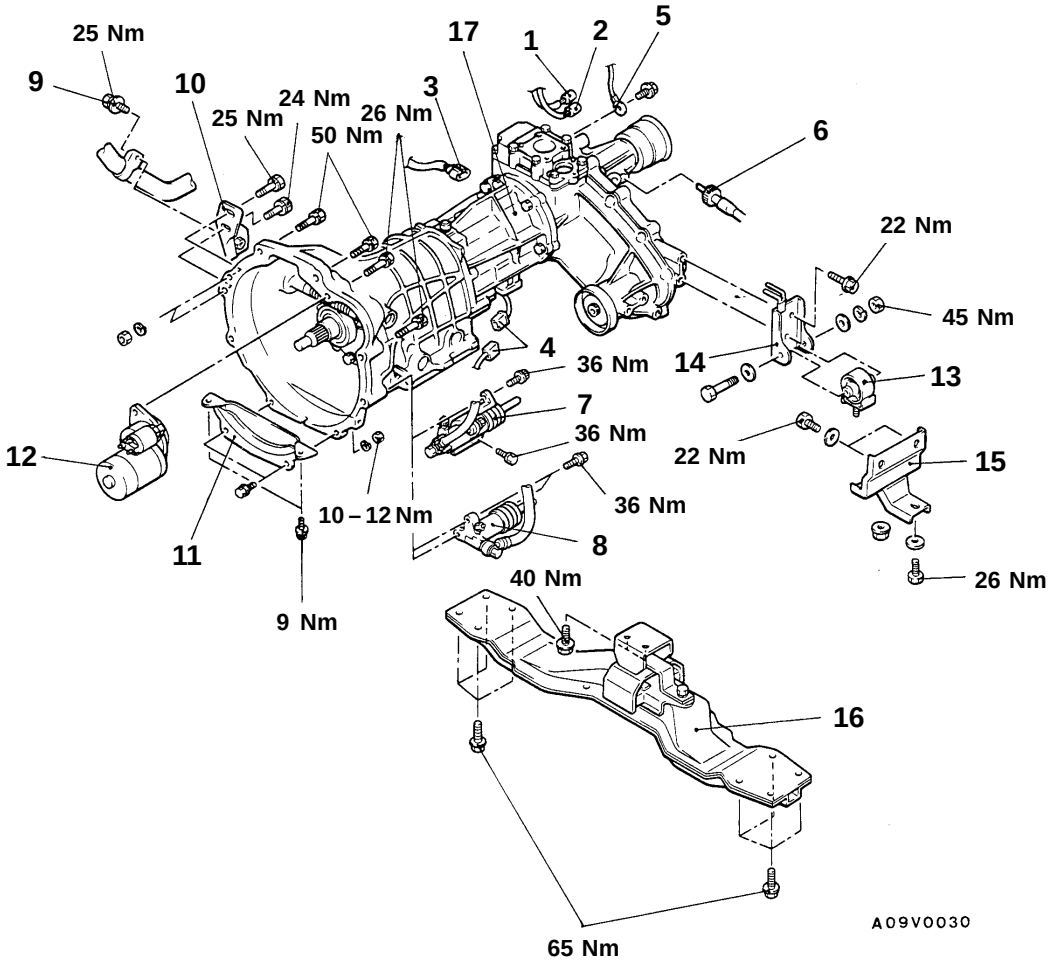

Removal steps

1. HIGH/LOW detection switch connector
2. 4WD detection switch connector
3. Back-up lamp switch connector <4D56>
4. Back-up lamp switch connector <4G64>
5. Earth cable
6. Speedometer cable connection
◀A▶ 7. Clutch release cylinder, bracket assembly <4G64>
◀A▶ 8. Clutch release cylinder <4D56>
9. Exhaust pipe clamp mounting bolt <4G64>
10. Transmission hanger bracket <4G64>
11. Bell housing cover
◀B▶ 12. Starter motor
   - Support the transmission with a transmission jack
▶B◀ 13. Transfer roll stopper
14. Transfer mount bracket
15. Transfer support bracket
16. No. 2 cross member
◀C▶ ▶A◀ 17. Transmission assembly

REMOVAL SERVICE POINTS

◀A▶ CLUTCH RELEASE CYLINDER, BRACKET ASSEMBLY <4G64>/CLUTCH RELEASE CYLINDER <4D56> REMOVAL

Remove the clutch release cylinder without disconnecting fluid line. Then suspend them with a cord.

◀B▶ STARTER MOTOR REMOVAL

Remove the starter motor with the starter motor harnesses still connected, and secure it inside the engine compartment.

◀C▶ TRANSMISSION ASSEMBLY REMOVAL

Caution
When removing the transmission assembly from the engine, care must be taken not to shake or rock with force, because to do so might cause damage to the end of the main drive gear, the pilot bearing, or the clutch disc, etc.

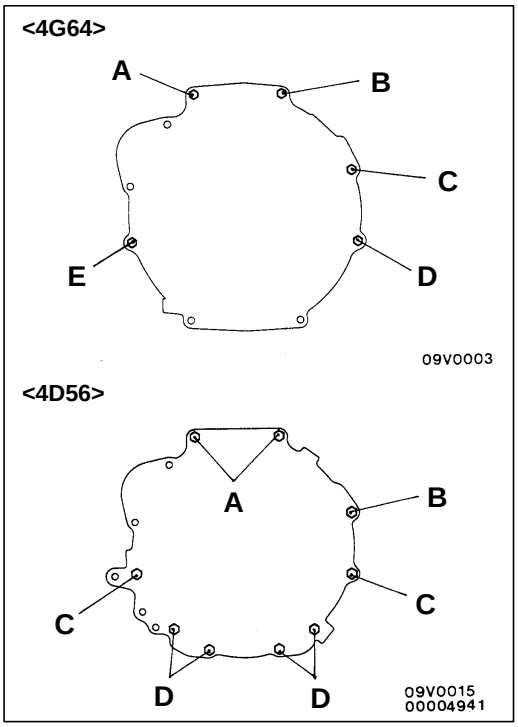

INSTALLATION SERVICE POINT

▶A◀ TRANSMISSION ASSEMBLY INSTALLATION

The sizes of the mounting bolts are different. So be sure not to confuse them.

<4G64>

Bolt	Diameter x Length mm
A	10 x 35
B	10 x 40
C	10 x 60
D	10 x 65
E	10 x 75

<4D56>

Bolt	Diameter x Length mm
A	10 x 45
B	8 x 30
C	10 x 80
D	10 x 25

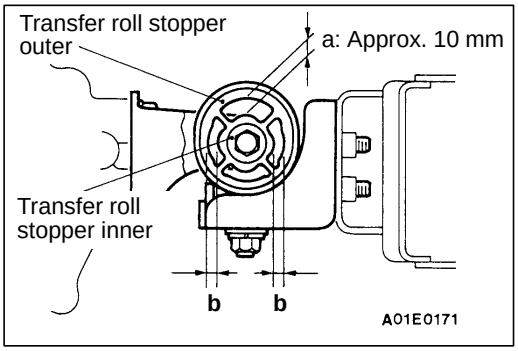

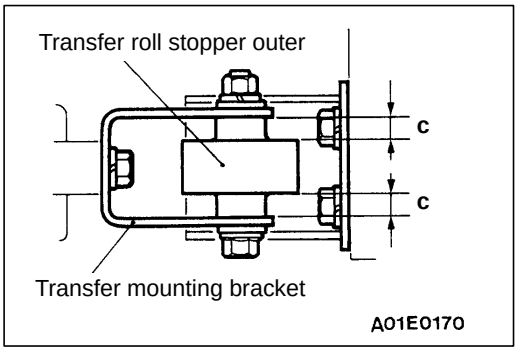

▶B◀ TRANSFER ROLL STOPPER INSTALLATION

1. Tighten the transfer roll stopper provisionally.
2. Make the engine and transmission assembly rest on the engine mount.
3. Tighten the transfer roll stoppers inner and outer finally so that the clearance (a) between the two are at the shown dimension.
4. Check that the right and left clearances (b) between the stoppers are equal.

5. Check that the clearances (c) between the transfer roll stopper and transfer mounting bracket are equal.

   NOTE
   When new, a transfer roll stopper consists of one part, but will separate into outer and inner part during use. This is normal.

4WD INDICATOR-ECU

22100620019

REMOVAL AND INSTALLATION

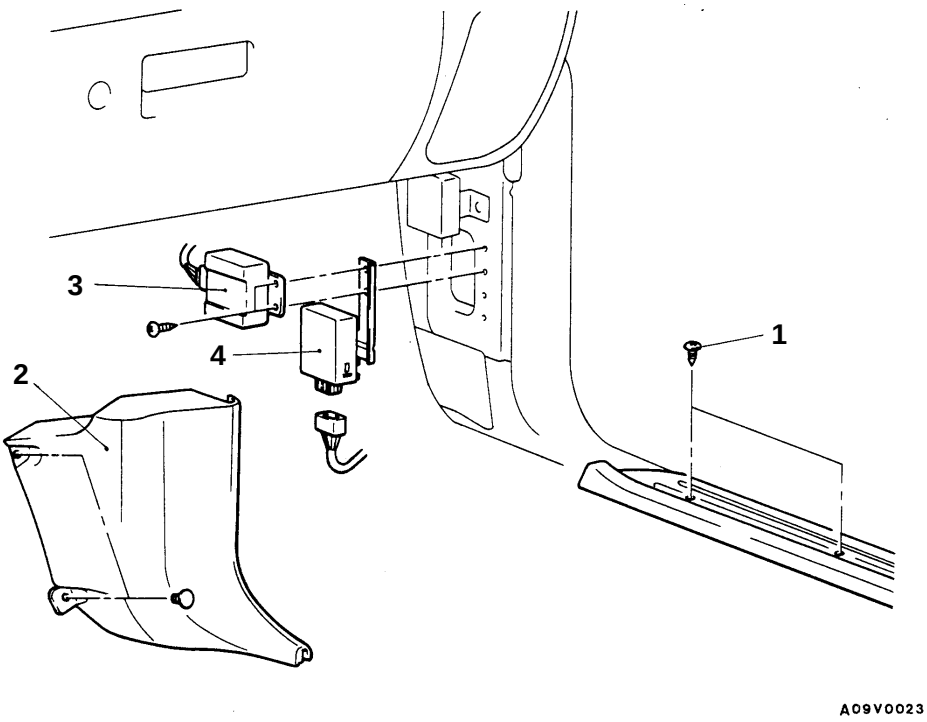

Removal steps

1. Front scuff plate attaching screw
2. Cowl side trim
3. Rear differential lock-ECU
4. 4WD indicator-ECU

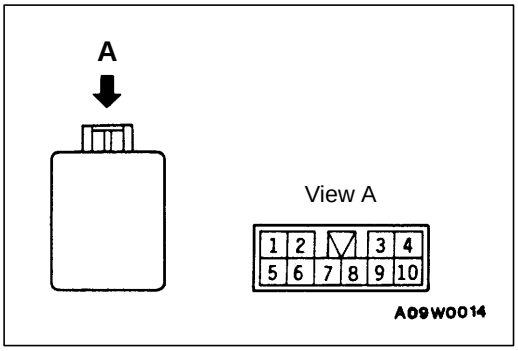

INSPECTION

4WD INDICATOR-ECU

1. Measure the voltage with the control unit and harness still connected.
2. Earth terminal (8) and then measure terminal voltage.

Terminal No.	Inspection item	Inspection condition 1: Ignition switch	Inspection condition 2: Transfer lever position	Terminal voltage
1	Free wheel engage switch	ON	2H	System voltage
			4H*1	0 V
2	4WD detection switch	ON	2H	System voltage
			4H, 4L	0 V
3	Ignition switch (IG1)	OFF	–	0 V
		ON	–	System voltage
5	Free wheel differen-tial indicator lamp	ON	2H	System voltage
			4H*1	0 V
6	HI/LOW detection switch	ON	Shifting from 4H to 4L or vice versa	System voltage
			2H, 4H, 4L	0 V
7	Free wheel clutch changeover solenoid valve	ON	4H, 4L	0 V
			2H*2	System voltage
10	4WD Indicator lamp	ON	2H	0 V
			4H, 4L	System voltage

NOTE
*1: When vehicle has been moved once.
*2: Shift the lever from 4H to 2H, and then turn the ignition switch to OFF and then back to ON.

GROUP 22
MANUAL TRANSMISSION

GENERAL

OUTLINE OF CHANGES

For model K75T GJENXEL6, the transmission gear ratio is 25/8 (driven/drive). The other items are the same as for model K75T TCENDEL6.

GROUP 22
MANUAL TRANSMISSION

GENERAL

OUTLINE OF CHANGE

Due to the addition of the vehicles with emission regulation step III compatible 4D5 engine, R5M21 type transmission has been changed.

GENERAL INFORMATION

Items		Specifications
Engine model		4D56-Step III
Transmission model		R5M21-5
Type		5-speed, floor-shift
Gear ratio	1st	3.967
	2nd	2.136
	3rd	1.360
	4th	1.000
	5th	0.856
	Reverse	3.578
Speedometer gear ratio (driven/drive)		26/8

NOTES

AUTOMATIC TRANSMISSION

Click on the applicable bookmark to selected the required model year

AUTOMATIC TRANSMISSION

CONTENTS

23109000217

GENERAL INFORMATION 2

SERVICE SPECIFICATIONS 2

LUBRICANTS 3

SEALANTS 3

SPECIAL TOOLS 3

TROUBLESHOOTING 4

ON-VEHICLE SERVICE 10

- Automatic Transmission Fluid Check 10
- Automatic Transmission Fluid Change 11
- Transfer Oil Level Check 11
- Transfer Oil Replacement 12
- 4WD Detection Switch Continuity Check <4WD> 12
- High/Low Detection Switch Continuity Check <4WD> 12
- Throttle Cable Check and Adjustment 13
- Selector Lever Operation Check 14
- Inhibitor Switch Continuity Check 14
- Inhibitor Switch and Control Cable Adjustment 14
- Automatic Transmission Fluid Temperature Switch Check 15
- A/T Control Component Location 16
- A/T Control Component Check 17
- Converter Stall Test 19
- Hydraulic Pressure Test 20
- Hydraulic Circuit 22

TRANSMISSION CONTROL* 23

SELECTOR LEVER ASSEMBLY 25

TRANSMISSION ASSEMBLY <2WD> 27

TRANSMISSION ASSEMBLY <4WD> 30

4WD INDICATOR-ECU 33

TRANSMISSION OIL COOLER 34

WARNING REGARDING SERVICING OF SUPPLEMENTAL RESTRAINT SYSTEM (SRS) EQUIPPED VEHICULES

WARNING!

(1) Improper service or maintenance of any component of the SRS, or any SRS-related component, can lead to personal injury or death to service personnel (from inadvertent firing of the air bag) or to driver (from rendering the SRS inoperative).

(2) Service or maintenance of any SRS component or SRS-related component must be performed only at an authorized MITSUBISHI dealer.

(3) MITSUBISHI dealer personnel must thoroughly review this manual, and especially its GROUP 52B – Supplemental Restraint System (SRS) before beginning any service or maintenance of any component of the SRS or any SRS-related component.

NOTE

The SRS includes the following components: impact sensors SRS-diagnosis unit, SRS warning lamp, air bag module, clock spring and interconnecting wiring. Other SRS-related components (that may have to be removed/installed in connection with SRS service or maintenance) are indicated in the table of contents by an asterisk (*).

GENERAL INFORMATION

23100010141

Items		Vehicles with 4G63 engine	Vehicles with 4D56 engine
Transmission model		R4AW2-6	V4AW2-6
Type		4-speed full automatic	4-speed full automatic
Gear ratio	1st	2.826	2.826
	2nd	1.493	1.493
	3rd	1.000	1.000
	4th	0.730	0.688
	Reverse	2.703	2.703
Transfer type		–	2-speed
Gear ratio	High	–	1.000
	Low	–	1.925
Speedometer gear ratio (driven/drive)		22/6	25/8

SERVICE SPECIFICATIONS

23100030130

Items			Standard value
Distance between inner cable stopper and end of outer cable <4G63> mm			0 – 1
Distance between inner cable stopper and end of outer cable <4D56> mm			34 – 35
Lock-up solenoid valve coil resistance (at 20°C) Ω			Approx. 13
Stall speed r/min		4G63	2,100 – 2,400
		4D56	2,300 – 2,600
Governor pressure kPa		1,000 r/min	137 – 166
		2,000 r/min	245 – 284
		3,200 r/min	402 – 460
Line pressure kPa	At idle speed	D range	480 – 558
		R range	735 – 852
	At stall speed	D range	1,019 – 1,195
		R range	1,519 – 1,911
Operation temperature of engine coolant temperature switch °C	On (continuity)		50 ± 3
	Off (no continuity)		43
Clearance between shift lever guide and steering column mm			2.4 – 3.6

LUBRICANTS

23100040119

Items	Specified lubricants	Quantity ℓ
Transmission fluid	DEXRON-II or equivalent	R4AW2: Approx. 6.8 V4AW2: Approx. 7.2
Transfer oil	Hypoid gear oil SAE 75W-90, 75W-85W or 80W confirming to API GL-4	2.3
O-ring for oil filler pipe	DEXRON-II or equivalent	As required

SEALANTS

Items	Specified sealant	Remarks
Automatic transmission fluid temperature switch	3M ATD Part No.8660 or equivalent	Semi-drying sealant
Transfer control lever gasket and spring cover support	3M ATD Part No.8661 or equivalent	Semi-drying sealant
Engine coolant temperature switch	3M Nut Locking Part No.4171 or equivalent	Drying sealant

SPECIAL TOOLS

23100060139

Tool	Number	Name	Use
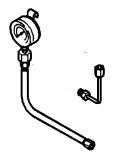	MD998330 (includes MD998331)	Oil pressure gauge (2,942 kPa)	Measurement of oil pressure
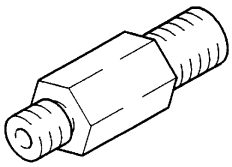	MD998920	Adapter	Connection of oil pressure gauge
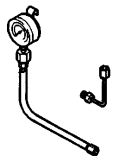	MD999563 (includes MD998331)	Oil pressure gauge (980 kPa)	Measurement of oil pressure

TROUBLESHOOTING

23100760152

STANDARD FLOW OF DIAGNOSIS TROUBLESHOOTING

Automatic transmission malfunctions may be caused by the following conditions.
(1) Improper maintenance and adjustment
(2) Shift control system malfunction
(3) Mechanical malfunctions
(4) Hydraulic malfunctions
(5) Poor engine performance

Troubleshooting in the event of any such malfunctions should begin by checking fluid level, ATF condition, manual linkage adjustment, throttle control cable adjustment and other conditions whose deviation from standards can be readily known. Then, road test shall be performed to determine whether or not the problem has been corrected or more diagnosis is necessary. If the problem still persists after these tests and corrections, hydraulic tests should be performed for further troubleshooting.

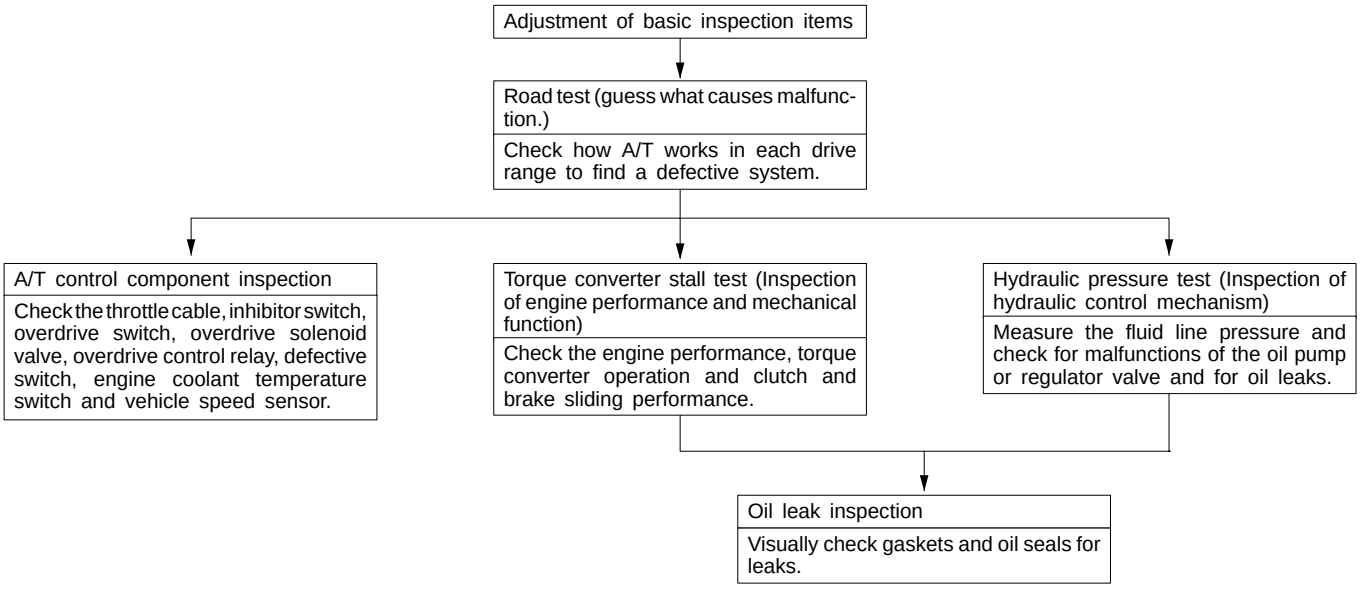

ROAD TEST

23100780158

Prior to performing road test, be sure to make basic checks including check and adjustment of fluid level and condition and adjustment of the throttle cable. For road test, the transfer must be placed in the 2H (2WD-high) position. In road test, various changes such as slips in transmission and shifting conditions are checked and the transmission operation at each shift position must have been checked.

D RANGE TEST

TEST 1

Start with throttle valve opened (50 % and full), and check upshift from 1-speed → 2-speed, 2-speed → 3-speed and 3-speed → 4-speed. Check that shifting points match shift pattern.

- OK → TEST 2
- NG ↓

Does the upshift from 1-speed to 2-speed occur?

- No →
  - 1 – 2 shift valve malfunction
  - Governor malfunction
- Yes ↓

Does the upshift from 2-speed to 3-speed occur?

- No →
  - 2 – 3 shift valve malfunction
  - Governor malfunction
- Yes ↓

Does the upshift from 3-speed to 4-speed occur? (with throttle valve opening under 85%)

- No →
  - 3 – 4 shift valve malfunction
  - Governor malfunction
  - Overdrive switch or overdrive solenoid malfunction
  - Overdrive control relay malfunction
  - Engine coolant temperature switch malfunction <4G6>
- Yes ↓

Check the shifting points.

- Incorrect →
  - Line pressure malfunction
  - Governor malfunction
  - Incorrect throttle cable adjustment
- Correct ↓

Carry out the TEST 1 again.

TEST 2

Kickdown traveling at 2-speed, 3-speed and 4-speed. Check that possible kickdown vehicle speed limit at 2-speed → 1-speed, 3-speed → 1-speed, 3-speed → 2-speed, or 4-speed → 1-speed, 4-speed → 2-speed, 4-speed → 3-speed conforms with the shift pattern.

- OK → TEST 3
- NG ↓

Does the downshift occur?

- No →
  - Shift valves malfunction
  - Governor malfunction
  - Overdrive switch or overdrive solenoid malfunction
  - Overdrive control relay malfunction
  - Detection switch malfunction
- Yes ↓

Check the shifting point.

- Incorrect →
  - Line pressure malfunction
  - Governor malfunction
  - Detent regulator valve malfunction
- Correct ↓

Carry out TEST 2 again.

TEST 3

When traveling in 3-speed or 4-speed, release accelerator pedal and shift to L. Check that 3-speed → 2-speed or 4-speed → 3-speed takes place immediately and 2-speed → 1-speed downshift conforms with shift pattern.

- OK → TEST 4
- NG ↓

Does the downshift from 2-speed to 1-speed occur?

- No →
  - 1 – 2 shift valve malfunction
  - Governor malfunction
- Yes ↓

Check the Shifting point.

- Incorrect →
  - Incorrect throttle cable adjustment
  - Governor malfunction
  - Line pressure malfunction
  - Low coast modulator valve malfunction
- Correct ↓

Carry out TEST 3 again.

TEST 4

When traveling in 3-speed or 4-speed, shift to 2 and L. Does the engine brake function in each range?

- Yes → TEST 5
- No ↓

Does the engine brake function in 2 range?

- No → Brake No. 1 malfunction
- Yes ↓

Does the engine brake function in L range?

- No → Brake No. 3 malfunction
- Yes ↓

Carry out TEST 4 again.

TEST 5

Is there abnormal noise(s) during acceleration and deceleration? Is there shocks when slipping and changing speed?

- No → TEST 6
- Yes ↓

- High line pressure
- Accumulator malfunction
- Check ball malfunction

→ Carry out TEST 5 again.

TEST 6

Is there abnormal noise(s) or vibration when traveling in 3-speed or 4-speed?

- No → TEST 7
- Yes ↓

- Incorrect torque converter installation
- Oil pump malfunction
- Shifting gear not meshing correctly
- Incorrect drive plate installation

→ Carry out TEST 6 again.

NOTE
Abnormal noises and vibrations are often caused by an unbalanced propeller shaft, differential, tyre, torque converter, engine, etc. Extremely thorough inspection is therefore required.

TEST 7

Check that lock up ON, OFF. Does the shifting points conform with shift pattern?

- Yes → Carry out the road test in 2 range.
- No ↓

Does the moment when lock up turns ON or OFF conform with the shift pattern?

- No →
  - Governor malfunction
  - Line pressure malfunction
- Yes ↓

Does lock up go on, off?

- No →
  - Lock up signal valve malfunction
  - Lock up relay valve malfunction
  - Lock up clutch malfunction
- Yes ↓

Carry out TEST 7 again.

NOTE
(1) Determine the moment when lock up turns ON by decreased engine r/min or by a slight shock back and forth.
(2) Determine the moment when lock up turns OFF by increased engine r/min.
(3) Check lock up condition by pumping the accelerator slightly. If engine r/min rises in accordance with throttle valve opening size, determine that the lock up is OFF, if not, determine it ON.

(When lock up is OFF, drive power is transferred through the fluid in the torque converter and therefore, when the accelerator pedal is depressed, slipping occurs inside the torque converter with a resulting large increase in engine r/min.)

2 RANGE TEST

TEST 1

Start with throttle valve opening at 50% and full. Does the shifting points conform with the shift pattern when upshifting from 1-speed → 2-speed?

- Yes → TEST 2
- No ↓

Does the upshift from 1-speed to 2-speed occur?

- No →
  - 1 – 2 shift valve malfunction
  - Governor malfunction
- Yes ↓

Check the shifting point.

- Incorrect →
  - Misadjusted throttle cable
  - Governor malfunction
  - Line pressure malfunction
- Correct ↓

Carry out TEST 1 again.

TEST 2

Kickdown and check that possible kickdown vehicle speed limit at 2-speed → 1-speed conforms with shift pattern.

- OK → Carry out road test in L range.
- NG ↓

Does the downshift occur and is the shifting point correct?

- No →
  - Detent regulator valve malfunction
  - Governor malfunction
  - Misadjusted throttle cable
  - 1 – 2 shift valve malfunction
  - Line pressure malfunction
- Yes ↓

Carry out TEST 2 again.

L RANGE TEST

TEST 1

Does the transmission upshift to 2-speed?

- Yes →
  - Low coast modulator valve malfunction
  - Governor malfunction
  - Low line pressure
- No ↓

Carry out road test in R range.

R RANGE TEST

TEST 1

Is the engine r/min by stall test correct?

- No →
  - Brake No. 3 malfunction
  - Overdrive clutch or direct clutch malfunction
  - Overdrive one-way clutch malfunction
  - Low line pressure
- Yes ↓

Carry out road test in P range.

P RANGE TEST

TEST 1

Park vehicle on an incline (more than 5°) and release parking and service brakes. Does the vehicle move?

- No →
  - Park mechanism malfunction
  - Misadjusted shift lever
- Yes ↓

End

SHIFT PATTERN

<4G63 engine>

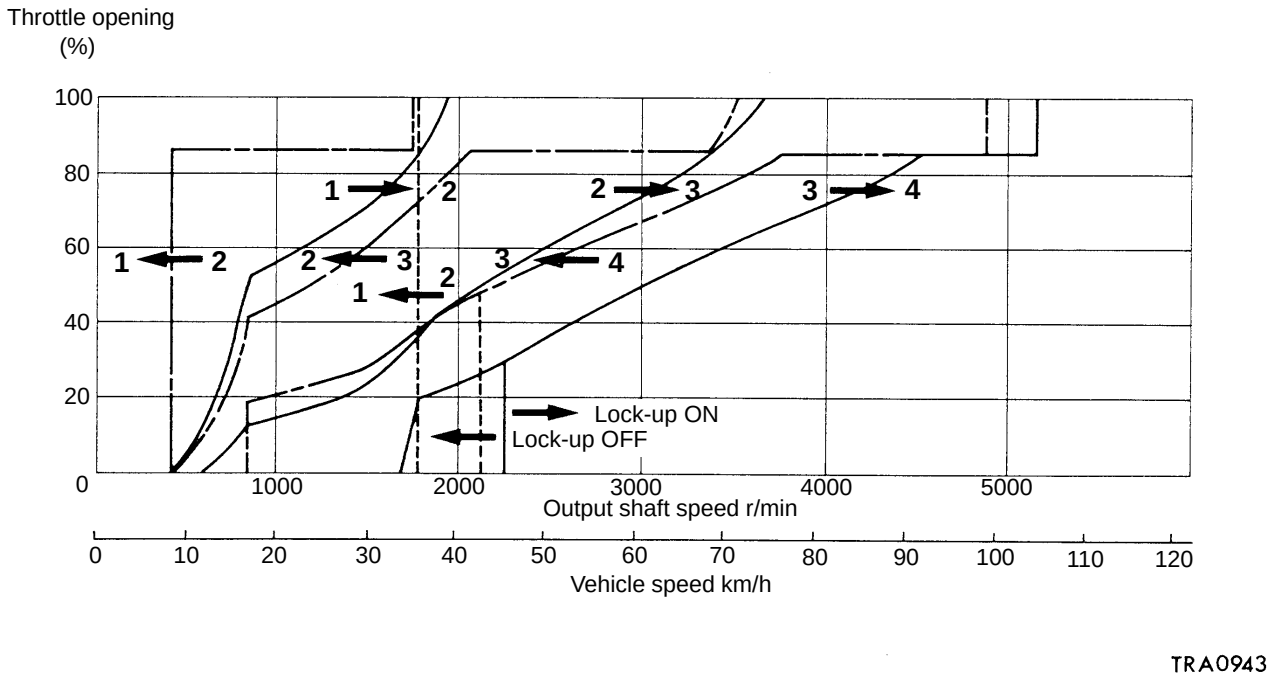

<4D56 engine>

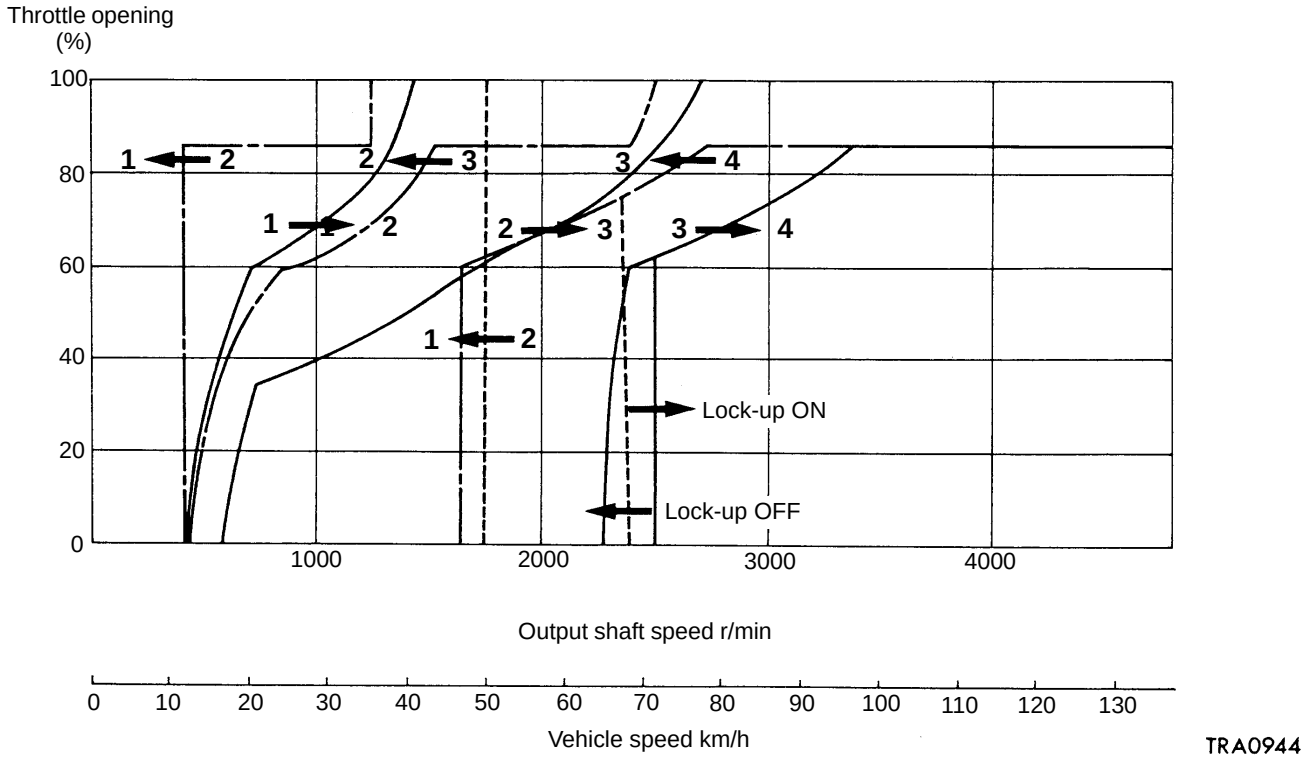

CHECK AT OVERDRIVE CONTROL RELAY

23101130013

Terminal Voltage Reference Table

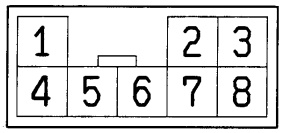

Overdrive control relay connector

TRA0956

Inspection terminal	Inspection item	Check requirement		Standard value
2	Overdrive switch	Ignition switch: ON	Overdrive switch: OFF	System voltage
			Overdrive switch: ON	0 V
3	Ignition switch	Ignition switch: OFF		0 V
		Ignition switch: ON		System voltage
4	Detection switch	Run the vehicle	Throttle valve: constant opening (under 85 %)	System voltage
			Throttle valve: Full opening	0 V
5	Overdrive solenoid valve	Run the vehicle at 50 km/h Overdrive switch: ON	Throttle valve: constant opening (under 85 %)	0 V
			Throttle valve: Full opening	11 V or more
6	Earth	Always		0 V
7	Engine coolant temperature switch	Ignition switch: ON	30°C or lower	System voltage
			60°C or higher	0 V
8	Vehicle speed sensor	Ignition switch: ON Move the vehicle slowly forward		0 V ↔ 5 V (Changes repeatedly)

ON-VEHICLE SERVICE

23100090121

AUTOMATIC TRANSMISSION FLUID CHECK

1. Place the vehicle on a level surface.
2. Before removing the dipstick, wipe all dirt from area around the dipstick.
3. With the selector lever in the “P” position and the parking brake applied, start the engine.
4. The engine should be running at idle and the transmission should be warmed up sufficiently. (fluid temperature 70 – 80°C)
5. Move the selector lever through all positions to fill the torque converter and hydraulic circuit with fluid. Then place the lever in the “N” position.

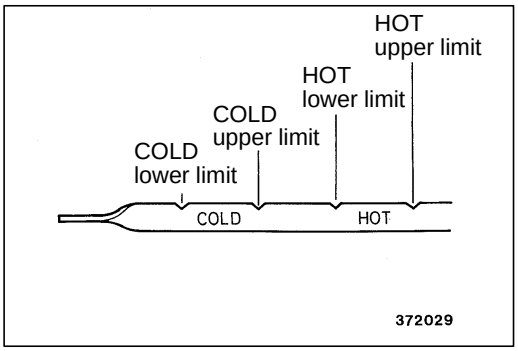

6. Check that fluid level is at oil level gauge “HOT”. If fluid level is low, add fluid to “HOT” level.

   Transmission fluid: DEXRON-II or equivalent

   NOTE
   Low fluid level can allow the oil pump to take in air together with fluid, leading to various troubles. Air trapped in hydraulic circuit forms bubbles which make the fluid spongy. This lowers pressure and shows down pressure buildup. If the transmission has too much fluid, gears churn up foam and cause same conditions as when the fluid level is low, resulting in premature deterioration of ATF. In either case, air bubbles can cause overheating and fluid oxidation and varnishing, which can interfere with normal valve, clutch and servo operation. Foaming can also result in fluid escaping from the transmission vent where it may be mistaken for a fluid leak.
7. Check fluid condition.

   NOTE
   When fluid smells burned, it is contaminated with metal bushing or friction material particles and hence a complete overhaul of the transmission is needed. Be sure to examine fluid on the dipstick closely.
8. After fluid has been checked, insert the dipstick until it is seated fully to seal out water and dirt.

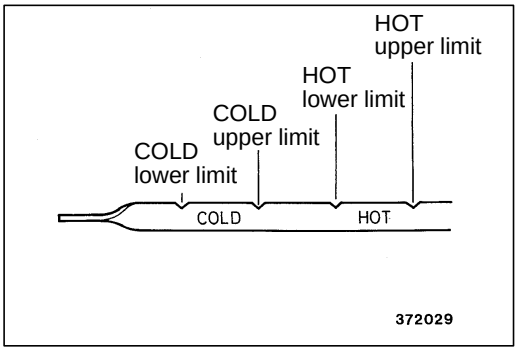

AUTOMATIC TRANSMISSION FLUID CHANGE

23100100145

Caution
If ATF change is required due to damage to the transmission, be sure to clean the cooler system.

(1) Raise the vehicle on hoist. Place a drain container with large opening under the drain plug (located in bottom of the oil pan).
(2) Remove the drain plug to let ATF drain.
(3) Install the drain plug and new gasket and tighten to 20 Nm.
(4) Refill ATF through the oil level gauge hole until its level reached at COLD lower limit of the level gauge.
(5) Start the engine and allow to idle for at least two minutes. Then, with the parking brake and service brake applied, move the selector lever through all positions and finally place in the “N” or “P” position.
(6) After the transmission is warmed up to the normal operating temperature, recheck the fluid level, which must be between the HOT upper limit and HOT lower limit marks.
(7) Insert the dipstick fully to prevent dirt from entering the transmission.

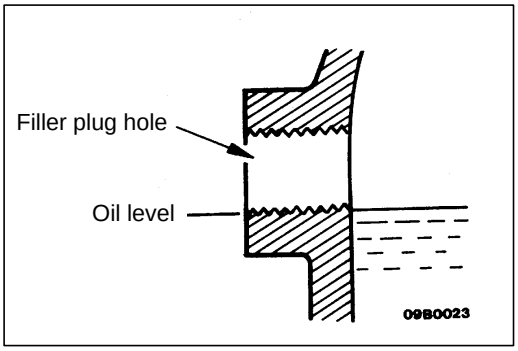

TRANSFER OIL LEVEL CHECK

23100110063

Inspect each component for evidence of leakage, and check the oil level by removing the filler plug. If the oil is contaminated, it is necessary to replace it with new oil.

1. Oil level should be at the lower portion of the filler plug hole.
2. Check that the transmission oil is not noticeably dirty, and that it has a suitable viscosity.

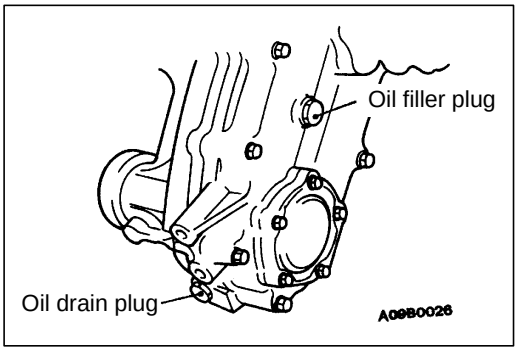

TRANSFER OIL REPLACEMENT

23100120066

1. Remove the oil filler plug and oil drain plug.
2. Drain oil.
3. Tighten the oil drain plug to the specified torque.

   Specified torque: 33 Nm
4. Fill with specified oil till the level comes to the lower portion of the oil filler plug hole.

   Specified transmission oil:
   Hypoid gear oil SAE 75W-90, 75W-85W or 80W conforming to API GL-4

   Quantity: 2.3 ℓ
5. Tighten the oil filler plug to the specified torque.

   Specified torque: 33 Nm

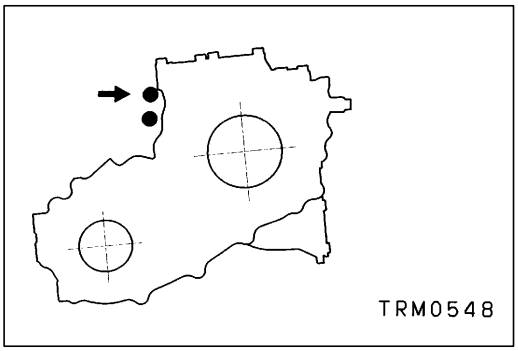

4WD DETECTION SWITCH CONTINUITY CHECK <4WD>

23101110017

Check the continuity between terminals of the black connector indicated in the illustration.

Transfer lever position	Terminal No.	
	1	2
2H		
4H	○———	———○

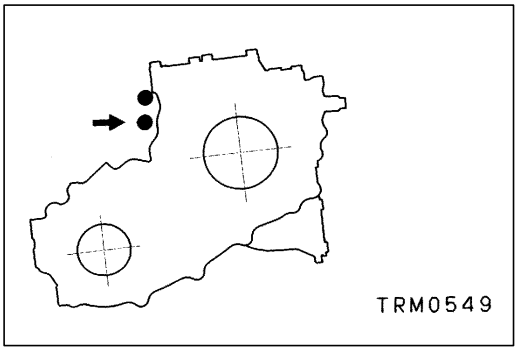

HIGH/LOW DETECTION SWITCH CONTINUITY CHECK <4WD>

23100330025

Check the continuity between terminals of the gray connector indicated in the illustration.

Transfer lever position	Terminal No.	
	1	2
4H	○———	———○
4L	○———	———○
4H – 4L		

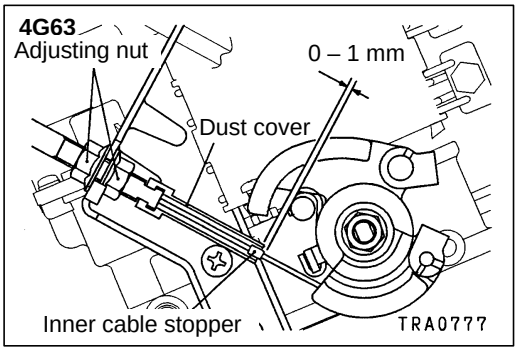

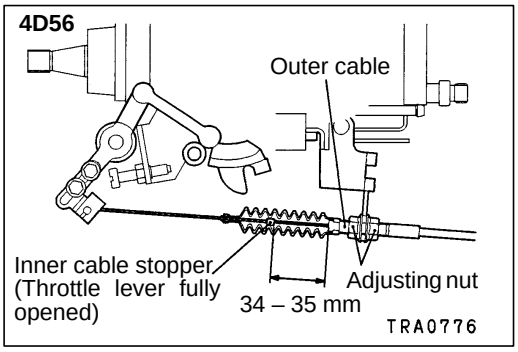

THROTTLE CABLE CHECK AND ADJUSTMENT

23100280047

<4G63>

(1) Check the throttle lever and the bracket for deformation.
(2) Measure the distance between the inner cable stopper and the end of the dust cover when the throttle lever is fully opened.

Standard value: 0 – 1 mm

(3) If the distance is not within the standard value, turn the adjusting nut.

<4D56>

(1) Check throttle lever for defective or bent and the throttle cable bracket for deformation.
(2) Remove the outer cable side of the boot to expose the inner cable stopper.
(3) Pull the throttle lever fully open and measure the distance between the inner cable stopper and the end of the outer cable.

Standard value: 34 – 35 mm

(4) If the distance is not within the standard value, turn the adjusting nut.

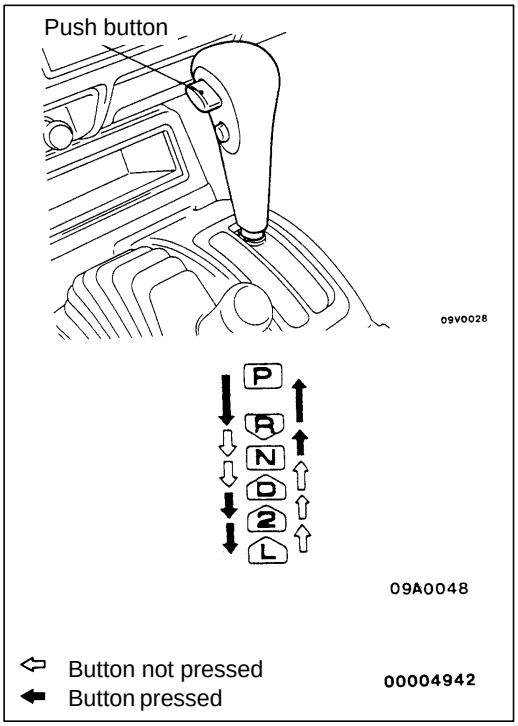

SELECTOR LEVER OPERATION CHECK

23100130038

1. Shift selector lever to each range and check that lever moves smoothly and is controlled. Check the position indicator is correct.
2. Check the selector lever can be moved to each position (by button operation as shown in the illustration).
3. Start the engine and check if the vehicle moves forward when the selector lever is moved from N or D, and moves backward when moved to R.
4. When the shift lever malfunctions, adjust control cable and selector lever sleeve. Check the shift lever assembly sliding parts for worn.

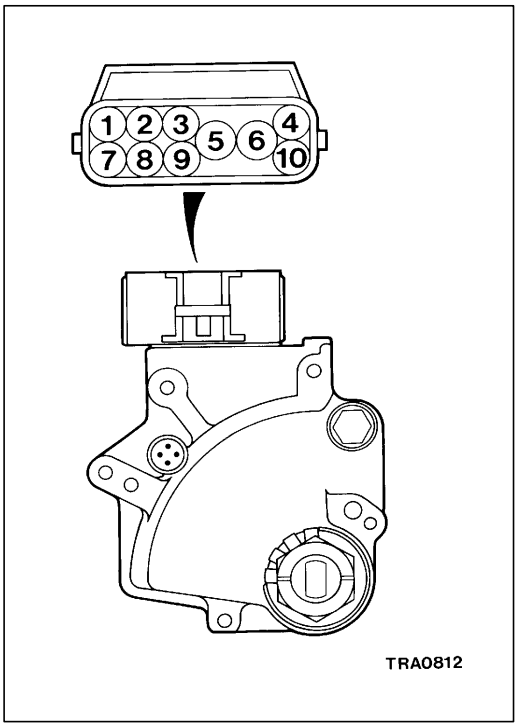

INHIBITOR SWITCH CONTINUITY CHECK

23100140208

Position	Terminal No.									
	1	2	3	4	5	6	7	8	9	10
P	○				○	○				○
R	○								○	
N	○				○	○	○			
D	○							○		
2	○		○							
L	○	○								

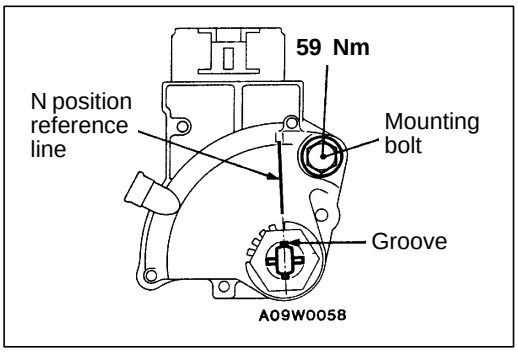

INHIBITOR SWITCH AND CONTROL CABLE ADJUSTMENT

23100150126

1. Shift the manual control lever to the N position.
2. Loosen the inhibitor switch mounting bolt.
3. Turn the inhibitor switch to align the N position reference line on the inhibitor switch with the groove.
4. Tighten the mounting bolt to the specified torque.

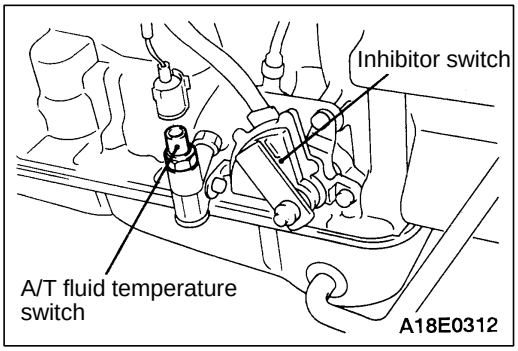

AUTOMATIC TRANSMISSION FLUID TEMPERATURE SWITCH CHECK

23100350038

1. Remove the automatic transmission fluid temperature switch from the transmission.

   Caution
   Use care to prevent foreign materials from entering the automatic transmission fluid temperature switch mounting hole.

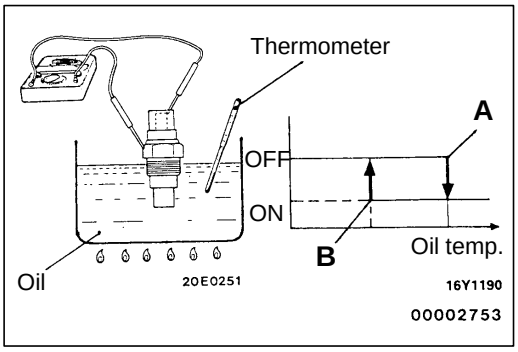

2. Immerse the automatic transmission fluid temperature switch in fluid up to the threaded portion as shown in the illustration.
3. Use a circuit tester or similar tool to check the continuity. The switch can be judged to be good if the conditions are within the following ranges

Item	Temperature
Continuity (temperature at point A)	143 – 151 °C
No continuity (temperature at point B)	125 °C or less

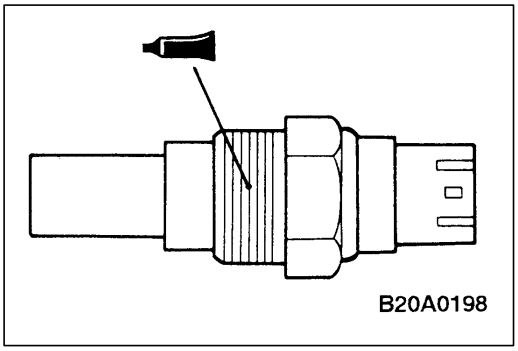

4. Apply a small amount of specified sealant to thread of the automatic transmission fluid temperature switch.

   Specified sealant:
   3M ATD Part No.8660 or equivalent
5. Install the automatic transmission fluid temperature switch.

   Tightening torque: 30 Nm
6. Check the quantity of the automatic transmission fluid.

A/T CONTROL COMPONENT LOCATION

23100860128

Name	Symbol	Name	Symbol
Detection switch	E	Overdrive solenoid valve	F
Engine coolant temperature switch <4G6>	A	Overdrive switch	C
Inhibitor switch	E	Vehicle speed sensor	B
Overdrive control relay	D	–	–

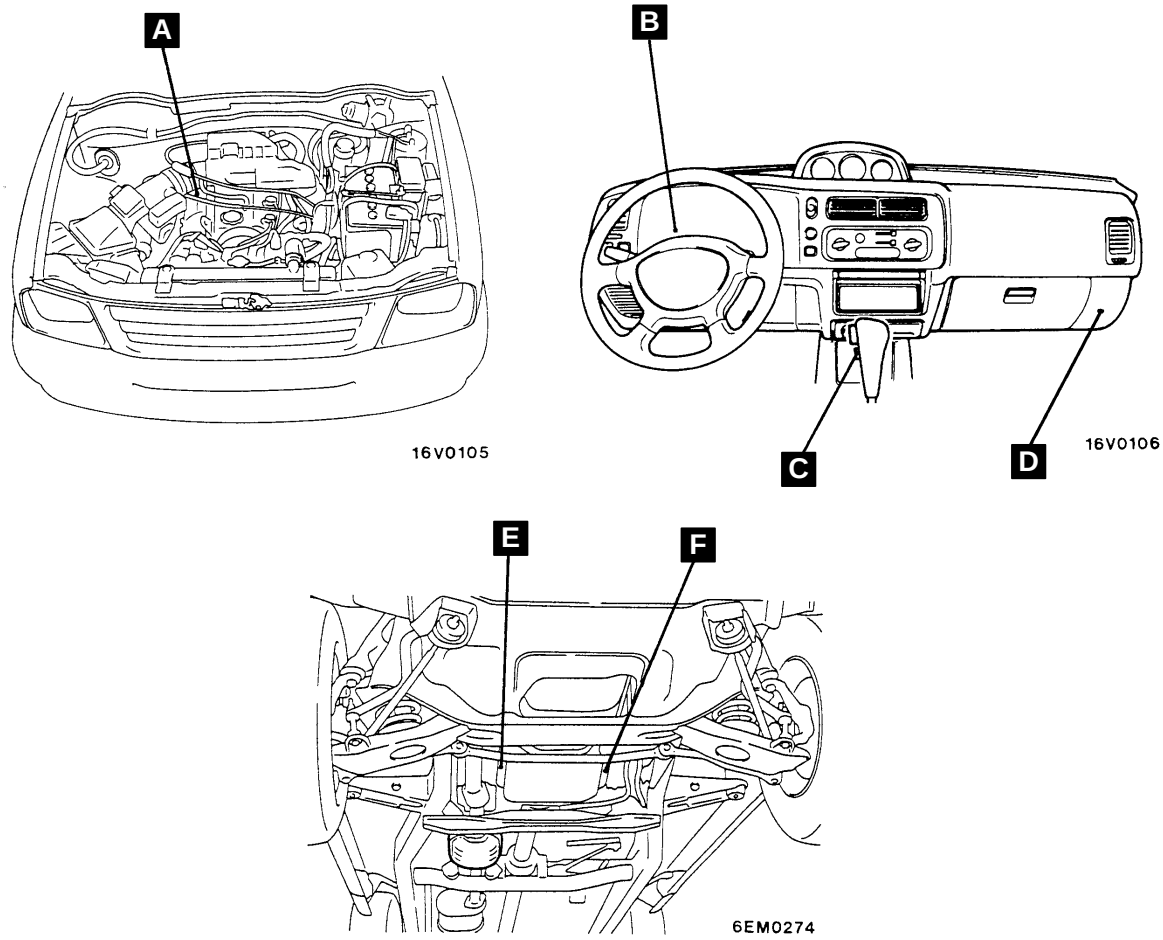

TRA0947

A/T CONTROL COMPONENT CHECK 23100140222

INHIBITOR SWITCH CHECK

Refer to P.23-14.

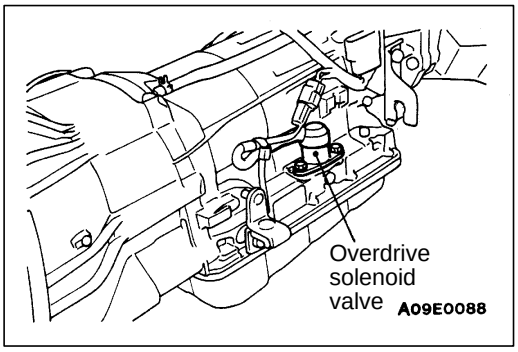

OVERDRIVE SOLENOID VALVE CHECK 23101120010

1. Disconnect the overdrive solenoid valve connector.

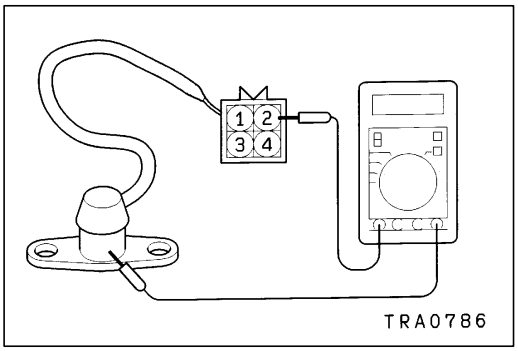

2. Measure the resistance between terminal (2) of the overdrive solenoid valve connector and the body earth.

   Standard value: Approx. 13 Ω
3. If the resistance is not within the standard value, replace the overdrive solenoid valve.

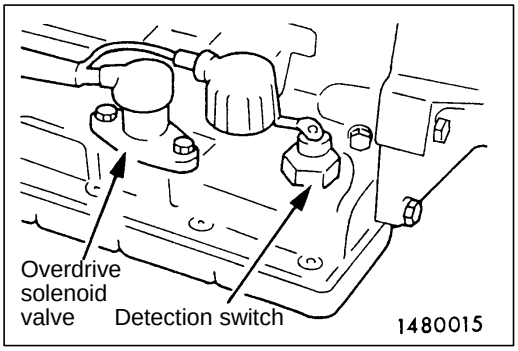

DETECTION SWITCH CHECK 23101140016

1. Remove the detection switch from the transmission case.

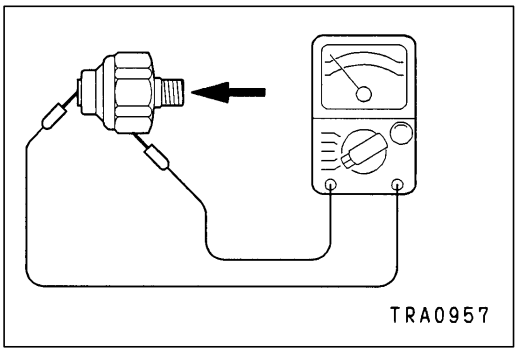

2. While blowing the low-compressed air into the switch, check the continuity between terminal and switch body.

Item	Continuity
Pressure not applied	No continuity (Infinite resistance)
Pressure applied	Continuity (0 Ω)

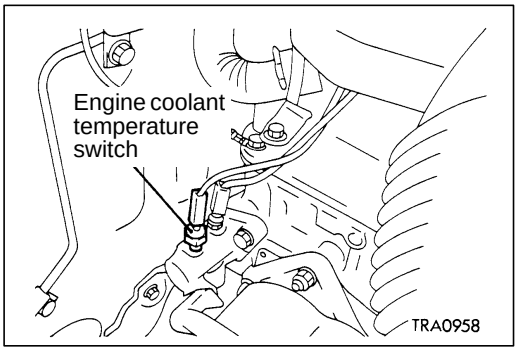

ENGINE COOLANT TEMPERATURE SWITCH 23101020020

1. Disconnect the engine coolant temperature switch connector.

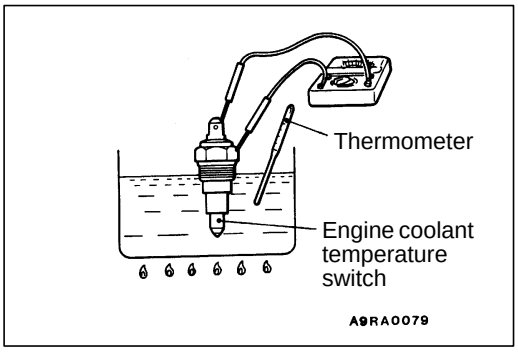

2. Immerse the sensing portion of switch in hot water and check the continuity between the switch connector terminal and the switch body.

   Standard value:

Item	Temperature
On (continuity)	50 ± 3°C
Off (no continuity)	43°C

3. Replace the engine coolant temperature switch if necessary.
4. Apply the specified sealant to the threaded portion and tighten to the specified torque.

   Specified sealant:
   3M Nut Locking Part No.4171 or equivalent

   Tightening torque: 7.4 Nm

VEHICLE SPEED SENSOR CHECK 23100460137

Refer to GROUP 54 – On-vehicle Service.

OVERDRIVE SWITCH CHECK 23100380143

Refer to P.23-26.

CONVERTER STALL TEST

23100540138

In this test, the engine maximum speed when the torque converter stalls with the shift lever in the "D" or "R" range is measured to check operation of the torque converter, starter and one-way clutch and check holding performance of the transmission clutch (including brake).

Caution
Do not stand in front or at rear of the vehicle during this test.

(1) Check the transmission fluid level. The fluid temperature should be at the level after normal operation (70 – 80°C). The engine coolant temperature should also be at the level after normal operation (80 – 90°C).
(2) Apply chocks to the rear wheels (right and left).
(3) Mount an engine tachometer.
(4) Apply fully the parking and service brakes.
(5) Start the engine.
(6) With the selector lever in the "D" range, fully depress the accelerator pedal and read off the engine maximum speed.

Standard value:
2,100 – 2,400 r/min <4G63>
2,300 – 2,600 r/min <4D56>

NOTE
When doing so, do not keep the engine running with throttle full open for more than 5 seconds. If two or more stall tests are needed, place the selector lever in the "N" position and run the engine at about 1,000 r/min to allow the transmission fluid to cool before another stall test.

(7) Place the selector lever in the "R" range and perform the test as above.

JUDGEMENT OF STALL TEST RESULTS

Stall speed in "D" and "R" range is equal to each other but lower than the nominal value.	(1) Engine output is low. (2) Starter one-way clutch is faulty. (Faulty torque converter is suspected if it is lower than nominal by more than 600 r/min)
Stall speed in "D" range is higher than nominal.	(1) Overdrive clutch slipping (2) Overdrive one-way clutch faulty (3) Forward clutch slipping (4) One-way clutch No. 2 faulty (5) Low line pressure
Stall speed in "R" range is higher than nominal.	(1) Overdrive clutch slipping (2) Overdrive one-way clutch faulty (3) Direct clutch slipping (4) Brake No. 3 slipping (5) Low line pressure

HYDRAULIC PRESSURE TEST

23100550131

The hydraulic pressure tests (governor pressure and line pressure tests) are important in determining the causes of transmission failures. Before conducting these tests, fluid level and condition and throttle cable adjustment, etc. must be checked for defects or abnormalities. When conducting the tests, the engine and transmission should be at correct operating temperatures, (engine coolant 80 – 90°C, transmission fluid 70 – 80°C.)

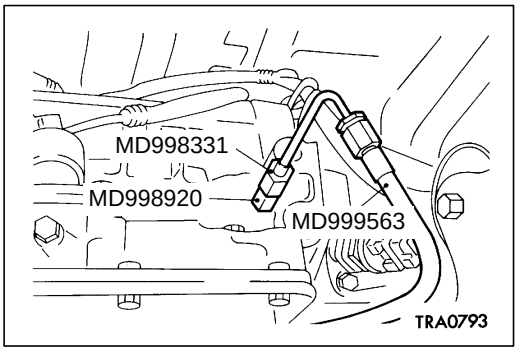

GOVERNOR PRESSURE TEST

(1) Place vehicle on a chassis dynamometer.
(2) Remove plug from governor pressure take off port.
(3) Install special tool as shown in figure and place the meter inside vehicles.
(4) Apply parking brake.
(5) Start engine.
(6) Release parking brakes.
(7) Shift to D and measure governor pressure at each output shaft r/min.

Standard value:

Output shaft speed r/min	Governor pressure kPa
1,000	137 – 166
2,000	245 – 284
3,200	402 – 460

JUDGEMENT BY GOVERNOR PRESSURE

Governor pressure is not within the standard value	• Line pressure malfunction • Oil leak in governor circuit • Governor malfunction

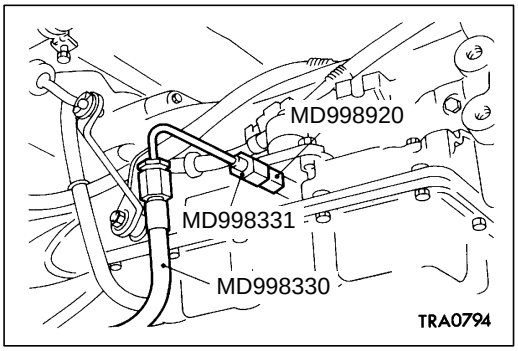

LINE PRESSURE TEST

(1) Place the vehicle on a chassis dynamometer.
(2) Remove the plug from the line pressure take off port.
(3) Install special tool as shown in the figure and place the meter inside vehicle.
(4) Apply the parking brake.
(5) Start the engine.
(6) Place the selector lever in the “D” range.
(7) Depress the brake pedal firmly by the left foot and operate the accelerator pedal by the right foot to measure the line pressure at each engine r/min. If the measured pressure is not nominal, check adjustment of the throttle cable and readjust if necessary before conducting the test again.
(8) Place the selector lever in the “R” range and test as above. When measuring the hydraulic pressure for reverse, change the oil-pressure gauge to 3,000 kPa.

Standard value:

Items		Line pressure kPa	
		“D” range	“R” range
At idle	4G63	480 – 558	735 – 852
	4D56	441 – 500	608 – 686
At stall	4G63	1019 – 1195	1519 – 1911
	4D56	1098 – 1294	1470 – 1863

JUDGEMENT BY LINE PRESSURE

Hydraulic pressure higher than nominal in all ranges	(1) Regulator valve faulty (2) Throttle valve faulty (3) Throttle control cable incorrectly adjusted
Hydraulic pressure lower than nominal in all ranges	(1) Oil pump faulty (2) Regulator valve faulty (3) Throttle valve faulty (4) Throttle control cable incorrectly adjusted (5) Overdrive clutch faulty
Hydraulic pressure lower than nominal in “D” range	(1) Large fluid leaks in “D” range hydraulic circuit (2) Forward clutch faulty (3) Overdrive clutch faulty
Hydraulic pressure lower than nominal in “R” range	(1) Large fluid leaks in “R” range hydraulic circuit (2) Brake No. 3 faulty (3) Direct clutch faulty (4) Overdrive clutch faulty

HYDRAULIC CIRCUIT

23100880100

N (NEUTRAL)

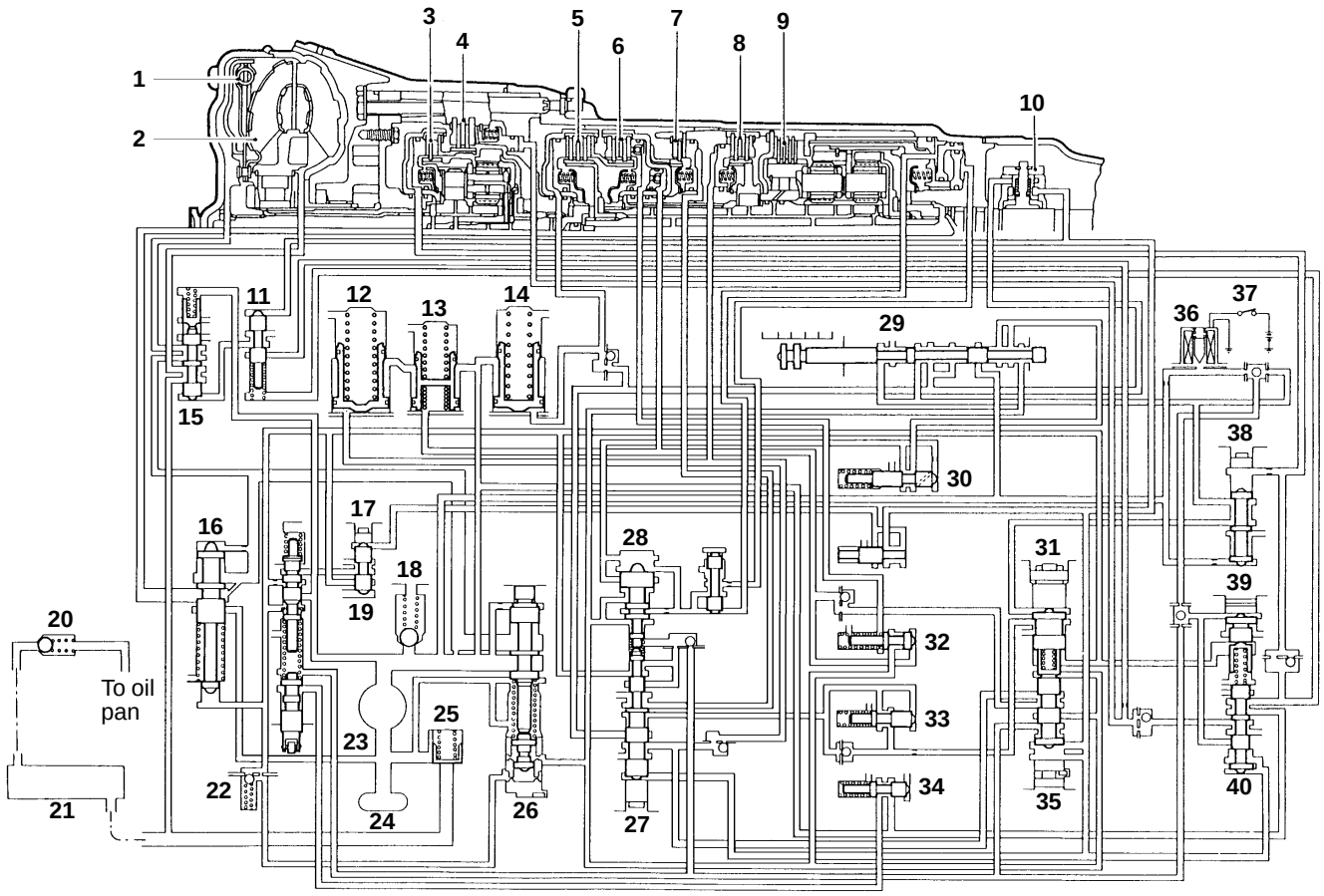

ATRA0215

1. Lock-up clutch
2. Torque converter
3. Overdrive clutch
4. Overdrive brake
5. Forward clutch
6. Direct clutch
7. Brake No. 1
8. Brake No. 2
9. Brake No. 3
10. Governor
11. Lock-up signal valve
12. Accumulator B2
13. Accumulator C2
14. Accumulator C3
15. Lock-up relay valve
16. Secondary regulator valve
17. Cut-back valve
18. Relief valve
19. Throttle valve
20. Check valve
21. Oil cooler
22. Damping check valve
23. Oil pump
24. Strainer
25. Cooler bypass valve
26. Primary regulator valve
27. 1-2 shift valve
28. Low-coast shift valve
29. Manual valve
30. Low coast modulator valve
31. Intermediate shift valve
32. Reverse clutch sequence valve
33. Intermediate modulator valve
34. Detent regulator valve
35. 2-3 shift valve
36. Overdrive solenoid valve
37. Overdrive switch
38. D-2 down timing valve
39. 3rd-coast shift valve
40. 3-4 shift valve

TRANSMISSION CONTROL

23100660162

REMOVAL AND INSTALLATION

Pre-removal and Post-installation Operation
- Front Floor Console Removal and Installation (Refer to GROUP 52A.)

Caution: SRS
Be careful not to subject the SRS diagnosis unit to any shocks during removal and installation of the selector lever assembly.

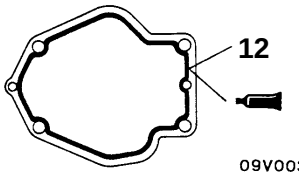

Sealant:
3M ATD Part No.8661 or equivalent

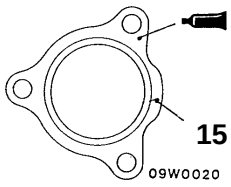

Apply sealant to contact surface with transfer control lever

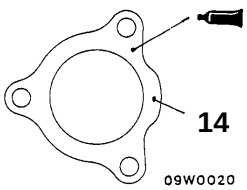

Apply sealant to both sides

Sealant:
3M ATD Part No.8661 or equivalent

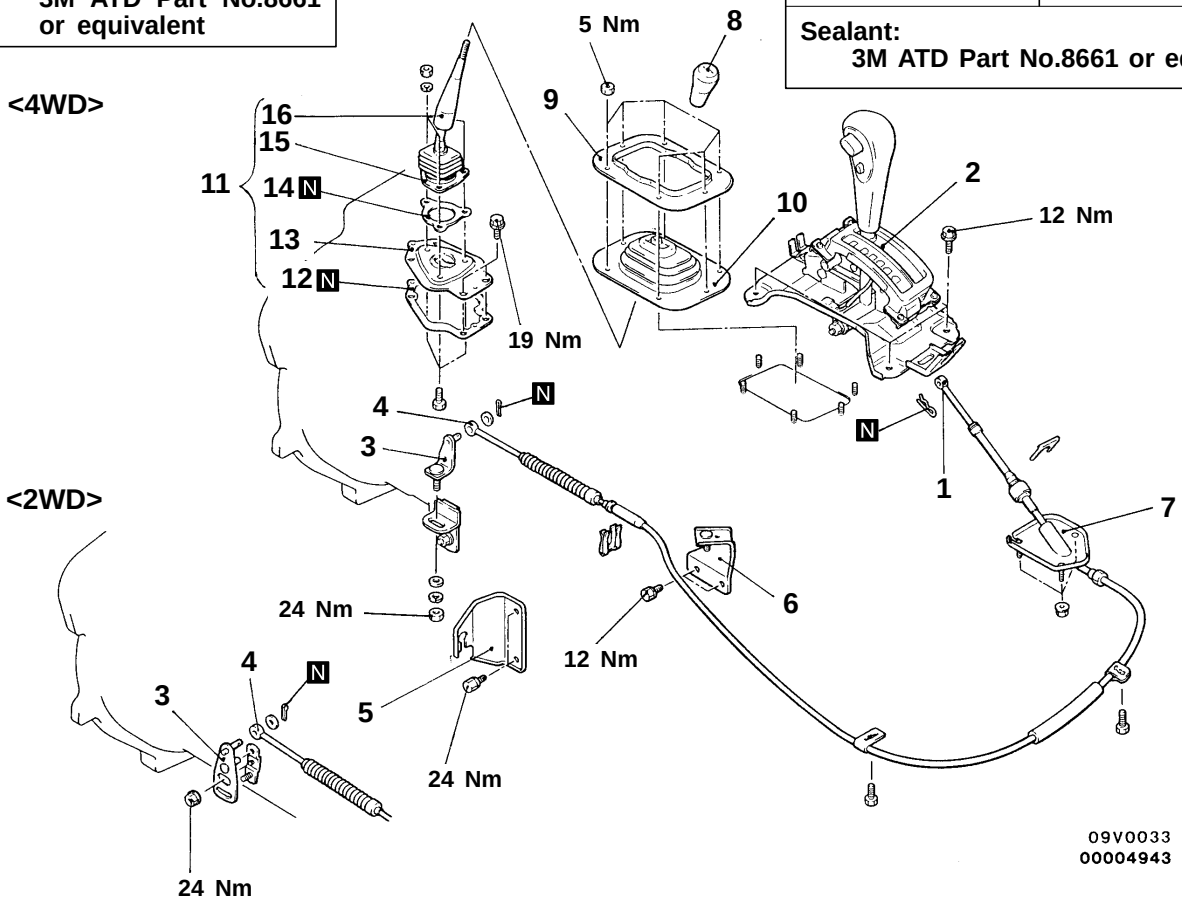

Selector lever assembly removal steps

1. Transmission control cable connection (selector lever side)
2. Selector lever assembly

Transmission control cable assembly removal steps

- Rear console assembly (Refer to GROUP 52A.)

1. Transmission control cable connection (selector lever side)
3. Transmission control upper lever
4. Transmission control cable connection (transmission side)
5. Cable end bracket
6. Cable bracket <4WD>
7. Transmission control cable assembly

Transfer lever assembly removal steps

8. Transfer shift knob
9. Retainer

▶A◀ 10. Dust cover
11. Transfer control lever assembly
12. Gasket
13. Stopper plate
14. Gasket
15. Spring cover support
16. Transfer control lever

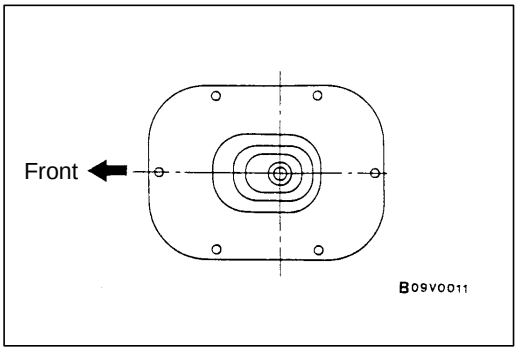

INSTALLATION SERVICE POINT

▶A◀ DUST COVER INSTALLATION

Install the dust cover as shown in the illustration.

SELECTOR LEVER ASSEMBLY

23100680106

DISASSEMBLY AND REASSEMBLY

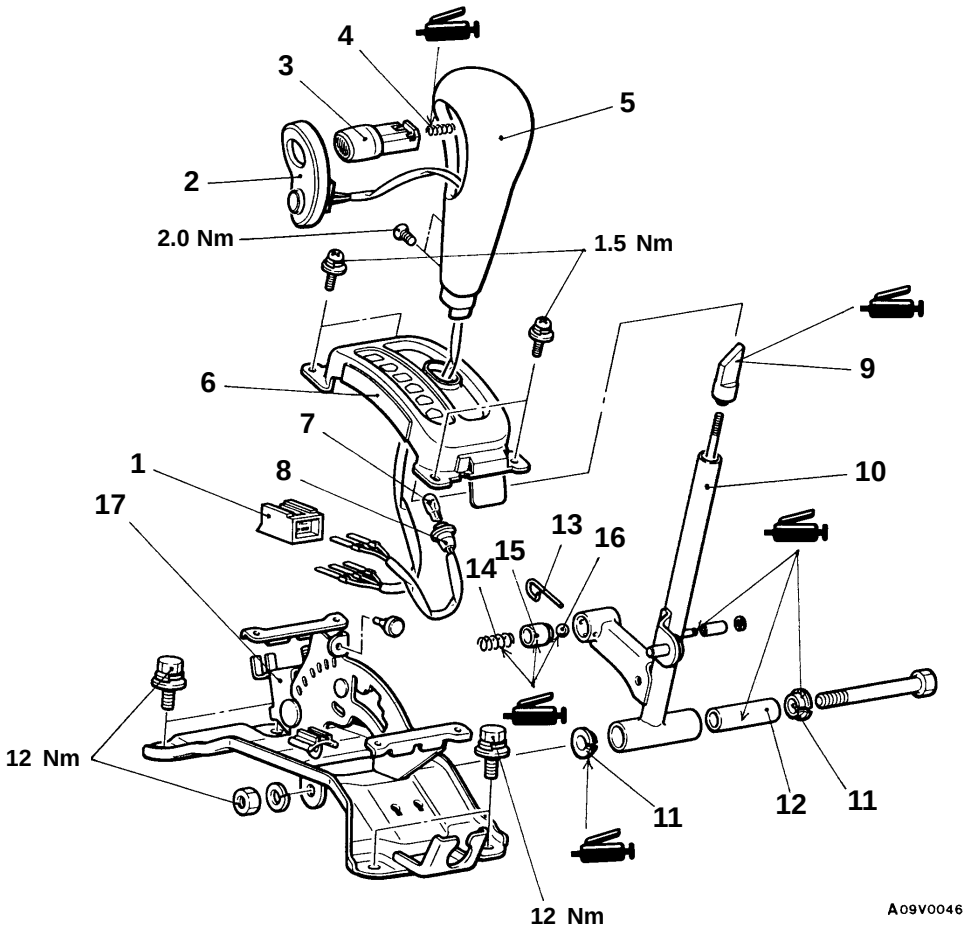

Removal steps

◀A▶ 1. Overdrive switch and indicator lamp connector
2. Overdrive switch
3. Button
4. Spring
▶B◀ 5. Shift knob
6. Indicator panel assembly
7. Bulb
8. Position indicator socket assembly
▶A◀ 9. Sleeve
10. Lever assembly
11. Shift bushing
12. Collar
13. Pin
14. Spring
15. Ball support
16. Ball
17. Bracket

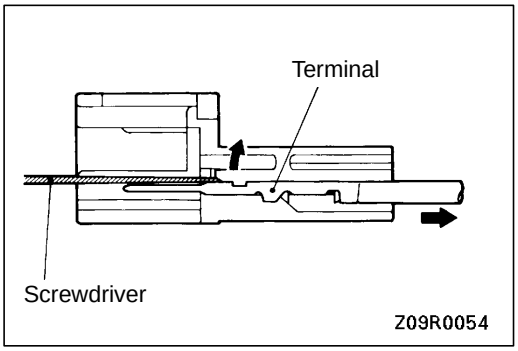

DISASSEMBLY SERVICE POINT

◀A▶ OVERDRIVE SWITCH AND INDICATOR LAMP CONNECTOR REMOVAL

Disconnect the connector and remove the terminal from the connector.

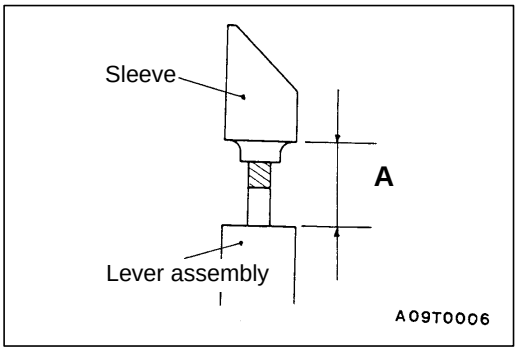

REASSEMBLY SERVICE POINTS

▶A◀ SLEEVE INSTALLATION

Shift the selector lever to the N position, and then turn the sleeve so that the clearance between the sleeve and lever assembly end is within the standard value.

Standard value (A): 16.0 – 16.8 mm

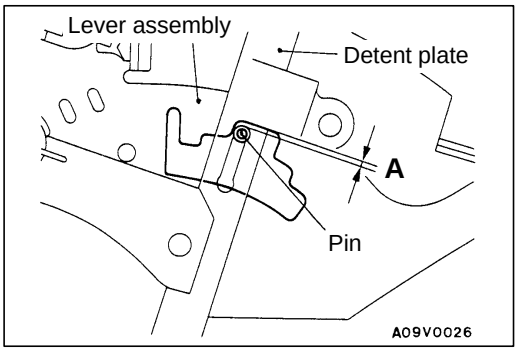

▶B◀ SHIFT KNOB INSTALLATION

Shift the selector lever to the N position, and then turn the sleeve so that the clearance between the detent plate and pin is within the standard value.

Standard value (A): 0.1 – 0.9 mm

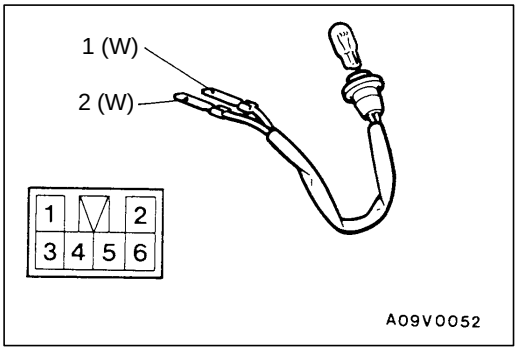

INSPECTION

23101100014

POSITION INDICATOR LAMP CHECK

Terminal No.	1	2
Always	○———	———○

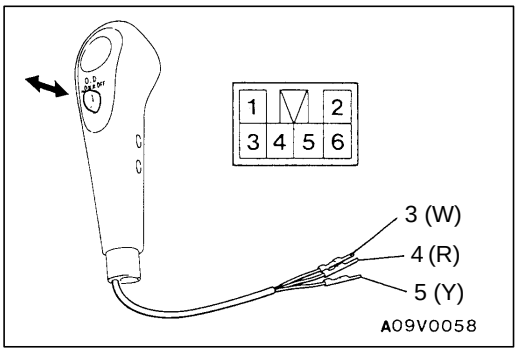

OVERDRIVE SWITCH CHECK

23100380129

Switch position	Terminal No.		
	3	4	5
ON (Overdrive activation)	○———	———○	
OFF (Overdrive non-activation)	○———		———○

TRANSMISSION ASSEMBLY <2WD>

23100570168

REMOVAL AND INSTALLATION

Pre-removal Operation
(1) Selector Lever Removal (Refer to P.23-23.)
(2) Transmission Fluid Draining (Refer to P.23-11.)
(3) Propeller Shaft Removal (Refer to GROUP 25.)

Post-installation Operation
(1) Propeller Shaft Installation (Refer to GROUP 25.)
(2) Transmission Fluid Filling (Refer to P.23-11.)
(3) Selector Lever Installation (Refer to P.23-23.)
(4) Selector Lever Operation Check (Refer to P.23-14.)
(5) Speedometer Operation Check

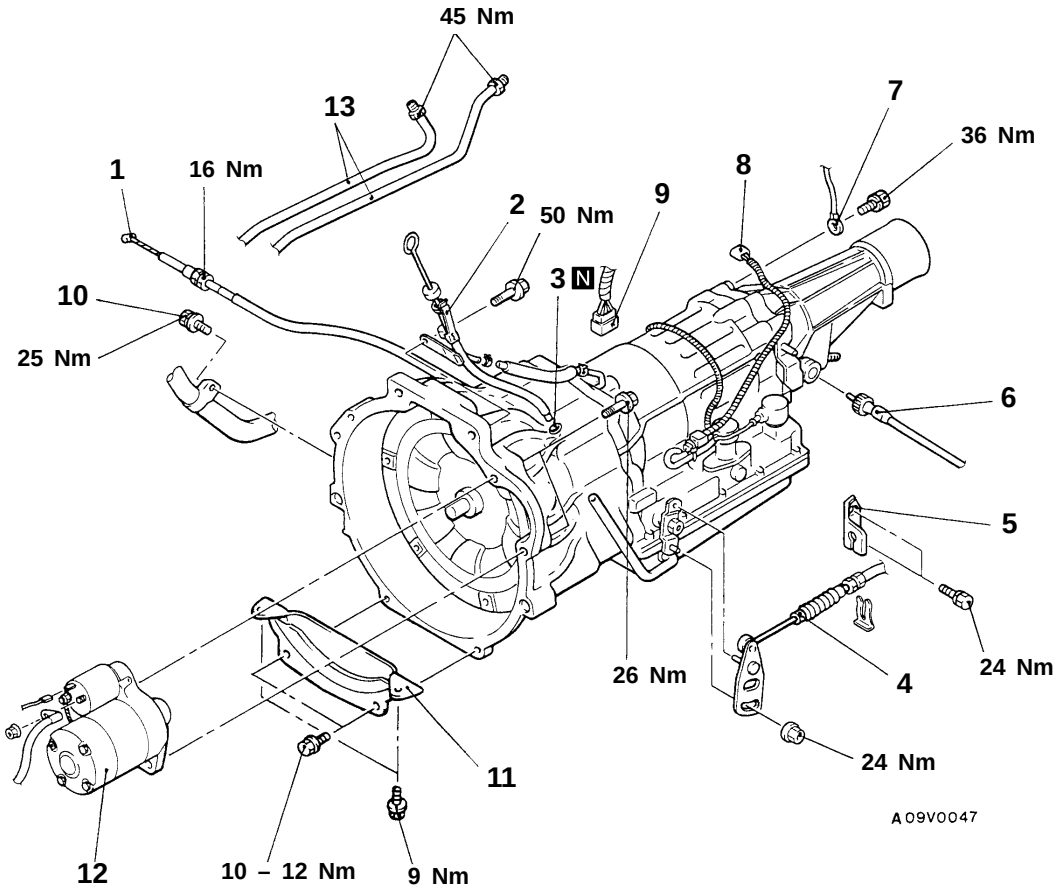

Removal steps

▶B◀ 1. Throttle cable connection
2. Filler tube assembly
3. O-ring
4. Transmission control cable connection
5. Cable end bracket
6. Speedometer cable connection
7. Earth cable
8. Overdrive solenoid valve connector
9. Inhibitor switch connector
10. Exhaust pipe clamp mounting bolt
11. Bell housing cover
12. Starter motor
13. Transmission oil cooler tube connection

◀A▶

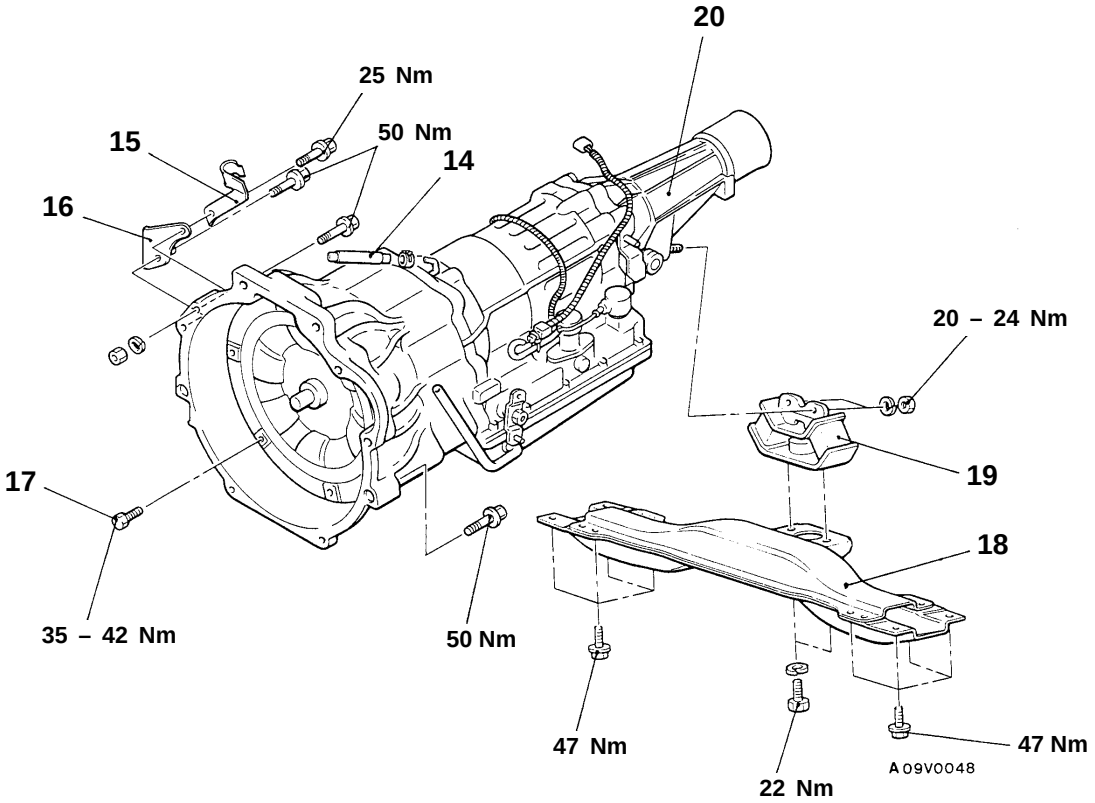

14. Breather hose
15. Throttle cable clamp
16. Exhaust pipe clamp bracket
◀B▶ 17. Torque converter and drive plate connection bolt
- Support the transmission with a transmission jack
18. No.2 crossmember
19. Rear engine support insulator
▶A◀ 20. Transmission assembly

REMOVAL SERVICE POINTS

◀A▶ STARTER MOTOR REMOVAL

Remove the starter motor with the starter motor harnesses still connected, and secure it inside the engine compartment.

◀B▶ TORQUE CONVERTER AND DRIVE PLATE CONNECTION BOLTS REMOVAL

1. Remove the connection bolts (6 places) while turning the crankshaft.
2. Press in the torque converter to the transmission side so the torque converter does not remain on the engine side.

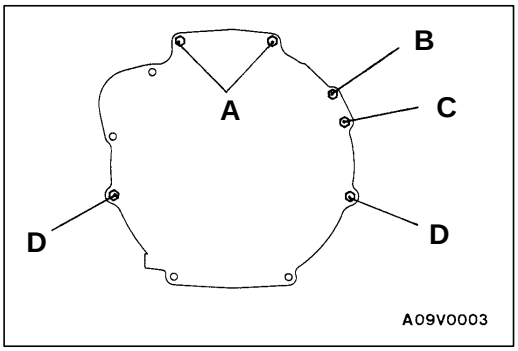

INSTALLATION SERVICE POINTS

▶A◀ TRANSMISSION ASSEMBLY INSTALLATION

The sizes of the mounting bolts are different. So be sure not to confuse them.

Bolt	Diameter x Length mm
A	10 x 40
B	8 x 55
C	10 x 60
D	10 x 65

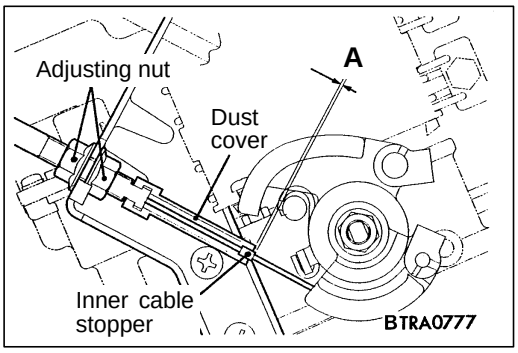

▶B◀ THROTTLE CABLE INSTALLATION

After installing the throttle cable, adjust it by the following procedure.

(1) Open the throttle lever completely and adjust the cable with the adjusting nut so that the distance between the inner cable stopper and the outer cable end is at the standard value.

Standard value (A): 0 – 1 mm

(2) Tighten the adjusting nut to the specified torque.

TRANSMISSION ASSEMBLY <4WD>

23100630033

REMOVAL AND INSTALLATION

Pre-removal Operation
(1) Selector Lever and Transfer Control Lever Removal (Refer to P.23-23.)
(2) Transfer Case Protector Removal
(3) Transmission Fluid Draining (Refer to P.23-11.)
(4) Transfer Oil Draining (Refer to P.23-12.)
(5) Front and Rear Propeller Shaft Removal (Refer to GROUP 25.)

Post-installation Operation
(1) Front and Rear Propeller Shaft Installation (Refer to GROUP 25.)
(2) Transfer Oil Filling (Refer to P.23-12.)
(3) Transmission Fluid Filling (Refer to P.23-11.)
(4) Transfer Case Protector Installation
(5) Selector Lever and Transfer Control Lever Installation (Refer to P.23-23.)
(6) Selector Lever Operation Check (Refer to P.23-14.)
(7) Speedometer Operation Check

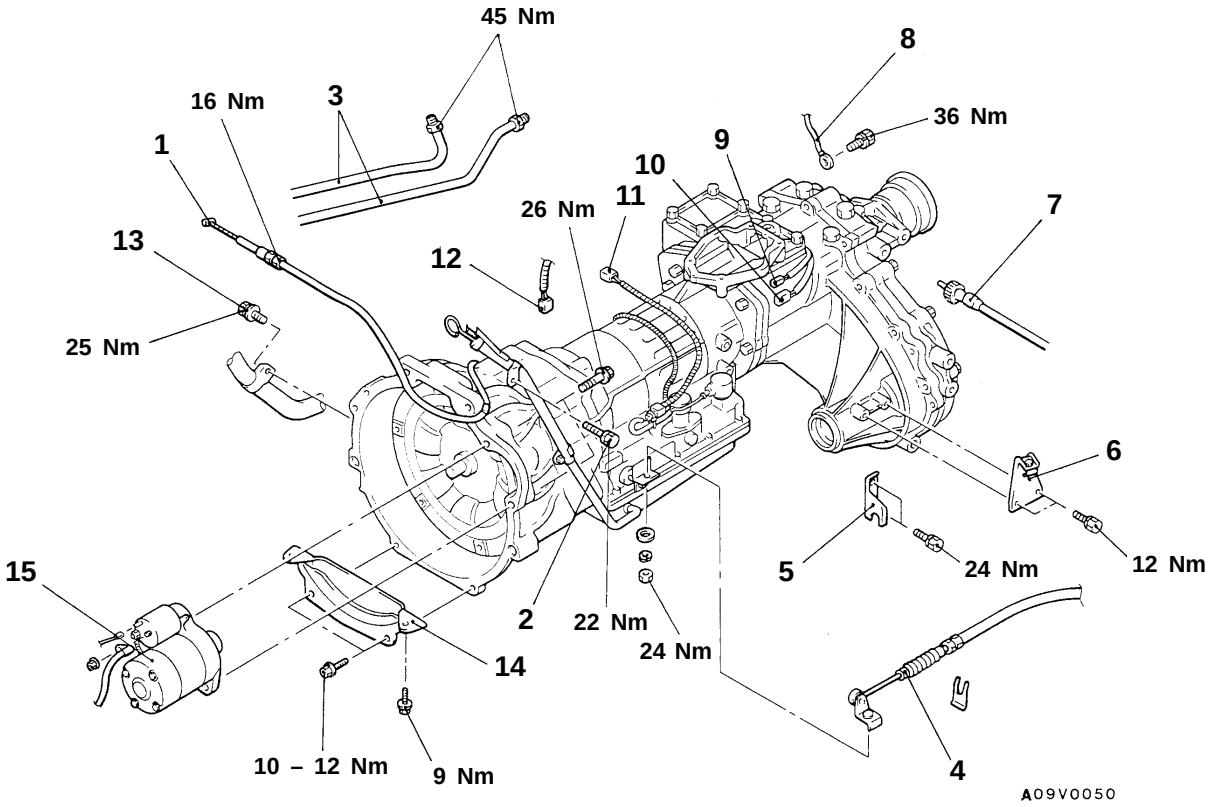

Removal steps

▶B◀ 1. Throttle cable connection
2. Filler tube assembly mounting bolt
3. Oil cooler tube connection
4. Transmission control lever connection
5. Cable end bracket
6. Cable bracket
7. Speedometer cable connection
8. Earth cable
9. 4WD detection switch connector
10. High/Low detection switch connector
11. Overdrive solenoid valve connector
12. Inhibitor switch connector
13. Exhaust pipe clamp mounting bolt
14. Bell housing cover
15. Starter motor

◀A▶

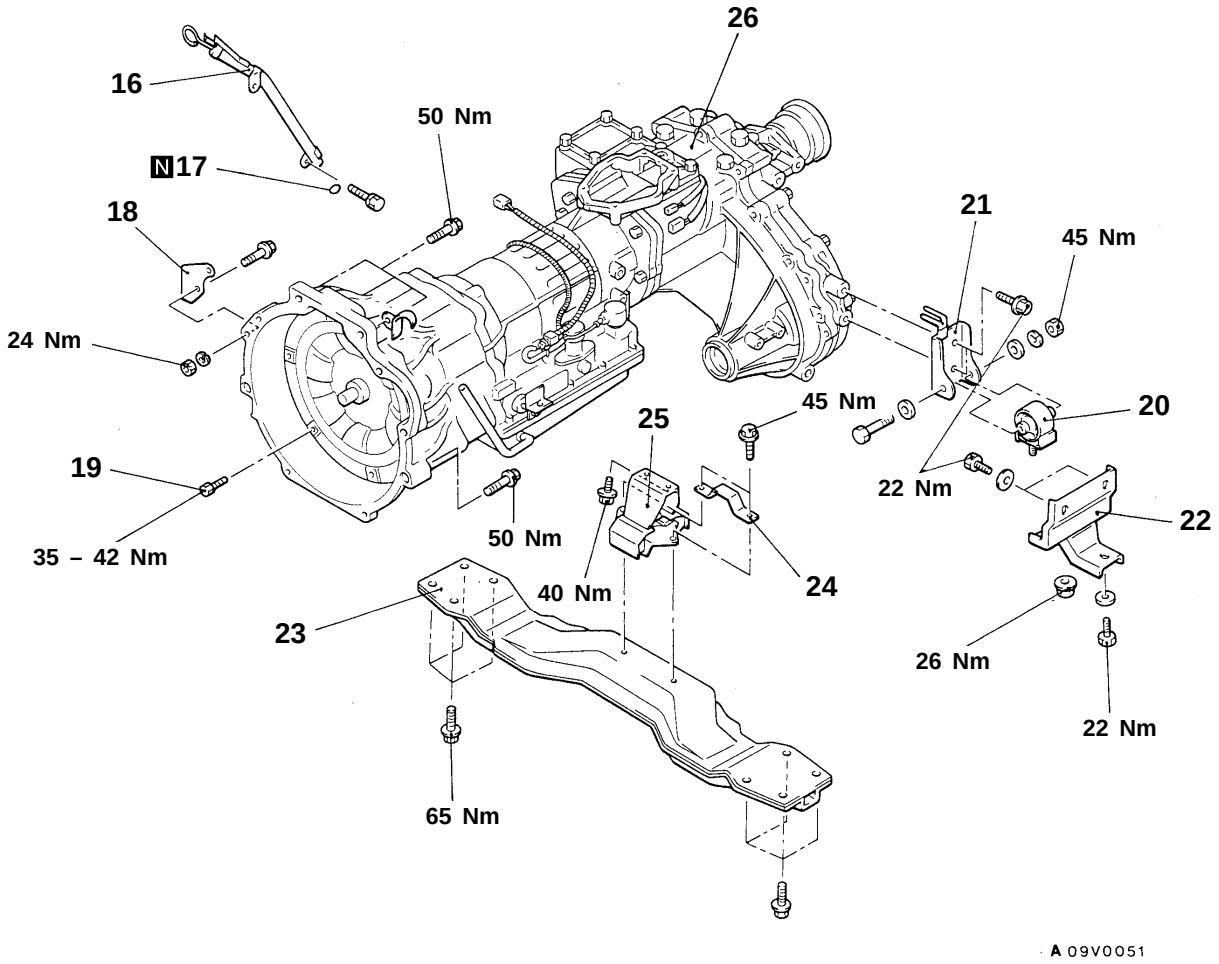

16. Filler tube assembly
17. O-ring
18. Exhaust pipe clamp bracket
◀B▶ 19. Torque converter and drive plate connection bolt
- Support the transmission with a transmission jack

20. Transfer roll stopper
21. Transfer mount bracket
22. Transfer support bracket
23. No.2 crossmember
24. Stopper
25. Rear engine support insulator
▶A◀ 26. Transmission assembly

REMOVAL SERVICE POINTS

◀A▶ STARTER MOTOR REMOVAL

Remove the starter motor with the starter motor harnesses still connected, and secure it inside the engine compartment.

◀B▶ TORQUE CONVERTER AND DRIVE PLATE CONNECTION BOLTS REMOVAL

1. Remove the connection bolts (6 places) while turning the crankshaft.
2. Press in the torque converter to the transmission side so the torque converter does not remain on the engine side.

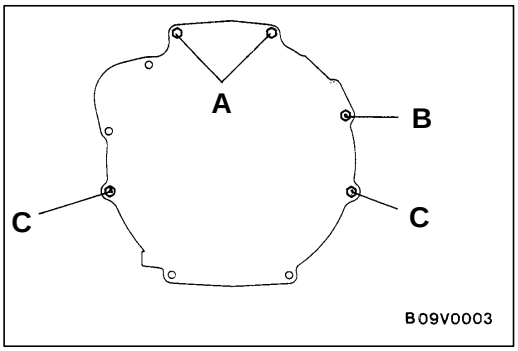

INSTALLATION SERVICE POINTS

▶A◀ TRANSMISSION ASSEMBLY INSTALLATION

The sizes of the mounting bolts are different. So be sure not to confuse them.

Bolt	Diameter x Length mm
A	10 x 40
B	10 x 55
C	10 x 65

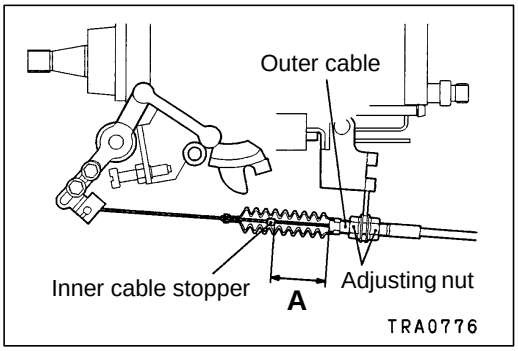

▶B◀ THROTTLE CABLE INSTALLATION

After installing the throttle cable, adjust it by the following procedure.

(1) Pull out the cable from the boot outer cable side until the inner cable stopper can be seen.

(2) Open the throttle lever completely and adjust the cable with the adjusting nut so that the distance between the inner cable stopper and the outer cable end is at the standard value.

Standard value (A): 34 – 35 mm

(3) Tighten the adjusting nut to the specified torque.

4WD INDICATOR-ECU

23101090014

REMOVAL AND INSTALLATION

Refer to GROUP 22.

TRANSMISSION OIL COOLER

23100700017

REMOVAL AND INSTALLATION

Pre-removal and Post-installation Operation
(1) Radiator Grille Removal and Installation (Refer to GROUP 51.) <4WD>
(2) Transmission Fluid Draining and Supplying (Refer to P.23-11.)
(3) Skid Plate, and Front Under Cover Removal and Installation

<2WD>

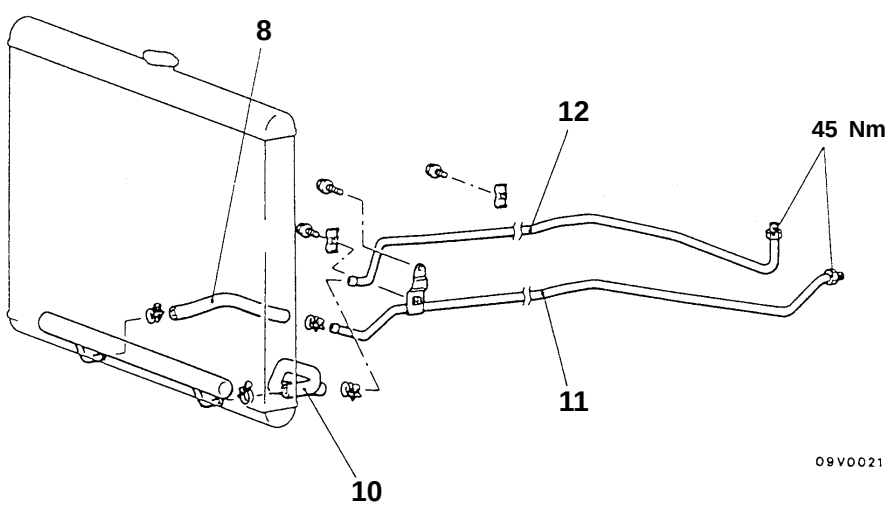

<4WD>

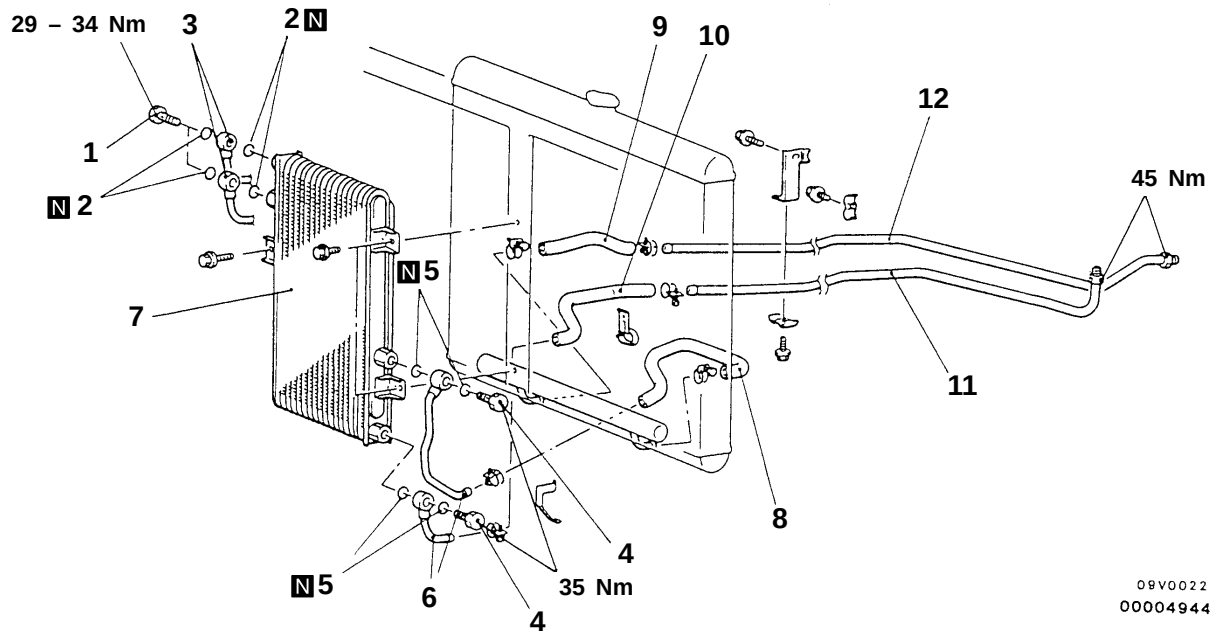

Removal steps

1. Eye bolt (for engine oil cooler)
2. Gasket (for engine oil cooler)
3. Engine oil cooler tube assembly connection
4. Eye bolt (for transmission oil cooler)
5. Gasket
6. Transmission oil cooler tube assembly connection
7. Oil cooler assembly
8. Return hose (A)
9. Return hose (B)
10. Feed hose
11. Return tube
12. Feed tube

GROUP 23
AUTOMATIC TRANSMISSION

GENERAL

OUTLINE OF CHANGE(S)

The hose clips have been modified. Therefore, service procedure has been added.

TRANSMISSION OIL COOLER

REMOVAL AND INSTALLATION

Pre-removal and Post-installation Operation
- Radiator Grille Removal and Installation (Refer to GROUP 51.) <4WD>
- Transmission Fluid Draining and Supplying
- Skid Plate, and Front Under Cover Removal and Installation

<2WD>

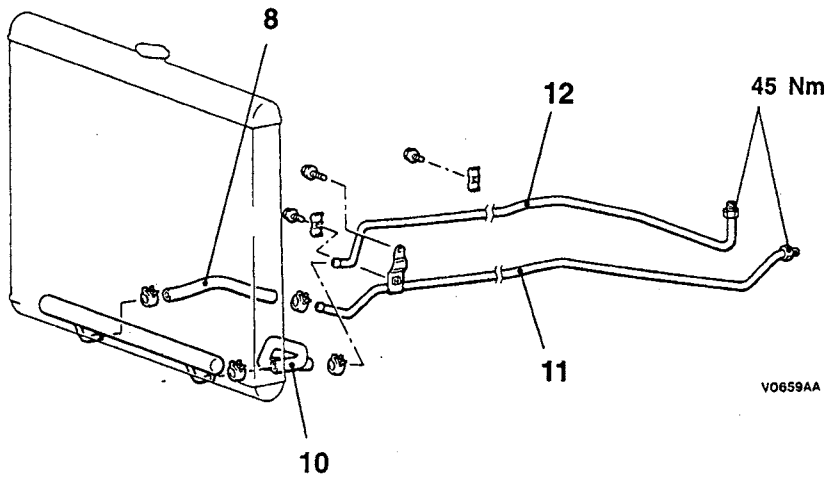

<4WD>

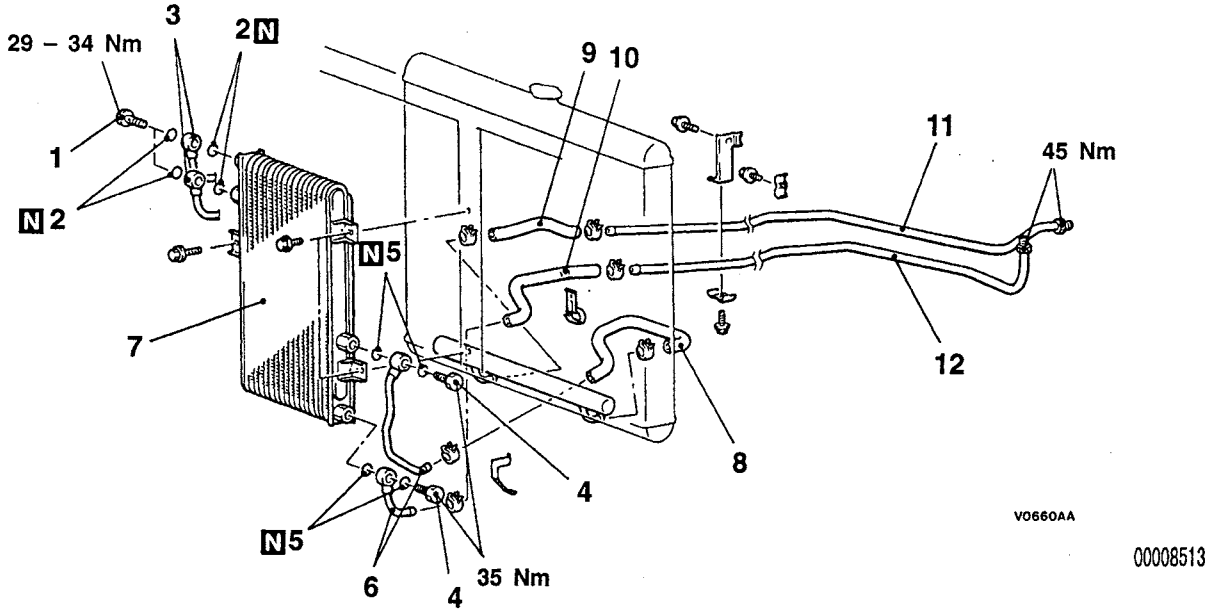

Removal steps

1. Eye bolt (for engine oil cooler)
2. Gaskets (for engine oil cooler)
3. Engine oil cooler tube assembly connection
4. Eye bolts (for transmission oil cooler)
5. Gaskets
6. Transmission oil cooler tube assembly connection
7. Oil cooler assembly
8. ▶B◀ Return hose (A)
9. ▶B◀ Return hose (B)
10. ▶B◀ Feed hoses
11. ▶A◀ Return tubes
12. ▶A◀ Feed tubes

INSTALLATION SERVICE POINT

▶A◀ FEED TUBE/RETURN TUBE INSTALLATION

1. Temporarily tighten the feed tube flare nut and return tube flare nut to the transmission assembly.
2. Connect the return hose to the return tube, and feed hose to feed tube. (Refer to ▶B◀ FEED HOSE/RETURN HOSE (B)/RETURN HOSE (A) INSTALLATION.)
3. Temporarily tighten the clamps, starting from the nearest one to the transmission assembly.
4. Securely tighten the feed tube flare nut and return tube flare nut.

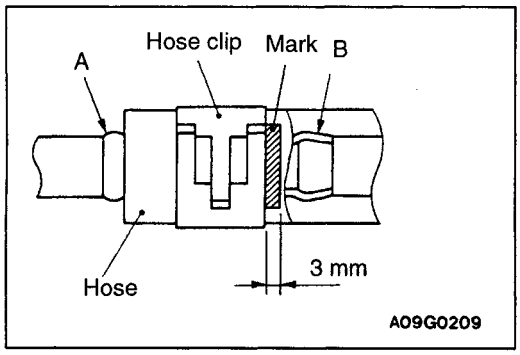

▶B◀ FEED HOSE/RETURN HOSE (B)/RETURN HOSE (A) INSTALLATION

1. Connect the feed hose, return hose (B) and return hose (A) with the mark upwards.
2. Insert the hose up to bulge A on the nipple and tube, as shown.
3. Attach the hose clip at the position being sure that it is not on top of bulge B, as shown.

SERVICE BULLETIN

MITSUBISHI MOTORS

QUALITY INFORMATION ANALYSIS
OVERSEAS SERVICE DEPT. MITSUBISHI MOTORS CORPORATION

SERVICE BULLETIN	**No.:** MSB-99E23-001		
	Date: 1999-12-15	**<Model>**	**<M/Y>**
Subject:	ADDITION OF DESCRIPTION OF ABS IDLE-UP SOLENOID VALVE ABOLISHMENT	(EC,EXP) L200 (K00)	99-10
Group:	AUTOMATIC TRANSAXLE	**Draft No.:** 99SY031213	
INFORMATION	**INTERNATIONAL CAR ADMINISTRATION OFFICE**	T.NITTA - PROJECT LEADER AFTER SALES SERVICE & CS PROMOTION	

1. Description:

In the ’99 L200 Workshop Manual, a description of abolishment of the ABS idle-up solenoid valve has been added.

2. Applicable Manuals:

Manual	Pub. No.	Language	Page(s)
’99 L200 Workshop Manual chassis	PWTE96E1-C	(English)	23-3
	PWTS96E1-C	(Spanish)	
	PWTF96E1-C	(French)	
	PWTG96E1-C	(German)	

3. Interchangeability:

Not interchangeable

4. Effective Date:

From the first production vehicle of 1999 model

INSTALLATION SERVICE POINT

▶A◀ FEED TUBE/RETURN TUBE INSTALLATION

1. Temporarily tighten the feed tube flare nut and return tube flare nut to the transmission assembly.
2. Connect the return hose to the return tube, and feed hose to feed tube. (Refer to ▶B◀ FEED HOSE/ RETURN HOSE (B)/RETURN HOSE (A) INSTALLATION.)
3. Temporarily tighten the claps, starting form the nearest one to the transmission assembly.
4. Securely tighten the feed tube flare nut and return tube flare nut.

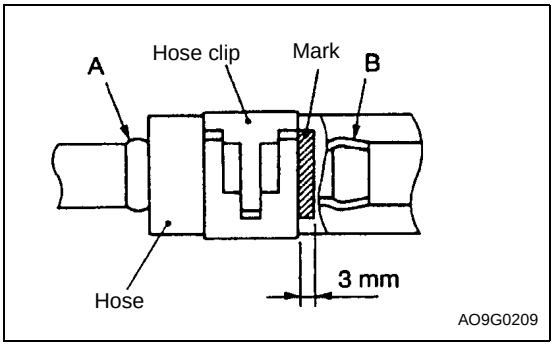

▶B◀ FEED HOSE/RETURN HOSE (B) RETURN HOSE (A) INSTALLATION

1. Connect the feed hose, return hose (B) and return hose (A) with the mark upwards
2. Insert the hose up to bulge A on the nipple and tube, as shown.
3. Attach the hose clip at the position being sure that it is not on top of bulge B, as shown.

The following descriptions come here.

GROUP 35B/35C
ANTI-SKID BRAKING SYSTEM (ABS) <2WD/4WD>

GENERAL
OUTLINE OF CHANGES

- The ABS idle-up solenoid valve has been abolished. <4D56>

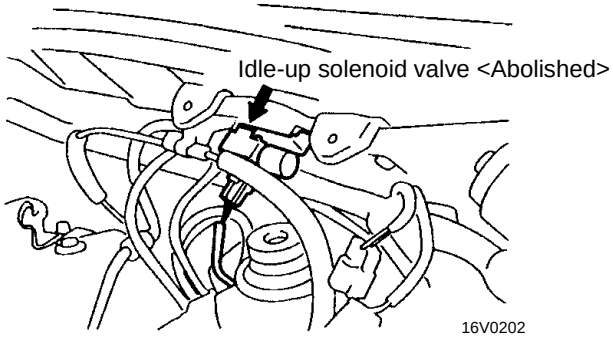

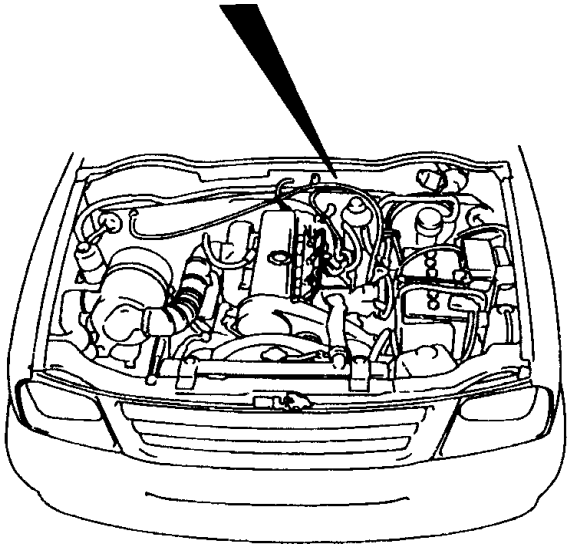

<Added>

GROUP 23
AUTOMATIC TRANSMISSION

GENERAL

OUTLINE OF CHANGES

With additional vehicle with emission regulation step III compatible 4D5 engine, the service procedure different from service adjustment procedure of the vehicle with 4D5 engine has been established.

SERVICE SPECIFICATIONS

Items	Standard value
Play of the accelerator cable inner cable mm	1 – 2
Dimension of the throttle cable inner cable stopper and outer cable end mm	0.8 – 1.5

TROUBLESHOOTING

SHIFT PATTERN

<2WD>

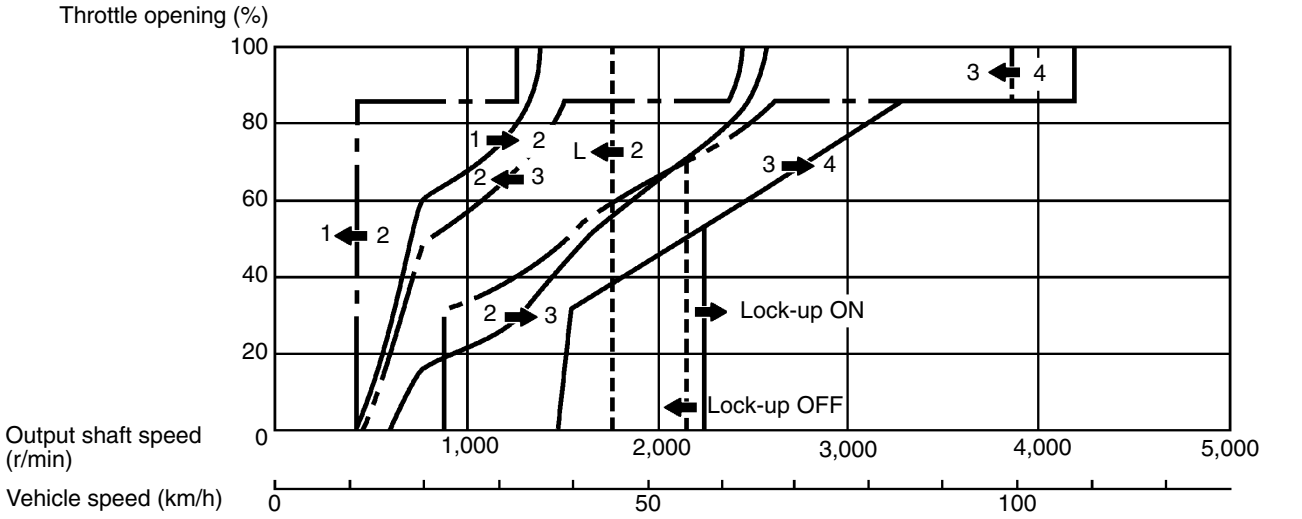

10017AA

<4WD>

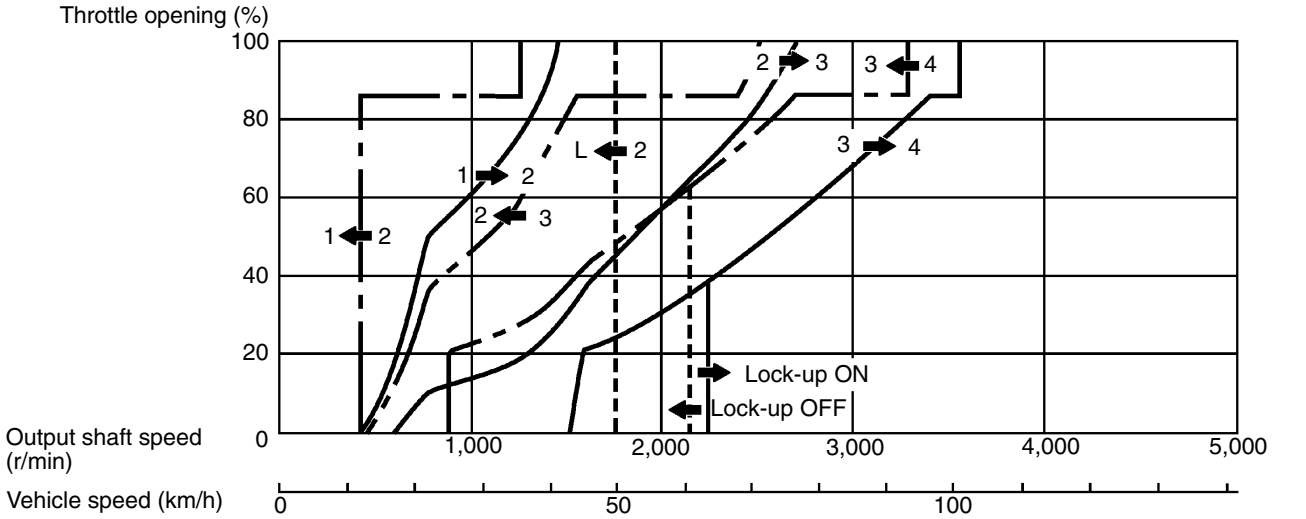

10018AA

ON-VEHICLE SERVICE

ACCELERATOR CABLE AND THROTTLE CABLE CHECK AND ADJUSTMENT

1. Check the accelerator cable and the throttle cable for bends.
2. Check that the A/T throttle control cable link assembly and bracket do not become deformed.

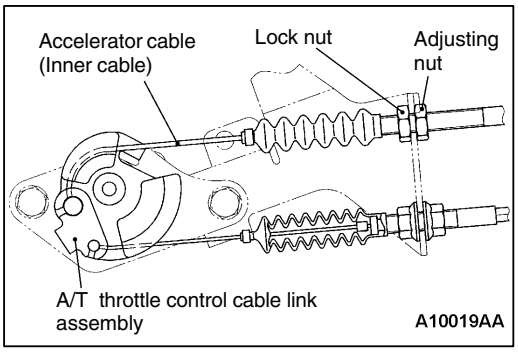

3. Check the play of the accelerator cable inner cable.

   Standard value: 1 – 2 mm

4. If the play in inner cable is out of standard value, adjust by following the step below.
   (1) Loosen the locking nut and adjusting nut in order to have the A/T throttle control cable link assembly to be free.
   (2) Tighten the adjusting nut until the A/T throttle control cable link assembly operates, turn the adjusting nut one turn in opposite direction.
   (3) Tighten the lock nut in specified torque.

   Tightening torque: 10 ± 1 N·m

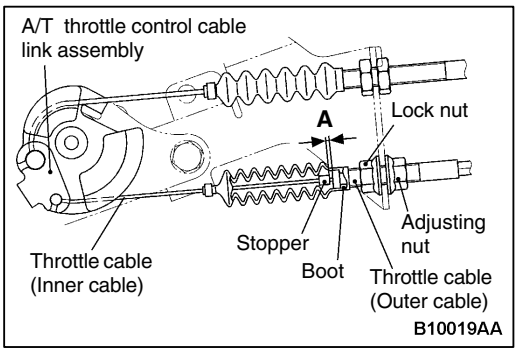

5. Remove the throttle cable boot and check the dimension of the inner cable stopper and the outer cable end.

   Standard value: 0.8 – 1.5 mm

6. If the dimension A between the inner cable stopper and the outer cable end is out of standard value, adjust by following the step below.
   (1) Loosen the locking nut and adjusting nut in order to have the A/T throttle control cable link assembly to be free.
   (2) Turn the adjusting nut, adjust in order that the dimension A between the inner cable stopper and the outer cable end is in standard value.
   (3) Tighten the lock nut in specified torque.

   Tightening torque: 16 ± 2 N·m

NOTES

PROPELLER SHAFT

Click on the applicable bookmark to selected the required model year

PROPELLER SHAFT

CONTENTS

25109000044

GENERAL INFORMATION 2
SERVICE SPECIFICATIONS 2
LUBRICANT 3
SPECIAL TOOLS 3
PROPELLER SHAFT 4

GENERAL INFORMATION

25100010039

For 2WD and 4WD, the rear propeller shaft is a 3-joint type with intermediate bearing. For 4WD, the front propeller shaft is a 2-joint type.

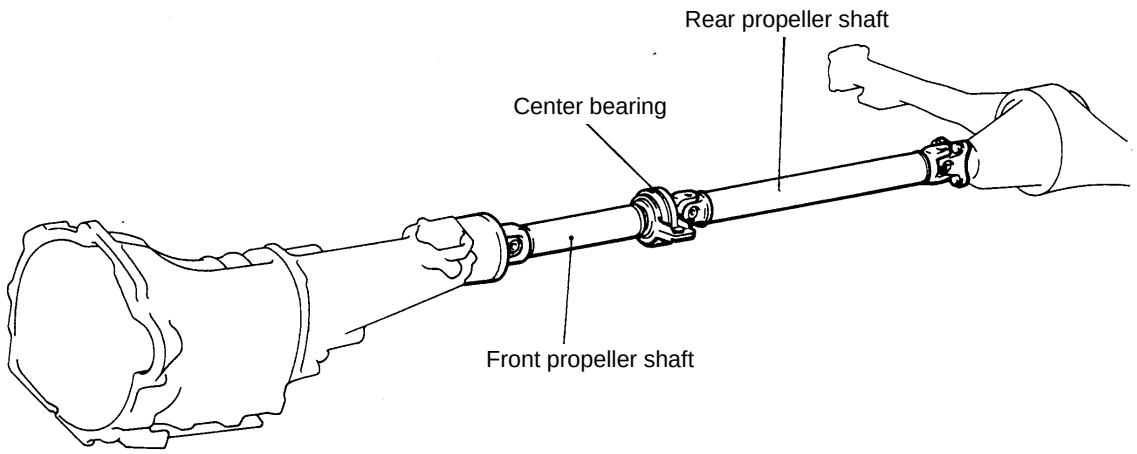

10W0023

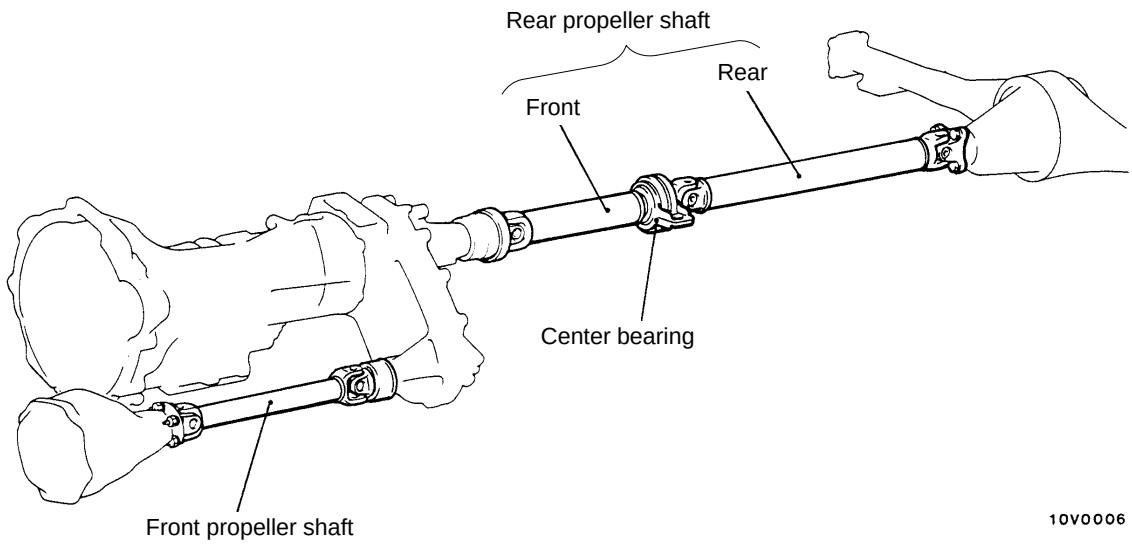

10V0006

00004947

SERVICE SPECIFICATIONS

25100030042

Items	Standard value	Limit
Clearance between snap ring and groove wall of yoke mm	0.03 or less	–
Front propeller shaft runout mm	–	0.6
Rear propeller shaft runout mm	–	0.6

LUBRICANT

25100040045

Item	Specified lubricant	Quantity
Sleeve yoke	Hypoid gear oil SAE 75W-85W conforming to API GL-4 or higher	As required

SPECIAL TOOLS

25100060041

Tool	Number	Name	Use
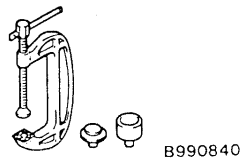	MB990840	Universal joint remover and installer	Disassembly and reassembly of the universal joint
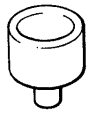	MB991410	Collar	

PROPELLER SHAFT

25100100057

REMOVAL AND INSTALLATION

Pre-removal Operation <4WD>
- Set the Transfer Shift Lever to ”2H”
- Front Under Cover Removal
- Transfer Gear Oil Draining
  (M/T: Refer to GROUP 22 – On-vehicle Service.)
  (A/T: Refer to GROUP 23 – On-vehicle Service.)

Post-installation Operation <4WD>
- Transfer Gear Oil Supplying
  (M/T: Refer to GROUP 22 – On-vehicle Service.)
  (A/T: Refer to GROUP 23 – On-vehicle Service.)
- Front Under Cover Installation

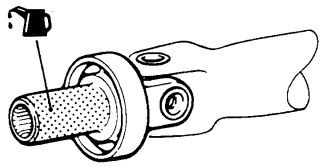

Gear Oil: Hypoid gear oil SAE 75W-85W conforming to API GL-4 or higher

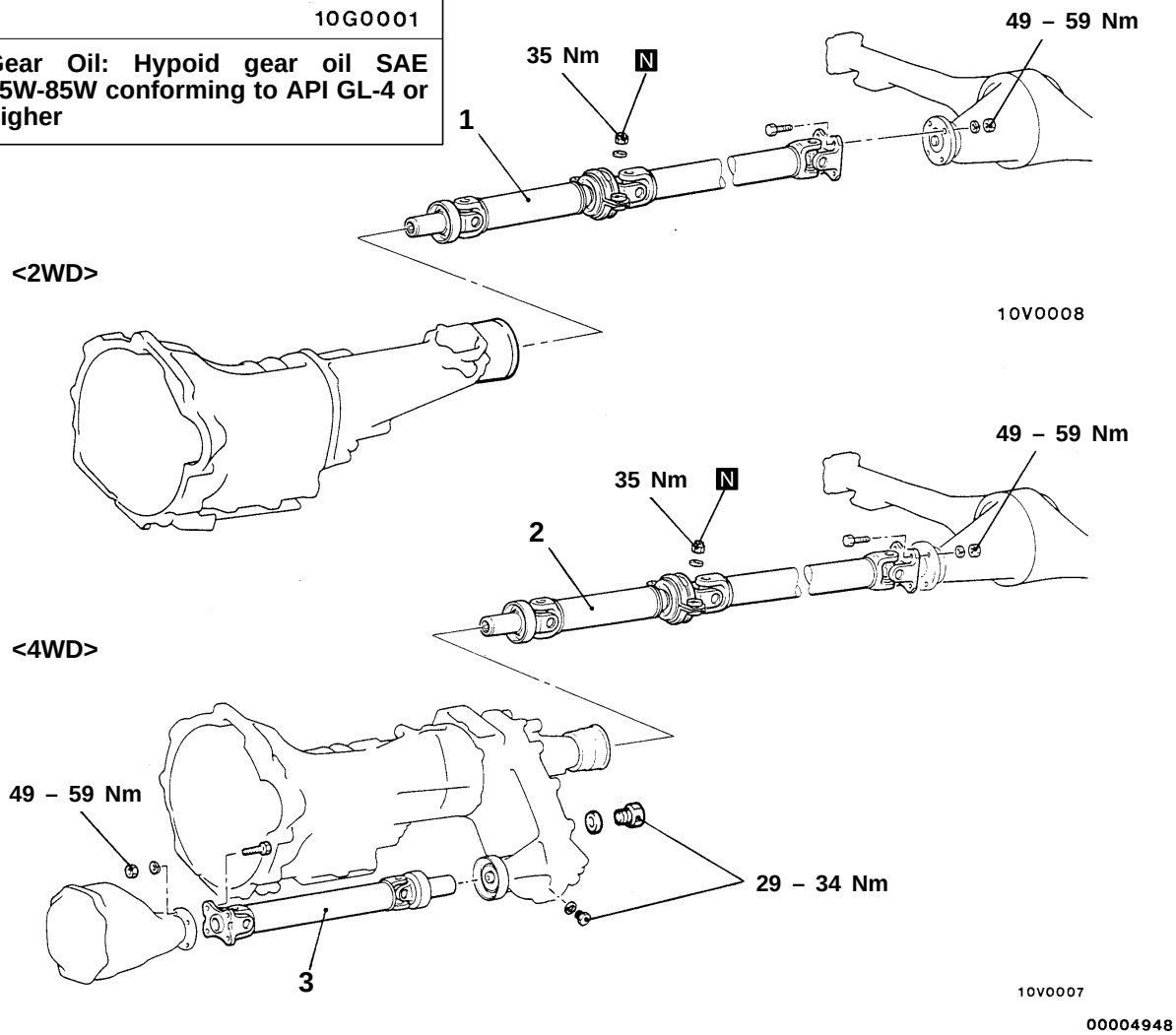

Removal steps

◀A▶ ▶A◀ 1. Propeller shaft assembly
◀A▶ ▶A◀ 2. Rear propeller shaft assembly
◀A▶ ▶A◀ 3. Front propeller shaft assembly

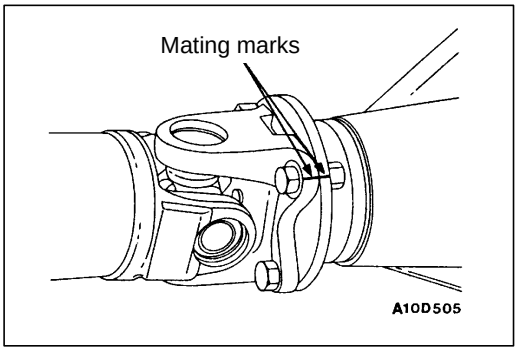

REMOVAL SERVICE POINT

◀A▶ PROPELLER SHAFT ASSEMBLY/REAR PROPELLER SHAFT ASSEMBLY/FRONT PROPELLER SHAFT ASSEMBLY REMOVAL

(1) Make mating marks on the differential companion flange and flange yoke and remove the propeller shaft.
(2) Use the plug as a cover so that no foreign material gets into the transmission or transfer.

INSTALLATION SERVICE POINT

▶A◀ PROPELLER SHAFT ASSEMBLY/FRONT PROPELLER SHAFT ASSEMBLY/REAR PROPELLER SHAFT ASSEMBLY INSTALLATION

Align the mating marks that were made during removal, and then install the propeller shaft assembly to the companion flange.

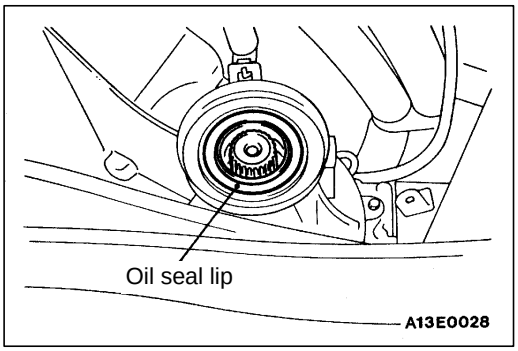

Caution

(1) Tighten installation bolts after removing oil and grease from threads to prevent them from loosening due to lubrication.
(2) Be careful not to damage the lip section of the transfer case oil seal when installing the propeller shaft.

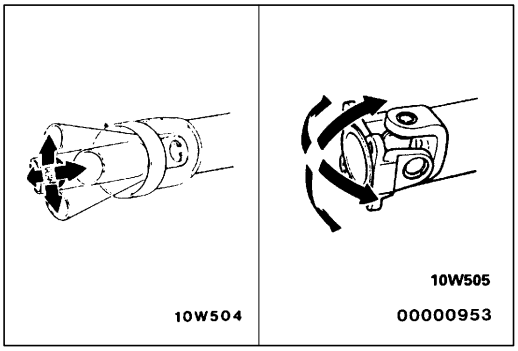

INSPECTION

25100110043

- Check the sleeve yoke, center yoke and flange yoke for wear, damage or cracks.
- Check the propeller shaft yokes for wear, damage or cracks.
- Check the propeller shaft for bends twisting or damage.
- Check the universal joints for smooth operation in all directions.
- Check the center bearing for smooth movement.
- Check the center bearing mounting rubber for damage or deterioration.

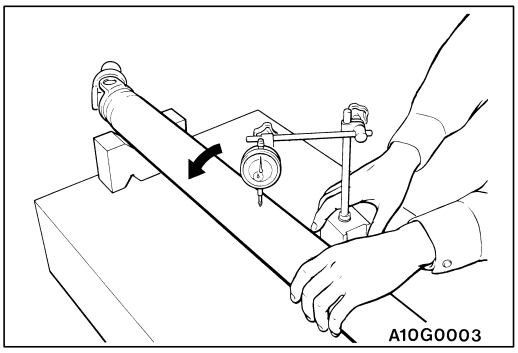

PROPELLER SHAFT RUNOUT

Limit: 0.6 mm

DISASSEMBLY AND REASSEMBLY

25100120046

<2WD>

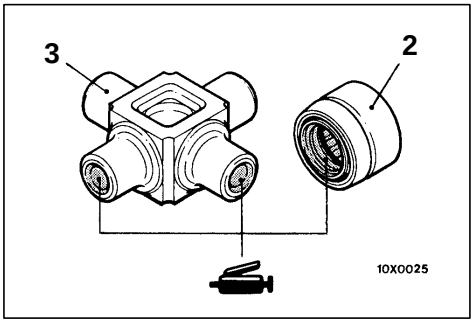

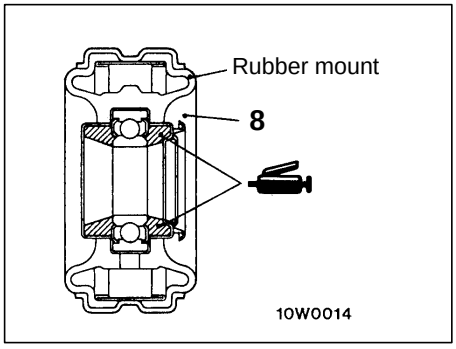

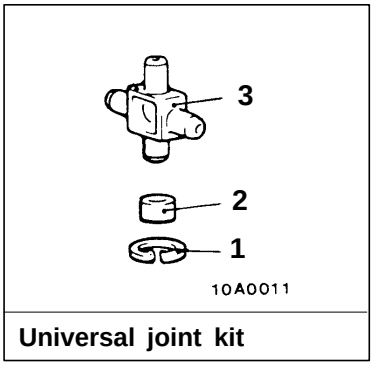

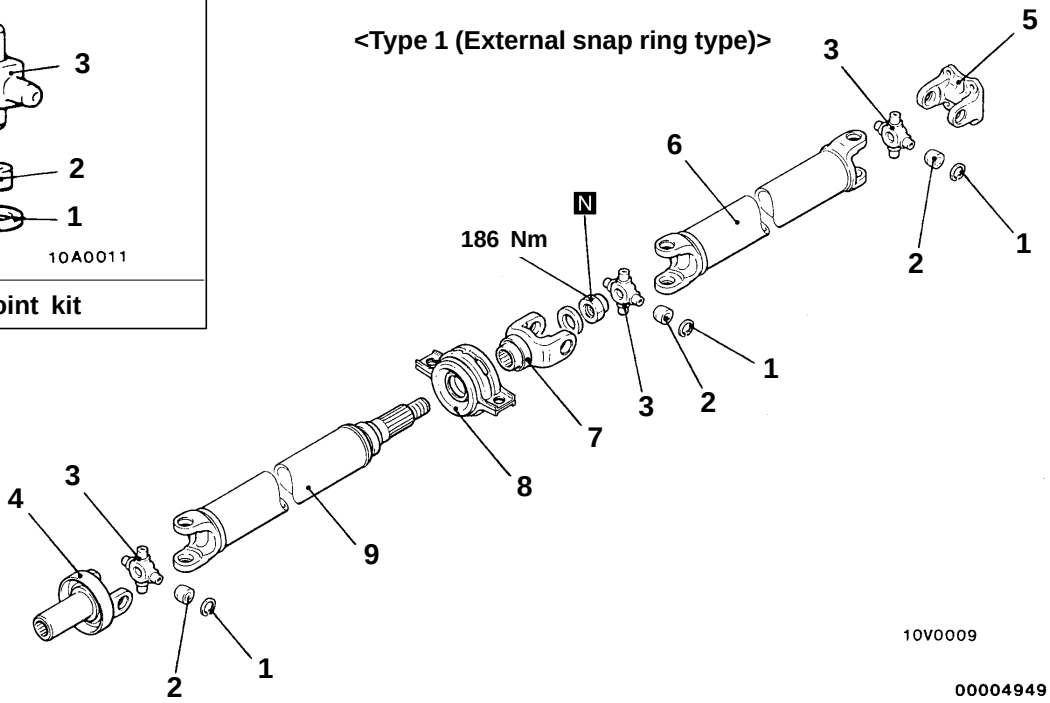

Disassembly steps

◀A▶ ▶C◀ 1. Snap ring
◀B▶ ▶B◀ 2. Journal bearing
3. Journal
4. Sleeve yoke
5. Flange yoke
6. Propeller shaft (rear)
◀C▶ ▶A◀ 7. Center yoke
◀D▶ ▶A◀ 8. Center bearing assembly
9. Propeller shaft (front)

<4WD>

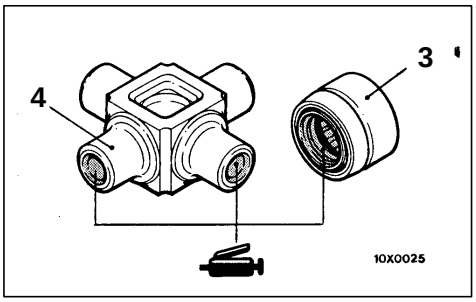

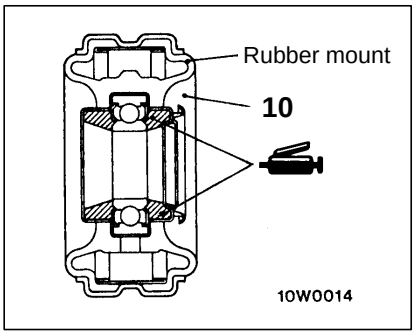

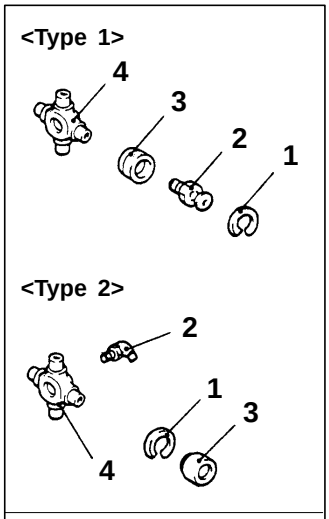

Universal joint kit

Front propeller shaft
<Type 1 (External snap ring type)>

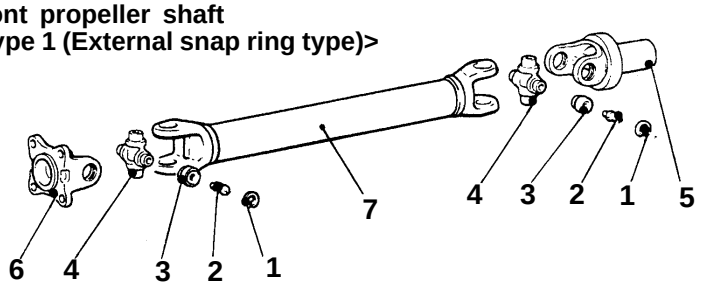

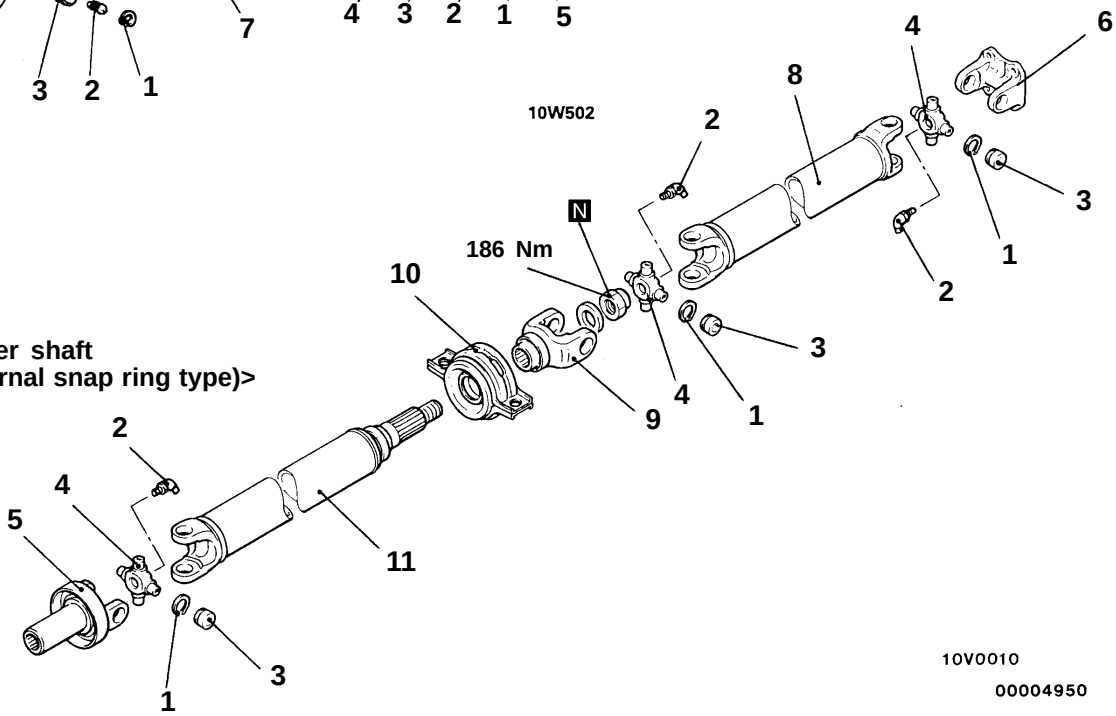

Rear propeller shaft
<Type 2 (Internal snap ring type)>

Disassembly steps

◀A▶ ▶C◀ 1. Snap ring
2. Grease fitting
◀B▶ ▶B◀ 3. Journal bearing
4. Journal
5. Sleeve yoke
6. Flange yoke
7. Front propeller shaft
8. Propeller shaft (rear)
◀C▶ ▶A◀ 9. Center yoke
◀D▶ ▶A◀ 10. Center bearing assembly
11. Propeller shaft (front)

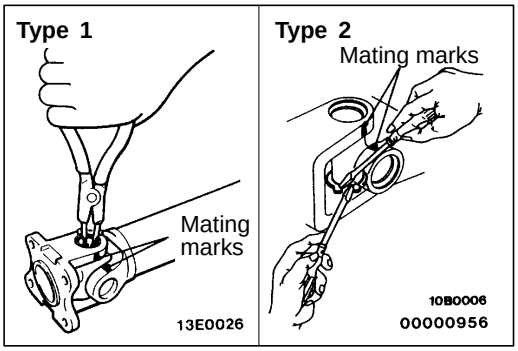

DISASSEMBLY SERVICE POINTS

◀A▶ SNAP RING REMOVAL

Make mating marks on the yokes of the universal joint that is to be disassembled.

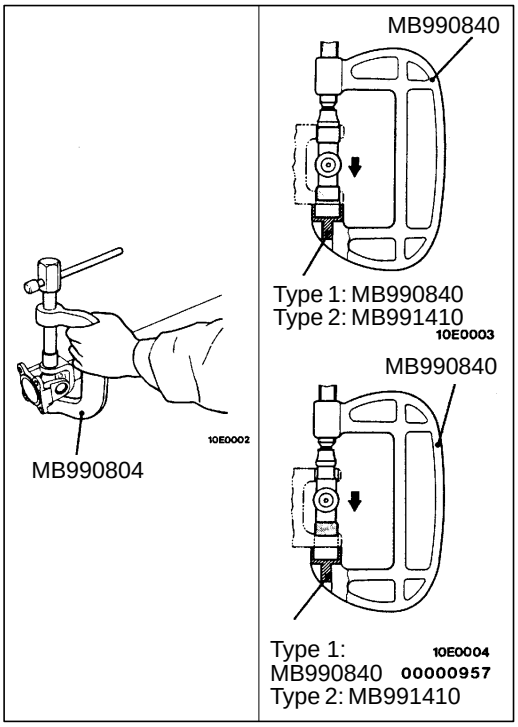

◀B▶ JOURNAL BEARING REMOVAL

(1) Use the special tool to press in the journal bearing on one side, and take out the journal bearing on the opposite side.
(2) Insert the special tool in the other side and press the journal to remove the first journal bearing that was pushed.

Caution
Do not tap the journal bearings to remove them, as this will upset the balance of the propeller shaft.

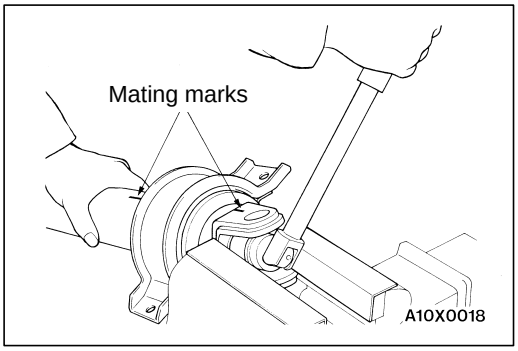

◀C▶ CENTER YOKE REMOVAL

Place a mating mark on the center yoke and front propeller shaft, and then remove the center yoke.

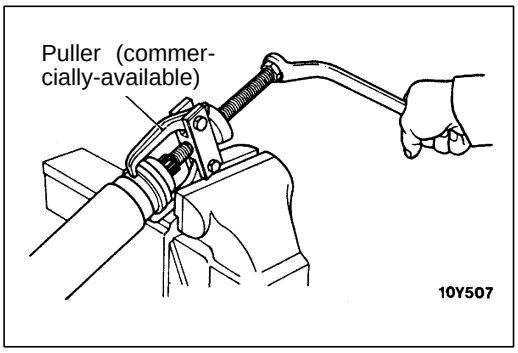

◀D▶ CENTER BEARING ASSEMBLY REMOVAL

After removing the rubber mount, use a commercially-available puller to remove the center bearing.

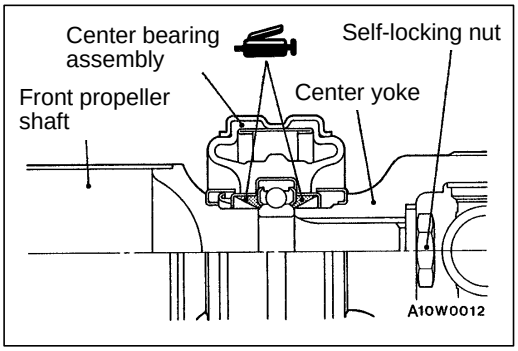

REASSEMBLY SERVICE POINTS

▶A◀ CENTER BEARING ASSEMBLY/CENTER YOKE INSTALLATION

(1) Install the center bearing assembly to the front propeller shaft as shown in the illustration.
(2) Align the mating marks on the center yoke and front propeller shaft.
(3) Press-fit the center bearing assembly with the center yoke while tightening the self-locking nut.

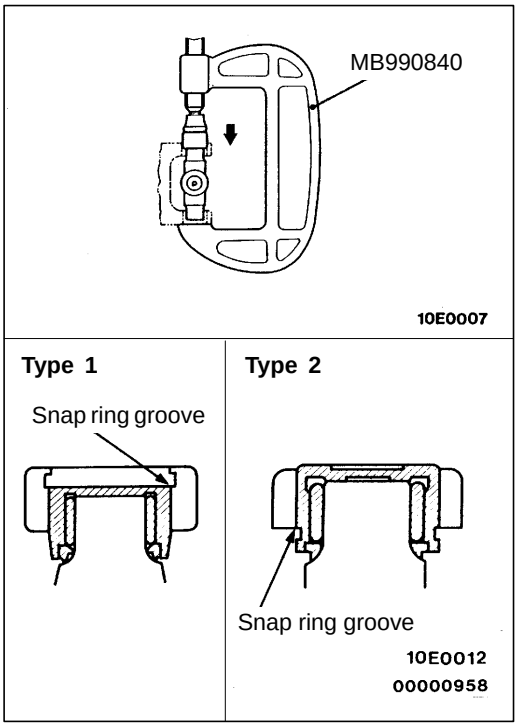

▶B◀ JOURNAL BEARING INSTALLATION

(1) Use the special tool to press the journal bearing into the yoke until the snap ring groove is fully visible.

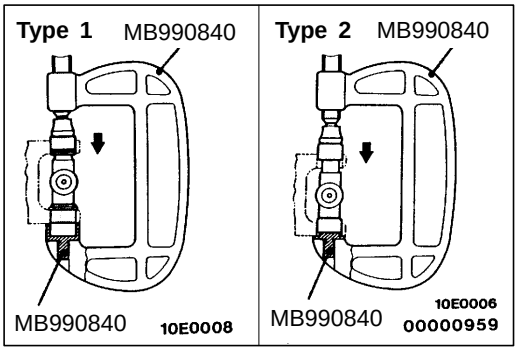

(2) Use the special tool to press the opposite side journal bearing into the yoke.

Caution
Be careful when pressing the journal bearings, as if they are pressed at an angle, the inside of the journal bearings will be damaged by the journal.

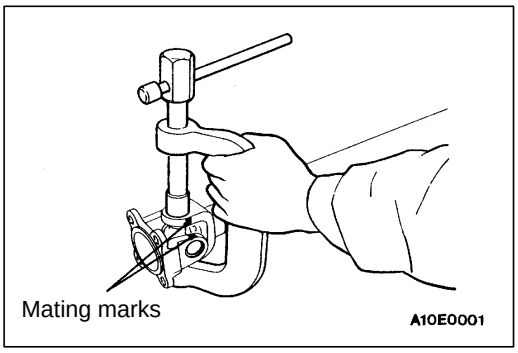

(3) Align the mating marks on the yoke and propeller shaft, and install the propeller shaft journal bearings in the method described in (1) and (2) above.

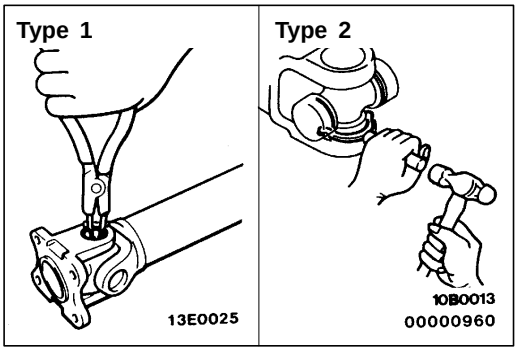

▶C◀ SNAP RING INSTALLATION

(1) Install a snap ring to one side of the journal.

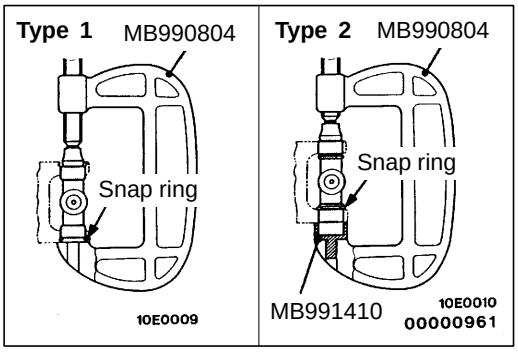

(2) Use the special tool at the opposite side of the installed snap ring to press in the journal bearing towards the snap ring.

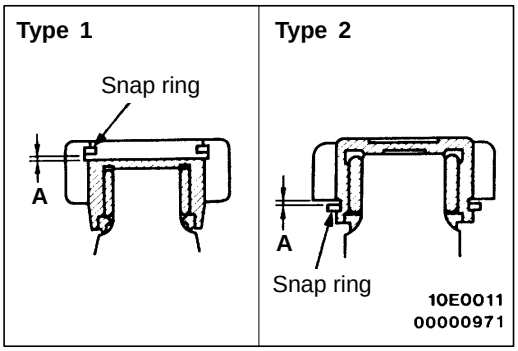

(3) Install the snap ring on the opposite side, and measure the clearance of the snap ring groove with a thickness gauge.

Standard value (A): 0.03 mm or less

Caution
Always use snap rings of equal thicknesses on both sides.

(4) If the clearance exceeds the standard value, adjust by changing the thickness of the snap ring.

Thickness mm Type 1	Thickness mm Type 2	Identification color
1.28	1.50	–
1.31	1.55	Yellow
1.34	1.60	Blue
1.37	1.65	Purple

FRONT AXLE

Click on the applicable bookmark to selected the required model year

FRONT AXLE

CONTENTS

26109000102

GENERAL INFORMATION 2
SERVICE SPECIFICATIONS 4
LUBRICANTS 4
SEALANTS 5
SPECIAL TOOLS 5
ON-VEHICLE SERVICE 9
Wheel Bearing Play Check 9
Front Axle Total Backlash Check 9
Front Axle Gear Oil Level Check 10
Drive Shaft Axial Play Check 10
Differential Carrier Oil Seal Replacement 10
Solenoid Valve Operation Check 11
FRONT HUB ASSEMBLY <2WD> 13
FRONT HUB ASSEMBLY <4WD> 16
KNUCKLE <2WD> 20
KNUCKLE <4WD> 22
DRIVE SHAFT 26
INNER SHAFT 36
DIFFERENTIAL CARRIER 40
FREEWHEEL CLUTCH 58

GENERAL INFORMATION

26100010111

2WD

The front hub assembly which uses a double taper roller bearing is mounted on the knuckle spindle.

For vehicles with ABS, a rotor for detecting the wheel speed is press-fitted into the front hub.

4WD

The front axle consists of the hub assembly, drive shaft, inner shaft, front differential, freewheel clutch assembly and actuator. The features are:

- The wheel bearing uses a double taper roller bearing. For vehicles with ABS, a rotor for detecting the wheel speed is bolted to the brake disc.
- Drive shafts of almost identical length reduce torque steer. In addition, a D.O.J.-B.J.-type constant velocity ball joint has high power transmission efficiency and reduces vibration and noise.
- A vacuum-type freewheel clutch has been adopted in the freewheel mechanism. Its solenoid valve and actuator switch powertrain between 2WD and 4WD.
- There are two types of differential gear. The difference between them is gear ratio.

2WD

Item		Specifications
Wheel bearing	Type	Double taper roller bearing
	Inner bearing (O.D. x I.D.) mm	65.1 x 34.9
	Outer bearing (O.D. x I.D.) mm	50.0 x 21.4

4WD

<Bearings>

Item		Specifications
Wheel bearing	Type	Double taper roller bearing
	Inner bearing (O.D. x I.D.) mm	73 x 45
	Outer bearing (O.D. x I.D.) mm	73 x 45
Drive shaft	Joint type	Outer: B.J. Inner: D.O.J.
	Shaft length (joint to joint) mm	Right: 318 Left: 291
Inner shaft	O.D. x length mm	31.5 x 304.2
	Bearing (O.D. x I.D.) mm	62 x 35

<Gears>

Item			4D56 <Vehicles without wide tyre>	4G64, 4D56 <Vehicles with wide tyre>
Reduction gear type			Hypoid gear type	Hypoid gear type
Reduction ratio			4.636	4.875
Differential	Differential gear type (type x piece)	Side gear	Straight bevel gear x 2	Straight bevel gear x 2
		Pinion gear	Straight bevel gear x 2	Straight bevel gear x 2
	Number of teeth	Drive gear	51	39
		Drive pinion	11	8
		Side gear	14	14
		Pinion gear	10	10
	Bearing (O.D. x I.D.) mm	Side	80.0 x 45.2	80.0 x 45.2
		Front	64.3 x 30.2	64.3 x 30.2
		Rear	76.2 x 36.5	76.2 x 36.5

CONSTRUCTION DIAGRAM

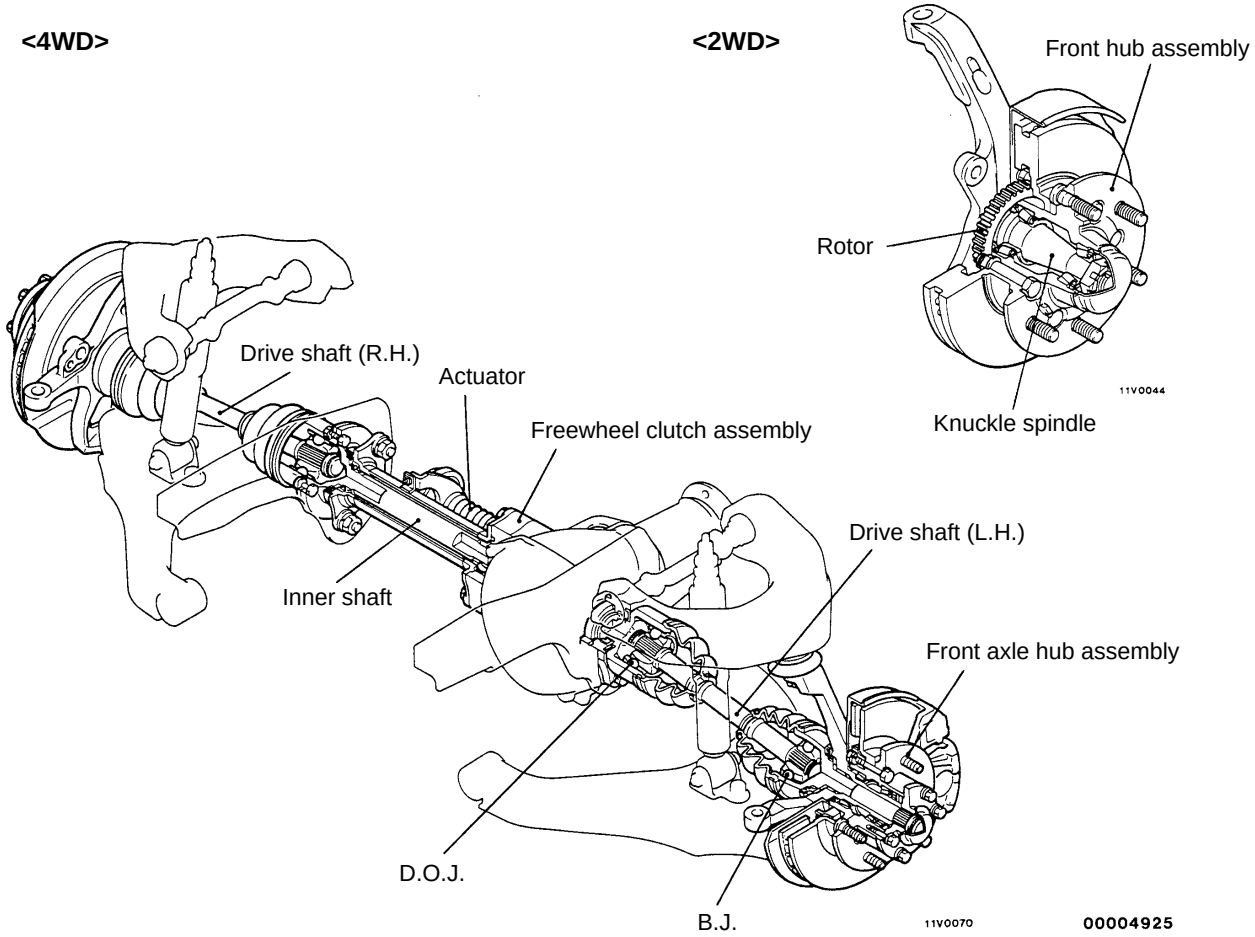

SERVICE SPECIFICATIONS

26100030131

Item		Standard value	Limit
Front axle total backlash mm		–	11
Drive shaft axial play mm		0.4 – 0.7	–
Solenoid valve resistance Ω		36 – 46	–
Hub rotary sliding resistance N		7 – 26	–
(Hub rotation starting torque) Nm		0.5 – 1.8	–
Amount of movement of far the wheel bearing in an axial direction mm		0.05 or less	–
Setting of D.O.J. boot length mm		80 ± 3	–
Clutch gear play (bearing axial play) mm		0.05 – 0.30	–
Drive gear backlash mm		0.11 – 0.16	–
Differential gear backlash mm		0 – 0.076	–
Drive pinion rotation torque Nm	Without oil seal	When replacing (with anti-rust agent) 0.3 – 0.5	–
		When replacing or reusing (with gear oil applied) 0.15 – 0.25	–
	With oil seal	When replacing (with anti-rust agent) 0.5 – 0.7	–
		When replacing or reusing (with gear oil applied) 0.3 – 0.4	–
Drive gear runout mm		–	0.05
Differential gear backlash mm		–	0.2

LUBRICANTS

26100040141

Items	Specified lubricants	Quantity
Front differential gear oil	Hypoid gear oil API classification GL-5 or higher SAE viscosity No. 90, 80W	0.9 ℓ
D.O.J. boot grease	Repair kit grease	100 g

SEALANTS

26100050038

Items	Specified sealants	Remarks
Contact surface of drive flange or freewheel hub and front axle hub	3M ATD Part No. 8661 or equivalent	Semi-drying sealant
Contact surface of hub cap and drive flange		
Contact surface of differential cover and differential carrier		
Vent plug		
Freewheel clutch assembly		
Drive gear threaded hole	3M Stud Locking 4170 or equivalent	Anaerobic sealant

SPECIAL TOOLS

26100060123

Tool	Number	Name	Use
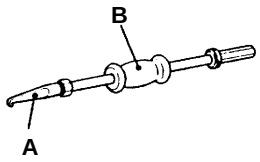	MB990590 A: MB990212 B: MB990211	Rear axle shaft oil seal remover A: Adapter B: Sliding hammer	● Removal of differential carrier oil seal ● Removal and installation of inner shaft (Used together with MB990906)
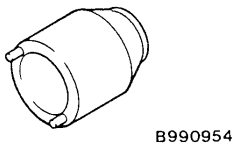	MB990954	Lock nut wrench	Removal and adjustment of lock nut <4WD>
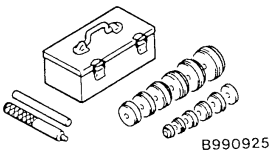	MB990925	Bearing and oil seal installer set	● Press-out and press-fitting of wheel bearing outer race ● Press-fitting of oil seal (front hub) ● Press-fitting of needle bearing (Knuckle) ● Press-fitting of bearing (freewheel clutch) ● Press-fitting of oil seal (freewheel clutch) ● Press-out and press-fitting of drive pinion front bearing outer race ● Press-out and press-fitting of drive pinion rear bearing outer race ● Press-fitting of drive shaft ● Tapping in of side bearing outer race ● Checking of drive gear tooth contact
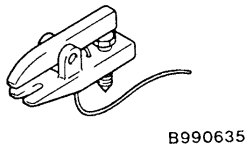	MB991113 or MB990635	Steering linkage puller	● Disconnection of tie rod ● Disconnection of upper ball joint ● Disconnection of lower ball joint
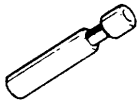	MB990804	Knuckle arm puller	Disconnection of upper, lower ball joint and knuckle <2WD>

Tool	Number	Name	Use
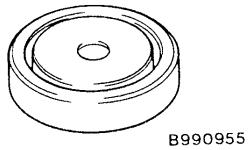	MB990955	Oil seal installer	● Press-fitting of housing tube dust seal ● Press-fitting of front axle hub oil seal (Used together with MB990938) ● Press-fitting of rotor <2WD> (Used together with MB990938)
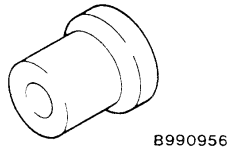	MB990956	Needle bearing installer	Press-fitting of knuckle needle bearing (Used together with MB990938)
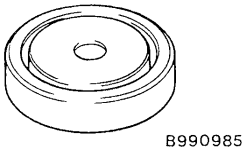	MB990985	Oil seal installer	Press-fitting of knuckle oil seal (Used together with MB990938)
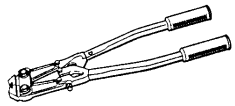	MB991561	Boot band clipping tool	Resin boot band installation
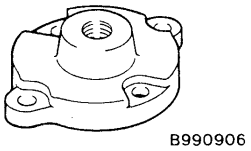	MB990906	Drive shaft attachment	Removal and installation of inner shaft (Used together with MB990211)
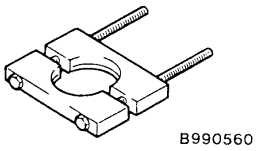	MB990560	Bearing remover	Removal and press-fitting of inner shaft bearing
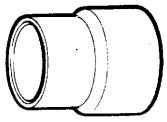	MB990799	Ball joint remover and installer	Installation of freewheel clutch bearing
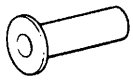	MB991168	Differential oil seal installer	Installation of freewheel clutch oil seal
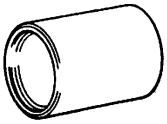	MB990890 or MB990891	Rear suspension bushing base	Installation of freewheel clutch bearing

Tool	Number	Name	Use
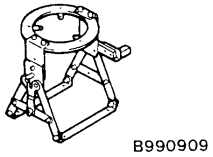	MB990909	Working base	Support of front differential carrier assembly
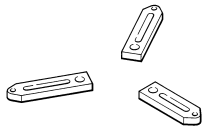	MB991116	Adapter	Support of front differential carrier assembly
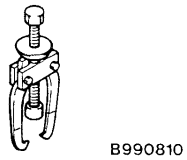	MB990810	Side bearing puller	Removal of side bearing inner race
	MB990811	Differential side bearing cap	
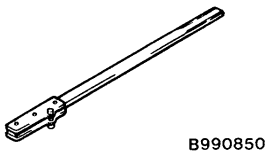	MB990850	End yoke holder	Removal and installation of companion flange
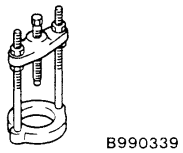	MB990339	Bearing puller	Removal of drive pinion front bearing inner race
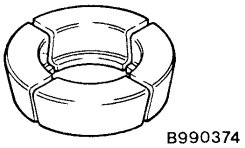	MB990648	Bearing remover	
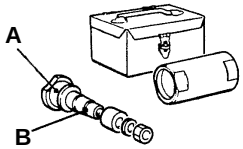	MB990901 A: MB990904 B: MB990552	Pinion height gauge set A: Drive pinion gauge assembly B: Cylinder gauge	• Inspection of drive pinion rotation starting torque • Measurement of drive pinion height
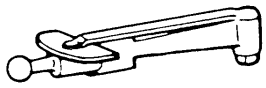	MB990685	Torque wrench	Measurement of drive pinion preload

Tool	Number	Name	Use
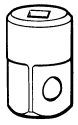	MB990326	Preload socket	
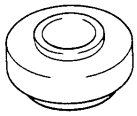	MB990802	Bearing installer	• Press-fitting of drive pinion front bearing inner race • Press-fitting of side bearing inner race
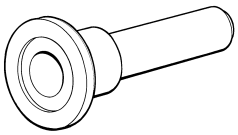	MB990031 or MB990699	Drive pinion oil seal installer	Press-fitting of drive pinion oil seal
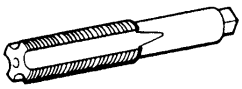	MB990813	Tap	Removal of adhesive

MB990925

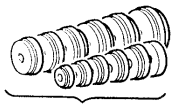

Installer adapter

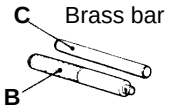

Bar (snap-in type)

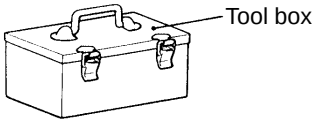

	Contents of tool (MB990925)	O.D. mm		Contents of tool (MB990925)	O.D. mm
A	MB990926	39	A	MB990933	63.5
	MB990927	45		MB990934	67.5
	MB990928	49.5		MB990935	71.5
	MB990929	51		MB990936	75.5
	MB990930	54		MB990937	79
	MB990931	57	B	MB990938	–
	MB990932	61	C	MB990939	–

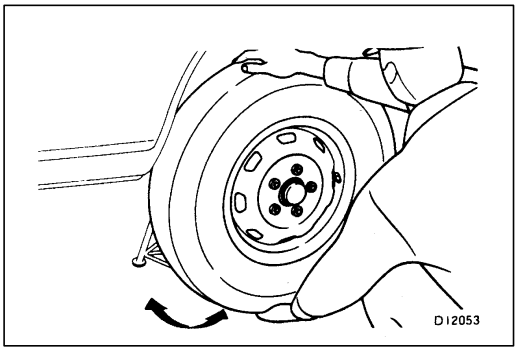

ON-VEHICLE SERVICE

26100110071

<2WD>

WHEEL BEARING PLAY CHECK

1. Check the play of the bearings while the vehicle is jacked up.

   Caution
   Do not confuse this play with the ball joint play.

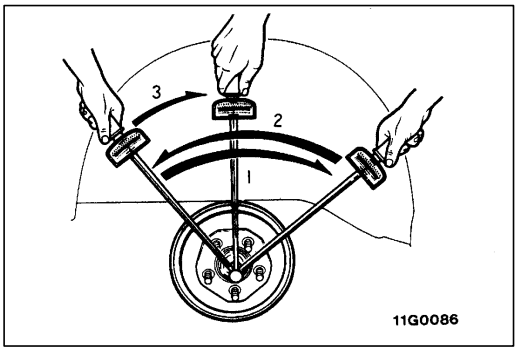

2. If there is some play in the bearings, tighten the wheel bearing nuts to 29 Nm, and then turn the front hub assembly to run in the bearings.
3. Loosen the nuts to 0 Nm.
4. Re-tighten the nuts to 7.8 Nm.
5. If the split pin hole in the wheel bearing nut is not aligned with that in the knuckle, turn the nut back within 30°. Then install the split pin.

<4WD>

FRONT AXLE TOTAL BACKLASH CHECK

26100130022

Observe the following procedure in order to switch powertrain to 4WD.

1. Turn the ignition switch off, and then put the transfer shift lever to the 2H position.

   Caution
   Do not jack up the vehicle.

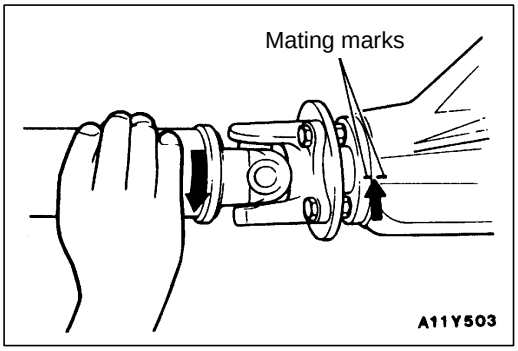

2. Turn the propeller shaft until a click is heard.
3. Turn the companion flange clockwise until all play is removed. Make mating marks on the dust cover of the companion flange with that on the differential carrier.

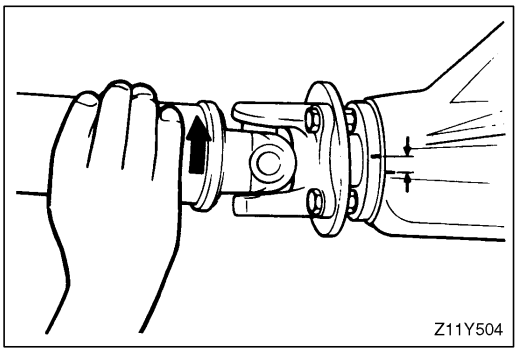

4. Turn the companion flange counterclockwise until all play is removed and measure the amount of distance through which the mating marks moved.

   Limit: 11 mm

5. If the amount of movement exceeds the limit value, check the following.
   (1) Final drive gear backlash
   (2) Differential gear backlash
   (3) Play in the serrations and splines of the side gears, drive shaft, inner shaft and drive flange

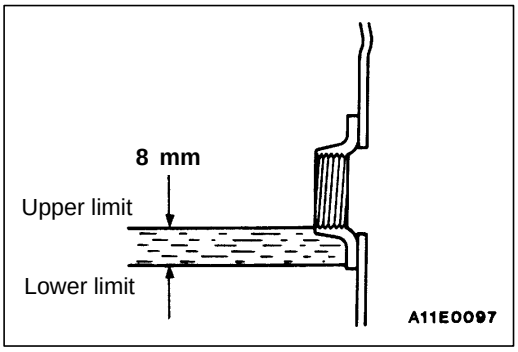

FRONT AXLE GEAR OIL LEVEL CHECK 26200090026

Remove the filler plug, and check the gear oil level. Check that gear oil level is not 8 mm below the bottom of filler plug hole.

Specified gear oil:
Hypoid gear oil API classification GL-5 or higher, SAE viscosity No. 90, 80W [Quantity: 0.9 ℓ]

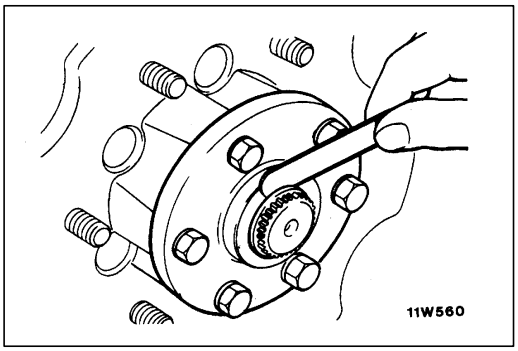

DRIVE SHAFT AXIAL PLAY CHECK 26100140025

1. Jack the vehicle up and remove the front wheels.
2. Remove the hub cap.
3. Manually push the drive shaft in the direction in which it will closely contact the knuckle.
4. As shown in the figure, use a thickness gauge to measure the clearance between the drive flange and snap ring.

   Standard value: 0.4 – 0.7 mm
5. If the play is out of standard value, adjust by adding or removing shims.

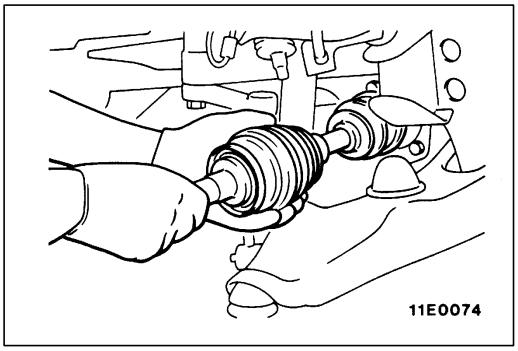

DIFFERENTIAL CARRIER OIL SEAL REPLACEMENT 26200100026

1. Remove the under cover.
2. Remove the shock absorber lower mounting bolts at the right and left.
3. Remove the front hub and knuckle assembly.
4. Remove the left drive shaft.

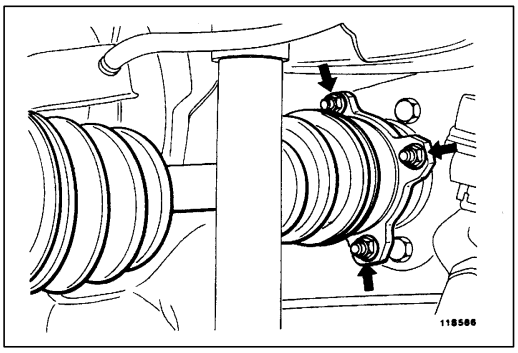

5. Remove the right drive shaft from the inner shaft assembly.
6. Remove the inner shaft.
7. Remove the actuator mounting bolt from the housing tube and remove the harness from the clamp.
8. Remove the differential mounting bracket (R.H.) and housing tube.

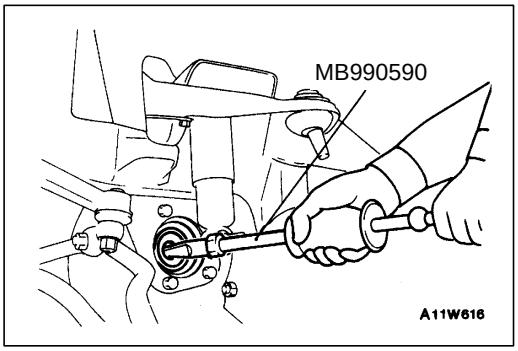

9. Use the special tool to remove the oil seal.

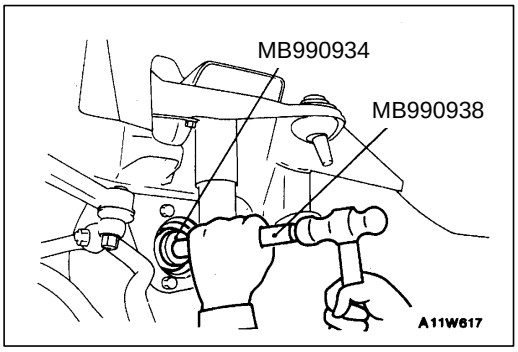

10. Press-fit the oil seal positively by using the special tools.

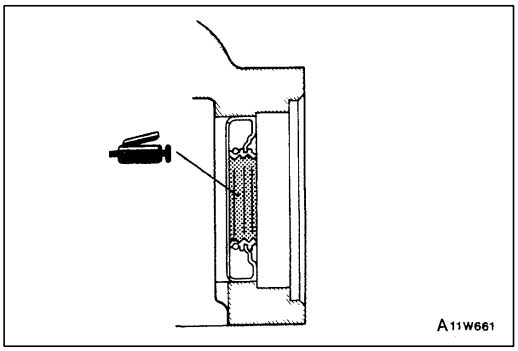

11. Apply multi-purpose grease to the lip of the oil seal and install the drive shaft (L.H.). For the right side, apply multi-purpose grease to the lip of the oil seal and install the housing tube and differential mounting bracket (R.H.).

12. Install the inner shaft and drive shaft (R.H.).

    Caution
    1. **Do not damage the lip of the oil seal.**
    2. **The circlip attached to the B.J. side of the drive shaft should be replaced with a new clip.**

13. Install the actuator and secure the harness with the clamp.
14. Install the shock absorber.
15. Install the hub and knuckle assembly.
16. Install the under cover.

SOLENOID VALVE OPERATION CHECK 26100150028

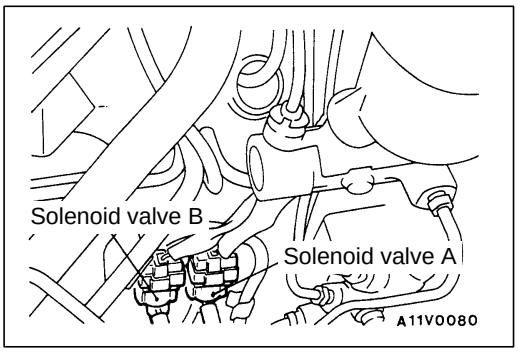

1. Remove the vacuum hoses (blue stripe, yellow stripe) from the solenoid valves.
2. Disconnect the harness connectors.

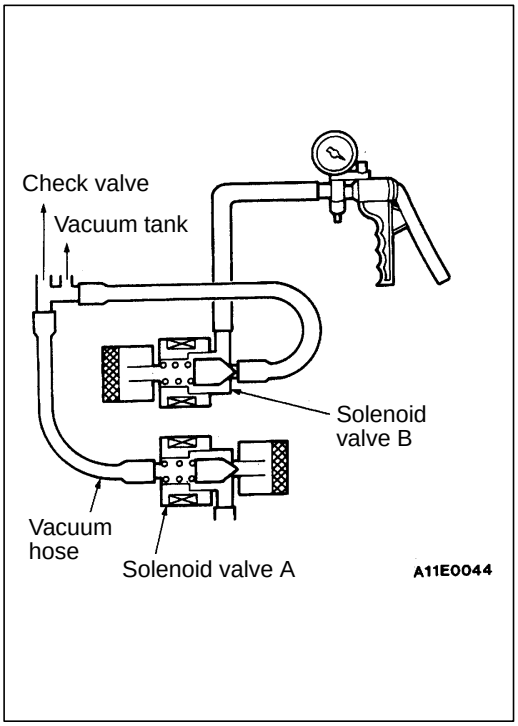

3. Connect a hand vacuum pump to solenoid valve B and carry out the following inspections.
   (1) Even if the hand pump is operated with no other operation, no negative pressure develops.
   (2) Negative pressure does not develop when battery voltage is applied to solenoid valve B. Meanwhile, negative pressure is maintained when the vacuum hose of solenoid valve A is blocked by bending.
   (3) When battery voltage is applied to solenoid valves A and B, negative pressure is maintained.

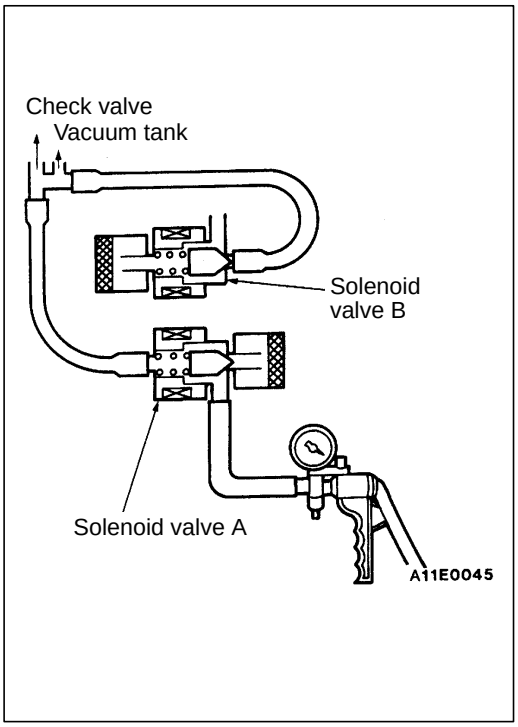

4. Connect the hand vacuum pump to solenoid valve A. Apply negative pressure and carry out the following inspections.
   (1) With no other operation, negative pressure is maintained.
   (2) When battery voltage is applied to solenoid valve B, negative pressure disappears.
   (3) When battery voltage is applied to solenoid valve A, negative pressure disappears.
5. Measure the resistance of the solenoid valves.

   Standard value: 36 – 46 Ω

FRONT HUB ASSEMBLY <2WD>

26100170123

REMOVAL AND INSTALLATION

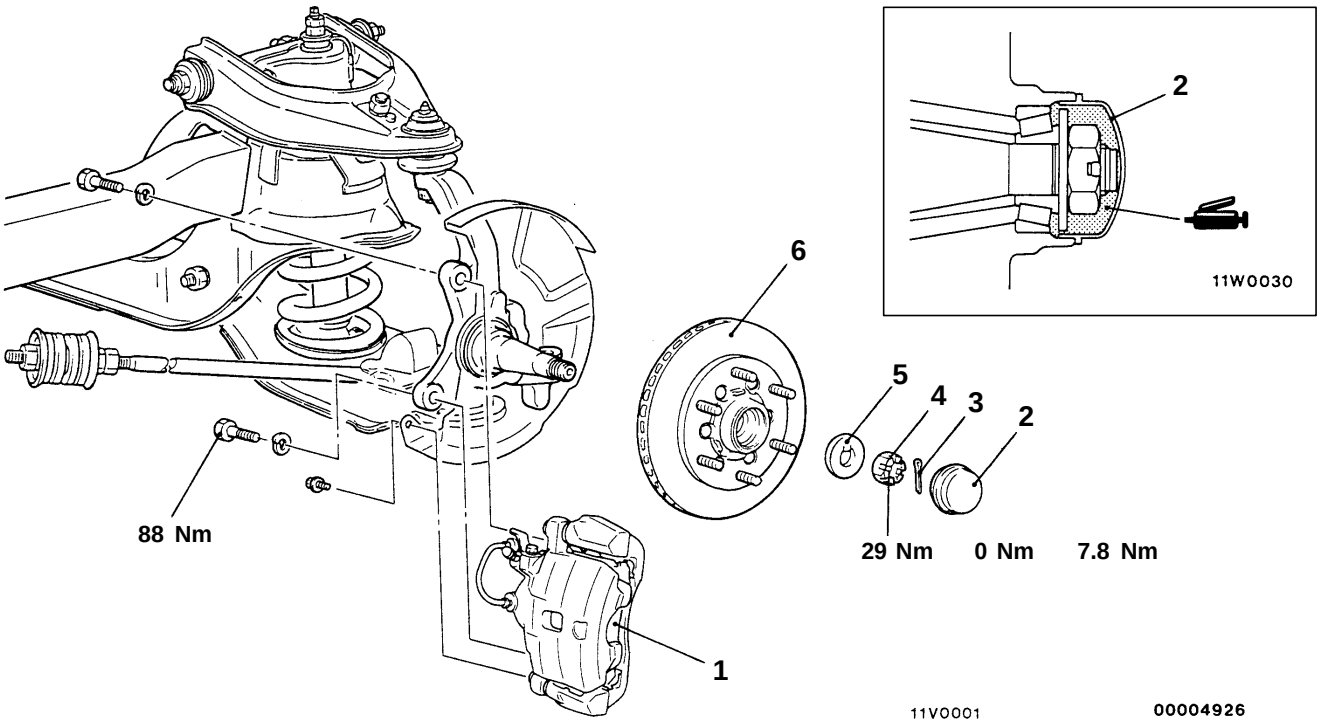

Removal steps

◀A▶ 1. Caliper assembly
2. Hub cap
3. Split pin
▶A◀ 4. Wheel bearing nut
5. Washer
◀B▶ 6. Front hub assembly

REMOVAL SERVICE POINTS

◀A▶ CALIPER ASSEMBLY REMOVAL

Secure the removed caliper assembly with wire so that it does not fall.

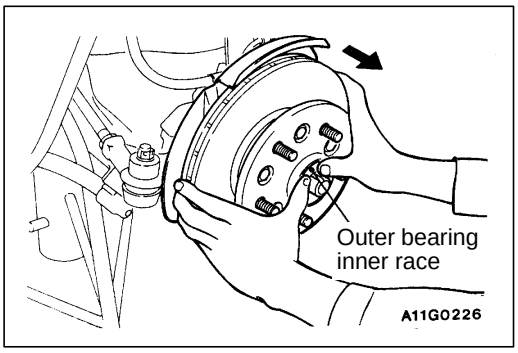

◀B▶ FRONT HUB ASSEMBLY REMOVAL

Do not drop the outer bearing inner race.

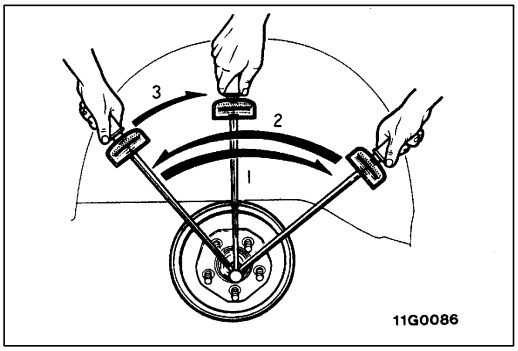

INSTALLATION SERVICE POINT

▶A◀ WHEEL BEARING NUT INSTALLATION

1. Tighten the wheel bearing nuts to 29 Nm, and then turn the front hub assembly to run in the bearings.
2. Loosen the nuts to 0 Nm.
3. Re-tighten the nuts to 7.8 Nm.
4. If the split pin hole in the wheel bearing nut is not aligned with that in the knuckle, turn the nut back within 30°. Then install the split pin.

DISASSEMBLY AND REASSEMBLY

26100190075

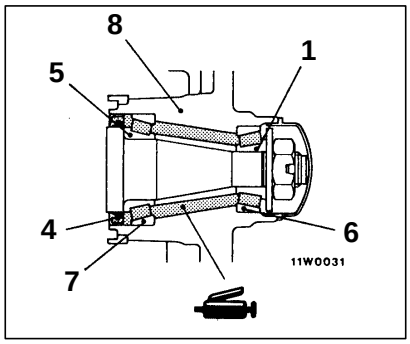

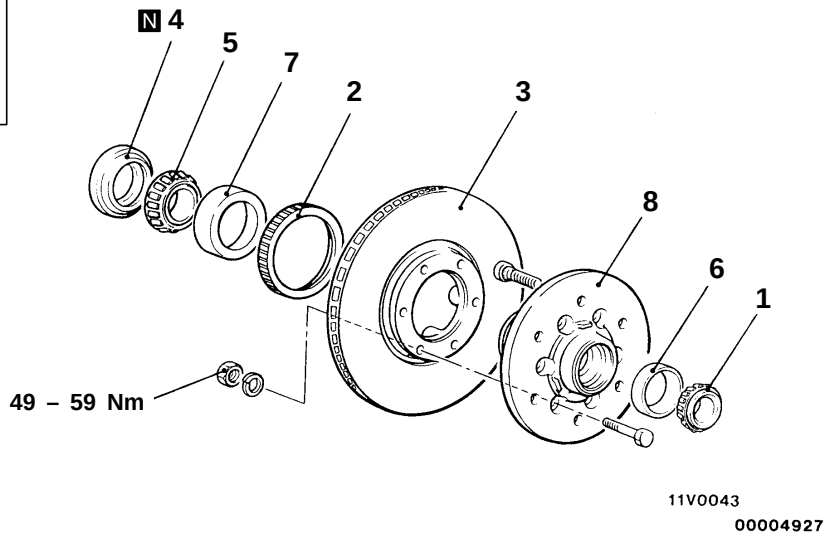

Disassembly steps

1. Outer bearing inner race
2. ▶C◀ Rotor (Vehicles with ABS)
3. ◀A▶ Brake disc
4. ▶B◀ Oil seal
5. Inner bearing inner race
6. ◀B▶ ▶A◀ Outer bearing outer race
7. ◀B▶ ▶A◀ Inner bearing outer race
8. Front hub

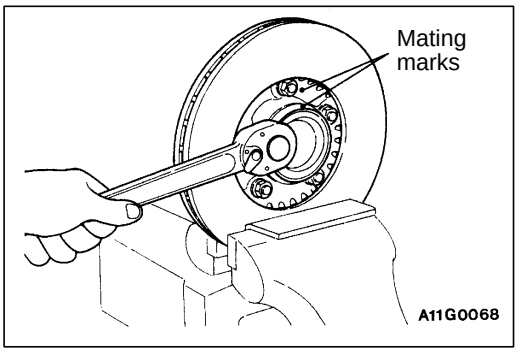

DISASSEMBLY SERVICE POINTS

◀A▶ BRAKE DISC REMOVAL

Make the mating marks on the brake disc and front hub, and then separate the front hub and brake disc, if necessary.

Caution
Lock disc in vise and grip with copper or aluminum board.

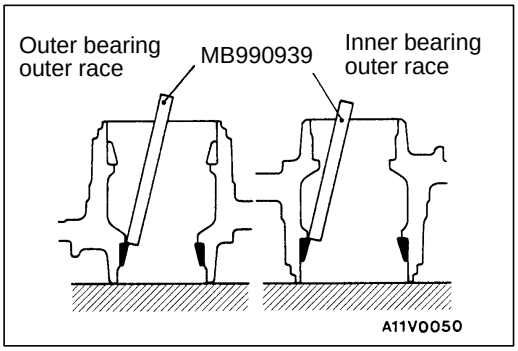

◀B▶ OUTER BEARING OUTER RACE/INNER BEARING OUTER RACE REMOVAL

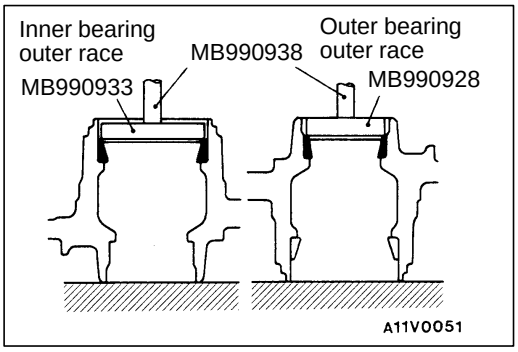

INSTALLATION SERVICE POINTS

▶A◀ INNER BEARING OUTER RACE/OUTER BEARING OUTER RACE INSTALLATION

NOTE
Replace the inner race and outer race assembly as a set.

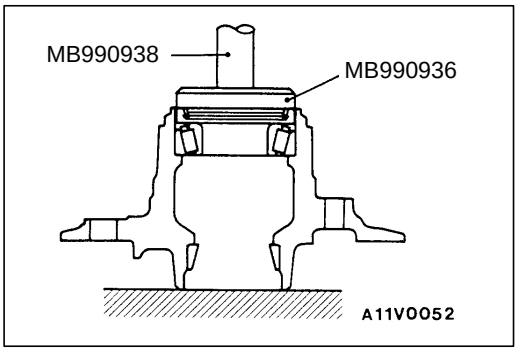

▶B◀ OIL SEAL INSTALLATION

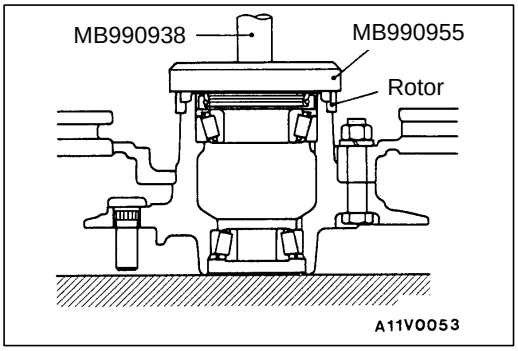

▶C◀ ROTOR INSTALLATION

FRONT HUB ASSEMBLY <4WD>

26100170130

REMOVAL AND INSTALLATION

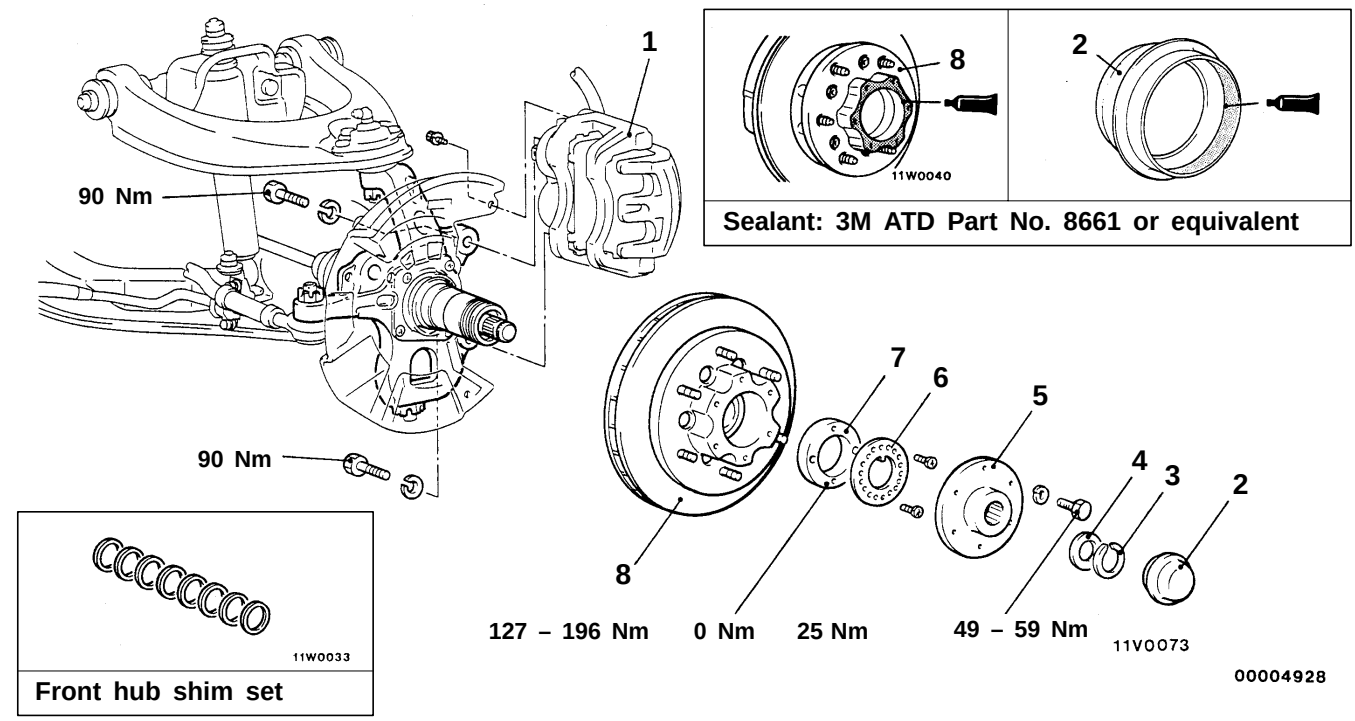

Removal steps

◀A▶ 1. Caliper assembly
2. Hub cap
▶D◀ ● Drive shaft axial play adjustment
3. Snap ring
4. Shim
5. Drive flange
▶C◀ ● Hub rotary sliding resistance and wheel bearing axial movement adjustment
▶B◀ 6. Lock washer
◀B▶ ▶A◀ 7. Lock nut
◀C▶ 8. Front hub assembly

REMOVAL SERVICE POINTS

◀A▶ CALIPER ASSEMBLY REMOVAL

Secure the removed caliper assembly with wire so that it does not fall.

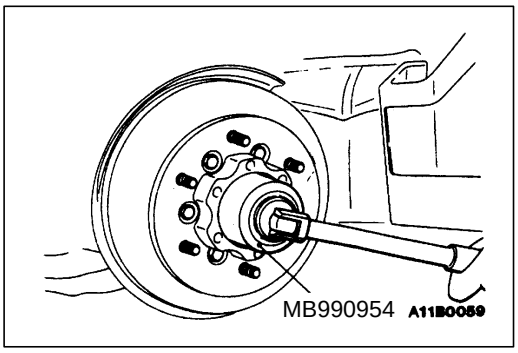

◀B▶ LOCK NUT REMOVAL

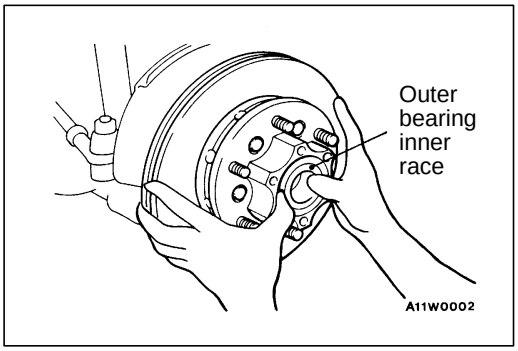

◀C▶ FRONT HUB ASSEMBLY REMOVAL

Do not drop the outer bearing inner race.

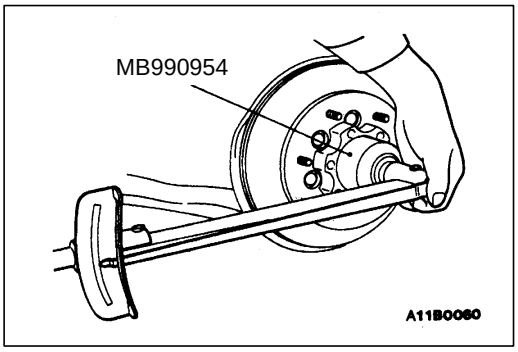

INSTALLATION SERVICE POINTS

▶A◀ LOCK NUT INSTALLATION

Using the special tool, tighten the lock nut by the following procedures.

(1) Tighten the lock nut to 127 – 196 Nm, and then turn the front hub assembly to run in the bearings.
(2) Loosen the nuts to 0 Nm.
(3) After re-tightening to 25 Nm, loosen the lock nuts by approximately 30°.

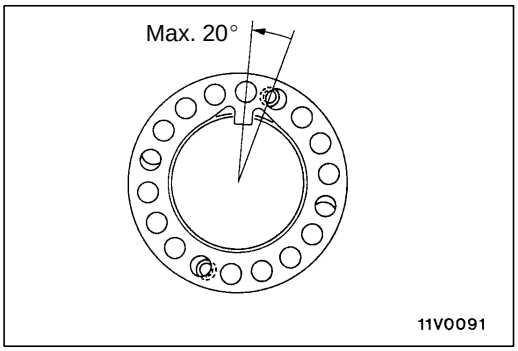

▶B◀ LOCK WASHER INSTALLATION

Install the lock washer. If the hole position is not aligned with the lock nut, move it within a range of not more than 20° until the holes are aligned.

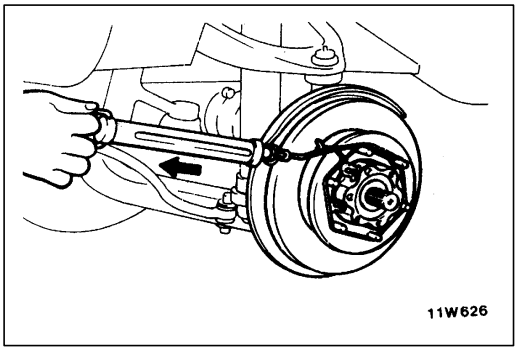

▶C◀ HUB ROTARY SLIDING RESISTANCE AND WHEEL BEARING AXIAL MOVEMENT ADJUSTMENT

1. Use a spring balance to measure the hub rotary sliding resistance (hub rotation starting torque) as shown in the illustration.

   Standard value: 7 – 26 N (0.5 – 1.8 Nm)

2. If the rotary sliding resistance is not within the standard value, remove the lock washer and adjust by the following procedure.
   (1) If the rotary sliding resistance is lower than the standard value, use the special tool (MB990954) to tighten the lock nut.
   (2) If the rotary sliding resistance is higher than the standard value, use the special tool (MB990954) to loosen the lock nut.

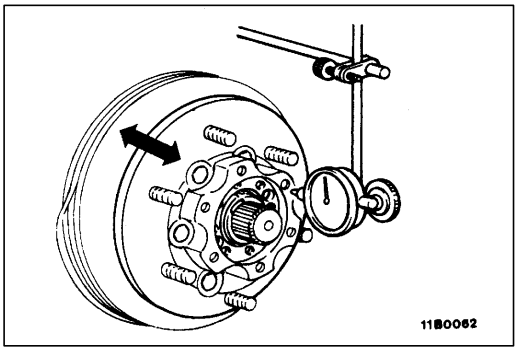

3. Install a dial gauge as shown in the illustration, and then move the hub in the axial direction and measure how far the front wheel bearing moves.

   Standard value: 0.05 mm or less

4. If the distance exceeds the standard value, remove the lock washer and use the special tool (MB990954) to tighten the lock nut.
5. If adjustment is not possible, disassemble the hub and inspect each part.

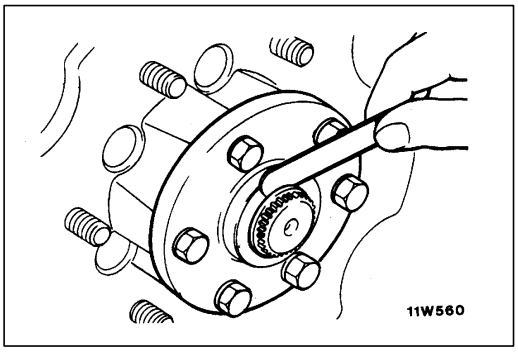

▶D◀ DRIVE SHAFT AXIAL PLAY ADJUSTMENT

1. Push the drive shaft in by hand towards the knuckle until they touch.
2. Measure the clearance between the drive flange and the spacer with a thickness gauge as shown in the illustration.

   Standard value: 0.4 – 0.7 mm

3. If the amount of play is outside the standard value, adjust by selecting a shim that will bring the play to the standard value.

DISASSEMBLY AND REASSEMBLY

26100190082

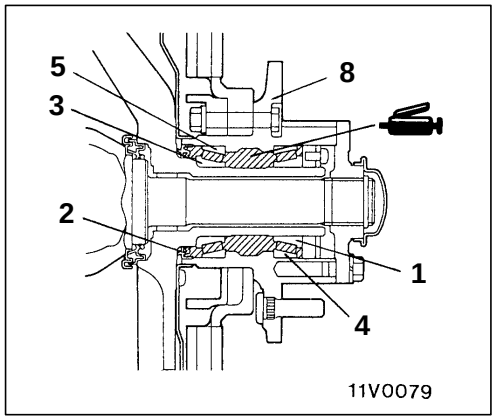

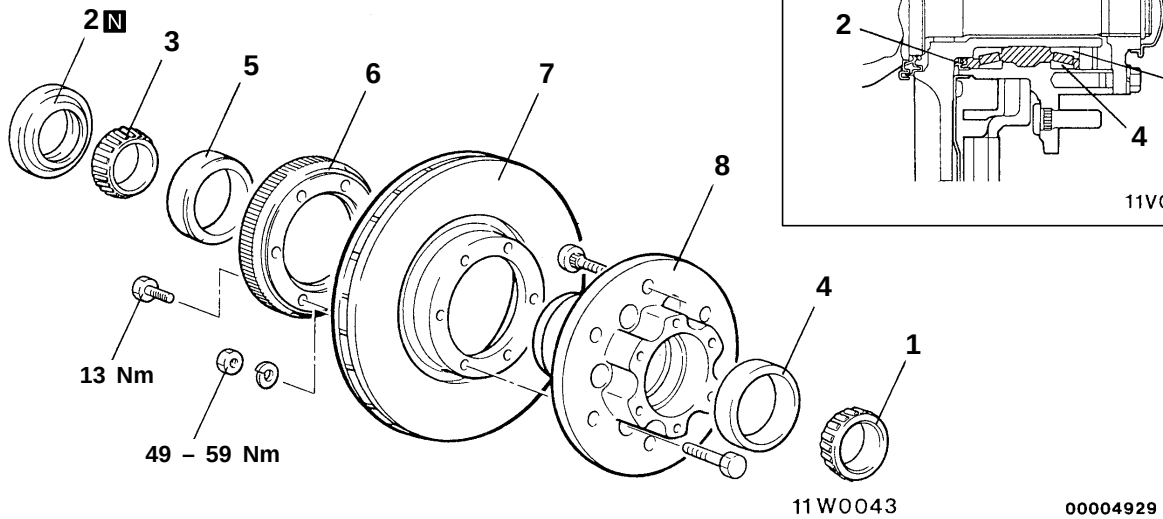

Disassembly steps

1. Outer bearing inner race
2. ▶B◀ Oil seal
3. Inner bearing inner race
4. ◀A▶ ▶A◀ Outer bearing outer race
5. ◀A▶ ▶A◀ Inner bearing outer race
6. Rotor <Vehicles with ABS>
7. ◀B▶ Brake disc
8. Front hub assembly

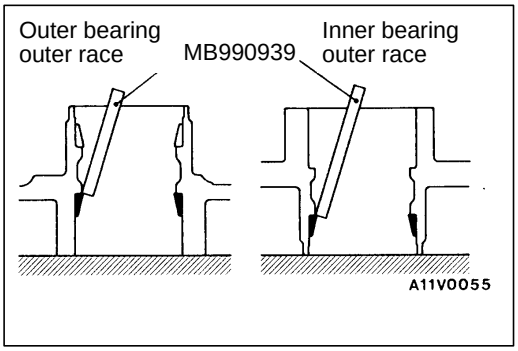

REMOVAL SERVICE POINTS

◀A▶ OUTER BEARING OUTER RACE/INNER BEARING OUTER RACE REMOVAL

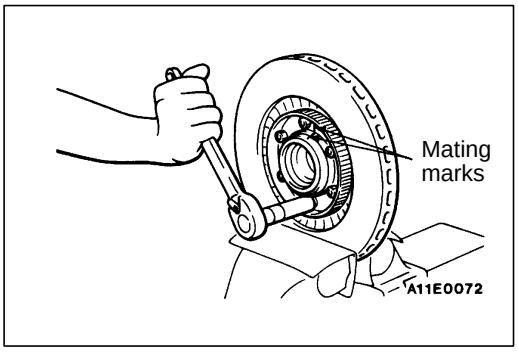

◀B▶ BRAKE DISC REMOVAL

Make the mating marks on the brake disc and front hub, and then separate the front hub and brake disc, if necessary.

Caution
Lock disc in vise and grip with copper or aluminium board.

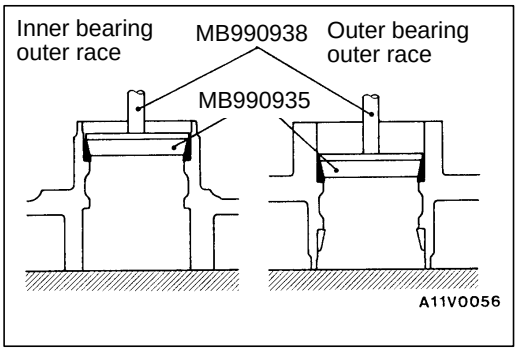

REASSEMBLY SERVICE POINTS

▶A◀ INNER BEARING OUTER RACE/OUTER BEARING OUTER RACE INSTALLATION

NOTE
Replace the inner race and outer race assembly as a set.

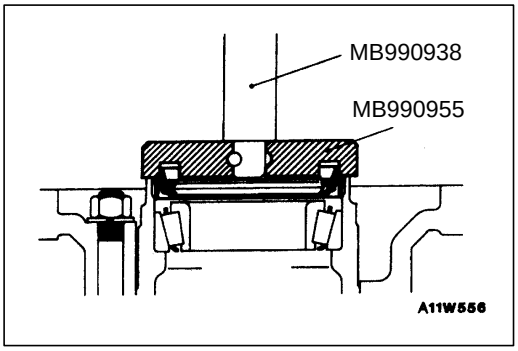

▶B◀ OIL SEAL INSTALLATION

KNUCKLE <2WD>

26100240084

REMOVAL AND INSTALLATION

Pre-removal Operation
- Front Hub Assembly Removal. (Refer to P. 26-13.)

Post-installation Operation
- Front Hub Assembly Installation. (Refer to P. 26-13.)
- Wheel Alignment Check and Adjustment. (Refer to GROUP 33A – On-vehicle Service.)

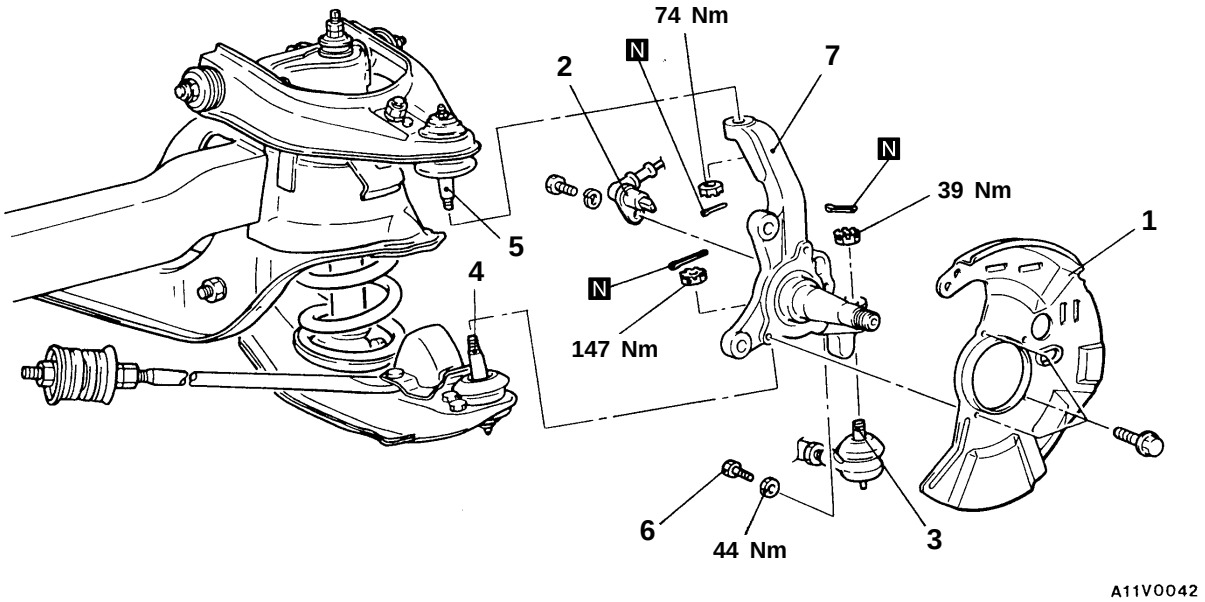

Removal steps

1. Dust cover
2. Front speed sensor <Vehicles with ABS> (Refer to GROUP 35B – Wheel Speed Sensor.>
3. ◀A▶ Tie rod end connection
4. ◀B▶ Lower arm ball joint connection
5. ◀A▶ Upper arm ball joint connection
6. Stopper bolt
7. Knuckle

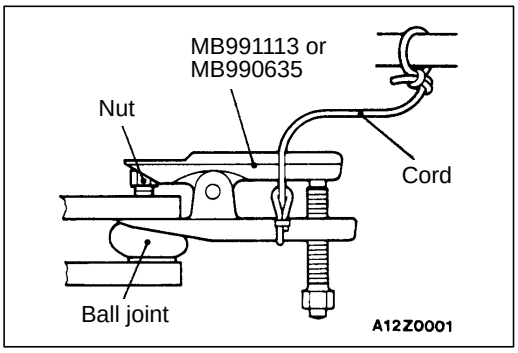

REMOVAL SERVICE POINTS

◀A▶ TIE ROD END /UPPER ARM BALL JOINT DISCONNECTION

Caution

1. **Use the special tool to loosen the nut only; do not remove it from the ball joint.**
2. **Tie the special tool with a cord not to let it fall off.**

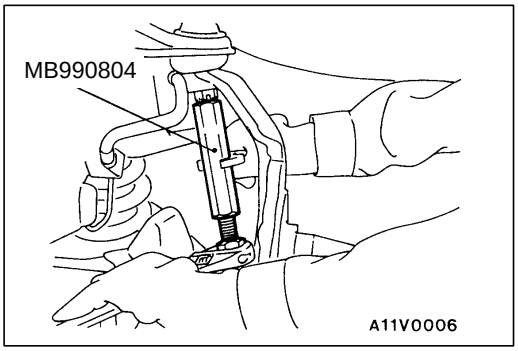

◀B▶ LOWER ARM BALL JOINT DISCONNECTION

Caution
Use the special tool to loosen the nut only; do not remove it from the ball joint.

INSPECTION

26100250049

- Check the knuckle for wear or cracks.

KNUCKLE <4WD>

26100240091

REMOVAL AND INSTALLATION

Pre-removal Operation
- Front Hub Assembly Removal. (Refer to P. 26-16.)

Post-installation Operation
- Front Hub Assembly Installation. (Refer to P. 26-16.)
- Wheel Alignment Check and Adjustment. (Refer to GROUP 33A – On-vehicle Service.)

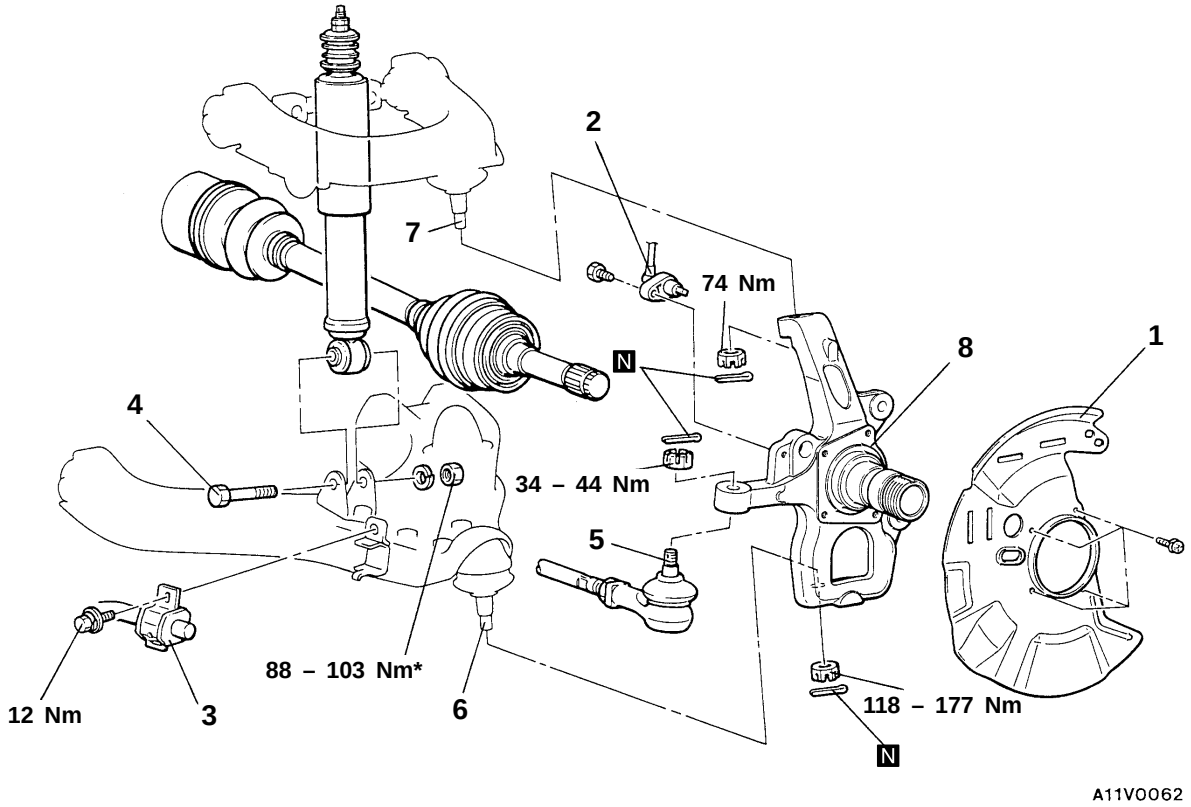

Removal steps

1. Dust cover
2. Front speed sensor <Vehicles with ABS> (Refer to GROUP 35B – Wheel Speed Sensor.>
3. Stabilizer bar connection
4. Shock absorber lower mounting bolt

◀A▶ 5. Tie rod end connection

◀A▶ 6. Lower arm ball joint connection

◀A▶ 7. Upper arm ball joint connection

8. Knuckle

Caution

***: Indicates parts which should be temporarily tightened, and then fully tightened with the vehicle on the ground in the unladen condition.**

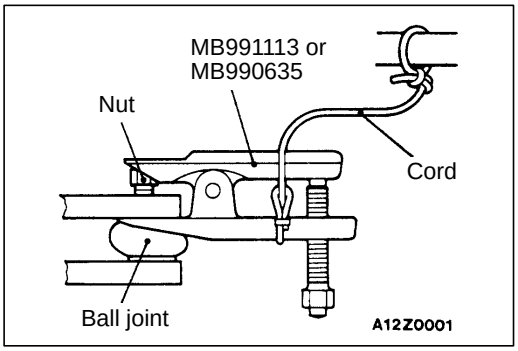

REMOVAL SERVICE POINT

◀A▶ TIE ROD END /LOWER ARM BALL JOINT /UPPER ARM BALL JOINT DISCONNECTION

Caution

1. **Use the special tool to loosen the nut only; do not remove it from the ball joint.**
2. **Tie the special tool with a cord not to let it fall off.**

INSPECTION

26100250056

- Check the knuckle for wear or cracks.

DISASSEMBLY AND REASSEMBLY

26100320023

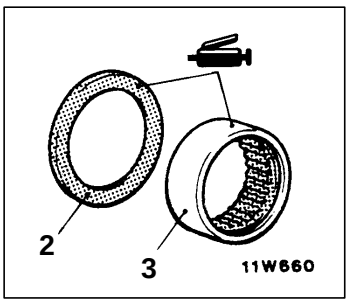

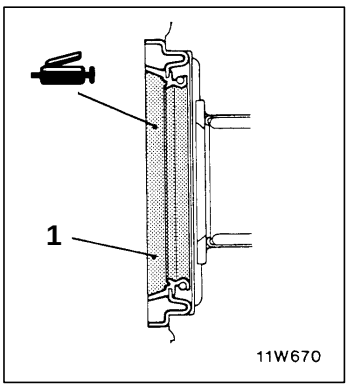

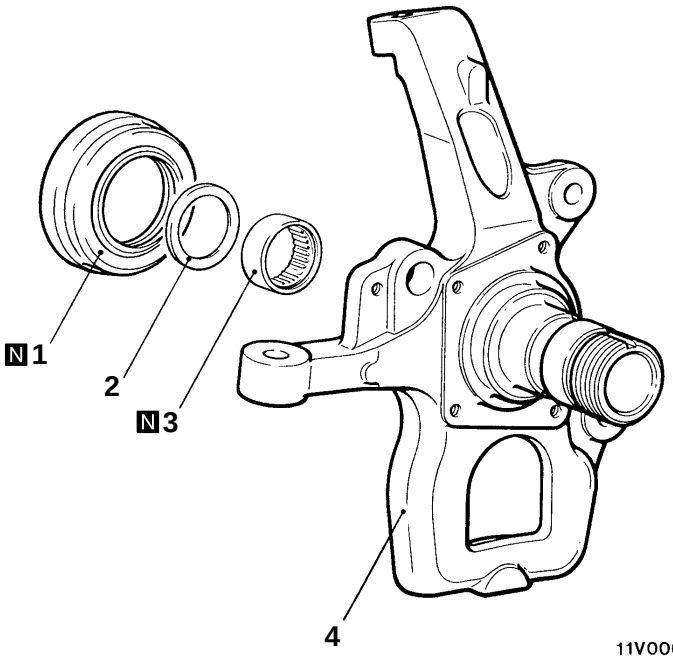

00004930

Disassembly steps

	▶C◀	1. Oil seal
	▶B◀	2. Spacer
◀A▶	▶A◀	3. Needle bearing
		4. Knuckle

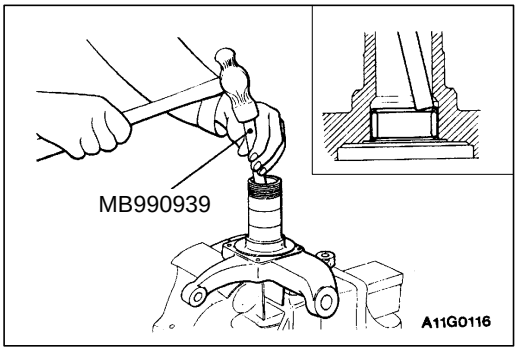

DISASSEMBLY SERVICE POINT

◀A▶ NEEDLE BEARING REMOVAL

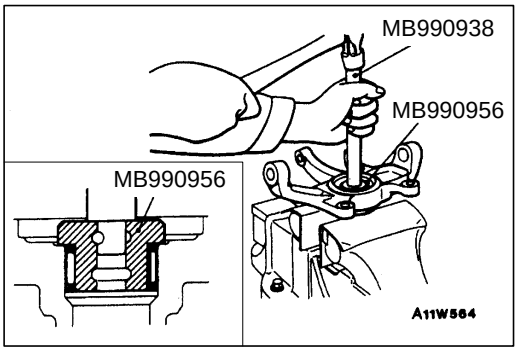

REASSEMBLY SERVICE POINTS

▶A◀ NEEDLE BEARING INSTALLATION

Caution
Use care to prevent driving the needle bearing too far in.

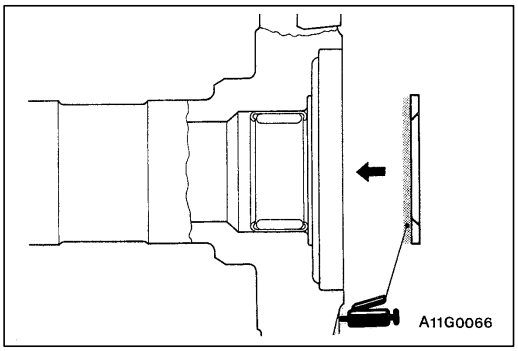

▶B◀ SPACER INSTALLATION

Install the spacer to the knuckle with the chamfered side toward the center of vehicle.

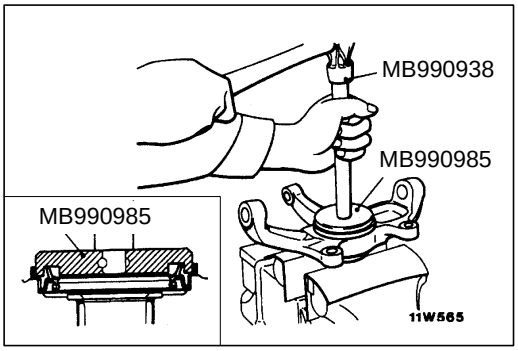

▶C◀ OIL SEAL INSTALLATION

DRIVE SHAFT

26100350152

REMOVAL AND INSTALLATION

Pre-removal Operation
- Front Under Cover Removal
- Gear Oil Draining (Refer to P. 26-10.)

Post-installation Operation
- Gear Oil Supplying (Refer to P. 26-10.)
- Front Under Cover installation
- Wheel Alignment Check and Adjustment. (Refer to GROUP 33A – On-vehicle Service.)

Left-side drive shaft

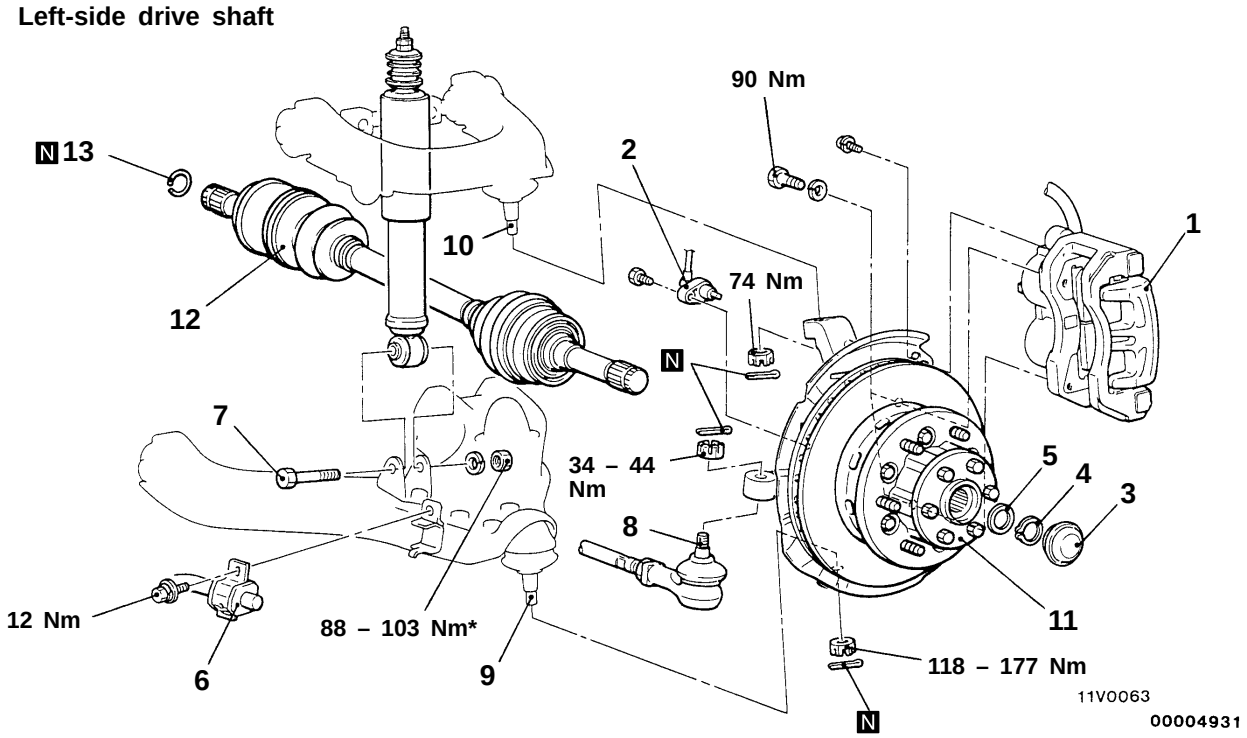

Right-side drive shaft

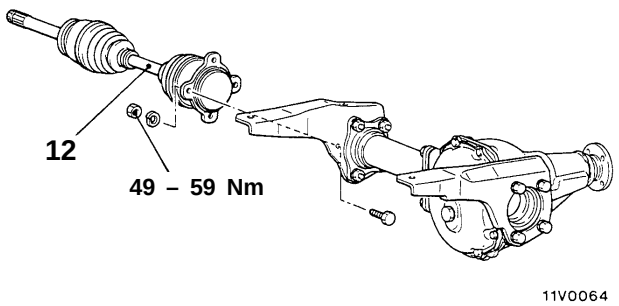

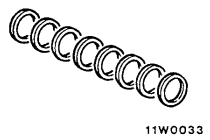	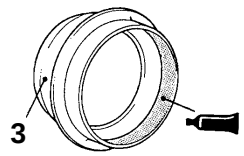
Front hub shim set	**Sealant: 3M ATD Part No. 8661 or equivalent**

Removal steps

◀A▶ 1. Caliper assembly
2. Front speed sensor <Vehicles with ABS> (Refer to GROUP 35B – Wheel Speed Sensor.)
3. Hub cap
▶C◀ ● Drive shaft axial play adjustment
4. Snap ring
5. Shim
6. Stabilizer bar connection
7. Shock absorber lower mounting bolt
◀B▶ 8. Tie rod end connection
◀B▶ 9. Lower arm ball joint connection
◀B▶ 10. Upper arm ball joint mounting bolt
◀C▶ ▶B◀ 11. Knuckle and front hub assembly
◀D▶ ▶A◀ 12. Drive shaft assembly
13. Circlip

Caution

***: Indicates parts which should be temporarily tightened, and then fully tightened with the vehicle on the ground in the unladen condition.**

REMOVAL SERVICE POINTS

◀A▶ CALIPER ASSEMBLY REMOVAL

Secure the removed caliper assembly with wire so that it does not fall.

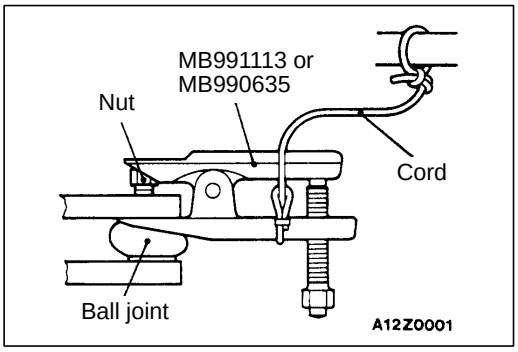

◀B▶ TIE ROD END /LOWER ARM BALL JOINT /UPPER ARM BALL JOINT DISCONNECTION

Caution

1. **Use the special tool to loosen the nut only; do not remove it from the ball joint.**
2. **Tie the special tool with a cord not to let it fall off.**

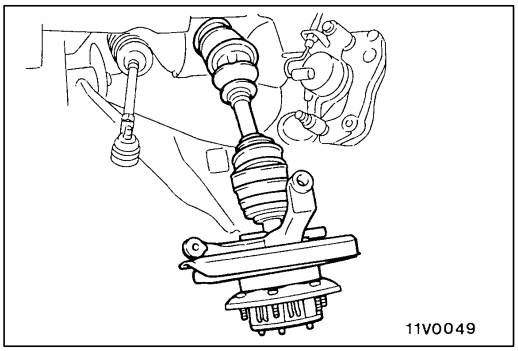

◀C▶ KNUCKLE AND FRONT HUB ASSEMBLY REMOVAL

1. Press down lower arm and remove upper knuckle towards you.

   NOTE
   Pull the D.O.J. side of the drive shaft assembly out slightly from the front differential carrier.

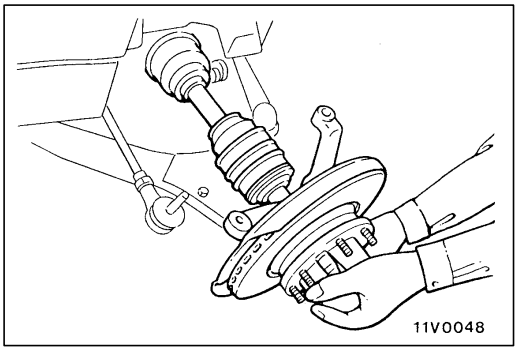

2. Slightly back off drive shaft from knuckle. Remove lower knuckle holding nut from the lower arm ball joint.
3. Disconnect knuckle and lower ball joint.
4. Remove knuckle and front hub assembly from drive shaft assembly.

   Caution
   Do not damage knuckle oil seals with drive shaft spline.

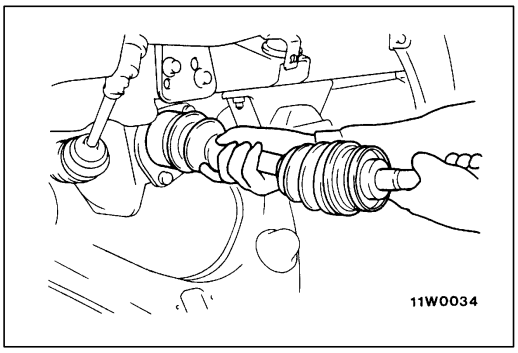

◀D▶ DRIVE SHAFT (LEFT SIDE) REMOVAL

Caution

When pulling the drive shaft out from the differential carrier, be careful that the spline part of the drive shaft does not damage the oil seal.

INSTALLATION SERVICE POINTS

▶A◀ DRIVE SHAFT (LEFT SIDE) INSTALLATION

Caution
Do not damage the oil seal of the differential carrier by the drive shaft splines.

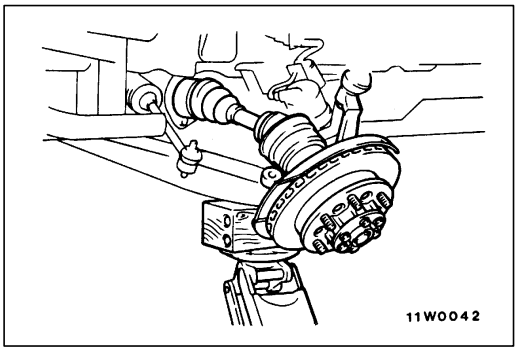

▶B◀ KNUCKLE AND FRONT HUB ASSEMBLY INSTALLATION

1. Insert knuckle and front hub assembly to drive shaft.

   Caution
   Do not damage knuckle oil seal with drive shaft spline.
2. Assemble knuckle and lower ball joint and temporarily tighten slotted nut.
3. Press up lower arm and lock upper ball joint onto upper arm.
4. Tighten lower ball joint mounting nuts to specified torque.

   Tightening torque: 118 – 177 Nm

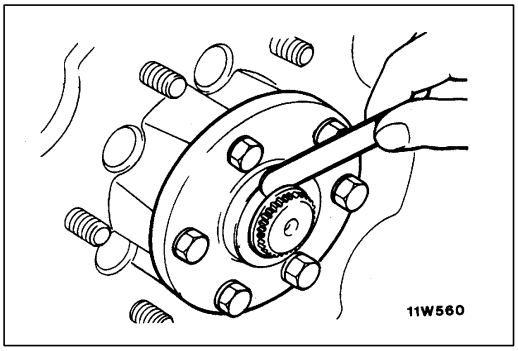

▶C◀ DRIVE SHAFT AXIAL PLAY ADJUSTMENT

1. Push the drive shaft in by hand towards the knuckle until they touch.
2. Measure the clearance between the drive flange and the spacer with a thickness gauge as shown in the illustration.

   Standard value: 0.4 – 0.7 mm
3. If the amount of play is outside the standard value, adjust by selecting a shim that will bring the play to the standard value.

   NOTE
   The shims available range from 0.3 mm thick to 0.6 mm thick in steps of 0.1 mm, and from 0.9 mm thick to 1.8 mm thick in steps of 0.3 mm.

INSPECTION

26100360087

- Check the boot for damage or deterioration.
- Check the ball joint for operating condition and excessive looseness.
- Check the splines for wear or damage.
- Check the differential carrier oil seal (L.H.) for damaged.

DISASSEMBLY AND REASSEMBLY

26100370165

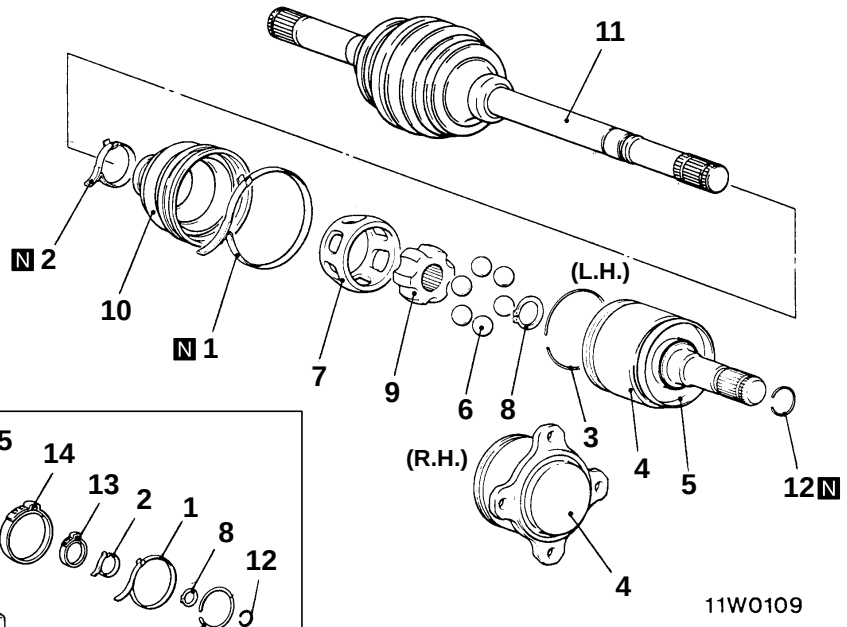

00004932

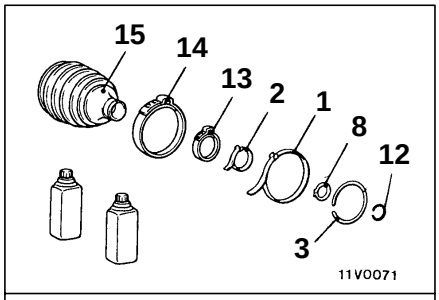

B.J. repair kit (B.J.)

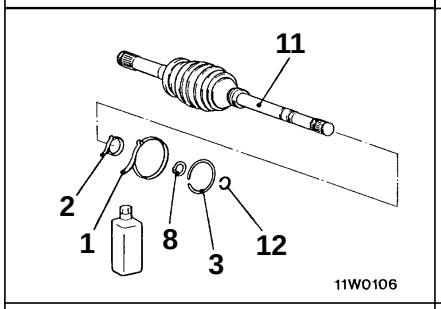

B.J. repair kit L.H.

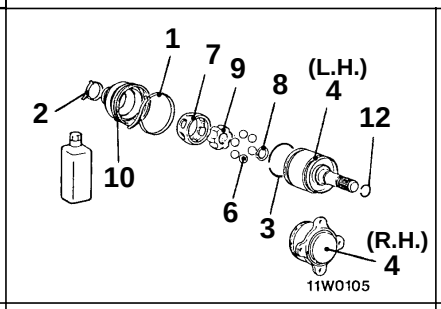

D.O.J. repair kit

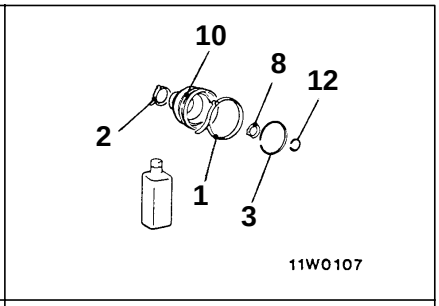

Boot repair kit (D.O.J.)

Disassembly steps

1. D.O.J. boot band (large)
2. D.O.J. boot band (small)
3. Circlip
4. D.O.J. outer race
5. Dust cover
6. ◀A▶ Balls
7. ◀B▶ D.O.J. cage
8. Snap ring
9. D.O.J. inner race
10. ◀C▶ D.O.J. boot
11. B.J. assembly
12. Circlip
13. B.J. boot band (small)
14. B.J. boot band (large)
15. B.J. boot

Reassembly steps

12. Circlip
11. B.J. assembly
9. ▶A◀ D.O.J. inner race
8. ▶A◀ Snap ring
7. ▶A◀ D.O.J. cage
6. ▶A◀ Balls
4. ▶B◀ D.O.J. outer race
5. Dust cover
3. Circlip
10. ▶C◀ D.O.J. boot
2. ▶C◀ D.O.J. boot band (small)
1. ▶C◀ D.O.J. boot band (large)

Caution
Never disassemble the B.J. assembly except when replacing the B.J. boot.

Lubrication Points

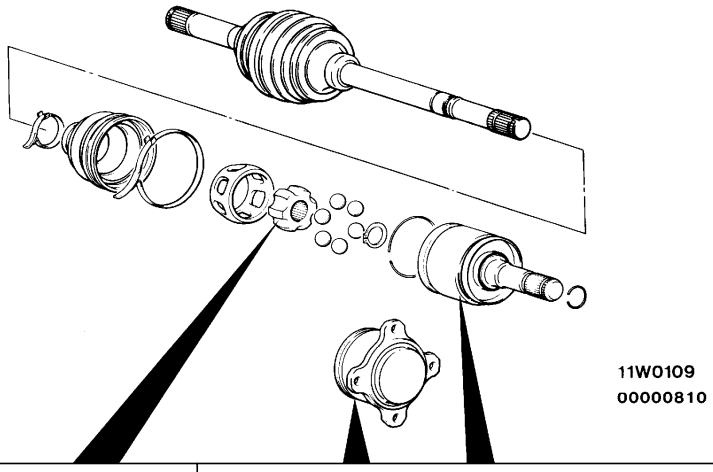

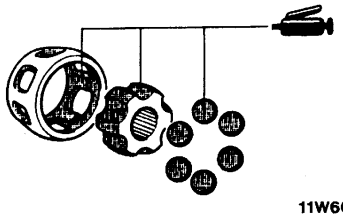	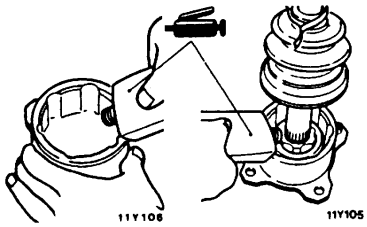
Grease: Repair kit grease	**Grease:** **Repair kit grease 100 g (60 g inside joint, 40 g inside boot)**
Caution **Do not mix old and new or different types of grease, as a special grease is used in the joint.**	

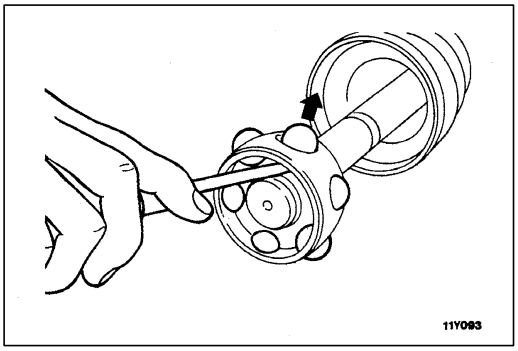

DISASSEMBLY SERVICE POINTS

◀A▶ BALLS REMOVAL

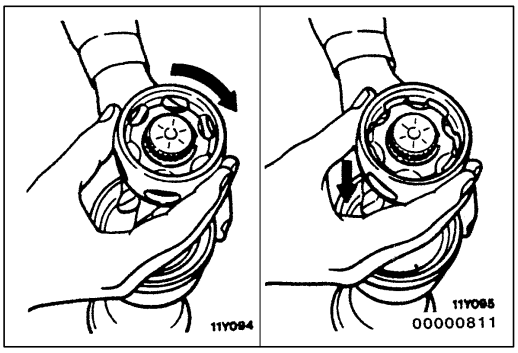

◀B▶ D.O.J. CAGE REMOVAL

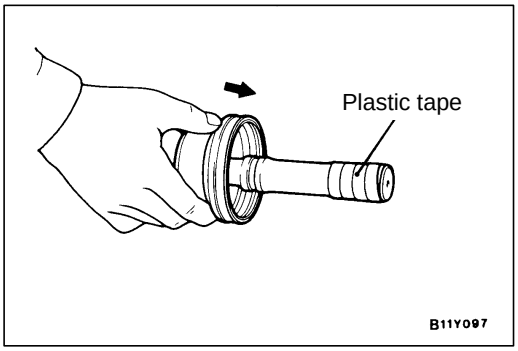

◀C▶ D.O.J. BOOT REMOVAL

Wrap plastic tape around the spline part on the D.O.J. side of the drive shaft so that D.O.J. boot is not damaged when they are removed.

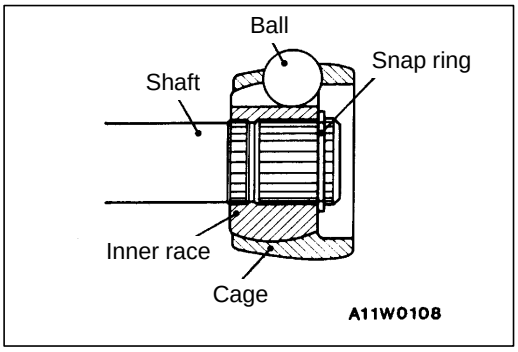

REASSEMBLY SERVICE POINTS

▶A◀ D.O.J. INNER RACE/SNAP RING/D.O.J. CAGE/BALLS INSTALLATION

Install the cage, balls and inner race to the drive shaft, and fit the snap ring securely to the groove in the drive shaft.

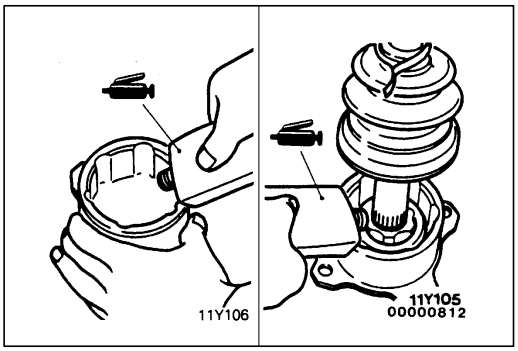

▶B◀ D.O.J. OUTER RACE INSTALLATION

Fill the inside of the D.O.J. outer race and D.O.J. boot with the specified grease.

Specified grease: Repair kit grease 100 g

NOTE
The grease in the repair kit should be divided in half for use, respectively, at the joint and inside the boot.

Caution
The drive shaft joint use special grease. Do not mix old and new or different types of grease.

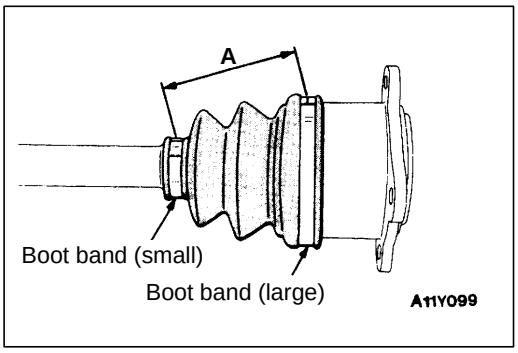

▶C◀ D.O.J. BOOT/D.O.J. BOOT BAND INSTALLATION

1. Position the D.O.J. outer race so that the distance between the boot bands is at the standard value.

   Standard value (A): 80 ± 3 mm

2. Remove part of the D.O.J. boot from the D.O.J. outer race to release the air pressure inside the boot.

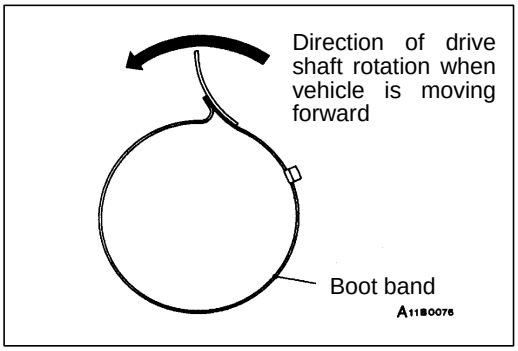

3. Secure the boot band (large) on D.O.J. boot.

   Caution
   Be sure that the installation direction of the boot bands is correct.

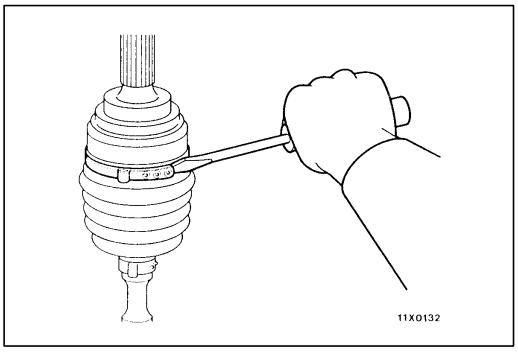

B.J. BOOT (RESIN BOOT) REPLACEMENT

26100520065

1. Remove the boot bands (large and small).

   NOTE
   The B.J. boot bands cannot be re-used.

2. Remove the B.J. boot.

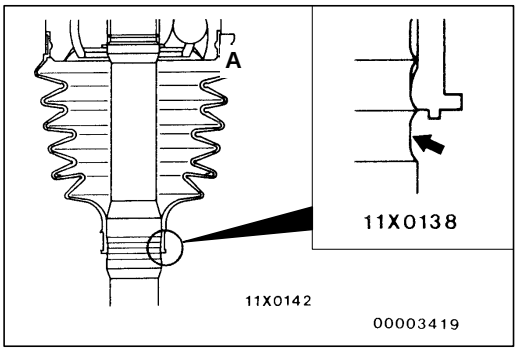

3. Install the B.J. boot with the part with the smallest diameter in a position such that the shaft groove can be seen.

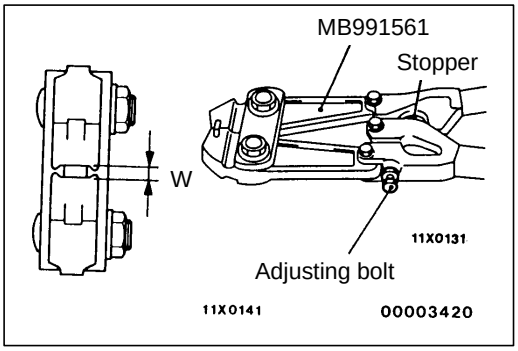

4. Turn the adjusting bolt on the special tool so that the size of the opening (W) is at the standard value.

   Standard value (W): 2.9 mm
   <If it is larger than 2.9 mm>
   Tighten the adjusting bolt.
   <If it is smaller than 2.9 mm>
   Loosen the adjusting bolt.

   NOTE
   (1) The value of W will change by approximately 0.7 mm for each turn of the adjusting bolt.
   (2) The adjusting bolt should not be turned more than once.

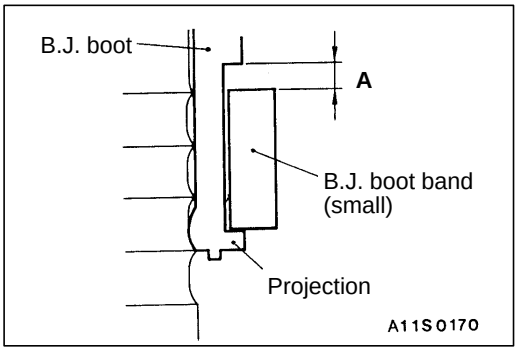

5. Place the B.J. boot band (small) against the projection at the edge of the boot, and then secure it so that there is a clearance left as shown by (A) in the illustration.

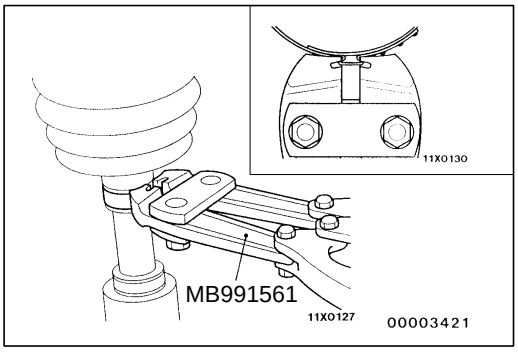

6. Use the special tool to crimp the B.J. boot band (small).

   Caution
   1. **Secure the drive shaft in an upright position and clamp the part of the B.J. boot band to be crimped securely in the jaws of the special tool.**
   2. **Crimp the B.J. boot band until the special tool touches the stopper.**

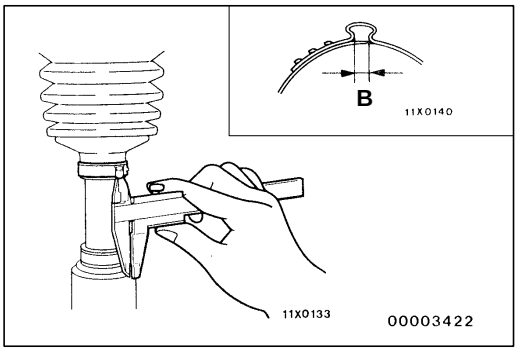

7. Check that crimping amount (B) of the B.J. boot band is at the standard value.

   Standard value (B): 2.4 – 2.8 mm

   <If the crimping amount is larger than 2.8 mm>
   Readjust the value of (W) in step (4) according to the following formula, and then repeat the operation in step (6).
   W = 5.5 mm – B
   Example: If B = 2.9 mm, then W = 2.6 mm.

   <If the crimping amount is smaller than 2.4 mm>
   Remove the B.J. boot band, readjust the value of (W) in step (4) according to the following formula, and then repeat the operations in steps (5) and (6) using a new B.J. boot band.
   W = 5.5 mm – B
   Example: If B = 2.3, then W = 3.2 mm.

8. Check that the B.J. boot band is not sticking out past the place where it has been installed.
   If the B.J. boot band is sticking out, remove it and then repeat the operations in steps (5) to (7) using a new B.J. boot band.
9. Fill the inside of the B.J. boot with the specified amount of the specified grease.

   Specified grease: Repair kit grease

   Amount to use: 125 g

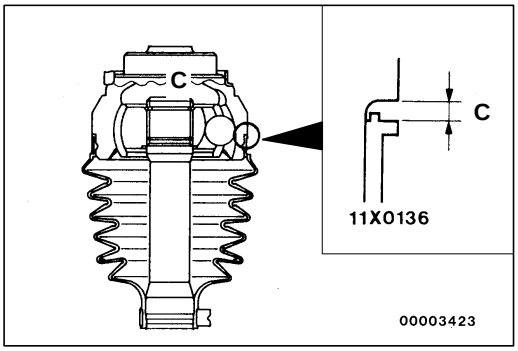

10. Install the B.J. boot band (large) so that there is the clearance (C) between it and the B.J. housing is at the standard value.

    Standard value (C): 0.1 – 1.55 mm

11. Follow the same procedure as in step (4) to adjust the size of the opening (W) on the special tool so that it is at the standard value.

    Standard value (W): 3.2 mm

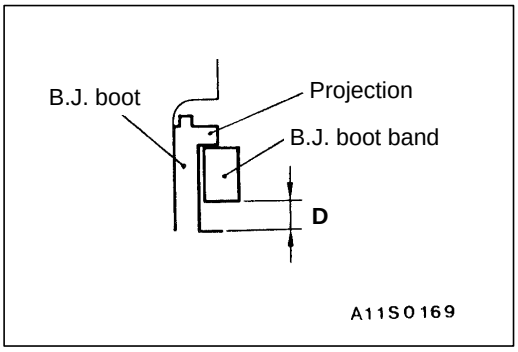

12. Place the B.J. boot band (large) against the projection at the edge of the boot, and then secure it so that there is a clearance left as shown by (D) in the illustration.
13. Use the special tool to crimp the B.J. boot band (large) in the same way as in step (6).

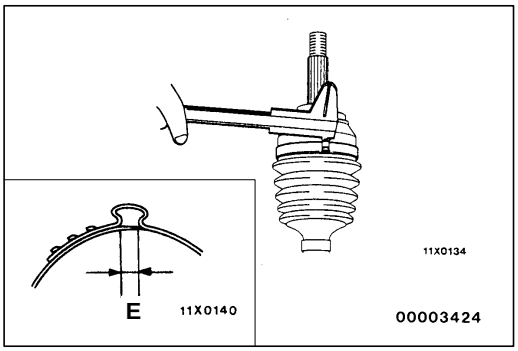

14. Check that the crimping amount (E) of the B.J. boot band is at the standard value.

    Standard value (E): 2.4 – 2.8 mm

    <If the crimping amount is larger than 2.8 mm>
    Readjust the value of (W) in step (11) according to the following formula, and then repeat the operation in step (13).
    W = 5.8 mm – E
    Example: If E = 2.9 mm, then W = 2.9 mm.

    <If the crimping amount is smaller than 2.4 mm>
    Remove the B.J. boot band, readjust the value of (W) in step (11) according to the following formula, and then repeat the operating in steps (12) and (13) using a new B.J. boot band.
    W = 5.8 mm – E
    Example: If E = 2.3 mm, then W = 3.5mm.

15. Check that the B.J. boot band is not sticking out past the place where it has been installed.
    If the B.J. boot band is sticking out, remove it and then repeat the operations in steps (12) to (14) using a new B.J. boot band.

INNER SHAFT

26100400031

REMOVAL AND INSTALLATION

Pre-removal and Post-installation Operation
- Front Under Cover Removal and Installation
- Gear Oil Draining and Supplying (Refer to P. 26-10.)

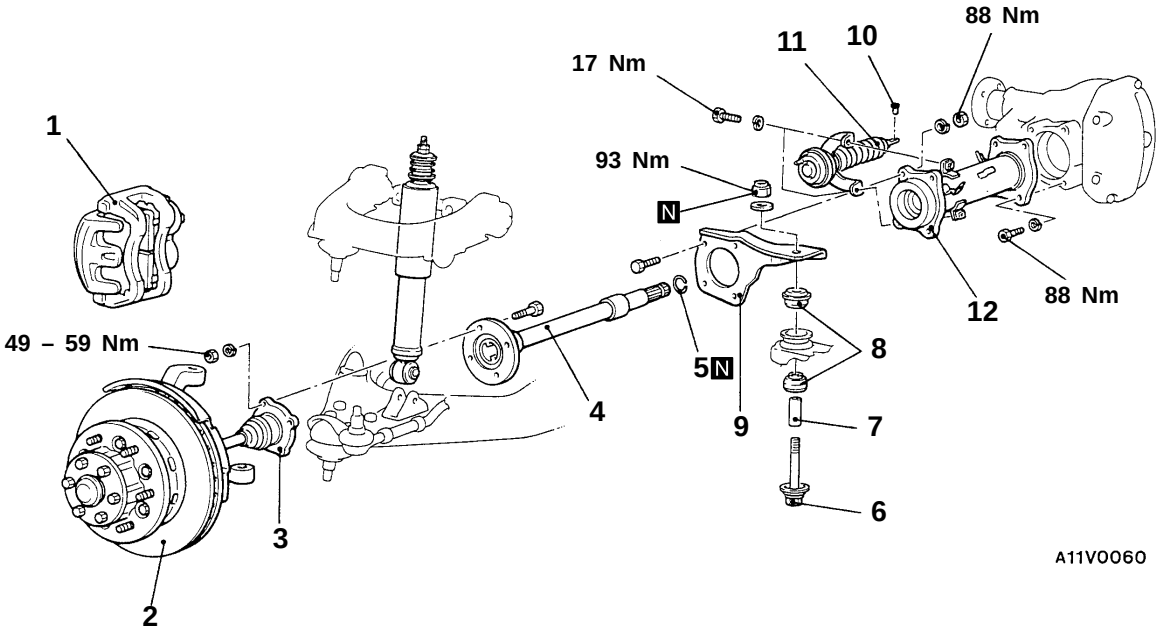

Removal steps

◀A▶ 1. Caliper assembly
2. Hub assembly, knuckle (Refer to P. 26-22.)
3. Drive shaft (R.H.) (Refer to P.26-26.)
◀B▶ ▶A◀ 4. Inner shaft
5. Circlip
6. Pin
7. Spacer
8. Rubber
9. Differential mounting bracket (R.H.)
10. Pin
11. Actuator assembly
12. Housing tube assembly

Caution

***: Indicates parts which should be temporarily tightened, and then fully tightened with the vehicle on the ground in the unladen condition.**

REMOVAL SERVICE POINTS

◀A▶ CALIPER ASSEMBLY REMOVAL

Secure the removed caliper assembly with wire so that it does not fall.

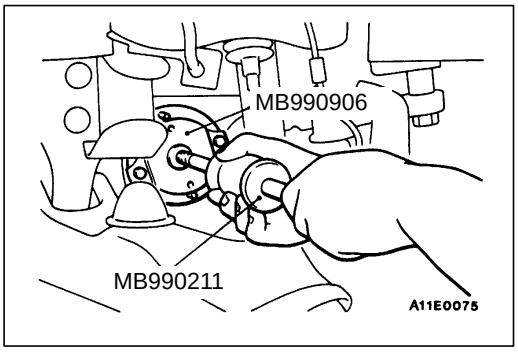

◀B▶ INNER SHAFT REMOVAL

Caution
When pulling the inner shaft out from the front differential carrier, be careful that the spline part of the inner shaft does not damage the oil seal.

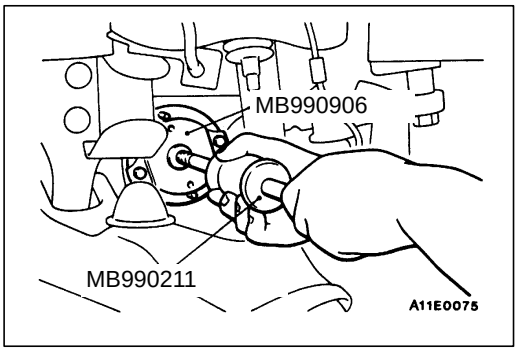

INSTALLATION SERVICE POINT

◀A▶ INNER SHAFT INSTALLATION

Caution
Be careful not to damage the lip of the dust seal and oil seal.

DISASSEMBLY AND REASSEMBLY

26100420020

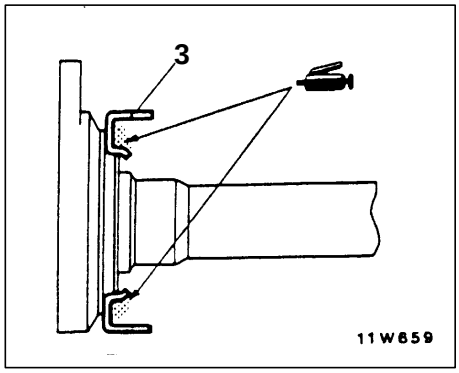

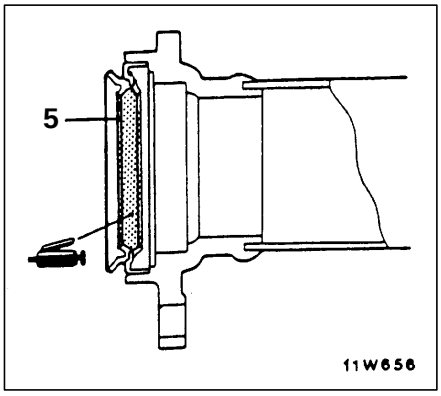

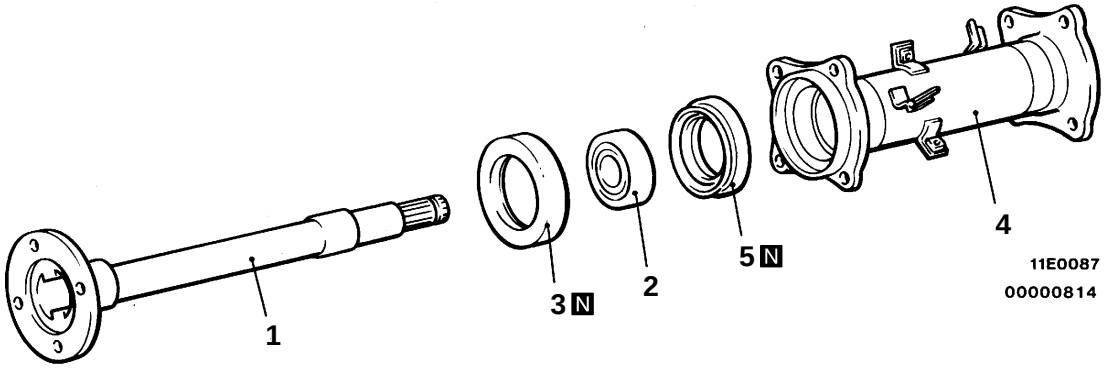

Disassembly steps

◀A▶ 1. Inner shaft
▶C◀ 2. Bearing
▶B◀ 3. Dust cover
4. Housing tube
▶A◀ 5. Dust seal

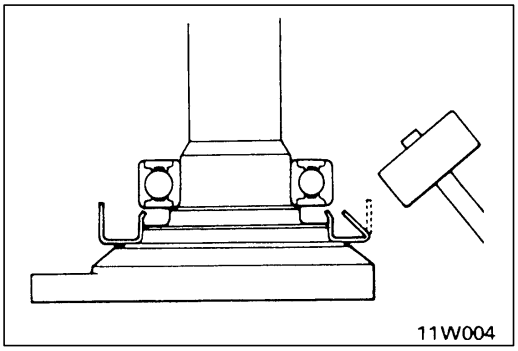

DISASSEMBLY SERVICE POINT

◀A▶ BEARING REMOVAL

1. Bend the outside periphery of dust cover inward with a hammer.

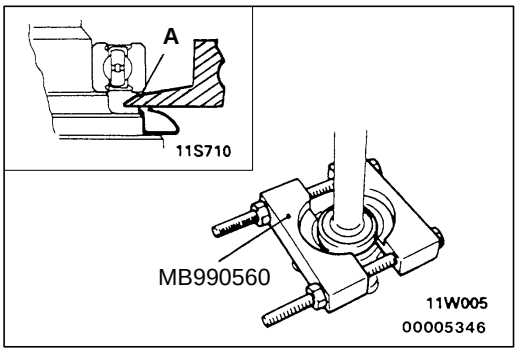

2. After the special tool has been installed as shown, tighten the nut of the special tool until the portion “A” of the special tool touches the bearing outer race.

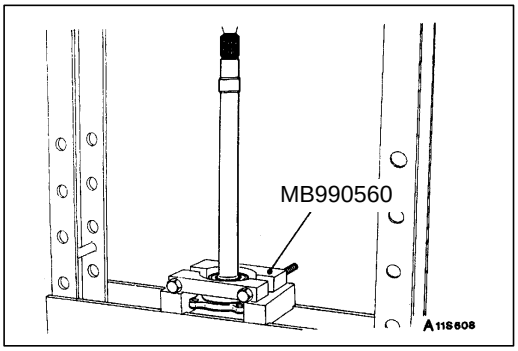

3. Press out the inner shaft from the bearing.

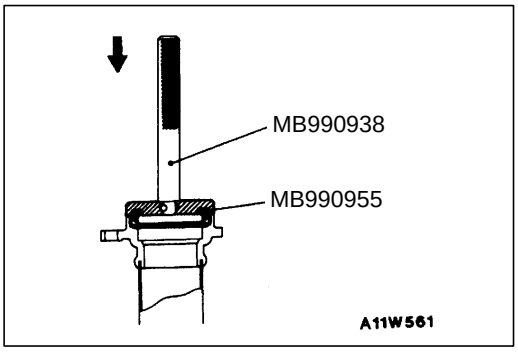

REASSEMBLY SERVICE POINTS

▶A◀ DUST SEAL INSTALLATION

Press-fit the new dust seal into the housing tube by using the special tools, until it is flush with the housing tube end face.

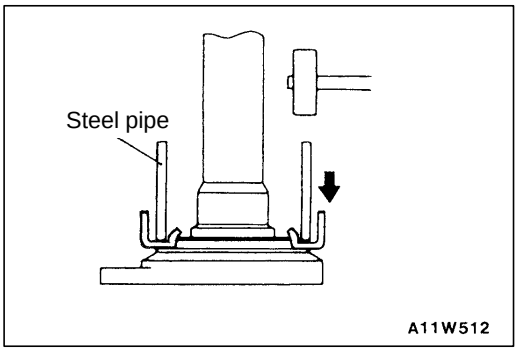

▶B◀ DUST COVER INSTALLATION

Using a steel pipe, force a new dust cover onto the inner shaft.

Steel pipe	mm
Overall length	50
Outside diameter	75
Wall thickness	4

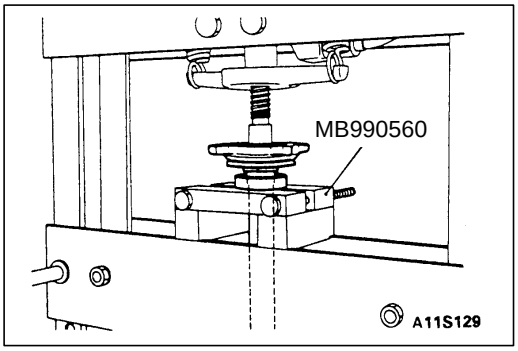

▶C◀ BEARING INSTALLATION

DIFFERENTIAL CARRIER

26200210019

REMOVAL AND INSTALLATION

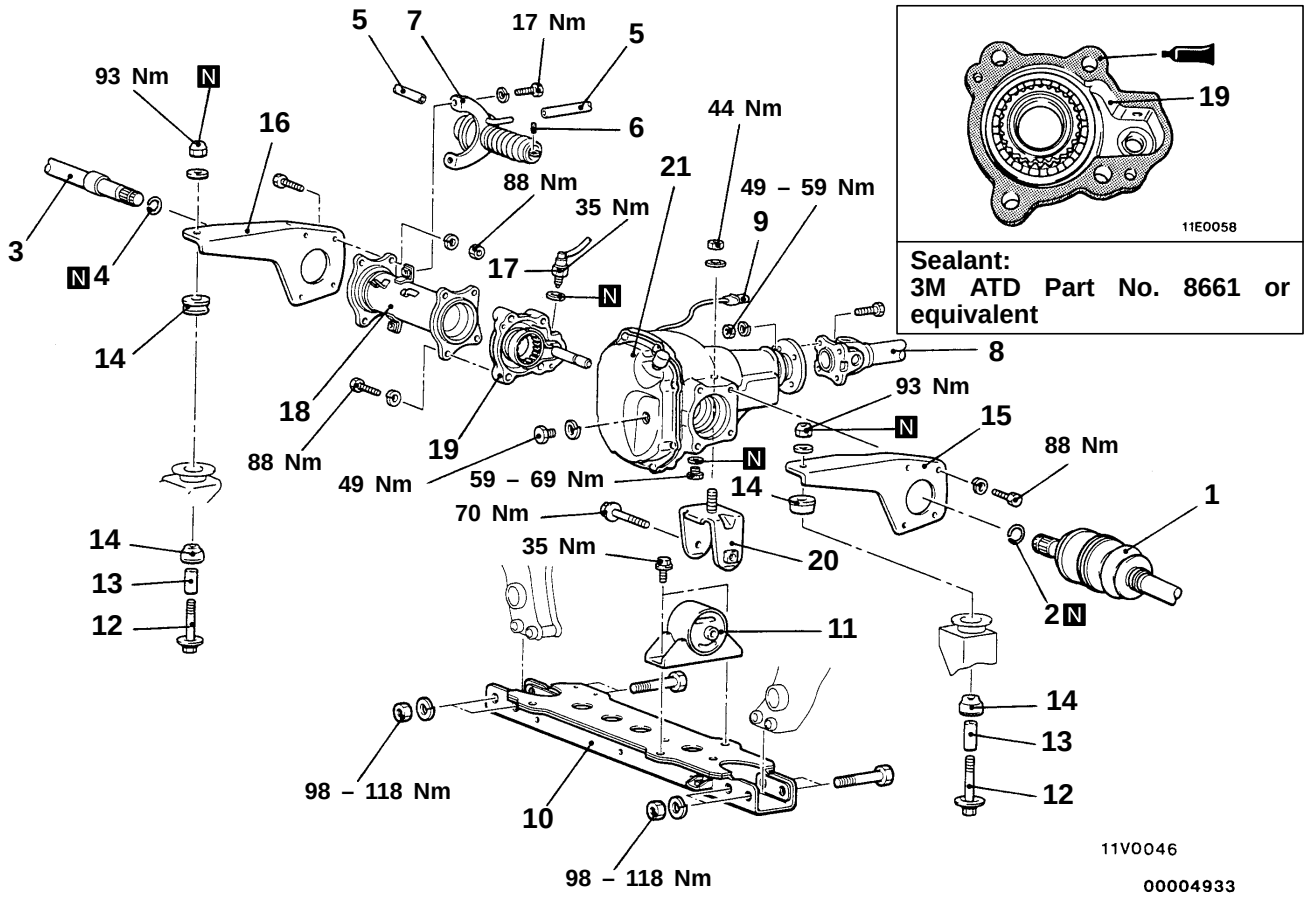

Removal steps

1. Drive shaft (Refer to P. 26-26.)
2. Circlip
3. Inner shaft (Refer to P.26-36.)
4. Circlip

▶C◀ 5. Vacuum hose connection
6. Pin
7. Actuator assembly

◀A▶ ▶B◀ 8. Front propeller shaft connection
9. Freewheel engage switch connector
10. Front suspension crossmember
11. Differential mount insulator assembly
    - Support the differential by a transmission jack.
12. Pin
13. Spacer
14. Rubber
15. Differential mounting bracket (L.H.)
16. Differential mounting bracket (R.H.)
17. Freewheel engage switch
18. Housing tube
19. Freewheel clutch assembly
20. Differential support bracket

▶A◀ • Clutch gear bearing axial play inspection.

21. Front differential carrier assembly

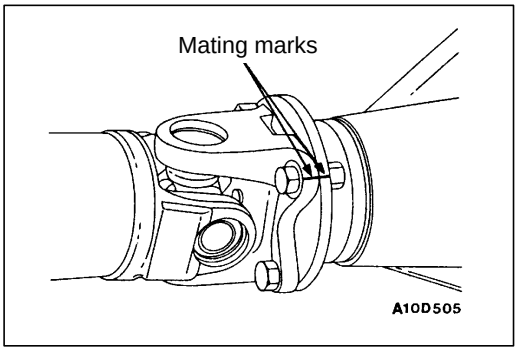

REMOVAL SERVICE POINT

◀A▶ FRONT PROPELLER SHAFT REMOVAL

Make the mating marks on the flange yoke and the differential carrier companion flange and then remove the front propeller shaft.

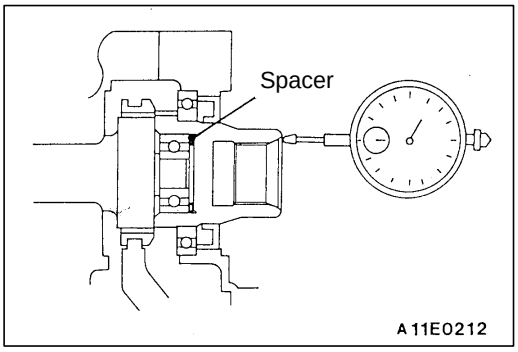

INSTALLATION SERVICE POINTS

▶A◀ CLUTCH GEAR BEARING AXIAL PLAY INSPECTION

Check the axial play of the clutch gear bearing by the following procedure before installing the freewheel clutch assembly.

1. Insert flat washers of the same thickness as the housing tube (9.0 mm) onto the bolt, and then temporarily install the freewheel clutch assembly to the front differential.
2. Place a micrometer against the end of the clutch gear and check the axial play of the clutch gear bearing.

   Standard value: 0.05 – 0.30 mm
3. If the play is not within the standard value, disassemble the bearing and insert a spacer of the appropriate thickness.

   NOTE
   The thicknesses of the spacers vary in steps of 0.25 mm.

▶B◀ FRONT PROPELLER SHAFT INSTALLATION

Install the front propeller shaft so that the mating marks of the flange yoke and the differential carrier companion flange are aligned.

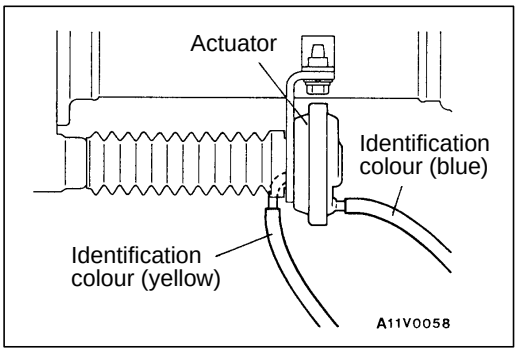

▶C◀ VACUUM HOSE INSTALLATION

Install the vacuum hoses so that they match the identification colours of the actuator assembly nipple.

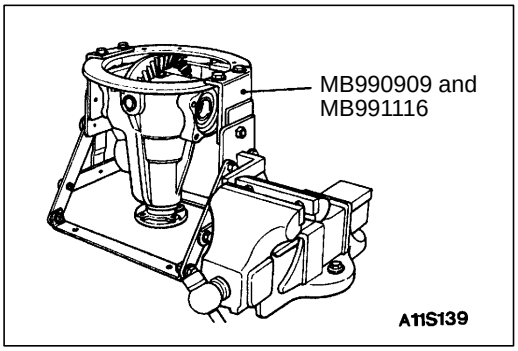

INSPECTION BEFORE DISASSEMBLY 26200430026

1. Remove the cover and gasket.
2. Hold the special tool in a vise, and install the differential carrier assembly to the special tool.

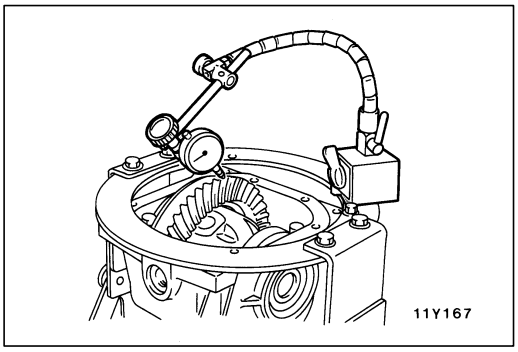

DRIVE GEAR BACKLASH

1. With the drive pinion locked in place, use a dial gauge to measure the drive gear backlash in four or more places on the drive gear.

   Standard value: 0.11 – 0.16 mm

2. If the backlash is not within the standard value, insert side bearing adjustment spacers, and then inspect the drive gear tooth contact.

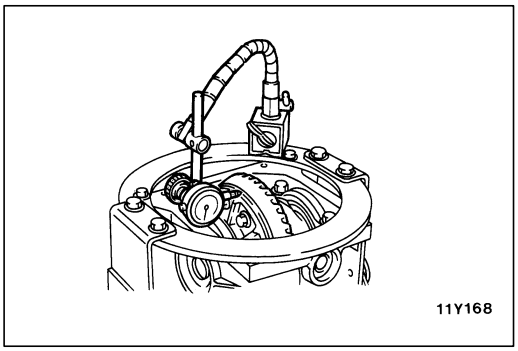

DRIVE GEAR RUNOUT

1. Measure the drive gear runout at the shoulder on the reverse side of the drive gear.

   Limit: 0.05 mm

2. When runout exceeds the limit value, check for foreign object between drive gear rear side and differential case, or for loose drive gear installation bolts.
3. When check (2) gives normal results, reposition drive gear and differential case and remeasure.
4. If adjustment is impossible, replace differential case, or replace drive gear and pinion as a set.

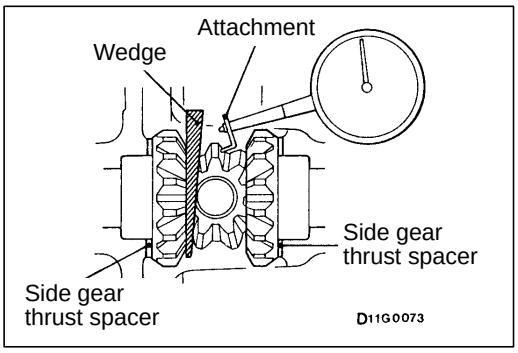

DIFFERENTIAL GEAR BACKLASH

1. While locking the side gear with the wedge, measure the differential gear backlash with a dial indicator on the pinion gear.

   Standard value: 0 – 0.076 mm
   Limit: 0.2 mm

   Repeat the same procedure for both pinion gears.

2. If the backlash exceeds the limit, adjust by using the side gear thrust spacers.
3. If adjustment is impossible, replace the side gear and pinion gear as a set.

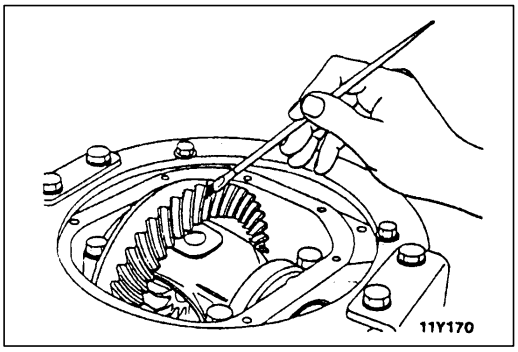

DRIVE GEAR TOOTH CONTACT

Check the tooth contact of drive gear by following the steps below.

1. Apply a thin, uniform coat of machine blue to both surfaces of the drive gear teeth.

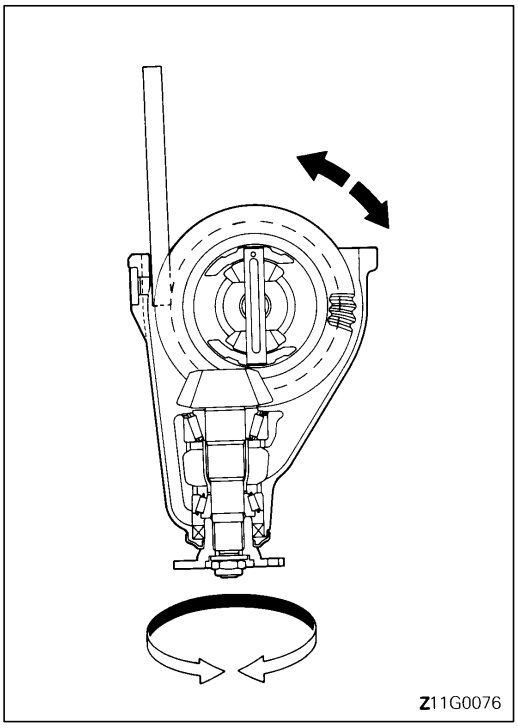

2. Insert the brass between the differential carrier and the differential case, and then rotate the companion flange by hand (once in the normal direction, and then once in the reverse direction) while applying a load to the drive gear so that the revolution torque (approximate 250 – 300 Ncm) is applied to the drive pinion.

   Caution
   If the drive gear is rotated too much, the tooth contact pattern will become unclear and difficult to check.

3. Check the tooth contact condition of the drive gear and drive pinion.

Standard tooth contact pattern	Problem	Solution
1 Narrow tooth side 2 Drive-side tooth surface (the side applying power during forward movement) 3 Wide tooth side 4 Coast-side tooth surface (the side applying power during reverse movement) 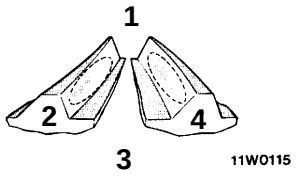	Tooth contact pattern resulting from excessive pinion height 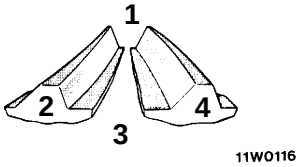 The drive pinion is positioned too far from the centre of the drive gear.	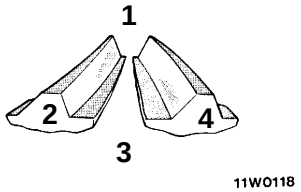 Increase the thickness of the drive pinion rear shim, and position the drive pinion closer to the centre of the drive gear. Also, for backlash adjustment, position the drive gear farther from the drive pinion.
	Tooth contact pattern resulting from insufficient pinion height. 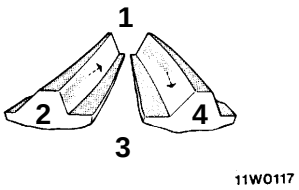 The drive pinion is positioned too close to the centre of the drive gear.	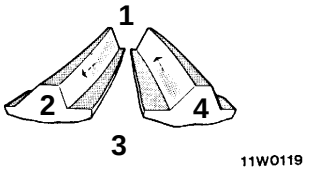 Decrease the thickness of the drive pinion rear shim, and position the drive pinion farther from the centre of the drive gear. Also, for backlash adjustment, position the drive gear closer to the drive pinion.

NOTE
Checking the tooth contact pattern is the way to confirm that the adjustments of the pinion height and backlash have been done properly. Continue to adjust the pinion height and backlash until the tooth contact pattern resembles the standard pattern.

If, even after adjustments have been made, the correct tooth contact pattern cannot be obtained, it means that the drive gear and the drive pinion have become worn beyond the allowable limit. Replace the gear set.

DISASSEMBLY

26200230039

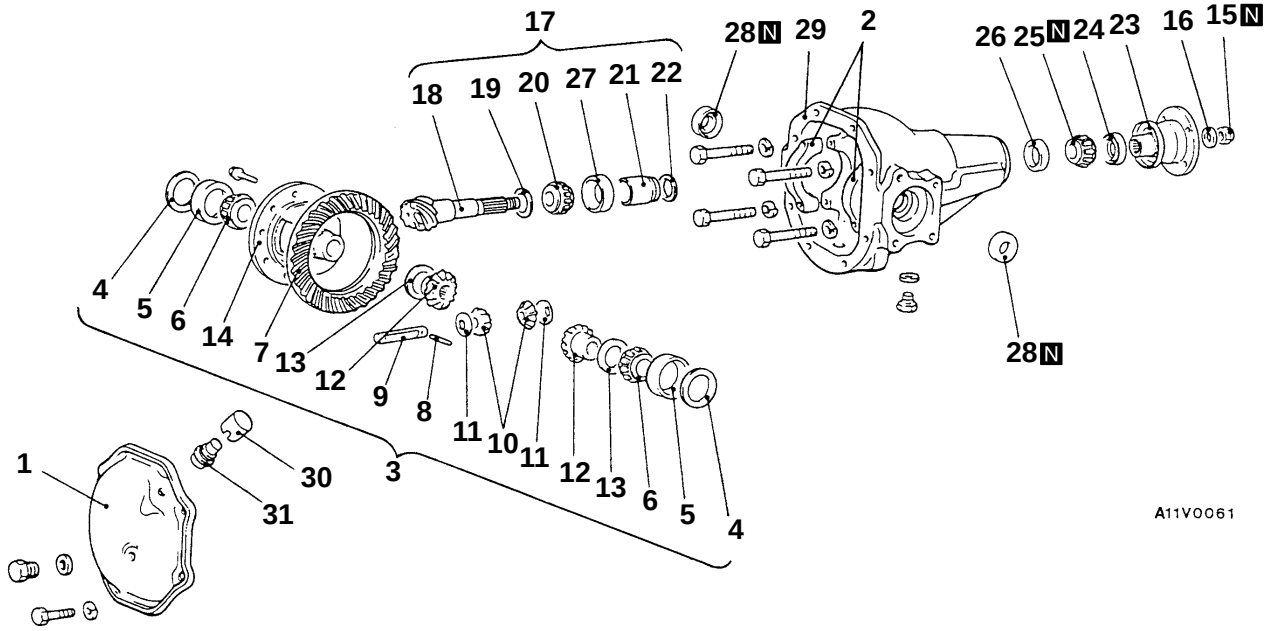

Disassembly steps

- Inspection before disassembly (Refer to P. 26-42.)

1. Cover
2. Bearing cap
3. ◀A▶ Differential case assembly
4. Side bearing spacer
5. Side bearing outer race
6. ◀B▶ Side bearing inner race
7. ◀C▶ Drive gear
8. ◀D▶ Lock pin
9. Pinion shaft
10. Pinion gear
11. Pinion washer
12. Side gear
13. Side gear spacer
14. Differential case
15. ◀E▶ Self-locking nut
16. Washer
17. ◀F▶ Drive pinion assembly
18. Drive pinion
19. Drive pinion front shim (for pinion height adjustment)
20. ◀G▶ Drive pinion front bearing inner race
21. Drive pinion spacer
22. Drive pinion rear shim (for turning torque adjustment)
23. Companion flange
24. Oil seal
25. Drive pinion rear bearing inner race
26. ◀H▶ Drive pinion rear bearing outer race
27. ◀I▶ Drive pinion front bearing outer race
28. Oil seal
29. Gear carrier
30. Plug cover
31. Vent plug

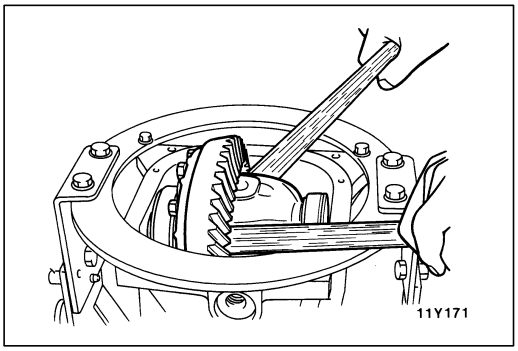

DISASSEMBLY SERVICE POINTS

◀A▶ DIFFERENTIAL CASE ASSEMBLY REMOVAL

Caution

When taking out the differential case assembly, be careful not to drop and damage the side bearing outer races.

NOTE

Keep the right and left side bearings and side bearing adjusting spacers separate, so that they do not become mixed at the time of reassembly.

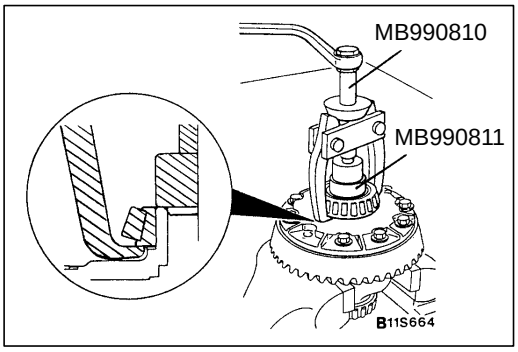

◀B▶ SIDE BEARING INNER RACE REMOVAL

NOTE

There are two notches provided (at the differential case side) for the claw part of the special tool; use the special tool at that position.

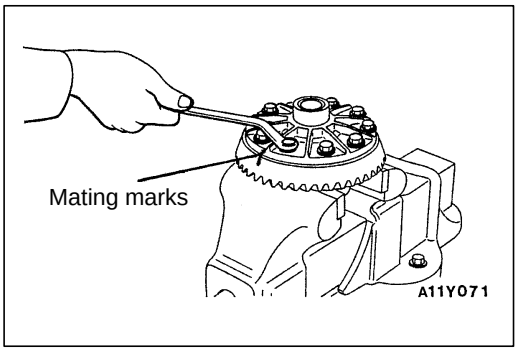

◀C▶ DRIVE GEAR REMOVAL

1. Make the mating marks to the differential case and the drive gear.
2. Loosen the drive gear attaching bolts in diagonal sequence to remove the drive gear.

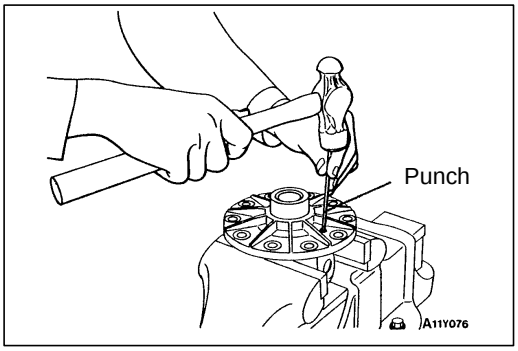

◀D▶ LOCK PIN REMOVAL

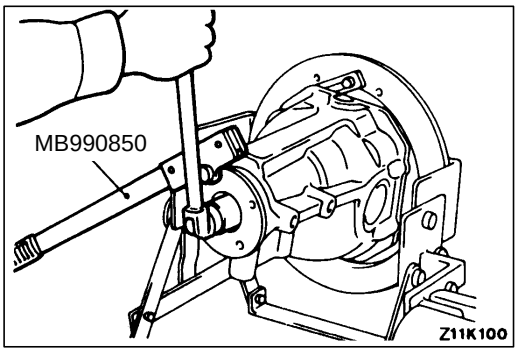

◀E▶ SELF-LOCKING NUT REMOVAL

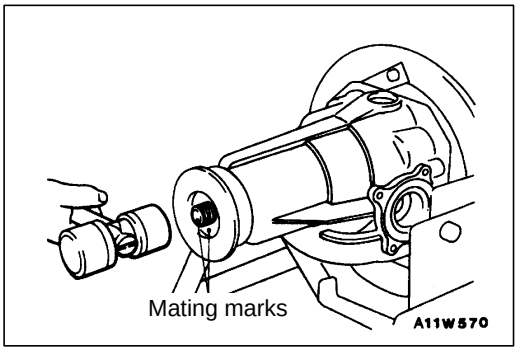

◀F▶ DRIVE PINION ASSEMBLY REMOVAL

1. Make mating marks on the drive pinion and companion flange.

   Caution
   The mating mark made on the companion flange must not be on the coupling surface of the flange yoke and the front propeller shaft.

2. Drive out the drive pinion together with the drive pinion spacer and drive pinion shims.

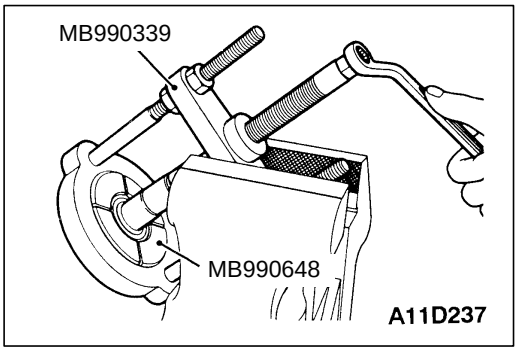

◀G▶ DRIVE PINION FRONT BEARING INNER RACE REMOVAL

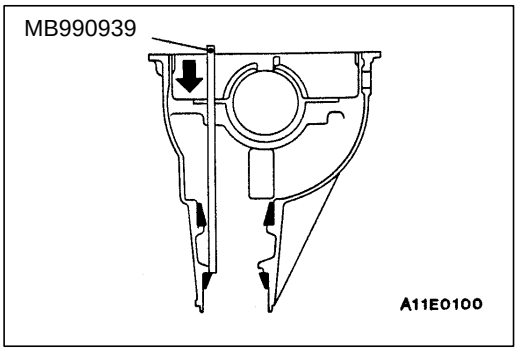

◀H▶ DRIVE PINION REAR BEARING OUTER RACE REMOVAL

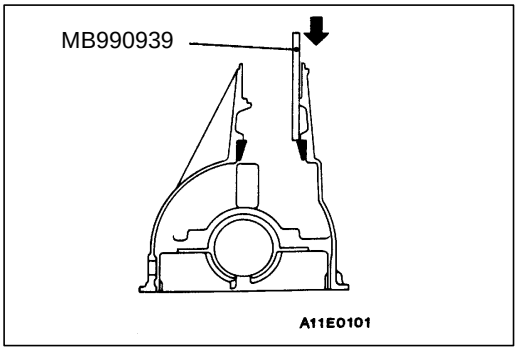

◀I▶ DRIVE PINION FRONT BEARING OUTER RACE REMOVAL

REASSEMBLY

26200250035

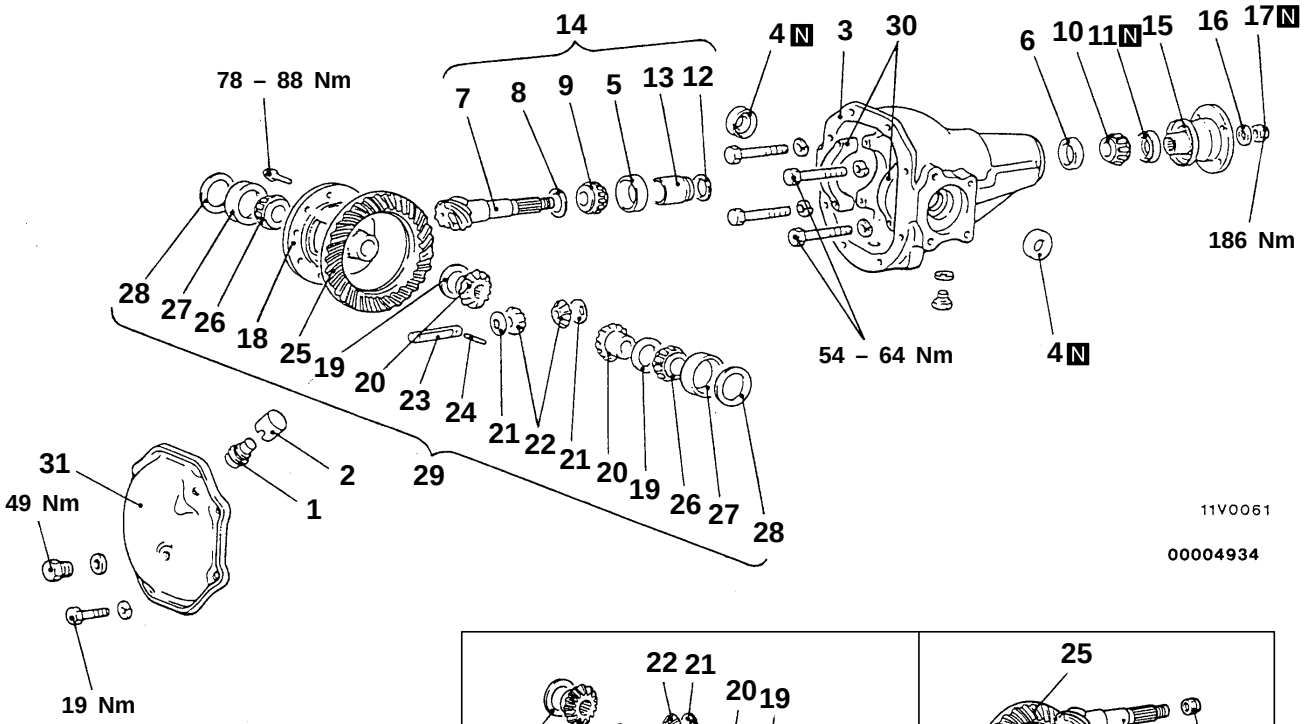

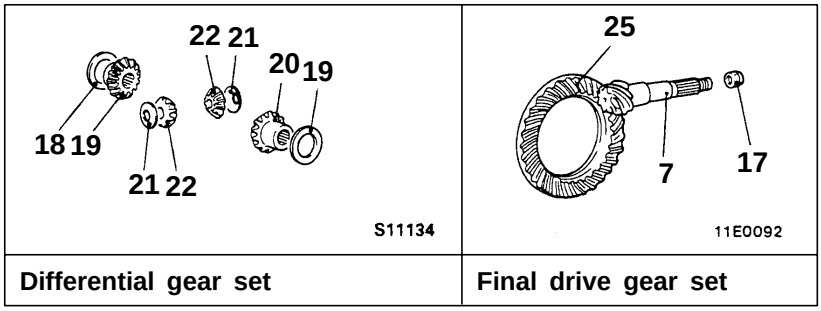

Differential gear set	Final drive gear set

Reassembly steps

1. Vent plug
2. Plug cover
3. Gear carrier
- ▶A◀ 4. Oil seal
- ▶B◀ 5. Drive pinion front bearing outer race
- ▶C◀ 6. Drive pinion rear bearing outer race
- ▶D◀ ● Pinion height adjustment
7. Drive pinion
8. Drive pinion front shim (for pinion height adjustment)
9. Drive pinion front bearing inner race
- ▶E◀ ● Drive pinion turning torque adjustment
10. Drive pinion rear bearing inner race
11. Oil seal
12. Drive pinion rear shim (for turning torque adjustment)
13. Drive pinion spacer
14. Drive pinion assembly
15. Companion flange
16. Washer
17. Self-locking nut
18. Differential case
19. Side gear spacer
20. Side gear
21. Pinion washer
22. Pinion gear
- ▶F◀ ● Differential gear backlash adjustment
23. Pinion shaft
- ▶G◀ 24. Lock pin
- ▶H◀ 25. Drive gear
- ▶I◀ 26. Side bearing inner race
27. Side bearing outer race
28. Side bearing adjusting spacer
- ▶J◀ ● Drive gear backlash adjustment
29. Differential case assembly
30. Bearing cap
31. Cover

Lubrication, Sealing and Adhesive Points

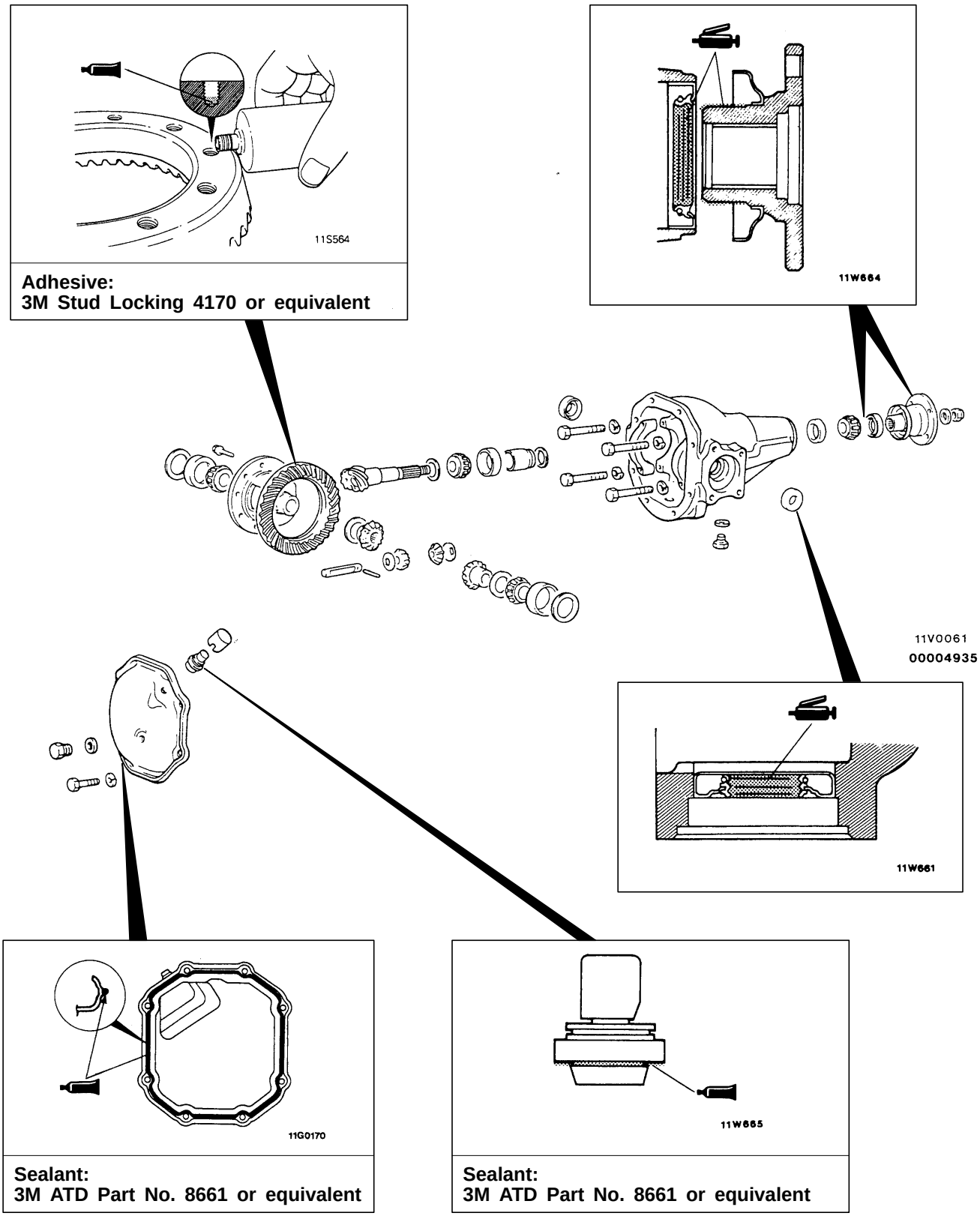

Adhesive:
3M Stud Locking 4170 or equivalent

Sealant:
3M ATD Part No. 8661 or equivalent

Sealant:
3M ATD Part No. 8661 or equivalent

REASSEMBLY SERVICE POINTS

▶A◀ OIL SEAL INSTALLATION

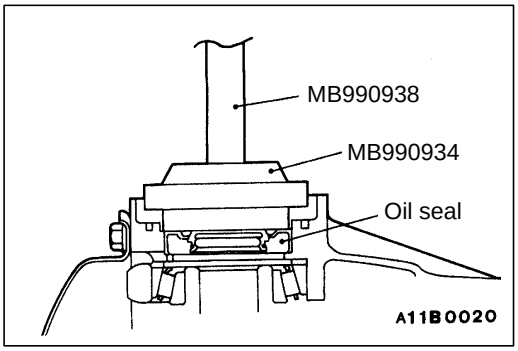

▶B◀ DRIVE PINION FRONT BEARING OUTER RACE INSTALLATION

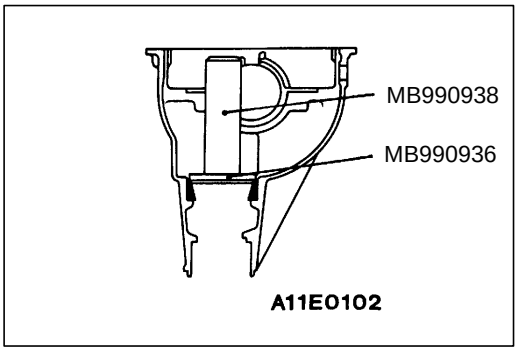

▶C◀ DRIVE PINION REAR BEARING OUTER RACE INSTALLATION

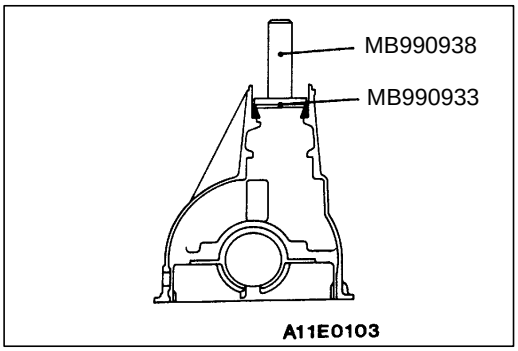

▶D◀ PINION HEIGHT ADJUSTMENT

Adjust the drive pinion height by the following procedure.

1. Apply multipurpose grease to the washer of the special tool.
2. Install the special tool, drive pinion front and rear bearing inner races to the gear carrier.

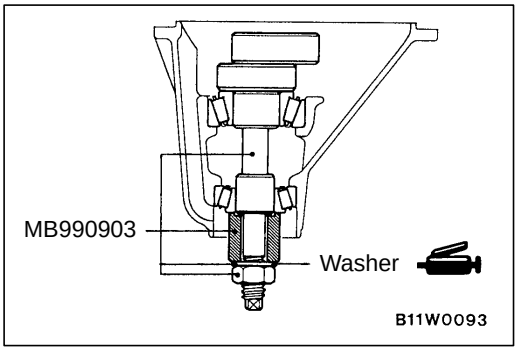

3. Tighten the nut of the special tool while measuring the rotation torque of the drive pinion. Gradually keep tightening the nut of the special tool until the rotation torque of the drive pinion (without oil seal) is at the standard value.

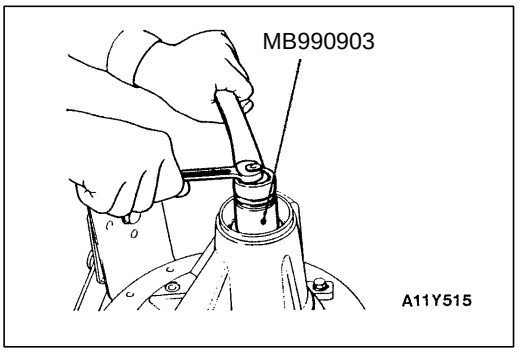

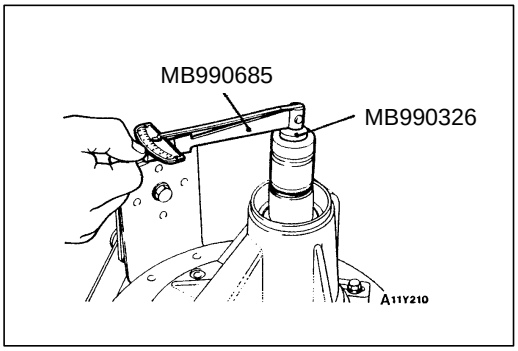

Standard value:

Bearing division	Bearing lubrication	Rotation torque
New	None (With anti-rust agent)	0.5 – 0.7 Nm
New or reusing	Gear oil applied	0.3 – 0.4 Nm

NOTE
The special tool cannot be turned a full revolution, so turn it several times within the range of movement to run in the bearing, and then measure the rotation torque.

4. Clean the side bearing hub.

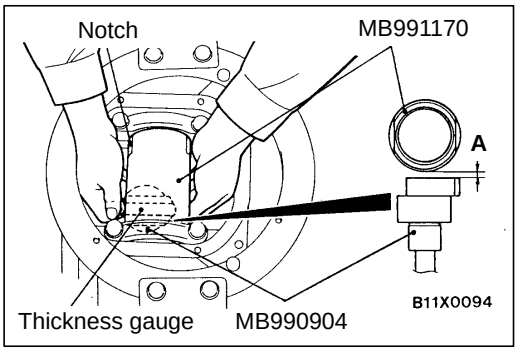

5. Install the special tools to the side bearing hub of the gear carrier, and then install the bearing cap.

   NOTE
   Always check that the notch is in the shown position and that the special tools are touching firmly against the side bearing hub.

6. Use a thickness gauge to measure the clearance (A) between the special tools.

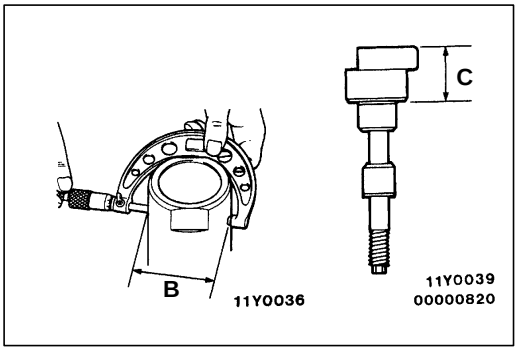

7. Remove the special tools (MB991170, MB990904).
8. Use a micrometer to measure the special tool in the places (B, C) shown in the illustration.

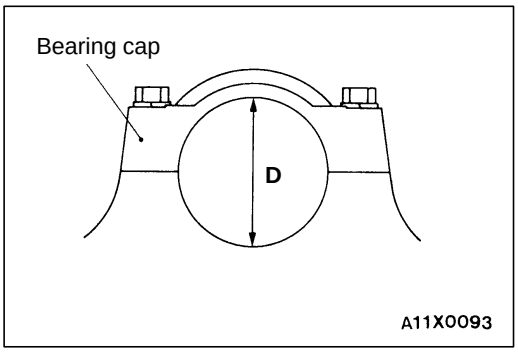

9. Install the bearing cap, and then use a cylinder gauge and micrometer to measure the inside diameter (D) of the bearing cap as shown in the illustration.
10. Calculate the thickness (E) of the required drive pinion front shim by the following formula, and then select a shim which most closely matches this thickness.
    E = A + B + C–1/2D–91.0

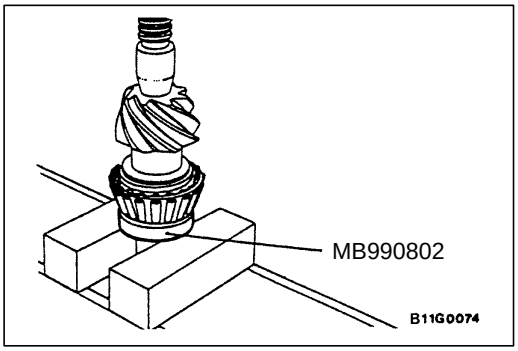

11. Fit the selected drive pinion front shim(s) to the drive pinion, and press-fit the drive pinion front bearing inner race by using the special tool.

▶E◀ DRIVE PINION TURNING TORQUE ADJUSTMENT

Adjust the drive pinion rotation torque by using the following procedure:

Without Oil Seal

1. Insert the drive pinion into the gear carrier, and then install the drive pinion spacer, the drive pinion rear shim, the drive pinion rear bearing inner race, and the companion flange in that order.

   NOTE
   Do not install the oil seal.

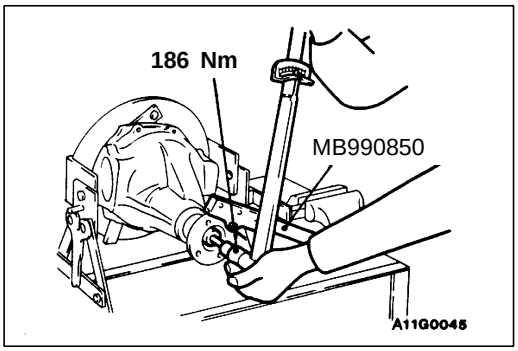

2. Tighten the companion flange to the specified torque by using the special tool.

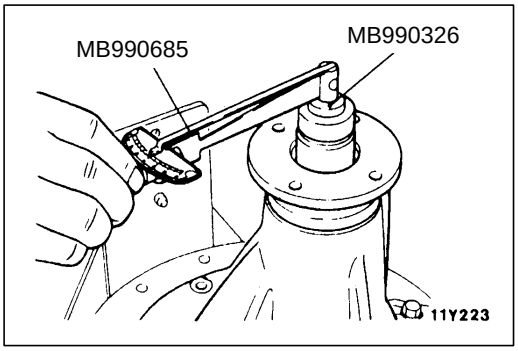

3. Measure the drive pinion rotation torque (without the oil seal) by using the special tools.

   Standard value:

Bearing division	Bearing lubrication	Rotation torque
New	None (With anti-rust agent)	0.3 – 0.5 Nm
New/reusing	Gear oil applied	0.15 – 0.25 Nm

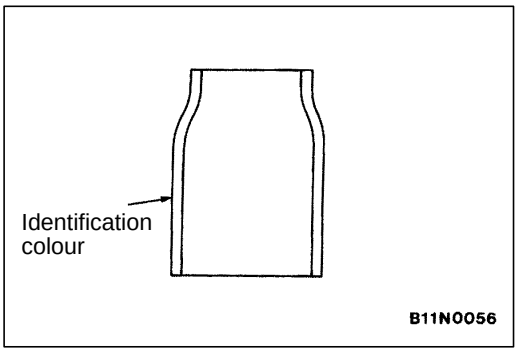

4. If the drive pinion rotation torque is not within the range of the standard value, adjust the preload by replacing the drive pinion rear shim(s) or the drive pinion spacer.

   NOTE
   When selecting the drive pinion rear shims, if the number of shims is large, reduce the number of shims to a minimum by selecting the drive pinion spacers. Also, select the drive pinion spacer from the following two types.

Drive pinion spacer height (mm)	Identification colour
46.67	White
47.01	–

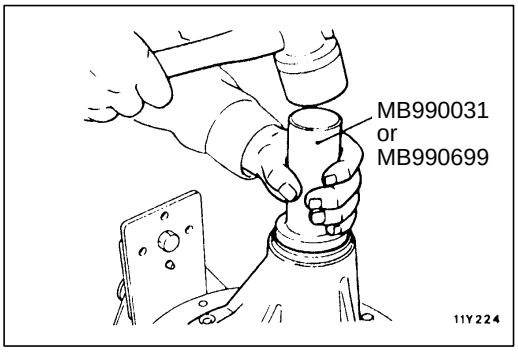

5. Remove the companion flange and drive pinion again. Then, after inserting the drive pinion rear bearing inner race into the gear carrier, use the special tool to press-fit the oil seal.

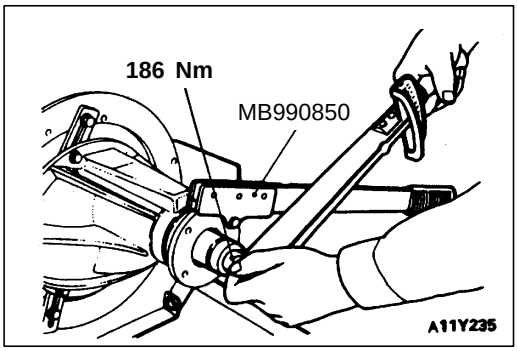

6. Install the drive pinion assembly and companion flange with mating marks properly aligned, and tighten the companion flange self-locking nut to the specified torque by using the special tools.

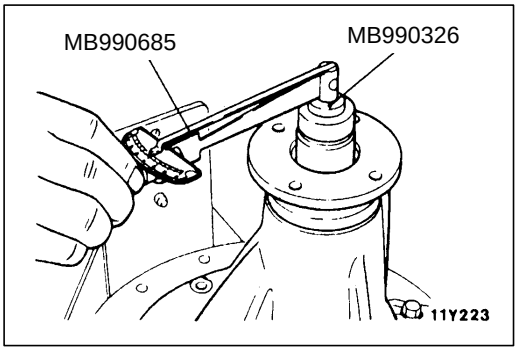

7. Measure the drive pinion rotation torque (with the oil seal) by using the special tools.

Standard value:

Bearing division	Bearing lubrication	Rotation torque
New	None (With anti-rust agent)	0.5 – 0.7 Nm
New/reusing	Gear oil applied	0.3 – 0.4 Nm

8. If the drive pinion rotation torque is not within the standard value, check the tightening torque of the companion flange self-locking nut and the oil seal.

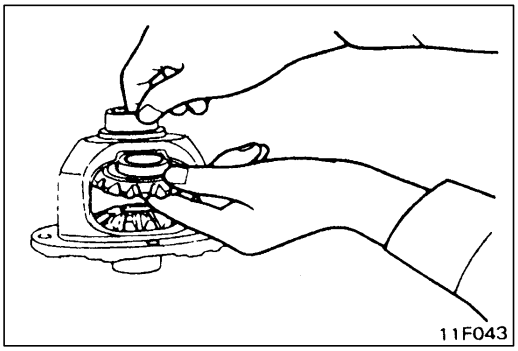

▶F◀ DIFFERENTIAL GEAR BACKLASH ADJUSTMENT

1. Assemble the side gears, side gear spacers, pinion gears and pinion washers into the differential case.
2. Temporarily install the pinion shaft.

   NOTE
   Do not drive in the lock pin yet.

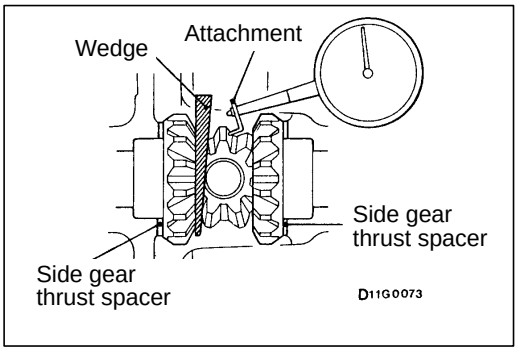

3. Insert a wedge between the side gear and the pinion shaft to lock the side gear.
4. Measure the differential gear backlash with a dial indicator on the pinion gear.

   Standard value: 0 – 0.076 mm

   Limit: 0.2 mm
5. If the differential gear backlash exceeds the limit, adjust the backlash by installing thicker side gear spacers.
6. If adjustment is not possible, replace the side gears and pinion gears as a set.
7. Measure the differential gear backlash once again, and confirm that it is within the limit.

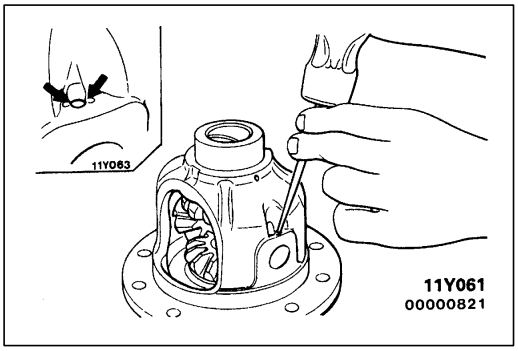

▶G◀ LOCK PIN INSTALLATION

1. Align the pinion shaft lock pin hole with the differential case lock pin hole, and drive in the lock pin.
2. Stake the lock pin with a punch at two points.

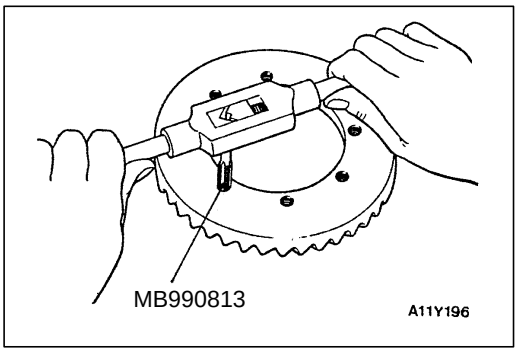

▶H◀ DRIVE GEAR INSTALLATION

1. Clean the drive gear attaching bolts.
2. Remove the adhesive adhered to the threaded holes of the drive gear by turning the special tool (tap M10 x 1.25), and then clean the threaded holes by applying compressed air.

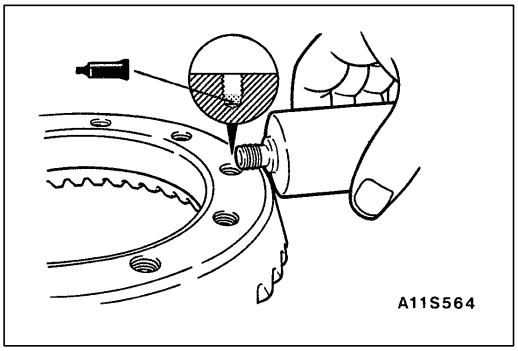

3. Apply the specified adhesive to the threaded holes of the drive gear.

   Specified adhesive:
   3M Stud Locking 4170 or equivalent

4. Install the drive gear onto the differential case with the mating marks properly aligned. Tighten the bolts to the specified torque in a diagonal sequence.

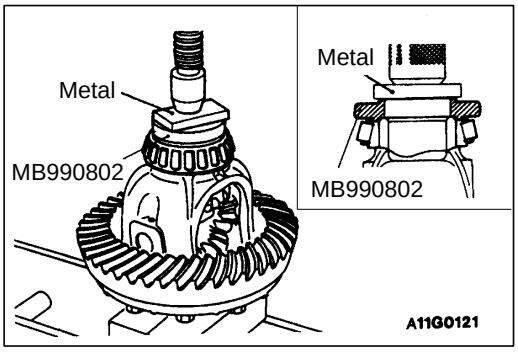

▶I◀ SIDE BEARING INNER RACE INSTALLATION

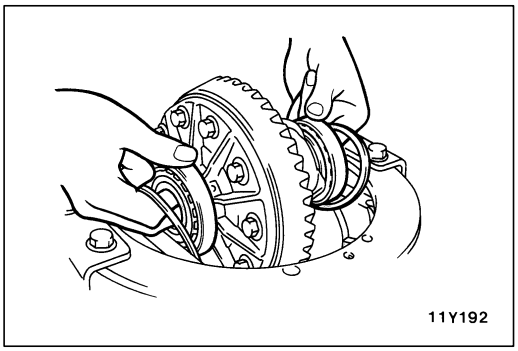

▶J◀ DRIVE GEAR BACKLASH ADJUSTMENT

Adjust the drive gear backlash by the following procedures:

1. Install the side bearing spacers, which are thinner than those removed, to the side bearing outer races, and then mount the differential case assembly into the gear carrier.

   NOTE
   Select side bearing spacers with the same thickness for both the drive pinion side and the drive gear side.

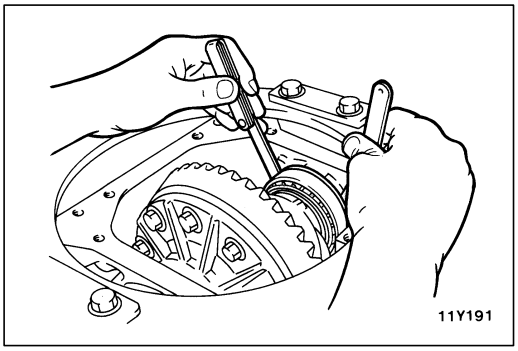

2. Push the differential case assembly to one side, and measure the clearance between the gear carrier and the side bearing adjusting spacer with a thickness gauge.

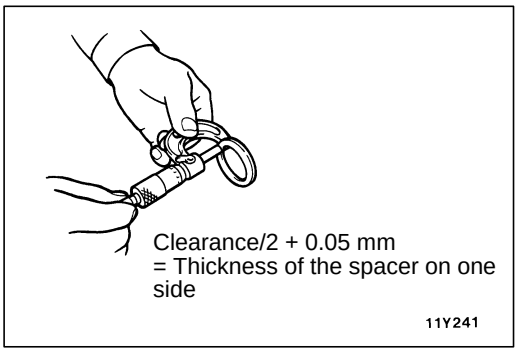

3. Measure the thickness of the side bearing adjusting spacers on one side, select two pairs of spacers which correspond to that thickness plus one half of the clearance plus 0.05 mm, and then install one pair each to the drive pinion side and the drive gear side.

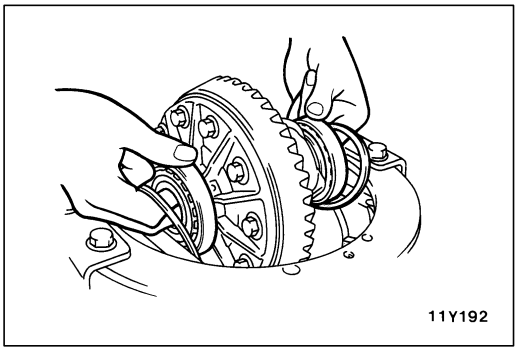

4. Install the side bearing adjusting spacers and differential case assembly, as shown in the illustration, to the gear carrier.

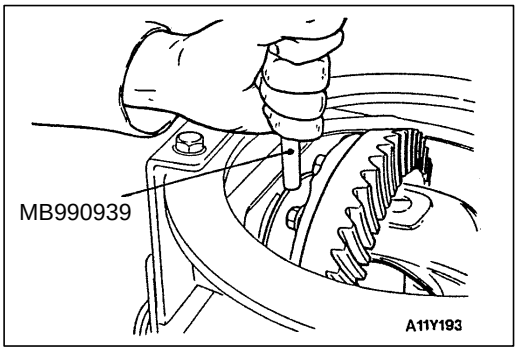

5. Tap the side bearing adjusting spacers with the special tool to fit them to the side bearing outer race.

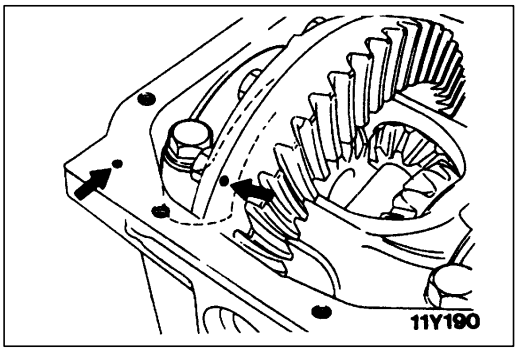

6. Align the mating marks on the gear carrier and the bearing cap, and then tighten the bearing cap.

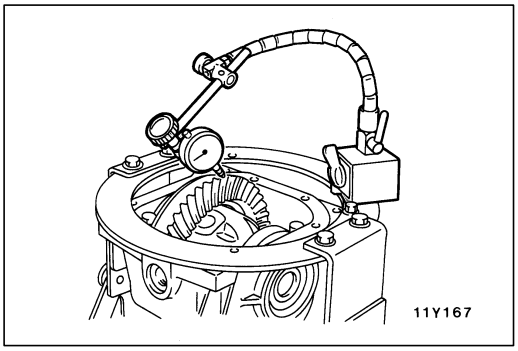

7. With the drive pinion locked in place, measure the drive gear backlash with a dial indicator on the drive gear.

   NOTE
   Measure at four points or more on the circumference of the drive gear.

   Standard value: 0.11 – 0.16 mm

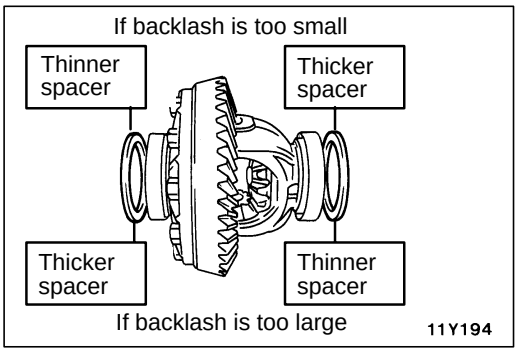

8. Change the side bearing adjusting spacers as illustrated, and then adjust the drive gear backlash between the drive gear and the drive pinion.

   NOTE
   When increasing the number of side bearing adjusting spacers, use the same number for each, and as few as possible.

9. Check the drive gear and drive pinion for tooth contact. If poor contact is evident, make adjustment. (Refer to P. 26-43.)

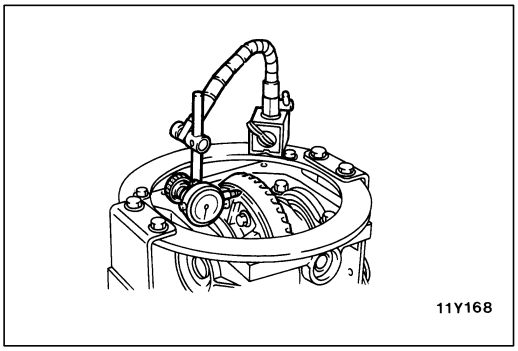

10. Measure the drive gear runout at the shoulder on the reverse side of the drive gear.

    Limit: 0.05 mm

11. If the drive gear runout exceeds the limit, reinstall by changing the phase of the drive gear and differential case, and remeasure.
12. If adjustment is not possible, replace the differential case or replace the drive gear and drive pinion as a set.

FREEWHEEL CLUTCH

26200270017

REMOVAL AND INSTALLATION

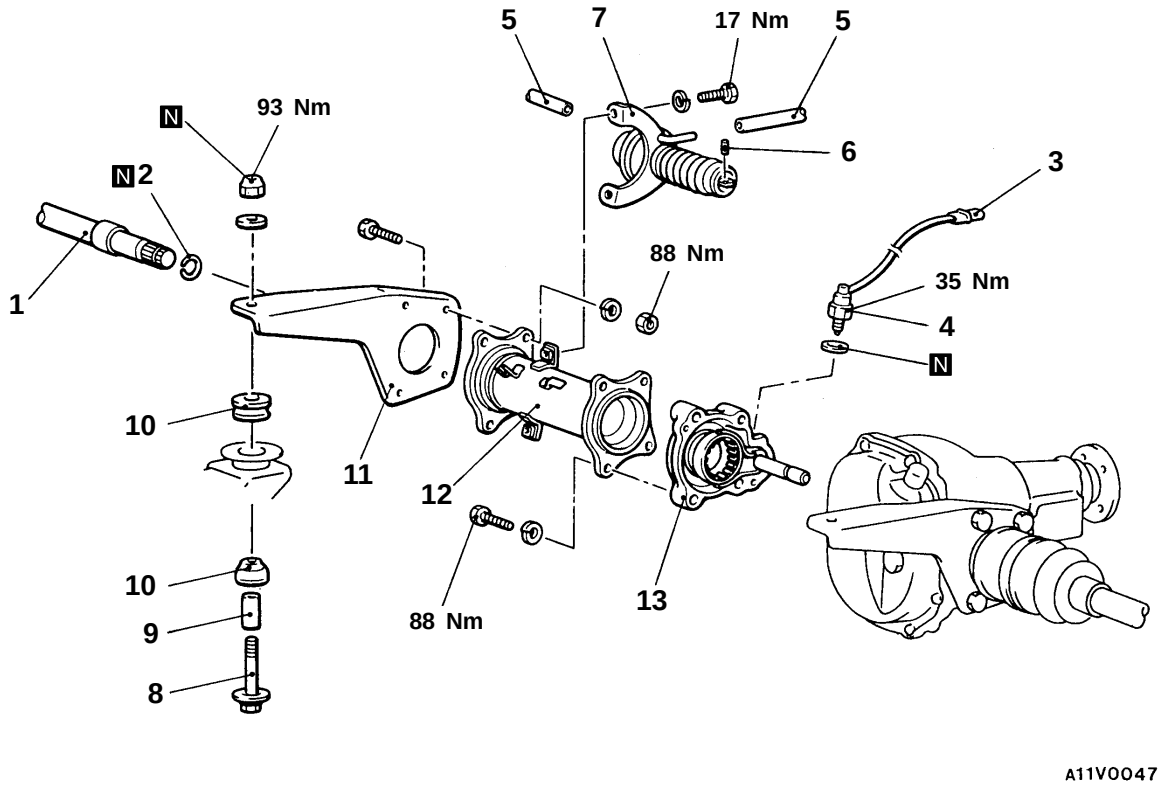

Freewheel clutch removal steps

1. Inner shaft (Refer to P. 26-36.)
2. Circlip
3. Freewheel engage switch connector
4. Freewheel engage switch
5. ▶E◀ Vacuum hose
6. Pin
7. Actuator assembly
   - Support the differential by a transmission jack.
8. Pin
9. Spacer
10. Rubber
11. Differential mounting bracket (R.H.)
12. Housing tube assembly
13. Freewheel clutch assembly
    - ▶D◀ Clutch gear bearing axial play inspection.

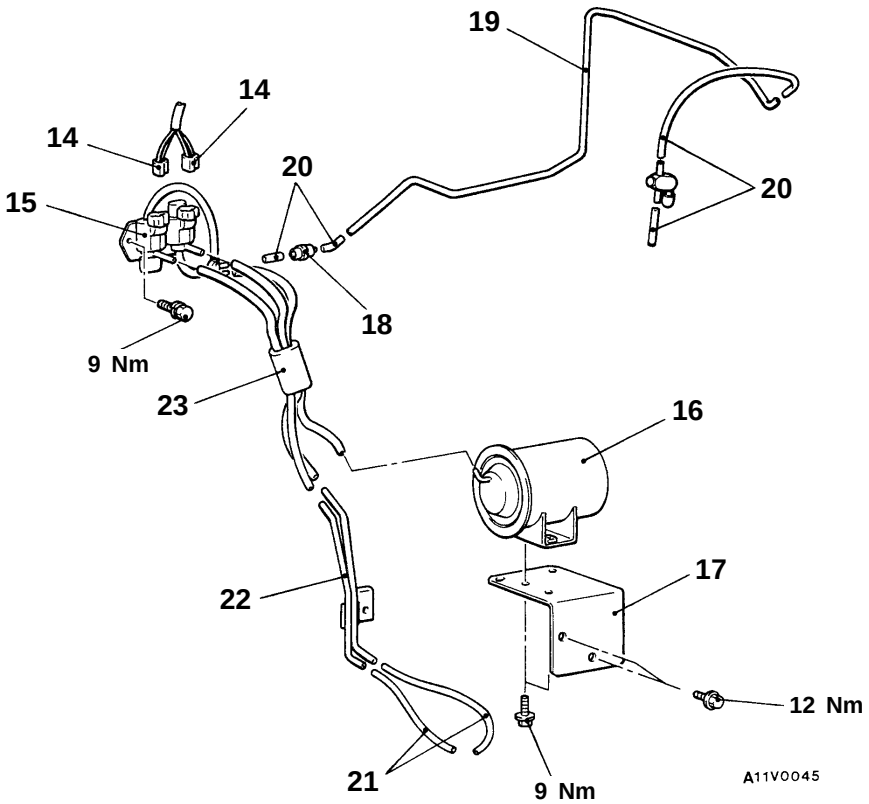

Solenoid valve assembly removal steps

14. Solenoid valve connector
▶C◀ 15. Solenoid valve assembly

Vacuum tank and vacuum hose assembly and vacuum pipe assembly removal steps

16. Vacuum tank
17. Vacuum tank bracket
▶B◀ 18. Check valve
19. Vacuum pipe
20. Vacuum hose
▶A◀ 21. Vacuum hose
▶A◀ 22. Vacuum pipe assembly
▶A◀ 23. Vacuum hose assembly

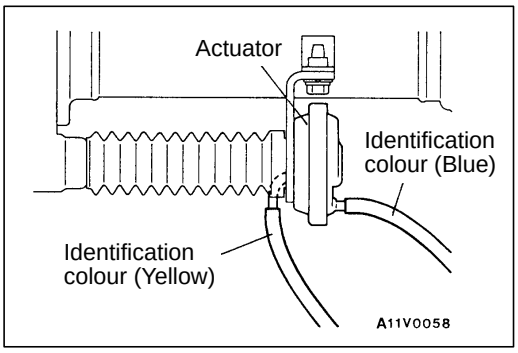

INSTALLATION SERVICE POINTS

▶A◀ VACUUM HOSE ASSEMBLY/VACUUM PIPE ASSEMBLY/VACUUM HOSE INSTALLATION

Install the vacuum hoses so that the identification colours of the vacuum pipe assembly match those of the actuators. Note that there is no identification colour for the vacuum hose which is to be connected to the vacuum tank.

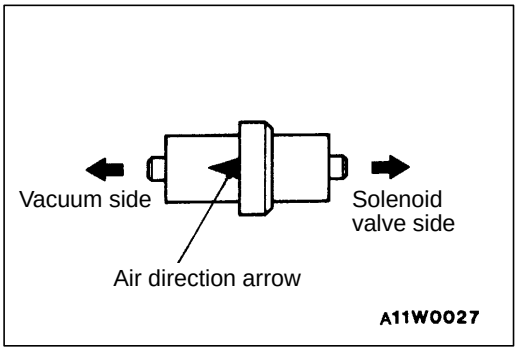

▶B◀ CHECK VALVE INSTALLATION

Install so that air direction arrow points to the vacuum side.

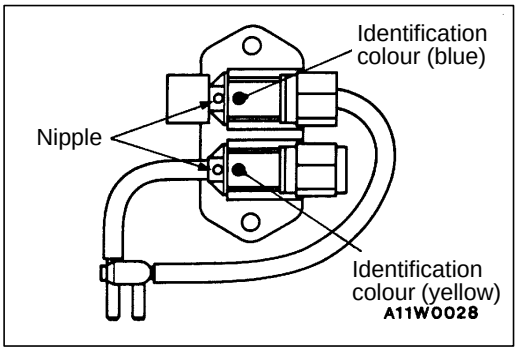

▶C◀ SOLENOID VALVE ASSEMBLY INSTALLATION

Install so that the identification colours of the vacuum hoses match those of the solenoid valve assembly.

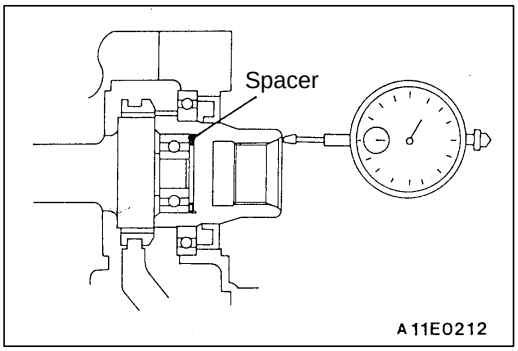

▶D◀ CLUTCH GEAR BEARING AXIAL PLAY INSPECTION

Check the axial play of the clutch gear bearing by the following procedure before installing the freewheel clutch assembly.

1. Insert flat washers of the same thickness as the housing tube (9.0 mm) onto the bolt, and then provisionally install the freewheel clutch assembly to the front differential.
2. Place a micrometer against the end of the clutch gear and check the axial play of the clutch gear bearing.

   Standard value: 0.05 – 0.30 mm
3. If the axial play of the clutch gear bearing is not within the standard value, disassemble the bearing and insert a spacer of the appropriate thickness.

   NOTE
   The thickness of the spacers vary in steps of 0.25 mm.

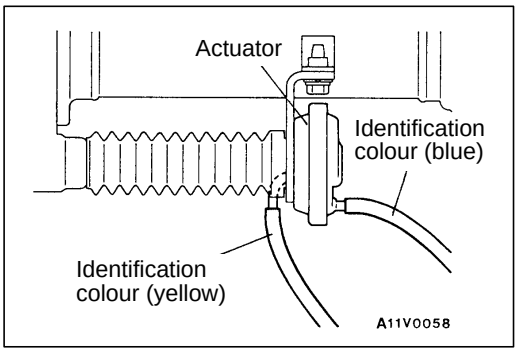

▶E◀ VACUUM HOSE INSTALLATION

Connect the vacuum hoses so that the identification colours match those of the actuator assembly nipples.

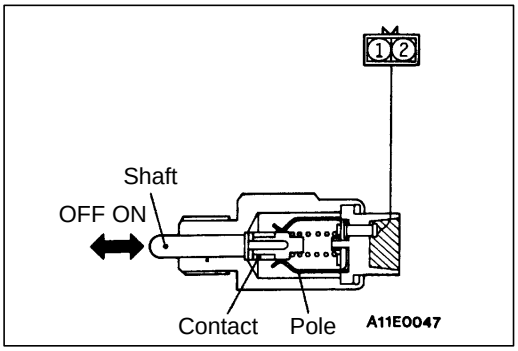

INSPECTION

26200280010

FREEWHEEL ENGAGE SWITCH

Shaft (switch) position	Terminal No. 1	Terminal No. 2
Pressed (ON)		
Released (OFF)	○	○

DISASSEMBLY AND REASSEMBLY

26200290044

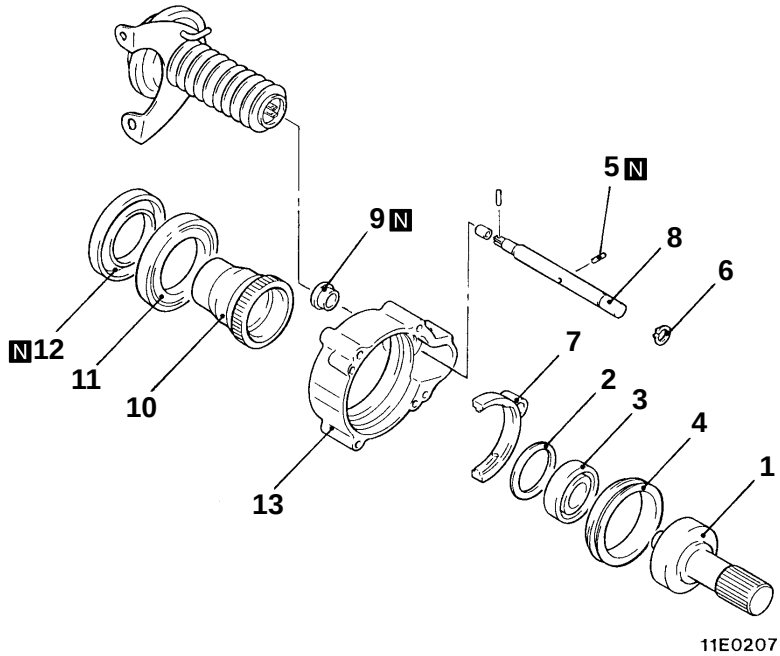

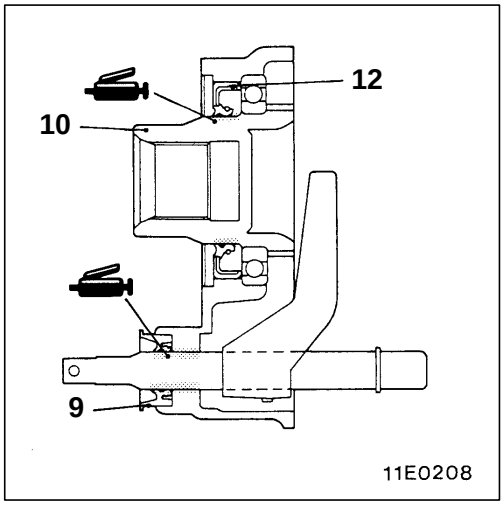

00004936

Removal steps

◀A▶ 1. Main shaft
▶F◀ 2. Spacer
◀A▶ ▶E◀ 3. Bearing
4. Clutch sleeve
▶D◀ 5. Spring pin
6. Snap ring
7. Shift fork
8. Shift rod
▶C◀ 9. Oil seal
◀B▶ ▶B◀ 10. Clutch gear
◀B▶ ▶B◀ 11. Bearing
▶A◀ 12. Oil seal
13. Clutch housing

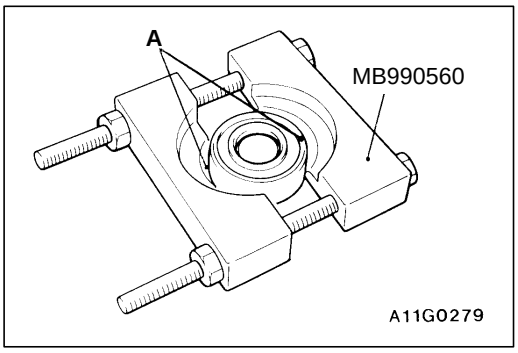

DISASSEMBLY SERVICE POINTS

◀A▶ MAINSHAFT/BEARING REMOVAL

1. After the special tool has been installed as shown, tighten the nut of the special tool until the portion “A” of the special tool touches the bearing outer race.

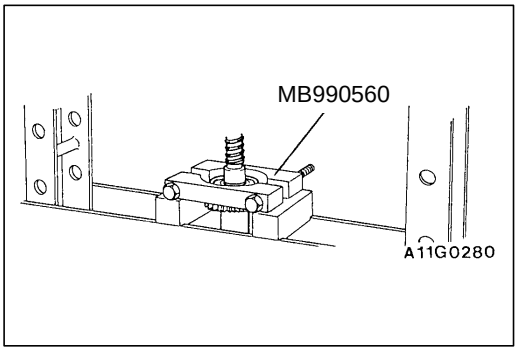

2. Press out the mainshaft from the bearing.

   Caution
   Do not allow the mainshaft to drop.

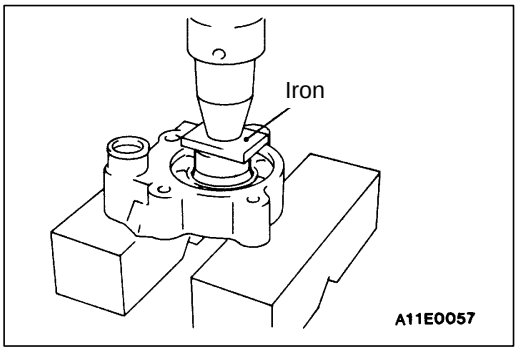

◀B▶ CLUTCH GEAR/BEARING REMOVAL

1. Use a press and steel plate to remove the clutch gear and bearing together.

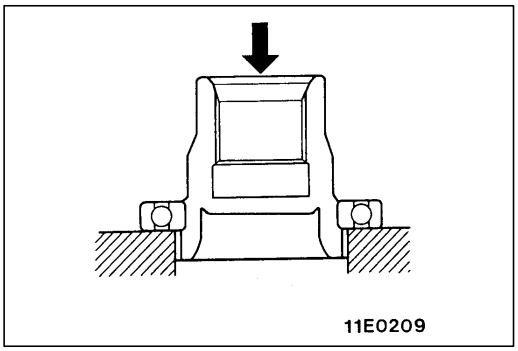

2. Use a press to hold the supports against the bearing inner race, and separate the clutch gear and bearing.

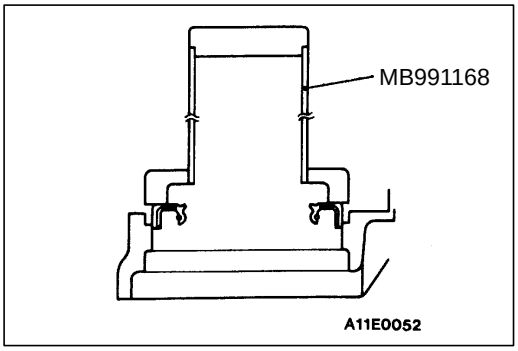

REASSEMBLY SERVICE POINTS

▶A◀ OIL SEAL INSTALLATION

Use the special tool to tap the oil seal until it is flush with the clutch housing.

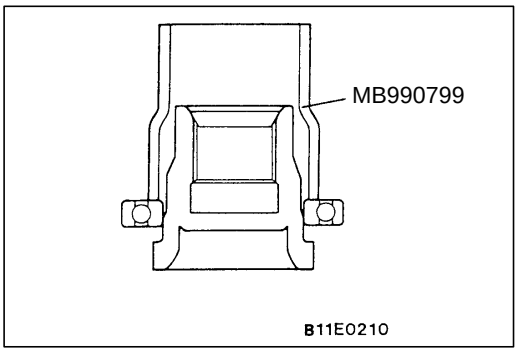

▶B◀ BEARING /CLUTCH GEAR INSTALLATION

1. Use the special tool to press-fit the bearing to the shoulder of the clutch gear.

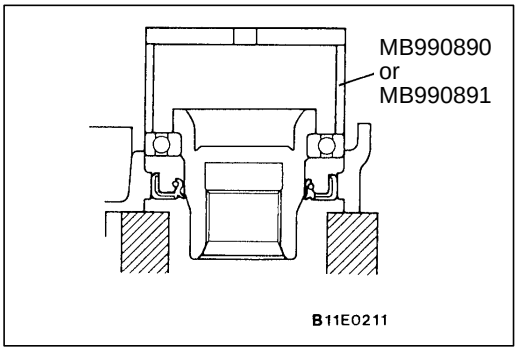

2. Use the special tool to press-fit the bearing to the side of the clutch housing.

   Caution
   Place the special tool against the outer race of the bearing.

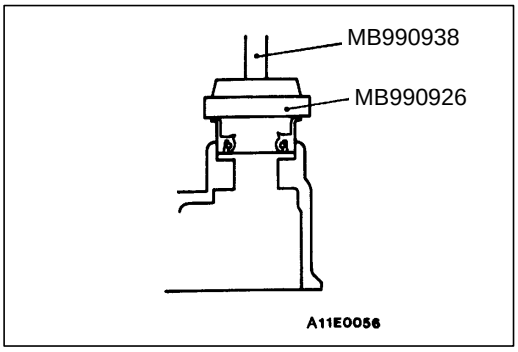

▶C◀ OIL SEAL INSTALLATION

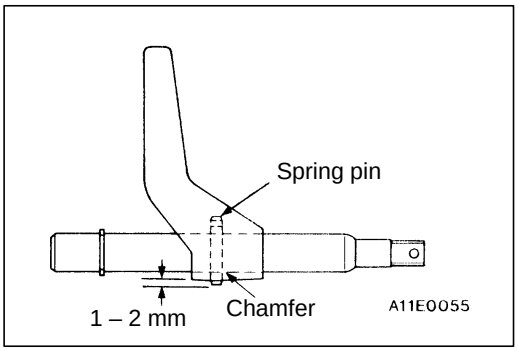

▶D◀ SPRING PIN INSTALLATION

Tap the spring pin from the chamfered side of the shift rod until the projection length becomes length shown in the illustration.

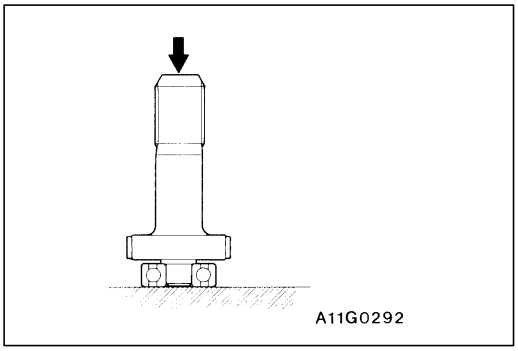

▶E◀ BEARING INSTALLATION

Press-fit the bearing to the shoulder of the mainshaft.

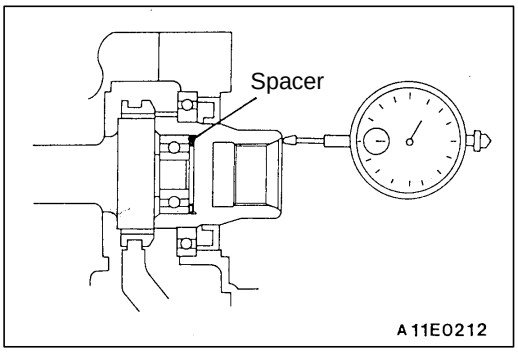

▶F◀ SPACER INSTALLATION

1. After installing the freewheel clutch assembly, select a spacer so that the clutch gear axial play (bearing looseness) is within the standard value.

   Standard value: 0.05 – 0.30 mm

2. If it is outside the standard value, disassemble and select the appropriate spacer again.

   NOTE
   The thickness of the gauge is different 0.25 mm each.

NOTES

SERVICE BULLETIN

QUALITY INFORMATION ANALYSIS
OVERSEAS SERVICE DEPT. MITSUBISHI MOTORS CORPORATION

SERVICE BULLETIN	**No.:** MSB-98E33-501		
	Date: 1998-11-15	**<Model>**	**<M/Y>**
Subject:	CORRECTION OF PART NUMBER OF PINION HEIGHT GAUGE SET'S COMPONENT PART	(EC,EXP)L200 (K60,70)	97-10
Group:	FRONT SUSPENSION	**Draft No.:** 98SY070111	
CORRECTION	**OVERSEAS SERVICE DEPT**	T.NITTA - VICE GENERAL MANAGER QUALITY INFORMATION ANALYSIS	

1. Description:

This Service Bulletin informs you concerning correction of the part number of the pinion height gauge set's component part.

2. Applicable Manuals:

Manual	Pub. No.	Language	Page(s)
'97 L200 Workshop Manual Chassis	PWTE96E1	(English)	26-7, 51
	PWTS96E1	(Spanish)	
	PWTF96E1	(French)	
	PWTG96E1	(German)	

3. Details:

Tool	Number	Name	Use
B990909	MB990909	Working base	Support of front differential carrier assembly
	MB991116	Adapter	Support of front differential carrier assembly
B990810	MB990810	Side bearing puller	Removal of side bearing inner race
	MB990811	Differential side bearing cap	
B990850	MB990850	End yoke holder	Removal and installation of companion flange
B990339	MB990339	Bearing puller	Removal of drive pinion front bearing inner race
B990374	MB990648 **<Correct>** MB990903	Bearing remover	
A B **<Deleted>**	MB990901 **A:** ~~MB990904~~ **B:** ~~MB990552~~ **<Deleted>**	Pinion height gauge set **A:** Drive pinion gauge assembly ~~**B:** Cylinder gauge~~	• Inspection of drive pinion rotation starting torque • Measurement of drive pinion height
	MB990685	Torque wrench	Measurement of drive pinion height

<Added>

A	MB991171 **A:** MB991171	Pinion height gauge set **A:** Cylinder gauge	Measurement of drive pinion height

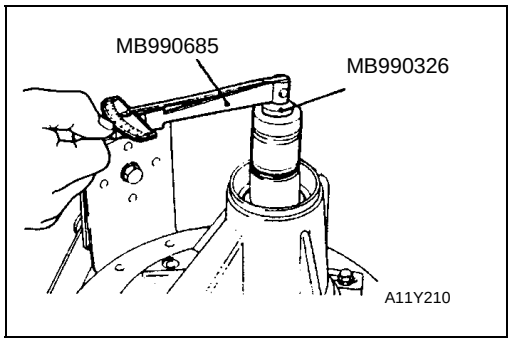

Standard value:

Bearing division	Bearing lubrication	Rotation torque
New	None (With anti-rust agent)	0.5 - 0.7 Nm
New or reusing	Gear oil applied	0.3 - 0.4 Nm

NOTE
The special tool cannot be turned a full revolution, so turn it several times within the range of movement to run in the bearing, and then measure the rotation torque.

4. Clean the side bearing hub.

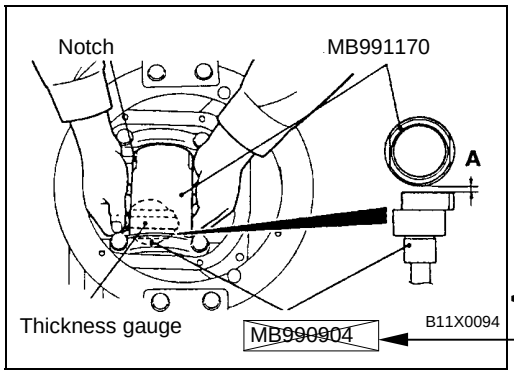

<Correct>

MB990903

<Incorrect>

5. Install the special tools to the side bearing hub of the gear carrier, and then install the bearing cap.

   NOTE
   Always check that the notch is in the shown position and that the special tools are touching firmly against the side bearing hub.

6. Use a thickness gauge to measure the clearance (A) between the special tools.

<Incorrect>

7. Remove the special tools (MB991170, ~~MB990904~~)
8. Use a micrometer to measure the special tool in the places (B,C) shown in the illustration

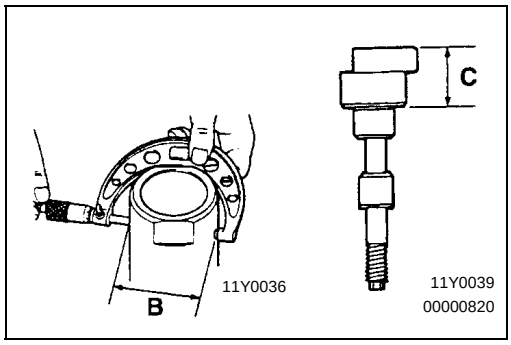

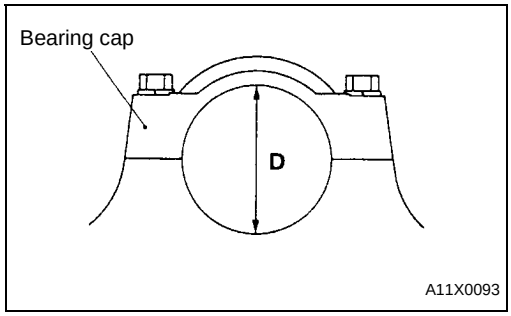

9. Install the bearing cap, and then use a cylinder gauge and micrometer to measure the inside diameter (D) of the bearing cap as shown in the illustration
10. Calculate the thickness (E) of the required drive pinion front shim by the following formula, and then select a shim which most closely matches this thickness.
    E = A + B + C-1/2D-91.0

SERVICE BULLETIN

QUALITY INFORMATION ANALYSIS
OVERSEAS SERVICE DEPT. MITSUBISHI MOTORS CORPORATION

SERVICE BULLETIN	**No.:** MSB-98E33-501REV		
	Date: 1999-09-30	**<Model>**	**<M/Y>**
Subject:	CORRECTION OF PART NUMBER OF PINION HEIGHT GAUGE SET'S COMPONENT PART (REVISED)	(EC,EXP) L200 (K00)	97-10
Group:	FRONT SUSPENSION	**Draft No.:** 98SY070111	
CORRECTION	**OVERSEAS SERVICE DEPT**	T.NITTA - VICE GENERAL MANAGER QUALITY INFORMATION ANALYSIS	

NOTE:
This Service Bulletin is a revision of the S/B MSB-98E33-501 which contained an error in the pinion height gauge set part number. S/B MSB-98E33-501 should be discarded.

1. Description:

This Service Bulletin informs you concerning correction of the part number of the pinion height gauge set's component part.

2. Applicable Manuals:

Manual	Pub. No.	Language	Page(s)
'97 L200 Workshop Manual Chassis	PWTE96E1	(English)	26-7, 51
	PWTS96E1	(Spanish)	
	PWTF96E1	(French)	
	PWTG96E1	(German)	

3. Details:

Tool	Number	Name	Use
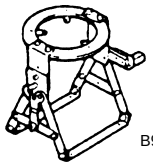 B990909	MB990909	Working base	Support of front differential carrier assembly
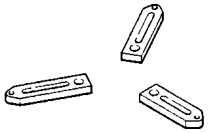	MB991116	Adapter	Support of front differential carrier assembly
B990810	MB990810	Side bearing puller	Removal of side bearing inner race
	MB990811	Differential side bearing cap	
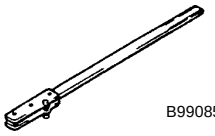 B990850	MB990850	End yoke holder	Removal and installation of companion flange
B990339	MB990339	Bearing puller	Removal of drive pinion front bearing inner race
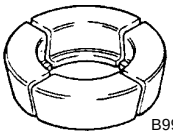 B990374	MB990648 **<Correct>** MB990903	Bearing remover	
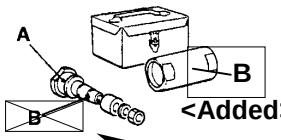 **<Added>** **<Deleted>**	MB990901 **A:** ~~MB990904~~ **B:** MB990552 ~~**<Deleted>**~~	Pinion height gauge set **A:** Drive pinion gauge assembly **B:** Cylinder gauge	• Inspection of drive pinion rotation starting torque • Measurement of drive pinion height
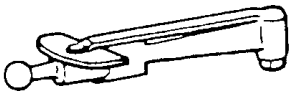	MB990685 **<Incorrect>**	Torque wrench	Measurement of drive pinion height

~~**<Added>**~~

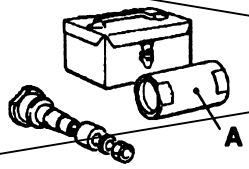	MB991171 **A:** MB991171	Pinion height gauge set **A:** Cylinder gauge	Measurement of drive pinion height

<Deleted>

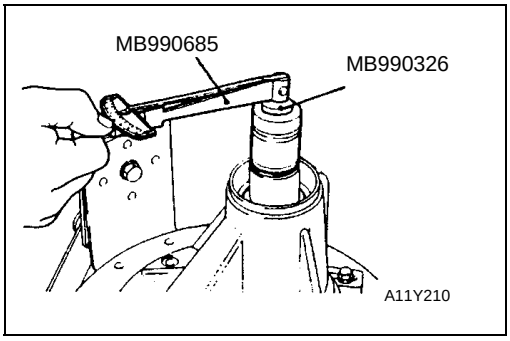

Standard value:

Bearing division	Bearing lubrication	Rotation torque
New	None (With anti-rust agent)	0.5 - 0.7 Nm
New or reusing	Gear oil applied	0.3 - 0.4 Nm

NOTE
The special tool cannot be turned a full revolution, so turn it several times within the range of movement to run in the bearing, and then measure the rotation torque.

4. Clean the side bearing hub.

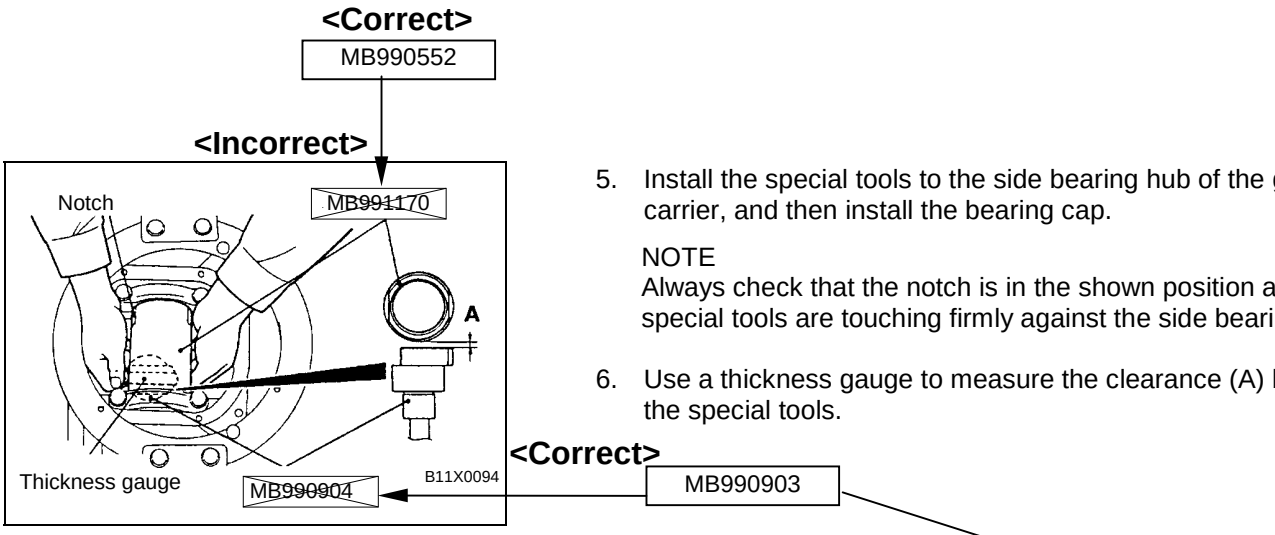

5. Install the special tools to the side bearing hub of the gear carrier, and then install the bearing cap.

NOTE
Always check that the notch is in the shown position and that the special tools are touching firmly against the side bearing hub.

6. Use a thickness gauge to measure the clearance (A) between the special tools.

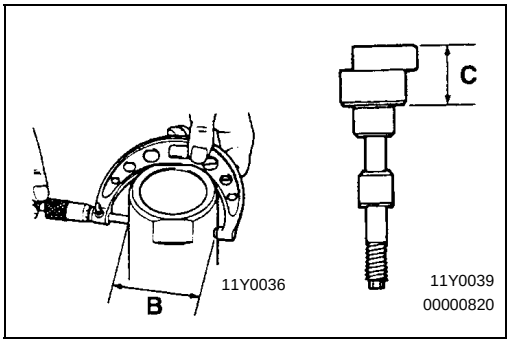

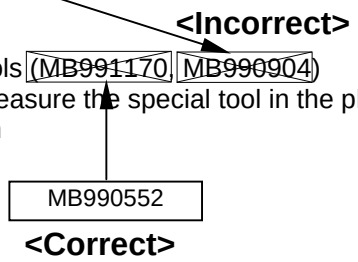

7. Remove the special tools (MB991170, MB990904)
8. Use a micrometer to measure the special tool in the places (B,C) shown in the illustration

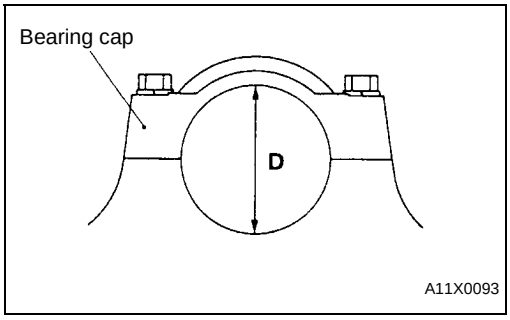

9. Install the bearing cap, and then use a cylinder gauge and micrometer to measure the inside diameter (D) of the bearing cap as shown in the illustration
10. Calculate the thickness (E) of the required drive pinion front shim by the following formula, and then select a shim which most closely matches this thickness.
E = A + B + C-1/2D-91.0

REAR AXLE

Click on the applicable bookmark to selected the required model year

REAR AXLE

CONTENTS

27109000109

GENERAL INFORMATION 2

SERVICE SPECIFICATIONS 4

LUBRICANTS 5

SEALANTS 5

SPECIAL TOOLS 6

ON-VEHICLE SERVICE 9

- Rear Axle Total Backlash Check 9
- Axle Shaft Axial Play Check 9
- Axle Shaft Axial Play Adjustment <Vehicles without ABS or rear differential lock> 9
- Gear Oil Level Check 10
- Limited Slip Differential Preload Check 11
- Axle Housing Oil Seal Replacement 11
- Rear Differential Lock Detection Switch Check 12
- Rear Differential Lock System Air Leakage Check 13

AXLE ASSEMBLY 14

AXLE SHAFT 16

REAR DIFFERENTIAL LOCK 26

DIFFERENTIAL CARRIER 29

DIFFERENTIAL CASE ASSEMBLY 47

GENERAL INFORMATION

27100010118

- The rear axle is a banjo-type semi-floating type. The axle shaft bearings are: *Single taper bearings for vehicles without ABS or rear differential lock. *Double-taper bearings for vehicles with ABS or rear differential lock. ABS rotor is press-fitted to the axle shaft retainer ring.
- Differential gear has 4 different types. A torque-responsive mechanical-type limited slip differential has a high performance against driving on unstable surfaces such as muddy roads.
- Driveability on sand or muddy road has been improved, and rear differential lock, which is useful for emergency , has been used.

REAR AXLE

Item		Vehicles without rear differential lock	Vehicles with rear differential lock
Axle housing type		Banjo type	Banjo type
Axle shaft	Support method	Semi-floating type	Semi-floating type
	Shaft O.D. (Bearing part x Centre x Length) mm	40.0 x 34.5 x 744.5	40.0 x 34.5 x 723.5 (LH) 40.0 x 34.5 x 761.0 (RH)
	Bearing type	Single taper (double taper)*	Double taper
	Bearing (O.D. x I.D.) mm	80.0 x 40.0	80.0 x 40.0

NOTE
*: Vehicles with ABS.

DIFFERENTIAL

<2WD>

Item		4G63	4D56
Drive gear type		Hypoid gear	Hypoid gear
Reduction ratio		4.636	4.222
Limited slip differential type		Torque sensitivity type mechanical	Torque sensitivity type mechanical
Differential gear type (type x quantity)	Side gear	Straight bevel gear x 2	Straight bevel gear x 2
	Pinion gear	Straight bevel gear x 2 [Straight bevel gear x 4]	Straight bevel gear x 2 [Straight bevel gear x 4]
Number of teeth	Side gear	51	38
	Drive pinion	11	9
	Side gear	14	14
	Pinion gear	10	10
Bearing (O.D. x I.D.) mm	Side	80.0 x 45.2	80.0 x 45.2
	Front	68.3 x 30.2	68.3 x 30.2
	Rear	76.2 x 36.5	76.2 x 36.5

NOTE
[ ]: Vehicles with limited slip differential

<4WD>

Item		4G64, 4D56 <Vehicles with wide tyre>	4D56 <Vehicles without wide tyre>
Drive gear type		Hypoid gear	Hypoid gear
Reduction ratio		4.875	4.636
Limited slip differential type		Torque sensitivity type mechanical	Torque sensitivity type mechanical
Differential gear type (type x quantity)	Side gear	Straight bevel gear x 2	Straight bevel gear x 2
	Pinion gear	Straight bevel gear x 2 [Straight bevel gear x 4]	Straight bevel gear x 2 [Straight bevel gear x 4]
Number of teeth	Side gear	39	51
	Drive pinion	8	11
	Side gear	19	19
	Pinion gear	10	10
Bearing (O.D. x I.D.) mm	Side	80.0 x 45.2	80.0 x 45.2
	Front	68.3 x 30.2	68.3 x 30.2
	Rear	79.4 x 36.5	79.4 x 36.5

NOTE
[ ]: Vehicles with limited slip differential or rear differential lock.

CONSTRUCTION DIAGRAM

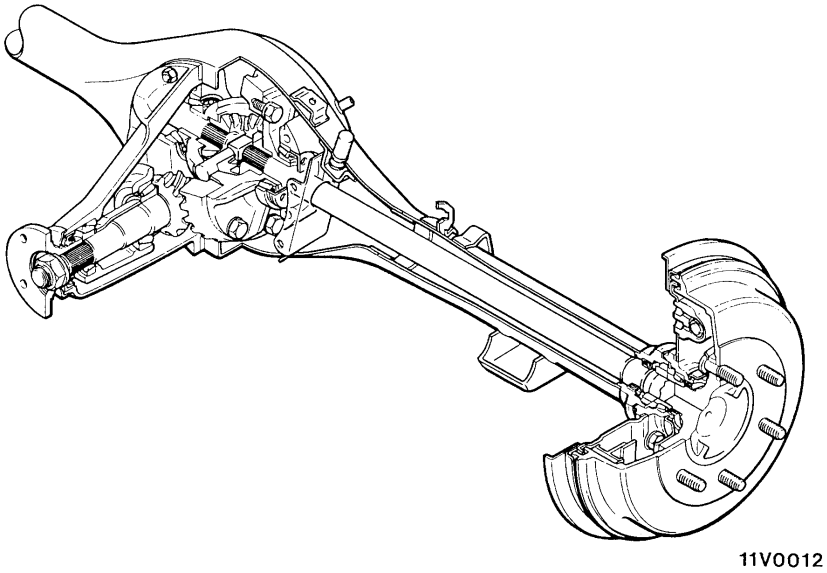

SERVICE SPECIFICATIONS

27100030121

Item			Standard value	Limit
Rear axle total backlash mm			–	5
Axle shaft axial play mm	Vehicles without ABS or rear differential lock		0.05 – 0.20	–
	Vehicles with ABS or rear differential lock		0 – 0.25	–
Limited slip differential preload Nm	Using special tool		13 or more	–
	Without using special tool		25 or more	–
Axle shaft retainer press-fitting force N	Vehicles without ABS or rear differential lock		Initial press-fitting force 49,000 or more	–
			Final press-fitting force 78,000	–
	Vehicles with ABS or rear differential lock		Initial press-fitting force 49,000 or more	–
			Final press-fitting force 98,000 – 108,000	–
Clearance between axle shaft retainer and snap ring mm			0 – 0.166	–
Rear differential lock air pump pressure kPa			25 – 40	–
Drive gear backlash mm	2WD		0.08 – 0.13	–
	4WD		0.13 – 0.18	–
Drive gear runout mm			–	0.05
Differential gear backlash mm	2WD		0 – 0.25	0.2
	4WD		0 – 0.076	0.2
Limited slip differential starting torque Nm	When a new clutch plate is used		39 – 74	–
	When re-installing current clutch plate		25 – 74	–
Drive pinion turning torque Nm	Without oil seal	When replacing (with anti-rust agent)	0.6 – 0.9	–
		When replacing or reusing (with gear oil applied)	0.4 – 0.5	–
	With oil seal	When replacing (with anti-rust agent)	0.8 – 1.1	–
		When replacing or reusing (with gear oil applied)	0.6 – 0.7	–

Item	Standard value	Limit
Horizontal difference between friction plate and friction disc thickness mm	0 – 0.05	–
Clearance between friction plate and friction disc mm	0.06 – 0.20	–
Clearance in side gear axial direction mm	0.05 – 0.20	–
Difference between left and right dimensions from back thrust face of pressure ring to end of thrust washer mm	0 – 0.05	–
Friction plate and friction disc warping (flatness) mm	–	0.08
Friction plate and friction disc wear (difference in the thickness of the friction surface and the projections) mm	–	0.1

LUBRICANTS

27100040049

Item	Specified lubricants	Quantity	
Rear differential gear oil	● Conventional differential: Hypoid gear oil API classification GL-5 or higher SAE viscosity No. 90, 80 W ● Limited slip differential: Hypoid gear oil MITSUBISHI Genuine Gear Oil Part No. 8149630 EX CASTROL HYPOY LS (GL-5, SAE 90), SHELL-LSD (GL-5, SAE 80W-90) or equivalent	2WD	1.6 ℓ
		4WD	2.6 ℓ

SEALANTS

27100050042

Items	Specified sealants	Remarks
Bearing case	3M ATD Part No. 8661 or equivalent	Semi-drying sealant
Dust cover		
Axle housing (differential carrier mounting part)		
Drive gear and differential case mounting part	3M Stud Locking 4170 or equivalent	Anaerobic sealant

SPECIAL TOOLS

27100060113

Tool	Number	Name	Use
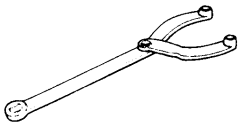	MB990767	End yoke holder	Measurement of the limited slip differential preload
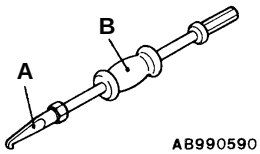	MB990590 A: MB990212 B: MB990211	Rear axle shaft oil seal remover A: Adapter B: Sliding hammer	Removal of axle shaft (Use together with MB990241, MB990211) Removal of axle housing oil seal
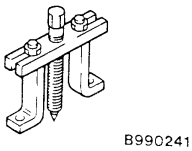	MB990241	Rear axle shaft puller	Removal of axle shaft (Use together with MB990211)
	MB991552	Axle shaft bearing and case remover	Removal of the axle shaft bearing and bearing case
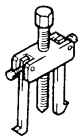	MB990801	Rear axle bearing outer race remover	Removal of bearing case, bearing outer race
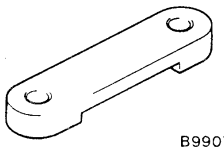	MB990786	Rear axle bearing outer race bridge	
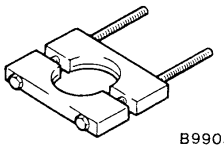	MB990560	Bearing remover	• Removal of bearing inner race • Press-fitting of the axle shaft bearing inner race • Press-fitting of the axle shaft retainer
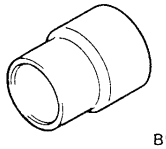	MB990799	Bearing inner race installer	
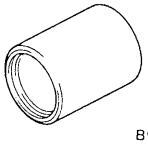	MB990890 or MB990891	Rear suspension bushing base	Installation of bearing outer race

Tool	Number	Name	Use
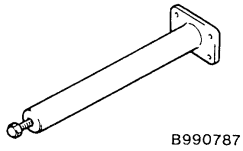 B990787	MB990787	Axle shaft bearing remover	Installation of rotor
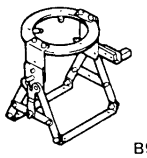 B990909	MB990909	Working base	Supporting of the differential carrier
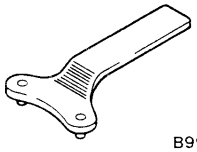 B990201	MB990201	Side bearing adjusting special spanner	Removal and adjustment of the side bearing nut
B990810	MB990810	Side bearing puller	Removal of the side bearing inner race
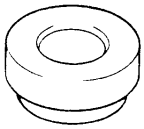 B990811	MB990811	Side bearing cup	
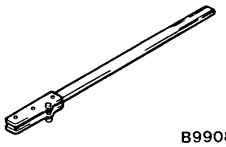 B990850	MB990850	End yoke holder	Removal of the companion flange
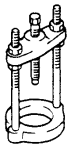 B990339	MB990339	Bearing puller	Removal of the drive pinion rear bearing inner race
	MB990648	Bearing remover	

Tool	Number	Name	Use
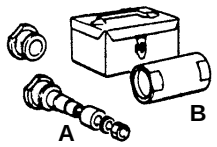	MB991171 A: MB990819 B: MB991170 C: MB991169	Pinion height gauge set A: Drive pinion gauge B: Cylinder gauge C: Drive pinion gauge attachment	Measurement of the pinion height
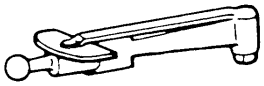	MB990685	Torque wrench	Measurement of the starting torque of drive pinion
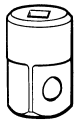	MB990326	Preload socket	
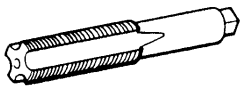	MB990813	Tap	Removal of adhesive
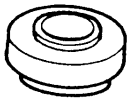	MB990728	Bearing installer	Press-fitting of the drive pinion rear bearing inner race
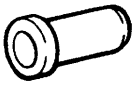	MB990727	Drive pinion oil seal installer	Press-fitting of the drive pinion oil seal
	MB990802	Bearing installer	Press-fitting of the side bearing inner race
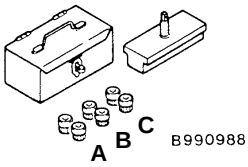	MB990988	Side gear holding tool set	Measurement of the clutch plate preload
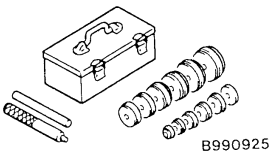	MB990925	Bearing and oil seal installer set	● Press-fitting of oil seal ● Inspection of drive gear tooth contact ● Removal of bearing outer race For details of each installer, refer to GROUP 26 – Special Tools.

MB990988	Tool number		Name	O.D. mm
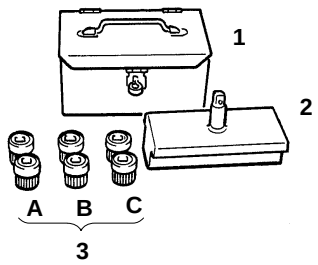	1	MB990551	Box	–
	2	MB990989	Base	–
	3	(MB990990)	Tool A	25
		(MB990991)	Tool B	28
		(MB990992)	Tool C	31

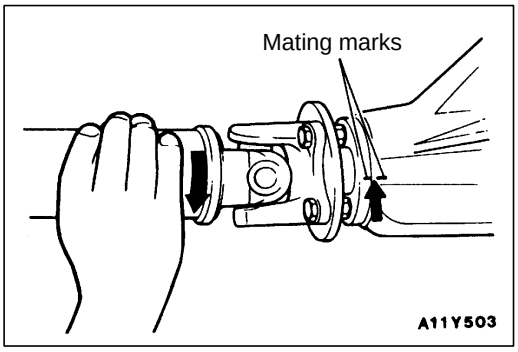

ON-VEHICLE SERVICE

27100120057

REAR AXLE TOTAL BACKLASH CHECK

1. Park the vehicles on a flat, level surface.
2. Place the transmission control lever to the neutral position, and place the transfer control lever to the neutral position. Then pull the parking brake lever and raise the vehicle on a jack.

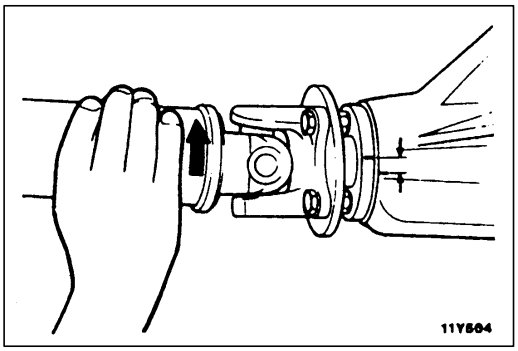

3. Turn the companion flange clockwise as far as it will go. Make the mating mark on the dust cover of the companion flange and on the differential carrier.
4. Turn the companion flange anti-clockwise as far as it will go, and measure the amount of distance through which the mating marks moved.

   Limit: 5 mm
5. If the backlash exceeds the limit value, remove the differential carrier assembly and check the following.
   - Final drive gear backlash (Refer to P.27-30.)
   - Differential gear backlash (Refer to P.27-31.)

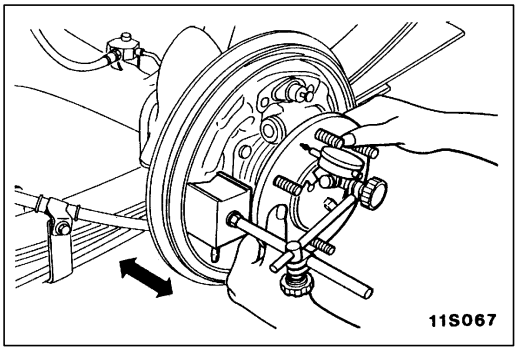

AXLE SHAFT AXIAL PLAY CHECK

27100130029

1. Measure the axle shaft axial play by using a dial indicator.

   Standard value:
   <Vehicles without ABS or rear differential lock>
   0.05 – 0.20 mm
   <Vehicles with ABS or rear differential lock>
   0 – 0.25 mm
2. For vehicles without ABS or rear differential lock, if the play is not within the standard value, replace the shim.

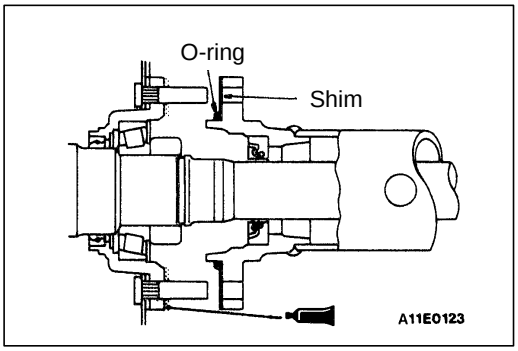

AXLE SHAFT AXIAL PLAY ADJUSTMENT

27100140015

<Vehicles without ABS or rear differential lock>

1. Insert a 1 mm thick shim and O-ring into the left side rear axle housing.
2. Apply the specified sealant to the mating surface of the bearing case, install the left axle shaft into rear axle housing and tighten the nuts 49 – 59 Nm.

   Specified sealant: 3M ATD Part No. 8661 or equivalent

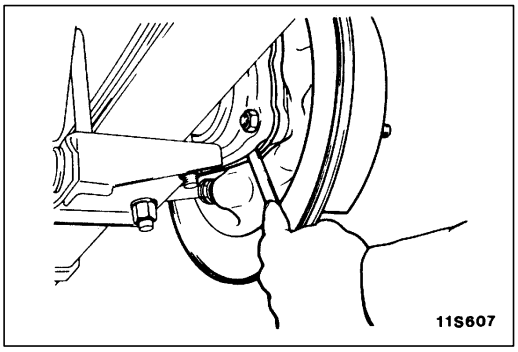

3. Temporarily install the right axle shaft assembly to the rear axle housing without installing the O-ring or shim.
4. Measure the clearance between the bearing case and rear axle housing end with a thickness gauge.

   NOTE
   Confirm that the measurement values no differ in the horizontal and vertical positions.

5. Select shims of the thickness which is equal to the sum of the measured clearance and 0.05 – 0.20 mm.
   Remove the right axle shaft, and install shim(s) and O-ring on the right side rear axle housing end.
6. Apply the specified sealant to the mating surface of bearing case, install the right axle shaft into rear axle housing and tighten the nut 49 – 59 Nm.

   Specified sealant: 3M ATD Part No. 8661 or equivalent

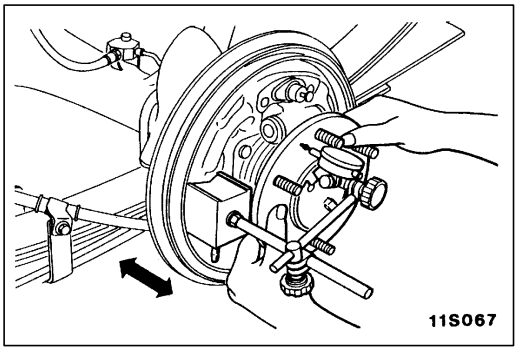

7. Check to assure that the axle shaft axial play is within the standard value.

   Standard value: 0.05 – 0.20 mm

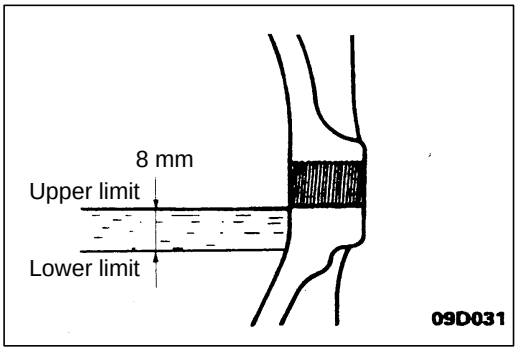

GEAR OIL LEVEL CHECK

27200120043

Check that gear oil level is not 8 mm below the bottom of filler plug hole.

Specified gear oil:

<Conventional differential>
Hypoid gear oil API classification GL-5 or higher SAE viscosity No. 90, 80W

<Limited slip differential>
Hypoid gear oil MITSUBISHI Genuine Gear Oil Part No. 8149630 EX, CASTROL HYPOY LS (GL-5, SAE 90), SHELL-LSD (GL-5, SAE 80W-90) or equivalent
<2WD> 1.6 ℓ
<4WD> 2.6 ℓ

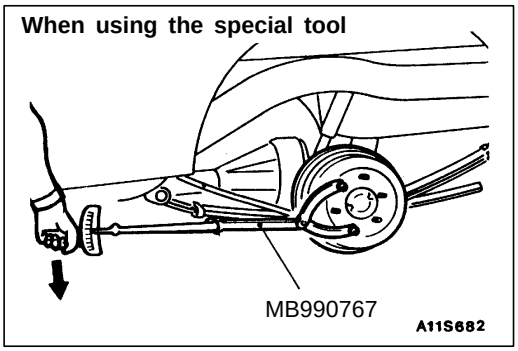

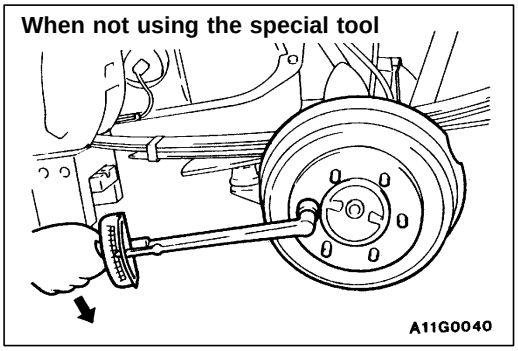

LIMITED SLIP DIFFERENTIAL PRELOAD CHECK

27300090026

1. Place the shift lever in the neutral position and lock the front wheels.
2. Disconnect the propeller shaft from the differential.
3. With the parking brake fully released, jack up one rear wheel so that the other is still on the ground.
4. Measure the differential preload in the forward direction when using the special tool and when not using the special tool.

Standard value:
Using the special tool: 13 Nm or more
Without using the special tool: 25 Nm or more

NOTE
If the differential preload is not within the standard value, disassemble the limited slip differential to check parts.

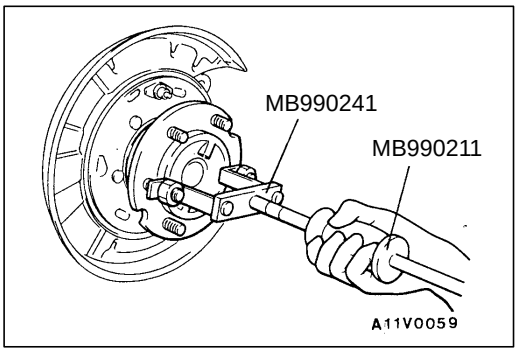

AXLE HOUSING OIL SEAL REPLACEMENT

27100150025

1. Remove the axle shaft assembly (Refer to P.27-16.)

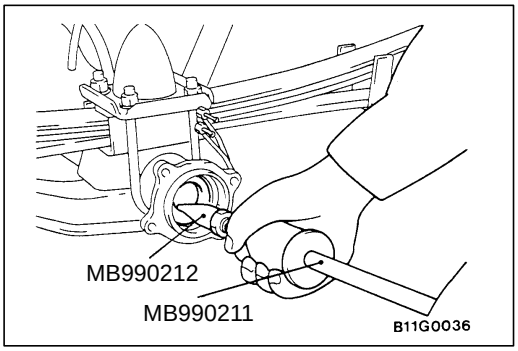

2. Use special tools with hook attached to remove the oil seal.
3. Apply multipurpose grease to the oil seal fitting area of the rear axle housing.

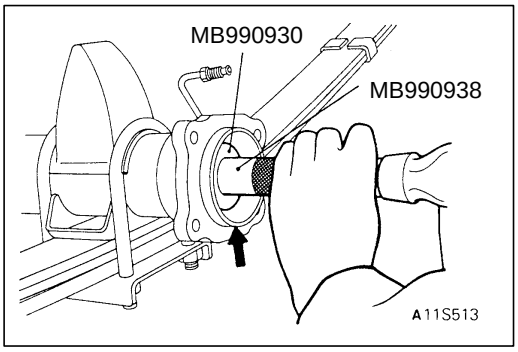

4. Drive the new oil seal into the rear axle housing end by using the special tool.
5. Apply multipurpose grease to the oil seal lip.
6. Install the rear axle shaft.

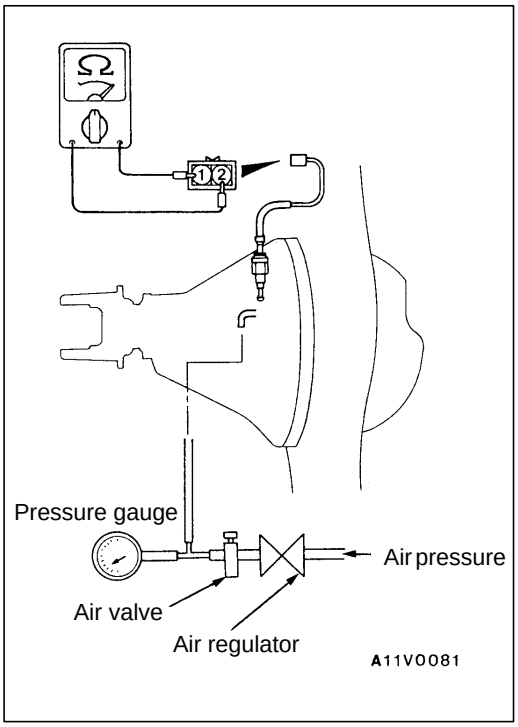

REAR DIFFERENTIAL LOCK DETECTION SWITCH CHECK

27200100047

1. Jack up the vehicle.
2. Remove the air pipe and air hose connection.
3. Connect a pressure gauge and air regulator to the air pipe.
4. Adjust the outside air pressure with the air regulator until the pressure gauge shows approx. 25 kPa.

   Caution
   Do not apply a higher pressure.

5. Lock the wheel on one side of the vehicle, and slowly turn the wheel on the other side.
6. Check for continuity in the rear differential lock detection switch.

When air is supplied	Continuity
When air is released	No continuity

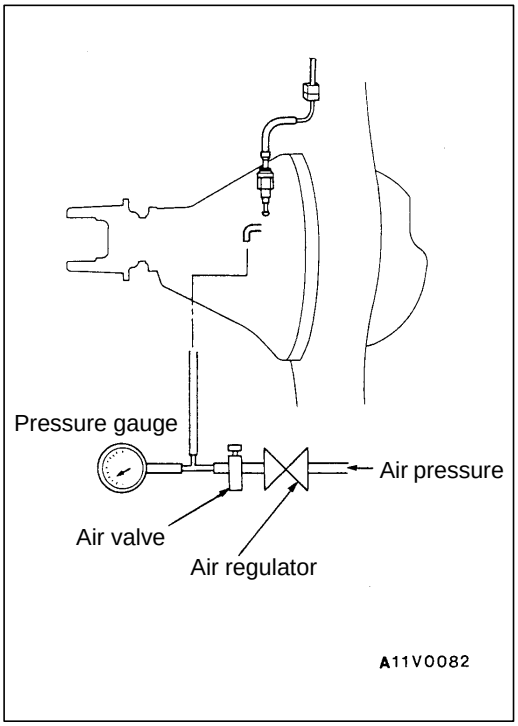

REAR DIFFERENTIAL LOCK SYSTEM AIR LEAKAGE CHECK

27200110033

1. Remove the rear differential lock air pump and remove the air hose from the air pump. (Refer to P.27-26.)
2. Connect a pressure gauge and air regulator to the air hose.
3. Adjust the outside air pressure with the air regulator until the pressure gauge shows approx. 35 kPa.

   Caution
   Do not apply a higher pressure.
4. Shut off the air valve.
5. If the pressure has not dropped more than 10 kPa after 10 minutes have passed, there can be no air leakage from the air hose etc.

AXLE ASSEMBLY

27100170038

REMOVAL AND INSTALLATION

Pre-removal Operation
- Brake Fluid Draining

Post-installation Operation
- Brake Fluid Filling and Air Bleeding (Refer to GROUP 35A – On-vehicle Service.)
- Parking Brake Lever Stroke Adjustment (Refer to GROUP 36 – On-vehicle Service.)

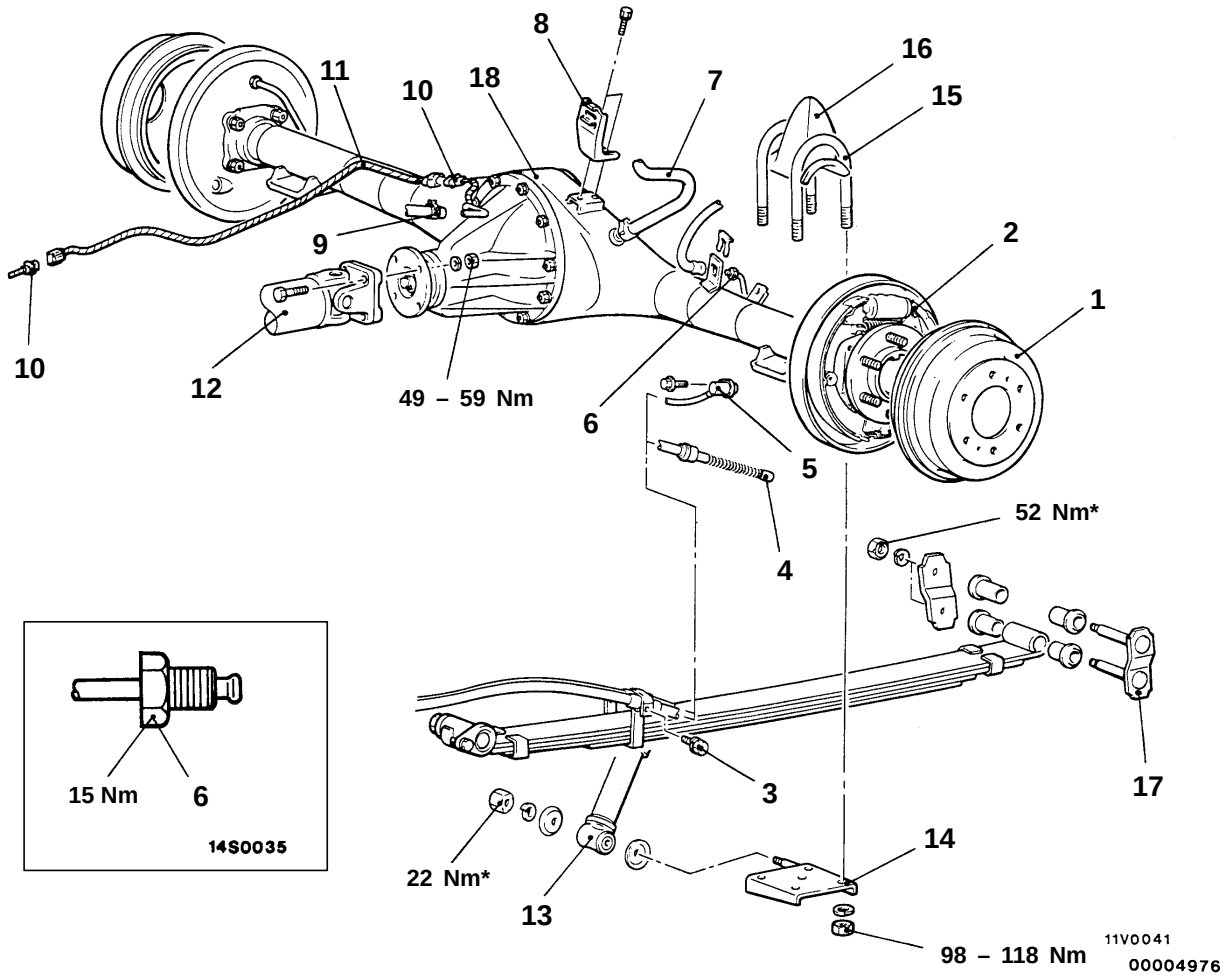

Removal steps

1. Brake drum
2. Shoe-lining assembly (Refer to GROUP 35A – Rear Drum Brake.)
3. Parking brake cable, speed sensor <Vehicles with ABS>, attaching bolt
4. Parking brake cable connection
5. Speed sensor connection <Vehicles with ABS>
6. Brake tube connection
7. Breather hose connection
8. Spring support
9. Hose connection <Vehicles with rear differential lock>
10. Rear differential lock position harness connection
11. Rear differential lock position harness
12. ◀A▶ ▶A◀ Propeller shaft connection
13. ◀B▶ Shock absorber connection
14. U-bolt seat
15. U-bolt
16. Bump stopper
17. Shackle assembly
18. ◀C▶ Axle assembly

Caution

*** Indicates parts which should be temporarily tightened, and then fully tightened with the vehicles on the ground in the unladen condition.**

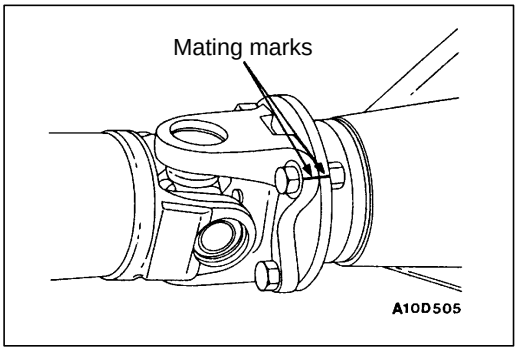

REMOVAL SERVICE POINTS

◀A▶ PROPELLER SHAFT REMOVAL

Place a mating marks on the companion flange and flange yoke, disconnect the propeller shaft from the companion flange.

Caution
Suspend the propeller shaft from the body with wire, etc. to prevent it from falling.

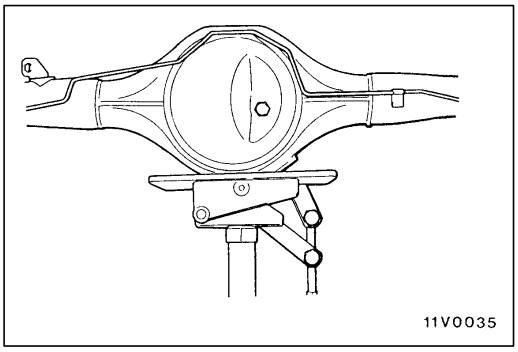

◀B▶ SHOCK ABSORBER REMOVAL

Support the axle housing with a jack before removing the shock absorber lower mounting nut.

◀C▶ AXLE ASSEMBLY REMOVAL

Take out the axle assembly from the rear of the vehicle.

Caution
Be careful not to drop the axle assembly, because it is unstable on the jack.

INSTALLATION SERVICE POINT

▶A◀ PROPELLER SHAFT INSTALLATION

Align the mating marks on the flange yoke and the companion flange to install the propeller shaft.

AXLE SHAFT

27100250039

REMOVAL AND INSTALLATION

Pre-removal Operation
- Brake Fluid Draining

Post-installation Operation
- Brake Fluid Supplying and Air Bleeding (Refer to GROUP 35A – On-vehicle Service.)
- Parking Brake Lever Stroke Adjustment (Refer to GROUP 36 – On-vehicle Service.)

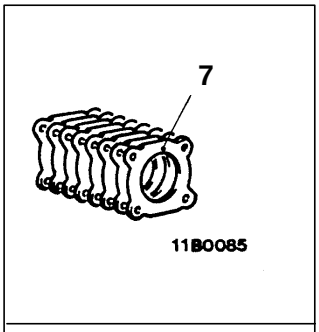

Rear axle shaft shim set

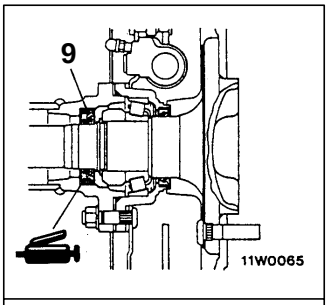

Apply to entire inside diameter of oil seal lip

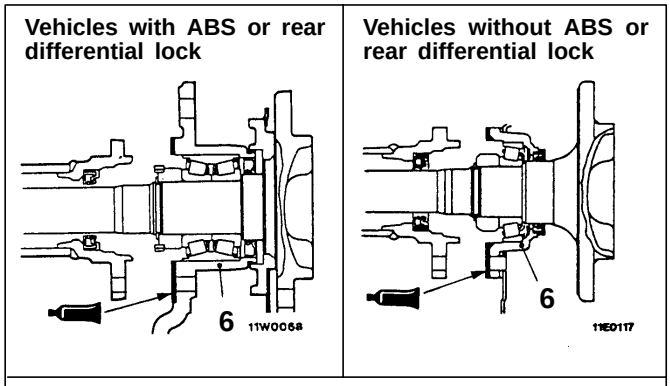

Sealant: 3M ATD Part No. 8661 or equivalent

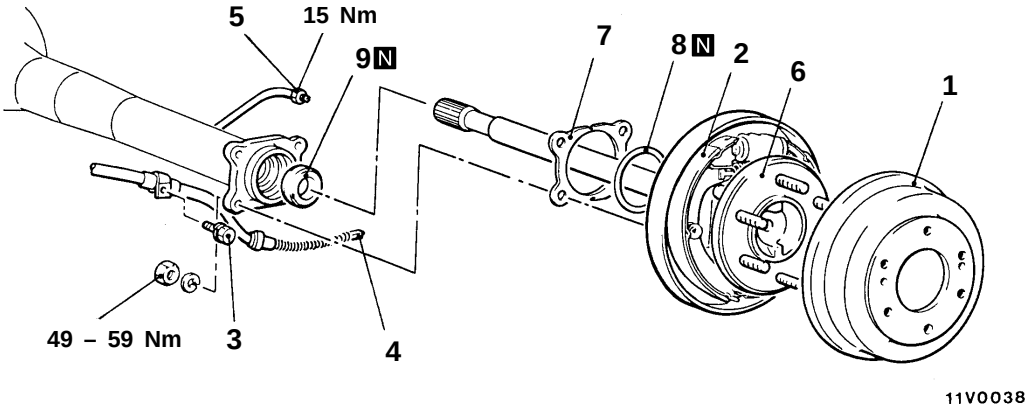

00004977

Removal steps

1. Brake drum
2. Shoe-lining assembly (Refer to Group 35A – Rear Drum Brake.)
3. Parking brake cable, speed sensor cable <Vehicles with ABS> attachment bolt
4. Parking brake cable connection
5. Brake tube connection

◀A▶

◀B▶ ▶A◀

▶B◀ • Axle shaft axial play adjustment <Vehicles without ABS or rear differential lock>

6. Axle shaft assembly
7. Shim <Vehicles without ABS or rear differential lock>
8. O-ring
9. Oil seal

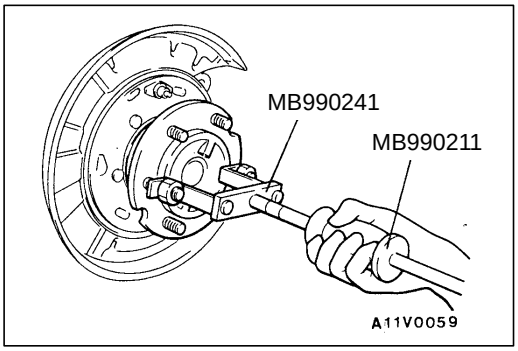

REMOVAL SERVICE POINTS

◀A▶ AXLE SHAFT ASSEMBLY REMOVAL

Caution
Be careful not to damage the oil seal when pulling axle shaft.

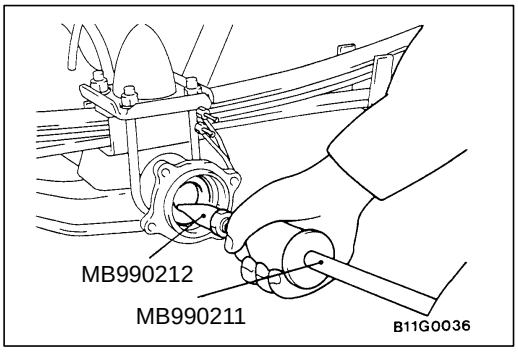

◀B▶ OIL SEAL REMOVAL

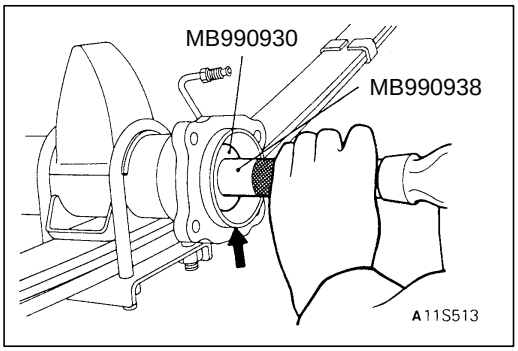

INSTALLATION SERVICE POINTS

▶A◀ OIL SEAL INSTALLATION

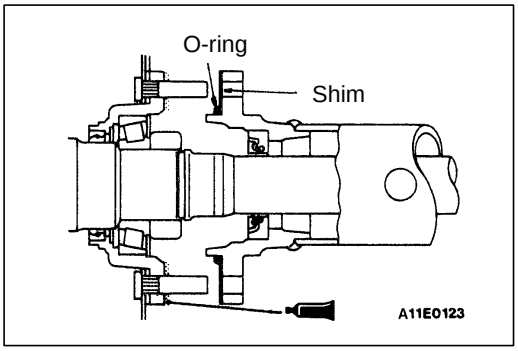

▶B◀ AXLE SHAFT AXIAL PLAY ADJUSTMENT

<VEHICLES WITHOUT ABS OR REAR DIFFERENTIAL LOCK>

When replacing the axle shaft or the wheel bearings, the following adjustment is needed. When removing and reinstalling the axle shaft, it is not needed and the same thickness and number of shims as previously should be used.

1. Insert a 1 mm thick shim and O-ring into the left side rear axle housing.
2. Apply the specified sealant to the mating surface of the bearing case, install the left axle shaft into rear axle housing and tighten the nuts 49 – 59 Nm.

   Specified sealant: 3M ATD Part No. 8661 or equivalent
3. Temporarily install the right axle shaft assembly to the axle housing without installing the O-ring or shim.

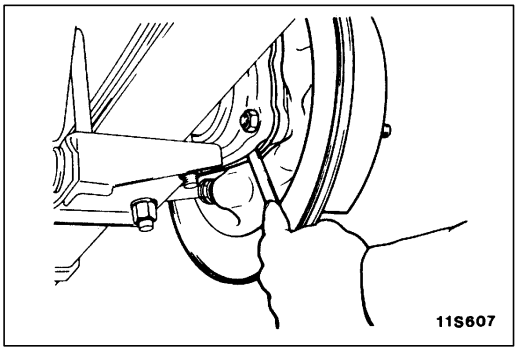

4. Measure the clearance between the bearing case and rear axle housing end with a thickness gauge.

   NOTE
   Confirm that the measurement values no differ in the horizontal and vertical positions.

5. Select shims of the thickness which is equal to the sum of the measured clearance and 0.05 – 0.20 mm.
6. Remove the right axle shaft, and install shim(s) and O-ring on the right side rear axle housing end.
7. Apply the specified sealant to the mating surface of bearing case, install the right axle shaft into rear axle housing and tighten the nut 49 – 59 Nm.

   Specified sealant: 3M ATD Part No. 8661 or equivalent

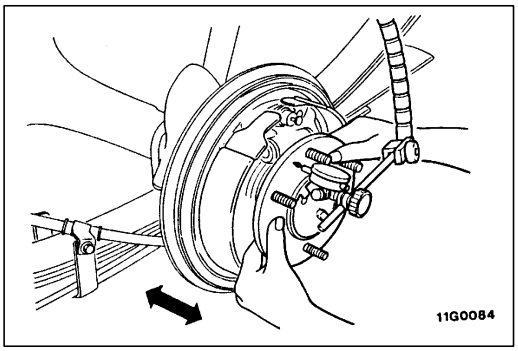

8. Check to assure that the axle shaft axial play is within the standard value.

   Standard value: 0.05 – 0.20 mm

DISASSEMBLY AND REASSEMBLY

27100270011

<VEHICLES WITHOUT ABS OR REAR DIFFERENTIAL LOCK>

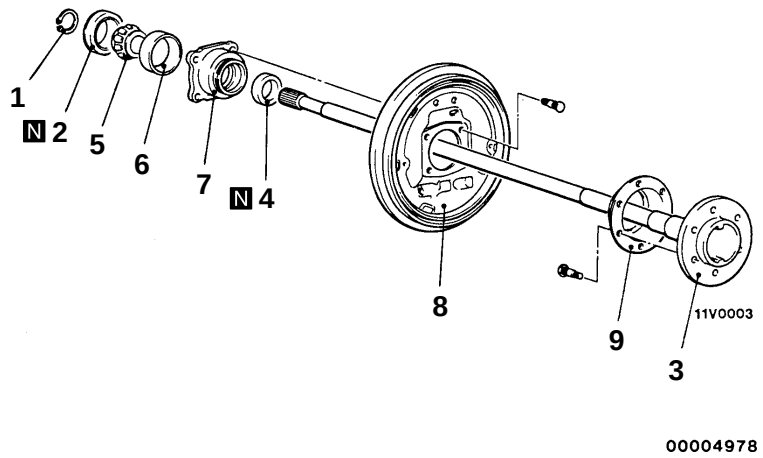

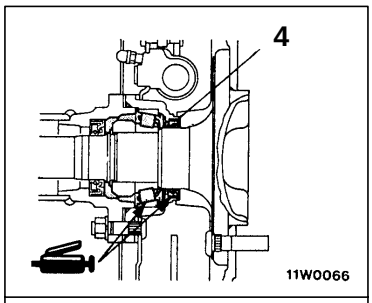

Apply to entire inside diameter of oil seal lip

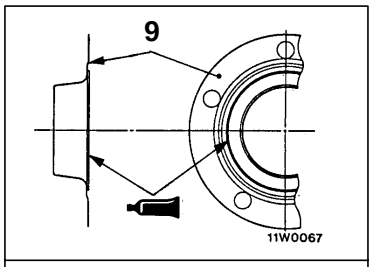

Sealant: 3M ATD Part No. 8661 or equivalent

Disassembly steps

	▶G◀	1. Snap ring
◀A▶	▶E◀	2. Retainer
◀B▶		3. Axle shaft
	▶D◀	4. Oil seal
	▶C◀	5. Bearing inner race
◀D▶	▶A◀	6. Bearing outer race
		7. Bearing case
		8. Backing plate
		9. Dust cover

<VEHICLES WITH ABS OR REAR DIFFERENTIAL LOCK>

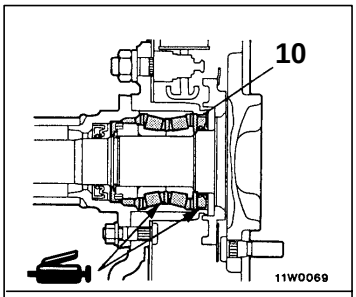

Apply to entire inside diameter of oil seal lip

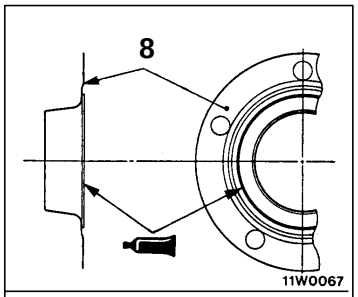

Sealant: 3M ATD Part No. 8661 or equivalent

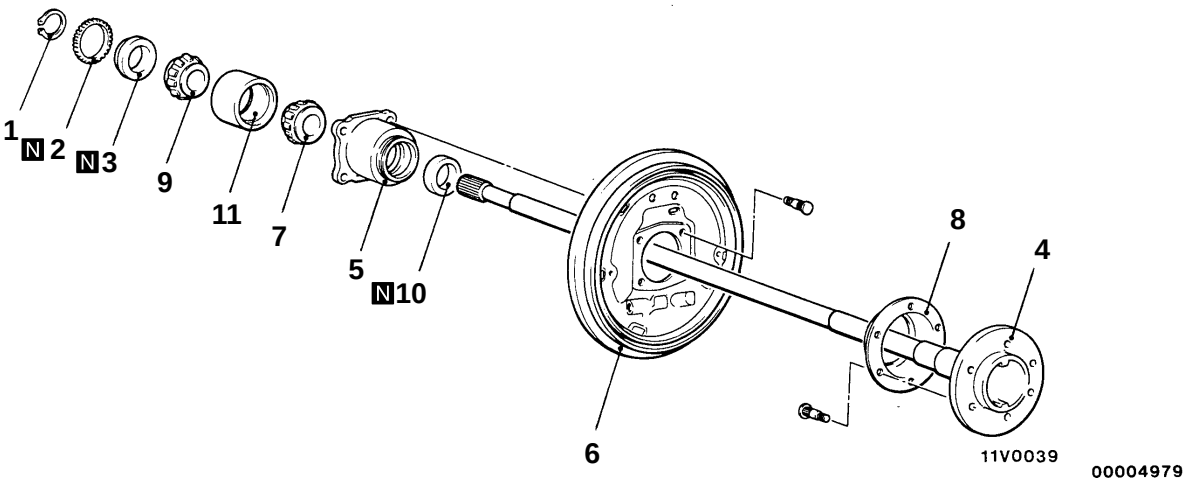

Disassembly steps

1. Snap ring
2. Rotor <Vehicles with ABS>
◀A▶ 3. Retainer
◀B▶ 4. Axle shaft
5. Bearing case
6. Backing plate
◀C▶ 7. Outer bearing inner race
8. Dust cover
9. Inner bearing inner race
10. Oil seal
◀D▶ 11. Bearing outer race

Reassembly steps

▶A◀ 11. Bearing outer race
▶B◀ 9. Inner bearing inner race
▶B◀ 7. Outer bearing inner race
▶D◀ 10. Oil seal
8. Dust cover
6. Backing plate
5. Bearing case
4. Axle shaft
▶E◀ 3. Retainer
▶F◀ 2. Rotor <Vehicles with ABS>
▶G◀ 1. Snap ring

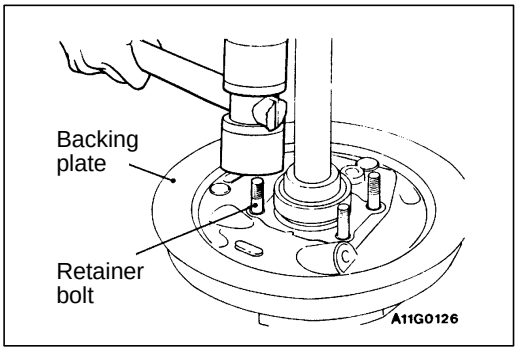

DISASSEMBLY SERVICE POINTS

◀A▶ RETAINER REMOVAL

1. Remove one retainer bolt from the backing plate.

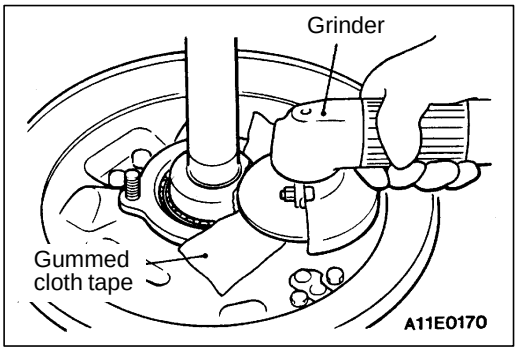

2. Apply gummed cloth tape around the edge of the bearing case for protection.
3. As shown in the figure, fix the axle shaft and shave off with grinder a point of its circumference locally until the wall thickness on the side of axle shaft of retainer and the side of bearing become approximately 1.0 – 1.5 mm and 2.0 mm respectively.

   Caution
   Be careful not to damage the bearing case and the axle shaft.

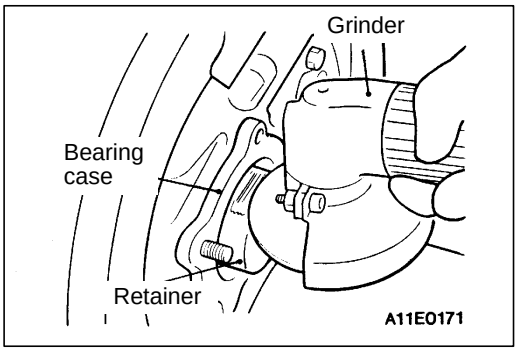

4. Fix the axle shaft and shave off the remaining 2.0 mm on the side of the bearing of the retainer.

   Caution
   Be careful not to damage the bearing case and the axle shaft.

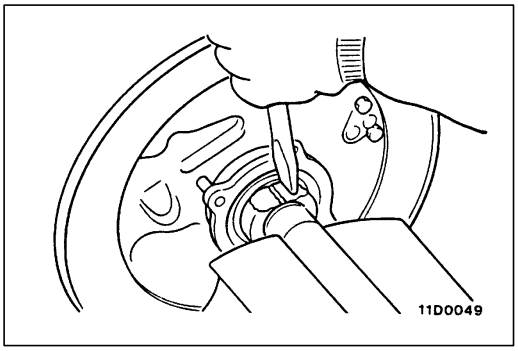

5. Cut in with a chisel the place where the retainer ring has been shaven and remove the retainer ring.

   Caution
   Be careful not to damage the axle shaft.

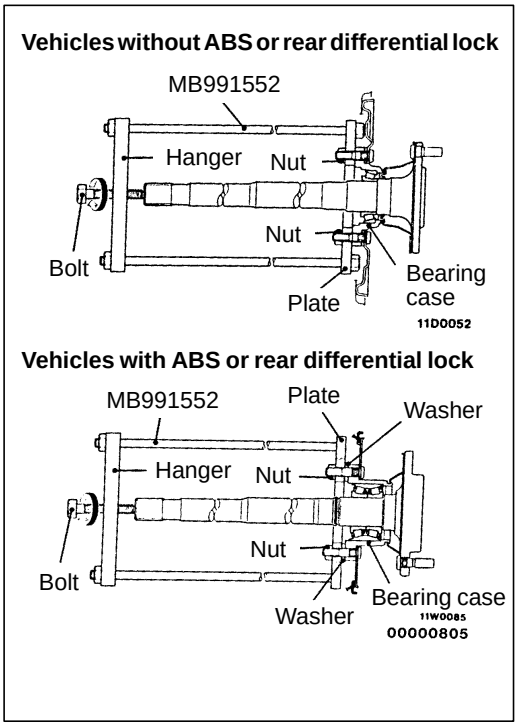

◀B▶ AXLE SHAFT REMOVAL

<VEHICLES WITHOUT ABS OR REAR DIFFERENTIAL LOCK>

1. Set the special tool by fixing its plate to the bearing case as shown in the figure and adjust the height of the hanger.

<VEHICLES WITH ABS OR REAR DIFFERENTIAL LOCK>

1. Secure the special tool to the bearing case bolts with the nuts installing the washers, plate and nuts in that order and adjust the height of the hanger.

   NOTE
   The washers are used to eliminate the difference in height of the bearing case so that the plate and the bearing case are parallel.

2. Place the end of the bolt against the centre of the axle shaft, and then tighten the bolt to remove the axle shaft from the bearing case assembly.

   Caution
   The hanger and plate should be placed so that they are parallel.

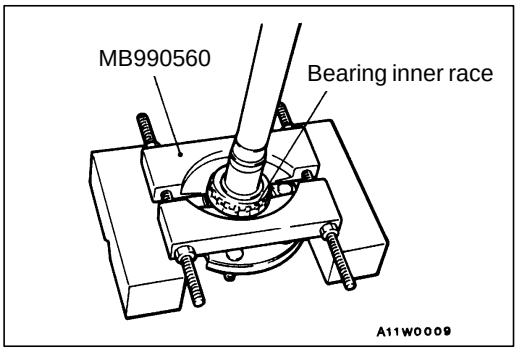

◀C▶ OUTER BEARING INNER RACE REMOVAL

Install the special tool as shown in the illustration, and then use a press to remove the outer bearing inner race from the axle shaft.

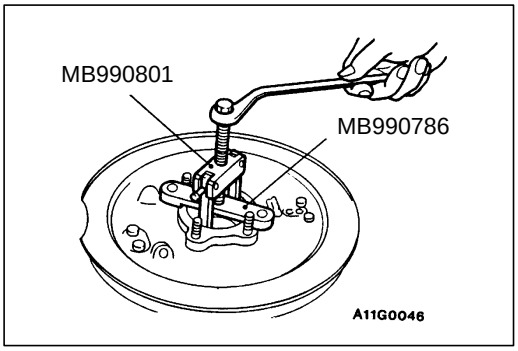

◀D▶ BEARING OUTER RACE REMOVAL

<VEHICLES WITHOUT ABS OR REAR DIFFERENTIAL LOCK>

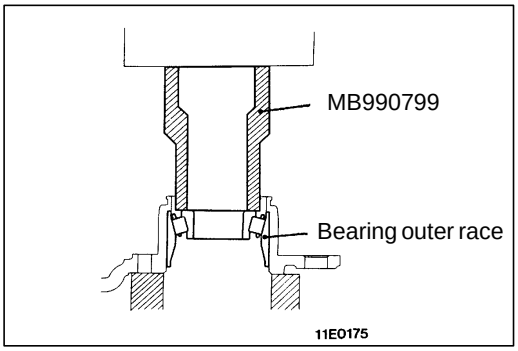

<VEHICLES WITH ABS OR REAR DIFFERENTIAL LOCK>

Reinstall the outer bearing inner race that was removed previously, and then use the special tool and a press to remove the bearing outer race.

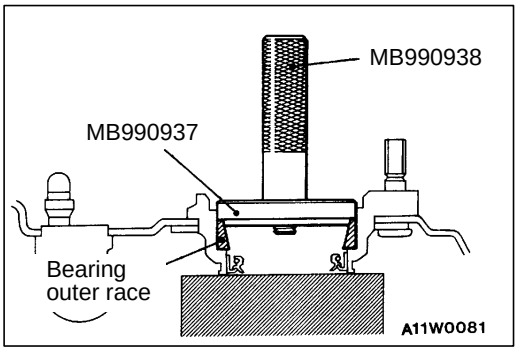

REASSEMBLY SERVICE POINTS

▶A◀ BEARING OUTER RACE INSTALLATION <VEHICLES WITHOUT ABS OR REAR DIFFERENTIAL LOCK>

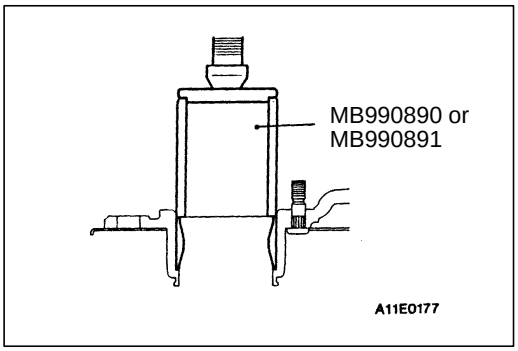

<VEHICLES WITH ABS OR REAR DIFFERENTIAL LOCK>

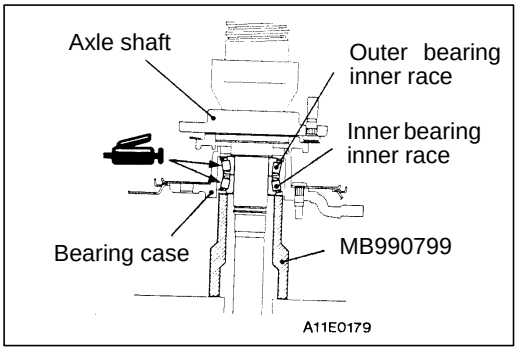

▶B◀ INNER BEARING INNER RACE / OUTER BEARING INNER RACE INSTALLATION

1. Apply multipurpose grease to the roller surface and ends of the bearing.
2. Pass the axle shaft through the bearing case and the inner bearing inner race and outer bearing inner race.
3. Use the special tool to press-fit the inner bearing inner race and outer bearing inner race to the axle shaft.

   Caution
   Both bearing inner race, outer race sets should be press-fitted together.

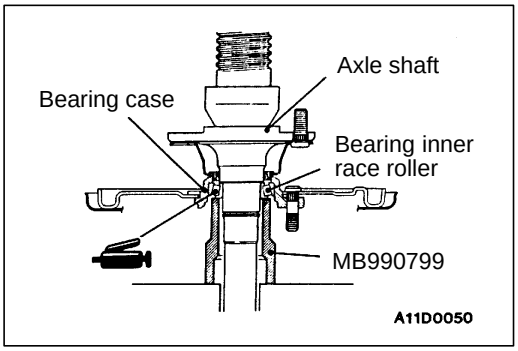

▶C◀ BEARING INNER RACE INSTALLATION

1. Apply multipurpose grease to the roller surface and ends of the bearing.
2. Place the bearing case and the bearing inner race onto the axle shaft in that order.
3. Use the special tool to press-fit the inner bearing inner race and outer bearing inner race to the axle shaft.

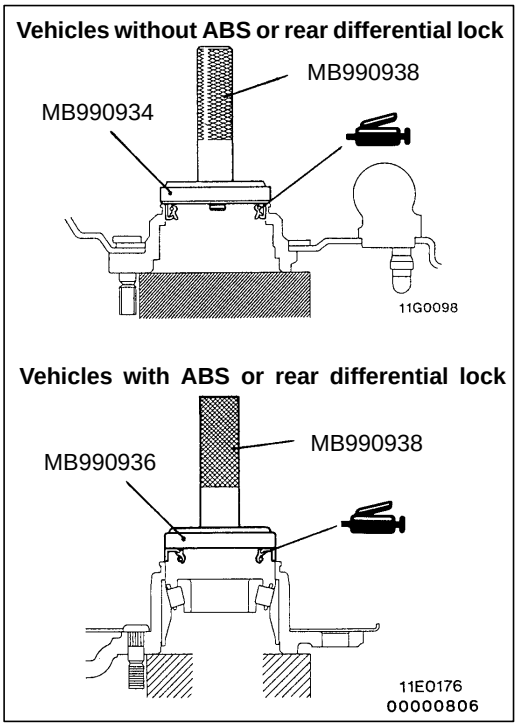

▶D◀ OIL SEAL INSTALLATION

1. Apply the multipurpose grease to the external periphery of the oil seal.
2. Press-fit the oil seal into the bearing case until it is flush with the face of the bearing case by using the special tools.
3. Apply the multipurpose grease to the lips of the oil seal.

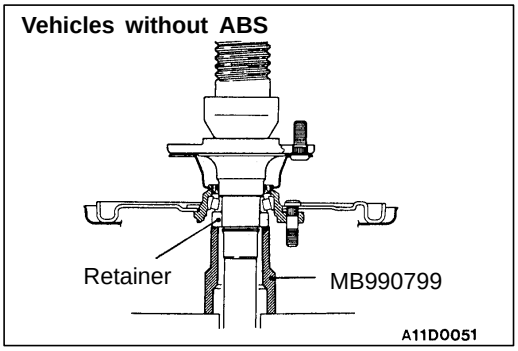

▶E◀ RETAINER INSTALLATION

Use the special tool to press-fit the retainer to the axle shaft, while checking that the press-fitting force is at the standard value.
If the initial press-fitting force is less that the standard value, replace the axle shaft.

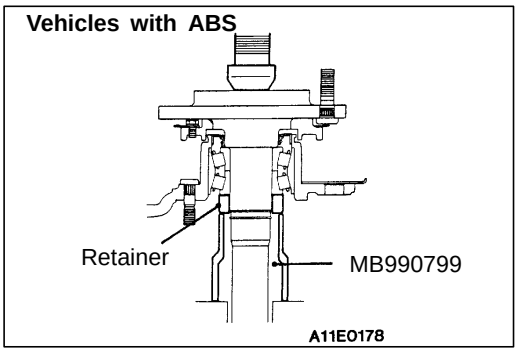

Standard value:

Item	Initial press-fitting force N	Final press-fitting force N
Vehicles without ABS	49,000 or more	78,000
Vehicles with ABS	49,000 or more	98,000 – 108,000

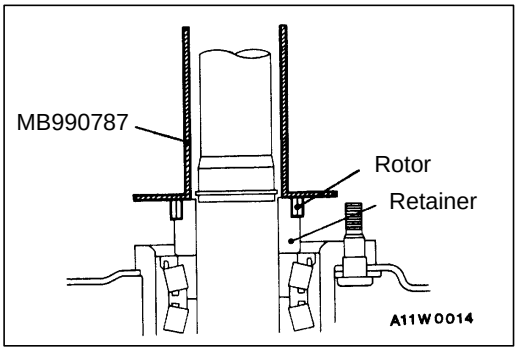

▶F◀ ROTOR INSTALLATION

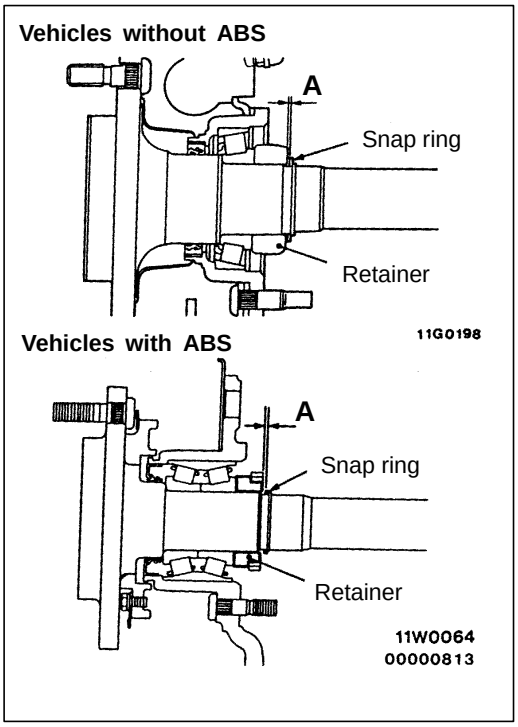

▶G◀ SNAP RING INSTALLATION

1. After installing the snap ring, measure the clearance (A) between the snap ring and the retainer with a thickness gauge, and check that it is within the standard value.

   Standard value (A): 0 – 0.166 mm

2. If the clearance exceeds the standard value, change the snap ring so that the clearance is at the standard value.

Thickness of snap ring mm	Identification colour
2.17	–
2.01	Yellow
1.85	Blue
1.69	Purple
1.53	Red

INSPECTION

27100280014

- Check the dust cover for deformation and damage.
- Check the inner and outer bearings for seizure, discoloration and rough raceway surface.
- Check the axle shaft for cracks, wear and damage.

REAR DIFFERENTIAL LOCK

27200270038

REMOVAL AND INSTALLATION

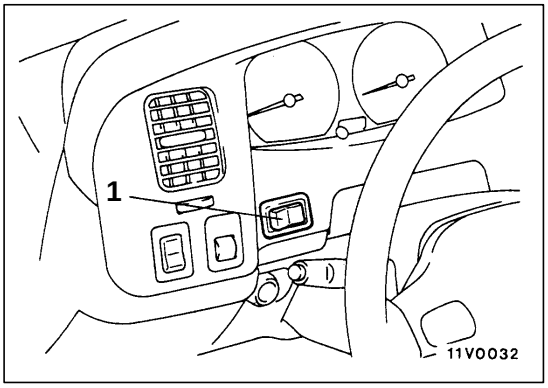

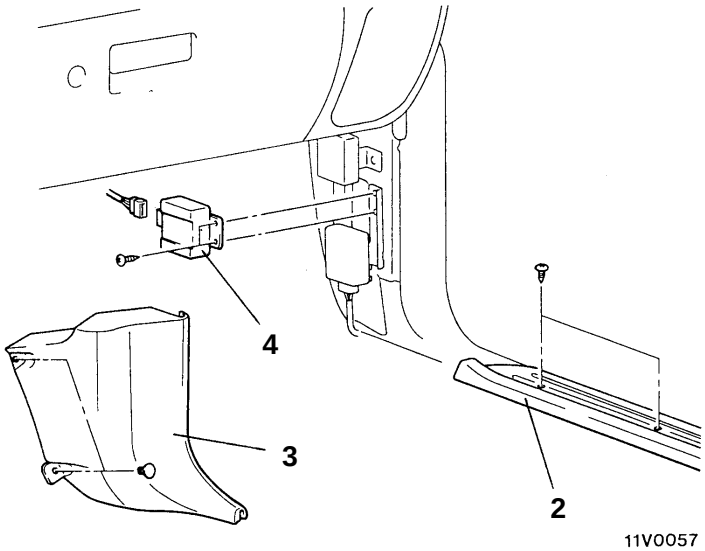

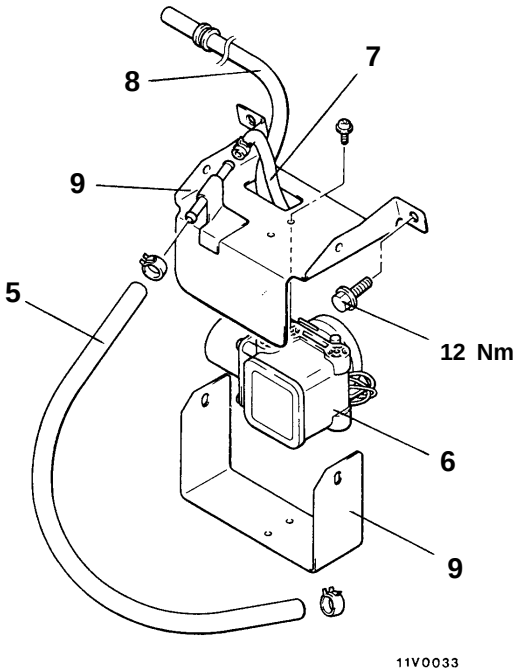

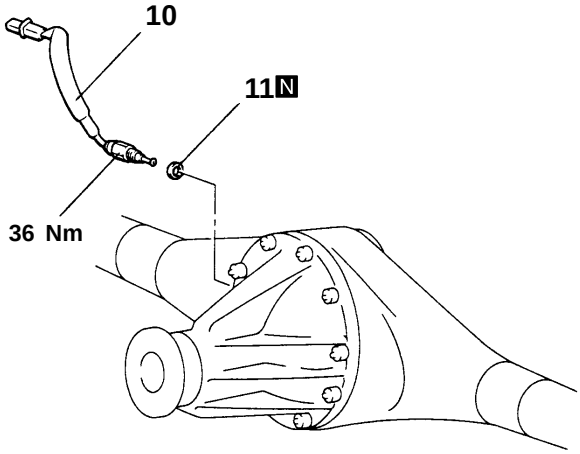

1. Rear differential lock switch

Rear differential lock-ECU removal steps

2. Scuff plate
3. Cowl side trim
4. Rear differential lock-ECU

Rear differential lock air pump removal steps

5. Hose
6. Rear differential lock air pump
7. Hose
8. Vapor hose
9. Bracket

Rear differential lock detection switch removal steps

10. Rear differential lock detection switch
11. Gasket

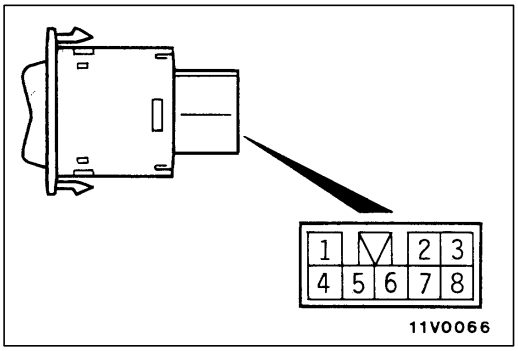

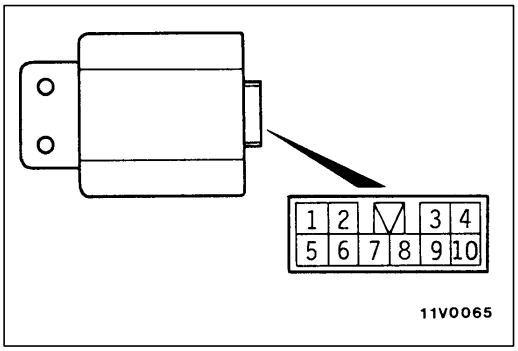

INSPECTION

27200330026

REAR DIFFERENTIAL LOCK SWITCH CHECK

Switch position	Terminal No.						
	1	2	3	4	5	7	8
OFF	○	——	○			ILL ○	○
ON	○	——	○	IND ○	○	ILL ○	○

REAR DIFFERENTIAL LOCK-ECU CHECK

27200320023

1. Measure the terminal voltage under each condition.
2. With the ECU connected to the harness and the probe inserted into rear of the harness connector, measure the voltage between terminal No.6 (earth terminal) and each terminal.

Terminal No.	Inspection item		Condition		Terminal voltage
3	Ignition switch (IG1)		Ignition switch (IG1)	OFF	0 V
				ON	System voltage
9	Rear differential lock switch	ON side	Ignition switch: ON	ON side or OFF side	0 V
1		OFF side		When in neutral	System voltage
10	Rear differential lock indicator lamp		Ignition switch: ON	Rear differential is locked	0 V
				Rear differential is free	System voltage
2	Vehicle speed reed switch		Select “D” or “1” (1st gear) and drive forward slowly		5 V
8	Rear differential lock detection switch		Ignition switch: ON	Rear differential is locked	0 V
				Rear differential is free	System voltage
4	Rear differential lock air pump		Ignition switch: ON	When filling or holding	System voltage
				When releasing	0 V
5	4WD detection switch		Ignition switch: ON	4WD	System voltage
				2WD	0 V

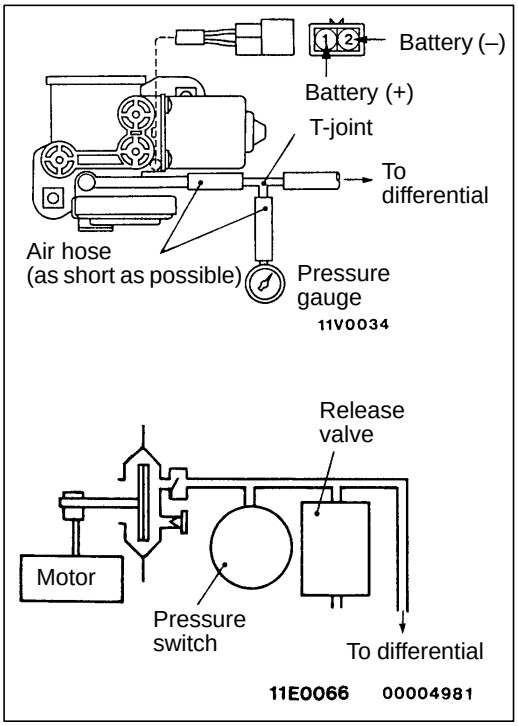

REAR DIFFERENTIAL LOCK AIR PUMP CHECK

27200310020

1. Install air hose to the differential.
2. Connect a pressure gauge to the air pump discharge outlet nozzle, via the air hose and T-joint.
3. Apply battery voltage to the air pump connector.
4. Measure the time when the pump starts and stops operating, and if it stops within 5 seconds, the pressure switch inside the pump is normal.
5. Measure the pressure 10 – 20 seconds after the pump has stopped.

   Standard value: 25 – 40 kPa

   If the pressure is within the standard value, the release valve inside the pump is normal.
6. Check that the pump does not begin operating for 5 minutes after it has stopped.
7. If the inspection for 4 – 6 is normal, then the pump is fully operational.

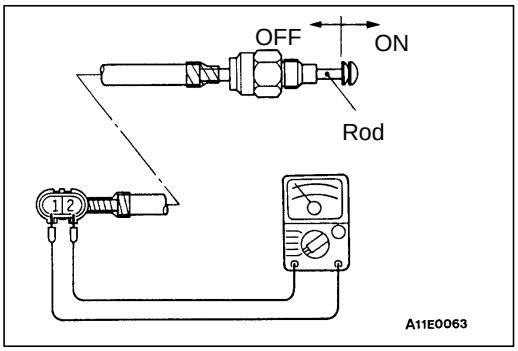

REAR DIFFERENTIAL LOCK DETECTION SWITCH CHECK

27200100030

1. Connect an ohmmeter to the detection switch connector.
2. The rear differential lock switch is in good condition when the rod of the detection switch is pulled, there should be continuity, and when it returned to its normal position, no continuity.

DIFFERENTIAL CARRIER

27200200068

REMOVAL AND INSTALLATION

Pre-removal Operation
- Differential Gear Oil Draining
- Axle Shaft Assembly Removal (Refer to P.27-16.)

Post-installation Operation
- Axle Shaft Assembly Installation (Refer to P.27-16.)
- Differential Gear Oil Filling (Refer to P.27-10.)

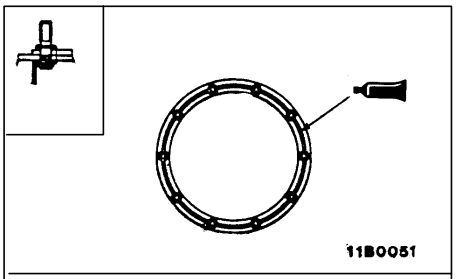

Sealant: 3M ATD Part No.8661 or equivalent

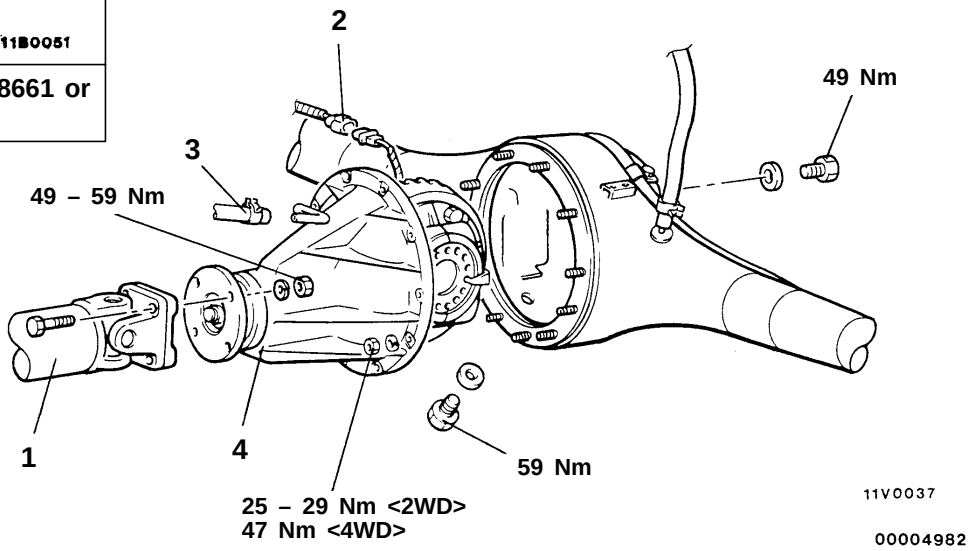

Removal steps

◀A▶ ▶A◀ 1. Propeller shaft connection
2. Rear differential lock detection switch connection
3. Hose connection <Vehicles with rear differential lock>
◀B▶ 4. Differential carrier assembly

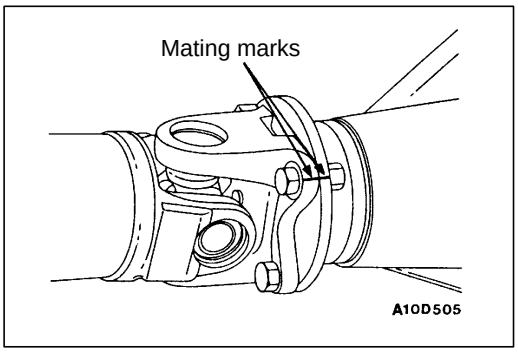

REMOVAL SERVICE POINTS

◀A▶ PROPELLER SHAFT REMOVAL

Make the mating marks on the flange yoke of the propeller shaft and the companion flange of the differential case.

Caution
Suspend the propeller shaft from the body with wire, etc.

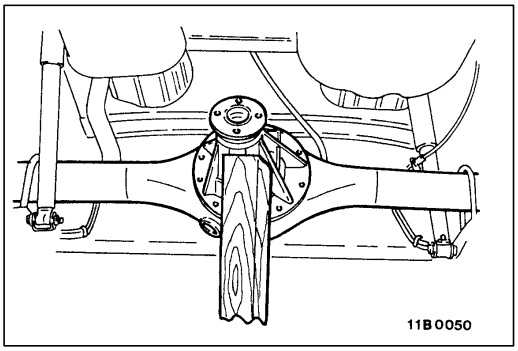

◀B▶ DIFFERENTIAL CARRIER REMOVAL

Remove the attaching nuts and strike the lower part of differential carrier assembly with a piece of timber several times to loosen, then remove the assembly.

Caution
Use care not to strike the companion flange.

INSTALLATION SERVICE POINT

▶A◀ PROPELLER SHAFT INSTALLATION

Align the mating marks on the flange yoke and the companion flange to install the propeller shaft.

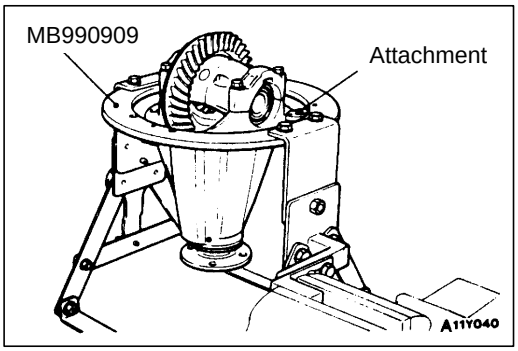

INSPECTION BEFORE DISASSEMBLY 27200290041

Secure the special tool with a vice and install the differential carrier assembly with the attachment. Then carry out the following inspection.

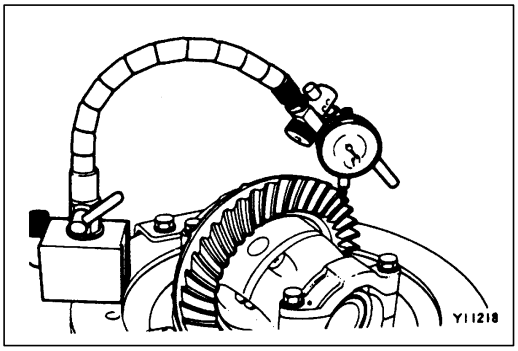

DRIVE GEAR BACKLASH

1. Place a dial gauge against the end of a drive gear tooth and secure the drive pinion. Then turn the drive gear and take measurements at four places or more to check the backlash.

   Standard value:
   <2WD> 0.08 – 0.13 mm
   <4WD> 0.13 – 0.18 mm

2. If the backlash is not within the standard value, replace the side bearing spacer, and then check the drive gear tooth contact.

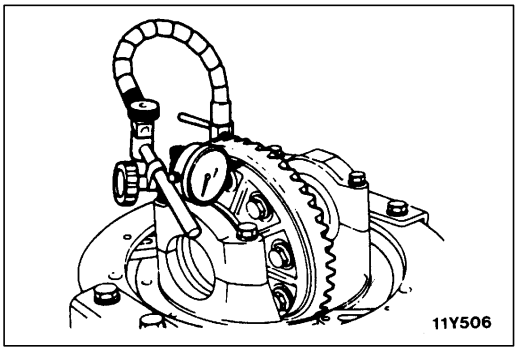

DRIVE GEAR RUNOUT

1. Measure the drive gear runout at the shoulder on the reverse side of the drive gear.

   Limit: 0.05 mm

2. If the runout exceeds the limit value, check that there is no foreign material between the reverse side of the drive gear and the differential case, or that there is no looseness in the drive gear mounting bolt.
3. If step (2) is normal, change the assembly position of the drive gear and differential case, and then take another measurement.
4. If adjustment is impossible, replace the differential case or the drive gear and drive pinion as a set.

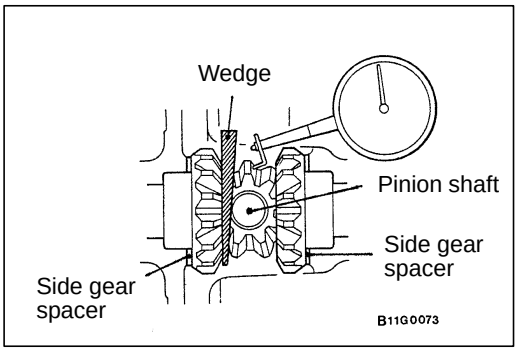

DIFFERENTIAL GEAR BACKLASH

1. Tap in a wooden wedge between the side gear and the pinion shaft and secure one side gear. Then place a dial gauge (with the measuring probe extended) against the pinion gear and measure the backlash.

   Standard value:
   <2WD> 0 – 0.076 mm
   <4WD> 0 – 0.25 mm

   NOTE
   Check the other pinion gear by the same procedure.

   Limit: 0.2 mm

2. If the backlash exceeds the limit, replace the side gear spacers.
3. If adjustment is not possible, replace the side gears and pinion gears as a set.

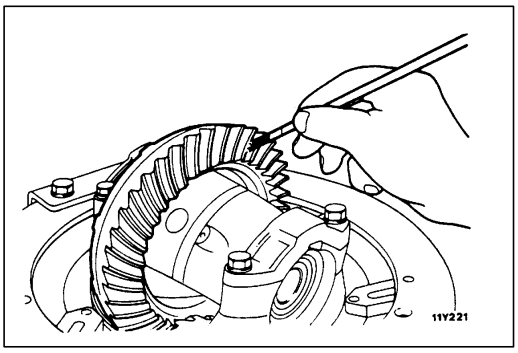

DRIVE GEAR TOOTH CONTACT

Check the drive gear tooth contact by the following steps.

1. Apply a thin, uniform coat of machine blue to both surfaces of the drive gear teeth.

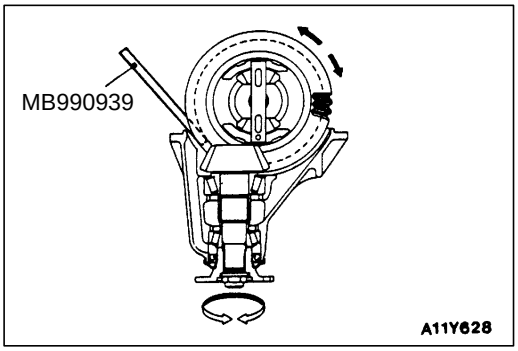

2. Insert a brass rod between the differential carrier and the differential case, and then rotate the companion flange by hand (once in the normal direction, and then once in the reverse direction) while applying a load to the drive gear, so that the revolution torque (approximately 2.5 – 3.0 Nm) is applied to the drive pinion.

   Caution
   If the drive gear is rotated too much, the tooth contact pattern will become unclear and difficult to check.

3. Check the tooth-contact condition of the drive gear and drive pinion.

Standard tooth contact pattern	Problem	Solution
1 Narrow tooth side 2 Drive-side tooth surface (the side applying power during forward movement) 3 Wide tooth side 4 Coast-side tooth surface (the side applying power during reverse movement) 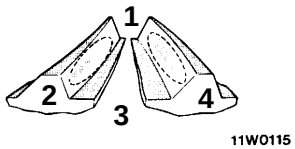 	Tooth contact pattern resulting from excessive pinion height 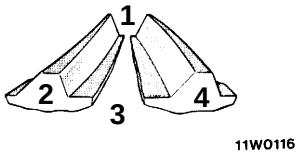 The drive pinion is positioned too far from the centre of the drive gear.	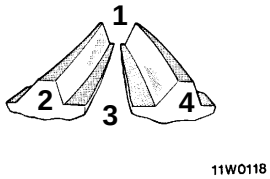 Increase the thickness of the pinion height adjusting shim, and position the drive pinion closer to the centre of the drive gear. Also, for backlash adjustment, position the drive gear farther from the drive pinion.
	Tooth contact pattern resulting from insufficient pinion height 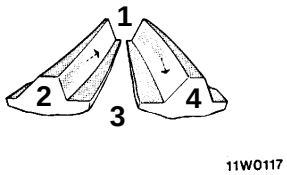 The drive pinion is positioned too close to the centre of the drive gear.	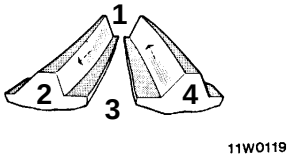 Decrease the thickness of the pinion height adjusting shim, and position the drive pinion farther from the centre of the drive gear. Also, for backlash adjustment, position the drive gear closer to the drive pinion.

NOTE
Checking the tooth contact pattern is the way to confirm that the adjustments of the pinion height and backlash have been done properly. Continue to adjust the pinion height and backlash until the tooth contact pattern resembles the standard pattern.

If, even after adjustments have been made, the correct tooth contact pattern cannot be obtained, it means that the drive gear and the drive pinion have become worn beyond the allowable limit. Replace the gear set.

DISASSEMBLY

27200220040

<VEHICLES WITHOUT REAR DIFFERENTIAL LOCK>

<Conventional differential>

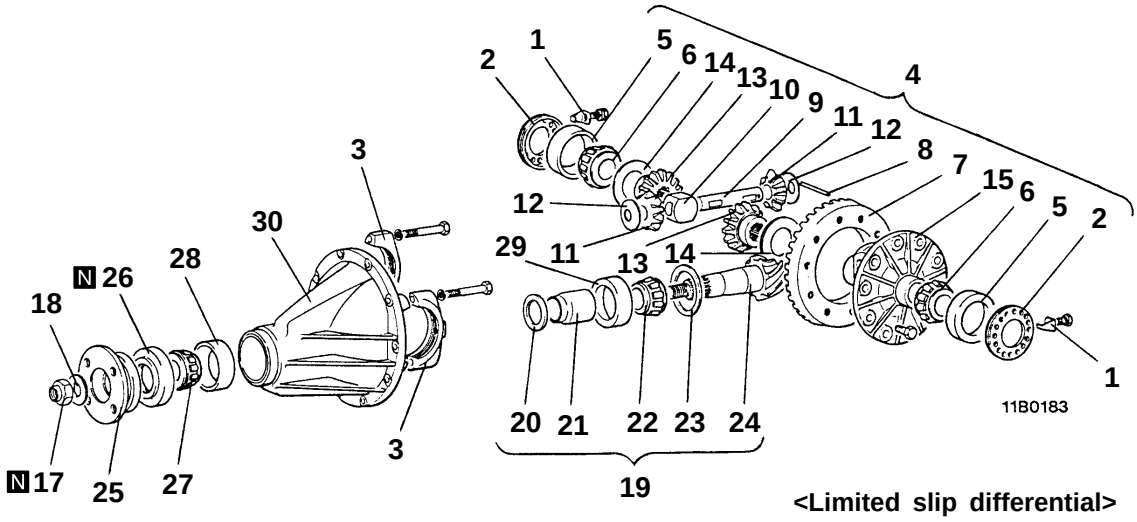

<Limited slip differential>

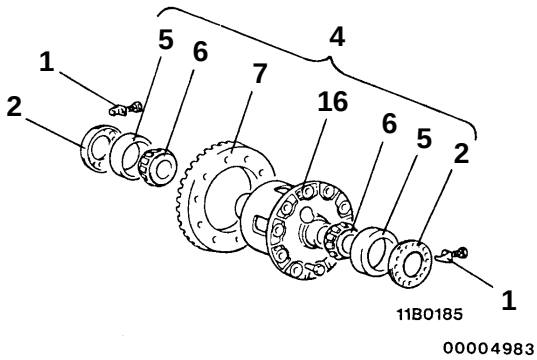

Disassembly steps

- Inspection before disassembly (P.27-30.)

1. Lock plate
2. ◀A▶ Side bearing nut
3. Bearing cap
4. ◀B▶ Differential case assembly
5. Side bearing outer race
6. ◀C▶ Side bearing inner race
7. ◀D▶ Drive gear
8. ◀E▶ Lock pin
9. Pinion shaft
10. Thrust block <Vehicles without ABS>
11. Pinion gear
12. Pinion washer
13. Side gear
14. Side gear thrust spacer
15. Differential case
16. Limited slip differential case assembly
17. ◀F▶ Self-locking nut
18. Washer
19. ◀G▶ Drive pinion assembly
20. Drive pinion front shim (For adjusting preload of drive pinion)
21. Drive pinion spacer
22. ◀H▶ Drive pinion rear bearing inner race
23. Drive pinion rear shim (For adjusting drive pinion height)
24. Drive pinion
25. Companion flange
26. ◀I▶ Oil seal
27. ◀I▶ Drive pinion front bearing inner race
28. ◀I▶ Drive pinion front bearing outer race
29. ◀J▶ Drive pinion rear bearing outer race
30. Differential carrier

<VEHICLES WITH REAR DIFFERENTIAL LOCK>

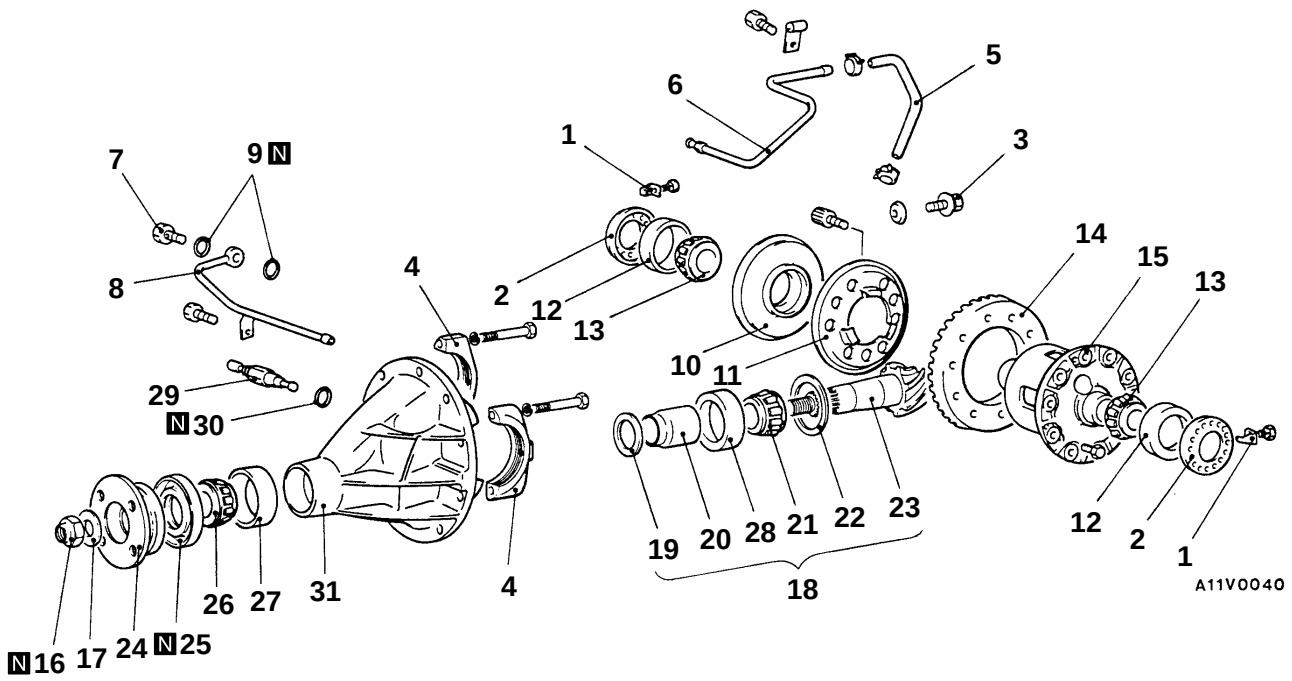

Disassembly steps

- Inspection before disassembly (P.27-30.)

1. Lock plate
◀A▶ 2. Side bearing nut
3. Bolt
4. Bearing cap
5. Hose
6. Air pipe assembly (A)
7. Eye bolt
8. Air pipe assembly (B)
9. Gasket
10. Actuator assembly
11. Pressure plate
12. Side bearing outer race
◀C▶ 13. Side bearing inner race
◀D▶ 14. Drive gear
15. Differential case
◀F▶ 16. Self-locking nut
17. Washer
◀G▶ 18. Drive pinion assembly
19. Drive pinion front shim (For adjusting preload of drive pinion)
20. Drive pinion spacer
◀H▶ 21. Drive pinion rear bearing inner race
22. Drive pinion rear shim (For adjusting drive pinion height)
23. Drive pinion
24. Companion flange
◀I▶ 25. Oil seal
◀I▶ 26. Drive pinion front bearing inner race
◀I▶ 27. Drive pinion front bearing outer race
◀J▶ 28. Drive pinion rear bearing outer race
29. Rear differential lock detection switch
30. Gasket
31. Differential carrier

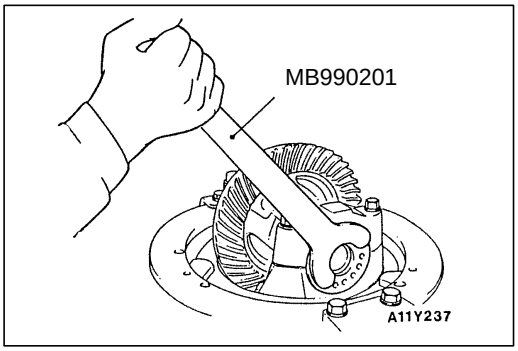

DISASSEMBLY SERVICE POINTS

◀A▶ SIDE BEARING NUT REMOVAL

NOTE
Keep the right and left side bearings and side bearing nuts separate, so that they do not become mixed at the time of reassembly.

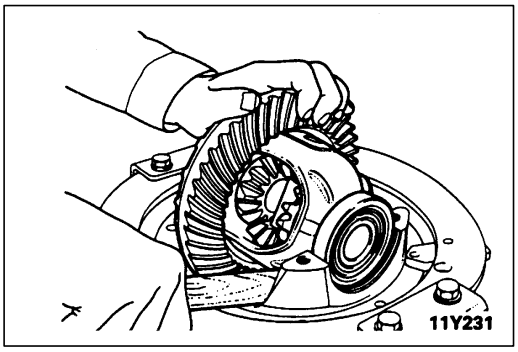

◀B▶ DIFFERENTIAL CASE ASSEMBLY REMOVAL

Use the handle of a hammer to remove the differential case assembly.

NOTE
Keep the right and left side bearings and side bearing nuts separate, so that they do not become mixed at the time of reassembly.

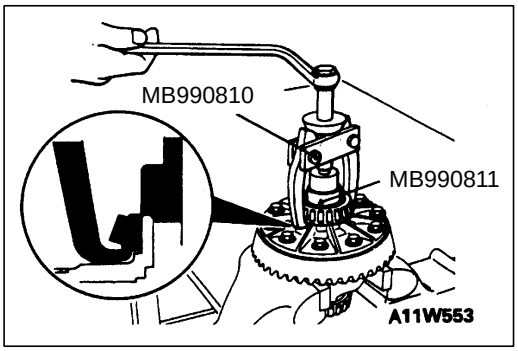

◀C▶ SIDE BEARING INNER RACE REMOVAL

NOTE
Attach the prongs of the special tool to the inner race of the side bearing through the openings in the differential case.

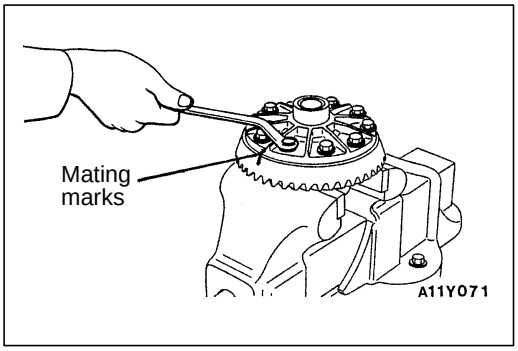

◀D▶ DRIVE GEAR REMOVAL

1. Make the mating marks to the differential case and the drive gear.
2. Loosen the drive gear attaching bolts in diagonal sequence to remove the drive gear.

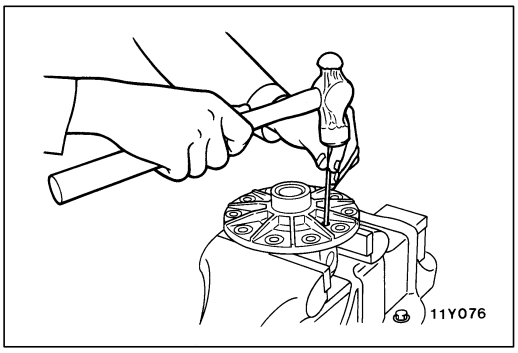

◀E▶ LOCK PIN REMOVAL

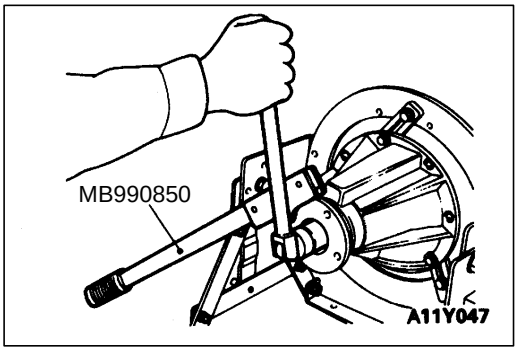

◀F▶ SELF-LOCKING NUT REMOVAL

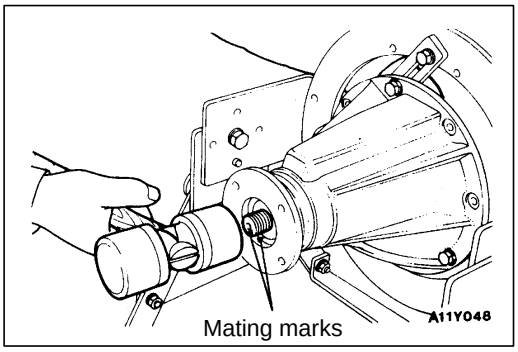

◀G▶ DRIVE PINION ASSEMBLY REMOVAL

1. Make the mating marks to the drive pinion and companion flange.

   Caution
   Do not make mating marks on the contact surfaces of the companion flange and propeller shaft.

2. Drive out the drive pinion together with the drive pinion spacer and drive pinion front shims.

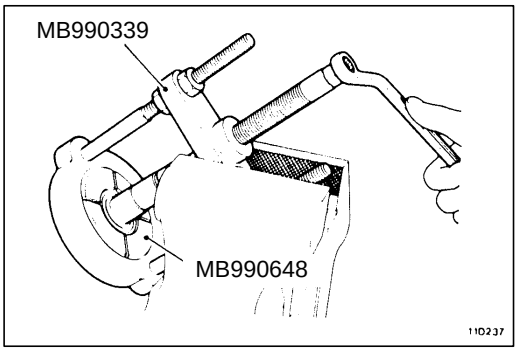

◀H▶ DRIVE PINION REAR BEARING INNER RACE REMOVAL

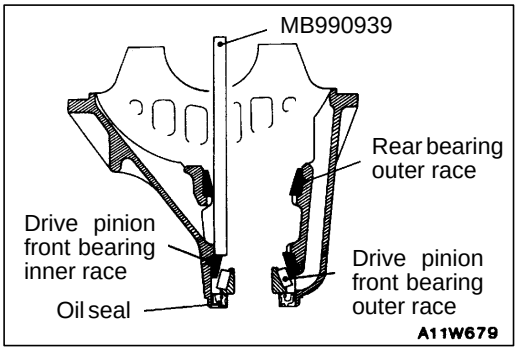

◀I▶ OIL SEAL / DRIVE PINION FRONT BEARING INNER RACE / DRIVE PINION FRONT BEARING OUTER RACE REMOVAL

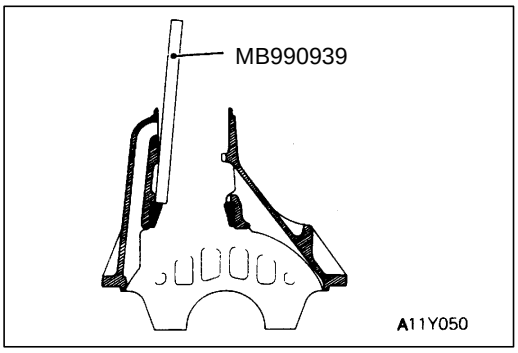

◀J▶ DRIVE PINION REAR BEARING OUTER RACE REMOVAL

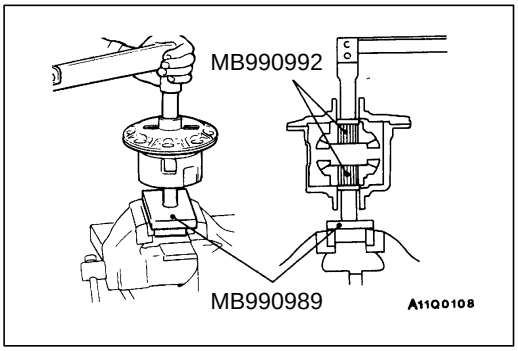

INSPECTION

27200210016

DIFFERENTIAL PRELOAD CHECK

1. Use the special tool to measure the differential preload.

   Standard value:
   <When installing a new clutch plate>
   39 – 74 Nm
   <When reinstalling the current clutch plate>
   25 – 74 Nm

2. If the differential preload is not within the standard value, disassemble the differential case assembly and repair or replace the parts.

REASSEMBLY

27200230043

<VEHICLES WITHOUT REAR DIFFERENTIAL LOCK>

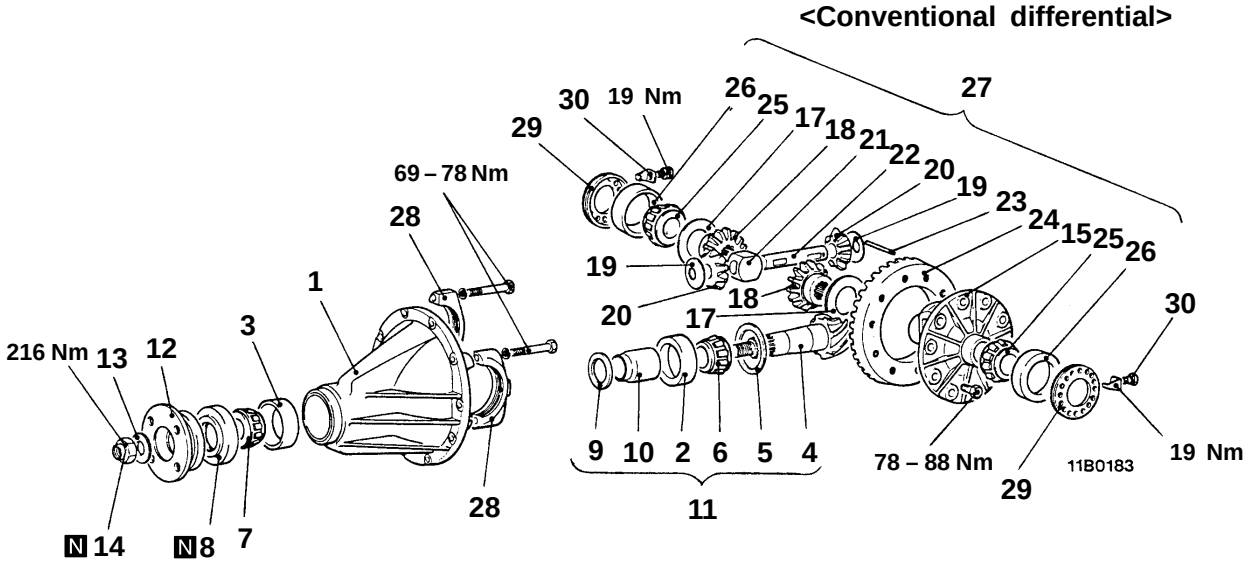

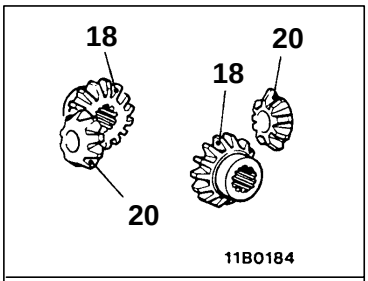

Differential gear set

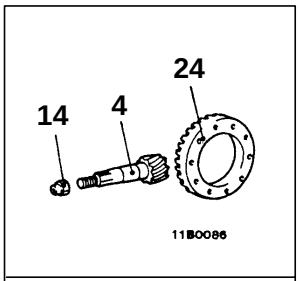

Final drive gear set

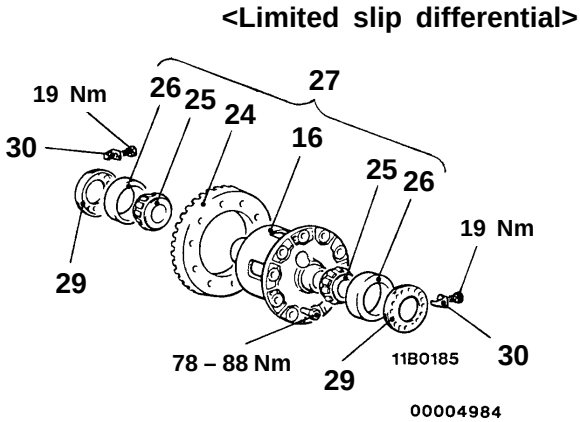

Reassembly steps

1. Differential carrier
▶A◀ 2. Drive pinion rear bearing outer race
▶B◀ 3. Drive pinion front bearing outer race
▶C◀ ● Drive pinion height adjustment
4. Drive pinion
5. Drive pinion rear shim (For adjusting drive pinion height)
6. Drive pinion rear bearing inner race
▶D◀ ● Drive pinion preload adjustment
7. Drive pinion front bearing inner race
8. Oil seal
9. Drive pinion front shim (For adjusting drive pinion preload)
10. Drive pinion spacer
11. Drive pinion assembly
12. Companion flange
13. Washer
14. Self-locking nut
15. Differential case
16. Limited slip differential case
17. Side gear thrust spacer
18. Side gear
19. Pinion washer
20. Pinion gear
▶E◀ ● Differential gear backlash adjustment
21. Thrust block <Vehicles without ABS>
22. Pinion shaft
▶F◀ 23. Lock pin
▶G◀ 24. Drive gear
▶H◀ 25. Side bearing inner race
26. Side bearing outer race
27. Differential case assembly
▶I◀ 28. Bearing cap
▶J◀ ● Drive gear backlash adjustment
29. Side bearing nut
30. Lock plate

<VEHICLES WITH REAR DIFFERENTIAL LOCK>

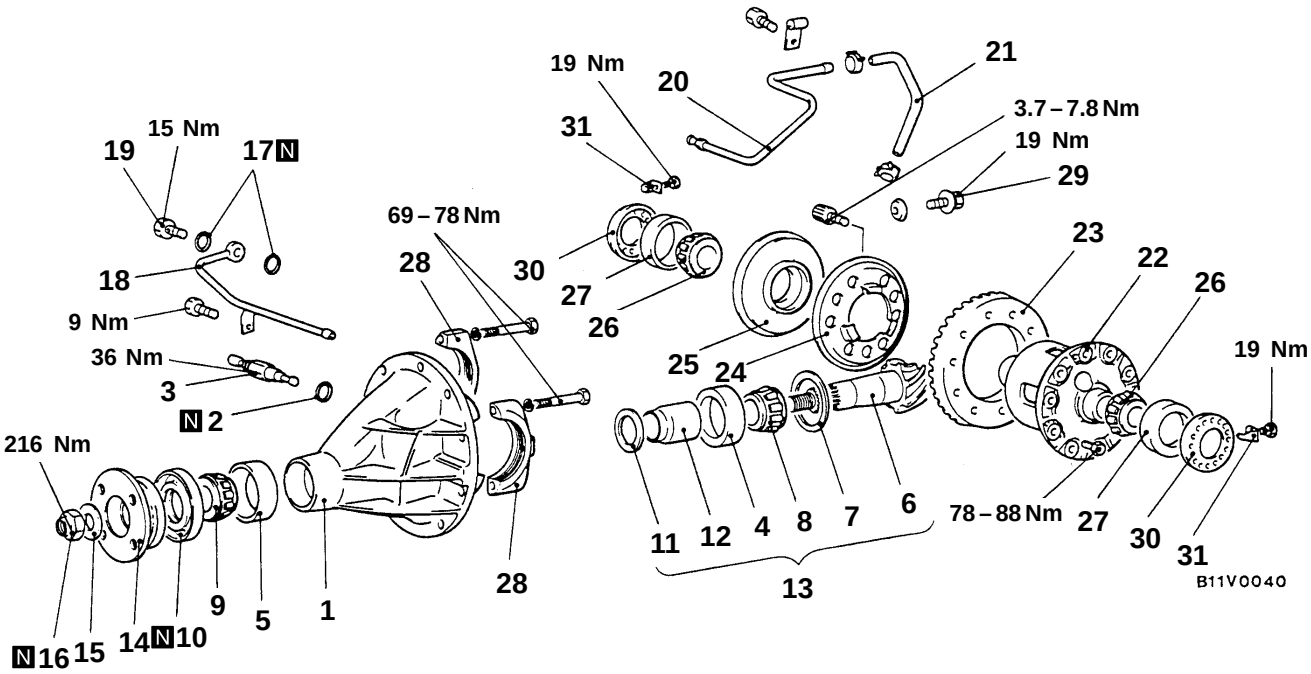

Reassembly steps

1. Differential carrier
2. Gasket
3. Rear differential lock detection switch
▶A◀ 4. Drive pinion rear bearing outer race
▶B◀ 5. Drive pinion front bearing outer race
▶C◀ ● Drive pinion height adjustment
6. Drive pinion
7. Drive pinion rear shim (For adjusting drive pinion height)
8. Drive pinion rear bearing inner race
▶D◀ ● Drive pinion preload adjustment
9. Drive pinion front bearing inner race
10. Oil seal
11. Drive pinion front shim (For adjusting drive pinion preload)
12. Drive pinion spacer
13. Drive pinion assembly
14. Companion flange
15. Washer
16. Self-locking nut
17. Gasket
18. Air pipe assembly (B)
19. Eye bolt
20. Air pipe assembly (B)
21. Hose
22. Differential case
▶G◀ 23. Drive gear
24. Pressure plate
25. Actuator assembly
▶H◀ 26. Side bearing inner race
27. Side bearing outer race
▶I◀ 28. Bearing cap
▶J◀ ● Drive gear backlash adjustment
29. Bolt
30. Side bearing nut
31. Lock plate

Lubrication and Adhesive Points

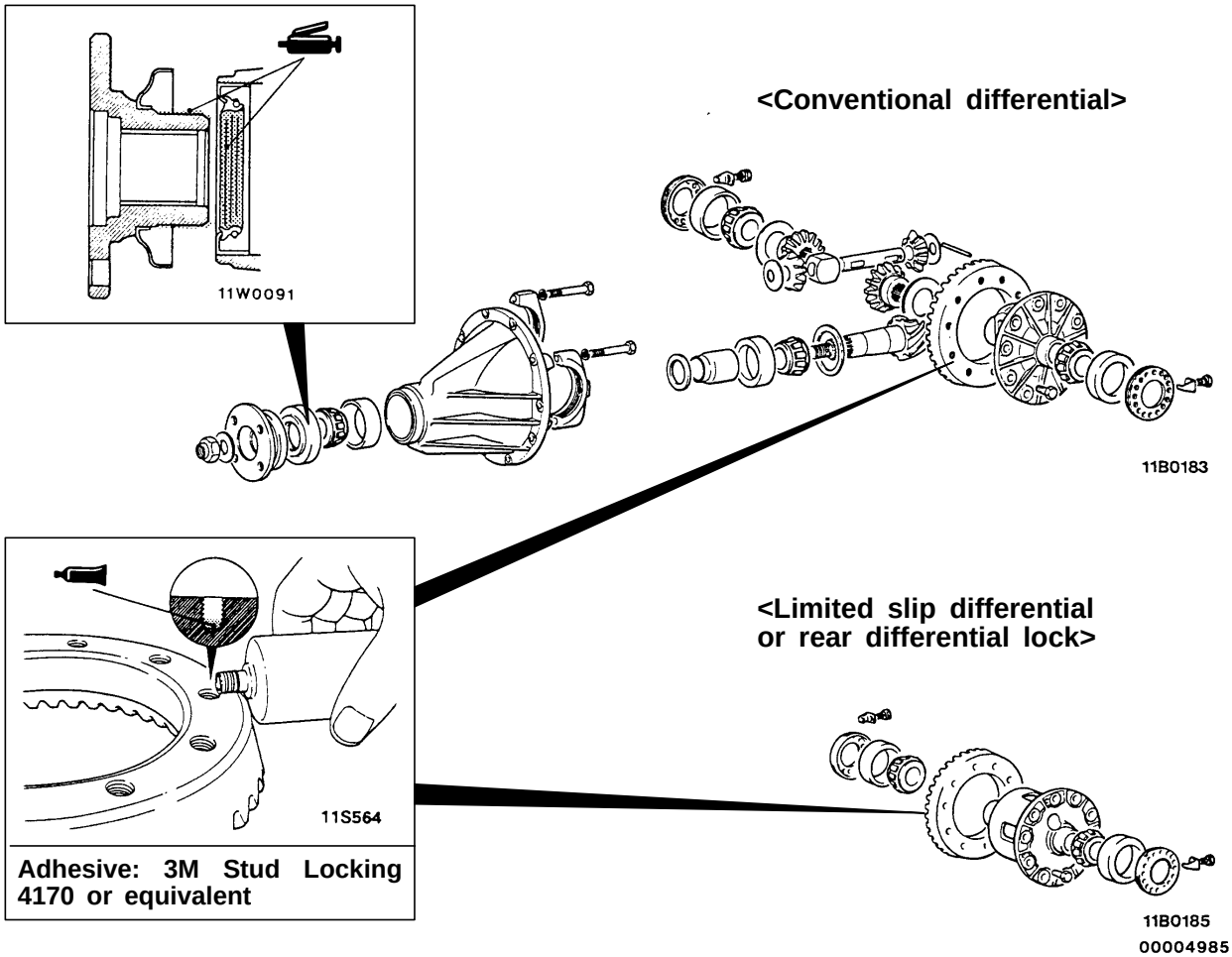

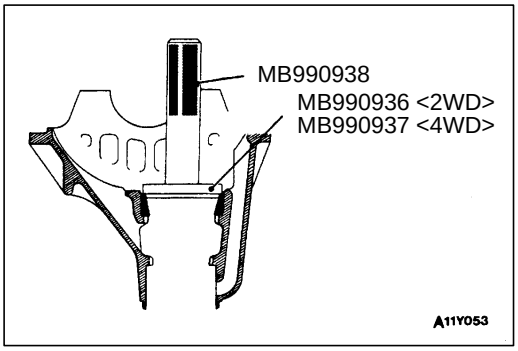

DISASSEMBLY SERVICE POINTS

▶A◀ DRIVE PINION REAR BEARING OUTER RACE PRESS-FITTING

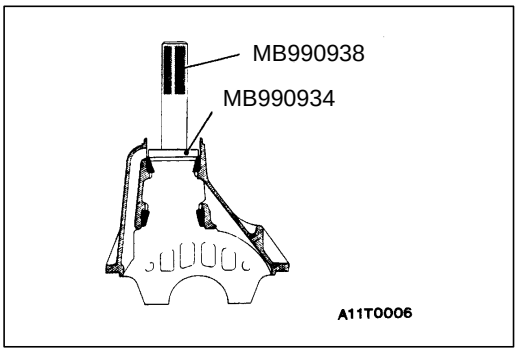

▶B◀ DRIVE PINION FRONT BEARING OUTER RACE PRESS-FITTING

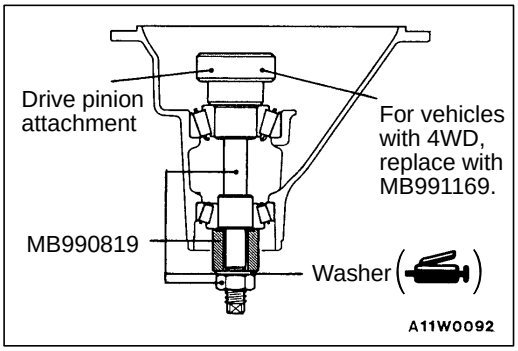

▶C◀ DRIVE PINION HEIGHT ADJUSTMENT

Adjust the drive pinion height by the following procedures:

1. Apply multipurpose grease to the washer of the special tool.
2. Install special tools and drive pinion front and rear bearing inner races to the gear carrier in the sequence shown in the illustration.

   NOTE
   For vehicles with 4WD, replace the drive pinion attachment only with MB991169.

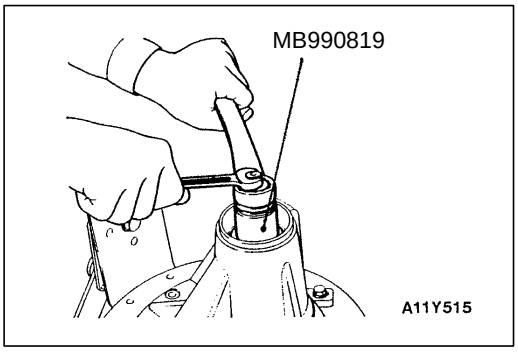

3. Tighten the nut of the special tool step by step while measuring the rotation torque of the drive pinion. Then check the rotation torque is at the standard value.

   Standard value:

Bearing division	Bearing lubrication	Rotation torque
New	None (With anti-rust agent)	0.6 – 0.9 Nm
New or reusing	Gear oil applied	0.4 – 0.5 Nm

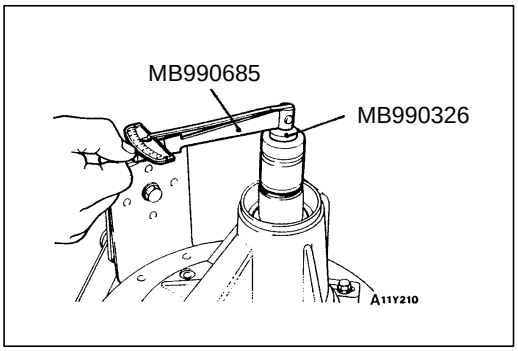

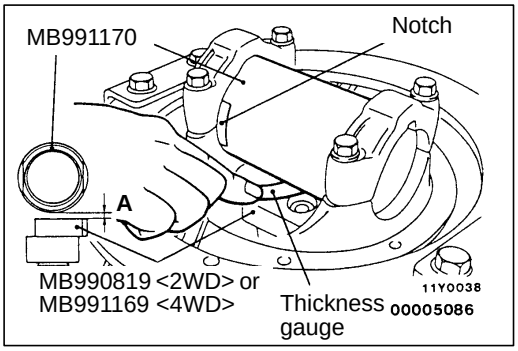

4. Clean the side bearing hub.
5. Place the special tools between the side bearing hub of the gear carrier, and position the notch as shown in the illustration. Then tighten side bearing mounting bolt.
6. Use a thickness gauge to measure the clearance (A) between the special tools.

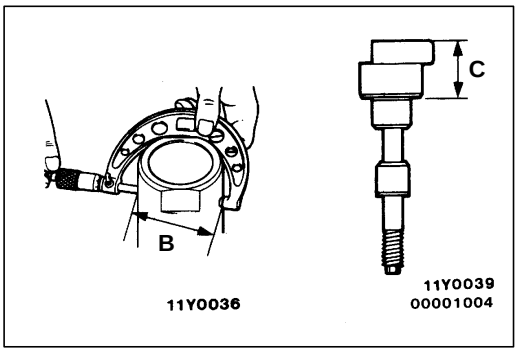

7. Remove the special tools (MB990819, MB991169).
8. Use a micrometer to measure the shown dimensions (B, C) of the special tools.

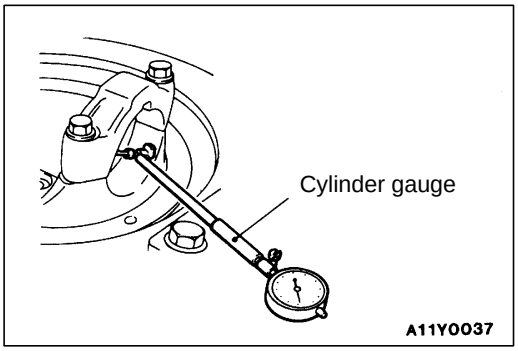

9. Install the bearing cap, and then use a cylinder gauge to measure the inside diameter (D) of the bearing cap.
10. Calculate the thickness (F) of the required drive pinion rear shim by the following formula, and then select a shim which most closely matches this thickness.
    F = A + B + C – 1/2D – E

    E: 100.00 <2WD>
    115.00 <4WD>

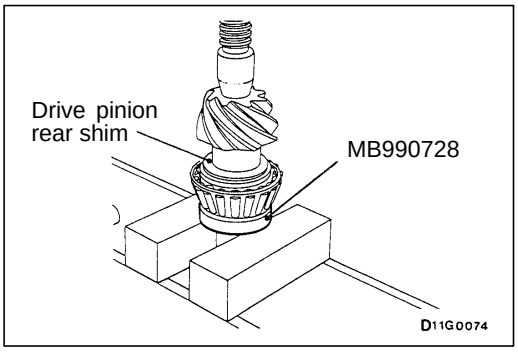

11. Fit the selected drive pinion rear shim(s) to the drive pinion, and press-fit the drive pinion rear bearing inner race by using the special tool.

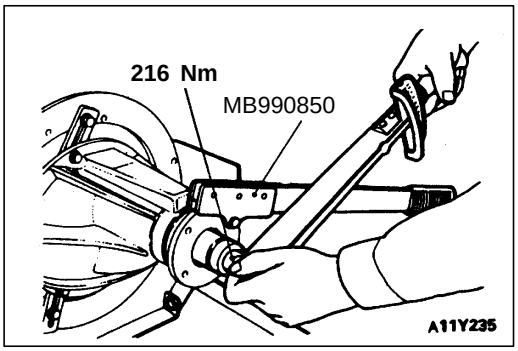

▶D◀ DRIVE PINION PRELOAD ADJUSTMENT

1. Insert the drive pinion into the gear carrier, and then install the following parts in that order from the carrier rear side. Drive pinion spacer, drive pinion front shim and drive pinion front bearing inner race, companion flange.

   NOTE
   Do not install the oil seal.

2. Tighten the companion flange to the specified torque by using the special tools.

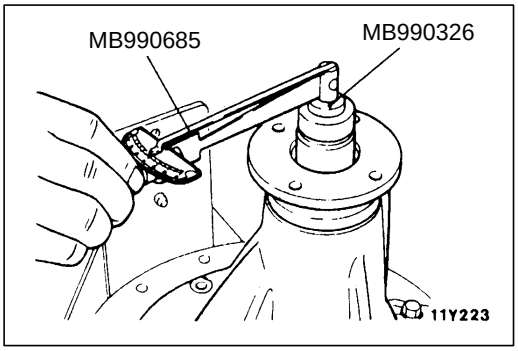

3. Measure the drive pinion turning torque. (without the oil seal)

   Standard value:

Bearing division	Bearing lubrication	Rotation torque
New	None (With anti-rust agent)	0.6 – 0.9 Nm
New or reusing	Gear oil applied	0.4 – 0.5 Nm

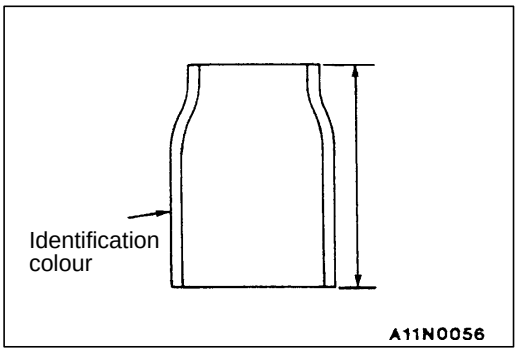

4. If the drive pinion turning torque is not within the range of the standard value, adjust the turning torque by replacing the drive pinion front shim(s) or the drive pinion spacer.

   NOTE
   When selecting the drive pinion front shims, if the number of shims is large, reduce the number of shims to a minimum by selecting the drive pinion spacers.
   Also, select the drive pinion spacer from the following two types.

Height of drive pinion spacer mm	Identification colour
56.67	–
57.01	White

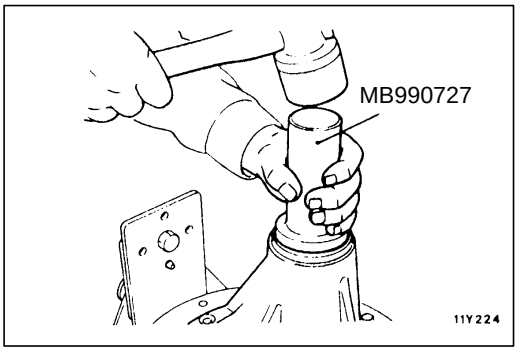

5. Remove the companion flange and drive pinion again. Then insert the drive pinion front bearing inner race into the gear carrier and use the special tool to press-fit the oil seal.

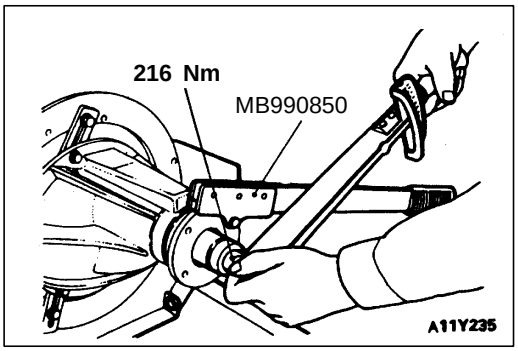

6. Install the drive pinion assembly and companion flange with mating marks properly aligned, and tighten the companion flange self-locking nut to the specified torque by using the special tools.

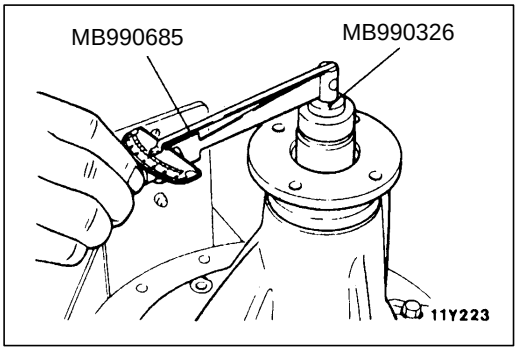

7. Measure the drive pinion turning torque (with oil seal) to verify that the drive pinion turning torque complies with the standard value.

Standard value:

Bearing division	Bearing lubrication	Rotation torque
New	None (With anti-rust agent)	0.8 – 1.1 Nm
New or reusing	Gear oil applied	0.6 – 0.7 Nm

8. If the rotation torque is not within the standard value, check the tightening torque of the companion flange self-locking nut and the installation of the oil seal.

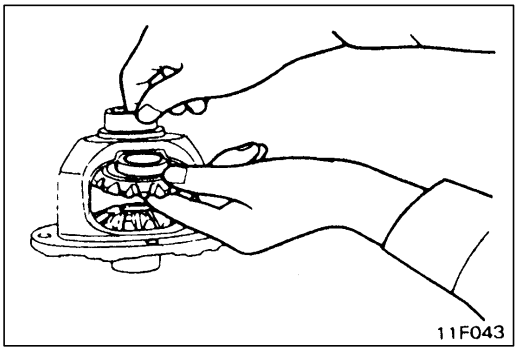

▶E◀ DIFFERENTIAL GEAR BACKLASH ADJUSTMENT

Adjust the differential gear backlash by the following procedure.

1. Assemble the side gears, side gear thrust spacers, pinion gears, and pinion washers into the differential case.
2. Temporarily install the pinion shaft.

   NOTE
   Do not assemble the thrust block and lock pin yet.

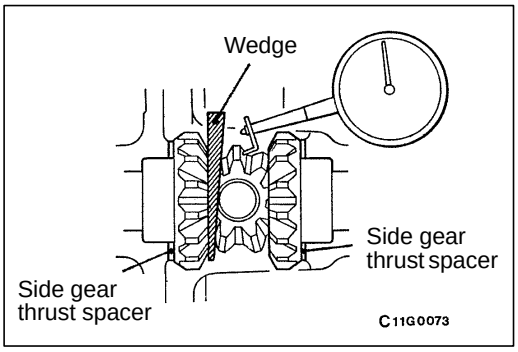

3. Insert a wedge between the side gear and the pinion shaft to lock the side gear.
4. While locking the side gear with the wedge, measure the differential gear backlash with a dial indicator on the pinion gear.

   Standard value:
   <2WD> 0 – 0.25 mm
   <4WD> 0 – 0.076 mm

   NOTE
   Measure by the same procedure for the other pinion gear.

   Limit: 0.2 mm
5. If the backlash exceeds the limit value, replace side bearing adjustment spacers.
6. If adjustment is not possible, replace the side gears and pinion gears as a set.
7. Check that the backlash is within the limit value and that the differential gear turns smoothly.

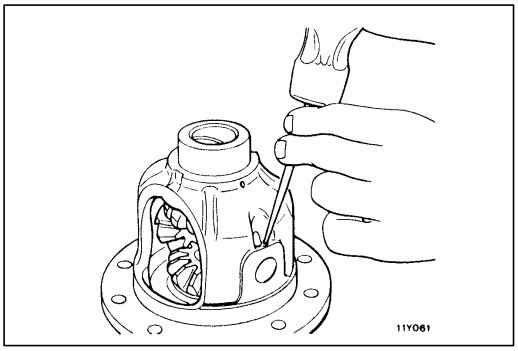

▶F◀ LOCK PIN INSTALLATION

1. Align the pinion shaft lock pin hole with the differential case lock pin hole, and drive in the lock pin.
2. Stake the lock pin with a punch at two points.

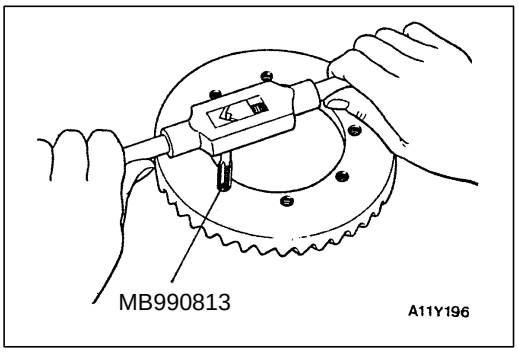

▶G◀ DRIVE GEAR INSTALLATION

1. Clean the drive gear attaching bolts.
2. Remove the adhesive adhered to the threaded holes of the drive gear by turning the special tool (tap M10 x 1.25), and then clean the threaded holes by applying compressed air.

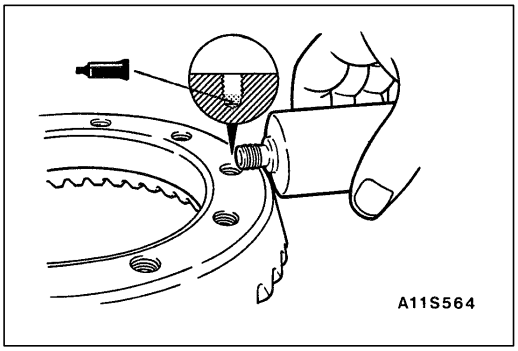

3. Apply the specified adhesive to the threaded holes of the drive gear.

   Specified adhesive:
   3M Stud Locking 4170 or equivalent

4. Install the drive gear onto the differential case with the mating marks properly aligned. Tighten the bolts to the specified torque in a diagonal sequence.

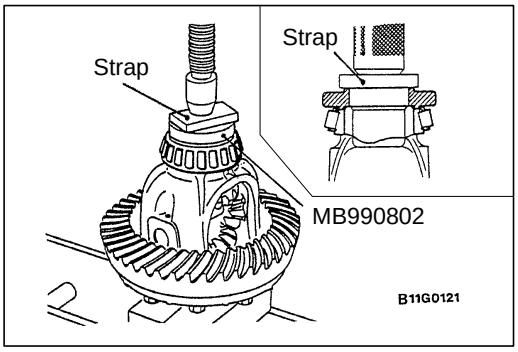

▶H◀ SIDE BEARING INNER RACE INSTALLATION

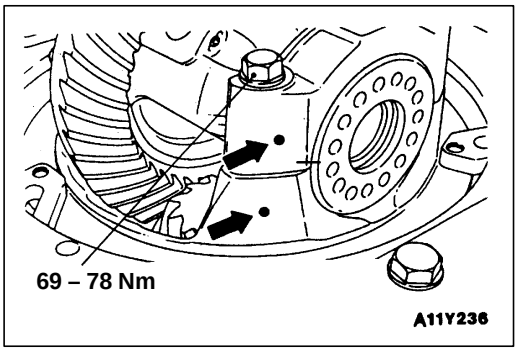

▶I◀ BEARING CAP INSTALLATION

Align the mating marks on the gear carrier and the bearing cap, and then tighten the bearing cap.

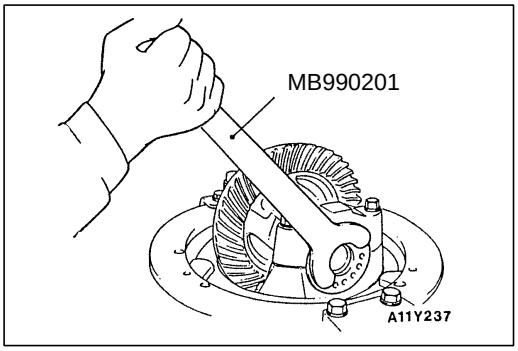

▶J◀ DRIVE GEAR BACKLASH ADJUSTMENT

Adjust drive gear backlash as follows:

1. Using the special tool, temporarily tighten the side bearing nut until it is in the state just before preloading of the side bearing.

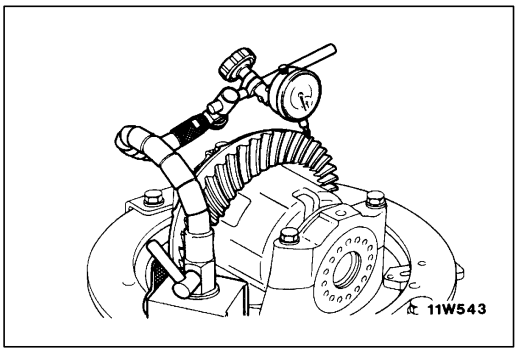

2. Measure the drive gear backlash.

   Standard value:
   <2WD> 0.08 – 0.13 mm
   <4WD> 0.13 – 0.18 mm

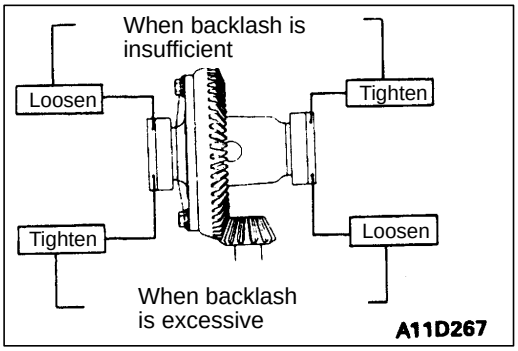

3. Using the special tool (MB990201), adjust the backlash to standard value by moving the side bearing nut as shown.

   NOTE
   First turn the side bearing nut for loosening, and then turn (by the same amount) the side bearing nut for tightening.

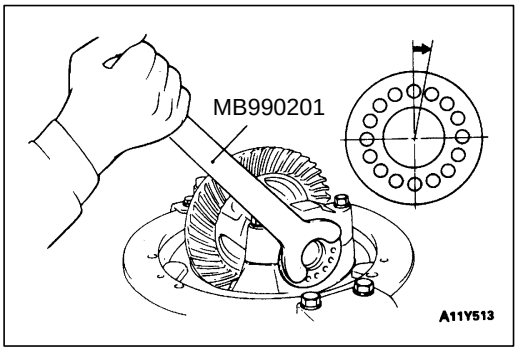

4. Using the special tool, to apply the preload, turn down both right and left side bearing nuts on half the distance between centres of two neighbouring holes.

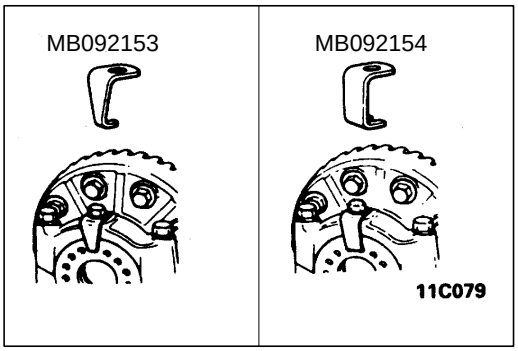

5. Choose and install the lock plate (two kinds).
6. Check the final drive gear tooth contact. If poor contact is evident, make adjustment. (Refer to P. 27-31.)

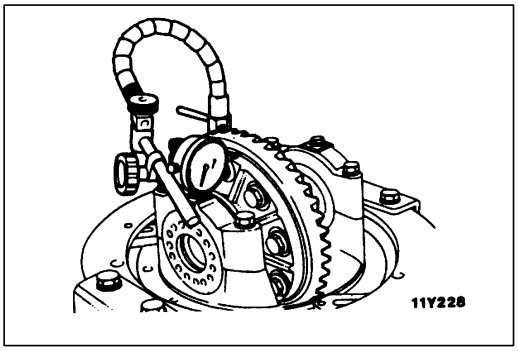

7. Measure the drive gear runout.

   Limit: 0.05 mm

8. When drive gear runout exceeds the limit, remove the differential case and then the drive gears, moving them to different positions and reinstall them.
9. If adjustment is not possible, replace the differential case or drive gear and drive pinion as a set.

DIFFERENTIAL CASE ASSEMBLY

27200240039

DISASSEMBLY AND REASSEMBLY

Gear oil:
MITSUBISHI Genuine Gear Oil Part No. 8149630EX, CASTROL HYPOY LS (GL-5, SAE 90), SHELL-LSD (GL-5, SAE 80W-90) or equivalent

Caution
Apply the specified gear oil to each component especially careful to coat contact surfaces and sliding surfaces.

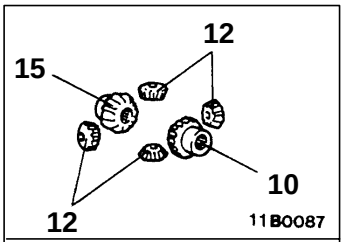

Differential gear set

<Vehicles with limited slip differential>

<Vehicles with rear differential lock>

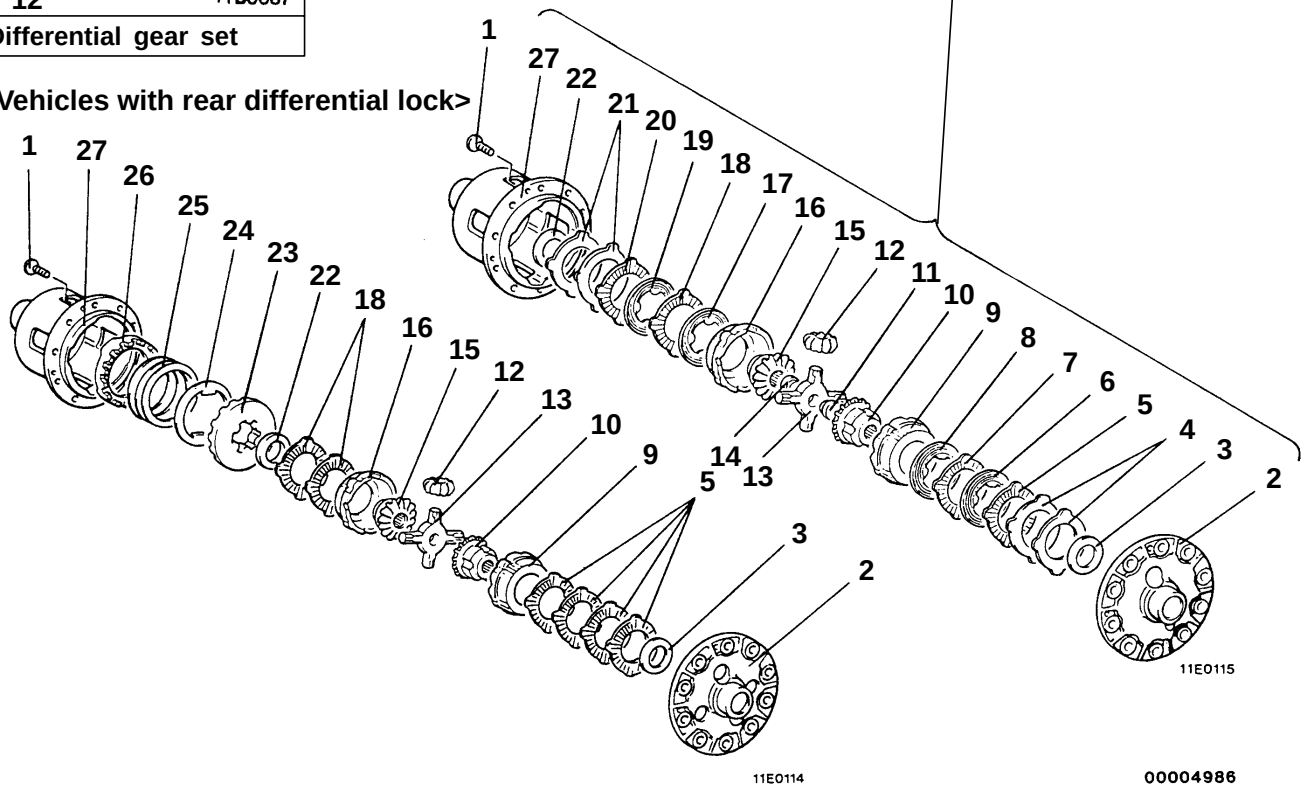

Disassembly steps

▶C◀ ● Differential preload inspection for limited slip differential
◀A▶ ▶B◀ 1. Screw
2. Differential case (A)
3. Thrust washer
4. Spring plate
5. Friction plate
6. Friction disc
7. Friction plate
8. Friction disc
9. Pressure ring
10. Side gear
11. Thrust block
12. Differential pinion gear
13. Differential pinion shaft
14. Thrust block
15. Side gear
16. Pressure ring
17. Friction disc
18. Friction plate
19. Friction disc
20. Friction plate
21. Spring plate
22. Thrust washer
23. Driven cam
24. Spring washer
25. Spring
26. Drive cam
▶A◀ 27. Differential case (B)

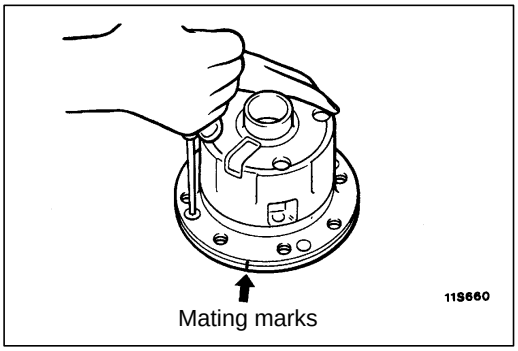

DISASSEMBLY SERVICE POINT

◀A▶ SCREW REMOVAL

1. Check the mating marks.

   NOTE
   The mating marks are represented by one of the following methods.
   (1) Engraving by a punch or electric pen.
   (2) Identical arabic numerals.
2. Loosen the mounting screws for differential case (A) and (B) evenly step by step.
3. Separate differential case (B) and differential case (A), and take out the parts inside. Do not confuse the left and right spring plates, spring discs, friction plates and friction discs for further reassembly.

REASSEMBLY SERVICE POINTS

▶A◀ DIFFERENTIAL CASE (B) INSTALLATION

Before assembly, use the following method to adjust the clearance between the spring plates and differential cases (for adjustment of the clutch plate friction force), and to adjust the end play of the side gear when installing the internal components into the differential case.

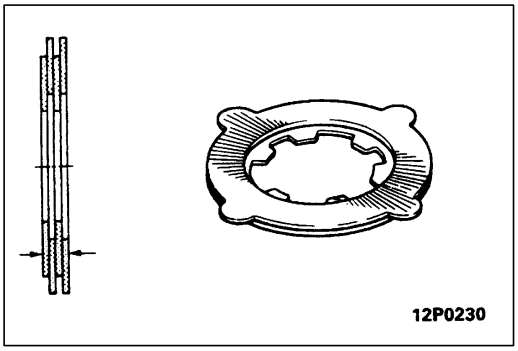

1. Arrange the two (each) friction discs and friction plates for each side, one on top of another, as shown in the figure, combining them so that the difference in thickness between the left and the right is the standard value.

   Standard value: 0 – 0.05 mm

   NOTE
   Two types of replacement parts are available:

   Friction disc (with thicknesses of 1.6 mm and 1.7 mm)

   Friction plate (with thicknesses of 1.75 mm and 1.85 mm)

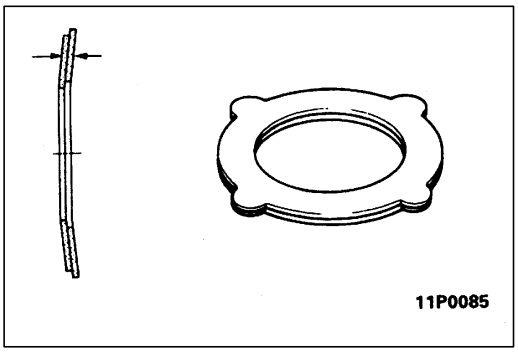

2. Place the spring plates together as shown in the illustration, and use a micrometer to measure the thickness. Place the parts together in the combination that gives the least difference in thickness between the two sets.

   NOTE
   If replacing with new parts, the thickness of the spring plates should be 1.75 mm.

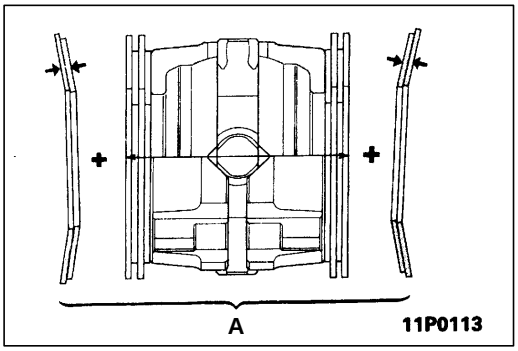

3. Assemble the pressure ring's internal components (differential pinion shaft and pressure ring) and the friction discs and friction plates, and then as shown in the figure, measure the overall width.
4. Calculate the total value (A) of the thickness of the spring plates plus the value measured in (3) above.

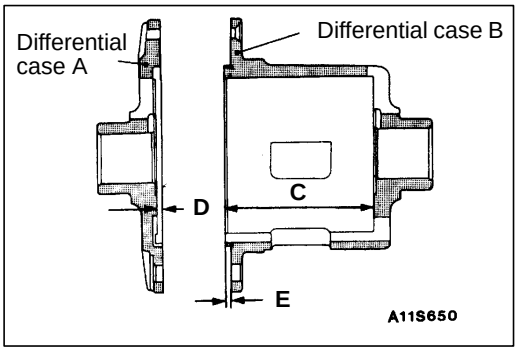

5. Obtain the dimension (B) between the spring plate contact surfaces when differential cases (A) and (B) are combined. (B = C + D – E)
6. Change the thickness of the friction disc so that the clearance (B – A) between the differential case and the spring plate becomes the standard value.

   Standard value: 0.06 – 0.20 mm

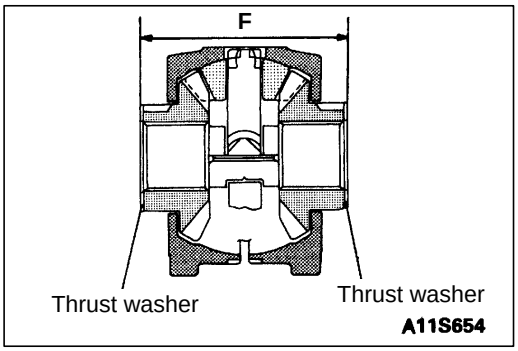

7. Remove the spring plates, friction plates and friction disc.
8. Measure the dimension (F) from the thrust washer end surface to end surface.

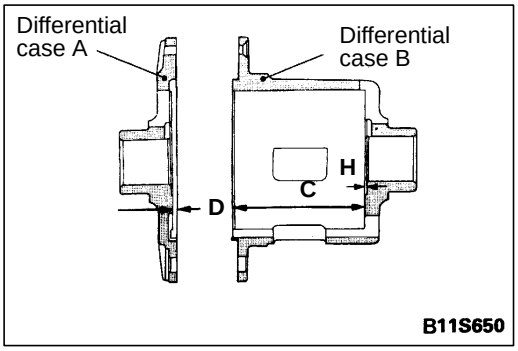

9. Obtain the dimension (G) between the thrust washer contact surfaces when differential cases (A) and (B) are combined.
   (G = C + D + H)

   NOTE
   Dimension (B) is the distance between the spring plate contact surfaces when differential cases (A) and (B) are combined. (Refer to P.27-49.)
10. Check that the clearance (G – F) in the side gear axial direction is within the standard value range.

    Standard value: 0.05 – 0.20 mm
11. If the clearance is not within the standard value range, replace the thrust washers.

    NOTE
    1. Select washers in such as way that the clearances between the left and right pressure rings and the thrust washers remain the same as each other.
    2. Three types of replacement parts are available: 1.50 mm, 1.60 mm and 1.70 mm.

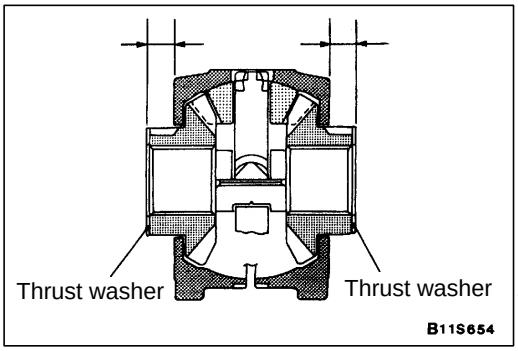

12. Install the thrust washer as shown in the figure, and then select a thrust washer so that the difference between the left and right dimensions from the pressure ring rear face to the thrust washer end face is the standard value.

    Standard value: 0 – 0.05 mm

    NOTE
    Measure the distance while squeezing the V-shaped groove manually.

13. If the distance is not within the standard value, replace the thrust washers.

    NOTE
    Three types of replacement parts are available: 1.50 mm, 1.60 mm and 1.70 mm.

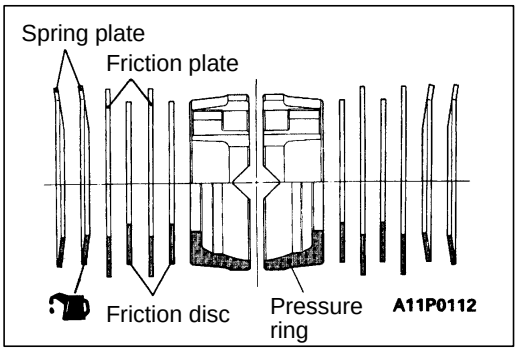

14. Apply specified gear oil to each part, and then insert each part into differential case (B) in the order shown in the illustration.

    Gear oil:
    MITSUBISHI Genuine Gear Oil part No. 8149630EX, CASTROL HYPOY LS (GL-5, SAE 90), SHELL-LSD (GL-5, SAE 80W-90) or equivalent

    NOTE
    Be particularly sure to apply oil to the contact surfaces and sliding surfaces.

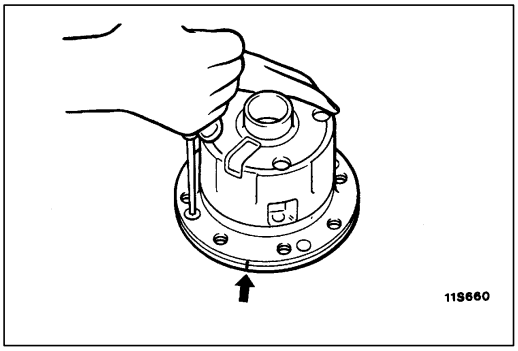

▶B◀ SCREW INSTALLATION

1. Align the mating marks (the same numeral on each case) of differential case (A) and differential case (B).
2. Tighten the screw so that the cases are in close contact.

   NOTE
   If, even though the screw is tightened, the end surfaces of case (A) and case (B) do not come into close contact, probably the thrust washer and spring plate are not fit correctly into the groove, so reassemble.

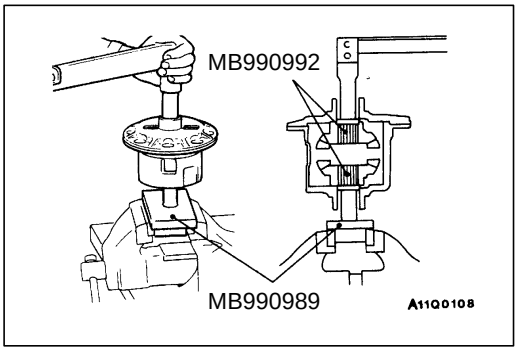

▶C◀ DIFFERENTIAL PRELOAD INSPECTION FOR LIMITED SLIP DIFFERENTIAL

1. After assembly, in order to check the frictional force of the clutch plate, use the special tools to measure the starting torque.

   Standard value:
   <When a new clutch plate is used>
   39 – 74 Nm
   <When the current clutch plate is reused>
   25 – 74 Nm

   NOTE
   Measure the starting torque after rotating slightly. When measuring the torque, do so at the beginning of movement.

2. If the starting torque is not within the standard value, disassemble the differential case assembly and repair or replace the parts.

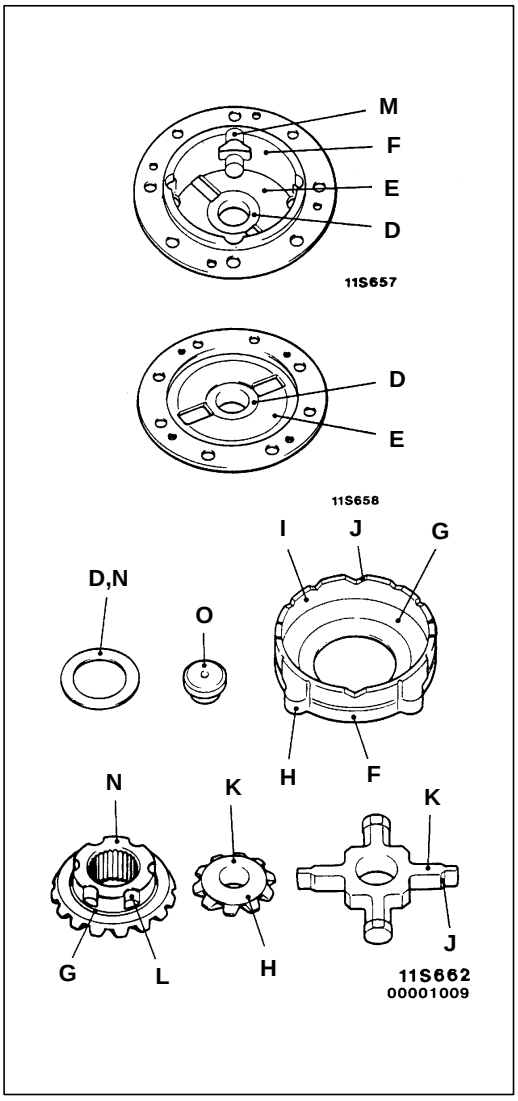

3. Inspect the contact and sliding surfaces listed below, and repair any nicks and burrs by using an oil stone.
   D. The sliding surfaces of the thrust washer and the case.
   E. The spring contacting surface of the differential case and spring plate.
   F. The contact surfaces of the outer circumference of the pressure ring and the inner circumference of the differential case.
   G. The sliding surfaces of the hole in the pressure ring and the outer circumference of the side gear.
   H. The projection on the outer circumference of the pressure ring.
   I. The spherical surface of the differential pinion gear and the inner diameter of the pressure ring.
   J. The V-shaped groove in the pressure ring, and the V-shaped part in the pinion shaft.
   K. The outer diameter of the pinion shaft and the hole of the differential pinion gear.
   L. The outer circumference groove of the side gear.
   M. The inner circumference groove of the differential case.
   N. The sliding surface of the thrust block.
   O. The sliding part of the thrust block.

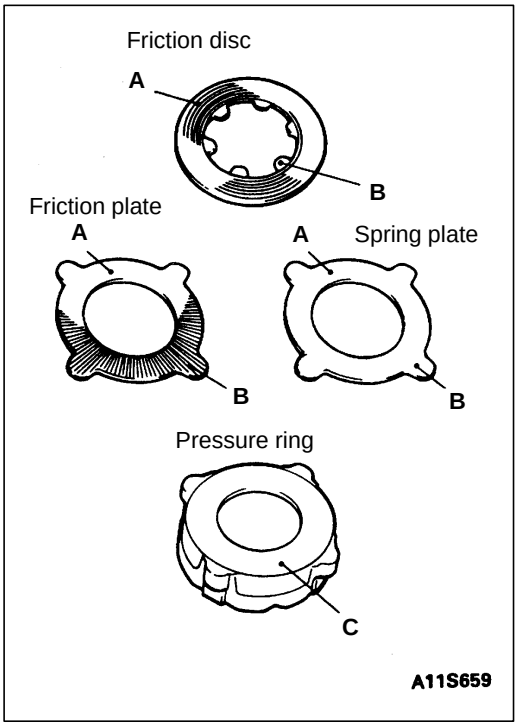

INSPECTION

27200250056

DIFFERENTIAL CASE COMPONENT CONTACT SLIDING SURFACE INSPECTION

1. Clean the disassembled parts with cleaning oil and dry them with compressed air.
2. Check the following items for each plate and disc and for the pressure ring.
   A. The friction surfaces of the friction plate, friction disc, spring plate.If there are any signs of seizure, severe friction, or colour change from the heat, it will adversely affect the locking performance; replace the part with a new one.

      NOTE
      The strong contact on the inner circumference of the friction surfaces is because of the spring plate; this wear is not abnormal.

   B. Inside and outside projections of friction disc, friction plate and spring plate.
      Replace any cracked or damaged parts.
   C. The friction surface of the friction disc and pressure ring. If there are nicks or scratches, repair the part by first grinding with an oil stone and then polishing with rubbing compound on a surface plate.

      NOTE
      The strong contact on the inner circumference of the friction surface is because of the spring plate; this wear is not abnormal.

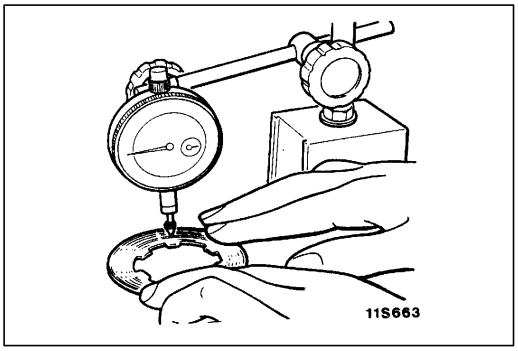

WARPING OF THE FRICTION PLATE AND FRICTION DISC

Using a dial indicator, measure the amount of warping (the flatness) of the friction plate and the friction disc on a surface plate by turning the friction plate or disc.

Limit: Max. 0.08 mm

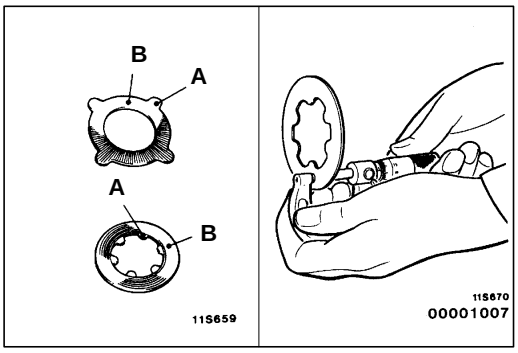

WEAR OF THE FRICTION PLATE SPRING PLATE AND FRICTION DISC

1. Measure the thickness of the friction surfaces (B) and projections (A) of the friction disc and spring plate in several places. Then check that the differences between A and B are within the limit.

   Limit: 0.1 mm

2. If the parts are worn beyond the allowable limit, replace them with new parts.

SERVICE BULLETIN

QUALITY INFORMATION ANALYSIS
OVERSEAS SERVICE DEPT. MITSUBISHI MOTORS CORPORATION

SERVICE BULLETIN	**No.:** MSB-98E27-501		
	Date: 1998-11-15	**<Model>**	**<M/Y>**
Subject:	CORRECTION TO THICKNESS OF DIFFERENTIAL CASE FRICTION DISC	(EC,EXP) L200 (K60,70)	97-10
Group:	REAR AXLE	**Draft No.:** 98SY070316	
CORRECTION	**OVERSEAS SERVICE DEPT**	T.NITTA - VICE GENERAL MANAGER QUALITY INFORMATION ANALYSIS	

1. Description:

This Service Bulletin informs you of correction to the thickness of the differential case friction disc.

2. Applicable Manuals:

Manual	Pub. No.	Language	Page(s)
’97 L200 Workshop Manual Chassis	PWTE96E1	(English)	27-48
	PWTS96E1	(Spanish)	
	PWTF96E1	(French)	
	PWTG96E1	(German)	

3. Details:

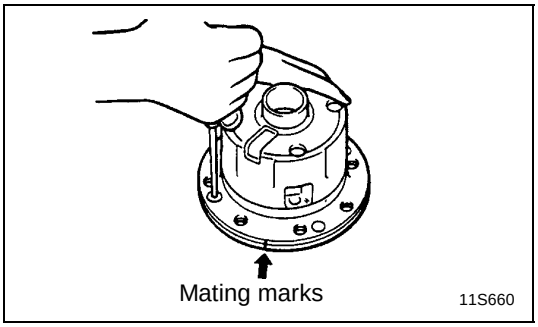

DISASSEMBLY SERVICE POINT

◀A▶ SCREW REMOVAL

1. Check the mating marks.
   NOTE
   The mating marks are represented by one of the following methods.
   (1) Engraving by a punch or electric pen.
   (2) Identical Arabic numerals.
2. Loosen the mounting screws for differential case (A) and (B) evenly step by step.
3. Separate differential case (B) and differential case (A), and take out the parts inside. Do not confuse the left and right spring plates, spring discs, friction plates and friction discs for further reassembly.

REASSEMBLY SERVICE POINT

▶A◀ DIFFERENTIAL CASE (B) INSTALLATION

Before assembly, use the following method to adjust the clearance between the spring plates and differential cases (for adjustment of the clutch plate friction force), and to adjust the end play of the side gear when installing the internal components into the differential case.

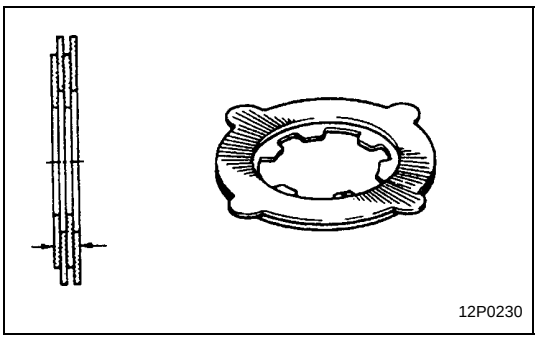

1. Arrange the two (each) friction discs and friction plates for each side, one on top of another, as shown in the figure, combining them so that the difference in thickness between the left and the right is the standard value.
   Standard value: 0 - 0.05 mm
   NOTE
   Two types of replacement parts are available:
   Friction disc (with thicknesses of ~~1.0 mm and 1.7 mm~~)
   Friction plate (with thicknesses of 1.75 mm and 1.85 mm)

<Correct>
1.75 mm and 1.85 mm
<Incorrect>

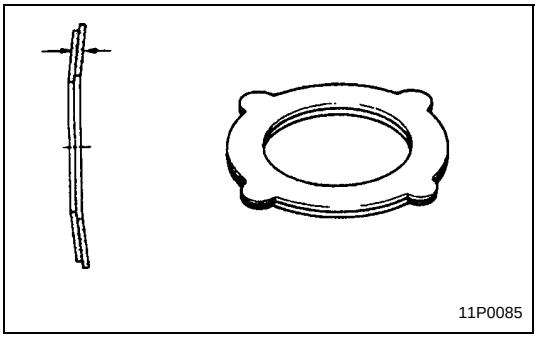

2. Place the spring plates together as shown in the illustration, and use a micrometer to measure the thickness. Place the parts together in the combination that gives the least difference in thickness between the two sets.
   NOTE
   If replacing with new parts, the thickness of the spring plates should be 1.75 mm.

WHEEL AND TYRE

Click on the applicable bookmark to selected the required model year

WHEEL AND TYRE

CONTENTS

31109000038

GENERAL INFORMATION 2
SERVICE SPECIFICATIONS 2
TROUBLESHOOTING 3
ON-VEHICLE SERVICE 4
Tyre Inflation Pressure Check 4
Tyre Wear Check 4
Wheel Runout Check 4
WHEEL AND TYRE 4

GENERAL INFORMATION

31100010146

Both steel type and aluminium type wheels have been adopted. The type of wheel used depends on the vehicle model.

Items		2WD	4WD	
Wheel	Type	Steel type	Steel type	Aluminium type
	Size	14 x 6JJ	16 x 6JJ	15 x 7JJ
	Amount of wheel offset	33	33	10 ± 1
	Pitch circle diameter (P.C.D.) mm	139.7	139.7	139.7
Tyre	Size	185R 14C 8PR	205/80 R16 RF	31 x 10.50 R15 LT

SERVICE SPECIFICATIONS

31100030036

Items		Limit
Tread depth of tyre mm		1.6
Wheel runout (Radial runout) mm	Steel wheel	1.2 or less
	Aluminium wheel	1.0 or less
Wheel runout (Lateral runout) mm	Steel wheel	1.2 or less
	Aluminium wheel	1.0 or less

TROUBLESHOOTING

31100070083

Symptom		Probable cause		Remedy	Reference page
Rapid wear at shoulders	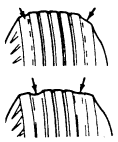 11X0109	Under-inflation or lack of rotation	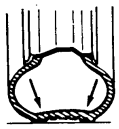 11X0116	Adjust the tyre pressure.	31-4.
Rapid wear at centre	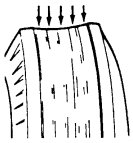 11X0110	Over-inflation or lack of rotation	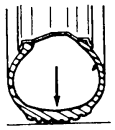 11X0117		
Cracked treads	11X0111	Under-inflation		Adjust the tyre pressure.	31-4.
Wear on one side	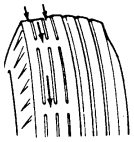 11X0112	Excessive camber	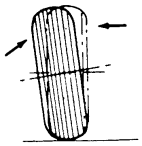 11X0118	Inspect the camber.	Refer to GROUP 33A – On-vehicle Service.
Feathered edge	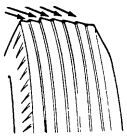 11X0113	Incorrect toe-in	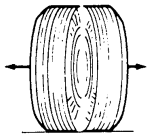 11X0119	Adjust the toe-in.	
Bald spots	11X0114	Unbalanced wheel	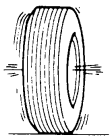 11X0120	Adjust the imbalanced wheels.	–
Scalloped wear	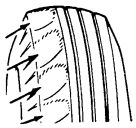 11X0115	Lack of rotation of tyres or worn or out-of-alignment suspension		Rotate the tyres and check the front suspension alignment.	Refer to GROUP 33A – On-vehicle Service.

ON-VEHICLE SERVICE

31100090034

TYRE INFLATION PRESSURE CHECK

Check the inflation pressure of the tyres. If it is not within the standard value, make the necessary adjustment.

TYRE WEAR CHECK

31100100034

Measure the tread depth of tyres.

Limit: 1.6 mm

If the remaining tread depth is less than the limit, replace the tyre.

NOTE
When the tread depth of tyres is reduced to 1.6 mm or less, wear indicators will appear.

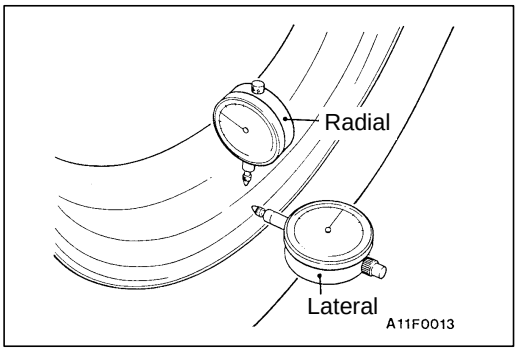

WHEEL RUNOUT CHECK

31100110037

Jack up the vehicle so that the wheels are clear of the floor. While slowly turning the wheel, measure wheel runout with a dial indicator.

Limit:

Item	Steel wheel	Aluminium wheel
Radial runout mm	1.2	1.0
Lateral runout mm	1.2	1.0

If wheel runout exceeds the limit, replace the wheel.

WHEEL AND TYRE

31100130095

INSTALLATION SERVICE POINT

Tighten the wheel nut to the specified torque.

Tightening torque:
Steel wheel 120 – 140 Nm
Aluminium wheel 100 – 120 Nm

GROUP 31
WHEEL AND TYRE

GENERAL

OUTLINE OF CHANGE

- The aluminium wheels have been added as optional equipment. <2WD>

GENERAL INFORMATION

Items		2WD
Wheel	Type	Steel or Aluminium type*
	Size	14 x 6JJ
	Amount of wheel offset mm	33
	Pitch circle diameter (P.C.D.) mm	139.7
Tyre	Size	185R14C 8PR

NOTE
*: indicates option.

NOTES

GROUP 31
WHEEL AND TYRE

GENERAL

OUTLINE OF CHANGE

- New 16-inch aluminium wheels has been adopted. <Vehicles with over fender>

GENERAL INFORMATION

Items		Vehicle with over fender
Wheel	Type	Aluminium type
	Size	16 x 7JJ
	Amount of wheel offset mm	10
	Pitch circle diameter (P.C.D.) mm	139.7
Tyre	Size	265/70 R16 112S

NOTES

POWER PLANT MOUNT

Click on the applicable bookmark to selected the required model year

POWER PLANT MOUNT

CONTENTS

32109000103

GENERAL INFORMATION 2
FRONT ENGINE MOUNTING 3
REAR ENGINE MOUNTING 5
FRONT DIFFERENTIAL MOUNTING 8
FRONT SUSPENSION CROSSMEMBER 9

GENERAL INFORMATION

32100010129

2WD vehicles

An engine and transmission support method (the 3-point support method) by which insulators are used at three places (2 places at the engine itself, 1 place at the transmission.)
The No. 2 crossmember is bolted to the frame and supports the transmission.

4WD vehicles

An engine and transmission support method (the 4-point support method) by which insulators are used at four places (2 places at the engine itself, 1 place at the transmission, and 1 place at the transfer) has been adopted.
A differential-support method (the 3-point support method) by which mounting brackets and mounting rubber pieces are used at three places (the left side of the differential carrier, the part beside the companion flange, and, via the housing tube, at the right side of the differential carrier) has been adopted.
The front suspension crossmember is bolted to the frame and supports the front differential.
The No. 2 crossmember is bolted to the frame and supports the transmission and transfer.

CONSTRUCTION DIAGRAM

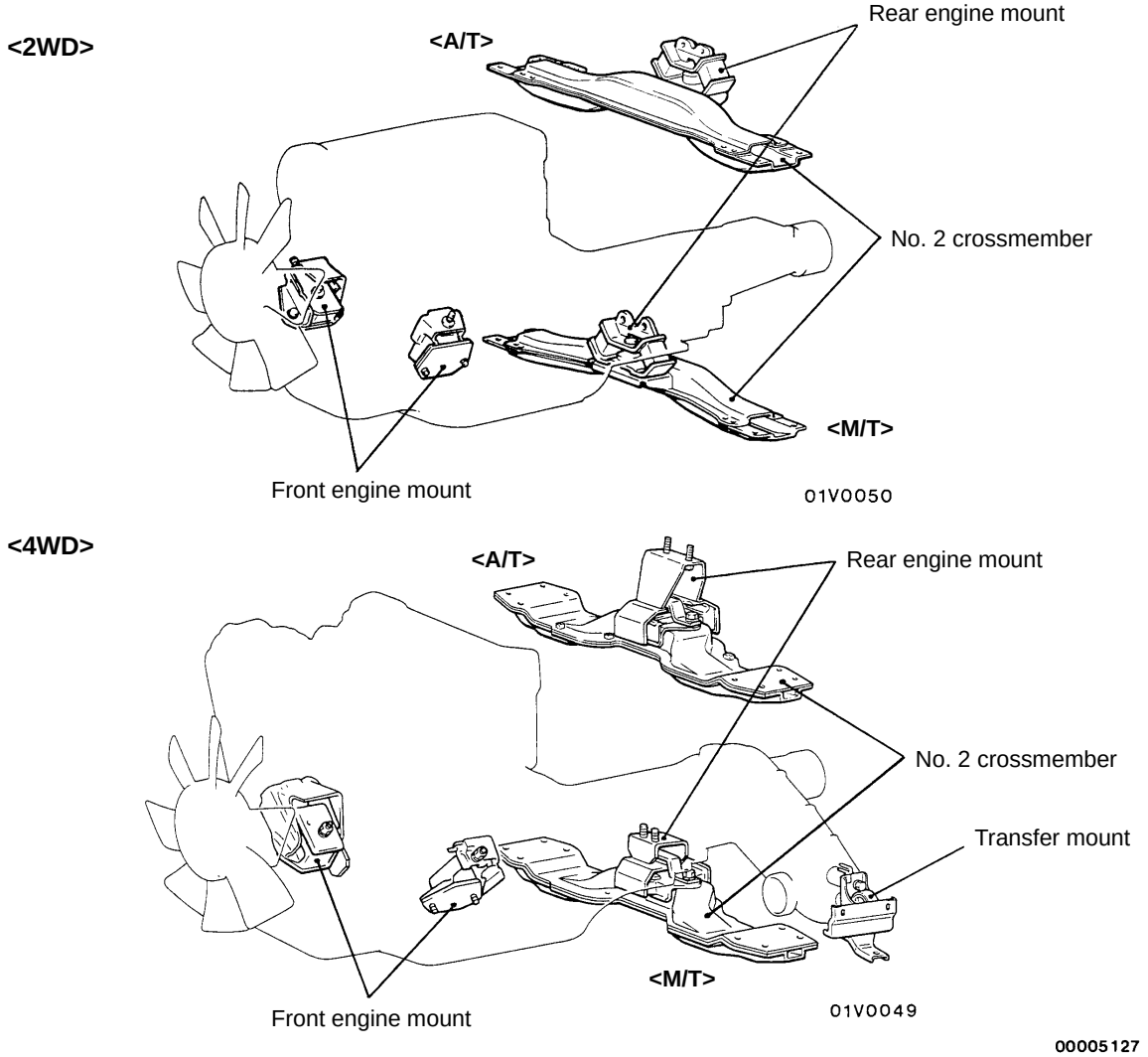

FRONT ENGINE MOUNTING

32100110140

REMOVAL AND INSTALLATION

Pre-removal and Post-installation Operation
- Air Cleaner Assembly Removal and Installation (Refer to GROUP 15.)
- Front Under Cover Removal and Installation

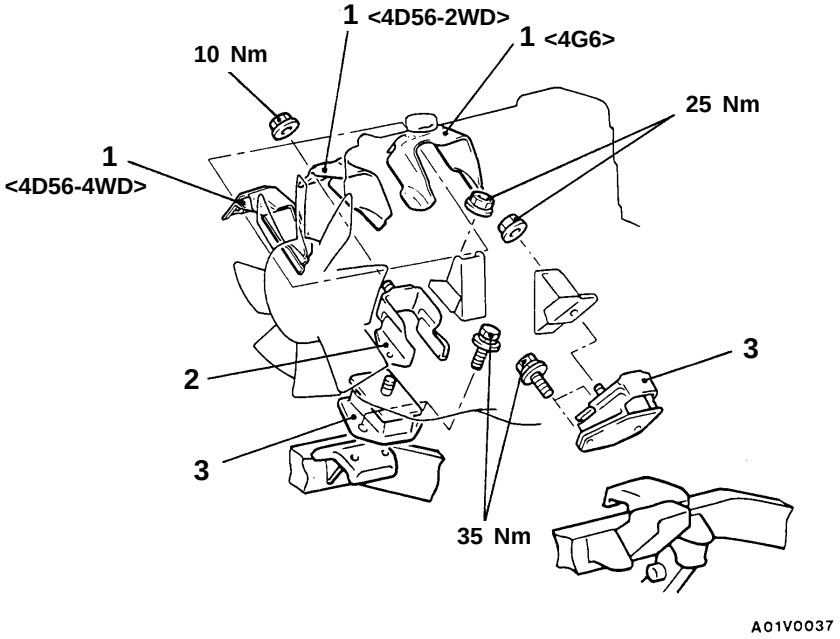

Removal steps

1. Heat protector
2. Front insulator stopper
◀A▶ ▶A◀ 3. Front engine support insulator

REMOVAL SERVICE POINT

◀A▶ FRONT ENGINE SUPPORT INSULATOR REMOVAL

1. Attach a chain to the engine hangers.
2. Using a chain block-and-tackle, hang the engine slightly up so that the insulator is free of engine weight.
3. Remove the front engine mounting insulator.

Caution
Do not raise the engine too high, or the radiator, fuel hoses and cables will be strained and damaged.

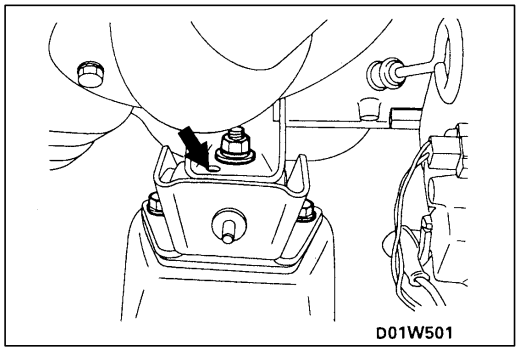

INSTALLATION SERVICE POINT

▶A◀ FRONT ENGINE SUPPORT INSULATOR INSTALLATION

Make sure that the locating boss and hole are in alignment.

Caution
Do not distort rubber portions, and never stain rubber portions with fuel or oil.

INSPECTION

32100120075

- Check insulators for cracks, separation or deformation.
- Check the front insulator stoppers for deformation.

REAR ENGINE MOUNTING

32100110157

REMOVAL AND INSTALLATION

Pre-removal and Post-installation Operation
- Front Under Cover and Transfer Case Protector <4WD> Removal and Installation

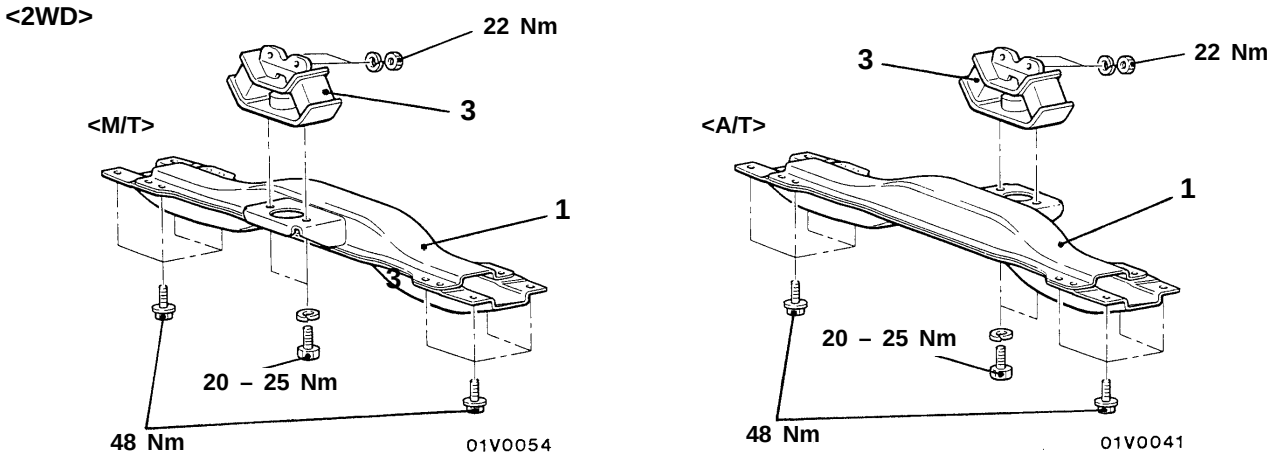

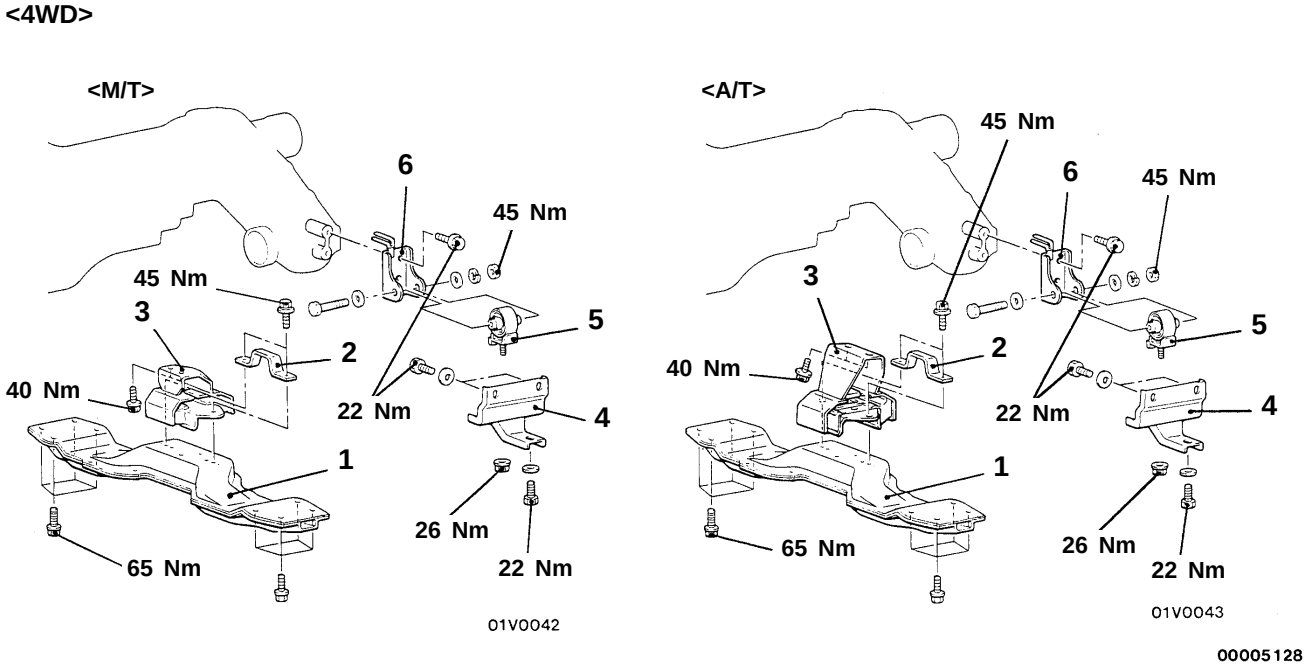

2WD removal steps

1. No. 2 crossmember
3. Rear engine support insulator

4WD removal steps

◀A▶
1. No. 2 crossmember
2. Stopper
3. Rear engine support insulator
4. Transfer support bracket

◀B▶ ▶A◀
5. Transfer roll stopper
6. Transfer mount bracket

REMOVAL SERVICE POINTS

◀A▶ NO. 2 CROSSMEMBER REMOVAL

Remove the No. 2 crossmember while supporting the transmission with a transmission jack.

◀B▶ TRANSFER ROLL STOPPER REMOVAL

Remove the transfer roll stopper while supporting the transmission with a transmission jack.

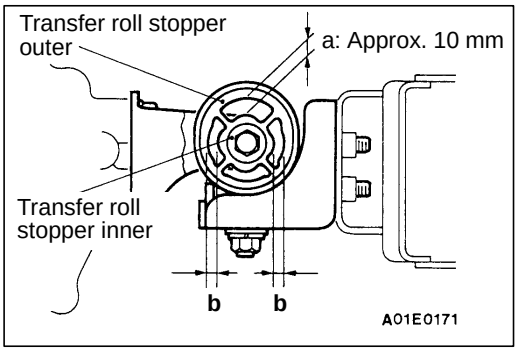

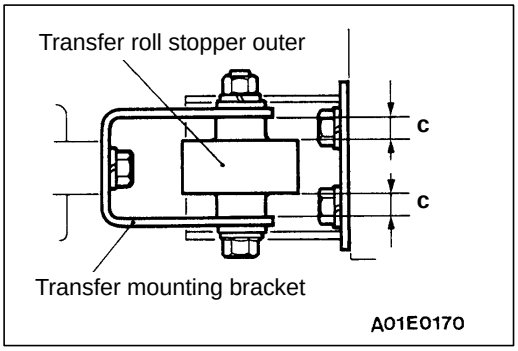

INSTALLATION SERVICE POINTS

▶A◀ TRANSFER ROLL STOPPER INSTALLATION

1. Tighten the transfer roll stopper provisionally.
2. Make the engine and transmission assembly rest on the engine mount.
3. Tighten the transfer roll stoppers inner and outer finally so that the clearance (a) between the two are at the shown dimension.
4. Check that the right and left clearances (b) between the stoppers are equal.
5. Check that the clearances (c) between the transfer roll stopper and transfer mounting bracket are equal.

   NOTE
   When new, a transfer roll stopper consists of one part, but will separate into outer and inner part during use. This is normal.

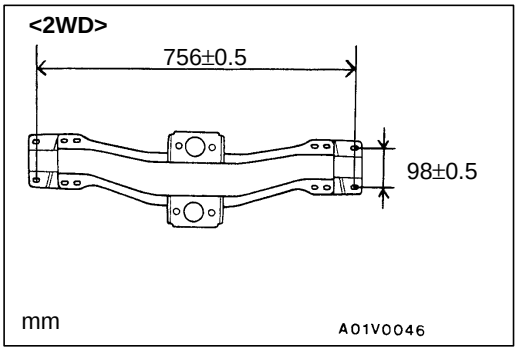

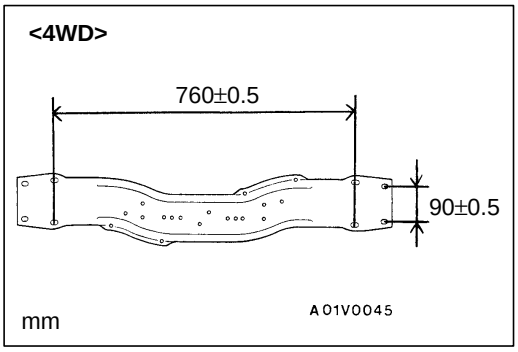

INSPECTION

32100120082

- Check insulators for cracks, separation or deformation.
- Check transfer mounting bracket for deformation or corrosion.
- Check transfer support bracket for deformation or corrosion.
- Check No. 2 crossmember for deformation or corrosion.

FRONT DIFFERENTIAL MOUNTING

32100170032

REMOVAL AND INSTALLATION

Pre-removal and Post installation Operation
- Front Under Cover and Skid Plate Removal and Installation

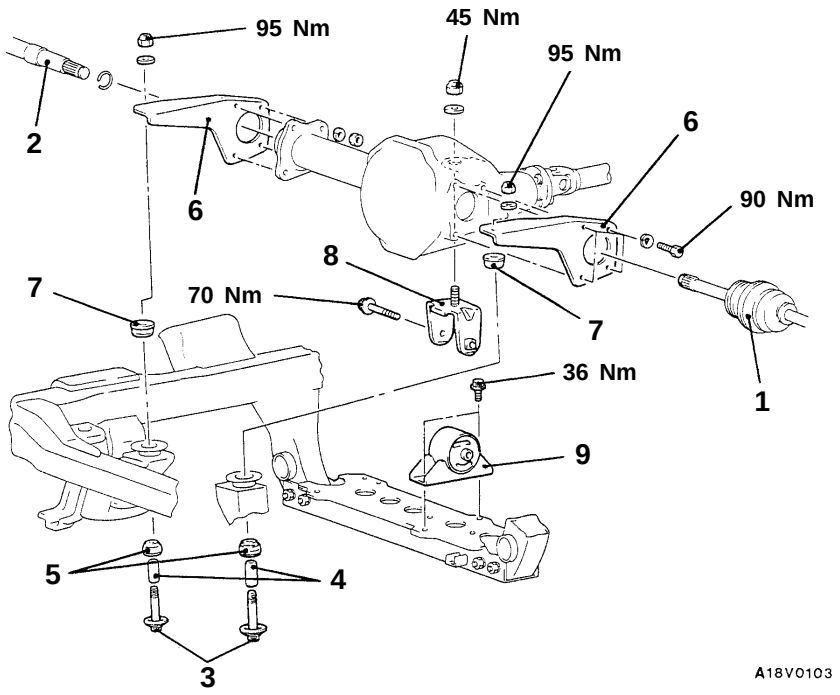

Removal steps

1. Drive shaft (Refer to GROUP 26.)
2. Inner shaft (Refer to GROUP 26.)
3. Pin
4. Spacer
5. Differential mounting rubber B

◀A▶

◀A▶

6. Differential mounting bracket
7. Differential mounting rubber A
8. Differential support bracket
9. Differential mounting bracket

REMOVAL SERVICE POINT

◀A▶ DIFFERENTIAL MOUNTING BRACKET REMOVAL

Remove the differential mounting bracket while supporting differential carrier with a jack.

INSPECTION

32100180028

- Check the differential mounting brackets for deformation and damage.
- Check the differential support bracket for deformation and damage.
- Check insulators for cracks, separation or deformation.
- Check differential mounting rubber for cracks and damage.

FRONT SUSPENSION CROSSMEMBER

32100350016

REMOVAL AND INSTALLATION

Pre-removal and Post-installation Operation
- Front Under Cover Removal and Installation

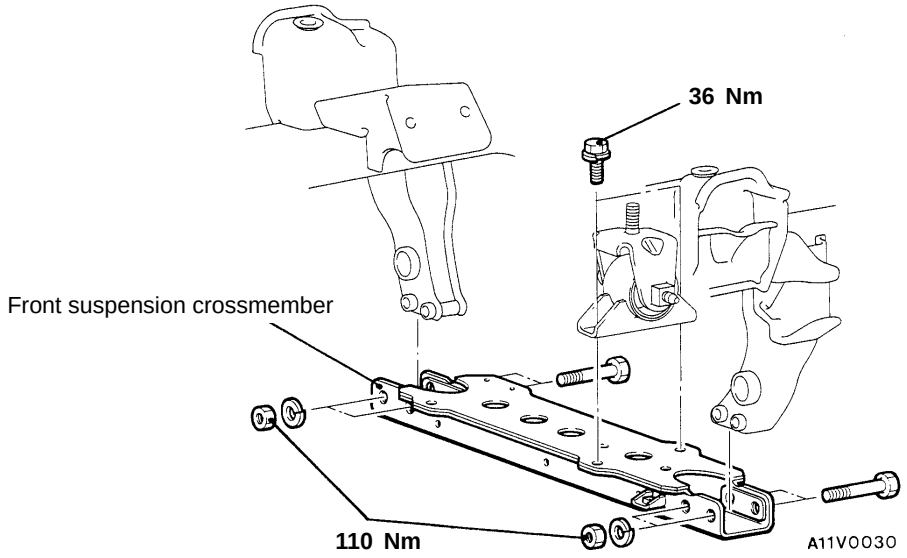

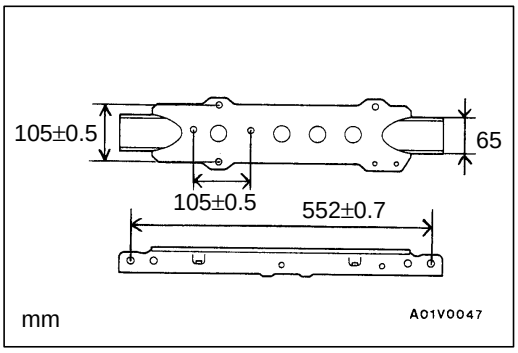

INSPECTION

32100360019

- Check crossmembers for cracks or damage.
- Check crossmembers as illustrated for dimensions.

NOTES

FRONT SUSPENSION

Click on the applicable bookmark to selected the required model year

FRONT SUSPENSION

CONTENTS

33209000080

GENERAL INFORMATION 2

SERVICE SPECIFICATIONS 3

SEALANT 3

SPECIAL TOOLS 4

ON-VEHICLE SERVICE 6

Front Wheel Alignment Check and Adjustment 6

SHOCK ABSORBER AND UPPER ARM <2WD> 10

SHOCK ABSORBER AND UPPER ARM <4WD> 13

LOWER ARM, COIL SPRING AND STRUT BAR <2WD> 16

LOWER ARM AND TORSION BAR <4WD> 19

STABILIZER BAR <4WD> 23

GENERAL INFORMATION

33200010105

The front suspension on 2WD vehicles is an independent suspension system having the double wishbone combined with the coil spring, while the front suspension on 4WD vehicles is an independent suspension having the double wishbone combined with the torsion bar spring.

COIL SPRING <2WD>

Items	4G63-Single cab, 4D56-Club cab	4G63-Double cab, 4D56-Single cab	4D56-Double cab
Wire dia. x O.D. x free length mm	16 × 99 × 280 [17 × 100 × 275]	16 × 100 × 284 [17 × 100 × 279]	16 × 100 × 288 [17 × 100 × 283]

NOTE
[ ]: indicates option

TORSION BAR <4WD>

Items	Specification
Length x O.D. mm	1,367 × 26 [1,367 × 27]

NOTE
[ ]: Indicates option

CONSTRUCTION DIAGRAM

<2WD>

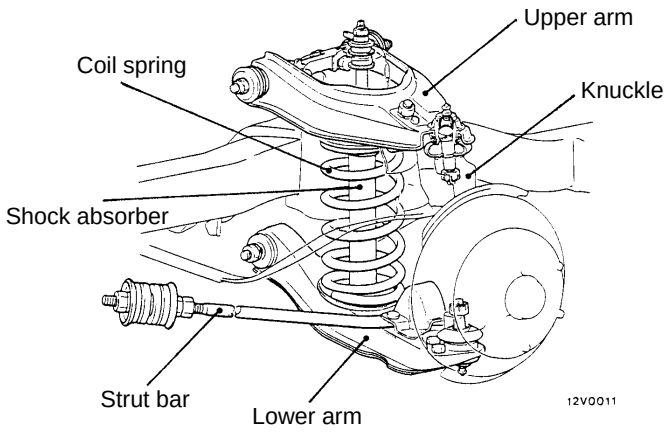

<4WD>

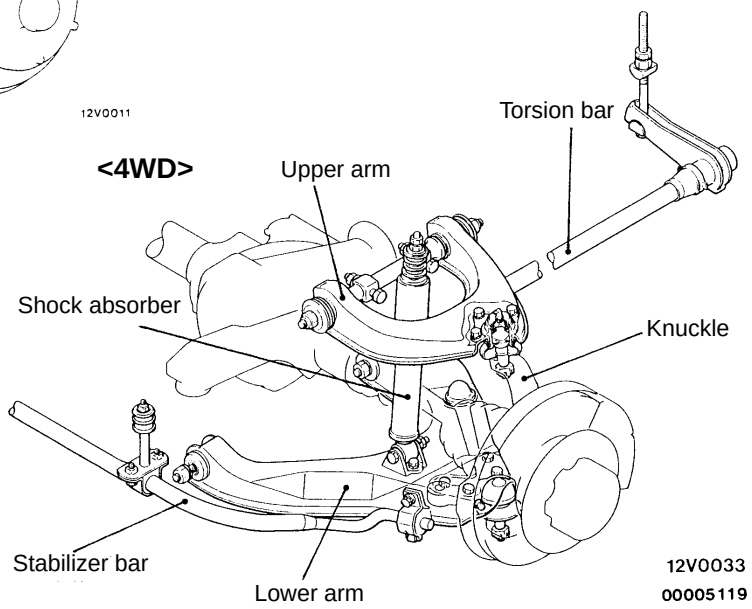

SERVICE SPECIFICATIONS

33200030088

Items			Standard value	Limit
Toe-in	At the centre of tyre thread mm		0 – 7	–
	Toe-angle (per wheel)	2WD	0° – 0°19’	–
		4WD <Vehicles with 205/80 R16 tyre>	0° – 0°16’	–
		4WD <Vehicles with 31 x 10.50 R15 tyre>	0° – 0°15’	–
Camber			0°10’ – 1°10’ (Difference between right and left within 30’)	–
Caster		2WD	1°45’ – 3°45’ (Difference between right and left within 30’)	–
		4WD	1°15’ – 3°15’ (Difference between right and left within 30’)	–
Kingpin inclination		2WD	15°00’	–
		4WD	14°50’	–
Shock absorber attaching dimension mm			1 – 2	–
Upper arm ball joint starting torque Nm		2WD	0.8 – 3.4	–
Strut bar attaching dimension mm			79	–
Lower arm ball joint end play mm			–	0.5
Lower arm bush press-fitting force kN			9.8	–
Clearance between bump stopper and bump stopper bracket mm		4WD	21 – 23	–
Stabilizer link assembly attaching dimension mm		4WD	16 – 18	–

SEALANT

33200050015

Item	Specified sealant
Upper arm ball joint dust cover <2WD>	3M ATD Part No. 8661 or equivalent

SPECIAL TOOLS

33200060070

Tool	Number	Name	Use
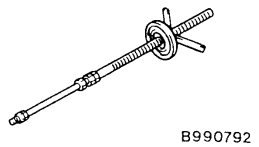	MB990792	Front coil spring compressor	Front suspension coil spring compression <2WD>
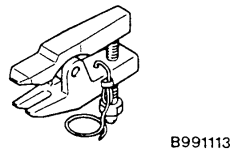	MB991406	Steering linkage puller	Upper or lower arm ball joint disconnection
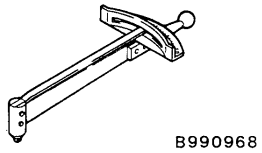	MB990968	Torque wrench	Upper arm ball joint rotation torque measurement
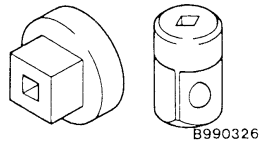	MB990326	Preload socket	
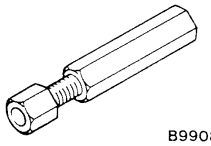	MB990804	Knuckle arm puller	Upper arm ball joint disconnection <2WD>
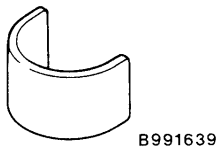	MB991639	Bushing remover and installer support	Preventing deformation when removing and installing the lower arm bushing <2WD>
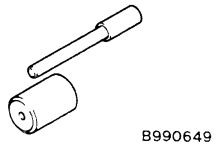	MB990649	Lower arm bushing remover and installer	Lower arm bushing removal and press-fitting <2WD>
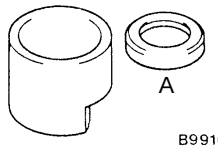	MB991071 A: MB991072	Lower arm bushing remover and installer A: Arbor	Lower arm bushing removal <2WD>
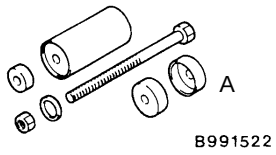	MB990958 A: MB990975	Torsion bar bushing remover and installer A: Installer guide	Lower arm bushing press-fitting <2WD>

Tool	Number	Name	Use
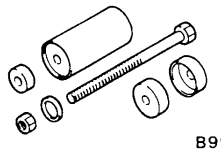	MB991522	Torsion bar bushing remover and installer	Lower arm bushing (A) removal and press-fitting <4WD>
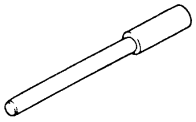	MB990883	Rear suspension bushing arbor	Lower arm bushing (B) removal and press-fitting <4WD>
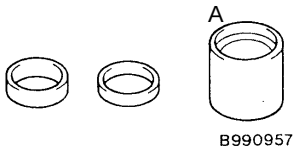	MB990957 A: MB990971	Lower arm bushing remover and installer A: Base	

ON-VEHICLE SERVICE

33100090113

FRONT WHEEL ALIGNMENT CHECK AND ADJUSTMENT

Measure the wheel alignment with the vehicle parked on a level surface.
The front suspension, steering system, and wheels should be serviced to normal condition prior to measurement of wheel alignment.

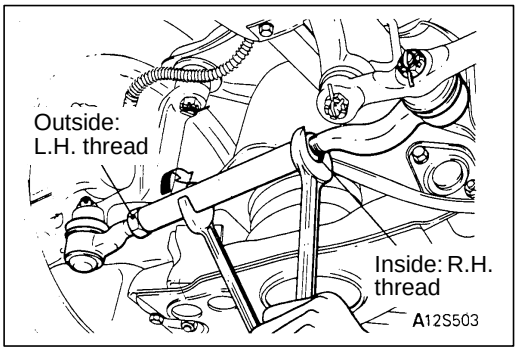

TOE-IN

Standard value:

At the centre of tyre tread 0 – 7 mm
Toe angle (per wheel)

0° – 0°19' <2WD>

0° – 0°16' <4WD (Vehicles with 205/80 R16 tyre)>

0° – 0°15' <4WD (Vehicles with 31 x 10.50 R15 tyre)>

1. If the toe-in is not within the standard value, adjust the toe-in by turning the left and right tie rod turnbuckles by the same amount (in opposite directions).

   NOTE
   The toe will move out as the left turnbuckle is turned toward the front of the vehicle and the right turnbuckle is turned toward the rear of the vehicle.

2. Use a turning radius gauge to check that the steering angle is at the standard value. (Refer to GROUP 37A – On-vehicle Service.)

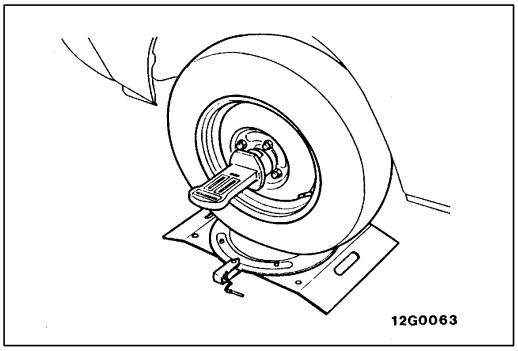

CAMBER AND CASTER

<2WD>

Standard value:

Camber 0°10' – 1°10' (Difference between right and left within 30')

Caster 1°45' – 3°45' (Difference between right and left within 30')

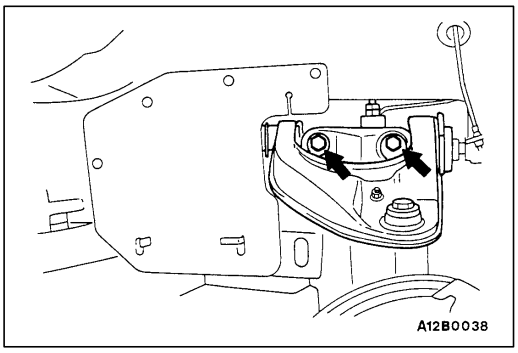

If the standard value is not obtained, make adjustment by the following procedure.

1. Loosen the upper arm mounting bolts and nuts.

   NOTE
   Remove the shock absorber mounting nut and lock nut, compress the shock absorber and loosen the upper arm mounting bolts and nuts.

2. Increase or decrease shims between upper arm shaft and crossmember to adjust the camber and caster. (Refer to Charts for Shim Increase or Decrease.)

Caution

1. **Difference in shim thickness between front and rear must be 4 mm or less.**
2. **Do not use 4 or more shims at one location.**

Adjustment of shim	
Part number	Thickness mm
MR132525	1
MR132526	2
MR210107 (Front shim integral with rear shim)	1
MB932441 (Front shim integral with real shim)	2

Charts for Shim Increase or Decrease

HOW TO USE CHARTS

These charts show how shims are added to or removed from existing shims.

EXAMPLE

To decrease camber by 36’ and increase caster by 24’, increase combined front side shim thickness by 1 mm and increase combined rear side shim thickness by 2 mm.

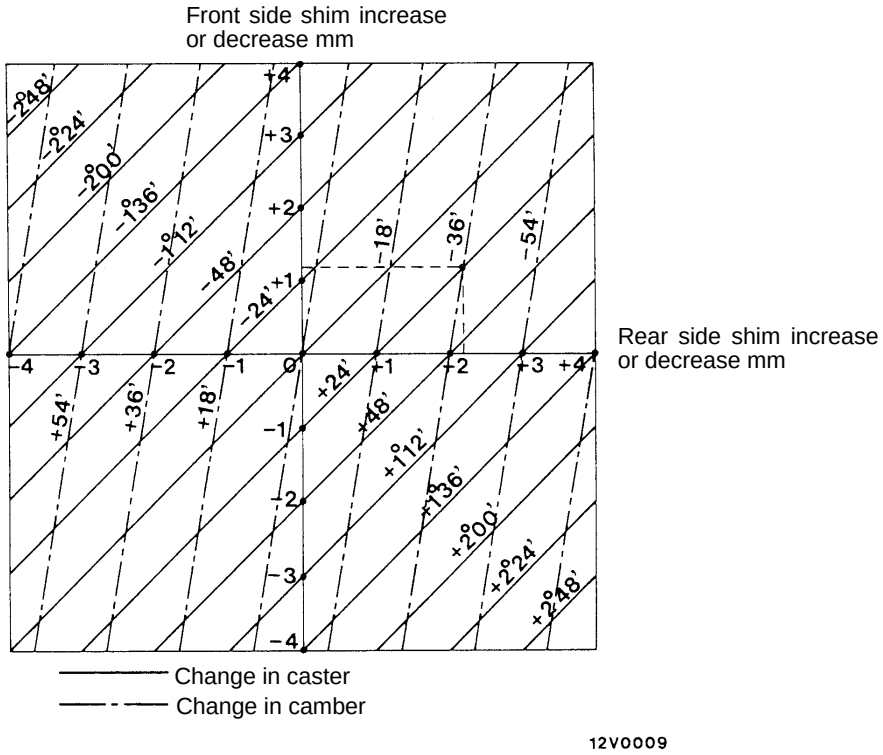

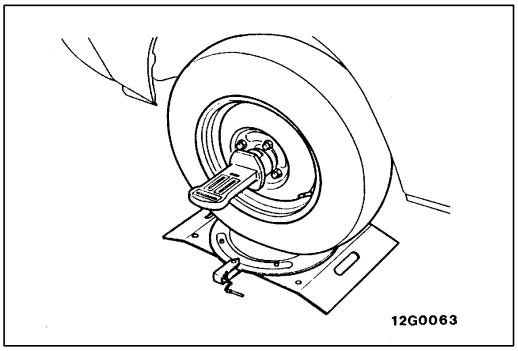

<4WD>

Standard value:

Camber 0°10' – 1°10' (Difference between right and left within 30')

Caster 1°15' – 3°15' (Difference between right and left within 30')

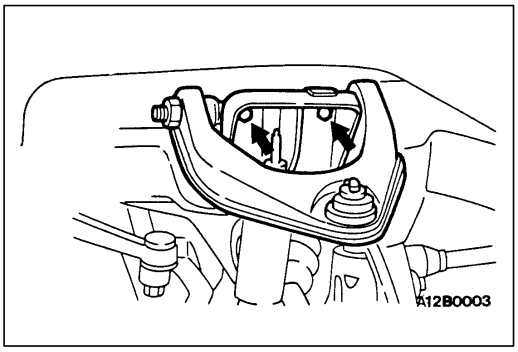

If the standard value is not obtained, make adjustment by the following procedure.

1. Loosen the upper arm mounting bolts and nuts.

   NOTE
   Remove the shock absorber mounting nut and lock nut, compress the shock absorber and loosen the upper arm mounting bolts and nuts.

2. Increase or decrease shims between upper arm shaft and crossmember to adjust the camber and caster. (Refer to Charts for Shim Increase or Decrease.)

   Caution
   1. Difference in shim thickness between front and rear must be 4 mm or less.
   2. Do not use 4 or more shims at one location.

Adjustment of shim	
Part number	Thickness mm
MR132525	1
MR132526	2
MB176288 (Front shim integral with rear shim)	1
MB176289 (Front shim integral with rear shim)	2

Charts for Shim Increase or Decrease

HOW TO USE CHARTS
These charts show how shims are added to or removed from existing shims.

EXAMPLE
To decrease camber by 30' and caster by 40', increase combined front side shim thickness by 3 mm and increase combined rear side shim thickness by 2 mm.

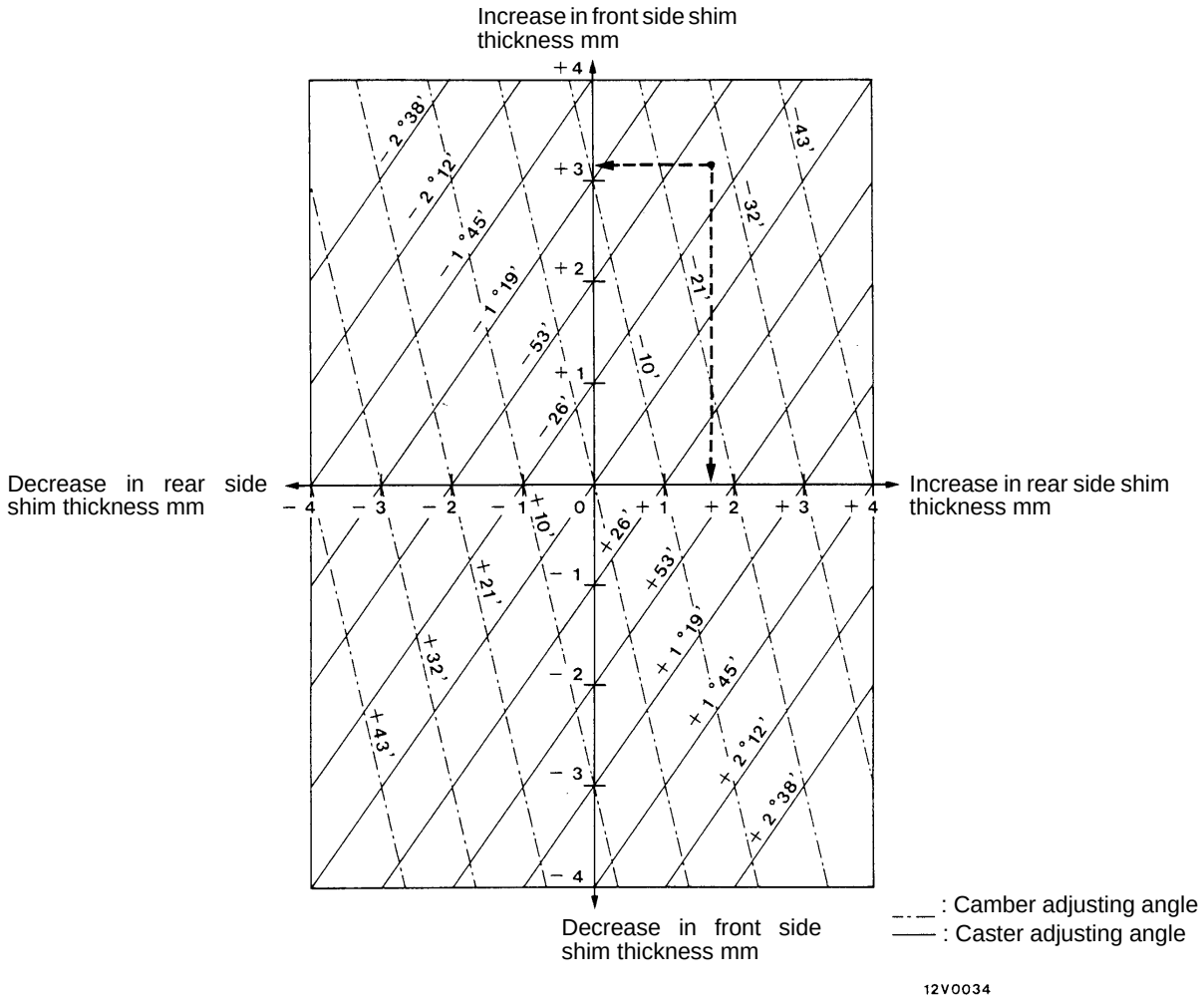

KINGPIN INCLINATION

Standard value:
<2WD> 15°00'
<4WD> 14°50'

SHOCK ABSORBER AND UPPER ARM <2WD>

33200250026

REMOVAL AND INSTALLATION

Post-installation Operation
- Front Wheel Alignment Check and Adjustment (Refer to P.33A-6.)

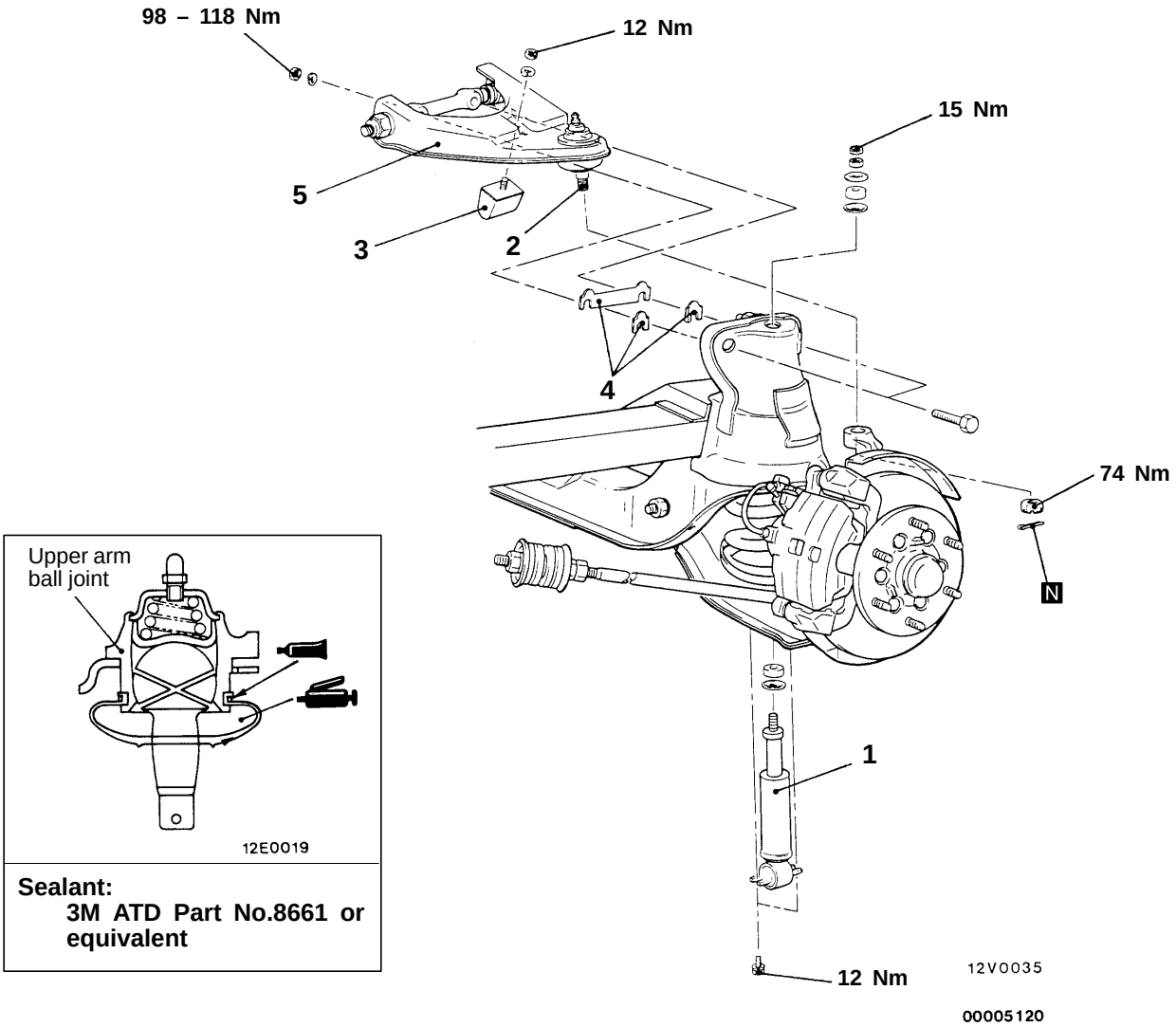

Removal steps

◀A▶ ▶B◀ 1. Shock absorber
2. Upper arm ball joint connection
3. Rebound stopper

◀B▶ 4. Shims
▶A◀ 5. Upper arm

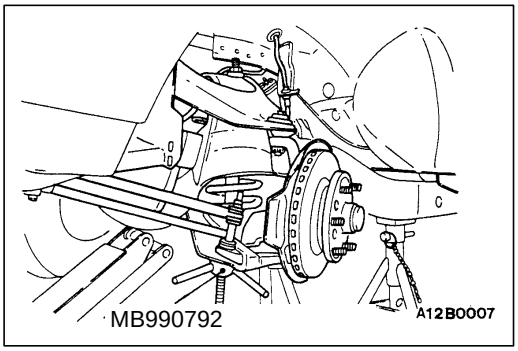

REMOVAL SERVICE POINTS

◀A▶ UPPER ARM BALL JOINT DISCONNECTION

1. Install the special tool to compress the coil spring slightly.

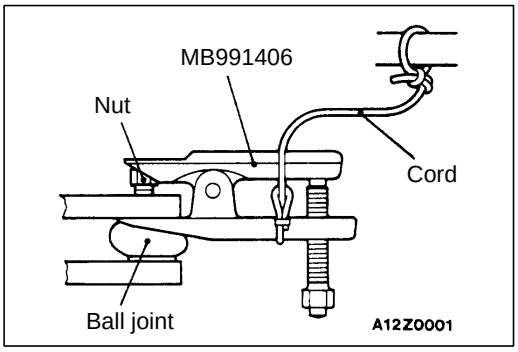

2. Use the special tool to disconnect the upper arm ball joint from the knuckle.

   Caution
   1. Use the special tool to loosen the nut only do not remove it from the ball joint.
   2. Tie the special tool with a cord not lot it fall off.

◀B▶ SHIMS REMOVAL

NOTE
The camber adjustment shims should be stored for reference at assembly.

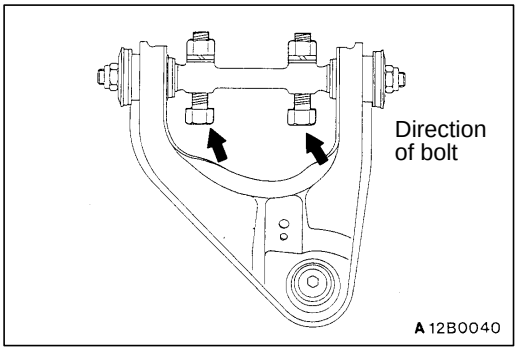

INSTALLATION SERVICE POINTS

▶A◀ UPPER ARM INSTALLATION

When the upper arm assembly is installed to the crossmember, insert the upper arm shaft attaching bolts from outside the crossmember and put adjusting shims between the crossmember and upper arm shaft.

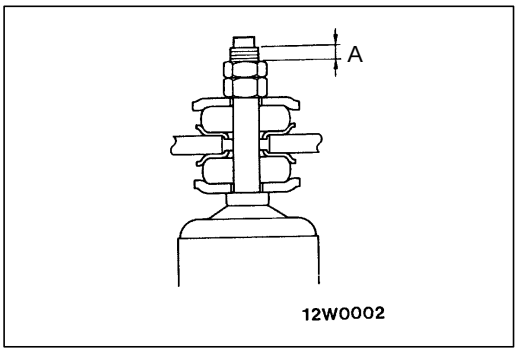

▶B◀ SHOCK ABSORBER INSTALLATION

Install the shock absorber so that the distance (A) shown in the illustration is at the standard value.

Standard value (A): 1 – 2 mm

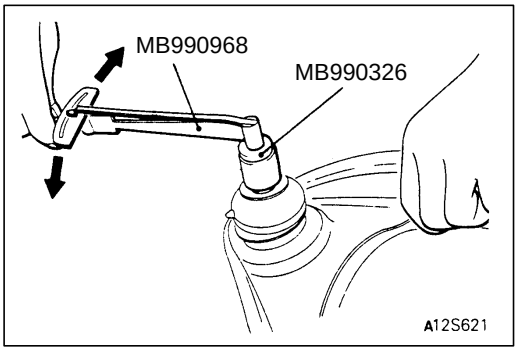

INSPECTION

33200260029

UPPER ARM BALL JOINT STARTING TORQUE CHECK

1. After shaking the upper arm ball joint stud several times, install the nut to the stud and use the special tool to measure the starting torque of the upper arm ball joint.

   Standard value: 0.8 – 3.4 Nm

2. If the starting torque exceeds the standard value, replace the upper arm assembly.
3. If the starting torque is lower than the standard value, check that the ball joint turns smoothly without excessive play. If so, it is possible to use that ball joint.

UPPER ARM BALL JOINT DUST COVER CHECK

When dust cover is cracked or damaged, replace the upper arm assembly.

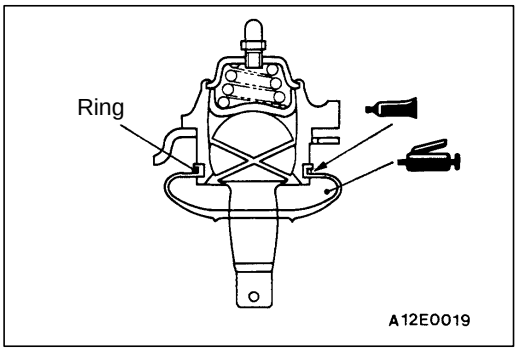

UPPER ARM BALL JOINT DUST COVER REPLACEMENT

33200800023

Only when dust cover is damaged accidentally during service work, replace the dust cover as follows.

1. Apply multipurpose grease to inside of the dust cover.
2. Apply specified sealant to the groove of the ball joint, and then securely install the dust cover and ring.

   Specified sealant: 3M ATD Part No.8661 or equivalent

SHOCK ABSORBER AND UPPER ARM <4WD>

33200250033

REMOVAL AND INSTALLATION

Pre-removal Operation
- Brake Fluid Draining

Post-installation Operation
- Brake Fluid Supplying
- Brake Line Bleeding (Refer to GROUP 35A – On-vehicle Service.)
- Front Wheel Alignment Check and Adjustment (Refer to P.33A-6.)

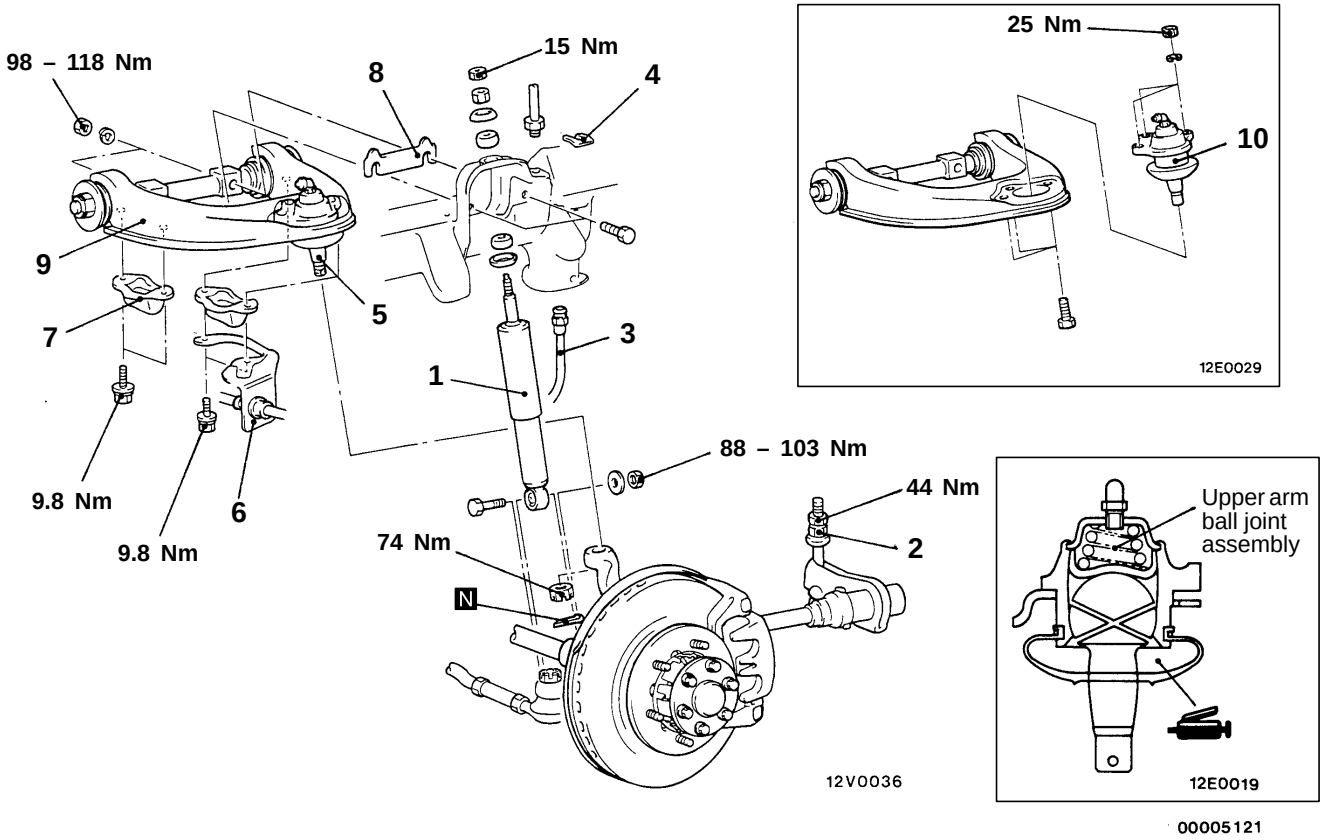

Removal Steps

▶C◀ 1. Shock Absorber
- Adjustment of clearance from bump stopper to bump stopper bracket (Refer to P.33A-20.)

◀A▶ 2. Anchor arm assembly adjusting nut
3. Brake hose connection
4. Hose clip

◀B▶ 5. Upper arm ball joint connection
6. Brake hose support

▶B◀ 7. Rebound stopper

◀C▶ 8. Shims

▶A◀ 9. Upper arm
10. Upper arm ball joint assembly

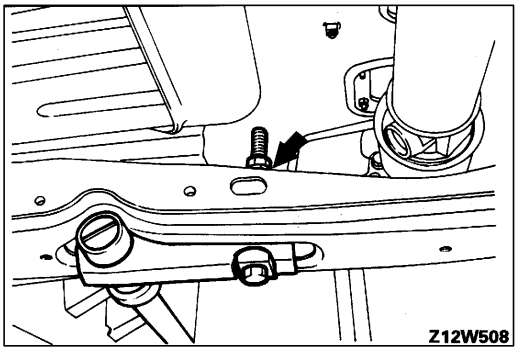

REMOVAL SERVICE POINTS

◀A▶ ANCHOR ARM ASSEMBLY ADJUSTING NUT LOOSENING

Loosen the anchor arm bolt of the torsion bar all the way.

NOTE
When the anchor arm assembly installation nut is loosened, use a jack to support the lower arm of the side to be loosened, thus the work easier.

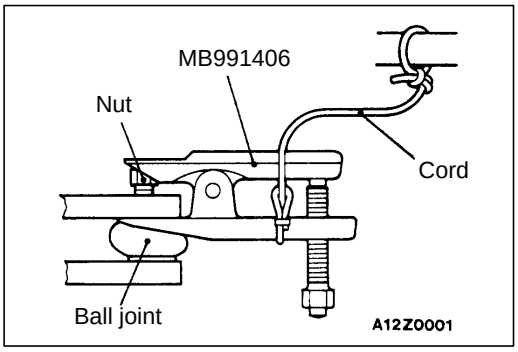

◀B▶ UPPER ARM BALL JOINT DISCONNECTION

Caution
1. **Use the special tool to loosen the nut only do not remove it from the ball joint.**
2. **Tie the special tool with a cord not lot it fall off.**

◀C▶ SHIMS REMOVAL

NOTE
The camber and caster adjustment shims should be stored for reference at assembly.

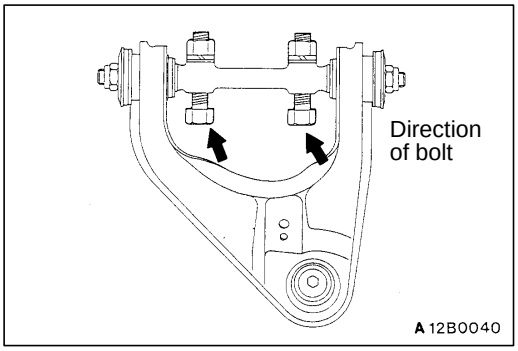

INSTALLATION SERVICE POINTS

▶A◀ UPPER ARM INSTALLATION

When the upper arm assembly is installed to the crossmember, insert the upper arm shaft attaching bolts from outside the crossmember and put adjusting shims between the crossmember and upper arm shaft.

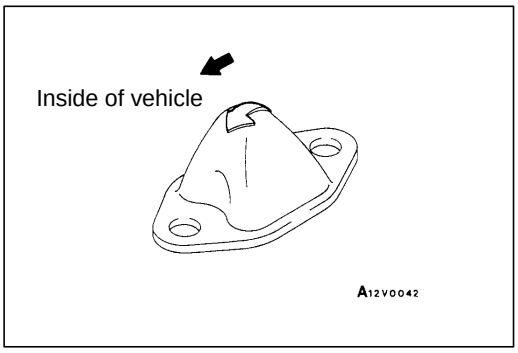

▶B◀ REBOUND STOPPER INSTALLATION

Install the rebound stopper so that its arrow faces inside of the vehicle.

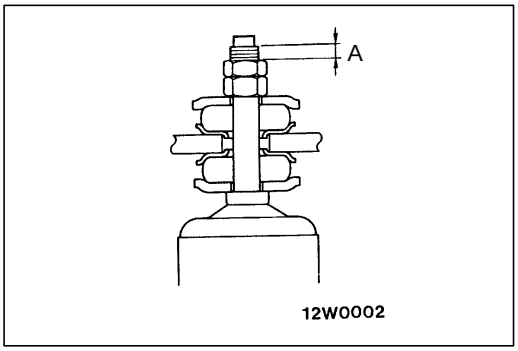

▶C◀ SHOCK ABSORBER INSTALLATION

Install the shock absorber so that the distance (A) shown in the illustration is at the standard value.

Standard value (A): 1 – 2 mm

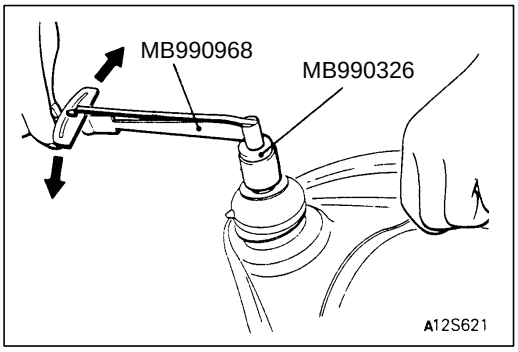

INSPECTION

33200260036

UPPER ARM BALL JOINT STARTING TORQUE CHECK

1. After shaking the upper arm ball joint assembly stud several times, install the nut to the stud and use the special tool to measure the starting torque of the upper arm ball joint assembly.

   Standard value: 0.8 – 3.4 Nm

2. If the starting torque exceeds the standard value, replace the upper arm ball joint assembly.
3. If the starting torque is lower than the standard value, check that the ball joint turns smoothly without excessive play. If so, it is possible to use that ball joint.

UPPER ARM BALL JOINT DUST COVER CHECK

When dust cover is cracked or damaged, replace the upper arm ball joint assembly.

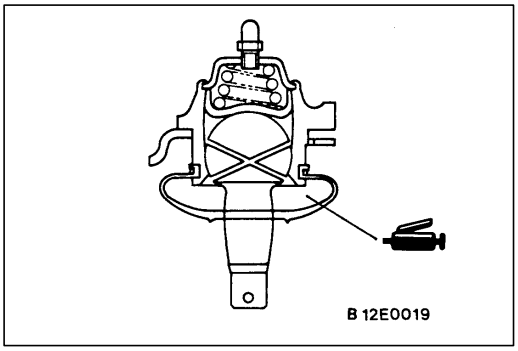

UPPER ARM BALL JOINT DUST COVER REPLACEMENT

33200800030

Only when dust cover is damaged accidentally during service work, replace the dust cover as follows:

1. Apply multipurpose grease to the interior of the dust cover and the upper arm ball joint.
2. Secure the dust cover to the upper arm ball joint with ring.

LOWER ARM, COIL SPRING AND STRUT BAR <2WD>

33200280032

REMOVAL AND INSTALLATION

Pre-removal
- Under Cover Removal

Post-installation Operation
- Front Wheel Alignment Check and Adjustment (Refer to P.33A-6.)
- Under Cover Installation

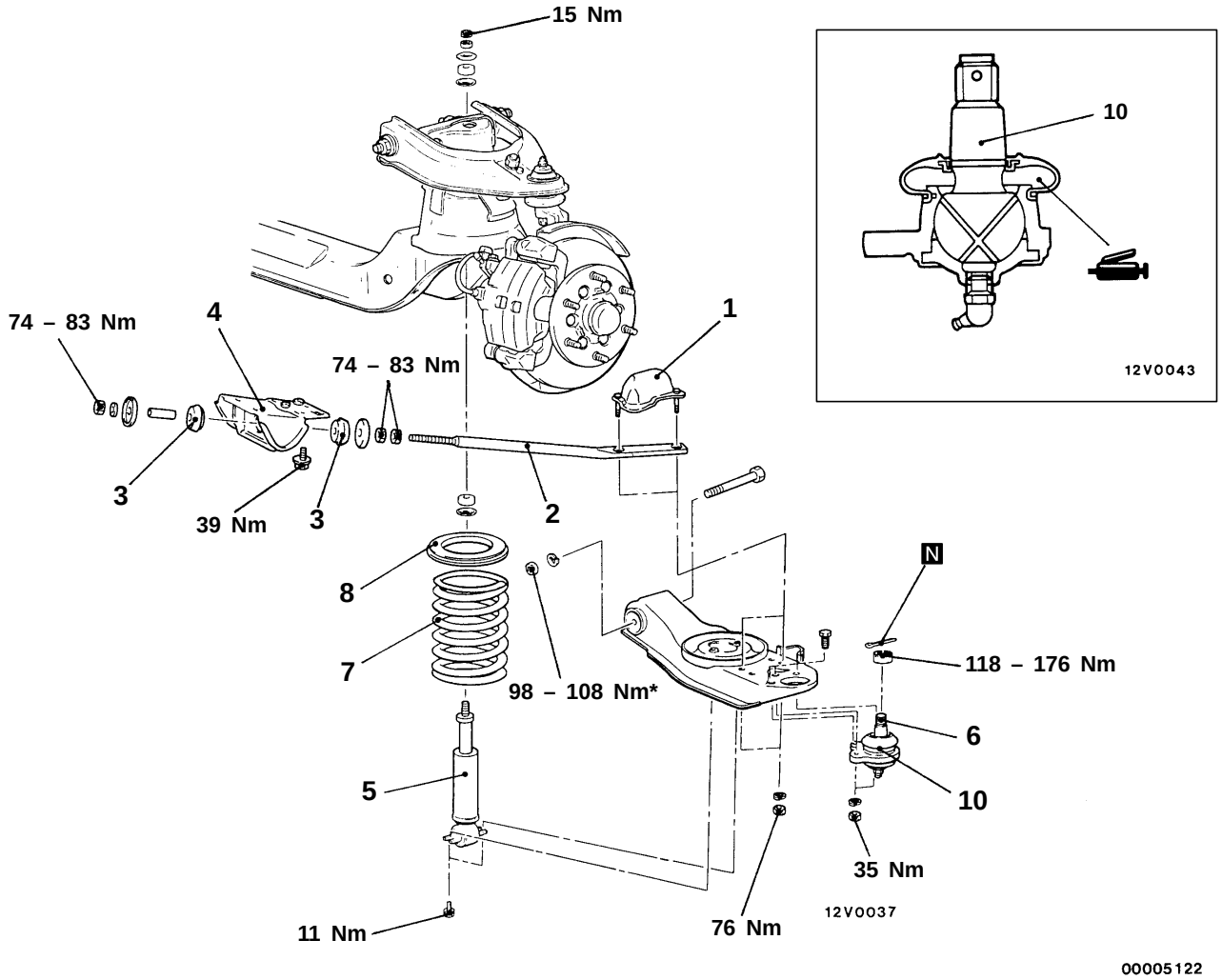

Strut bar removal steps

1. Bump stopper
2. ▶C◀ Strut bar
3. ▶C◀ Strut bar bushing
4. Strut bar bracket

Coil spring removal steps

1. Bump stopper
5. ▶B◀ Shock absorber
6. ◀A▶ Lower arm ball joint connection
7. ▶A◀ Coil spring
8. Spring seat

Lower arm removal steps

1. Bump stopper
5. ▶B◀ Shock absorber
6. ◀A▶ Lower arm ball joint connection
7. ▶A◀ Coil spring
8. Spring seat
9. Lower arm assembly
10. Lower arm ball joint assembly

Caution

***: Indicates parts which should be temporarily tightened, and then fully tightened with the vehicle on the ground in the unladen condition.**

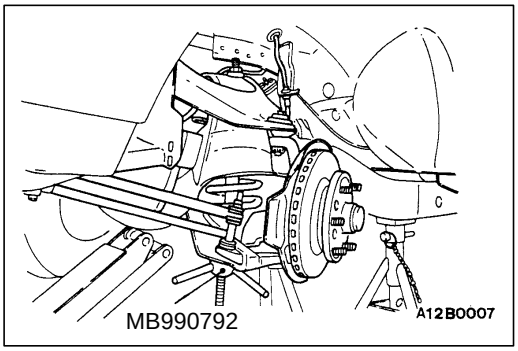

REMOVAL SERVICE POINT

◀A▶ LOWER ARM BALL JOINT DISCONNECTION

1. Install the special tool to compress the coil spring slightly.

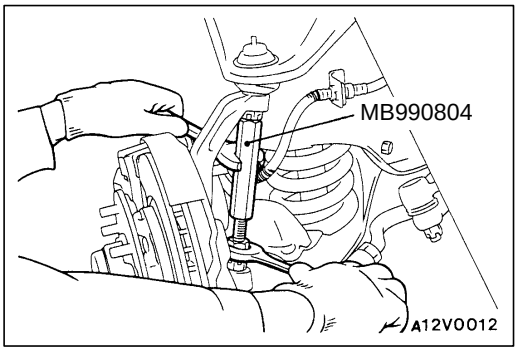

2. Use the special tool to disconnect the lower ball joint from the knuckle.

   Caution
   1. **Use the special tool to loosen the nut only do not remove it from the ball joint.**
   2. **Tie the special tool with a cord not lot it fall off.**

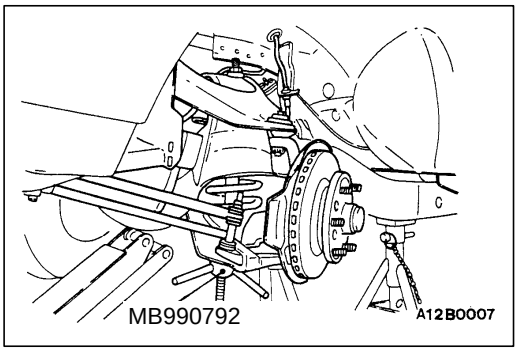

INSTALLATION SERVICE POINTS

▶A◀ COIL SPRING INSTALLATION

Compress the coil spring with the special tool and assemble the lower ball joint to knuckle.

NOTE
Compression of the coil spring will be facilitated if the lower arm is slightly lifted with a hydraulic jack fitted to the end of the lower arm.

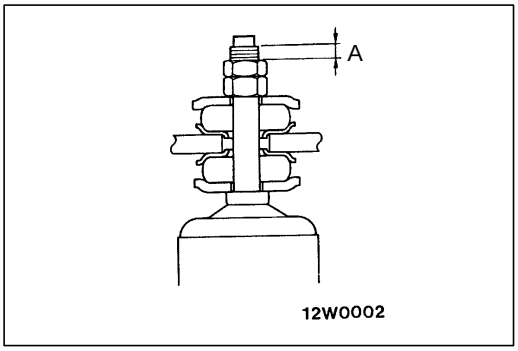

▶B◀ SHOCK ABSORBER INSTALLATION

Install the shock absorber so that the distance (A) shown in the illustration is at the standard value.

Standard value (A): 1 – 2 mm

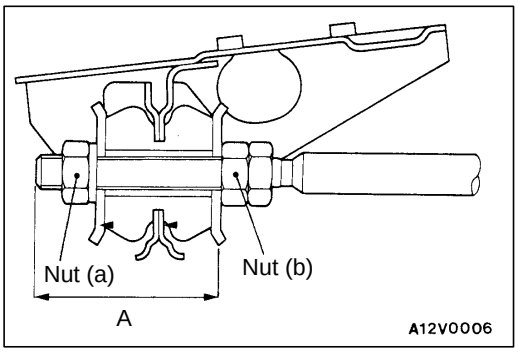

▶C◀ STRUT BAR BUSHING AND STRUT BAR INSTALLATION

1. Install the strut bar bushing so that they face in the direction shown in the illustration.
2. Tighten nut (b) so that distance (A) is at the standard value.

   Standard value (A): 79 mm
3. Tighten nut (a) to the specified torque.

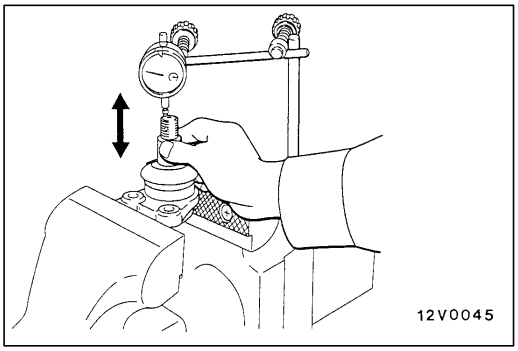

INSPECTION 33200290028

LOWER ARM BALL JOINT END PLAY

Check the lower arm ball joint assembly end play by following the steps below.

1. Measure the lower arm ball joint assembly end play with a dial indicator.

   Limit: 0.5 mm

2. If the lower arm ball joint assembly end play exceeds the service limit, replace the lower arm ball joint assembly.

LOWER ARM BALL JOINT DUST COVER CHECK

When dust cover is cracked or damaged, replace the upper arm ball joint assembly.

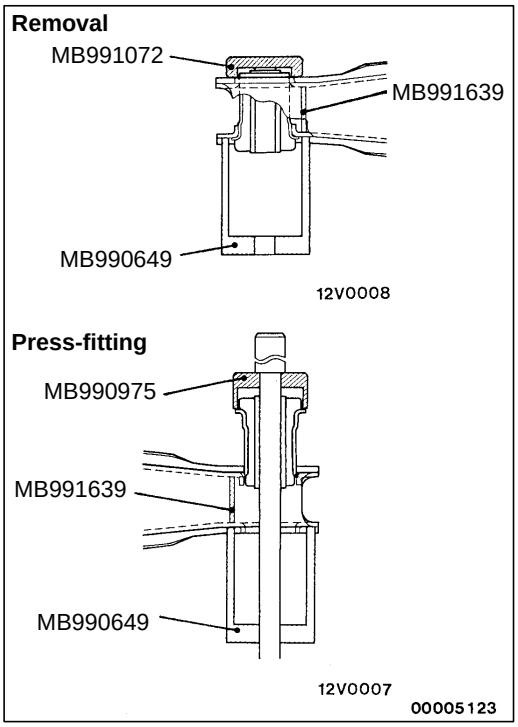

LOWER ARM BUSH REPLACEMENT 33200810040

1. Use the special tool to remove the lower arm bushing.
2. Use the special tool to press-fit the lower arm bushing until the flange of the bushing touches the lower arm.
3. Check that the press-fitting force is at the standard value while press-fitting the bushing.

   Standard value: 9.8 kN

4. If the press-fitting force is less than the standard value, replace the lower arm.

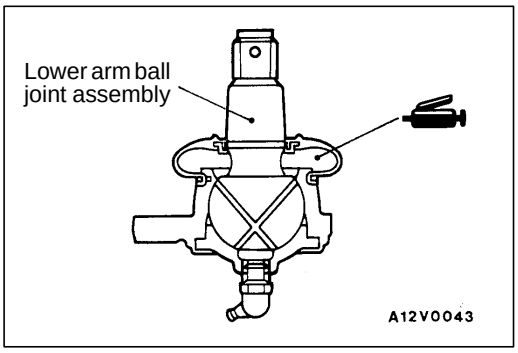

LOWER ARM BALL JOINT DUST COVER REPLACEMENT 33200820036

Only when dust cover is damaged accidentally during service work, replace the dust cover as follows:

1. Apply multipurpose grease to the interior of the dust cover and the lower arm ball joint.
2. Secure the dust cover to the lower arm ball joint with ring.

LOWER ARM AND TORSION BAR <4WD>

33200280049

REMOVAL AND INSTALLATION

Pre-removal Operation
- Under Cover and Skid Plate Removal

Post-installation Operation
- Front Wheel Alignment Check and Adjustment (Refer to P.33A-6.)
- Under Cover and Skid Plate Installation

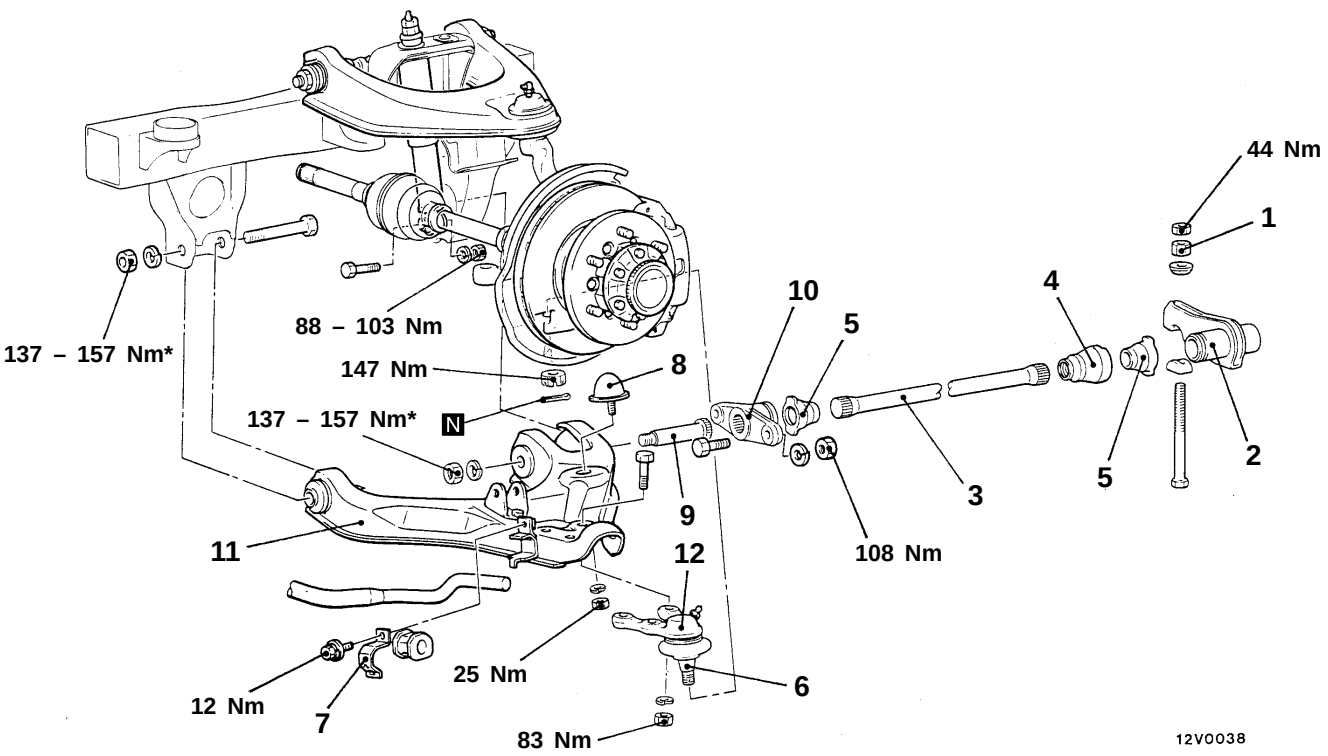

12V0038

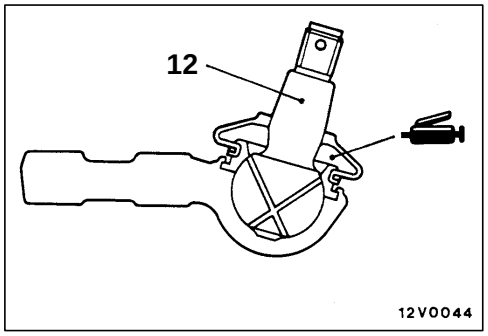

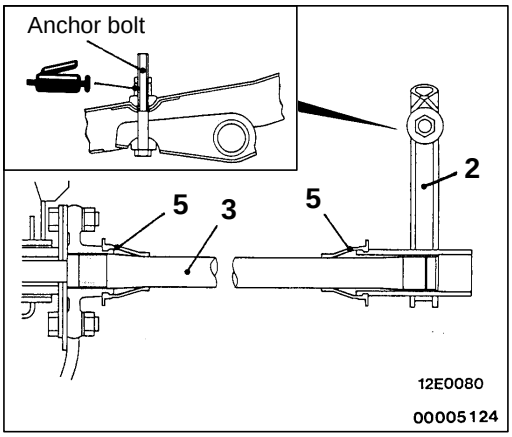

Removal steps

▶C◀ ● Adjustment of clearance from bump stopper to bump stopper bracket
▶B◀ 1. Anchor arm assembly adjusting nut
▶A◀ 2. Anchor arm assembly
▶A◀ 3. Torsion bar
4. Heat cover (right side only)
5. Dust covers
◀A▶ 6. Lower arm ball joint connection
7. Stabilizer bar connection
8. Bump stopper
9. Lower arm shaft
10. Anchor arm B
11. Lower arm
12. Lower arm ball joint assembly

Caution

***: Indicates parts which should be temporarily tightened, and then fully tightened with the vehicle on the ground in the unladen condition.**

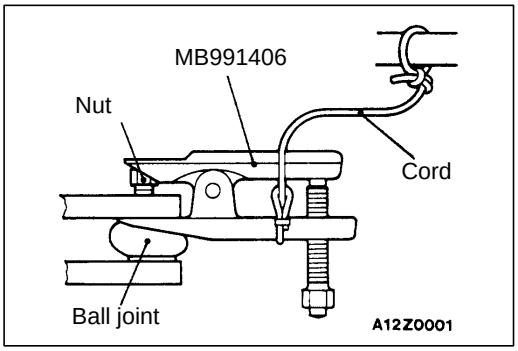

REMOVAL SERVICE POINT

◀A▶ LOWER ARM BALL JOINT DISCONNECTION

Caution

1. **Use the special tool to loosen the nut only do not remove it from the ball joint.**
2. **Tie the special tool with a cord not lot it fall off.**

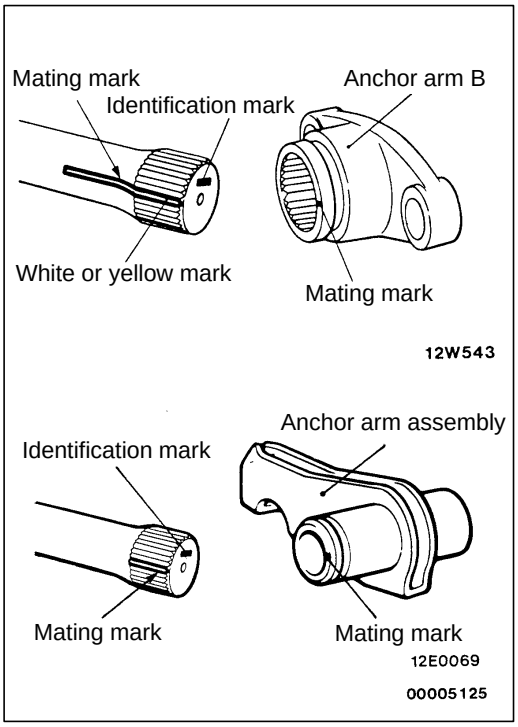

INSTALLATION SERVICE POINTS

▶A◀ TORSION BAR/ANCHOR ARM ASSEMBLY INSTALLATION

1. Check the identification marks at the end of the left and right torsion bars.
   R → for right side
   L → for left side
2. When installation the torsion bar, align the white mark on the serrated section of the torsion bar with the mating mark on the anchor arm.

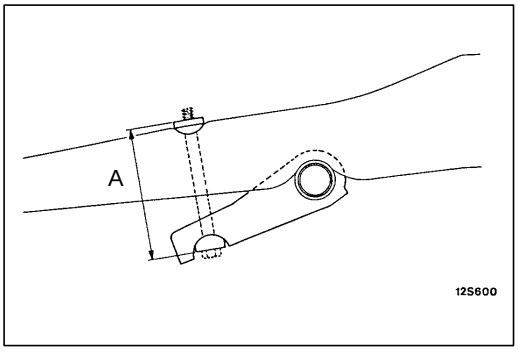

▶B◀ ANCHOR ARM ASSEMBLY ADJUSTING NUT INSTALLATION

Tighten the anchor arm assembly adjusting nut so that the distance of the anchor arm bolt shown in the illustration is at the standard value.

Standard value (A): 138 mm

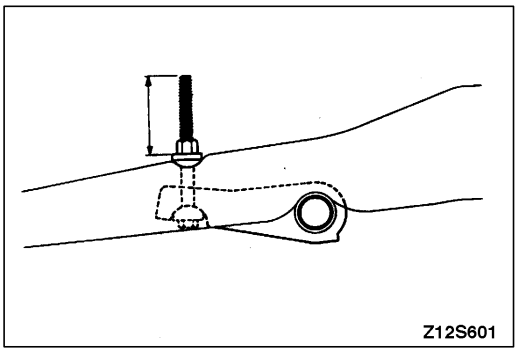

▶C◀ ADJUSTMENT OF CLEARANCE FROM BUMP STOPPER TO BUMP STOPPER BRACKET

1. Tighten the adjusting nut until the protruding length of the anchor bolt is 60 mm [53 mm] or less.

   NOTE
   [ ]: indicates option of torsion bar.

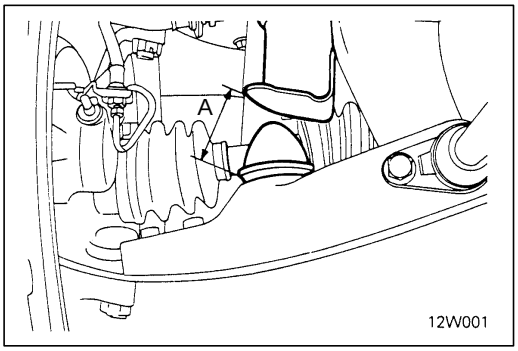

2. With the vehicle in an unladen condition, measure the distance from the bump stopper to the bump stopper bracket to check if it is at the standard value.

   Standard value (A): 71 – 73 mm

3. If outside the standard value, adjust the anchor bolt with the adjusting nut.

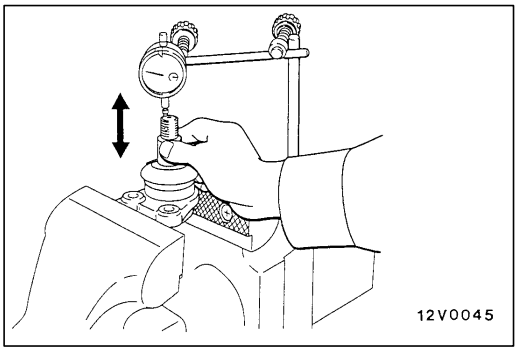

INSPECTION

33200290035

LOWER ARM BALL JOINT END PLAY

Check the lower arm ball joint assembly end play by following the steps below.

1. Measure the lower arm ball joint assembly end play with a dial indicator.

   Limit: 0.5 mm

2. If the lower arm ball joint assembly end play exceeds the service limit, replace the lower arm ball joint assembly.

LOWER ARM BALL JOINT DUST COVER CHECK

When dust cover is cracked or damaged, replace the lower arm ball joint assembly.

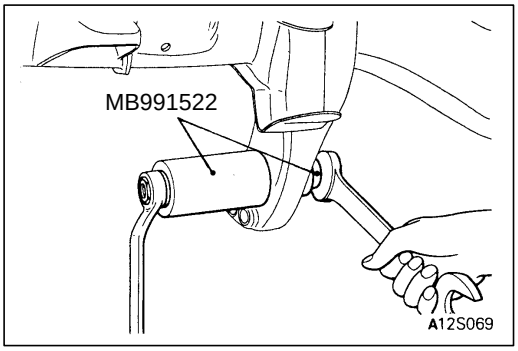

LOWER ARM BUSHING (A) REPLACEMENT

33200810057

1. Using the special tool, remove the lower arm bushing (A) from the bracket.

   NOTE
   When removing the left hand lower arm bushing (A), detach the differential carrier. (Refer to GROUP 26.)

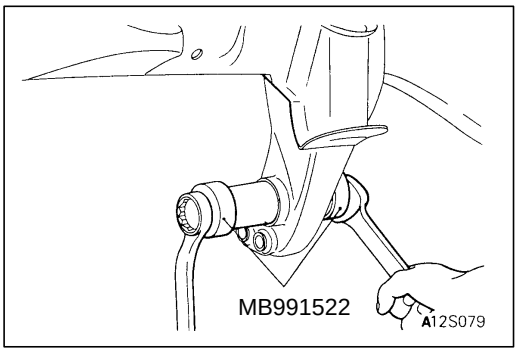

2. Using the special tool, press-fit the lower arm bushing (A) into the bracket.

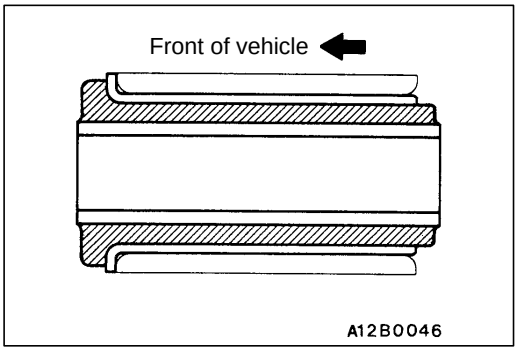

NOTE
Install the lower arm bushing (A) in a arrow direction.

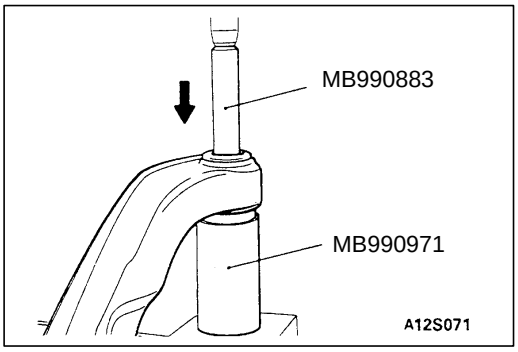

LOWER ARM BUSHING (B) REPLACEMENT

33200810064

1. Remove the lower arm bushing (B) from the lower arm by using special tools.

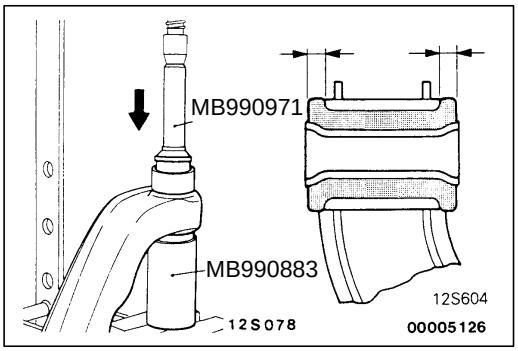

2. Coat the lower arm bushing (B) and the lower arm with soap solution and press-fit the lower arm bushing (B) into the lower arm by using special tools and taking care not to twist or tilt the lower arm bushing (B).

   NOTE
   Press-fit the lower arm bushing (B) again from the opposite side to equalize bushing projections at both ends.

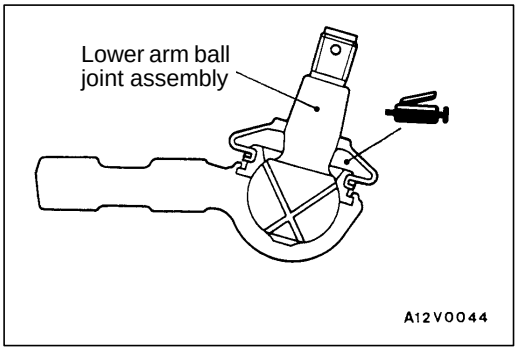

LOWER ARM BALL JOINT DUST COVER REPLACEMENT

33200820043

Only when dust cover is damaged accidentally during service work, replace the dust cover as follows:

1. Apply multipurpose grease to the interior of the dust cover and the lower arm ball joint.
2. Secure the dust cover to the lower arm ball joint with ring.

STABILIZER BAR <4WD>

33200400049

REMOVAL AND INSTALLATION

Pre-removal and Post-installation Operation
- Under Cover and Skid Plate Removal and Installation

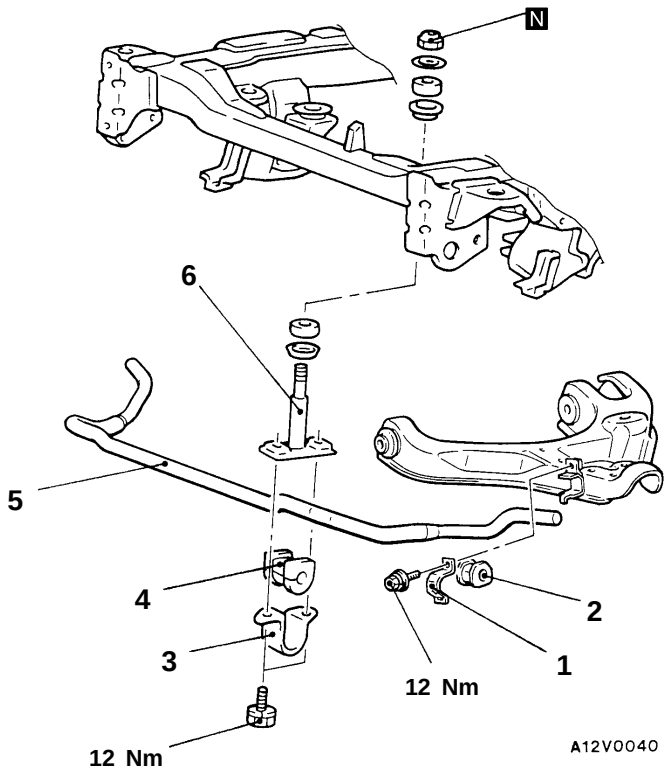

Removal steps

▶A◀ • Stabilizer link assembly mounting nut adjustment
1. Stabilizer bracket (A)
2. Bushing
3. Stabilizer bracket
4. Bushing
5. Stabilizer bar
6. Stabilizer link assembly

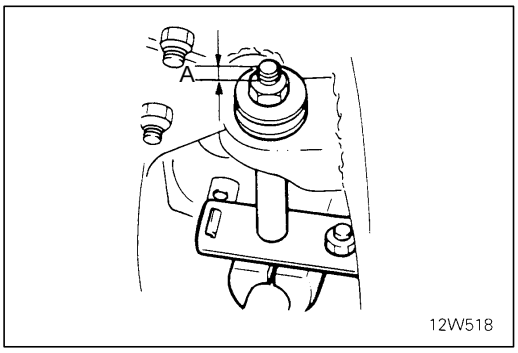

INSTALLATION SERVICE POINT

▶A◀ STABILIZER LINK ASSEMBLY MOUNTING NUT ADJUSTMENT

Tighten the nut so that the dimensions shown in the figure are at standard value.

Standard value (A): 16 – 18 mm

NOTES

REAR SUSPENSION

Click on the applicable bookmark to selected the required model year

REAR SUSPENSION

CONTENTS

34109000107

GENERAL INFORMATION 2
SERVICE SPECIFICATIONS 2
ON-VEHICLE SERVICE 3
Rear Wheel Alignment 3
REAR SUSPENSION ASSEMBLY 4

GENERAL INFORMATION

34100010123

The leaf spring type of rear suspension has been adopted. The leaf spring is secured to the rear axle housing by U-bolts, so that the vibration and noise transmitted to the body during off-road driving are reduced by the bump stopper.
The shock absorbers have a bias arrangement.

LEAF SPRING

Items	2WD	4WD
Number of leaf springs	4 [5]	5 [6]
Straight span mm	1200	1200

NOTE
[ ] indicates option.

CONSTRUCTION DIAGRAM

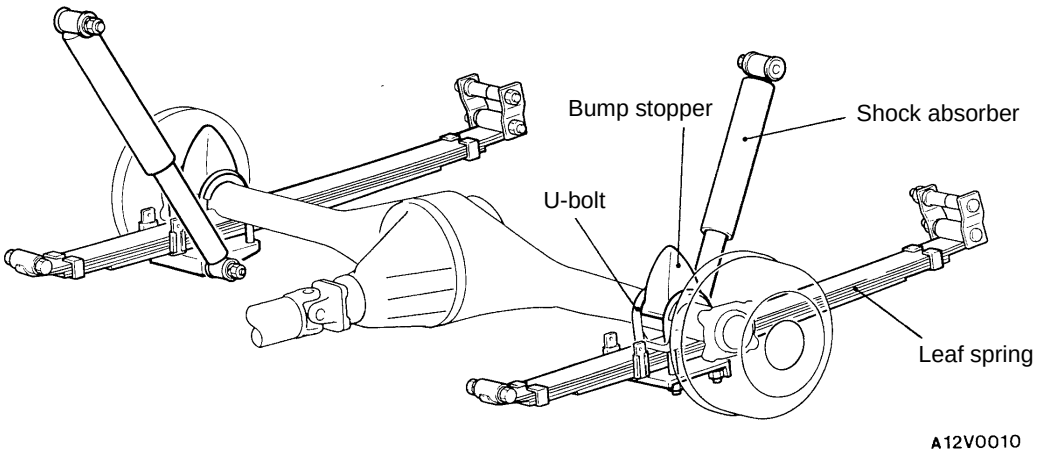

SERVICE SPECIFICATIONS

34100030129

Items	Standard value
Toe-in mm	0 (non adjustable)
Camber	0° (non adjustable)
Thrust angle	0° (non adjustable)

ON-VEHICLE SERVICE

34101100034

REAR WHEEL ALIGNMENT

The rear suspension assembly must be free of worn, loose or damaged parts prior to measurement of rear wheel alignment.

Standard value:
Toe-in 0 mm
Camber 0°

NOTE
Toe-in and camber are set at the factory and cannot be adjusted. If toe-in or camber is not within the standard value, check and replace bent or damaged parts.

REAR SUSPENSION ASSEMBLY

34100100011

REMOVAL AND INSTALLATION

Pre-removal Operation
- Support the axle housing with a jack

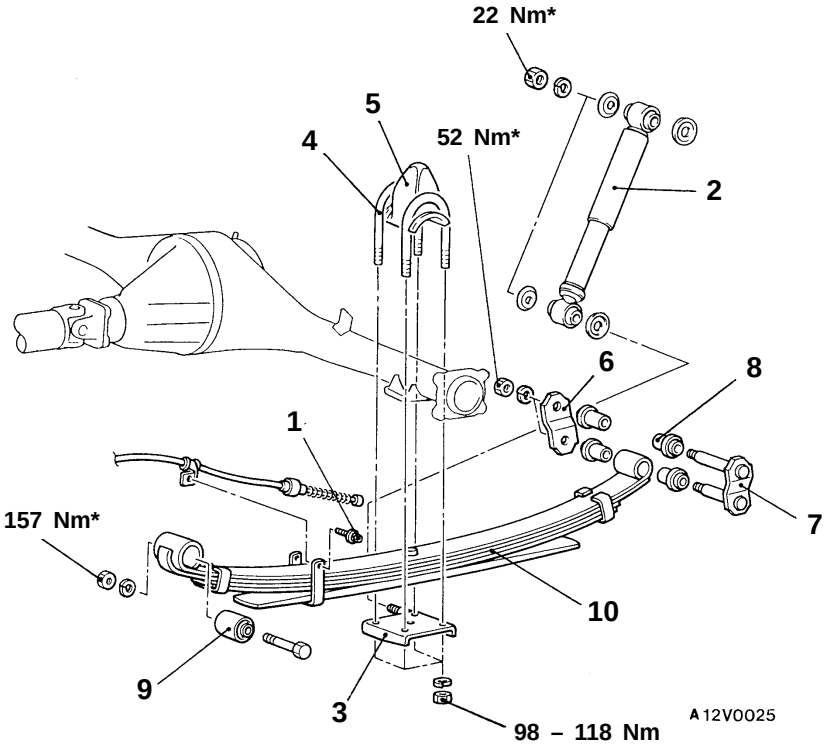

Removal steps

1. Parking brake cable attaching bolt
2. Shock absorber
3. U-bolt seat
4. U-bolt
5. Bump stopper
6. Shackle plate
7. Shackle assembly
8. Rubber bushings
9. Bushing
10. Rear spring

Caution

*** Indicates parts which should be temporarily tightened, and then fully tightened with the vehicles on the ground in the unladen condition.**

BASIC BRAKE SYSTEM

Click on the applicable bookmark to selected the required model year

BASIC BRAKE SYSTEM

CONTENTS

35109000197

GENERAL INFORMATION 3

SERVICE SPECIFICATIONS 5

LUBRICANTS 6

SEALANTS 6

SPECIAL TOOLS 6

TROUBLESHOOTING 7

ON-VEHICLE SERVICE 10

- Brake Pedal Check and Adjustment 10
- Stop Lamp Switch Check 11
- Brake Booster Operating Test 11
- Check Valve Operation Check 12
- Brake Booster Vacuum Switch Check <Diesel-powered vehicles> 12
- Bleeding 12
- Brake Fluid Level Sensor Check 13
- Load Sensing Spring Length Check and Adjustment 13
- Load Sensing Proportioning Valve Function Test 14
- Disc Brake Pad Check and Replacement 15
- Front Disc Brake Rotor Check 16
- Brake Lining Thickness Check 17
- Brake Drum Inside Diameter Check 18
- Brake Lining and Brake Drum Connection Check 18

BRAKE PEDAL 19

MASTER CYLINDER AND BRAKE BOOSTER 20

LOAD SENSING PROPORTIONING VALVE 23

FRONT DISC BRAKE 24

REAR DRUM BRAKE 30

GENERAL INFORMATION

35100010120

The brake system has high reliability and durability which maintains excellent braking performance and braking feeling. The main features are as follows.

- A dual type master cylinder is equipped in all models.
- Both a single type and a tandem type brake booster have been adopted.
- The following type of brake have been adopted.
  Front: Floating caliper, 2-piston, ventilated disc brakes (V4-W43, V5-W43) or floating caliper, 1-piston, ventilated disc brakes (V4-S60, V5-S60)
  Rear: Leading-trailing type drum brake.

Items	2WD <Petrol-powered vehicles>	2WD <Diesel-powered vehicles>	4WD <Petrol-powered vehicles>	4WD <Diesel-powered vehicles>
Master cylinder I.D. mm	23.8	23.8	23.8	23.8
Brake booster effective dia. of power cylinder mm	230 205 + 230*	230 180 + 205*	205 + 230	180 + 205
Brake booster boosting ratio	5.0	5.0	7.0	7.0
Load sensing proportioning valve decompression ratio	0.15	0.15	0.15	0.15
Front brake disc effective dia. mm	200	200	222 228*	222 228*
Front brake wheel cylinder I.D. mm	60.3 42.9*	60.3 42.9*	60.3 42.9*	60.3 42.9*
Rear drum brake drum I.D. mm	254	254	270	270
Rear drum brake wheel cylinder I.D. mm	23.8	23.8	23.8	23.8
Rear drum brake lining thickness mm	4.7	4.7	4.7	4.7

NOTE
*: Vehicles with ABS.

CONFIGURATION DIAGRAM

<L.H. drive vehicles>

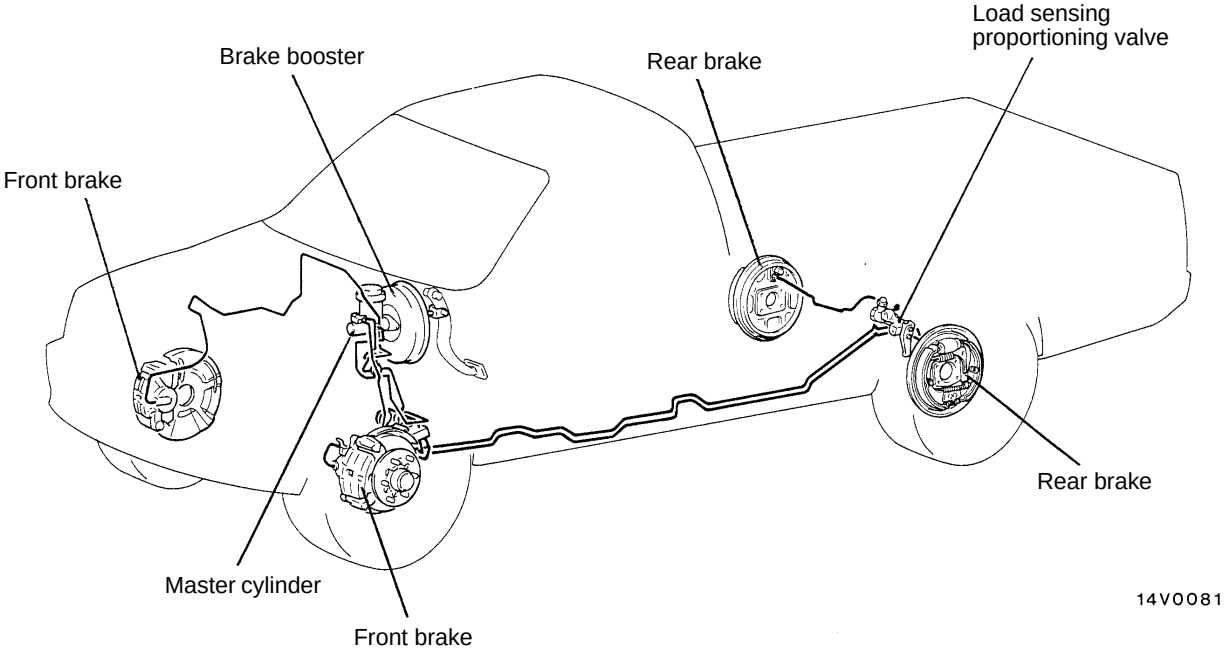

<R.H. drive vehicles>

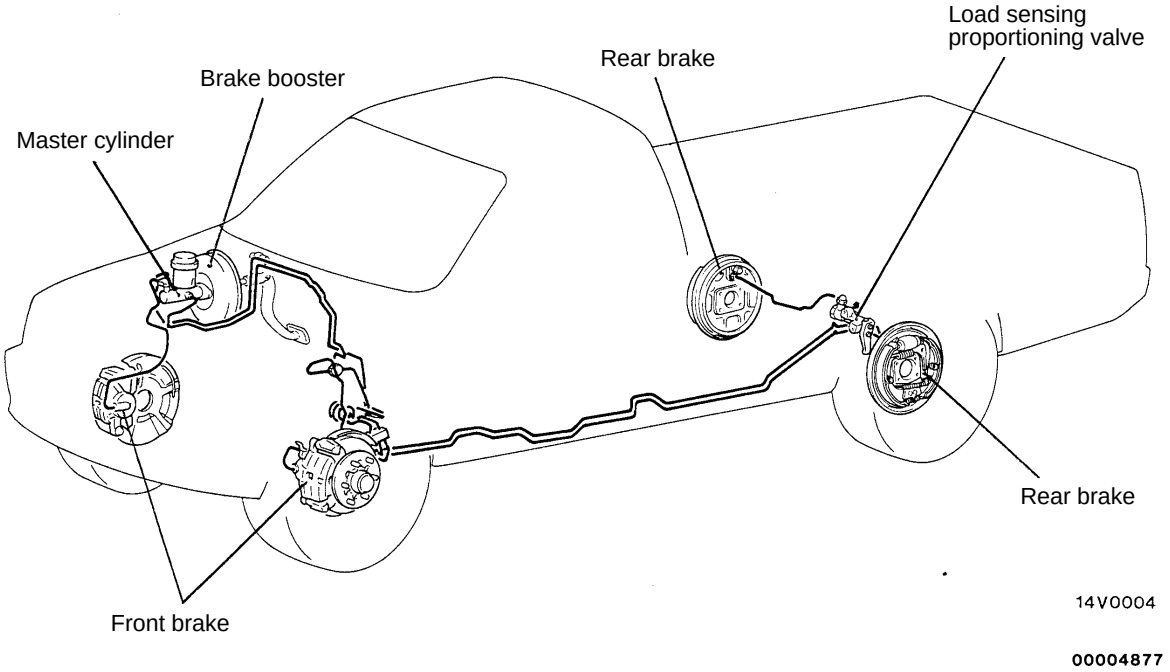

SERVICE SPECIFICATIONS

35100030119

Items			Standard value	Limit
Brake pedal height mm			176 – 181	–
Brake pedal free play mm			3 – 8	–
Brake pedal to floor board clearance mm			95 or more	–
Load sensing proportioning valve output pressure kPa (Input pressure kPa)	2WD	When load sensing spring length is 190 mm (when unladen)	3,625 (5,884)	–
			5,390 (17,652)	–
		When load sensing spring length is 215 mm (when laden)	14,393 (17,652)	–
	4WD	When load sensing spring length is 190 mm (when unladen)	4,309 (5,884)	–
			6,074 (17,652)	–
		When load sensing spring length is 215 mm (when laden)	16,310 (17,652)	–
Load sensing spring length mm			189 – 193	–
Booster push rod to master cylinder piston clearance mm	Single brake booster	Petrol-powered vehicles	0.65 – 1.05	–
		Diesel-powered vehicles	1.00 – 1.40	–
	Tandem brake booster	Vehicle which brake booster of power cylinder is 180 mm and 205 mm in effective diameter	0.90 – 1.30	–
		Vehicle which brake booster of power cylinder is 205 mm and 230 mm in effective diameter	0.70 – 1.10	–
Front disc brake pad thickness mm			10	2.0
Front brake disc thickness mm			24	22.4
Front brake disc run-out mm		2WD	–	0.08
		4WD	–	0,06
Front disc brake drag force (tangential force of wheel mounting bolts) N			69 or less	–
Rear drum brake lining thickness mm			4.7	1.0
Rear drum inside diameter mm		2WD	254.0	256.0
		4WD	270.0	272.0
Front hub end play mm			0.05	–

LUBRICANTS

35100040105

Items	Specified lubricant
Brake fluid	DOT3 or DOT4
Brake piston seal	Repair kit grease
Guide pin boot inner surface	
Lock pin boot inner surface	
Piston boot mounting grooves	
Brake piston boot inner surface	
Lock pin bush inner surface	
Piston cup surface	
Rear brake shoe and backing plate contact surface	Brake grease SAE J310, NLGI No.1
Auto adjuster assembly	

SEALANTS

35100050108

Items	Specified sealant	Remarks
Vacuum switch	3M ATD Part No.8661 or equivalent	Semi-drying sealant
Shoe hold-down pin	3M ATD Part No.8513 or equivalent	Drying sealant

SPECIAL TOOLS

35100060095

Tool	Number	Name	Use
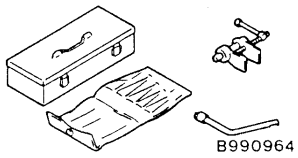	MB990964 MB990520 MB990623	Brake tool set	Pushing-in of the disc brake piston Installation of drum brake wheel cylinder piston cup

TROUBLESHOOTING

35100070081

Symptom	Probable cause	Remedy
Vehicle pulls to one side when brakes are applied	Grease or oil on pad or lining surface	Replace
	Inadequate contact of pad or lining	Correct
	Auto adjuster malfunction	Adjust
	Drum eccentricity or uneven wear	Repair or replace as necessary
Insufficient braking power	Low or deteriorated brake fluid	Refill or change
	Air in brake system	Bleed air
	Overheated brake rotor due to dragging of pad or lining	Correct
	Inadequate contact of pad or lining	
	Brake booster malfunction	
	Clogged brake line	
	Grease or oil on pad or lining surface	Replace
	Load sensing proportioning valve malfunction	
	Auto adjuster malfunction	Adjust
Increased pedal stroke (Reduced pedal to floor board clearance)	Air in brake system	Bleed air
	Worn lining or pad	Replace
	Broken vacuum hose	
	Faulty master cylinder	
	Brake fluid leaks	Correct
	Auto adjuster malfunction	Adjust
	Excessive push rod to master cylinder clearance	
Brake drag	Incomplete release of parking brake	Correct
	Clogged master cylinder return port	
	Incorrect parking brake adjustment	Adjust
	Improper push rod to master cylinder clearance	
	Faulty master cylinder piston return spring	Replace
	Worn brake pedal return spring	
	Broken rear drum brake shoe to shoe spring	
	Lack of lubrication in sliding parts	Lubricate

Symptom	Probable cause	Remedy
Insufficient parking brake function	Worn brake lining or pad	Replace
	Grease or oil on lining or pad surface	
	Parking brake cable sticking	
	Stuck wheel cylinder or caliper piston	
	Excessive parking brake lever stroke	Adjust the parking brake lever stroke or check the parking brake cable routing
	Auto adjuster malfunction	Adjust
Scraping or grinding noise when brakes are applied	Worn brake lining or pad	Replace
	Caliper to wheel interference	Correct or replace
	Dust cover to disc interference	
	Bent brake backing plate	
	Cracked drums or brake disc	
Squealing, groaning or chattering noise when brakes are applied	Disc brakes – Missing or damaged brake pad anti-squeak shim	Replace
	Brake drums and linings, discs and pads worn or scored	Correct or replace
	Improper lining parts	
	Disc brake – Burred or rusted calipers	Correct or deburr
	Dirty, greased, contaminated or glazed linings	Clean or replace
	Drum brakes – Weak, damaged or incorrect shoe hold-down springs, loose or damaged shoe hold-down pins and springs	Correct or replace
	Incorrect brake pedal or booster push rod	Adjust

Symptom	Probable cause	Remedy
Squealing noise when brakes are not applied	Bent or warped backing plate causing interference with drum	Replace
	Drum brakes – Weak, damaged or incorrect shoe-to-shoe spring	
	Poor return of brake booster, master cylinder or wheel cylinder	
	Loose or extra parts in brakes	Retighten
	Improper positioning of pads in caliper	Correct
	Improper installation of support mounting to caliper body	
	Improper machining of drum causing interference with backing plate or shoe	Replace drum
	Disc brakes – Rusted, stuck	Lubricate or replace
	Worn, damaged or insufficiently lubricated wheel bearings	
	Incorrect brake pedal or booster push rod	Adjust
Groaning, clicking or rattling noise when brakes are not applied	Stones or foreign material trapped inside wheel covers	Remove stones, etc.
	Loose wheel nuts	Retighten
	Disc brakes – Loose installation bolts	
	Worn, damaged or dry wheel bearings	Lubricate or replace
	Disc brakes – Failure of shim	Replace
	Disc brakes – Wear on sleeve	
	Incorrect brake pedal or booster push rod	Adjust

ON-VEHICLE SERVICE

35100090131

BRAKE PEDAL CHECK AND ADJUSTMENT

BRAKE PEDAL HEIGHT

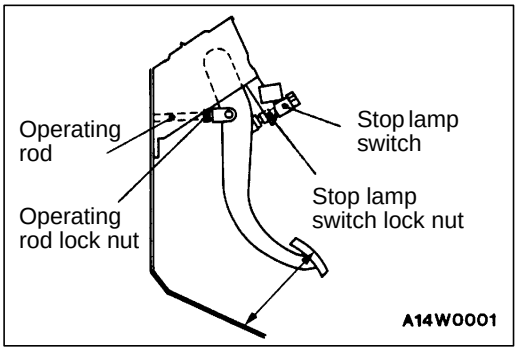

1. Turn back the carpet etc. under the brake pedal.
2. Measure the brake pedal height as illustrated. If it is not within the standard value, adjust as follows.

   Standard value: 176 – 181 mm (From the surface of melting seat to the face of pedal pad)

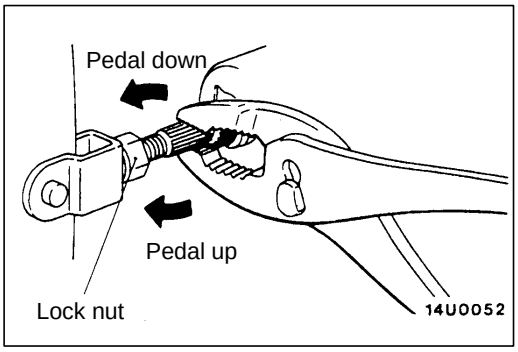

   (1) Disconnect the stop lamp switch connector, loosen the lock nut, and move the stop lamp switch to a position where it does not contact the brake pedal arm.
   (2) Adjust the brake pedal height by turning the operating rod with pliers (with the operating rod lock nut loosened).
   (3) Screw in the stop lamp switch until it contacts the brake pedal stopper (just before brake pedal is caused to move), return the stop lamp switch 1/2 to 1 turn and secure with the lock nut.

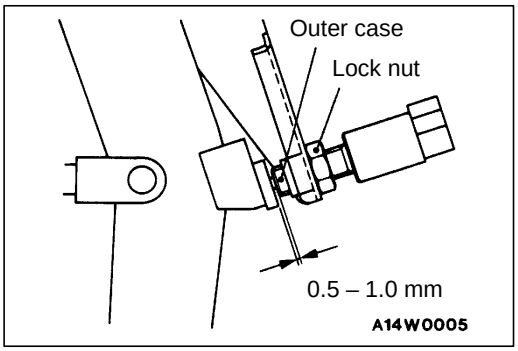

   (4) Connect the connector of the stop lamp switch.
   (5) Check to be sure that the stop lamp is not illuminated with the brake pedal released.
3. Return the carpet etc.

BRAKE PEDAL FREE PLAY

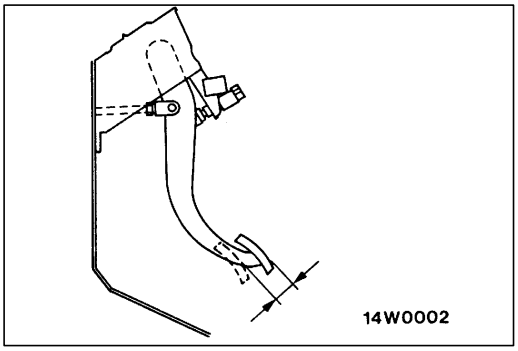

With the engine stopped, depress the brake pedal two or three times. After eliminating the vacuum in the brake booster, press the pedal down by hand, and confirm that the amount of movement before resistance is met (free play) is within the standard value range.

Standard value: 3 – 8 mm

If the free play exceeds the standard value, it is probably due to excessive play between the clevis pin and brake pedal arm.
Check for excessive clearance and replace faulty parts as required.

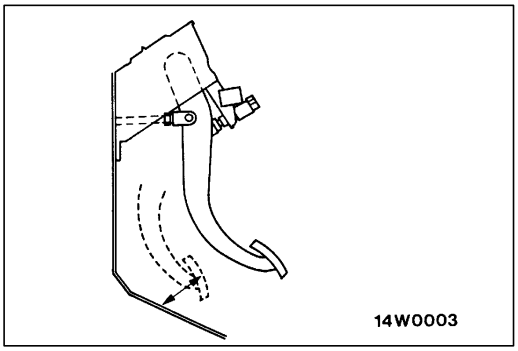

CREARANCE BETWEEN BRAKE PEDAL AND FLOOR BOARD

1. Turn back the carpet etc. under the brake pedal.
2. Start the engine, depress the brake pedal with approximately 490 N of force, and measure the clearance between the brake pedal and the floorboard.

   Standard value:
   95 mm or more (From the surface of melting seat to the face of pedal pad)
3. If the clearance is outside the standard value, check for air trapped in the brake line, clearance between the lining and the drum and dragging in the parking brake. Adjust and replace defective parts as required.
4. Return the carpet etc.

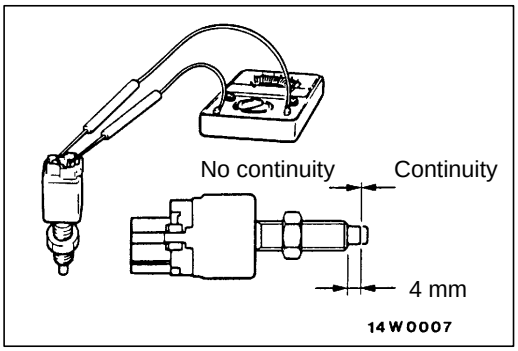

STOP LAMP SWITCH CHECK 35100890090

Connect a circuit tester to the stop lamp switch, and check whether or not there is continuity when the plunger of the stop lamp switch is pushed in and when it is released. The stop lamp switch is in good condition if there is no continuity when the plunger is pushed in to a depth of within 4 mm from the outer case edge surface, and if there is continuity when it is released.

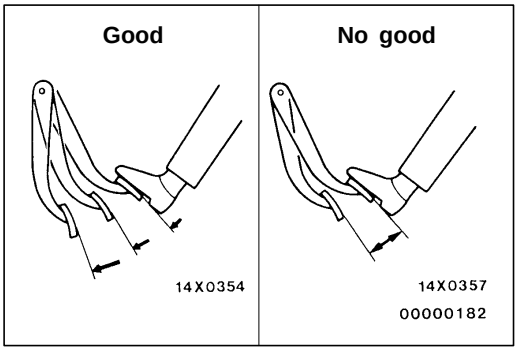

BRAKE BOOSTER OPERATING TEST 35100100087

For simple checking of the brake booster operation, carry out the following tests:

1. Run the engine for one or two minutes, and then stop it.
   If the pedal depresses fully the first time but gradually becomes higher when depressed succeeding times, the booster is operating properly, if the pedal height remains unchanged, the booster is defective.

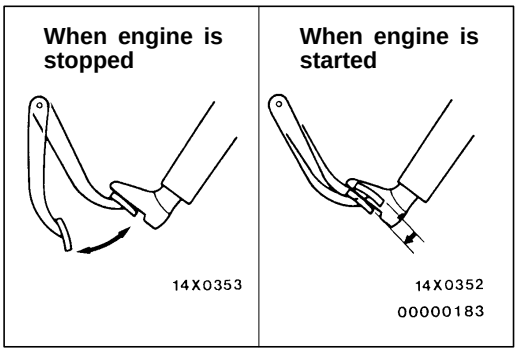

2. With the engine stopped, step on the brake pedal several times.
   Then step on the brake pedal and start the engine.
   If the pedal moves downward slightly, the booster is in good condition. If there is no change, the booster is defective.

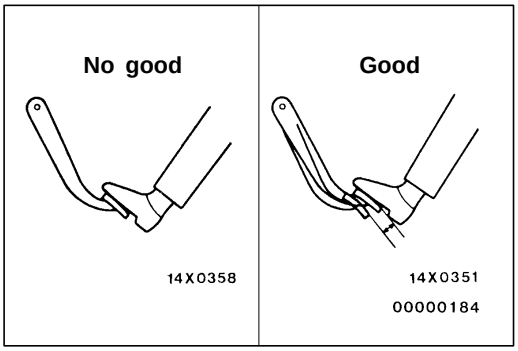

3. With the engine running, step on the brake pedal and then stop the engine.
   Hold the pedal depressed for 30 seconds. If the pedal height does not change, the booster is in good condition, if the pedal rises, the booster is defective.
   If the above three tests are okay, the booster performance can be determined as good.
   If one of the above three tests is not okay at last, the check valve, vacuum hose, or booster will be defective.

CHECK VALVE OPERATION CHECK 35100900113

1. Remove the vacuum hose. (Refer to P.35A-20.)

   Caution
   The check valve should not be removed from the vacuum hose.

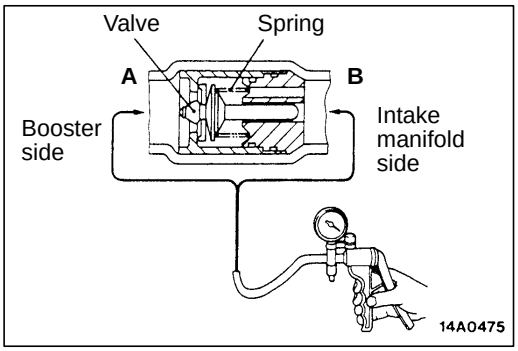

2. Check the operation of the check valve by using a vacuum pump.

Vacuum pump connection	Accept/reject criteria
Connection at the brake booster side (A)	A negative pressure (vacuum) is created and held.
Connection at the intake manifold side (B)	A negative pressure (vacuum) is not created.

   Caution
   If the check valve is defective, replace it as an assembly unit together with the vacuum hose.

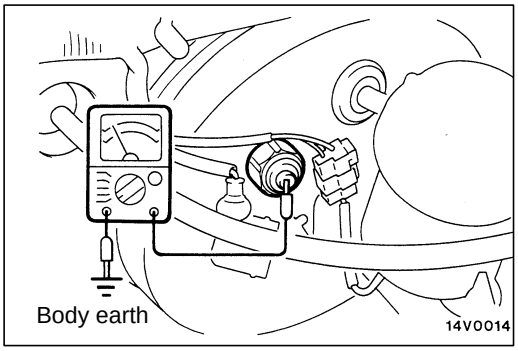

BRAKE BOOSTER VACUUM SWITCH CHECK <DIESEL-POWERED VEHICLES> 35100920034

1. Connect an ohmmeter to the connector of the vacuum switch.
2. Start the engine and check for continuity when the vacuum hose is connected, and when it is disconnected.
   The vacuum switch is in good condition if there is no continuity when the vacuum hose is connected, and if there is continuity when it is disconnected.

BLEEDING 35100140102

Caution
Use the specified brake fluid. Avoid using a mixture of the specified brake fluid and other fluid.

Specified brake fluid: DOT3 or DOT4

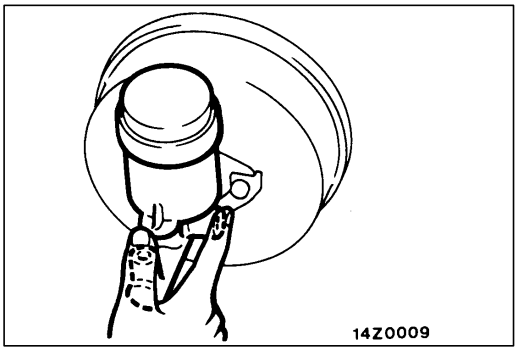

MASTER CYLINDER BLEEDING

The master cylinder used has no check valve, so if bleeding is carried out by the following procedure, bleeding of air from the brake pipeline will become easier. (When brake fluid is not contained in the master cylinder.)

(1) Fill the reserve tank with brake fluid.
(2) Keep the brake pedal depressed.
(3) Have another person cover the master cylinder outlet with a finger.
(4) With the outlet still closed, release the brake pedal.
(5) Repeat steps (2)–(4) three or four times to fill the inside of the master cylinder with brake fluid.

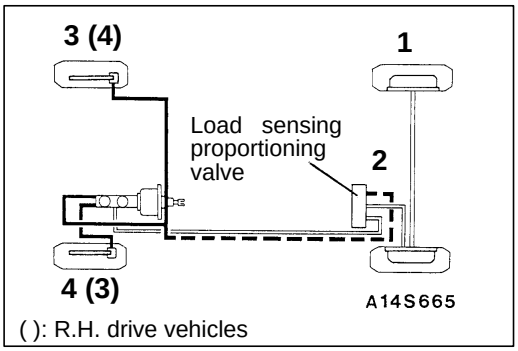

BRAKE PIPE LINE BLEEDING

Start the engine and bleed the air in the sequence shown in the figure.

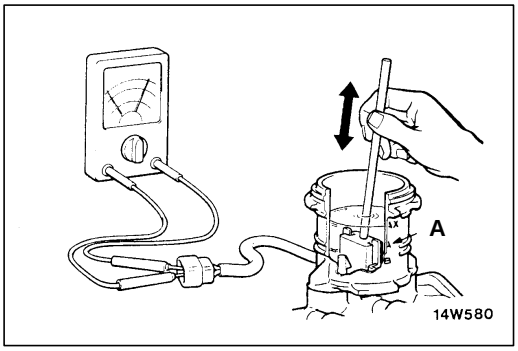

BRAKE FLUID LEVEL SENSOR CHECK

35100910086

The brake fluid level sensor is in good condition if there is no continuity when the float surface is above “A” and if there is continuity when the float surface is below “A”.

LOAD SENSING SPRING LENGTH CHECK AND ADJUSTMENT

35100120021

1. Park the vehicle on a level ground. The vehicle should be unloaded and supported only by wheels.

   Caution
   Never support the vehicle with jacks or other similar means.

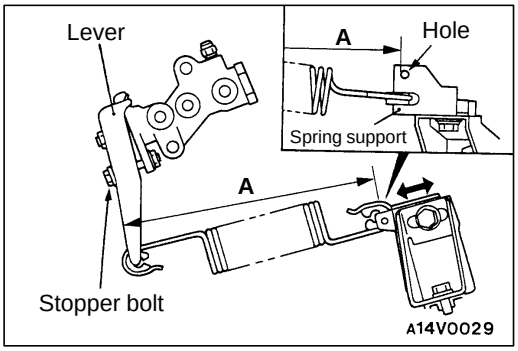

2. While the lever of the load sensing proportioning valve is touching the stopper bolt, install the spring support so that the distance (A) from the edge of the spring mounting section of the lever to the place on the spring support shown in the illustration is at the standard value.

   Standard value (A): 189 – 193 mm

3. If the spring length is not within the standard value, loosen the bolt attaching the support and adjust the distance by moving the support.

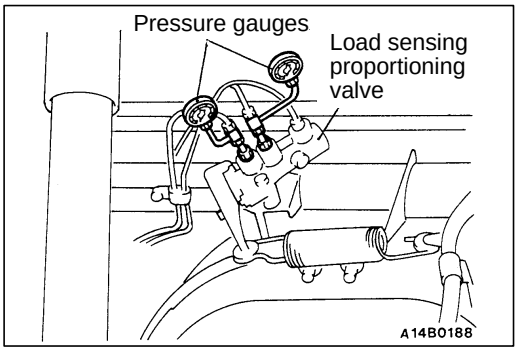

LOAD SENSING PROPORTIONING VALVE FUNCTION TEST

35100130024

1. Connect pressure gauges to the input and output ports of the load sensing proportioning valve.
2. Bleed the system. (Refer to P.35-12, GROUP 35B – On-vehicle Service.)

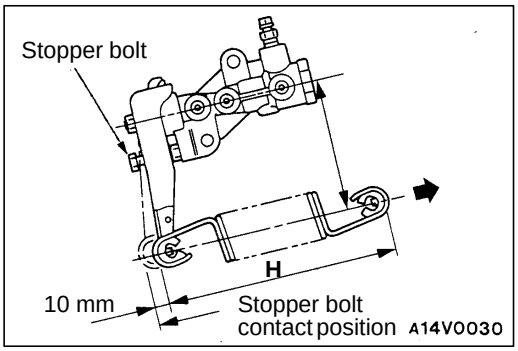

3. Disconnect the spring at the support side.
4. Place the spring so that it is in parallel with the load sensing proportioning valve, and pull in the direction indicated by the arrow so that its length H shown in the figure (the length between its ends) is as noted below.

   NOTE
   At this time the lever is pressed all the way to the load sensing proportioning valve.

   Standard value:

Items	Spring length H mm	Input fluid pressure kPa	Output fluid pressure kPa
2WD	190*1	5,884	3,625
		17,652	5,390
	215*2	17,652	14,393
4WD	190*1	5,884	4,309
		17,652	6,074
	215*2	17,652	16,310

   NOTE
   *1 and *2 indicate the applicable lengths for unladen and laden vehicles respectively.

5. After making the check, install the spring. Disconnect the pressure gauges from the load sensing proportioning valve and bleed the air. (Refer to P.35A-12, GROUP 35B – On-vehicle Service.)

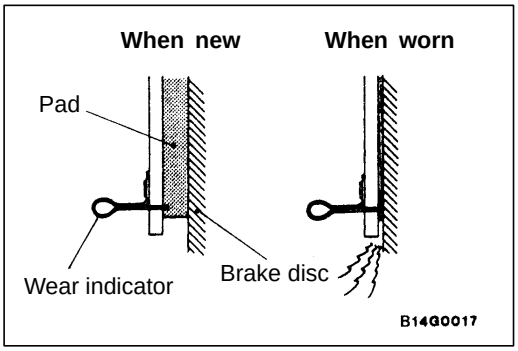

DISC BRAKE PAD CHECK AND REPLACEMENT

35100150129

NOTE
The brake pads have indicators that contact the brake disc when the brake pad thickness becomes 2 mm, and emit a squealing sound to warn the driver.

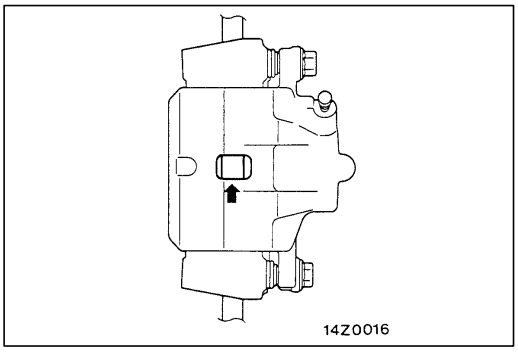

1. Check brake pad thickness through caliper body check port.

   Standard value: 10 mm
   Limit: 2.0 mm

   Caution
   1. When the limit is exceeded, replace the pads at both sides, and also the brake pads for the wheels on the opposite side at the same time.
   2. If there is a significant difference in the thicknesses of the pads on the left and right sides, check the sliding condition of the piston, lock pin and guide pin.

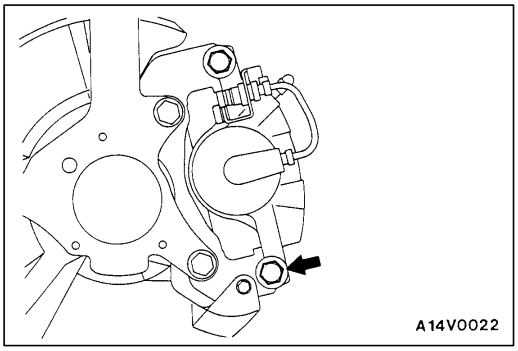

2. Remove the guide pin <2WD> or lock pin <4WD>. Lift the caliper assembly and retain with wire.

   Caution
   Do not wipe the special grease from the guide pin <2WD> or lock pin <4WD>. Do not contaminate the guide pin <2WD> or lock pin <4WD>.

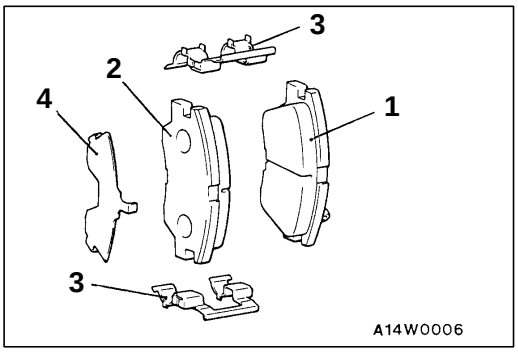

3. Remove the following parts from caliper support.
   (1) Pad & wear indicator assembly
   (2) Pad assembly
   (3) Clip
   (4) Outer shim
4. Measure hub torque with pad removed to measure brake drag torque after pad installation. (Refer to P.35A-25.)
5. Install the pad and caliper assembly, and check the brake drag force. (Refer to P.35A-25.)

FRONT DISC BRAKE ROTOR CHECK

35100270061

CAUTION

When servicing disc brakes, it is necessary to exercise caution to keep the disc brakes within the allowable service values in order to maintain normal brake operation.

Before re-finishing or re-processing the brake disc surface, the following conditions should be checked.

Inspection items	Remarks
Scratches, rust, saturated lining materials and wear	● If the vehicle is not driven for a certain period, the sections of the discs that are not in contact with lining will become rusty, causing noise and shuddering. ● If grooves resulting from excessive disc wear and scratches are not removed prior to installing a new pad assembly, there will momentarily be inappropriate contact between the disc and the lining (pad).
Run-out or drift	Excessive run-out or drift of the discs will increase the pedal depression resistance due to piston knock-back.
Change in thickness (parallelism)	If the thickness of the disc changes, this will cause pedal pulsation, shuddering and surging.
Inset or warping (flatness)	Overheating and improper handling while servicing will cause inset or warping.

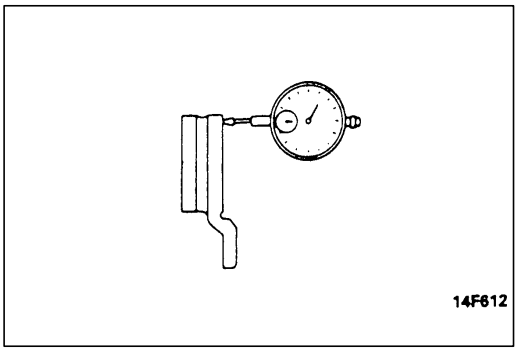

RUN-OUT CHECK AND CORRECTION

35100940016

1. Remove the caliper support; then raise the caliper assembly upward and secure by using wire.
2. Inspect the disc surface for grooves, cracks and rust. Clean the disc thoroughly and remove all rust.
3. Place a dial gauge approximately 5 mm from the outer circumference of the brake disc, and measure the run-out of the disc.

   Limit:
   <2WD> 0.08 mm
   <4WD> 0.06 mm

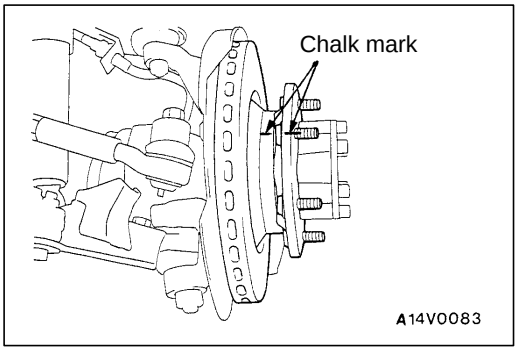

4. If the run-out of the brake disc is equivalent to or exceeds the limit specification, change the phase of the disc and hub, and then measure the run-out again.
   (1) Before removing the brake disc, chalk both sides of the wheel stud on the side at which run-out is greatest.

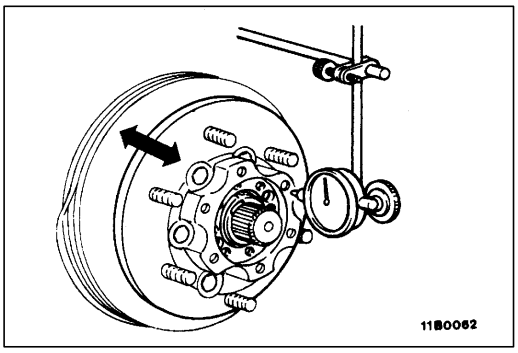

   (2) For 4WD, place a dial gauge as show in the illustration, and then move the hub in the axial direction and measure the play.

   Standard value: 0.05 mm

   If the play is equal to or exceeds the standard value, adjust the wheel bearing preload. (Refer to GROUP 26 – Front Hub Assembly <4WD>.)

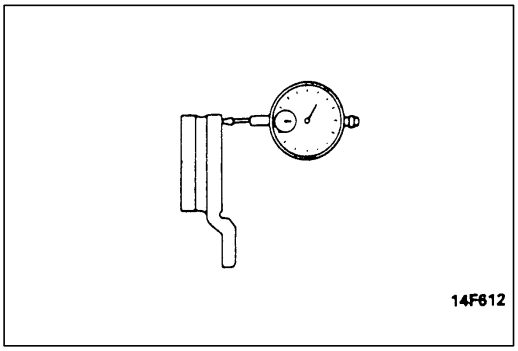

(3) If the play does not exceed the standard value specification, install the brake disc at a position 180° away from the chalk mark, and then check the run-out of the brake disc once again.

5. If the run-out cannot be corrected by changing the phase of the brake disc, replace the disc or turn rotor with on the car type brake lathe ("MAD, DL-8700PF" or equivalent).

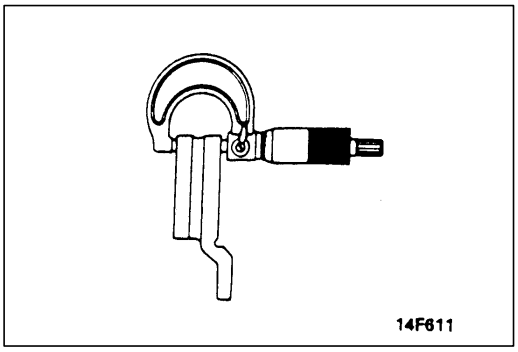

THICKNESS CHECK 35100160108

1. Using a micrometer, measure disc thickness at eight positions, approximately 45° apart and 10 mm in from the outer edge of the disc.

   Brake disc thickness
   Standard value: 24 mm
   Limit: 22.4 mm

   Thickness variation (at least 8 positions)
   The difference between any thickness measurements should not be more than 0.015 mm.
2. If the disc is beyond the limits for thickness, remove it and install a new one. If thickness variation exceeds the specification, replace the brake disc or turn rotor with on the car type brake lathe ("MAD, DL-8700PF" or equivalent).

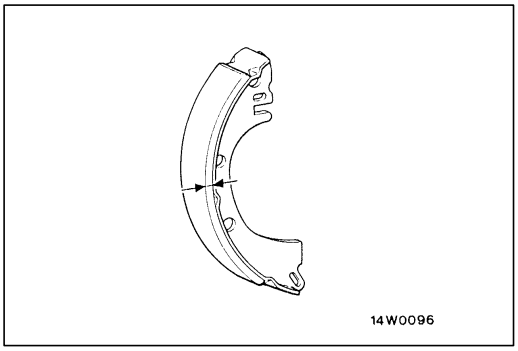

BRAKE LINING THICKNESS CHECK 35100300135

1. Remove the brake drum.
2. Measure the wear of the brake lining at the place worn the most.

   Standard value: 4.7 mm
   Limit: 1.0 mm

   Replace the shoe and lining assembly if brake lining thickness is less than the limit or if it is not worn evenly. For information concerning the procedures for installation of the shoe and lining assembly, refer to P.35A-30.

   Caution
   1. Whenever the shoe and lining assembly is replaced, replace both RH and LH assemblies as a set to prevent car from pulling to one side when braking.
   2. If there is a significant difference in the thickness of the shoe and lining assemblies on the left and right sides, check the sliding condition of the piston.

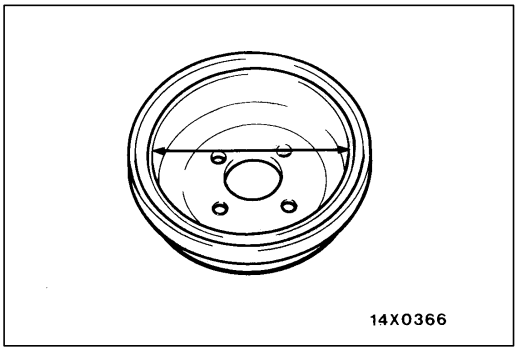

BRAKE DRUM INSIDE DIAMETER CHECK

35100320124

1. Remove the brake drum.
2. Measure the inside diameter of the brake drum at two or more locations.

   Standard value:
   <2WD> 254.0 mm
   <4WD> 270.0 mm

   Limit:
   <2WD> 256.0 mm
   <4WD> 272.0 mm

3. Replace brake drums, shoe and lining assembly when wear exceeds the limit value or is badly imbalanced.

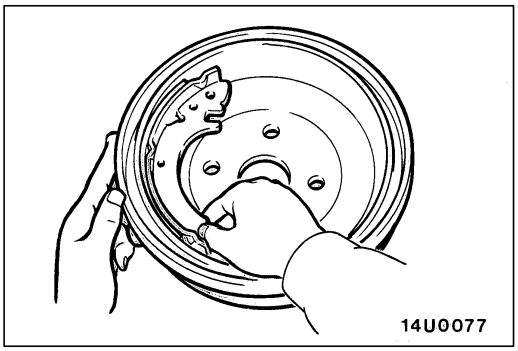

BRAKE LINING AND BRAKE DRUM CONNECTION CHECK

35100310138

1. Remove the brake drum.
2. Remove the shoe and lining assembly.
   (Refer to P.35A-30.)
3. Chalk inner surface of brake drum and rub with shoe and lining assembly.
4. Replace shoe and lining assembly or brake drums if there are any irregular contact area.

   NOTE
   Clean off chalk after check.

BRAKE PEDAL

35100340182

REMOVAL AND INSTALLATION

Post-installation Operation
- Brake Pedal Adjustment (Refer to P.35A-10.)

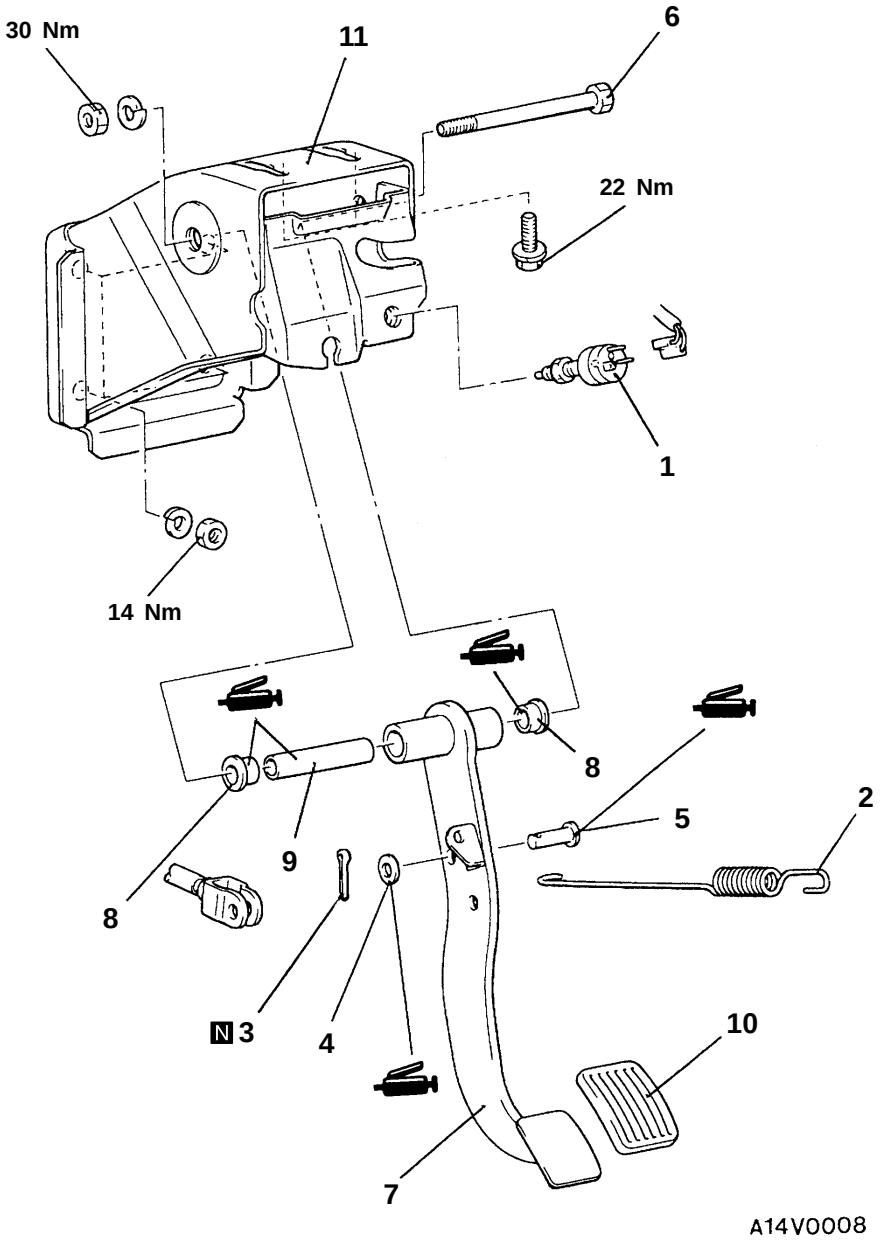

Removal steps

1. Stop lamp switch
2. Brake pedal return spring
3. Split pin
4. Washer
5. Clevis pin
6. Brake pedal shaft bolt
7. Brake pedal
8. Bushing
9. Pipe
10. Pedal pad
11. Pedal support member

MASTER CYLINDER AND BRAKE BOOSTER

35100370150

REMOVAL AND INSTALLATION

Pre-removal Operation
- Brake Fluid Draining

Post-installation Operation
- Brake Fluid Supplying
- Brake Line Bleeding (Refer to P.35A-12.)
- Brake Pedal Adjustment (Refer to P.35A-10.)

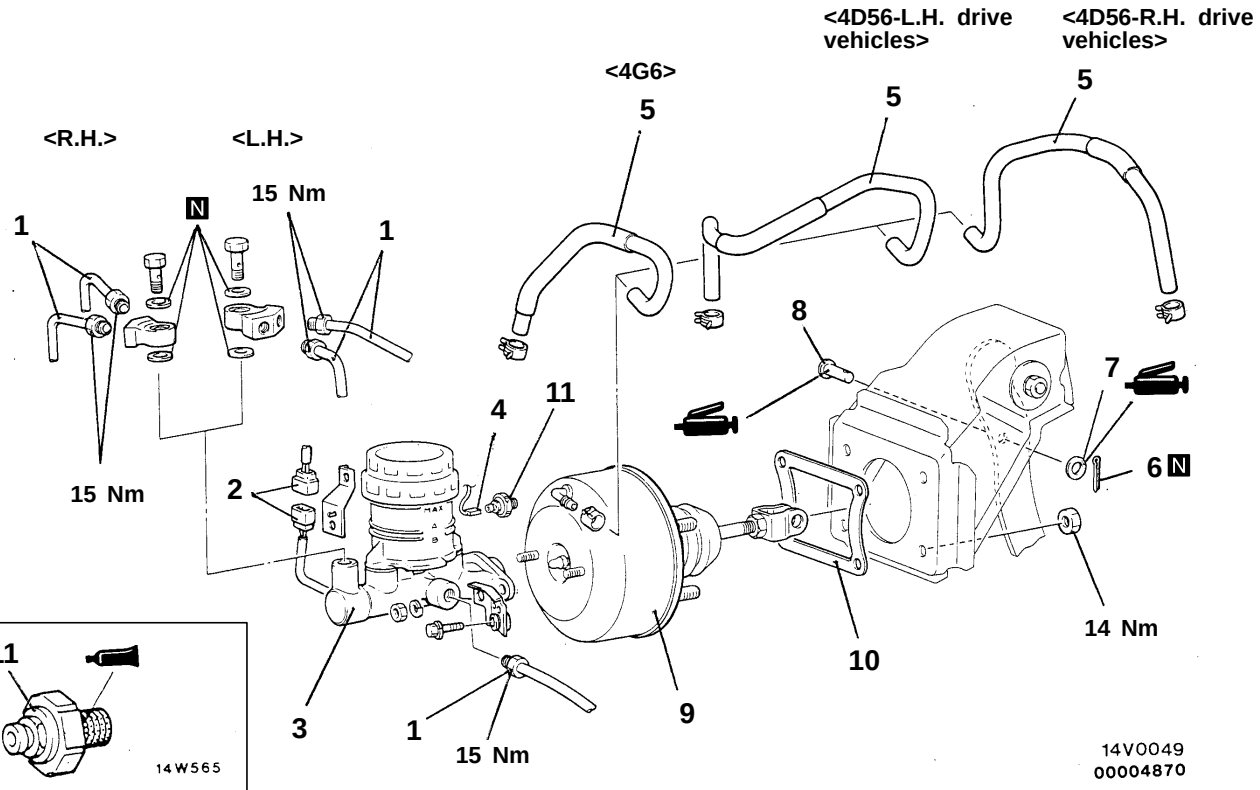

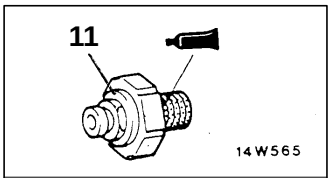

Sealant: 3M ATD Part No.8661 or equivalent

Removal steps

1. Brake tube connection
2. Brake fluid level sensor connector
3. Master cylinder assembly
- ▶B◀ ● Adjustment of clearance between brake booster push rod and primary piston
4. Vacuum switch connector <4D56>
- ▶A◀ 5. Vacuum hose (with built-in check valve)
6. Split pin
7. Washer
8. Clevis pin
9. Brake booster
10. Sealer
11. Vacuum switch <4D56>

Caution
Do not remove the check valve from the vacuum hose. If the check valve is defective, replace it together with the vacuum hose.

INSTALLATION SERVICE POINTS

▶A◀ VACUUM HOSE CONNECTION

Insert securely and completely until the vacuum hose at the engine side contacts the edge of the hexagonal part of the fitting, and then secure by using the hose clip.

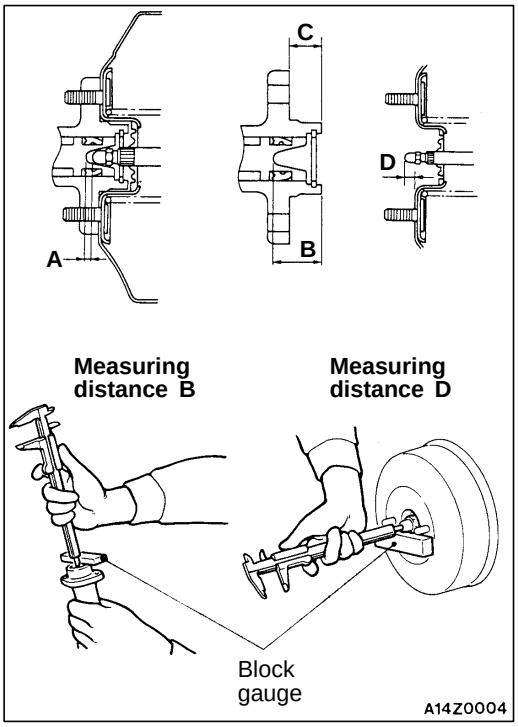

▶B◀ CLEARANCE ADJUSTMENT BETWEEN BRAKE BOOSTER PUSH ROD AND PRIMARY PISTON

Calculate clearance A from the B, C and D measurements.
A = B – C – D

Standard value:

Brake booster size		Clearance A standard valve mm
Single brake booster	Petrol-powered vehicles	0.65 – 1.05
	Diesel-powered vehicles	1.00 – 1.40
Tanden brake booster	Vehicle which brake booster of power cylinder is 180 mm and 205 mm in effective diameter	0.90 – 1.30
	Vehicle which brake booster of power cylinder is 205 mm and 230 mm in effective diameter	0.70 – 1.10

NOTE
When brake booster negative pressure (petrol-powered vehicles: –66.7 kPa, diesel-powered vehicles: –93.3 kPa) is applied, clearance value will become 0.10 – 0.50 mm.

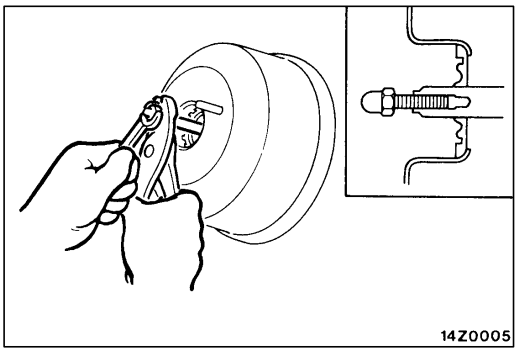

If the clearance is not within the standard value range, adjust by changing the push rod length by turning the screw of the push rod.

MASTER CYLINDER

35100420114

DISASSEMBLY AND REASSEMBLY

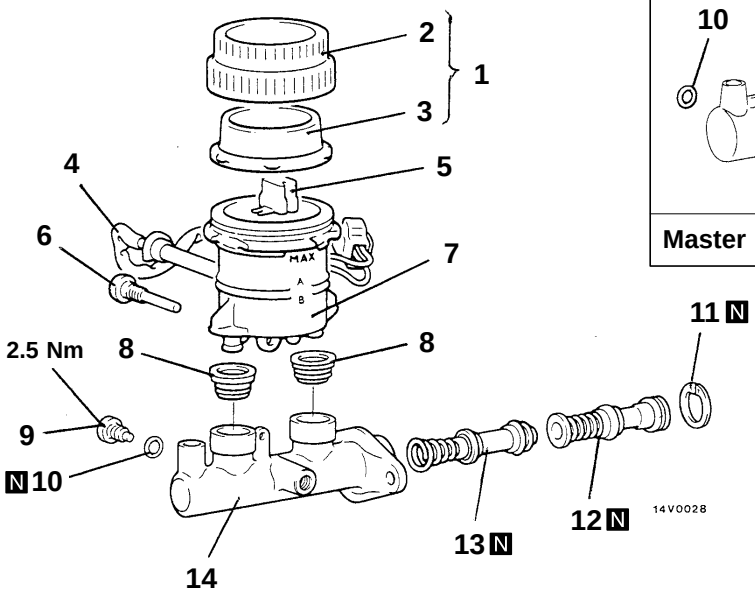

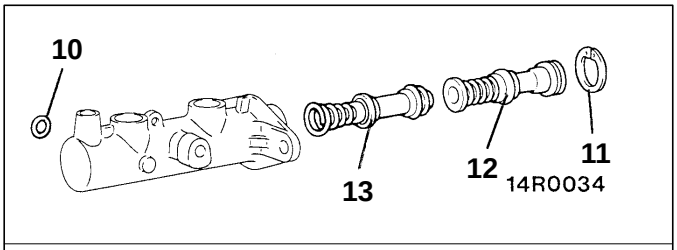

Master cylinder kit

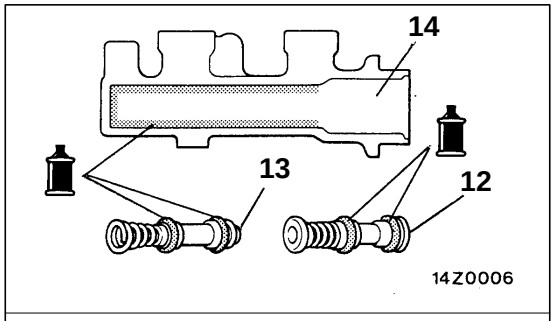

Brake fluid: DOT3 or DOT4

00004871

Disassembly steps

1. Reservoir cap assembly
2. Reservoir cap
3. Diaphragm
4. Brake fluid level sensor
5. Float
6. Reservoir stopper bolt
7. Reservoir tank
8. Reservoir seal
9. ◀A▶ Piston stopper bolt
10. Gasket
11. ◀A▶ Piston stopper ring
12. Primary piston assembly
13. Secondary piston assembly
14. Master cylinder body

Caution
Do not disassemble the primary piston and secondary piston assembly.

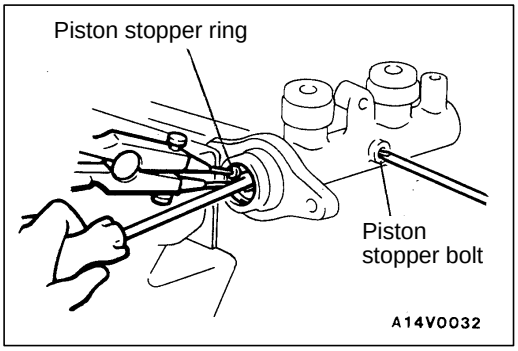

DISASSEMBLY SERVICE POINT

◀A▶ PISTON STOPPER BOLT/PISTON STOPPER RING DISASSEMBLY

Remove the piston stopper bolt and piston stopper ring while depressing the piston.

INSPECTION

35100430056

- Check the inner surface of master cylinder body for rust or pitting.
- Check the primary and secondary pistons for rust, scoring, wear or damage.
- Check the diaphragm for cracks and wear.

LOAD SENSING PROPORTIONING VALVE

35100540018

REMOVAL AND INSTALLATION

Pre-removal Operation
- Brake Fluid Draining

Post-installation Operation
- Brake Fluid Supplying
- Brake Line Bleeding (Refer to P.35A-12.)

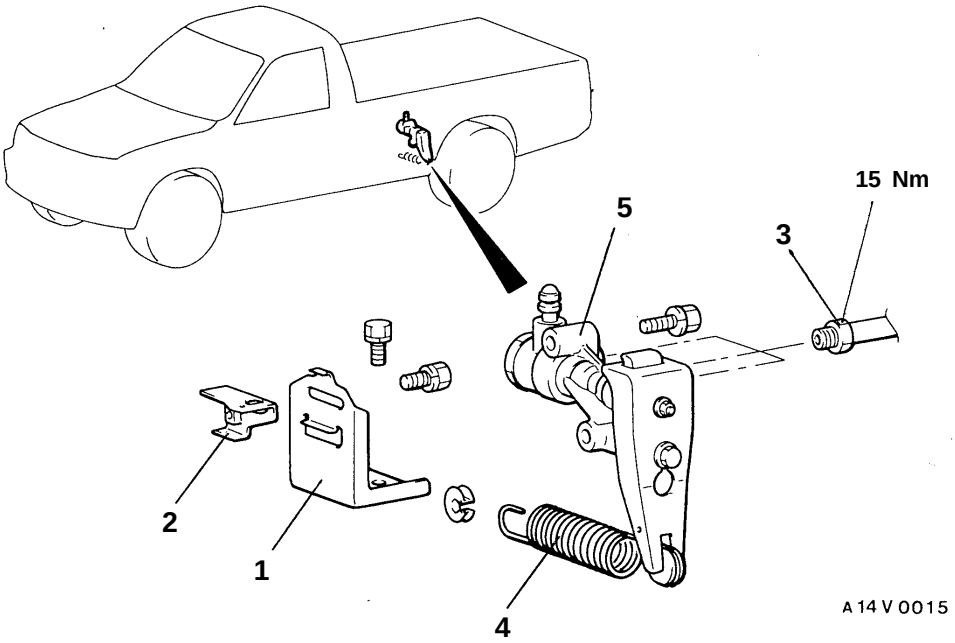

Removal steps

1. Spring holder
▶A◀ 2. Spring support
3. Brake tube connection
4. Load sensing spring
5. Load sensing proportioning valve

Caution
Do not disassemble the load sensing proportioning valve.

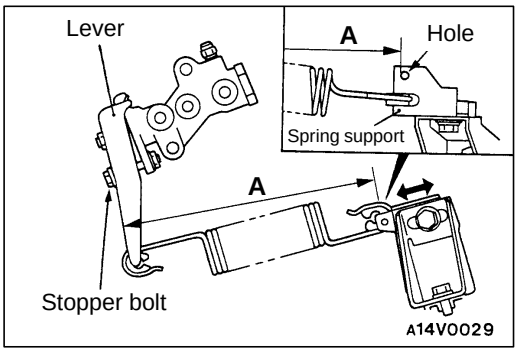

INSTALLATION SERVICE POINT

▶A◀ SPRING SUPPORT INSTALLATION

While the lever of the load sensing proportioning valve is touching the stopper bolt, install the spring support so that the distance (A) from the edge of the spring mounting section of the lever to the place on the spring support shown in the illustration is within the standard value.

Standard value (A): 189 – 193 mm

FRONT DISC BRAKE

35100600112

REMOVAL AND INSTALLATION

Pre-removal Operation
- Brake Fluid Draining

Post-installation Operation
- Brake Fluid Supplying
- Brake Line Bleeding (Refer to P.35A-12.)

<2WD>

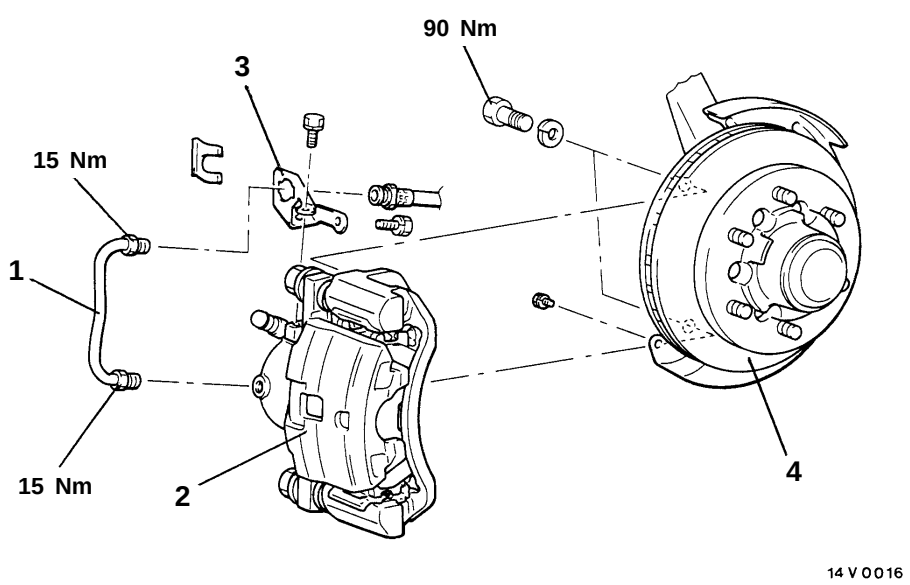

<4WD>

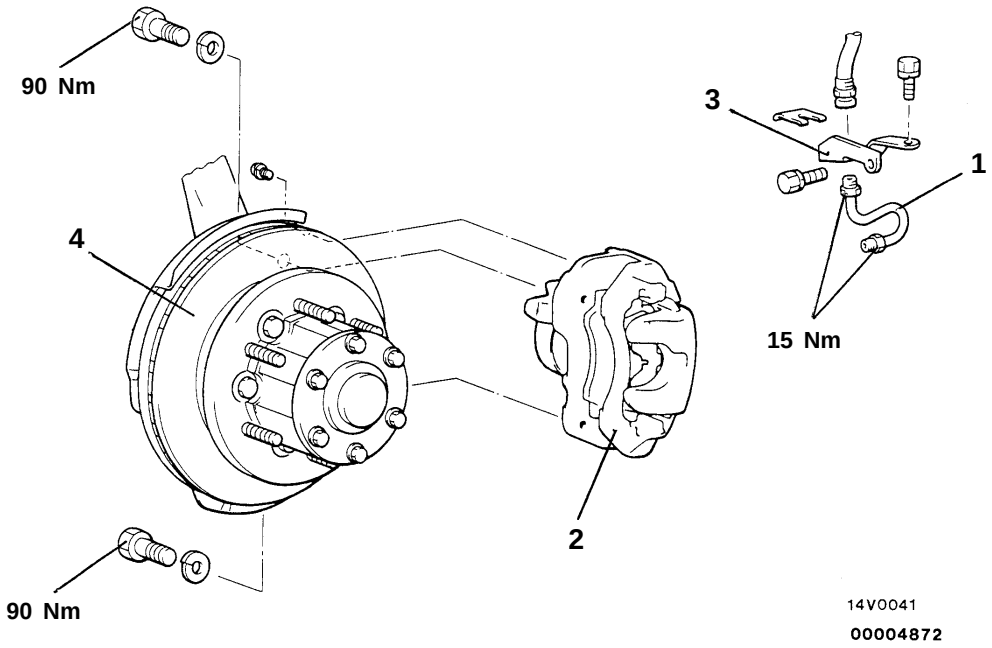

Removal steps

1. Brake tube
2. ▶A◀ Front brake assembly
3. Brake hose bracket
4. Brake disc (Refer to GROUP 26 – Front Hub Assembly.)

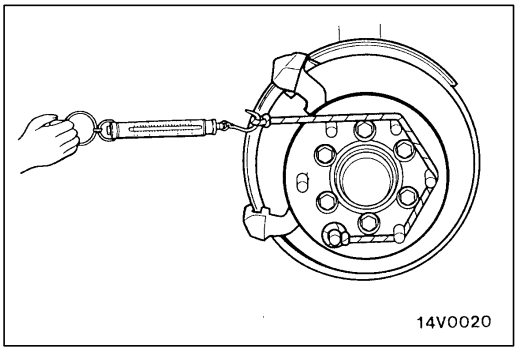

INSTALLATION SERVICE POINT

▶A◀ FRONT BRAKE ASSEMBLY INSTALLATION

1. Measure hub torque (A) with pad removed to measure brake drag torque after pad installation.
2. Securely attach the pad clip to the caliper support.

   Caution
   For the vehicles with 4WD, engage 2WD before measurement.

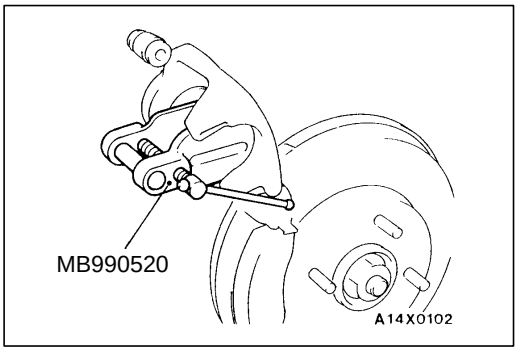

3. Clean the piston and insert into cylinder with special tool.
4. Be careful that the piston boot does not become caught, when lowering the caliper assembly and install the lock pin.
5. Check brake drag torque as follows.
   (1) Start engine and hold brake pedal down for 5 seconds. (Pedal depression force: approx. 196 N)
   (2) Stop engine.
   (3) Turn brake disc forward 10 times.

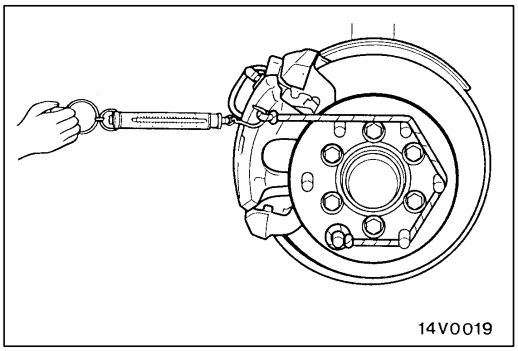

   (4) Check hub torque (B) with spring balance.
   (5) Calculate drag torque of the disc brake [difference between hub torque (B) and hub torque (A)].

   Standard value: 69 N or less

6. If the brake drag torque exceeds the standard value, disassemble and clean the piston. Check for corrosion or worn piston seal, and check the sliding condition of the lock pin and guide pin.

DISASSEMBLY AND REASSEMBLY

35100620132

<2WD>

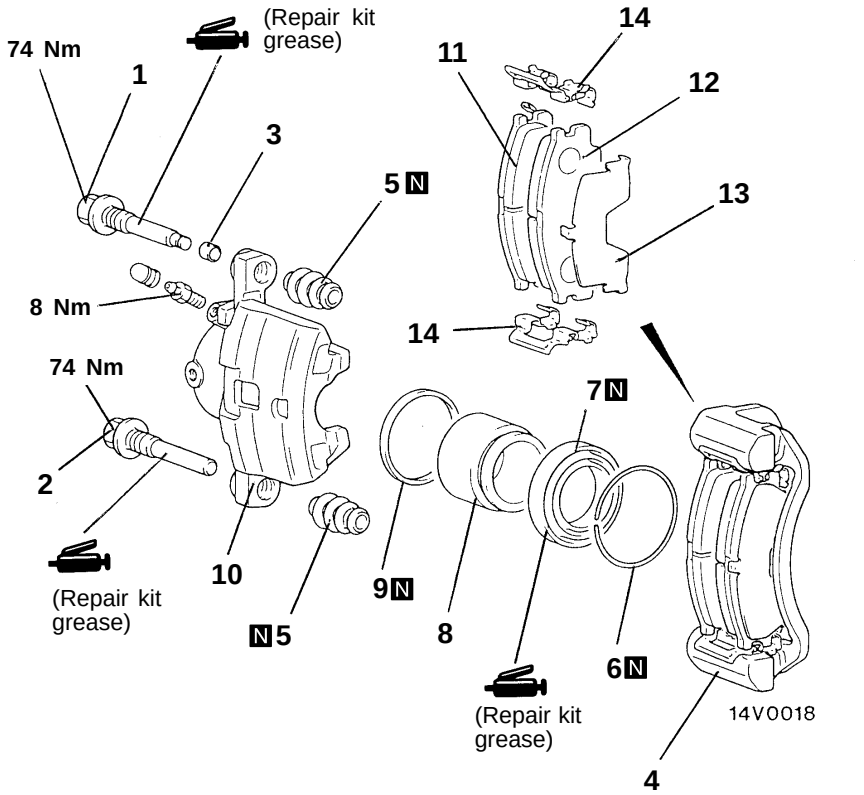

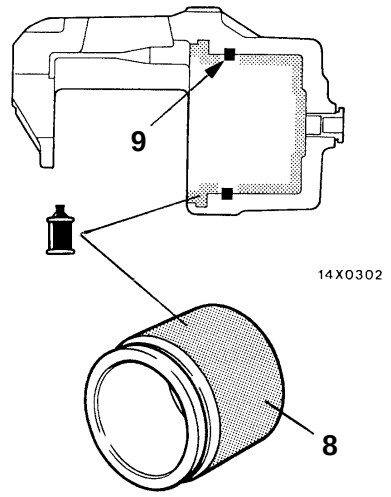

Caution
The piston seal inside the seal and boot kit is coated with special grease, so do not wipe this grease off.

Brake fluid: DOT3 or DOT4

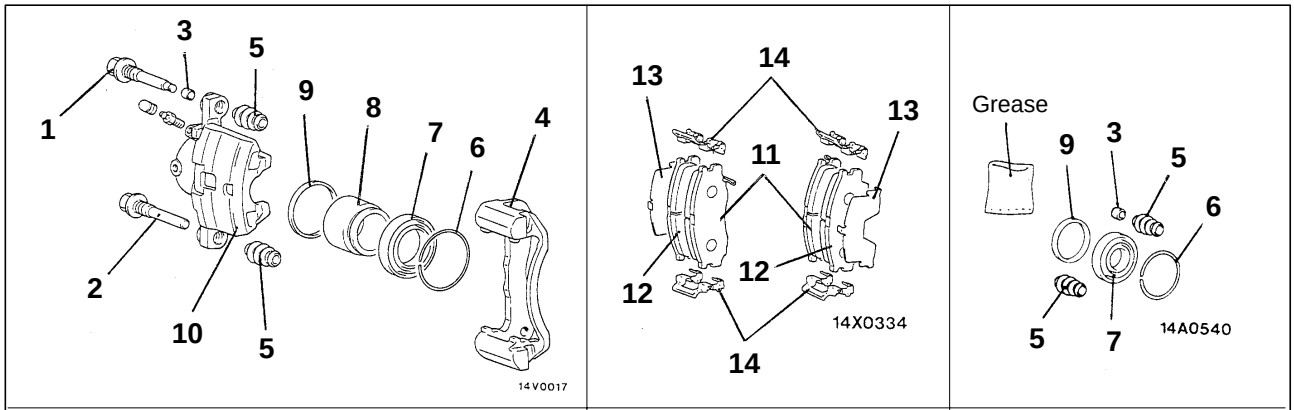

Brake caliper kit	Pad repair kit	Seal and boots repair kit

00004873

Caliper assembly disassembly steps

- ▶A◀ 1. Lock pin
- ▶A◀ 2. Guide pin
- 3. Bushing
- 4. Caliper support (pad, clip and shim)
- 5. Pin boot
- 6. Boot ring
- ◀A▶ 7. Piston boot
- ◀A▶ 8. Piston
- ◀B▶ 9. Piston seal
- 10. Caliper body

Pad assembly disassembly steps

- ▶A◀ 1. Lock pin
- ▶A◀ 2. Guide pin
- 3. Bushing
- 4. Caliper support (pad, clip and shim)
- 11. Pad and wear indicator assembly
- 12. Pad assembly
- 13. Outer shim
- 14. Clip

<4WD>

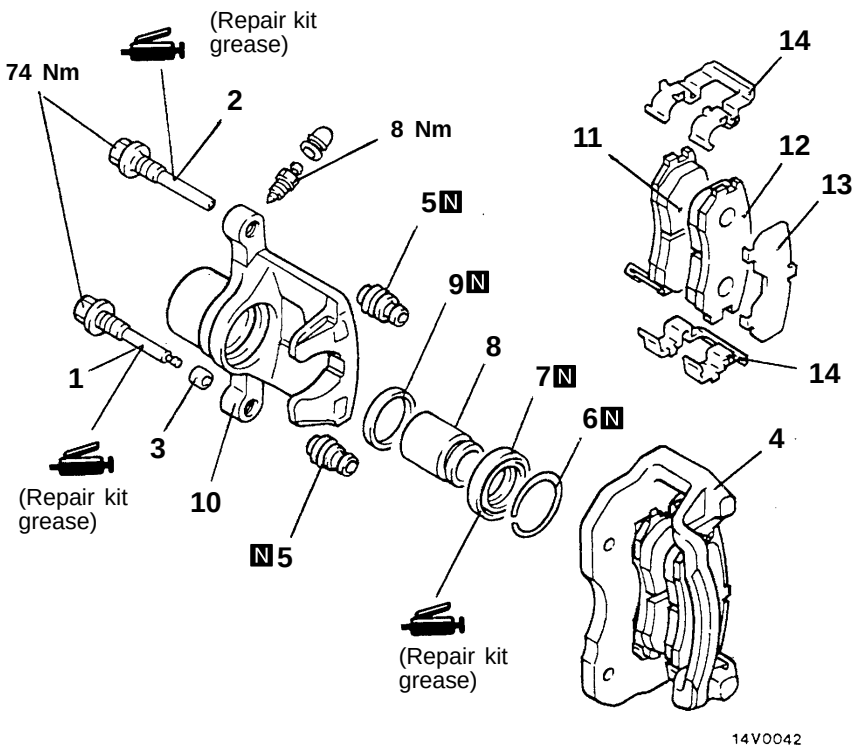

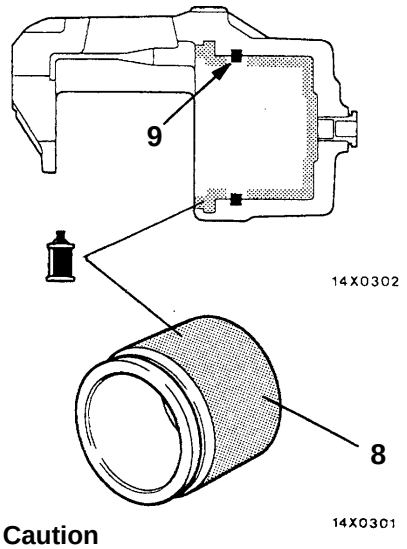

Caution
The piston seal inside the seal and boot kit is coated with special grease, so do not wipe this grease off.

Brake fluid: DOT3 or DOT4

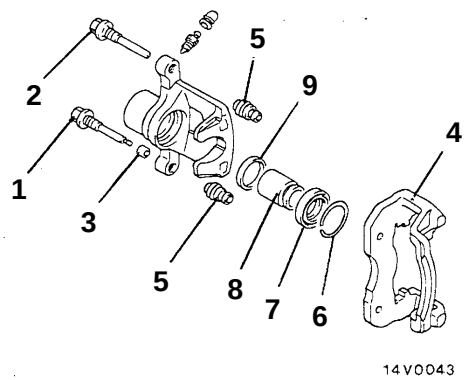

Brake caliper kit

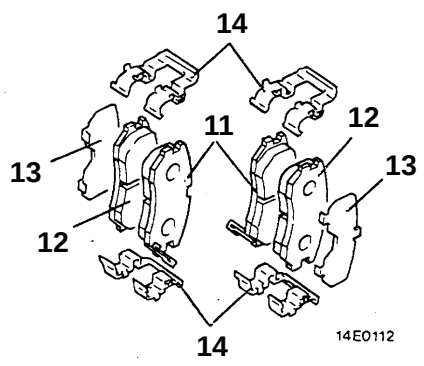

Pad repair kit

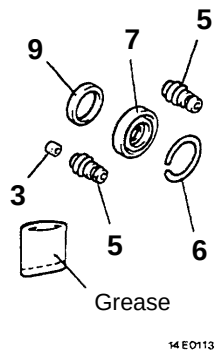

Seal and boot repair kit

00004874

Caliper assembly disassembly steps

- ▶A◀ 1. Lock pin
- ▶A◀ 2. Guide pin
- 3. Bushing
- 4. Caliper support (pad, clip and shim)
- 5. Pin boot
- 6. Boot ring
- ◀A▶ 7. Piston boot
- ◀A▶ 8. Piston
- ◀B▶ 9. Piston seal
- 10. Caliper body

Pad assembly disassembly steps

- ▶A◀ 1. Lock pin
- ▶A◀ 2. Guide pin
- 3. Bushing
- 4. Caliper support (pad, clip and shim)
- 11. Pad and wear indicator assembly
- 12. Pad assembly
- 13. Outer shim
- 14. Clip

DISASSEMBLY SERVICE POINTS

When disassembling the front disc brakes, disassemble both sides (left and right) as a set.

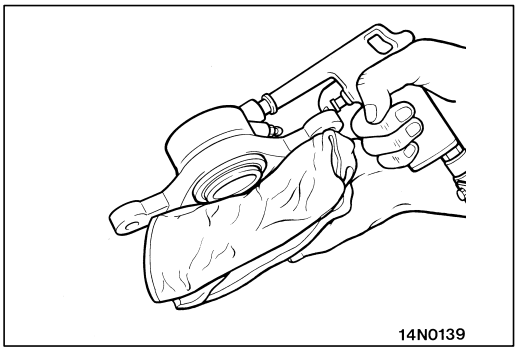

◀A▶ PISTON BOOT/PISTON REMOVAL

Protect caliper body with cloth. Blow compressed air through brake hose to remove piston boot and piston.

Caution
Blow compressed air gently.

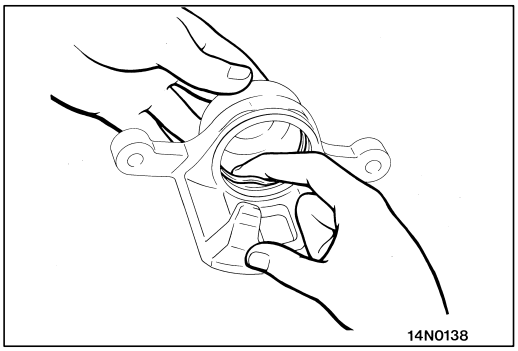

◀B▶ PISTON SEAL REMOVAL

(1) Remove piston seal with finger tip.

Caution
Do not use a flat-tipped screwdriver or other tool to prevent damage to inner cylinder.

(2) Clean piston surface and inner cylinder with trichloroethylene, alcohol or specified brake fluid.

Specified brake fluid: DOT3 or DOT4

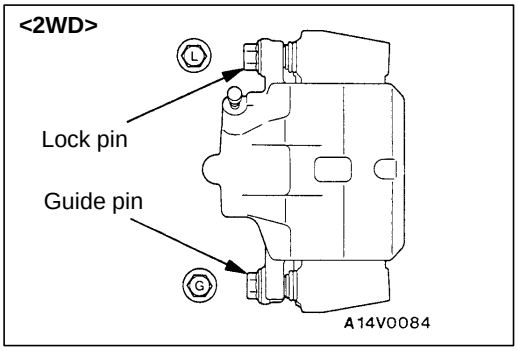

REASSEMBLY SERVICE POINT

▶A◀ LOCK PIN/GUIDE PIN INSTALLATION

Install the lock pin and guide pin to the caliper body as shown in the illustration.

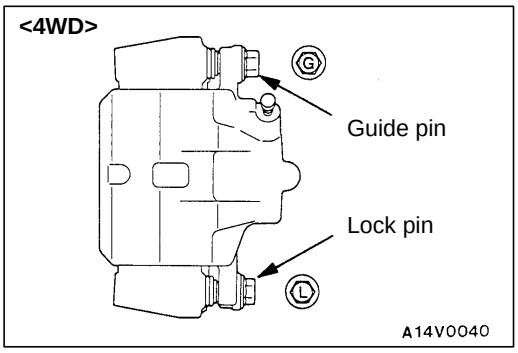

INSPECTION

35100630104

- Check cylinder for wear, damage or rust.
- Check piston surface for wear, damage or rust.
- Check caliper body or sleeve for wear.
- Check pad for damage or adhesion of grease, check backing metal for damage.

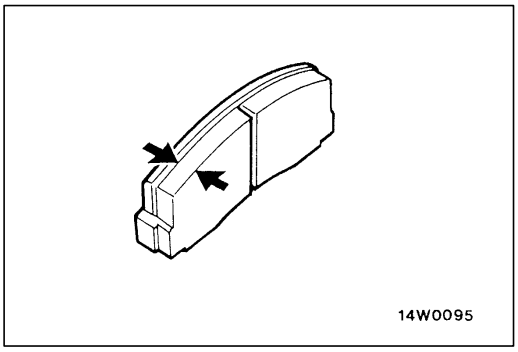

PAD WEAR CHECK

Measure the thickness at the thinnest and worn area of the pad.
Replace the pad assembly if pad thickness is less than the limit value.

Standard value: 10 mm
Limit: 2.0 mm

Caution

1. **Replace the pads always at both sides, and also the brake pads for the wheels on the opposite side at the same time.**
2. **If there is significant difference in the thicknesses of the pads on the left and right sides, check the sliding condition of the piston, lock pin and guide pin.**

REAR DRUM BRAKE

35100750091

REMOVAL AND INSTALLATION

Pre-removal Operation
- Loosening the Parking Brake Cable Adjusting Nut.
- Brake Fluid Draining

Post-installation Operation
- Brake Fluid Filling and Air Bleeding (Refer to P.35A-12 or GROUP 35B – On-vehicle Service.)
- Parking Brake Lever Stroke Adjustment (Refer to GROUP 36 – On-vehicle Service.)

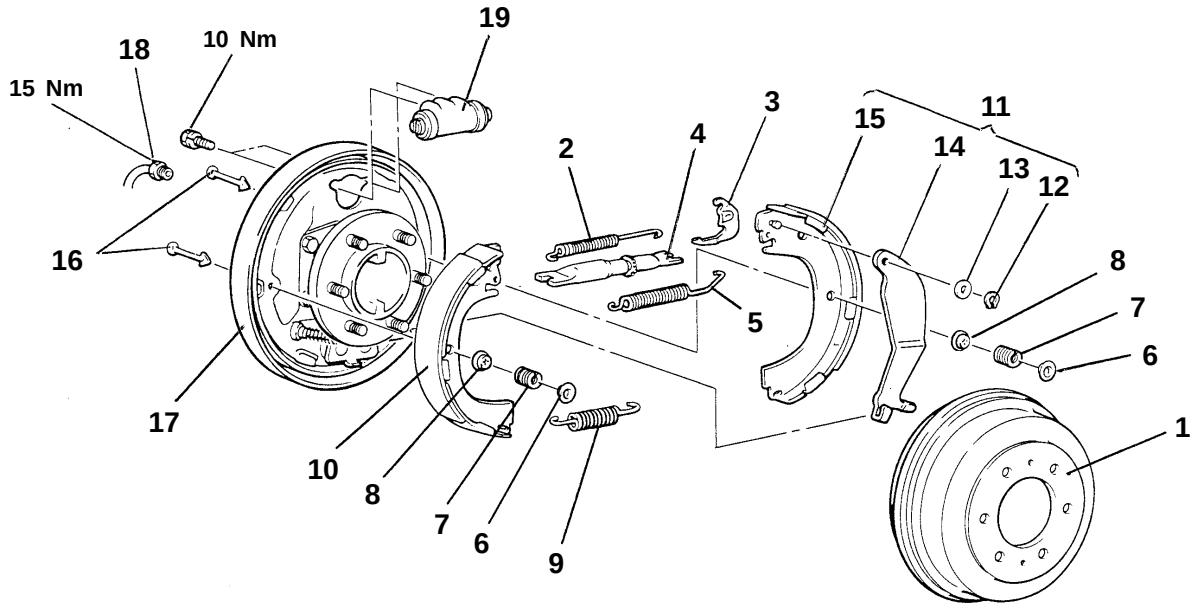

14V0027

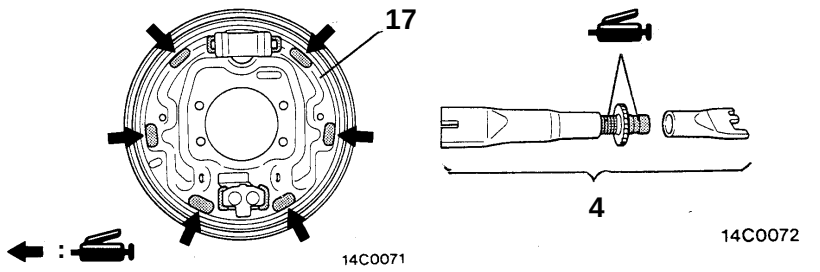

Specified grease: Brake grease SAE J310, NLGI No.1

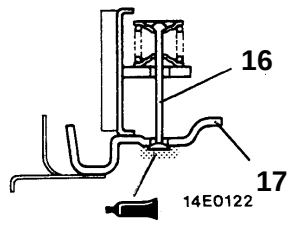

Sealant: 3M ATD Part No.8513 or equivalent

00004875

Rear drum brake removal steps

1. Brake drum
2. Shoe-to-lever spring
3. Adjuster lever
4. Auto adjuster assembly
5. Retainer spring
6. Shoe hold-down cup
7. Shoe hold-down spring
8. Shoe hold-down cup
9. Shoe-to-shoe spring
10. Shoe and lining assembly
11. Shoe and lever assembly

◀A▶ ▶B◀ 12. Retainer

▶A◀ 13. Wave washer
14. Parking lever
15. Shoe and lining assembly
16. Shoe hold-down pin
17. Backing plate (Refer to GROUP 27 – Rear Axle Shaft.)

Wheel cylinder removal steps

1. Brake drum
18. Brake tube connection
19. Wheel cylinder

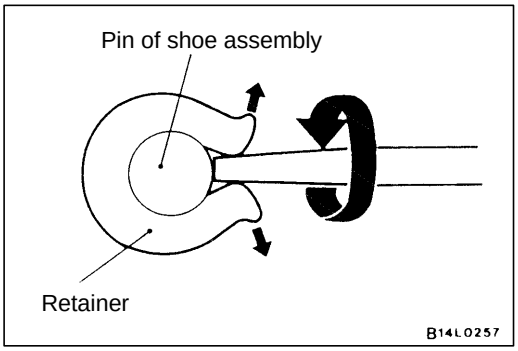

REMOVAL SERVICE POINT

◀A▶ RETAINER REMOVAL

Use a flat-tipped screwdriver or the like to open up the retainer joint, and remove retainer.

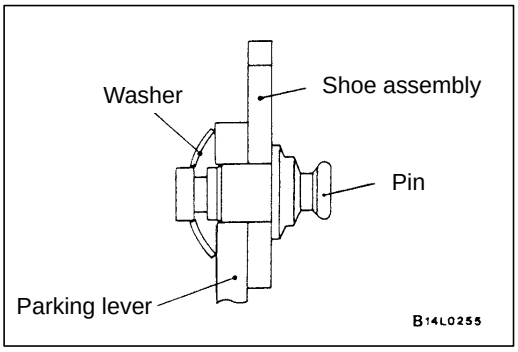

INSTALLATION SERVICE POINTS

▶A◀ WAVE WASHER INSTALLATION

Install the washer in the direction shown in the illustration.

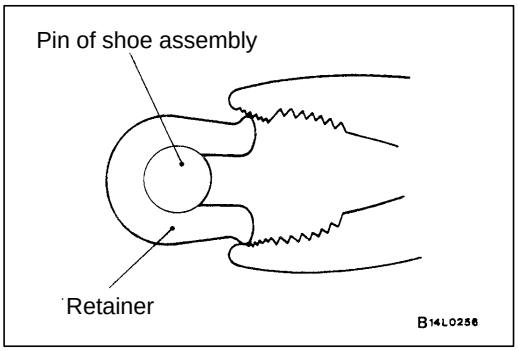

▶B◀ RETAINER INSTALLATION

Use pliers or the like to install the retainer or the pin positively.

WHEEL CYLINDER
DISASSEMBLY AND REASSEMBLY

35100770080

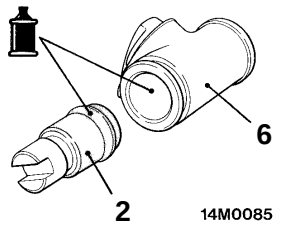	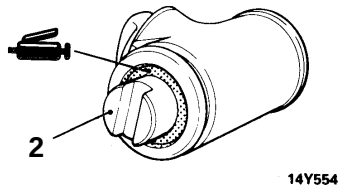	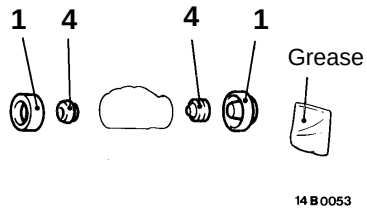
Brake fluid: DOT3 or DOT4	**Grease: Repair kit grease**	**Wheel cylinder repair kit**

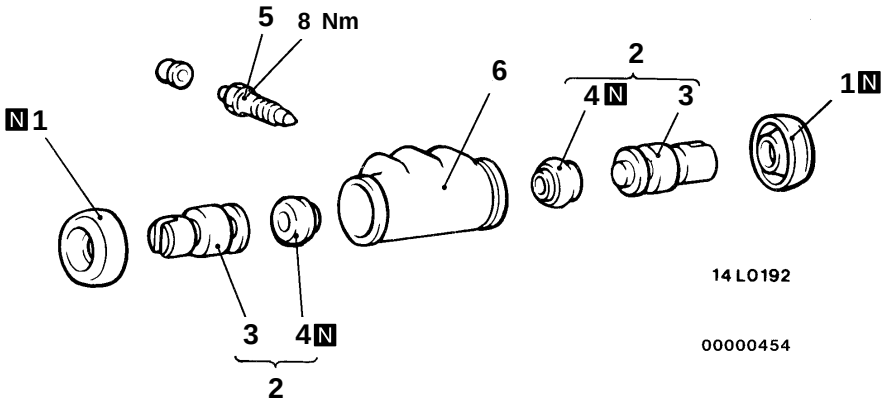

Disassembly steps

1. Boots
2. Piston assembly
3. ▶A◀ Pistons
4. ▶A◀ Piston cups
5. Bleeder screw
6. Wheel cylinder body

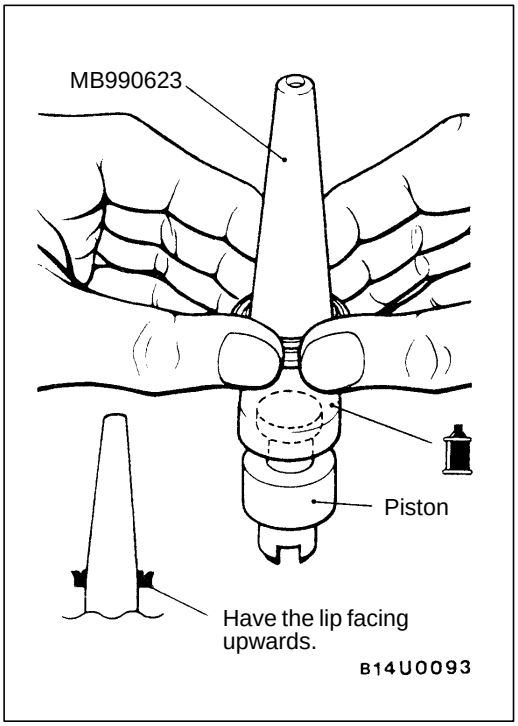

REASSEMBLY SERVICE POINT

▶A◀ PISTON CUP/PISTON REASSEMBLY

(1) Use alcohol or specified brake fluid to clean the wheel cylinder and the piston.

(2) Apply the specified brake fluid to the piston cups and the special tool.

Specified brake fluid: DOT3 or DOT4

(3) Set the piston cup on the special tool with the lip of the cup facing up, fit the cup onto the special tool, and then slide it down the outside of the tool into the piston groove.

Caution
In order to keep the piston cup from becoming twisted or slanted, slide the piston cup down the tool slowly and carefully, without stopping.

INSPECTION

35100780069

Check the piston and wheel cylinder walls for rust or damage, and if there is any abnormality, replace the entire wheel cylinder assembly.

NOTES

GROUP 35A
BASIC BRAKE SYSTEM

GENERAL

OUTLINE OF CHANGE

- The following service procedures have been established due to the changes of 16-inch 2-pot disc brake <Vehicles with over fender>.

FRONT DISC BRAKE

REMOVAL AND INSTALLATION

Pre-removal Operation
- Brake Fluid Draining

Post-installation Operation
- Brake Fluid Supplying
- Brake Line Bleeding

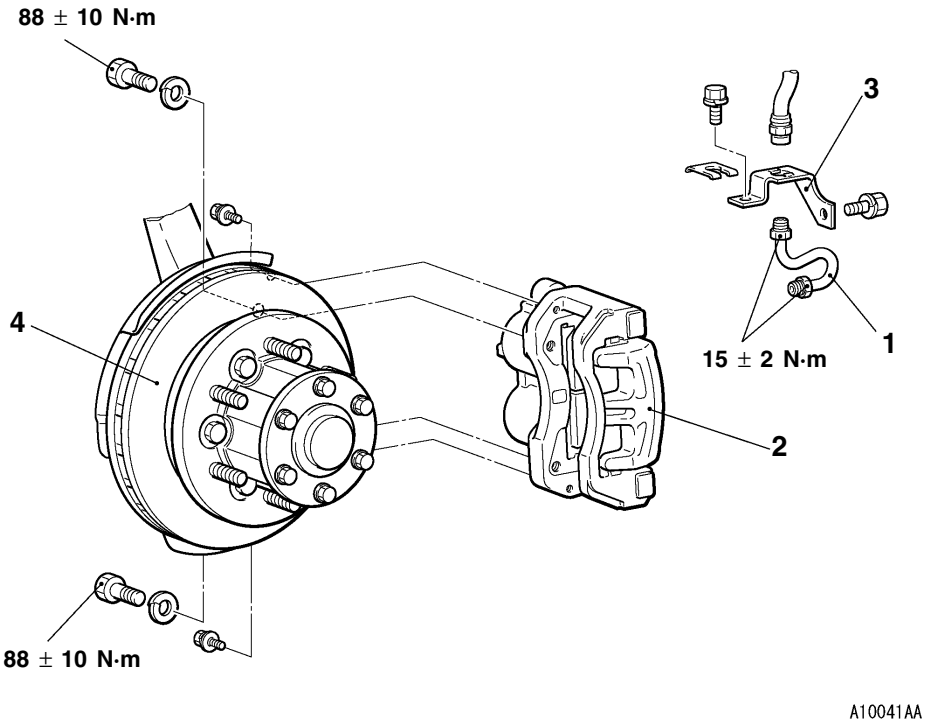

Removal steps

1. Brake tube
▶A◀ 2. Front brake assembly
3. Brake hose bracket
4. Brake disc (Refer to '97 L200 Workshop Manual GROUP 26 – Front Hub Assembly)

NOTE
For service point, refer to the Basic Manual.

DISASSEMBLY AND REASSEMBLY

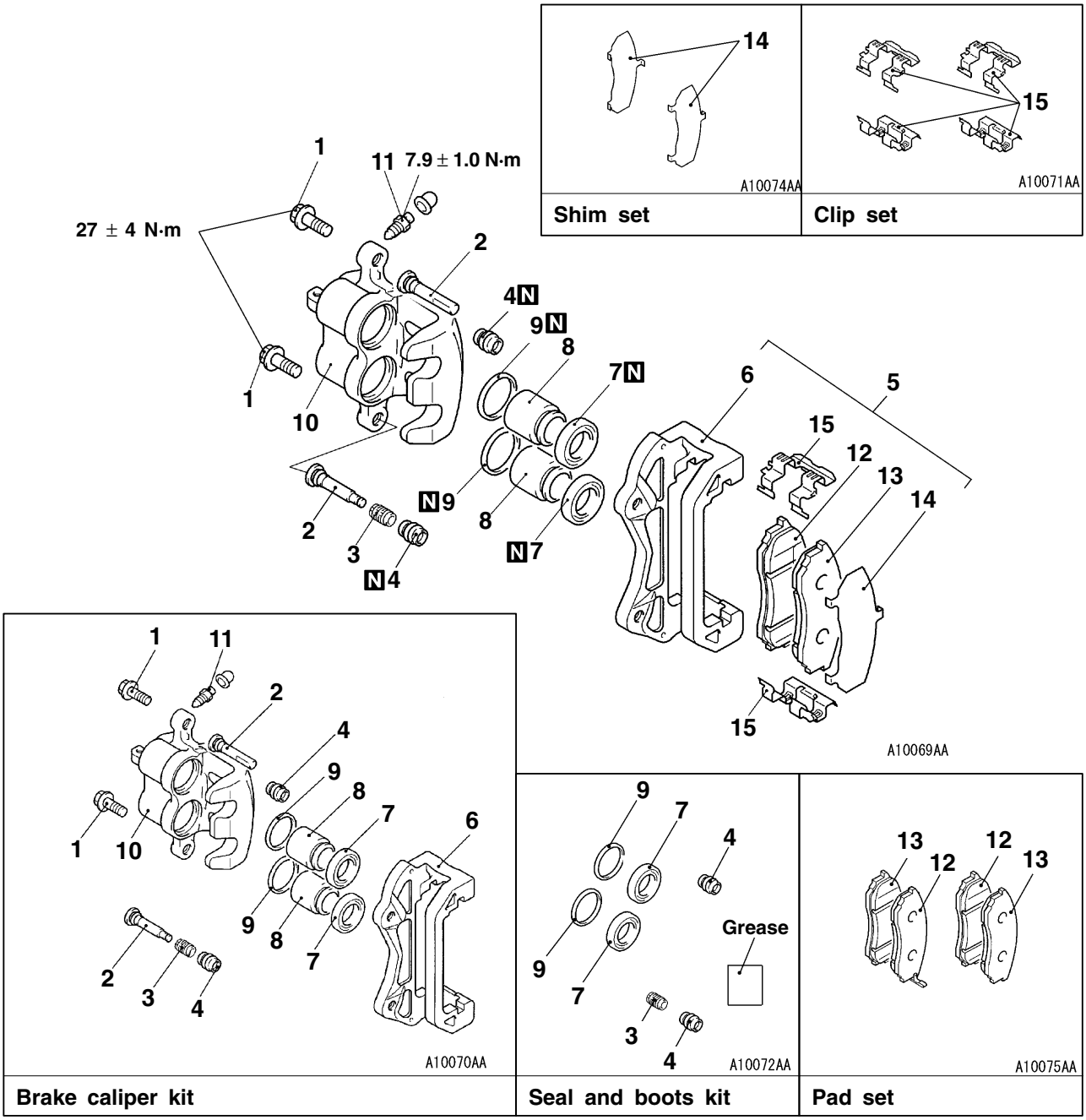

Caliper assembly disassembly steps

1. Bolt
2. Pin
3. Bushing
4. Pin boot
5. Caliper support, pad, clip and shim assembly
6. Caliper support
7. ◀A▶ Piston boot
8. ◀A▶ Piston
9. ◀B▶ Piston seal
10. Caliper body
11. Bleeder screw

Pad assembly disassembly steps

1. Bolt
2. Pin
3. Bushing
5. Caliper support, pad, clip and shim assembly
12. Pad and wear indicator assembly
13. Pad assembly
14. Outer shim
15. ◀C▶ Clip

LUBRICATION POINTS

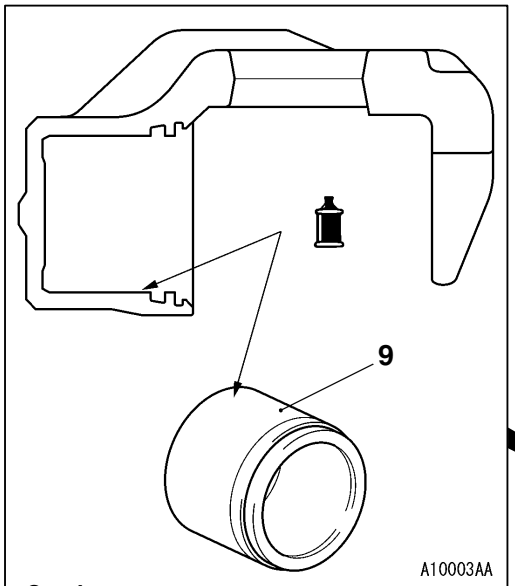

Caution
The piston seal inside the seal and boot kit is coated with a special grease, so do not wipe this grease off.

Brake fluid: DOT3 or DOT4

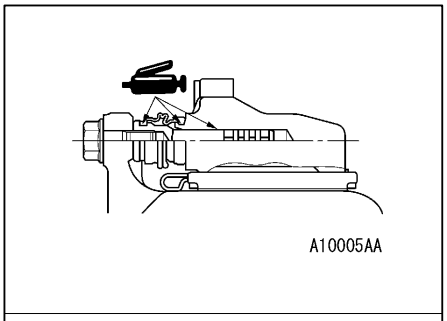

Grease: Repair kit grease

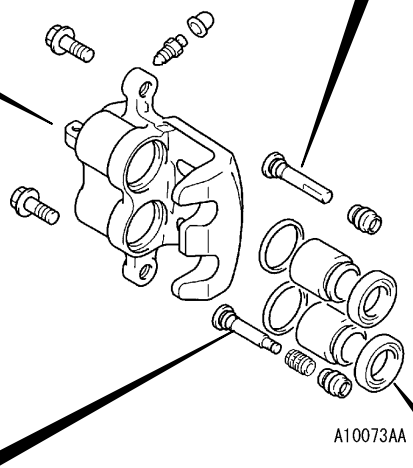

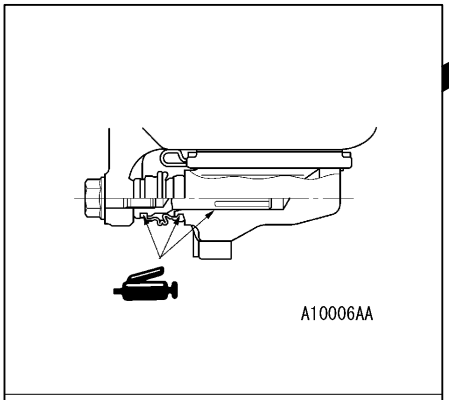

Grease: Repair kit grease

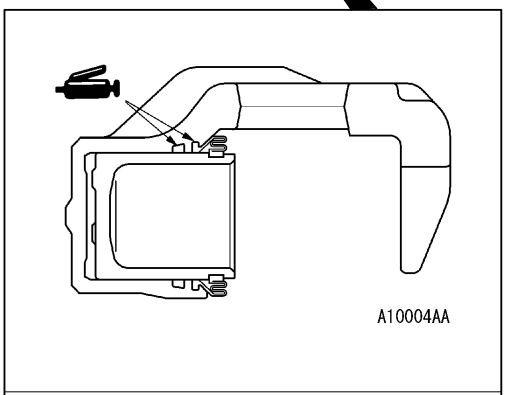

Grease: Repair kit grease

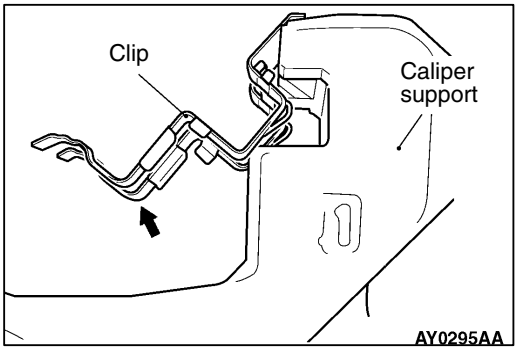

DISASSEMBLY SERVICE POINTS

Refer to the Basic Manual except for service points described below.

◀C▶ HARNESS CONNECTOR REMOVAL

Caution

Swivel up the clip as shown to avoid deformation of the clip.

NOTES

ANTI-SKID BRAKING SYSTEM (ABS) <2WD>

Click on the applicable bookmark to selected the required model year

ANTI-SKID BRAKING SYSTEM (ABS) <2WD>

CONTENTS

35209000121

GENERAL INFORMATION 3

SERVICE SPECIFICATIONS 4

LUBRICANTS 4

SEALANTS 4

SPECIAL TOOLS 4

TROUBLESHOOTING 5

ON-VEHICLE SERVICE 23

Brake Pedal Check and Adjustment
..... Refer to GROUP 35A

Stop Lamp Switch Check
..... Refer to GROUP 35A

Brake Booster Operating Test
..... Refer to GROUP 35A

Check valve Operation Check
..... Refer to GROUP 35A

Brake Booster Vacuum Switch Check
..... Refer to GROUP 35A

CONTINUED ON NEXT PAGE

WARNINGS REGARDING SERVICING OF SUPPLEMENTAL RESTRAINT SYSTEM (SRS) EQUIPPED VEHICLES

WARNING!

(1) Improper service or maintenance of any component of the SRS, or any SRS-related component, can lead to personal injury or death to service personnel (from inadvertent firing of the air bag) or to the driver (from rendering the SRS inoperative).

(2) Service or maintenance of any SRS component or SRS-related component must be performed only at an authorized MITSUBISHI dealer.

(3) MITSUBISHI dealer personnel must throughly review this manual, and especially its GROUP 52B – Supplemental Restraint System (SRS) before begining any service or maintenance of any component of the SRS or any SRS-related component.

NOTE

The SRS includes the following components: impact sensors, SRS diagnosis unit, SRS warning lamp, air bag module, clock spring and interconnecting wiring. Other SRS-related components (that may have to be removed/installed in connection with SRS service or maintenance) are indicated in the table of contents by an asterisk (*).

Bleeding 23
Brake Fluid Level Sensor Check . . . . . Refer to GROUP 35A
Load Sensing Spring Length Check and Adjustment . . . . . Refer to GROUP 35A
Load Sensing Proportioning Valve Function Test . . . . . Refer to GROUP 35A
Disc Brake Pad Check and Replacement 23
Front Disc Brake Rotor Check . . . . . Refer to GROUP 35A
Brake Lining Thickness Check . . . . . Refer to GROUP 35A
Brake Drum Inside Diameter Check . . . . . Refer to GROUP 35A
Brake Lining and Brake Drum Connection Check . . . . . Refer to GROUP 35A
Wheel Speed Sensor Output Voltage Check 24
Hydraulic Unit Check 26
Solenoid Valve Check 27
Motor Operation Check 27
Motor Relay and Valve Relay Continuity Check 28
Remedy for a Flat Battery 28

BRAKE PEDAL . . . . . Refer to GROUP 35A

MASTER CYLINDER AND BRAKE BOOSTER 29

LOAD SENSING PROPORTIONING VALVE . . . . . Refer to GROUP 35A

FRONT DISC BRAKE 32

REAR DRUM BRAKE . . . . . Refer to GROUP 35A

HYDRAULIC UNIT 37

WHEEL SPEED SENSOR 39

ABS-ECU 41

GENERAL INFORMATION

35200010123

The ABS consists of wheel speed sensors, stop lamp switch hydraulic unit and the ABS-ECU. If a problem occurs in the system, the malfunctioning system can be identified by means of the diagnosis function, and the trouble symptom memory will not be erased even if the ignition switch is turned to OFF. (However, it will be erased if the battery is disconnected.)
In addition, reading of diagnosis codes and data list and actuator testing are possible using the MUT-II.

Items	Specifications
Speed sensor	Magnet coil type
Front rotor teeth	47
Rear rotor teeth	47

CONSTRUCTION DIAGRAM

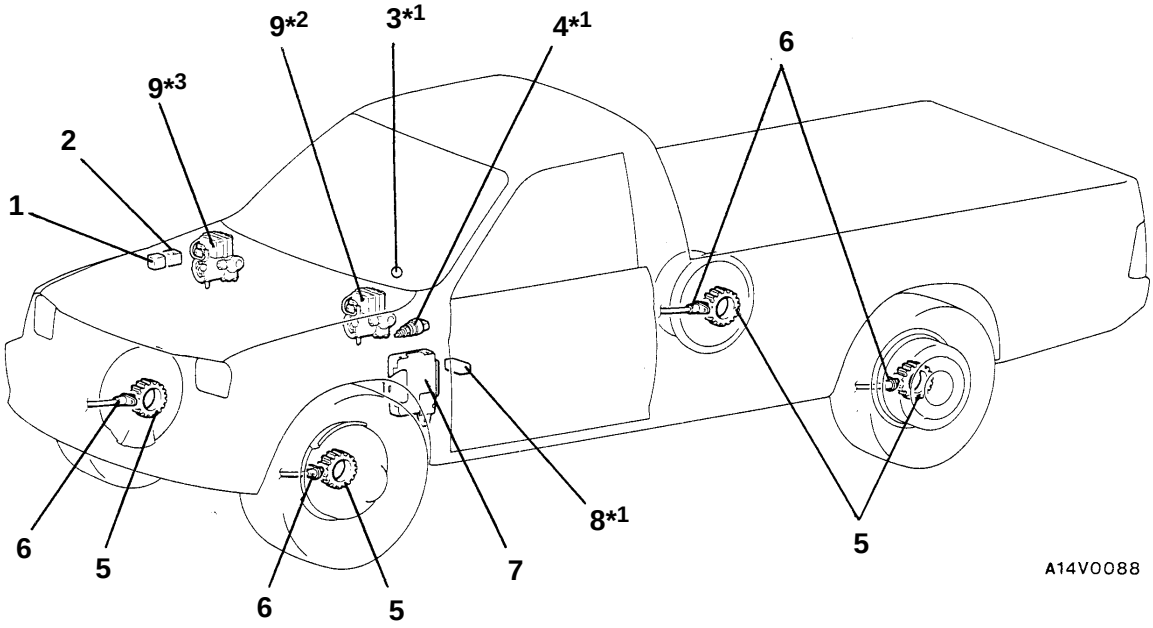

NOTE
*1: For R.H. drive vehicles, those parts are installed at the right side.
*2: Diesel-powered vehicles-L.H. drive vehicles.
*3: Except diesel-powered vehicles-L.H. drive vehicles.

1. ABS motor relay
2. ABS valve relay
3. ABS warning lamp
4. Stop lamp switch
5. Rotor
6. Wheel speed sensor
7. ABS-ECU
8. Diagnosis connector
9. Hydraulic unit

SERVICE SPECIFICATIONS

35200030136

Items		Standard value	Limit
Booster push rod to master cylinder piston clearance mm	Diesel-powered vehicles	0.70 – 1.10	–
	Petrol-powered vehicles	0.90 – 1.30	–
Front disc brake pad thickness mm		10	2.0
Hydraulic unit solenoid valve internal resistance Ω	OUT	2.2	–
	IN	5.0	–
Speed sensor's internal resistance kΩ		1.2 – 1.4	–
Speed sensor insulation resistance kΩ		100 or more	–

LUBRICANTS

35200040023

Items	Specified lubricant
Brake fluid	DOT3 or DOT4
Brake piston seal	Repair kit grease
Guide pin boot inner surfaces	
Lock pin boot inner surfaces	
Piston boot mounting grooves	
Brake piston boot inner surfaces	
Lock pin bush inner surfaces	
Piston cup surface	

SEALANTS

35200050057

Items	Specified sealant	Remarks
Vacuum switch	3M ATD Part No. 8661 or equivalent	Semi-drying sealant

SPECIAL TOOLS

35200060135

Tool	Number	Name	Use
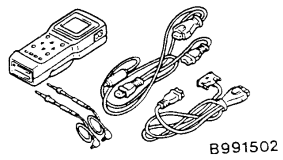	MB991502	MUT-II sub assembly	For checking of ABS (Diagnosis code display when using the MUT-II)
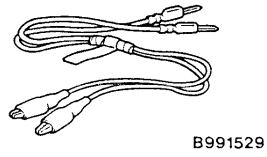	MB991529	Diagnosis code check harness	For checking of ABS (Diagnosis code display when using the ABS warning lamp)
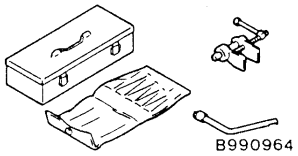	MB990964 MB990520	Brake tool set	Pushing-in of the disc brake piston

TROUBLESHOOTING

35201110143

STANDARD FLOW OF DIAGNOSTIC TROUBLESHOOTING

Refer to GROUP 00 – How to Use Troubleshooting/Inspection Service Points.

NOTES WITH REGARD TO DIAGNOSIS

The phenomena listed in the following table are not abnormal.

Phenomenon	Explanation of phenomenon
System check sound	When starting the engine, a thudding sound can sometimes be heard coming from inside the engine compartment, but this is because the system operation check is being performed, and is not an abnormality.
ABS operation sound	1. Sound of the motor inside the ABS hydraulic unit operation. (whine) 2. Sound is the generated along with vibration of the brake pedal. (scraping) 3. When ABS operates, sound is generated from the vehicle chassis due to repeated brake application and release. (Thump: suspension; squeak: tyres)
ABS operation (Long braking distance)	For road surfaces such as snow-covered roads and gravel roads, the braking distance for vehicles with ABS can sometimes be longer than that for other vehicles. Accordingly, advise the customer to drive safely on such roads by lowering the vehicle speed and not being too overconfident.
Shock during system operation check	Shock may be felt when the brake pedal is depressed slightly at a low driving speed. This occurs due to ABS operation check (initial check at a vehicle speed of 8 km/h), and does not indicate any malfunction.

Diagnosis detection condition can vary depending on the diagnosis code.
Make sure that checking requirements listed in the “Comment” are satisfied when checking the trouble symptom again.

DIAGNOSIS FUNCTION

35201120108

DIAGNOSIS CODES CHECK

Read a diagnosis code by the MUT-II or ABS warning lamp. (Refer to GROUP 00 – How to Use Troubleshooting/Inspection Service Points.)

ERASING DIAGNOSIS CODES

Refer to GROUP 00 – How to Use Troubleshooting/Inspection Service Points.

INSPECTION CHART FOR DIAGNOSIS CODES

35201130156

Inspect according to the inspection chart that is appropriate for the malfunction code.

Diagnosis code No.	Inspection item	Diagnosis content	Reference page
11	Front right wheel speed sensor	Open or short circuit	35B-7
12	Front left wheel speed sensor		
13	Rear right wheel speed sensor		
14	Rear left wheel speed sensor		
15	Wheel speed sensor	Abnormal output signal	35B-8
16	Power supply system		35B-8
21	Front right wheel speed sensor	Abnormal	35B-7
22	Front left wheel speed sensor		
23	Rear right wheel speed sensor		
24	Rear left wheel speed sensor		
33	Stop lamp switch system		35B-9
41	Front right solenoid valve		35B-10
42	Front left solenoid valve		
43	Rear solenoid valve		
51	Valve relay		35B-11
53	Motor relay, motor		35B-12
63	ABS-ECU		35B-41 (Replace the ABS-ECU)
64			

INSPECTION PROCEDURE FOR DIAGNOSIS CODES

Code No. 11, 12, 13, 14 Wheel speed sensor open circuit or short circuit Code No. 21, 22, 23, 24 Wheel speed sensor abnormal	Probable cause
The ABS-ECU determines that an open circuit or short circuit occurs in more than one line of wheel speed sensors.	● Malfunction of wheel speed sensor ● Malfunction of wiring harness or connector ● Malfunction of ABS-ECU
These codes are output at the following times: ● When an open circuit cannot be found, but more than one wheel speed sensor does not output any signal during driving at 8 km/h or higher. ● When a chipped or plugged-up rotor tooth, etc. is detected. ● When the sensor output drops and anti-lock control is continuously carried out due to a defective sensor or a warped rotor.	● Malfunction of wheel speed sensor ● Malfunction of rotor ● Malfunction of wheel bearing ● Malfunction of wiring harness or connector ● Malfunction of ABS-ECU

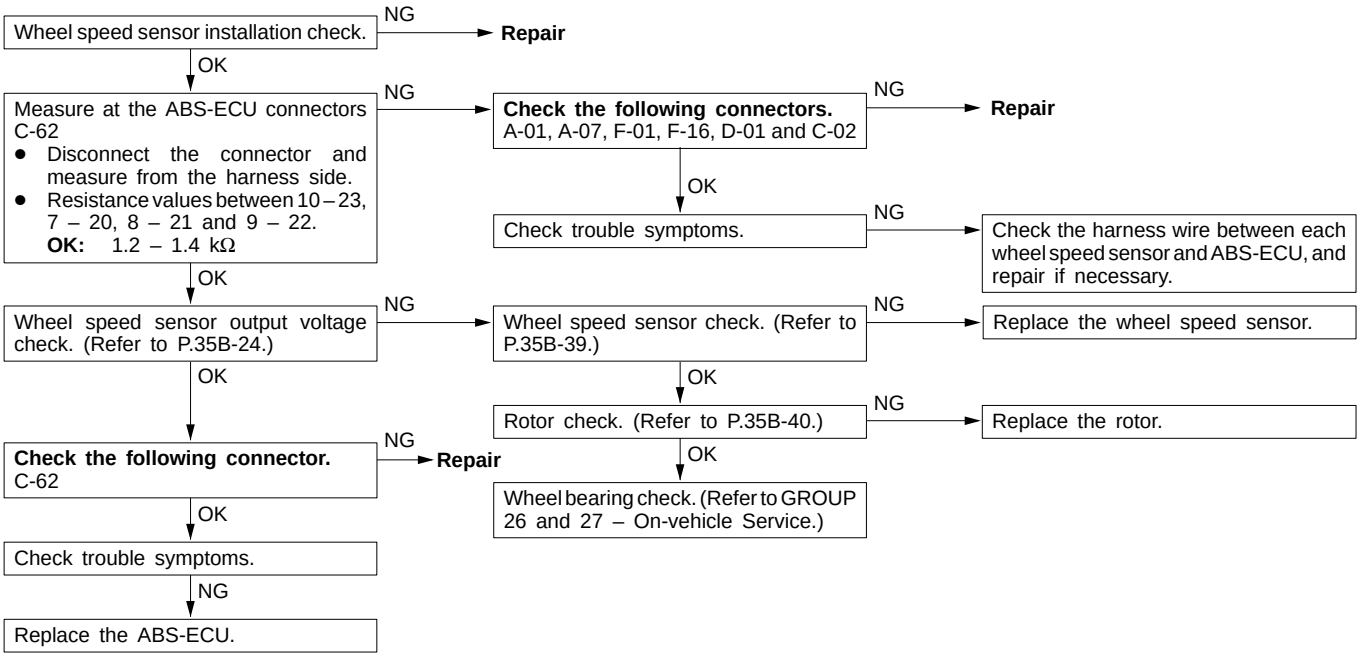

Code No. 15 Wheel speed sensor (Abnormal output signal)	Probable cause
A wheel speed sensor outputs an abnormal signal (other than an open or short-circuit).	● Improper installation of wheel speed sensor ● Malfunction of wheel speed sensor ● Malfunction of rotor ● Malfunction of wheel bearing ● Malfunction of wiring harness or connector ● Malfunction of ABS-ECU

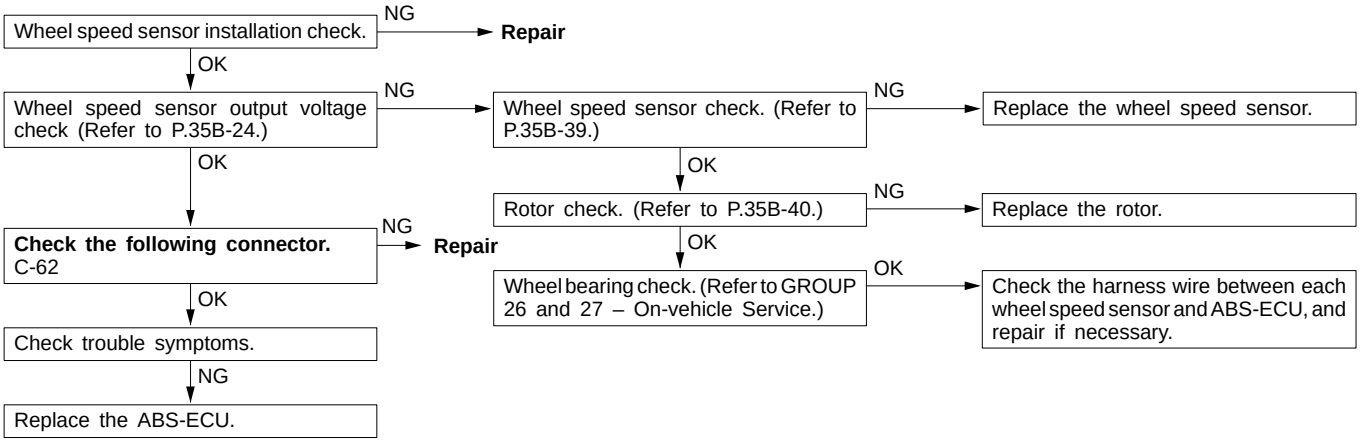

Code No. 16 Power supply system	Probable cause
The voltage of the ABS-ECU power supply drops lower or rises higher than the specified value. If the voltage returns to the specified value, this code is no longer output.	● Malfunction of wiring harness or connector. ● Malfunction of ABS-ECU

Caution

If battery voltage drops or rises during inspection, this code will be output as well. If the voltage returns to standard value, this code is no longer output.

Before carrying out the following inspection, check the battery level, and refill distilled water if necessary.

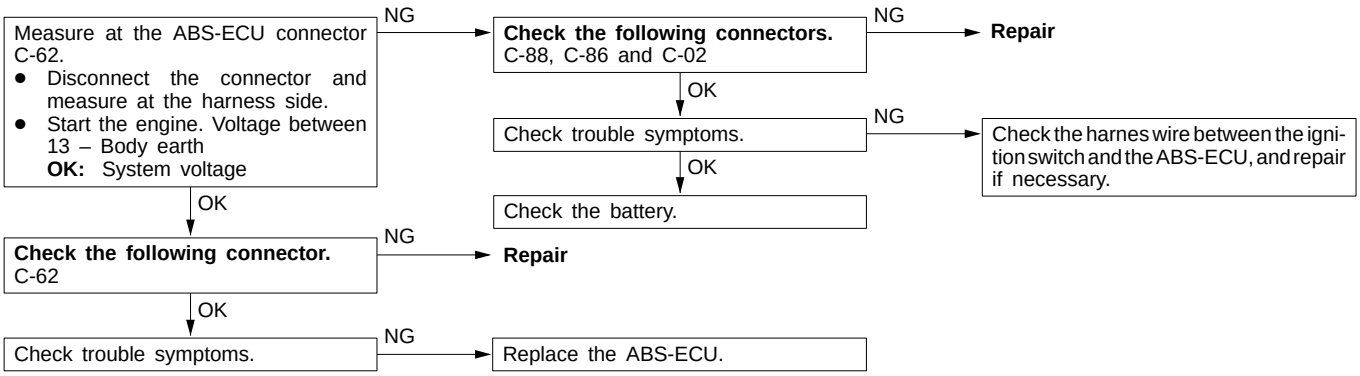

Code No. 33 Stop lamp switch system	Probable cause
These codes are output at the following times: ● When the stop lamp switch is not be turned off (when the stop lamp switch stays on for 15 minutes or more although the ABS is not operating) ● When the ABS-ECU determines that there is an open circuit in harness of the stop lamp switch system.	● Malfunction of stop lamp switch ● Malfunction of harness or connector ● Malfunction of ABS-ECU

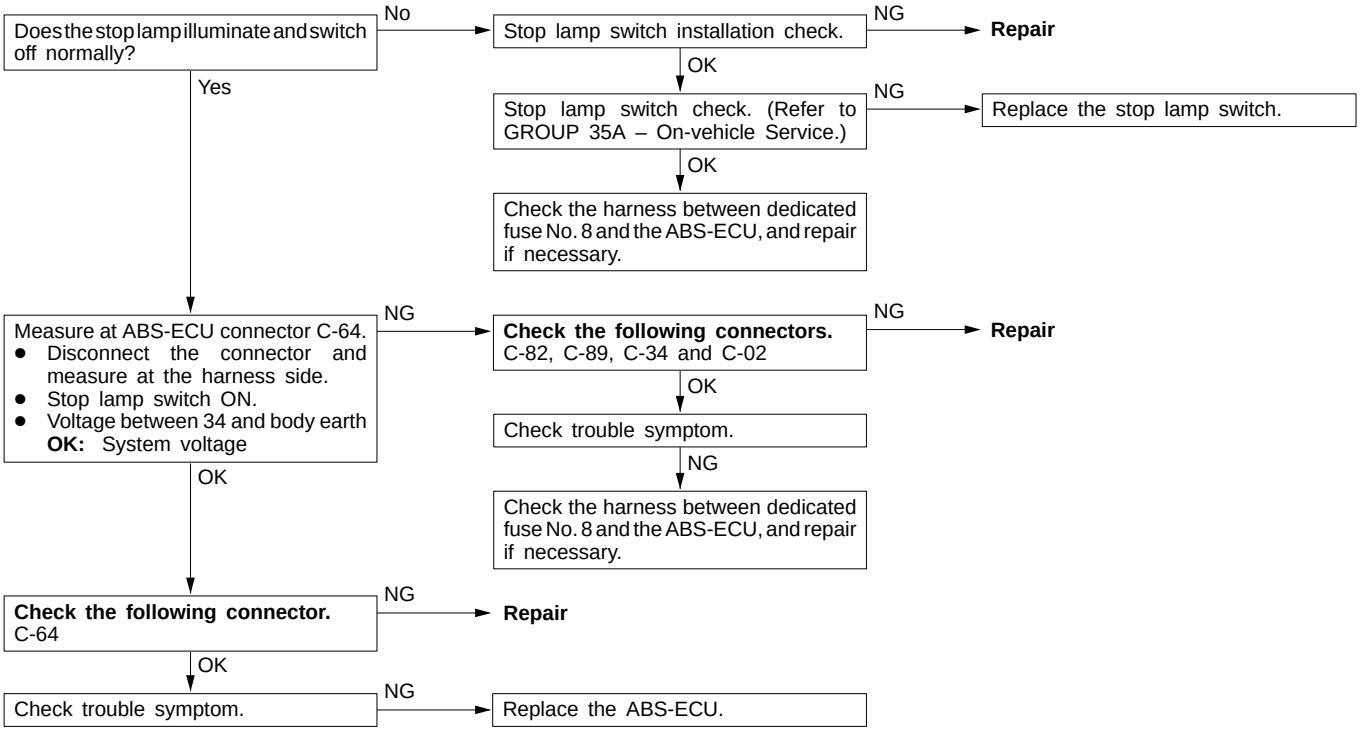

Code No. 41, 42, 43 Solenoid valve	Probable cause
The ABS-ECU always monitors the solenoid valve drive circuit. It determines that there is an open or short-circuit in the solenoid coil or in a harness: When no current flows in the solenoid even though the ABS-ECU turns on it, and vice versa.	• Malfunction of wiring harness • Malfunction of hydraulic unit • Malfunction of ABS-ECU

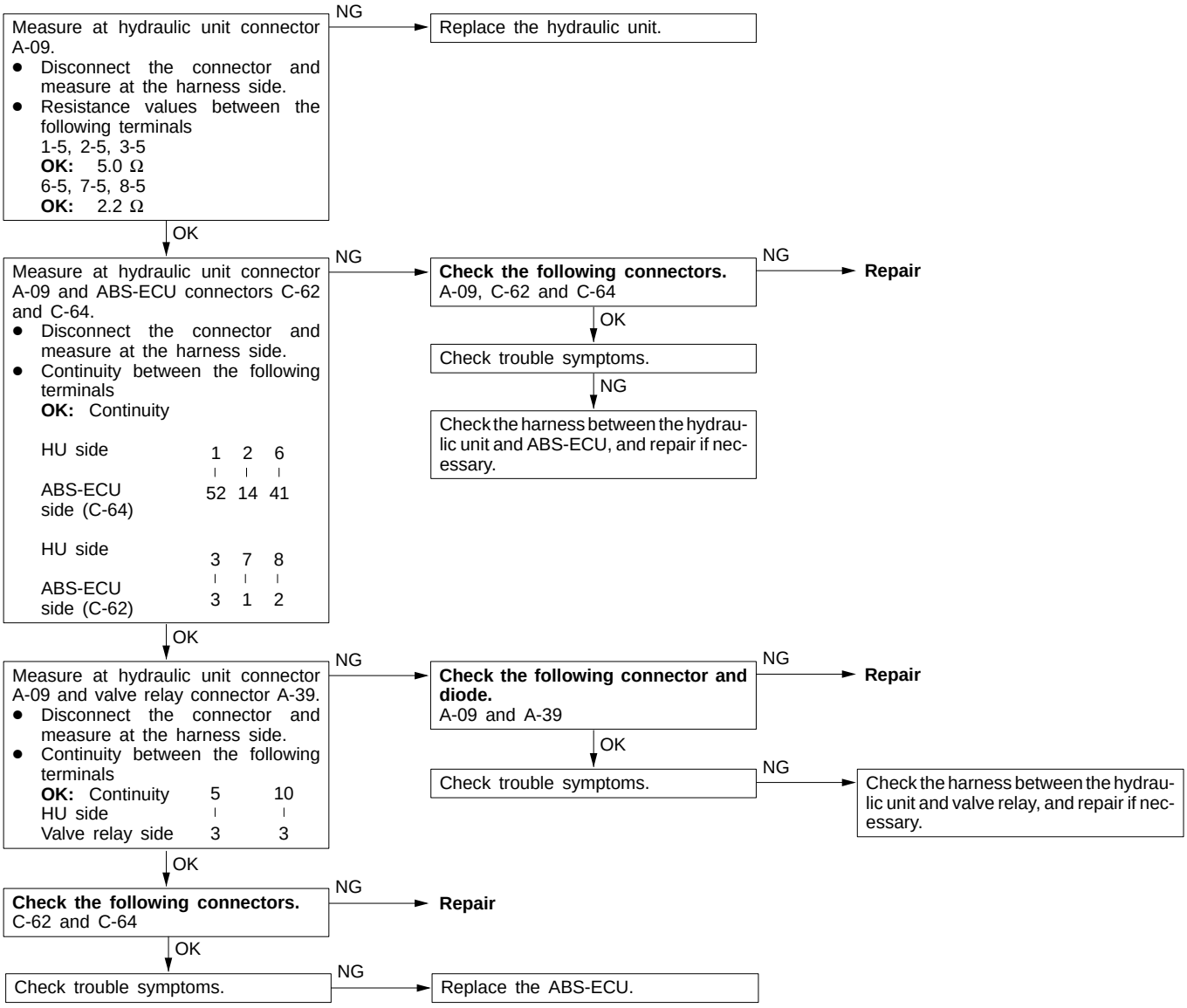

Code No. 51 Valve relay	Probable cause
When the ignition switch is turned to ON, the ABS-ECU switches the valve relay off and on during the initial check. In that way, the ABS-ECU compares the signals sent to the valve relay with the voltage in the valve power monitor line. That is how to check if the valve relay is operating normally. The ABS-ECU always checks if current flows in the valve power monitor line, too. It determines that there is an open circuit when no current flows. If no current flows in the valve power monitor line, this diagnosis code is output.	● Malfunction of valve relay ● Malfunction of wiring harness or connector ● Malfunction of ABS-ECU ● Malfunction of hydraulic unit

NOTE
Whenever reading the diagnosis codes using the ABS warning lamp (Refer to GROUP 00 – How to Use Troubleshooting/Inspection Service Points), this diagnosis code will be output. That is not a malfunction but because the valve relay connector is disconnected. After repairing all other malfunctions, connect the valve relay connector again to check the valve relay. Then check that the ABS warning lamp does not illuminate. If it illuminates, the valve relay may be defective. So carry out the following procedure.

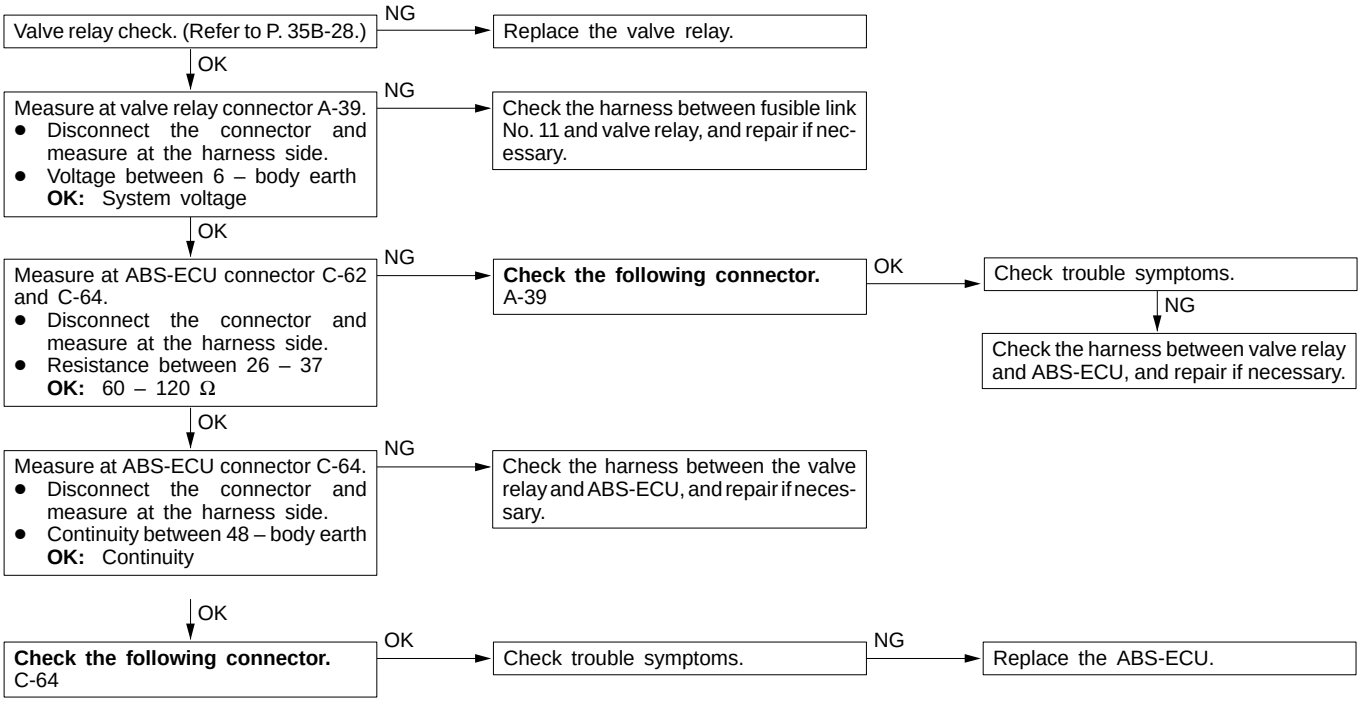

Code No. 53 Motor relay, motor	Probable cause
These codes are output at the following times: When the motor relay is on but no signal is input to the motor monitor line (motor is not operating, etc.) When the motor relay is off but a signal is input to the motor monitor line for 5 seconds or more (motor continues operating, etc.) When the motor relay does not operate	● Malfunction of motor relay ● Malfunction of wiring harness or connector ● Malfunction of hydraulic unit ● Malfunction of ABS-ECU

Caution

Because force-driving of the motor by means of the actuator test will drain the battery, the engine should be started and left to run for a while after testing is completed.

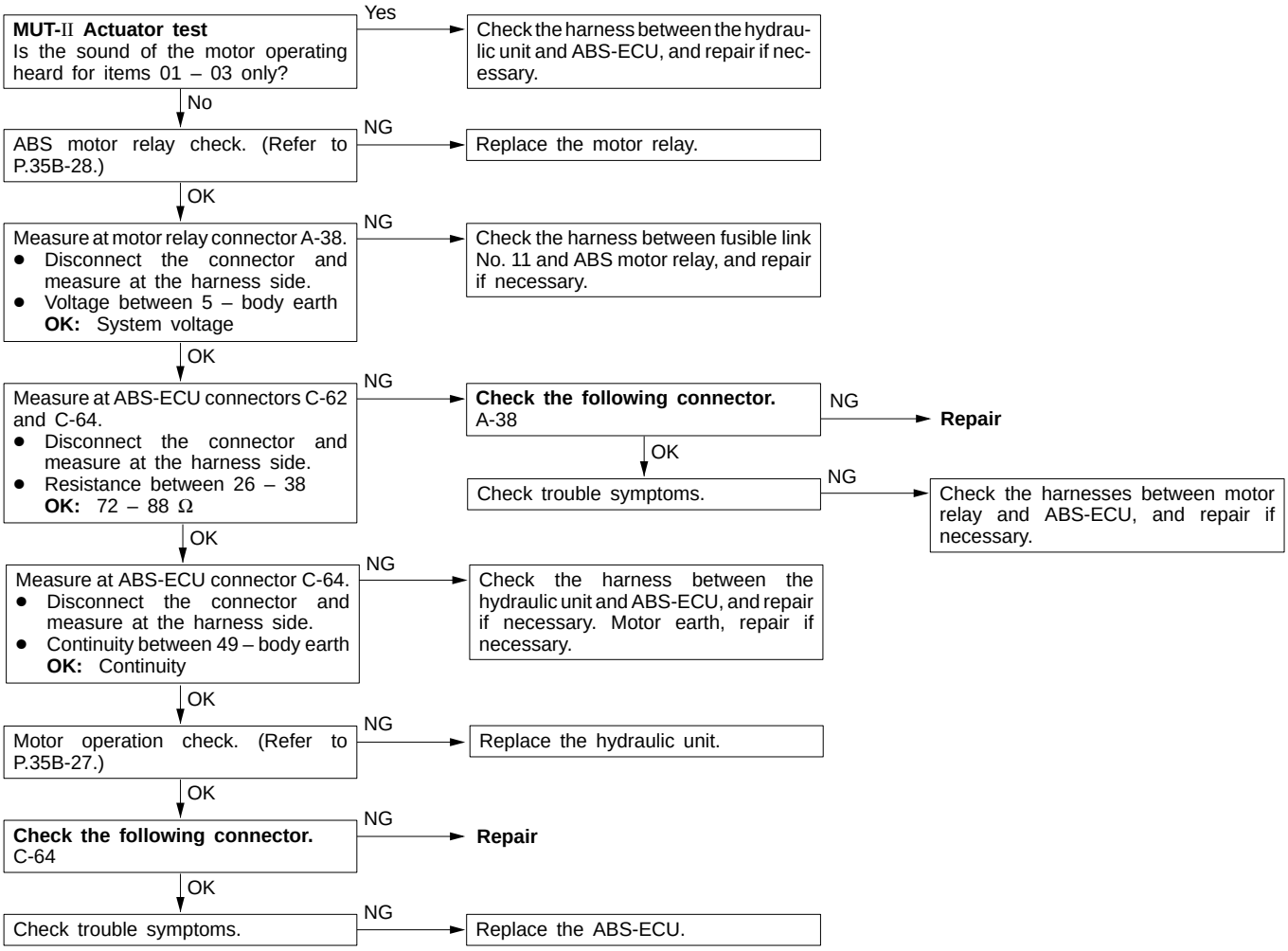

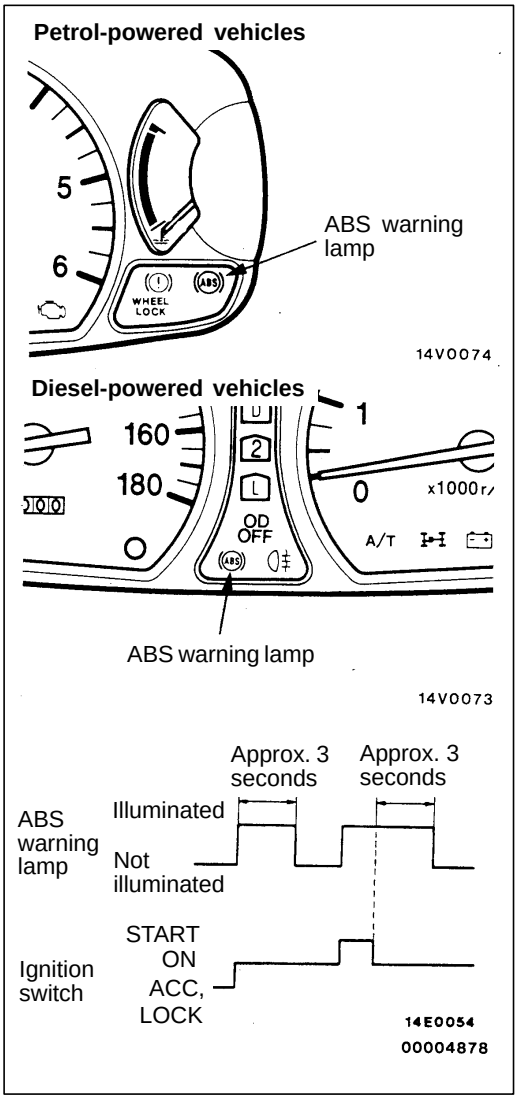

ABS WARNING LAMP INSPECTION 35201200079

Check that the ABS warning lamp illuminates as follows.

1. When the ignition key is turned to “ON”, the ABS warning lamp illuminates for approximately 3 seconds* and then switches off.
2. When the ignition key is turned to “START”, the ABS warning lamp remains illuminated.
3. When the ignition key is turned from “START” back to “ON”, the ABS warning lamp illuminates for approximately 3 seconds* and then switches off.
4. If the illumination is other than the above, check the diagnosis codes.

NOTE
*: The warning lamp may continue to illuminate until the vehicle speed reaches 8 km/h after the ignition switch is turned on. If the ABS-ECU has stored one of the diagnosis codes Nos.21 to 24 or No.53 as a former malfunction, the ECU attempts to detect the malfunction at 8 km/h. Until the speed reaches 8 km/h, the ABS-ECU illuminates the warning lamp.

INSPECTION CHART FOR TROUBLE SYMPTOMS

35201140142

Get an understanding of the trouble symptoms and check according to the inspection procedure chart.

Trouble symptoms		Inspection procedure No.	Reference page
Communication with MUT-II is not possible.	Communication with all systems is not possible.	1	35B-15
	Communication with ABS only is not possible.	2	35B-15
When the ignition key is turned to “ON” (engine stopped), the ABS warning lamp does not illuminate.		3	35B-16
After the engine starts, the ABS warning lamp remains illuminated.		4	35B-16
When the ignition key is turned to “START”, the ABS warning lamp does not illuminate.		5	35B-17
After the ignition key is turned to “ON”, the ABS warning lamp blinks twice, and when turned to “START”, it illuminates. When returned to “ON”, the lamp flashes once, and then switches off.		6	35B-17
Faulty ABS operation	Unequal braking power on both sides	7	35B-18
	Insufficient braking power		
	ABS operates under normal braking conditions		
	ABS operates before vehicle stops under normal braking conditions		
	Large brake pedal vibration (Caution 2.)	–	–

Caution

1. **If steering movements are made when driving at high speed, or when driving on road surfaces with low frictional resistance, or when passing over bumps, the ABS may operate even though sudden braking is not being applied. Because of this, when getting information from the customer, check if the problem occurred while driving under such conditions as these.**
2. **During ABS operation, the brake pedal may vibrate or may not be able to be depressed. Such phenomena are due to intermittent changes in hydraulic pressure inside the brake line to prevent the wheels from locking and is not an abnormality.**

INSPECTION PROCEDURE FOR TROUBLE SYMPTOMS

Inspection Procedure 1

Communication with MUT-II is not possible. (Communication with all systems is not possible.)	Probable cause
The reason is probably a defect in the power supply system (including earth) for the diagnosis line.	● Malfunction of connector ● Malfunction of harness

Refer to GROUP 13A – Troubleshooting.

Inspection Procedure 2

Communication with MUT-II is not possible. (Communication with ABS only is not possible.)	Probable cause
When communication with the MUT-II is not possible, the cause is probably an open circuit in the ABS-ECU power circuit or an open circuit in the diagnosis output circuit.	● Blown fuse ● Malfunction of wiring harness or connecter ● Malfunction of ABS-ECU

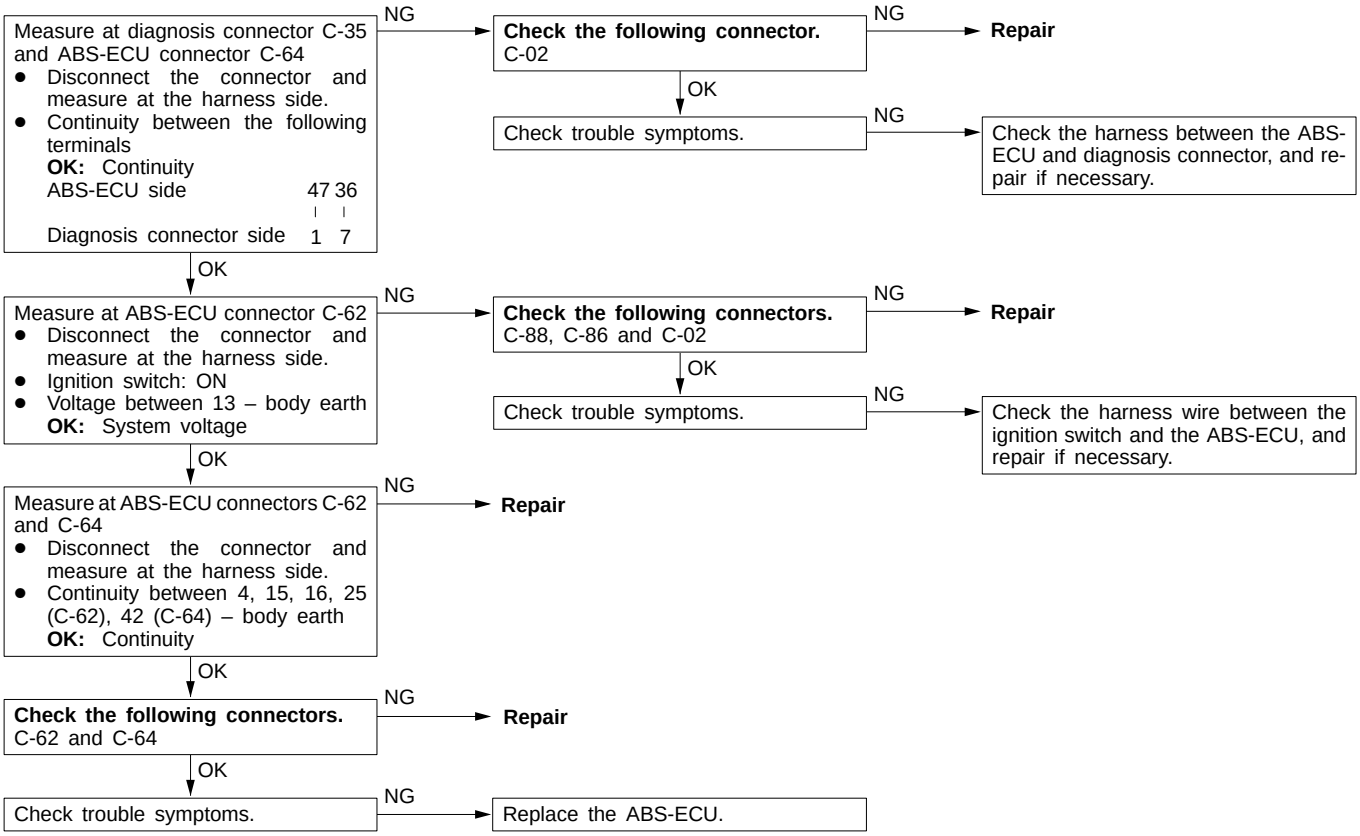

Inspection Procedure 3

When ignition key is turned to "ON" (engine stopped), ABS warning lamp does not illuminate.	Probable cause
When current flows in the ABS-ECU, the valve relay turns from off to on, off and back to on again as the initial check. So the ABS warning lamp will illuminate twice when the valve relay is off even if there is a problem with the circuit between the ABS warning lamp and the ABS-ECU. Therefore, if the lamp does not illuminate, the cause may be: an open circuit in the lamp power supply circuit, a blown lamp bulb, an open circuit in both the circuit between the ABS warning lamp and the ABS-ECU and in the circuit between the ABS warning lamp and the valve relay.	● Blown fuse ● Burnt out ABS warning lamp bulb ● Malfunction of wiring harness or connector

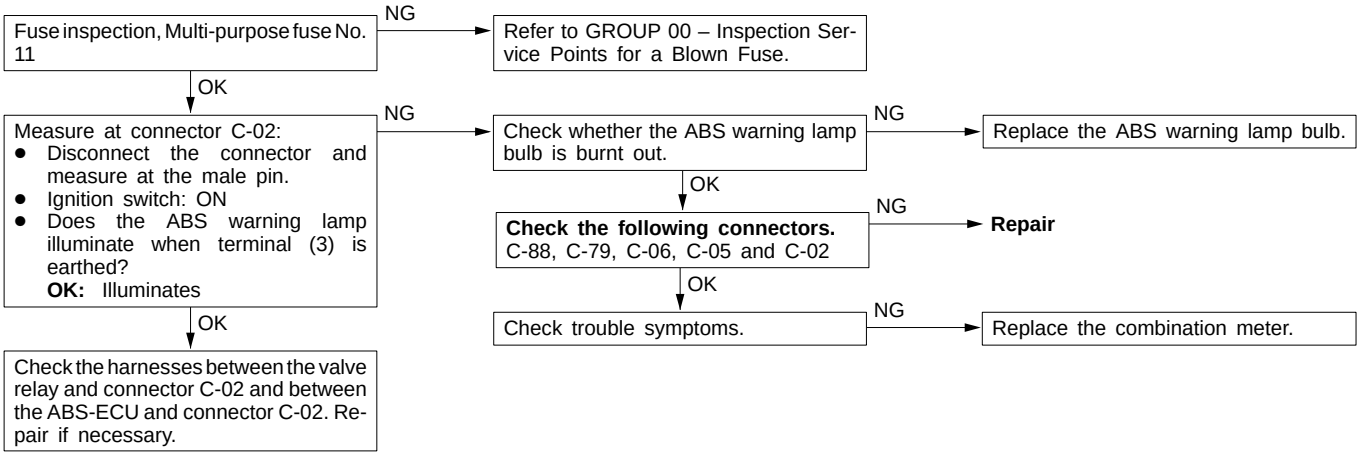

Inspection Procedure 4

Even after the engine is started, the ABS warning lamp remains illuminated.	Probable cause
The cause is probably a short-circuit in the ABS warning lamp illumination circuit.	● Malfunction of combination meter ● Malfunction of ABS-ECU ● Malfunction of wiring harness

NOTE
This trouble symptom is limited to cases where communication with the MUT-II is possible (ABS-ECU power supply is normal) and the diagnosis code is a normal diagnosis code.

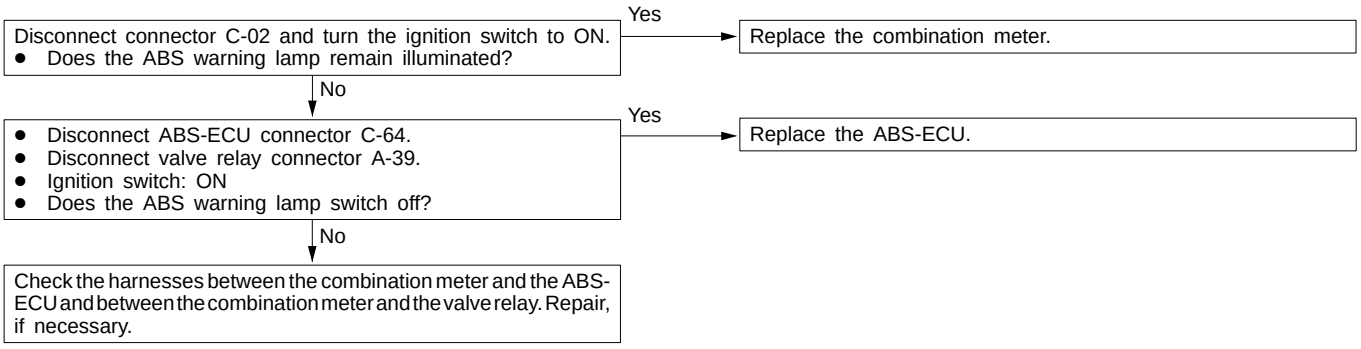

Inspection Procedure 5

When ignition key is turned to ”START”, ABS warning lamp does not illuminate.	Probable cause
Current does not flow in the ABS-ECU when the ignition switch is turned to START. Current flows in the ABS warning lamp even when the ignition switch is turned to START. Therefore, the valve relay, which current is supplied through the ABS-ECU, turns off when the ignition switch is at START. However, the warning lamp circuit of the valve relay must turn on in turn. So the cause must be a defective circuit on valve relay side.	● Malfunction of wiring harness or connector ● Malfunction of ABS-ECU

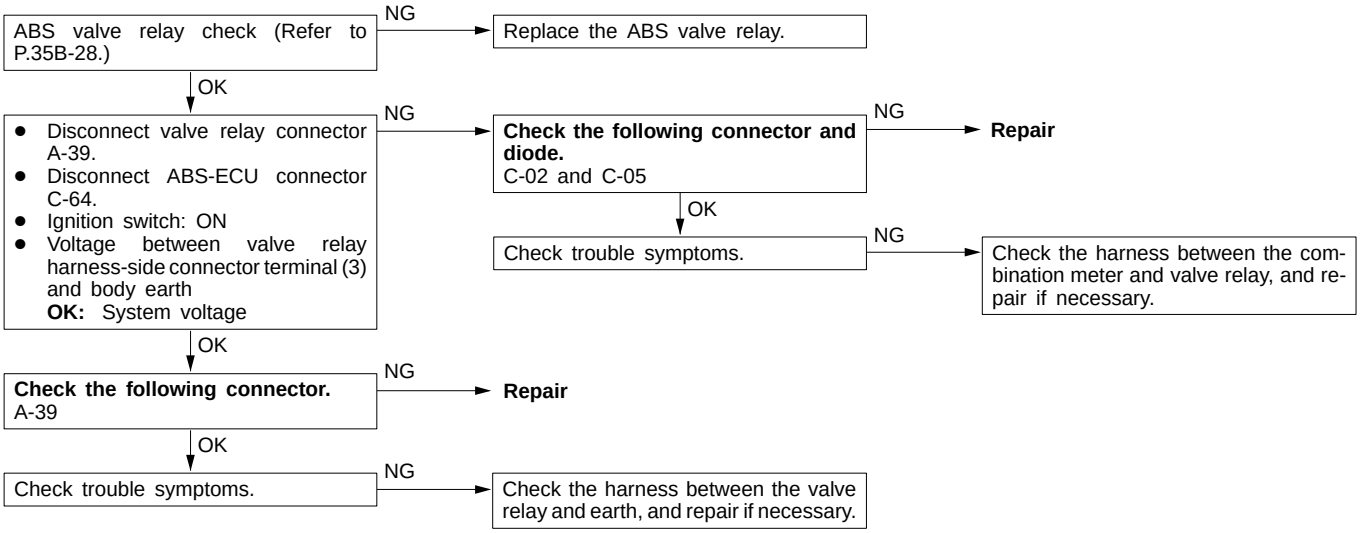

Inspection Procedure 6

The ABS warning lamp flashes twice after the ignition key is turned to ”ON”. The lamp illuminates when the ignition key is turned to ”START”, and when the key is returned to ”ON”, it flashes once.	Probable cause
The ABS-ECU causes the ABS warning lamp to illuminate during the initial check (approx. 3 seconds). During the initial check, the valve relay turns from off to on, off and back to on again. If there is an open circuit in the harness between the ABS-ECU and the ABS warning lamp, the lamp will illuminate only when the valve relay is OFF during valve relay test, etc.	● Malfunction of wiring harness or connector ● Malfunction of ABS-ECU

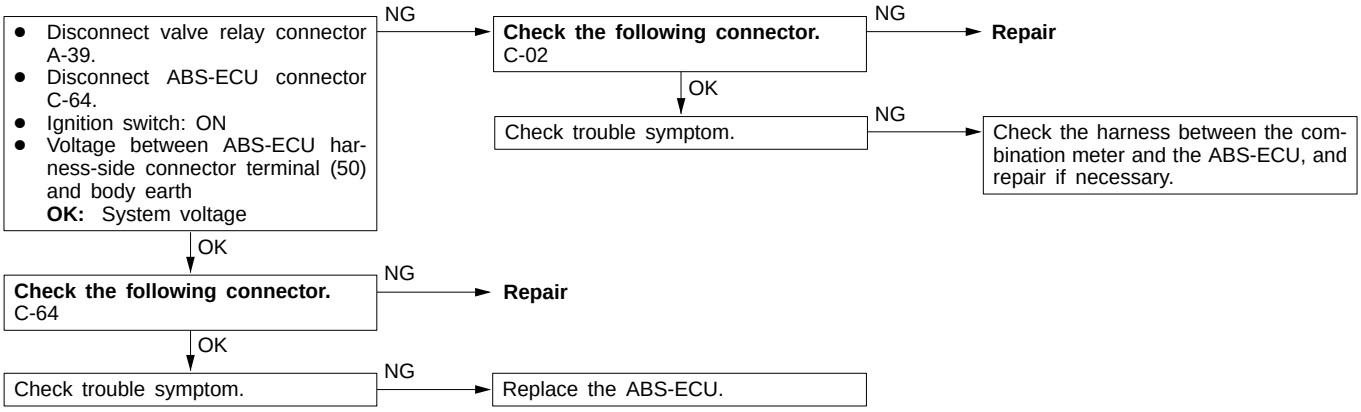

Inspection Procedure 7

Brake operation is abnormal.	Probable cause
This varies depending on the driving conditions and the road surface conditions, so problem diagnosis is difficult. However, if a normal diagnosis code is displayed, carry out the following inspection.	● Improper installation of wheel speed sensor ● Incorrect sensor harness contact ● Foreign material adhering to wheel speed sensor ● Malfunction of wheel speed sensor ● Malfunction of rotor ● Malfunction of wheel bearing ● Malfunction of hydraulic unit ● Malfunction of ABS-ECU

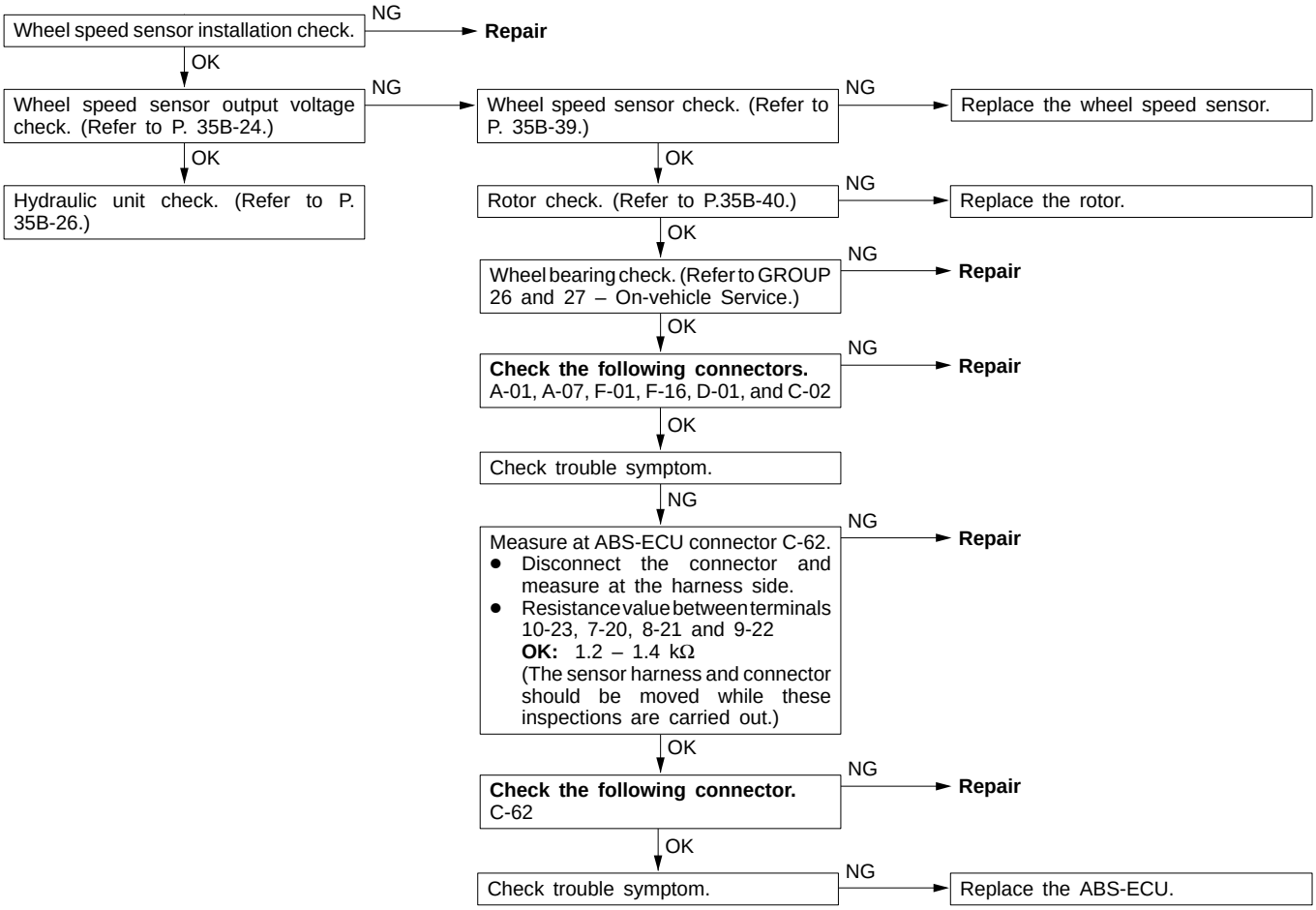

DATA LIST REFERENCE TABLE

35201150091

The following items can be read by the MUT-II from the ABS-ECU input data.

1. When the system is normal

Item No.	Check item	Checking requirements	Normal value
11	Front-right wheel speed sensor	Perform a test run	Vehicle speeds displayed on the speedometer and MUT-II are identical.
12	Front-left wheel speed sensor		
13	Rear-right wheel speed sensor		
14	Rear-left wheel speed sensor		
16	ABS-ECU power supply voltage	Ignition switch power supply voltage and valve monitor voltage	9–16 V
33	Stop lamp switch	Depress the brake pedal.	ON
		Release the brake pedal.	OFF

2. When the ABS-ECU shut off ABS operation.

When the diagnosis system stops the ABS-ECU, the MUT-II display data will be unreliable.

ACTUATOR TEST REFERENCE TABLE

35201160049

The MUT-II activates the following actuators for testing.

NOTE
1. If the ABS-ECU runs down, actuator testing cannot be carried out.
2. Actuator testing is only possible when the vehicle is stationary. If the vehicle speed during actuator testing exceeds 10 km/h, forced actuation will be canceled.
3. During the actuator test, the ABS warning lamp will illuminate and the anti-skid control will be cancelled.

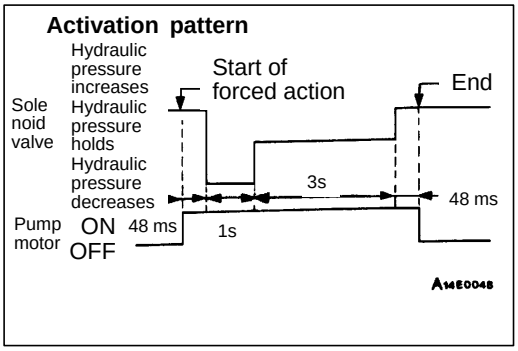

ACTUATOR TEST SPECIFICATIONS

No.	Item	
01	Solenoid valve for front-left wheel	Solenoid valves and pump motors in the hydraulic unit (simple inspection mode)
02	Solenoid valve for front-right wheel	
03	Solenoid valve for rear wheel	

CHECK AT ABS-ECU

35201180120

TERMINAL VOLTAGE CHECK CHART

1. Measure the voltages between terminals (15), (16), (25) and (42) (earth terminals) and each respective terminal.
2. The terminal layouts are shown in the illustrations below.

14W0043

Connector terminal No.	Signal	Checking requirements		Normal condition
1	Output to front-left hydraulic unit solenoid valve (OUT side)	Ignition switch: ON (When solenoid valve is off approximately 1 second after engine is started)		System voltage
2	Output to rear hydraulic unit solenoid valve (OUT side)			
3	Output to rear hydraulic unit solenoid valve (IN side)			
13	ABS-ECU power supply	Ignition switch: ON		System voltage
		Ignition switch: START		0 V
14	Output to front-left hydraulic unit solenoid valve (IN side)	Ignition switch: ON (When solenoid valve is off approximately 1 second after engine is started)		System voltage
26	Output to relay power supply	Ignition switch: ON		System voltage
32	Memory power supply	Always		System voltage
34	Input from stop lamp switch	Ignition switch: ON	Stop lamp switch: ON	System voltage
			Stop lamp switch: OFF	1 V or less
36	MUT-II	Connect the MUT-II.		Serial communication with MUT-II.
		Do not connect the MUT-II.		1 V or less
37	Output to valve relay	Ignition switch: ON	Approximately 1 second after engine is started, the relay is on.	2 V or less
			The system runs down. The relay is off.	System voltage
38	Output to motor relay	Ignition switch: ON Approximately 1 second after engine is started	Motor is on.	2 V or less
			Motor is off.	System voltage
39	Idle-up solenoid valve (+)	Ignition switch: ON (The motor is on approximately 1 second after engine is started.)		System voltage
41	Output to front-right hydraulic unit solenoid valve (OUT side)	Ignition switch: ON (When solenoid valve is off approximately 1 second after engine is started.)		System voltage

Connector terminal No.	Signal	Checking requirements		Normal condition
43	Idle-up solenoid valve (–)	Ignition switch: ON (The motor is on approximately 1 second after engine is started.)		2 V or less
46	Ignition switch	Ignition switch: ON		System voltage
		Ignition switch: START		0 V
47	Input from diagnosis indication selection	Connect the MUT-II.		0 V
		Do not connect the MUT-II.		Approx. 12 V
48	Input from valve relay monitor	Ignition switch: ON		System voltage
49	Motor monitor	Ignition switch: ON Approximately 1 second after engine is started	Motor is on.	System voltage
			Motor is off.	0.5 V or less
50	Output to ABS warning lamp	Ignition switch: ON	The lamp is switched off.	System voltage
			The lamp is illuminated.	0 – 2 V
52	Output to front-right hydraulic unit solenoid valve (IN side)	Ignition switch: ON (When solenoid valve is off approximately 1 second after engine is started.)		System voltage

RESISTANCE AND CONTINUITY BETWEEN HARNESS-SIDE CONNECTOR TERMINALS

1. Turn the ignition switch off and disconnect the ABS-ECU connectors before checking resistance and continuity.
2. Check them between the terminals indicated in the table below.
3. The terminal layouts are shown in the illustrations below.

14W0042

Connector terminal No.	Signal	Normal condition
1 – Body earth	Front-left solenoid valve (OUT side)	2.2 Ω
2 – Body earth	Rear solenoid valve (OUT side)	2.2 Ω
3 – Body earth	Rear solenoid valve (IN side)	5.0 Ω
7 – 20	Front-left wheel speed sensor (+ wire)	1.2 – 1.4 kΩ
8 – 21	Rear-right wheel speed sensor (+ wire)	1.2 – 1.4 kΩ
9 – 22	Rear-left wheel speed sensor (+ wire)	1.2 – 1.4 kΩ
10 – 23	Front-right wheel speed sensor (+ wire)	1.2 – 1.4 kΩ
14 – Body earth	Front-left solenoid valve (IN side)	5.0 Ω
15 – Body earth	ABS-ECU earth	Continuity
16 – Body earth		
25 – Body earth		
39 – 43	Idle-up solenoid valve	37 – 44 Ω
41 – Body earth	Front-right solenoid valve (OUT side)	2.2 Ω
42 – Body earth	ABS-ECU earth	Continuity
48 – Body earth	Valve relay monitor input	Continuity
49 – Body earth	Motor monitor	Continuity
52 – Body earth	Front-right solenoid valve (IN side)	5.0 Ω

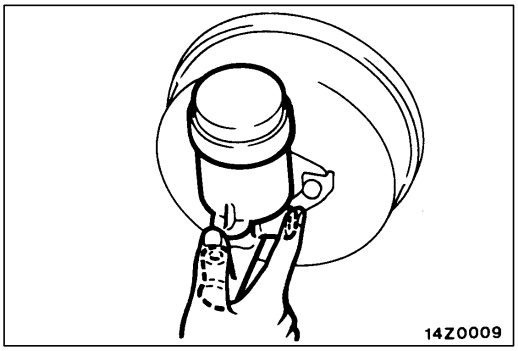

ON-VEHICLE SERVICE

35200150108

BLEEDING

Caution
Use the specified brake fluid. Avoid using a mixture of the specified brake fluid and other fluid.

Specified brake fluid: DOT3 or DOT4

MASTER CYLINDER BLEEDING

The master cylinder used has no check valve, so if bleeding is carried out by the following procedure, bleeding of air from the brake pipeline will become easier. (When brake fluid is not contained in the master cylinder.)
(1) Fill the reserve tank with brake fluid.
(2) Keep the brake pedal depressed.
(3) Have another person cover the master cylinder outlet with a finger.
(4) With the outlet still closed, release the brake pedal.
(5) Repeat steps (2) –(4) three or four times to fill the inside of the master cylinder with brake fluid.

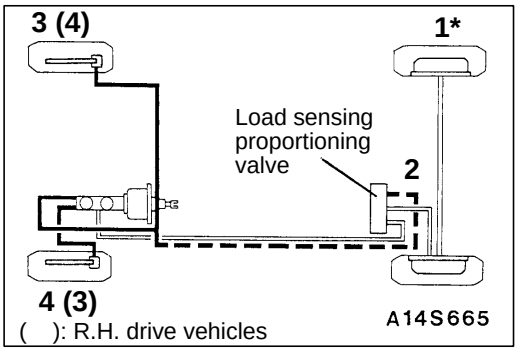

BRAKE PIPE LINE BLEEDING

Start the engine and bleed the air in the sequence shown in the figure.

Caution
Be sure to install a filter to the master cylinder reservoir tank when supplying brake fluid.

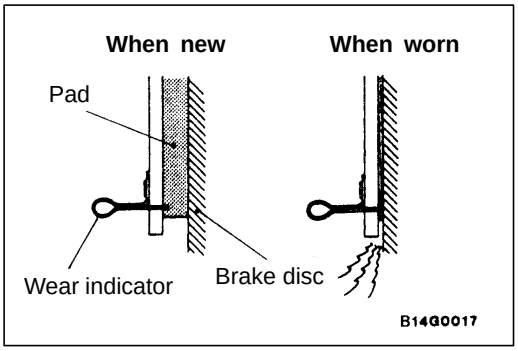

DISC BRAKE PAD CHECK AND REPLACEMENT

35200280012

NOTE
The brake pads have wear indicators that contact the brake disc when the brake pad thickness becomes 2 mm, and emit a squealing sound to warn the driver.

1. Check brake pad thickness through caliper body check port.

   Standard value: 10 mm
   Limit: 2.0 mm

   Caution
   1. **When the limit is exceeded, replace the pads at both sides, and also the brake pads for the wheels on the opposite side at the same time.**
   2. **If there is a significant difference in the thicknesses of the pads on the left and right sides, check the sliding condition of the piston, lock pin and guide pin.**

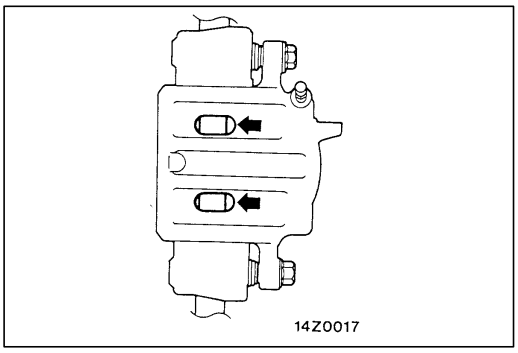

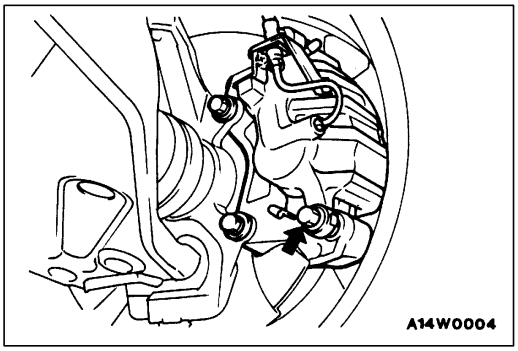

2. Remove guide pin. Lift caliper assembly and retain with wires.

Caution
Do not wipe off the special grease that is on the lock pin or allow it to contaminate the guide pin.

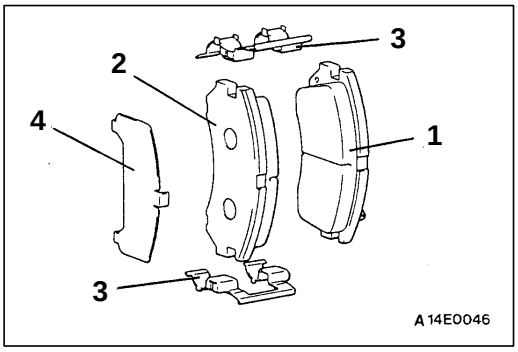

3. Remove the following parts from caliper support.
   (1) Pad and wear indicator assembly
   (2) Pad assembly
   (3) Clip
   (4) Outer shim
4. Measure hub torque with pad removed to measure brake drag torque after pad installation. (Refer to P. 35B-33.)
5. Install the pad and caliper assembly, and check the brake drag force. (Refer to P. 35B-33.)

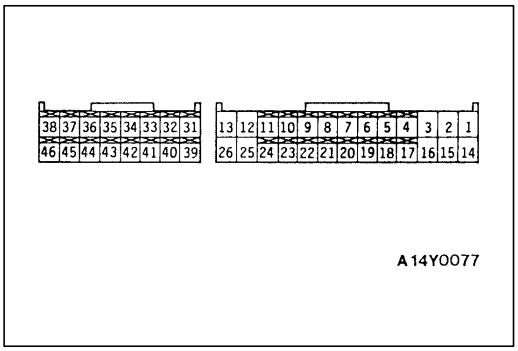

WHEEL SPEED SENSOR OUTPUT VOLTAGE CHECK

35200160156

1. Lift up the vehicle and release the parking brake.
2. Disconnect the ABS-ECU connector, and then use the special tool (inspection harness for connector pin contact pressure) to measure the output voltage at the harness-side connector.

3. Rotate the wheel to be measured at approximately 1/2–1 rotation per second, and check the output voltage using a circuit tester or an oscilloscope.

Wheel speed sensor	Front left	Front right	Rear left	Rear right
Terminal No.	7	10	9	8
	20	23	22	21

Output voltage

When measuring with a circuit tester:
50 mV or more

When measuring with an oscilloscope:
120 mV p-p or more

4. If the output voltage is lower than the above values, the reason could be as follow:
   - Faulty wheel speed sensor.

   So replace the wheel speed sensor.

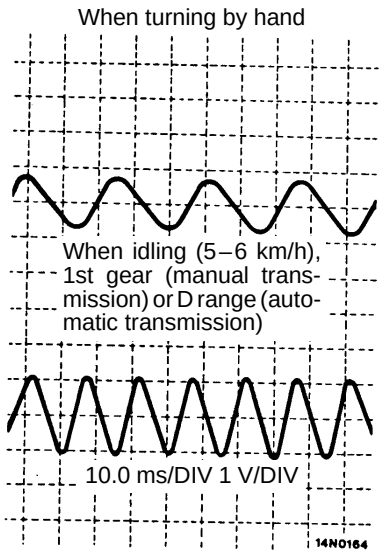

Inspecting Waveforms With An Oscilloscope

Use the following method to observe the output voltage waveform from each wheel sensor with an oscilloscope.

- Start the engine, and rotate the rear wheels by engaging 1st gear (vehicles with manual transmission) or D range (vehicles with automatic transmission). Turn the front wheels manually so that they rotate at a constant speed.

NOTE
1. Check the connection of the sensor harness and connector before using the oscilloscope.
2. The waveform measurements can also be taken while the vehicle is actually moving.
3. The output voltage will be small when the wheel speed is low, and similarly it will be large when the wheel speed is high.

Points In Waveform Measurement

Symptom	Probable causes	Remedy
Too small or zero waveform amplitude	Faulty wheel speed sensor	Replace sensor
Waveform amplitude fluctuates excessively (this is no problem if the minimum amplitude is 100 mV or more)	Axle hub eccentric or with large runout	Replace hub
Noisy or disturbed waveform	Open circuit in sensor	Replace sensor
	Open circuit in harness	Correct harness
	Incorrectly mounted wheel speed sensor	Mount correctly
	Rotor with missing or damaged teeth	Replace rotor

NOTE
The wheel speed sensor cable moves following motion of the front or rear suspension. Therefore, it is likely that it has an open circuit only when driving on rough roads and it functions normally on ordinary roads. It is, therefore, recommended to observe sensor output voltage waveform also under special conditions, such as rough road driving.

HYDRAULIC UNIT CHECK

35200170166

Caution
Turn the ignition switch off before connecting or disconnecting the MUT-II.

1. Jack up the vehicle and support the vehicle with rigid racks placed at the specified jack-up points or place the wheels which are checked on the rollers of the braking force tester.

   Caution
   1. The roller of the braking force tester and the tyre should be dry during testing.
   2. When testing the front brakes, apply the parking brake, and when testing the rear brakes, stop the front wheels by chocking them.

2. Release the parking brake, and feel the drag force (drag torque) on each road wheel.
   When using the braking force tester, take a reading of the brake drag force.
3. Turn the ignition key to the OFF position and set the MUT-II.
4. After checking that the shift lever <M/T> or the selector lever <A/T> is in neutral, start the engine.
5. Use the MUT-II to force-drive the actuator.

   NOTE
   1. During the actuator test, the ABS warning lamp will illuminate and the anti-skid control will be cancelled.
   2. When the ABS has been interrupted by the fail-safe function, the MUT-II actuator testing cannot be used.

6. Turn the wheel by hand and check the change in braking force when the brake pedal is depressed.
   When using the braking force tester, depress the brake pedal until the braking force is at the following values, and check that the braking force decreases when the actuator is force-driven.

Front wheel	785 – 981 N
Rear wheel	294 – 490 N

The result should be as shown in the following diagram.

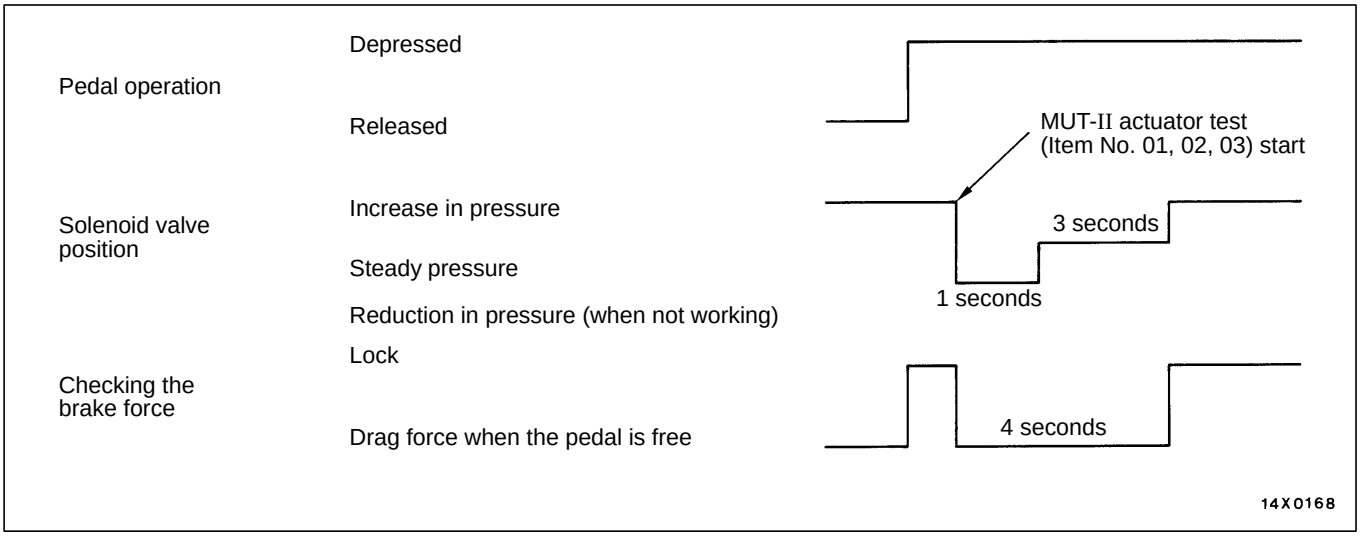

7. If the result of inspection is abnormal, correct according to the “Diagnosis Table” (Refer to P.35B-27).
8. After inspection, disconnect the MUT-II immediately after turning the ignition switch to OFF.

Diagnosis Table

No.	Operation	Judgement – Normal	Judgement – Abnormal	Probable cause	Remedy
01	(1) Depress brake pedal to lock wheel. (2) Using the MUT-II, select the wheel to be checked and force the actuator to operate. (3) Turn the selected wheel manually to check the change of brake force.	Brake force released for 4 seconds after locking.	Wheel does not lock when brake pedal is depressed.	Clogged brake line other than hydraulic unit	Check and clean brake line
02				Clogged hydraulic circuit in hydraulic unit	Replace hydraulic unit assembly
03			Brake force is not released	Incorrect hydraulic unit brake tube connection	Connect correctly
				Hydraulic unit solenoid valve not functioning correctly	Replace hydraulic unit assembly

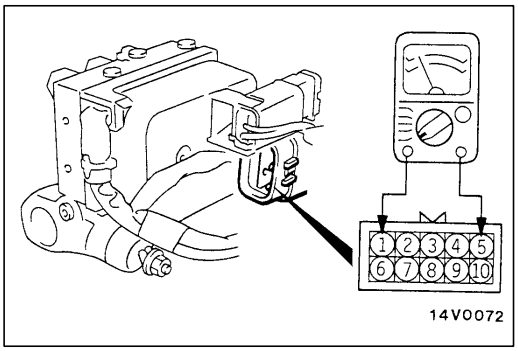

SOLENOID VALVE CHECK

35201070120

Measure the resistance between terminals.

Standard value:

Solenoid valve	Measurement terminals	Resistance between terminals.
Front IN (right side)	1 – 5 or 10	5.0 Ω
Front IN (left side)	2 – 5 or 10	
Rear IN	3 – 5 or 10	
Front OUT (right side)	6 – 5 or 10	2.2 Ω
Front OUT (left side)	7 – 5 or 10	
Rear OUT	8 – 5 or 10	

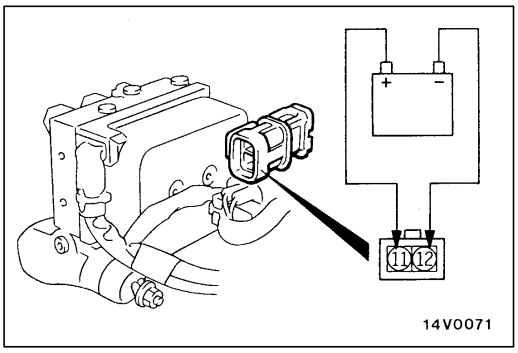

MOTOR OPERATION CHECK

35200180121

Connect the battery and check to be sure that the sound of the hydraulic unit motor operating can be heard.

Caution
The battery power should not be applied for more than 1 second.

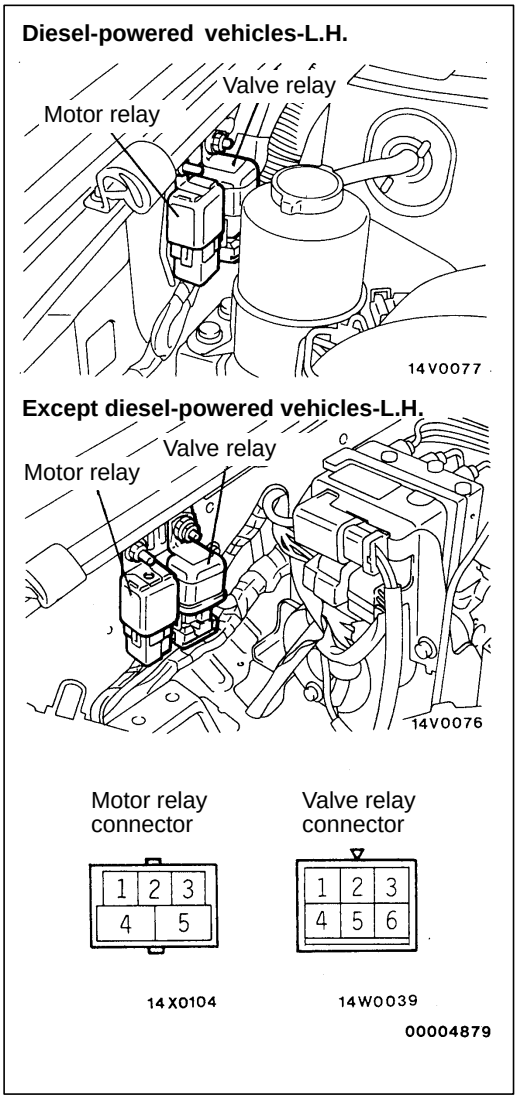

MOTOR RELAY AND VALVE RELAY CONTINUITY CHECK

35201090133

Motor relay

Battery voltage	Terminal No.			
	1	3	4	5
Power is not supplied	○	○		
Power is supplied	⊕	⊖	○	○

Valve relay

Battery voltage	Terminal No.				
	1	2	3	5	6
Power is not supplied	○	○	○	○	
Power is supplied		⊕	○	⊖	○

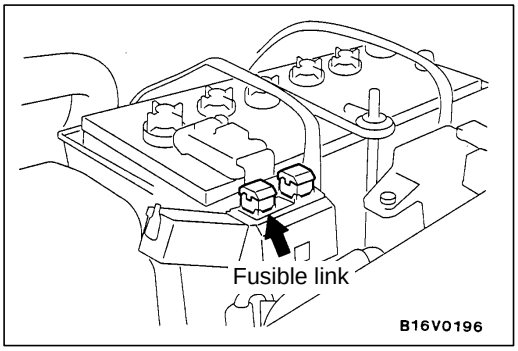

REMEDY FOR A FLAT BATTERY

35200350126

When booster cables are used to start the engine when the battery is completely flat and then the vehicle is immediately driven without waiting for the battery to recharge itself to some extent, the engine may misfire, and driving might not be possible.

This happens because ABS consumes a great amount of current for its self-check function; the remedy is to either allow the battery to recharge sufficiently, or to remove the fusible link for ABS circuit, thus disabling the anti-skid brake system. The ABS warning lamp will illuminate when the fusible link (for ABS) is removed.

After the battery has sufficiently recharged, install the fusible link (for ABS) and restart the engine; then check to be sure the ABS warning lamp is not illuminated.

MASTER CYLINDER AND BRAKE BOOSTER

35200400159

REMOVAL AND INSTALLATION

Pre-removal Operation
- Battery Removal
- Brake Fluid Draining

Post-installation Operation
- Brake Fluid Supplying
- Brake Line Bleeding (Refer to P. 35B-23.)
- Brake Pedal Adjustment (Refer to GROUP 35A – On-vehicle Service.)

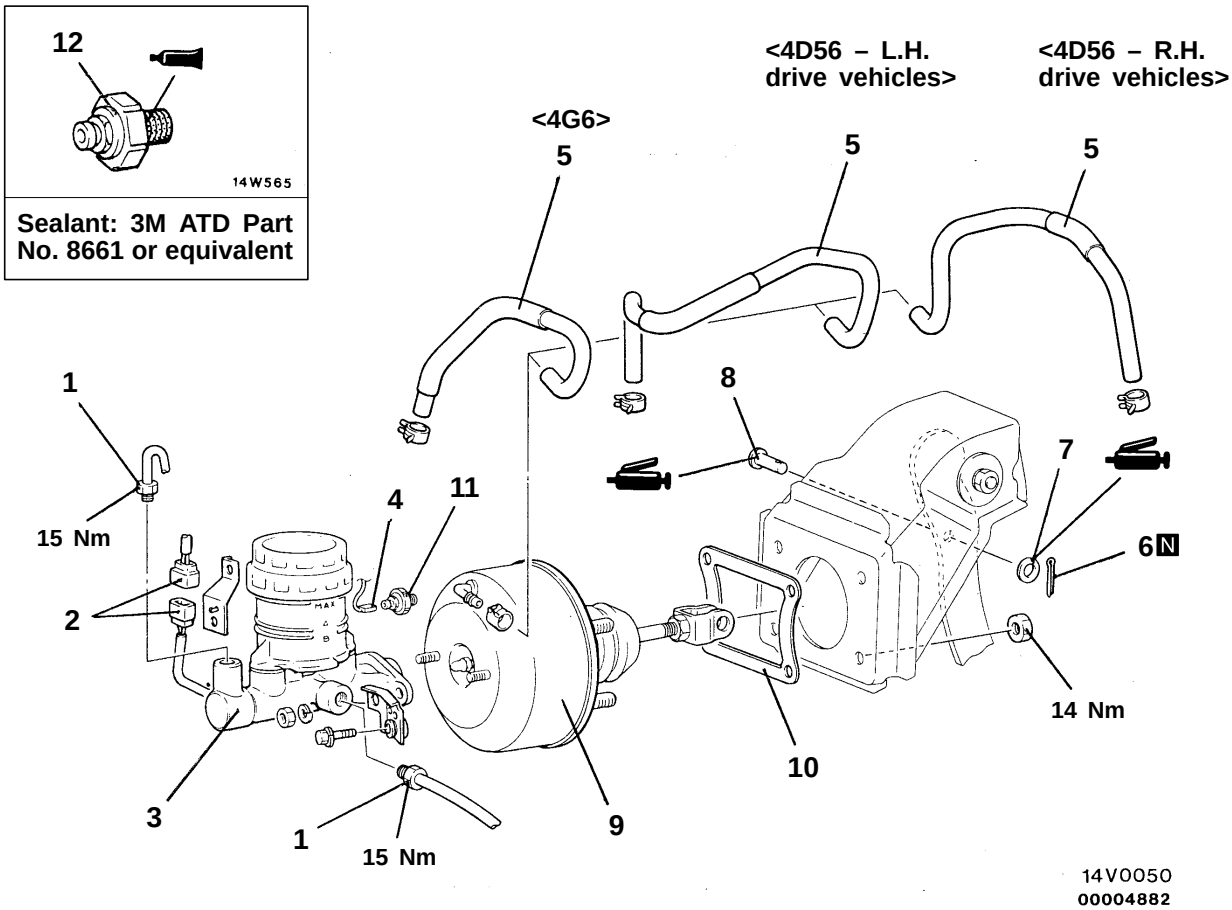

Removal steps

1. Brake tube connection
2. Brake fluid level sensor connector
3. Master cylinder assembly
   ▶B◀ • Adjustment of clearance between brake booster push rod and primary piston
4. Vacuum switch connector <4D56>
   ▶A◀ 5. Vacuum hose (With built-in check valve)
6. Split pin
7. Washer
8. Clevis pin
9. Brake booster
10. Sealer
11. Vacuum switch <4D56>

Caution
The check valve should not be removed from the vacuum hose. If the check valve is defective, replace it together with the vacuum hose.

INSTALLATION SERVICE POINTS

▶A◀ VACUUM HOSE CONNECTION

Insert securely and completely until the vacuum hose at the engine side contacts the edge of the hexagonal part of the fitting, and then secure by using the hose clip.

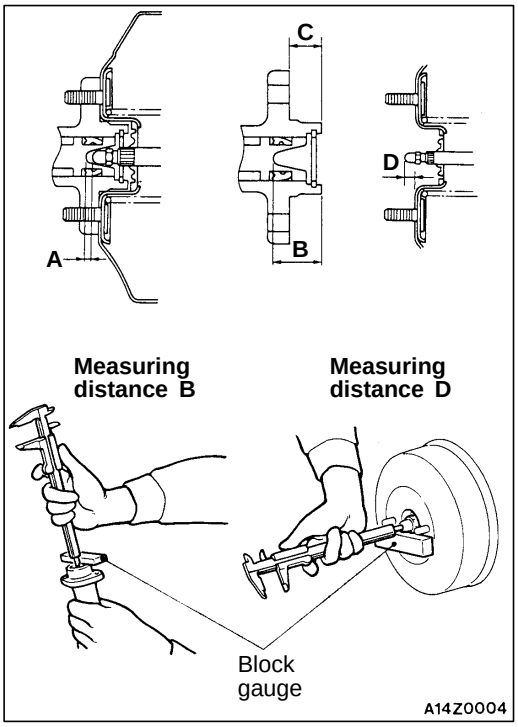

▶B◀ CLEARANCE ADJUSTMENT BETWEEN BRAKE BOOSTER PUSH ROD AND PRIMARY PISTON

Calculate clearance A from the B, C and D measurements.
A = B – C – D

Standard value:

Brake booster size	Clearance A standard value mm
Petrol-powered vehicles	0.90 – 1.30
Diesel-powered vehicles	0.70 – 1.10

NOTE
When brake booster negative pressure (petrol-powered vehicles: –66.7 kPa, diesel-powered vehicles: –93.3 kPa) is applied, clearance value will become 0.10 – 0.50 mm.

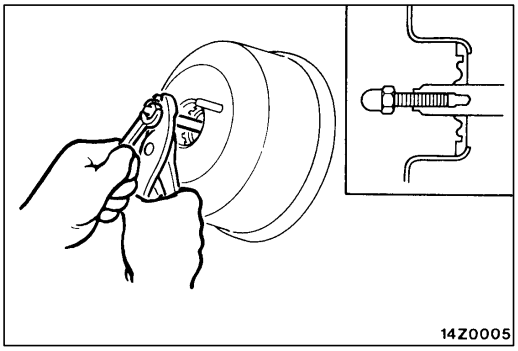

If the clearance is not within the standard value range, adjust by changing the push rod length by turning the screw of the push rod.

MASTER CYLINDER
DISASSEMBLY AND REASSEMBLY

35200450109

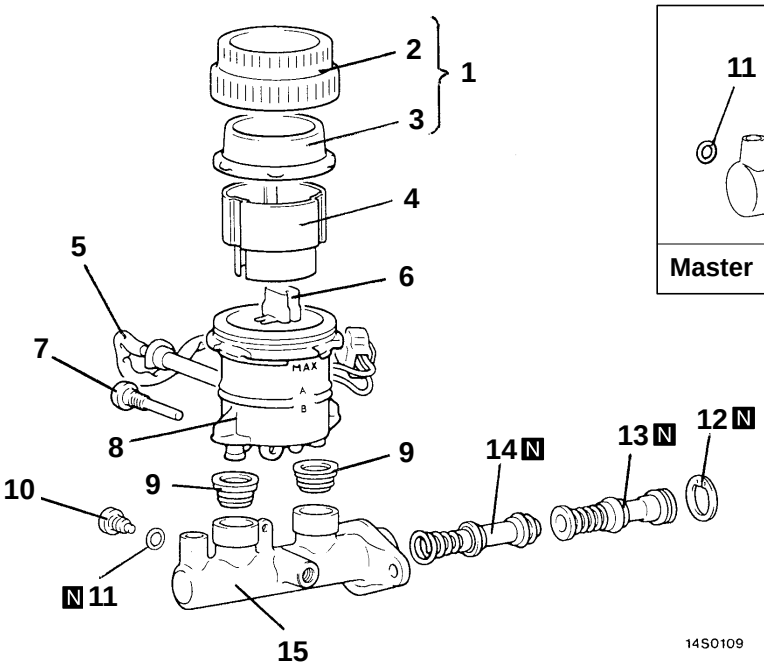

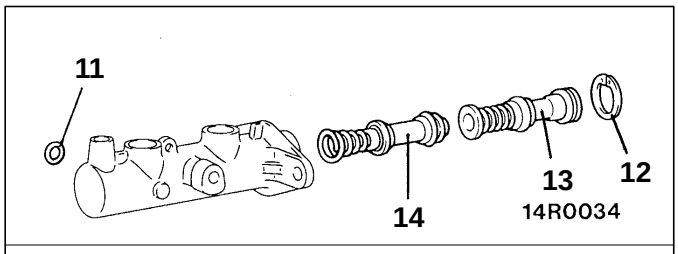

Master cylinder kit

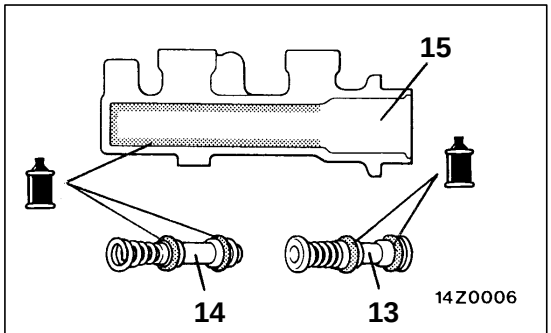

Brake fluid: DOT3 or DOT4

00004883

Disassembly steps

1. Reservoir cap assembly
2. Reservoir cap
3. Diaphragm
4. Filter
5. Brake fluid level sensor
6. Float
7. Reservoir stopper bolt
8. Reservoir tank
9. Reservoir seal
10. ◀A▶ Piston stopper bolt
11. Gasket
12. ◀A▶ Piston stopper ring
13. Primary piston assembly
14. Secondary piston assembly
15. Master cylinder body

Caution
Do not disassemble the primary and secondary piston assembly.

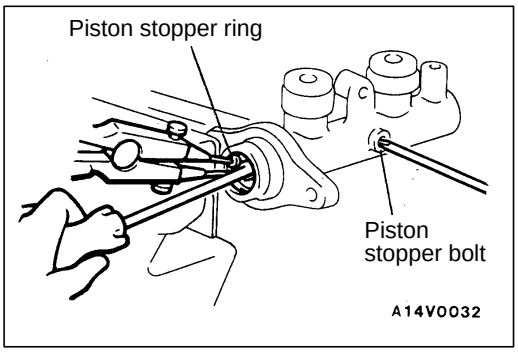

DISASSEMBLY SERVICE POINTS

◀A▶ PISTON STOPPER BOLT /PISTON STOPPER RING DISASSEMBLY

Remove the piston stopper bolt and piston stopper ring, while depressing the piston.

INSPECTION

35200460027

- Check the inner surface of master cylinder body for rust or pitting.
- Check the primary and secondary pistons for rust, scoring, wear, damage or wear.
- Check the diaphragm for cracks and wear.

FRONT DISC BRAKE

35200600016

REMOVAL AND INSTALLATION

Pre-removal Operation
- Brake Fluid draining

Post-installation Operation
- Brake Fluid Supplying
- Brake Line Bleeding (Refer to P. 35B-23.)

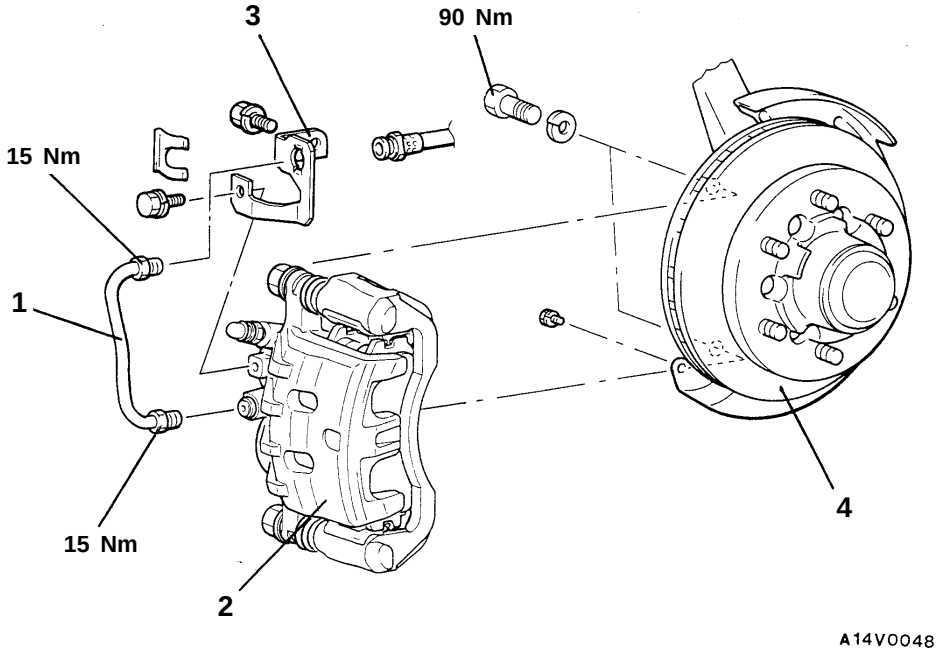

Removal steps

1. Brake tube
2. ▶A◀ Front brake assembly
3. Brake hose bracket
4. Brake disc (Refer to GROUP 26 – Front Hub Assembly.)

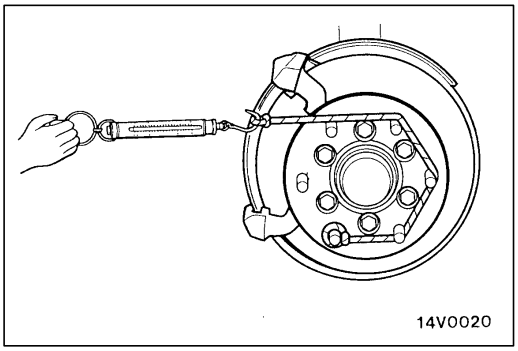

INSTALLATION SERVICE POINT

▶A◀ FRONT BRAKE ASSEMBLY INSTALLATION

1. Measure hub torque (A) with pad removed to measure brake drag torque after pad installation.
2. Securely attach the pad clip to the caliper support.

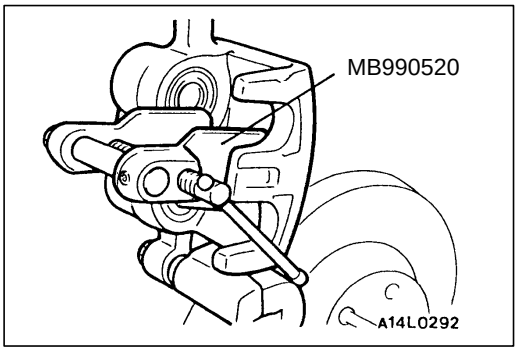

3. Clean piston and insert into cylinder with special tool.
4. Be careful that the piston boot does not become caught, when lowering the caliper assembly and install the lock pin.
5. Check brake drag torque as follows.
   (1) Start engine and hold brake pedal down for 5 seconds. (Pedal depression force approx. 196 N.)
   (2) Stop engine.
   (3) Turn brake disc forward 10 times.

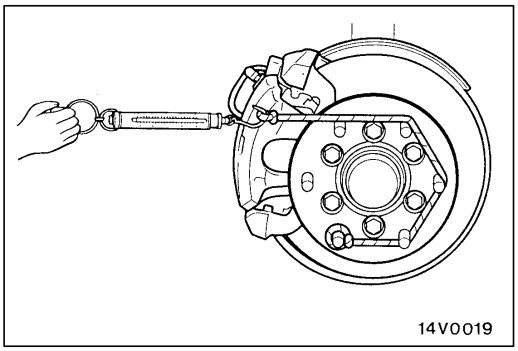

   (4) Check hub torque (B) with spring balance.
   (5) Calculate the drag torque of the disc brake [difference between hub torque (B) and hub torque (A)].

   Standard value: 69 N or less

6. If the difference between brake drag torque and hub torque exceeds the standard value, disassemble piston and clean the piston. Check for corrosion or worn piston seal, and check the sliding condition of the lock pin and guide pin.

DISASSEMBLY AND REASSEMBLY

35200620012

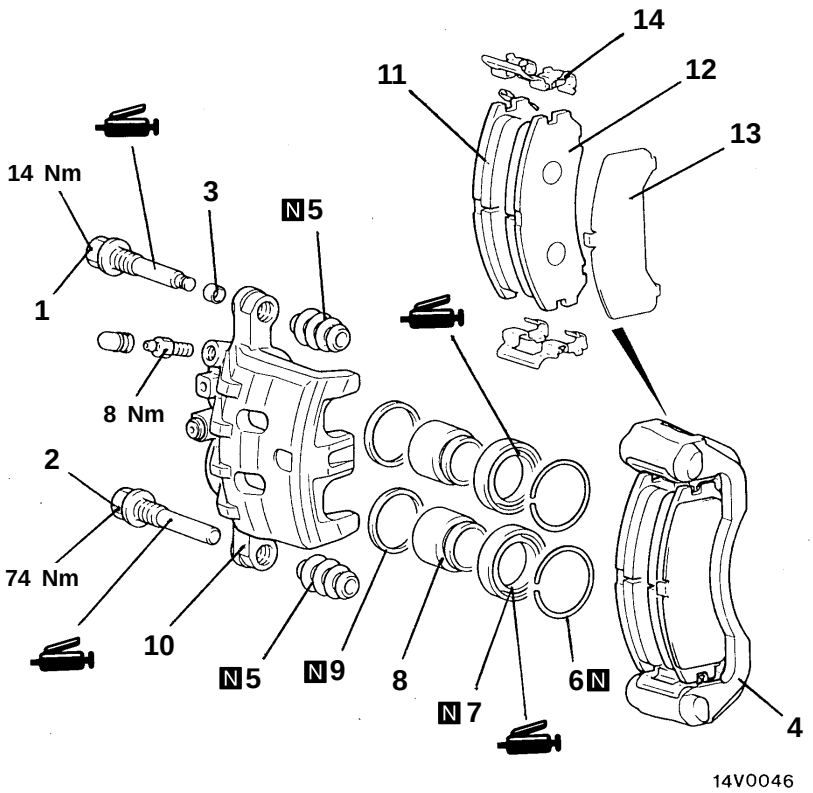

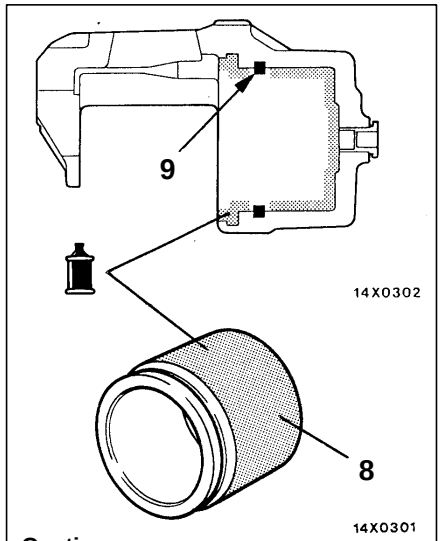

Caution
The piston seal inside the seal and boot kit is coated with special grease, so do not wipe this grease off.

Brake fluid: DOT3 or DOT4

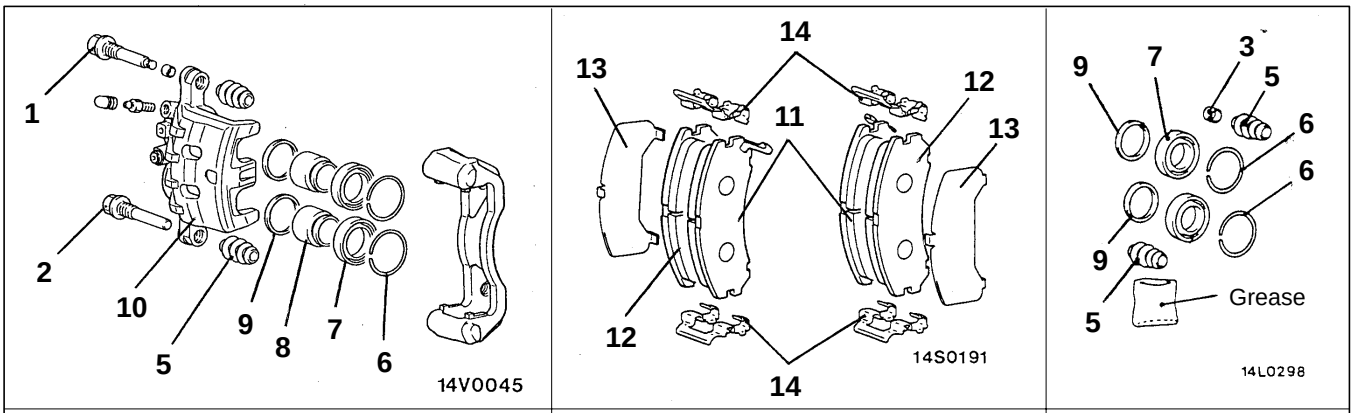

Brake caliper kit	Pad kit	Seal and boot kit

00004884

Caliper assembly disassembly steps

▶A◀ 1. Lock pin
▶A◀ 2. Guide pin
3. Bushing
4. Caliper support (Pad, clip and shim)
5. Pin boot
6. Boot ring
◀A▶ 7. Piston boot
◀A▶ 8. Piston
◀B▶ 9. Piston seal
10. Caliper body

Pad assembly disassembly steps

▶A◀ 1. Lock pin
▶A◀ 2. Guide pin
3. Bushing
4. Caliper support (Pad, clip and shim)
11. Pad and wear indicator assembly
12. Pad assembly
13. Outer shim
14. Clip

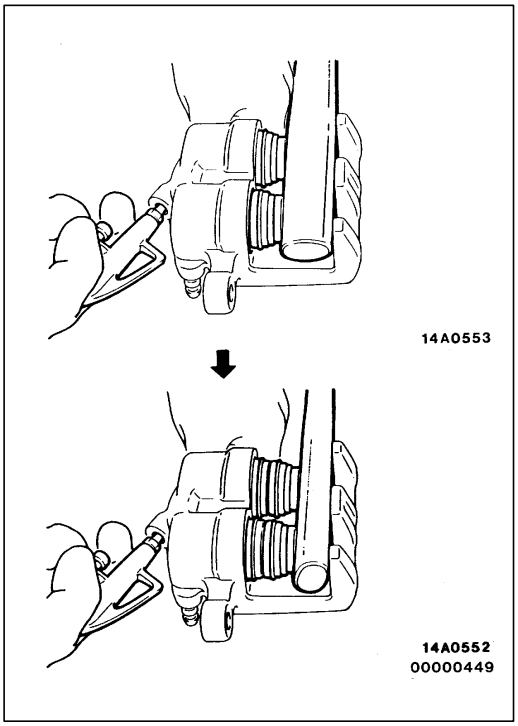

DISASSEMBLY SERVICE POINTS

When disassembling the disc brakes, disassemble both sides (left and right) as a set.

◀A▶ PISTON BOOT/PISTON REMOVAL

Pump in compressed air through the brake hose installation hole and remove the piston and piston boot.

Caution
When removing the pistons, be sure to use the handle of a plastic hammer and adjust the height of the two pistons while pumping air slowly in so that the pistons protrude evenly.
Do not remove one piston completely before trying to remove the other piston because it will become impossible to remove the second piston.

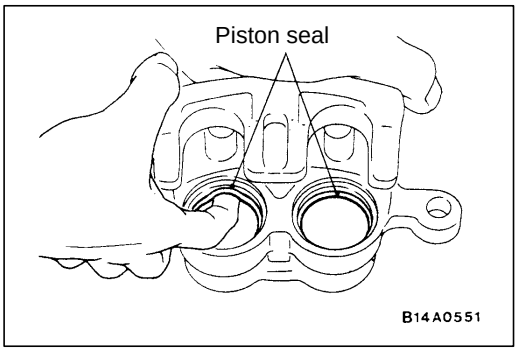

◀B▶ PISTON SEAL REMOVAL

(1) Remove piston seal with finger tip.

Caution
Do not use a screwdriver or other tool to prevent damage to inner cylinder.

(2) Clean piston surface and inner cylinder with trichloro-ethylene, alcohol or specified brake fluid.

Specified brake fluid: DOT3 or DOT4

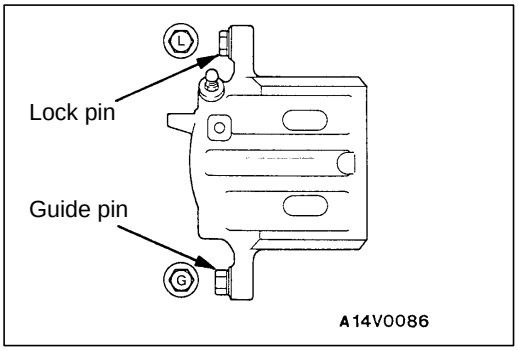

REASSEMBLY SERVICE POINT

▶A◀ LOCK PIN/GUIDE PIN INSTALLATION

Install the lock pin and the guide pin to the caliper body as shown in the illustration..

INSPECTION

35200630015

- Check cylinder for wear, damage or rust.
- Check piston surface for wear, damage or rust.
- Check caliper body or sleeve for wear.
- Check pad for damage or adhesion of grease, check backing metal for damage.

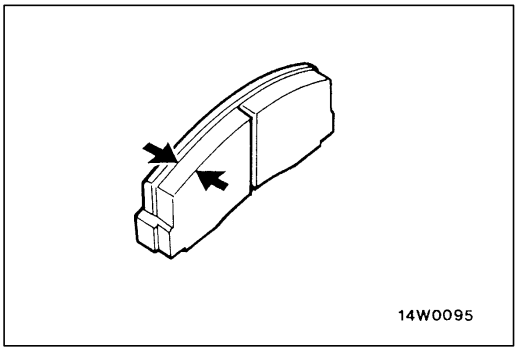

PAD WEAR CHECK

Measure thickness at the thinnest and worn area of the pad. Replace pad assembly if pad thickness is less than the limit value.

Standard value: 10 mm

Limit value: 2.0 mm

Caution

1. **When the limit is exceeded, replace the pads at both sides, and also the brake pads for the wheels on the opposite side at the same time.**
2. **If there is a significant difference in the thicknesses of the pads on the left and right sides, check the sliding condition of the piston, lock pin and guide pin.**

HYDRAULIC UNIT

35200860179

REMOVAL AND INSTALLATION

Pre-removal Operation
- Brake Fluid Draining

Post-installation Operation
- Brake Fluid Supplying
- Brake Lines Bleeding (Refer to P. 35B-23.)
- Hydraulic Unit Checking (Refer to P. 35B-26.)

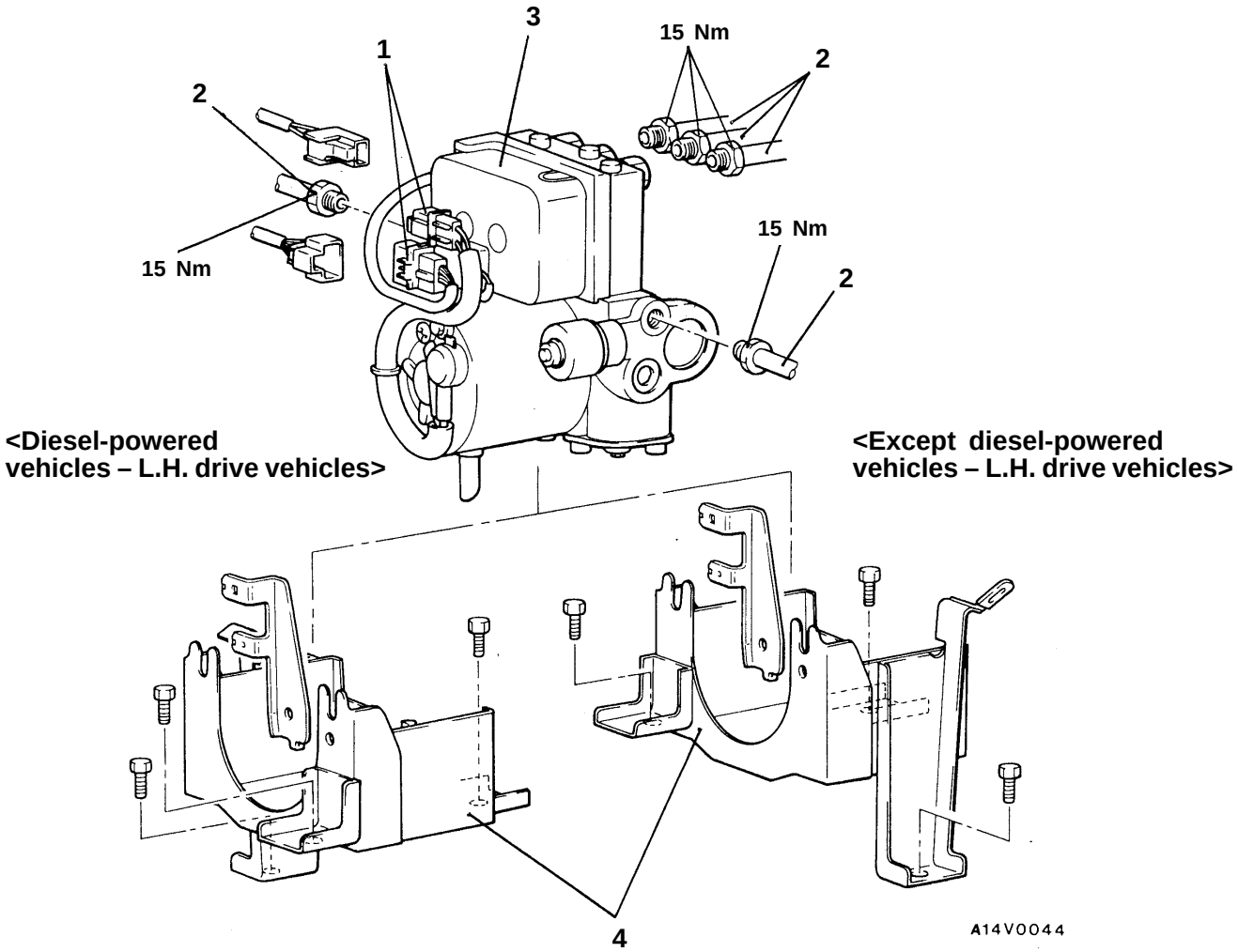

Removal steps

1. Harness connector
2. ▶A◀ Brake tube connection
3. ◀A▶ Hydraulic unit
4. Hydraulic unit bracket

REMOVAL SERVICE POINT

◀A▶ HYDRAULIC UNIT REMOVAL

Caution

1. **The hydraulic unit is heavy, and so care should be take when removing it.**
2. **The hydraulic unit is not to be disassembled; its nuts and bolts should absolutely not be loosened.**
3. **The hydraulic unit must not be dropped or otherwise subjected to impact shocks.**
4. **The hydraulic unit must not be turned upside down or laid on its side.**

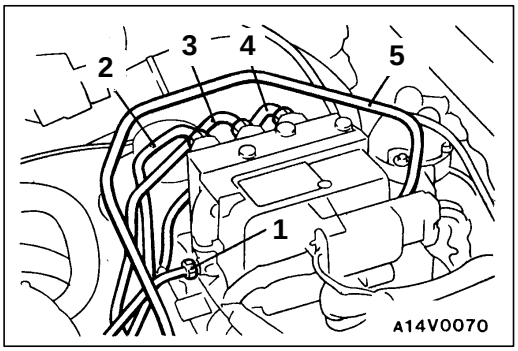

INSTALLATION SERVICE POINT

◀A▶ BRAKE TUBE CONNECTION

Connect the tube to the hydraulic unit as shown in the illustration.

1. Master cylinder (for front)
2. Front brake (R.H.)
3. Front brake (L.H.)
4. Rear brake
5. Master cylinder (for rear)

WHEEL SPEED SENSOR

35200830163

REMOVAL AND INSTALLATION

Post-installation Operation
- Wheel Speed Sensor Output Voltage Checking (Refer to P. 35B-24.)

Front

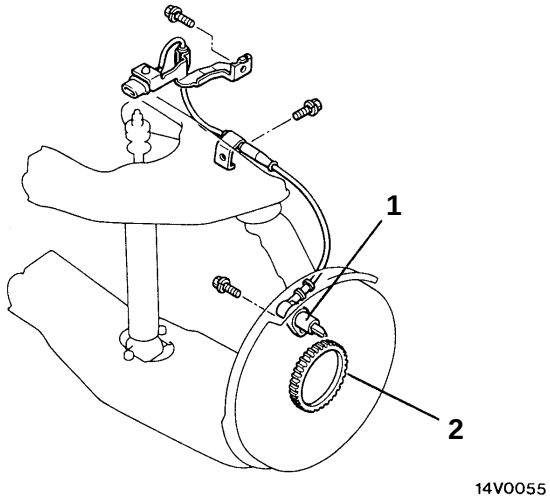

Rear

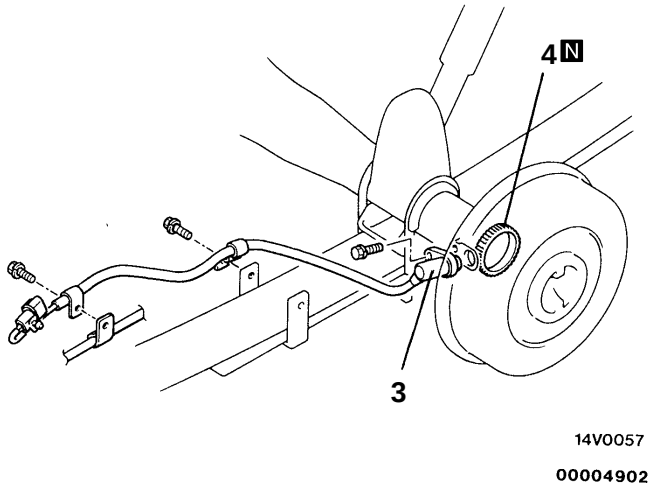

1. Front speed sensor
2. Front rotor (Refer to GROUP 26 – Front Hub.)
3. Rear speed sensor
4. Rear rotor (Refer to GROUP 27 – Rear Axle Shaft.)

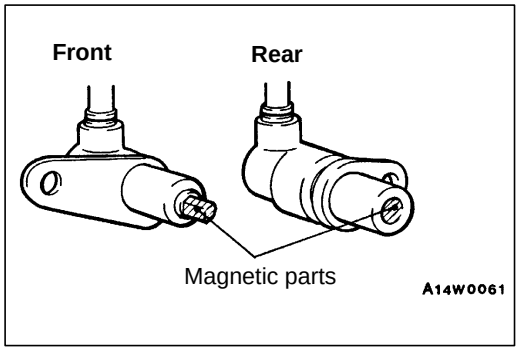

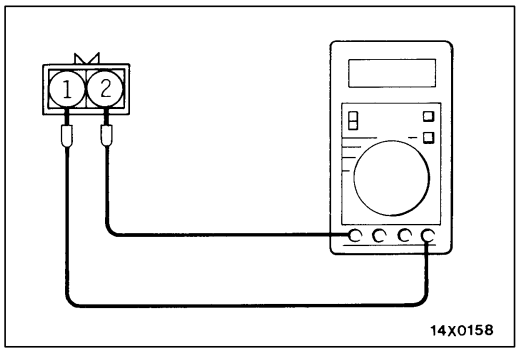

INSPECTION

35200840128

SPEED SENSOR

(1) Check whether any metallic foreign material has adhered to the parts shown in the illustration at the speed sensor tip, and if so, remove it.

NOTE
The section shown in the illustration can become magnetized because of the magnet built into the speed sensor, with the result that foreign metallic material easily adheres to it.

(2) Measure the resistance between the speed sensor terminals.

Standard value: 1.2 – 1.4 kΩ

If the internal resistance of the speed sensor is not within the standard value, replace with a new speed sensor.

(3) Check the speed sensor cable for breakage, damage or disconnection; replace with a new one if a problem is found.

NOTE
When checking for cable damage, remove the cable clamp part from the body and then bend and pull the cable near the clamp to check whether or not temporary disconnection occurs. Check the connector connection and the terminal insertion.

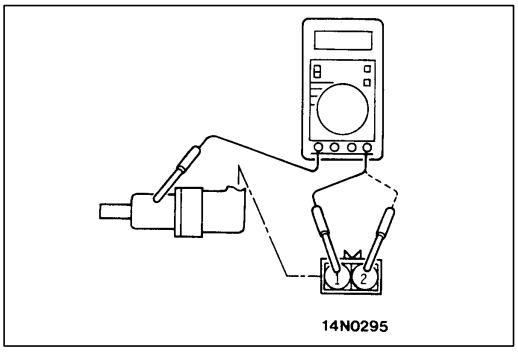

SPEED SENSOR INSULATION CHECK

(1) Remove all connections from the speed sensor, and then measure the resistance between terminals (1) and (2) and the body of the speed sensor.

Standard value: 100 kΩ or more

(2) If the speed sensor insulation resistance is outside the standard value range, replace with a new speed sensor.

TOOTHED ROTOR

Check whether rotor teeth are broken or deformed, and if so, replace the rotor.

ABS-ECU

35200980141

REMOVAL AND INSTALLATION

Pre-removal and Post-installation Operation
- Driver's Side Under Cover Removal and Installation (Refer to GROUP 52A – Instrument Panel.)
- Junction Block Installation Nut Removal and Installation.

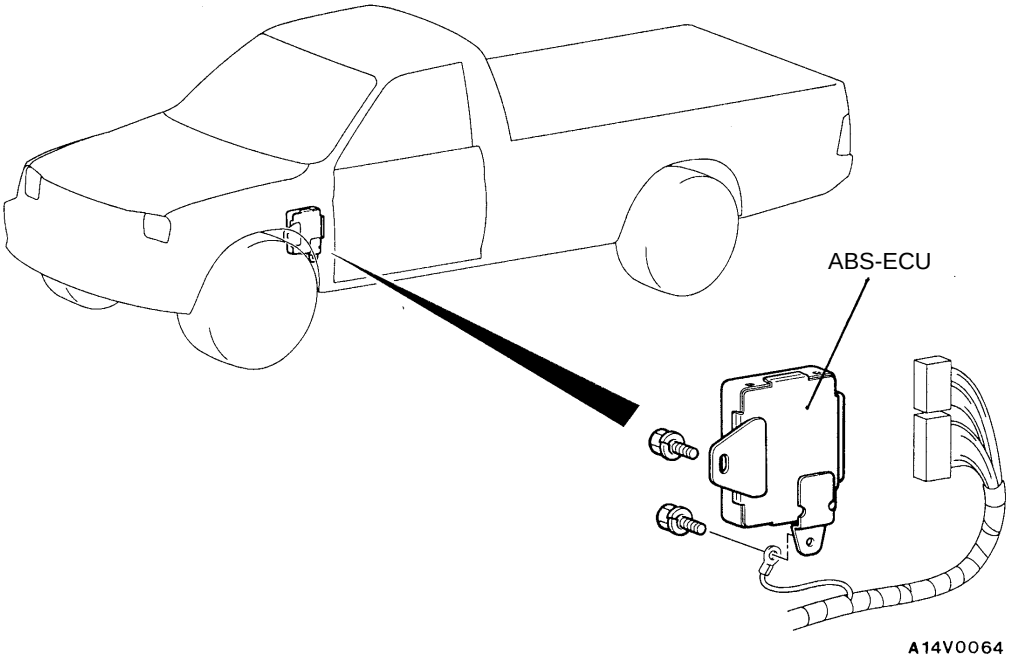

INSPECTION

35200990106

Refer to P. 35B-20.

NOTES

ANTI-SKID BRAKING SYSTEM (ABS) <2WD>

CONTENTS

GENERAL **2**
Outline of Change 2
TROUBLESHOOTING **3**
ON-VEHICLE SERVICE **19**
Wheel Speed Sensor Output Voltage Check 19
Hydraulic Unit Check 21
ABS Warning Lamp Relay Continuity Check 22
ABS-ECU AND HYDRAULIC UNIT **23**

GENERAL

OUTLINE OF CHANGE

- The ABS system has been revised as follows:
  (1) The ABS control unit (ABS-ECU) and the hydraulic unit have been unified.
  (2) The motor relay and the valve relay have been discontinued.
  (3) The ABS warning lamp relay has been added.

CONSTRUCTION DIAGRAM

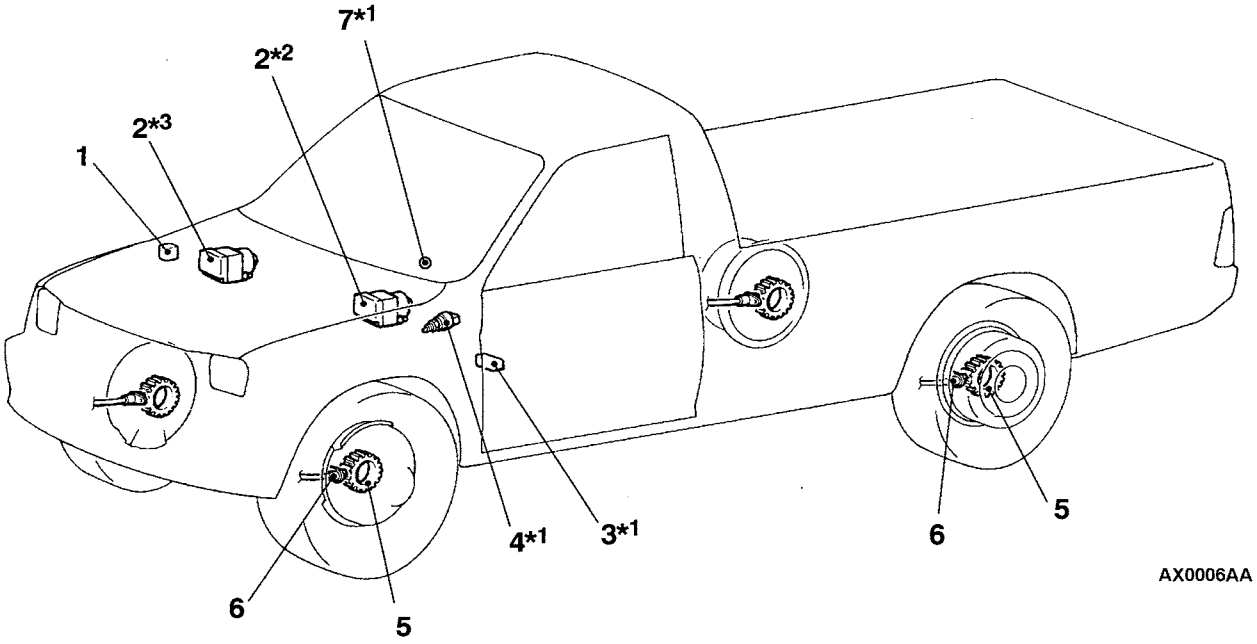

1. ABS warning lamp relay
2. Hydraulic unit assembly (integrated in ABS-ECU)
3. Diagnosis connector
4. Stop lamp switch
5. ABS rotor
6. Wheel speed sensor
7. ABS warning lamp

NOTE
For R.H. drive vehicles, *1 indicates installation at the right aide.
*2: LHD diesel-powered vehicles
*3: Except LHD diesel-powered vehicles

TROUBLESHOOTING

STANDARD FLOW OF DIAGNOSTIC TROUBLESHOOTING

Refer to Basic Manual GROUP 00 – How to Use Troubleshooting/Inspection Service Points.

NOTES WITH REGARD TO DIAGNOSIS

The phenomena listed in the following table are not abnormal.

Phenomenon	Explanation of phenomenon
System check sound	When starting the engine, a thudding sound can sometimes be heard coming from inside the engine compartment, but this is because the system operation check is being performed, and is not an abnormality.
ABS operation sound	1. Sound of the motor inside the ABS hydraulic unit operation (whine). 2. Sound is generated along with vibration of the brake pedal (scraping). 3. When ABS operates, sound is generated from the vehicle chassis due to repeated brake application and release. (Thump: suspension: squeak: tyres)
ABS operation (Long braking distance)	For road surfaces such as snow-covered roads and gravel roads, the braking distance for vehicles with ABS can sometimes be longer than that for other vehicles. Accordingly, advise the customer to drive safely on such roads by lowering the vehicle speed and not being too overconfident.
Shock during system operation check	Shock may be felt when the brake pedal is depressed slightly at a low driving speed. This occurs due to ABS operation check (check at a vehicle speed of 8 km/h after starting), and does not indicate any malfunction.

Diagnosis detection condition can vary depending on the diagnosis code.
Make sure that checking requirements listed in the "Comment" are satisfied when checking the trouble symptom again.

DIAGNOSIS FUNCTION

DIAGNOSIS CODES CHECK

With the MUT-II

Refer to Basic Manual GROUP 00 – How to Use Troubleshooting/Inspection Service Points.

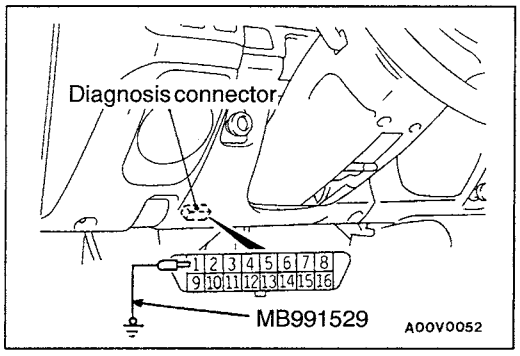

WHEN USING THE ABS WARNING LAMP

1. Use the special tool to earth No.1 terminal (diagnosis control terminal) of the diagnosis connector.
2. Turn on the ignition switch.
3. Read out a diagnosis code by observing how the ABS warning lamp flashes.

Indication of diagnosis code by ABS warning lamp

When the diagnosis code No.24 is output	When no diagnosis code is output
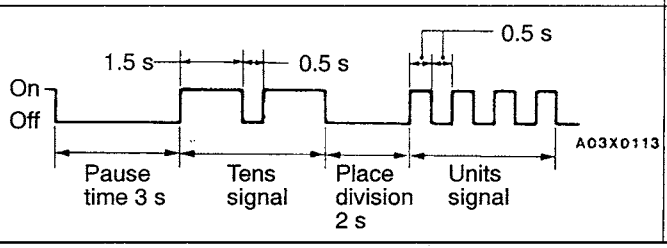	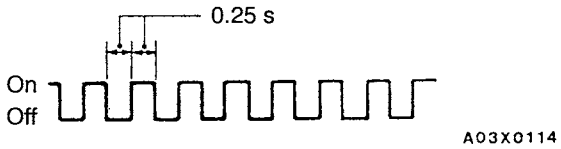

ERASING DIAGNOSIS CODES

With the MUT-II

Refer to Basic Manual GROUP 00 – How to Use Troubleshooting/Inspection Service Points.

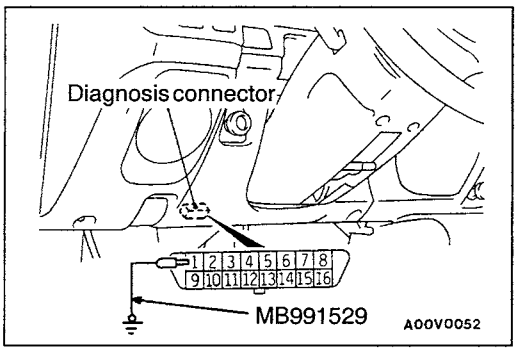

Without the MUT-II

1. Stop the engine.
2. Use the special tool to earth terminal (1) (diagnosis control terminal) of the diagnosis connector.
3. Turn on the stop lamp switch. (Depress the brake.)

4. After carrying out steps 1. to 3., turn the ignition switch to ON. Within 3 seconds after turning the ignition switch to ON, turn off the stop lamp switch (release the brake). Then, turn the stop lamp switch on and off a total of 10 times.

   NOTE
   If the ABS-ECU function has been stopped because of fail-safe operation, it will not be possible to erase the diagnosis codes.

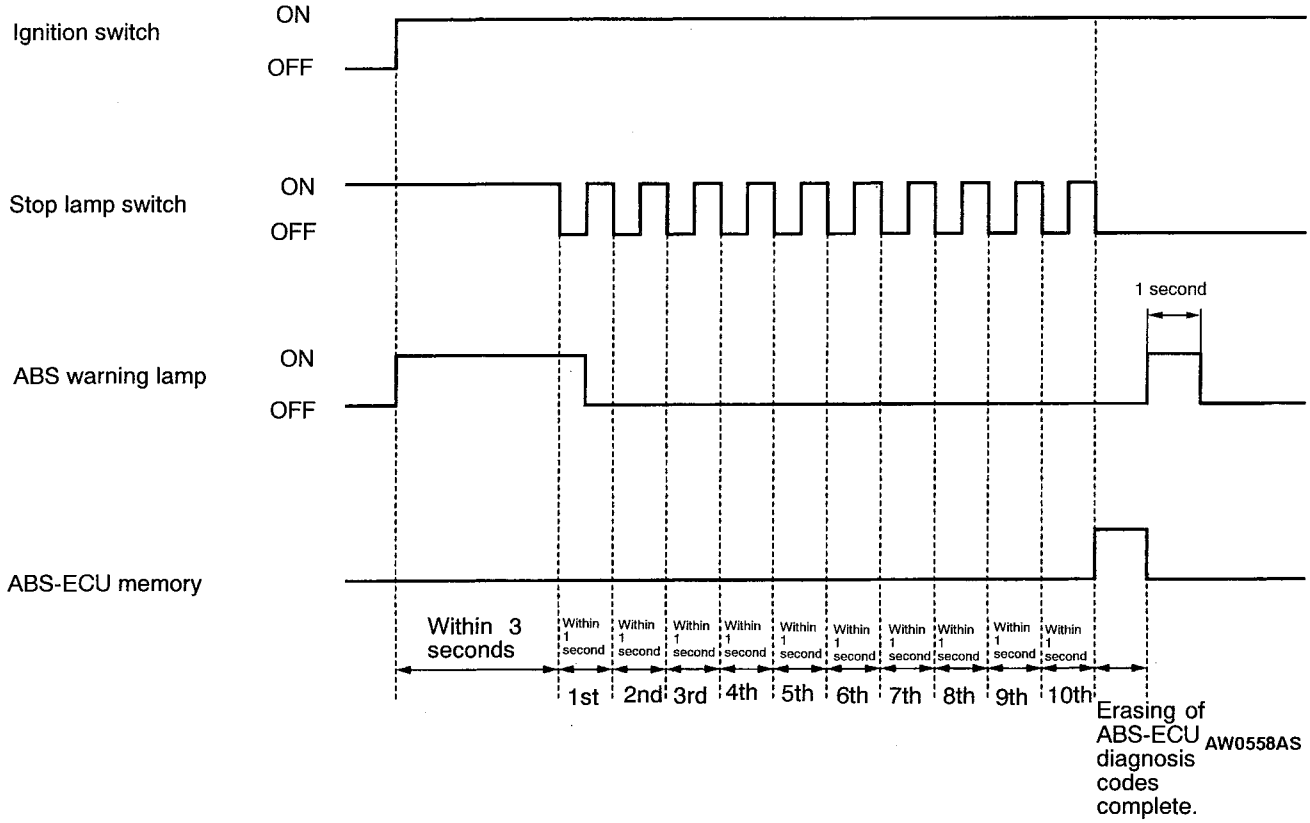

INSPECTION CHART FOR DIAGNOSIS CODES

Inspect according to the inspection chart that is appropriate for the malfunction code.

Diagnosis code No.	Inspection item	Diagnosis content	Reference page
11	Front right wheel speed sensor	Open or short circuit	35B-7
12	Front left wheel speed sensor		
13	Rear right wheel speed sensor		
14	Rear left wheel speed sensor		
15	Wheel speed sensor	Abnormal output signal	35B-8
16	Power supply system		35B-8
21	Front right wheel speed sensor	Abnormal	35B-7
22	Front left wheel speed sensor		
23	Rear right wheel speed sensor		
24	Rear left wheel speed sensor		
25	Free wheel engage switch		35B-9
26	4WD position detection switch		
27	Rear differential lock detection switch		
32	G-sensor system		
33	Stop lamp switch system		35B-9
41	Front right solenoid valve		35B-10
42	Front left solenoid valve		
43	Rear solenoid valve		
51	Valve driver		
53	Motor driver		
63	ABS-ECU		Refer to P.35B–23. (Replace the ABS-ECU and hydraulic unit assembly.)

INSPECTION PROCEDURE FOR DIAGNOSIS CODES

Code No. 11, 12, 13, 14 Wheel speed sensor open circuit or short circuit Code No. 21, 22, 23, 24 Wheel speed sensor abnormal	Probable cause
The ABS-ECU determines that an open circuit or short circuit occurs in more than one line of wheel speed sensors.	• Malfunction of wheel speed sensor • Malfunction of wiring harness or connector • Malfunction of ABS-ECU and hydraulic unit assembly
These codes are output at the following times: • When an open circuit cannot be found, but more than one wheel speed sensor does not output any signal during driving at 8 km/h or higher. • When a chipped or plugged-up rotor tooth, etc. is detected. • When the sensor output drops and anti-lock control is continuously carried out due to a defective sensor or a warped rotor.	• Malfunction of wheel speed sensor • Malfunction of ABS rotor • Malfunction of wheel bearing • Malfunction of wiring harness or connector • Malfunction of ABS-ECU and hydraulic unit assembly

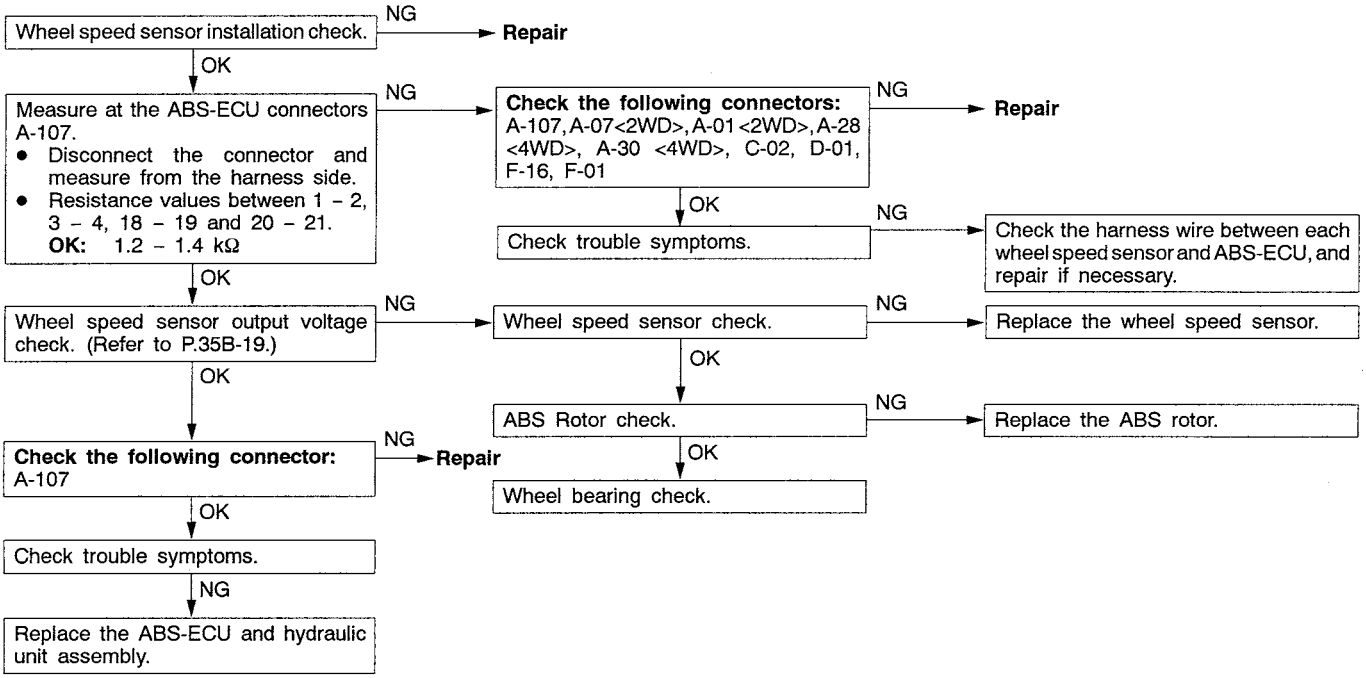

Code No. 15 Wheel speed sensor (Abnormal output signal)	Probable cause
A wheel speed sensor outputs an abnormal signal (other than an open or short-circuit).	• Improper installation of wheel speed sensor • Malfunction of wheel speed sensor • Malfunction of ABS rotor • Malfunction of wheel bearing • Malfunction of wiring harness or connector • Malfunction of ABS-ECU and hydraulic unit assembly

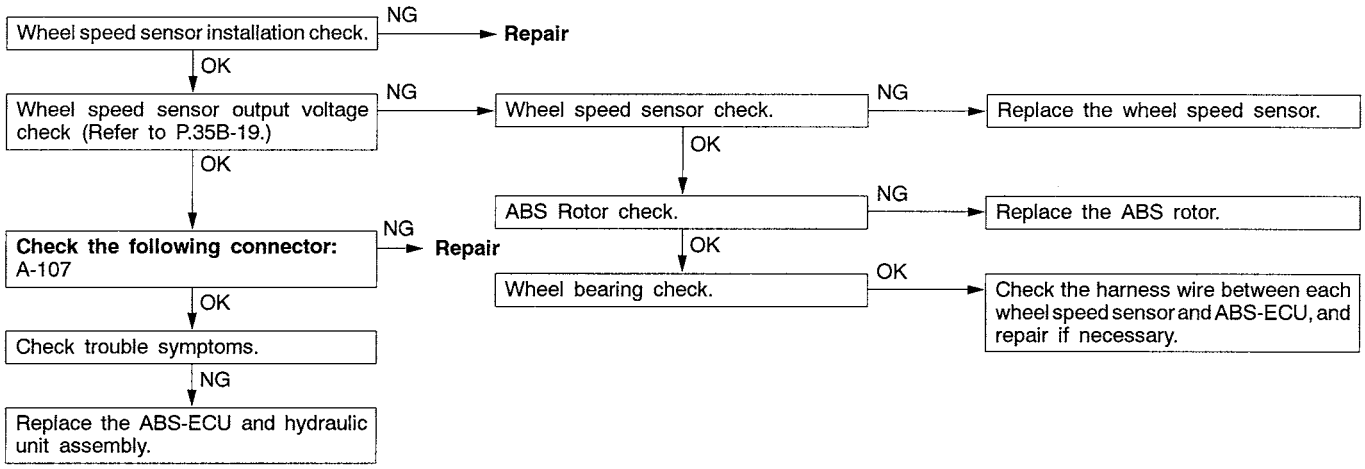

Code No. 16 Power supply system	Probable cause
The voltage of the ABS-ECU power supply drops lower or rises higher than the specified value. If the voltage returns to the specified value, this code is no longer output.	• Malfunction of wiring harness or connector. • Malfunction of ABS-ECU and hydraulic unit assembly

Caution

If battery voltage drops or rises during inspection, this code will be output as well. If the voltage returns to standard value, this code is no longer output.

Before carrying out the following inspection, check the battery level, and refill distilled water if necessary.

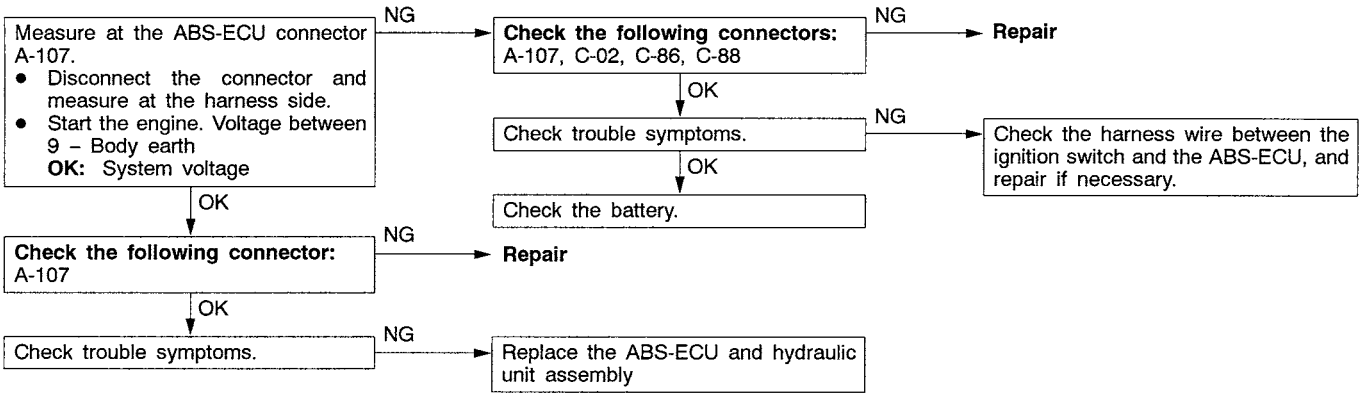

Code No. 25 Freewheel engage switch system	Probable cause
Code No. 26 4WD position detection switch system	
Code No. 27 Rear differential lock detection switch	
Code No. 32 G-sensor system	
The ABS-ECU is shared by 2WD and 4WD vehicles. To identify 2WD from 4WD, on 2WD vehicles, the ABS-ECU G-sensor signal input terminal (terminal No.7) is earthed. Code Nos. 25, 26, 27 and 32 are output when the earth line to that terminal is open circuit.	• Malfunction of wiring harness or connector • Malfunction of ABS-ECU and hydraulic unit assembly

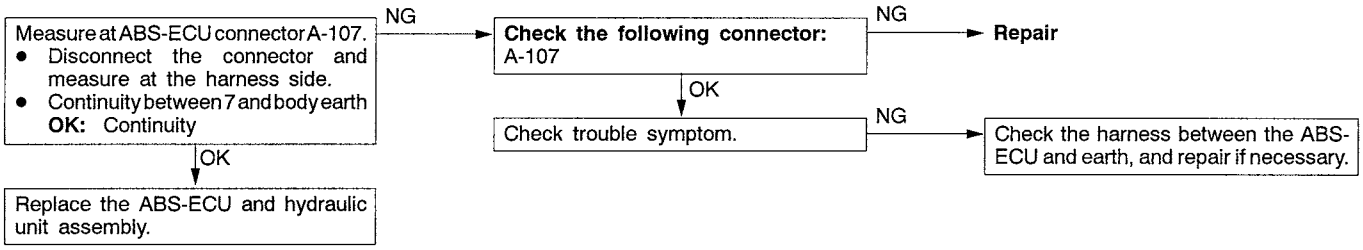

Code No. 33 Stop lamp switch system	Probable cause
This code is output when the stop lamp switch stays on for 15 minutes or more at a vehicle speed of 15 km/h or more due to a ON-failure in the stop lamp switch or open circuit in the stop lamp switch circuit.	• Malfunction of stop lamp switch • Malfunction of harness or connector • Malfunction of ABS-ECU and hydraulic unit assembly

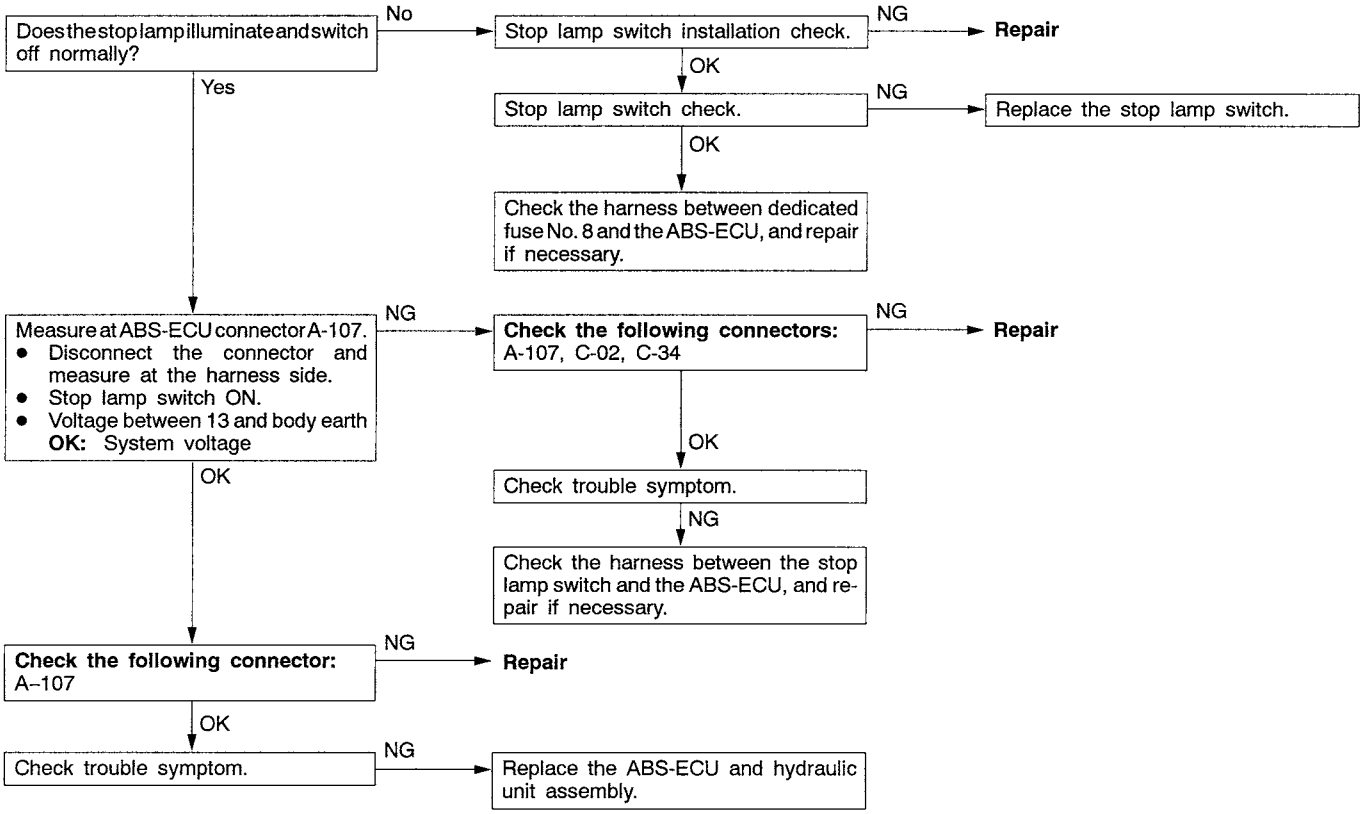

Code No. 41, 42, 43 Solenoid valve system Code No. 51 Valve driver system Code No. 53 Motor driver system	Probable cause
These codes are output in the following cases: • If there is an open or short circuit in the ABS-ECU power circuit (solenoid valve, motor). • If there is a malfunction in the ABS-ECU and hydraulic unit inner circuit.	• Malfunction of harness or connector • Malfunction of ABS-ECU and hydraulic unit assembly

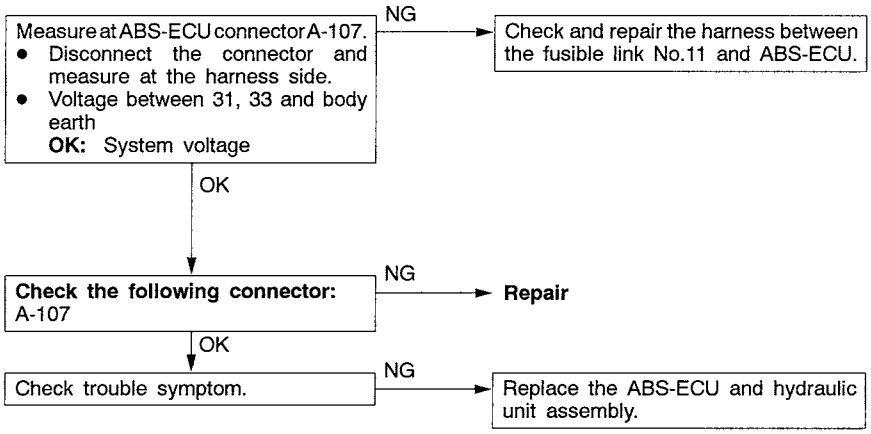

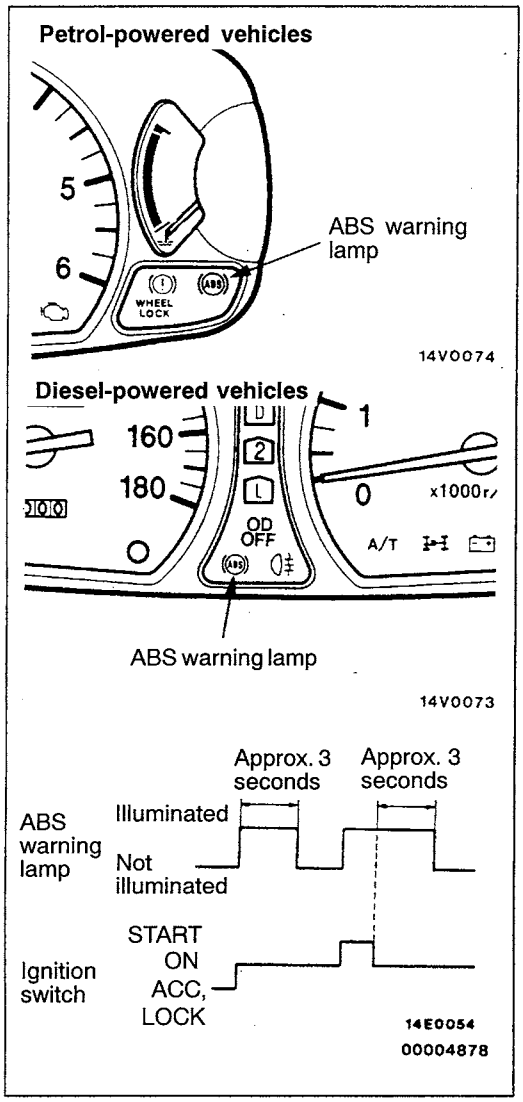

ABS WARNING LAMP INSPECTION

Check that the ABS warning lamp illuminates as follows.

1. When the ignition key is turned to "ON", the ABS warning lamp illuminates for approximately 3 seconds and then switches off.
2. When the ignition key is turned to "START", the ABS warning lamp remains illuminated.
3. When the ignition key is turned from "START" back to "ON", the ABS warning lamp illuminates for approximately 3 seconds and then switches off.

   NOTE
   The ABS warning lamp may remain on until the vehicle reaches a speed of several km/h. This is limited to cases where diagnosis code Nos.21 – 24 and 53 have been recorded because of a previous problem occurring. In this case, the ABS-ECU keeps the warning lamp illuminated until the problem corresponding to that diagnosis code can be detected.
4. If the illumination is other than the above, check the diagnosis codes.

INSPECTION PROCEDURE FOR TROUBLE SYMPTOMS

Inspection Procedure 1

Communication with MUT-II is not possible. (Communication with all systems is not possible.)	Probable cause
The reason is probably a defect in the power supply system (including earth) for the diagnosis line.	• Malfunction of connector • Malfunction of harness

Refer to GROUP 13A – Troubleshooting*.

NOTE
*: Refer to '98 L200 Workshop Manual (Pub.No. PWTE96E1-B).

Inspection Procedure 2

Communication with MUT-II is not possible. (Communication with ABS only is not possible.)	Probable cause
When communication with the MUT-II is not possible, the cause is probably an open circuit in the ABS-ECU power circuit or an open circuit in the diagnosis output circuit.	• Blown fuse • Malfunction of wiring harness or connecter • Malfunction of ABS-ECU and hydraulic unit assembly

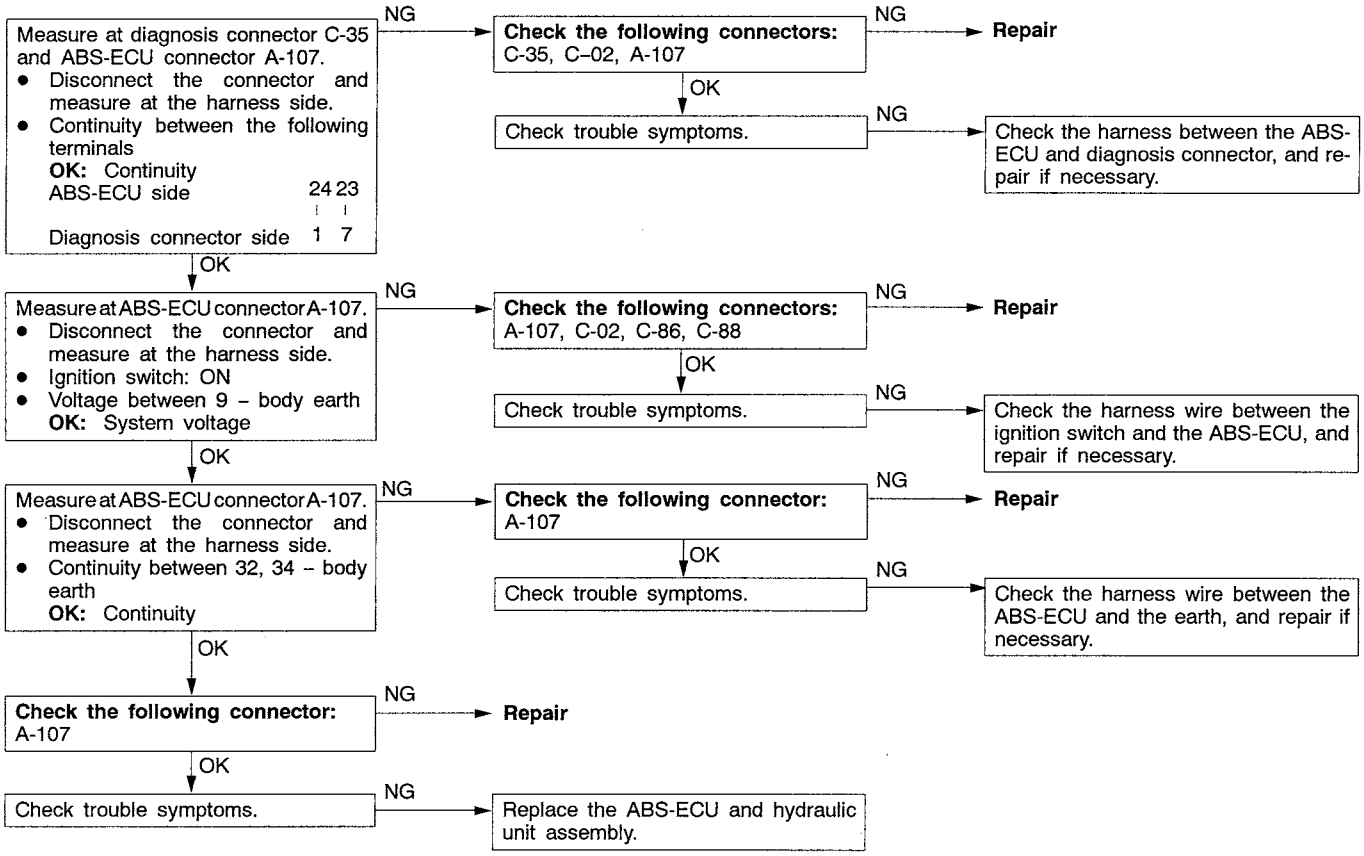

Inspection Procedure 3

When ignition key is turned to "ON" (engine stopped), ABS warning lamp does not illuminate.	Probable cause
Lamp power supply circuit disconnections, lamp bulb burnouts, ABS warning lamp relay faults, or circuit breaks between the ABS warning lamp and the earth are possible causes.	• Blown fuse • Burnt out ABS warning lamp bulb • Malfunction of the ABS warning lamp relay • Malfunction of wiring harness or connector • Malfunction of ABS-ECU and hydraulic unit assembly

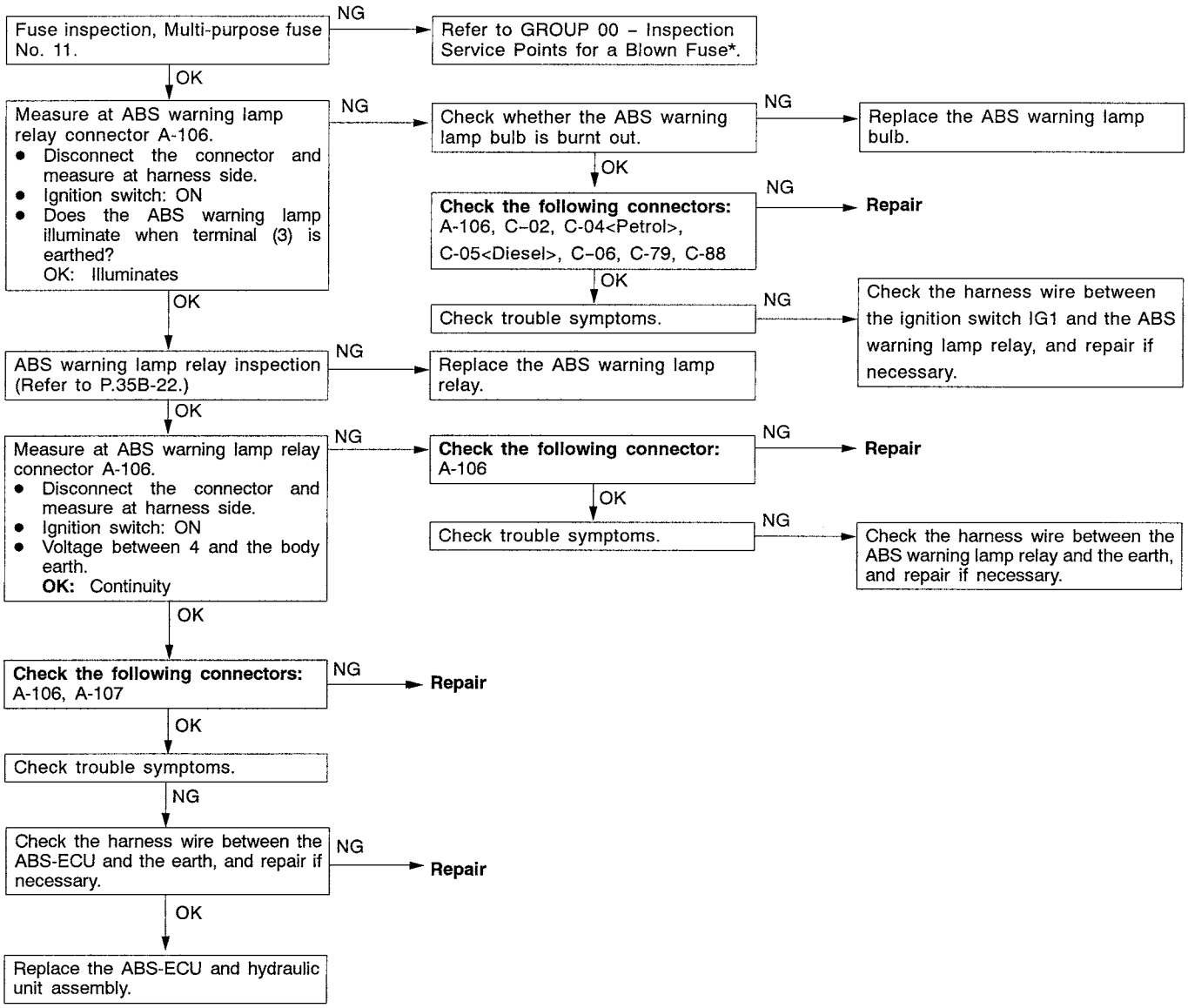

NOTE
*: Refer to '97 L200 Workshop Manual (Pub.No. PWTE96E1).

Inspection Procedure 4

The ABS warning lamp remains illuminated after the engine is started.	Probable cause
The following causes are suspected: • Short circuit in the harness between the ABS warning lamp and the ABS waring lamp relay • Defective ABS waring lamp relay • Open circuit in the ABS warning lamp relay power supply circuit • Open circuit in the harness between the ABS-ECU and the ABS waring lamp relay	• Defective combination meter • Defective ABS warning lamp relay • Malfunction of wiring or connector • Defective ABS-ECU and hydraulic unit assembly

NOTE

This trouble symptom is limited to cases where communication with the MUT-II is possible (ABS-ECU power supply is normal) and the diagnosis code is a normal diagnosis code.

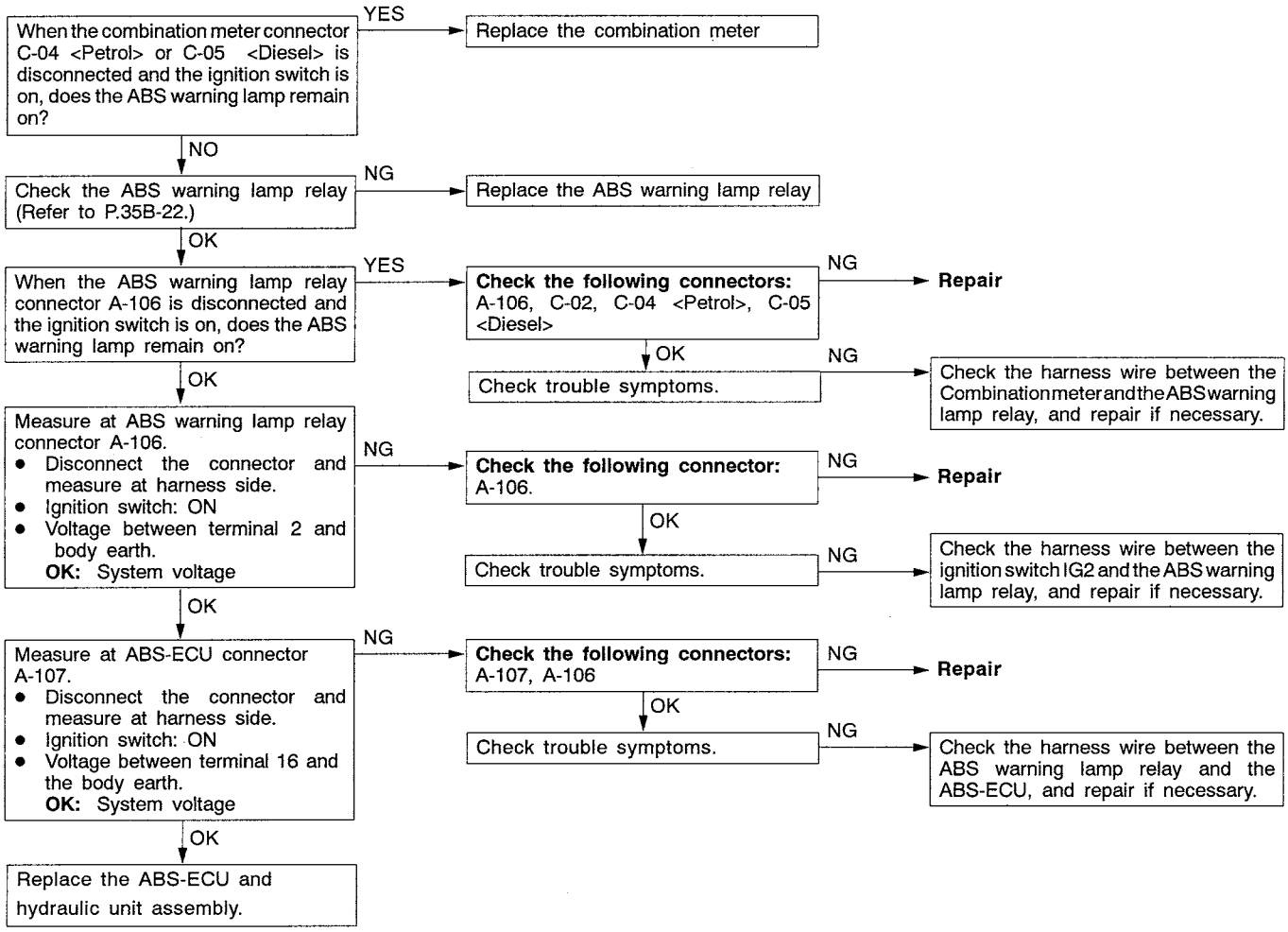

Inspection Procedure 5

Brake operation is abnormal.	Probable cause
This varies depending on the driving conditions and the road surface conditions, so problem diagnosis is difficult. However, if a normal diagnosis code is displayed, carry out the following inspection.	• Improper installation of wheel speed sensor • Incorrect sensor harness contact • Foreign material adhering to wheel speed sensor • Malfunction of wheel speed sensor • Malfunction of ABS rotor • Malfunction of wheel bearing • Malfunction of ABS-ECU and hydraulic unit assembly

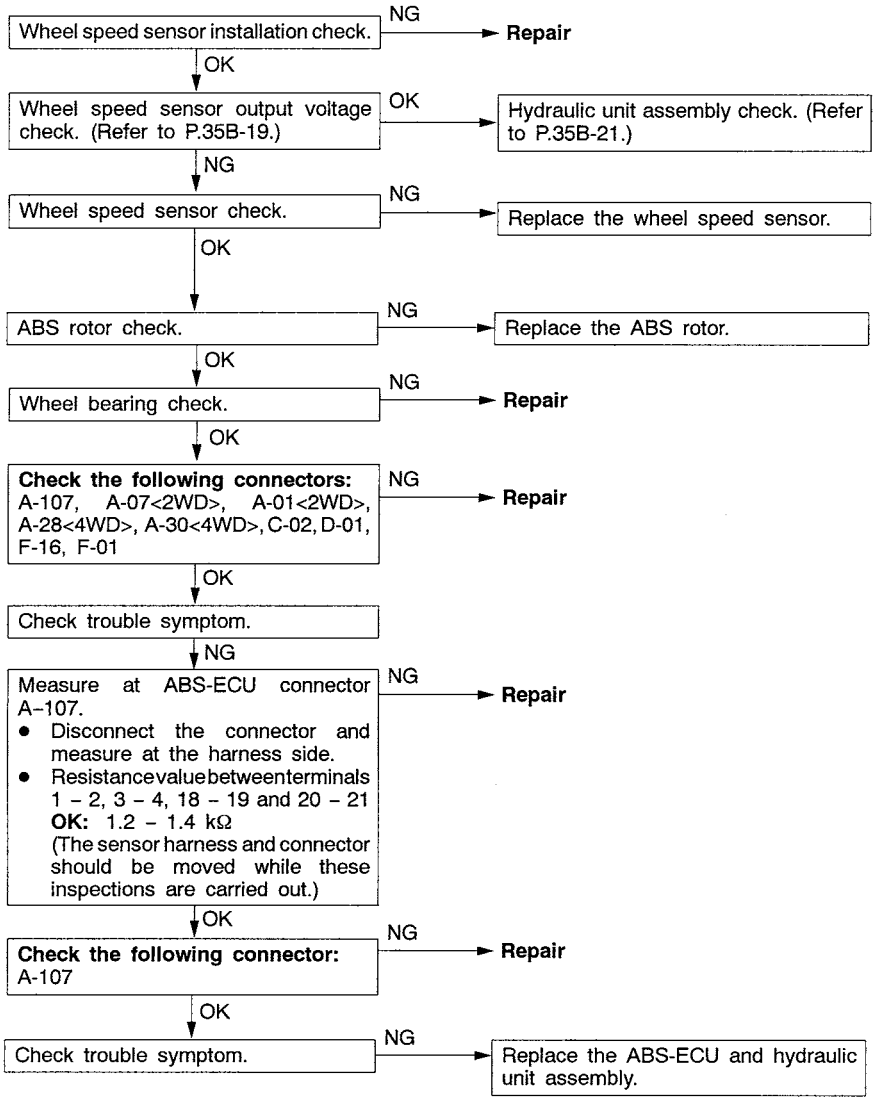

DATA LIST REFERENCE TABLE

The following items can be read by the MUT-II from the ABS-ECU input data.

1. When the system is normal

Item No.	Check item	Checking requirements	Normal value
11	Front-right wheel speed sensor	Perform a test run	Vehicle speeds displayed on the speedometer and MUT-II are identical.
12	Front-left wheel speed sensor		
13	Rear-right wheel speed sensor		
14	Rear-left wheel speed sensor		
16	ABS-ECU power supply voltage	Ignition switch power supply voltage and valve monitor voltage	9 – 16 V
25	Freewheel engage switch	Always	OFF
26	4WD position detection switch	Always	OFF
27	Rear differential lock detection switch	Always	OFF
32	G-sensor system	Always	0V
33	Stop lamp switch	Depress the brake pedal.	ON
		Release the brake pedal.	OFF

2. When the ABS-ECU shut off ABS operation.

When the diagnosis system stops the ABS-ECU, the MUT-II display data will be unreliable.

ACTUATOR TEST REFERENCE TABLE

The MUT-II activates the following actuators for testing.

NOTE
1. If the ABS-ECU runs down, actuator testing cannot be carried out.
2. Actuator testing is only possible when the vehicle is stationary. If the vehicle speed during actuator testing exceeds 10 km/h, forced actuation will be cancelled.
3. During the actuator test, the ABS warning lamp will illuminate and the anti-skid control will be cancelled.

Activation pattern

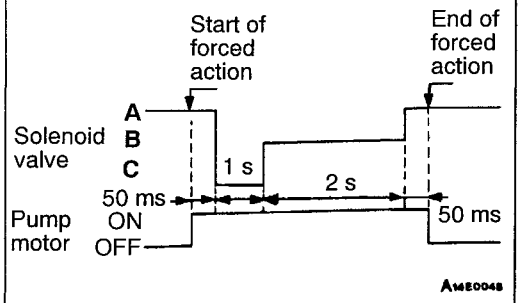

NOTE
A: Hydraulic pressure increases
B: Hydraulic pressure holds
C: Hydraulic pressure decreases

ACTUATOR TEST SPECIFICATIONS

No.	Item	
01	Solenoid valve for front-left wheel	Solenoid valves and pump motors in the hydraulic unit (simple inspection mode)
02	Solenoid valve for front-right wheel	
03	Solenoid valve for rear wheel	

CHECK AT ABS-ECU

TERMINAL VOLTAGE CHECK CHART

1. Measure the voltages between terminals (32) and (34) (earth terminals) and each respective terminal.
   NOTE
   Do not measure terminal voltage for approximately three seconds after the ignition switch is turned on. The ABS-ECU performs the initial check during that period.
2. The terminal layouts are shown in the illustrations below.

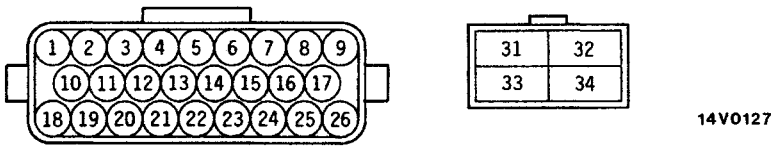

Connector terminal No.	Signal	Checking requirement		Normal condition
7	G-sensor signal	Ignition switch: "ON"		0 V
9	ABS-ECU power supply	Ignition switch: "ON"		System voltage
		Ignition switch: "START"		0 V
13	Input from stop lamp switch	Ignition switch: ON	Stop lamp switch: "ON"	System voltage
			Stop lamp switch: "OFF"	1 V or less
16	Control output to ABS warning lamp relay.	Ignition switch: ON	The lamp is switch off.	2 V or less
			The lamp is illuminated.	System voltage

Connector terminal No.	Signal	Checking requirement	Normal condition
23	MUT-II	Connect the MUT-II	Serial communication with MUT-II
		Do not connect the MUT-II	1 V or less
24	Input from diagnosis indication selection	Connect the MUT-II	0 V
		Do not connect the MUT-II	Approximately 12 V
31	Solenoid valve power supply	Always	System voltage
33	Motor power supply		

RESISTANCE AND CONTINUITY BETWEEN HARNESS-SIDE CONNECTOR TERMINALS

1. Turn the ignition switch off and disconnect the ABS-ECU connectors before checking resistance and continuity.
2. Check between the terminals indicated in the table below.
3. The terminal layouts are shown in the illustration below.

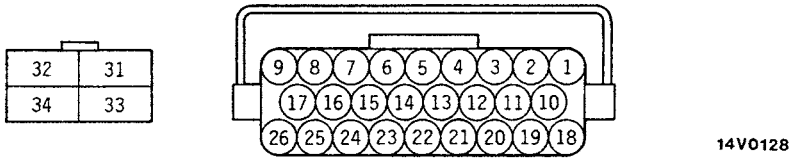

Connector terminal No.	Signal	Normal condition
20 – 21	Front-left wheel speed sensor	1.2 – 1.4 kΩ
1 – 2	Rear-right wheel speed sensor	1.2 – 1.4 kΩ
18 – 19	Front-right wheel speed sensor	1.2 – 1.4 kΩ
3 – 4	Rear-left wheel speed sensor	1.2 – 1.4 kΩ
32 – body earth	Solenoid valve earth	Continuity
34 – body earth	Motor earth	Continuity

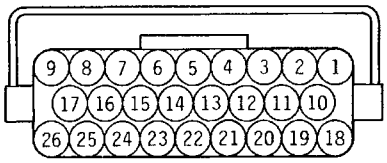

B14V0128

ON-VEHICLE SERVICE

WHEEL SPEED SENSOR OUTPUT VOLTAGE CHECK

1. Lift up the vehicle and release the parking brake.
2. Disconnect the ABS-ECU connector, and then use the special tool (inspection harness for connector pin contact pressure) to measure the output voltage at the harness-side connector.

3. Rotate the wheel to be measured at approximately 1/2–1 rotation per second, and check the output voltage using a circuit tester or an oscilloscope.

Wheel speed sensor	Front left	Front right	Rear left	Rear right
Terminal No.	20	18	3	1
	21	19	4	2

Output voltage

When measuring with a circuit tester:
70 mV or more

When measuring with an oscilloscope:
200 mV p-p or more

4. If the output voltage is lower than the above values, the reason could be as follow:
   - Faulty wheel speed sensor.

   So replace the wheel speed sensor.

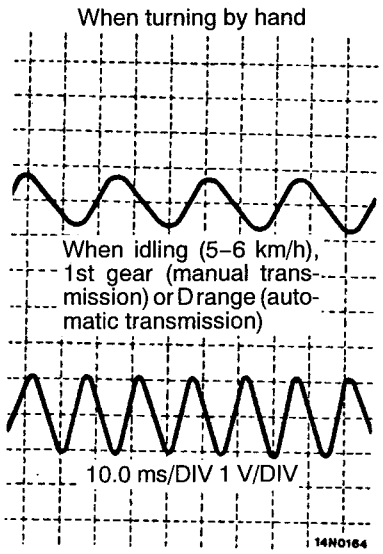

Inspecting Waveforms With An Oscilloscope

Use the following method to observe the output voltage waveform from each wheel sensor with an oscilloscope.

- Start the engine, and rotate the rear wheels by engaging 1st gear (vehicles with manual transmission) or D range (vehicles with automatic transmission). Turn the front wheels manually so that they rotate at a constant speed.

NOTE
1. Check the connection of the sensor harness and connector before using the oscilloscope.
2. The waveform measurements can also be taken while the vehicle is actually moving.
3. The output voltage will be small when the wheel speed is low, and similarly it will be large when the wheel speed is high.

Points In Waveform Measurement

Symptom	Probable causes	Remedy
Too small or zero waveform amplitude	Faulty wheel speed sensor	Replace sensor
Waveform amplitude fluctuates excessively (this is no problem if the minimum amplitude is 100 mV or more)	Axle hub eccentric or with large runout	Replace hub
Noisy or disturbed waveform	Open circuit in sensor	Replace sensor
	Open circuit in harness	Correct harness
	Incorrectly mounted wheel speed sensor	Mount correctly
	ABS rotor with missing or damaged teeth	Replace ABS rotor

NOTE
The wheel speed sensor cable moves following motion of the front or rear suspension. Therefore, it is likely that it has an open circuit only when driving on rough roads and it functions normally on ordinary roads. It is, therefore, recommended to observe sensor output voltage waveform also under special conditions, such as rough road driving.

HYDRAULIC UNIT CHECK

Caution
Turn the ignition switch off before connecting or disconnecting the MUT-II.

1. Jack up the vehicle and support the vehicle with rigid racks placed at the specified jack-up points or place the wheels which are checked on the rollers of the braking force tester.

   Caution
   (1) The roller of the braking force tester and the tyre should be dry during testing.
   (2) When testing the front brakes, apply the parking brake, and when testing the rear brakes, stop the front wheels by chocking them.

2. Release the parking brake, and feel the drag force (drag torque) on each road wheel.
   When using the braking force tester, take a reading of the brake drag force.
3. Turn the ignition key to the OFF position and set the MUT-II.
4. After checking that the shift lever is in neutral, start the engine.
5. Use the MUT-II to force-drive the actuator.

   NOTE
   (1) During the actuator test, the ABS warning lamp will illuminate and the anti-skid control will be cancelled.
   (2) When the ABS has been interrupted by the fail-safe function, the MUT-II actuator testing cannot be used.

6. Turn the wheel by hand and check the change in braking force when the brake pedal is depressed.
   When using the braking force tester, depress the brake pedal until the braking force is at the following values, and check that the braking force decreases when the actuator is force-driven.

Front wheel	2942 – 3334 N
Rear wheel	1275 – 1471 N

The result should be as shown in the following diagram.

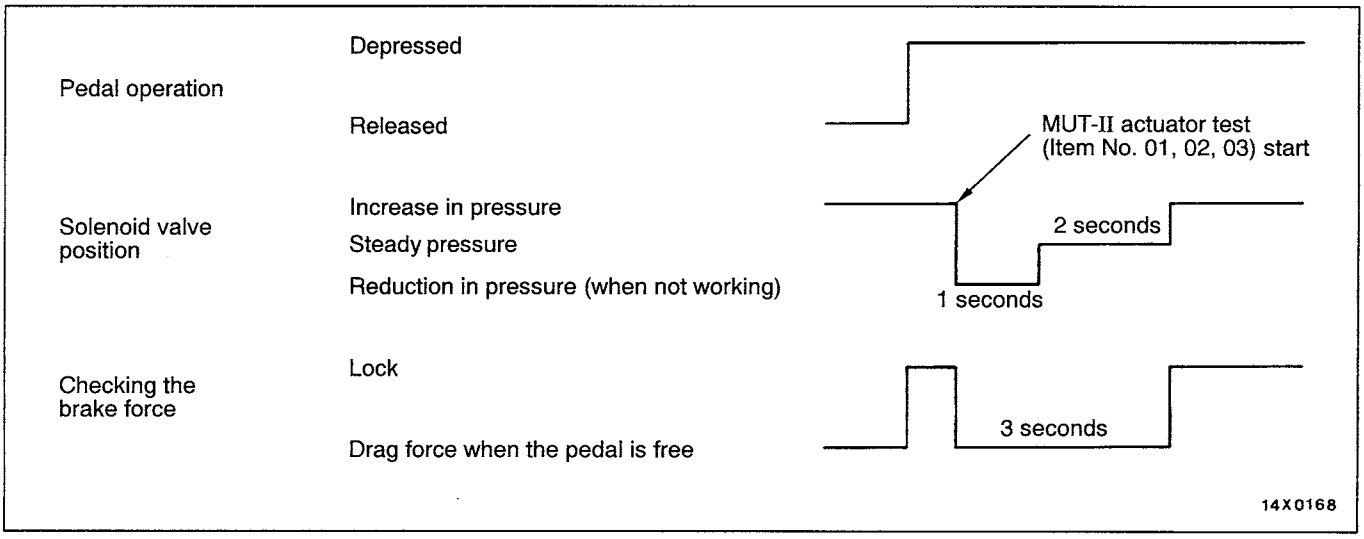

7. If the result of inspection is abnormal, correct according to the "Diagnosis Table" (Refer to P.35B-22).
8. After inspection, disconnect the MUT-II immediately after turning the ignition switch to OFF.

Diagnosis Table

No.	Operation	Judgement – Normal	Judgement – Abnormal	Probable cause	Remedy
01	(1) Depress brake pedal to lock wheel. (2) Using the MUT-II, select the wheel to be checked and force the actuator to operate. (3) Turn the selected wheel manually to check the change of brake force.	Brake force released for 4 seconds after locking.	Wheel does not lock when brake pedal is depressed.	Clogged brake line other than hydraulic unit	Check and clean brake line
02				Clogged hydraulic circuit in hydraulic unit	Replace hydraulic unit assembly
03			Brake force is not released	Incorrect hydraulic unit brake tube connection	Connect correctly
				Hydraulic unit solenoid valve not functioning correctly	Replace hydraulic unit assembly

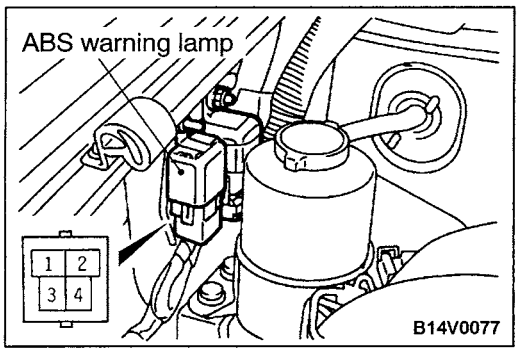

ABS WARNING LAMP RELAY CONTINUITY CHECK

Battery voltage	Terminal No.			
	1	2	3	4
Not applied	○	○	○	○
Applied	⊖	⊕		

ABS-ECU AND HYDRAULIC UNIT

REMOVAL AND INSTALLATION

Pre-removal Operation
Brake Fluid Draining

Post-installation Operation
- Brake Fluid Filling
- Bake Line Bleeding

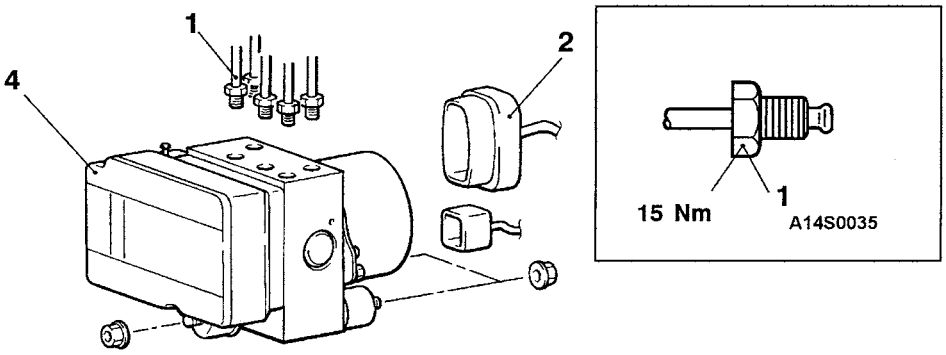

<4G6, 4D5 – R.H. drive vehicles>

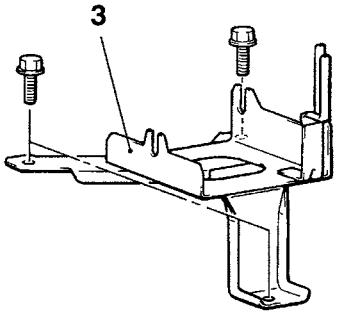

<4D5 – L.H. drive vehicles>

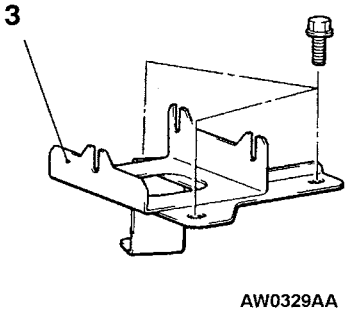

Removal steps

▶A◀ 1. Brake tube
◀A▶ 2. Harness connector
3. Bracket assembly
◀B▶ 4. ABS-ECU and hydraulic unit assembly

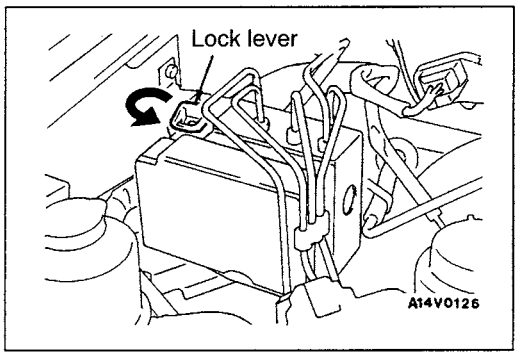

REMOVAL SERVICE POINTS

◀A▶ HARNESS CONNECTOR REMOVAL

Turn the lock lever in the direction shown in the illustration, and remove the harness.

◀B▶ ABS-ECU AND HYDRAULIC UNIT REMOVAL

Caution

1. **The ABS-ECU and hydraulic unit assembly is heavy. Use care when removing it.**
2. **The ABS-ECU and hydraulic unit assembly cannot be disassembled. Never loosen its nuts or bolts.**
3. **Do not drop or shock the ABS-ECU and hydraulic unit assembly.**
4. **Do not turn the ABS-ECU and hydraulic unit assembly upside down or lay it on its side.**

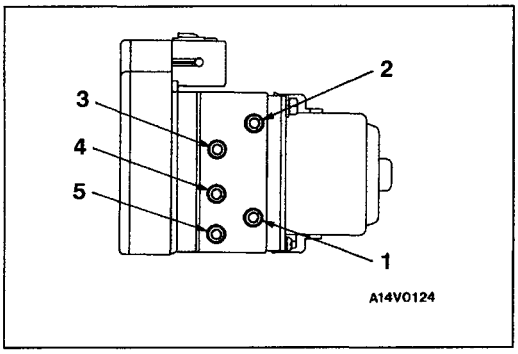

INSTALLATION SERVICE POINT

▶A◀ BRAKE TUBE INSTALLATION

Connect the tubes to the hydraulic unit assembly as shown in the illustration.

1. Master cylinder and load sensing proportioning valve <Front system>
2. Master cylinder <Rear system>
3. Load sensing proportioning valve <Rear system>
4. Front brake <R.H.>
5. Front brake <L.H.>

SERVICE BULLETIN

MITSUBISHI MOTORS

QUALITY INFORMATION ANALYSIS
OVERSEAS SERVICE DEPT. MITSUBISHI MOTORS CORPORATION

SERVICE BULLETIN	**No.:** MSB-00E35-001		
	Date: 2000-05-30	**<Model>**	**<M/Y>**
Subject: CHANGE TO ERASING OF ABS DIAGNOSTIC CODES		(EC)COLT/LANCER (CKOA,CJOA)	96-10
		(EC)PAJERO (V10, 20, 30,40)	95-10
Group: SERVICE BRAKE	**Draft No.:** 99AL122308	(EC)L400 (PA0 to PD0)	95-10
		(EC)PAJERO SPORT/MONTERO SPORT (K80W, K90W)	99-10
INFORMATION/ CORRECTION	**INTERNATIONAL CAR ADMINISTRATIO OFFICE**	T.NITTA - PROJECT LEADER AFTER SALES SERVICE & CS PROMOTION	(EC)L200 (K60, k70) 97-10

1. Description:

This Service Bulletin informs you of erasing of the diagnostic codes for the cars mentioned below that are equipped with the ABS-ECU

2. Applicable Manuals:

Manual	Pub. No.	Language	Page(s)
'96 COLT/LANCER Workshop Manual Chassis	PWME9511	(English)	35-6
	PWMS9512	(Spanish)	
	PWMF9513	(French)	
	PWMG9514	(German)	
	PWMD9515	(Dutch)	
	PWMW9516	(Swedish)	
'95 PAJERO Workshop Manual Chassis Supplement	PWJE9086-F	(English)	35-36-4
	PWJF9088-F	(French)	
	PWJG9089-F	(German)	
	PWJD9090-F	(Dutch)	
	PWJW9091-F	(Swedish)	
'95 MONTERO Workshop Manual Chassis Supplement	PWJS9087-F	(Spanish)	35-36
'95 L400 Workshop Manual Chassis	PWWE9410	(English)	35B-7
	PWWS9411	(Spanish)	
	PWWF9412	(French)	
	PWWG9413	(German)	
	PWWD9414	(Dutch)	
	PWWW9415	(Swedish)	
'99 PAJERO SPORT Workshop Manual Chassis	PWJE9812	(English)	35B-4,5
	PWJF9814	(French)	
	PWJG9815	(German)	
'99 MONTERO SPORT Workshop Manual Chassis	PWJS9813	(Spanish)	35B-4,5

Manual	Pub. No.	Language	Page(s)
’97 L200 Workshop Manual Chassis	PWTE96E1	(English)	35b-5
	PWTS96E1	(Spanish)	
	PWTF96E1	(French)	
	PWTG96E1	(German)	
2000 L200 Workshop Manual Chassis	PWTE96E2	(English)	35b-5
	PWTS96E2	(Spanish)	
	PWTF96E2	(French)	
	PWTG96E2	(German)	

3. Effective date:

Model	Effective Date	ABS-ECU part No.
COLT/LANCER	From March 1998	MR445910
PAJERO/MONTERO	From September 1998	MR400413
L400	From September 1998	MR400415
PAJERO SPORT/ MONTERO SPORT	From the first production car	MR235362*, MR307755*, MR334886*
L200	From September 1998	MR400416, MR400417, MR4469642*

* Integral Hydraulic unit. These part numbers are for the hydraulic unit.

4. Details:

’96 COLT/LANCER Workshop Manual Chassis (page 3.)
’95 PAJERO Workshop Manual Chassis Supplement (page 5.)
’95 L400 Workshop Manual Chassis (page 7.)
’99 PAJERO SPORT Workshop Manual Chassis (page 9.)
’97 L200 Workshop Manual (page 11.)
’00 L200 Workshop Manual (page 13.)

TROUBLESHOOTING

35201110129

STANDARD FOW OF DIAGNOSTIC TROUBLESHOOTING

Refer to GROUP 00 – How to Use Troubleshooting/Inspection Service Points.

NOTES WITH REGARD TO DIAGNOSIS

The phenomena listed in the following table are not abnormal.

Phenomenon	Explanation of phenomenon
System check sound	When starting the engine, a thudding sound can sometimes be heard coming from inside the engine compartment, but this is because the system operation check is being performed, and is not an abnormality.
ABS operation sound	Sound of the motor inside the ABS hydraulic unit operation. (whine) Sound is the generated along with vibration of the brak pedal. (Scraping). When ABS operates, sound is generated from the vehicle chassis due to repeated brake application and release. (Thump: suspension; squeak: tyres)
ABS operation (Long braking distance)	For road surfaces such as snow-covered roads and gravel roads, the braking distance for vehicles with ABS can sometimes be longer than that for other vehicles. Accordingly, advise the customer to drive safely on suc roads by lowering the vehicle speed and not being too overconfident.

Diagnosis detection condition can vary depending on the diagnosis code.
Make sure that checking requirements listed in the “Comment” are satisfied when checking the trouble symptom again.

DIAGNOSIS FUNCTION

35201120106

DIAGNOSIS CODES CHECK

Read a diagnosis code by the MUT-II or ABS warning lamp. (Refer to GROUP 00 – How to Use Troubleshooting/Inspection Service Points.)

ERASING DIAGNOSIS CODES

<Old> ~~Refer to GROUP 00 – How to Use Troubleshooting/Inspection Service Points.~~

<New> **See next page.**

With the MUT-II

Refer to GROUP 00 – How to Use Troubleshooting/Inspection Service Points.

When diagnostic trouble codes (Nos. 21 to 24) (for vehicle wheel speed sensor system failures) occur, normal MUT-II operation may not erase those codes. In that case, erase the diagnostic trouble codes using the following procedures.

1. Perform erasing of the diagnostic trouble codes by special operation of the brake pedal. (See erasing procedure for the diagnostic trouble codes without use of the MUT-II.)
2. Turn the ignition switch OFF.
3. Perform erasing of the diagnostic trouble codes by use of the MUT-II.

Without the MUT-II

1. Stop the car.
2. Place the stop lamp switch to ON (with brake pedal depressed).
3. Under the condition of 1 and 2 above, turn the ignition switch ON. After that, place the stop lamp switch to OFF (with brake pedal released) within 3 seconds and cycle the stop lamp switch to ON an OFF ten times consecutively.

   NOTE:
   When ABS-ECU stops functioning through the fail-safe mechanism, erasing of the diagnostic troubl codes cannot be performed.

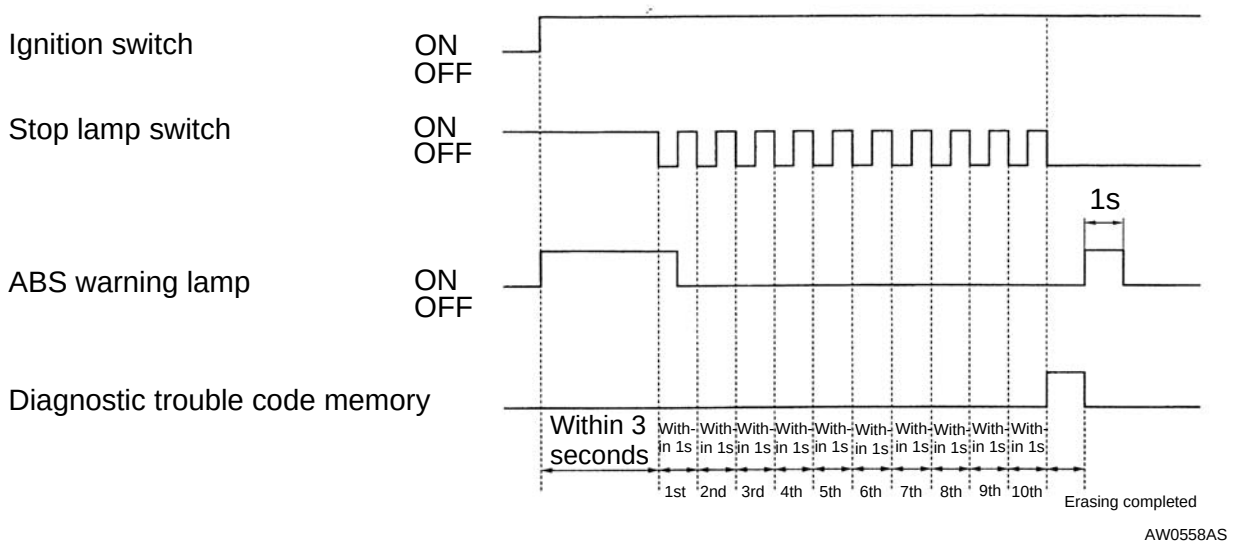

4. Ensure that the diagnostic trouble codes have been erased.
   When diagnostic trouble codes (Nos. 21 to 24) (for vehicle wheel speed sensor system failures) occur, the above procedures may not erase those codes. In that case, turn the ignition switch OFF, and then repeat steps 1 to 3 above.

4. Remedy the malfunctions indicated by th diagnosis codes, disconnect the diagnosis code check harness, and then install the valve relay. Then turn the ignition switch to ON again t check the ABS warning lamp. (Refer to P.35-36-16.) If the lamp indicates a malfunction, th valve relay system may be detective. (Refer to P.35-36-14.)

ERASING DIAGNOSIS CODES

<Old>

~~**With the MUT-II**~~
~~Connect the MUT-II to the diagnosis connector (16-pin), and then erase the diagnosis codes.~~

~~**Without the MUT-II**~~
~~Remove the battery cable from the battery (-) terminal for 10 seconds or more, and the reconnect the cable.~~

<New> **See next page.**

With the MUT-II

Connect the MUT-II to the diagnosis connector (16-pin), then erase the diagnosis codes.

Caution
Turn the ignition switch off before connecting or disconnecting the MUT-II.

When diagnostic trouble codes (Nos. 21 to 24) (for vehicle wheel speed sensor system failures) occur, normal MUT-II operation may not erase those codes. In that case, erase the diagnostic trouble codes using the following procedures.

1. Perform erasing of the diagnostic trouble codes by special operation of the brake pedal. (See erasing procedure for the diagnostic trouble codes without use of the MUT-II.)
2. Turn the ignition switch OFF.
3. Perform erasing of the diagnostic trouble codes by use of the MUT-II.

Without the MUT-II

1. Stop the car.
2. Place the stop lamp switch to ON (with brake pedal depressed).
3. Under the condition of 1 and 2 above, turn the ignition switch ON. After that, place the stop lamp switch to OFF (with brake pedal released) within 3 seconds, and cycle the stop lamp switch ON and OFF ten times consecutively.

   NOTE:
   When ABS-ECU stops functioning through the fail-safe mechanism, erasing of the diagnostic troubl codes cannot be performed.

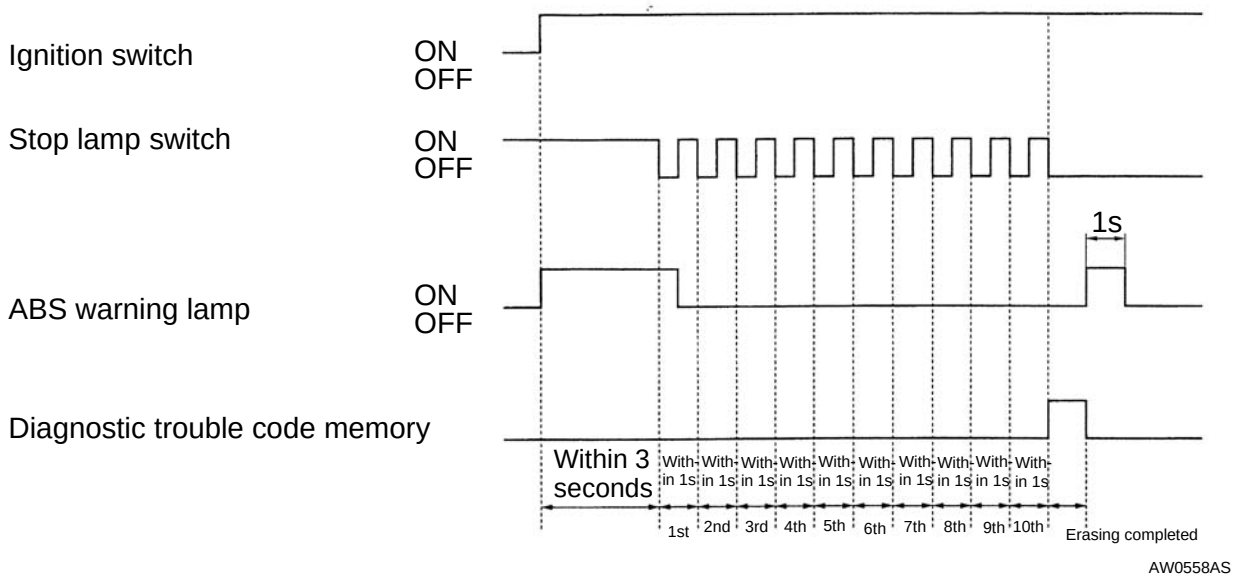

4. Ensure that the diagnostic trouble codes have been erased. When diagnostic trouble codes (Nos. 21 to 24) (for vehicle wheel speed sensor system failures) occur, the above procedures may not eras those codes. In that case, turn the ignition switch OFF, then repeat steps 1 to 3 above.

4. Remedy the malfunctions indicated by th diagnosis codes, disconnect the diagnosis code check harness, and then reconnect the valve relay harness. Then turn the ignition switch to ON again to check the ABS warning lamp. (Refer to P.35B-19.) If the lamp indicates a malfunction, the valve relay system may be defective. (Refer to P.35B-17)

ERASING DIAGNOSTIC CODES

<Old>

~~**With the MUT-II**~~

~~Connect the MUT-II to the diagnosis connector (16-pin), then erase the diagnostic codes.~~

~~**Without the MUT-II**~~

~~Removing the battery cable from the battery (-) terminal for 10 seconds or more, then reconnect the cable.~~

<New> **See next page.**

With the MUT-II

Connect the MUT-II to the diagnosis connector (16-pin), then erase the diagnosis codes.

Caution
Turn the ignition switch off before connecting or disconnecting the MUT-II.

When diagnostic trouble codes (Nos. 21 to 24) (for vehicle wheel speed sensor system failures) occur, normal MUT-II operation may not erase those codes. In that case, erase the diagnostic trouble codes using the following procedures.

1. Perform erasing of the diagnostic trouble codes by special operation of the brake pedal. (See erasing procedure for the diagnostic trouble codes without use of the MUT-II.)
2. Turn the ignition switch OFF.
3. Perform erasing of the diagnostic trouble codes by use of the MUT-II.

Without the MUT-II

1. Stop the car.
2. Place the stop lamp switch to ON (with brake pedal depressed).
3. Under the condition of 1 and 2 above, turn the ignition switch ON. After that, place the stop lamp switch to OFF (with brake pedal released) within 3 seconds, and cycle the stop lamp switch ON and OFF ten times consecutively.

   NOTE:
   When ABS-ECU stops functioning through the fail-safe mechanism, erasing of the diagnostic troubl codes cannot be performed.

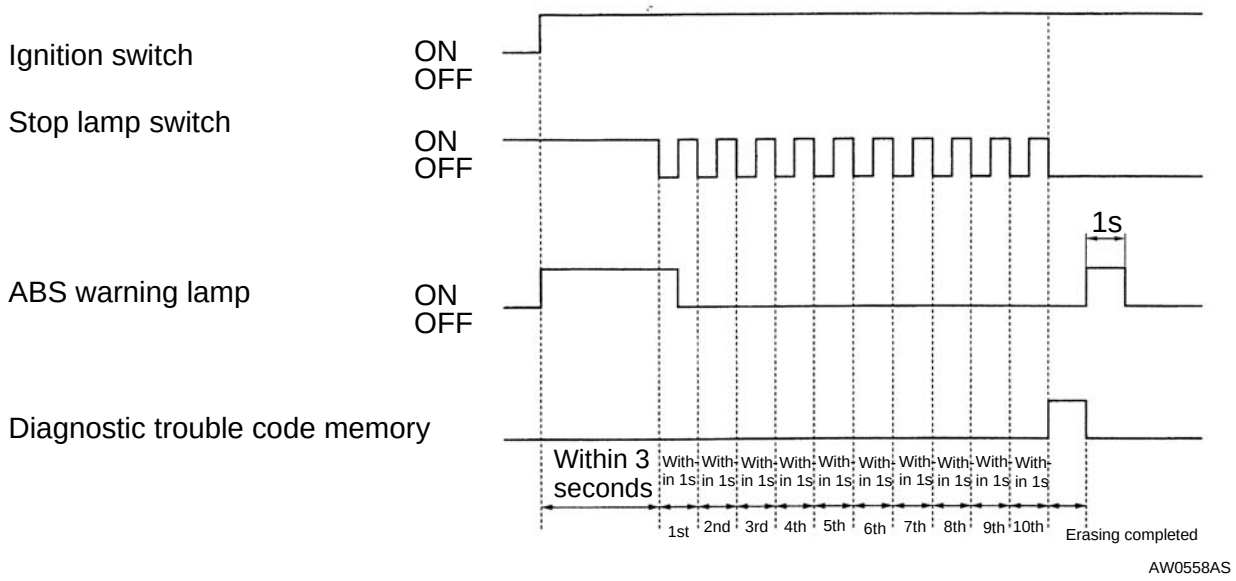

4. Ensure that the diagnostic trouble codes have been erased. When diagnostic trouble codes (Nos. 21 to 24) (for vehicle wheel speed sensor system failures) occur, the above procedures may not eras those codes. In that case, turn the ignition switch OFF, then repeat steps 1 to 3 above.

TROUBLESHOOTING

35201110501

STANDARD FLOW OF DIAGNOSTIC TROUBLESHOOTING

Refer to GROUP 00 – How to Use Troubleshooting/Inspection Service Points

NOTES WITH REGARD TO DIAGNOSIS

The Phenomena listed in the following table are not abnormal.

Phenomenon	Explanation of phenomenon
System check sound	When starting the engine, a thudding sound can sometimes be hear coming from inside the engine compartment, but this is because the system operation check is being performed, and is not an abnormality.
ABS operation sound	1. Sound of the motor inside the ABS hydraulic unit operation (whine). 2. Sound is generated along with vibration of the brake pedal (scraping) 3. When ABS operates, sound is generated from the vehicle chassis due to repeated brake application and release. (Thump: suspension: squeak: tyres)
ABS operation (Long braking distance)	For road surfaces suck as snow-covered roads a gravel roads, the braking distance for vehicles with ABS can sometimes be longer than that for other vehicles. Accordingly, advise the customer to drive safely on suck roads by lowering the vehicle speed and not being to overconfident.

Diagnosis detection condition can vary depending on the diagnosis code.
Make sure that checking requirements listed in the “Comment” are satisfied when checking the trouble symptom again.

DIAGNOSIS FUNCTION

35201120351

DIAGNOSIS CODES CHECK

Read a diagnosis code by the MUT-II or ABS warning lamp. (Refer to GROUP 00 - How to Use Trouble-shooting/Inspection Service Points.)

ERASING DIAGNOSIS CODES

With the MUT-II

Refer to GROUP 00 – How to Use Troubleshooting/Inspection Service Points

<Added>

When diagnostic trouble codes (Nos. 21 to 24) (for vehicle wheel speed sensor system failures) occur, normal MUT-II operation may not erase those codes. In that case, erase the diagnostic trouble codes using the following procedures.

1. Perform erasing of the diagnostic trouble codes by special operation of the brake pedal. (See erasing procedure for the diagnostic trouble codes without use of the MUT-II.)
2. Turn the ignition switch OFF.
3. Perform erasing of the diagnostic trouble codes by use of the MUT-II.

Without the MUT-II

1. Use the special tool to earth terminal (1) (diagnosis control terminal) of the diagnosis connector. (Refer to GROUP 00 – How to Use Troubleshooting/Inspection Service Points.)
2. Stop the engine.
3. Turn on the stop lamp switch.
4. After carrying out steps 1. To 3., turn the ignition switch to ON. Within 3 seconds after turning the ignition switch to ON, turn off the stop lamp switch (release the brake). Then, turn the stop lamp switch; on and off a total of 10 times.

   NOTE
   If the ABS-ECU function has been stopped because of fail-sage operation, it will not be possible t erase the diagnosis codes.

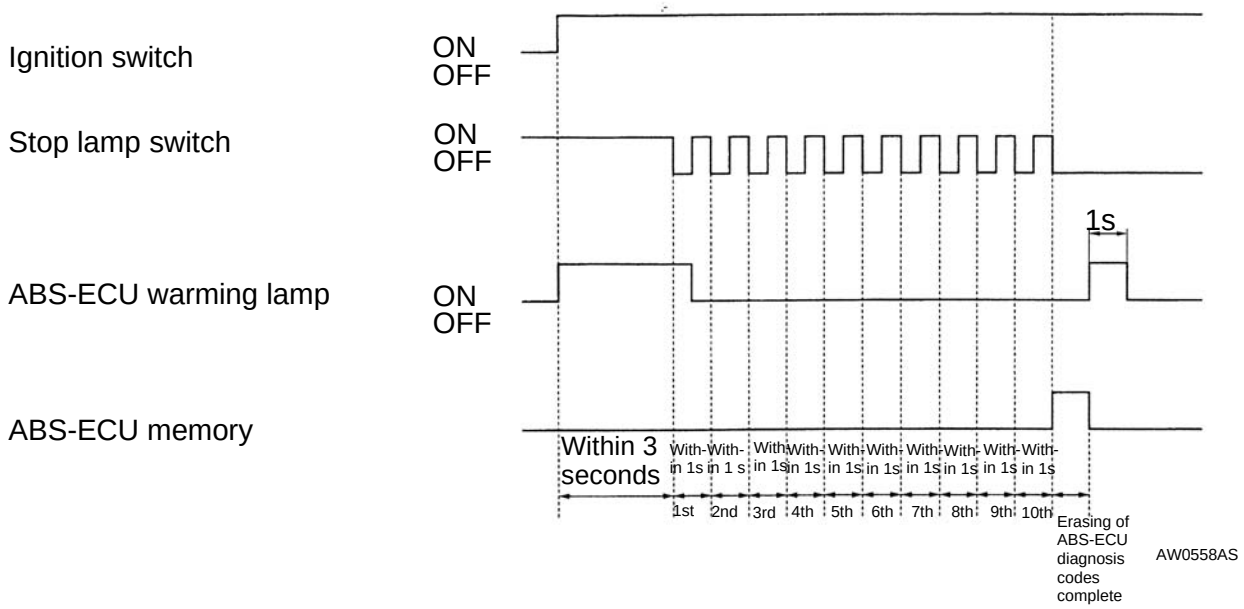

<Added>

5. Ensure that the diagnostic trouble codes have been erased.
   When diagnostic trouble codes (Nos. 21 to 24) (for vehicle wheel speed sensor system failures) occur,the above procedures may not erase those codes. In that case, turn the ignition switch OFF, then repeat steps 1 to 4 above.

TROUBLESHOOTING

35201110143

STANDARD FLOW OF DIAGNOSTIC TROUBLESHOOTING

Refer to GROUP 00 – How to Use Troubleshooting/Inspection Service Points

NOTES WITH REGARD TO DIAGNOSIS

The Phenomena listed in the following table are not abnormal.

Phenomenon	Explanation of phenomenon
System check sound	When starting the engine, a thudding sound can sometimes be hear coming from inside the engine compartment, but this is because the system operation check is being performed, and is not an abnormality.
ABS operation sound	1. Sound of the motor inside the ABS hydraulic unit operation (whine). 2. Sound is generated along with vibration of the brake pedal (scraping) 3. When ABS operates, sound is generated from the vehicle chassis due to repeated brake application and release. (Thump: suspension: squeak: tyres)
ABS operation (Long braking distance)	For road surfaces suck as snow-covered roads an gravel roads, the braking distance for vehicles with ABS can sometimes be longer than that for other vehicles. Accordingly, advise the customer to drive safely on suck roads by lowering the vehicle speed and not being to overconfident.
Shock during system operation check	Shock may be felt when the brake pedal is depressed slightly at a low driving speed. This occurs due to ABS operation check (initial check at a vehicle speed of 8 km/h), and does not indicate any malfunction.

Diagnosis detection condition can vary depending on the diagnosis code.
Make sure that checking requirements listed in the “Comment” are satisfied when checking the trouble symptom again.

DIAGNOSIS FUNCTION

35201120108

DIAGNOSIS CODES CHECK

Read a diagnosis code by the MUT-II or ABS warning lamp. (Refer to GROUP 00- How to Use Troubleshooting/Inspection Service Points.)

ERASING DIAGNOSIS CODES

<Old> ~~Refer to GROUP 00 – How to Use Troubleshooting/Inspection Service Points.~~

<New> **See next page**

With the MUT-II

Connect the MUT-II to the diagnosis connector (16-pin), then erase the diagnosis codes.

Caution
Turn the ignition switch off before connecting or disconnecting the MUT-II.

When diagnostic trouble codes (Nos. 21 to 24) (for vehicle wheel speed sensor system failures) occur, normal MUT-II operation may not erase those codes. In that case, erase the diagnostic trouble codes using the following procedures.

1. Perform erasing of the diagnostic trouble codes by special operation of the brake pedal. (See erasing procedure for the diagnostic trouble codes without use of the MUT-II.)
2. Turn the ignition switch OFF.
3. Perform erasing of the diagnostic trouble codes by use of the MUT-II.

Without the MUT-II

1. Stop the car.
2. Place the stop lamp switch to ON (with brake pedal depressed).
3. Under the condition of 1 and 2 above, turn the ignition switch ON. After that, place the stop lamp switch to OFF (with brake pedal released) within 3 seconds, and cycle the stop lamp switch ON and OFF ten times consecutively.

   NOTE:
   When ABS-ECU stops functioning through the fail-safe mechanism, erasing of the diagnostic troubl codes cannot be performed.

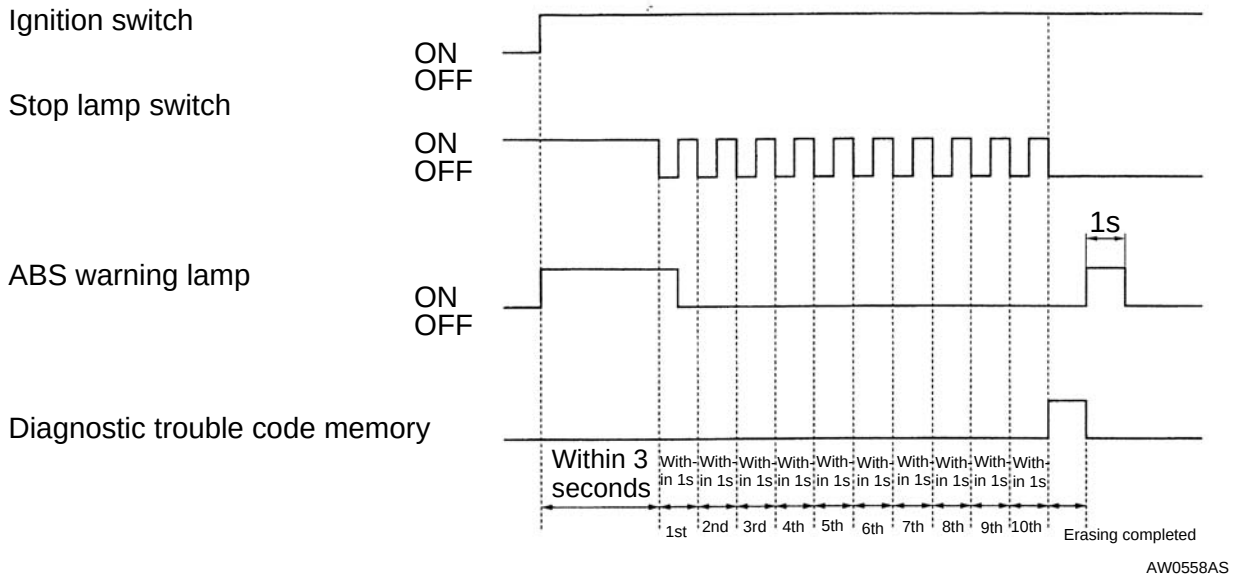

4. Ensure that the diagnostic trouble codes have been erased. When diagnostic trouble codes (Nos. 21 to 24) (for vehicle wheel speed sensor system failures) occur, the above procedures may not erase those codes. In that case, turn the ignition switch OFF, then repeat steps 1 to 3 above.

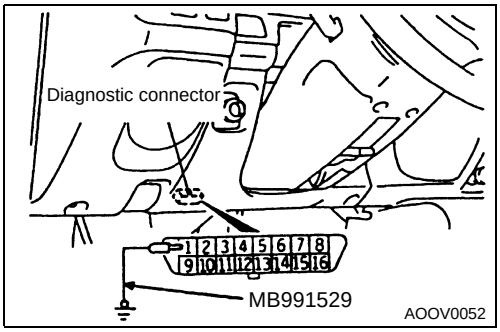

WHEN USING THE ABS WARNING LAMP

1. Use the special tool to earth No.1. terminal (diagnosis control terminal) of the diagnosis connector.
2. Turn on the ignition switch.
3. Read out a diagnosis code by observing how the ABS warning lamp flashes.

Indication of diagnosis code by ABSA warning lamp

When the diagnosis code No.24 is output	When no diagnosis is output
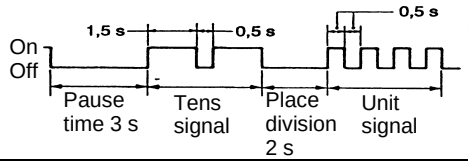	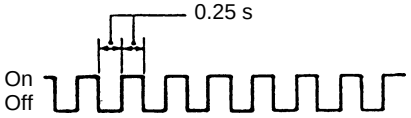

ERASING DIAGNOSIS CODES

With the MUT-II

Refer to Basic Manual GROUP 00 – How to use Troubleshooting/Inspection Service Points.

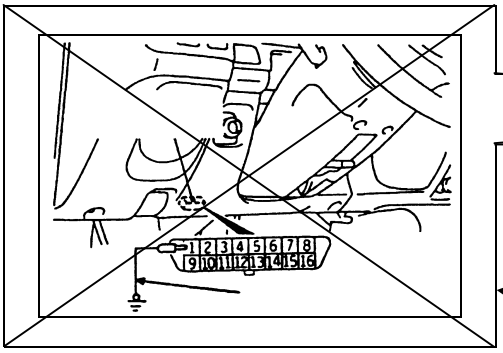

Without the MUT-II

1. Stop the engine.
2. ~~Use the special tool to earth terminal (1) (diagnosis control terminal) of the diagnosis connector.~~
3. Turn on the stop lamp switch. (Depress the brake)

2. **<Changed>**

<Deleted>

<Added>

When diagnostic trouble codes (Nos. 21 to 24)(for vehicle wheel speed sensor system failures) occur, normal MUT-II operation may not erase those codes. In that case, erase the diagnostic trouble codes using the following procedures.

1. Perform erasing of the diagnostic trouble codes by special operation of the brake pedal. (See erasing procedure for the diagnostic trouble codes without use of the MUT-II.
2. Turn the ignition switch OFF.
3. Perform erasing of the diagnostic trouble codes by use of the MUT-II

<Changed> 3. → ~~4.~~ After carrying out steps 1. To 3., turn the ignition switch to ON. Within 3 seconds after turning the ignition switch to ON, turn off the stop lamp switch (release the brake). Then, turn the sto lamp switch on and off a total of 10 times.

NOTE

If the ABS-ECU function has been stoppe because of fail-safe operation, it will not be possible to erase the diagnosis codes

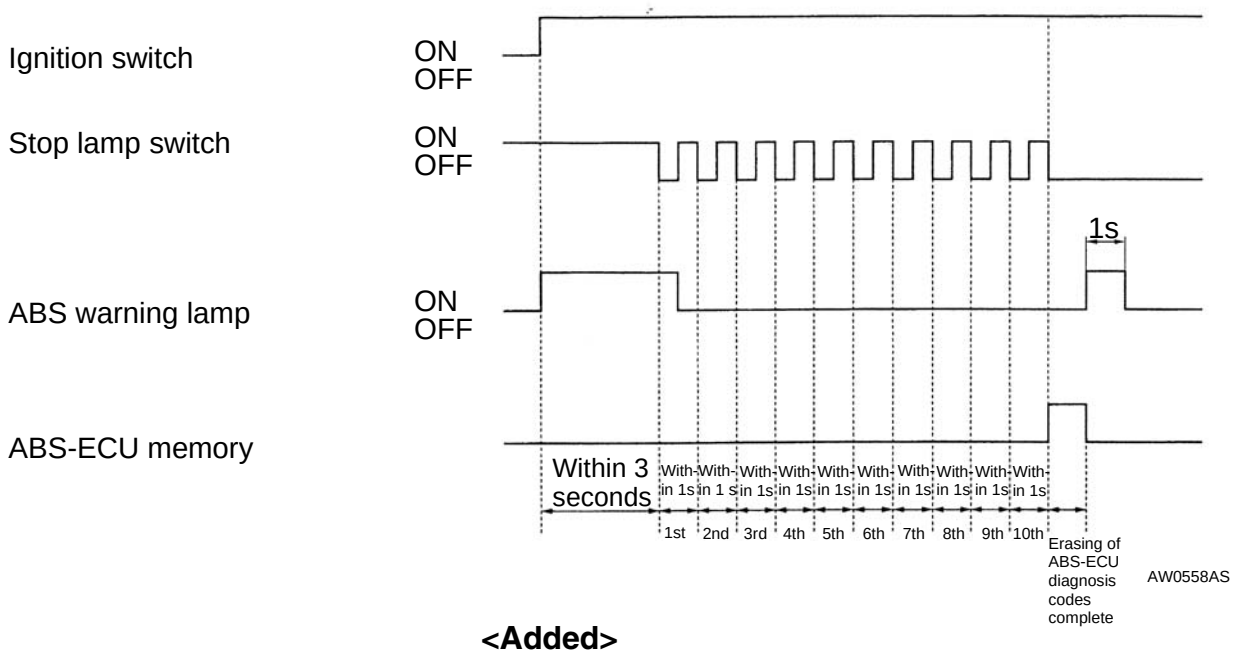

<Added>

4. Ensure that the diagnostic trouble codes have been erased.
   When diagnostic trouble codes (Nos.21 to 24)(for vehicle wheel speed sensor system failures) occur, the above procedures may not erase those codes. In that case, turn the ignition switch OFF, then repeat steps 1 to 3 above.

ANTI-SKID BRAKING SYSTEM (ABS) <4WD>

Click on the applicable bookmark to selected the required model year

ANTI-SKID BRAKING SYSTEM (ABS) <4WD>

CONTENTS

35209000138

GENERAL INFORMATION 3

SERVICE SPECIFICATION 4

LUBRICANTS 4

SPECIAL TOOLS 4

TROUBLESHOOTING 5

FRONT DISC BRAKE 15

WHEEL SPEED SENSOR 19

G-SENSOR* 20

WARNINGS REGARDING SERVICING OF SUPPLEMENTAL RESTRAINT SYSTEM (SRS) EQUIPPED VEHICLES

WARNING!

(1) Improper service or maintenance of any component of the SRS, or any SRS-related component, can lead to personal injury or death to service personnel (from inadvertent firing of the air bag) or to the driver (from rendering the SRS inoperative).

(2) Service or maintenance of any SRS component or SRS-related component must be performed only at an authorized MITSUBISHI dealer.

(3) MITSUBISHI dealer personnel must throughly review this manual, and especially its GROUP 52B – Supplemental Restraint System (SRS) before begining any service or maintenance of any component of the SRS or any SRS-related component.

NOTE

The SRS includes the following components: impact sensor, SRS diagnosis unit, SRS warning lamp, air bag module, clock spring and interconnecting wiring. Other SRS-related components (that may have to be removed/installed in connection with SRS service or maintenance) are indicated in the table of contents by an asterisk (*).

For the items below, refer to GROUP 35A.

SEALANTS

ON-VEHICLE SERVICE

- Brake Pedal Check and Adjustment
- Stop Lamp Switch Inspection
- Brake Booster Operating Test
- Check Valve Operation Check
- Brake Booster Vacuum Switch Check
- Load Sensing Spring Length Check and Adjustment
- Load Sensing Proportioning Valve Function Test
- Front Disc Brake Rotor Check
- Brake Lining Thickness Check
- Brake Drum Inside Diameter Check
- Brake Lining and Brake Drum Connection Check

BRAKE PEDAL

LOAD SENSING PROPORTIONING VALVE

REAR DRUM BRAKE

For the items below, refer to GROUP 35B.

ON-VEHICLE SERVICE

- Bleeding
- Disc Brake Pad Check and Replacement
- Wheel Speed Sensor Output Voltage Check
- Hydraulic Unit Check
- Solenoid Valve Check
- Motor Operation Check
- Motor Relay and Valve Relay Continuity Check
- Remedy for a Flat Battery

MASTER CYLINDER AND BRAKE BOOSTER

HYDRAULIC UNIT

ABS-ECU

GENERAL INFORMATION

35200010130

The ABS consists of wheel speed sensors, stop lamp switch hydraulic unit and the ABS-ECU. If a problem occurs in the system, the malfunctioning system can be identified by means of the diagnosis function, and the trouble symptom memory will not be erased even if the ignition switch is turned to OFF. (However, it will be erased if the battery is disconnected.)
In addition, reading of diagnosis codes and data list and actuator of testing are possible using the MUT-II.

Items	Specifications
Speed sensor	Magnet coil type
Front rotor teeth	47
Rear rotor teeth	47

CONSTRUCTION DIAGRAM

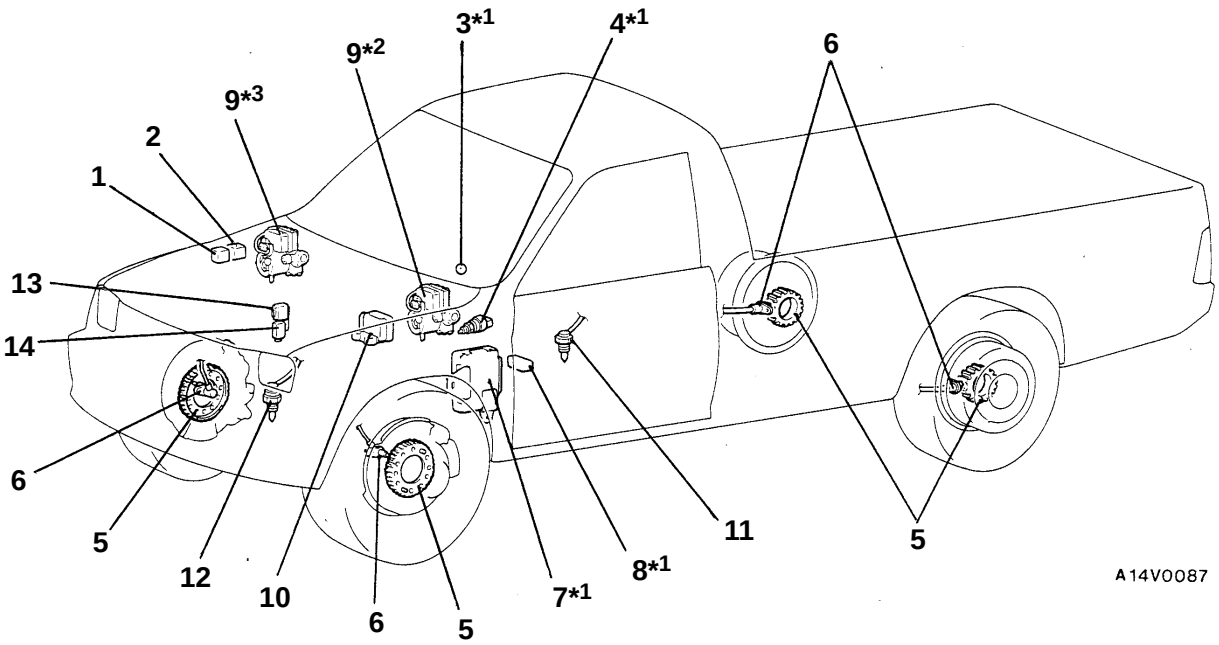

NOTE
*1: For R.H. drive vehicles, those parts are installed at the right side.
*2: Diesel-powered vehicles – L.H. drive vehicles.
*3: Except diesel-powered vehicles – L.H. drive vehicles.

1. ABS valve relay
2. ABS motor relay
3. ABS warning lamp
4. Stop lamp switch
5. Rotor
6. Wheel speed sensor
7. ABS-ECU
8. Diagnosis connector
9. Hydraulic unit
10. G-sensor
11. 4WD position detection switch
12. Free wheel engage switch
13. Rear differential lock-ECU
14. 4WD indicator-ECU

SERVICE SPECIFICATION

35200030143

Items		Standard value	Limit
Front disc brake pad thickness mm		10	2.0
G-sensor output voltage V	When installed	2.4 – 2.6	–
	When removed with arrow mark facing down	3.4 – 3.6	–

LUBRICANTS

35200040030

Items	Specified lubricant
Brake fluid	DOT3 or DOT4
Brake piston seal	Repair kit grease
Guide pin boot inner surfaces	
Lock pin boot inner surfaces	
Piston boot mounting grooves	
Brake piston boot inner surfaces	
Lock pin bush inner surfaces	
Piston cup surface	

SPECIAL TOOLS

35200060142

Tool	Number	Name	Use
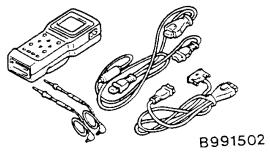	MB991502	MUT-II sub assembly	For checking of ABS (Diagnosis code display when using the MUT-II)
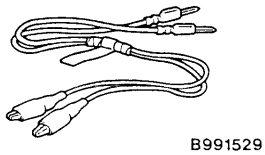	MB991529	ABS check harness	For checking of ABS (Diagnosis code display when using the ABS warning lamp)
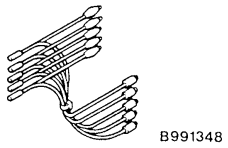	MB991348	Test harness set	For checking of G-sensor
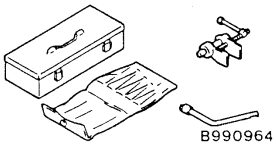	MB990964 MB990520	Brake tool set	Pushing-in of the brake piston

TROUBLESHOOTING

35101110143

STANDARD FLOW OF DIAGNOSTIC TROUBLESHOOTING

Refer to GROUP 00 – How to Use Troubleshooting/Inspection Service Points.

NOTES WITH REGARD TO DIAGNOSIS

The phenomena listed in the following table are not abnormal.

Phenomenon	Explanation of phenomenon
System check sound	When starting the engine, a thudding sound can sometimes be heard coming from inside the engine compartment, but this is because the system operation check is being performed, and is not an abnormality.
ABS operation sound	1. Sound of the motor inside the ABS hydraulic unit operation. (whine) 2. Sound is the generated along with vibration of the brake pedal. (scraping) 3. When ABS operates, sound is generated from the vehicle chassis due to repeated brake application and release. (Thump: suspension; squeak: tyres)
ABS operation (Long braking distance)	For road surfaces such as snow-covered roads and gravel roads, the braking distance for vehicles with ABS can sometimes be longer than that for other vehicles. Accordingly, advise the customer to drive safely on such roads by lowering the vehicle speed and not being too overconfident.
Shock during system operation check	Shock may be felt when the brake pedal is depressed slightly at a low driving speed. This occurs due to ABS operation check (check at a vehicle speed of 8 km/h after starting), and does not indicate any malfunction.

Diagnosis detection condition can vary depending on the diagnosis code.
Make sure that checking requirements listed in the “Comment” are satisfied when checking the trouble symptom again.

DIAGNOSIS FUNCTION

35201120108

DIAGNOSIS CODES CHECK

Read a diagnosis code by the MUT-II or ABS warning lamp. (Refer to GROUP 00 – How to Use Troubleshooting/Inspection Service Points.)

ERASING DIAGNOSIS CODES

Refer to GROUP 00 – How to Use Troubleshooting/Inspection Service Points.

INSPECTION CHART FOR DIAGNOSIS CODES

35201130163

Inspect according to the inspection chart that is appropriate for the malfunction code.

Diagnosis code No.	Inspection item	Diagnosis content	Reference page
11	Front right wheel speed sensor	Open or short circuit	Refer to GROUP 35B – Troubleshooting.
12	Front left wheel speed sensor		
13	Rear right wheel speed sensor		
14	Rear left wheel speed sensor		
15	Wheel speed sensor	Abnormal output signal	Refer to GROUP 35B – Troubleshooting.
16	Power supply system		Refer to GROUP 35B – Troubleshooting.
21	Front right wheel speed sensor	Abnormal	Refer to GROUP 35B – Troubleshooting.
22	Front left wheel speed sensor		
23	Rear right wheel speed sensor		
24	Rear left wheel speed sensor		
25	Free wheel engage switch		35C-7
26	4WD position detection switch		35C-8
27	Rear differential lock detection switch		35C-9
32	G-sensor system		35C-10
33	Stop lamp switch system		Refer to GROUP 35B – Troubleshooting.
41	Front right solenoid valve		Refer to GROUP 35B – Troubleshooting.
42	Front left solenoid valve		
43	Rear solenoid valve		
51	Valve relay		Refer to GROUP 35B – Troubleshooting.
53	Motor relay, motor		Refer to GROUP 35B – Troubleshooting.
63	ABS-ECU		Refer to GROUP 35B – ABS-ECU. (Replace the ABS-ECU.)
64			

INSPECTION PROCEDURE CLASSIFIED BY DIAGNOSIS CODES

For diagnosis code numbers other than those listed below, refer to GROUP 35B – Troubleshooting.

Code No. 25 Free wheel engage switch	Probable cause
ABS-ECU determines that an open circuit exists in the free wheel engage switch system.	● Malfunction of wiring harness or connector ● Malfunction of 4WD indicator-ECU ● Malfunction of ABS-ECU

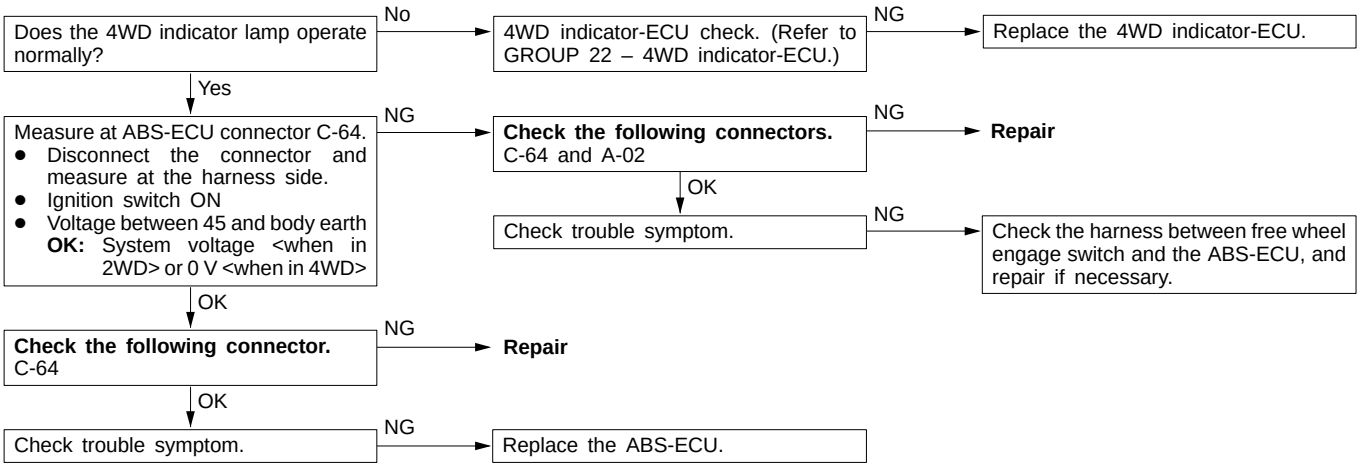

Code No. 26 4WD position detection switch	Probable cause
This code is output at the following times: ABS-ECU determines that an open circuit exists in the 4WD detection switch system. The free wheel engage switch is off and the 4WD detection switch is on at a vehicle speed of 15km/h or more for 5 seconds or more.	● Malfunction of wiring harness or connector ● Malfunction of free wheel engage switch ● Malfunction of 4WD indicator-ECU ● Malfunction of 4WD position detection switch ● Malfunction of ABS-ECU

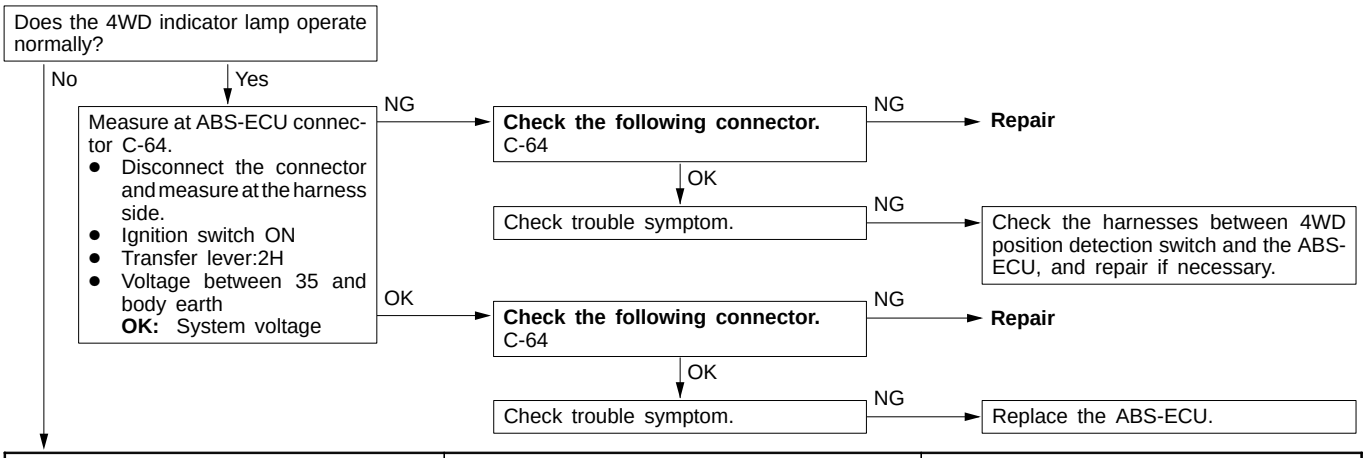

Trouble symptom	Main cause	Remedy
Even when the transfer shift lever is in the ”4H” position, the 4WD front wheel indicator lamp does not illuminate.	Broken harness wire between the 4WD indicator-ECU and the free-wheel engage switch, or broken earth wire from the free wheel engage switch	Repair the harness.
	Free wheel engage switch is defective.	Replace the switch.
Even when the transfer shift lever is in the ”4H” position, the free wheel differential indicator lamp does not illuminate.	Broken harness wire between the 4WD indicator-ECU and the 4WD position detection switch	Repair the harness.
	Broken wire in the 4WD indicator-ECU circuit	4WD indicator-ECU inspection (Refer to GROUP 22 – 4WD indicator-ECU.)
Free wheel differential indicator lamp illuminates regardless of the position of the transfer shift lever.	Short in the harness wire in the 4WD position detection switch circuit	Repair the harness.
	4WD position detection switch is defective.	Replace the switch.
	Short in the ABS-ECU circuit	Replace the ABS-ECU.
	Short in the 4WD indicator-ECU circuit	4WD indicator-ECU inspection (Refer to GROUP 22 – 4WD indicator-ECU.)
No indicator is illuminated	Power circuit in the 4WD indicator-ECU is defective.	Repair the harness.
	4WD indicator-ECU is defective.	4WD indicator-ECU inspection (Refer to GROUP 22 – 4WD indicator-ECU.)

NOTE
When checking a short in the ABS-ECU circuit, remove the ABS-ECU connector and check if the 4WD indicator returns to normal. If it returns to normal, the ABS-ECU is defective. Furthermore, if the ABS-ECU is normal, then the 4WD indicator-ECU will be defective.

Code No. 27 Rear differential lock detection switch <Vehicles with rear differential lock>	Probable cause
The ABS-ECU determines that an open circuit occurs in rear differential detection switch system.	● Malfunction of wiring harness or connector ● Malfunction of rear differential lock-ECU ● Malfunction of ABS-ECU

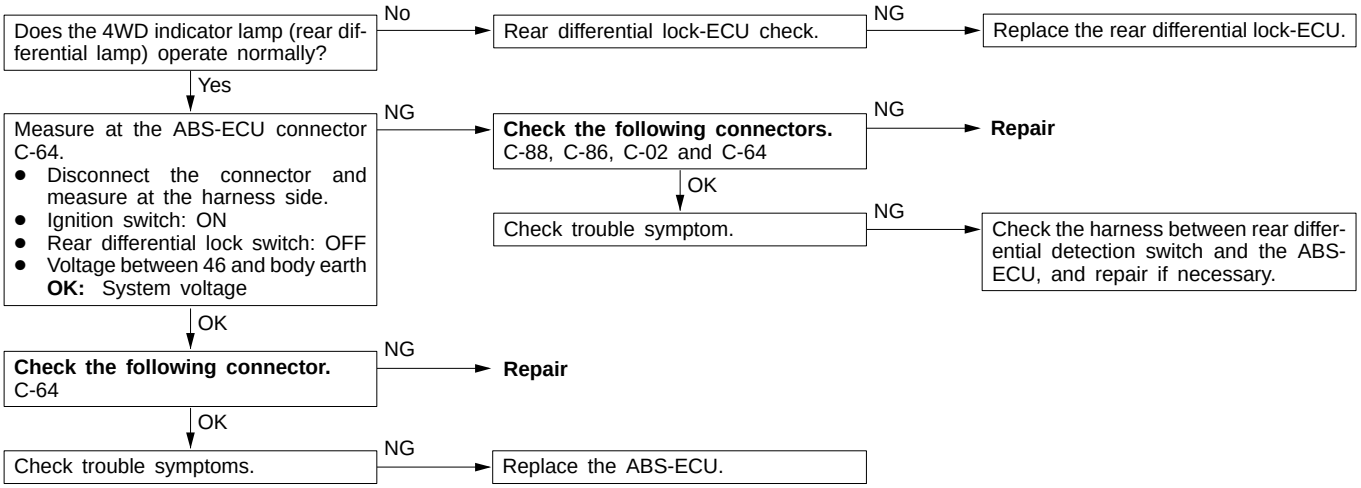

Code No. 27 Rear differential lock detection switch <Vehicles without rear differential lock>	Probable cause
For vehicles without rear differential lock, battery positive voltage is applied to the ABS-ECU terminal No. 46. This code is output when this line is interrupted.	● Malfunction of wiring harness or connector ● Malfunction of ABS-ECU

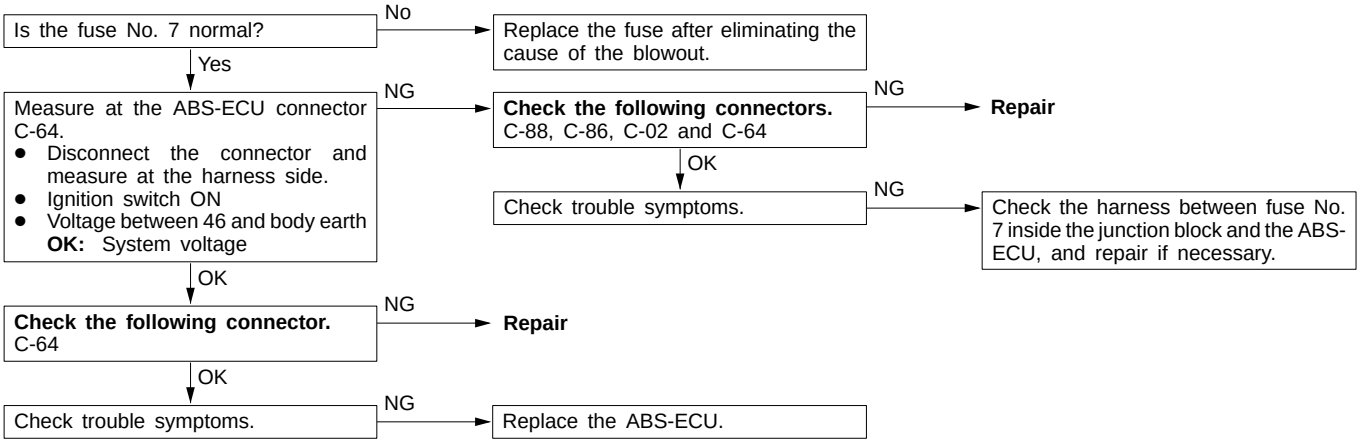

Code No. 32 G-sensor system	Probable cause
This code is output at the following times: The G-sensor output is less than 0.5 V or more than 4.5 V. An open or short circuit is present in the G-sensor system.	● Malfunction of G-sensor ● Malfunction of wiring harness or connector ● Malfunction of ABS-ECU

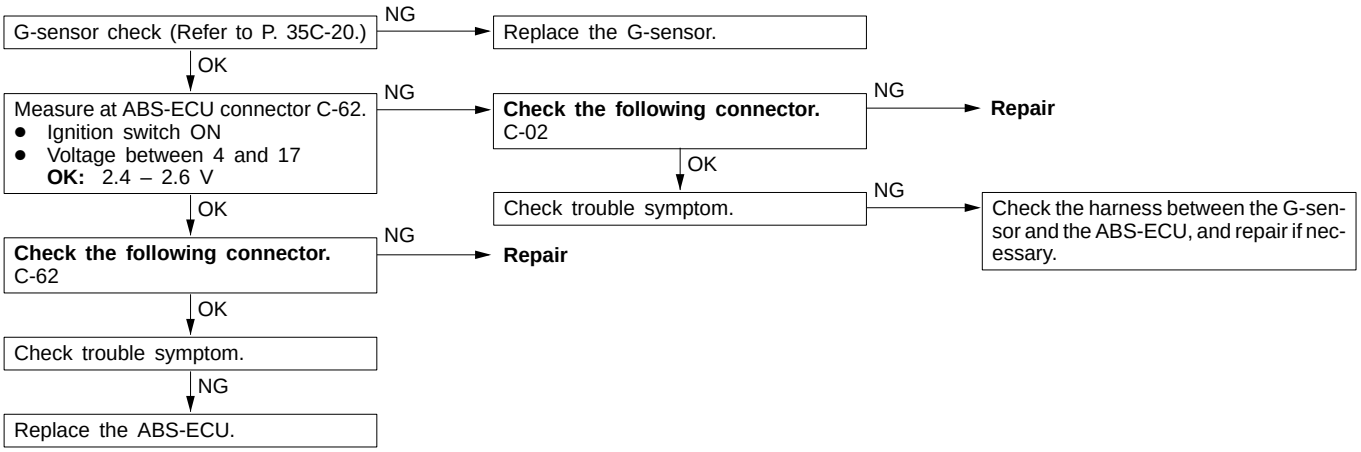

ABS WARNING LAMP INSPECTION

35201200086

Refer to GROUP 35B – Troubleshooting.

INSPECTION CHART FOR TROUBLE SYMPTOMS

35201140159

Refer to GROUP 35B – Troubleshooting.

DATA LIST REFERENCE TABLE

35201150107

The following items can be read by the MUT-II from the ABS-ECU input data.

1. When the system is normal

Item No.	Check item	Checking requirements	Normal value
11	Front-right wheel speed sensor	Perform a test run	Vehicle speeds displayed on the speedometer and MUT-II are identical.
12	Front-left wheel speed sensor		
13	Rear-right wheel speed sensor		
14	Rear-left wheel speed sensor		
16	ABS-ECU power supply voltage	Ignition switch power supply voltage and valve monitor voltage	9 – 16 V
25	Free wheel engage switch	Engage 4WD	ON
		Engage 2WD	OFF
26	4WD detection switch	Place the transfer lever at 4H.	ON
		Place the transfer lever at 2H.	OFF
27	Rear differential lock detection switch	Turn on the switch.	ON
		Turn off the switch.	OFF
32	G-sensor output voltage	Stop the vehicle.	2.4 – 2.6 V
		Perform a test run.	Display value fluctuates with a mean value of 2.5 V.
33	Stop lamp switch	Depress the brake pedal.	ON
		Release the brake pedal.	OFF

2. When the ABS-ECU shut off ABS operation.

When the diagnosis system stops the ABS-ECU, the MUT-II display data will be unreliable.

ACTUATOR TEST INSPECTION TABLE

35201160056

Refer to GROUP 35B – Troubleshooting.

CHECK AT ABS-ECU

35201180137

TERMINAL VOLTAGE CHECK CHART

1. Measure the voltages between terminals (15), (16), (25) and (42) (earth terminals) and each respective terminal.

   NOTE
   Do not measure terminal voltage for approx. 3 seconds after the ignition switch is turned on. The ABS-ECU performs the initial check for that period.
2. The terminal layouts are shown in the illustrations below.

Connector terminal No.	Signal	Checking requirements		Normal condition
1	Output to front-left hydraulic unit solenoid valve (OUT side)	Ignition switch: ON (When solenoid valve is off approximately 1 second after engine is started)		System voltage
2	Output to rear hydraulic unit solenoid valve (OUT side)			
3	Output to rear hydraulic unit solenoid valve (IN side)			
4	G-sensor signal	Ignition switch: ON		2.4 – 2.6 V (Horizontal condition)
13	ABS-ECU power supply	Ignition switch: ON		System voltage
		Ignition switch: START		0 V
14	Output to front-left hydraulic unit solenoid valve (IN side)	Ignition switch: ON (When solenoid valve is off approximately 1 second after engine is started)		System voltage
17	G-sensor earth	Always		0 V
26	Output to relay power supply	Ignition switch: ON		System voltage
31	Free wheel engage switch	Ignition switch: ON	2WD	System voltage
			4WD	1 V or less
32	Memory power supply	Always		System voltage
34	Input from stop lamp switch	Ignition switch: ON	Stop lamp switch ON	System voltage
			Stop lamp switch OFF	1 V or less
35	Input from 4WD detection switch	Ignition switch: ON	Transfer lever position: 2H	System voltage
			Transfer lever position: 4H	1 V or less
36	MUT-II	Connect the MUT-II.		Serial communication with MUT-II
		Do not connect the MUT-II.		1 V or less

Connector terminal No.	Signal	Checking requirements		Normal condition
37	Output to valve relay	Ignition switch: ON	Approximately 1 second after engine is started. The relay is on.	2 V or less
			The system runs down. The relay is off.	System voltage
38	Output to motor relay	Ignition switch: ON (Approximately 1 second after engine is started)	Motor is on	2 V or less
			Motor is off	System voltage
39	Idle-up solenoid valve (+)	Ignition switch: ON (When motor is on approximately 1 second after engine is started)		System voltage
41	Output to front-right hydraulic unit solenoid valve (OUT side)	Ignition switch: ON (When solenoid valve is off approximately 1 second after engine is started)		System voltage
43	Idle-up solenoid valve (–)	Ignition switch: ON (When motor is on approximately 1 second after engine is started)		2 V or less
45	Input from free wheel engage switch	Ignition switch: ON	Engage 2WD	System voltage
			Engage 4WD	1 V or less
46*1	Ignition switch	Ignition switch: ON		System voltage
		Ignition switch: START		0 V
46*2	Input from rear differential lock detection switch	Ignition switch: ON	Rear differential lock switch: ON	0 V
			Rear differential lock switch: OFF	System voltage
47	Input from diagnosis indication selection	Connect the MUT-II.		0 V
		Do not connect the MUT-II.		Approx. 12 V
48	Input from valve relay monitor	Ignition switch: ON		System voltage
49	Motor monitor	Ignition switch: ON (Approximately 1 second after engine is started)	Motor is on	System voltage
			Motor is off	0.5 V or less
50	Output to ABS warning lamp	Ignition switch: ON	The lamp is switched off	System voltage
			The lamp illuminates	0 – 2 V
52	Output to front-right hydraulic unit solenoid valve (IN side)	Ignition switch: ON (When solenoid valve is off approximately 1 second after engine is started)		System voltage

NOTE
*1: Vehicles without rear differential lock
*2: Vehicles with rear differential lock

RESISTANCE AND CONTINUITY BETWEEN HARNESS-SIDE CONNECTOR TERMINALS

1. Turn the ignition switch off and disconnect the ABS-ECU connectors before checking resistance and continuity.
2. Check them between the terminals indicated in the table below.
3. The terminal layouts are shown in the illustrations below.

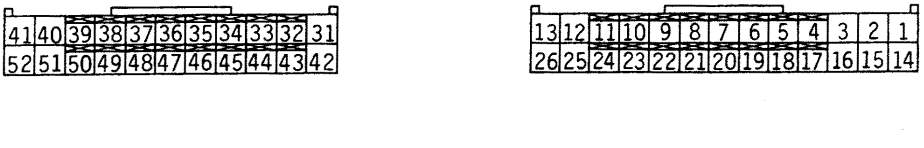

Connector terminal No.	Signal	Normal condition
1 – Body earth	Front-left solenoid valve (OUT side)	2.2 Ω
2 – Body earth	Rear solenoid valve (OUT side)	2.2 Ω
3 – Body earth	Rear solenoid valve (IN side)	5.0 Ω
7 – 20	Front-left wheel speed sensor (+ wire)	1.2 – 1.4 kΩ
8 – 21	Rear-right wheel speed sensor (+ wire)	1.2 – 1.4 kΩ
9 – 22	Rear-left wheel speed sensor (+ wire)	1.2 – 1.4 kΩ
10 – 23	Front-right wheel speed sensor (+ wire)	1.2 – 1.4 kΩ
14 – Body earth	Front-left solenoid valve (IN side)	5.0 Ω
15 – Body earth	ABS-ECU earth	Continuity
16 – Body earth		
25 – Body earth		
39 – 43	Idle-up solenoid valve	37 – 44 Ω
41 – Body earth	Front-right solenoid valve (OUT side)	2.2 Ω
42 – Body earth	ABS-ECU earth	Continuity
48 – Body earth	Input from valve relay monitor	Continuity
49 – Body earth	Motor monitor	Continuity
52 – Body earth	Front-right solenoid valve (IN side)	5.0 Ω

FRONT DISC BRAKE

35200600023

REMOVAL AND INSTALLATION

Pre-removal Operation
- Brake Fluid Draining

Post-installation Operation
- Brake Fluid Supplying
- Brake Line Bleeding
  (Refer to GROUP 35B – On-vehicle Service.)

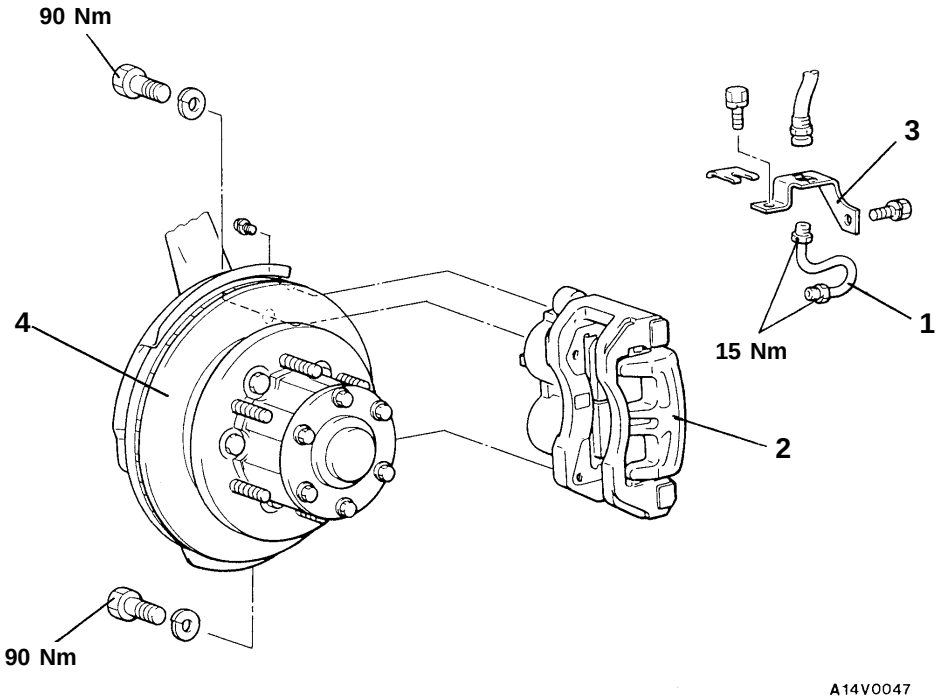

Removal steps

1. Brake tube
2. Front brake assembly (Refer to GROUP 35B – Front Disc Brake.)
3. Brake hose bracket
4. Brake disc (Refer to GROUP 26 – Front Hub Assembly.)

DISASSEMBLY AND REASSEMBLY

35200620029

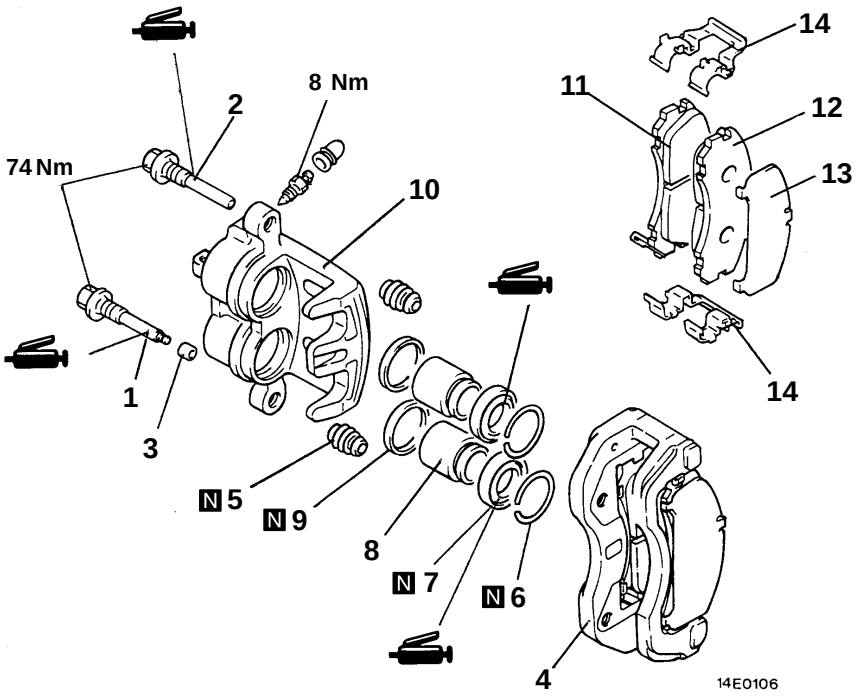

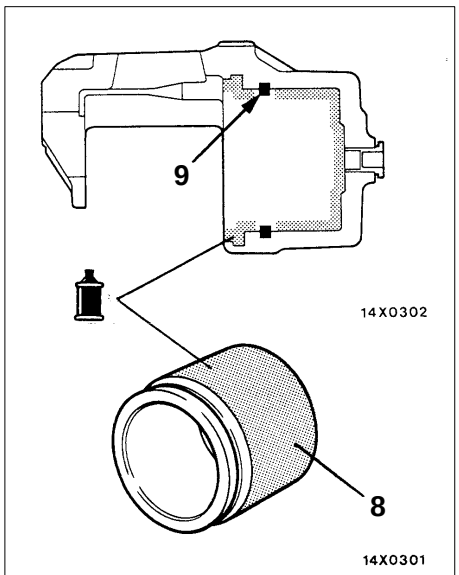

Caution
The piston seal inside the seal and boot kit is coated with special grease, so do not wipe this grease off.

Brake fluid: DOT3 or DOT4

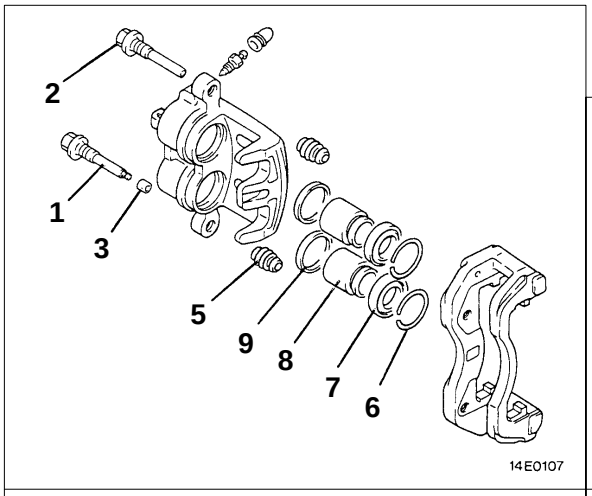

Brake caliper kit

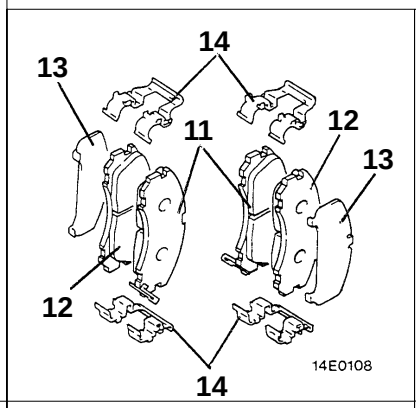

Pad kit

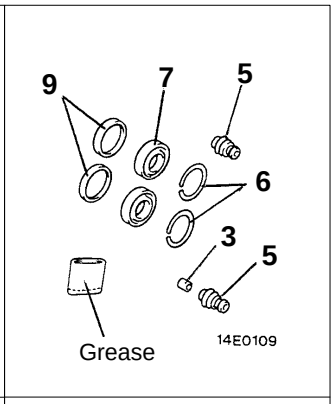

Seal and boot kit

00004876

Caliper assembly disassembly steps

- ▶A◀ 1. Lock pin
- ▶A◀ 2. Guide pin
- 3. Bushing
- 4. Caliper support (Pad, clip and shim)
- 5. Pin boot
- 6. Boot ring
- ◀A▶ 7. Piston boot
- ◀A▶ 8. Piston
- ◀B▶ 9. Piston seal
- 10. Caliper body

Pad assembly disassembly steps

- ▶A◀ 1. Lock pin
- ▶A◀ 2. Guide pin
- 3. Bushing
- 4. Caliper support (Pad, clip and shim)
- 11. Pad and wear indicator assembly
- 12. Pad assembly
- 13. Outer shim
- 14. Clip

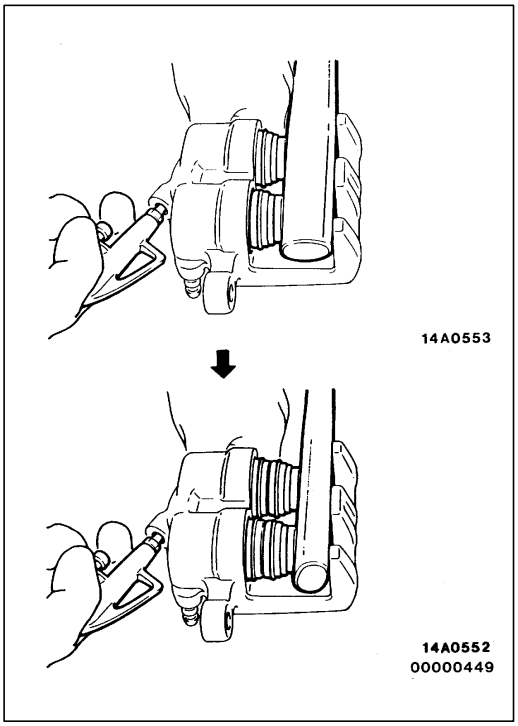

DISASSEMBLY SERVICE POINTS

When disassembling the disc brakes, disassemble both sides (left and right) as a set.

◀A▶ PISTON BOOT/PISTON REMOVAL

Pump in compressed air through the brake hose installation hole and remove the pistons and piston boot.

Caution
When removing the pistons, be sure to use the handle of a plastic hammer and adjust the height of the two pistons while pumping air slowly in so that the pistons protrude evenly.
Do not remove one piston completely before trying to remove the other piston because it will become impossible to remove the second piston.

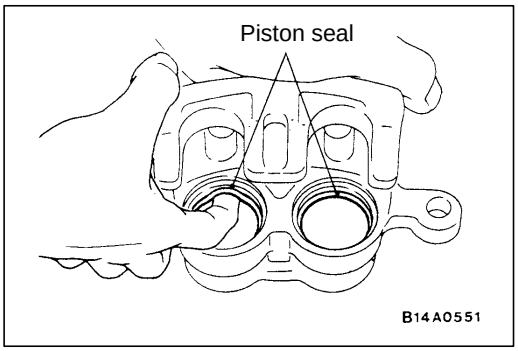

◀B▶ PISTON SEAL REMOVAL

(1) Remove piston seal with finger tip.

Caution
Do not use a screwdriver or other tool to prevent damage to inner cylinder.

(2) Clean piston surface and inner cylinder with trichloro-ethylene, alcohol or specified brake fluid.

Specified brake fluid: DOT3 or DOT 4

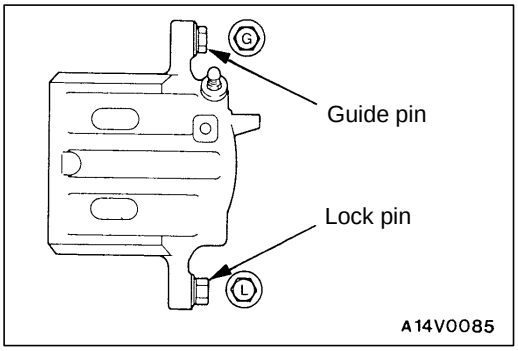

REASSEMBLY SERVICE POINT

▶A◀ LOCK PIN/GUIDE PIN INSTALLATION

Install the lock pin and the guide pin to the caliper body as illustrated.

INSPECTION

35200630015

- Check cylinder for wear, damage or rust.
- Check piston surface for wear, damage or rust.
- Check caliper body or sleeve for wear.
- Check pad for damage or adhesion of grease, check backing metal for damage.

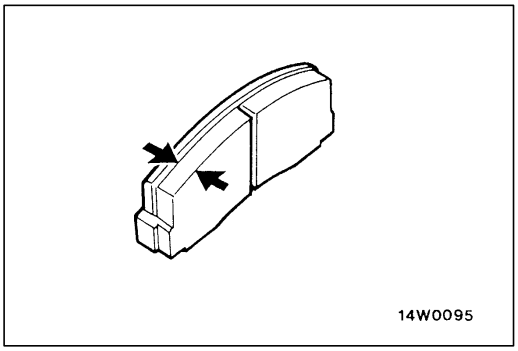

PAD WEAR CHECK

Measure thickness at the thinnest and worn area of the pad. Replace pad assembly if pad thickness is less than the limit value.

Standard value: 10 mm

Limit: 2.0 mm

Caution

1. **When the limit is exceeded, replace the pads at both sides, and also the brake pads for the wheels on the opposite side at the same time.**
2. **If there is a significant difference in the thicknesses of the pads on the left and right sides, check the sliding condition of the piston, lock pin and guide pin.**

WHEEL SPEED SENSOR

35200830170

REMOVAL AND INSTALLATION

Post-installation Operation
- Wheel Speed Sensor Output Voltage Checking (Refer to GROUP 35B – On-vehicle Service.)

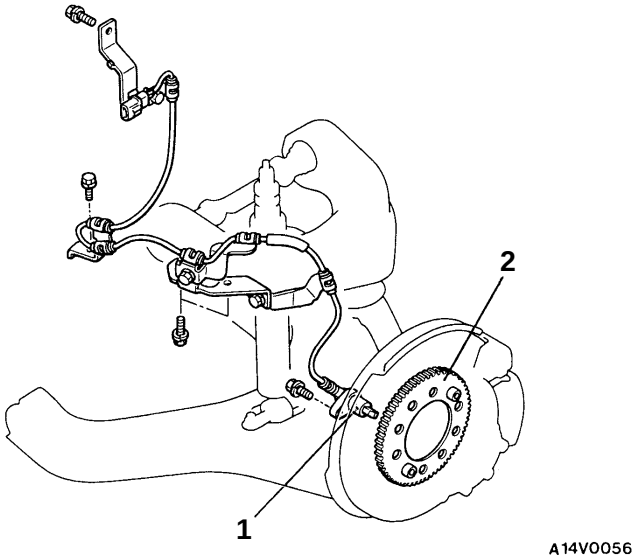

1. Front speed sensor
2. Front rotor
   (Refer to GROUP 26 – Front Hub.)

NOTE
The rear wheel speed sensor is the same as 2WD.

INSPECTION

35200840135

Refer to GROUP 35B.

G-SENSOR

35201010078

REMOVAL AND INSTALLATION

CAUTION: SRS
When removing and installing the G-sensor from/to vehicles equipped with SRS, do not let it bump against the SRS diagnostic unit or other components.

Pre-removal and Post-installation Operation
- SRS diagnostic unit Removal and Installation (Refer to GROUP 52B.)

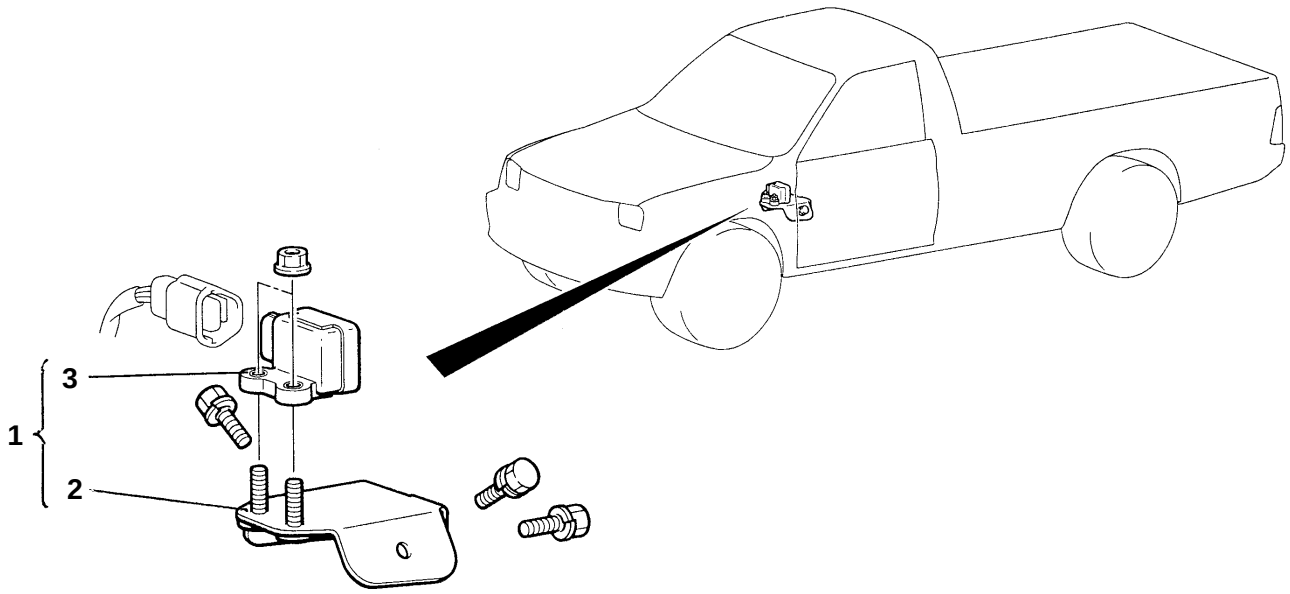

A14V0065

Removal steps
1. G-sensor assembly
2. G-sensor bracket
3. G-sensor

Caution
Do not drop the G-sensor or subject it to shocks.

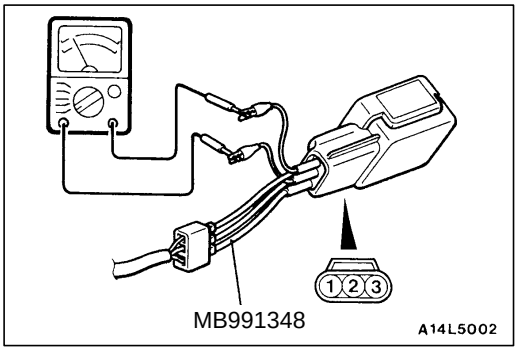

INSPECTION

35201020057

(1) Disconnect the G-sensor connector and connect the special tool between the terminals of the disconnected connector.
(2) Turn the ignition switch to ON and take a reading of the following output voltage.
Between terminals (2) and (3).

Standard value: 2.4 – 2.6 V

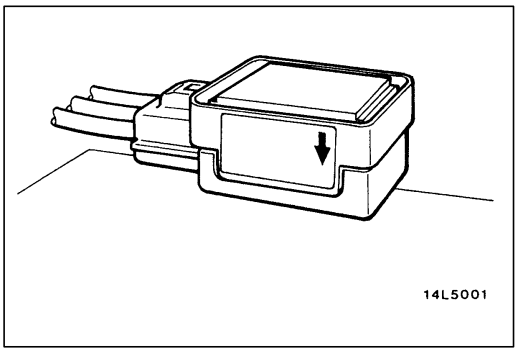

(3) With the special tool still connected, secure the G-sensor so that the arrow mark on the sensor mounting surface faces straight down, and then take a reading of the following output voltage between terminals (2) and (3).

Standard value: 3.4 – 3.6 V

(4) If the voltages is outside the standard value, after checking to be sure that there is no abnormality in the power supply and earth wires, replace the G-sensor.

ANTI-SKID BRAKING SYSTEM (ABS) <4WD>

CONTENTS

GENERAL **2**
Outline of Change 2
TROUBLESHOOTING **3**
ON-VEHICLE SERVICE
Wheel Speed Sensor Output Voltage Check ..... Refer to GROUP 35B
Hydraulic Unit Check ..... Refer to GROUP 35B
ABS Warning Lamp Relay Continuity Check ..... Refer to GROUP 35B
ABS-ECU AND HYDRAULIC UNIT ..... **Refer to GROUP 35B**

GENERAL

OUTLINE OF CHANGE

- The ABS system has been revised as follows:

(1) The ABS control unit (ABS-ECU) and the hydraulic unit have been unified.
(2) The motor relay and the valve relay have been discontinued.
(3) The ABS warning lamp relay has been added.

CONSTRUCTION DIAGRAM

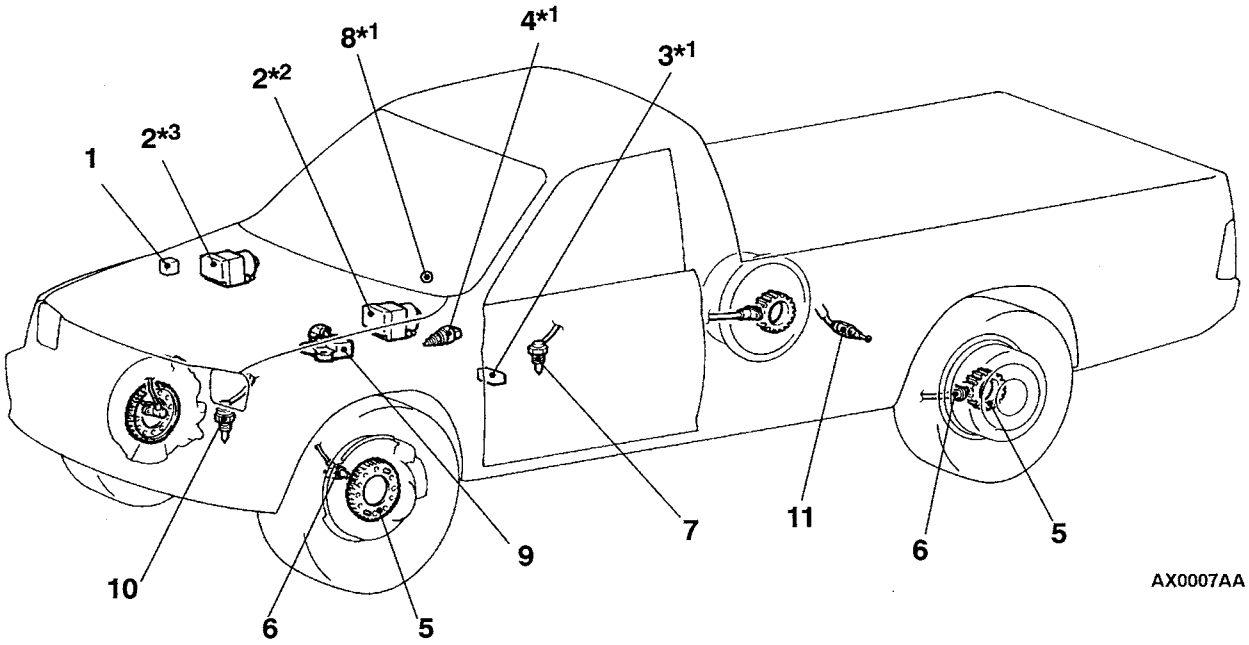

1. ABS warning lamp relay
2. Hydraulic unit assembly (integrated in ABS-ECU)
3. Diagnosis connector
4. Stop lamp switch
5. ABS rotor
6. Wheel speed sensor
7. 4WD position detection switch
8. ABS warning lamp
9. G-sensor
10. Freewheel engage switch
11. Rear differential lock detection switch <Vehicles with rear differential lock system>

NOTE
For R.H. drive vehicles, *1 indicates installation at the right aide.
*2: LHD diesel-powered vehicles
*3: Except LHD diesel-powered vehicles

TROUBLESHOOTING

STANDARD FLOW OF DIAGNOSTIC TROUBLESHOOTING

Refer to Basic Manual GROUP 00 – How to Use Troubleshooting/Inspection Service Points.

NOTES WITH REGARD TO DIAGNOSIS

The phenomena listed in the following table are not abnormal.

Phenomenon	Explanation of phenomenon
System check sound	When starting the engine, a thudding sound can sometimes be heard coming from inside the engine compartment, but this is because the system operation check is being performed, and is not an abnormality.
ABS operation sound	1. Sound of the motor inside the ABS hydraulic unit operation. (whine) 2. Sound is the generated along with vibration of the brake pedal. (scraping) 3. When ABS operates, sound is generated from the vehicle chassis due to repeated brake application and release. (Thump: suspension; squeak: tyres)
ABS operation (Long braking distance)	For road surfaces such as snow-covered roads and gravel roads, the braking distance for vehicles with ABS can sometimes be longer than that for other vehicles. Accordingly, advise the customer to drive safely on such roads by lowering the vehicle speed and not being too overconfident.
Shock during system operation check	Shock may be felt when the brake pedal is depressed slightly at a low driving speed. This occurs due to ABS operation check (check at a vehicle speed of 8 km/h after starting), and does not indicate any malfunction.

Diagnosis detection condition can vary depending on the diagnosis code.
Make sure that checking requirements listed in the "Comment" are satisfied when checking the trouble symptom again.

DIAGNOSIS FUNCTION

DIAGNOSIS CODES CHECK

Refer to GROUP 35B – Troubleshooting.

ERASING DIAGNOSIS CODES

Refer to GROUP 35B – Troubleshooting.

INSPECTION CHART FOR DIAGNOSIS CODES

Inspect according to the inspection chart that is appropriate for the malfunction code.

Diagnosis code No.	Inspection item	Diagnosis content	Reference page
11	Front right wheel speed sensor	Open or short circuit	Refer to GROUP 35B – Troubleshooting.
12	Front left wheel speed sensor		
13	Rear right wheel speed sensor		
14	Rear left wheel speed sensor		
15	Wheel speed sensor	Abnormal output signal	Refer to GROUP 35B – Troubleshooting.
16	Power supply system		Refer to GROUP 35B – Troubleshooting.
21	Front right wheel speed sensor	Abnormal	Refer to GROUP 35B – Troubleshooting.
22	Front left wheel speed sensor		
23	Rear right wheel speed sensor		
24	Rear left wheel speed sensor		
25	Free wheel engage switch		35C-5
26	4WD position detection switch		35C-7
27	Rear differential lock detection switch		35C-7
32	G-sensor system		35C-8
33	Stop lamp switch system		Refer to GROUP 35B – Troubleshooting.
41	Front right solenoid valve		Refer to GROUP 35B – Troubleshooting.
42	Front left solenoid valve		
43	Rear solenoid valve		
51	Valve driver		Refer to GROUP 35B – Troubleshooting.
53	Motor driver		Refer to GROUP 35B – Troubleshooting.
63	ABS-ECU		Refer to GROUP 35B – ABS-ECU. (Replace the ABS-ECU and hydraulic unit assembly.)

INSPECTION PROCEDURE CLASSIFIED BY DIAGNOSIS CODES

For diagnosis code numbers other than those listed below, refer to GROUP 35B – Troubleshooting.

Code No. 25 Free wheel engage switch	Probable cause
This diagnosis code is displayed under the following cased. For case (2), code No. 26 is also displayed at the same time. (1) The ABS-ECU determines that an open circuit exists in the freewheel engage switch system. (2) While the vehicle speed is 20 km/h or more, the freewheel engage switch remains off, and the 4WD position detection switch remains on for five minutes or more until the vehicle speed reaches 0 km/h (The switch signals are combined abnormality).	• Malfunction of wiring harness or connector • Malfunction of freewheel engage switch • Malfunction of 4WD position detection switch • Malfunction of 4WD indicator-ECU • Malfunction of ABS-ECU and hydraulic unit

<When only code No. 25 is displayed>

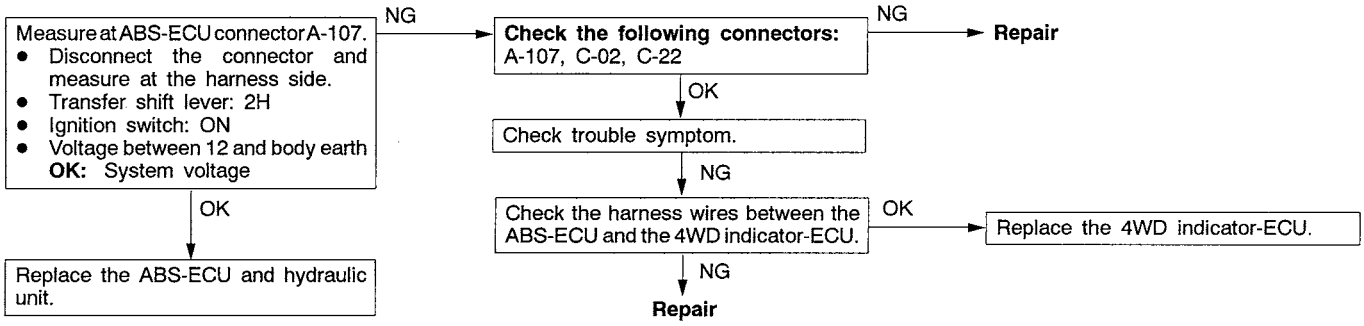

<When code Nos. 25 and 26 are displayed simultaneously>

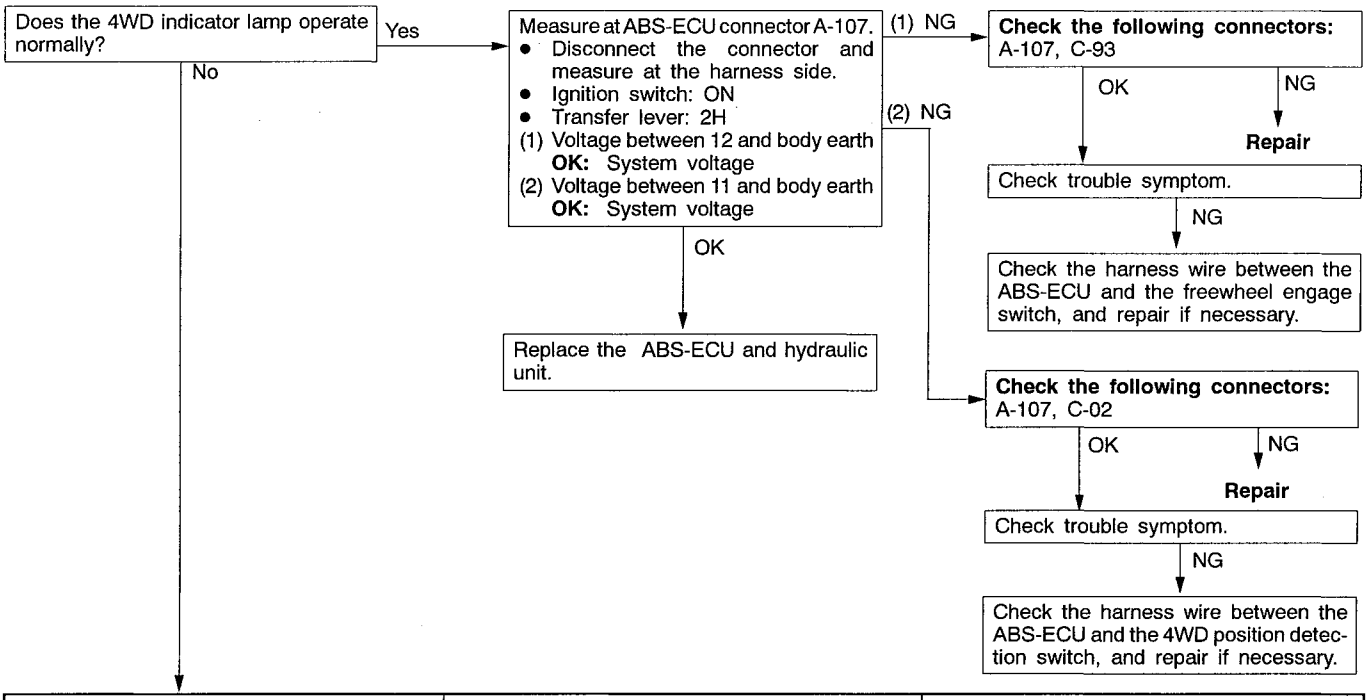

Trouble symptom	Main cause	Remedy
When the transfer shift lever is at "4H" position, the 4WD indicator lamp flashes, but does not remain on.	Broken harness wire between the 4WD indicator-ECU and the free-wheel engage switch, or broken earth wire from the free wheel engage switch	Repair the harness.
	Free wheel engage switch is defective.	Replace the switch.
	4WD indicator-ECU is defective.	Replace the 4WD indicator-ECU
When the transfer shift lever is at "2H" position, the 4WD indicator lamp flashes.	Short in the harness wire in the 4WD position detection switch circuit	Repair the harness.
	4WD position detection switch is defective.	Replace the switch.
	Short in the ABS-ECU circuit	Replace the ABS-ECU.
	4WD indicator-ECU is defective.	Replace the 4WD indicator-ECU.
No indicator is illuminated	Power circuit in the 4WD indicator-ECU is defective.	Repair the harness.
	Broken harness wire between the 4WD indicator-ECU and the freewheel engage switch, or broken earth wire from the freewheel engage switch	Replace the harness.
	Broken harness wire between the 4WD indicator-ECU and the 4WD position detection switch	Repair the harness.
	Freewheel engage switch or 4WD position detection switch is defective.	Repair the switch.
	4WD indicator-ECU is defective.	Replace the 4WD indicator-ECU.

NOTE
When checking a short in the ABS-ECU circuit, remove the ABS-ECU connector and check if the 4WD indicator returns to normal. If it returns to normal, the ABS-ECU is defective. Furthermore, if the ABS-ECU is normal, then the 4WD indicator-ECU will be defective.

Code No. 26 4WD position detection switch system	Probable cause
This diagnosis code is displayed under the following case. For case (2), code No. 25 is also displayed at the same time. (1) The ABS-ECU determines that an open circuit exists in the 4WD position detection switch system. (2) While the vehicle speed is 20 km/h or more, the freewheel engage switch remains off, and the 4WD position detection switch remains on for five minutes or more until the vehicle speed reaches 0 km/h (The switch signals are combined abnormally).	• Malfunction of wiring harness or connector • Malfunction of freewheel engage switch • Malfunction of 4WD position detection switch • Malfunction of 4WD indicator-ECU • Malfunction of ABS-ECU and hydraulic unit

<When only code No. 26 is displayed>

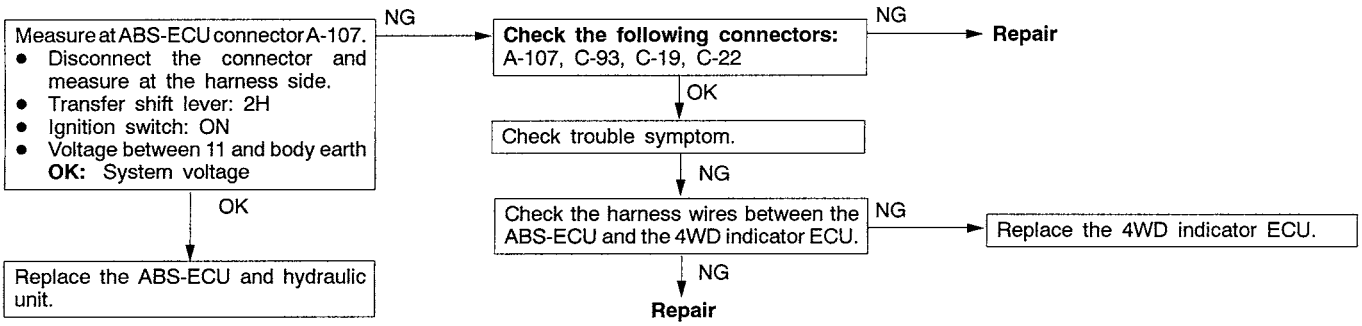

<When code Nos. 25 and 26 are displayed>

Refer to P.35C-6.

Code No. 27 Rear differential lock detection switch <Vehicles without rear differential lock>	Probable cause
For vehicles without rear differential lock, battery positive voltage is applied to the ABS-ECU terminal No. 46. This code is output when this line is interrupted.	• Malfunction of wiring harness or connector • Malfunction of ABS-ECU and hydraulic unit assembly

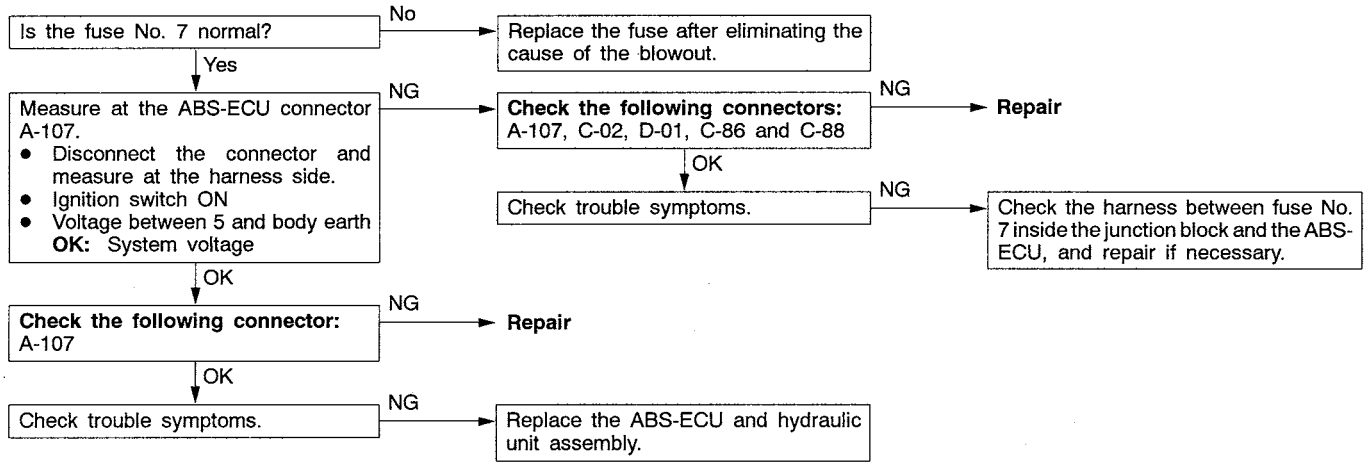

Code No. 27 Rear differential lock detection switch <Vehicles with rear differential lock>	Probable cause
The ABS-ECU determines that an open circuit occurs in rear differential detection switch system.	• Malfunction of wiring harness or connector • Malfunction of rear differential lock-ECU • Malfunction of ABS-ECU and hydraulic unit assembly

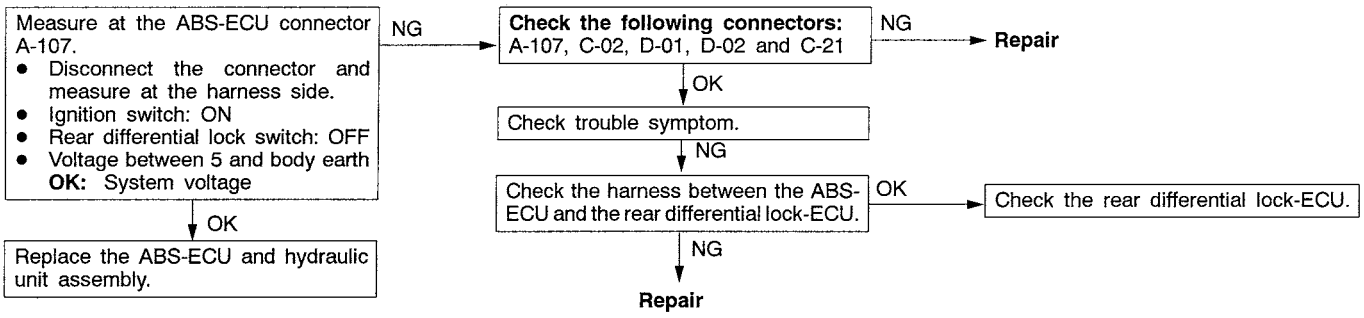

Code No. 32 G-sensor system	Probable cause
This code is output at the following times: The G-sensor output is less than 0.5 V or more than 4.5 V. An open or short circuit is present in the G-sensor system.	• Malfunction of G-sensor • Malfunction of wiring harness or connector • Malfunction of ABS-ECU and hydraulic unit assembly

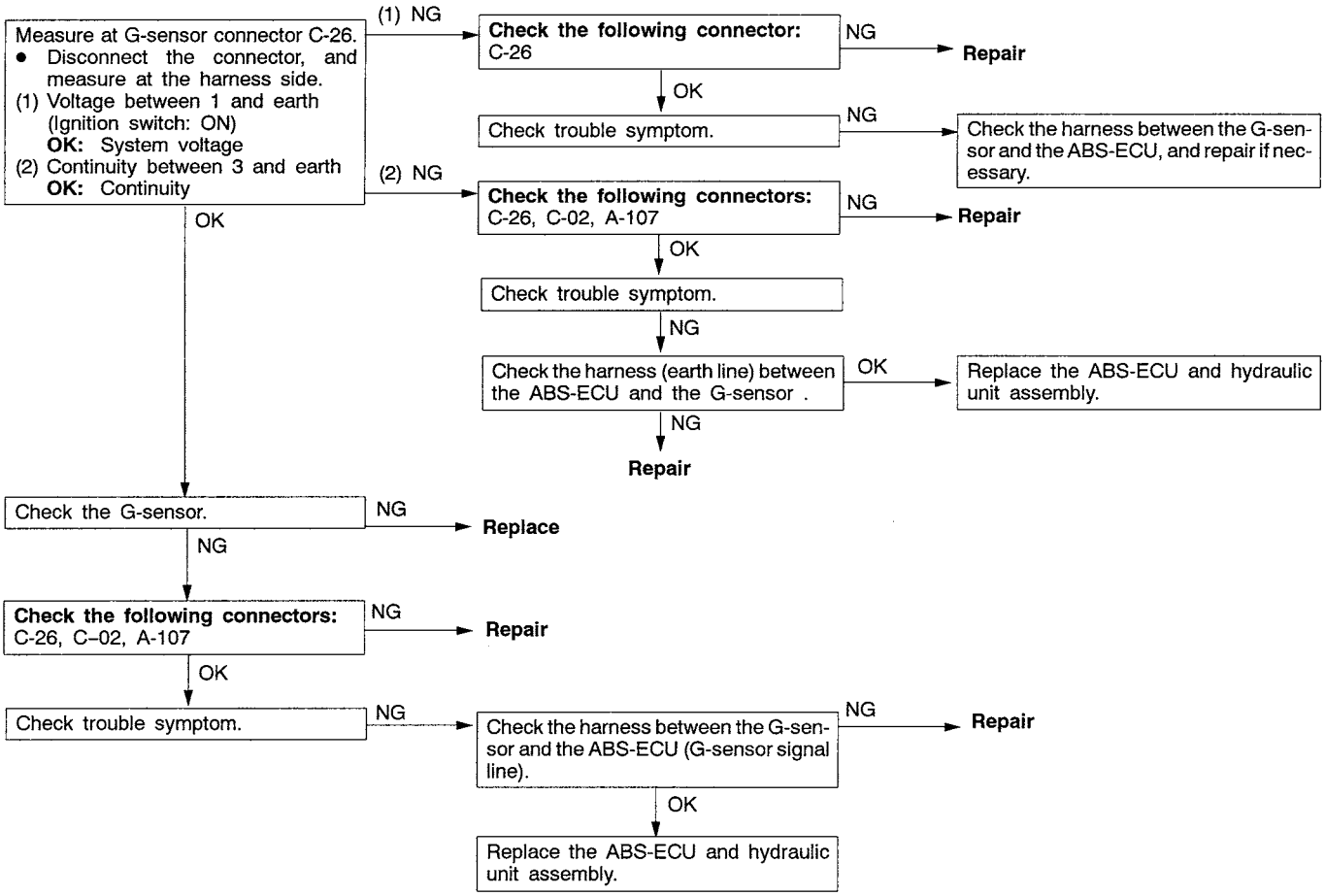

ABS WARNING LAMP INSPECTION

Refer to GROUP 35B – Troubleshooting.

INSPECTION CHART FOR TROUBLE SYMPTOMS

Refer to GROUP 35B – Troubleshooting.

DATA LIST REFERENCE TABLE

The following items can be read by the MUT-II from the ABS-ECU input data.

1. When the system is normal

Item No.	Check item	Checking requirements		Normal value
11	Front-right wheel speed sensor	Perform a test run		Vehicle speeds displayed on the speedometer and MUT-II are identical.
12	Front-left wheel speed sensor			
13	Rear-right wheel speed sensor			
14	Rear-left wheel speed sensor			
16	ABS-ECU power supply voltage	Ignition switch power supply voltage and valve monitor voltage		9 – 16 V
25	Free wheel engage switch	Engage 4WD		ON
		Engage 2WD		OFF
26	4WD detection switch	Place the transfer lever at 4H.		ON
		Place the transfer lever at 2H.		OFF
27	Rear differential lock detection switch	Vehicles with rear differential	Turn on the switch	ON
			Turn off the switch	OFF
		Vehicles without rear differential lock	Always	OFF
32	G-sensor output voltage	Stop the vehicle.		2.4 – 2.6 V
		Perform a test run.		Display value fluctuates with a mean value of 2.5 V.
33	Stop lamp switch	Depress the brake pedal.		ON
		Release the brake pedal.		OFF

2. When the ABS-ECU shut off ABS operation.

When the diagnosis system stops the ABS-ECU, the MUT-II display data will be unreliable.

ACTUATOR TEST INSPECTION TABLE

Refer to GROUP 35B – Troubleshooting.

CHECK AT ABS-ECU

TERMINAL VOLTAGE CHECK CHART

1. Measure the voltages between terminals (32) and (34) (earth terminals) and each respective terminal.

   NOTE
   Do not measure terminal voltage for approximately three seconds after the ignition switch is turned on. The ABS-ECU performs the initial check during that period.

2. The terminal layouts are shown in the illustrations below.

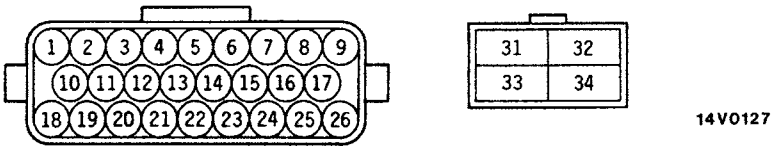

Connector terminal No.	Signal	Checking requirement		Normal condition
5*1	Ignition switch	Ignition switch: ON		System voltage
5*2	Input from rear differential lock detection switch	Ignition switch: ON	Rear differential lock switch: ON	0 V
			Rear differential lock switch: OFF	System voltage
7	G-sensor signal	• Ignition switch: ON • Vehicle: parked on level ground		2.4 – 2.6 V
9	ABS-ECU power supply	Ignition switch: ON		System voltage
		Ignition switch: START		0 V
11	Input from 4WD detection switch	Ignition switch: ON	Transfer lever position: 2H	System voltage
			Transfer lever position: 4H	1 V or less
12	Input from freewheel engage switch	Ignition switch: ON	Transfer lever position: 2H	System voltage
			Transfer lever position: 4H	1 V or less

NOTE
*1: Vehicles without rear differential lock
*2: Vehicles with rear differential lock

Connector terminal No.	Signal	Checking requirement		Normal condition
13	Input from stop lamp switch	Ignition switch: ON	Stop lamp switch: ON	System voltage
			Stop lamp switch: OFF	1 V or less
14	G-sensor	Always		0V
16	Control output to ABS warning lamp relay.	Ignition switch: ON	The lamp is switch off.	2 V or less
			The lamp is illuminated.	System voltage
23	MUT-II	Connect the MUT-II		Serial communication with MUT-II
		Do not connect the MUT-II		1 V or less
24	Input from diagnosis indication selection	Connect the MUT-II		0 V
		Do not connect the MUT-II		Approximately 12 V
31	Solenoid valve power supply	Always		System voltage
33	Motor power supply			

RESISTANCE AND CONTINUITY BETWEEN HARNESS-SIDE CONNECTOR TERMINALS

1. Turn the ignition switch off and disconnect the ABS-ECU connectors before checking resistance and continuity.
2. Check between the terminals indicated in the table below.
3. The terminal layouts are shown in the illustration below.

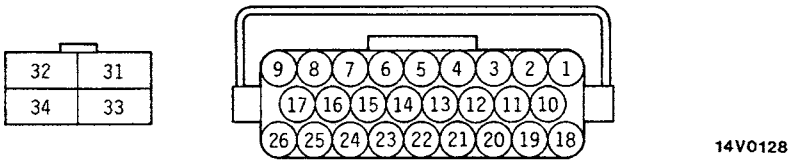

Connector terminal No.	Signal	Normal condition
20 – 21	Front-left wheel speed sensor	1.2 – 1.4 kΩ
1 – 2	Rear-right wheel speed sensor	1.2 – 1.4 kΩ
18 – 19	Front-right wheel speed sensor	1.2 – 1.4 kΩ
3 – 4	Rear-left wheel speed sensor	1.2 – 1.4 kΩ
32 – body earth	Solenoid valve earth	Continuity
34 – body earth	Motor earth	Continuity

PARKING BRAKES

Click on the applicable bookmark to selected the required model year

PARKING BRAKES

CONTENTS

36109000125

GENERAL INFORMATION 2

SERVICE SPECIFICATIONS 2

ON-VEHICLE SERVICE 3

Parking Brake Lever Stroke Check <Lever Type> 3

Parking Brake Pull Rod Stroke Check <Stick Type> 3

Parking Brake Switch Check 4

PARKING BRAKE LEVER <LEVER TYPE> 5

PARKING BRAKE PULL ROD <STICK TYPE> 6

PARKING BRAKE CABLE 7

GENERAL INFORMATION

36100010110

The parking brake is of a mechanical rear-wheel brake construction in all vehicles.

There are two types of parking brake. - stick type and lever type.

CONSTRUCTION DIAGRAM

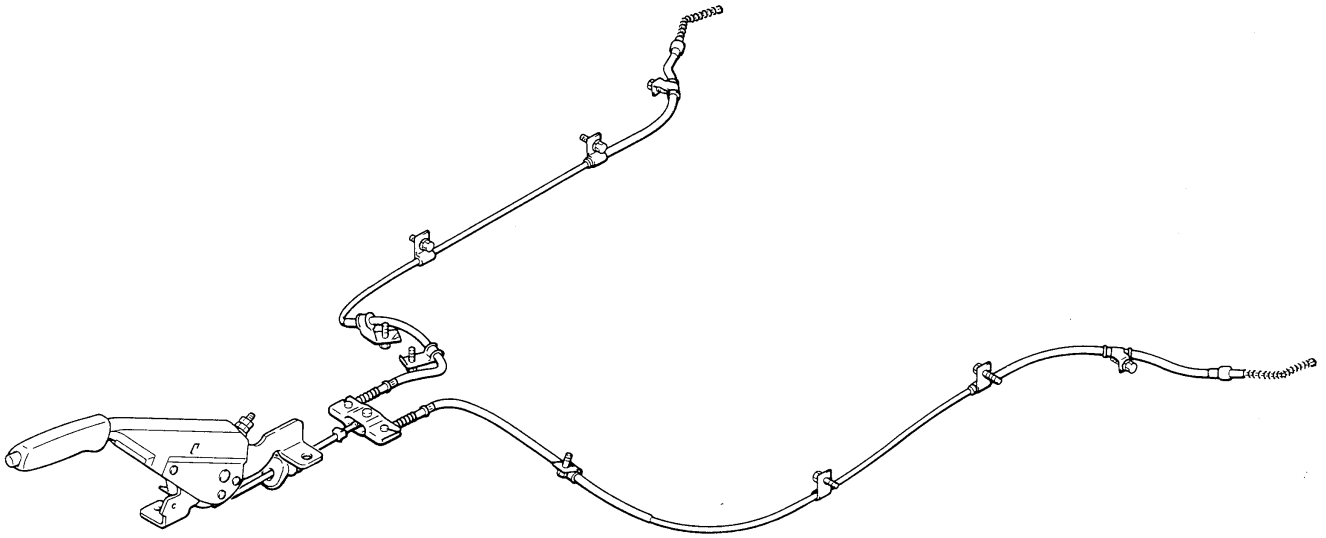

14V0037

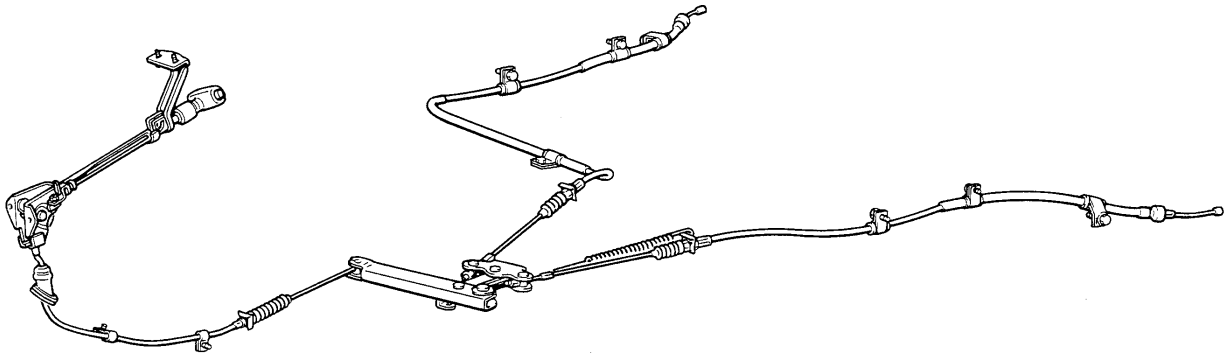

14V0095

SERVICE SPECIFICATIONS

36100030116

Item	Standard value
Parking brake lever stroke	6 – 7 notches
Parking brake pull rod stroke	11 – 13 notches

ON-VEHICLE SERVICE

36100090114

PARKING BRAKE LEVER STROKE CHECK <LEVER TYPE>

1. Pull the parking brake lever with a force of approx. 196 N and count the number of notches.

   Caution
   The 196 N force of the parking brake lever must be strictly observed.

   Standard value: 6 – 7 notches

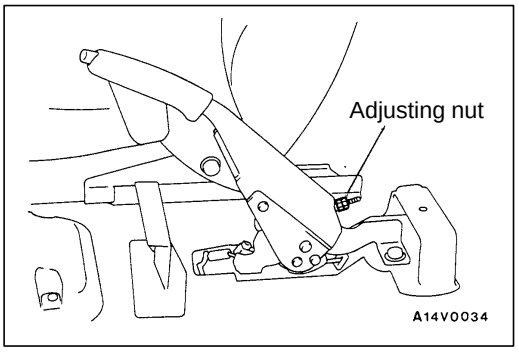

2. Lever Stroke Adjustment
   Loosen the adjusting nut as far as the end of the cable rod as shown in the illustration. Then release the parking brake cable to adjust the parking brake lever stroke by the following procedures.
   (1) With the engine idling, forcefully depress the brake pedal five or six times and confirm that the pedal stroke stops changing.

   NOTE
   If the pedal stroke stops changing, the automatic-adjusting mechanism is functioning normally, and clearance between the shoe and drum is correct.

   (2) Turn the adjusting nut to adjust the parking brake lever stroke to within the standard value range.

   Caution
   If the number of brake lever notches engaged is less than the standard value, the cable has been pulled excessively. Be sure to adjust it to the standard value.

   (3) Check to be sure that there is no play between the adjusting nut and the parking brake lever.
   (4) Release the parking brake lever, and jack up the rear of the vehicle.
   (5) Turn the rear wheel to confirm that the rear brakes are not dragging.

PARKING BRAKE PULL ROD STROKE CHECK <STICK TYPE>

36109000149

1. Pull the parking brake pull rod with a force of approx. 196 N and count the number of notches.

   Caution
   The 196 N force of the parking brake pull rod must be strictly observed.

   Standard value: 11 – 13 notches

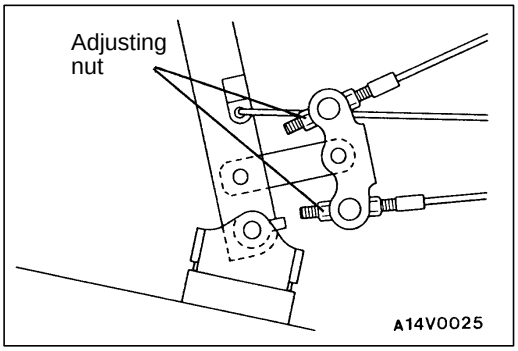

2. Pull Rod Stroke Adjustment
   Loosen the adjusting nut and release the parking brake rear cable. Adjust by the following procedures.
   (1) With the engine idling, forcefully depress the brake pedal five or six times and confirm that the pedal stroke stops changing.

   NOTE
   If the pedal stroke stops changing, the automatic-adjusting mechanism is functioning normally, and clearance between the shoe and drum is correct.

   (2) Turn the adjusting nut to adjust the parking brake pull rod stroke to within the standard value range.

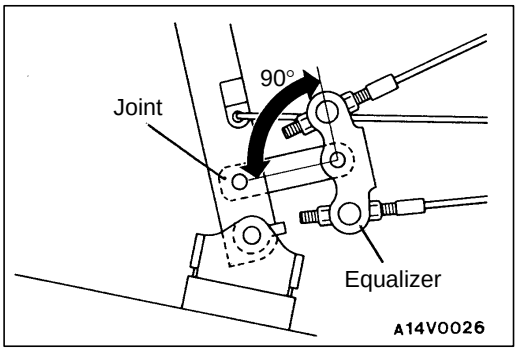

Caution
1. **Make sure that joint and equalizer are at right angles to each other.**
2. **If the number of brake pull rod notches engaged is less than the standard value, the cable has been pulled excessively. Be sure to adjust it to the standard value.**

   (3) Adjust the pull rod stroke. Release the parking brake pull rod and jack up the rear of the vehicle.
   (4) Turn the rear wheel to confirm that the rear brakes are not dragging.

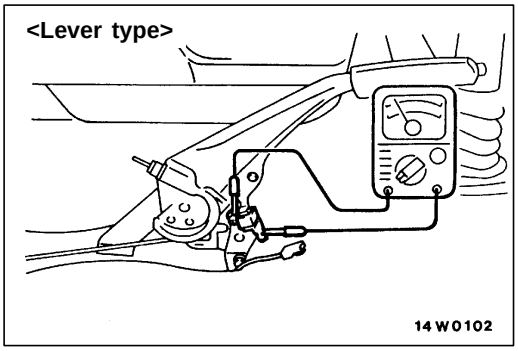

PARKING BRAKE SWITCH CHECK 36100330100

1. Disconnect the connector of the parking brake switch, and connect an ohmmeter to the parking brake switch and to the switch installation bolt.
2. The parking brake switch is good if there is continuity when the parking brake lever or parking brake pull rod is pulled, and there is no continuity when it is released.

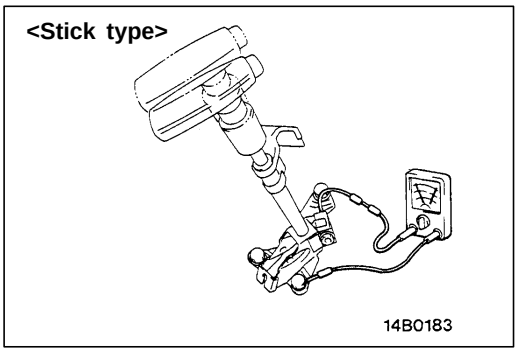

PARKING BRAKE LEVER <LEVER TYPE>

36100130120

REMOVAL AND INSTALLATION

Pre-removal Operation
- Rear Floor Console Removal
  <Vehicles with rear floor console>
  (Refer to GROUP 52A – Floor Console.)

Post-installation Operation
- Rear Floor Console Installation
  <Vehicles with rear floor console>
  (Refer to GROUP 52A – Floor Console.)
- Parking Brake Lever Stroke Adjustment
  (Refer to P.36-3.)

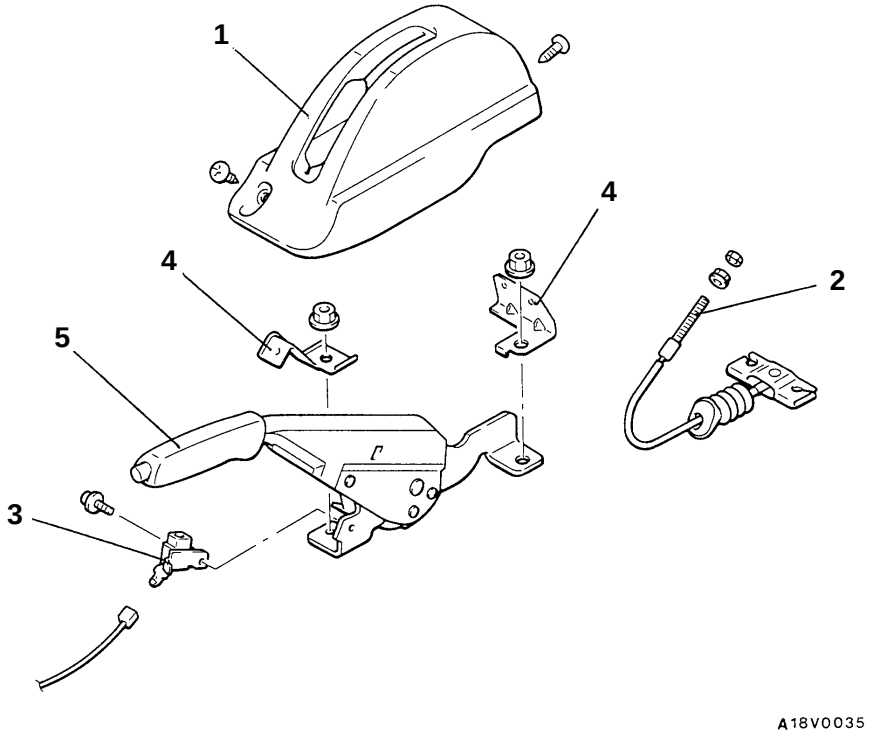

Removal steps

1. Parking cover <Vehicles without rear floor console>
2. Parking lever cable connection
3. Parking brake switch
4. Parking cover bracket <Vehicles without rear floor console>
5. Parking brake lever

PARKING BRAKE PULL ROD <STICK TYPE>

36100280016

REMOVAL AND INSTALLATION

Post-installation Operation
- Parking Brake Pull Rod Stroke Adjustment (Refer to P.36-3.)

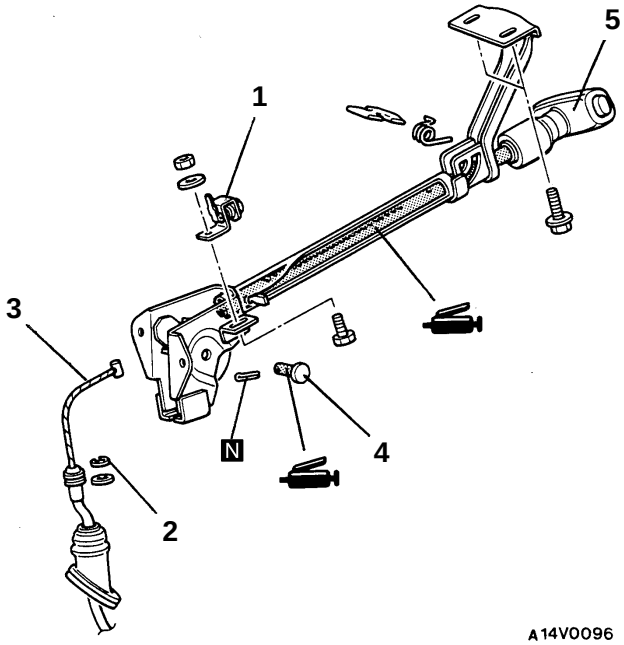

Removal steps

▶A◀ 1. Parking brake switch
2. Snap ring
◀A▶ 3. Parking brake front cable end
4. Wire roller shaft
5. Parking brake pull rod

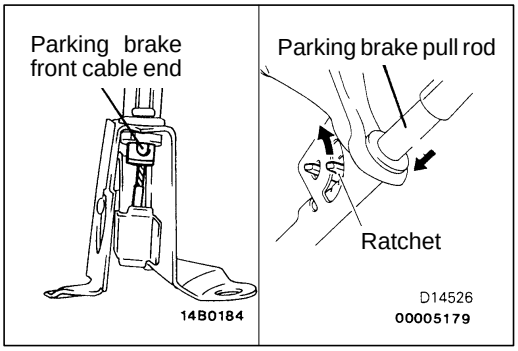

REMOVAL SERVICE POINT

◀A▶ PARKING BRAKE FRONT CABLE END REMOVAL

Remove pawl from ratchet. With the parking brake pull rod pushed in, disconnect the parking brake front cable end from the parking brake pull rod.

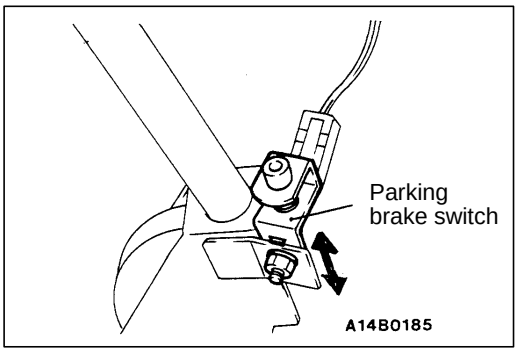

INSTALLATION SERVICE POINT

▶A◀ PARKING BRAKE SWITCH INSTALLATION

Adjust the parking brake switch position so that the warning lamp will go out when parking brake pull rod is fully returned and will light when parking brake pull rod is pulled by a notch.

PARKING BRAKE CABLE

36100190166

REMOVAL AND INSTALLATION <LEVER TYPE>

Pre-removal Operation
- Rear Floor Console Removal
  <Vehicles with rear floor console>
  (Refer to GROUP 52A – Floor Console.)
- Parking Cover Removal
  <Vehicles without rear floor console>
  (Refer to 36-5.)

Post-installation Operation
- Rear Floor Console Installation
  <Vehicles with rear floor console>
  (Refer to GROUP 52A – Floor Console.)
- Parking Cover Installation
  <Vehicles without rear floor console>
  (Refer to 36-5.)
- Parking Brake Lever Stroke Adjustment
  (Refer to P.36-3.)

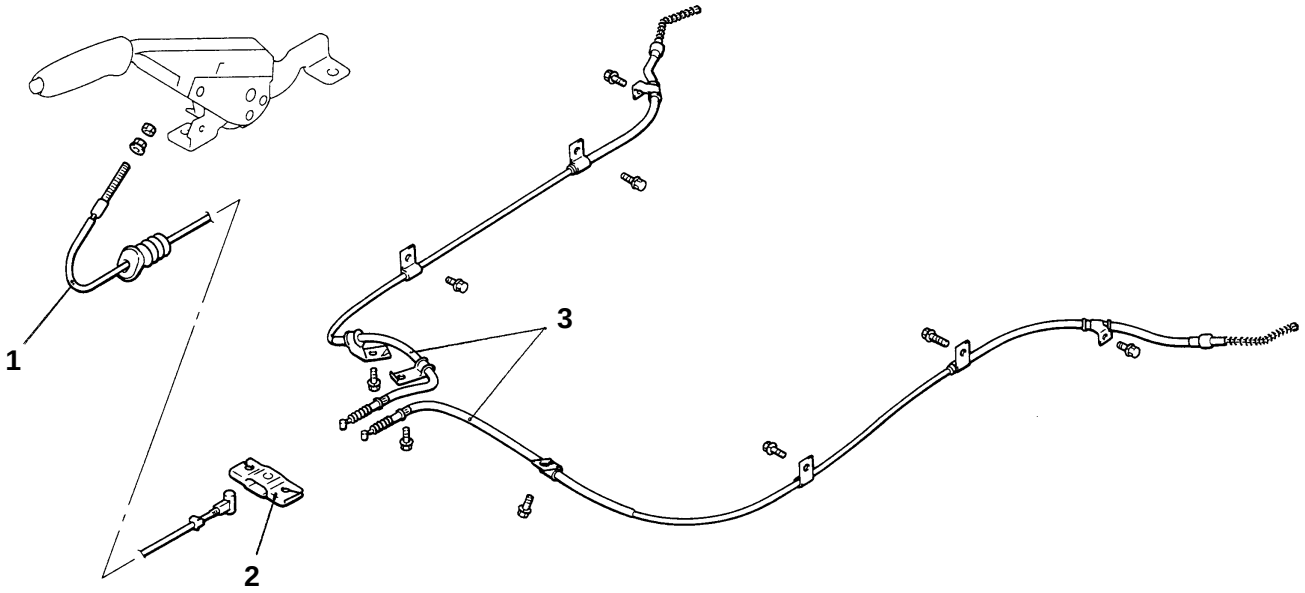

A14V0036

Removal steps
- Shoe and lining assembly (Refer to GROUP 35 – Rear Drum Brake.)

1. Front parking brake cable
2. Cable equalizer
3. Parking brake cable

REMOVAL AND INSTALLATION <STICK TYPE>

Post-installation Operation
- Parking Brake Pull Rod Stroke Adjustment (Refer to P.36-3.)

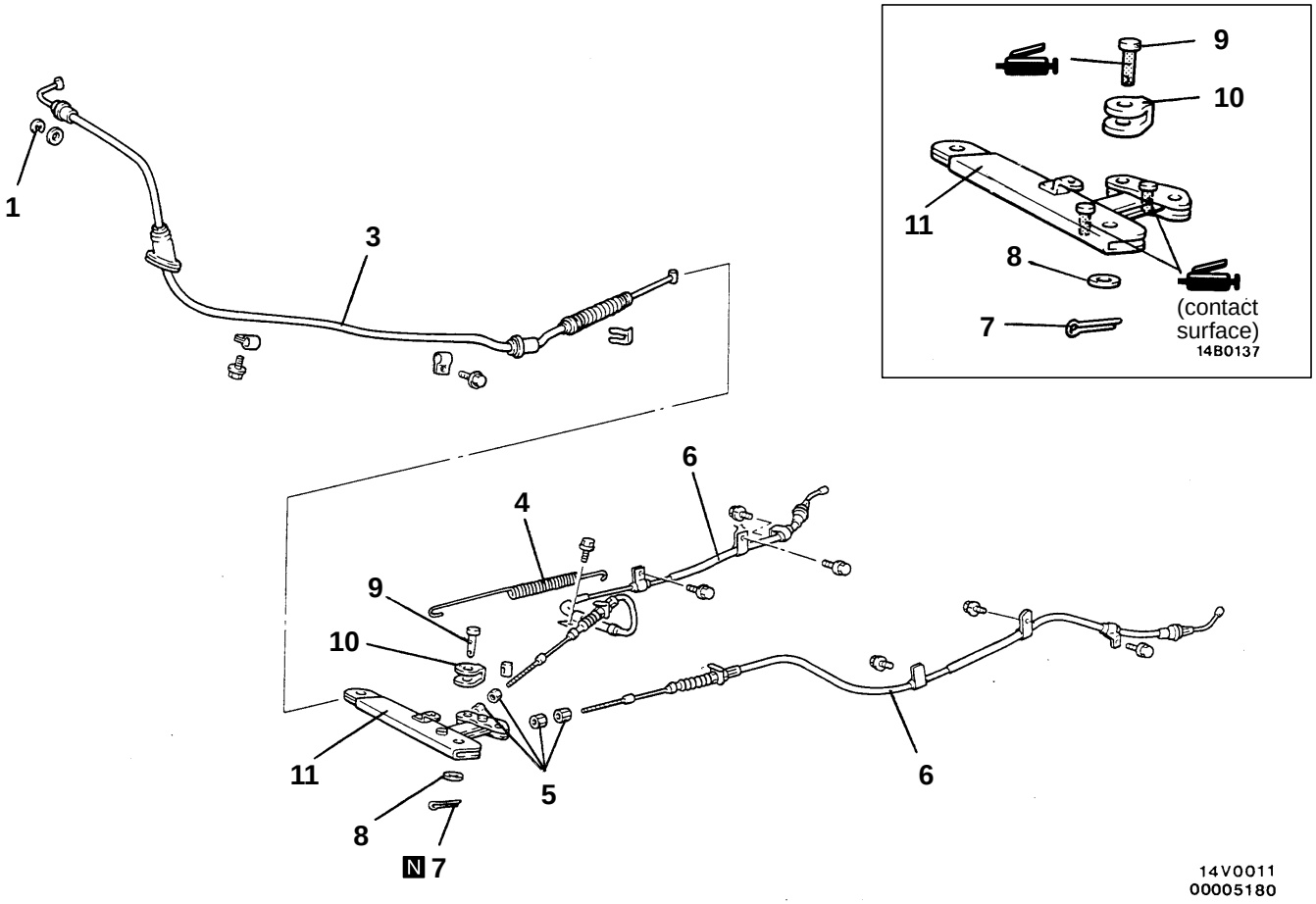

Removal steps
- Shoe and lining assembly (Refer to GROUP 35A – Rear Drum Brake.)

1. Snap ring
2. Clip
3. Parking brake front cable
4. Return spring
5. Adjusting nut
6. Parking brake rear cable end
7. Split pin
8. Plane washer
9. Clevis pin

▶A◀ 10. Spacer

11. Lever assembly

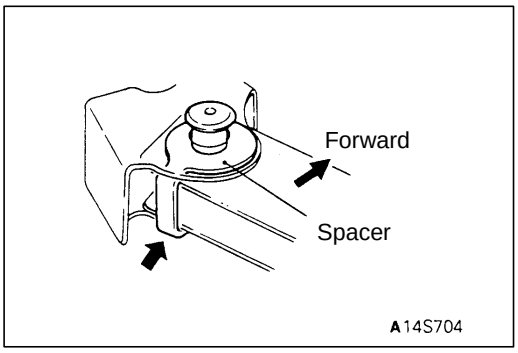

INSTALLATION SERVICE POINT

▶A◀ SPACER INSTALLATION

Install the spacer with its projection located towards rear of the vehicle.

STEERING

Click on the applicable bookmark to selected the required model year

STEERING

CONTENTS

37109000023

GENERAL INFORMATION 2

SERVICE SPECIFICATIONS 3

LUBRICANTS 4

SEALANTS 4

SPECIAL TOOLS 4

ON-VEHICLE SERVICE 7

- Steering Wheel Free Play Check 7
- Steering Angle Check 7
- Steering Gear Backlash Check 8
- Tie Rod End Ball Joint Variation Check (Shaft Direction) 9
- Tie Rod End Ball Joint Starting Torque Check 9
- Steering Gear Oil Level Check (Manual Steering) 10
- Stationary Steering Effort Check (Power Steering) 10
- Checking Steering Wheel Return to Centre (Power Steering) 10
- Drive Belt Tension Check (Power Steering) 11
- Fluid Level Check (Power Steering) 11
- Fluid Replacement (Power Steering) 11
- Bleeding (Power Steering) 12
- Oil Pump Pressure Test (Power Steering) 13
- Power Steering Oil Pressure Switch Check (Power Steering) <Petrol-powered vehicles> 14

STEERING WHEEL AND SHAFT* 15

MANUAL STEERING GEAR BOX* 19

POWER STEERING GEAR BOX* 26

POWER STEERING OIL PUMP 37

POWER STEERING HOSES 45

STEERING LINKAGE 49

WARNINGS REGARDING SERVICING OF SUPPLEMENTAL RESTRAINT SYSTEM (SRS) EQUIPPED VEHICLES

WARNING!

(1) Improper service or maintenance of any component of the SRS, or any SRS-related component, can lead to personal injury or death to service personnel (from inadvertent firing of the air bag) or to the driver (from rendering the SRS inoperative).

(2) Service or maintenance of any SRS component or SRS-related component must be performed only at an authorized MITSUBISHI dealer.

(3) MITSUBISHI dealer personnel must thoroughly review this manual, and especially its GROUP 52B – Supplemental Restraint System (SRS) before beginning any service or maintenance of any component of the SRS or any SRS-related component.

NOTE

The SRS includes the following components: impact sensor, SRS diagnosis unit, SRS warning lamp, air bag module, clock spring and interconnecting wiring. Other SRS-related components (that may have to be removed/installed in connection with SRS service or maintenance) are indicated in the table of contents by an asterisk (*).

GENERAL INFORMATION

37100010025

Engine speed-responsive hydraulic power steering or manual steering has been used.
The main features are as follows. The steering wheel has four spokes. In addition, SRS (Supplemental Restraint System) is available as an option in all vehicles.

The steering column in all vehicles has a shock absorber mechanism and a tilt steering mechanism. A vane-type oil pump with a fluid flow control system has been included. The steering gear and linkage is ball and nut typ.

Items			Specifications
Manual steering gear box	Type		Ball and nut type
	Gear ratio		18.5 – 23.0
Power steering gear box	Type		Ball and nut type
	Gear ratio	2WD	18.5 – 23.0
		4WD	16.4 – 18.0
Oil pump	Type		Vane type
	Displacement mℓ/rev.		9.6
	Relief set pressure MPa		8.3 – 9.0

CONSTRUCTION DIAGRAM

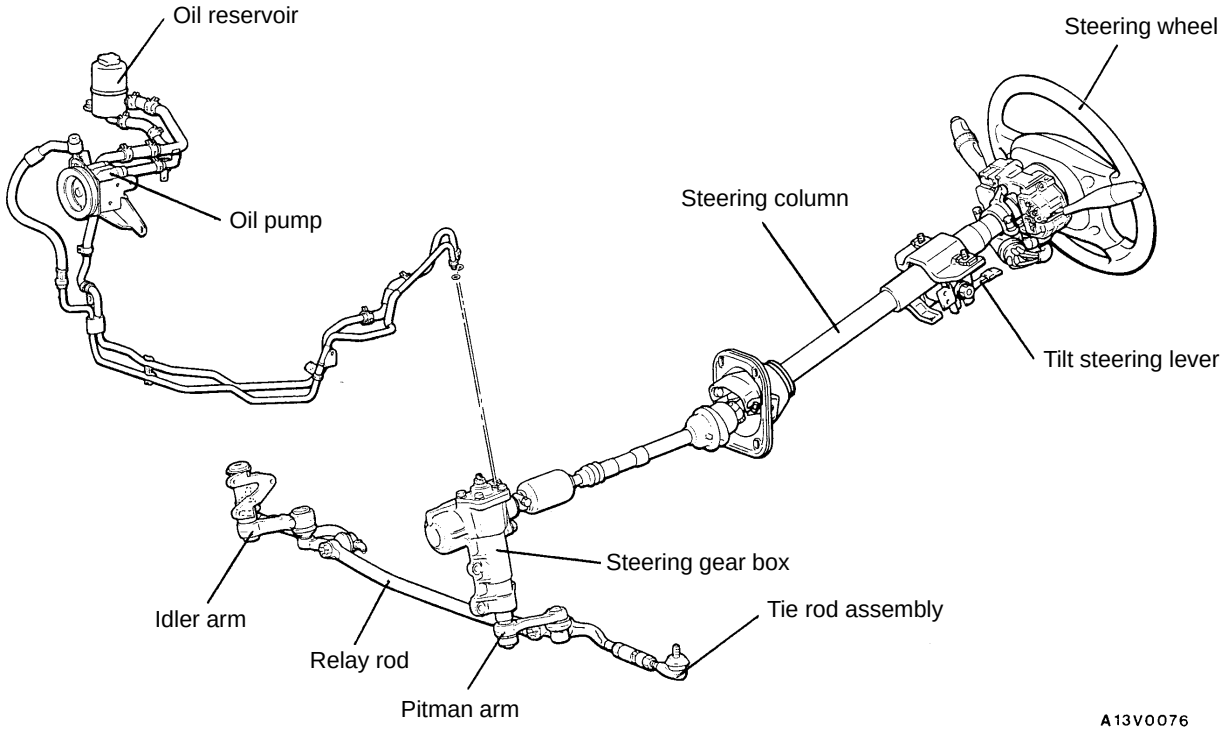

SERVICE SPECIFICATIONS

37100030021

Items			Standard value	Limit
Steering wheel free play mm		With engine running	–	50
		With engine stopped	10 or less	–
Steering angle	2WD	Inner wheel	33°55’ – 36°55’	–
		Outer wheel	30°57’	–
	4WD	Inner wheel	29°40’ – 32°40’	–
		Outer wheel	29°30’	
Steering gear backlash mm			–	0.5
Variation of tie rod end ball joint shaft direction mm			–	1.5
Tie rod end ball joint starting torque Nm			3.0	–
Steering gear oil level mm			22	–
Engine idle speed r/min		4G6	750 ± 100	–
		4D56	750 ± 100	–
Stationary steering effort N			39.2 or less	–
Oil pump pressure MPa	Oil pump relief pressure		8.3 – 9.0	–
	Pressure under no-load conditions		0.8 – 1.0	–
	Steering gear retention hydraulic pressure		8.3 – 9.0	–
Oil pressure switch operating pressure MPa		OFF → ON	1.5 – 2.0	–
		ON → OFF	0.7 – 1.2	–
Mainshaft starting torque Nm			0.49 – 0.78	–
Cross-shaft axial play mm			0.05 or less	–
Mainshaft total starting torque Nm		<2WD>	0.98 – 1.47	–
		<4WD>	0.69 – 1.28	–
Pitman arm ball joint starting torque Nm			0.5 – 1.5	–
Mainshaft axial play mm			0.03 or less	–
Backlash between ball groove of rack piston and balls mm			–	0.05
Idler arm sliding resistance N		2WD	8.8 – 30	–
		4WD	2.4 – 16	–

LUBRICANTS

37100040017

Items	Specified lubricants	Quantity ℓ
Manual steering gear oil	Hypoid gear oil API GL-4 or higher SAE80	0.21
Power steering fluid	Automatic transmission fluid DEXRON or DEXRON II	0.8
Seal ring, rack piston, mainshaft, cross-shaft, bearing, O-ring, oil seal, vane	Automatic transmission fluid DEXRON or DEXRON II	As required

SEALANTS

37100050010

Items	Specified sealants	Remarks
Cover assembly installation hole Adjusting bolt, seal bolt, packing, adjusting shim, dust cover lip for ball joint	3M ATD Part No.8663 or equivalent	Semi-drying sealant

SPECIAL TOOLS

37100060013

Tool	Number	Name	Use
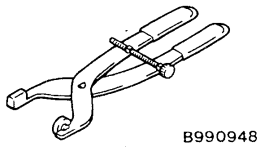	MB990948	Linkage joint gauge	Ball joint variation check for shaft direction
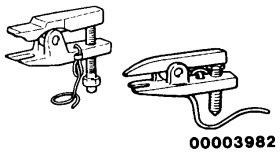	MB991113 or MB990635	Steering linkage puller	Disconnection of ball joint
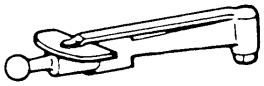	MB990685 MB991151	Torque wrench	● Measurement of the ball joint starting torque ● Measurement of the pinion shaft preload ● Measurement of the mainshaft starting torgue
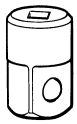	MB990326	Preload socket	Measurement of the ball joint starting torque
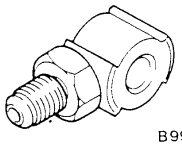	MB990993 or MB991217	Power steering oil pressure gauge adapter (pump side)	Measurement of oil pressure

Tool	Number	Name	Use
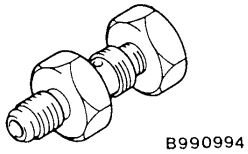	MB990994	Power steering oil pressure gauge adapter (hose side)	Measurement of oil pressure
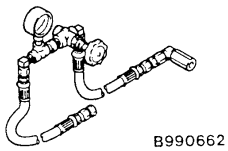	MB990662	Oil pressure gauge assembly	
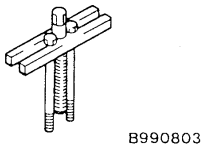	MB990803	Steering wheel puller	Disconnection of the steering wheel
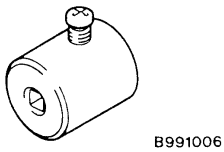	MB991006 or MB990228	Preload socket	Measurement of the mainshaft total starting torque
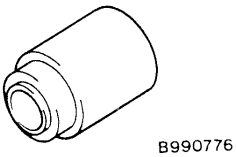	MB990776	Front axle base	Installation of dust cover for tie rod end ball joint
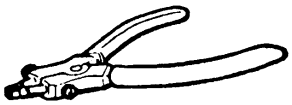	MB990628	Snap ring pliers	To remove and install the snap ring of the pulley assembly
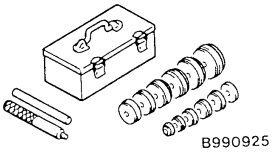	MB990925	Bearing and oil seal installer set	Installation of the oil seal and bearing (Refer to GROUP 26 – Special Tools.)
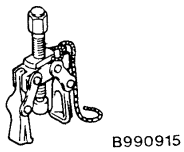	MB990915	Pitman arm puller	Removal of the pitman arm
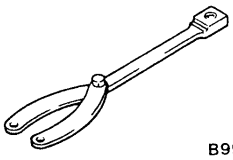	MB991367	Special spanner	Removal and installation of the lock nut

Tool	Number	Name	Use
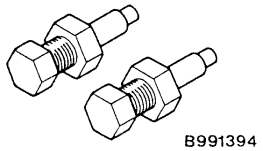	MB991394	Pin set	Removal and installation of the lock nut
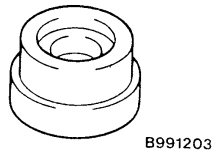	MB991203	Oil seal & bearing installer	To press in the valve housing oil seal and bearing
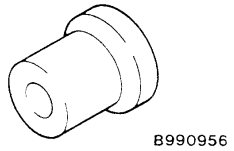	MB990956	Needle bearing installer	To press in the drive shaft assembly
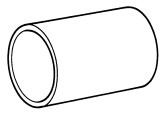	MB991172	Adapter	
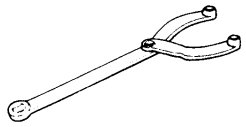	MB990767	End york holder	Securing the drive pulley
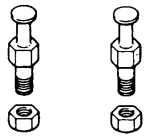	MD998719 or MD998754	Crankshaft pulley holder pin	

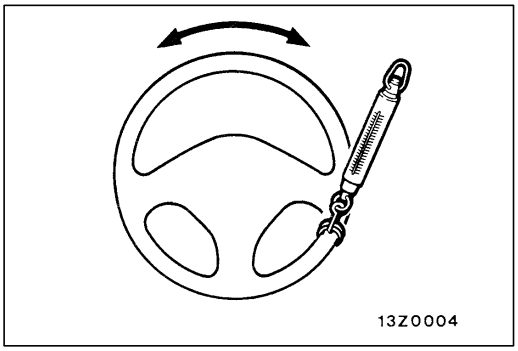

ON-VEHICLE SERVICE

37100090036

STEERING WHEEL FREE PLAY CHECK

<Manual steering>

1. Set the front wheels straight ahead.
2. Measure the play on the steering wheel circumference before wheels move when slightly moving the steering wheel in both directions.

   Limit: 50 mm
3. When the play exceeds the limit, check the play in the steering shaft connection and steering linkage. Correct or replace.
4. When (3) check provides good results, check the following to adjust:
   - Remove the steering gear box, check and adjust the mainshaft total starting torque.

<Power steering>

1. With engine running (hydraulic operation), set front wheels straight ahead.
2. Measure the play on steering wheel circumference before wheels start to move when slightly moving steering wheel in both directions.

   Limit: 50 mm
3. When play exceeds the limit, check for play on steering shaft connection and steering linkage. Correct or replace.
4. If the free play still exceeds the limit value, set steering wheel straight ahead with engine stopped. Load 5 N towards steering wheel circumference and check play.

   Standard value (steering wheel play with engine stopped): 10 mm or less

   If the play exceeds the standard value, check the steering gear backlash and ball joint axial play.

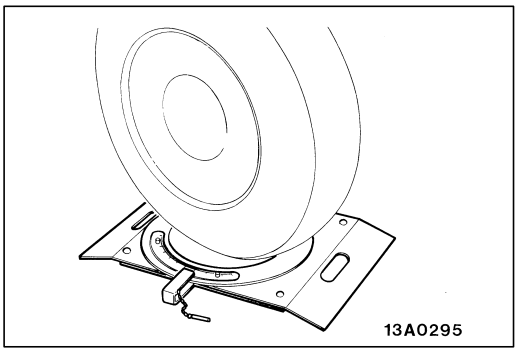

STEERING ANGLE CHECK

37100100012

1. Place the front wheel on a turning radius gauge and measure the steering angle.

   Standard value:

Items	2WD	4WD
Inside wheel	33°55’ – 36°55’	29°40’ – 32°40’
Outside wheel	30°57’	29°30’

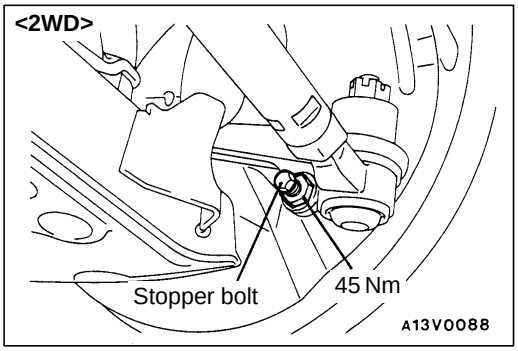

2. If the steering angle is outside the standard value after checking the toe-in (refer to GROUP 33A – On-vehicle Service), adjust the steering angle with the stopper bolt.

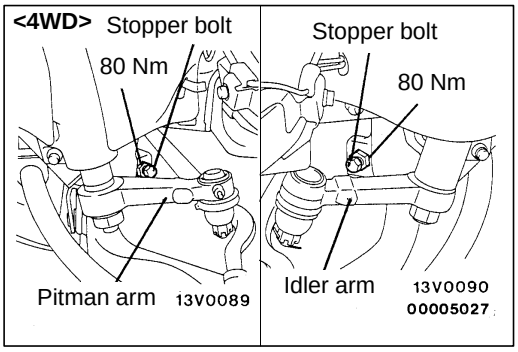

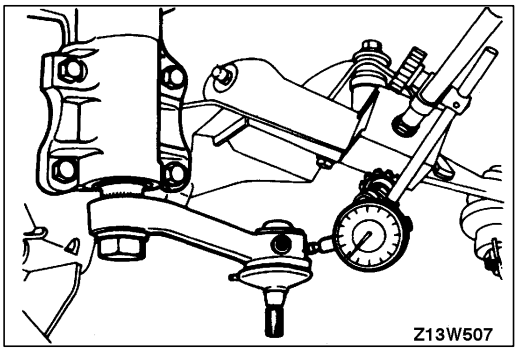

STEERING GEAR BACKLASH CHECK 37100120018

1. Jack up the vehicle front and hold the steering wheel in the straight ahead position.
2. Apart the pitman arm and the relay rod. (Refer to P.37A-49.)
3. Measure the steering gear backlash at the pitman arm top end with a dial indicator.

   Limit: 0.5 mm

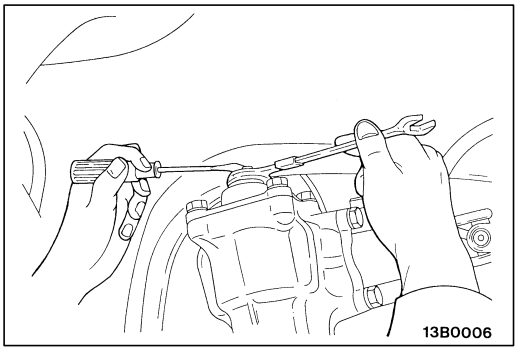

4. If the measured value exceeds the limit, screw in the steering gear box adjusting bolt until steering wheel free play is within the standard value.

   Caution
   1. **Be sure to make the adjustment with the steering wheel in the straight ahead position.**
   2. **If the adjusting bolt is overtightened, more steering effort will be required, and return of the wheel will be adversely affected.**

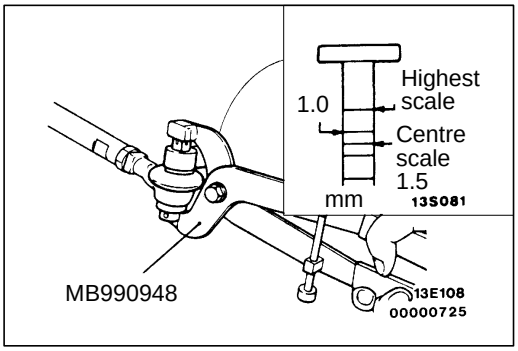

TIE-ROD END BALL JOINT VARIATION CHECK (SHAFT DIRECTION)

37100130011

1. Hold the ball joint with the special tool.
2. Set the special tool scale at its highest and measure variation with ball stud compressed. The variation should locate between the highest and centre scales.

   Limit: 1.5 mm
3. When the variation exceeds the centre scale, replace the tie-rod end.

   Caution
   Even if the variation is within the limit, check ball joint starting torque.

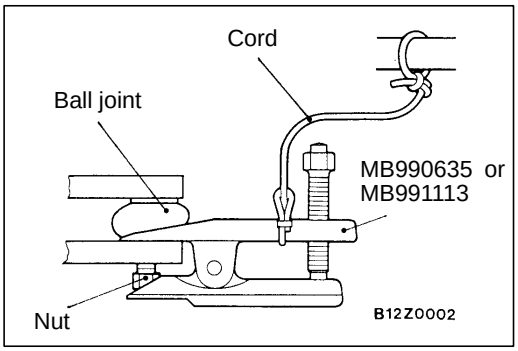

TIE-ROD END BALL JOINT STARTING TORQUE CHECK

37100140014

1. Use the special tool to disconnect the ball joint.

   Caution
   1. Only loosen tie-rod end mounting nut; but do not remove it from the ball joint.
   2. Support the special tool with a cord, etc. to prevent it from coming off.

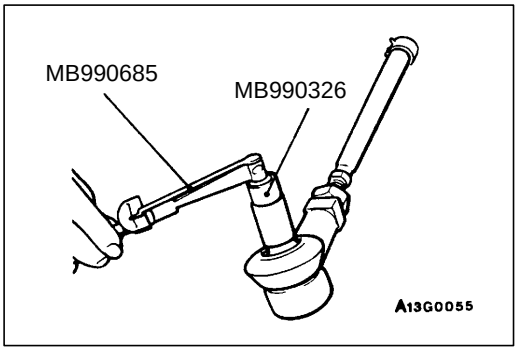

2. Move the ball joint stud several times and install the nut on stud. Measure ball joint starting torque with special tools.

   Standard value: 3.0 Nm
3. When the starting torque exceeds the standard value, replace the tie-rod end.
4. When the starting torque is under the standard value, check ball joint for end play or ratcheting. If none of these, the ball joint is still serviceable.
5. Tighten the nut to the specified torque and install a new split pin.

   Tightening torque: 40 Nm

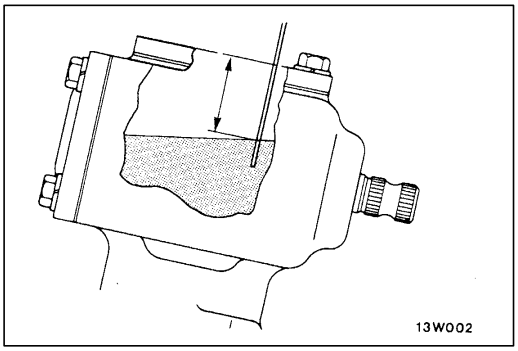

STEERING GEAR OIL LEVEL CHECK (MANUAL STEERING) 37100110015

Remove the breather plug and check the oil level in the steering gear box by using a special gauge or a thin screwdriver.

Standard value: 22 mm

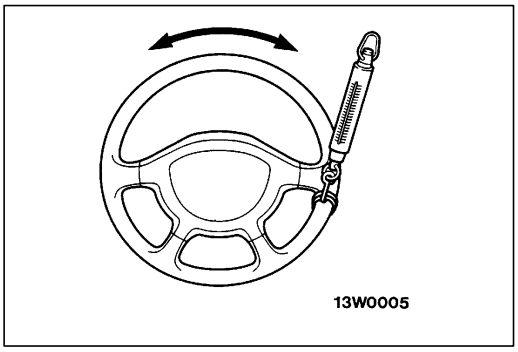

STATIONARY STEERING EFFORT CHECK (POWER STEERING) 37200170115

1. With the vehicle stopped on a flat and paved surface, and turn the steering wheel to the straight ahead position.
2. Start the engine and check the engine idle speed.

   Standard value:

Engine idle speed r/min	Remarks
750 ± 100	4G6
750 ± 100	4D56

3. Attach a spring balance to the outer circumference of the steering wheel and measure the steering force required to turn the steering wheel from the straight ahead position to the left and right (within a range of 1.5 turns). Also check to be sure that there is no significant fluctuation of the required steering force.

   Standard value:
   Steering effort: 39.2 N or less
   Fluctuation allowance: 5 N or less

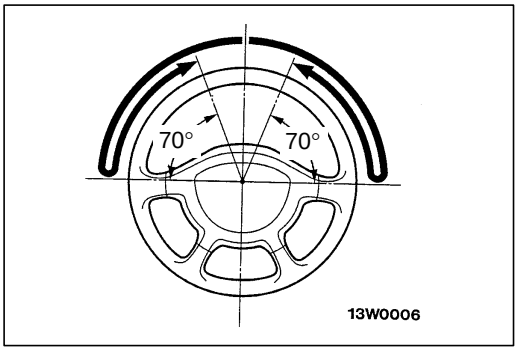

CHECKING STEERING WHEEL RETURN TO CENTRE (POWER STEERING) 37200180118

Conduct a road test before this test.

1. Make both gradual and sudden turns and check the steering “feeling” to be sure that there is no difference in the steering force required and the wheel return between left and right turns.
2. At a speed of 35 km/h, turn the steering wheel 90° and release the steering wheel after 1 or 2 seconds. If the steering wheel then returns 70° or more, the return can be judged to the satisfactory.

   NOTE
   There will be a momentary feeling or “heaviness” when the wheel is turned quickly, but this is not abnormal. (this is because the oil pump discharge amount is especially apt to be insufficient during idling.)

DRIVE BELT TENSION CHECK (POWER STEERING)

37200190074

Refer to GROUP 11A and B – On-vehicle Service.

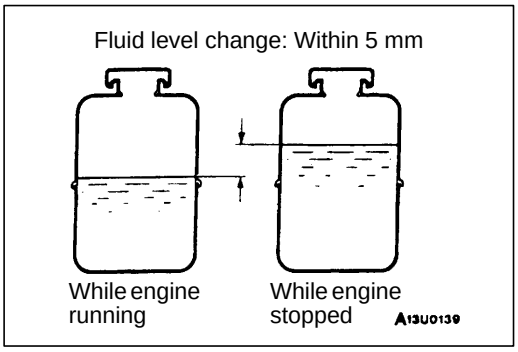

FLUID LEVEL CHECK (POWER STEERING)

37200200098

1. Park the vehicle on a flat, level surface, start the engine, and then turn the steering wheel several times to raise the temperature of the fluid to approximately 50–60°C.
2. With the engine running, turn the wheel all the way to the left and right several times.
3. Check the fluid in the oil reservoir for foaming or milkiness. Check the difference of the fluid level when the engine is stopped, and while it is running. If the change of the fluid level is 5 mm or more, air bleeding should be done.

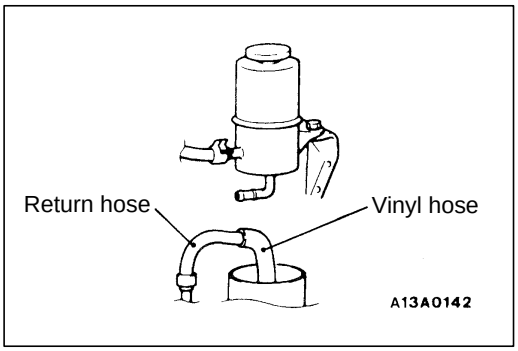

FLUID REPLACEMENT (POWER STEERING)

37200210091

1. Raise the front wheels on a jack, and then support them with rigid racks.
2. Disconnect the return hose connection.
3. Connect a vinyl hose to the return hose, and drain the oil into a container.
4. On vehicles with a petrol engine, disconnect the high-tension cable. On vehicles with a diesel engine, remove the fuel cut valve connector attached to the injection pump.

   Caution
   Be careful not to position the high-tension cable near the delivery pipe.

5. While operating the starting motor intermittently, turn the steering wheel all the way to the left and right several times to drain all of the fluid.
6. Connect the return hoses securely, and then secure it with the clip.
7. Fill the oil reservoir with the specified fluid up to the lower position of the filter, and then bleed the air.

   Specified fluid:
   Automatic transmission fluid
   DEXRON or DEXRON II

BLEEDING (POWER STEERING) 37200220100

1. Jack up the front wheels and support them by using a rigid rack.
2. Manually turn the oil pump pulley a few times.
3. Turn the steering wheel all the way to the left and to the right five or six times.
4. On vehicles with a petrol engine, disconnect the high-tension cable. On vehicles with a diesel engine, remove the fuel cut valve connector attached to the injection pump.

   Caution
   Be careful not to place the high-tension cable near the delivery pipe.

5. While operating the starting motor intermittently, turn the steering wheel all the way to the left and right five or six times (for 15 to 20 seconds).

   Caution
   1. **During air bleeding, refill the fluid so that the level never falls below the lower position of the filter.**
   2. **If air bleeding is done while engine is running, the air will be broken up and absorbed into the fluid; be sure to do the bleeding only while cranking.**

6. On vehicles with a petrol engine, connect the high-tention cable. On vehicles with a diesel engine, connect the fuel cut valve connector attached to the injection pump. Start the engine (idling).
7. Turn the steering wheel to the left and right until there are no air bubbles in the oil reservoir.
8. Confirm that the fluid is not milky, and that the level is up to the specified position on the level gauge.
9. Confirm that there is very little change in the fluid level when the steering wheel is turned left and right.

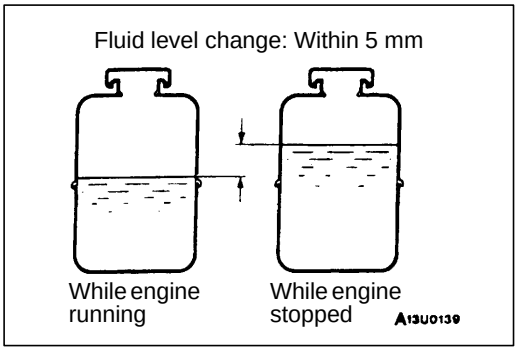

10. Check whether or not the change in the fluid level is within 5 mm when the engine is stopped and when it is running.
11. If the change of the fluid level is 5 mm or more, the air has not been completely bled from the system, and thus must be bled completely.

    Caution
    1. **If the fluid level rises suddenly after the engine is stopped, the air has not been completely bled.**
    2. **If air bleeding is not complete, there will be abnormal noises from the pump and the flow-control valve, and this condition could cause a lessening of the life of the pump, etc.**

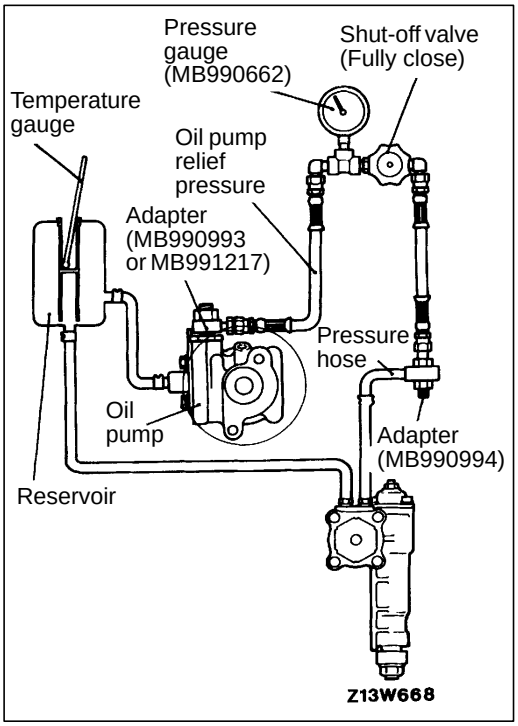

OIL PUMP PRESSURE TEST (POWER STEERING)

37200230127

1. Disconnect the pressure hose from the oil pump, and then connect the special tools.
2. Bleed the air, and then turn the steering wheel several times while the vehicle is not moving so that the temperature of the fluid rises to approximately 50–60°C.
3. Start the engine and idle it at 1,000±100 r/min.
4. Fully close the shut-off valve of the pressure gauge and measure the oil pump relief pressure to confirm that it is within the standard value range.

   Standard value: 8.3 – 9.0 MPa

   Caution
   Pressure gauge shut off valve must not remain closed for more than 10 seconds.

5. If it is not within the standard value, replace the oil pump.
6. Check whether or not the hydraulic pressure is the standard value when no-load conditions are created by fully opening the shut-off valve of the pressure gauge.

   Standard value: 0.8 – 1.0 Mpa

7. If it is not within the standard value, the probable cause is a malfunction of the oil line or steering gear box, so check these parts and repair as necessary.
8. Turn the steering wheel all the way to the left or right; then check whether or not the retention hydraulic pressure is the standard value.

   Standard value: 8.3 – 9.0 MPa

9. When not within the standard value, overhaul the steering gear box.
   Remeasure fluid pressure.
10. Remove the special tools, and then tighten the pressure hose to the specified torque.

    Tightening torque: 18 Nm

11. Bleed the system.

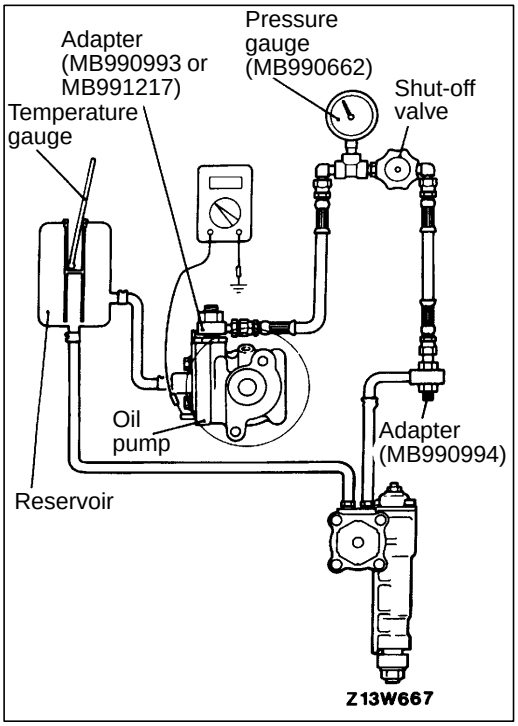

POWER STEERING OIL PRESSURE SWITCH CHECK (POWER STEERNG) <Petrol-powered vehicle>

37200720105

1. Disconnect the pressure hose from the oil pump, and then connect the special tools.
2. Bleed the air, and then turn the steering wheel several times while the vehicle is not moving so that the temperature of the fluid rises to approximately 50–60°C.
3. The engine should be idling.
4. Disconnect the connection of the connector for the oil pressure switch, and place an ohmmeter in position.
5. Gradually close the shut-off valve of the pressure gauge and increase the hydraulic pressure, then check whether or not the hydraulic pressure that activates the switch is the standard value.

   Standard value: 1.5 – 2.0 MPa

6. Gradually open the shut-off valve and reduce the hydraulic pressure; then check whether or not the hydraulic pressure that deactivates the switch is the standard value.

   Standard value: 0.7 – 1.2 MPa

7. Remove the special tools, and then tighten the pressure hose to the specified torque.

   Tightening torque: 18 Nm

8. Bleed the system

STEERING WHEEL AND SHAFT

37100170013

REMOVAL AND INSTALLATION

Caution: SRS
Before removal of air bag module, refer to GROUP 52B – Service Precautions and Air Bag Module and Clock Spring.

Post-installation Operation
- Checking Steering Wheel Position with Wheels Straight Ahead

<2WD>

Sealant:
3M ATD Part No.8661 or equivalent

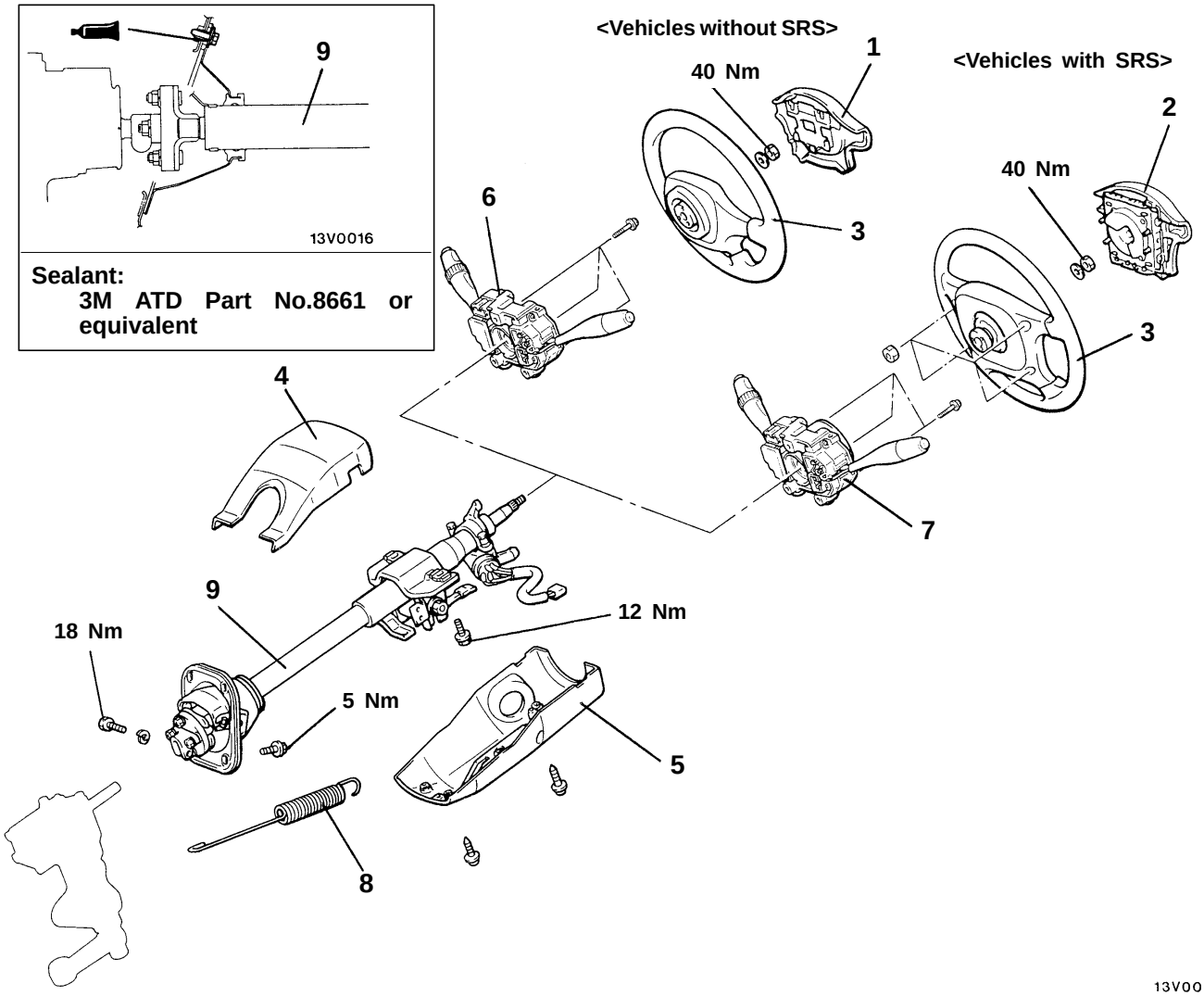

Removal steps

1. Horn pad <Vehicles without SRS>
2. Air bag module (Refer to GROUP 52B – Air Bag Module and Clock Spring.)
◀A▶ 3. Steering wheel
4. Upper column cover
   - Instrument under cover (Refer to GROUP 52A – Instrument Panel.)
5. Lower column cover
▶A◀ 6. Column switch <Vehicles without SRS>
▶A◀ 7. Clock spring (Refer to GROUP 52B – Air Bag Module and Clock Spring.)
8. Brake pedal return spring
9. Steering column assembly

<4WD>

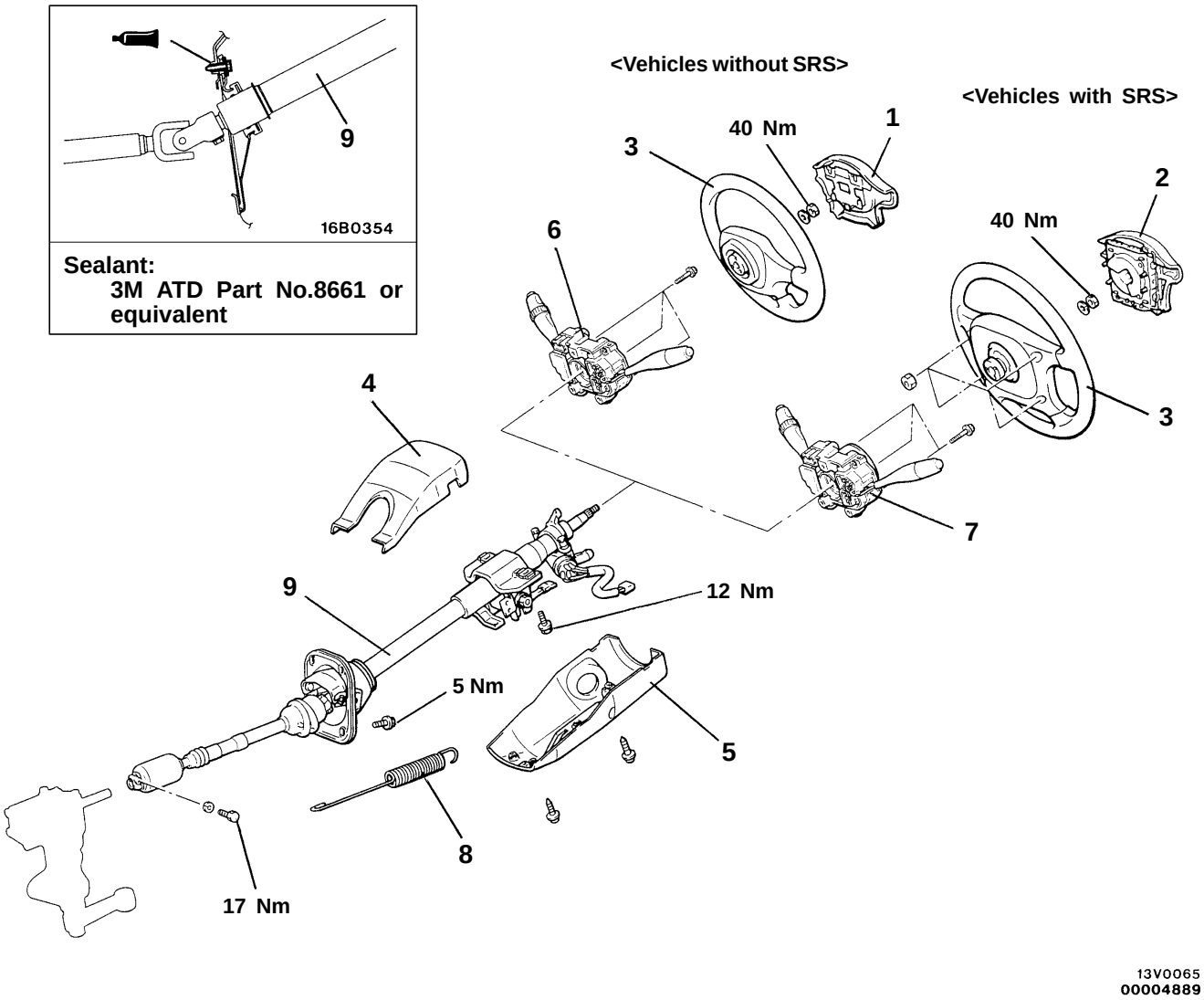

Removal steps

1. Horn pad <Vehicles without SRS>
2. Air bag module (Refer to GROUP 52B – Air Bag Module and Clock Spring.)
◀A▶ 3. Steering wheel
4. Upper column cover
5. Lower column cover
▶A◀ 6. Column switch <Vehicles without SRS>
▶A◀ 7. Clock spring and column switch (Refer to GROUP 52B – Air Bag Module and Clock Spring.)
8. Brake pedal return spring
9. Steering column assembly

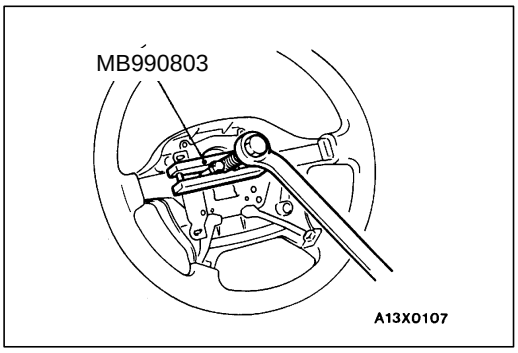

REMOVAL SERVICE POINT

◀A▶ STEERING WHEEL REMOVAL

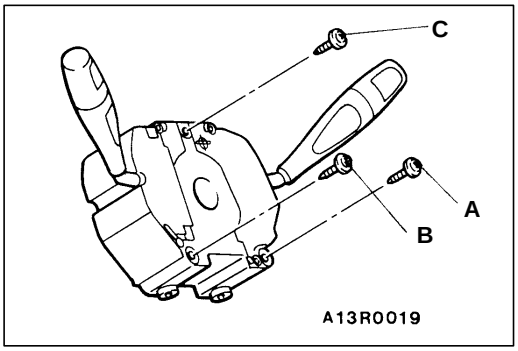

INSTALLATION SERVICE POINT

▶A◀ CLOCK SPRING AND COLUMN SWITCH/COLUMN SWITCH INSTALLATION

Tighten the screws in an alphabetical order.

DISASSEMBLY AND REASSEMBLY

37100190019

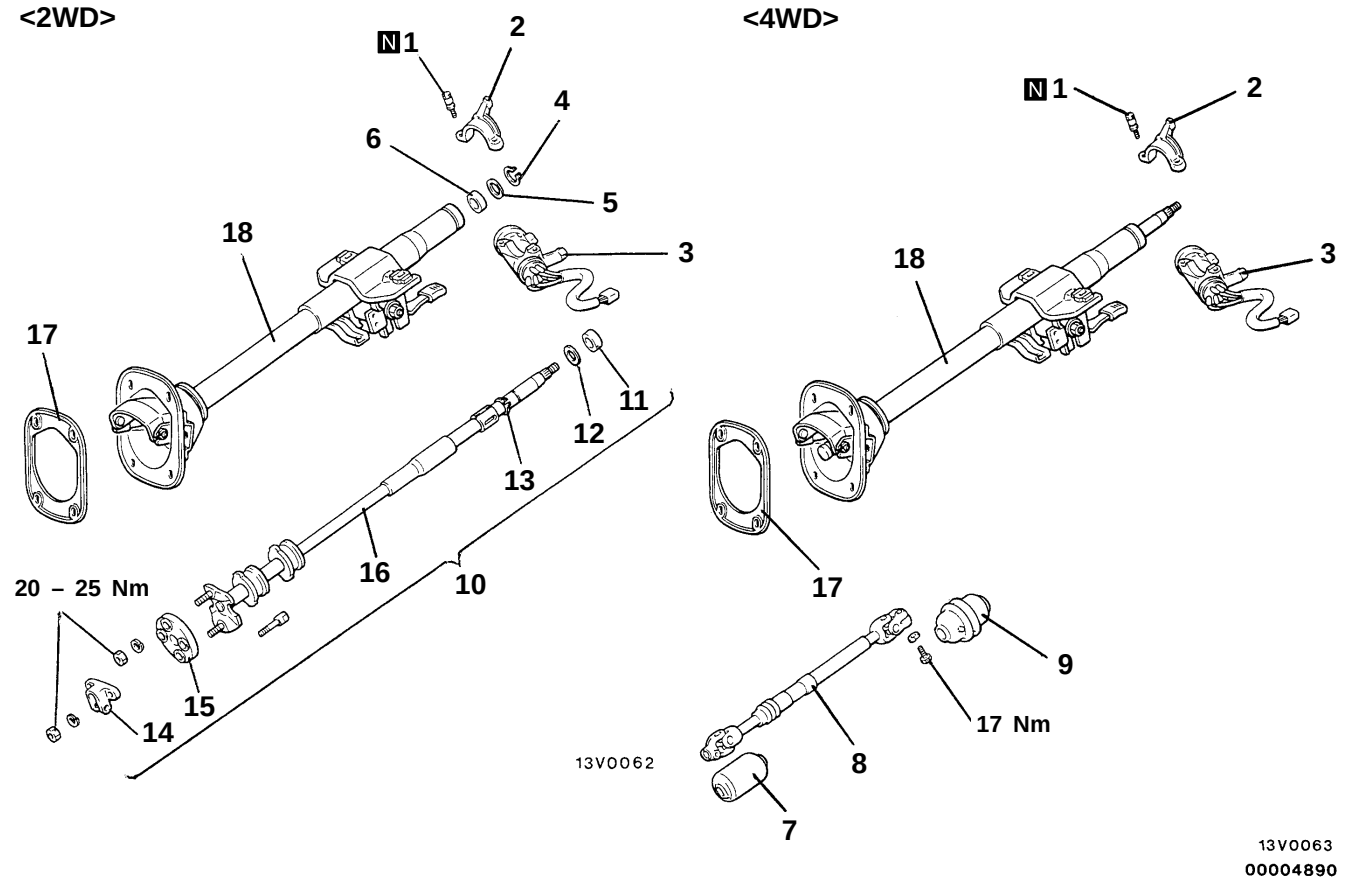

Disassembly steps

	▶B◀	1. Special bolt
◀A▶	▶B◀	2. Steering lock bracket
◀A▶	▶B◀	3. Steering lock cylinder
		4. Snap ring
		5. Stopper
		6. Bearing spacer
	▶A◀	7. Lower boot
		8. Joint assembly
	▶A◀	9. Upper boot
		10. Steering shaft assembly
		11. Bearing spacer
		12. Stopper
		13. Snap ring
		14. Yoke
		15. Rubber coupling
		16. Steering shaft
		17. Packing
		18. Column sub assembly

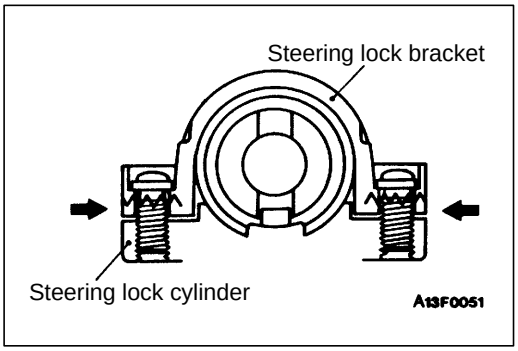

DISASSEMBLY SERVICE POINT

◀A▶ STEERING LOCK BRACKET/STEERING LOCK CYLINDER REMOVAL

If it is necessary to remove the steering lock cylinder, use a hacksaw to cut the special bolts at the steering lock bracket side.

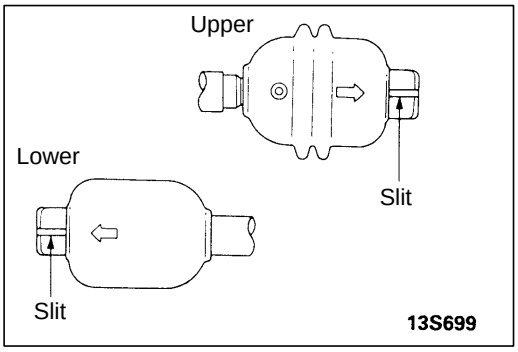

REASSEMBLY SERVICE POINT

▶A◀ UPPER BOOT/LOWER BOOT INSTALLATION

Assemble the upper and lower boots and the dust cover.

NOTE
Align the arrows on the upper and lower boots to the slit on the yokes in order to assemble.

▶B◀ STEERING LOCK CYLINDER/STEERING LOCK BRACKET/SPECIAL BOLT INSTALLATION

(1) When installing the steering lock cylinder and steering lock bracket to the column tube, temporarily install the steering lock in alignment with the column boss.

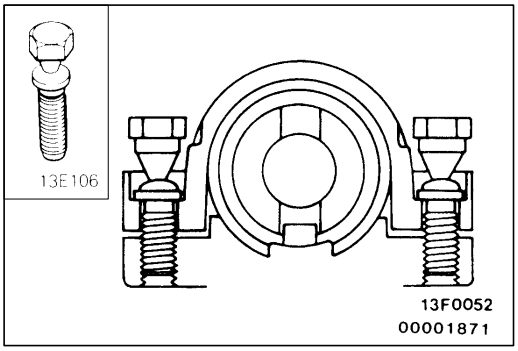

(2) After checking that the lock works properly, tighten the special bolts until the head twists off.

Caution
The steering lock bracket and bolts must be replaced with new ones when the steering lock is installed.

MANUAL STEERING GEAR BOX

37100220046

REMOVAL AND INSTALLATION

Caution: SRS
For vehicles with SRS, before removal of steering gear box refer to GROUP 52B, center front wheels and remove ignition key. Failure to do so many damage SRS clock spring and render SRS system inoperative, risking serious driver injury.

Post-installation Operation
- Checking Steering Wheel Position with Wheels Straight Ahead
- Front Wheel Alignment Adjustment (Refer to GROUP 33A – On-vehicle Service.)

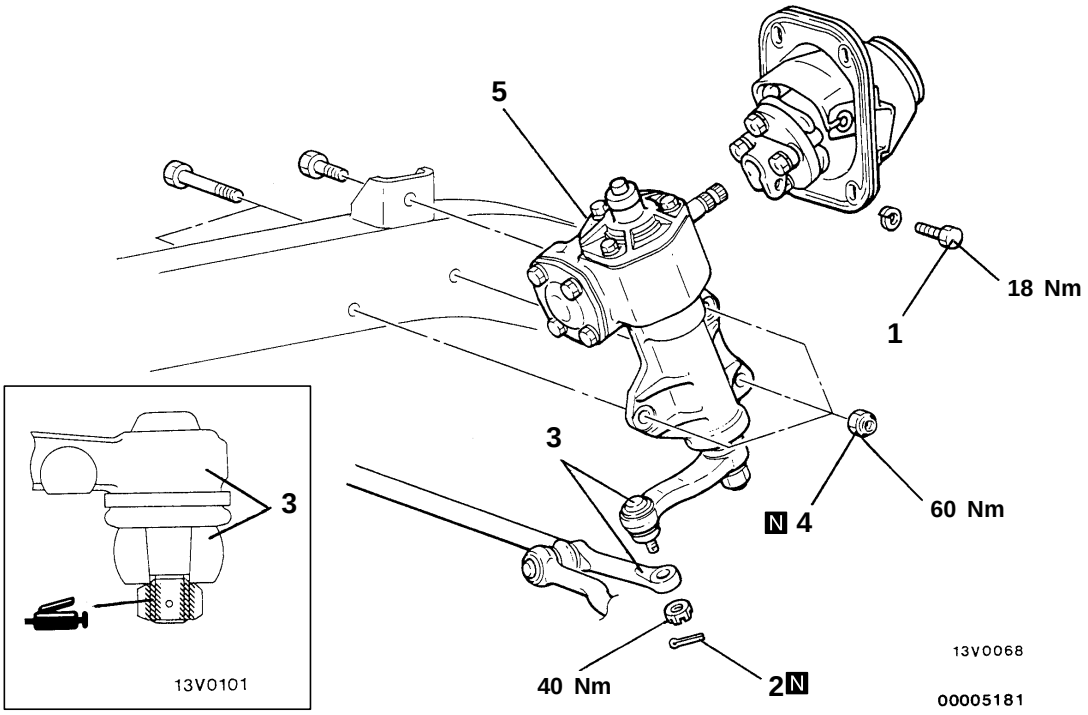

Removal steps

1. Steering gear box and steering shaft connecting bolt
2. Split pin
3. ◀A▶ Pitman arm and relay rod connection
4. Self-locking nut
5. Steering gear box

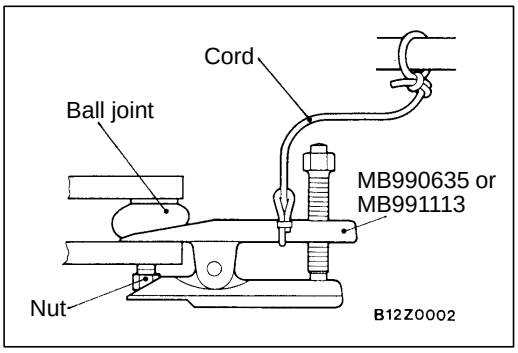

REMOVAL SERVICE POINT

◀A▶ PITMAN ARM AND RELAY ROD DISCONNECTION

Use the special tool to disconnect the ball joint.

Caution

1. **Using the special tool, loosen the tie rod end mounting nut. Only loosen the nut; do not remove it from the ball joint.**
2. **Support the special tool with a cord, etc. to prevent it from coming off.**

INSPECTION

37100230049

PITMAN ARM DUST COVER CHECK

If there are any cracks in or damage to the dust cover, replace the pitman arm. If the dust cover is damaged accidentally during service work, replace the dust cover only. (Refer to P. 37A-25.)

DISASSEMBLY AND REASSEMBLY

37100240042

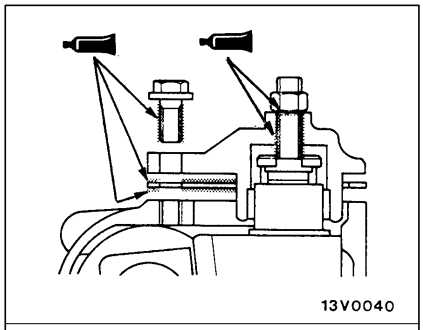

Sealant:
3M ATD Part No.8661 or equivalent

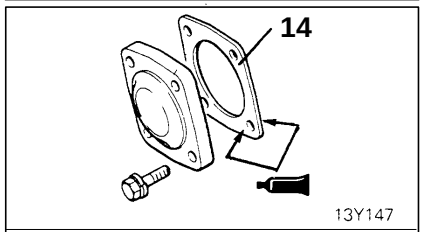

Sealant:
3M ATD Part No.8661 or equivalent

End cover shim set	Adjusting spacer set

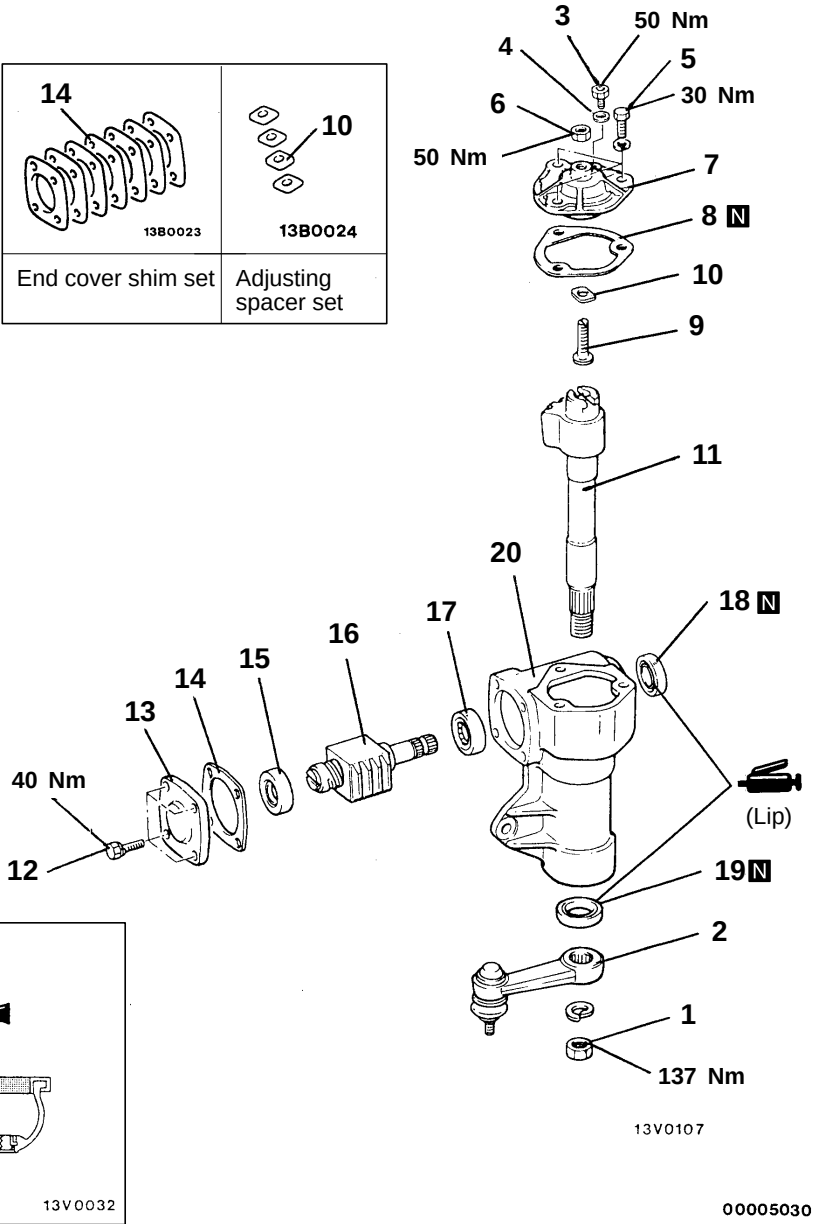

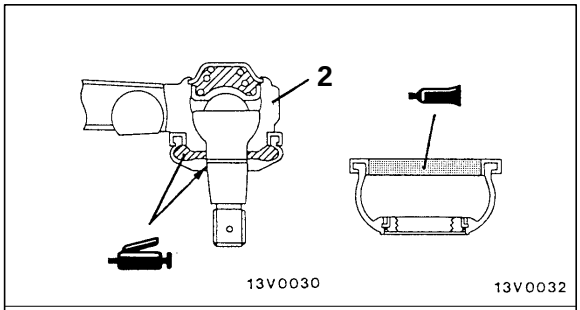

Sealant: 3M ATD Part No.8661 or equivalent

Disassembly steps

- ▶H◀ ● Steering gear backlash check
- 1. Jam nut
- ◀A▶ ▶G◀ 2. Pitman arm
- 3. Breather plug
- 4. Gasket
- 5. Seal bolt
- ▶F◀ ● Mainshaft total starting torque adjustment
- 6. Lock nut
- ◀B▶ 7. Side cover
- 8. Packing
- 9. Adjusting bolt
- ▶E◀ ● Cross-shaft axial play adjustment
- 10. Adjusting spacer
- ◀C▶ 11. Cross-shaft
- 12. Bolt
- ▶D◀ ● Mainshaft starting torque adjustment
- 13. End cover
- 14. Adjusting shim
- 15. Bearing
- ▶C◀ 16. Mainshaft assembly
- 17. Bearing
- ▶B◀ 18. Oil seal
- ▶A◀ 19. Oil seal
- 20. Gear box housing

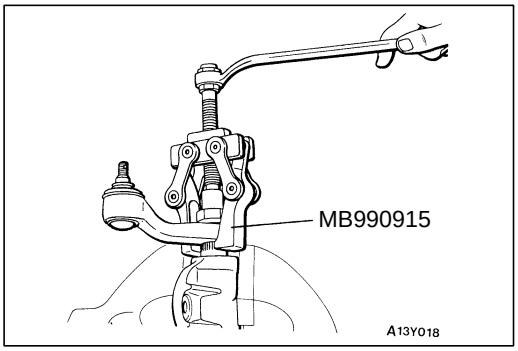

DISASSEMBLY SERVICE POINTS

◀A▶ PITMAN ARM REMOVAL

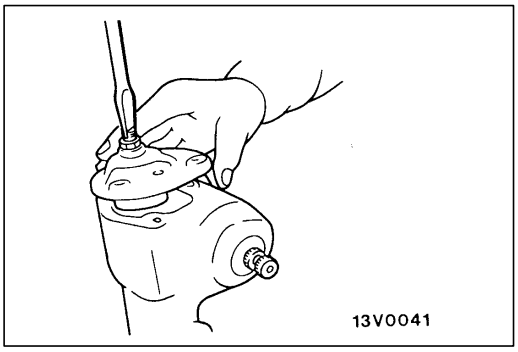

◀B▶ SIDE COVER REMOVAL

1. Loosen the lock nut, and then turn the adjusting bolt anti-clockwise slightly.
2. Screw in the adjusting bolt without turning the side cover, and then remove the side cover.

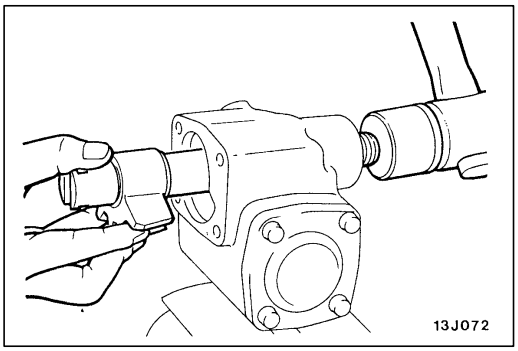

◀C▶ CROSS-SHAFT REMOVAL

With the mainshaft and cross-shaft placed in the straight ahead position, tap the bottom of the cross-shaft with a plastic hammer to take out the cross-shaft together with the top cover.

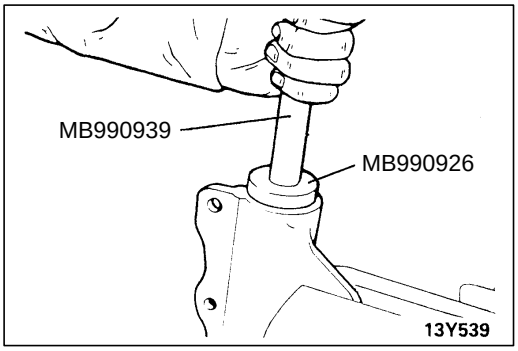

REASSEMBLY SERVICE POINTS

▶A◀ OIL SEAL INSTALLATION

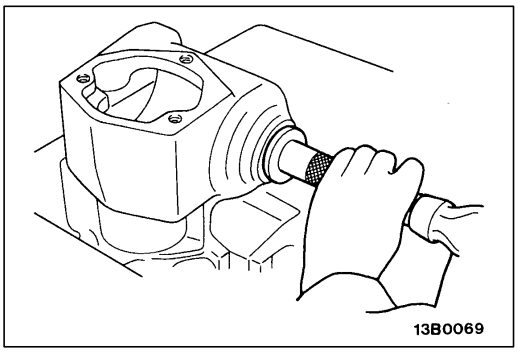

▶B◀ OIL SEAL INSTALLATION

▶C◀ MAINSHAFT ASSEMBLY INSTALLATION

Apply gear oil to the tooth surfaces and sliding surfaces, and insert the mainshaft assembly and bearings into the gear housing.

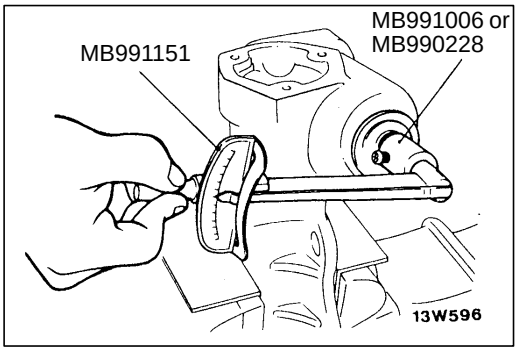

▶D◀ MAINSHAFT STARTING TORQUE ADJUSTMENT

1. Install the end cover and adjusting shim(s) to the gear housing and then tighten to the specified torque.

   Standard value: 0.49 – 0.78 Nm
2. Measure the mainshaft starting torque by using the special tools.
3. If the measured value is not within the standard value, adjust by changing the adjusting shim(s).
4. Remove the shim(s) to increase starting torque, or add shim(s) to reduce.

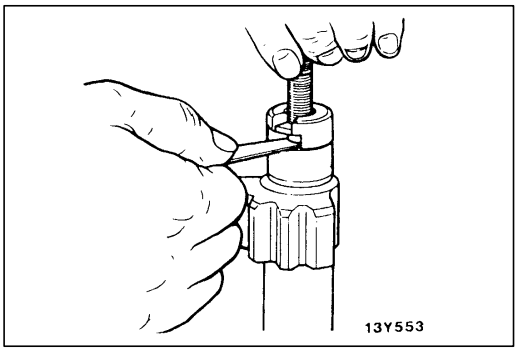

▶E◀ CROSS-SHAFT AXIAL PLAY ADJUSTMENT

1. Install the adjusting spacer to the adjusting bolt and measure the cross-shaft axial play.

   Standard value: 0.05 mm or less
2. If the measured value is not within the standard value, adjust by changing the adjusting spacer.

▶F◀ MAINSHAFT TOTAL STARTING TORQUE ADJUSTMENT

Lubricate the bearings and gear teeth of each shaft.

1. Move the ball nut of the mainshaft to the centre position (straight ahead position).

   Caution
   Do not damage the cross-shaft oil seal.
2. Turn the adjusting bolt 2 or 3 times until the tooth surfaces are in contact.

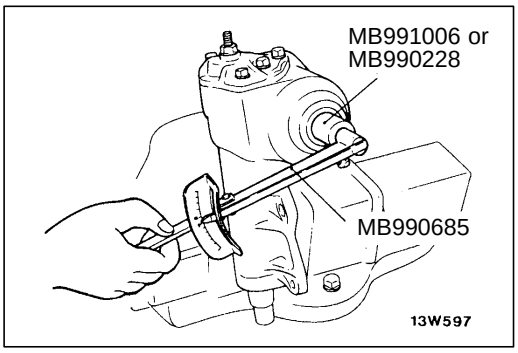

3. Measure the mainshaft total starting torque.
   (1) Secure the flange part of the gear box housing in a vise.
   (2) Measure the mainshaft total starting torque by using the special tools.

   Standard value: 0.98 – 1.47 Nm

   NOTE
   The mainshaft should rotate smoothly across the entire range.

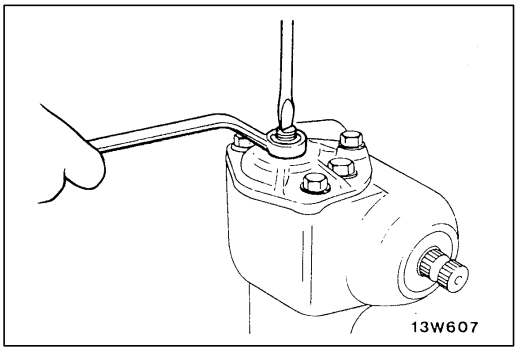

(3) If the measured value is not within the standard value, adjust by turning the adjusting bolt in or out.
(4) If it is not possible, check the following points.
  1) Cross-shaft eccentricity due to improperly installed top cover
  2) Cross-shaft needle roller bearing damaged
  3) End cover improperly installed

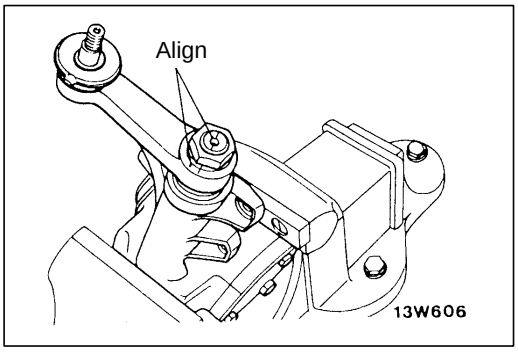

▶G◀ PITMAN ARM INSTALLATION

Install the pitman arm to the gear box with the mating marks aligned.

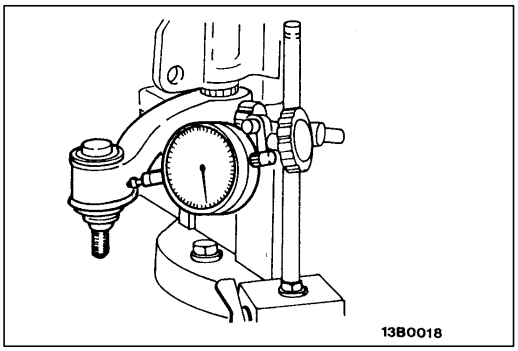

▶H◀ STEERING GEAR BACKLASH CHECK

1. Move the pitman arm to the right and left 3 to 5 times to be sure that the tooth surfaces sufficiently correct with each other.
2. Measure the steering gear backlash at the end of the pitman arm with a dial indicator.

   Limit: 0.5 mm

   Caution
   Measure the steering gear backlash when the mainshaft, cross-shaft and pitman arm are in the straight-ahead position.
3. If the reading exceeds the limit, replace the mainshaft.

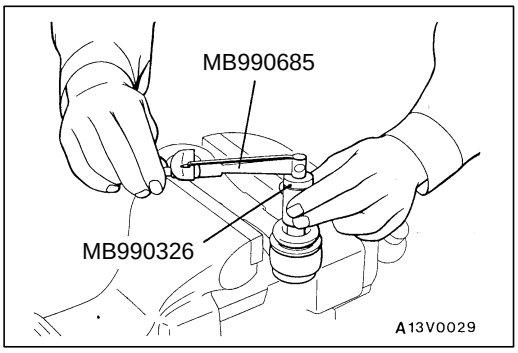

INSPECTION

37100250045

PITMAN ARM BALL JOINT STARTING TORQUE CHECK

After shaking the ball joint stud several times, install the nut to the stud and use the special tool to measure the starting torque of the ball joint.

Standard value: 0.5 – 1.5 Nm

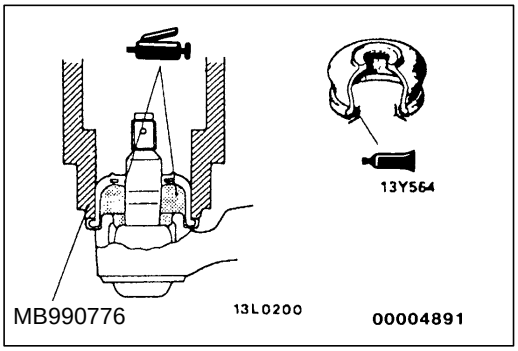

DUST COVER REPLACEMENT

Only when the dust cover is damaged accidentally during service work, replace the dust cover only as follows:

1. Fill inside the dust cover with multipurpose grease.
2. Apply specified sealant to the mounting surface of the dust cover at the pitman arm.

   Specified sealant: 3M ATD Part No.8661 or equivalent

3. Using the special tool, install the dust cover to the pitman arm.

POWER STEERING GEAR BOX

37200390122

REMOVAL AND INSTALLATION

Caution: SRS
For vehicles with SRS, before removal of steering gear box refer to GROUP 52B, center front wheels and remove ignition key. Failure to do so many damage SRS clock spring and render SRS system inoperative, risking serious driver injury.

Pre-removal Operation
- Power Steering Fluid Draining (Refer to P.37A-11.)

Post-installation Operation
- Power Steering Fluid Supplying (Refer to P.37A-11.)
- Power Steering Fluid Line Bleeding (Refer to P.37A-12.)
- Checking Steering Wheel Position with Wheels Straight Ahead
- Front Wheel Alignment Adjustment (Refer to GROUP 33A – On-vehicle Service.)

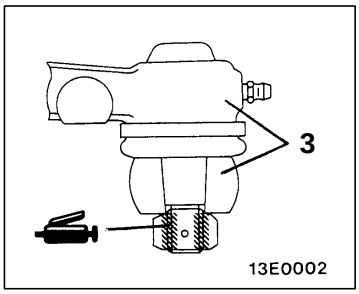

<2WD>

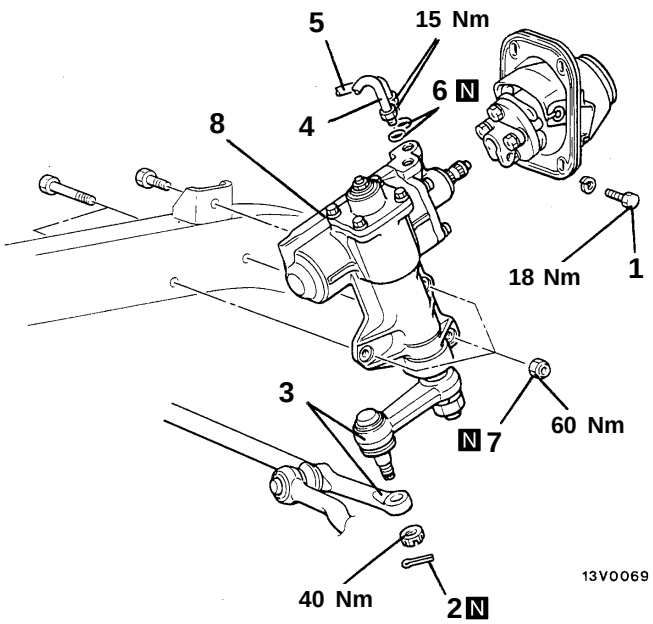

<4WD>

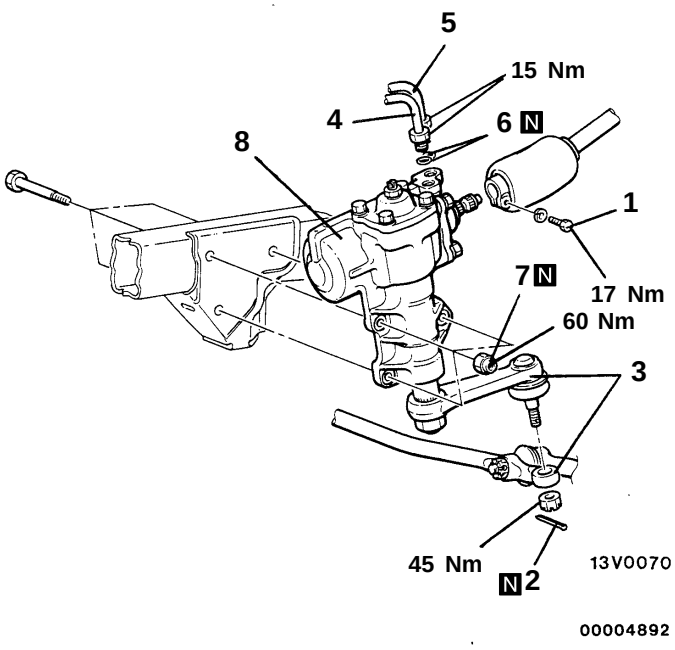

Removal steps

1. Connecting bolt for steering gear box and steering shaft
2. Split pin
3. Connection for pitman arm and relay rod
4. Pressure tube
5. Return tube
6. O-ring
7. Self-locking nut
8. Power steering gear box

◀A▶

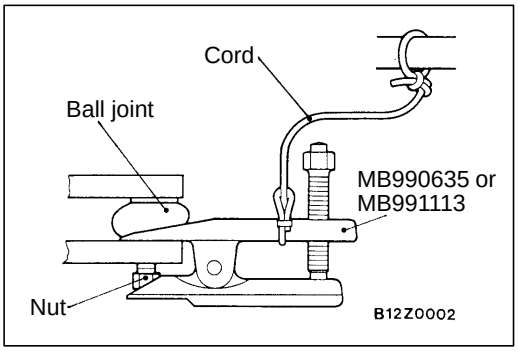

REMOVAL SERVICE POINT

◀A▶ PITMAN ARM AND RELAY ROD DISCONNECTION

Use the special tool to disconnect the ball joint.

Caution

1. **Using the special tool, loosen the tie rod end mounting nut. Only loosen the nut; do not remove it from the ball joint.**
2. **Support the special tool with a cord, etc. to prevent it from coming off.**

INSPECTION

37200400108

PITMAN ARM DUST COVER CHECK

If there are any cracks in or damage to the dust cover, replace the pitman arm. (Refer to P. 37A-36 .)

DISASSEMBLY

37200420029

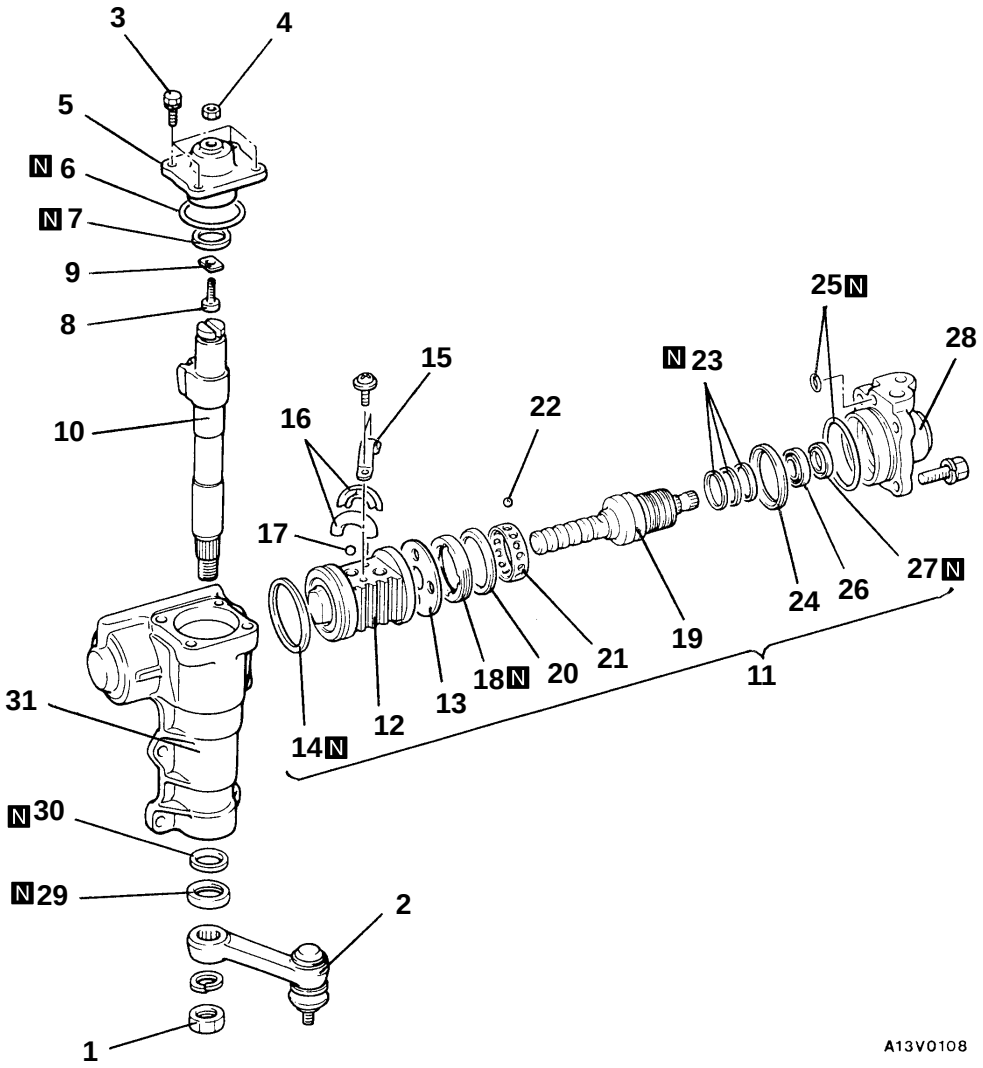

Disassembly steps

	1. Jam nut		17. Ball
◀A▶	2. Pitman arm	◀E▶	18. Lock nut
	3. Bolts	◀F▶	19. Mainshaft
	4. Adjusting bolt locking nut	◀F▶	20. Bearing race
◀B▶	5. Side cover		21. Cage
	6. O-ring	◀F▶	22. Ball
	7. Y-packing		23. Seal ring
	8. Adjusting bolt		24. Bearing race
	9. Adjusting plate		25. O-ring
◀C▶	10. Cross-shaft	◀G▶	26. Bearing
	11. Mainshaft and valve assembly	◀G▶	27. Oil seal
◀D▶	12. Rack piston		28. Valve housing
	13. Spacer		29. Oil seal
	14. Seal ring		30. Y-packing
	15. Circulator holder		31. Gear box housing
	16. Circulator		

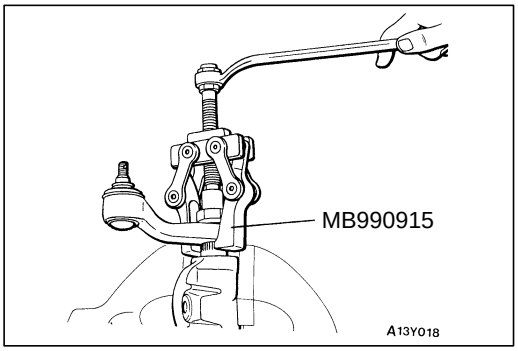

DISASSEMBLY SERVICE POINTS

◀A▶ PITMAN ARM REMOVAL

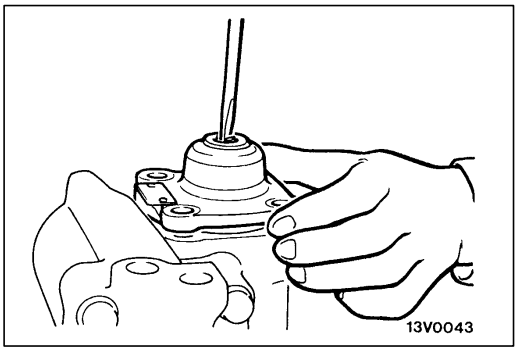

◀B▶ SIDE COVER REMOVAL

1. Loosen the lock nut and then turn the adjusting bolt anti-clockwise slightly.
2. Screw in the adjusting bolt without turning the side cover, and then remove the side cover.

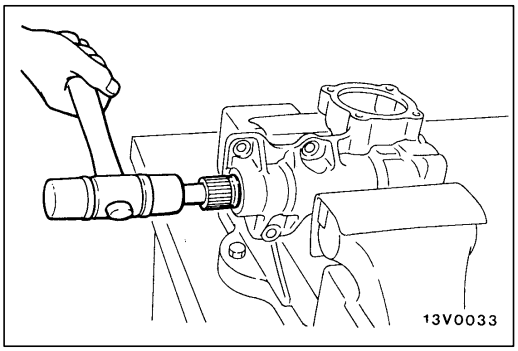

◀C▶ CROSS-SHAFT REMOVAL

With the mainshaft and cross-shaft placed in the straight ahead position, tap the bottom of the cross-shaft with a plastic hammer to take out the cross-shaft together with the side cover.

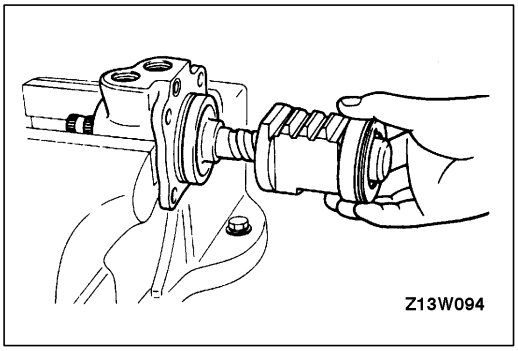

◀D▶ RACK PISTON REMOVAL

Remove the rack piston from the mainshaft by turning it counterclockwise.

Caution
Be careful not to lose the 26 balls inside the rack piston.

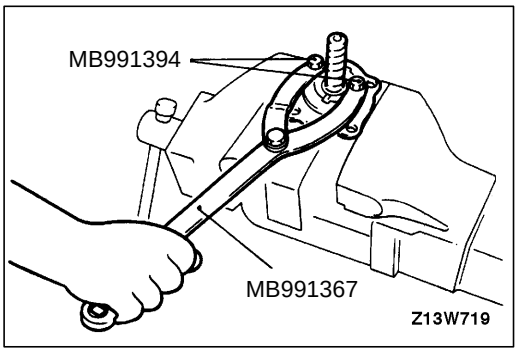

◀E▶ LOCK NUT REMOVAL

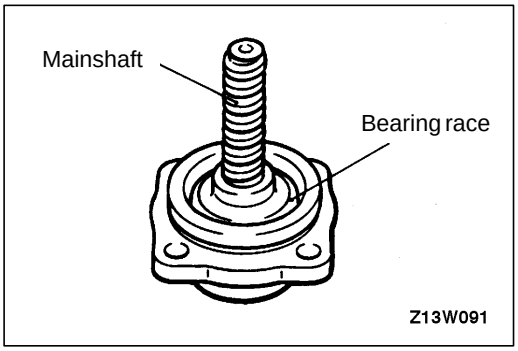

◀F▶ MAINSHAFT, BEARING RACE AND BALL REMOVAL

Remove the mainshaft while pressing the bearing race so that the balls do not come out.

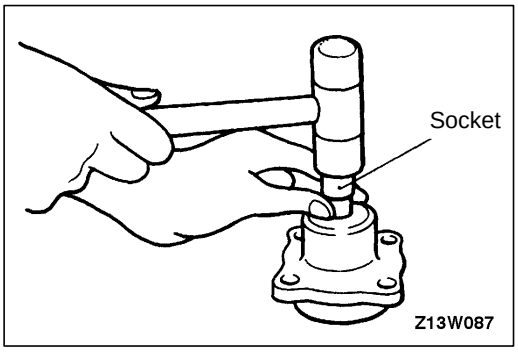

◀G▶ BEARING AND OIL SEAL REMOVAL

Using a socket, remove the oil seal and bearing from the valve housing simultaneously.

REASSEMBLY

37200430022

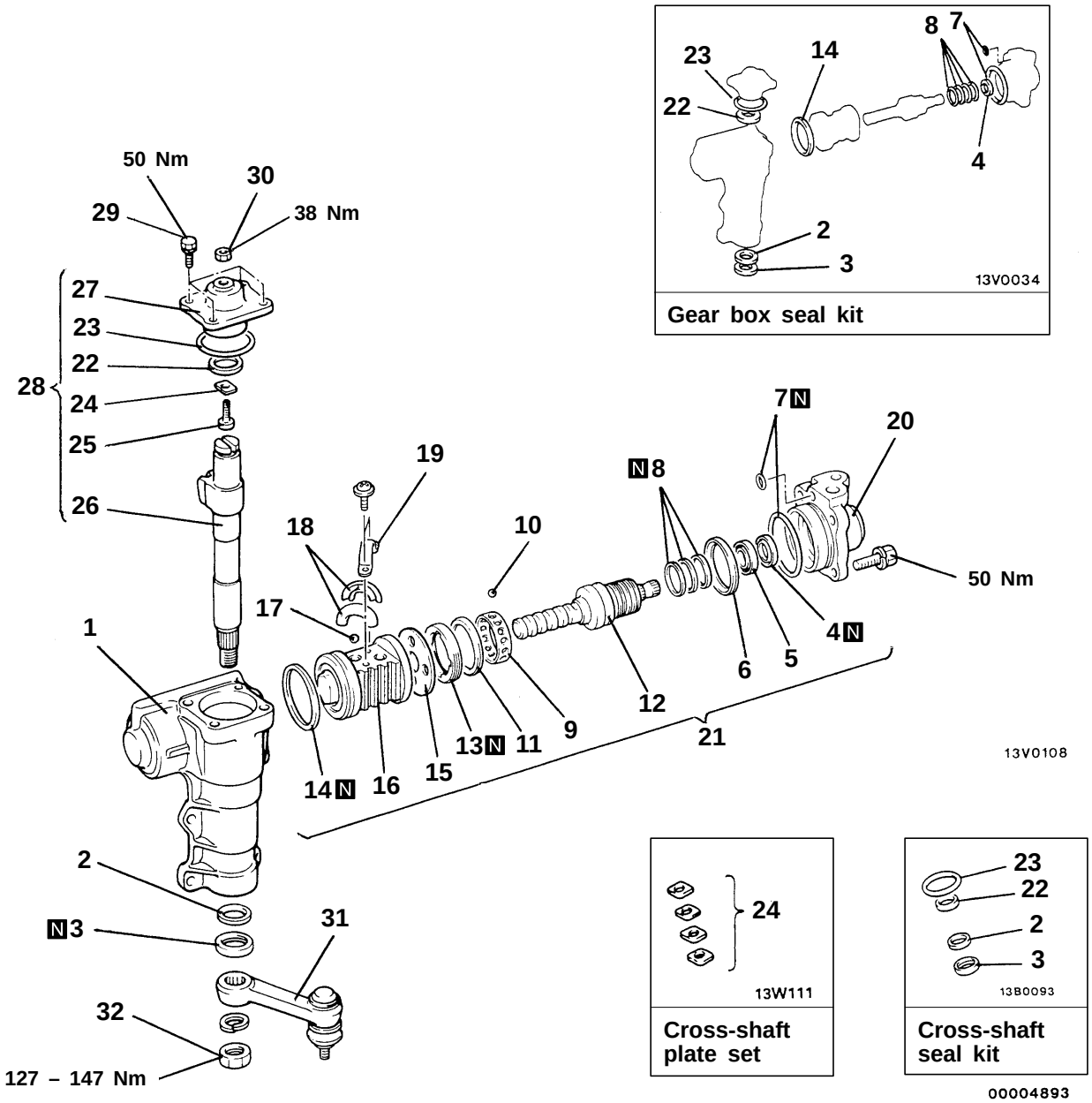

Reassembly steps

1. Gear box housing
2. Y-packing
▶A◀ 3. Oil seal
▶B◀ 4. Oil seal
▶C◀ 5. Bearing
6. Bearing case
7. O-ring
▶D◀ 8. Seal ring
▶E◀ 9. Cage
▶E◀ 10. Ball
▶E◀ 11. Bearing race
▶E◀ 12. Mainshaft
▶F◀ 13. Lock nut
▶G◀ ● Mainshaft axial play adjustment
14. Seal ring
15. Spacer
▶H◀ 16. Rack piston
▶H◀ 17. Ball
18. Circulator
19. Circulator holder
20. Valve housing
21. Mainshaft and valve assembly
22. Y-packing
23. O-ring
▶I◀ ● Cross-shaft axial play adjustment
24. Adjusting plate
25. Adjusting bolt
▶J◀ 26. Cross-shaft
27. Side cover
28. Side cover and cross-shaft assembly
29. Bolt
▶K◀ ● Mainshaft total staring torque adjustment
30. Adjusting bolt lock nut
▶L◀ 31. Pitman arm
32. Jam nut

LUBRICATION AND SEALING POINTS

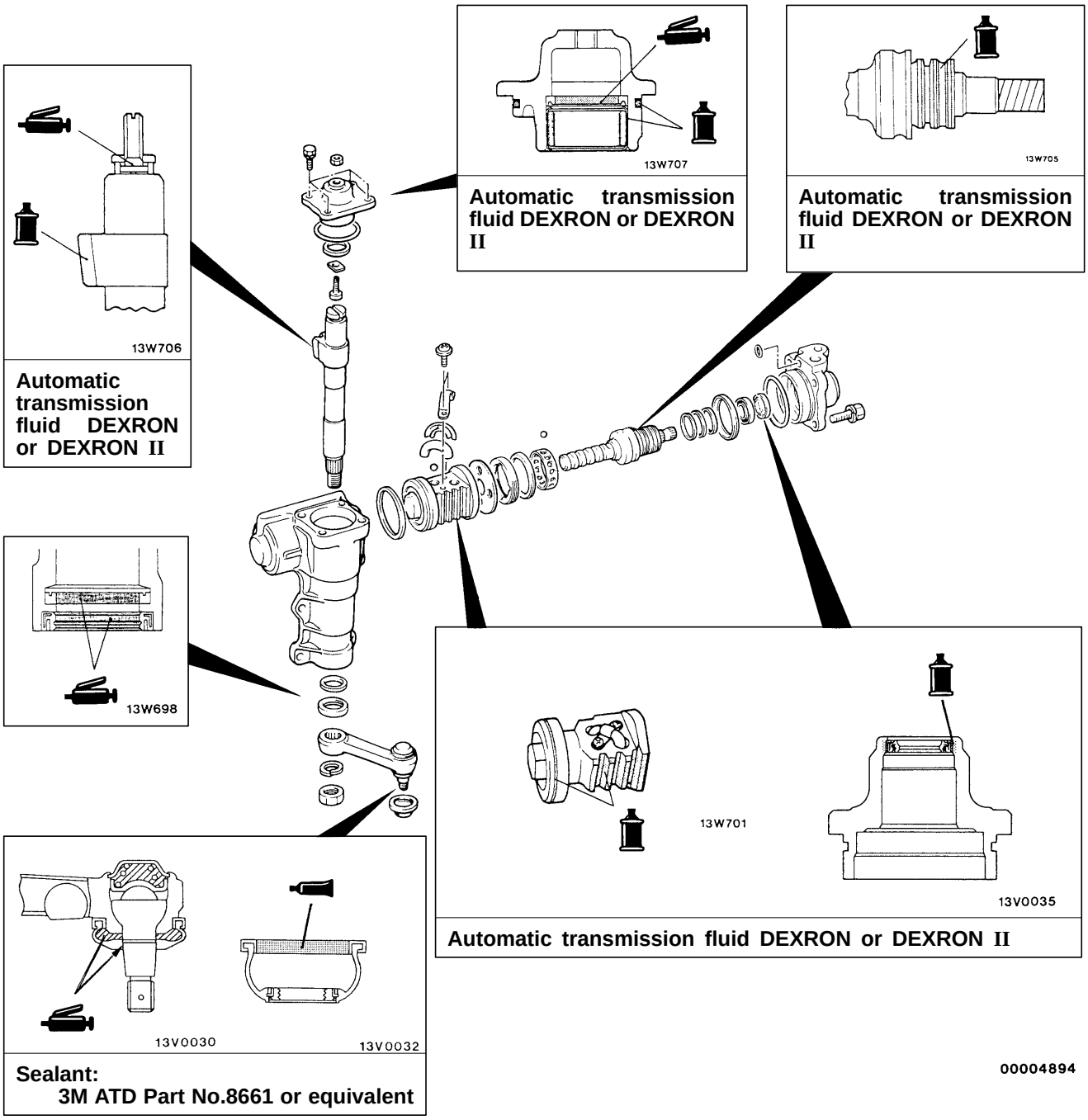

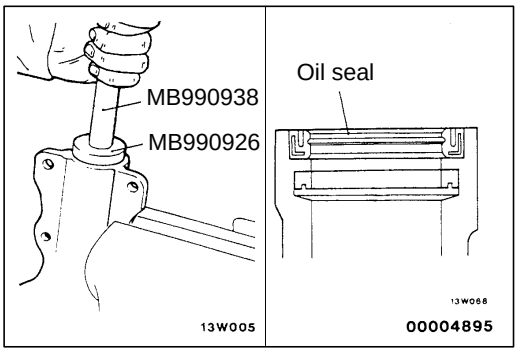

REASSEMBLY SERVICE POINTS

▶A◀ OIL SEAL INSTALLATION

Apply a coating of the specified fluid to the outside of the oil seal. Using the special tools, press the oil seal into the valve housing.

Specified fluid:

Automatic transmission fluid DEXRON or DEXRON II

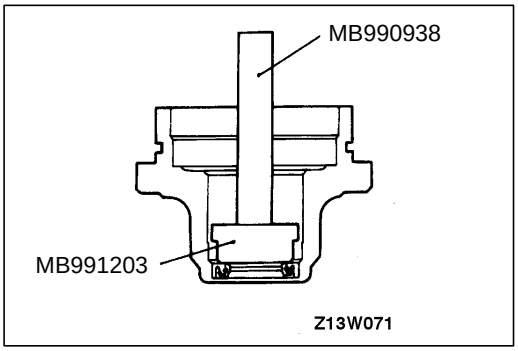

▶B◀ OIL SEAL INSTALLATION

Apply a coating of the specified fluid to the outside of the bearing. Using the special tools, press the oil seal into the valve housing.

Specified fluid:
Automatic transmission fluid DEXRON or DEXRON II

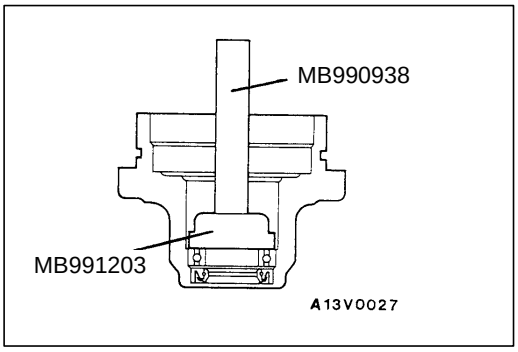

▶C◀ BEARING INSTALLATION

Apply a coating of the specified fluid to the outside of the bearing. Using the special tools, press the bearing into the valve housing.

Specified fluid:
Automatic transmission fluid DEXRON or DEXRON II

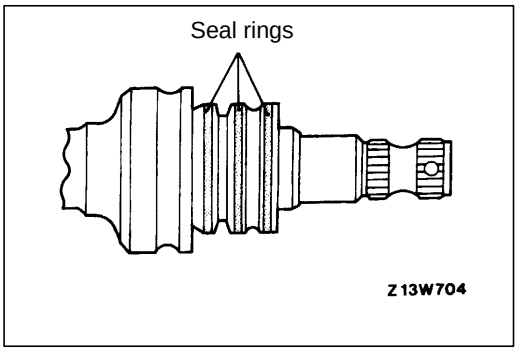

▶D◀ SEAL RING INSTALLATION

Press the seal ring firmly into the valve groove.

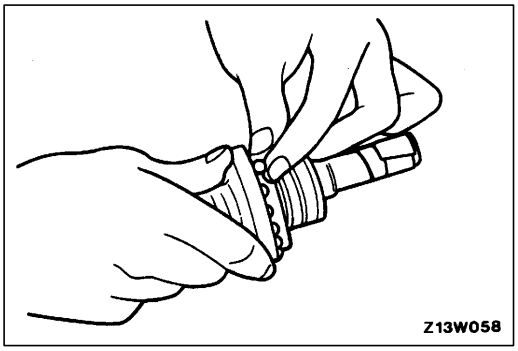

▶E◀ CAGE, BALLS, BEARING RACE AND MAINSHAFT INSTALLATION

1. Apply specified fluid to the mainshaft.

   Specified fluid:
   Automatic transmission fluid DEXRON or DEXRON II
2. Wrap vinyl tape around the serrated part so that the oil seal won't be damaged when the mainshaft is installed to the valve housing.
3. Mount the mainshaft to the valve housing.
4. Align the cage's hole and the channel in the mainshaft and insert two or three balls.
5. Insert the remainder of the balls into the cage's hole while pressing the ball with the bearing race.
6. When installing the mainshaft, connect it to the valve housing while pressing the bearing race so that the balls do not come out.

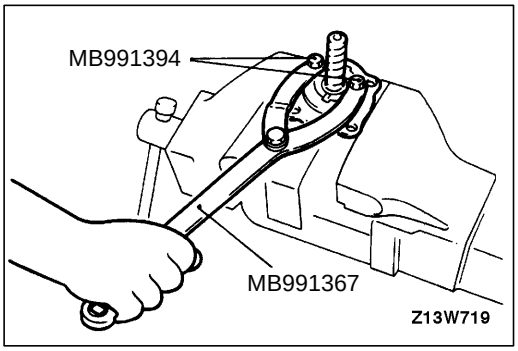

▶F◀ LOCK NUT INSTALLATION

Using special tools, tighten carefully until the lock nut contacts the bearing race.

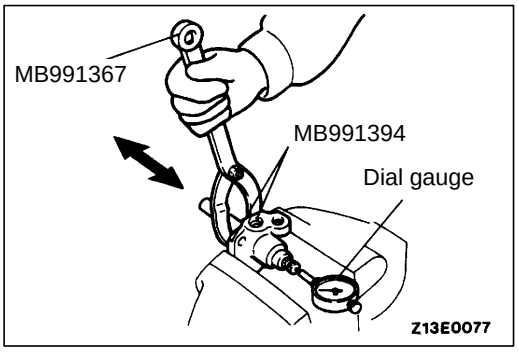

▶G◀ MAINSHAFT AXIAL PLAY ADJUSTMENT

1. Adjust the play by tightening the lock nut gradually so that the mainshaft axial play will meet the range of the standard value.

   Standard value: 0.03 mm or less

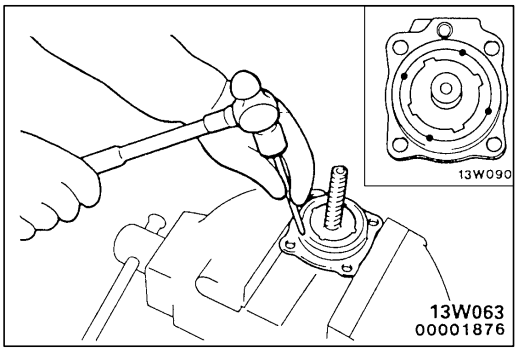

2. Use a punch to crimp the circumference of the lock nut so as to secure the lock nut.
3. Check to be sure that the mainshaft rotates smoothly.

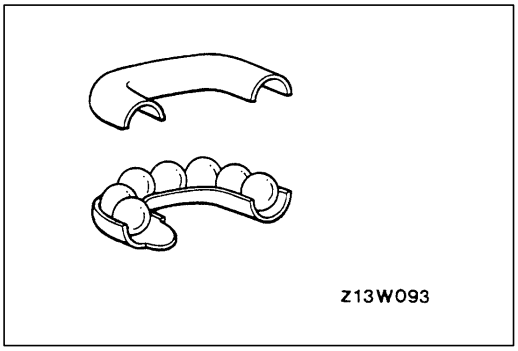

▶H◀ RACK PISTON AND BALLS INSTALLATION

1. Install the rack piston until it comes in contact with the edge of the mainshaft.
2. Rotate the mainshaft to align the ball race way with the 19-ball insertion hole.

   NOTE
   The balls must be inserted so that there is no clearance between the balls.

3. Set the remaining seven balls in the circulator, and install the circulator to the rack piston.
4. Apply the specified fluid to the seal ring of the rack piston.

   Specified fluid:
   Automatic transmission fluid DEXRON or DEXRON II

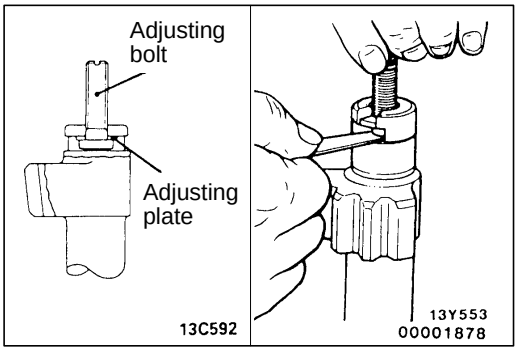

▶I◀ CROSS-SHAFT AXIAL PLAY ADJUSTMENT

1. Install the adjusting plate so that the beveled part is facing downward.
2. Using a thickness gauge, measure the clearance between the adjusting bolt and cross-shaft.

   Standard value: 0.05 mm or less
3. If the clearance exceeds the standard value, replace with a suitable adjusting plate.

▶J◀ CROSS-SHAFT INSTALLATION

Set the rack piston in the neutral position and install the cross-shaft.

Caution
Do not rotate the side cover during installation. Take care not to damage the cross-shaft oil seal.

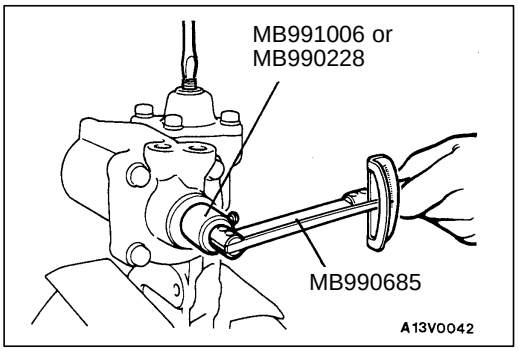

▶K◀ MAINSHAFT TOTAL STARTING TORQUE ADJUSTMENT

1. While turning the adjusting bolt, measure the mainshaft total starting torque by using the special tools.

   Standard value:
   <2WD> 0.98 – 1.47 Nm
   <4WD> 0.69 – 1.28 Nm

   Caution
   Adjust by turning adjusting bolt so that the starting torque at the centre position of the rack piston is approximately 0.2 Nm higher than the values at the both ends of the rack piston.
2. Tighten the adjusting bolt lock nut to the specified torque.

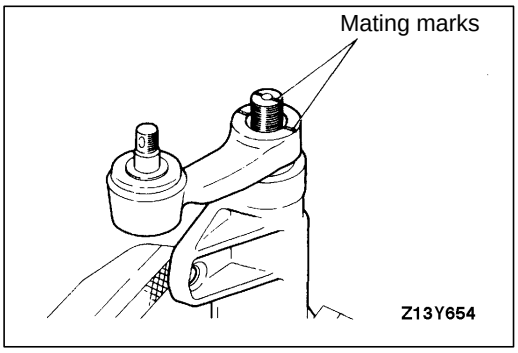

▶L◀ PITMAN ARM INSTALLATION

Install the pitman arm to the gear box with the mating marks aligned.

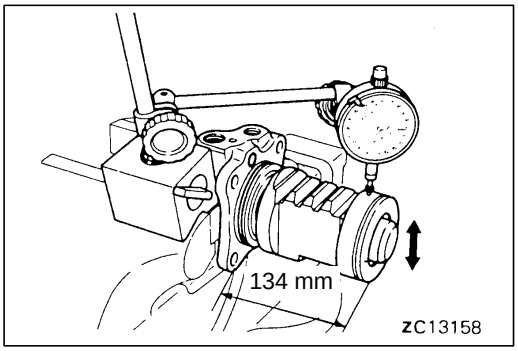

INSPECTION

37200440087

BACKLASH BETWEEN BALL GROOVE OF RACK PISTON AND BALLS

Set the rack piston to the position shown in the figure, and then measure the backlash by using a dial gauge.

Limit: 0.05 mm

PITMAN ARM BALL JOINT STARTING TORQUE

Refer to P.37A-24.

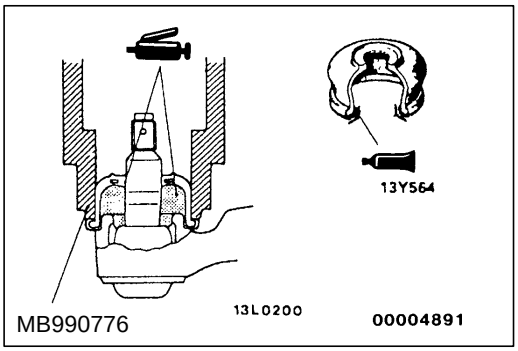

DUST COVER REPLACEMENT

Only when the dust cover is damaged accidentally during service work, replace the dust cover only as follows:

1. Fill inside the dust cover with multipurpose grease.
2. Apply specified sealant to the mounting surface of the dust cover at the pitman arm.

   Specified sealant:
   3M ATD Part No.8661 or equivalent

3. Using the special tool, install the dust cover to the pitman arm.

POWER STEERING OIL PUMP

37200520163

REMOVAL AND INSTALLATION

Pre-removal Operation
- Power Steering Fluid Draining (Refer to 37A-11.)

Post-installation Operation
- Power Steering Fluid Supplying (Refer to 37A-11.)
- Drive Belt Tension Check (Refer to 37A-11.)
- Power Steering Fluid Line Bleeding (Refer to 37A-12.)
- Oil Pump Pressure Check (Refer to 37A-13.)

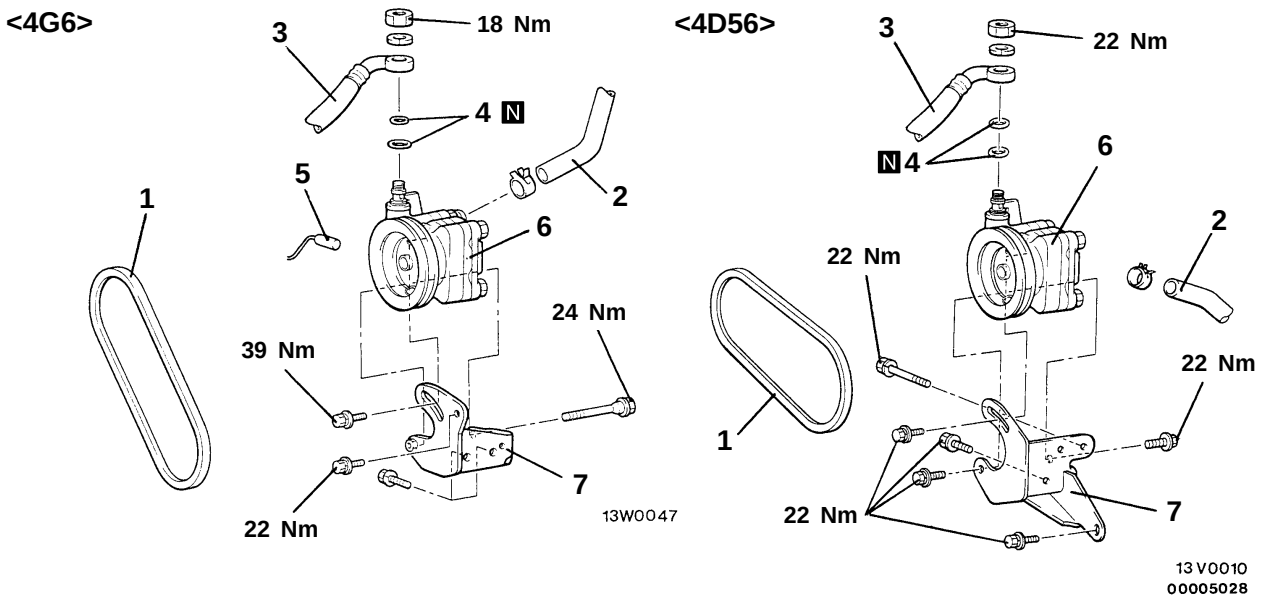

Removal steps

1. Drive belt
2. Suction hose
3. ▶A◀ Pressure hose
4. O-ring
5. Pressure switch connector <4G6>
6. Oil pump
7. Oil pump bracket

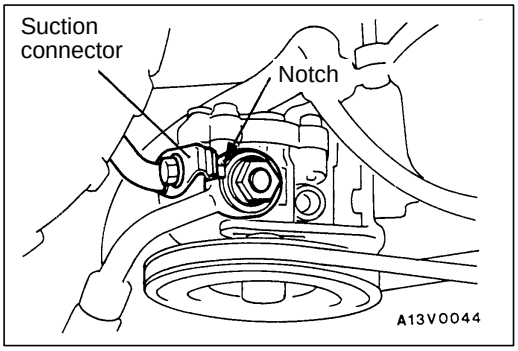

INSTALLATION SERVICE POINTS

▶A◀ PRESSURE HOSE INSTALLATION

Connect the pressure hose so that the notch part contacts the suction connector.

INSPECTION

37200530067

Check the drive belt for cracks.
Check the pulley assembly for uneven rotation.

DISASSEMBLY AND REASSEMBLY <4G6>

37200540121

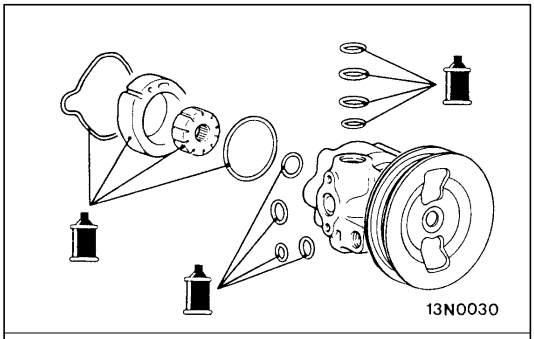

Fluid:
Automatic transmission fluid DEXRON or DEXRON II

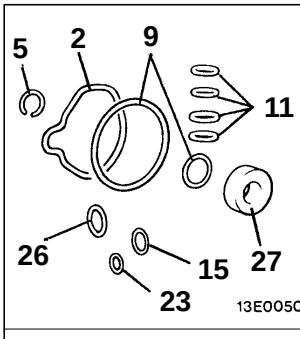

Oil pump seal kit

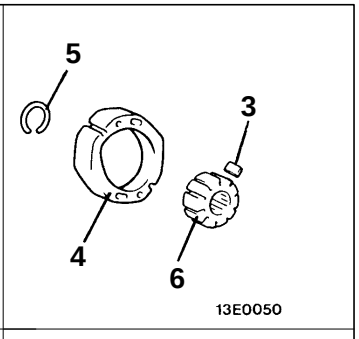

Oil pump cartridge kit

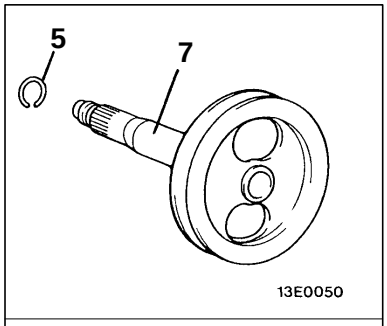

Pulley and shaft kit

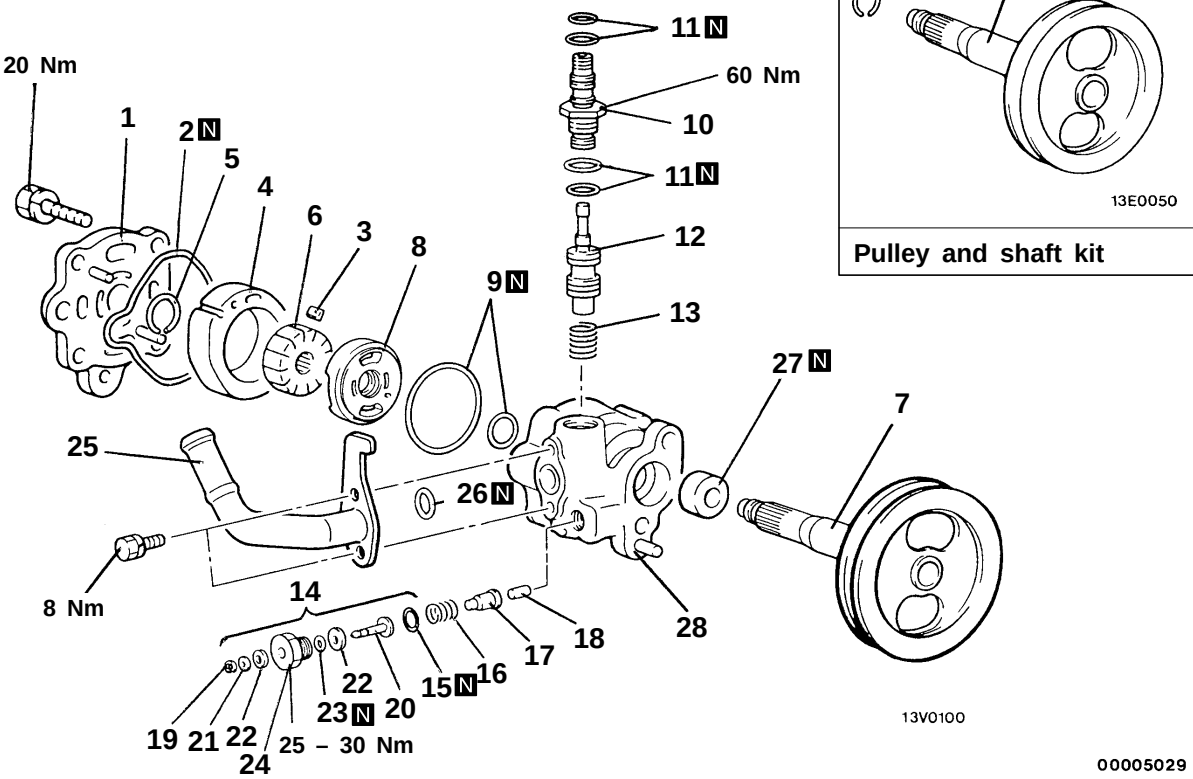

Disassembly steps

1. Pump cover
2. O-ring
3. ▶H◀ Vanes
4. ▶G◀ Cam ring
5. ◀A▶ ▶F◀ Snap ring
6. ▶E◀ Rotor
7. Pulley assembly
8. ▶D◀ Side plate
9. ▶B◀ O-ring
10. Connector
11. ▶B◀ O-ring
12. Flow control valve
13. Flow control spring
14. Terminal assembly
15. ▶B◀ O-ring
16. ▶C◀ Spring
17. Plunger
18. Piston rod
19. Snap ring
20. Terminal
21. Washer
22. Insulator
23. ▶B◀ O-ring
24. Plug
25. Suction connector
26. ▶B◀ O-ring
27. ▶A◀ Oil seal
28. Oil pump body

Caution
Do not disassemble the flow control valve.

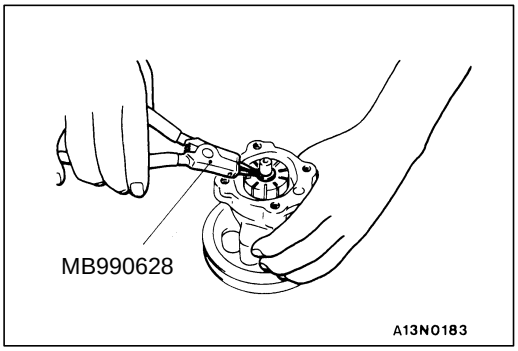

DISASSEMBLY SERVICE POINT

◀A▶ SNAP RING REMOVAL

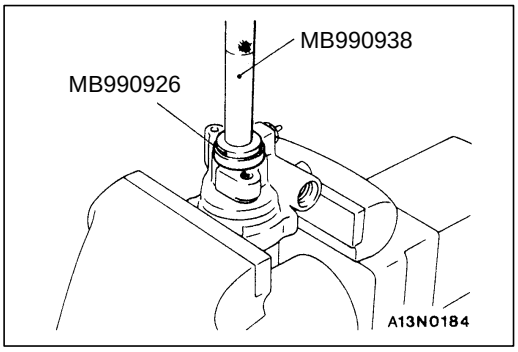

REASSEMBLY SERVICE POINTS

▶A◀ OIL SEAL INSTALLATION

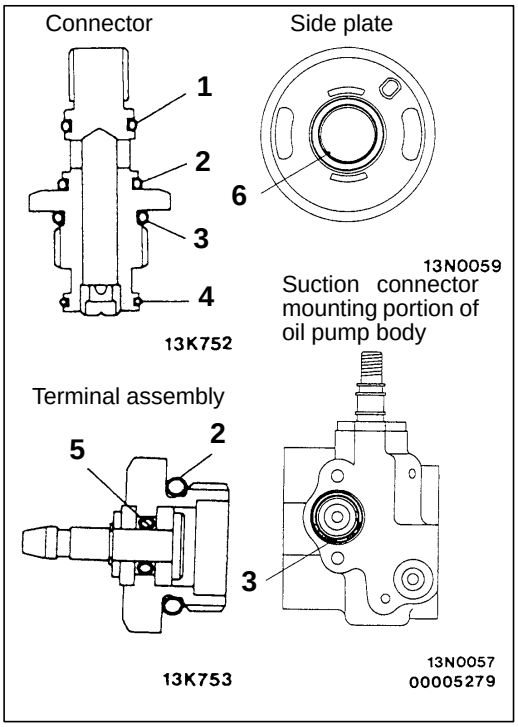

▶B◀ O-RINGS INSTALLATION

No.	I.D. x Width mm
1	11 × 1.9
2	13 × 1.9
3	17.8 × 2.4
4	13.5 × 1.5
5	3.8 × 1.9
6	16.8 × 2.4

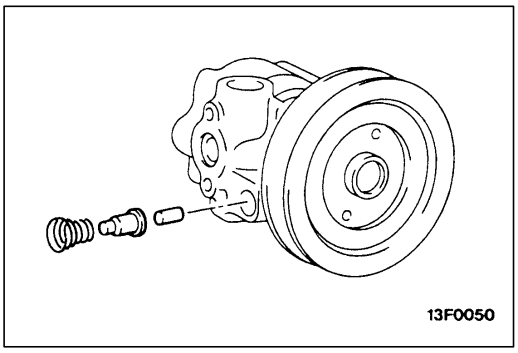

▶C◀ SPRING INSTALLATION

Fit the spring to the oil pump body with the larger-diameter end at the terminal assembly side.

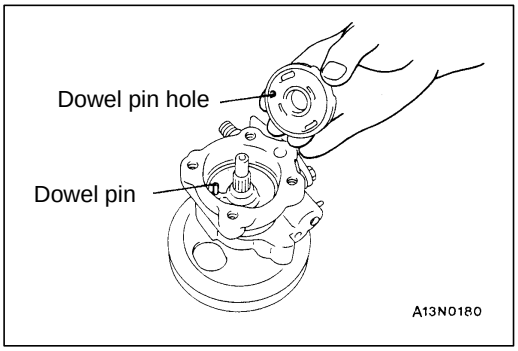

▶D◀ SIDE PLATE INSTALLATION

Line up the dowel pin hole of the side plate with the dowel pin of the pump body when installing the side plate.

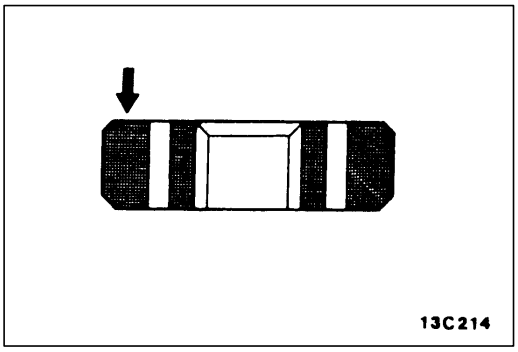

▶E◀ ROTOR INSTALLATION

Install the rotor to the pulley assembly so that the rotor's punch mark is at the pump cover side.

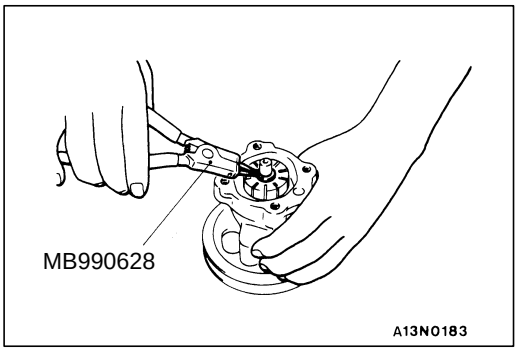

▶F◀ SNAP RING INSTALLATION

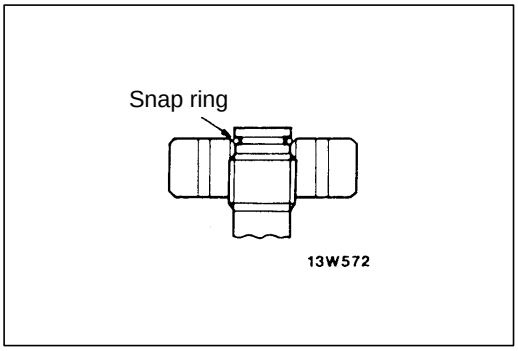

After installation of the snap ring, lift the rotor and check that the snap ring has entered the countersunk part.

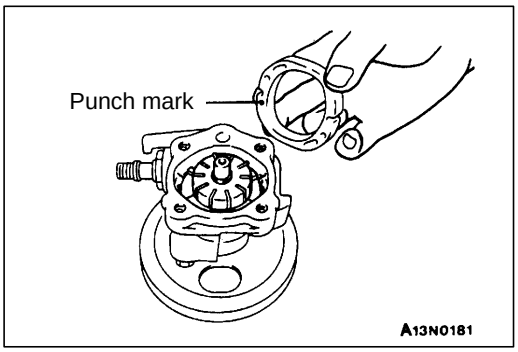

▶G◀ CAM RING INSTALLATION

Install the cam ring with the punch mark facing the side plate.

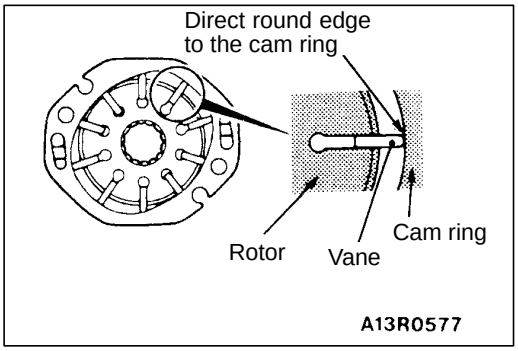

▶H◀ VANES INSTALLATION

Install the vanes on the rotor, paying close attention to the installation direction.

INSPECTION

37200550087

- Check the flow control valve for clogging.
- Check the pulley assembly for wear or damage.
- Check the groove of rotor and vane for “stepped” wear.
- Check the contact surface of cam ring and vanes for “stepped” wear.
- Check the vanes for damage.

DISASSEMBLY AND REASSEMBLY <4D56>

37200540138

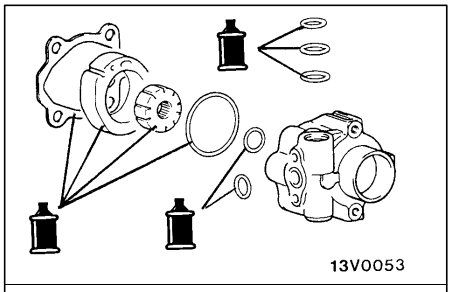

Fluid:
Automatic transmission fluid DEXRON or DEXRON II

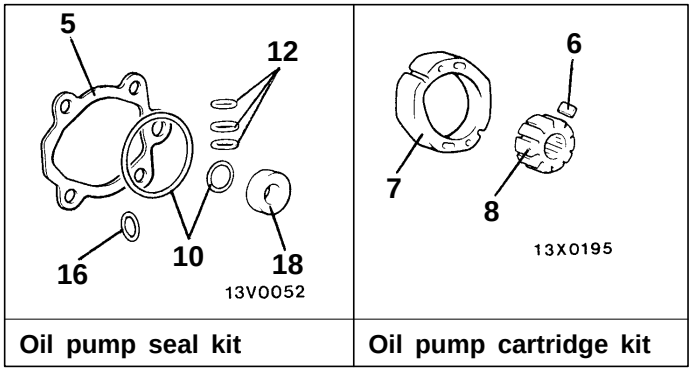

Oil pump seal kit | **Oil pump cartridge kit**

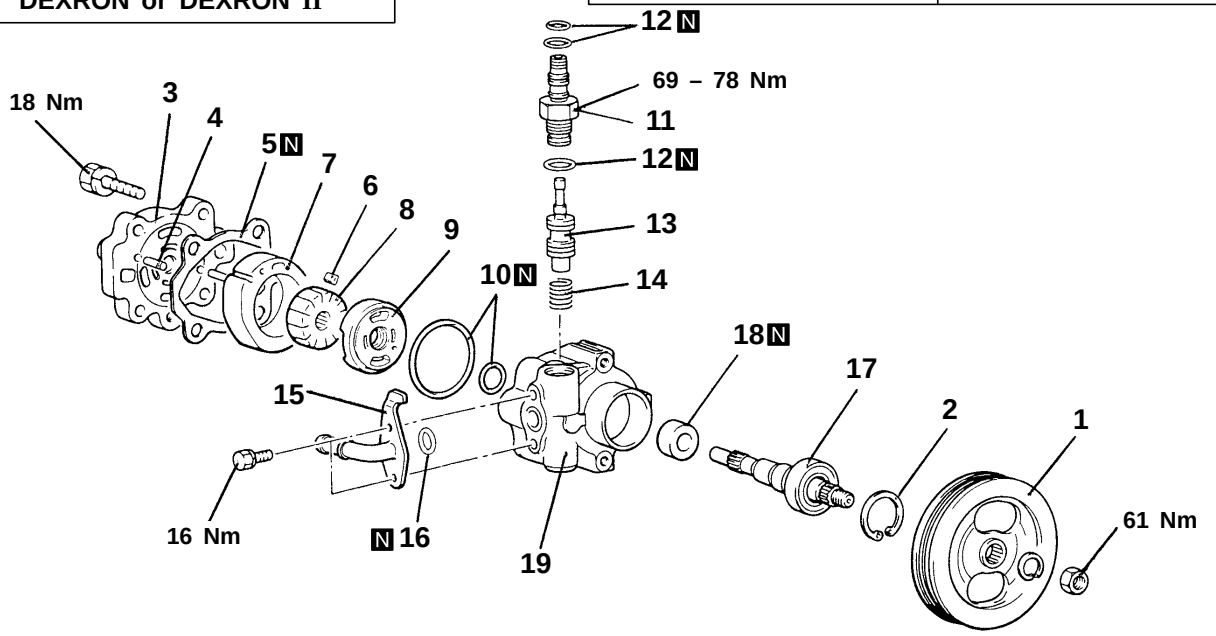

13V0054 **00004901**

Disassembly steps

◀A▶ ▶G◀ 1. Drive pulley
2. Snap ring
3. Pump cover
4. Lock pin
5. Seal washer
▶F◀ 6. Vanes
▶E◀ 7. Cam ring
▶D◀ 8. Rotor
9. Side plate
▶C◀ 10. O-ring
11. Connector
▶C◀ 12. O-ring
13. Flow control valve
14. Flow control spring
15. Suction connector
▶C◀ 16. O-ring
▶B◀ 17. Drive shaft assembly
▶A◀ 18. Oil seal
19. Oil pump body

Caution
Do not disassemble the flow control valve.

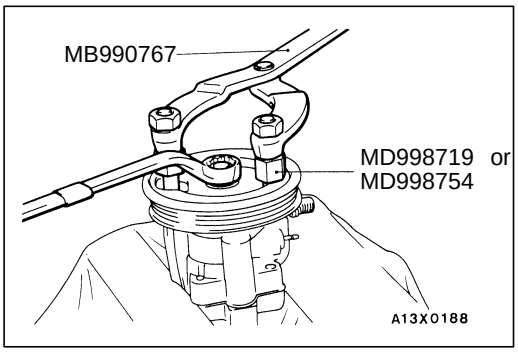

DISASSEMBLY SERVICE POINT

◀A▶ DRIVE PULLEY REMOVAL

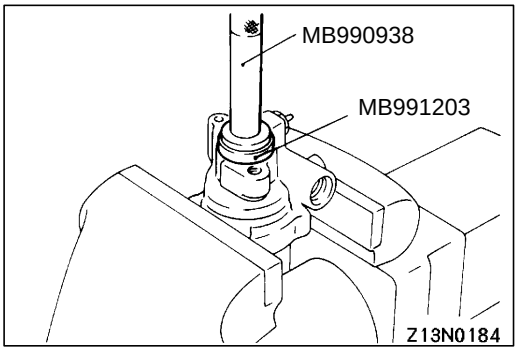

REASSEMBLY SERVICE POINTS

▶A◀ OIL SEAL INSTALLATION

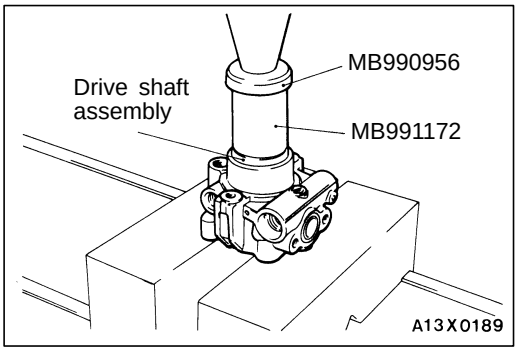

▶B◀ DRIVE SHAFT ASSEMBLY INSTALLATION

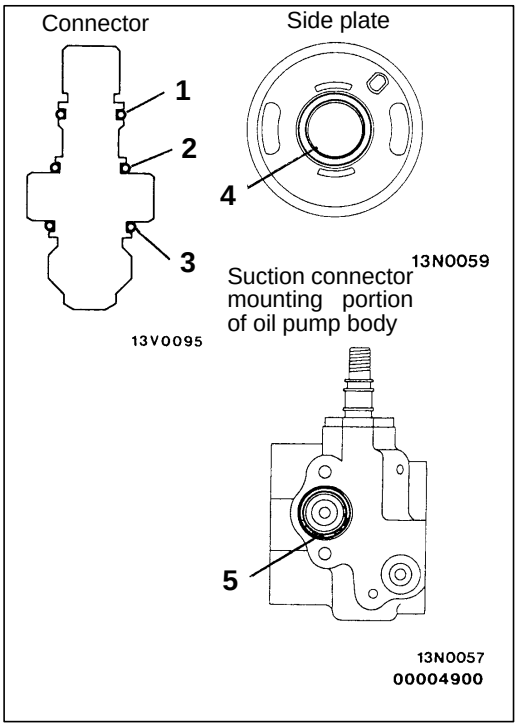

▶C◀ O-RINGS INSTALLATION

No.	I.D. x Width mm
1	11 × 1.9
2	13 × 1.9
3	15.5 × 2.4
4	14.6 × 2.4
5	19.4 × 1.9

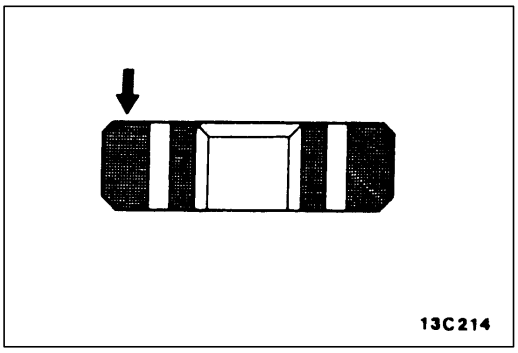

▶D◀ ROTOR INSTALLATION

Install the rotor to the pulley assembly so that the rotor's punch mark is at the pump cover side.

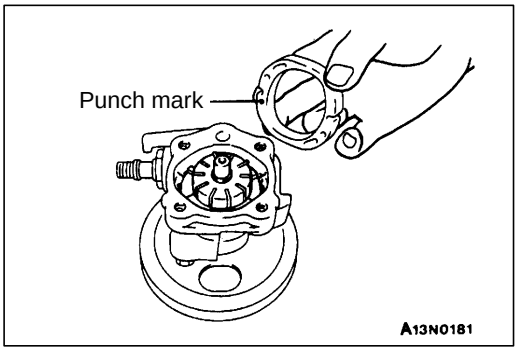

▶E◀ CAM RING INSTALLATION

Install the cam ring with the punch mark facing the side plate.

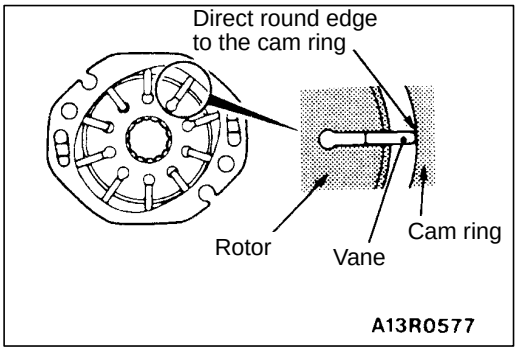

▶F◀ VANE INSTALLATION

Install the vanes on the rotor, paying close attention to the installation direction.

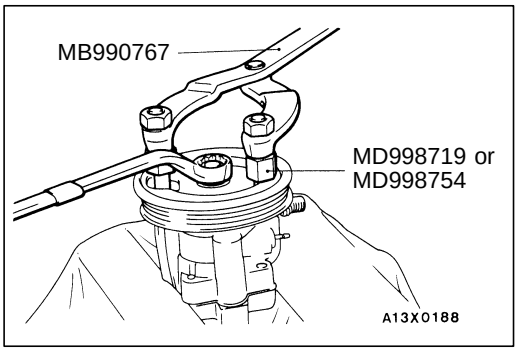

▶G◀ DRIVE PULLEY INSTALLATION

INSPECTION

37200550087

- Check the flow control valve for clogging.
- Check the pulley assembly for wear or damage.
- Check the groove of rotor and vane for “stepped” wear.
- Check the contact surface of cam ring and vanes for “stepped” wear.
- Check the vanes for damage.

POWER STEERING HOSES

37200570151

REMOVAL AND INSTALLATION

Pre-removal Installation
- Power Steering Fluid Draining (Refer to P.37A-11.)
- Radiator Grille Removal

Post-installation Operation
- Radiator Grille Installation
- Power Steering Fluid Supplying (Refer to P.37A-11.)
- Power Steering Fluid Line Bleeding (Refer to P.37A-12.)

<4G6>

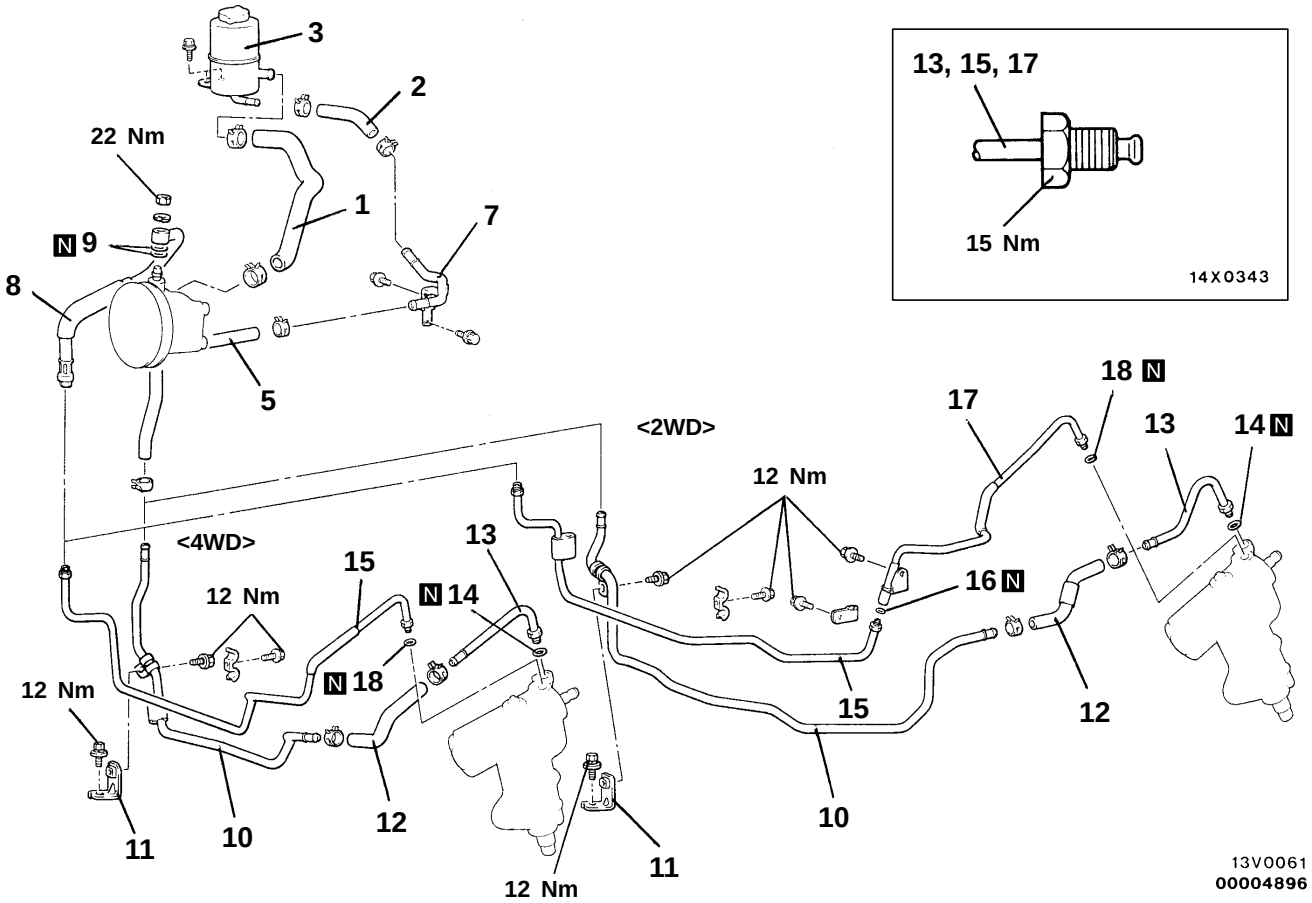

Removal steps

- ▶F◀ 1. Suction hose
  2. Return hose
  3. Oil reservoir
- ▶E◀ 5. Return hose
  7. Return tube
- ▶D◀ 8. Pressure hose
  9. O-ring
- ▶C◀ 10. Return tube
- ▶B◀ 11. Tube stay
  12. Return hose
- ▶A◀ 13. Return tube
  14. O-ring
  15. Pressure tube
  16. O-ring
  17. Pressure tube
  18. O-ring

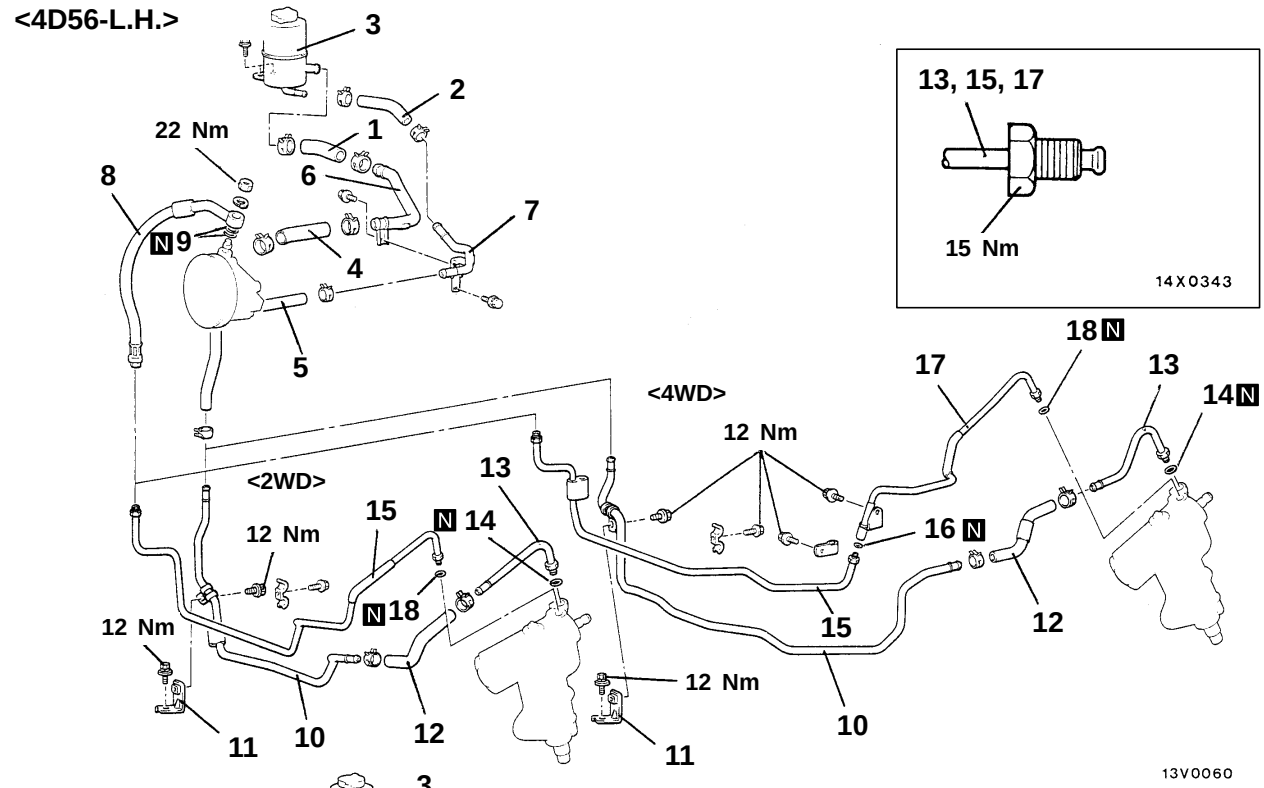

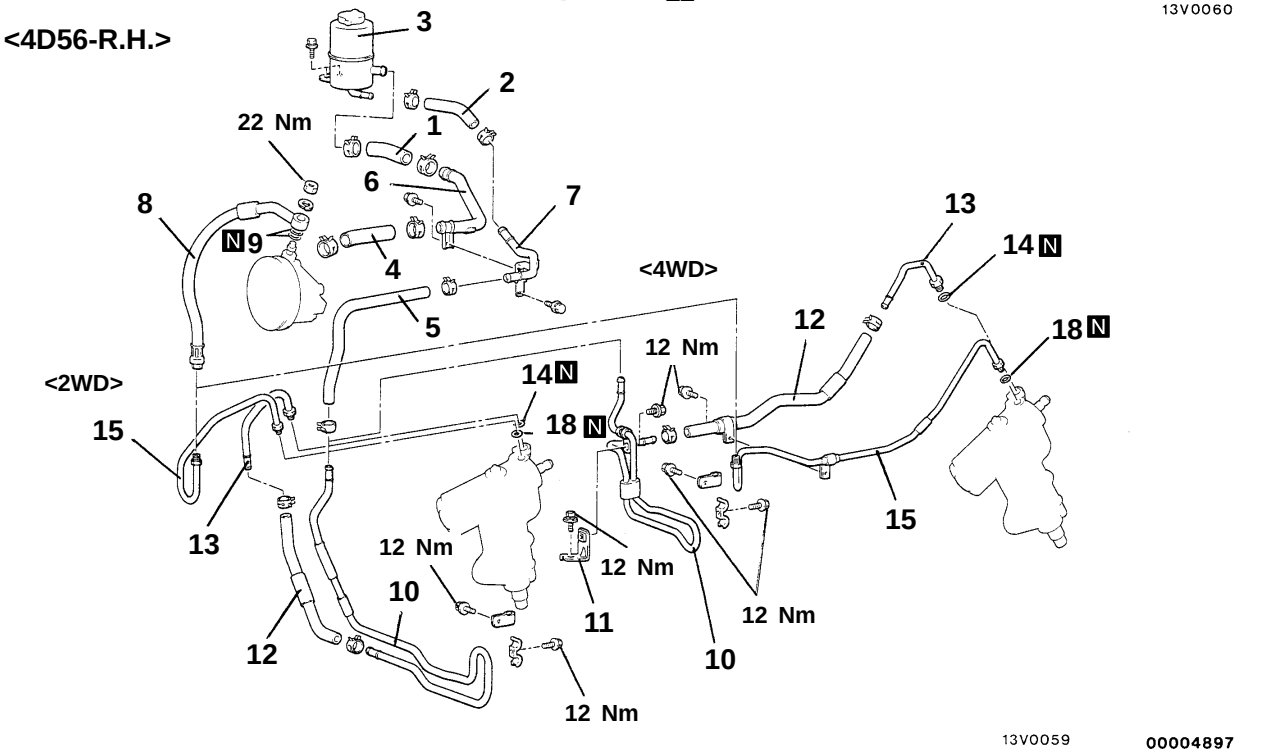

Removal steps

- ▶F◀ 1. Suction hose
- 2. Return hose
- 3. Oil reservoir
- ▶F◀ 4. Suction hose
- ▶E◀ 5. Return hose
- 6. Suction tube
- 7. Return tube
- ▶D◀ 8. Pressure hose
- 9. O-ring
- ▶C◀ 10. Return tube
- ▶B◀ 11. Tube stay
- 12. Return hose
- ▶A◀ 13. Return tube
- 14. O-ring
- 15. Pressure tube
- 16. O-ring
- 17. Pressure tube
- 18. O-ring

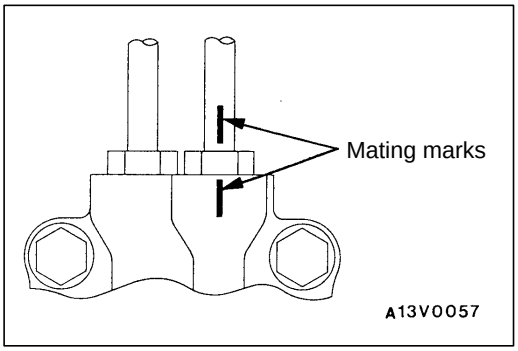

INSTALLATION SERVICE POINTS

▶A◀ RETURN TUBE INSTALLATION

Align the marks on the return tube and steering gear box, and install the return tube.

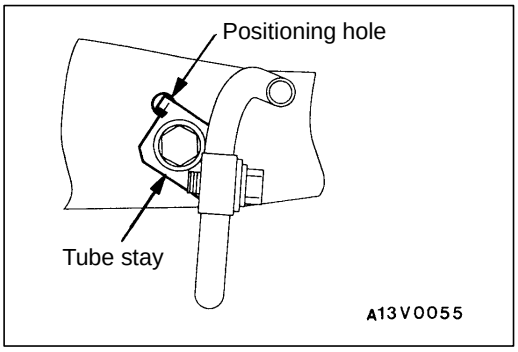

▶B◀ TUBE STAY INSTALLATION

Fit the protrusion of the tube stay to the positioning hole.

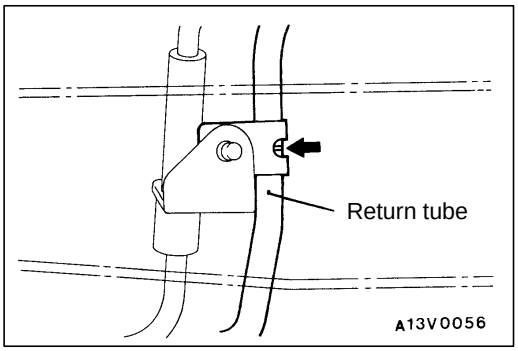

▶C◀ RETURN TUBE INSTALLATION

Connect the return tube so that the marking is positioned as shown in the illustration.

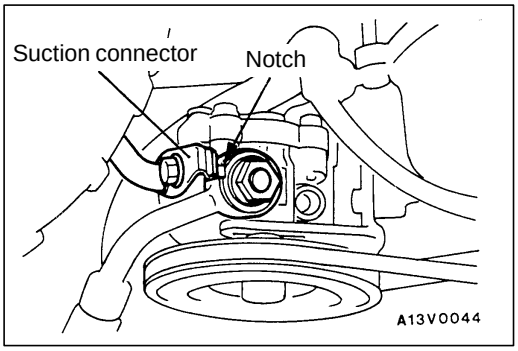

▶D◀ PRESSURE HOSE INSTALLATION

1. Connect the pressure hose so that the its notch part contacts the suction connector.

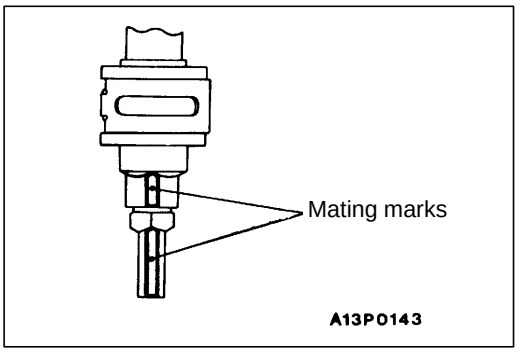

2. Align the marks on the pressure hose and pressure tube, and install the pressure hose.

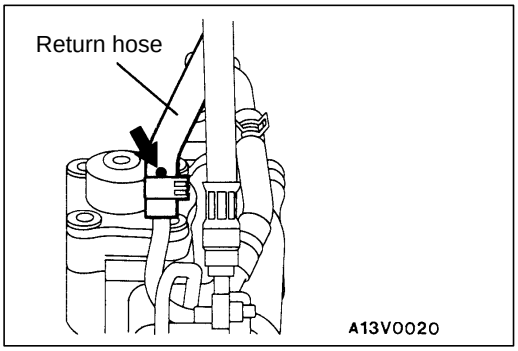

▶E◀ RETURN HOSE INSTALLATION

Install the return hose so that the marking faces towards front of the vehicle.

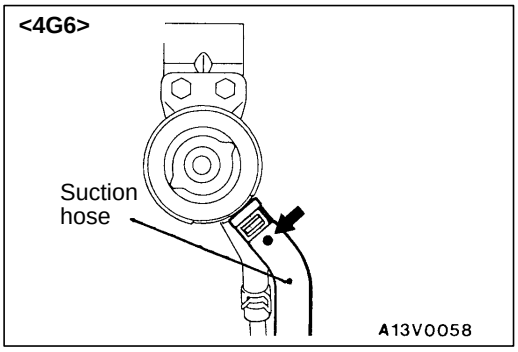

▶F◀ SUCTION HOSE INSTALLATION

Connect the suction hose so that the marking is positioned as shown in the illustration.

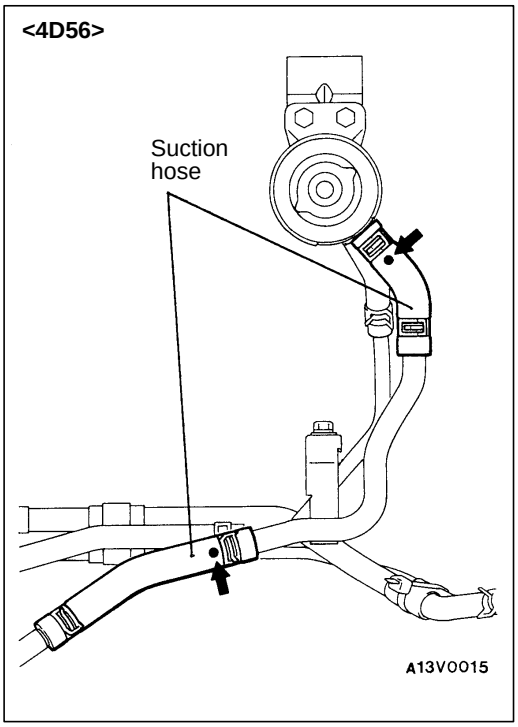

STEERING LINKAGE

37100300016

REMOVAL AND INSTALLATION

Post-installation Operation
- Checking Steering Wheel Position with Wheels Straight Ahead
- Front Wheel Alignment (Refer to GROUP 33A – On-vehicle Service.)

<2WD>

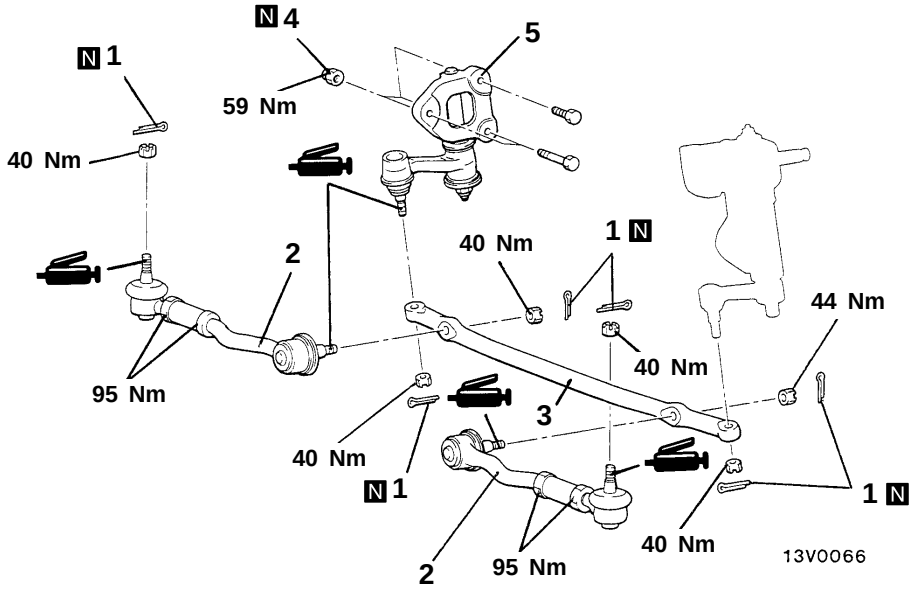

<4WD>

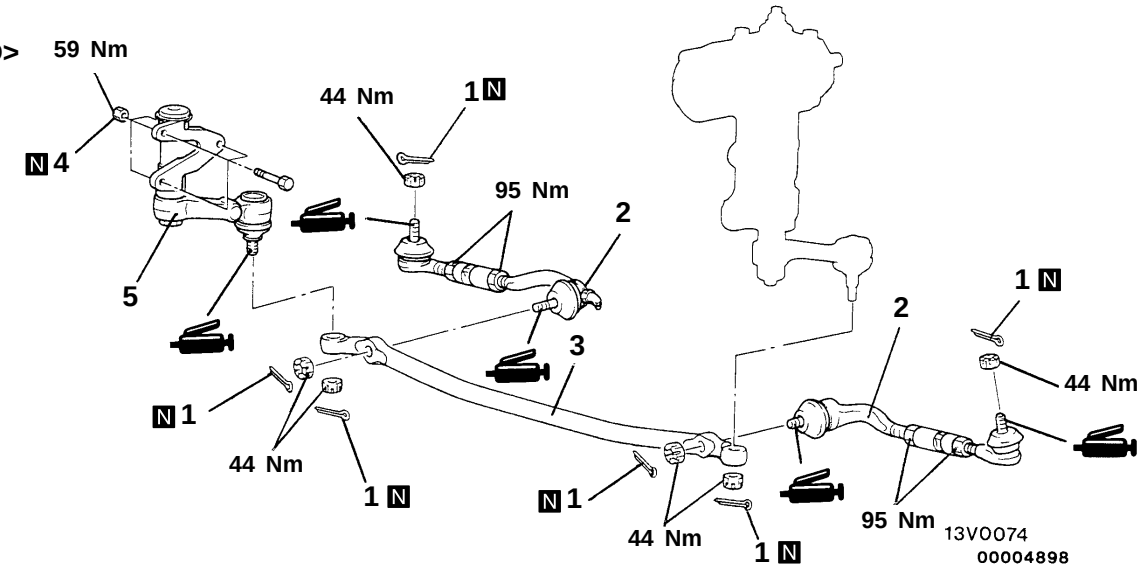

Removal steps

1. Split pin
◀A▶ ▶A◀ 2. Tie rod assembly
◀A▶ 3. Relay rod
◀A▶ 4. Self-locking nut
5. Idler arm assembly

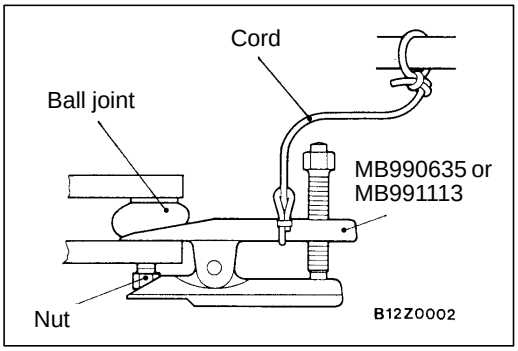

REMOVAL SERVICE POINT

◀A▶ TIE ROD ASSEMBLY/RELAY ROD/IDLER ARM ASSEMBLY REMOVAL

Use the special tool to disconnect the ball joint.

Caution

1. **Only loosen the tie rod end mounting nut; but do not remove it from the ball joint.**
2. **Support the special tool with a cord, etc. to prevent it from coming off.**

INSTALLATION SERVICE POINT

▶A◀ TIE ROD ASSEMBLY INSTALLATION

Tighten the tie rod assembly to the specified torque.

INSPECTION

37100310019

Check the rubber parts for cracks and break.

DUST COVER CHECK

If there are any cracks in or damage to the dust cover, replace the tie rod end assembly or idler arm. If the dust cover is damaged accidentally during service work, replace the dust cover only. (Refer to P. 37A-52.)

DISASSEMBLY AND REASSEMBLY

37100340018

Idler Arm

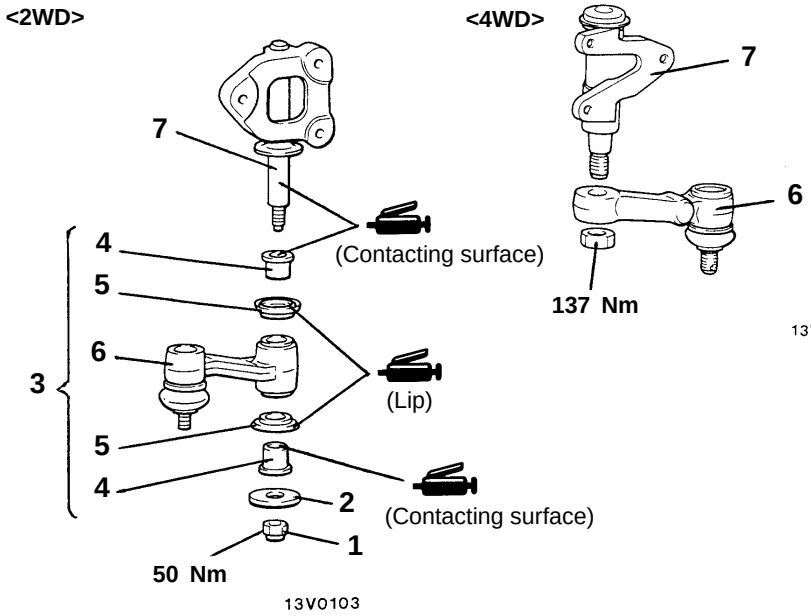

Tie rod assembly

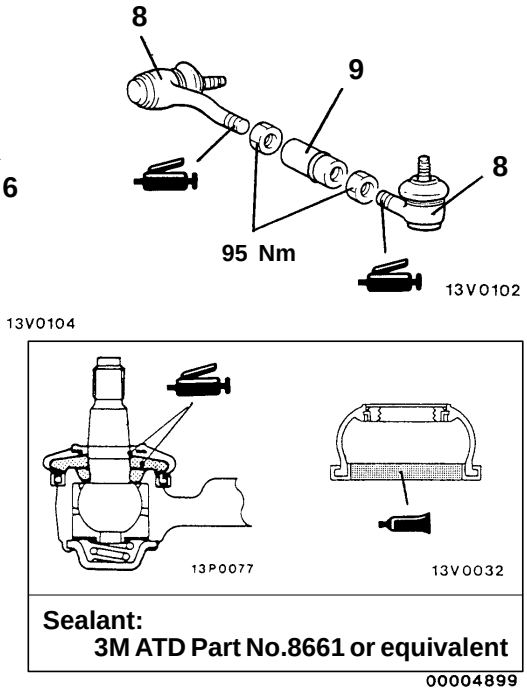

Idler arm disassembly steps

1. Self-locking nut
2. Washer
3. Idler arm assembly
4. ▶C◀ Bushing
5. ▶B◀ Oil seal
6. Idler arm
7. Idler arm support

Tie rod disassembly steps

8. ▶A◀ Tie rod end assembly
9. Pipe

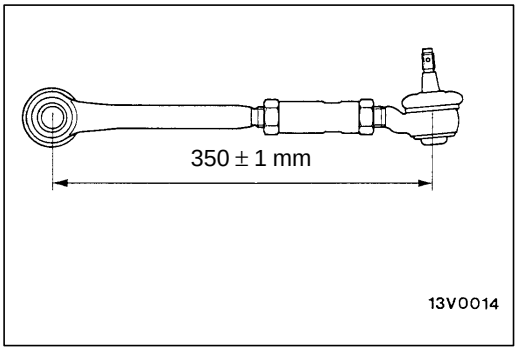

REASSEMBLY SERVICE POINTS

▶A◀ TIE-ROD END INSTALLATION

1. Apply multipurpose grease to the threaded section of the tie-rod end.
2. Screw in the right and left tie-rod ends to the pipe by the same amount, and then and provisionally tighten the tie-rod end fixing nut.

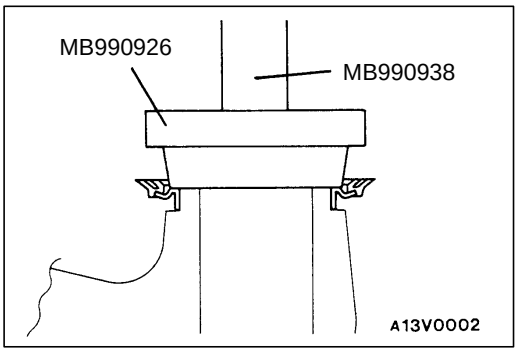

▶B◀ OIL SEAL INSTALLATION

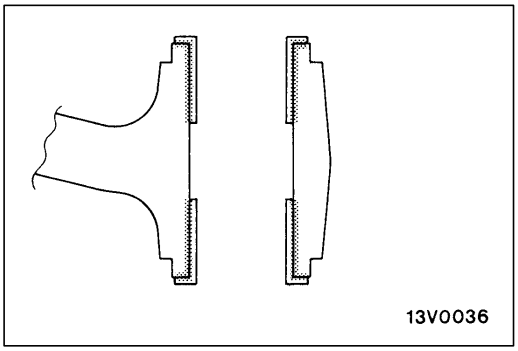

▶C◀ BUSHING INSTALLATION

1. Apply a neutral detergent to the inside of the idler arm and to the outside of the bushings.
2. Insert the bushings as far as the stepped section. If they won't go in easily, use a vice to push them in.

   Caution
   Wipe off the detergent after the bushings are inserted.

3. Apply multipurpose grease to the inside of the bushings and in between the bushings.

   Caution
   Do not apply grease to the outside of the bushings.

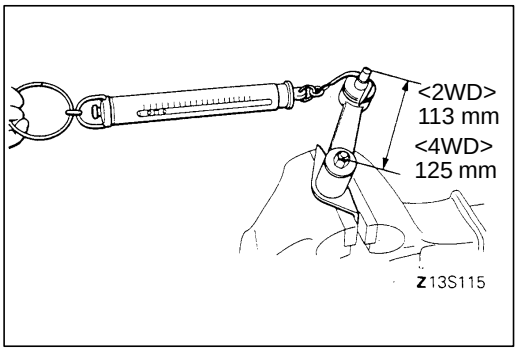

INSPECTION

37100350011

IDLER ARM SLIDING RESISTANCE

Standard value:
<2WD> 8.8 – 30 N [1.0 – 3.4 Nm]
<4WD> 2.4 – 16 N [0.3 – 2.0 Nm]

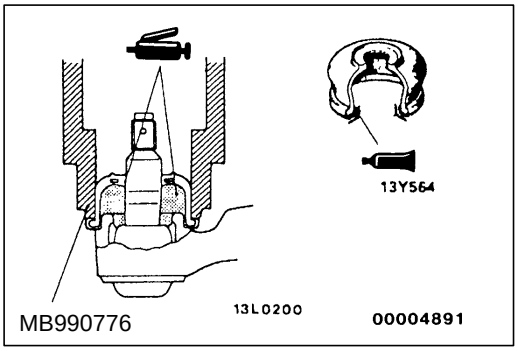

DUST COVER REPLACEMENT

Only when the dust cover is damaged accidentally during service work, replace the dust cover only as follows:

1. Fill inside the dust cover with multipurpose grease.
2. Apply the specified sealant to the dust cover lip.

   Specified sealant: 3M ATD Part No.8661 or equivalent

3. Using the special tool, install the dust cover to the tie rod end ball joint.

SERVICE BULLETIN

MITSUBISHI MOTORS

QUALITY INFORMATION ANALYSIS
OVERSEAS SERVICE DEPT. MITSUBISHI MOTORS CORPORATION

SERVICE BULLETIN		**No.:** MSB-98E37-002	
		Date: 1999-08-15	**<Model>** / **<M/Y>**
Subject:	NEW SERVICE PROCEDURE FOR POWER STEERING GEARBOX		(EC,EXP) L200 (K00) 97-10
Group:	STEERING	**Draft No.:** 98SY100912	(EC,EXP) PAJERO (V10,V20,V30,V40) 95-10
INFORMATION	**OVERSEAS SERVICE DEPT**	T.NITTA - VICE GENERAL MANAGER QUALITY INFORMATION ANALYSIS	

1. Description:

The mainshaft valve assembly in the power steering gearbox is now available only as an assembly (supply of individual components and parts discontinued). Accordingly, the service procedure for the power steering gearbox is also changed as shown in the attached sheets.

2. Applicable Manuals:

Manual	Pub. No.	Language	Page(s)
'97 L200 Workshop Manual CHASSIS	PWTE96E1	(English)	37A-3-~6, 28-34
	PWTS96E1	(Spanish)	
	PWTF96E1	(French)	
	PWTG96E1	(German)	
'95 PAJERO Workshop Manual CHASSIS	PWJE9086-F	(English)	37-3, 4, 6, 25-32
	PWJF9088-F	(French)	
	PWJG9089-F	(German)	
	PWJD9090-F	(Dutch)	
	PWJW9091-F	(Swedish)	
'95 MONTERO Workshop Manual CHASSIS	PWJS9087-F	(Spanish)	

3. Interchangeability:

Not interchangeable

4. Effective Date:

From when the part stock has been exhausted

SERIVICE SPECIFICATIONS

37100030021

Items			Standard value	Limit
Steering Wheel free play mm		With engine running	-	50
		With engine stopped	10 or less	-
Steering angle	2WD	Inner wheel	33°55'-36°55'	-
		Outer wheel	30°57'	-
	4WD	Inner wheel	29°40'-32°40'	-
		Outer wheel	29°30'	
Steering gear backlash mm			-	0.5
Variation of tie rod end ball joint shaft direction mm			-	1.5
Tie rod end ball joint starting torque Nm			3.0	-
Steering gear oil level mm			22	-
Engine idle speed r/min		4G6	750 ± 100	-
		4D56	750 ± 100	-
Stationairy steering effort N			39.2 or less	-
Oil pump pressure MPa	Oil pump relief pressure		8.3 - 9.0	-
	Pressure under no-load conditions		0.8 - 1.0	-
	Steering gear retention hydraulic pressure		8.3 - 9.0	-
Oil pressure switch operating pressure Mpa		OFF → ON	1.5 – 2.0	-
		ON → OFF	0.7 – 1.2	-
Mainshaft starting torque Nm			0.49 – 0.78	-
Cross-shaft axial play mm			0.05 or less	-
Mainshaft total starting torque Nm		<2WD>	0.98 – 1.47	-
		<4WD>	0.69 – 1.28	-
Pitman arm ball joint starting torque Nm			0.5 – 1.5	-
~~Mainshaft axial play mm~~			~~0.03 or less~~	~~-~~
Backlash between ball groove of rack piston and balls mm			-	0.05
Idler arm sliding resistance N		2WD	8.8 – 30	-
		4WD	2.4 – 16	-

<Deleted>

LUBRICANTS

37100040017

Items	Specified lubricants	Quantity l
Manual steering gear oil	Hypoid gear oil API GL-4 higher SAE80	0.21
Power steering fluid	Automatic transmission fluid DEXRON or DEXRON II	0.8
~~Seal rigg~~, rack piston, ~~mainshaft~~, cross-shaft, ~~bearing~~, O-ring, ~~oil seal~~, vane	Automatic transmission fluid DEXRON or DEXRON II	As required

<Deleted>

SEALANTS

37100050010

Items	Specified sealants	Remarks
Cover assembly installation hole Adjusting bolt, seal bolt, packing, adjusting shim, dust cover lip for ball joint	3M ATD Part No. 8663 or equivalent	Semi-drying sealant

SPECIAL TOOLS

37100060013

Tools	Number	Name	Use
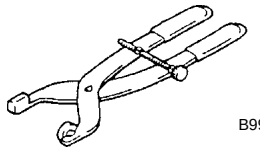 B990948	MB990948	Linkage joint gauge	Ball joint variation check for shaft direction
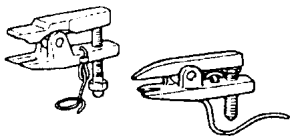 00003982	MB991113 or MB990635	Steering linkage puller	Disconnection of ball joint
	MB990685 MB991151	Torque wrench	• Measurement of the ball joint starting torque • Measurement of the shaft preload • Measurement of the mainshaft starting torque
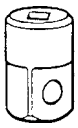	MB990326	Preload socket	Measurement of the ball joint starting torque
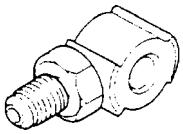 B990993	MB990993 or MB991217	Power steering oil pressure gauge adapter (pump side)	Measurement of oil pressure

Tools	Number	Name	Use
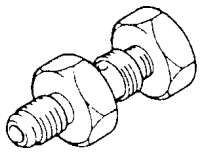 B990994	MB990994	Power steering oil pressure gauge adapter (hose side)	Measurement of oil pressure
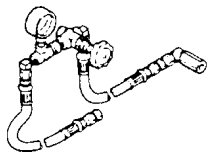 B990662	MB990662	Oil pressure gauge assembly	
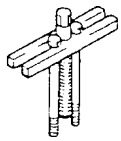 B990803	MB990803	Steering wheel puller	Disconnection of the steering wheel
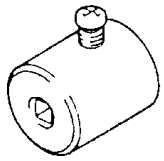 B991006	MB991006 or MB990228	Preload socket	Measurement of the mainshaft total starting torque
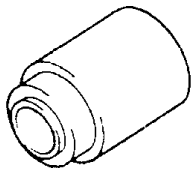 B990776	MB990776	Front axle base	Installation of dust cover for tie rod end ball joint
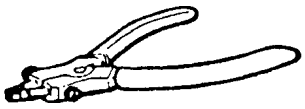	MB990628	Snap ring pliers	To remove and install the snap ring of the pulley asembly
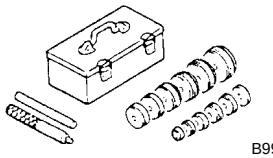 B990925	MB990925	Bearing and oil seal installer set	Installation of the oil seal and bearing (Refer to GROUP 26 – Special tools)
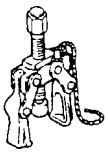 B990915	MB990915	Pitman arm puller	Removal of the pitman arm
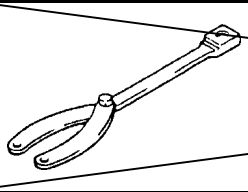 B991367	MB991367	Special spanner	Removal and installation of the lock nut

<Deleted>

<Deleted>

Tools	Number	Name	Use
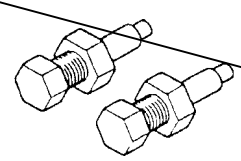 B991394	MB991394	Pin set	Removal and installation of the lock nut
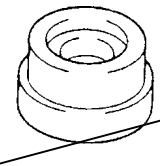 B991203	MB991203	Oil seal & bearing installer	To press in the valve housing oil seal and bearing
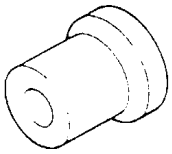 B990956	MB990956	Needle bearing installer	To press in the drive shaft assembly
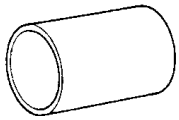	MB991172	Adapter	
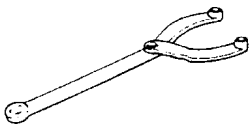	MB990767	End york holder	Securing the drive pulley
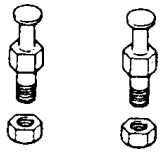	MB998719 or MD998754	Crankshaft pulley holder pin	

DISASSEMBLY

37200420029

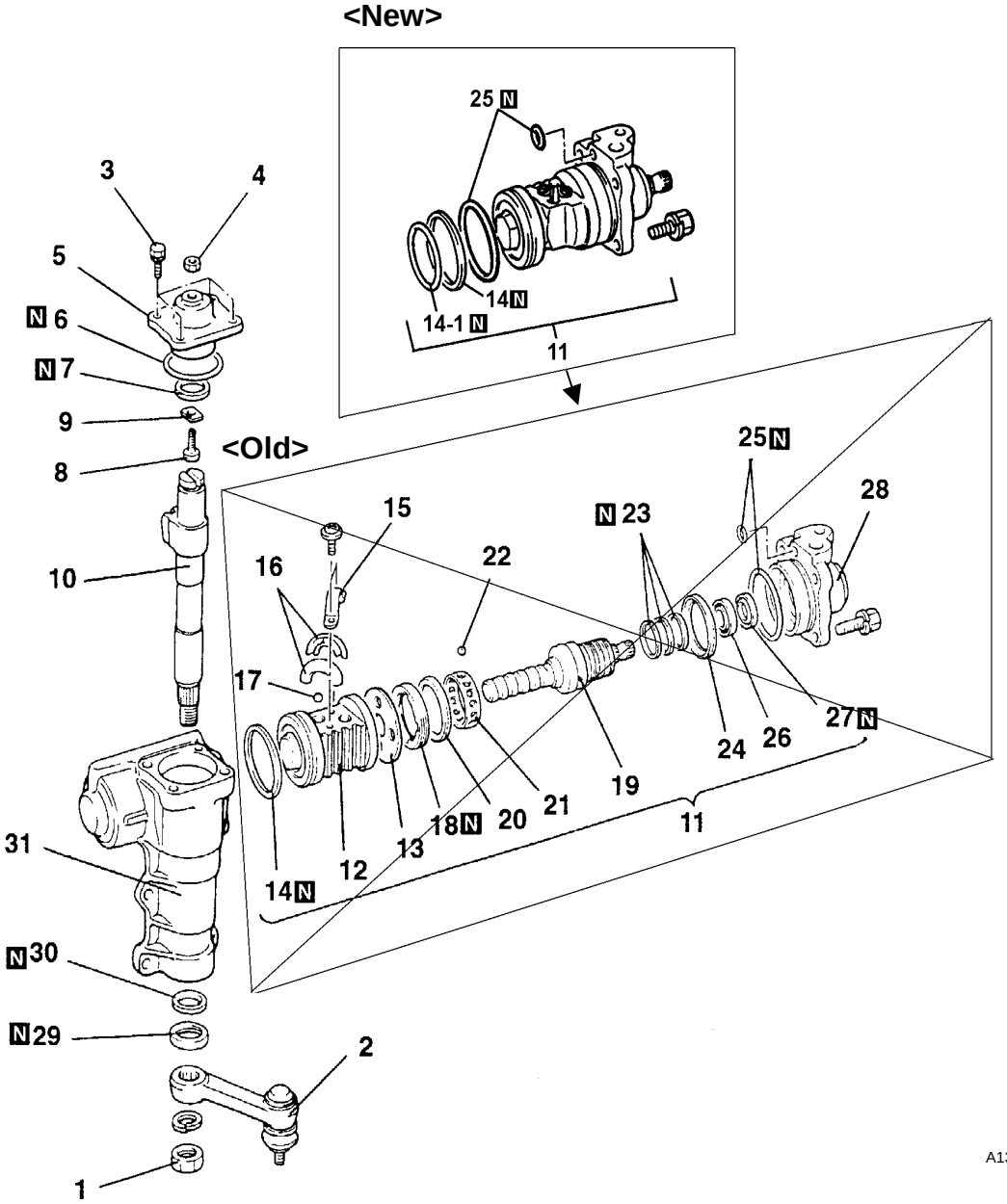

Disassembly steps

	1.	Jam nut
◀A▶	2.	Pitman arm
	3.	Bolts
	4.	Adjusting bolt locking nut
◀B▶	5.	Side cover
	6.	O-ring
	7.	Y-packing
	8.	Adjusting bolt
	9.	Adjusting plate
◀C▶	10.	Cross-shaft
	11.	Mainshaft and valve assembly
◀D▶	12.	~~Rack piston~~
	13.	~~Spacer~~
	14.	Seal ring
	15.	~~Circulator helder~~
	16.	~~Circulator~~
	17.	~~Ball~~
◀E▶	18.	~~Lock nut~~
◀F▶	19.	~~Mainshaft~~
◀F▶	20.	~~Bearing race~~
	21.	~~Cage~~
◀F▶	22.	~~Ball~~
	23.	~~Seal ring~~
	24.	~~Bearing race~~
	25.	O-ring
◀G▶	26.	~~Bearing~~
◀G▶	27.	~~Oil seal~~
	28.	~~Valve housing~~
	29.	Oil seal
	30.	Y-packing
	31.	Gear box housing

<Deleted>

<Added>

14-1. O-ring

<Deleted>

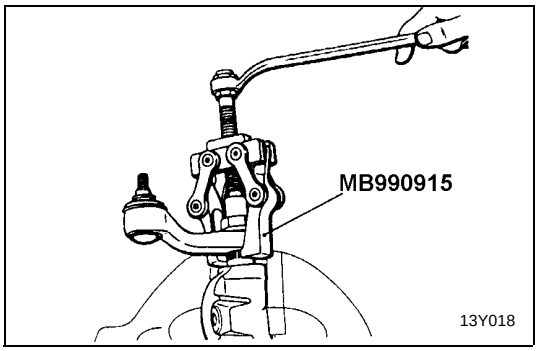

DISASSEMBLY SERVICE POINTS

◀A▶PITMAN ARM REMOVAL

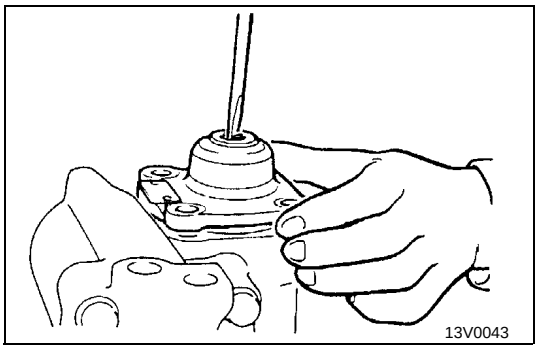

◀B▶SIDE COVER REMOVAL

1. Loosen the lock nut and then turn the adjusting bolt anti-clockwise slightly.
2. Screw in the adjusting bolt without turning the side cover, and then remove the side cover.

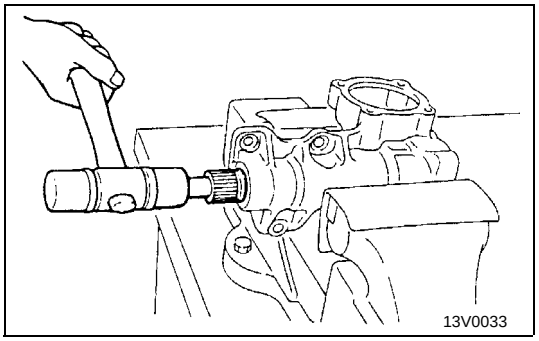

◀C▶CROSS-SHAFT REMOVAL

With the mainshaft and cross-shaft placed in the straight ahead position, tap the bottom of the cross-shaft with a plastic hammer to take out the cross-shaft together with the side cover.

<Deleted>

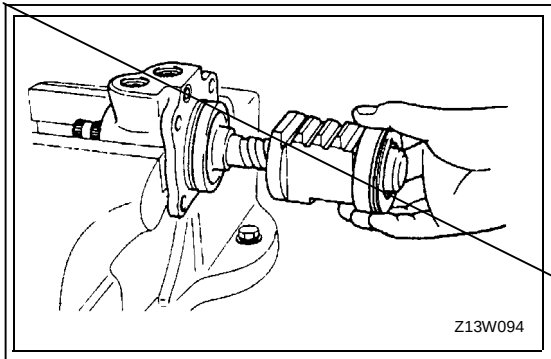

◀D▶RACK PISTON REMOVAL

Remove the rack piston from the mainshaft by turning it counterclockwise.

Caution

Be careful not to lose the 26 balls inside the rack piston.

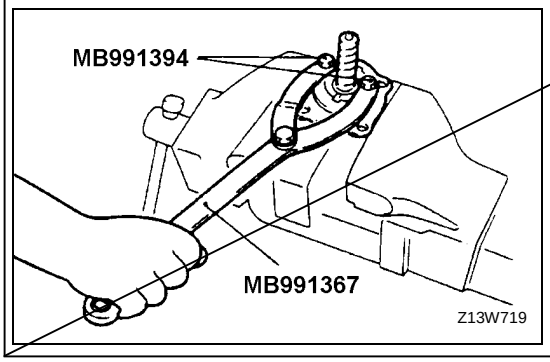

◀E▶LOCK NUT REMOVAL

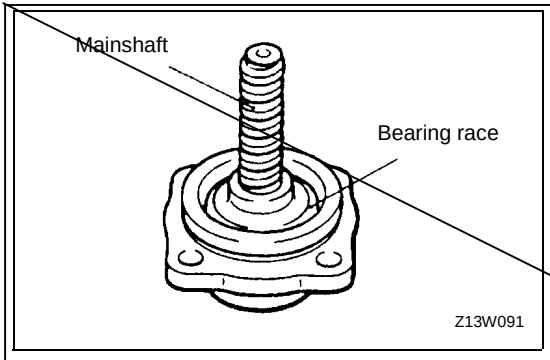

◀F▶MAINSHAFT, BEARING RACE AND BALL REMOVAL

Remove the mainshaft while pressing the bearing race so that the balls do not come out.

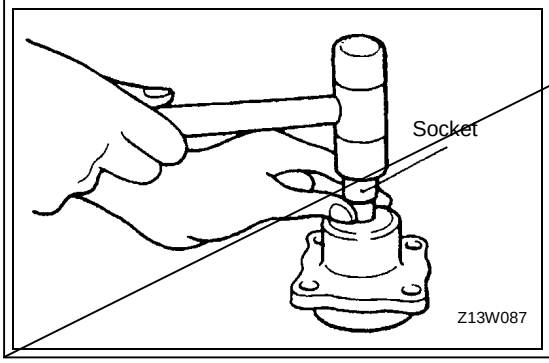

◀G▶BEARING AND OIL SEAL REMOVAL

using a socket, remove the oil seal and bearing from the valve housing simultaneously.

<Deleted>

REASSEMBLY

37200430022

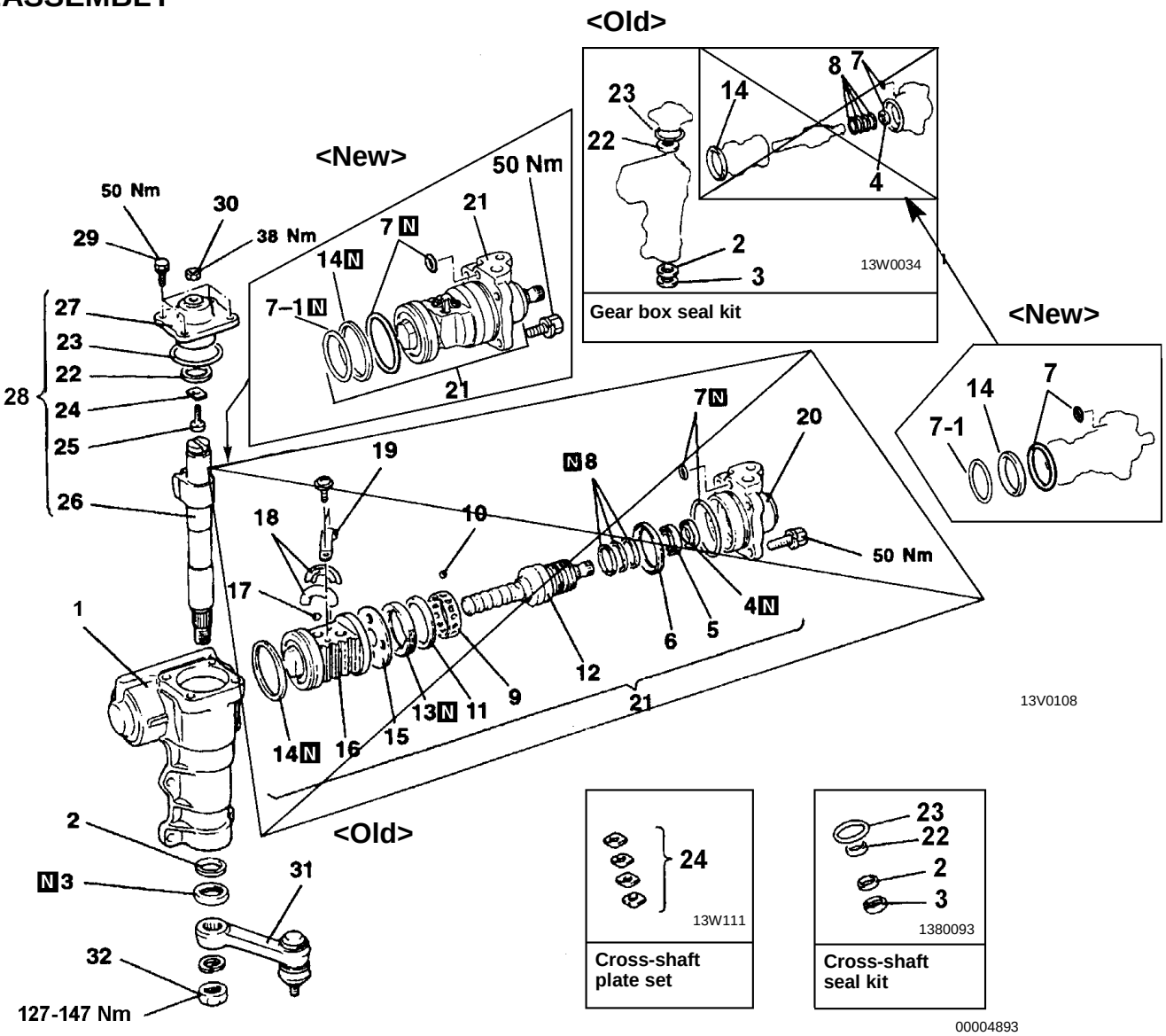

A13V0108

Reassembly steps

1. Gear box housing
2. Y-packing
- ▶A◀ 3. Oil seal
- ▶B◀ 4. Oil seal
- ▶C◀ 5. Bearing
6. Bearing case
7. O-ring
- ▶D◀ 8. Seal ring
- ▶E◀ 9. Cage
- ▶E◀ 10. Ball
- ▶E◀ 11. Bearing race
- ▶E◀ 12. Mainshaft
- ▶F◀ 13. Lock nut
- ▶G◀ • Mainshaft axial play adjustment
14. Seal ring
15. Spacer
- ▶H◀ 16. Rack piston
- ▶H◀ 17. Ball
18. Circulator

<Deleted>

7-1. O-ring

<Added>

<Deleted>

19. Circulator holder
20. Valve housing
21. Mainshaft and valve assembly
22. Y-packing
23. O-ring
- ▶I◀ • Cross-shaft axial play adjustment
24. Adjusting plate
25. Adjusting bolt
- ▶J◀ 26. Cross-shaft
27. Side cover
28. Side cover and cross-shaft assembly
29. Bolt
- ▶K◀ • Mainshaft total staring torque Adjustment
30. Adjusting bolt lock nut
- ▶L◀ 31. Pitman arm
32. Jam nut

LUBRICATION AND SEALING POINTS

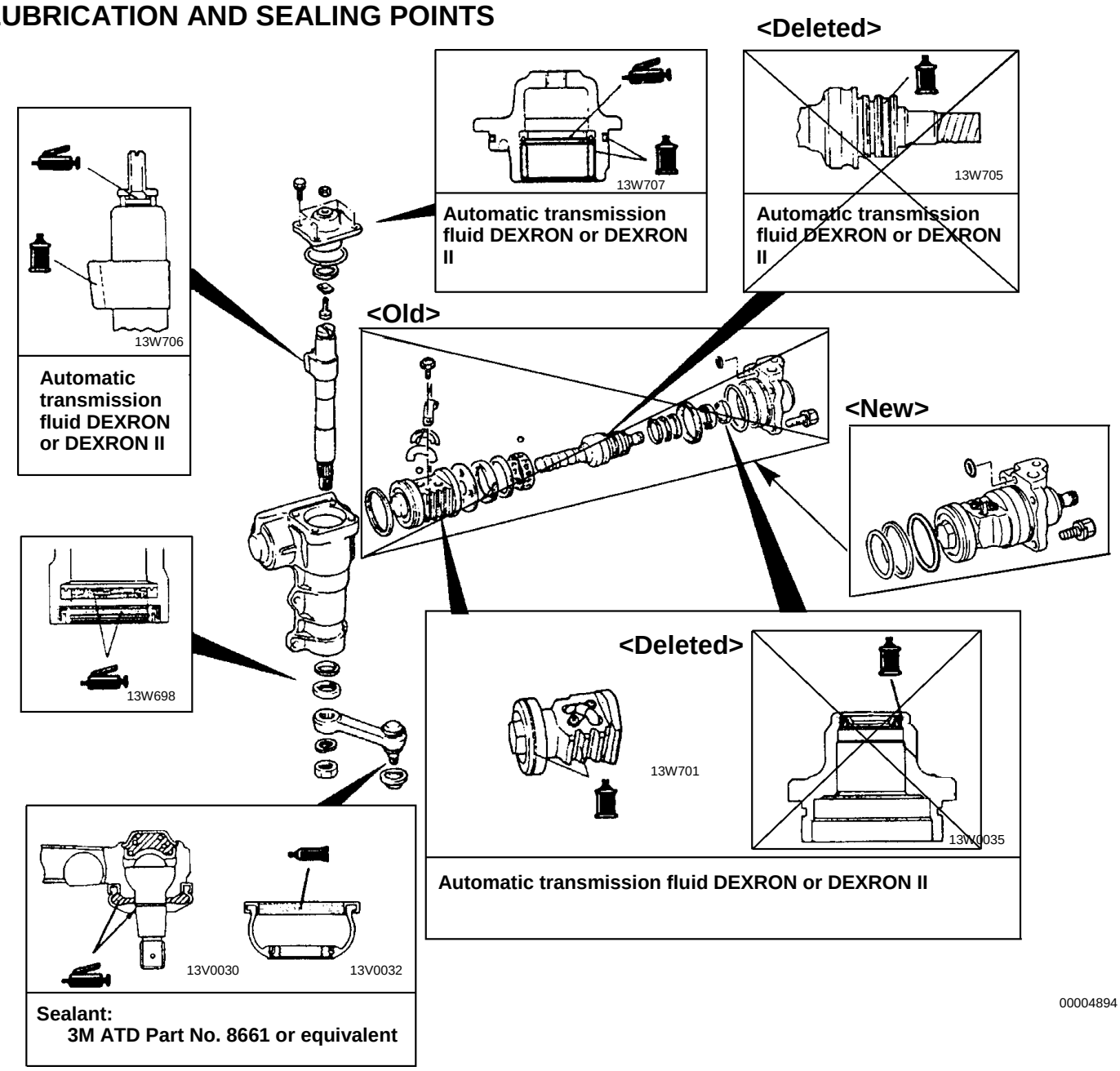

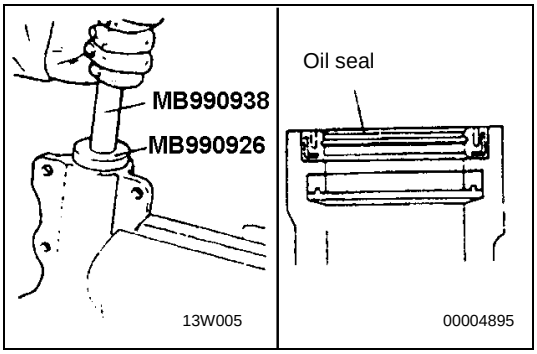

REASSEMBLY SERVICE POINTS

◀A▶OIL SEAL INSTALLATION

Apply a coating of the specified fluid to the outside of the oil seal. Using the special tools, press the oil seal into the valve housing.

Specified fluid:

Automatic transmission fluid DEXRON or DEXRON II

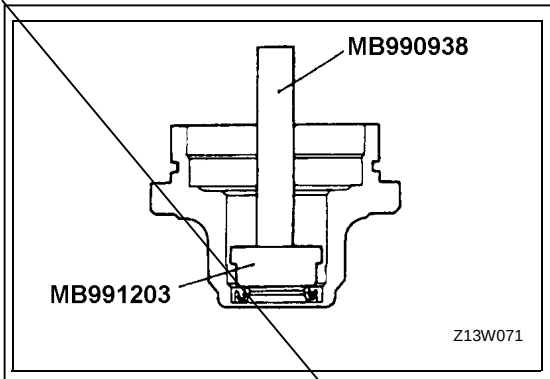

▶B◀ OIL SEAL INSTALLATION

Apply a coating of the specified fluid to the outside of the bearing. Using the special tools, press the oil seal into the valve housing.

Specified fluid:
Automatic transmission fluid
DEXRON or DEXRON II

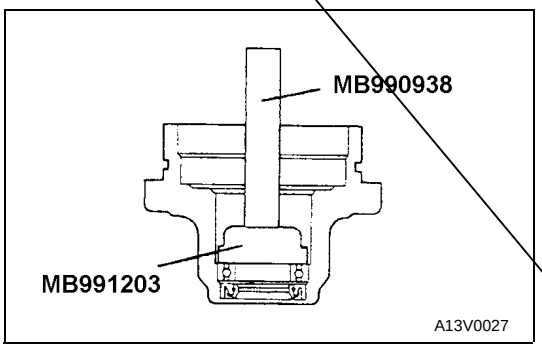

▶C◀ BEARING INSTALLATION

Apply a coating of the specified fluid to the outside of the bearing. Using the special tools, press the bearing into the valve housing.

Specified fluid:
Automatic transmission fluid
DEXRON or DEXRON II

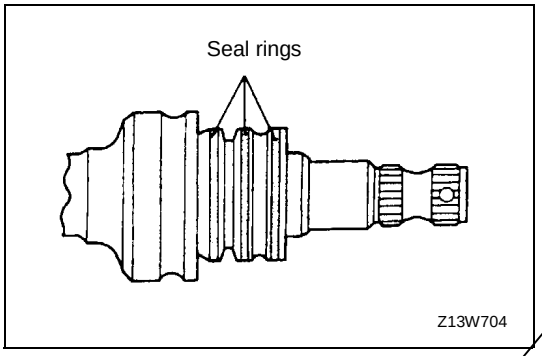

▶D◀ SEAL RING INSTALLATION

Press the seal ring firmly into the valve groove.

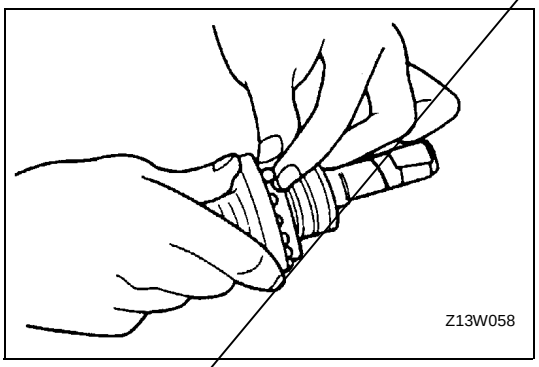

▶E◀ CAGE, BALLS, BEARING RACE AND MAINSHAFT INSTALLATION

1. Apply specified fluid to the mainshaft.
   Specified fluid:
   Automatic transmission fluid
   DEXRON or DEXRON II
2. Wrap vinyl tape around the serrated part so that the oil seal won't be damaged when the mainshaft is installed to the valve housing.
3. Mount the mainshaft to the valve housing.
4. Align the cage's hole and the channel in the mainshaft and insert two or three balls.
5. Insert the remainder of the balls into the cage's hole while pressing the ball with the bearing race.
6. When installing the mainshaft, connect it to the valve housing while pressing the bearing race so that the balls do not come out.

<Deleted>

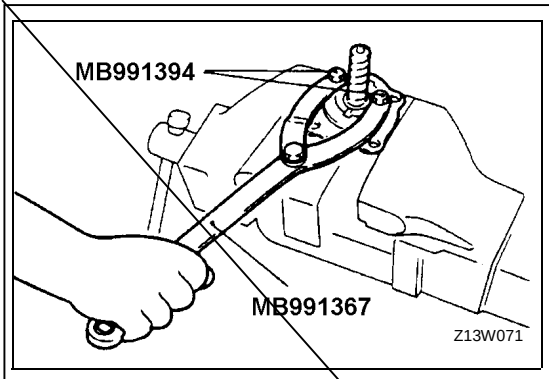

▶F◀ LOCK NUT INSTALLATION

Using special tools, tighten carefully until the lock nut contacts the bearing race.

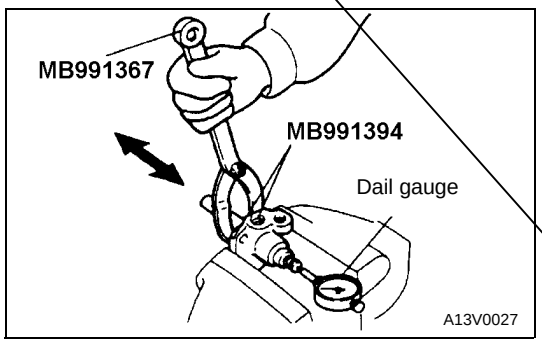

▶G◀ MAINSHAFT AXIAL PLAY ADJUSTMENT

1. Adjust the play by tightening the lock nut gradually so that the mainshaft axial play will meet the range of the standard value.

   Standard value: 0.03 mm or less

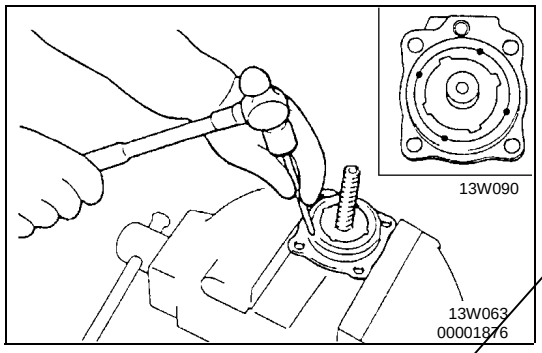

2. Use a punch to crimp the circumference of the lock nut so as to secure the lock nut.
3. Check to be sure that the mainshaft rotates smoothly.

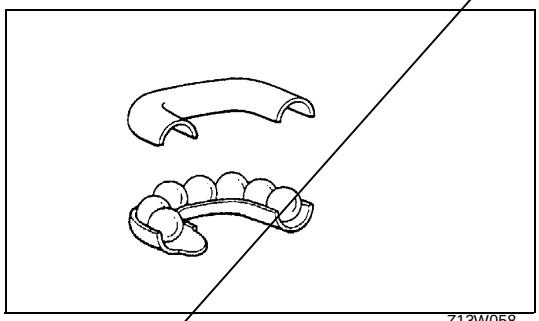

▶H◀ RACK PISTON AND BALLS INSTALLATION

1. Install the rack piston until it comes in contact with the edge of the mainshaft.
2. Rotate the mainshaft to align the ball race way with the 19-ball insertion hole.

   NOTE
   The balls must be inserted so that there is no clearance between the balls.
3. Set the remaining seven balls in the circulator, and install the circulator to the rack piston.
4. Apply the specified fluid to the seal ring of the rack piston.

   Specified fluid:
   Automatic transmission fluid
   DEXRON or DEXRON II

<Deleted>

Items		Specifications
Pressure switch activation oil pressure		
	Mpa (kg/cm^2, psi)	
OFF → ON		1.5 – 2.0 (15 – 20, 21-284)
ON→ OFF		0.7 – 1.2 (7.2 – 12, 100-171)
Mainshaft starting torque (Manual steering)		
<Deleted>	Nm (kgcm, in.lbs.)	0.35 – 0.55 (3.5 – 5.5, 3 – 5)
~~Mainshaft axial play (Power steering)~~	~~mm (in.)~~	~~0.03 – (0.0012) or less~~
Cross-shaft axial play	mm (in.)	
Manual steering’		0.05 (0.0020)
Power steering		0.05 (0.0020)
Mainshaft total starting torque	Nm (kgcm, in.lbs.)	
Manual steering		0.65 – 0.85 (6.5 – 8.5, 5.7 – 7.3)
Power steering		0.45 – 1.25 (4.5 – 12, 5, 4 – 11)
Ball joint starting torque	Nm (kgcm, in.lbs.)	
Tie rod end		1 – 3 (10 – 30, 8.9 – 26)
Idler arm		0.5 – 2.0 (5 – 520, 4 – 17)
Idler arm turning torque	Nm (kgcm, in.lbs.)	0.3 – 2.0 (3 – 20, 3 – 17)
Spring balance reading	N (kg,lbs)	2.3 – 15.4 (0.23 – 1.54, 0.5 – 33.9)
Limit		
Steering wheel free play	mm (in.)	
Manual steering		50 (1.97)
Power steering		50 (1.97)
Steering gear backlash	mm (in.)	0.5 (0.020)
Ball joint axia play	mm (in.)	1.5 (0.059)
Backlash between ball groove of rack piston		
And balls	mm (in.)	0.05 (0.0020)
Gap between vane and rotor groove	mm (in.)	0.06 (0.0024)
Clearance between oil pump drive shaft		
And pump body	mm (in.)	0.1 (0.004)

LUBRICANTS

E37CD--

Items	Specified lubricant	Quantity
Manual steering gear oil	Hypoid gear oil API GL-4 or higher SAE 80	210 cm3 (12.81 cu.in.)
Power steering fluid L.H. drive vehicles <2800D> <Except 2800D> R.H. drive vehicels <2800D> <Except 2800D>	Automatic transmission fluid DEXRON or DEXRON II	 11.1 dm3 (1.17 U.S.qts., 0.98 lmp.qts.) 1.06 dm3 (1.12 U.S.qts., 0.93 lmp.qts.) 1.02 dm3 (1,08 U.S.qts., 0.90 lmp.qts.) 0.97 dm3 (1.02 U.S. qts., 0.85 lmp.qts.)
Power steering gear box ~~Bearing~~, O-ring and oil seal **<Deleted>**	Automatic transmission fluid DEXRON or DEXRON II	As required
Oil pump Flow control valve and O-ring Friction surface of rotor, vane, cam ring and pump cover	Automatic transmission fluid DEXRON or DEXRON II	As required

SEALANTS AND ADHESIVES

E37CE--

Items	Specified sealant and adhesive	Remarks
Steering column cover assembly installation hole Dash panel cover installed surface Manual steering gear box top cover packing Manual steering gear box cross-shaft adjusting and lock nut Manual steering gear box top cover bolt Manual steering gear box adjusting shim Tie-rod end dust cover installed surface	3M ATD Part No. 861 or equivalent	Semi-drying sealant
Inside of steering column lower pipe bearing Connection of steering column upper and steering column lower (Nut side)	3M Stud Locking Part No. 4170 or equivalent	Semi-drying sealant
Steering column upper bearing	3M ATD Part No. 8001 or equivalent	Semi-drying sealant

Tool	Number	Name	Use
	MB990925	Bearing and oil seal installer set	Installation of the oil seal and the ball bearing (Refer to GROUP 26.) MB990938, MB99028,MB990926, ~~MB991203~~ ◄—— **<Deleted>**
	MB991151 MB990685	Torque wrench	Measurement of the mainshaft starting torque
	MB991006 or MB990228	Preload socket	Measurement of the mainshaft total starting torque **<Deleted>**
	MB991367	Special spanner	Removal and installation of the lock nut
	MB991394	Pin set	
	MB990326	Preload socket	Measurement of the ball joint starting torque
	MB990778	Ball joint remover	Disconnection of idler arm from relay rod

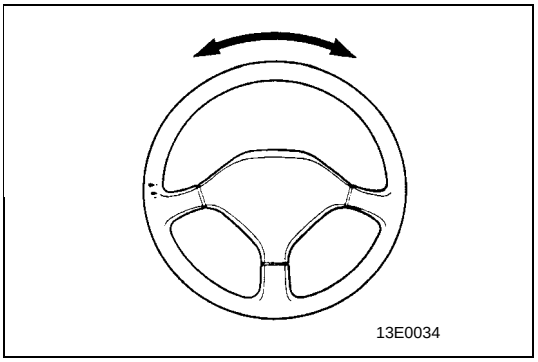

SERVICE ADJUSTMENT PROCEDURES

STEERING WHEEL FREE PLAY CHECK

E37FAAF

MANUAL STEERING

Standard value: 26.6 mm (1.05 in.) or less

Limit: 50 mm (1.97 in.)

If the measured value exceeds the repair limit, check the steering gear backlash and ball joint axial play.

DISASSEMBLY

E37NF--

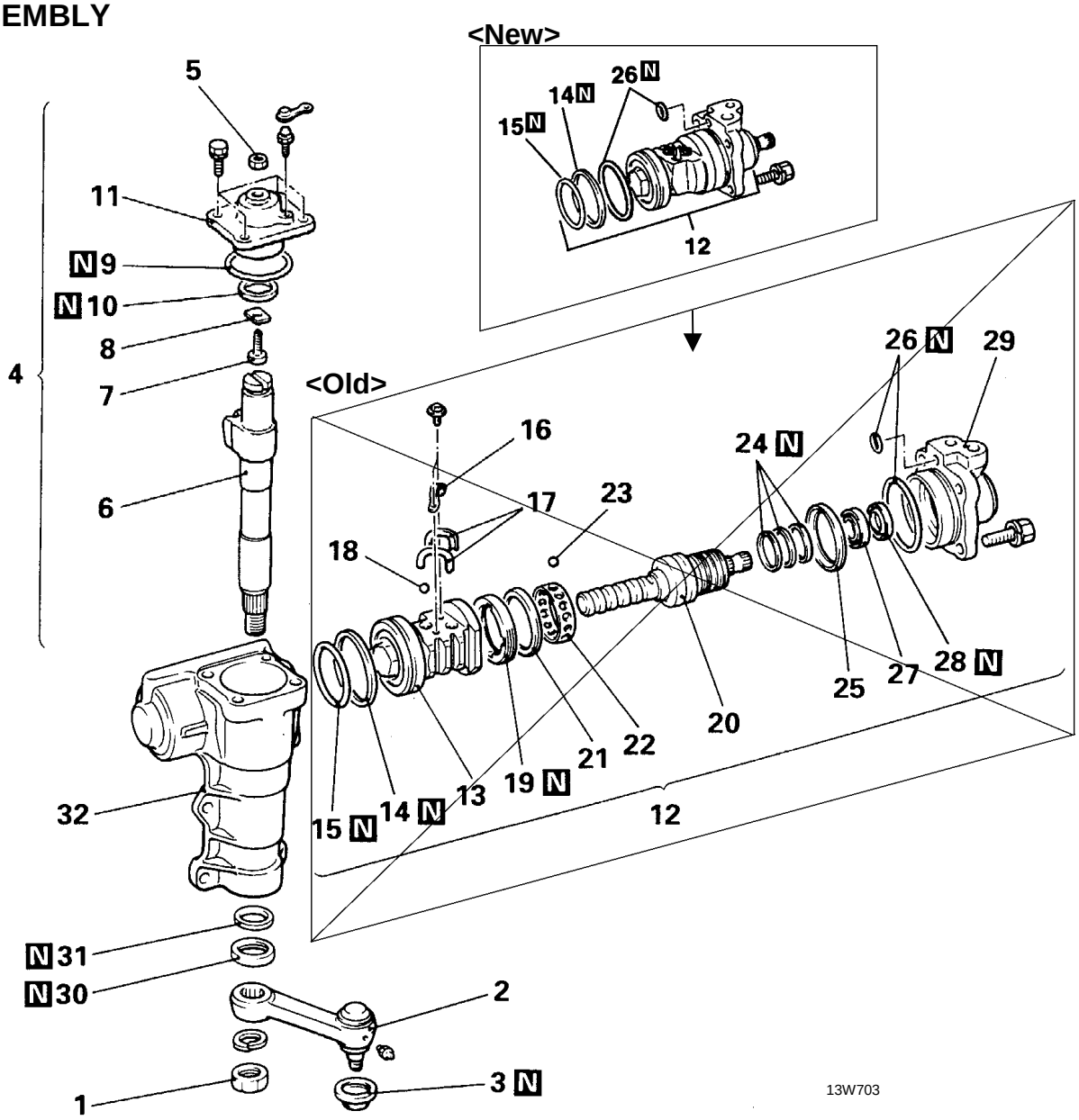

Disassembly steps

1. Jam nut
2. ←→ Pitman arm
3. Dust cover
4. ←→ Side cover and cross-shaft assembly
5. Adjusting bolt lock nut
6. Cross-shaft
7. Adjusting bolt
8. Adjusting plate
9. O-ring
10. ←→ Y-packing
11. Side cover
12. ←→ Main shaft and valve assembly
13. ←→ ~~Rack piston~~
14. Seal ring
15. O-ring
16. ~~Circulation holder~~

<Deleted>

17. Circulator
18. Ball
19. ←→ Lock nut
20. ←→ Main shaft
21. ←→ Bearing race
22. ←→ Cage
23. ←→ Ball
24. Seal ring
25. Bearing race

<Deleted>

26. O-ring
27. ←→ Bearing
28. ←→ Oil seal
29. Valve housing
30. Oil seal
31. Y-packing
32. Gear box housing

SERVICE POINTS OF DISASSEMBLY

E37NGAE

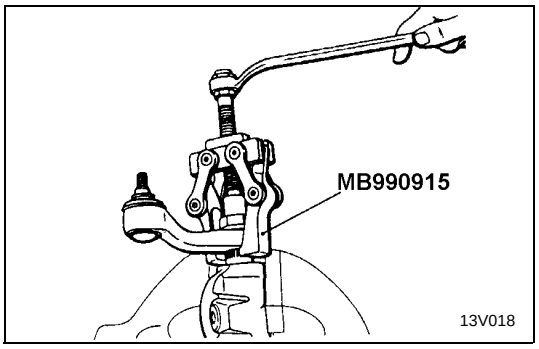

2. REMOVAL OF PITMAN ARM

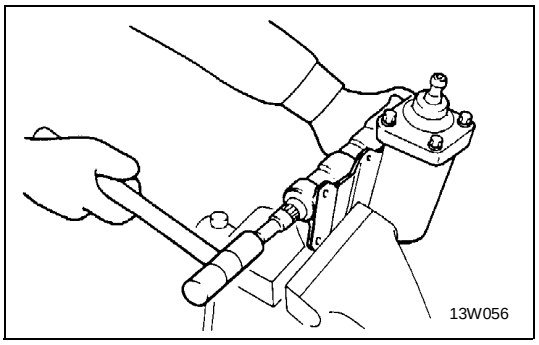

4. REMOVAL OF SIDE COVER AND CROSS-SHAFT ASSEMBLY

With the mainshaft and cross-shaft placed in the straight ahead position, tap the bottom of the cross-shaft with a plastic hammer to take out the cross-shaft together with the side cover.

10. REMOVAL OF Y-PACKING

Do not remove the Y-packing at the rear of the needle bearing unless there is fluid leakage from the threads of the adjusting bolt. If there is leakage, replace the Y-pacing with a new one.

<Deleted>

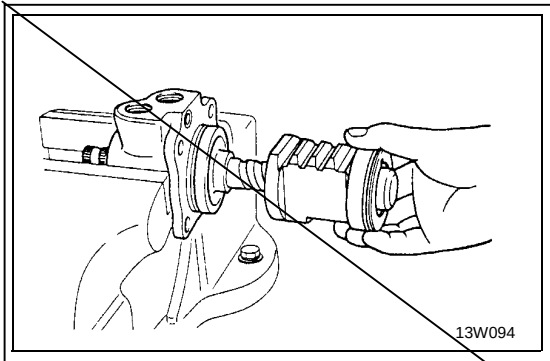

13. REMOVAL OF RACK PISTON

Remove the rack piston form the mainshaft by turning it counterclockwise.

Caution
Be careful not to lose the 26 balls inside the rack piston.

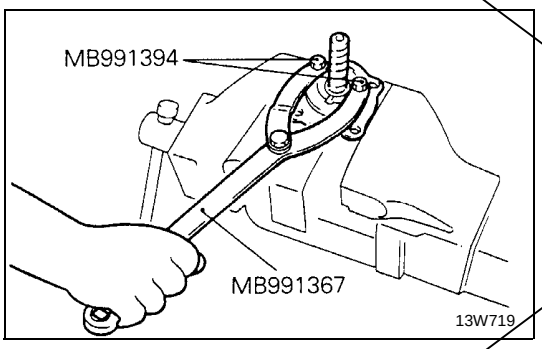

19. REMOVAL OF LOCK NUT

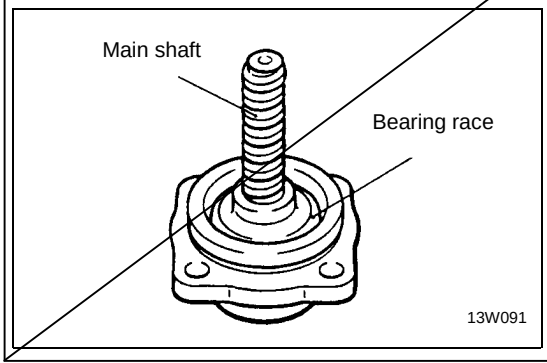

20. REMOVAL OF MAIN SHAFT/21. BEARING RACE/22. CAGE/23. BALL

When removing the main shaft, remove it while pressing the bearing race so that the balls do not come out.

<Deleted>

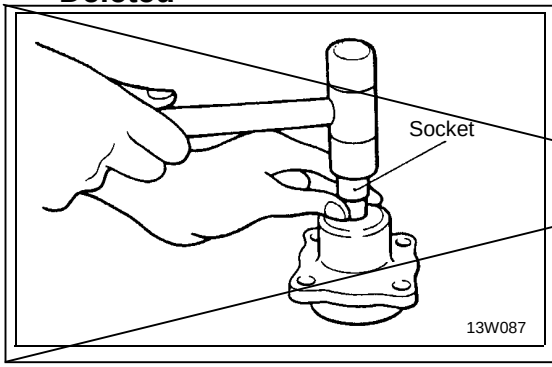

27. REMOVAL OF BEARING/28. OIL SEAL

Using a socket, remove the oil seal and the bearing from the valve housing simultaneously.

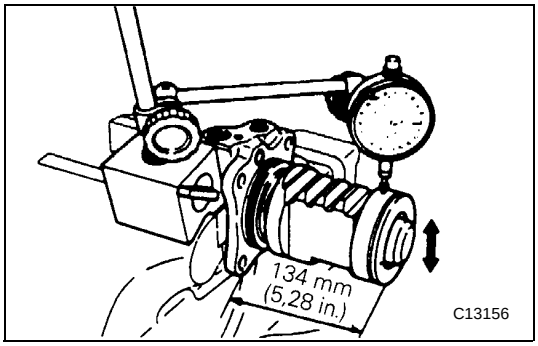

INSPECTION

E37NHAD

BACKLASH BETWEEN BALL GROOVE OF RACK PISTON AND BALLS

Set the rack piston to the position shown in the figure, and then measure the backlash by using a dial gauge.

Limit: 0.05 mm (0.0020 in.)

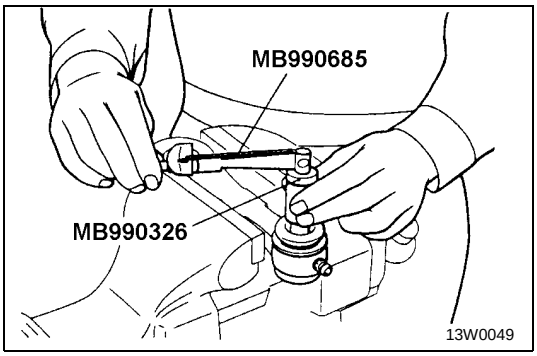

PITMAN ARM BALL JOINT STARTING TORQUE

Standard value: 1-3 Nm (10-30 kgcm, 9-26 in.lbs.)

REASSEMBLY

E37NI--

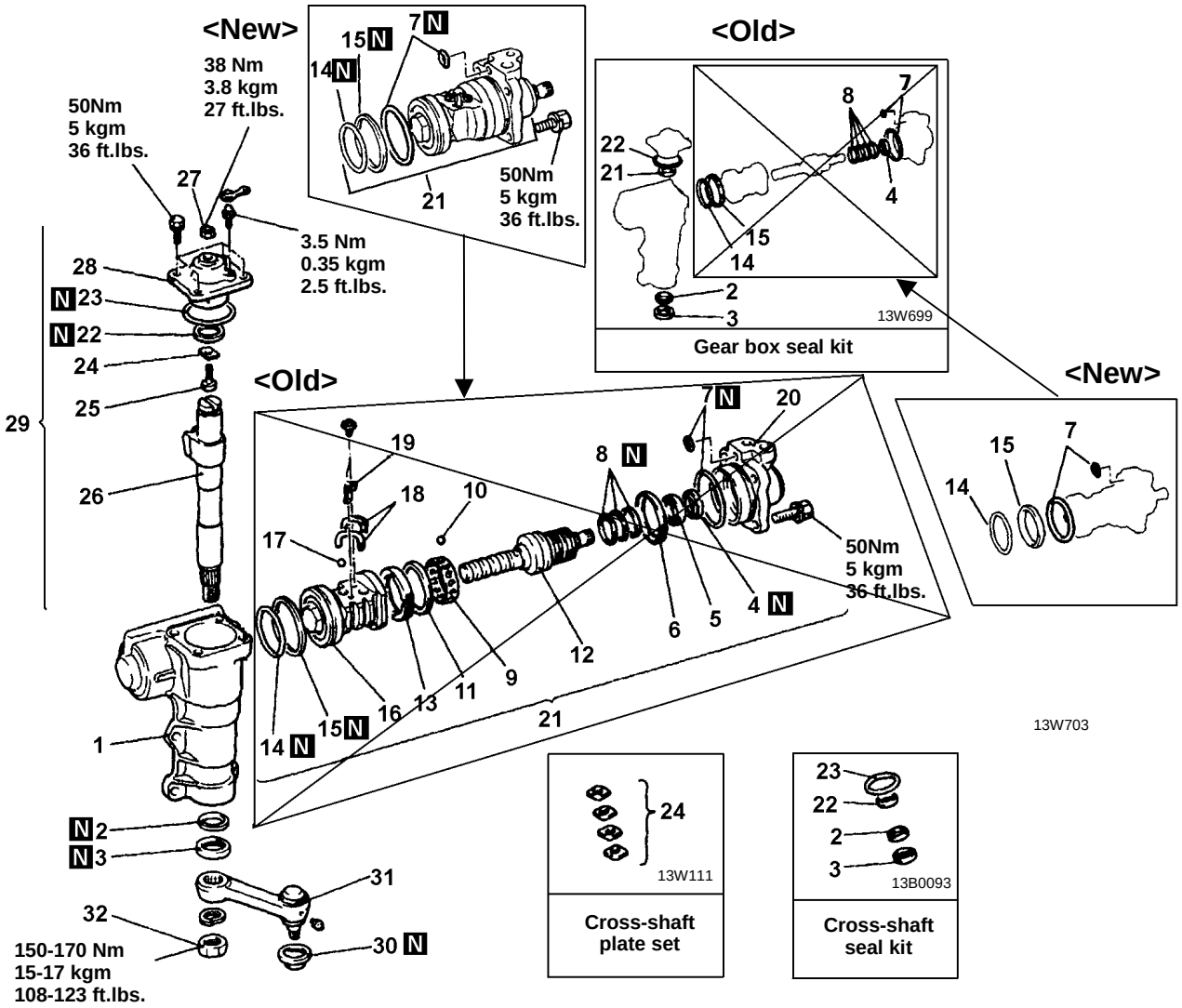

Reassembly steps

1. Gear box housing
2. ➔🡐 Y-packing
3. ➔🡐 Oil seal
4. ➔🡐 Oil seal
5. ➔🡐 Bearing
6. Bearing case
7. O-ring
8. ➔🡐 Seal ring
9. ➔🡐 Cage
10. ➔🡐 Ball
11. ➔🡐 Bearing race
12. ➔🡐 Mainshaft
13. ➔🡐 Lock nut
- ➔🡐 • Adjustment of main shaft axial play
14. O-ring
15. Seal ring
16. ➔🡐 Rack piston
17. Ball

<Deleted>

<Deleted>

A13V0108

18. Circulator
19. Circulator holder
20. ➔🡐 Valve housing
21. Mainshaft and valve assembly
22. Y-packing
23. O-ring
24. ➔🡐 Adjusting plate
25. ➔🡐 Adjusting bolt
26. ➔🡐 Cross-shaft
27. ➔🡐 Adjusting bolt lock nut
28. Side cover
29. ➔🡐 Side cover and cross-shaft assembly
- ➔🡐 • Adjustment of main shaft total staring torque
30. Dust cover
31. ➔🡐 Pitman arm
32. Jam nut

LUBRICATION AND SEALING POINTS

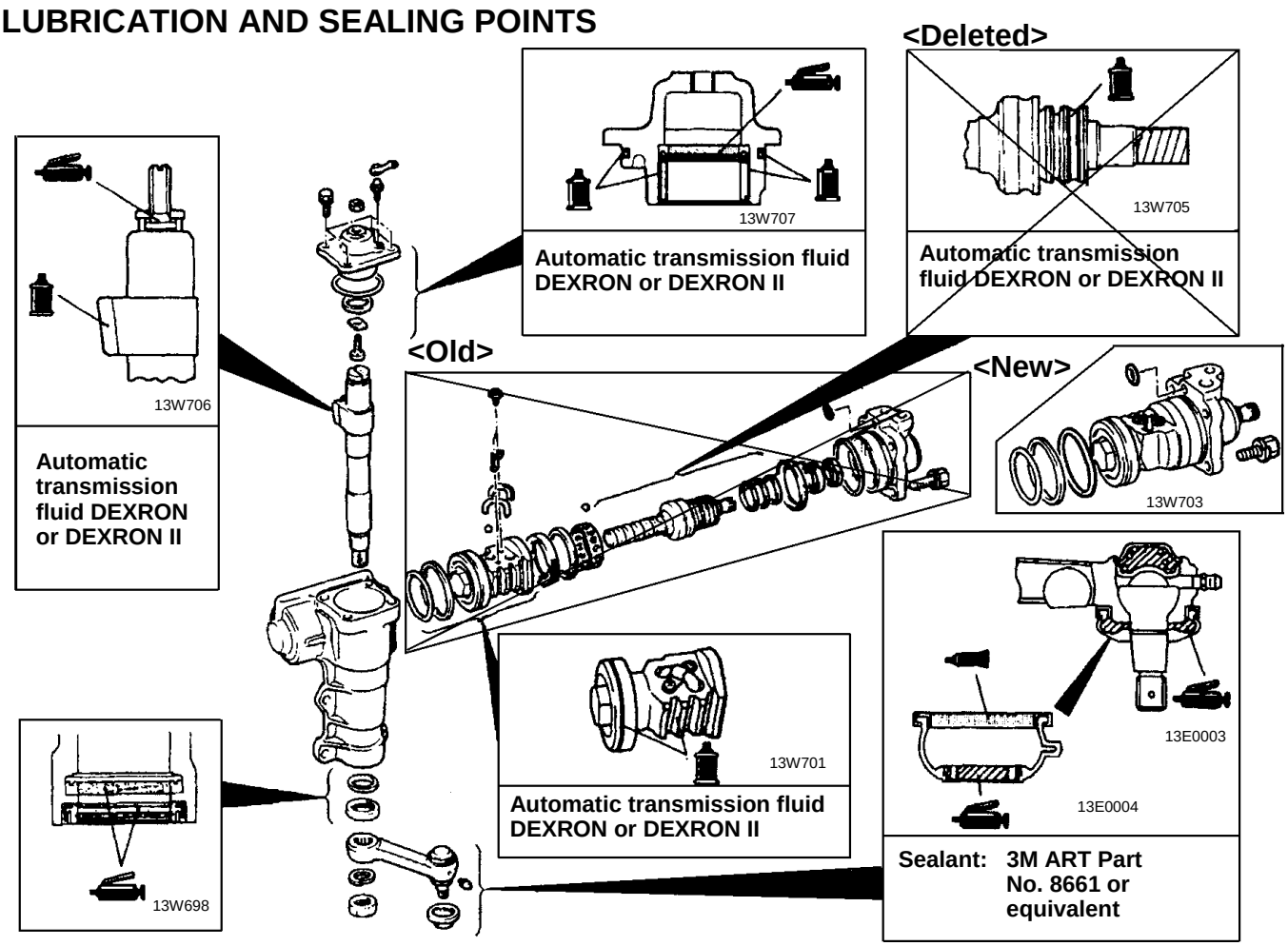

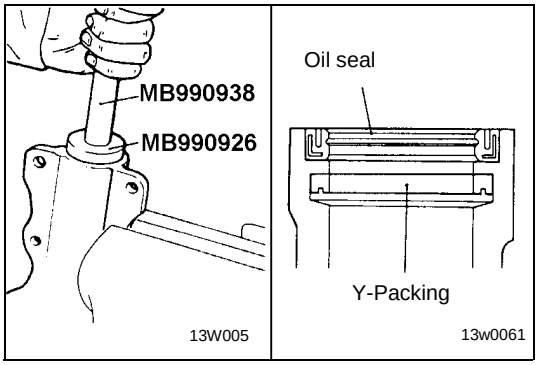

SERVICE POINTS OF REASSEMBLY

E37NJAE

2. INSTALLATION OF Y-PACKING/3. OIL SEAL

(1) Install the Y-packing facing the direction shown in the illustration.

(2) Use the special tool to press-fit the oil seal to the gearbox housing so that it faces in the direction shown in the illustration.

<Deleted>

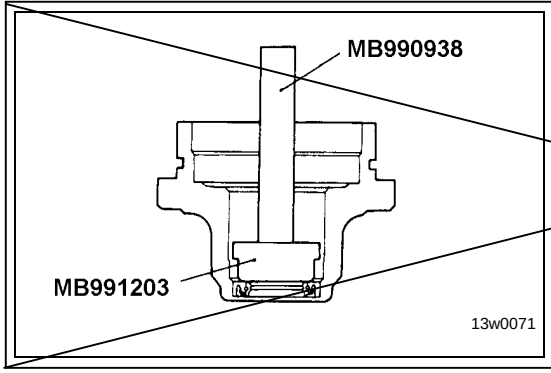

4. INSTALLATION OF OIL SEAL

Apply a coating of the specified fluid to the outside of the oil seal. Using the special tools, press the oil seal into the valve housing.

Specified fluid: Automatic transmission fluid DEXRON or DEXRON II

<Deleted>

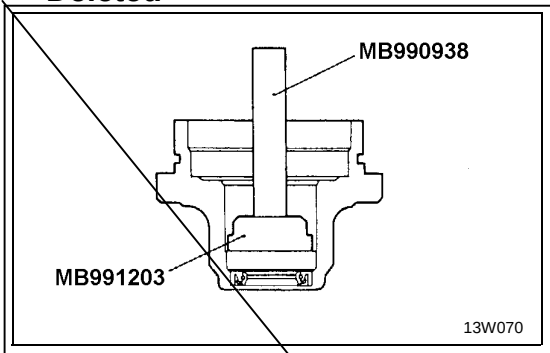

5. INSTALLATION OF BEARING

Apply a coating of the specified fluid to the outside of the bearing. Using the special tools, press the oil seal into the valve housing.

Specified fluid: Automatic transmission fluid DEXRON or DEXRON II

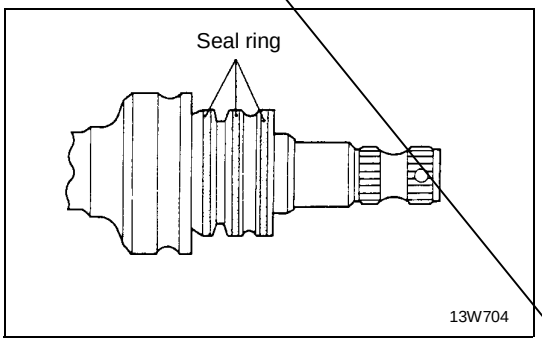

8. INSTALLATION OF SEAL RING

When installing seal ring, press firmly into valve groove.

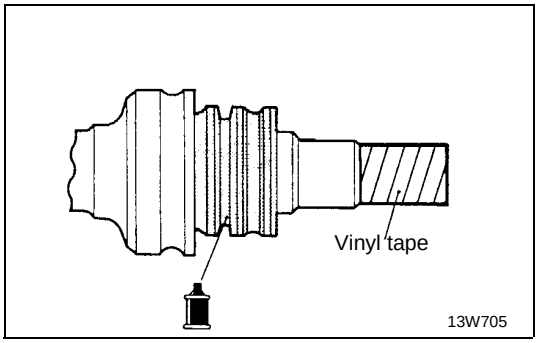

9. INSTALLATION OF CAGE/10. BALL/11. BEARING RACE/12. MAIN SHAFT

(1) Apply specified fluid to valve body.

Specified fluid: Automatic transmission fluid DEXRON or DEXRON II

(2) Wrap vinyl tape around the serrated part so that the oil seal won't be damaged when the valve body is installed tot he valve housing.

(3) Mount the valve body to the valve housing

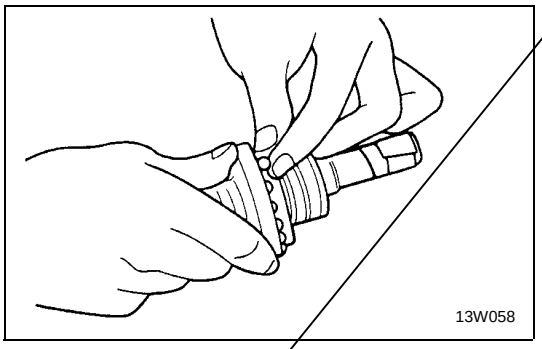

(4) Align the cage's hole and the channel in the main shaft, and insert two or three balls.

(5) Insert the remainder of the balls into the cage's hole while pressing the ball with the bearing race.

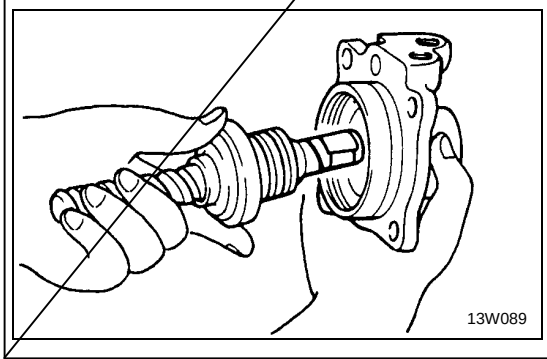

(6) When installing the main shaft, connect it to the valve housing while pressing the bearing race so that the balls do not come out.

<Deleted>

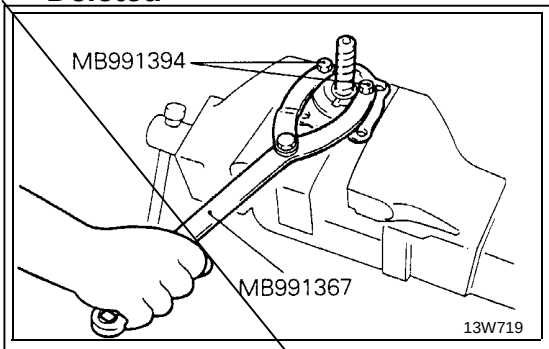

13. INSTALLATION OF LOCK NUT

Using the special tool,tighten carefully until the lock nut contacts the bearing race.

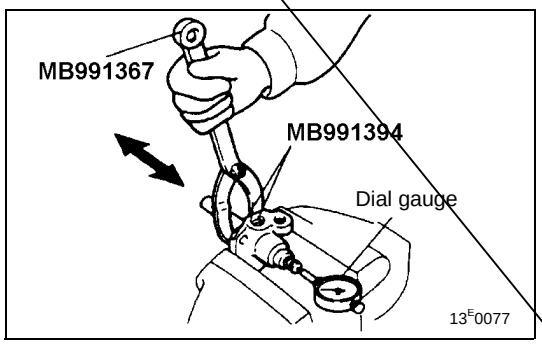

- **ADJUSTMENT OF MAIN SHAFT AXIAL PLAY**

(1) Adjust the play by tightening the lock nut gradually so that the mainshaft axial play will meet the range of standard value.

Standard value: 0.03 mm (0.0012 in.) or less

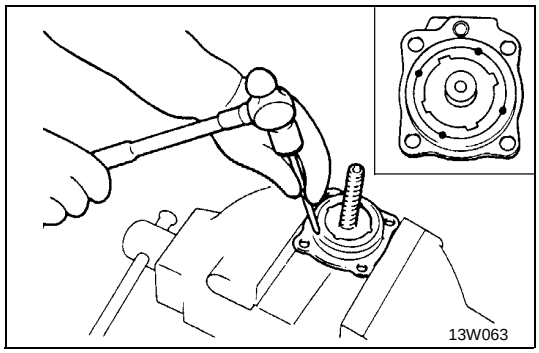

(2) Use a punch to crimp the circumference of the lock nut so as to secure the lock nut.

(3) Check to be sure that the mainshaft rotates smoothly.

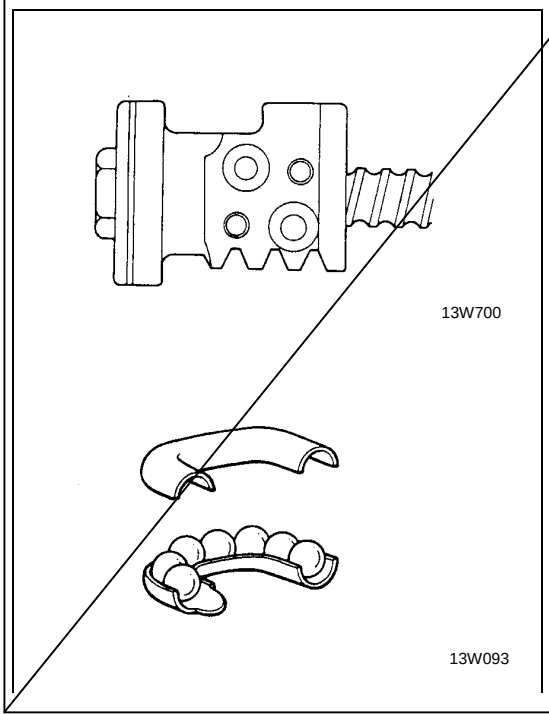

16. INSTALLATION OF RACK PISTON

(1) Install the rack piston until it comes in contact with the edge of the main shaft.

(2) Rotate the main shaft to align the ball raceway with the 19-ball insertion hole.

NOTE
The balls must be inserted so that there is no clearance between the balls.

(3) Set the remaining seven balls in the circulator, and install the circulator to the rack piston.

<Deleted>

~~**20. INSTALLATION OF VALVE HOUSING**~~

~~(1) Apply specified automatic transmission fluid to the seal ring of the rack piston.~~

~~**Specified fluid: Automatic transmission fluid DEXRON or DEXRON II**~~

~~(2) Insert the valve housing.~~

~~(3) Rotate the main shaft until the rack piston moves to the neutral position (center).~~

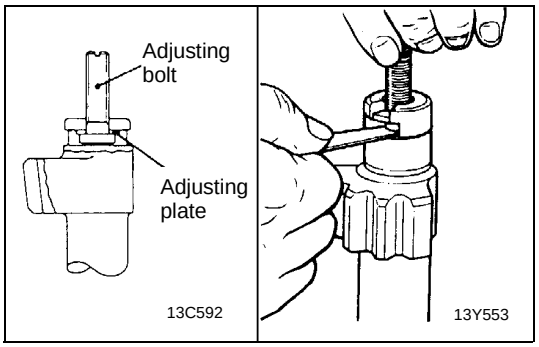

24. INSTALLATION OF ADJUSTING PLATE/25. ADJUSTING BOLT

(1) Install the adjusting plate so that the beveled part is facing downward.

(2) Using a thickness gauge, measure the clearance between the adjusting bolt and cross-shaft.

Standard value: 0 - 0.05 mm (0 – 0.002 in.)

(3) If the clearance is exceeded the standard value, replace with a suitable adjusting plate.

26. INSTALLATION OF CROSS-SHAFT/27. ADJUSTING BOLT LOCK NUT

Install the cross-shaft to the side cover, and then temporarily tighten the adjusting bolt lock nut.

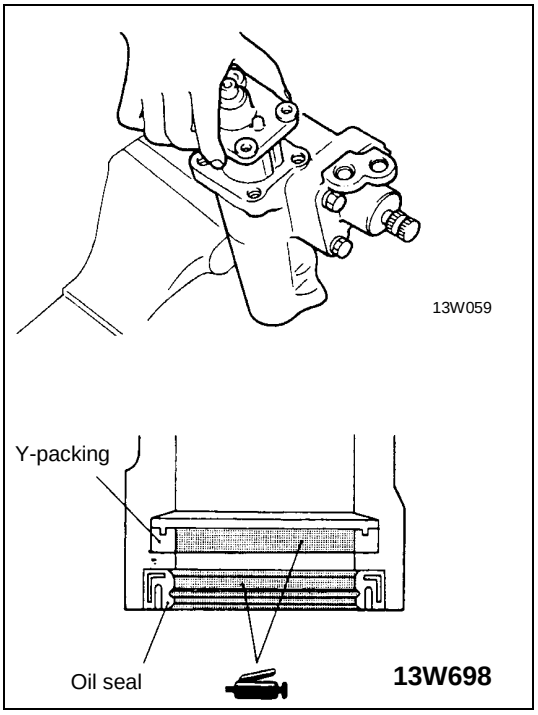

29. INSTALLATION OF SIDE COVER AND CROSS-SHAFT ASSEMBLY

Install the side cover assembly (with the corss-shaft) to the gear box.

NOTE

Apply specified automatic transmission fluid to the teeth and shaft areas of the rack piston, and apply multipurpose grease to the oil seal lip.

Specified fluid: Automatic transmission fluid DEXRON or DEXRON II

Caution

Do not rotate the side cover during installation. Take care not to damage the cross-shaft oil seal.

SERVICE BULLETIN

MITSUBISHI MOTORS

QUALITY INFORMATION ANALYSIS
OVERSEAS SERVICE DEPT. MITSUBISHI MOTORS CORPORATION

SERVICE BULLETIN	**No.:** MSB-00E37-501		
	Date: 2000-12-30	**<Model>**	**<M/Y>**
Subject: ADDITION OF STEERING ANGLE ADJUSTMENT PROCEDURE		(EC)PAJERO/ MONTERO (V10, 20, 30, 40)	00-10
Group: STEERING	**Draft No.:** 00SY040517	(EC)PAJERO SPORT/MONTERO SPORT (K80W, K90W)	99-10
INFORMATION/ CORRECTION	**INTERNATIONAL CAR ADMINISTRATION OFFICE**	T.NITTA - PROJECT LEADER AFTER SALES SERVICE & CS PROMOTION	(EC)L200(K60, K70) 93-10

1. Description:

This Service Bulletin informs you that a cautionary description has been added on Steering Angle Check.

2. Applicable Manuals:

Manual	Pub. No.	Language	Page(s)
PAJERO Workshop Manual Chassis	PWJE9086	(English)	37-8
MONTERO Workshop Manual Chassis	PWJS9087	(Spanish)	
PAJERO Workshop Manual Chassis	PWJF9088	(French)	
	PWJG9089	(German)	
	PWJD9090	(Dutch)	
	PWJW9091	(Swedish)	
’99 PAJERO SPORT Workshop Manual Chassis	PWJE9812	(English)	37A-7
’99 MONTERO SPORT Workshop Manual Chassis	PWJS9813	(Spanish)	
’99 PAJERO SPORT Workshop Manual Chassis	PWJF9814	(French)	
	PWJG9815	(German)	
’97 L200 Workshop Manual Chassis	PWTE96E1	(English)	37A-7
	PWTS96E1	(Spanish)	
	PWTF96E1	(French)	
	PWTG96E1	(German)	
’93 L200 Workshop Manual Chassis’97	PWTE9319	(English)	37-14

3. Details:

Pajero Workshop Manual (PWJE 9086) (Page 2)
’99 PAJERO SPORT Workshop Manual Chassis (Page 3)
’93 L200 Workshop Manual Chassis (Page 4 to 5)
’97 L200 Workshop Manual Chassis (Page 6 to 7)

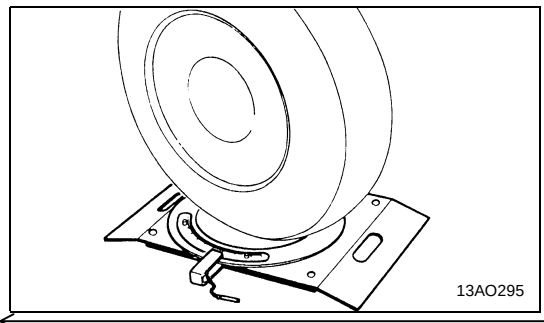

STEERING ANGLE CHECK

E37FDAH

1. Place the front wheel on a turning radius gauge and measure the steering angle
   Standard value: **Inner wheel 32° 40'$^{0}_{-3°}$**
   Outer wheel 29° 45'

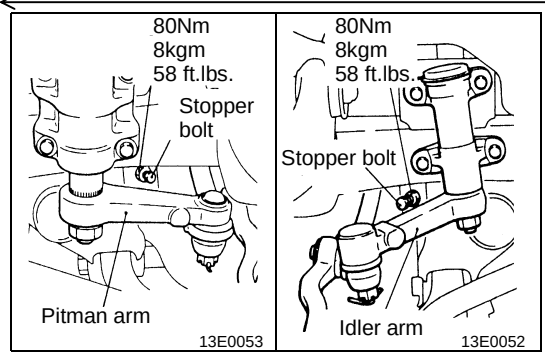

2. If the steering angle is outside the standard value, after checking the toe-in, (Refer to GROUP 33-Service Adjustment Procedures), adjust the steering angle with the stopper bolt.

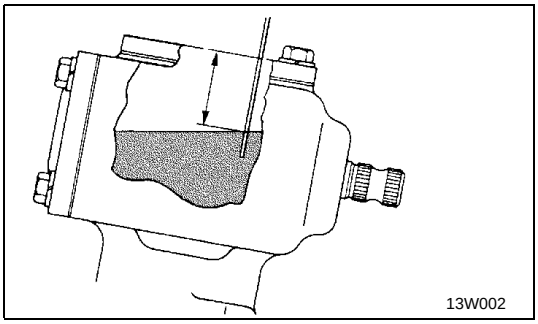

STEERING GEAR OIL LEVEL CHECK (MANUAL STEERING)

E37FEAAa

Remove the breather plug and check the oil level in the steering gear box by using a special gauge or a thin screwdriver.

Standard value: 25 mm (0.98 in.)

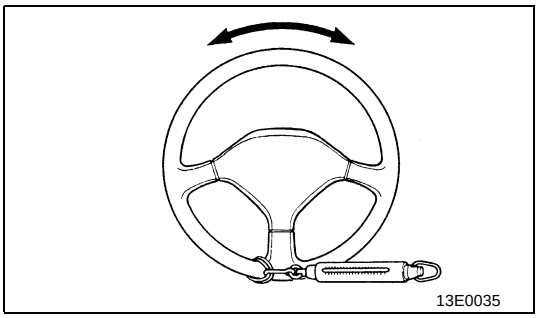

STATIONARY STEERING EFFORT CHECK (POWER STEERING)

E37FFAG

1. Place the vehicle on a level surface and place the steering wheel in the straight-ahead position.
2. Set the engine speed to 1,000 r/min.
   Caution
   After checking the engine r/min., there must be a return to the standard idling r/min.
3. Measure the tangential force with a spring balance by turning the steering wheel clockwise and counter clock wise one and a half turns.
   Standard value: 37N (3.7kg, 8.21 lbs) or less
4. If the stationary steering effort exceeds the standard value, check for belt slackness, damage, insufficient oil, air mixed into oil, collapsed or twisted hoses, etc., and repair if found.

<Added>

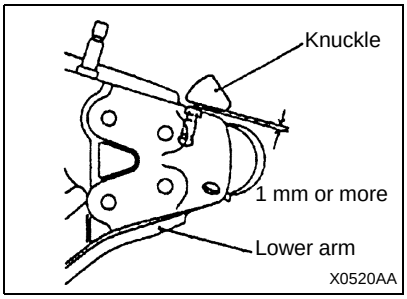

Caution

When the steering wheel is turned to lock, check that the clearance between the knuckle and the stopper is 1 mm or more.

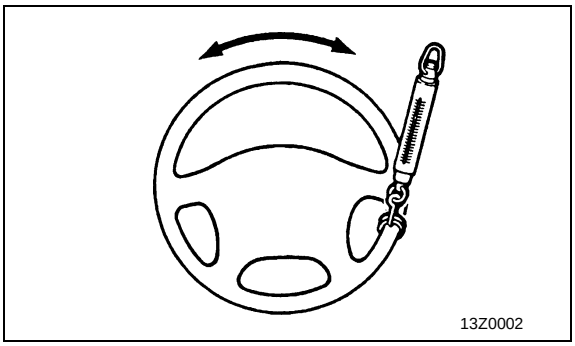

ON-VEHICLE SERVICE

37100090043

STEERING WHEEL FREE PLAY CHECK

1. With engine running (hydraulic operation), set front wheels straight ahead.
2. Measure the play on steering wheel circumference before wheels start to move when slightly moving steering wheel in both directions.

   Limit: 50 mm
3. When play exceeds the limit, check for play on steering shaft connection and steering linkage. Correct or replace.
4. If the free play still exceeds the limit value, set steering wheel straight ahead with engine stopped. Load 5 N towards steering wheel circumference and check play.

   Standard value (steering wheel play with engine stopped): 10 mm or less

   If the play exceeds the standard value, check the steering gear backlash and ball joint axial play.

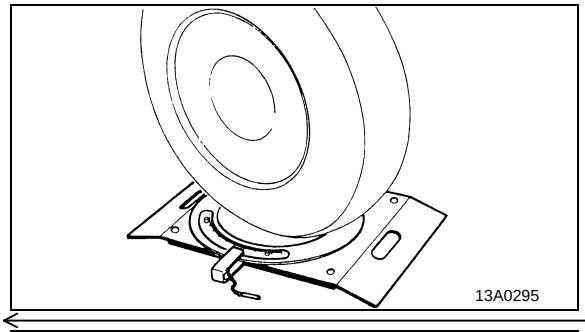

STEERING ANGLE CHECK

37100100029

1. Place the front wheel on a turning radius gauge and measure the steering angle.

   Standard value:

Items	Specifications
Inside wheel	29°40’ - 32°40’
Outside wheel	29°30’

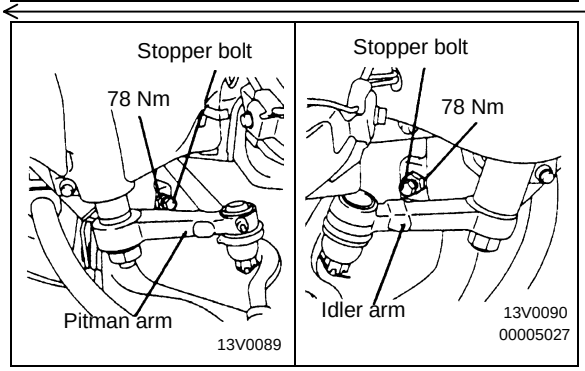

2. If the steering angle is outside the standard value after checking the toe-in (refer to GROUP 33A – On-Vehicle Service), adjust the steering angle with the stopper bolt.

<Added>

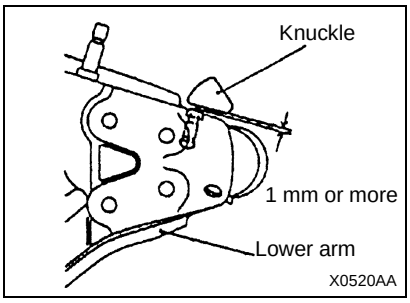

Caution

When the steering wheel is turned to lock, check that the clearance between the knuckle and the stopper is 1 mm or more.

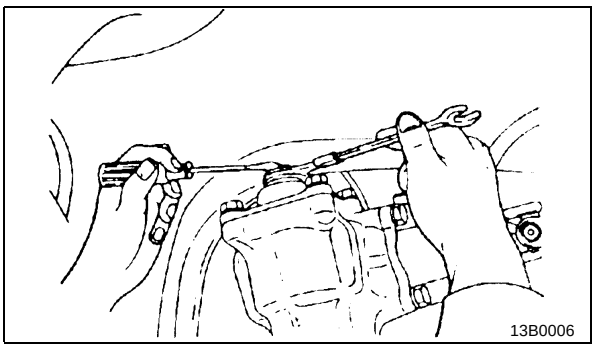

5. 4WD VEHICLES

   If the measured value exceeds the limit, screw in the steering gear box adjusting bolt until steering wheel free play is within the range of standard value.

   Caution

   1. Be sure to make the adjustment with the steering wheel in the straight-ahead position.
   2. If the adjusting bolt is overtightened, more steering effort will be required, and return of the wheel will be adversely affected.

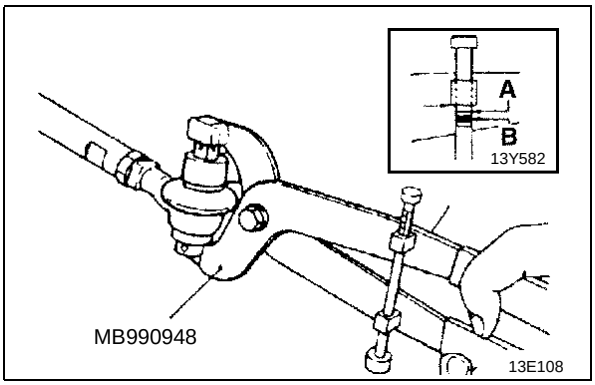

MEASURING BALL JOINT AXIAL PLAY

E37FCAA

1. Hold the ball joint by using the special tool.
2. Set the scale of special tool to the upper limit (A), compress the ball stud, and measure the axial play. The measured displacement should be between the upper limit (A) and the centre graduation (B).

   Limit: 1.5 mm (0.06 in.)
3. If the measured displacement exceeds the centre graduation (B), replace the ball joint.

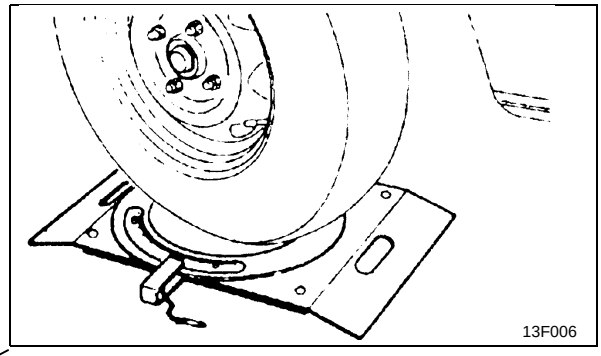

CHECKING STEERING ANGLE

E37FDAA

1. Place the front wheel on a turning radius gauge and measure the steering angle.

Standard value	2WD vehicles	4WD vehicles
Inner wheel	37° $^{0°}_{-3°}$	30°
Outer wheel	30°20'	27° $^{0°}_{-3°}$

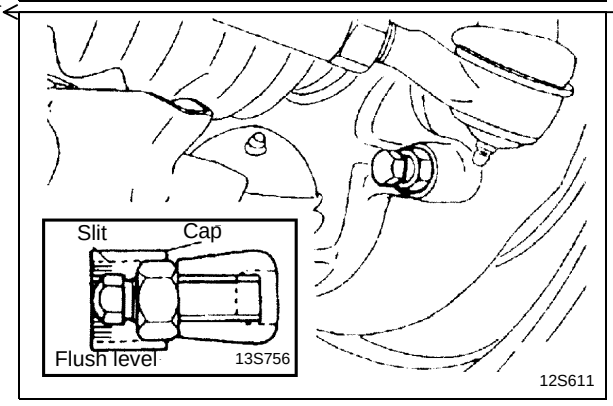

2. Adjust the steering angle of each wheel by turning the stop bolt of the knuckle arm.

   NOTE
   On 4WD vehicles, after adjusting the steering angle, mount the cap onto the jam bolt so that the edge of the slit side of the cap and the head of the stop volt are flush and face in the same direction, and then pack the head of the stop volt with the specified grease.
   Specified grease: Multipurpose grease SAE J310, NLGI No. 2

   Caution
   Be sure that the toe-in is properly adjusted before adjusting the steering angle.

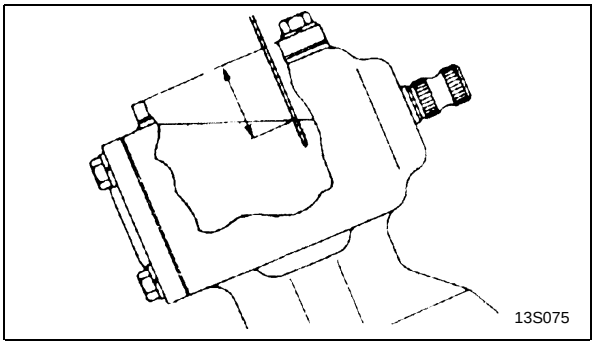

CHECKING STEERING GEAR OIL LEVEL (MANUAL STEERING)

E37FEAA

Remove the breather plug and check the oil level in the steeing gear box by using a special gauge or a thin screwdriver.

Standard value:

2WD vehicles	**35 mm (1.4 in.)**
4WD vehicles	**30 mm (1.2 in.)**

Followed by next page

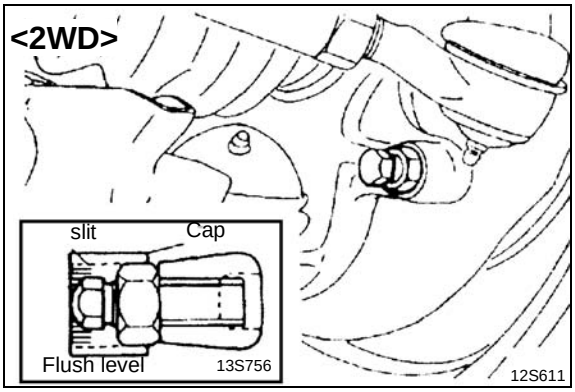

<2WD>
Caution
After adjusting toe-in and wheel steering angle, if stop bolt does not touch the lower arm when turning steering wheel fully, decrease wheel steering angle to touch on stop bolt in advance.

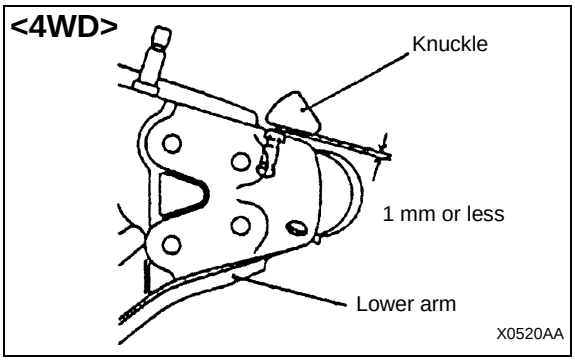

<4WD>
Caution
When the steering wheel is turned to lock, check that the clearance between the knuckle and the stopper is 1 mm or more.

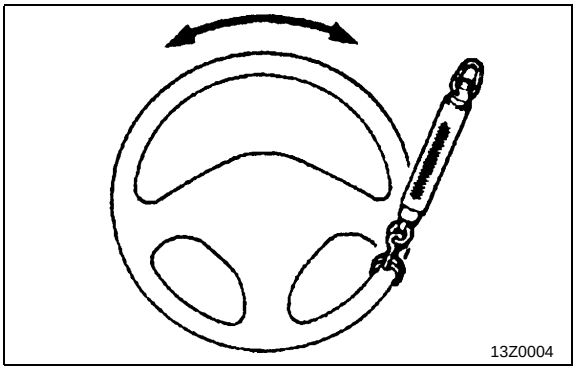

ON-VEHICLE SERVICE

37100090036

STEERING WHEEL FREE PLAY CHECK

<Manual steering>

1. Set the front wheels straight ahead.
2. Measure the play on the steering wheel circumference before wheels move when slightly moving the steering wheel in both directions.

   Limit: 50 mm
3. When the play exceeds the limit, check the play in the steering shaft connection and steering linkage. Correct or replace.
4. When (3) check provides good results, check the following to adjust:
   - Remove the steering gear box, check and adjust the mainshaft total starting torque.

<Power steering>

1. With engine running (Hydraulic operation), set front wheels straight ahead.
2. Measure the play on steering wheel circumference before wheels start to move when slightly moving steering wheel in both directions.

   Limit: 50 mm
3. When play exceeds the limit, check for play on steering shaft connection and steering linkage. Correct or replace.
4. If the free play still exceeds the limit value, set steering wheel straight ahead with engine stopped. Load 5 N towards steering wheel circumference and check play.

   Standard value (steering wheel play with engine stopped): 10 mm or less

   If the play exceeds the standard value, check the steering gear backlash and ball joint axial play.

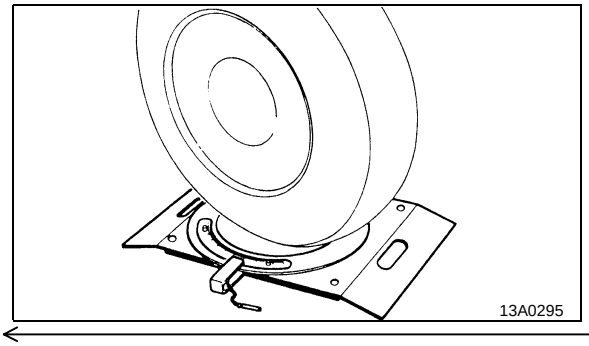

STEERING ANGLE CHECK

37100100012

1. Place the front wheel on a turning radius gauge and measure the steering angle.

   Standard value:

Items	2WD	4WD
Inside wheel	33°55’ - 36°55’	29°40’ - 32°40’
Outside wheel	30°57’	29°30’

<Added>

Followed by next page

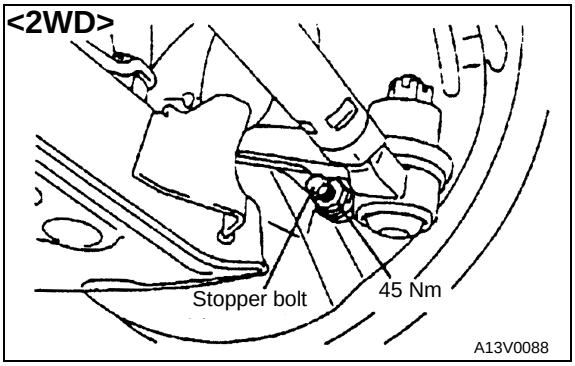

<2WD>
Caution
After adjusting toe-in and wheel steering angle, if stop bolt does not touch the lower arm when turning steering wheel fully, decrease wheel steering angle to touch on stop bolt in advance.

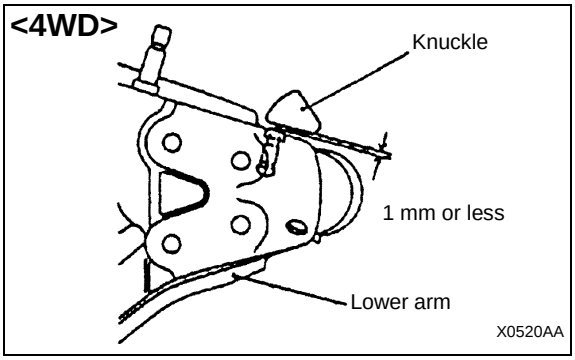

<4WD>
Caution
When the steering wheel is turned to lock, check that the clearance between the knuckle and the stopper is 1 mm or more.

BODY

Click on the applicable bookmark to selected the required model year

BODY

CONTENTS

42109000126

BODY MOUNTING 3
- CAB BODY 3
- REAR BODY 5

HOOD 7

FENDER* 8
- SEALANT 8
- FENDER 8

FUEL FILLER DOOR 9

WINDOW GLASS 12
- ADHESIVES 12
- SPECIAL TOOL 12
- WINDOW REPAIR 12
- WINDSHIELD 14
- REAR WINDOW GLASS 17
- QUARTER WINDOW GLASS <CLUB CAB> 18

DOOR 19
- SERVICE SPECIFICATIONS 19
- SEALANT 19
- SPECIAL TOOLS 19
- TROUBLESHOOTING 20
- ON-VEHICLE SERVICE 29
  - Door Fit Adjustment 29
  - Door Window Glass Adjustment 29
  - Adjustment and Replacement When There is a Malfunction of The Power Windows ... 29
  - Power Window Safety Mechanism Check .. 30
  - Door Outside Handle Play Check 30
  - Power Window Operation Current Check ... 30
  - Circuit Breaker (Incorporated in the Power Window Motor) Check 31
  - Door Inside Handle Play Check and Adjustment 31

CONTINUED ON NEXT PAGE

WARNINGS REGARDING SERVICING OF SUPPLEMENTAL RESTRAINT SYSTEM (SRS) EQUIPPED VEHICLES

WARNING!

(1) Improper service or maintenance of any component of the SRS, or any SRS-related component, can lead to personal injury or death to service personnel (from inadvertent firing of the air bag) or to the driver (from rendering the SRS inoperative).

(2) Service or maintenance of any SRS component or SRS-related component must be performed only at an authorized MITSUBISHI dealer.

(3) MITSUBISHI dealer personnel must thoroughly review this manual, and especially its GROUP 52B – Supplemental Restraint System (SRS) and GROUP 00 – Maintenance Service before beginning any service or maintenance of any component of the SRS or any SRS-related component.

NOTE

The SRS includes the following components: impact sensors, SRS diagnosis unit, SRS warning light, air bag module, clock spring and interconnecting wiring. Other SRS-related components (that may have to be removed/installed in connection with SRS service or maintenance) are indicated in the table of contents by and asterisk (*).

DOOR ASSEMBLY 32
DOOR TRIM AND WATERPROOF FILM 34
DOOR GLASS AND REGULATOR 36
DOOR HANDLE AND LATCH 40
WINDOW GLASS RUNCHANNEL AND DOOR OPENING WEATHERSTRIP 43
REAR GATE 44
SERVICE SPECIFICATION 44
ON-VEHICLE SERVICE 44
Rear Gate Outside Handle Play Check and Adjustment 44
REAR GATE 45

BODY MOUNTING

42100370035

CAB BODY

REMOVAL AND INSTALLATION

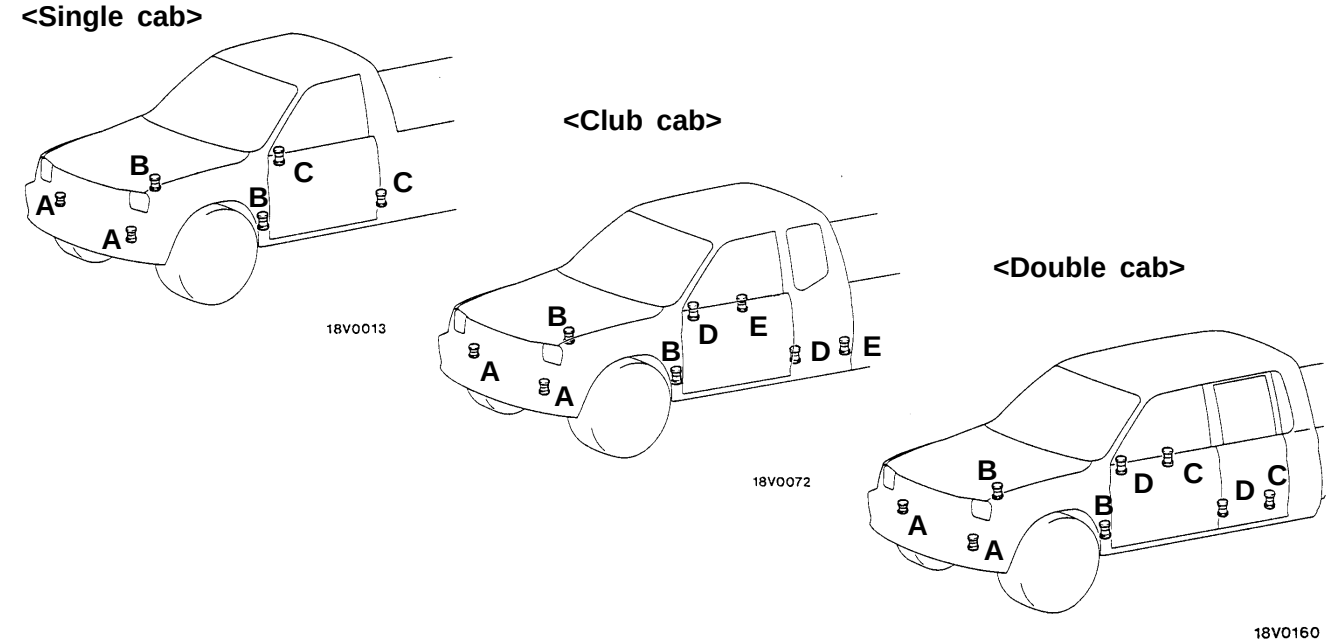

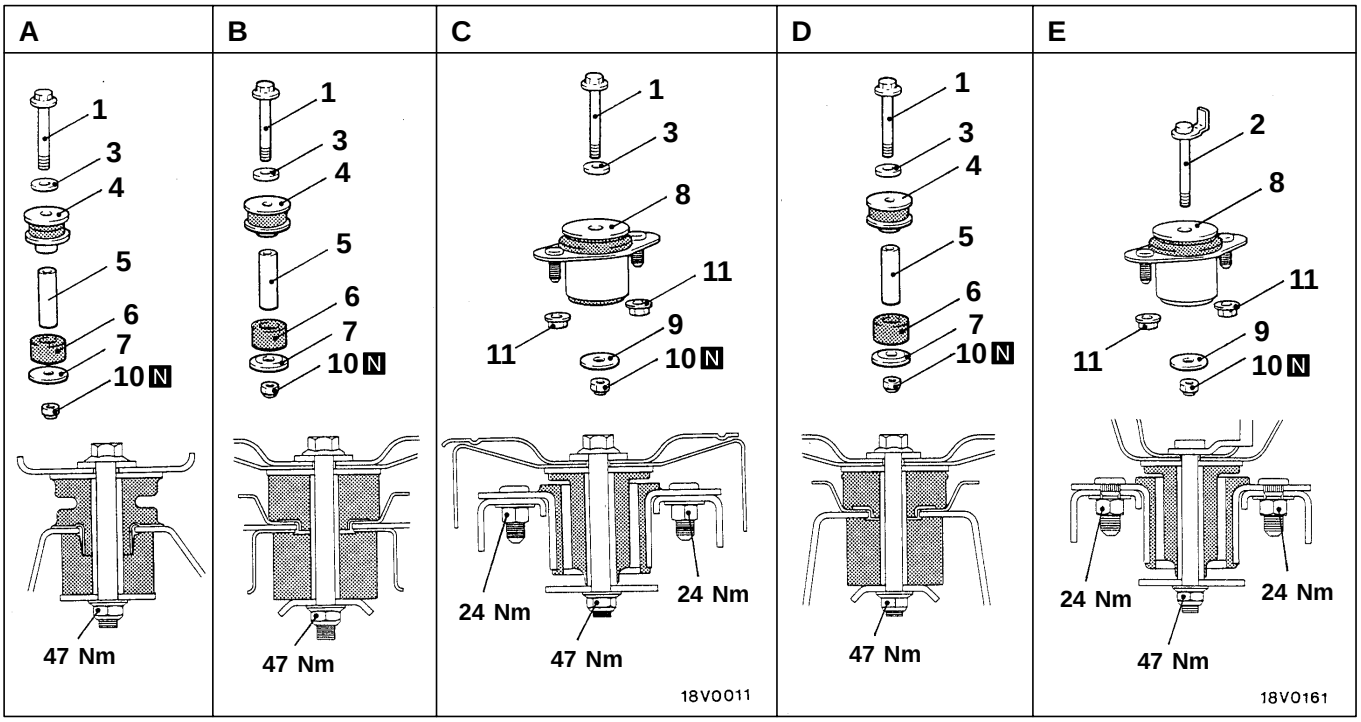

1. Special bolt
2. Mounting bolt
3. Plain washer
4. Body mounting rubber (A)
5. Spacer
6. Body mounting rubber (B)
7. Washer
8. Body mounting rubber
9. Plate
10. Self-locking nut
11. Nut

CAB BODY REMOVAL

1. Remove or disconnect the following parts.

- Hood
- Radiator grille
- Headlamp
- Front bumper assembly
- Front bumper bracket
- Oil cooler hose
- Radiator assembly
- Air cleaner duct
- Steering shaft joint
- Heater hose
- Power steering reservoir tank
- Brake booster vacuum hose
- Accelerator cable
- Fuel hose
- Brake pipe
- A/C piping
- Clutch release cylinder
- Speedometer cable
- Parking brake cable
- Shift lever knob
- Idle up vacuum hose
- Engine harness
- Transmission harness
- A/C harness
- Frame harness
- Ground strap
- Engine earth
- Door opening trim
- Floor carpet
- Cab body mounting bolt

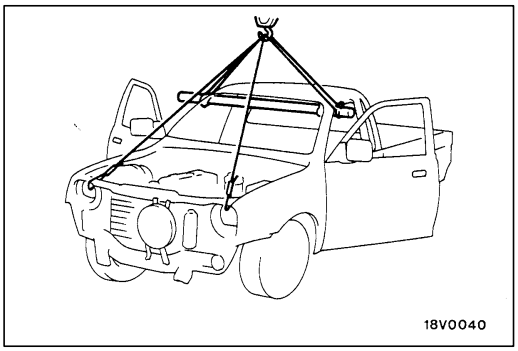

2. After removing the body mounting bolts and the body shims, insert wooden blocks to the body and gently lift with a crane.

   Caution
   Before lifting, check to be sure that all the connections between cab body and frame and engine are separated.
   Connect sling wires to a suitable bar or frame, fitting protection covers as necessary.

REAR BODY

REMOVAL AND INSTALLATION

<Single cab>

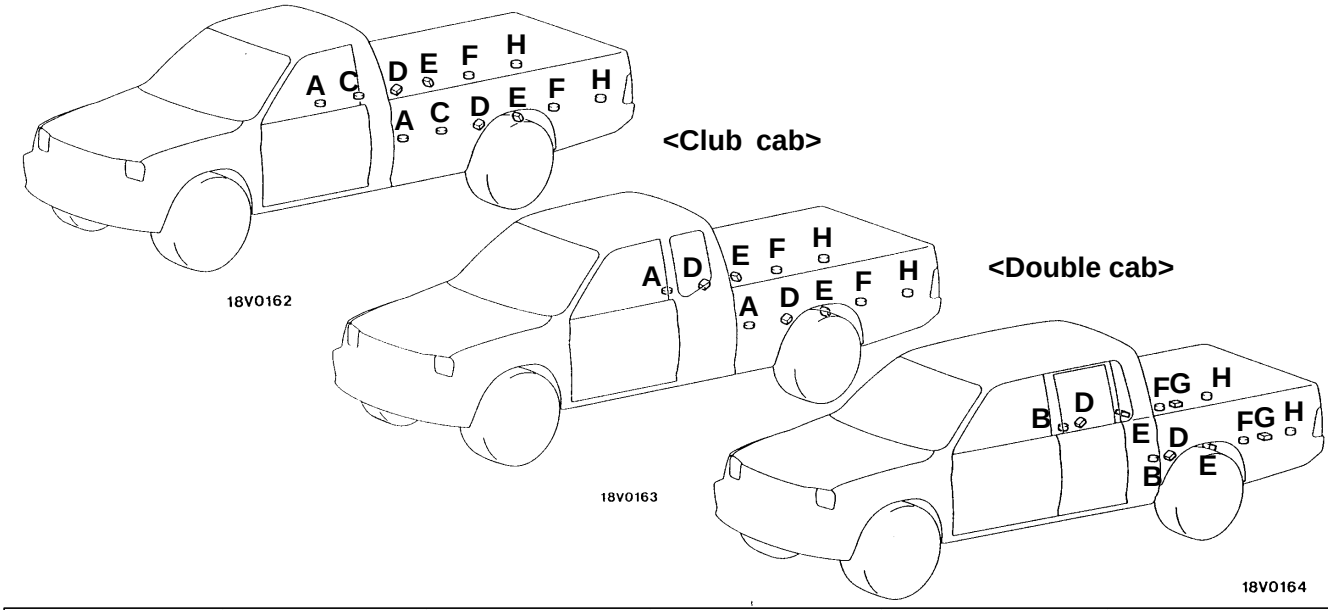

A	B	C, F	D, E	G	H
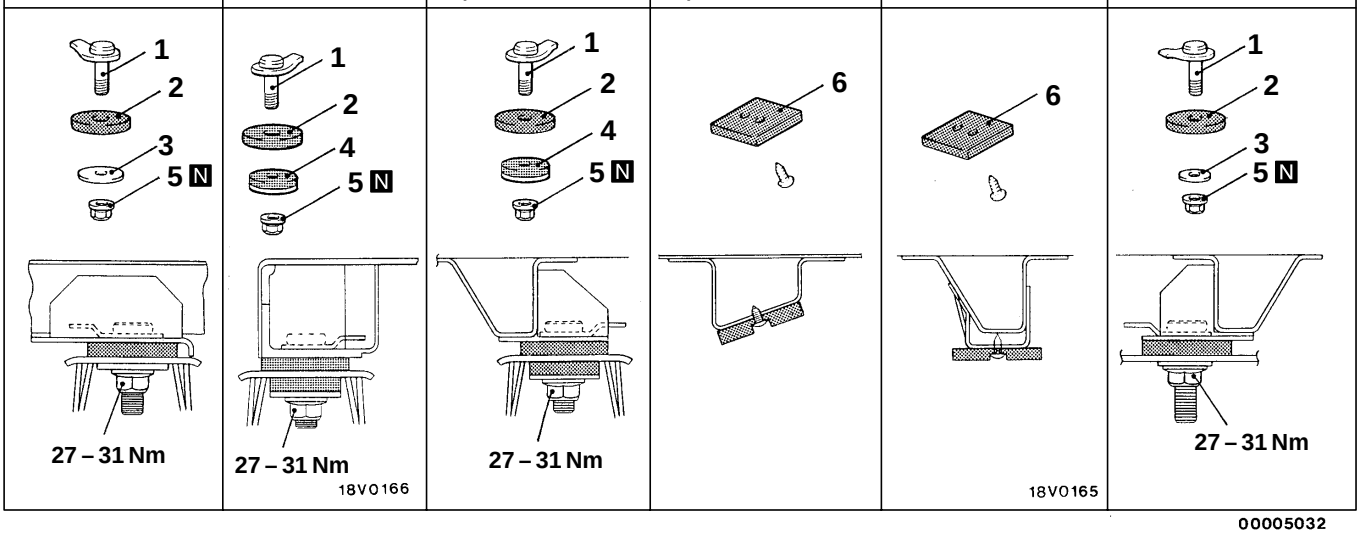					

1. Mounting bolt
2. Body shim (A)
3. Plain washer
4. Body shim (B) assembly
5. Self-locking nut
6. Body shim (C)

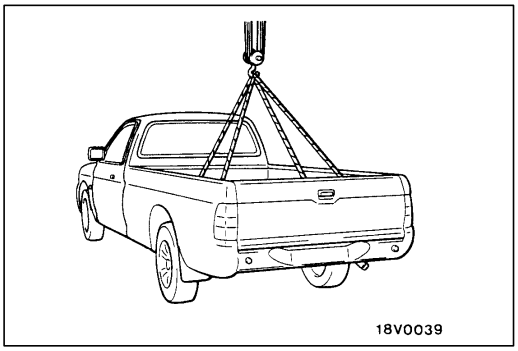

REAR BODY REMOVAL

1. Remove or disconnect the following parts.
   - Filler neck <Single cab, Club cab>
   - Rear body wiring harness connector
   - Rear body mounting bolts
2. Hook wires onto the rope hocks on the rear body, and then use a crane to raise the rear body.

   Caution
   Make sure that the rear body doesn't hit the cab while it is being raised.

HOOD

42100160137

REMOVAL AND INSTALLATION

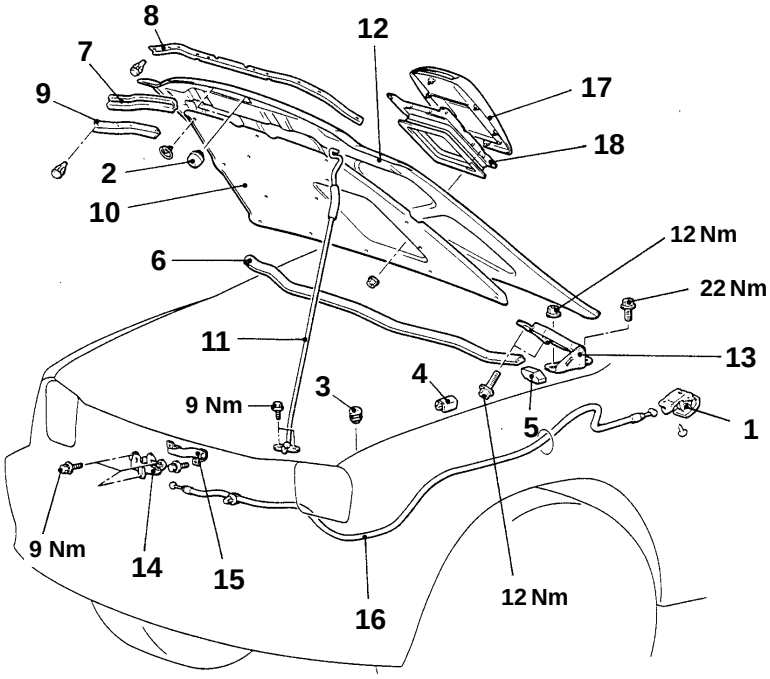

16V016

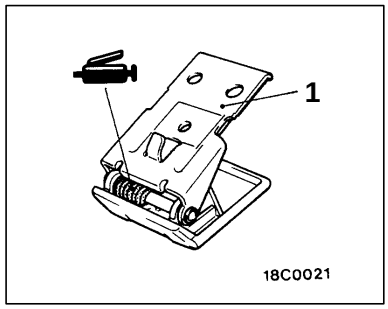

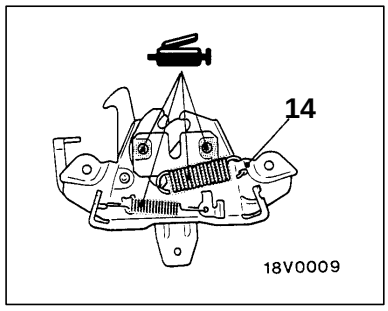

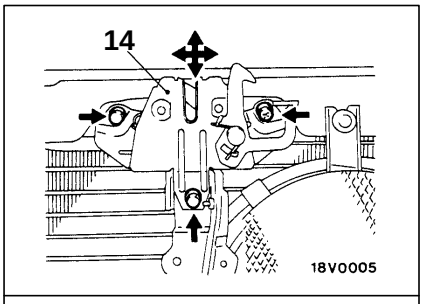

Adjustment of hood step and hood striker linkage

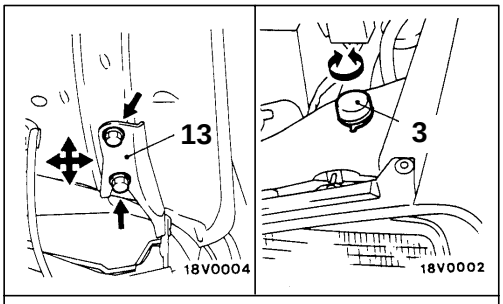

Adjustment of clearance and height around hood

00005033

1. Hood lock release handle
2. Hood bumper
3. Hood bumper
4. Hood damper
5. Hood side weatherstrip
6. Hood weatherstrip
7. Front hood weatherstrip <Vehicles without air conditioner>
8. Hood seal <Vehicles with air conditioner>
9. Hood weatherstrip <Petrol-powered vehicles>
10. Hood silencer <Diesel-powered vehicles>
11. Hood support rod

Hood latch and hood lock release cable removal steps

- Radiator grille

14. Hood latch
15. Cable protector
- Junction block

16. Hood lock release cable

Hood and hood hinge removal steps

- Washer hose connection

12. Hood
- Front deck garnish (Refer to GROUP 51 – Windshield Wiper and Washer.)

13. Hood hinge

Hood garnish removal steps <Vehicles with intercooler>

17. Hood garnish
18. Hood intercooler weatherstrip

FENDER

42100050090

SEALANT

Item	Specified sealant	Remark
Splash shield	3M ATD Part No. 8625 or equivalent	Ribbon sealer

FENDER

REMOVAL AND INSTALLATION

CAUTION: SRS
When removing and installing the fender from the vehicles equipped with SRS, do not let it bump against the front impact sensor.

Pre-removal and Post-installation Operation
- Front Bumper Removal and Installation (Refer to GROUP 51.)
- Front Deck Garnish Removal and Installation (Refer to GROUP 51 – Windshield Wiper and Washer.)

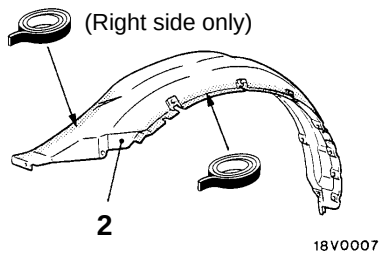

Sealant: 3M ATD Part No.8625 or equivalent

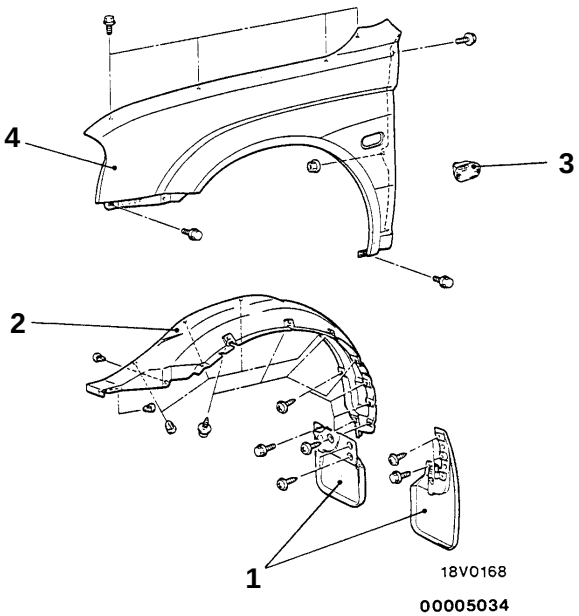

Removal steps
1. Mud guard
2. Splash shield
3. ◀A▶ Side turn signal lamp
4. Fender

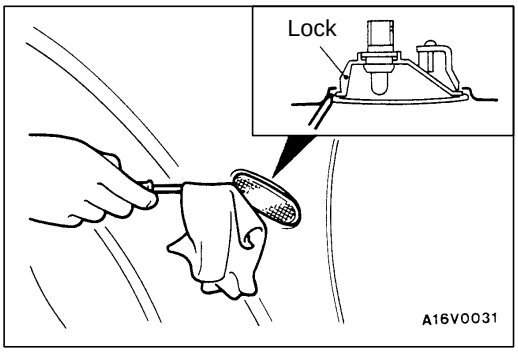

REMOVAL SERVICE POINT

◀A▶ SIDE TURN SIGNAL LAMP REMOVAL

Use a flat-tipped (–) screwdriver or similar tool to remove the lock from the fender panel, and remove the side turn signal lamp.

FUEL FILLER DOOR

42100250148

REMOVAL AND INSTALLATION

<Single cab>

Pre-removal and Post-installation Operation
- Rear Floor Console Removal and Installation <Vehicles with heated seat> (Refer to GROUP 52A.)
- Driver's Seat Removal and Installation (Refer to GROUP 52A.)
- Scuff Plate (driver's side) Removal and Installation (Refer to GROUP 52A – Trims.)
- Rear Splash Shield (L.H.) Removal and Installation

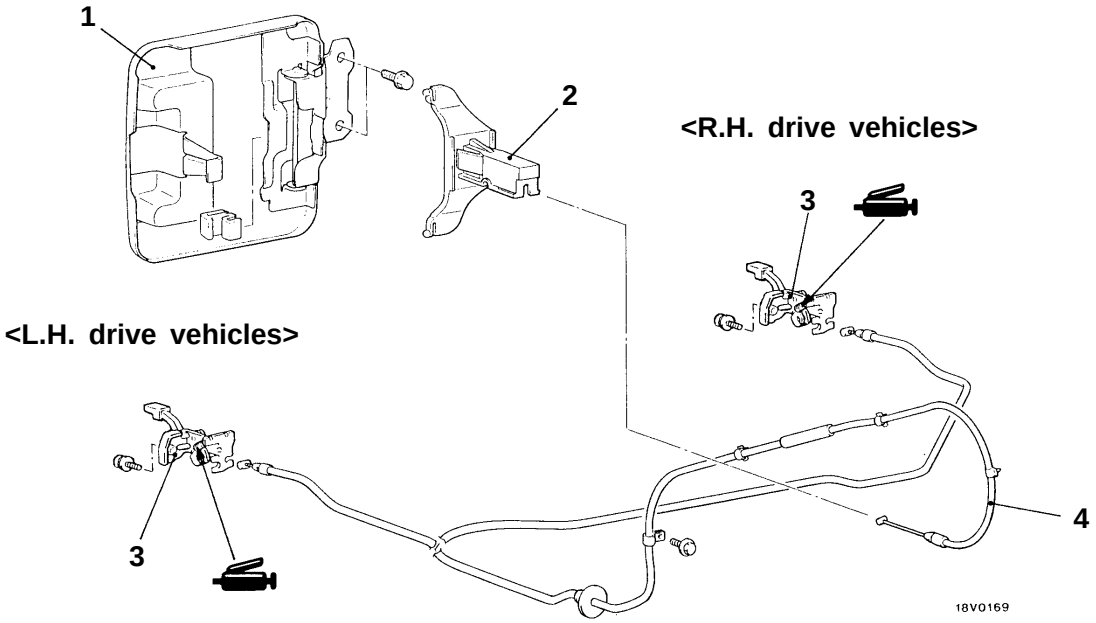

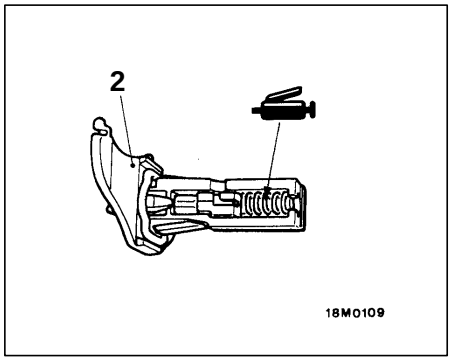

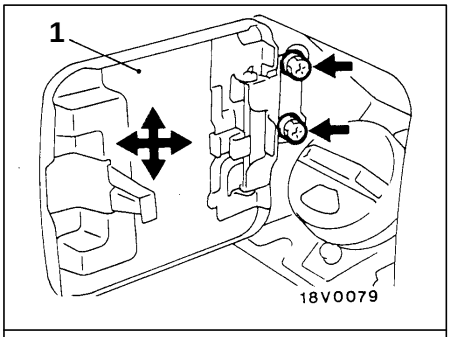

Fuel filler dour height and clearance adjustment

00005035

Removal steps

1. Fuel filler door panel assembly
2. Fuel filler door hook assembly
3. Lid lock release handle
4. Fuel filler door lock release cable

<Club cab>

Pre-removal and Post-installation Operation
- Rear Floor Console Removal and Installation <Vehicles with heated seat> (Refer to GROUP 52A.)
- Driver's Seat Removal and Installation (Refer to GROUP 52A.)
- Scuff Plate (driver's side) Removal and Installation (Refer to GROUP 52A – Trims.)
- Rear Splash Shield (L.H.) Removal and Installation

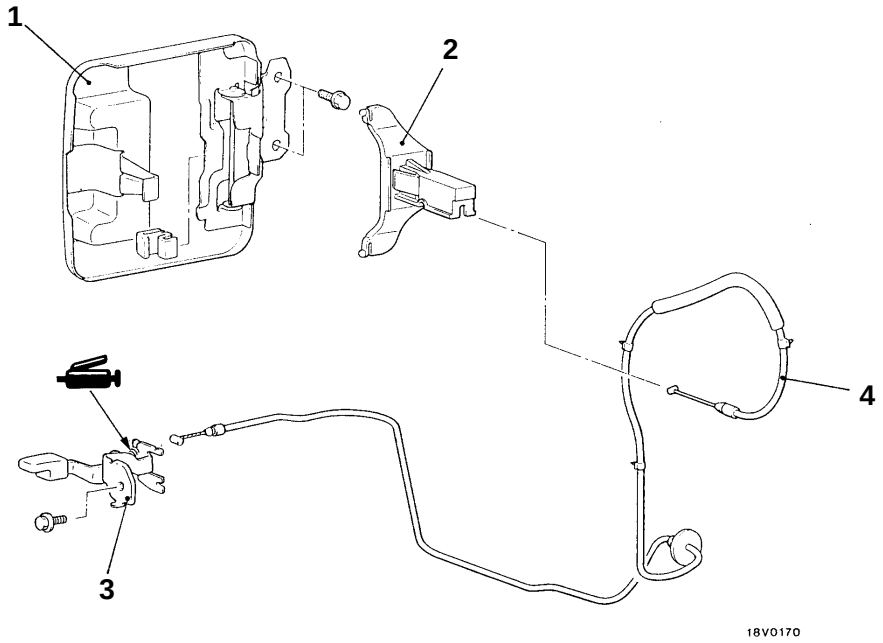

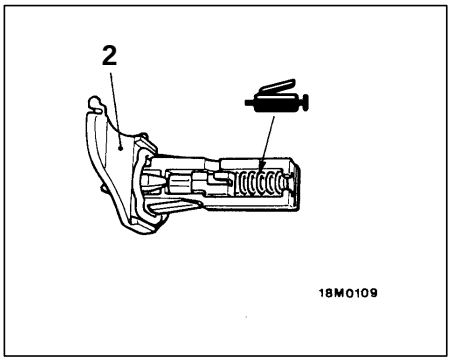

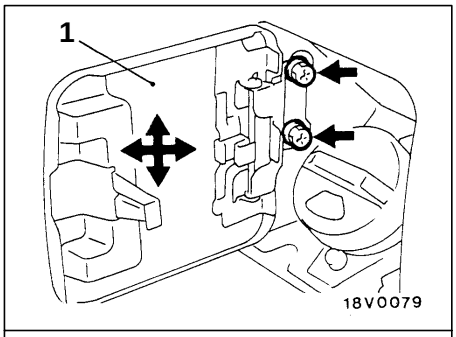

Fuel filler door height and clearance adjustment

00005036

Removal steps

1. Fuel filler door panel assembly
2. Fuel filler door hook assembly
3. Lid lock release handle
4. Fuel filler door lock release cable

<Double cab>

Pre-removal and Post-installation Operation
- Rear Floor Console Removal and Installation <Vehicles with heated seat> (Refer to GROUP 52A.)
- Driver's Seat, Rear Seat Removal and Installation (Refer to GROUP 52A.)
- Front Scuff Plate (driver's side), Rear Scuff Plate (driver's side),Center Pillar Lower Trim (driver's side), Strap Assembly, ELR Cover, Back Panel Lower/Upper Trim, Rear Seat Belt ELR (L.H.), Rear Pillar Lower Trim Removal and Installation (Refer to GROUP 52A – Trims.)

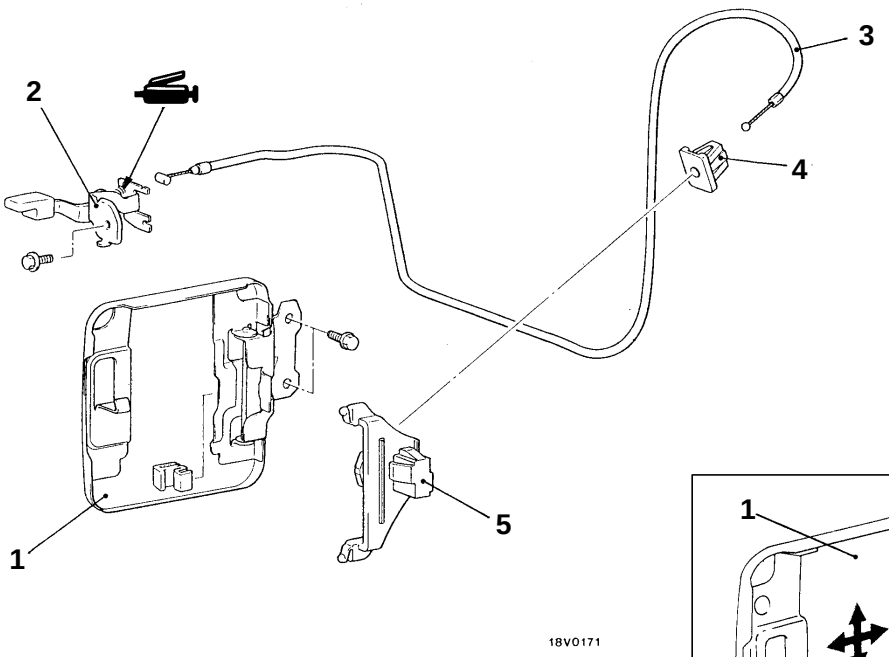

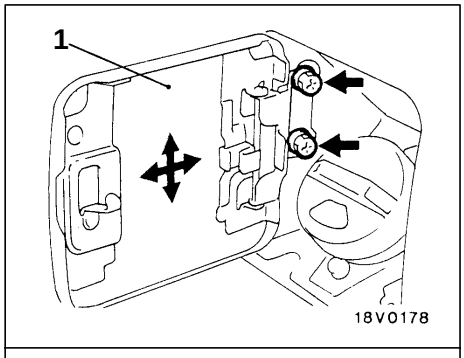

Fuel filler door height and clearance adjustment

00005037

Removal steps

1. Fuel filler door panel assembly
2. Lid lock release handle
3. Fuel filler door lock release cable
4. Cable holder
5. Fuel filler door hook assembly

WINDOW GLASS

42200050093

ADHESIVES

Items	Specified adhesives
Windshield	3M ATD Part No. 8609 Super Fast Urethane Auto Glass Sealants or equivalent

SPECIAL TOOL

42200060089

Tool	Number	Name	Use
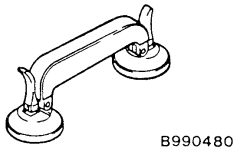	MB990480	Glass holder	Removal and installation of windshield

WINDOW REPAIR

42200560060

The following glass sections are installed by means of a liquid urethane adhesive method.

- Windshield

ITEMS NEEDED

Name	Remarks
Adhesive	3M ATD Part No. 8609 Super Fast Urethane Auto Glass Sealant or equivalent
Primer	3M ATD Part No. 8608 Super Fast Urethane Primer or equivalent
Spacers	Available as service part
Dam	Available as service part
Anti-rust solvent (or Tectyl 506T...Valvoline Oil Company)	For rust prevention
Isopropyl alcohol	For grease removal from bonded surface
Steel piano wire	Dia. × length...0.6mm × 1m For cutting adhesive
Adhesive gun	For pressing-out adhesive

NOTE
The TEROSON 127.37V auto window sealer kit can also be used. If using the TEROSON 127.37V auto window sealer kit, follow the instructions in the manual included with the kit.

HANDLING OF AUTO WINDOW SEALER

Keep the sealant in a cool place, not exposed to the direct rays of the sun. Do not place any heavy article on the sealant nor press it, otherwise it will become deformed. Avoid storing the sealant for more than 6 months, because it will lose its sealing effect.

BODY PINCH-WELD FLANGE SERVICING.

Before servicing the body pinch-weld flange, remove old adhesive completely. If the flange requires painting, bake it after painting is completed.

WORKING PROCESS

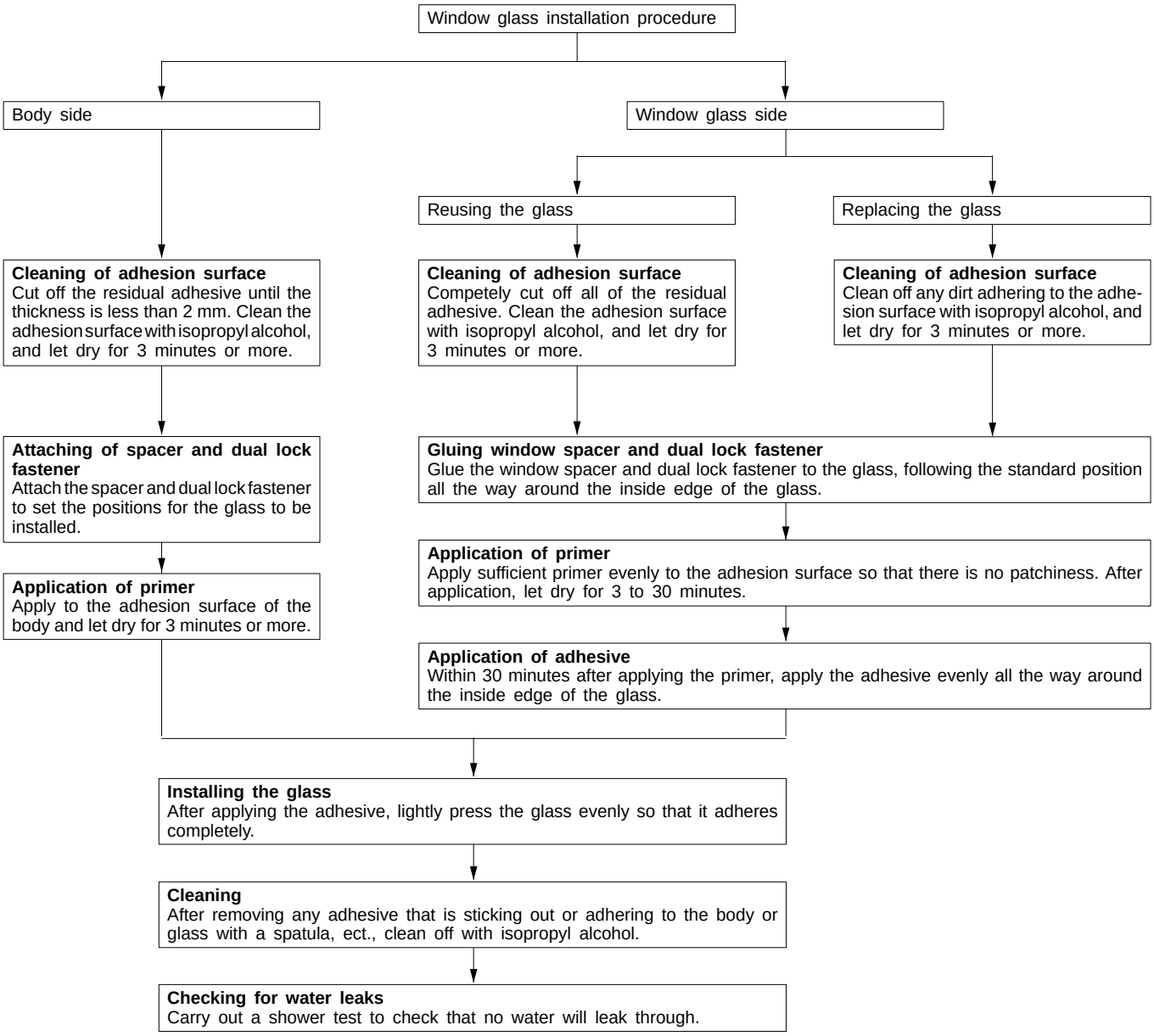

WINDSHIELD

42200100132

REMOVAL AND INSTALLATION

Pre-removal and Post-installation Operation
- Front Deck Garnish Removal and Installation (Refer to GROUP 51.)
- Front Pillar Trim Removal and Installation (Refer to GROUP 52A.)
- Headlining

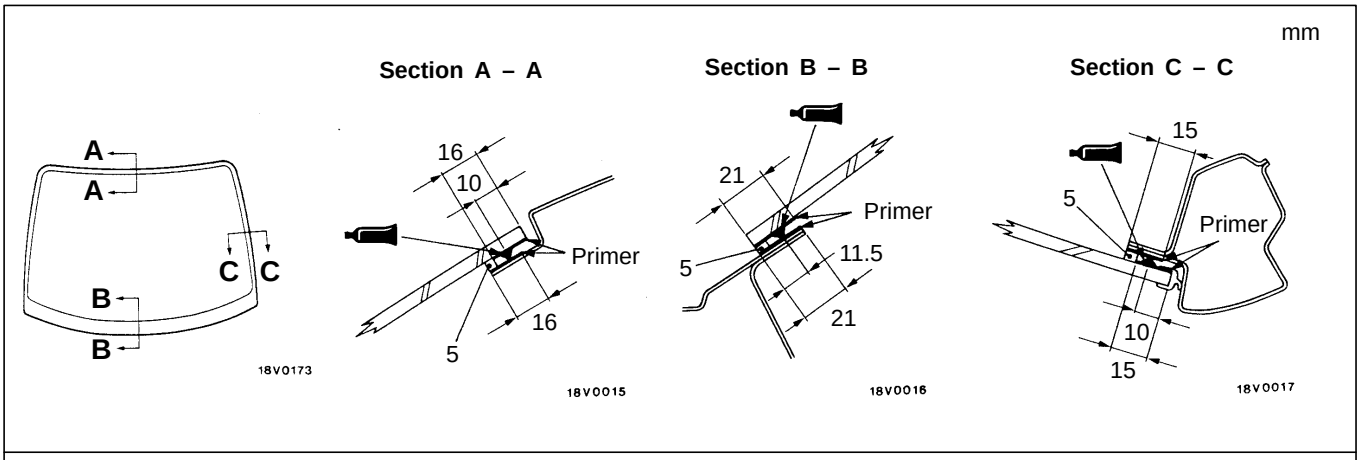

Adhesive: 3M ATD Part No.8609 Super Fast Urethane Auto Glass Sealant or equivalent

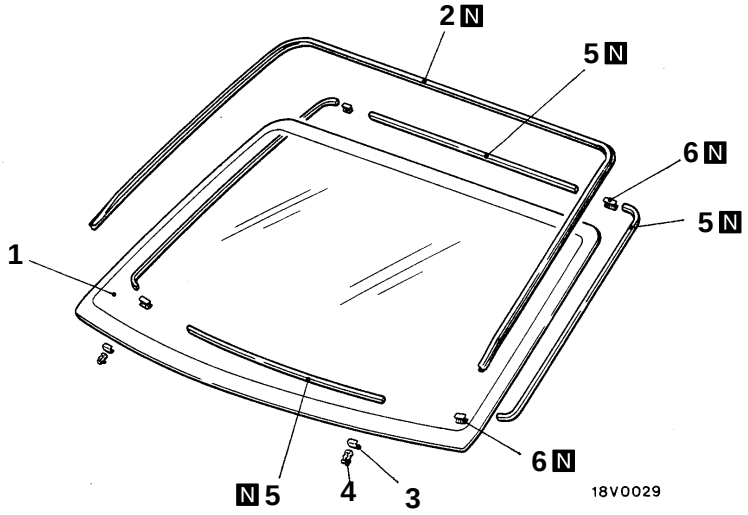

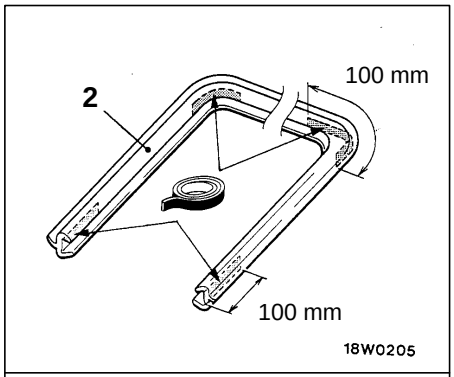

Adhesive tape: Both-side tape (6 mm wide and 0.125 mm thick)

00005038

Removal steps

◀A▶ ▶A◀ 1. Windshield
2. Windshield moulding
3. Windshield protector
4. Window spacer
5. Window spacer
▶A◀ 6. Dual lock fastener

REMOVAL SERVICE POINT

◀A▶ WINDSHIELD REMOVAL

1. In order to protect the body (paint surface), apply cloth tape to all body areas around the installed windshield glass.
2. Cut the moulding with a cutter knife.

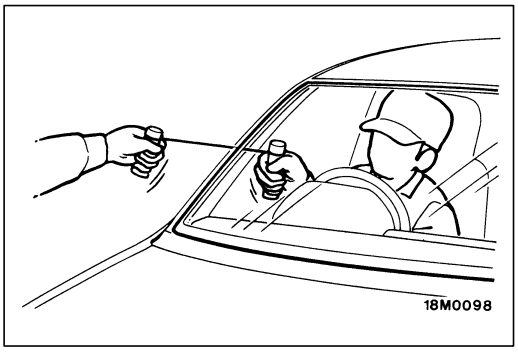

3. Using a sharp-point drill, make hole in the windshield glass adhesive.
4. Pass the piano wire from the inside of the vehicle through the hole.
5. Pull the piano wire alternately from the inside and outside along the windshield glass to cut the adhesive.

   Caution
   Do not let the piano wire touch the edge of the windshield glass.
6. Make mating marks on the windshield glass and body.

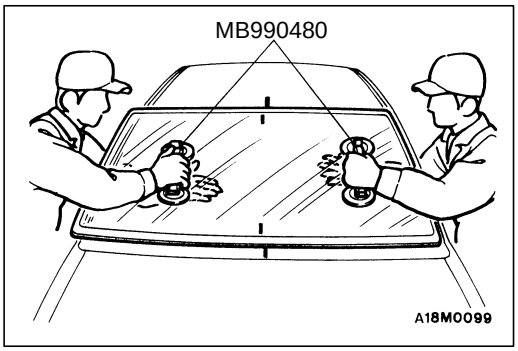

7. Use the special tool to remove the windshield glass.

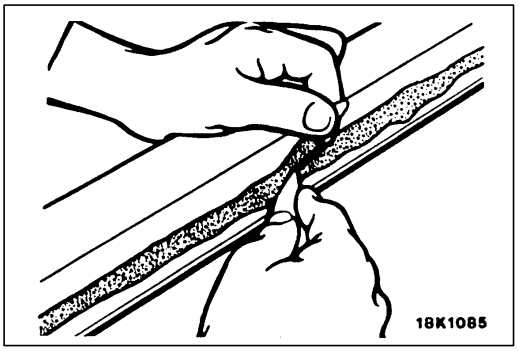

8. Use a knife to cut away the remaining adhesive so that the thickness is within 2 mm around the entire circumference of the body flange.
9. Finish the flange surfaces so that they are smooth

   Caution
   (1) Be careful not to remove more adhesive than is necessary.
   (2) Be careful also not to damage the paintwork on the body surface with the knife. If the paintwork is damaged, repair the damaged area with repair paint or anti-rust agent.
10. When reusing the glass, remove the adhesive still adhering to the glass, and clean with isopropyl alcohol.
11. Clean the body side in the same way.

    Caution
    Let the cleaned places stand for 3 minutes or more, and carry out the next procedures after they have dried. Also, do not touch any surface that has been cleaned.

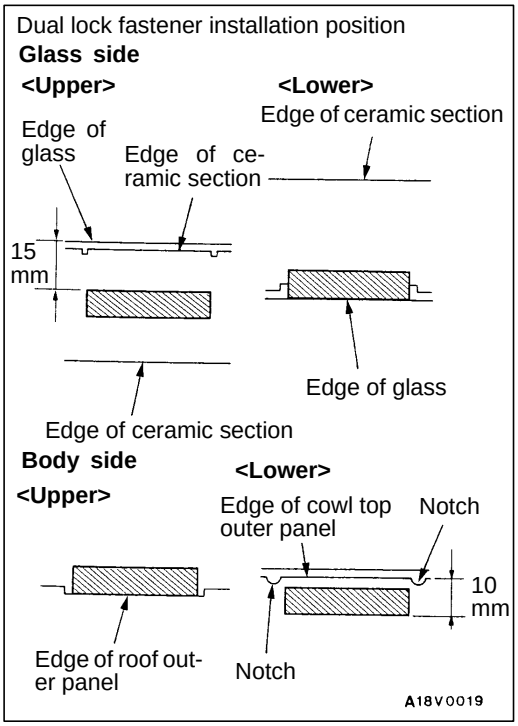

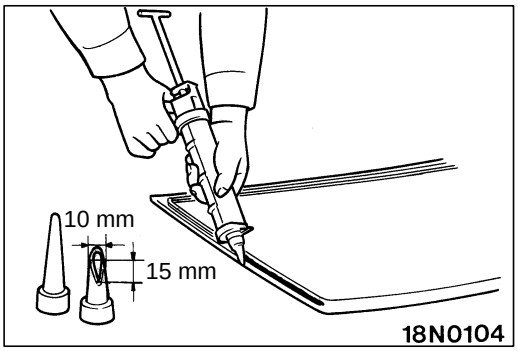

INSTALLATION SERVICE POINTS

▶A◀ DUAL LOCK FASTENER/WINDSHIELD INSTALLATION

1. When replacing the glass, temporarily set the glass against the body, and place a mating mark on the glass and body.
2. Use isopropyl alcohol to degrease the inside and outside of the windshield glass and the body flanges.
3. Soak a sponge in the primer, and apply evenly to the glass and the body in the specified places.
4. Apply the primer, and then let it dry for 3 to 30 minutes.

   Caution
   (1) The primer strengthens the adhesive, so be sure to apply it evenly around the entire circumference. However, a too thick application will weaken the adhesive.
   (2) Do not touch the coated surface.
5. Install the dual lock fasteners to the windshield in the position shown in the illustration.
6. Install the dual lock fasteners to the body flange in the positions that are corresponding to those on the windshield.
7. Fill a sealant gun with adhesive. Then apply the adhesive evenly around the windshield within 30 minutes after applying the primer.

   NOTE
   Cut the tip of the sealant gun nozzle into a V shape to simplify adhesive application.
8. Align the mating marks on the glass and the body, and lightly press the windshield glass evenly so that it adheres completely.
9. Use a spatula or the like to remove any excessive adhesive. Then clean the surface with isopropyl alcohol. Try not to move the vehicle until the adhesive sets.
10. Wait 30 minutes or more, and then test for water leakage.

    Caution
    (1) Do not move the vehicle unless absolutely necessary.
    (2) When testing for water leakage, do not pinch the end of the hose to spray the water.

REAR WINDOW GLASS

42200160079

REMOVAL AND INSTALLATION

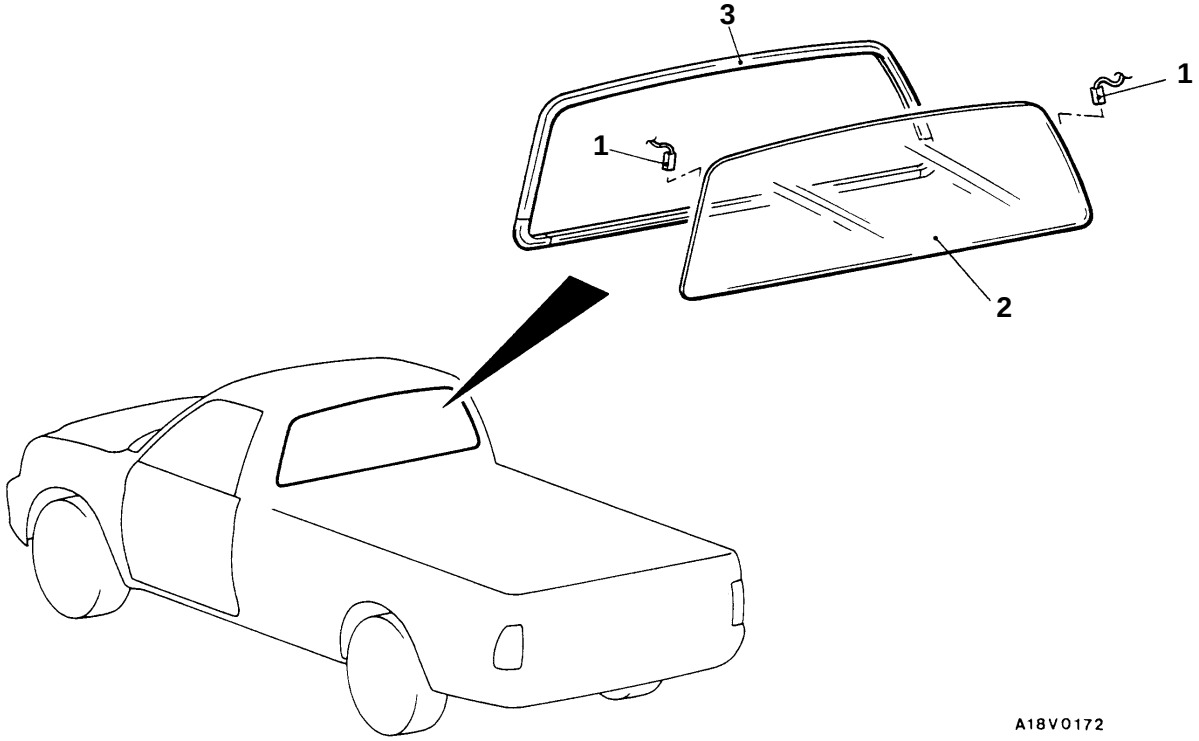

Removal steps

1. Harness connector <Vehicles with rear window defogger>
◀A▶ ▶A◀ 2. Rear window glass
◀A▶ ▶A◀ 3. Rear window glass weatherstrip

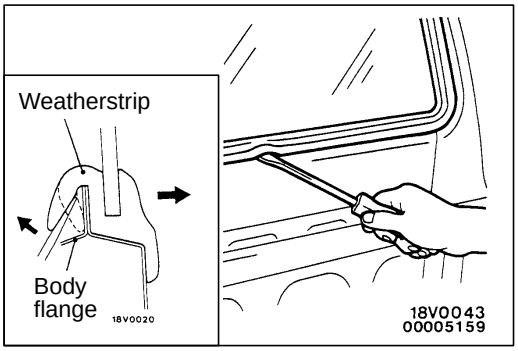

REMOVAL SERVICE POINT

◀A▶ REAR WINDOW GLASS/REAR WINDOW GLASS WEATHERSTRIP REMOVAL

Push the rear window glass out from the inside of the cabin with the lip of the weatherstrip straightened along the entire periphery with a screwdriver.

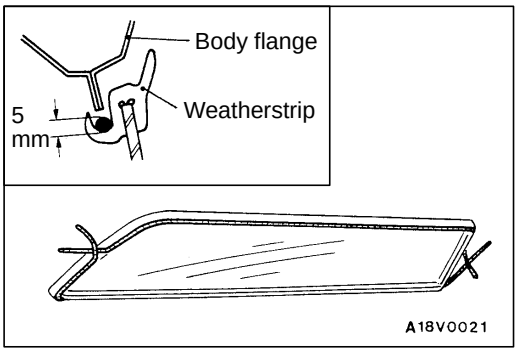

INSTALLATION SERVICE POINT

▶A◀ REAR WINDOW GLASS WEATHERSTRIP/REAR WINDOW GLASS INSTALLATION

1. Set round strings in the weatherstrip groove.

   NOTE
   Make certain that the strings overlap other at both ends.

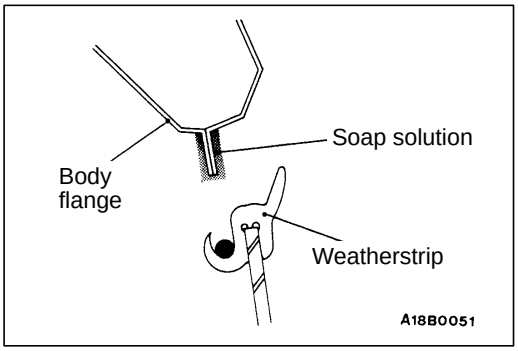

2. Apply soap solution to the entire periphery of the body flange.
3. Place the rear window glass in position from outside with the strings placed inside the cabin.

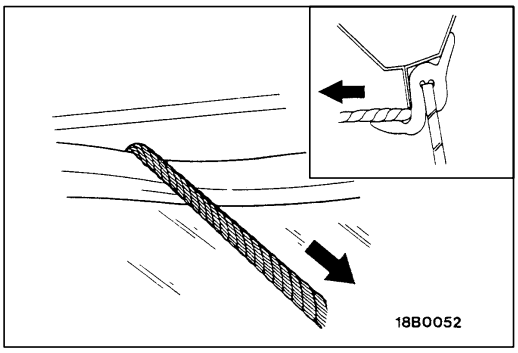

4. With the aid of an assistant to push the rear window glass from outside, slowly pull one end of the string at right angles to the rear window glass and fit the lips of the weatherstrip correctly on the body flange.

   NOTE
   Pull the strings, working from both sides of the rear window glass toward the centre and tapping the glass.

   Caution
   Tap the rear window glass repeatedly until it is lightly held against the body flange surface.

QUARTER WINDOW GLASS <CLUB CAB>

42200250103

REMOVAL AND INSTALLATION

Pre-removal and Post-installation Operation
- Quarter Upper Trim Removal and Installation (Refer to GROUP 52A – Trims.)

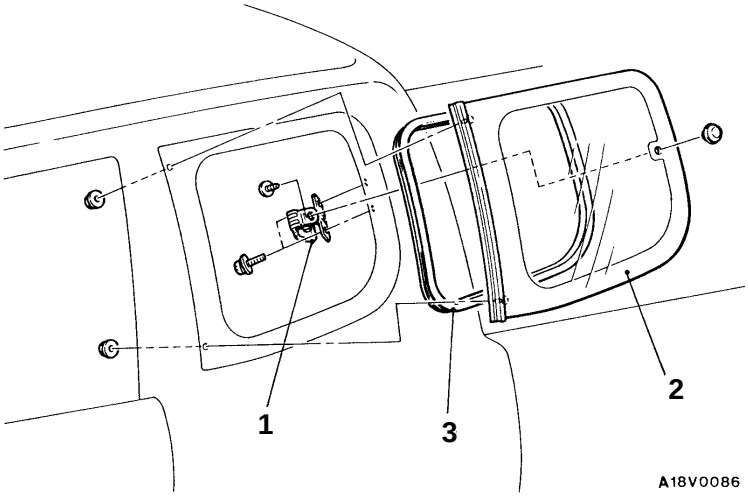

Removal steps
1. Link assembly
2. Quarter window glass assembly
3. Quarter window weatherstrip

DOOR

42300030083

SERVICE SPECIFICATIONS

Items			Standard value
Door outside handle play mm			2.8 or more
Power window operation current A		Single cab, Double cab	4 – 7 (at 20°C)
		Club cab	3.5 – 6.5 (at 20°C)
Door inside handle play mm			7.3 or more
Glass pad and glass holder installation position mm	Distance (A) between glass holder and rear edge of glass	Single cab, Double cab	107 – 108
		Club cab	217 – 218
	Distance (B) between glass holders		418 – 420
	Distance (C) between glass holder and front edge of glass	Vehicles without power window	161 – 165
		Vehicles with power window	223 – 227

SEALANT

42300050034

Items	Specified sealant	Remark
Waterproof film	3M ATD Part No. 8625 or equivalent	Ribbon sealer

SPECIAL TOOLS

42300060075

Tool	Number	Name	Use
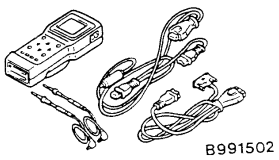	MB991502	MUT-II sub assembly	ETACS-ECU input signal checking
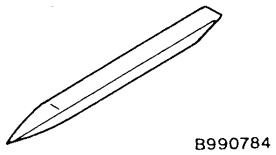	MB990784	Ornament remover	Removal of door trim
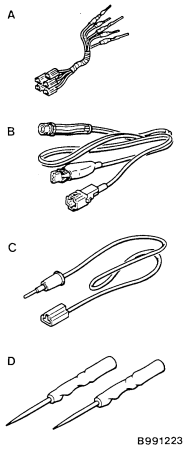	MB991223 A: MB991219 B: MB991220 C: MB991221 D: MB991222	Harness set A: Test harness B: LET harness C: LED harness adapter D: probe	Measurement of terminal voltage A: Connector pin contact pressure inspection B, C: Power circuit inspection D: Commercial tester connection

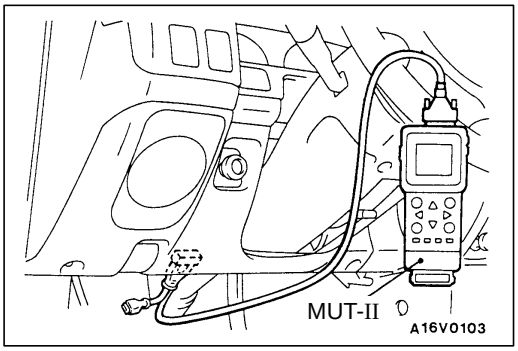

TROUBLESHOOTING

42300070115

DIAGNOSIS FUNCTION

INPUT SIGNAL INSPECTION POINTS <VEHICLES WITH ETACS-ECU>

1. Connect the MUT-II to the diagnosis connector.
2. If buzzer of the MUT-II sounds once when door lock actuator switch is operated (LOCK/UNLOCK), the ETACS-ECU input signal for that switch circuit system is normal.

INSPECTION CHART FOR TROUBLE SYMPTOMS

Trouble symptom		Inspection procedure	Reference page
Power windows	The power windows cannot be operated by any of the power window switches.	1	42-21
	Driver's side power window cannot be operated by the power window main switch.	2	42-22
	Passenger's side and rear power windows cannot be operated by the power window main switch. (However, they can be operated by the power window sub-switches.)	3	42-23
	Passenger's side and rear power windows cannot be operated by the power window sub-switches. (However, they can be operated by the power window main switch.)	4	42-23
	Passenger's side and rear power windows cannot be operated by both the power window sub-switches and by the power window main switch.	5	42-24
	When the glass is raised, it then lowers automatically.	6	42-26
	The glass is not lowered when something is jammed in the window.	7	42-26
	When the glass is fully raised, it then lowers automatically.	8	42-27
Door locking mechanism	None of the door lock functions operate.	9	42-27
	None of the doors lock or unlock when the driver's side inside door locking knob is operated (including by means of the door key).	10	42-28
	Some doors do not lock or unlock.	11	42-28

INSPECTION PROCEDURE FOR TROUBLE SYMPTOMS

Inspection Procedure 1

The power windows cannot be operated by any of the power window switches.	Probable cause
The cause may be a malfunction of the power window relay and of the power window relay drive circuit.	● Malfunction of power window relay ● Malfunction of wiring harness or connector

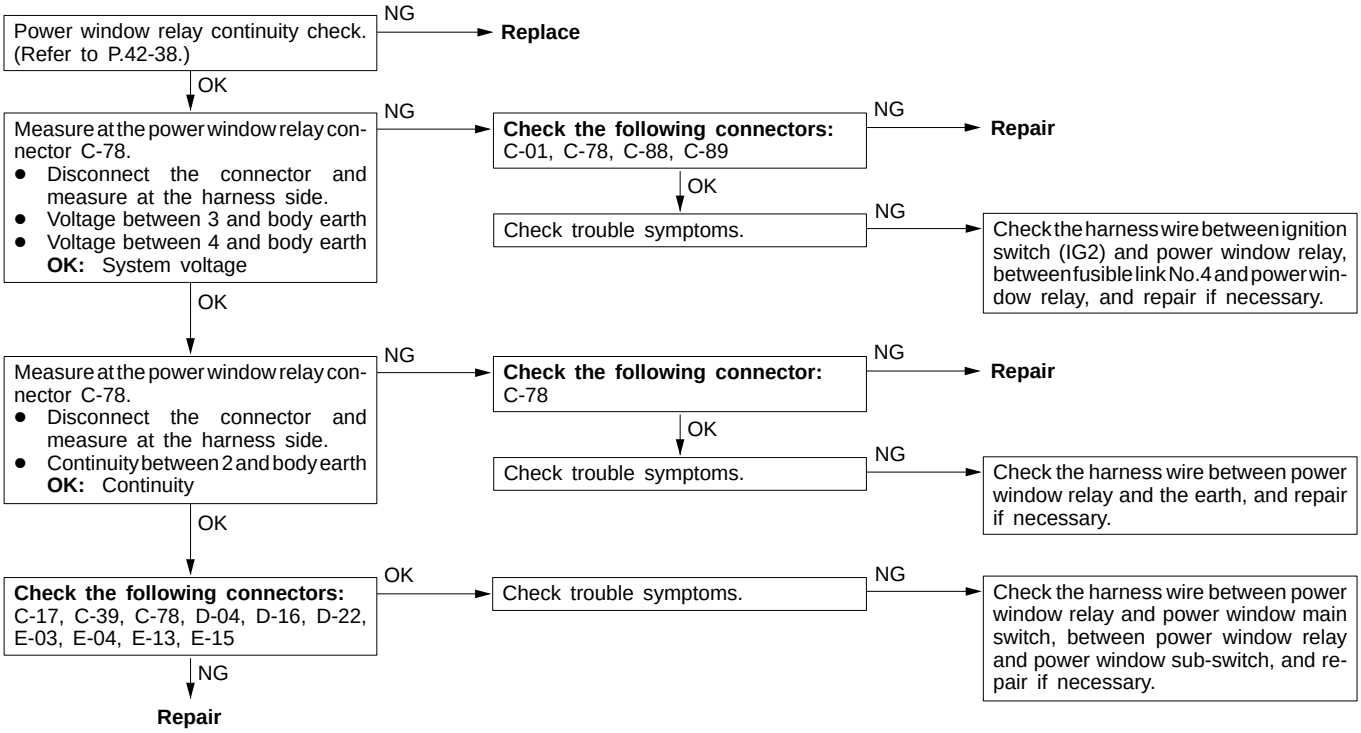

Inspection Procedure 2

Driver's side power window cannot be operated by the power window main switch.	Probable cause
The cause may be a malfunction of the earth circuit in the power window main switch or of the power supply circuit for the power window motor. The cause may also be a malfunction of the control circuit inside the power window main switch.	● Malfunction of power window motor ● Malfunction of power window main switch ● Malfunction of wiring harness or connector

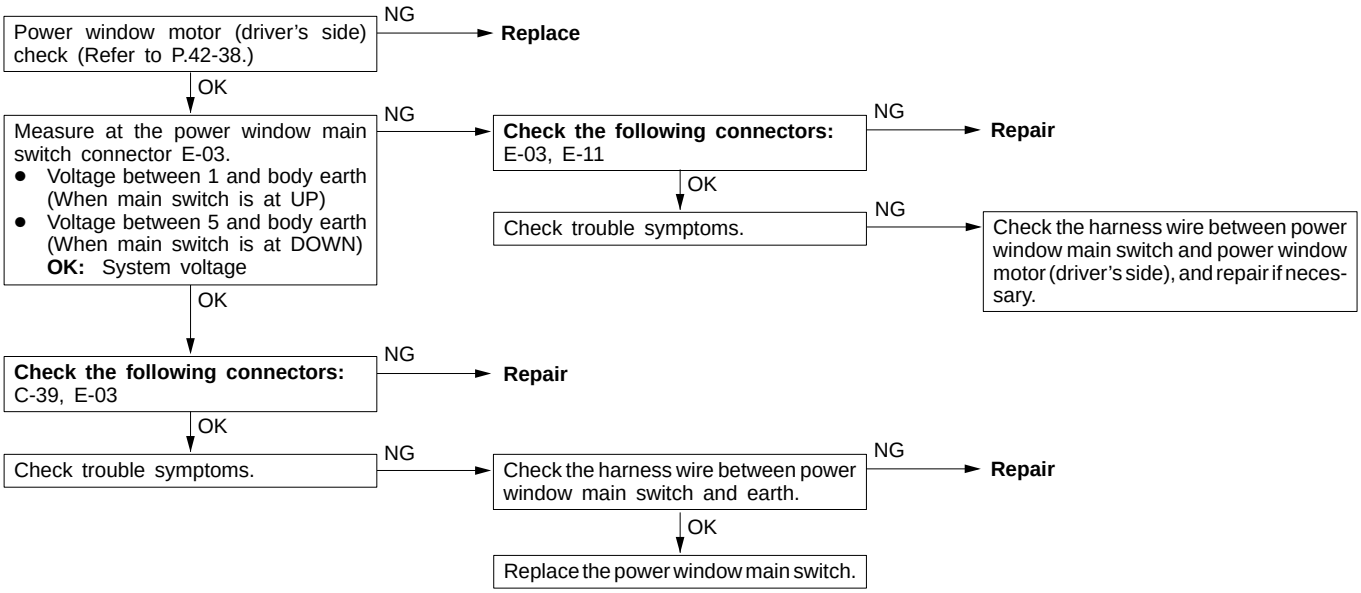

Inspection Procedure 3

Passenger's side and rear power windows cannot be operated by the power window main switch. (However, they can be operated by the power window sub-switches.)	Probable cause
The cause may be a malfunction of the power window main switch, or an open circuit or short-circuit in the communication line.	● Malfunction of power window main switch ● Malfunction of wiring harness or connector

<If passenger's side power window does not operate>

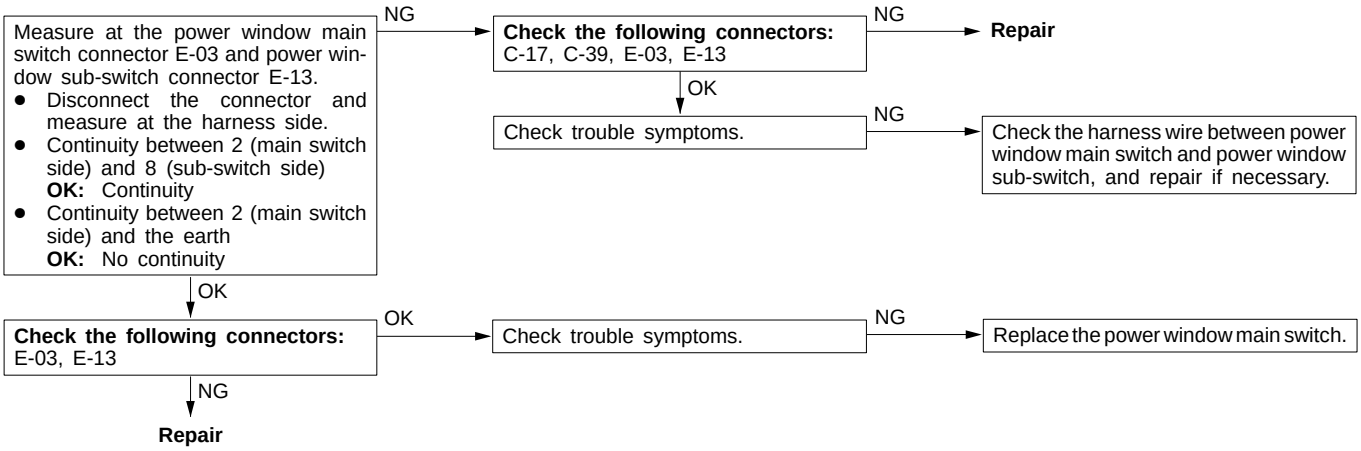

<If a rear power window does not operate>

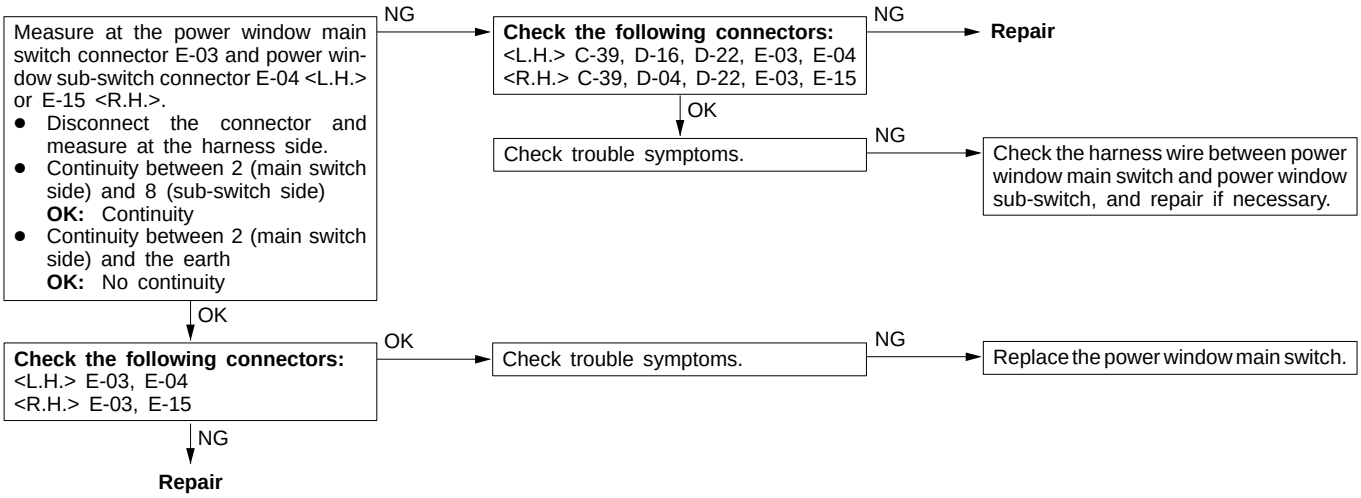

Inspection Procedure 4

Passenger's side and rear power windows cannot be operated by the power window sub-switches. (However, they can be operated by the power window main switch.)	Probable cause
The cause may be a malfunction of the power window sub-switch.	● Malfunction of power window sub-switch

Replace the power window sub-switch

Inspection Procedure 5

Passenger's side and rear power windows cannot be operated by both the power window sub-switches and by the power window main switch.	Probable cause
One of the following items can be defective: ● Power supply circuit of the power window sub-switch ● Earth circuit ● Power window motor ● Lock switch ● Power window main switch ● Power window sub-switch	● Malfunction of power window main switch ● Malfunction of power window sub-switch ● Malfunction of power window motor ● Malfunction of wiring harness or connector

<If passenger's side power window does not operate>

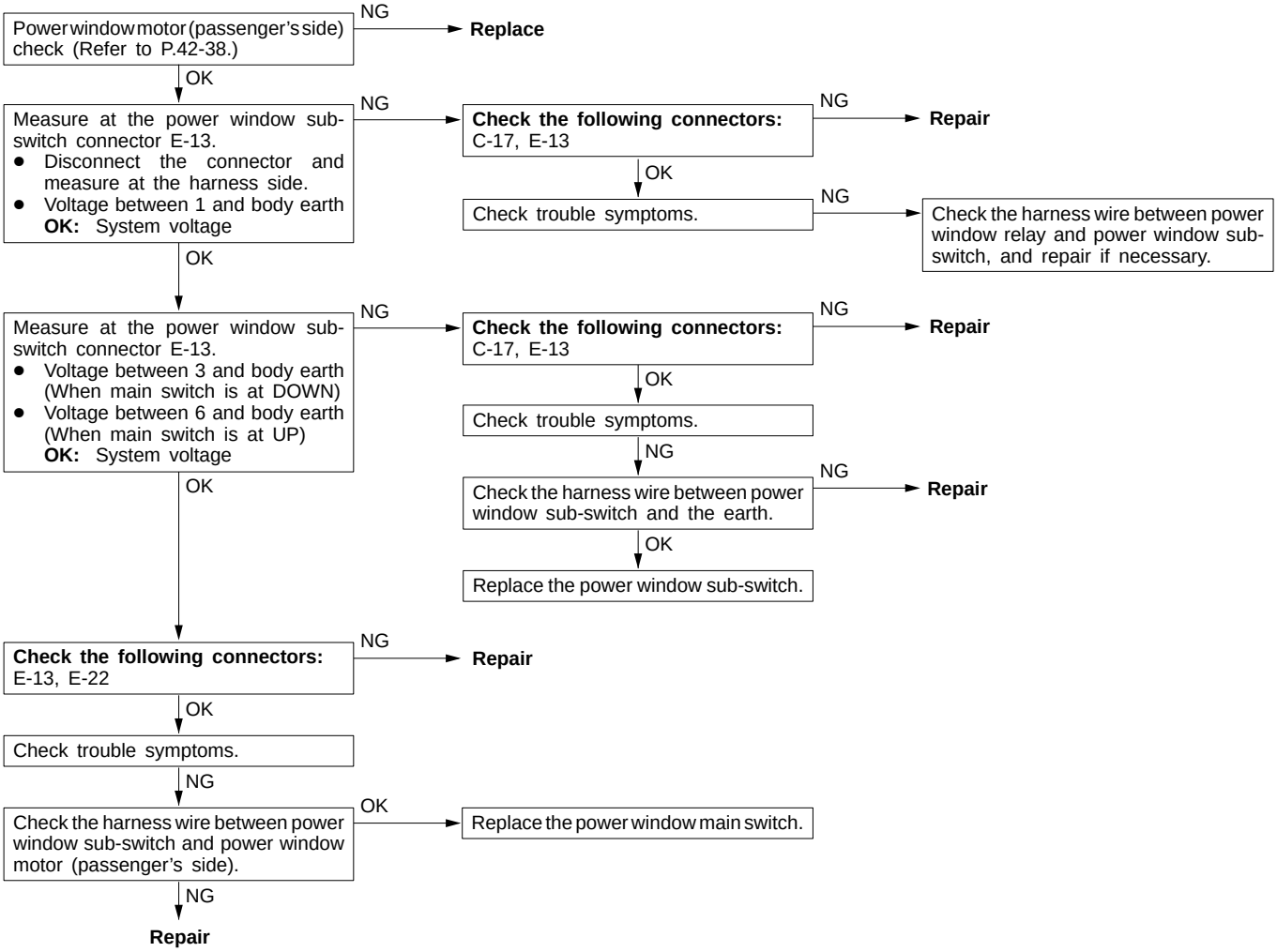

<If a rear power window does not operate>

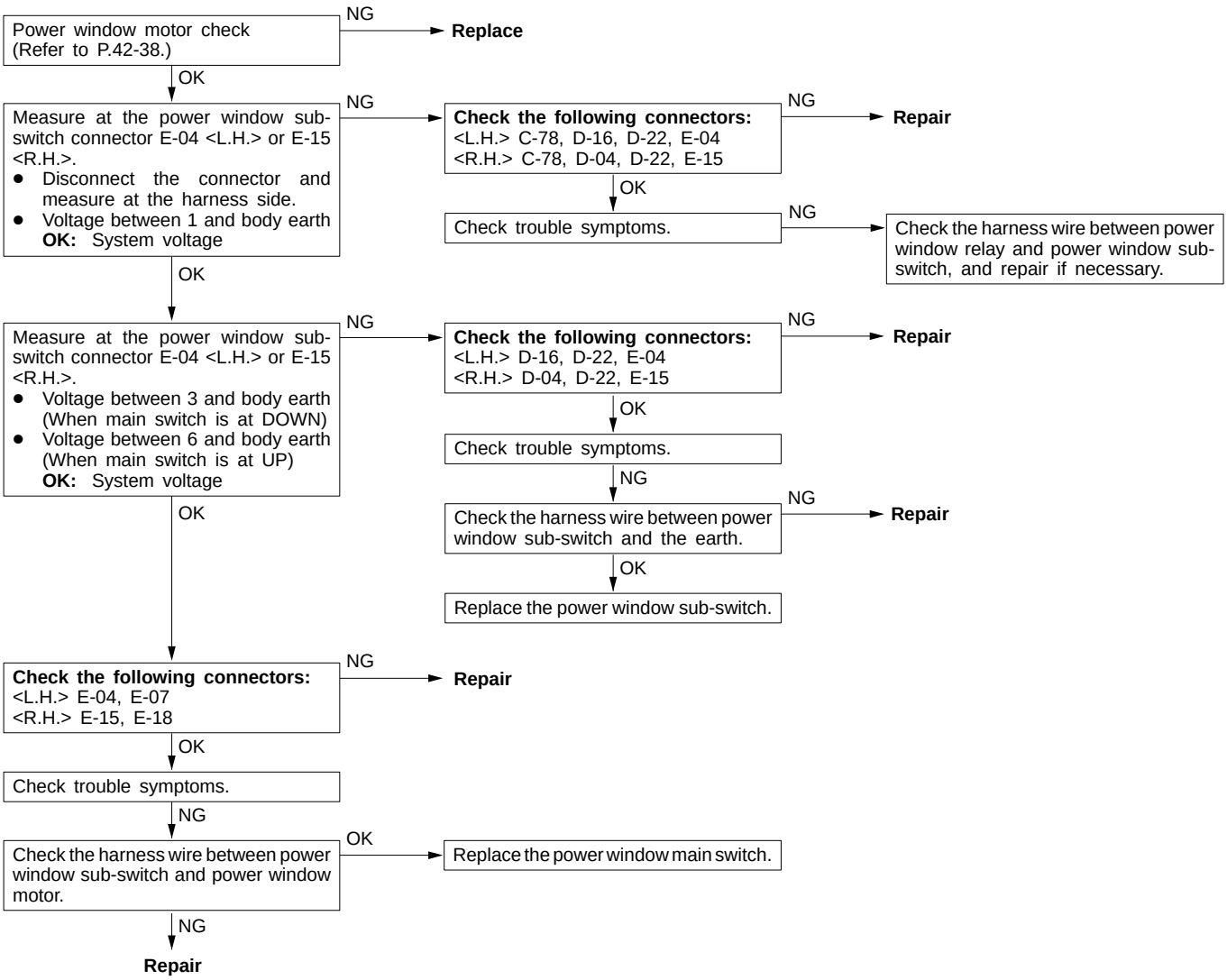

Inspection Procedure 6

When the glass is raised, it then lowers automatically.	Probable cause
If the sliding resistance is too large when the glass is being raised, it is judged that something is jammed in the window, and the window is lowered by approximately 150 mm.	● Incorrect window glass adjustment ● Glass slider is incorrectly installed or warped ● Malfunction of power window main switch or sub-switch

Does the glass move in the opposite direction when the power window drive current is above the following value? (Refer to P.42-30.)
Drive current:
<Single cab, Double cab> 4 – 7 A
<Club cab> 3.5 – 6.5 A

YES → Adjust the window glass. (Refer to P.42-29.)
Adjust or replace the power window. (Refer to P.42-29.)

NO ↓

Driver's side: Replace the power window main switch.
Passenger's side: Replace the power window sub-switch.

Inspection Procedure 7

The glass is not lowered when something is jammed in the window.	Probable cause
The safety mechanism is released under the following conditions, and the window will not be lowered even if something becomes jammed in it. ● If the limit switch is always off ● If there is an open circuit in the harness between the limit switch and the power window main switch or the power window sub-switch ● If the limit switch turns off before the set value is reached ● If the window is within 12 mm of being fully closed (normal setting to prevent the window from being lowered)	● Malfunction of limit switch ● Malfunction of wiring harness ● Malfunction of power window main switch or sub-switch ● Incorrect limit switch operation position

Limit switch operation position adjustment (Refer to P.42-39.)

↓

Check trouble symptoms.

NG ↓

Limit switch continuity check (Refer to P.42-39.)

NG → **Replace**

OK ↓

Check the following connectors:
<Driver's side> C-39, E-03, E-10
<Passenger's side> C-17, E-13, E-21
<Rear L.H.> D-16, D-22, E-04, E-08
<Rear R.H.> D-04, D-22, E-15, E-19

NG → **Repair**

OK ↓

Check trouble symptoms.

NG ↓

Check the harness between the limit switch and the power window main switch and between the limit switch and the power window sub-switch, and between the limit switch and the earth.

OK → Driver's side: Replace the power window main switch.
Passenger's side: Replace the power window sub-switch.

NG ↓

Repair

Inspection Procedure 8

When the glass is fully raised, it then lowers automatically.	Probable cause
When the window is within 12 mm of being fully closed, the limit switch turns off to prevent the window from being lowered. However, the above problem can occur if there is a malfunction of the limit switch or a short-circuit in a harness.	● Malfunction of limit switch ● Malfunction of wiring harness or connector ● Malfunction of power window main switch or sub-switch ● Incorrect limit switch operation position

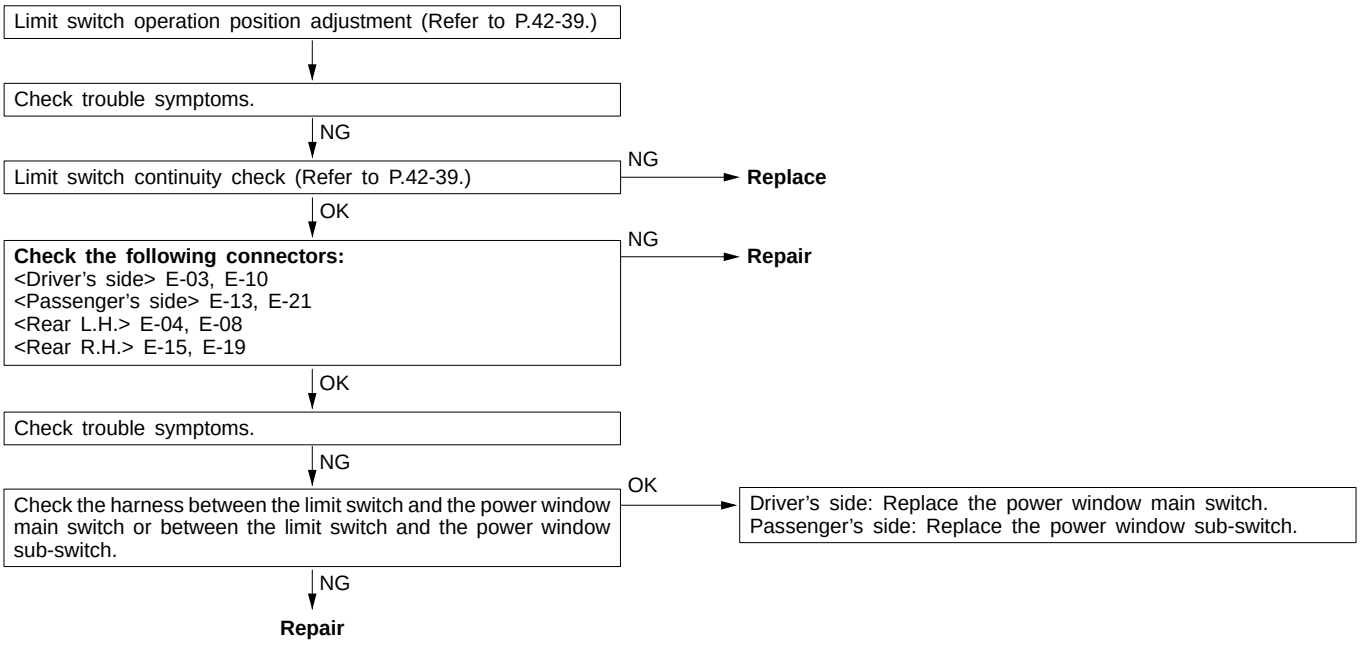

Inspection Procedure 9

None of the door lock functions operate.	Probable cause
The cause may be a malfunction of the ETACS-ECU power supply circuit system or of the earth circuit system.	● Malfunction of ETACS-ECU ● Malfunction of wiring harness or connector

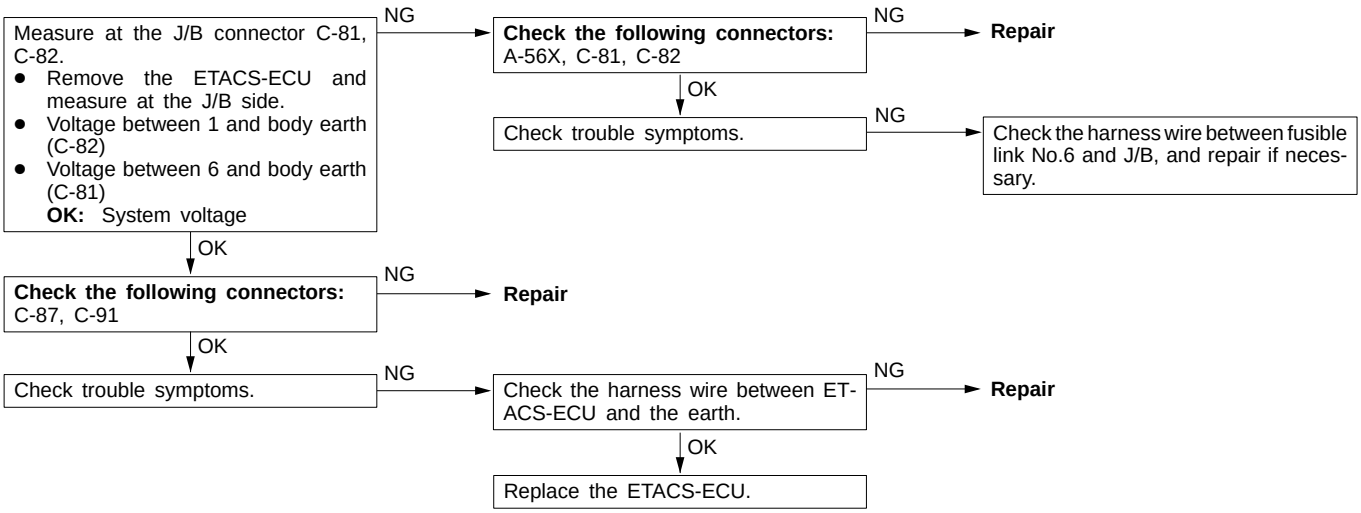

Inspection Procedure 10

None of the doors lock or unlock when the driver's-side inside door locking knob is operated (including by means of the door key).	Probable cause
The cause may be a malfunction of the door lock actuator switch, the ETACS-ECU or of a wiring harness or connector.	● Malfunction of front door lock actuator (driver's side) ● Malfunction of ETACS-ECU ● Malfunction of wiring harness or connector

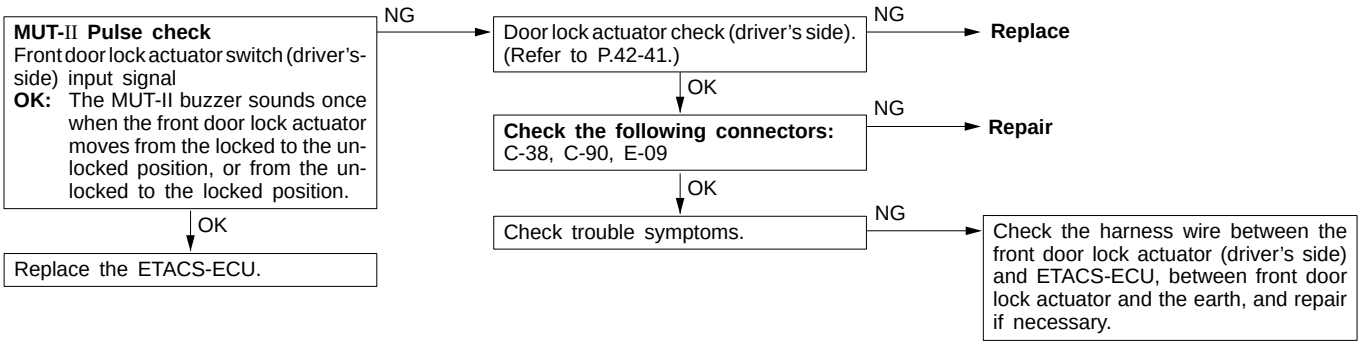

Inspection Procedure 11

Some doors do not lock or unlock.	Probable cause
The cause may be a malfunction of the door lock actuator or of a wiring harness or connector.	● Malfunction of door lock actuator ● Malfunction of wiring harness or connector

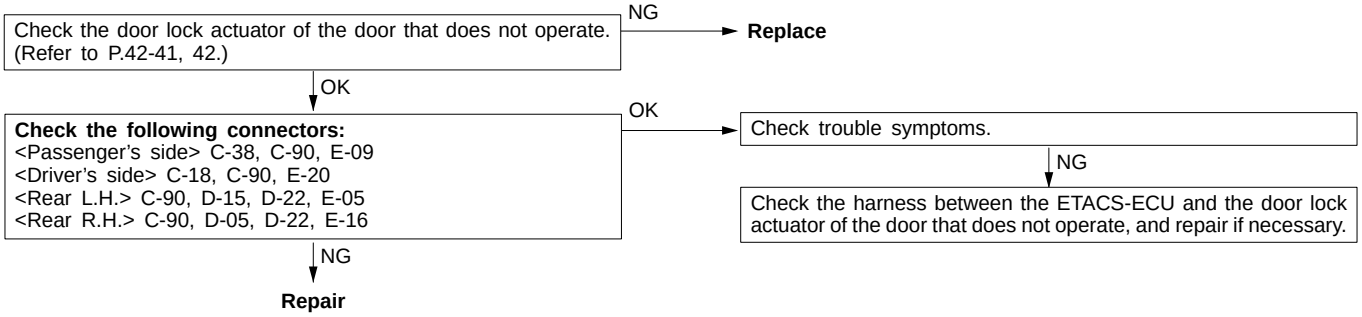

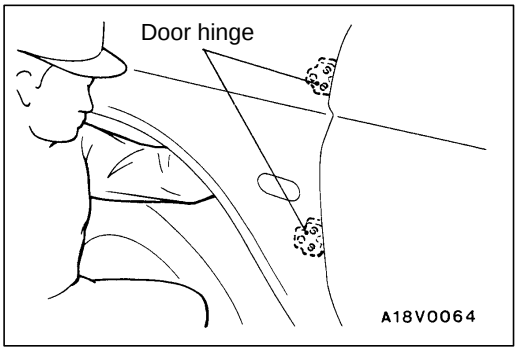

ON-VEHICLE SERVICE

42300090081

DOOR FIT ADJUSTMENT

1. If the clearance between the door and body is uneven, remove the splash shield, loosen the mounting bolt of the body side door hinges from inside the fender, and then move the door to adjust so that the clearance is even.

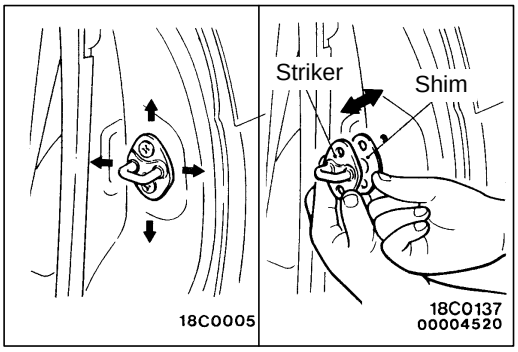

2. If the door opening and closing is heavy, adjust the meshing of the striker and the door latch (in the longitudinal direction) by adding shims to the striker and by moving the striker up and down or to the left and right.

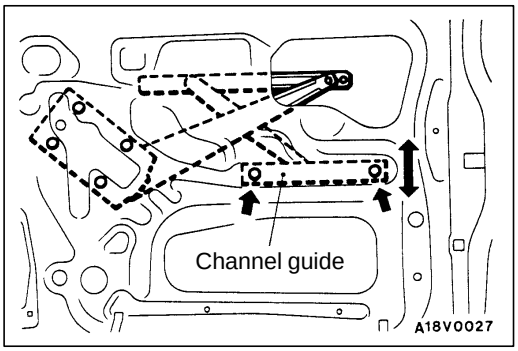

DOOR WINDOW GLASS ADJUSTMENT

42300100135

Check that the window glass moves smoothly and touches the glass runchannel firmly when it is fully raised and fully lowered. If the window glass doesn't move properly, adjust by the following procedure.

1. Remove the door trim and waterproof film. (Refer to P.42-34, 35.)
2. Raise the window glass, loosen the channel guide mounting bolts and adjust the vertical tilt of the glass.

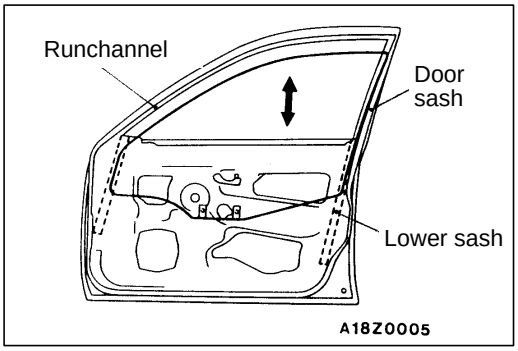

ADJUSTMENT AND REPLACEMENT WHEN THERE IS A MALFUNCTION OF THE POWER WINDOWS

42900190048

If the window glass automatically starts moving downwards at the wrong time while it is being raised, carry out the following adjustment or replacement procedures.

1. Remove the door trim and waterproof film. (Refer to P.42-34, 35.)
2. Remove the window regulator assembly from the door window glass, and then raise and lower the door window glass by hand to check the operation force.

   NOTE
   Insert a cushion or similar object to prevent damage to the glass if it should happen to fall down.

3. If the door window glass does not move up and down smoothly, check or repair the following points.
   - Check the installation condition of the runchannel.
   - Repair the twisting in the door sash.
   - Check the installation condition of the lower sash or the center sash.

NOTE
The lower sash cannot normally be adjusted, but it may be possible to adjust the sash span slightly within the range allowed by manufacturing tolerances by pushing the lower sash outwards while re-installing it.

4. If repair or adjustment is not possible, replace the door assembly.

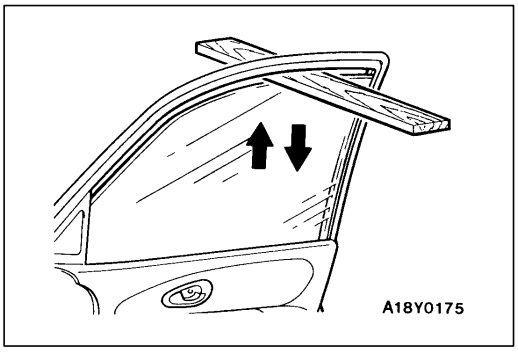

POWER WINDOW SAFETY MECHANISM CHECK

42900100058

1. Place a wooden board with a thickness of approximately 15 mm as shown in the illustration, and then raise the window glass.
2. Check that the window lowers by a distance of approximately 150 mm when the window clamps the wooden board. If this doesn't happen, refer to "Troubleshooting" (P.42-26).

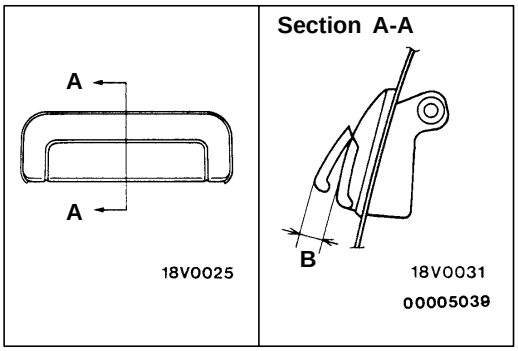

DOOR OUTSIDE HANDLE PLAY CHECK

42300160096

1. Check that the door outside handle play is within the standard value range.

   Standard value (B): 2.8 mm or more

2. If the door outside handle play is not within the standard value range, check the door outside handle or the door latch assembly. Replace, if necessary.

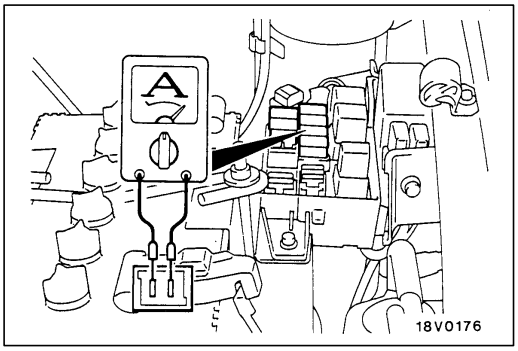

POWER WINDOW OPERATION CURRENT CHECK

42900110020

1. Remove the power window fuse and connect a circuit analyser as shown in the illustration.
2. When the power window switch is pressed to the UP position, a large amount of current flows at the time the window starts to close and when it is fully closed, so measure the operation current in the interval between these two points.

   Standard value:
   <Single cab, Double cab>
   4 – 7 A (for 14 – 15 V power supply voltage at 20°C)
   <Club cab>
   3.5 – 6.5 A (for 14 – 15 V power supply voltage at 20°C)

3. If the operation current is outside the standard value, refer to "Troubleshooting" (P.42-25).

CIRCUIT BREAKER (INCORPORATED IN THE POWER WINDOW MOTOR) CHECK 42900170059

1. Press the power window switch to the UP position to fully close the window glass, and keep pressing the switch for a further 10 seconds.
2. Release the power window switch from the UP position and immediately press it to the DOWN position. The condition of the circuit breaker is good if the power window glass starts to move downwards within 60 seconds.

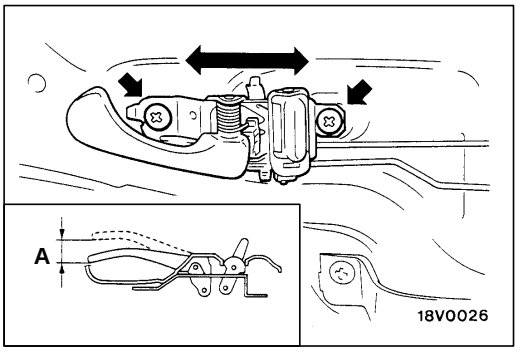

DOOR INSIDE HANDLE PLAY CHECK AND ADJUSTMENT 42300150130

1. Check that the door inside handle play is within the standard value range.

   Standard value (A): 7.3 mm or more
2. If the door inside handle play is outside the standard value range, remove the door trim. (Refer to P.42-33, 34.)
3. Loosen the inside handle mounting screws, and then move the inside handle back and forth to adjust the play.

DOOR ASSEMBLY

42300220169

REMOVAL AND INSTALLATION

Post-installation Operation
- Door Adjustment (Refer to P.42-29.)

Front door

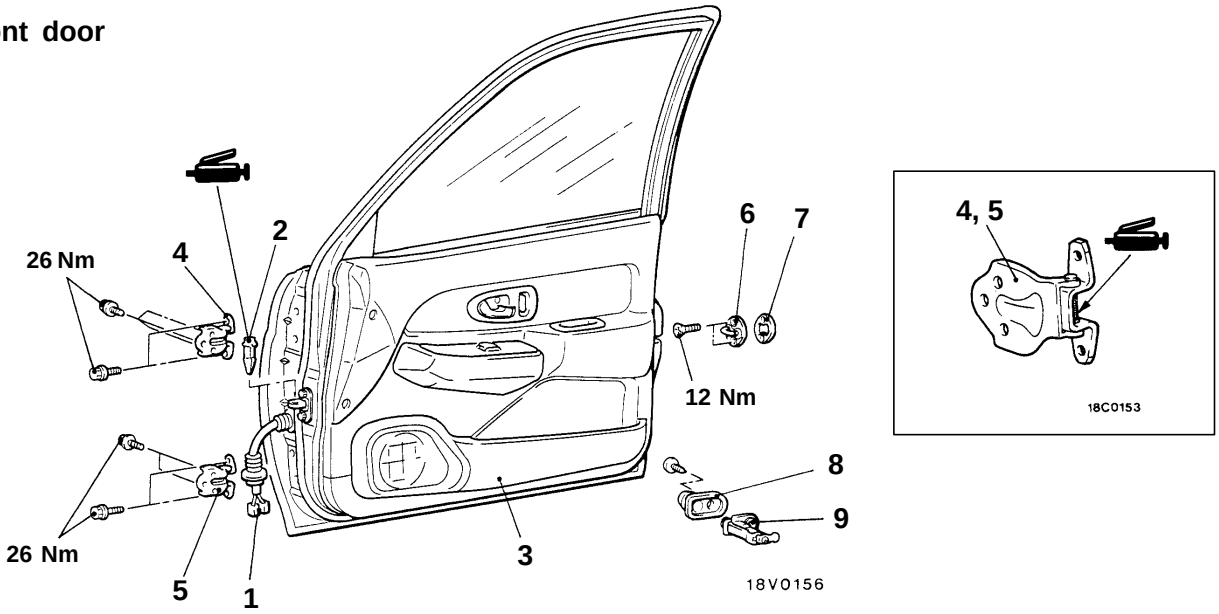

Rear door

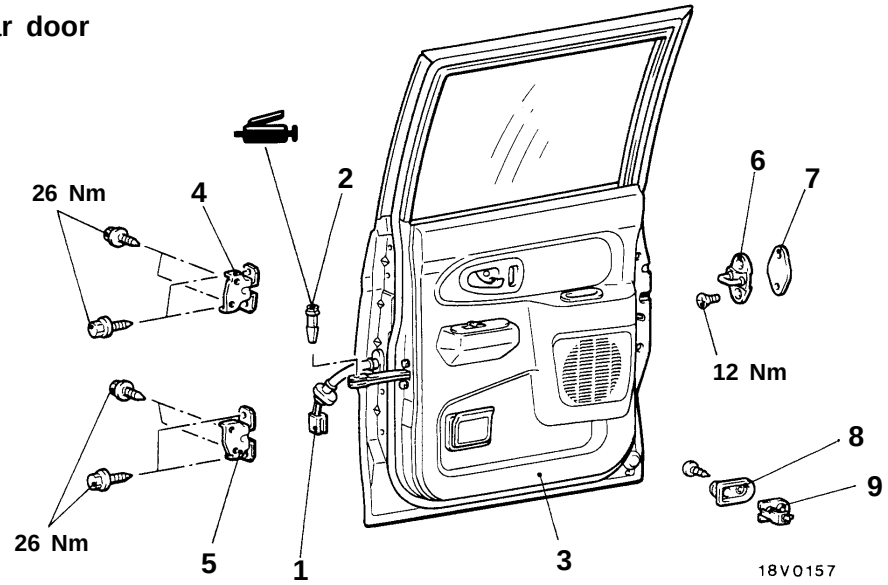

00005040

Door assembly removal steps

1. Harness connector
2. Spring pin
3. Door assembly
4. ▶A◀ Door upper hinge
5. ▶A◀ Door lower hinge

Striker removal steps

6. Striker
7. Striker shim

Door switch removal steps

8. Door switch cap
9. Door switch

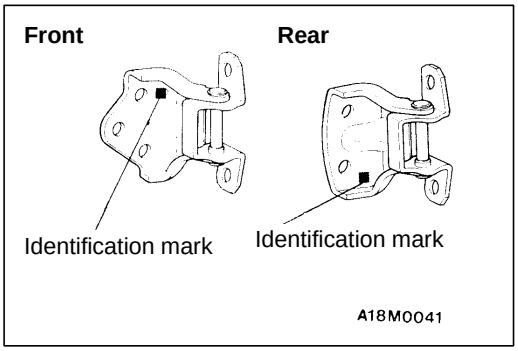

INSTALLATION SERVICE POINT

▶A◀ DOOR LOWER HINGE/DOOR UPPER HINGE INSTALLATION

The door hinges differ according to where they are used, so check the identification marks before installation.

Applicable location		Identification mark
Front left side door	Upper hinge	F1
	Lower hinge	E1
Front right side door	Upper hinge	E1
	Lower hinge	F1
Rear left side door	Upper hinge	A1
	Lower hinge	B1
Rear right side door	Upper hinge	B1
	Lower hinge	L1

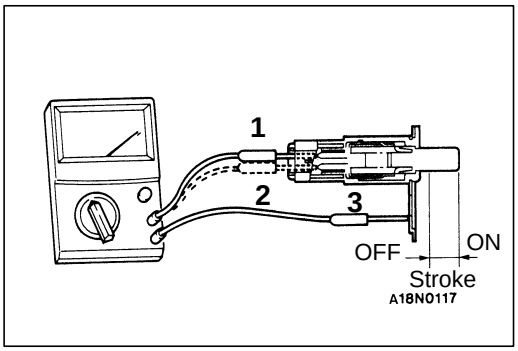

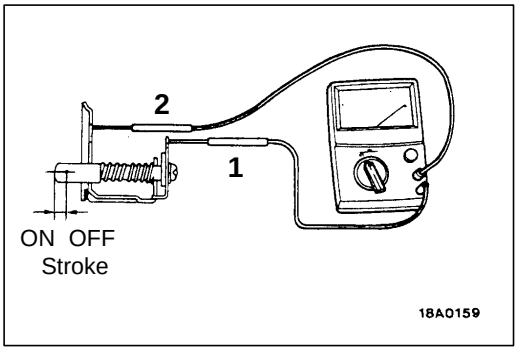

INSPECTION

42300600031

DOOR SWITCH CONTINUITY CHECK

Driver's door switch

Switch position	Terminal No.		
	1	2	3
Open (ON)	○	○	○
Depressed (OFF)			

Passenger's door and rear door switch

Switch position	Terminal No.	
	1	2
Open (ON)	○	○
Depressed (OFF)		

DOOR TRIM AND WATERPROOF FILM

42300430142

REMOVAL AND INSTALLATION

Front door

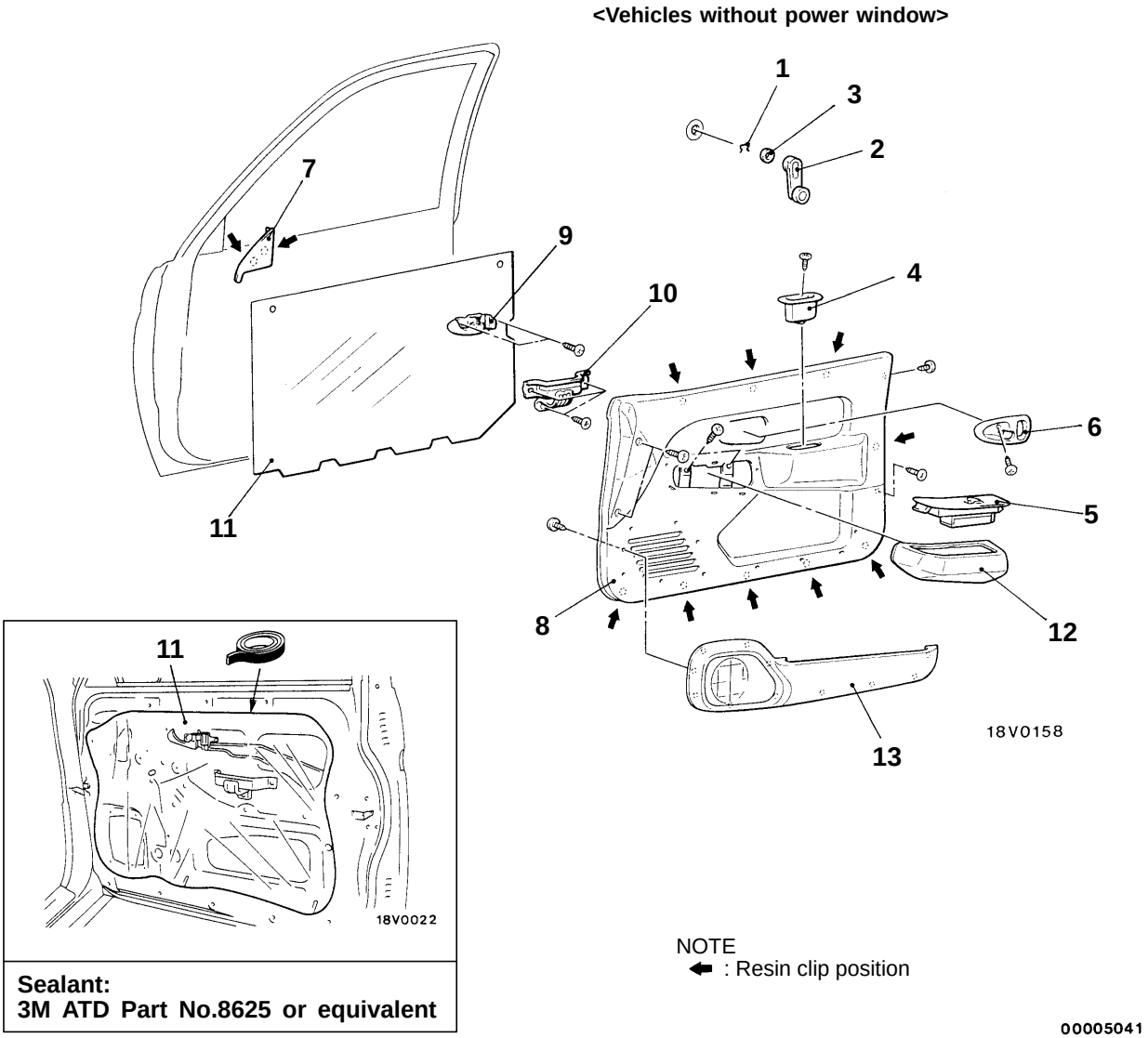

Removal steps

◀A▶ ▶A◀ 1. Clip
<Vehicles without power window>

▶A◀ 2. Regulator handle <Vehicles without power window>

▶A◀ 3. Escutcheon
<Vehicles without power window>

4. Pull handle box
5. Power window switch
<Vehicles with power window>
6. Cover
7. Inner delta cover
8. Door trim
9. Door inside handle
10. Pull handle bracket
11. Waterproof film
12. Power window switch cover
<Vehicles with power window>
13. Door pocket

Rear door

<Vehicles without power window>

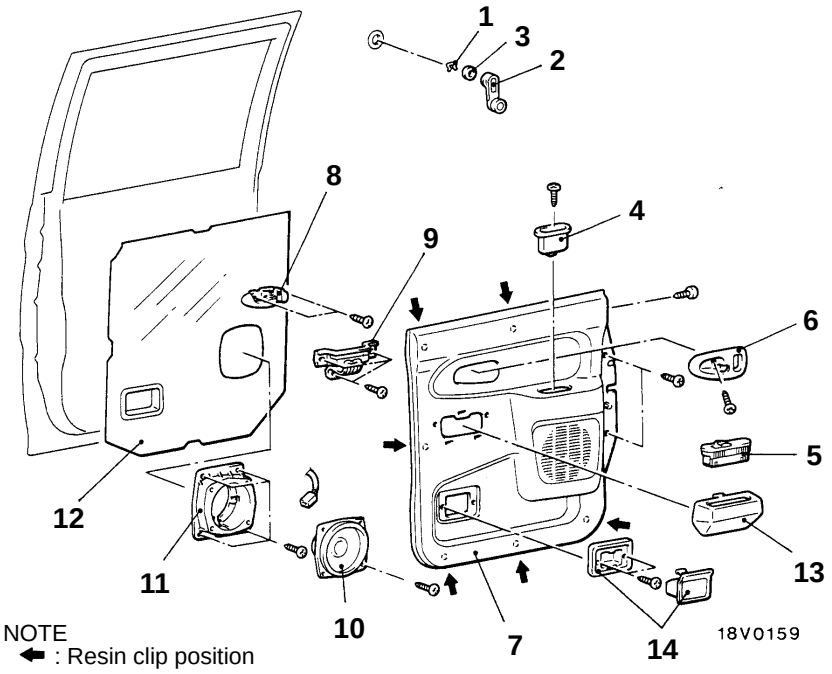

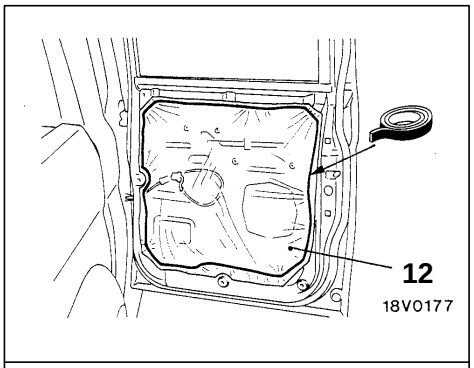

Sealant:
3M ATD Part No.8625 or equivalent

00005042

Removal steps

◀A▶ ▶A◀ 1. Clip
<Vehicles without power window>
▶A◀ 2. Regulator handle
<Vehicles without power window>
▶A◀ 3. Escutcheon
<Vehicles without power window>
4. Pull handle box
5. Power window switch
<Vehicles with power window>
6. Cover
7. Door trim
8. Door inside handle
9. Pull handle bracket
10. Speaker
11. Speaker cover
12. Waterproof film
13. Power window switch cover
<Vehicles with power window>
14. Ashtray

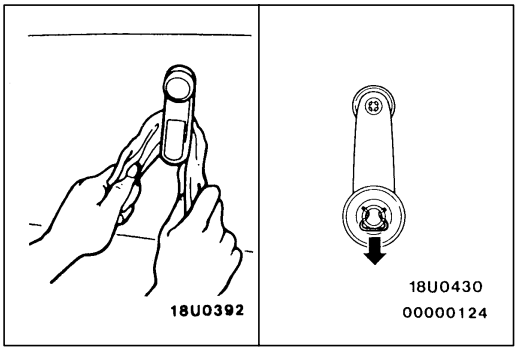

REMOVAL SERVICE POINT

◀A▶ CLIP REMOVAL

Remove the clip by using a rag, and then remove the regulator handle.

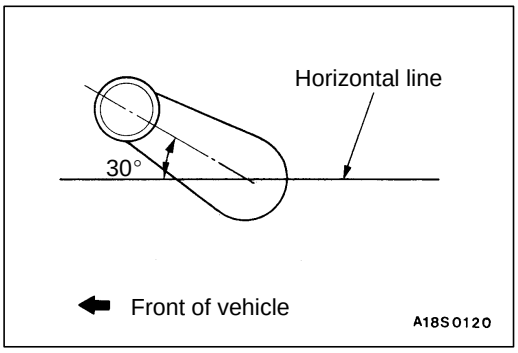

INSTALLATION SERVICE POINT

▶A◀ ESCUTCHEON/REGULATOR HANDLE/CLIP INSTALLATION

1. Install the escutcheon and the clip to the regulator handle.
2. Fully close the front door glass, and install the regulator handle so that it faces as shown in the illustration.

DOOR GLASS AND REGULATOR

42900130156

REMOVAL AND INSTALLATION

Front door

Pre-removal Operation
- Door Trim and Waterproof Film Removal (Refer to P.42-34.)
- Door Mirror Removal (Refer to GROUP 51.)

Post-installation Operation
- Door Trim and Waterproof Film Installation (Refer to P.42-34.)
- Door Mirror Installation (Refer to GROUP 51.)
- Door Window Glass Adjustment (Refer to P.42-29.)
- Power Window Safety Mechanism Check (Refer to P.42-30.)

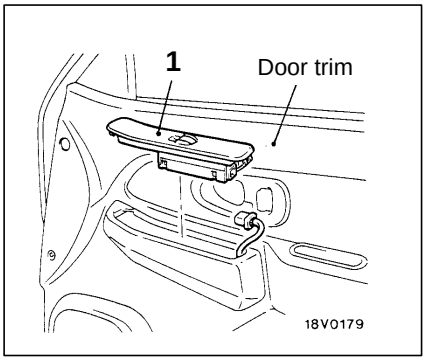

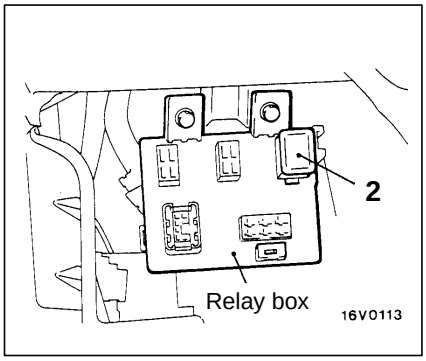

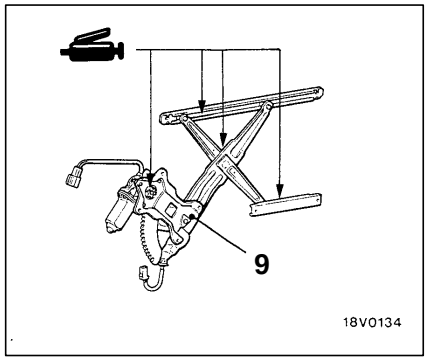

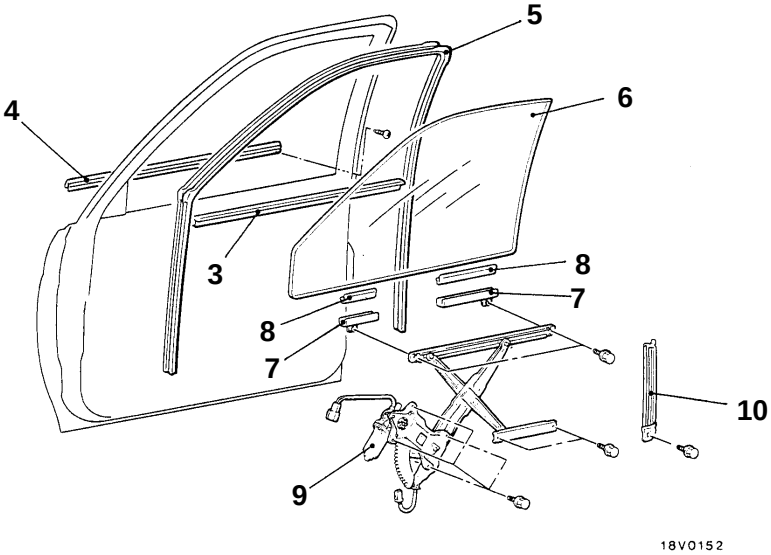

00005043

1. Power window switch
   <Vehicles with power window>

Power window relay removal steps
- Driver's side under cover (Refer to GROUP 52A – Instrument Panel.)

2. Power window relay
   <Vehicles with power window>

Front window regulator assembly removal steps

3. Door window inner weatherstrip
4. Door beltline moulding assembly
5. Door window glass runchannel
6. Door window glass
7. ▶A◀ Door glass holder
8. Door glass pad
9. Window regulator assembly
10. Rear lower sash

Rear door

Pre-removal Operation
- Door Trim and Waterproof Film Removal (Refer to P.42-35.)

Post-installation Operation
- Door Trim and Waterproof Film Installation (Refer to P.42-35.)
- Door Window Glass Adjustment (Refer to P.42-29.)
- Power Window Safety Mechanism Check (Refer to P.42-30.)

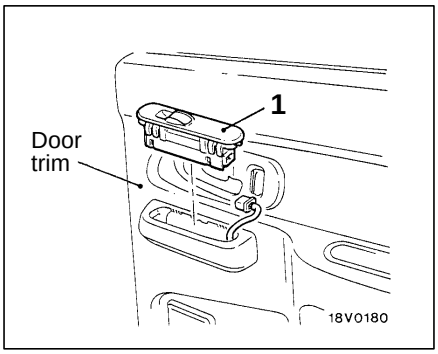

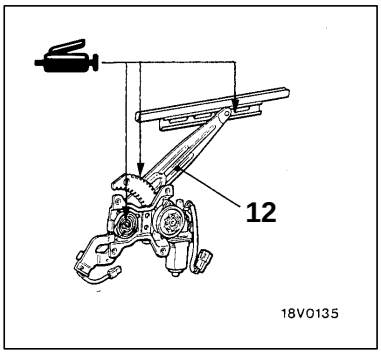

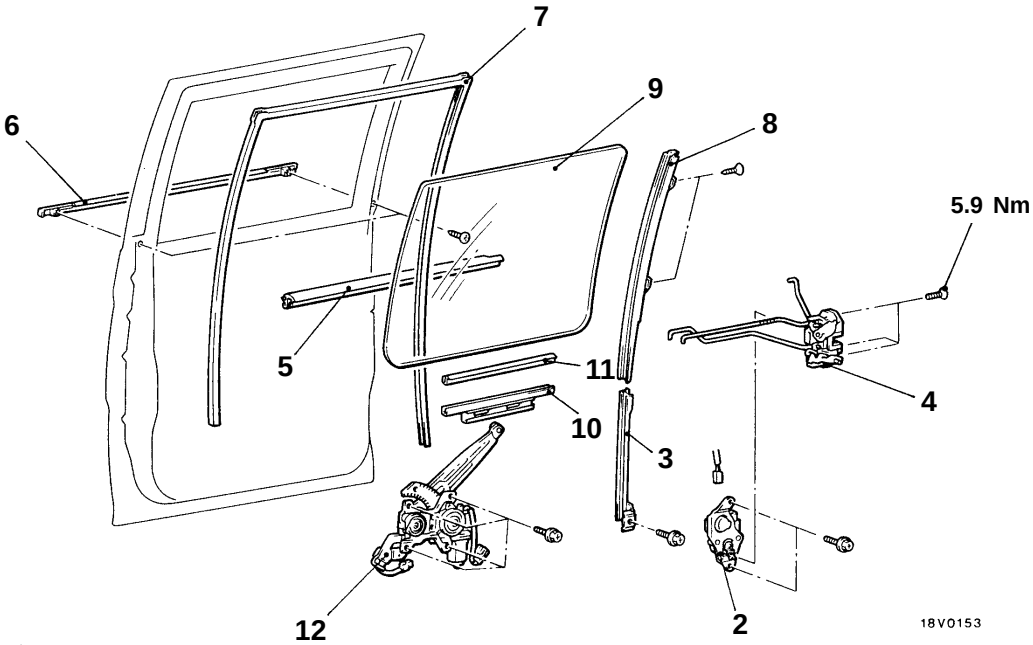

00005044

1. Power window switch <Vehicles with power window>

Power window regulator assembly removal steps ◀A▶

2. Door lock actuator assembly <Vehicles with power window>
3. Rear lower sash
4. Latch assembly
5. Door window inner weatherstrip
6. Door beltline moulding assembly
7. Door window glass runchannel
8. Rear upper sash
9. Door window glass
10. Door glass holder ▶A◀
11. Door glass pad
12. Window regulator assembly

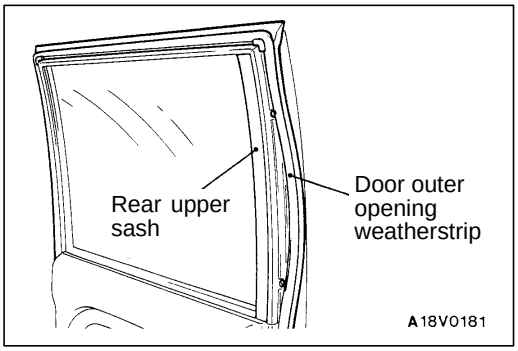

REMOVAL SERVICE POINT

◀A▶ REAR UPPER SASH REMOVAL (REAR DOOR)

1. Remove the door outer opening weatherstrip from the rear upper sash only.
2. Remove the rear upper sash mounting screws, and then remove the rear upper sash from the door panel.

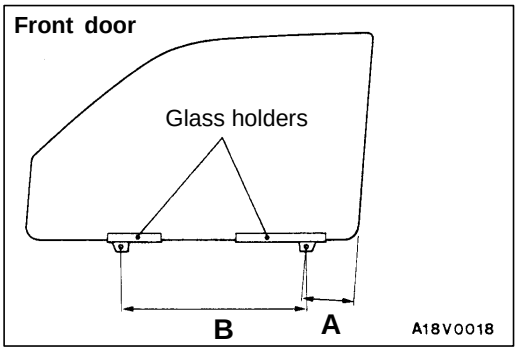

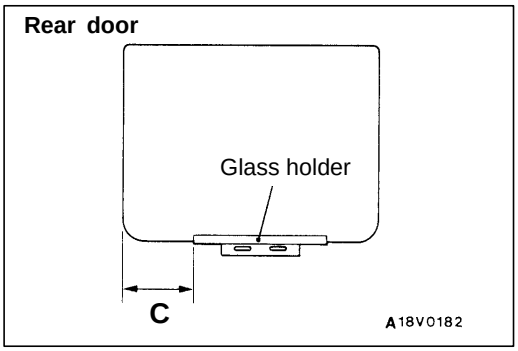

INSTALLATION SERVICE POINTS

▶A◀ DOOR GLASS HOLDER INSTALLATION

Install the glass pad and the glass holders to the window glass as shown in the illustration.

Standard value:

Single cab, Double cab
(A) 107 – 108 mm
(B) 418 – 420 mm

Club cab
(A) 217 – 218 mm
(B) 418 – 420 mm

Double cab
(C) 161 – 165 mm
<Vehicles without power window>
(C) 223 – 227 mm <Vehicles with power window>

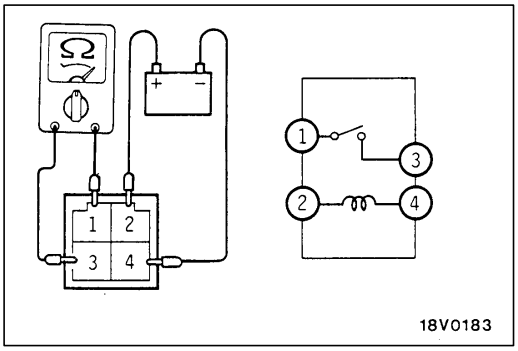

INSPECTION

42900180069

POWER WINDOW RELAY CONTINUITY CHECK

System voltage	Terminal No.			
	1	2	3	4
Not applied		○		○
Applied	○	⊕	○	⊖

POWER WINDOW MOTOR CHECK

42900150053

1. Connect a battery directly to the motor terminals and check that the motor runs smoothly.
2. Check that the motor runs in the opposite direction when the battery is connected with the polarity reversed.

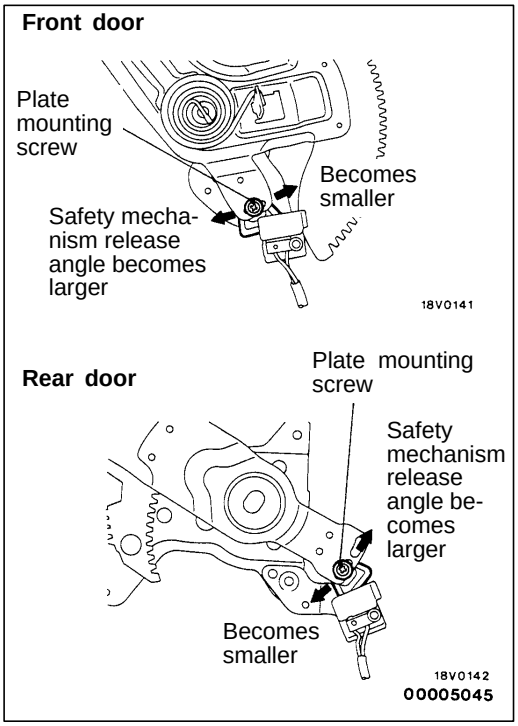

LIMIT SWITCH OPERATION POSITION ADJUSTMENT

42900230016

Loosen the plate mounting screw and move the plate to the left or right to adjust where the limit switch starts working (safety mechanism stops working).

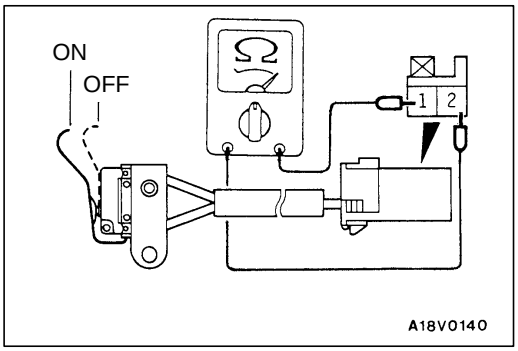

LIMIT SWITCH CONTINUITY CHECK

42900220020

Switch position	Terminal No.	
	1	2
ON	○	○
OFF		

DOOR HANDLE AND LATCH

42300460141

REMOVAL AND INSTALLATION

Pre-removal Operation
- Door Trim Removal (Refer to 42-34, 35.)

Post-installation Operation
- Door Inside Handle Play Check (Refer to 42-31.)
- Door Trim Installation (Refer to 42-34, 35.)
- Door Fit Adjustment (Refer to 42-29.)

Front door

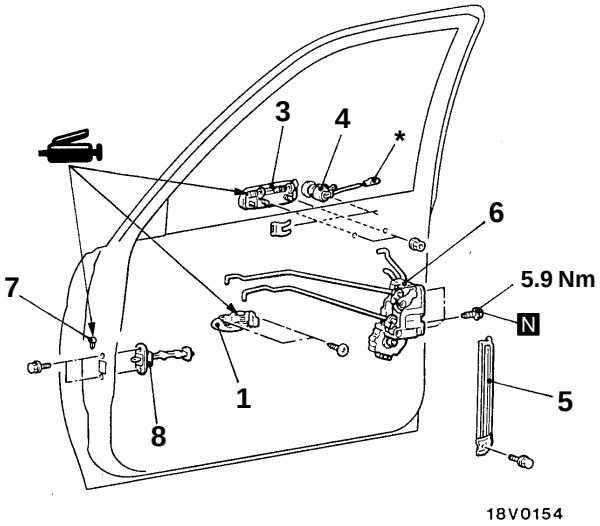

Rear door

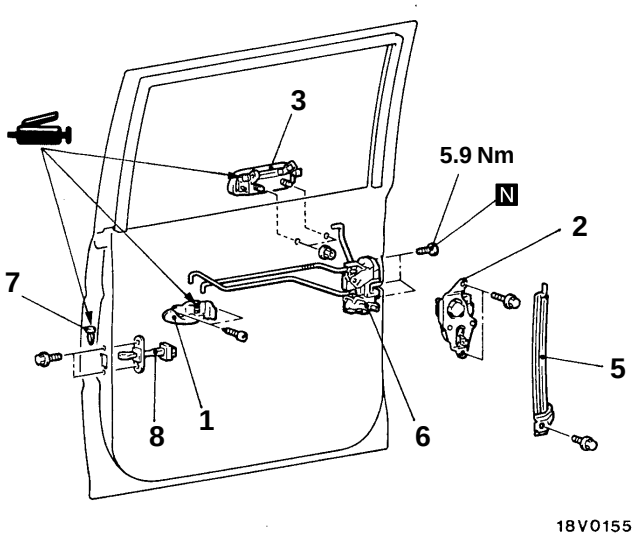

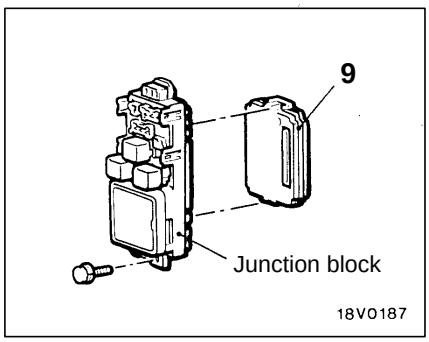

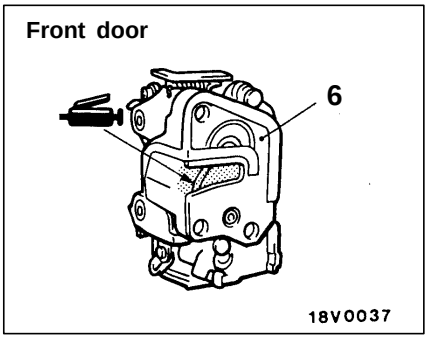

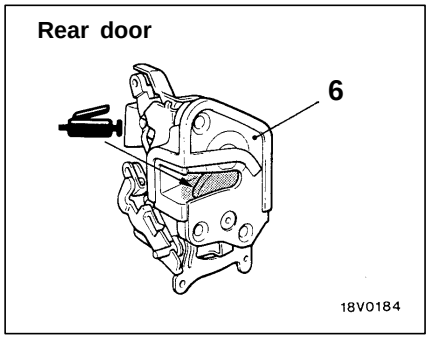

00005046

Front door handle and door latch assembly removal steps

1. Door inside handle
- Waterproof film (Refer to 42-34.)
3. Door outside handle
4. Door lock key cylinder
5. Rear lower sash
6. Door latch assembly

Rear door handle and door latch assembly removal steps

1. Door inside handle
- Waterproof film (Refer to 42-35.)
2. Rear door lock actuator assembly <Vehicles with central door locking system>
3. Door outside handle
5. Rear lower sash
6. Door latch assembly

Door check removal steps

1. Door inside handle
- Waterproof film (Refer to 42-34, 35.)
7. Spring pin
▶A◀ 8. Door check

ETACS-ECU removal

9. ETACS-ECU <Vehicles with central door locking system> (Refer to GROUP 54 – Ignition Switch and Immobilizer System.)

NOTE
*: This is equipped on passenger's side door lock key cylinder of vehicles with central door locking system.

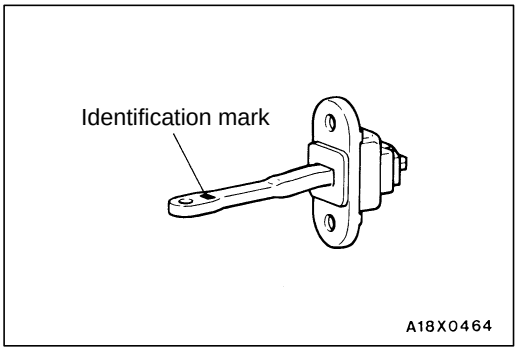

INSTALLATION SERVICE POINT

▶A◀ DOOR CHECK INSTALLATION

Install the door check so that the identification mark faces upwards.

Applicable location		Identification mark
L.H.	Front door	YL
	Rear door	MR
R.H.	Front door	YR
	Rear door	ML

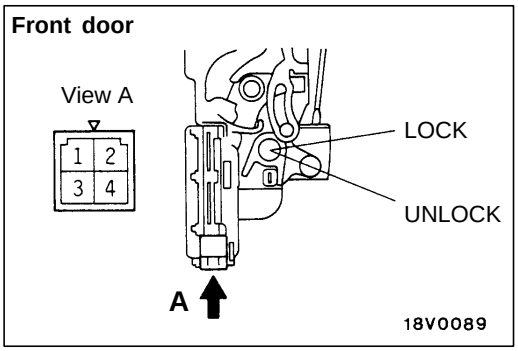

INSPECTION

42300610089

FRONT DOOR LOCK ACTUATOR CHECK <Vehicles with central door locking system>

Driver's side

Rod position	Terminal No.				Rod operation
	1	2	3	4	
LOCK			⊖	⊕	LOCK position → UNLOCK position
UNLOCK			⊕	⊖	UNLOCK position → LOCK position
LOCK			○	○	
UNLOCK	○	○	○	○	

Passenger's side

Rod position	Terminal No.		Rod operation
	3	4	
LOCK	⊕	⊖	LOCK position → UNLOCK position
UNLOCK	⊖	⊕	UNLOCK position → LOCK position

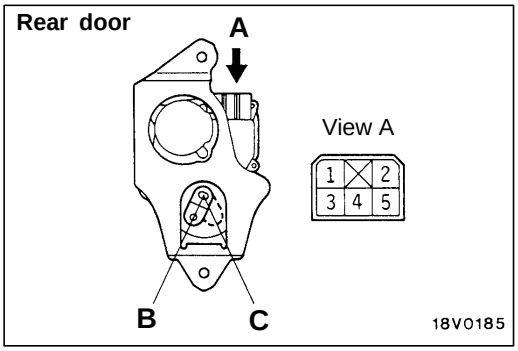

REAR DOOR LOCK ACTUATOR CHECK <Vehicles with central door locking system>

42300620068

Rod position	Terminal No.		Rod operation
	1	2	
B	⊕	⊖	B position → C position
C	⊖	⊕	C position → B position

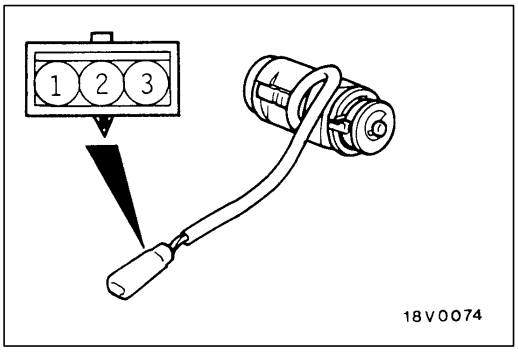

DOOR LOCK KEY CYLINDER SWITCH CONTINUITY CHECK <Vehicles with central door locking system>

42300630092

Passenger's side only

Switch position	Terminal No.		
	1	2	3
LOCK	○	○	
Neutral (OFF)			
UNLOCK		○	○

WINDOW GLASS RUNCHANNEL AND DOOR OPENING WEATHERSTRIP

42300310125

REMOVAL AND INSTALLATION

Front door

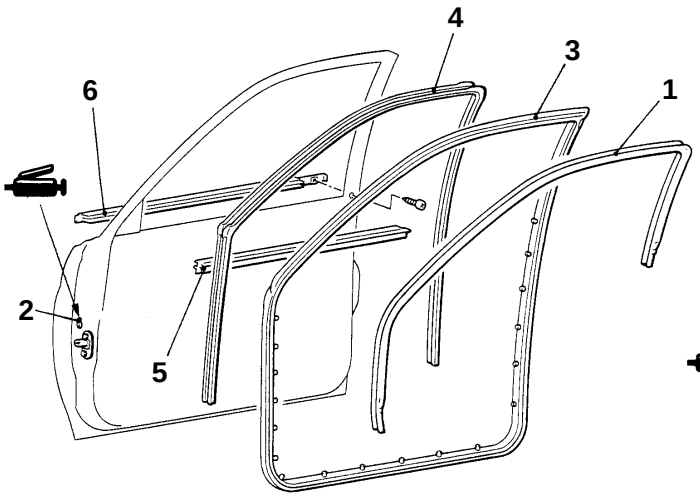

18V0150

Rear door

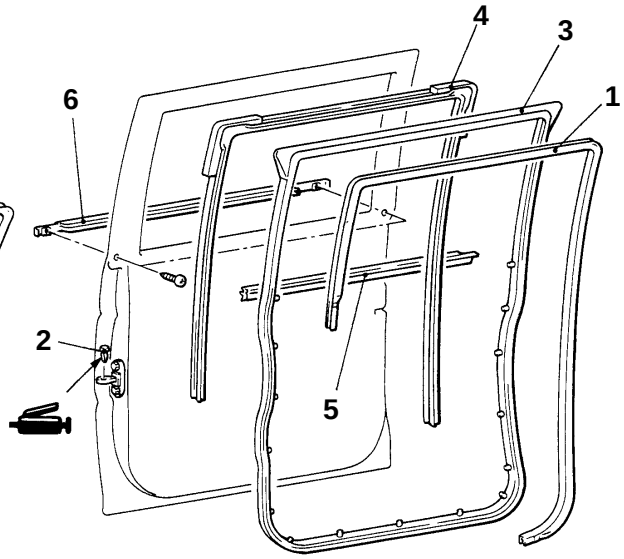

18V0151

00005047

Door inner opening weatherstrip removal steps <Vehicles with map lamp>

- Front scuff plate (Refer to GROUP 52A – Trims.)
- Rear scuff plate (Refer to GROUP 52A – Trims.)
- Centre pillar lower trim (Refer to GROUP 52A – Trims.)
- Cowl side trim (Refer to GROUP 52A – Trims.)

1. Door inner opening weatherstrip

Door outer opening weatherstrip removal

2. Spring pin

◀A▶ ▶A◀ 3. Door outer opening weatherstrip

Window glass runchannel removal

4. Window glass runchannel

Door beltline inner weatherstrip removal steps

- Door trim (Refer to P.42-34, 35.)

5. Door beltline inner weatherstrip

Door beltline outer weatherstrip removal steps

- Door mirror (Refer to GROUP 51.)

6. Door beltline outer weatherstrip

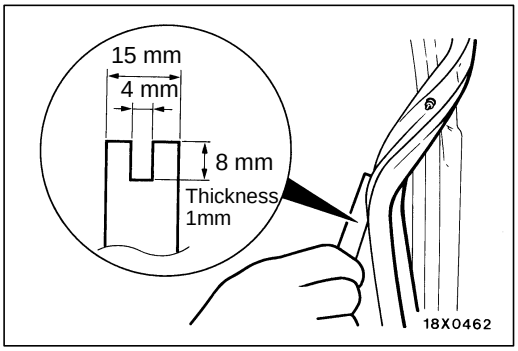

REMOVAL SERVICE POINT

◀A▶ DOOR OUTER OPENING WEATHERSTRIP REMOVAL

Make a tool as shown in the illustration to remove the door opening weatherstrip.

INSTALLATION SERVICE POINT

▶A◀ DOOR OUTER OPENING WEATHERSTRIP INSTALLATION

The clip colour identifies the left and right weatherstrips, so be sure to use the colours so as to install correctly.

Applicable side	Identification colour
Left door	Brown
Right door	Natural

REAR GATE

42500030010

SERVICE SPECIFICATION

Item	Standard value
Tailgate handle play mm	1 – 3

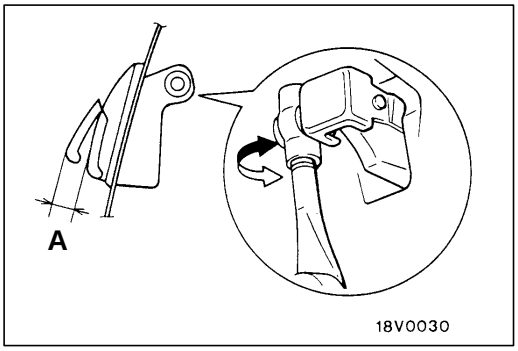

ON-VEHICLE SERVICE

42500090018

REAR GATE OUTSIDE HANDLE PLAY CHECK AND ADJUSTMENT

Check that play is within the standard value. If not within the standard value, adjust as follows.

1. Remove the rear gate panel.
2. Remove the outside handle rod from outside handle. Turn upper rod to adjust outside handle play.

   Standard value (A): 1 – 3 mm

REAR GATE

42500170019

REMOVAL AND INSTALLATION

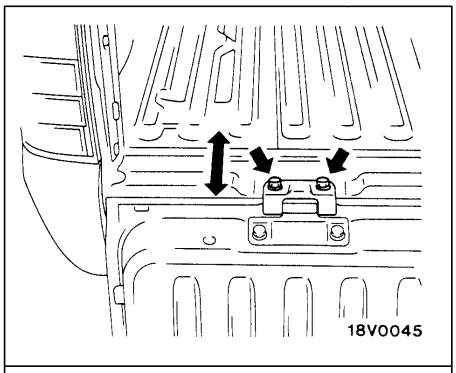

Rear gate height adjustment

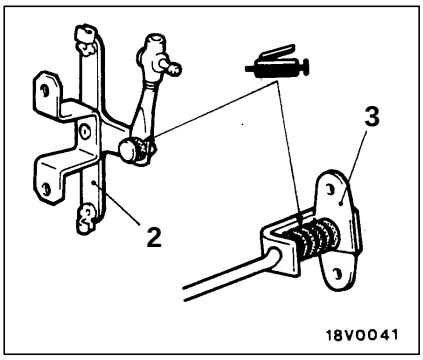

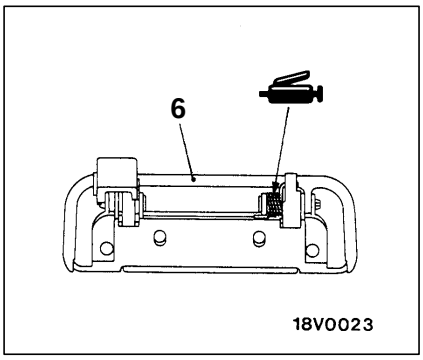

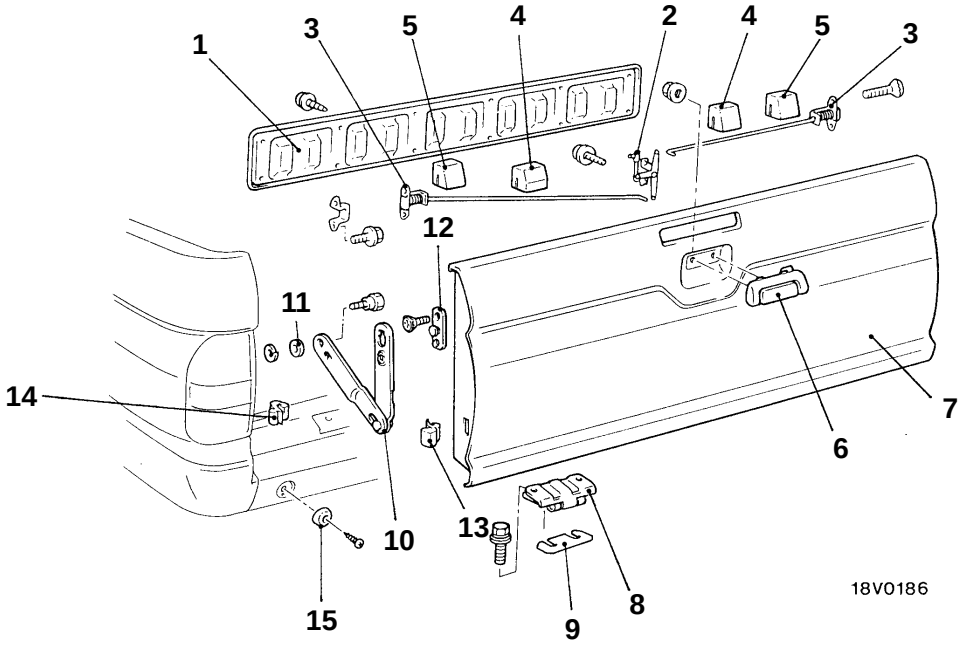

00005225

Removal steps

1. Rear gate panel
2. Remote control assembly
3. Latch assembly
4. Cushion
5. Cushion
   <Club cab, Double cab>
6. Outside handle
7. Rear gate
8. Rear gate hinge
9. Shim
10. Rear gate link assembly
11. Spacer
12. Link hook
13. Rear gate link damper (A)
14. Rear gate link damper (B)
15. Cushion rubber

NOTES

SERVICE BULLETIN

MITSUBISHI MOTORS

QUALITY INFORMATION ANALYSIS
OVERSEAS SERVICE DEPT. MITSUBISHI MOTORS CORPORATION

SERVICE BULLETIN	**No.:** MSB-00E00-003		
	Date: 2000-05-30	**<Model>**	**<M/Y>**
Subject:	YEAR MODEL CHANGES FOR 2001 L200	(EC)L200(K60, K70)	00-10
Group:	GENERAL	**Draft No.:** 00SY0022915	
INFORMATION/ CORRECTION	**INTERNATIONAL CAR ADMINISTRATIO OFFICE**	T.NITTA - PROJECT LEADER AFTER SALES SERVICE & CS PROMOTION	

1. Description:

This Service Bulletin informs you of the year model changes for the 2001 L200

2. Applicable Manuals:

Manual	Pub. No.	Language	Page(s)
2000 L200 Workshop Manual Chassis	PWTE96E1-D	(English)	
	PWTS96E1-D	(Spanish)	
	PWTF96E1-D	(French)	
	PWTG96E1-D	(German)	

3. Details:

L200

WORKSHOP MANUAL SUPPLEMENT

FOREWORD

This Manual outlines changes in servicing proc e-dures related to the chassis including vehicle i n-spections, adjustments and improvements in the newly equipped models.

TECHNICAL INFORMATION MANUAL	PYTE96E1
WORKSHOP MANUAL	
ENIGINE GROUP	PWEE___ (looseleaf edition)
CHASSIS GROUP	PWTE96E1
	PWTE96E1-B (SUPPLEMENT)
	PWTE96E1-C (SUPPLEMENT)
	PWTE96E1-D (SUPPLEMENT)
ELECTRICAL WIRING	PHTE96E1
	PHTE96E1-A
	PHTE96E1-B
	PHTE96E1-D
	PHTE96E1-D (SUPLEMTENT)
BODY REPAIR MANUAL	PBTE96E1
PARTS CATALOGUE	T603B00□D□

All information, illustrations and product d e-scriptions contained in this manual are current as at the time of publication. We, however, re-serve the right to make changes at any time without prior notice or obligation.

MITSUBISHI MOTORS CORPORATION

© Mitsubishi Motors Corporation 2000

General 00

Engine Lubrication 12

Body 42

Interior and Supplemental Restraint System (SRS) 52

Chassis Electrical 54

GROUP 00
GENERAL

VEHICLE IDENTIFICATION

MODELS

Model Code		Engine model	Transmission model	Fuel supply system
K62T	JERDEL6	4G63-SOHC (1,997mℓ)	R4AW2 (2WD-4A/T	MPI
	ENDEL6		R5M21 (2WD-5M/T)	
K64T	ENDL6	4D56 (2,477mℓ)	R5M21 (2WD-M/T)	Fuel injection
	ENDR6			
	CENDL6			
	JENDL6			
K75T	CENDEL6	4G64-SOHC (2,351 mℓ)	V5M21 (4WD-5M/T)	MPI
	GJENXEL6			
K74T	ENDFL6	4D56- Turbocharger with intercooler (2,477mℓ)	V5MT1 (4WD-5M/T	Fuel injection
	ENDFR6			
	JERDFL6		V4AW2 (AWD-4A/T	
	GJERXFL6		V5MT1 (4WD-5M/T	
	GJENXFL6			
	GJENXFR6			
	CENDFL6			
	GCENXFL6			
	JENDFL6			
	JENDFR6			
	JENHFL6			

CHASSIS NUMBER

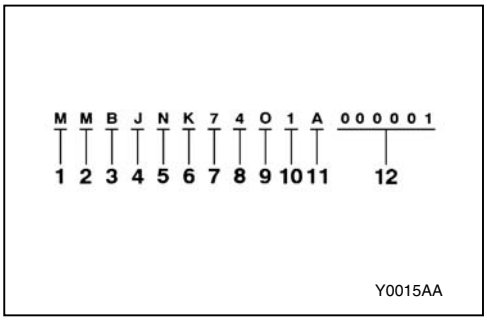

No.	Items		Contents
1	Continent	M	ASIA
2	Country	M	THAILAND
3	Register code	B	Follow register
4	Body shape	C	Club cab
		J	Double cab
		O	Single cab
		Y	Single cab without rear body
		Z	Double cab without rear body
5	Transmission type	N	5-speed manual transmission
		R	4-speed automatic transmission
6	Vehicle line	K	Mitsubushi L200
7	Body type	6	Long wheelbase
		7	4WD, Long wheelbase
8	Engine type	2	4G63: 1,997mℓ petrol engine
		4	4D56:2,477mℓ diesel engine
		5	4G64: 2,351 mℓ petrol engine
9	Internal production control code	A	A, B, C…etc 0 (zero): No meaning
10	Model year	1*	2001
11	Plant	A	A, C: LARDKRABANG factory D, F: LAEMCHABANG factory
12	Serial number	-	-

NOTE
*: Indicates changes.

NOTES

GROUP 12

ENGINE LUBRICATION

GENERAL

OUTLINE OF CHANGES

- A quality of the engine oil has been changed.

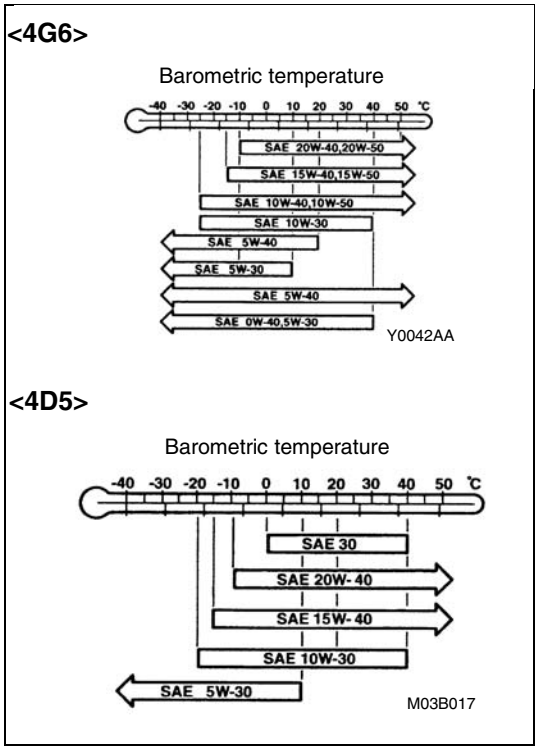

ON-VEHICLE SERVICE

specified engine oil (ACEA and API classification):
<4G6> ACEA A1, A2, A3/API SG or higher
<4D5> ACEA B1, B2, B3, B4/API CD or higher

NOTES

GROUP 42

BODY

GENERAL

OUTLINE OF CHANGES

The following service procedures have been added due to the introduction of the keyless entry system as an optional equipment <GLS>.

KEYLESS ENTRY SYSTEM

SPECIAL TOOL

Tool	Number	Name	Use
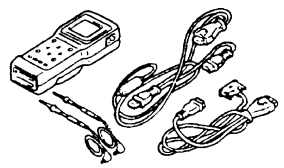	MB991502	MUT-II sub assembly	Encrypted codes recording

TROUBLESHOOTING

DIAGNOSIS FUNCTION

INPUT SIGNAL INSPECTION PROCEDURE

1. Connect the MUT-II to the diagnosis connector to check input signal. (Refer to ’97 L200 Workshop Manual GROUP 00 – How to Use Troubleshooting/Inspection Service Points.)
2. The following input signals can be checked:
   - Ignition switch (IG1, ACC)
   - Driver’s door switch
   - Every door switch
   - Key reminder switch
   - Driver’s door lock actuator
   - Keyless entry transmitter (LOCK, UNLOCK)

   NOTE
   If the MUT-II cannot check all the input signals, the diagnosis circuit may be defective.

ETACS FUNCTION ADJUSTMENT PROCEDURE

The following functions can be adjusted by operating input switches, The adjustments will be stored in th ECU memory even after a battery cable is disconnected:

- Switching of keyless entry answerback function (From activation to deactivation, or vice versa)
- Initialisation of the above function (From deactivation)

1. Entry conditions to the adjustment mode
   The ETACS-ECU sounds a buzzer once when all of the following conditions are satisfied, and then enters the adjustment mode:
   - Diagnosis control: ON (Connect the MUT-II.)
   - Key reminder switch: OFF
   - Ignition switch: LOCK (OFF
   - Door switch: OFF (Close the door)
   - If all of the conditions above are satisfied, the tailgate switch will be turned in for more than 10 seconds.

2. Exit conditions from the adjustment mode
   The ETACS-ECU cancels the adjustment mode when any of the following conditions is satisfied:
   - Diagnosis control: OFF (Disconnect the MUT-II>)
   - Key reminder switch: ON (Pull out the ignition key.)
   - Ignition switch: Other than LOCK (OFF)
   - Door switch: ON (Open the door)
   - After the ETACS_ECU has entered the adjustment mode, no adjustment is made within 3 minutes (If any adjustment is made within 3 minutes, the ETACS-ECU monitors an adjustment operation for other 3 minutes.
   - Other warning buzzer(s) sounds
3. Adjustment of functions

Function	Adjustment procedure
Keyless entry answerback function	When the transmitter lock switch is turned on twice continuously within 2 seconds, the lock answerback function toggles on and off. • If the function toggles on, the buzzer sounds once (default condition). • If the function toggles off, the buzzer sounds twice, When the transmitter unlock switch is turned on twice continuously within 2 seconds, the unlock answerback function toggles on and off. • If the function toggles on, the buzzer sounds once (default condition). • If the function toggles off, the buzzer sounds twice,
Initialisation of all the ETACS functions (From deactivation to activation)	When the tailgate switch remains on for more than 20 seconds, th buzzer sounds twice and he answer-back function of the keyless entry system is initialised. The buzzer will sound in 10 seconds (indicating that the ETACS-ECU enters the adjustment mode), but the washer switch must remains off for 20 seconds in order to initialise all the functions. If the tailgate switch remains on for more than 20 seconds without entering the adjustment mode, the system enters the adjustment mode in 10 seconds, but does not initialise all of the functions.

INSPECTION CHART FOR TROUBLE SYMPTOMS

Trouble symptom	Inspection procedure No.	Reference page
None of the doors can be locked or unlocked using th transmitter.	1	42-3
All of the doors can be locked and unlocked using th transmitter, but the room lamp or turn-signal lamp does not flash or illuminate. (However, the room lamp operates normally when the doors are opened and closed.)	2	42-4
Encrypted codes cannot be registered.	3	42-5

INSPECTION PROCEDURE FOR TROUBLE SYMPTOMS

INSPECTION PROCEDURE 1

None of the doors can be locked or unlocked using the transmitter.	Probable cause
The cause may be a malfunction of the transmitter or ETACS-ECU, defective connection between ETACS-ECU and junction block, defective power supply voltage to ETACS-ECU input line due to commercial equipment, or the lock and unlock signals are not being sent to the ETACS-ECU.	• Malfunction of transmitter • Malfunction of ETACS-ECU • Malfunction of key reminder switch • Malfunction of wiring harness or connector • Malfunction of door switch • Defective connection between ETACS-ECU and junction block • Defective power supply voltage to ETACS-ECU input line due to commercial equipment

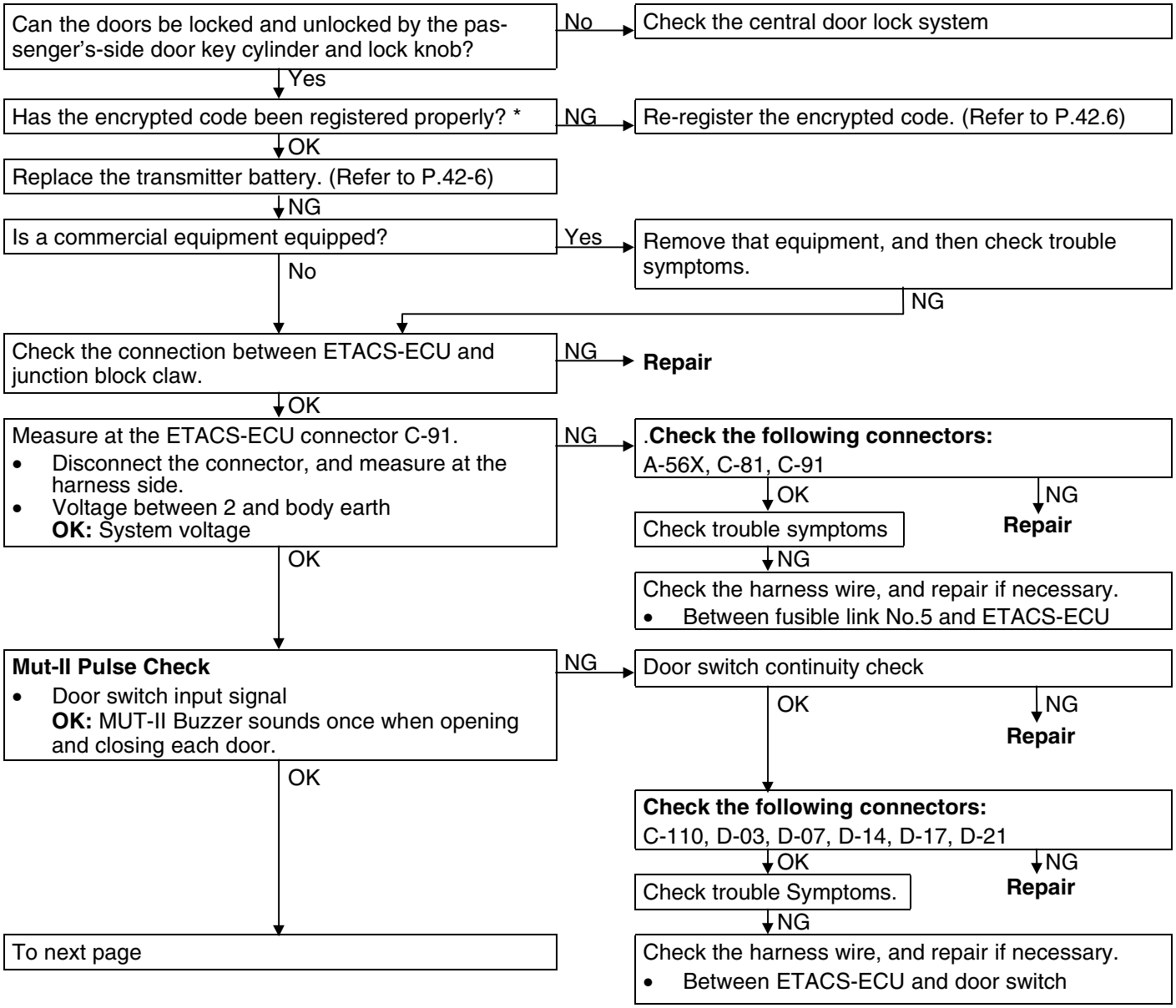

NOTE

*: This should be done if a transmitter, receiver or ETACS-ECU has been replaced, and if a secret cod has not been registered properly

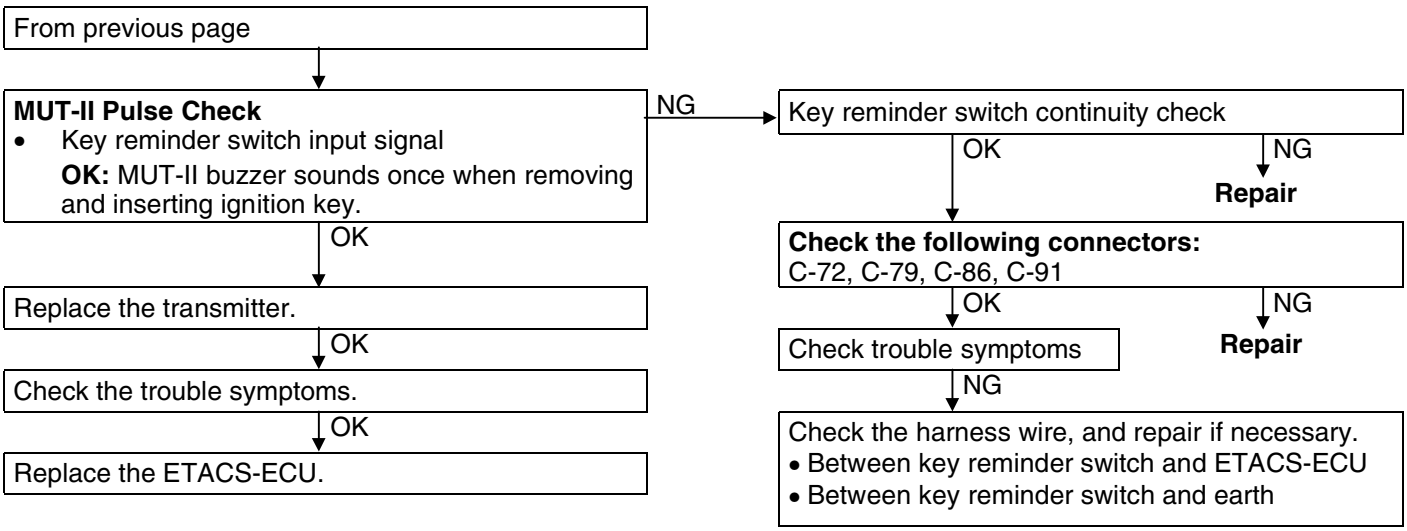

INSPECTION PROCEDURE 2

All of the doors can be locked and unlocked using th transmitter, but the room lamp or turn-signal lamp does not flash or illuminate. (However, the room lamp operates normally when the doors are opened and closed.)	Probable cause
If neither room lamp nor turn-signal lamp flash/illuminate, the cause may be a malfunction of the ETACS-ECU or driver's-side door lock actuator. If either room lamp or turn-signal lamp does not flash/illuminate, the cause may be a malfunction of the room lamp circuit or turn-signal lamp.	• Malfunction of ETACS-ECU • Malfunction of driver's door lock actuator • Burnt turn-signal lamp bulb • Malfunction of connector or wiring harness

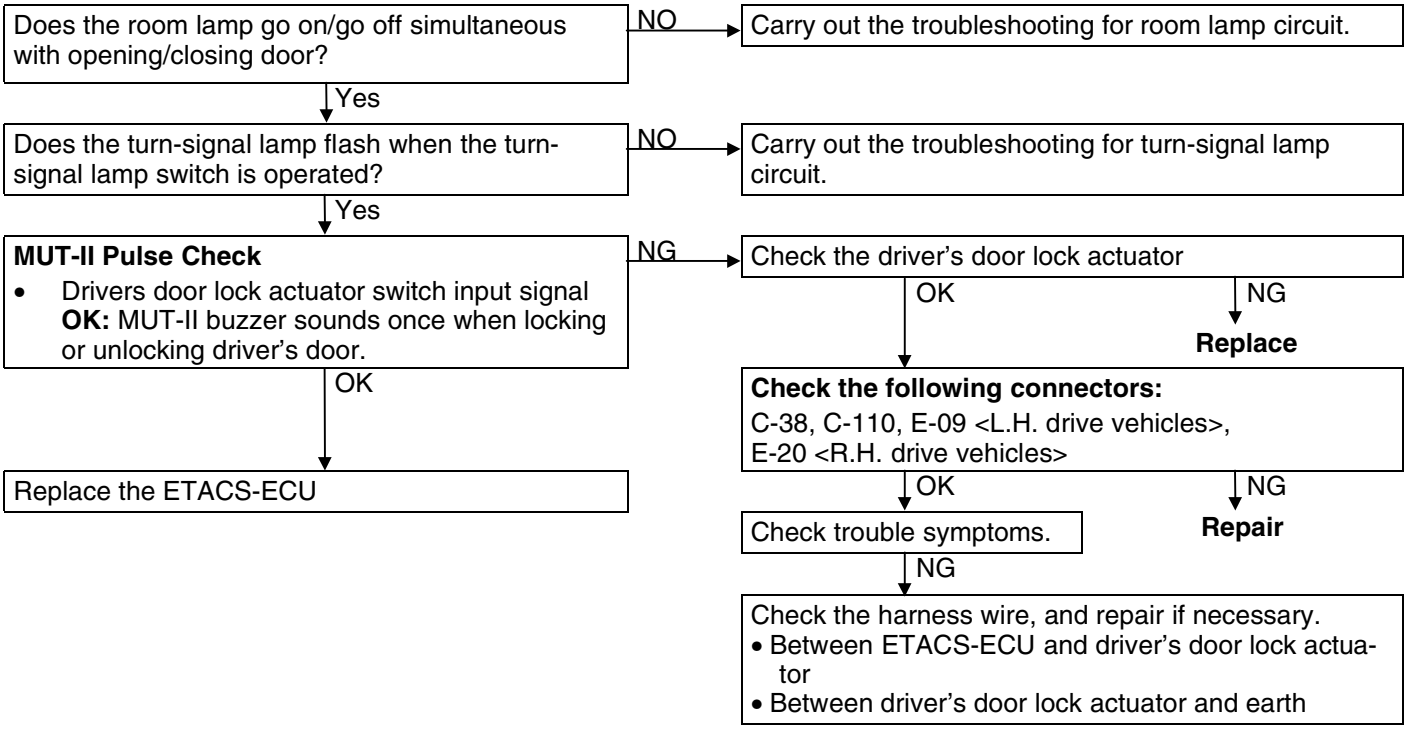

INSPECTION PROCEDURE 3

Encrypted codes cannot be registered	Probable cause
The cause may be a malfunction of the diagnosis connector, ETACS-ECU or diagnosis output circuit.	• Malfunction of MUT-II • Malfunction of connector or wiring harness • Malfunction of ETACS-ECU

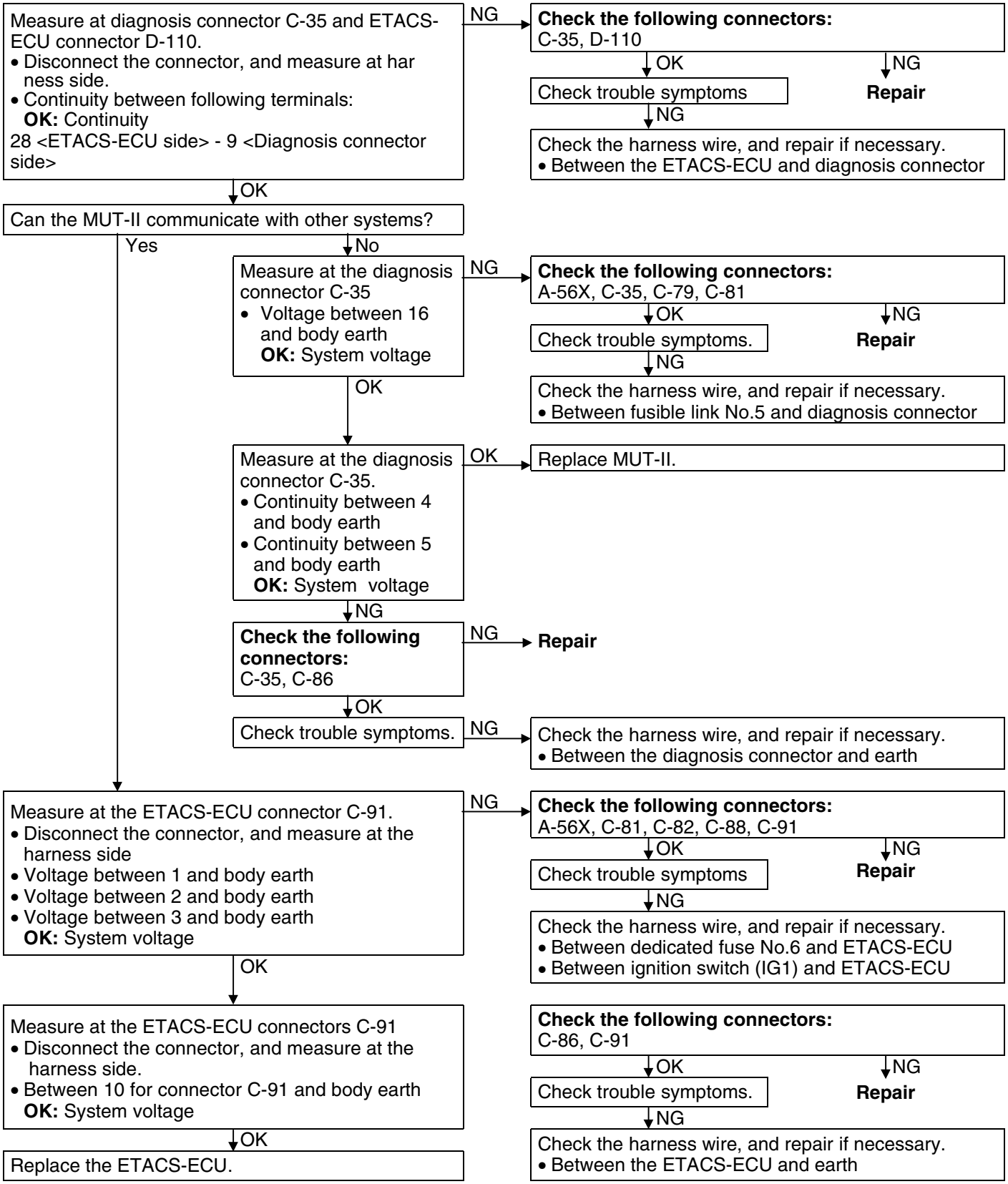

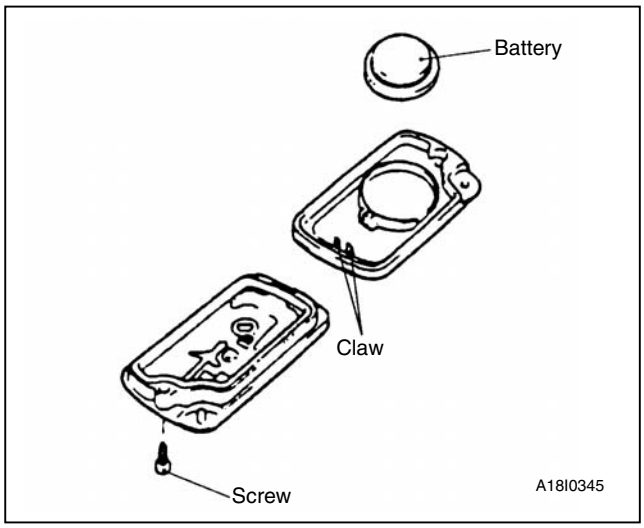

ON – VEHICLE SERVICE

HOW TO REPLACE A BATTERY OF THE TRANSMITTER

1. Remove the set screw to remove the battery from the transmitter.
   Install a battery with its (+) side face-down.
   Battery required for replacement:
   Coin type battery CR2032
3. Insert the claw, and then assemble the transmitter.
   Caution
   Do not let water or dust stick to the inside of the transmitter when it is open. Also, do not touch the precision electronic device.
4. Check to see if the keyless entry system operates.

SECRET CODE REGISTRATION METHOD

Each individual secret code is registered inside the transmitter, and so it is necessary to register these codes with the EEPROM inside the ETACS-ECU in the following cases.

- When either the transmitter or ETACS-ECU in the following cases.
- If a second transmitter is to be used;
- If it appears that a problem is occurring because of faulty registration of a code.

A maximum of two different codes can be stored in the memory area of the EEPROM (two different transmitters can be used).

When the code for the first transmitter is registered, th previously- registered codes for two transmitters are cleared.

Therefore, if you are using more than two or are addin a second transmitter, the codes for all the transmitters must be registered at the same time.

1. Check that the doors lock normally when the key is used.
2. Connect the MUT-II to the diagnosis connector
   NOTE
   This will connect terminal (1) of the diagnosis con nectar to earth, and the system will be in secret code registration standby mode.
   Caution
   Always turn the ignition switch to OFF before connecting and disconnecting the MUT-II

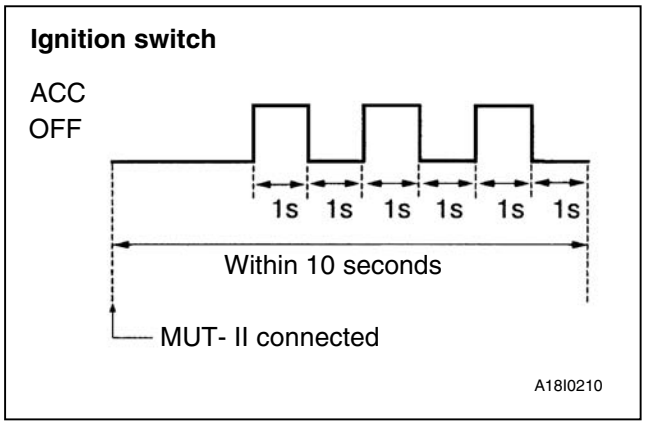

3. Within 10 seconds after connecting the MUT-II, turn the ignition switch to ACC ON for 1 second an then to OFF for 1 second; repeat this procedure three times.

   NOTE

   The doors will lock and unlock once at this tim and the system will switch to registration mode.
4. Press the lock switch or unlock switch; of th transmitter switch, and then press it two times within 10 seconds of the first press. This will register the code.
5. After registration is completed, the doors will be automatically locked and unlocked once.
6. If you are using two transmitters or have added a second transmitter, the same registration procedure should be carried out for the second transmitter, and it should be carried out within one minute after registration of the code for the first transmitter has been completed. After the second registration is completed, the doors will be automatically locked and unlocked once.
7. Registration mode will be terminated under the following conditions.

- When the secret codes for two transmitters hav been registered;
- When one minute has passed after registration mode started;
- If the MUT-II is disconnected (earth is released);
- If the ignition switch is tuned to ON;

8. After registration mode has been completed, carry out the followings to make sure that the keyless entry system operates.

- Pull the ignition key out.
- Close the all doors.

KEYLESS ENTRY SYSTEM

REMOVAL AND INSTALLATION

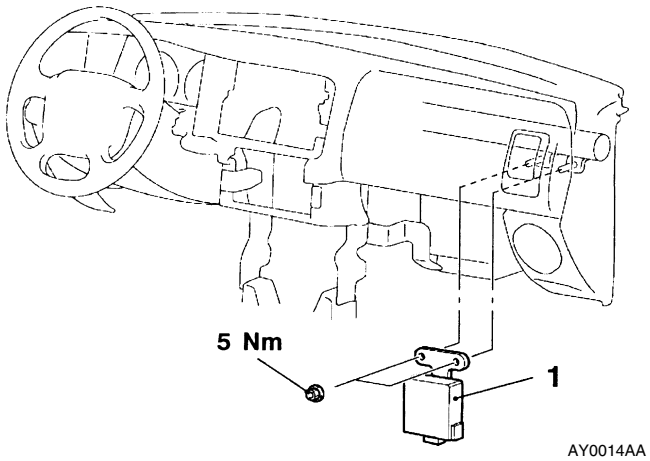

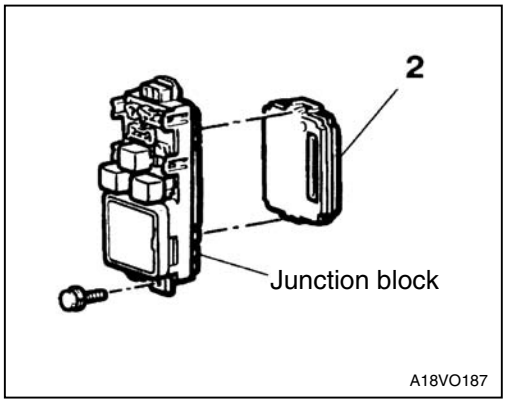

Keyless entry receiver-ECU removal steps

- Glove box assembly (Refer to GROUP 52A*.)

1. Keyless entry receiver-ECU

ETACS-ECU removal

2. ETACS-ECU

NOTE

*: Refer to ’97 L200 Workshop Manual <Pub. No. PWTE96E1>

GROUP 52A
INTERIOR

GENERAL
OUTLINE OF CHANGE

- The following service procedures have been added due to the introduction of the adjustable seat belt anchor.
- On dual cab models, three-point ELR/child seat fixing mechanism (ALR) seat belts have been added for rear seat as an optional equipment. The service procedures are the same as previous one.

FRONT SEAT BELT
REMOVAL AND INSTALLATION

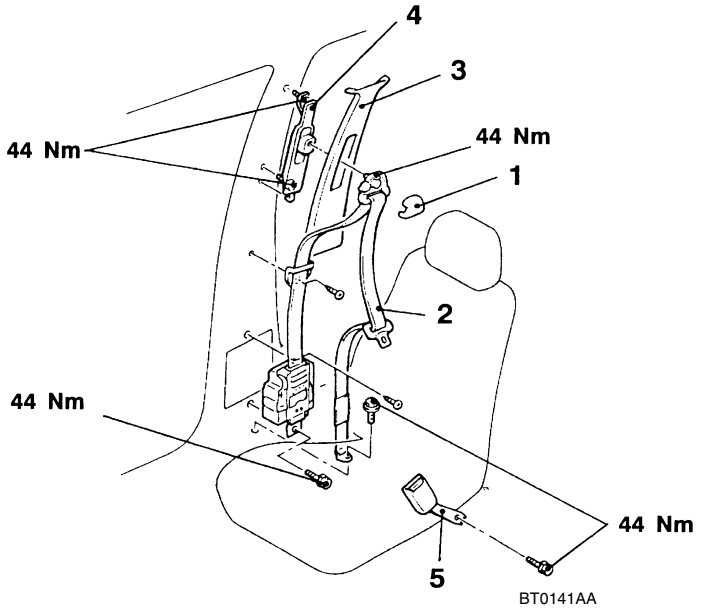

Outer seat belt removal steps

- Center pillar trim, lower or quarter trim, lower (refer to P.52A*.)

1. Sash guide cover
2. Outer seat belt
3. Center pillar trim, upper or quarter trim, upper (refer to P.52A*.)
4. Adjustable seat belt anchor.

Inner seat belt removal steps

- Front seat (refer to P.52A*.)

5. Inner seat belt

NOTE

*: Refer to ’97 L200 Workshop Manual <Pub. No. PWTE96E1>.

NOTES

GROUP 54
CHASSIS ELECTRAL

GENERAL
OUTLINE IF CHANGES
- The following procedure has been added due to the addition of the high-stop lamp <4WD>.

HIGH-MOUNTED STOP LAMP
REMOVAL AND INSTALLATION

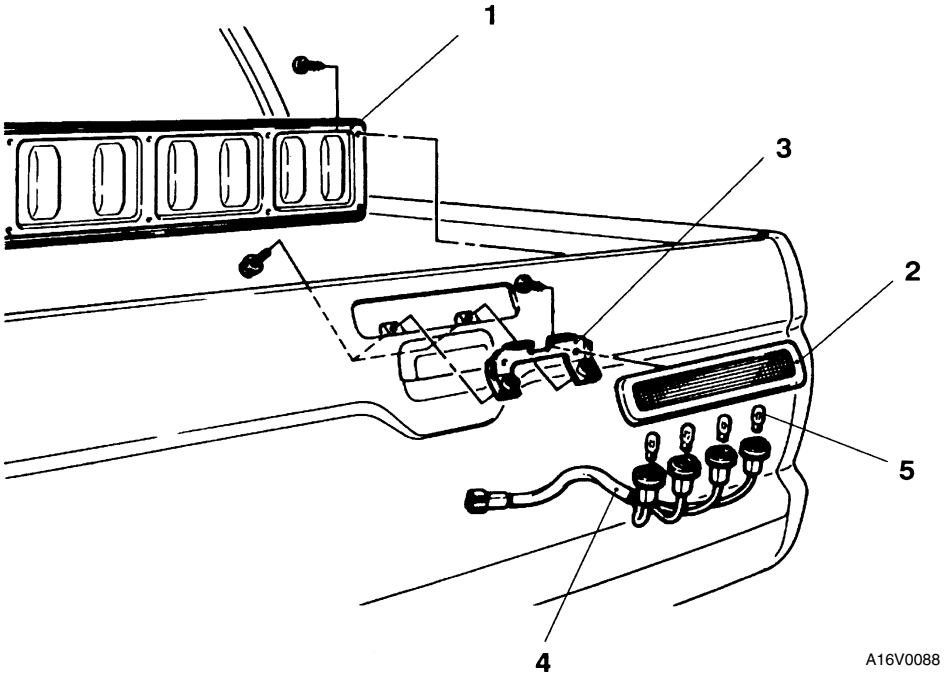

Removal steps
1. Rear gate panel
2. High mounted stop lamp
3. Lamp bracket
4. Bulb socket assembly
5. Bulb

EXTERIOR

Click on the applicable bookmark to selected the required model year

EXTERIOR

CONTENTS

51109000135

SERVICE SPECIFICATION 2
ADHESIVE 2
SPECIAL TOOLS 2
FRONT BUMPER 3
GRILLE, MOULDING AND GARNISH 5
OVER FENDER 6
SIDE STEP 7
WINDSHIELD WIPER AND WASHER 9
HEADLAMP WASHER 12
MARKS 14
STRIPE TAPE 15
DOOR MIRROR 17

SERVICE SPECIFICATION

51100030119

Item		Standard value
Windshield wiper blade installation position mm	Driver's side	23 – 33
	Passenger's side	25 – 35

ADHESIVE

51100050108

Item	Specified adhesive
Door mirror inner delta cover	Adhesive tape: double-sided tape [5 mm width and 0.5 mm thickness]

SPECIAL TOOLS

51100060095

Tool	Number	Name	Use
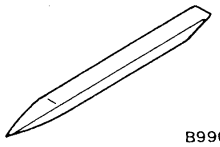	MB990784	Ornament remover	Front deck garnish, front and rear flare, remote controlled mirror switch and door mirror inner delta cover removal
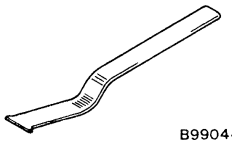	MB990449	Window moulding remover	Roof drip moulding removal
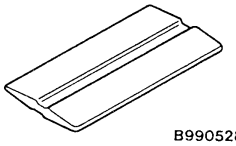	MB990528	Stripe tape spatula	Stripe tape bonding

FRONT BUMPER

51100140119

REMOVAL AND INSTALLATION

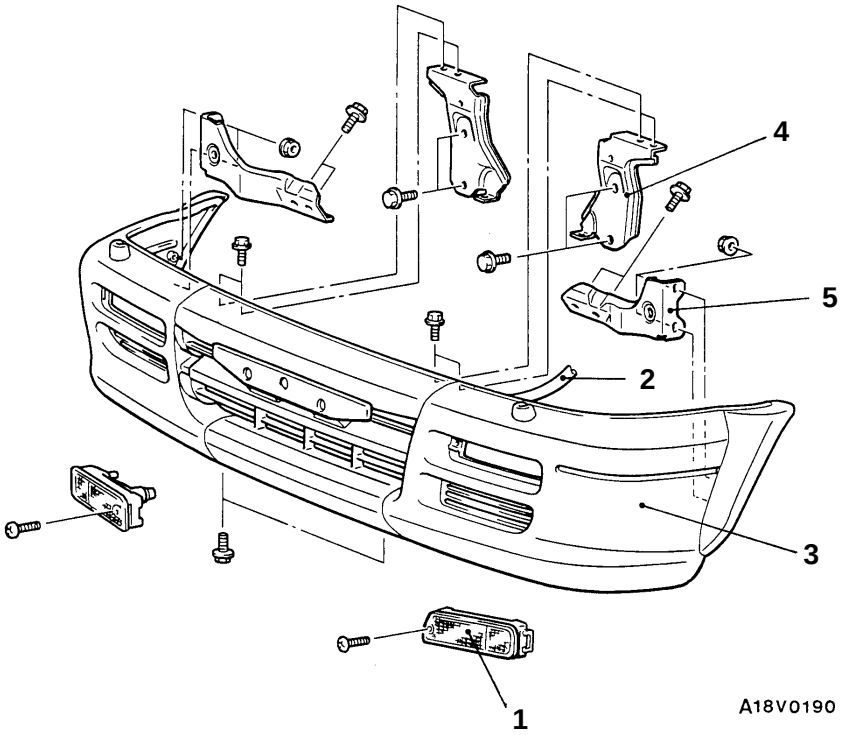

Removal steps

- Radiator grille

1. Front combination lamp assembly
2. Headlamp washer hose connection <Vehicles with headlamp washer> (Refer to P.51-12.)
3. Front bumper assembly
4. Front bumper support
5. Front bumper side stay

DISASSEMBLY AND REASSEMBLY

51100160122

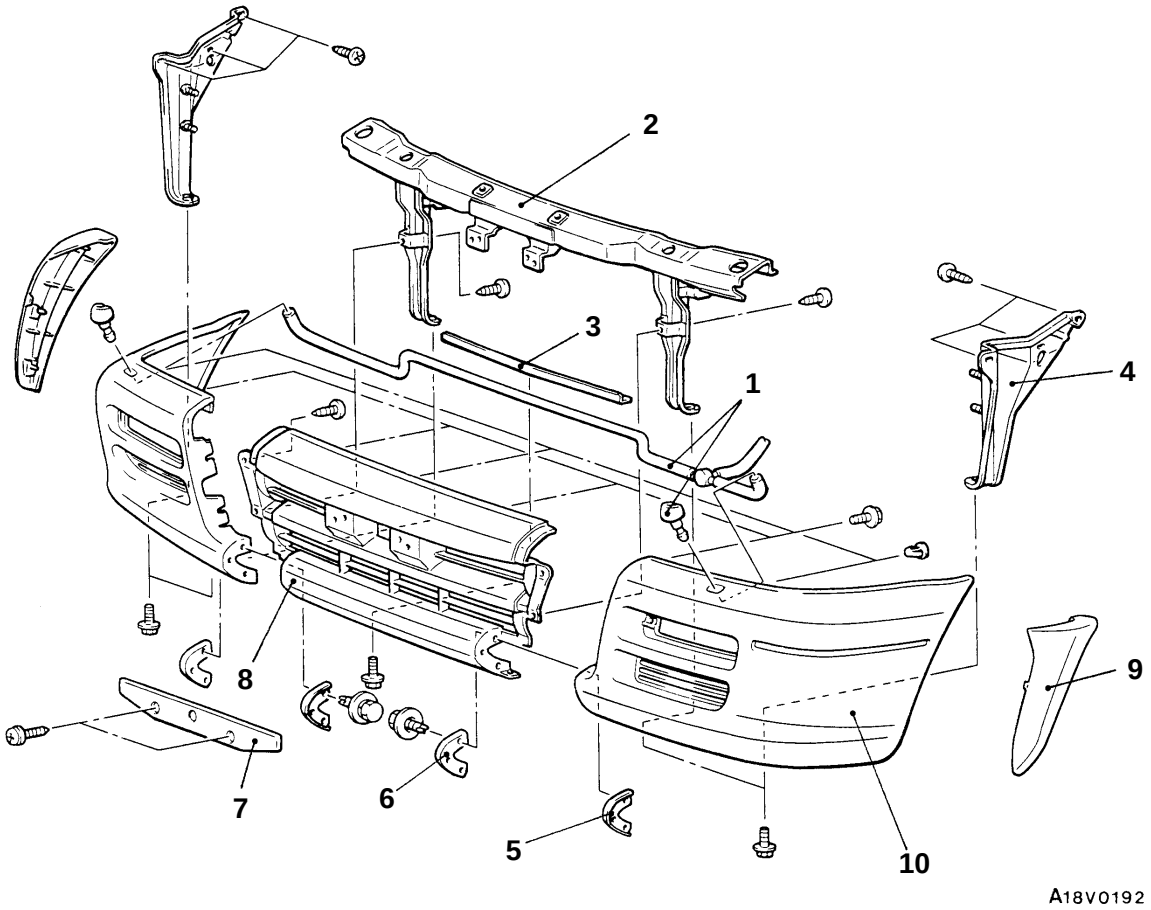

Disassembly steps

1. Headlamp washer hose and nozzle <Vehicles with headlamp washer> (Refer to P.51-12.)
2. Front bumper beam assembly
3. Front bumper lower reinforcement
4. Front bumper side reinforcement
5. Bumper side corner reinforcement
6. Bumper center corner reinforcement
7. Licence plate bracket
8. Front bumper center face
9. Front bumper face side extension <Vehicles with over fender>
10. Front bumper side face

GRILLE, MOULDING AND GARNISH

51100350031

REMOVAL AND INSTALLATION

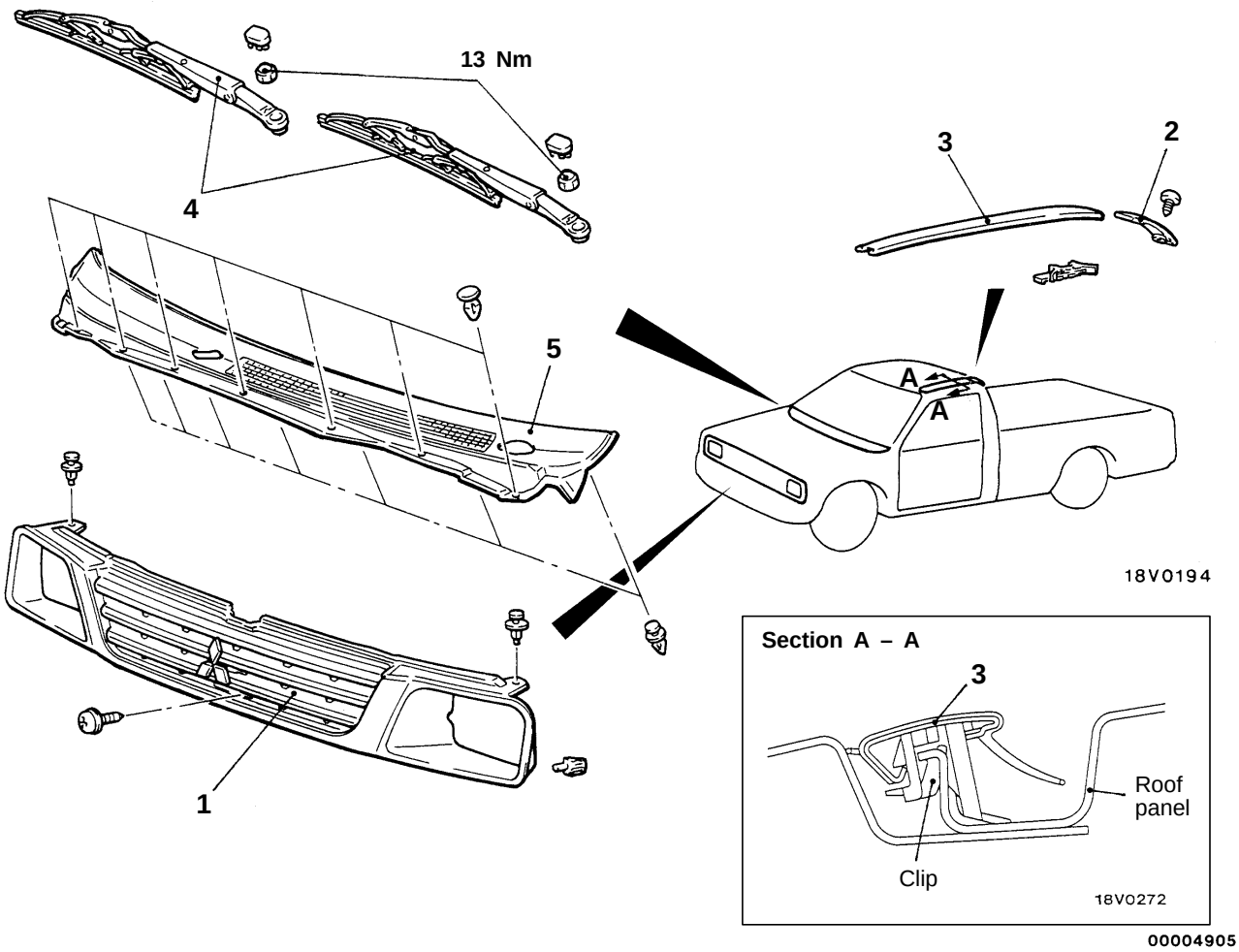

◀A▶ 1. Radiator grille

Roof drip moulding removal steps

2. Roof drip cover
◀B▶ 3. Roof drip moulding

Front deck garnish removal steps

4. Wiper arm and blade assembly (Refer to P.51-9.)
5. Front deck garnish

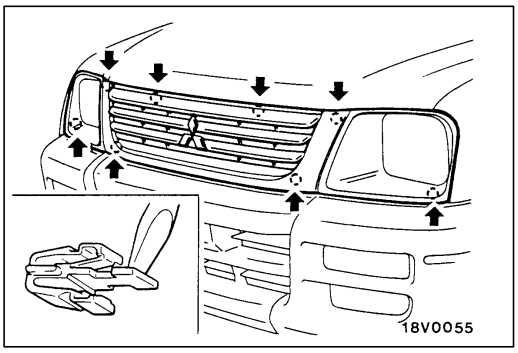

REMOVAL SERVICE POINTS

◀A▶ RADIATOR GRILLE REMOVAL

Remove the radiator grille by pushing the tab of the radiator grille clips in the direction of the arrows with a flat-tipped screwdriver, while lightly pulling the radiator grille towards you.

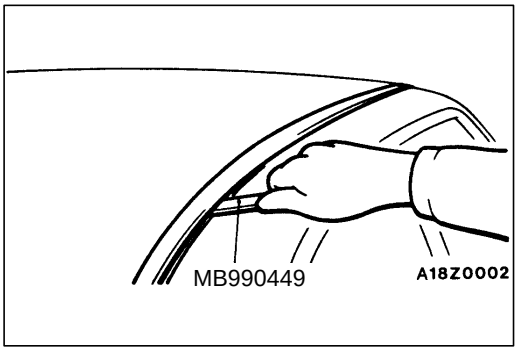

◀B▶ ROOF DRIP MOULDING REMOVAL

Use the special to lever out the moulding.

Caution
Do not reuse the warped moulding.

OVER FENDER

51101380039

REMOVAL AND INSTALLATION

Pre-removal and Post-installation Operation
- Mud Guard Removal and Installation

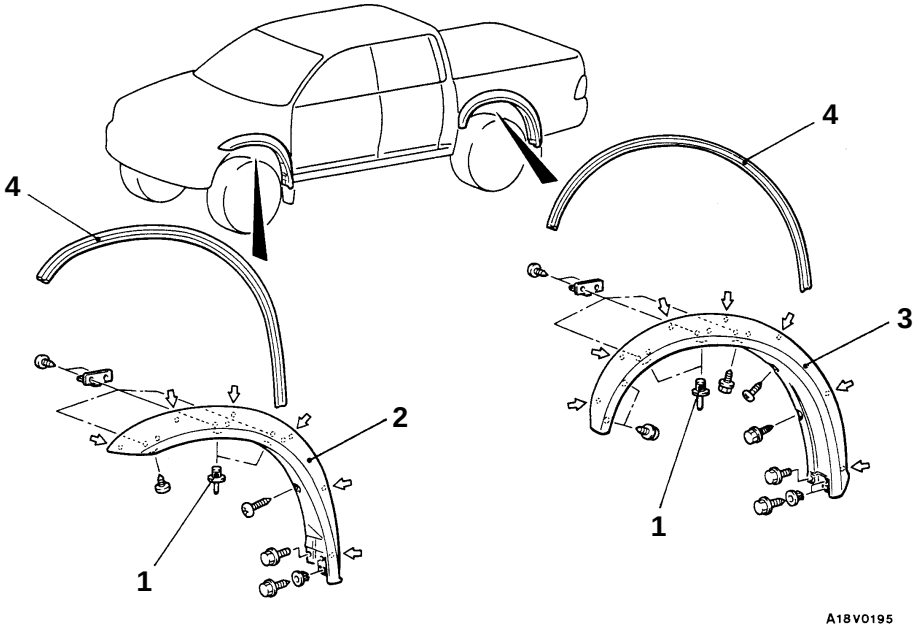

Removal steps

◀A▶ ▶A◀
1. Rivet
2. Front flare
3. Rear flare
4. Protector

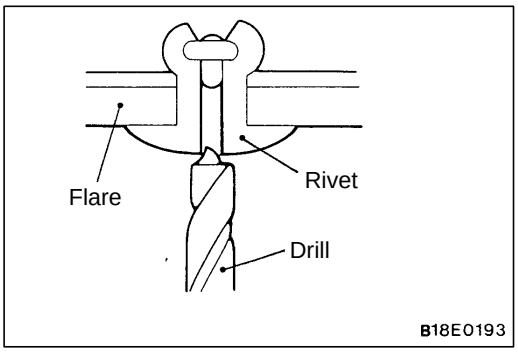

REMOVAL SERVICE POINT

◀A▶ RIVET REMOVAL

Use a drill (ϕ4.0 – 5.5 mm) to break the rivet by drilling a hole, and remove the rivet.

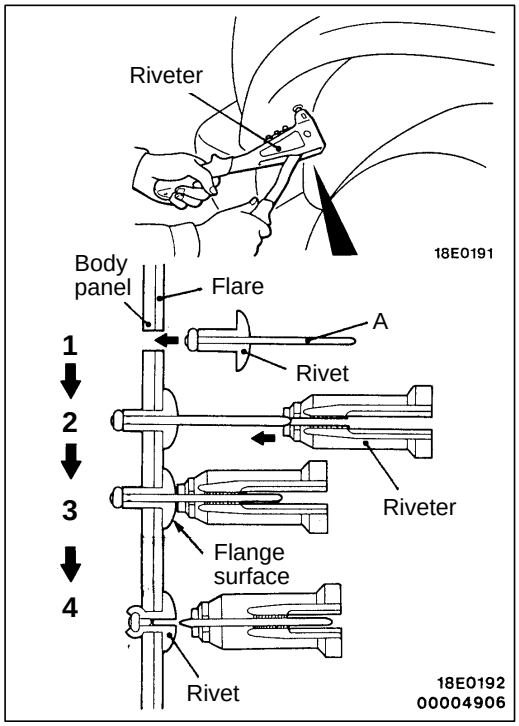

INSTALLATION SERVICE POINT

▶A◀ RIVET INSTALLATION

1. Insert the rivet into the body panel and flare.
2. Insert A of the rivet into the riveter.
3. Pressing the flange surface of the rivet, move the handle of the riveter.
4. The thinnest point of A is cut and the rivet is hold in the position

SIDE STEP

51101150012

REMOVAL AND INSTALLATION

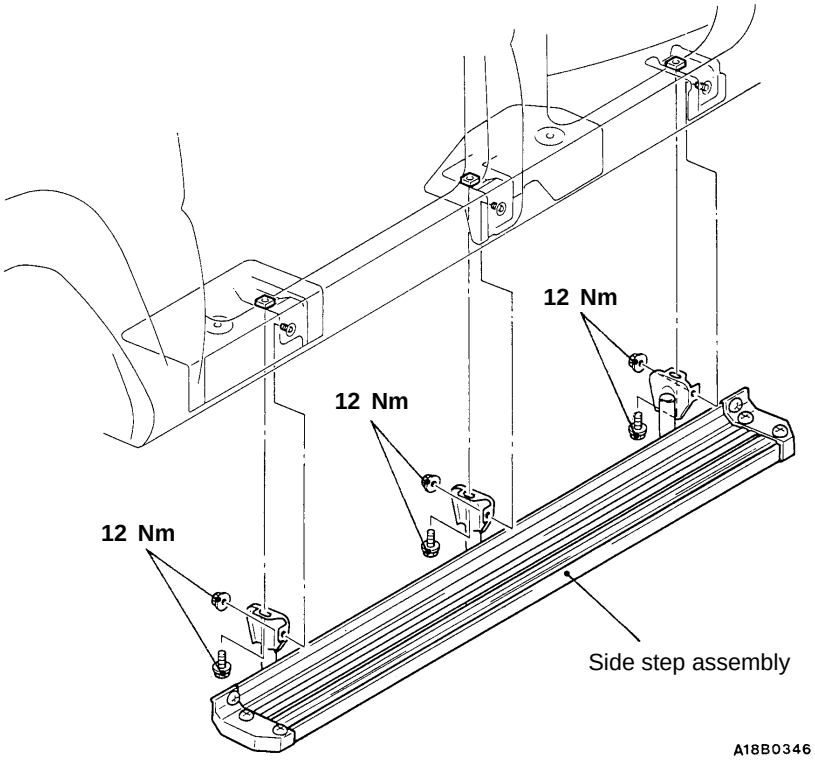

DISASSEMBLY AND REASSEMBLY

51101430017

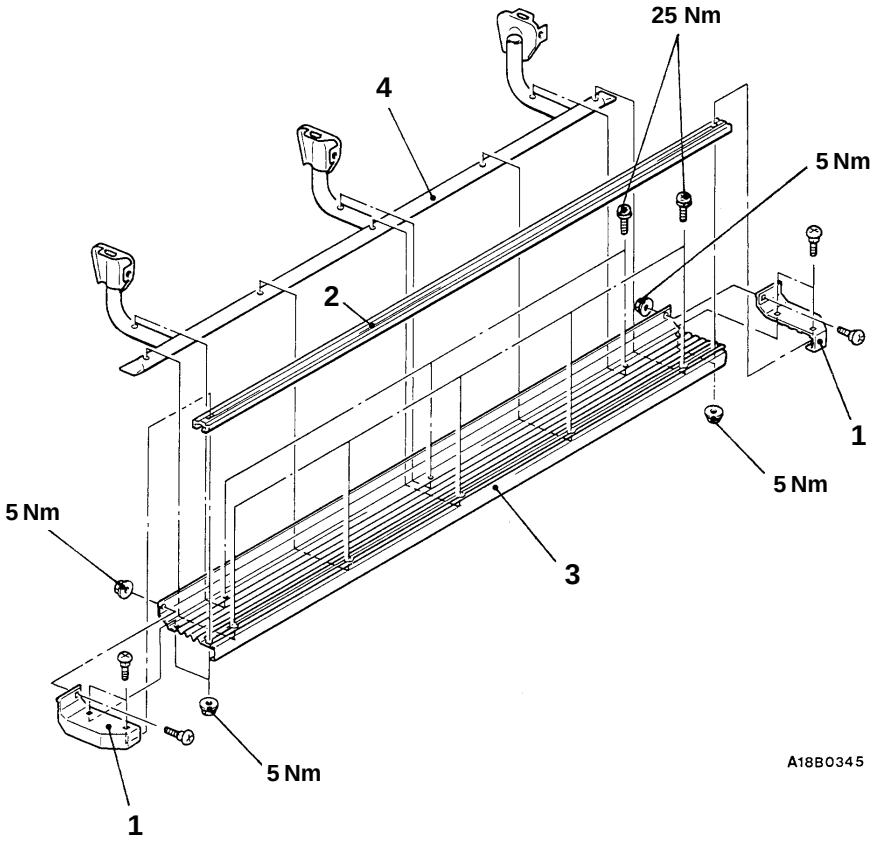

Disassembly steps

1. Step cover
2. Non-slip cover
3. Step plate
4. Side step pipe assembly

WINDSHIELD WIPER AND WASHER

51100760148

REMOVAL AND INSTALLATION

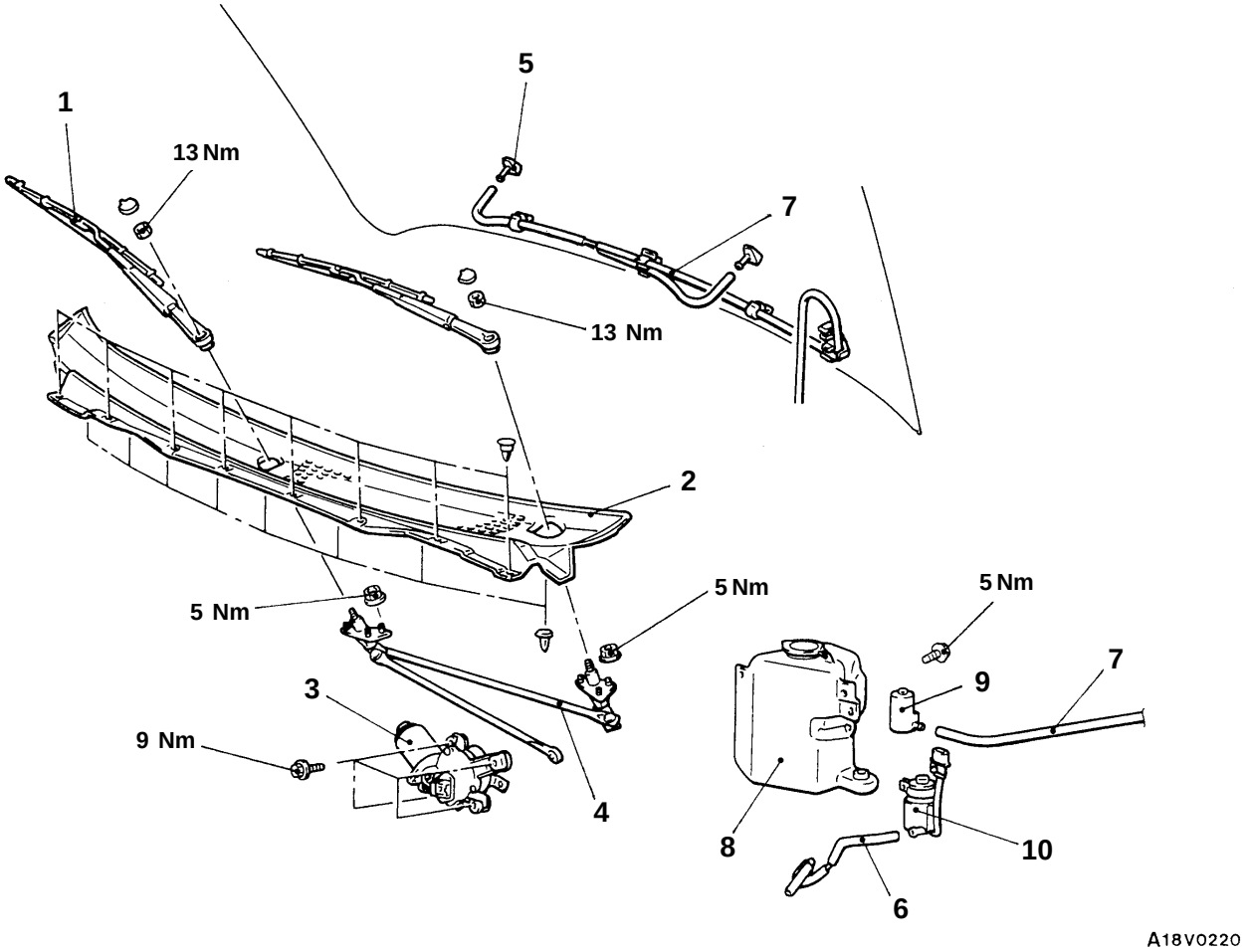

Wiper motor and link assembly removal steps

▶A◀ 1. Wiper arm and blade assembly
2. Front deck garnish
◀A▶ 3. Wiper motor
4. Wiper link assembly

Washer nozzle removal

5. Washer nozzle

Washer tank removal steps

- Washer fluid draining and supplying

6. Headlamp washer hose connection <Vehicles with headlamp washer>
7. Washer hose
8. Washer tank assembly
9. Washer motor
10. Headlamp washer motor <Vehicles with headlamp washer>

NOTE
For removal and installation of the column switch assembly (windshield wiper and washer switch), refer to GROUP 37A – Steering Wheel and Shaft.

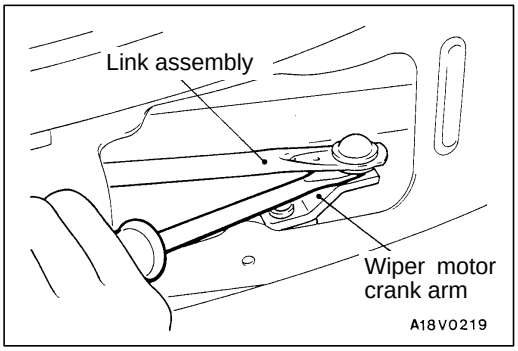

REMOVAL SERVICE POINT

◀A▶ WIPER MOTOR REMOVAL

Use a flat-tipped screwdriver to remove the connection between the wiper motor crank arm and the link assembly.

Caution
Auto-stop angle is controlled so do not remove crank arm from wiper motor unless necessary.
When removing, mark crank arm and wiper motor.

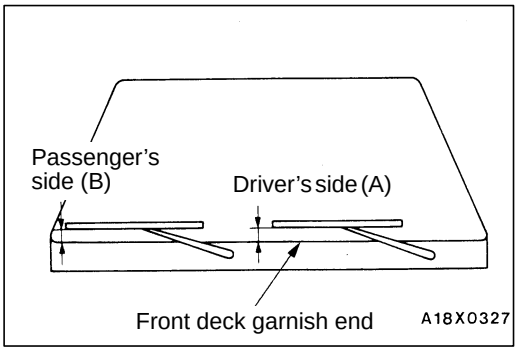

INSTALLATION SERVICE POINT

▶A◀ WIPER ARM AND BLADE ASSEMBLY INSTALLATION

Install the wiper blade in the specified position (standard value).

Standard value:
Driver's side (A) 23 – 33 mm
Passenger's side (B) 25 – 35 mm

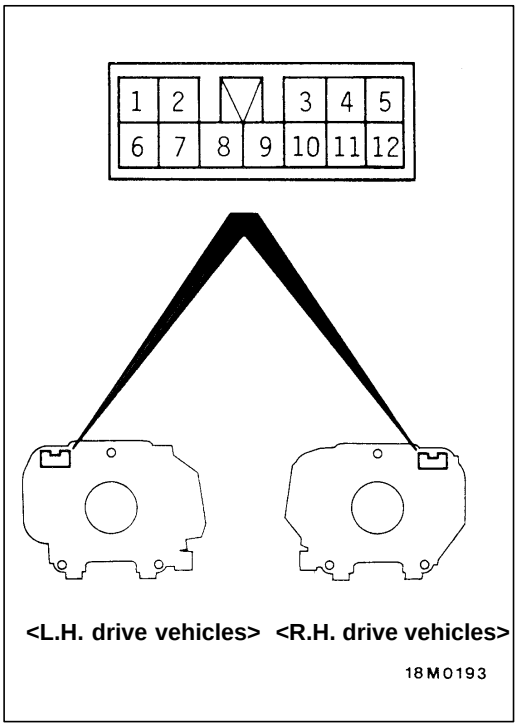

INSPECTION

51100770103

COLUMN SWITCH CHECK

Wiper and Washer Switch

<L.H. drive vehicles>

Switch position		Terminal No.				
		6	7	8	9	10
Wiper switch	OFF		○	○		
	INT		○	○		
	1 (LO)			○		○
	2 (HI)				○	○
Washer switch	ON	○				○

<R.H. drive vehicles>

Switch position		Terminal No.				
		8	9	10	11	12
Wiper switch	OFF			○	○	
	INT			○	○	
	1 (LO)	○		○		
	2 (HI)	○	○			
Washer switch	ON	○				○

Intermittent Wiper Relay (Intermittent Operation Inspection)

1. Connect the column switch connector.
2. Turn the ignition switch to ACC.
3. Inspect the intermittent operation time when the wiper switch is turned to INT.

   Vehicles with variable intermittent control
   FAST: Approx. 2 seconds
   SLOW: Approx. 15 seconds

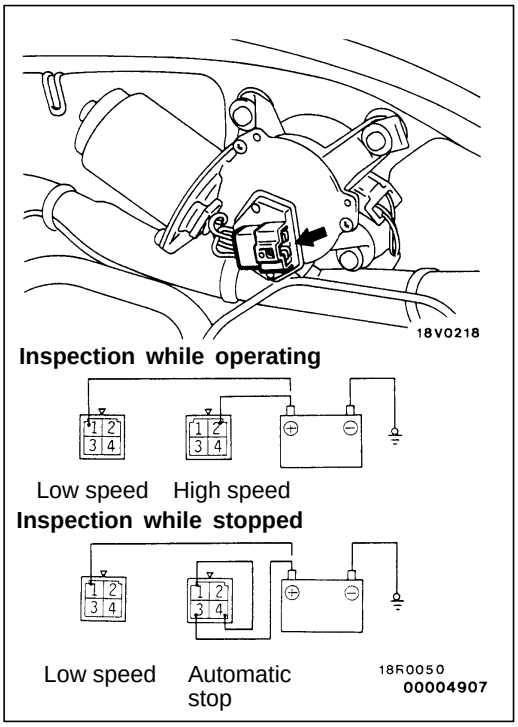

WIPER MOTOR CHECK

51101260050

Check the wiper motor after disconnecting the wiring harness connector, and with the wiper motor remaining installed to the body.

Wiper Motor at Low Speed and High Speed Operation

Connect a battery to the wiper motor as shown in the illustration and inspect motor operation at low speed and high speed.

Wiper Motor at Stop Position Operation

1. Run the wiper motor at low speed, disconnect the battery, and stop the motor.
2. Reconnect the battery as shown in the illustration, and confirm that after the motor starts turning at low speed, it stops at the automatic stop position.

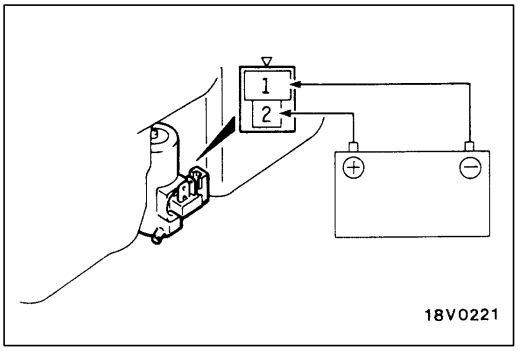

WASHER MOTOR CHECK

51101270060

1. With the washer motor installed to the washer tank, fill the washer tank with water.
2. Check that the water squirts out strongly when battery voltage is applied to terminals (1) and (2).

HEADLAMP WASHER

51100970077

REMOVAL AND INSTALLATION

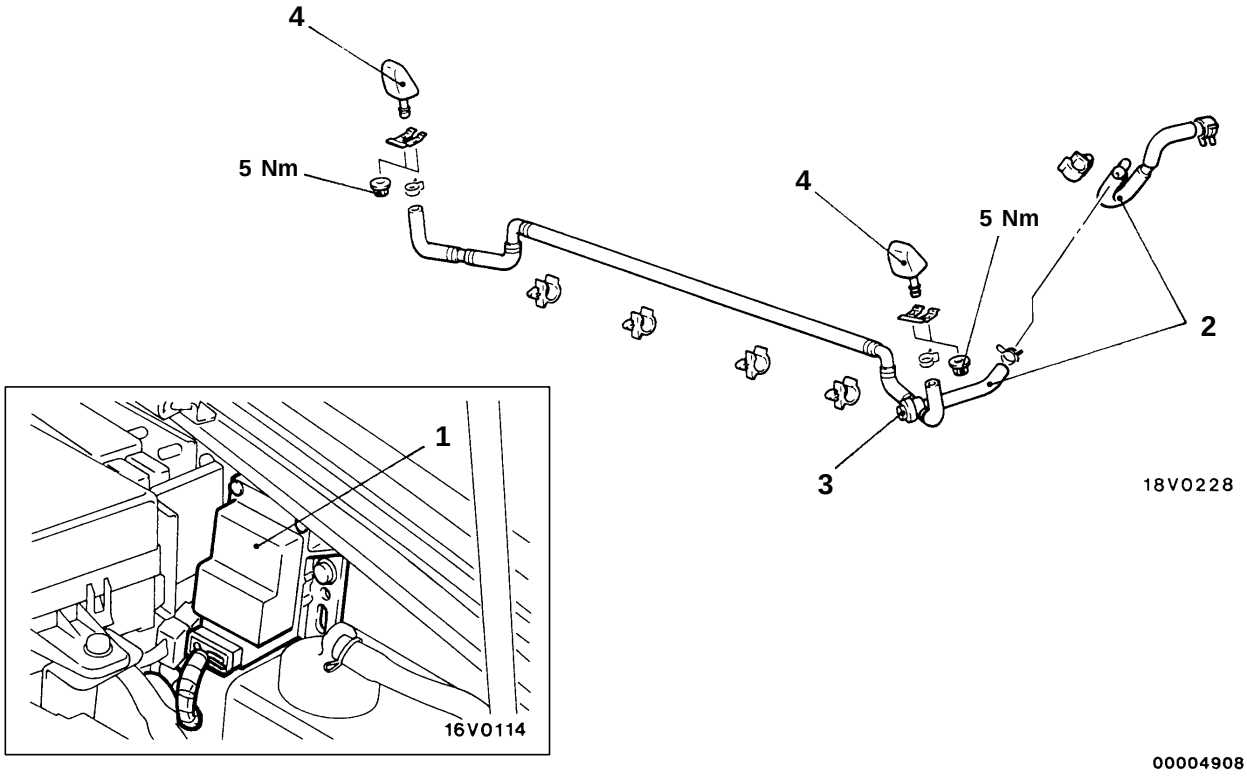

1. Headlamp washer relay

Washer nozzle and check valve removal steps

- Washer fluid draining
- Front bumper (Refer to P.51-3.)

2. Washer hose
3. Check valve
4. Washer nozzle

NOTE
1. For removal and installation of the column switch assembly (built-in headlamp washer switch), refer to GROUP 37A – Steering Wheel and Shaft.
2. For removal and installation of the washer tank, refer to P.51-9.

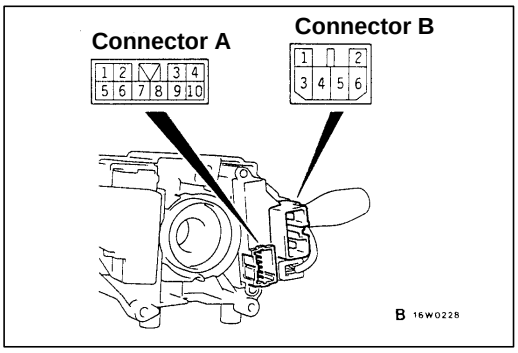

INSPECTION

51100980070

COLUMN SWITCH (HEADLAMP WASHER SWITCH) CHECK

Check the continuity between terminal (2) of connector A and terminal (1) of connector B with headlamp washer switch in ON position.

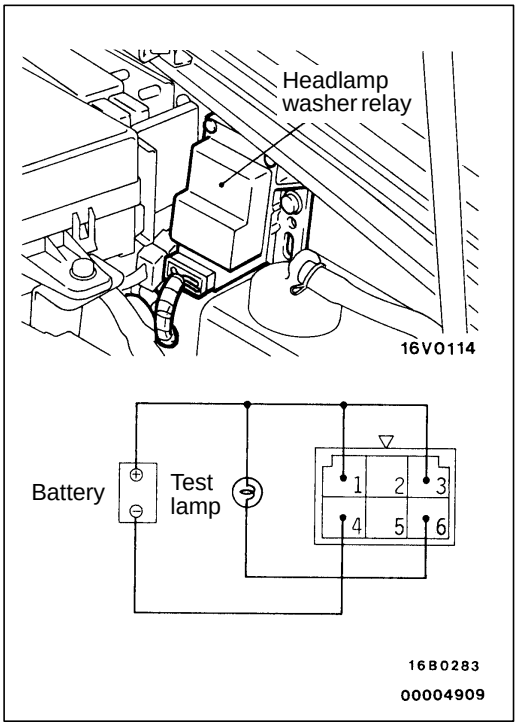

HEADLAMP WASHER RELAY CHECK 51101320048

1. Connect battery and test lamp to the relay as illustrated.

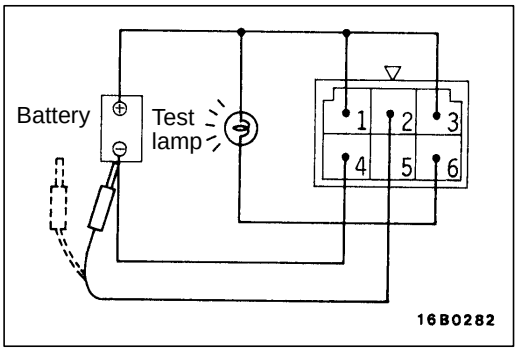

2. The relay is normal if the lamp lights for approximately 0.5 second upon connection of terminal (2) to battery (–).

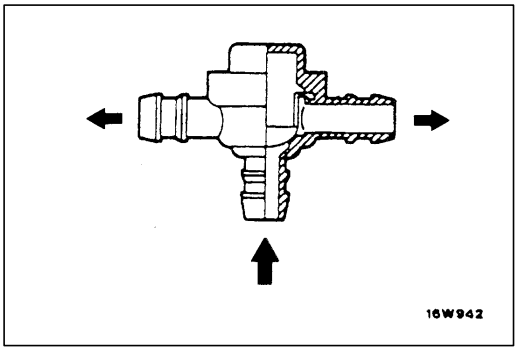

CHECK VALVE CHECK 51101330041

Apply pressure to the inlet of the check valve to check its opening pressure.

Opening pressure: 78 kPa

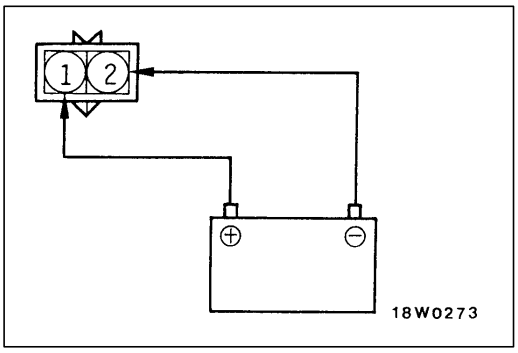

HEADLAMP WASHER MOTOR CHECK 51101340044

1. With the headlamp washer motor installed to the washer tank, fill the washer tank with water.
2. Check that the water squirts out strongly when battery voltage is applied to terminals (1) and (2).

MARKS

51101180066

REMOVAL AND INSTALLATION

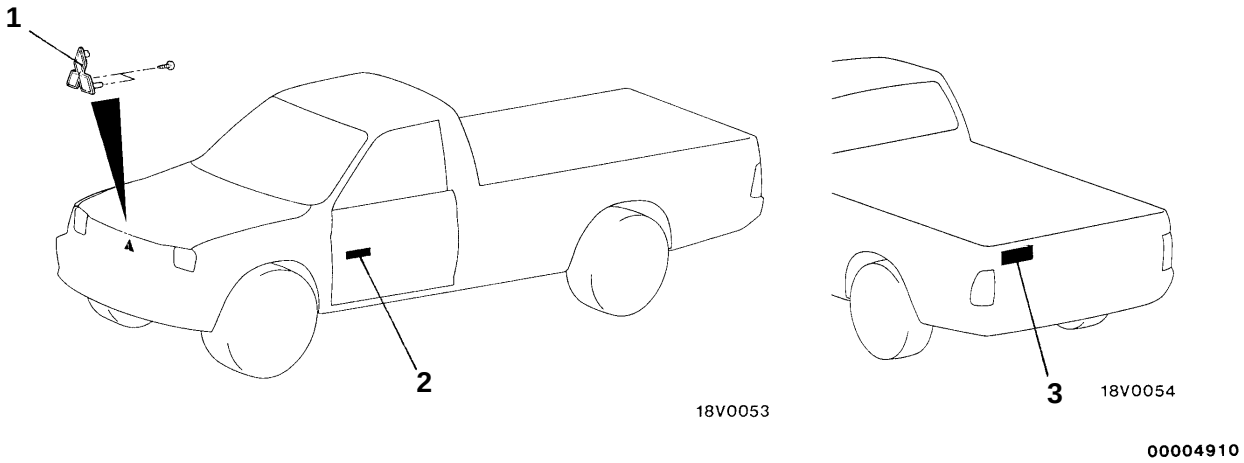

1. Three dia. mark
▶A◀ 2. L200 mark
▶A◀ 3. MITSUBISHI mark

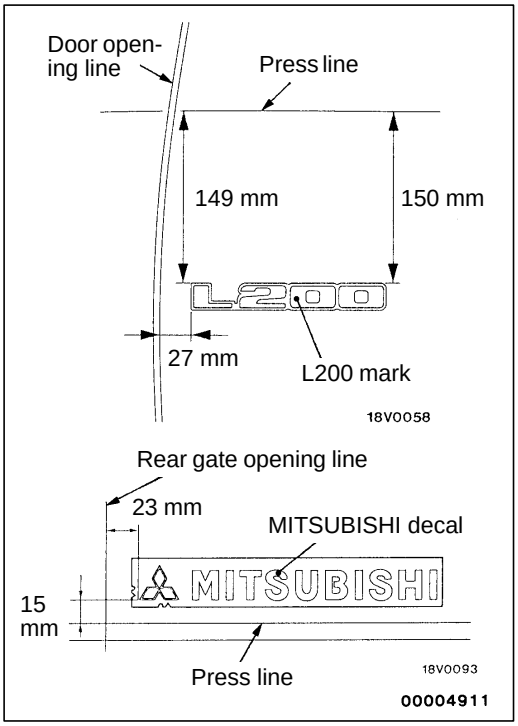

INSTALLATION SERVICE POINT

▶A◀ MARK AND DECAL INSTALLATION

1. Installation position
   Attach to the position shown in the illustration.
2. Installation procedure
   (1) Use unleaded petrol to clean the body surface at the installation position of the marks and decals.
   (2) Peel the backing paper off from the reverse of the marks and decals and attach the marks and decals to the vehicle body.
   (3) Remove the application tape from the decal.

Caution

1. **When installing the marks and decals, the surrounding temperature should be 20 – 38°C and the air should be completely free from dust.**
2. **If the surrounding temperature is lower than 20°C, the marks, decals and the body surface should be heated to 20 – 30°C.**

STRIPE TAPE

51101210017

INSTALLATION SERVICE POINT

1. Peel the backing paper off from the reverse of the stripe tape and attach the stripe tape to the vehicle body.

Caution

1. When installing the stripe tape, the surrounding temperature should be 20 – 38°C and the air should be completely free from dust.

2. If the surrounding temperature is lower than 20°C, the stripe tape and the body surface should be heated to 20 – 30°C.

Single cab

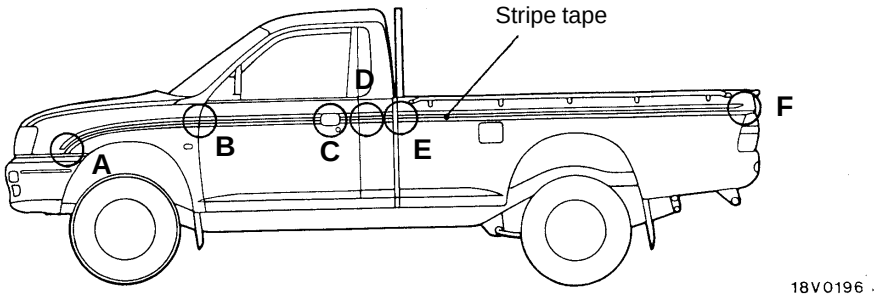

Club cab

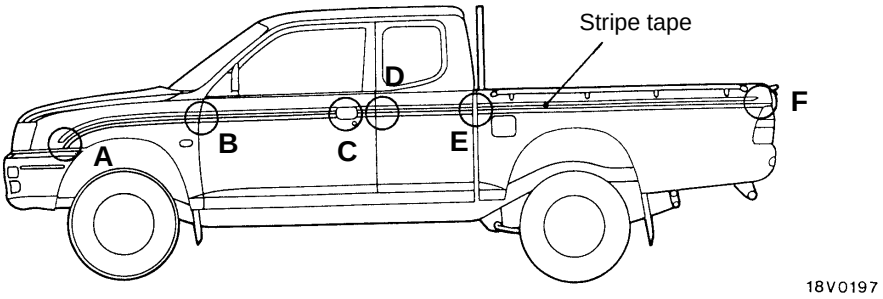

Double cab

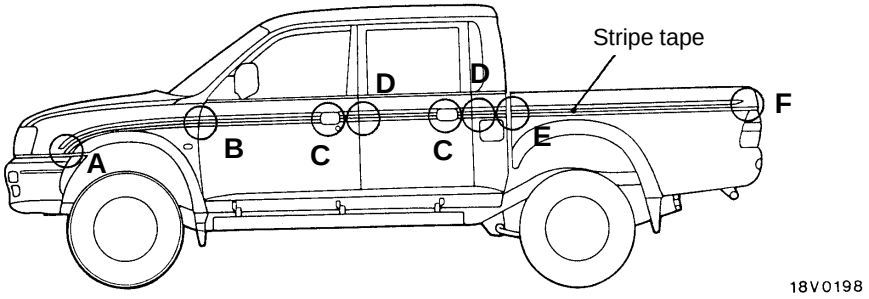

Point A

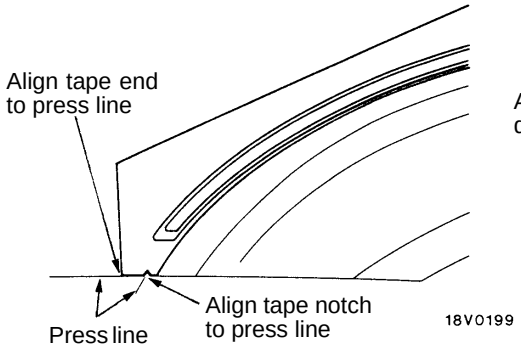

Point B

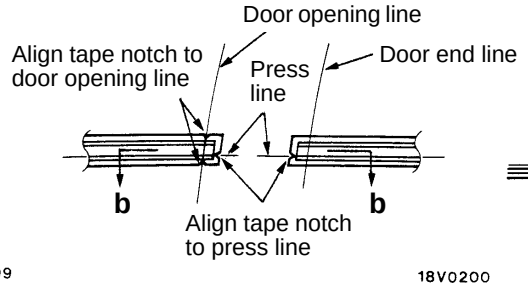

Section b – b

00004912

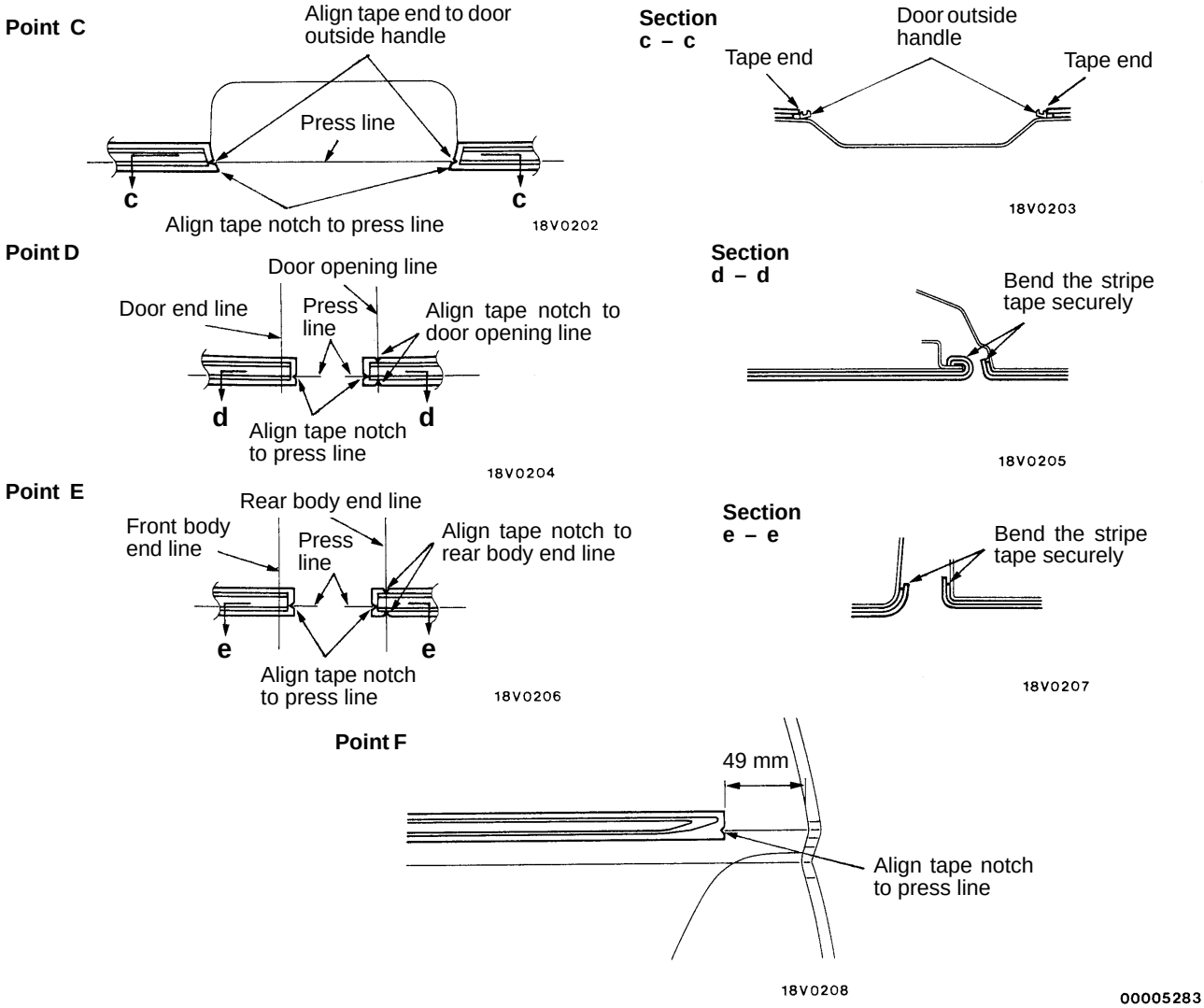

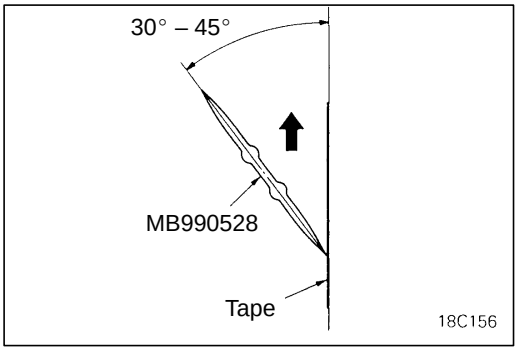

2. Use the special tool to press on the tape, beginning at the centre and moving evenly to both the top and bottom, in order to remove any trapped air bubbles.

   Caution
   1. **If the special tool slides to the side, there will be slack at the end of the tape, causing wrinkles, and the tape may deviate from the correct application position.**
   2. **If the tape is not applied properly, it may come off later.**

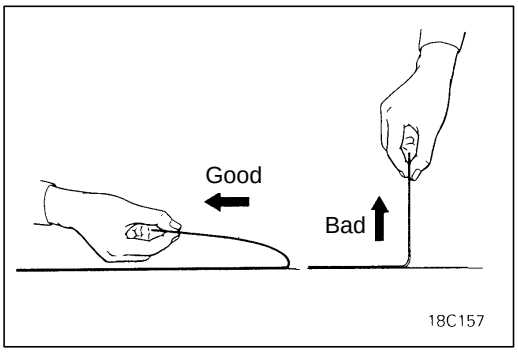

3. Pull the tape off straight and slowly.
4. If there are any air bubbles in the tape after the application, use a sewing needle to make small holes in the bubbles, and use the corners of the spatula to press the air out.

DOOR MIRROR

51100640060

REMOVAL AND INSTALLATION

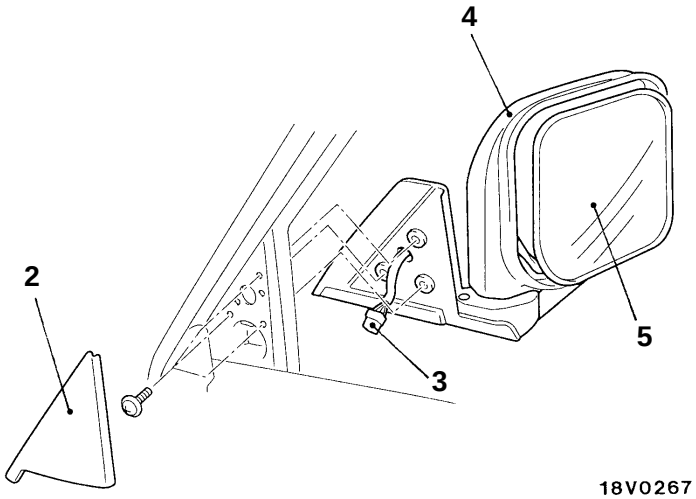

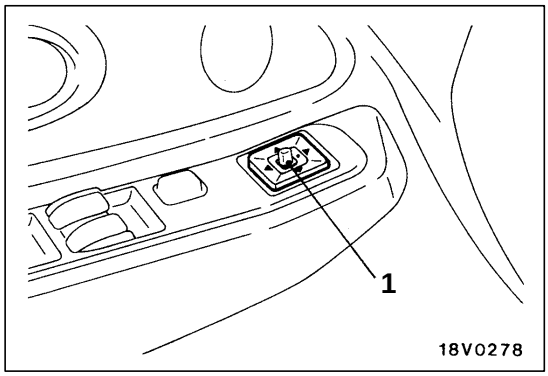

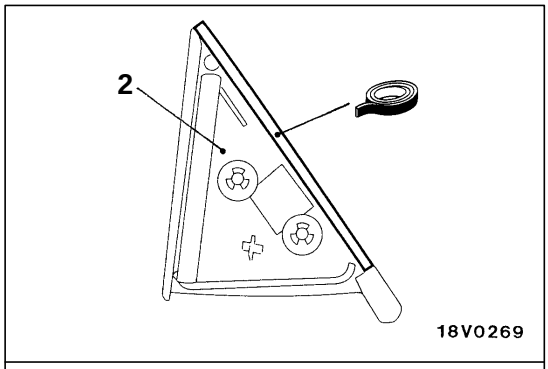

Adhesive tape:
Double-side tape
[5 mm width and 0.4 mm thickness]

00004914

1. Remote controlled mirror switch

Door mirror removal steps

2. Inner delta cover
3. Harness connector <Vehicles with remote controlled mirror>
4. Door mirror assembly
5. ◀A▶ Mirror <Vehicles with remote controlled mirror>

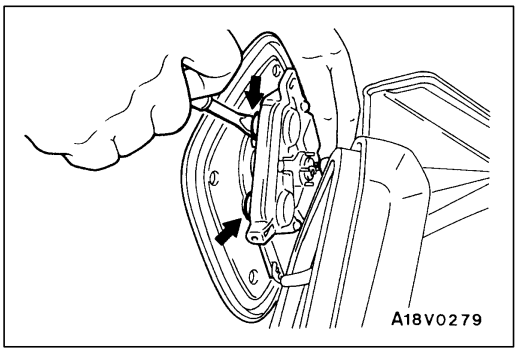

REMOVAL SERVICE POINT

◀A▶ MIRROR REMOVAL

Disconnect the parts indicated by the arrows and remove the mirror from the actuator sub assembly.

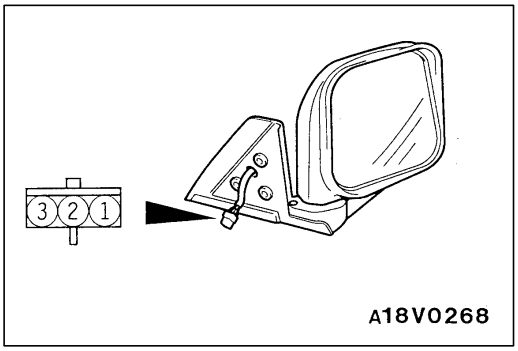

INSPECTION

51100650056

REMOTE CONTROLLED MIRROR ASSEMBLY CHECK

Check to be sure that the mirror moves as described in the table when each terminal is connected to the battery.

Battery connection terminal			Direction operation
1	2	3	
⊖		⊕	UP
⊕		⊖	DOWN
⊖	⊕		RIGHT
⊕	⊖		LEFT

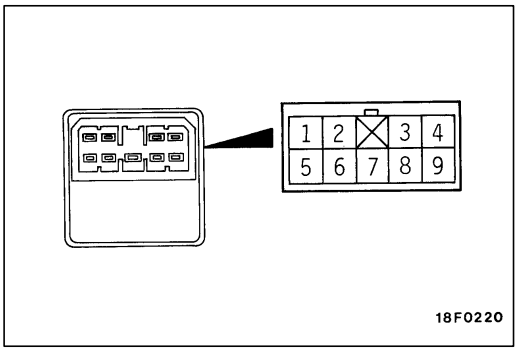

REMOTE CONTROLLED MIRROR SWITCH CONTINUITY CHECK

51101350047

Switch position		Terminal No.						
		2	3	4	6	7	8	9
Left side	UP			○			○	
					○	○		
	DOWN			○		○		
					○		○	
	LEFT		○		○			
				○		○		
	RIGHT		○	○				
					○	○		
Right side	UP	○		○				
					○	○		
	DOWN	○			○			
				○		○		
	LEFT			○		○		
					○			○
	RIGHT			○				○
					○		○	

GROUP 51
EXTERIOR

GENERAL

OUTLINE OF CHANGE

- The service procedures have been established to correspond to the adoption of the remote-controlled door mirror with printed heating wire.

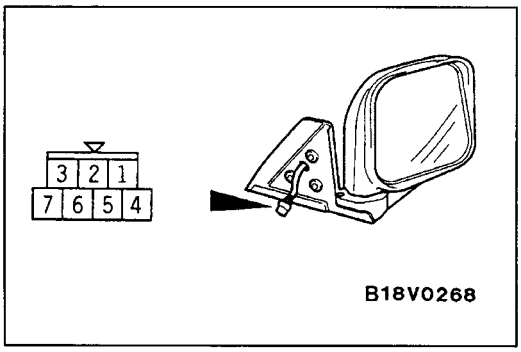

DOOR MIRROR

INSPECTION

REMOTE-CONTROLLED MIRROR ASSEMBLY CHECK

Check to be sure that the mirror moves as described in the table when each terminal is connected to the battery.

Battery connection terminal			Operation direction
5	6	7	
⊖		⊕	UP
⊕		⊖	DOWN
⊖	⊕		RIGHT
⊕	⊖		LEFT

PRINTED HEATING WIRE CHECK

For the remote-controlled door mirror with printed heating wire, check to be sure that there is a continuity between the terminal 1 and the terminal 4.

GROUP 51
EXTERIOR

GENERAL

OUTLINE OF CHANGE(S)

Service procedures have been added due to the following modifications.
- The radiator grille has been modified.
- Newly designed door mirrors have been newly used.

GRILLE

REMOVAL AND INSTALLATION

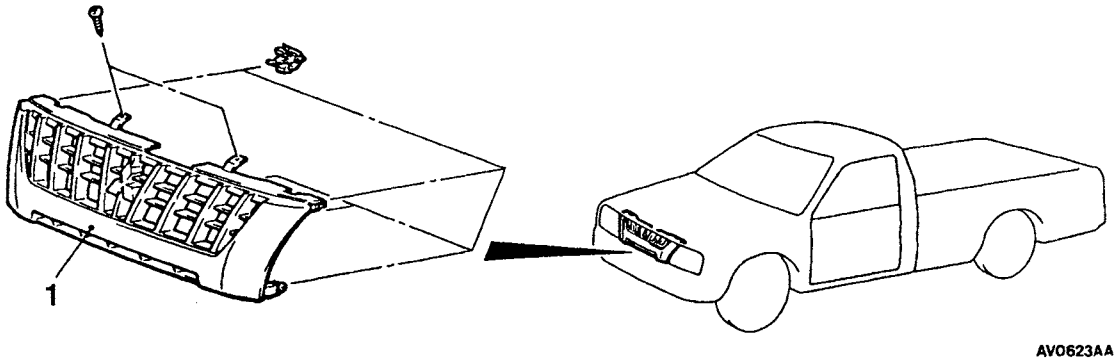

◀A▶ 1. Radiator grille

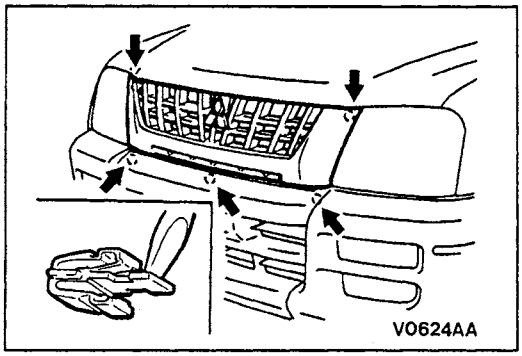

REMOVAL SERVICE POINT

◀A▶ RADIATOR GRILLE REMOVAL

1. Remove the radiator grille upper screws.
2. Gently pulling the radiator grille forwards, push the clip tab with a flat–tipped screwdriver to remove the radiator grille, as shown.

DOOR MIRRORS

REMOVAL AND INSTALLATION

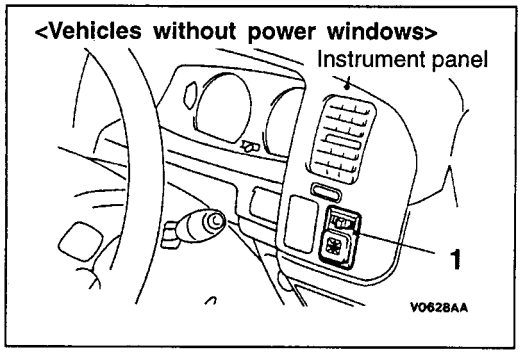

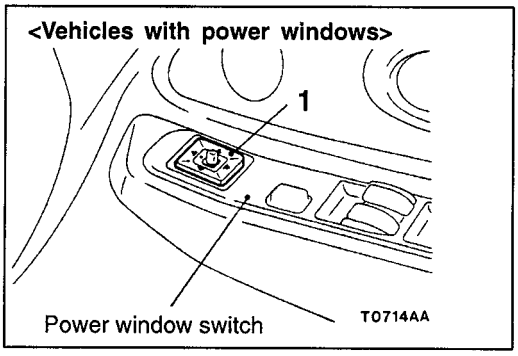

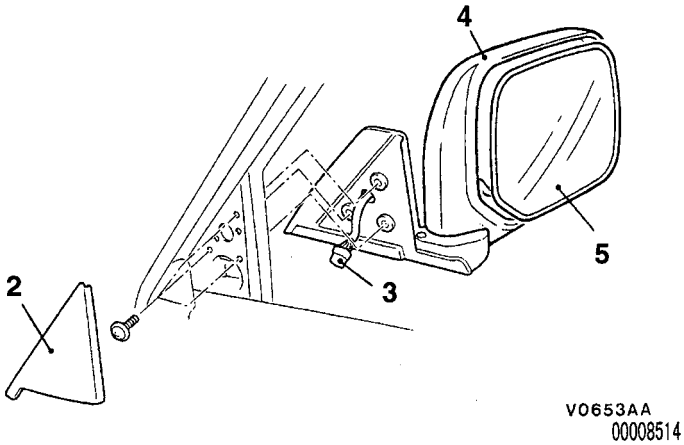

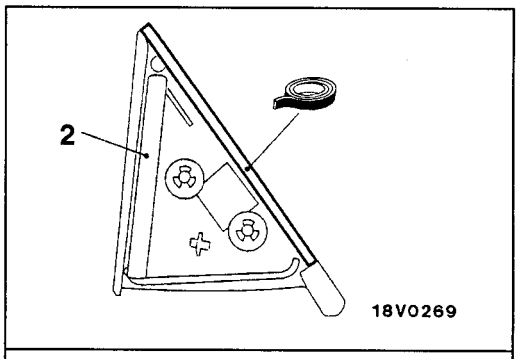

Adhesive tape:
Double-side tape
[5 mm width and 0.4 mm thickness]

1. Remote controlled mirror switch

Door mirror removal steps

2. Inner delta cover
3. Harness connector
4. Door mirror assembly
5. Mirror

◀A▶

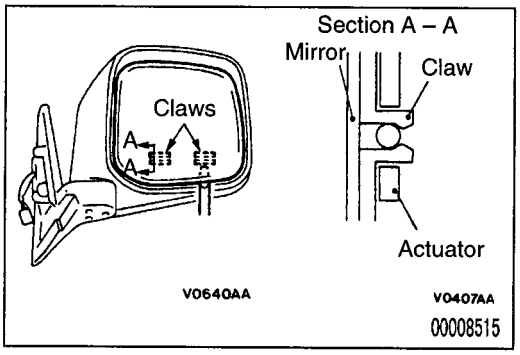

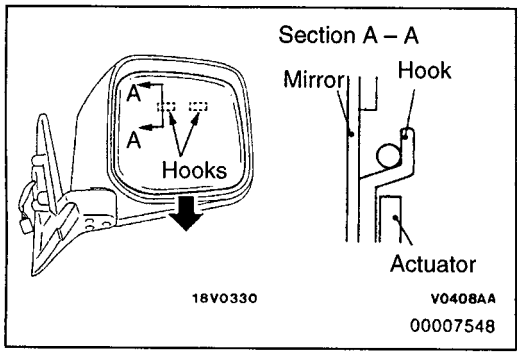

REMOVAL SERVICE POINT

◀A▶ MIRROR REMOVAL

1. Tilting the mirror upwards by hand, insert a flat-tipped screwdriver wound with protection tape. Then, pry the claws out of the actuator.

2. Unhook the mirror by pulling it downwards.

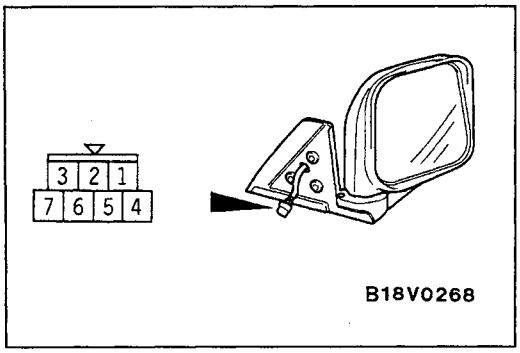

INSPECTION

REMOTE CONTROLLED MIRROR ASSEMBLY CHECK

Check that the mirror moves as described in the table when each terminal is connected to the battery.

Battery connection terminal			Direction operation
5	6	7	
⊖		⊕	UP
⊕		⊖	DOWN
⊕	⊖		LEFT
⊖	⊕		RIGHT

PRINTED HEATING WIRE CHECK

For the remote-controlled door mirror with printed heating wire, check that continuity is present between terminals 1 and 4.

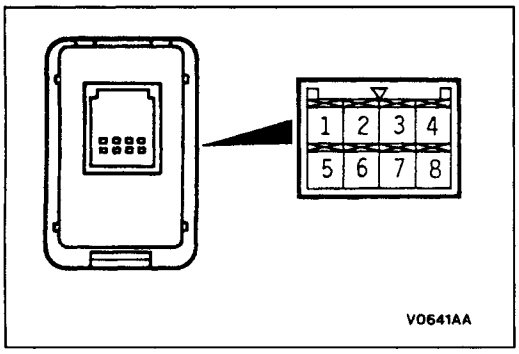

REMOTE CONTROLLED MIRROR SWITCH CONTINUITY CHECK

<Vehicles without power windows>

Switch position		Terminal No.						
		2	3	4	5	6	7	8
Left side	UP	○	○	○			○	
	DOWN	○	○	○			○	
	LEFT	○	○				○	○
	RIGHT	○	○				○	○
Right side	UP	○	○			○	○	
	DOWN	○	○			○	○	
	LEFT	○	○		○		○	
	RIGHT	○	○		○		○	

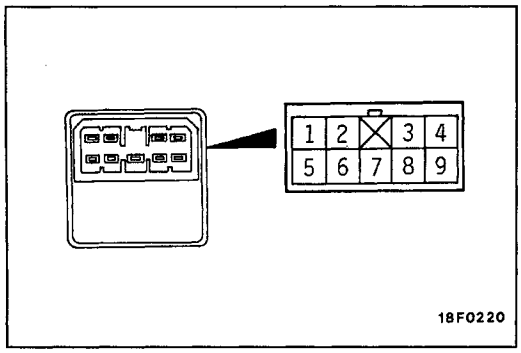

<Vehicles with power windows>

Switch position		Terminal No.						
		2	3	4	6	7	8	9
Left side	UP			○	○	○	○	
	DOWN			○	○	○	○	
	LEFT		○	○	○	○		
	RIGHT		○	○	○	○		
Right side	UP	○		○	○	○		
	DOWN	○		○	○	○		
	LEFT			○	○	○		○
	RIGHT			○	○	○		○

GROUP 51
EXTERIOR

GENERAL

OUTLINE OF CHANGE

- The service procedures have been established to correspond to the adoption of the side protector moulding.

MOULDING

REMOVAL AND INSTALLATION

<Single cab, Club cab>

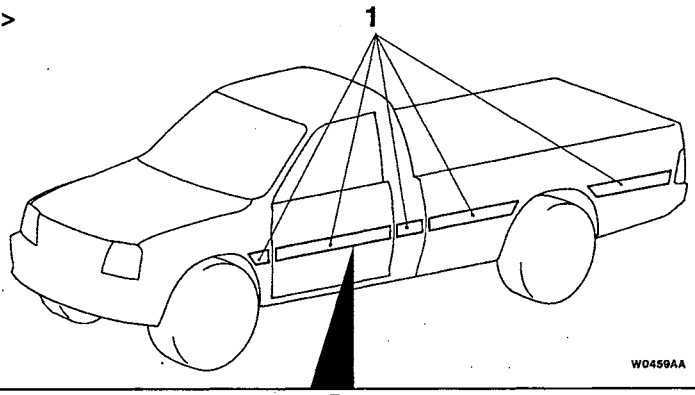

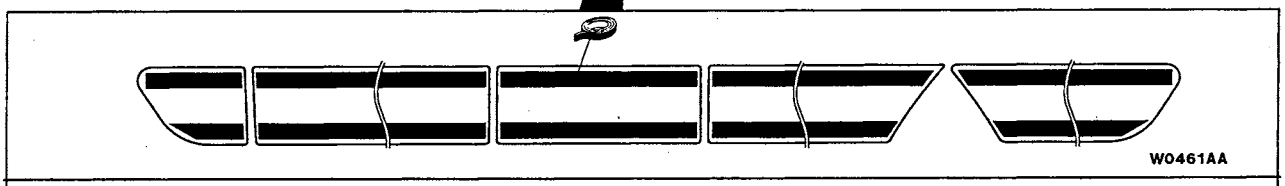

Adhesive tape: double-sided tape [15 mm wide and 0.8 mm thick]

<Double cab>

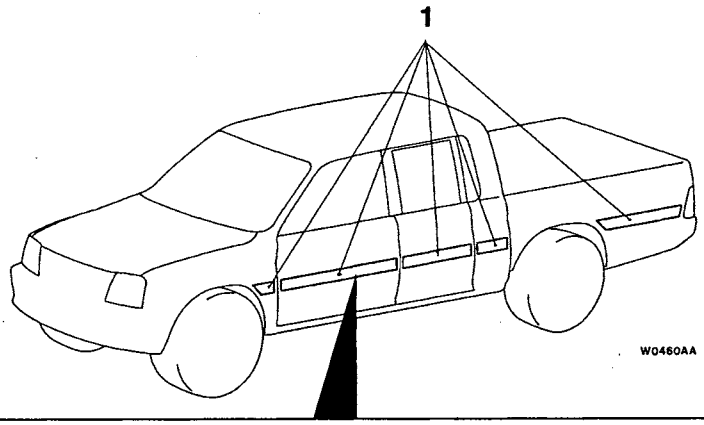

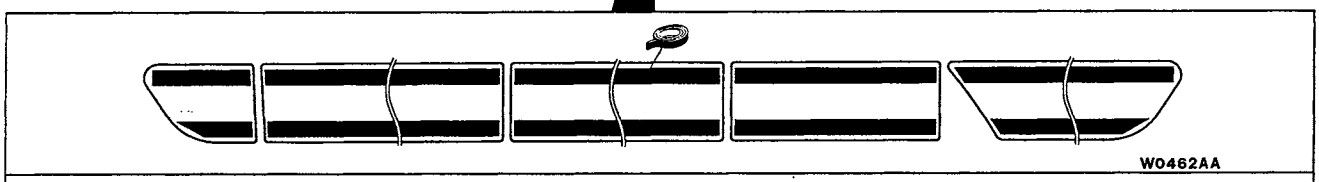

Adhesive tape: double-sided tape [15 mm wide and 0.8 mm thick]

Removal steps

◀A▶ ▶A◀ 1. Side protector moulding

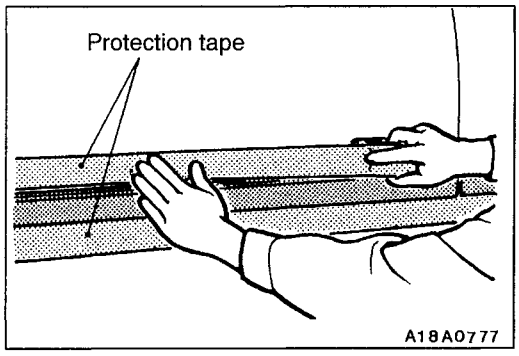

REMOVAL SERVICE POINT

◀A▶ SIDE PROTECTOR MOULDING REMOVAL

1. Attach protection tape all the way along the edges of the double-sided tape which is still adhering to the body.

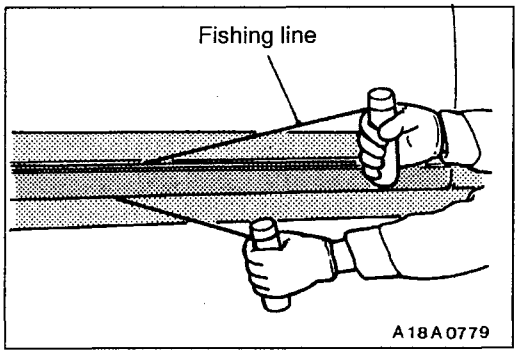

2. Insert fishing line [Ø 0.8 mm] in between the body and the moulding, and pull both ends alternately to cut the adhesive section and remove the moulding.

   Caution
   (1) If the moulding is to be reused, pull the fishing line along the edge of the body so as not to damage the edge of the moulding.
   (2) If the adhesive is difficult to remove, heat it to 40℃ moulding has become warped, it should not be reused.

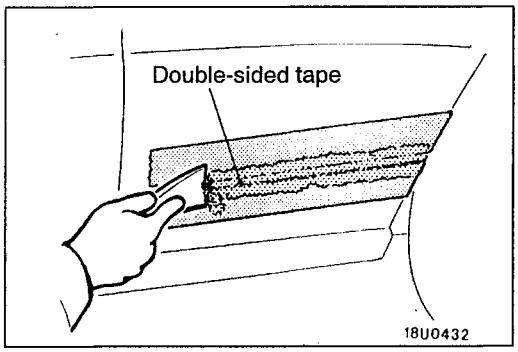

3. Scrape off the double-sided tape with a resin spatula.
4. Peel off the protection tape.
5. Wipe the body surface clean with a rag moistened with isopropyl alcohol.

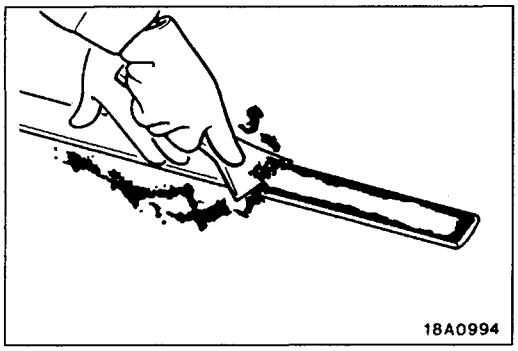

INSTALLATION SERVICE POINT

▶A◀ SIDE PROTECTOR MOULDING INSTALLATION

Affixing Double-sided tape to the mouldings (when reusing mouldings)

1. Scrape off the double-sided tape with a resin spatula or gasket scraper.
2. Wipe the moulding adhesion surface clean with a rag moistened with isopropyl alcohol.
3. Affix the specified double-sided tape to the side protect moulding.

   Specified adhesive tape:
   Double-sided tape [15 mm wide and 0.8 mm thick]

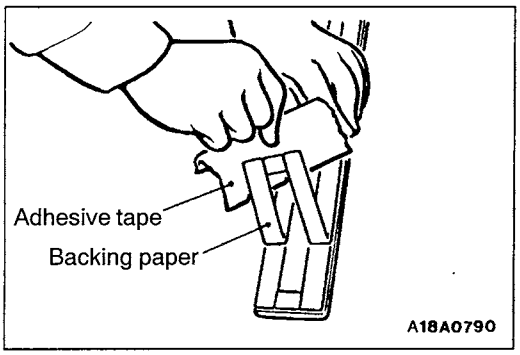

4. Remove the strip paper from the pressure sensitive double-side tape.

   NOTE
   Affix double-sided tape to the end of strip paper for ease of strip paper removal.

5. Remove strip paper from the pressure sensitive double - side tape.

   NOTE
   If it is hard to affix the double-side tape in winter, heat the application surfaces at both the vehicle body and the side protector moulding.

   Body 40 – 60°C
   Side protect moulding 20 – 30°C

   Apply pressure fully to the side protector moulding.

OVER FENDER

REMOVAL AND INSTALLATION

Pre-removal and Post-installation Operation
- Mud Guard Removal and Installation

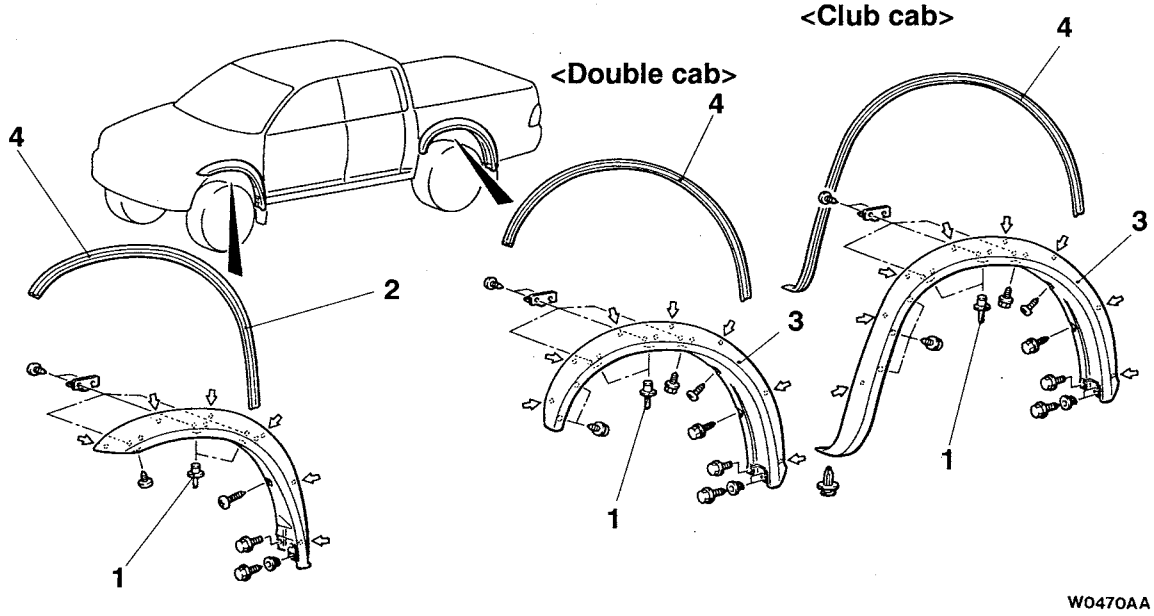

⇦ :Resin clip position

Removal steps

◀A▶ ▶A◀ 1. Rivet
2. Front flare
3. Rear flare
4. Protector

NOTE
For each service point, refer to the Basic Manual.

GROUP 51
EXTERIOR

GENERAL

OUTLINE OF CHANGES

The following changes have been made. The same procedures as before are applied except for the items shown below:

- The separate front bumper has been united.
- The radiator grille design has been changed.
- The routing of the headlamp washer hoses has been changed.

FRONT BUMPER

REMOVAL AND INSTALLATION

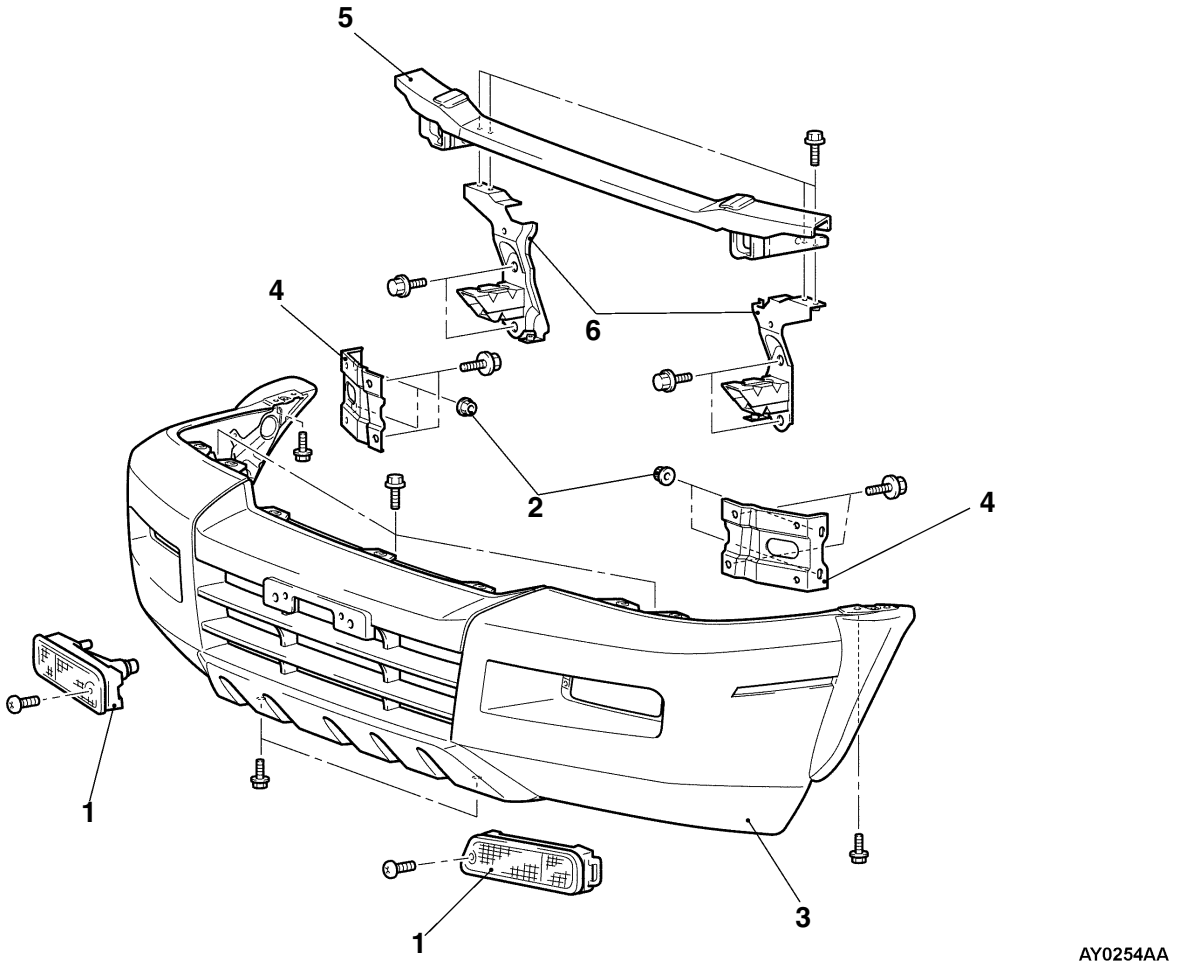

Removal steps

- Radiator grille (Refer to P.51-3.)
- Headlamp

1. Front combination lamp assembly
2. Nut
3. Front bumper assembly
4. Front bumper side stay
5. Front bumper beam assembly
6. Front bumper support assembly

DISASSEMBLY AND REASSEMBLY

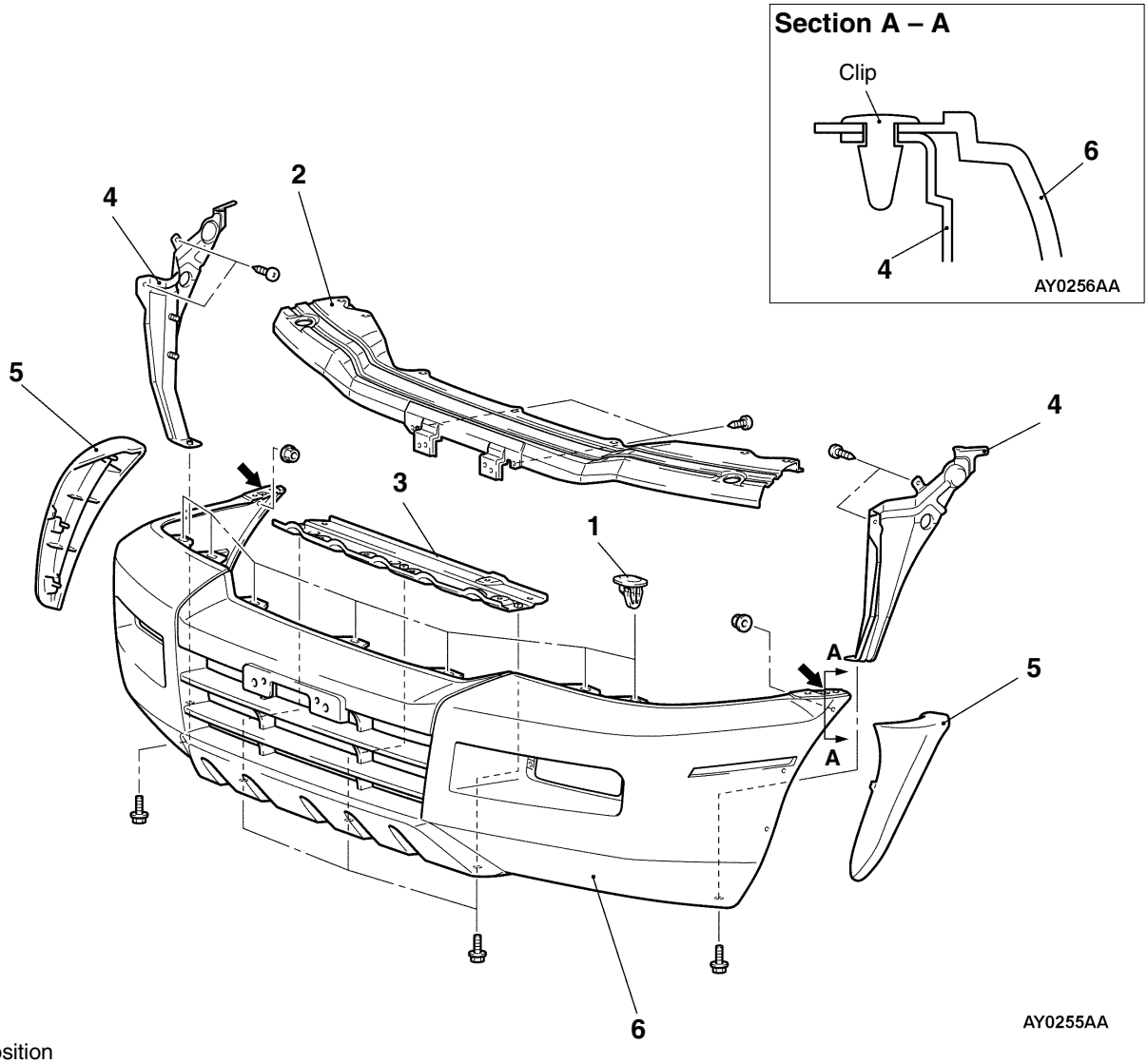

NOTE
⬅:Clips position

Disassembly steps

1. Clip
2. Front bumper reinforcement, upper
3. Front bumper reinforcement, lower
4. Front bumper reinforcement, side
5. Front bumper face side extension (Vehicle with over fender)
6. Front bumper face

RADIATOR GRILLE

REMOVAL AND INSTALLATION

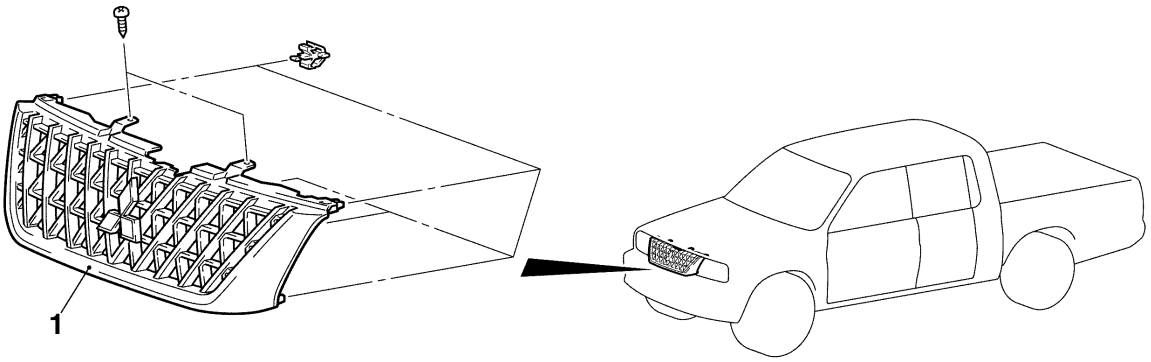

AY0246AA

◀A▶ 1. Radiator grille

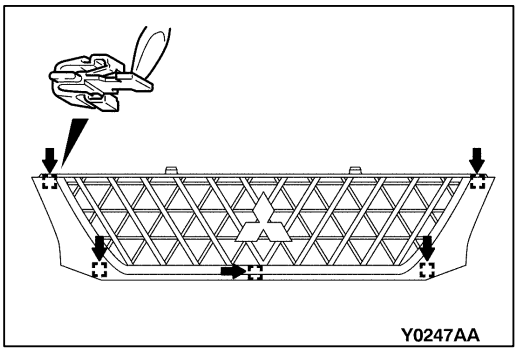

Y0247AA

REMOVAL SERVICE POINT

◀A▶ REMOVAL OF RADIATOR GRILLE

1. Remove the screws on the top side of the radiator grille.
2. Remove the radiator grille by pushing its tab clips in the direction of the arrows with a flat-tipped screwdriver, while lightly pulling the radiator grille toward you.

HEADLAMP WASHER

REMOVAL AND INSTALLATION

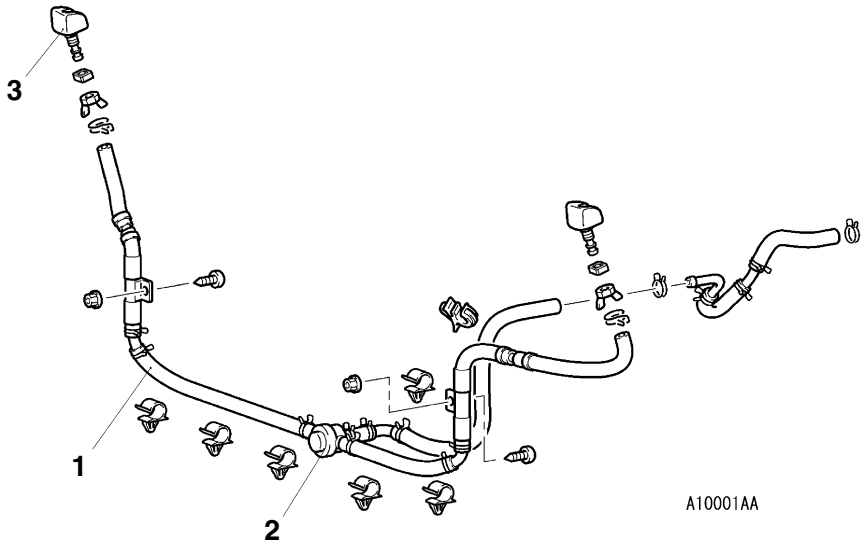

Washer nozzle and check valve removal steps

- Washer fluid draining
- Front bumper (Refer to P.51-1.)

1. Washer hose
2. Check valve
3. Washer nozzle

NOTE
For inspection, refer to the Basic Manual.

GROUP 54
CHASSIS ELECTRICAL

GENERAL

OUTLINE OF CHANGE

The following service procedure of the immobilizer system has been changed. The same procedures as before are applied except for the items shown below.

- The troubleshooting has been changed due to the addition to the 4D56 engine which complies with emission regulation step III.

IMMOBILIZER SYSTEM

The same troubleshooting and ignition key registration method as 4G6 engine are applied except for the following.
Refer to 2000 L200 Workshop Manual. (Pub. No. PWTE96E1–D)

INSPECTION CHART FOR TROUBLE SYMPTOMS

Trouble symptom	Inspection procedure No.	Reference page
Communication with MUT-II is not possible.	1	54-1
Encrypted code cannot be registered using the MUT-II.	2	54-2
Engine does not start (Cranking but no initial combustion).	3	54-2
Malfunction of the immobilizer-ECU power source and earth circuit.	4	54-3

INSPECTION PROCEDURE FOR TROUBLE SYMPTOMS <4D56-Step III>

Inspection Procedure 1

Communication with MUT-II is impossible	Probable cause
The cause is probably that a malfunction of the diagnosis line or the immobilizer-ECU is not functioning.	• Malfunction of diagnosis line • Malfunction of harness or connector • Malfunction of immobilizer-ECU

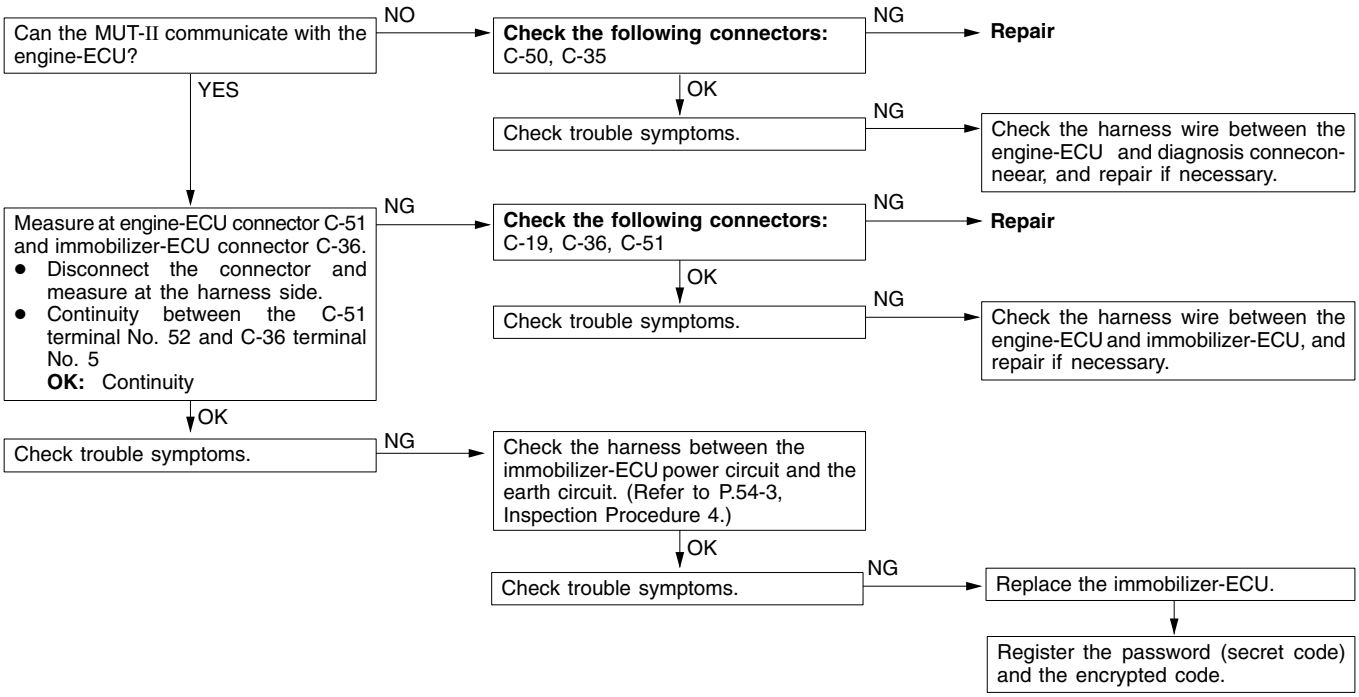

Inspection Procedure 2

Encrypted code cannot be registered using the MUT-II	Probable cause
The cause is probably that there is no encrypted code registered in the immobilizer-ECU or there is a malfunction of the immobilizer-ECU.	● Malfunction of transponder ● Malfunction of ignition key ring antenna ● Malfunction of harness or connector ● Malfunction of immobilizer-ECU

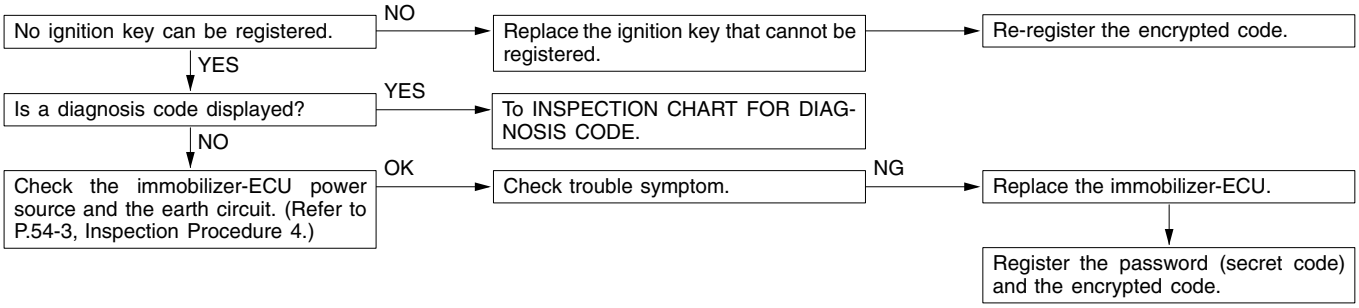

Inspection Procedure 3

Engine does not start (Cranking but no initial combustion).	Probable cause
If no fuel injection, there might be a problem with the fuel injection system in addition to a malfunction of the immobilizer system. It is normal for this to occur if an attempt is made to start the engine using a key that has not been properly registered.	● Malfunction of diesel fuel injection system ● Malfunction of immobilizer-ECU

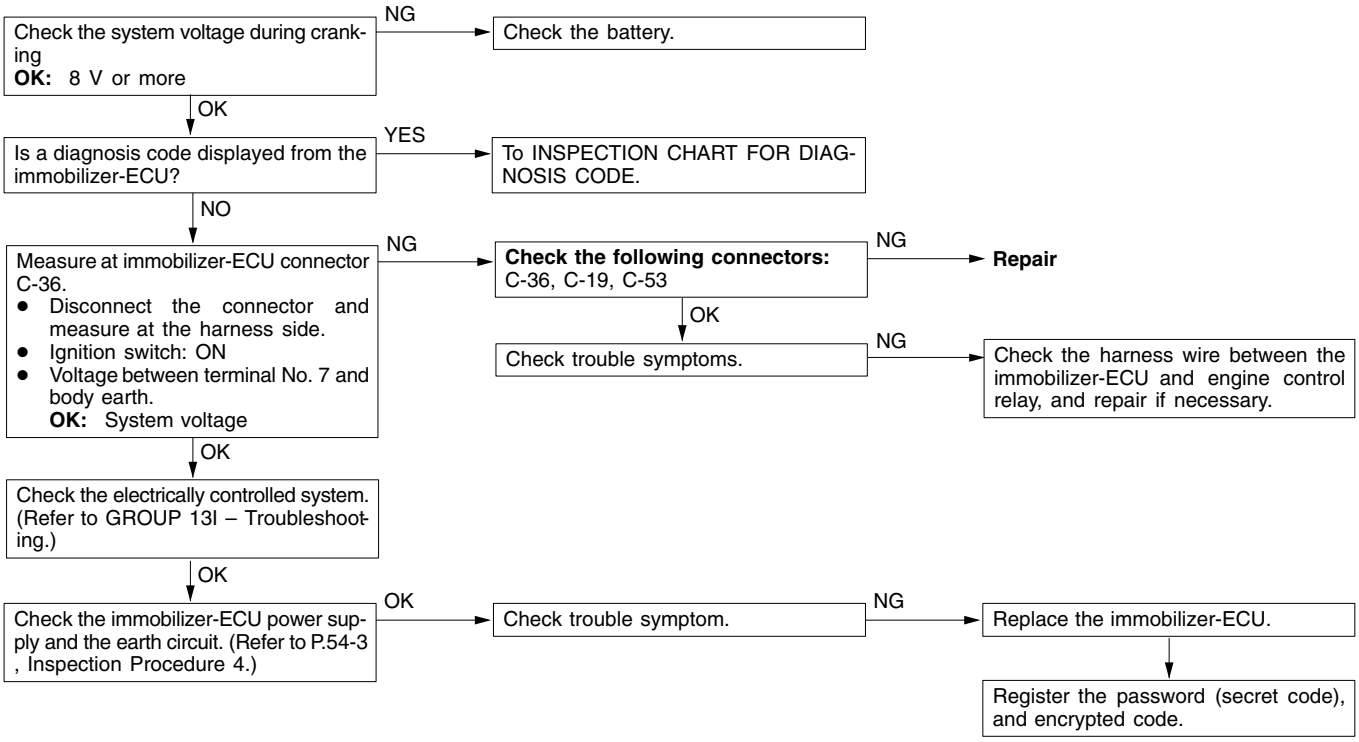

Inspection Procedure 4

Malfunction of the immobilizer-ECU power source and earth circuit

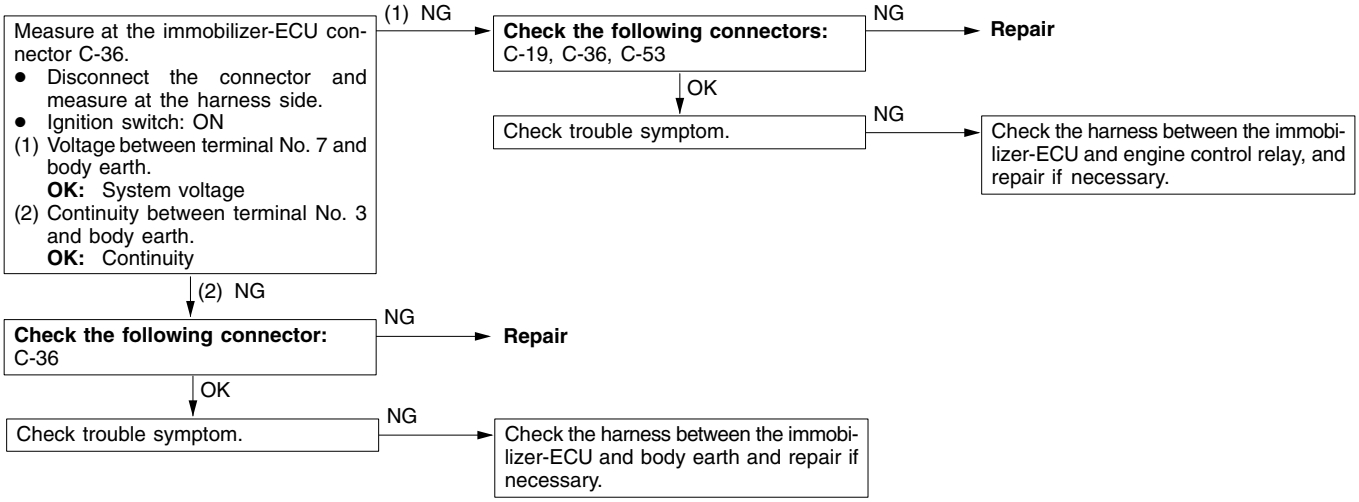

CHECK AT IMMOBILIZER-ECU

Terminal Voltage Check Chart

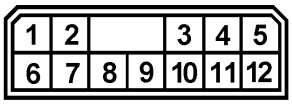

20F0191

Terminal No.	Signal	Checking requirements	Terminal voltage
3	Immobilizer-ECU earth	Always	0 V
7	Immobilizer-ECU power supply	Ignition switch: OFF or approx. 5 or more seconds after switch has been turned from ON to OFF.	0 V
		Ignition switch: ON or within approx. 5 or more seconds after switch has been turned from ON to OFF	System voltage

NOTES

INTERIOR

Click on the applicable bookmark to selected the required model year

INTERIOR

CONTENTS

52109000255

SERVICE SPECIFICATIONS 3
ADHESIVE 3
SPECIAL TOOL 3
INSTRUMENT PANEL* 4
FLOOR CONSOLE 7
TRIMS 8
FRONT SEAT 12
REAR SEAT 17
FRONT SEAT BELT 18
REAR SEAT BELT 19

WARNINGS REGARDING SERVICING OF SUPPLEMENTAL RESTRAINT SYSTEM (SRS) EQUIPPED VEHICLES

WARNING!

(1) Improper service or maintenance of any component of the SRS, or any SRS-related component, can lead to personal injury or death to service personnel (from inadvertent firing of the air bag) or to the driver (from rendering the SRS inoperative).
(2) Service or maintenance of any SRS component or SRS-related component must be performed only at an authorized MITSUBISHI dealer.
(3) MITSUBISHI dealer personnel must thoroughly review this manual, and especially its GROUP 52B – Supplemental Restraint System (SRS) before beginning any service or maintenance of any component of the SRS or any SRS-related component.

NOTE

The SRS includes the following components: impact sensors, SRS diagnosis unit, SRS warning lamp, air bag module, clock spring and interconnecting wiring. Other SRS-related components (that may have to be removed/installed in connection with SRS service or maintenance) are indicated in the table of contents by an asterisk (*).

SERVICE SPECIFICATIONS

52100030031

Items		Standard value
Seatback heater resistance (between terminals) Ω		Approx. 8
Seat cushion heater resistance (between terminals) Ω	Between terminals 2 and 3	Approx. 8
	Between terminals 1 and 3	0

ADHESIVE

52100050068

Items	Specified adhesive
Back panel trim, lower B to back panel trim, lower extension <Club cab>	Adhesive tape: double-sided tape [8 mm width and 0.16 mm thickness]

SPECIAL TOOL

52100060146

Tool	Number	Name	Use
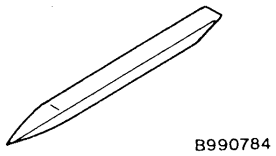	MB990784	Ornament remover	Removal of switch, trim, etc.

INSTRUMENT PANEL

52100170153

REMOVAL AND INSTALLATION

For installation of the instrument panel, the bolts and screws described below are used. They are indicated by symbols in the illustration.

Name	Symbol	Size mm (D x L)	Colour	Shape
Tapping screw	A	5 x 12	–	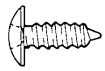 A00Z0010
	B	5 x 16		
	C	5 x 12	Black	
	D	5 x 16		
	E	5 x 20		19X0639
	F	5 x 12	–	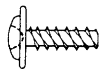 B00Z0010
	G	5 x 16		
	H	5 x 16	Black	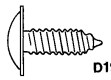 D19N0001
Washer assembled screw	I	5 x 12	–	C00Z0010
	J	5 x 16		
	K	5 x 20	Black	
Washer assembled bolt	L	6 x 8	–	D00Z0010
	M	6 x 16		
	N	8 x 16		
	O	6 x 16		F00Z0010
Machine screw	P	4 x 8	–	J00Z0010

D = Thread diameter
L = Effective thread length

CAUTION: SRS
When removing and installing the instrument panel (vehicles equipped with SRS), do not let it bump against the SRS diagnosis unit.

Pre-removal and Post-installation Operation
- Floor Console Assembly Removal and Installation (Refer to P. 52A-7.)
- Steering Wheel and Column Cover Removal and Installation (Refer to GROUP 37A.)

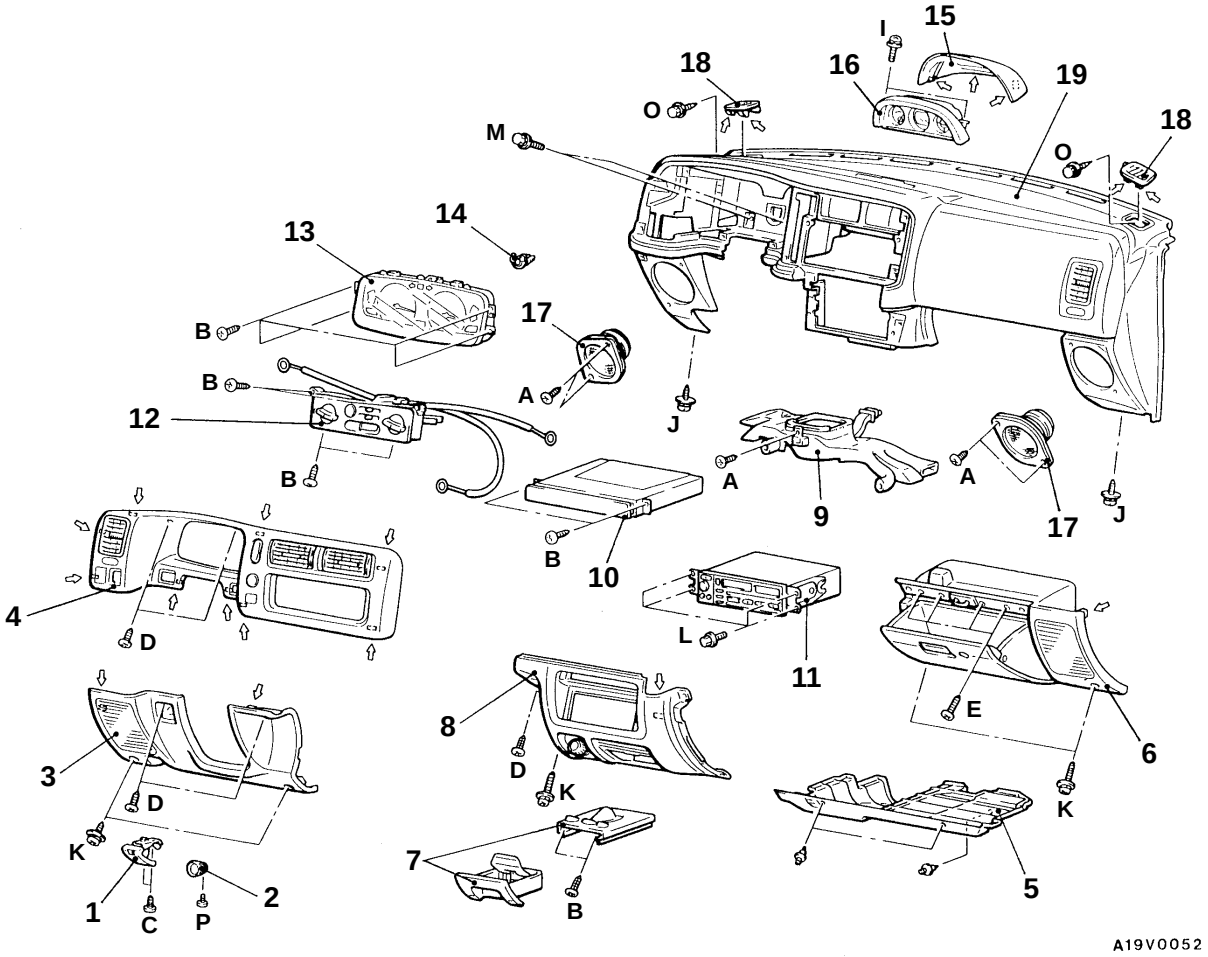

NOTE
⇦ : Metal clip position

Removal steps

1. Hood lock release handle
2. Throttle cable knob <Diesel-powered vehicles>
3. Driver side under cover
4. Meter bezel assembly
5. Under cover
6. Glove box assembly
7. Ashtray assembly
8. Center under cover
9. Foot duct
10. Cup holder assembly

◀A▶

11. Radio and tape player
12. Heater control assembly (Refer to GROUP 55.)
13. Combination meter
14. Adapter
15. Multi-meter panel <4WD>
16. Multi-meter assembly <4WD>
17. Speaker
18. Side defroster grille
19. Instrument panel assembly

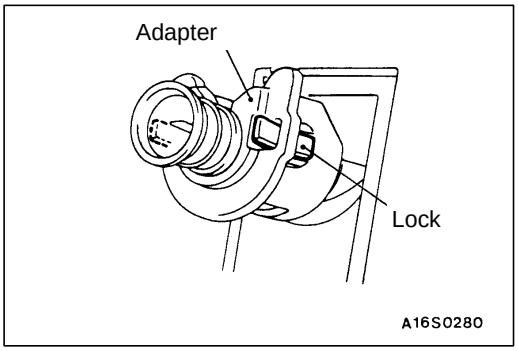

REMOVAL SERVICE POINT

◀A▶ ADAPTER REMOVAL

1. Remove the adapter lock from the instrument panel.
2. Pull the speedometer cable slightly into the passenger compartment, and remove the adapter.

DISASSEMBLY AND REASSEMBLY

52100190142

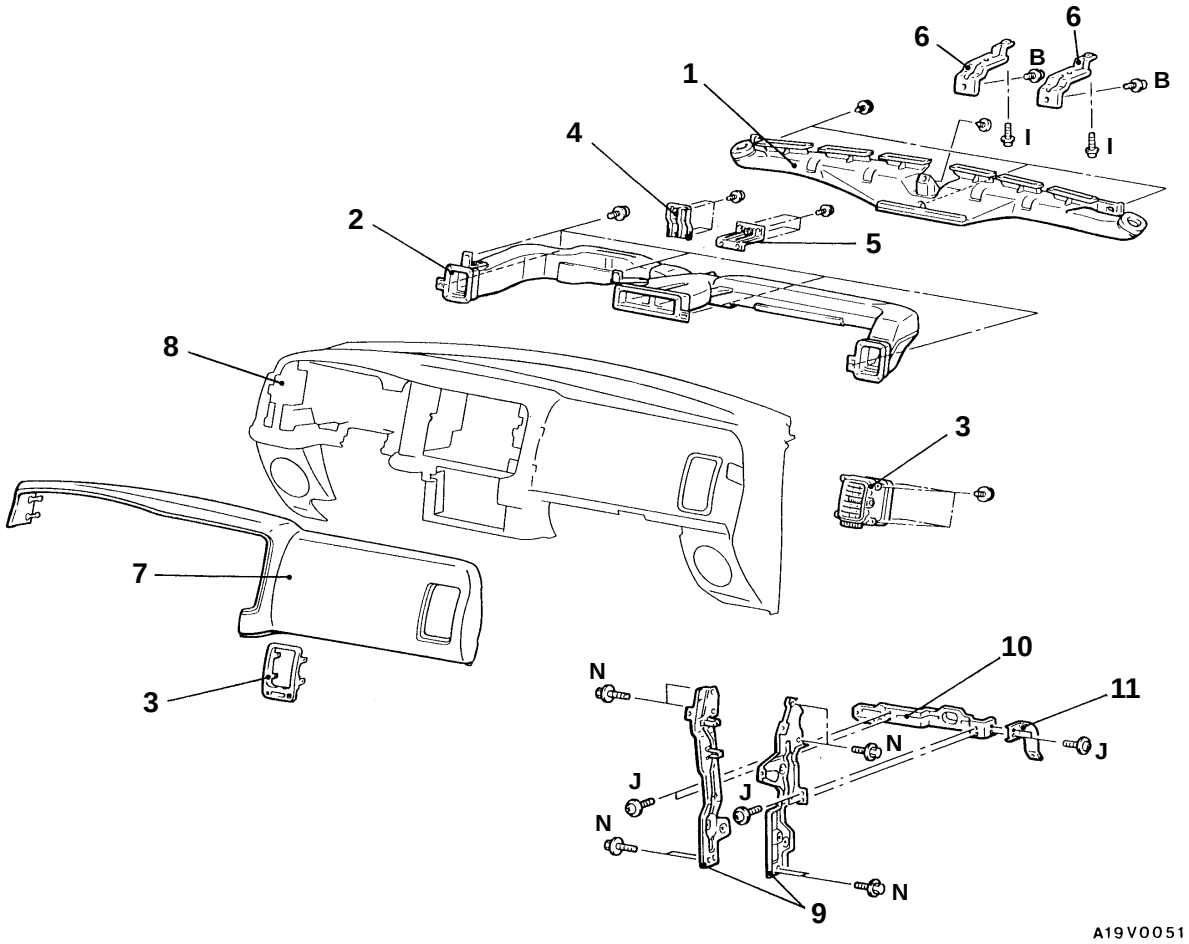

Disassembly steps

1. Defroster nozzle
2. Distribution duct
3. Air outlet assembly
4. Combination meter reinforcement
5. Instrument panel reinforcement
6. Multi-meter bracket
7. Instrument pad
8. Instrument panel
9. Center reinforcement
10. Center reinforcement A
11. Center reinforcement B

FLOOR CONSOLE

52100220124

REMOVAL AND INSTALLATION

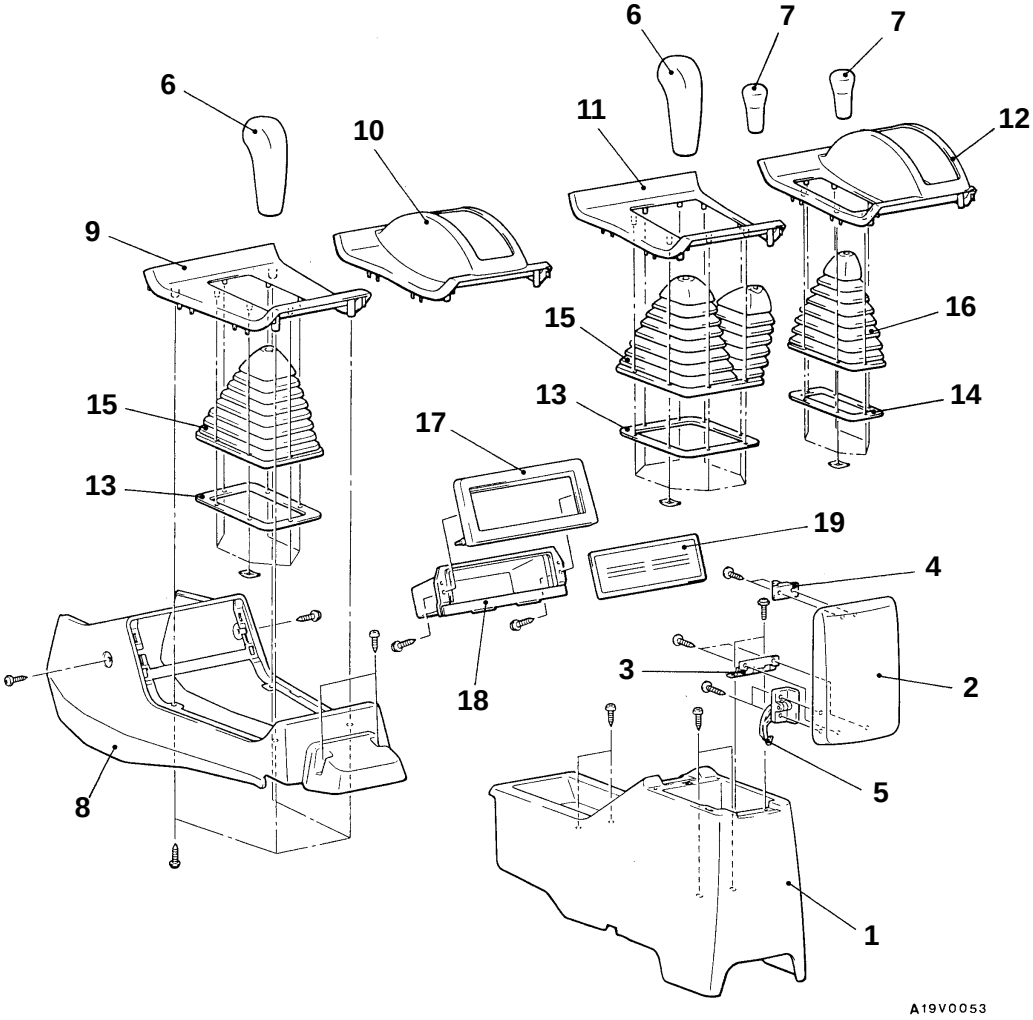

Removal steps

1. Rear floor console assembly
2. Console lid
3. Console lid hinge
4. Striker
5. Stopper
6. Transmission shift lever knob <M/T>
7. Transfer shift lever knob <4WD>
8. Front floor console assembly
9. Console panel A <2WD-M/T>
10. Console panel B <2WD-A/T>
11. Console panel C <4WD-M/T>
12. Console panel D <4WD-A/T>
13. Shift lever boots reinforcement <M/T>
14. Transfer lever boots reinforcement <4WD-A/T>
15. Shift lever boots <M/T>
16. Transfer lever boots <4WD-A/T>
17. Console panel
18. Box <Vehicles without SRS>
19. Radio plug <Vehicles with SRS>

TRIMS

52100110162

REMOVAL AND INSTALLATION

<Single cab>

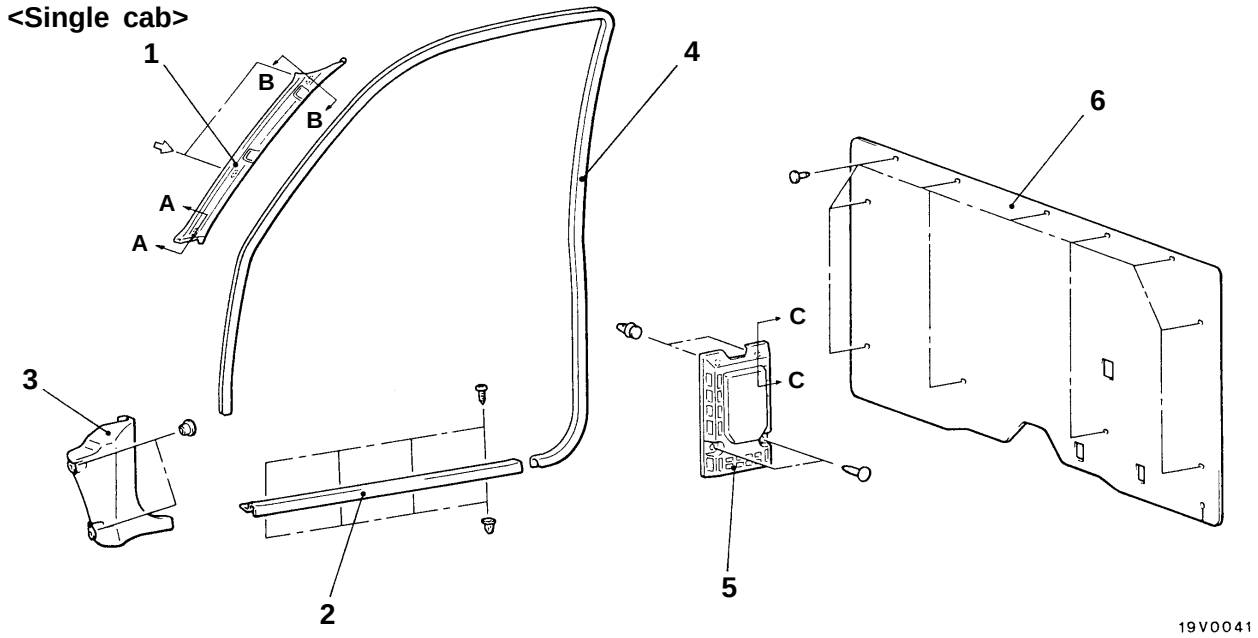

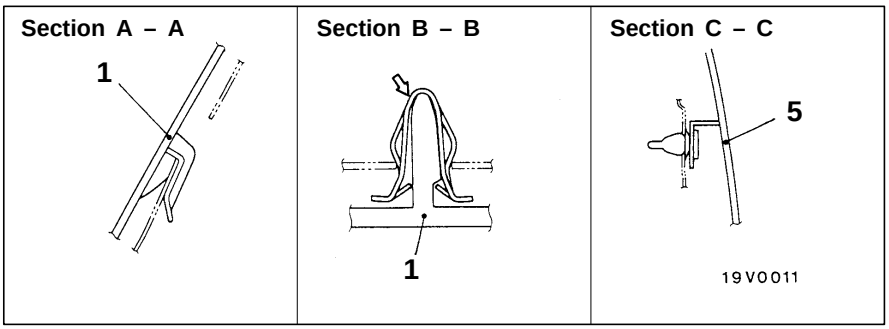

NOTE
⇦ : Metal clip position

00005084

1. Front pillar trim
2. Scuff plate
3. Cowl side trim
4. Door opening weatherstrip, inner
5. Retractor cover
6. Back panel trim, lower

<Club cab>

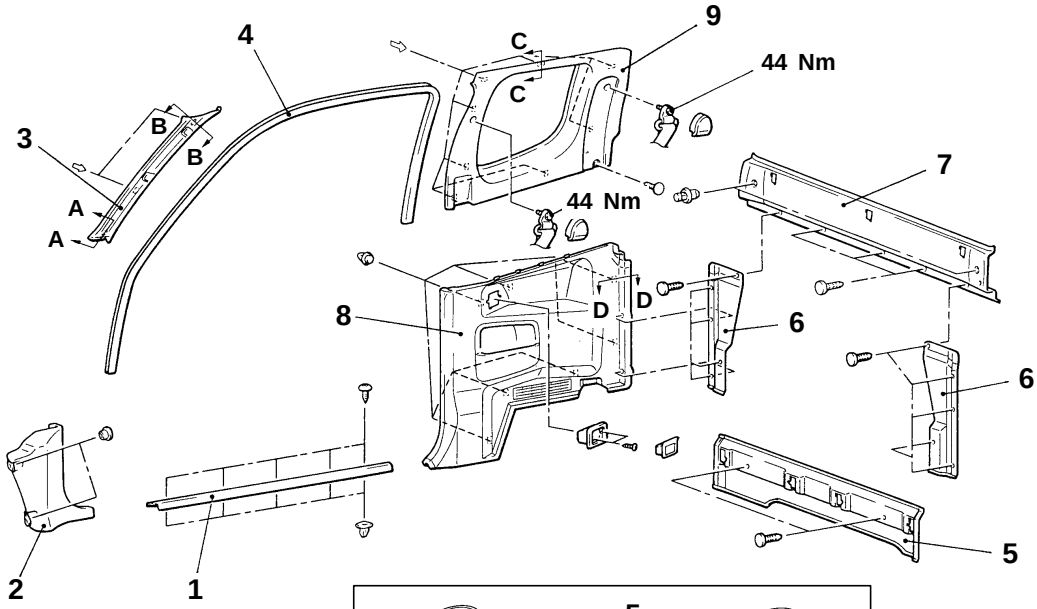

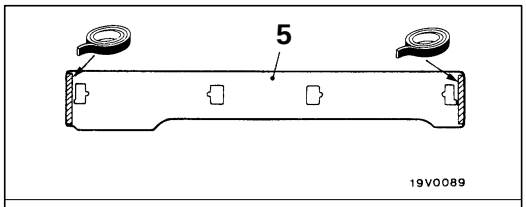

Adhesive tape: double-sided tape [8 mm width and 0.16 mm thickness]

19V0042

NOTE
⇦ : Metal clip position

Section A – A	Section B – B	Section C – C	Section D – D
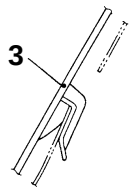	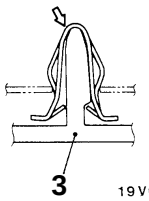	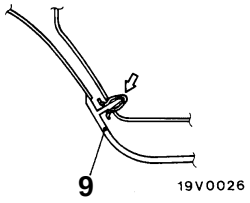	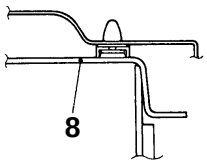

00005085

1. Scuff plate
2. Cowl side trim
3. Front pillar trim
4. Front door opening weatherstrip, inner

- Rear seat assembly (Refer to P.52A-17.)

5. Back panel trim, lower
6. Back panel trim, lower extension
7. Back panel trim, upper
8. Quarter trim, lower
9. Quarter trim, upper

<Double cab-Full trim>

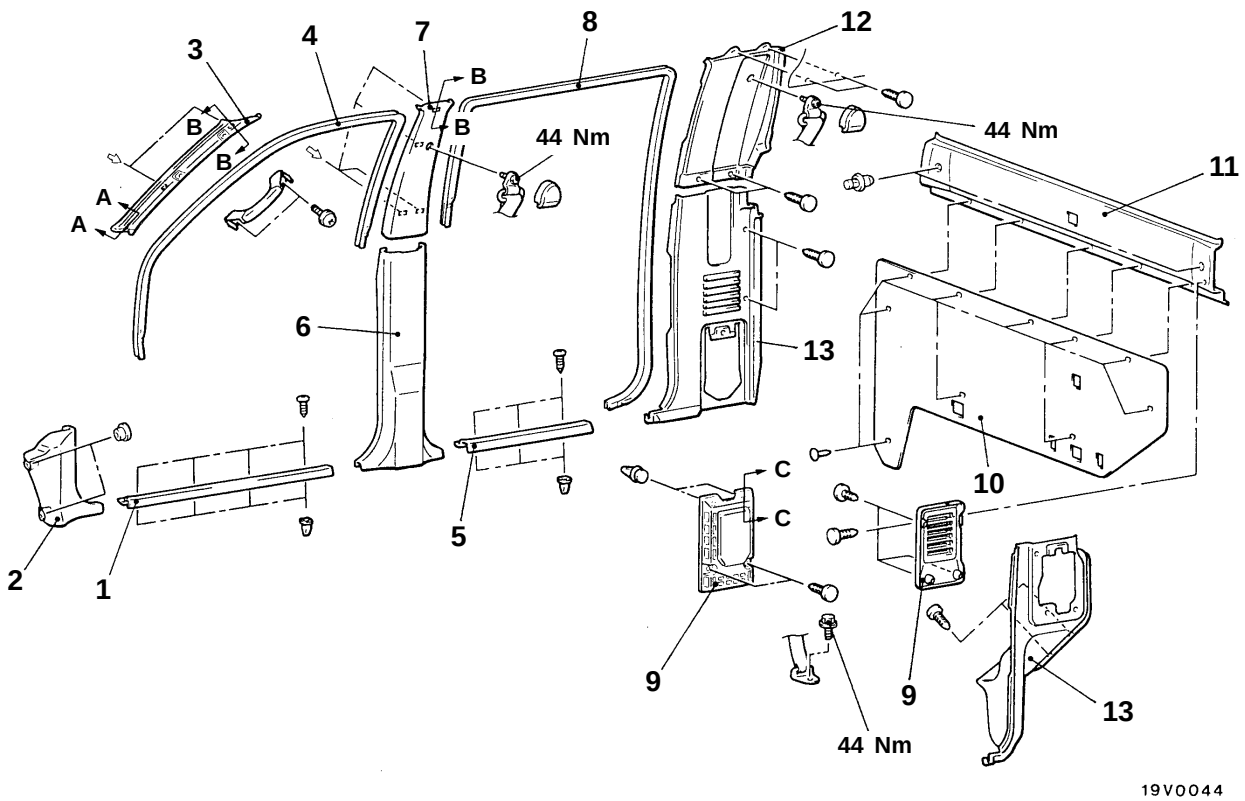

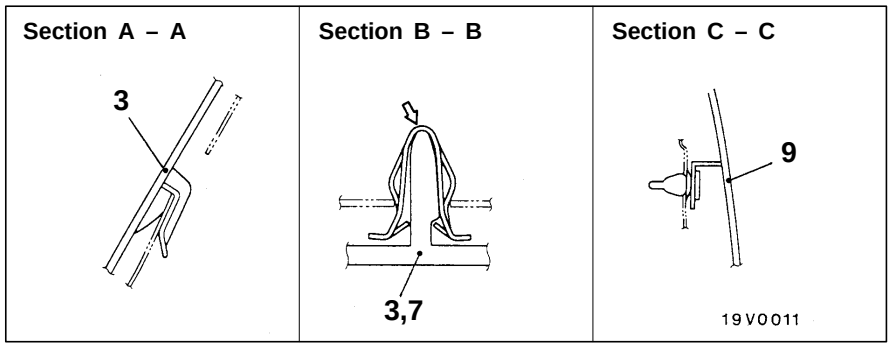

NOTE
⇦ : Metal clip position

00005087

1. Front scuff plate
2. Cowl side trim
3. Front pillar trim
4. Front door opening weatherstrip, inner
5. Rear scuff plate
6. Center pillar trim, lower
7. Center pillar trim, upper
8. Rear door opening weatherstrip, inner
9. Retractor cover
10. Back panel trim, lower
11. Back panel trim, upper
12. Rear pillar trim, upper
13. Rear pillar trim, lower

<Double cab-Partial trim>

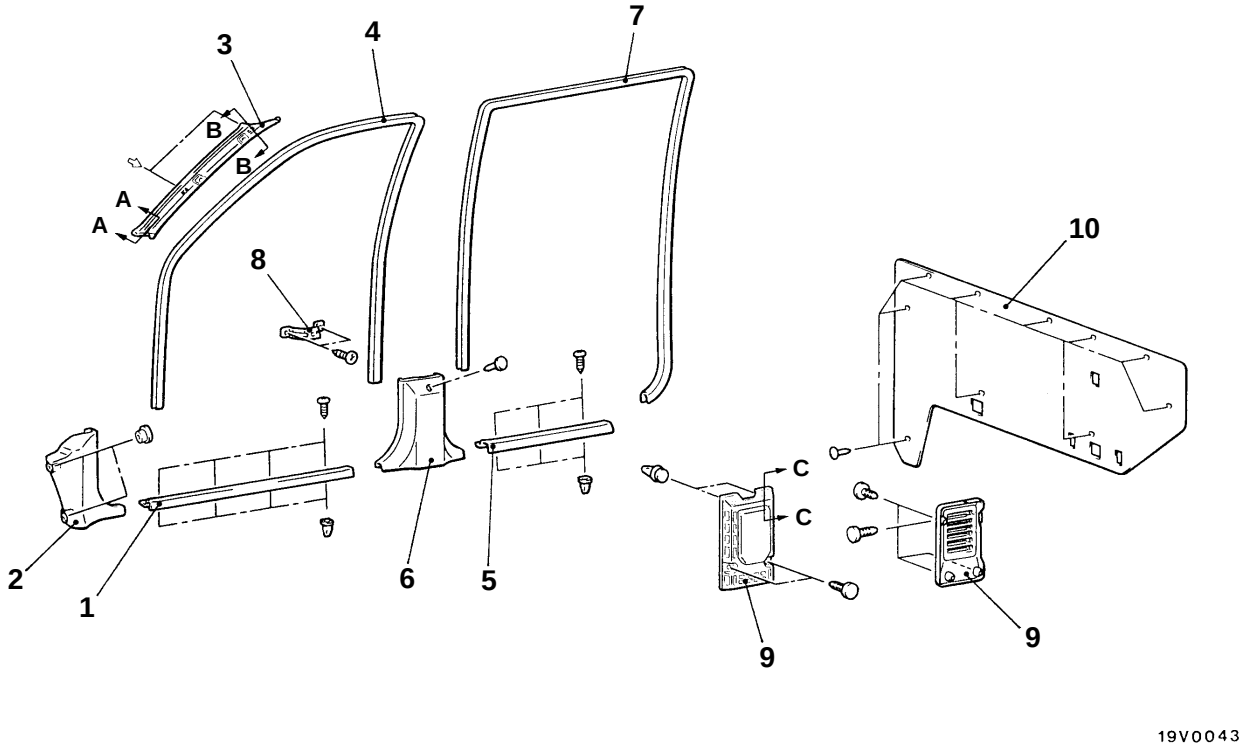

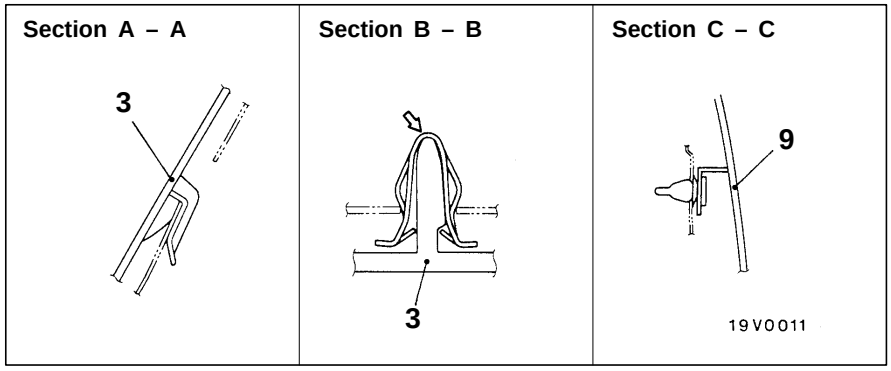

NOTE
⇦ : Metal clip position

1. Front scuff plate
2. Cowl side trim
3. Front pillar trim
4. Front door opening weatherstrip, inner
5. Rear scuff plate
6. Center pillar trim, lower
7. Rear door opening weatherstrip, inner
8. Trim bracket
9. Retractor cover
10. Back panel trim, lower

FRONT SEAT

52200130147

REMOVAL AND INSTALLATION

Pre-removal and Post-installation Operation
- Rear Floor Console Assembly Removal and Installation (Refer to P.52A-7).

<SEPARATE TYPE>

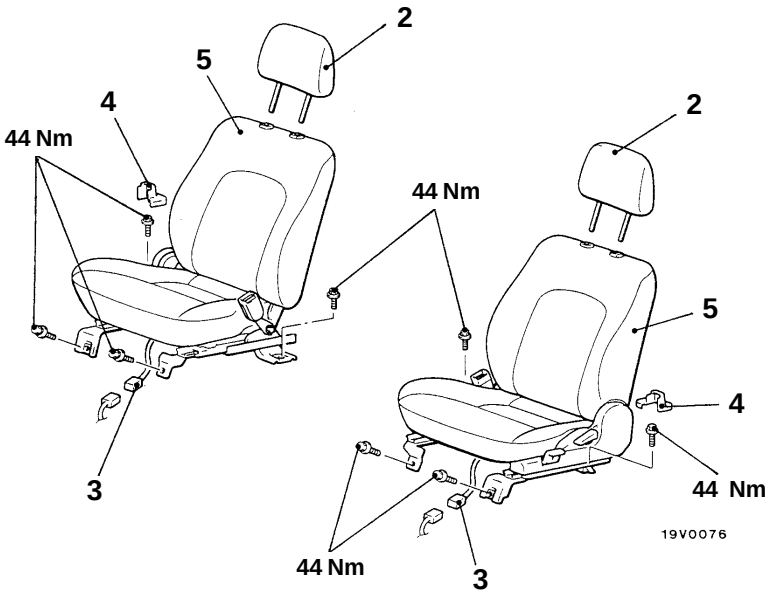

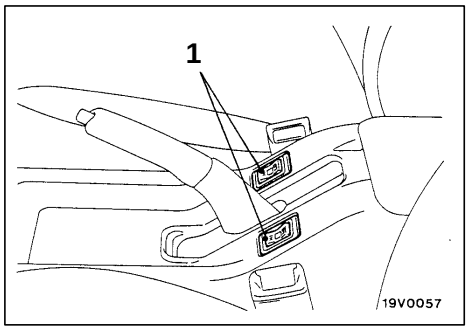

<BENCH TYPE>

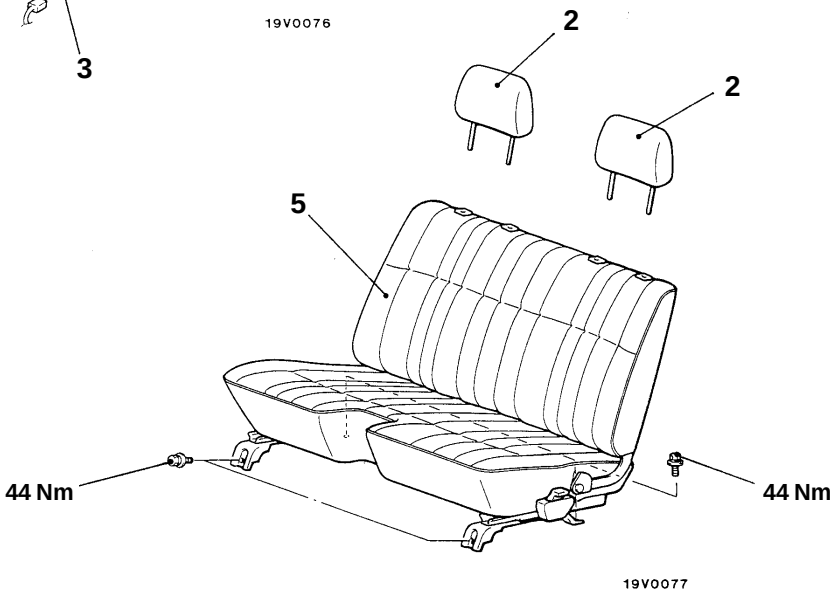

00005089

1. Heated seat switch
   <vehicles with heated seat>
2. Headrestraint

Front seat assembly removal steps

3. Harness connector
   <vehicles with heated seat>
4. Seat anchor cover
▶A◀ 5. Front seat assembly

NOTE
After provisionally tightening the seat assembly mounting nuts and bolts in every installation location, fully tighten them to the specified torque.

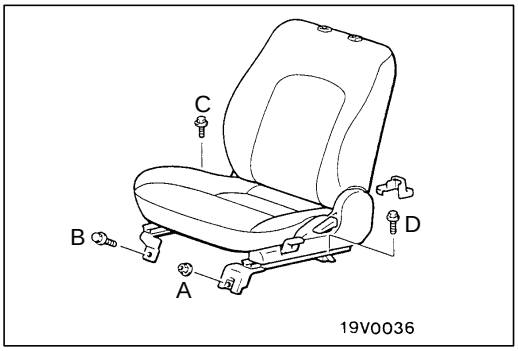

INSTALLATION SERVICE POINT

▶A◀ FRONT SEAT ASSEMBLY INSTALLATION

Tighten the front seat mounting bolts in the order A, B, C and D.

Caution

Do not slide the seat while tightening the bolts. If the above procedures are not observed, the seat adjusters at left and right will not be aligned properly with each other and a locking mechanism will be damaged.

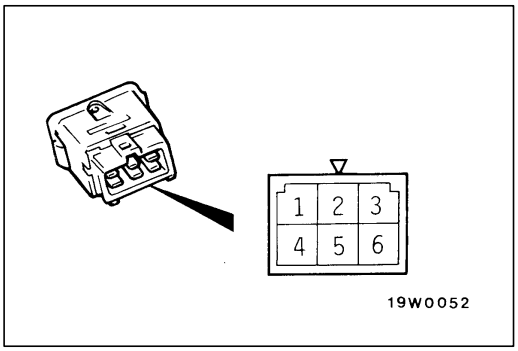

INSPECTION

52200390026

HEATED SEAT SWITCH CONTINUITY CHECK

Switch position	Terminal No.							
	1	2	IND	5	6	3	ILL	4
HI	○	○		○	○			
		⊖	▶		⊕	○	⊘	○
OFF						○	⊘	○
LO		○		○				
		⊖	▶		⊕	○	⊘	○

NOTE
To inspect the diode, match the polarity of the circuit tester with the (+) (–) polarities in the table.

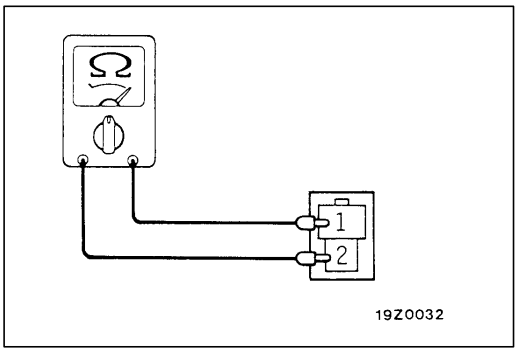

SEATBACK HEATER CHECK

Measure the resistance between terminals.

Standard value: Approx. 8 Ω

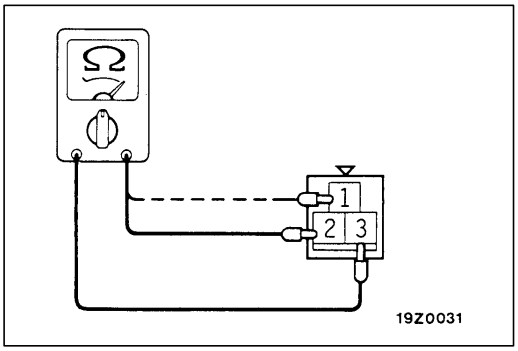

SEAT CUSHION HEATER CHECK

Measure the resistance between terminals.

Standard value:

Between terminals 2 and 3: Approx. 8 Ω
Between terminals 1 and 3: 0 Ω

DISASSEMBLY AND REASSEMBLY

52200150181

<SEPARATE TYPE>

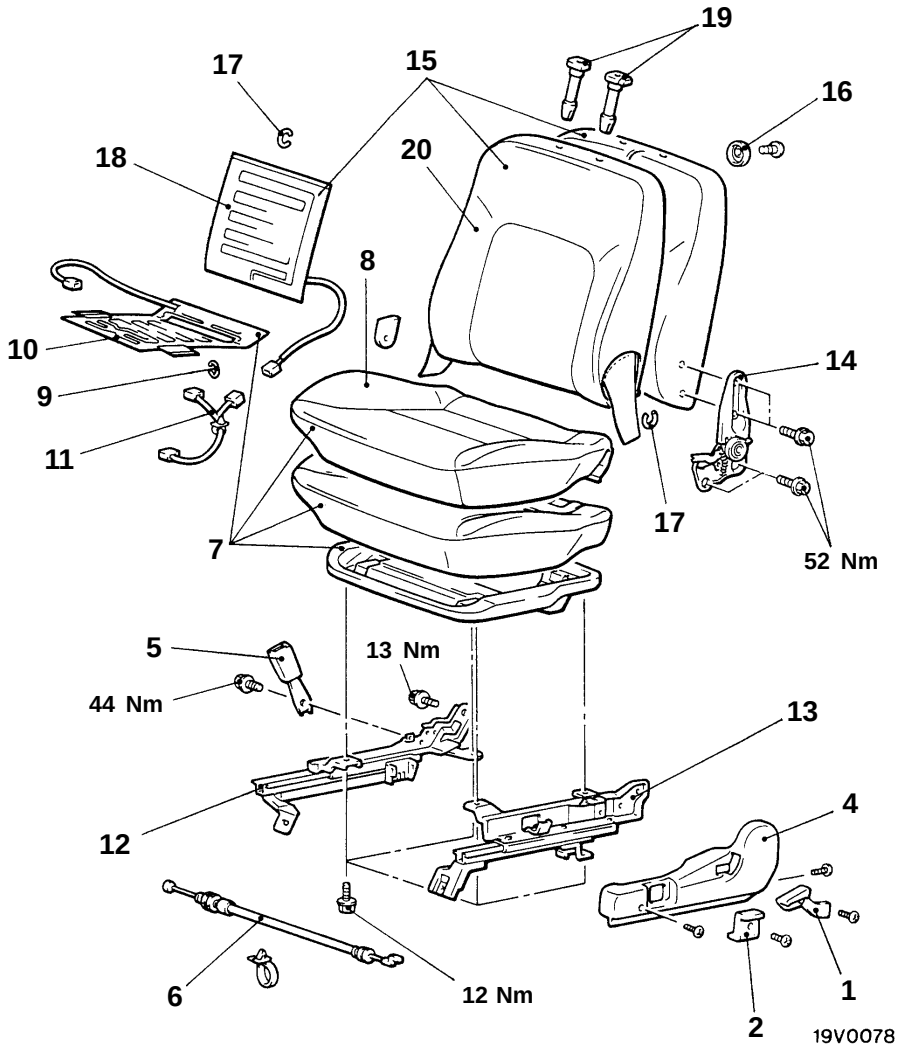

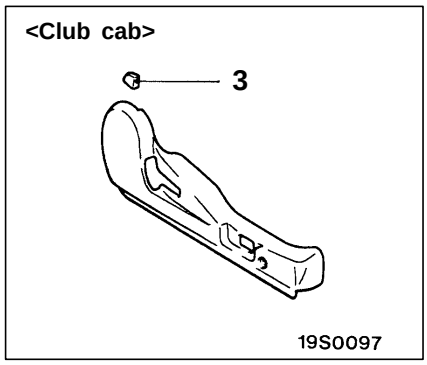

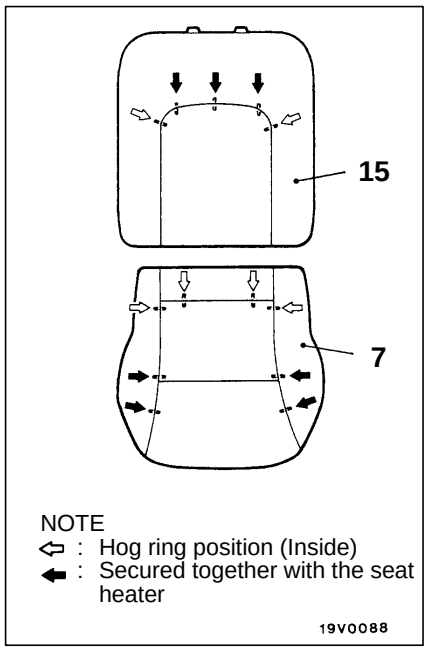

00005090

Disassembly steps

1. Reclining adjuster knob
2. Slide adjuster knob
3. Walk-in knob (Passenger side) <Club cab>
4. Front seat side shield cover
5. Inner seat belt
6. Wire assembly
7. Seat cushion assembly
8. Seat cushion cover
9. Hog ring
10. Seat cushion heater
11. Seat heater wiring harness <Vehicles with heated seat>
12. Seat inner adjuster
13. Seat outer adjuster
14. Reclining adjuster
15. Seat back assembly
16. Damper <Single cab>
17. Hog ring
18. Seatback heater
19. Headrestraint guide
20. Seatback cover

<BENCH TYPE>

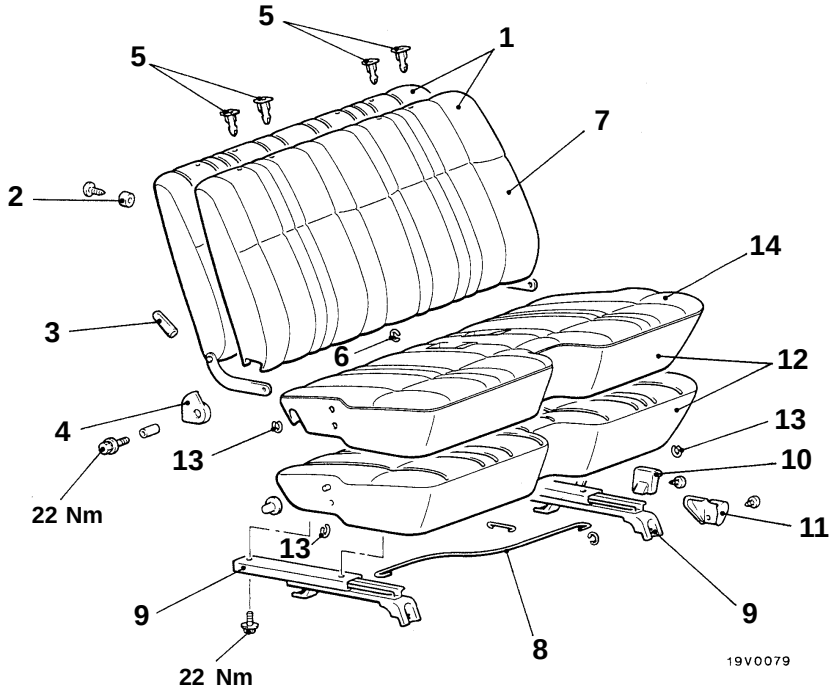

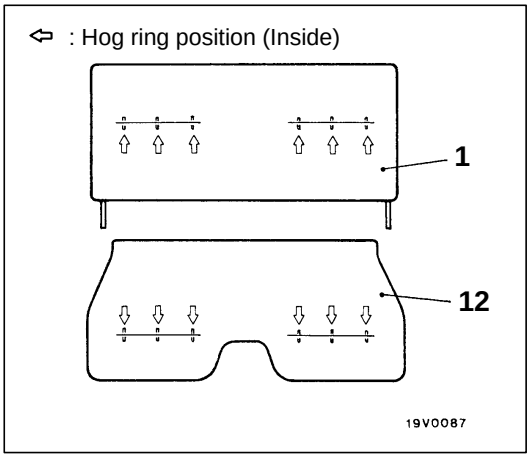

00005091

Disassembly steps

1. Seat back assembly
2. Damper
3. Knob
4. Hinge cap
5. Headrestraint guide
6. Hog ring
7. Seat back cover
8. Pull wire
9. Seat adjuster
10. Knob
11. Cover
12. Seat cushion assembly
13. Hog ring
14. Seat cushion cover

REAR SEAT

52200180142

REMOVAL AND INSTALLATION

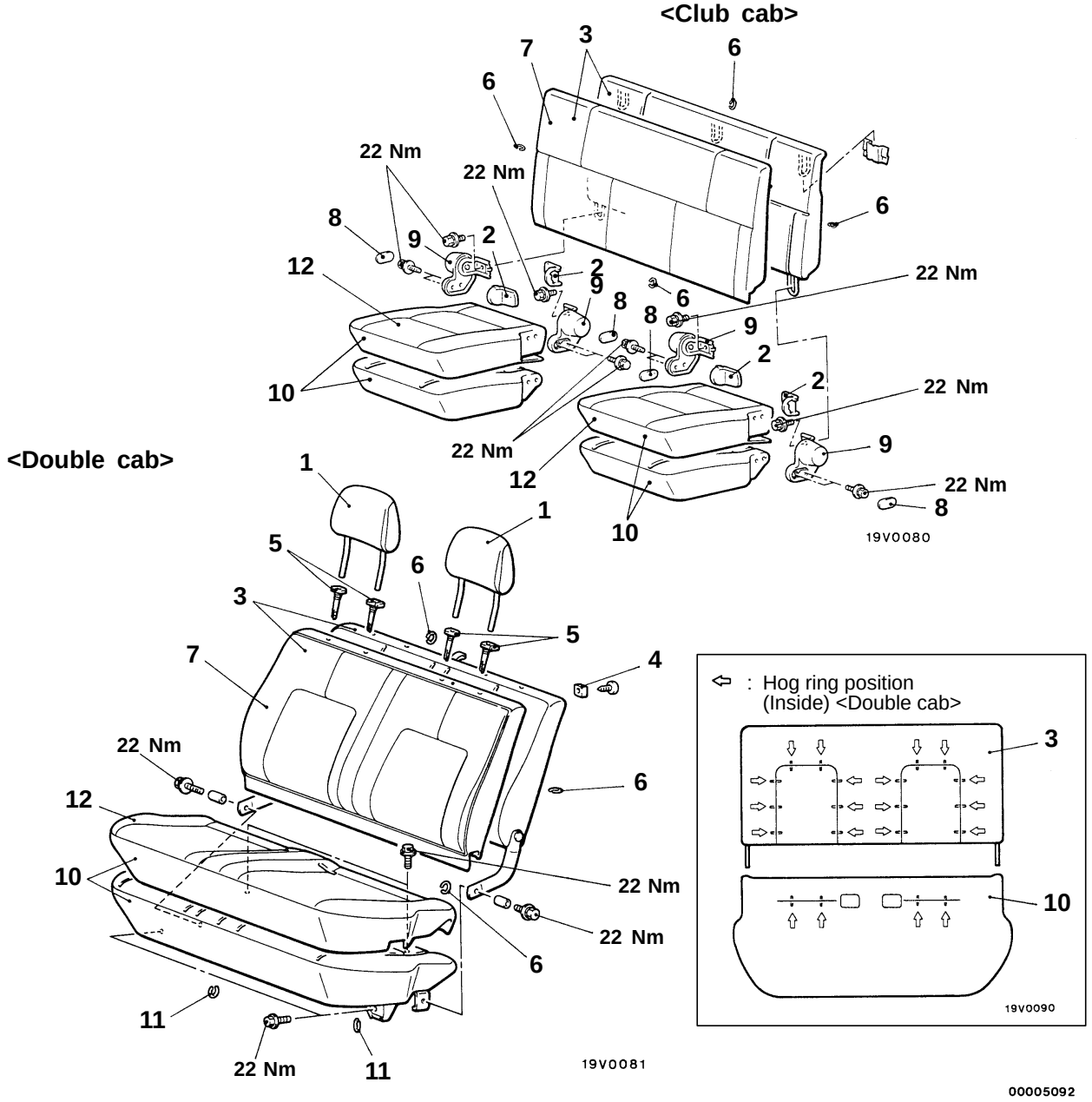

1. Headrestraint <Double cab>

Removal steps

2. Seat anchor cover <Club cab>
3. Seatback assembly
4. Damper <Double cab>
5. Headrestraint guide <Double cab>
6. Hog ring
7. Seatback cover
8. Shield cap <Club cab>
9. Rear seat hinge assembly <Club cab>
10. Seat cushion assembly
11. Hog ring
12. Seat cushion cover

FRONT SEAT BELT

52300130119

REMOVAL AND INSTALLATION

<SEPARATE SEAT TYPE>

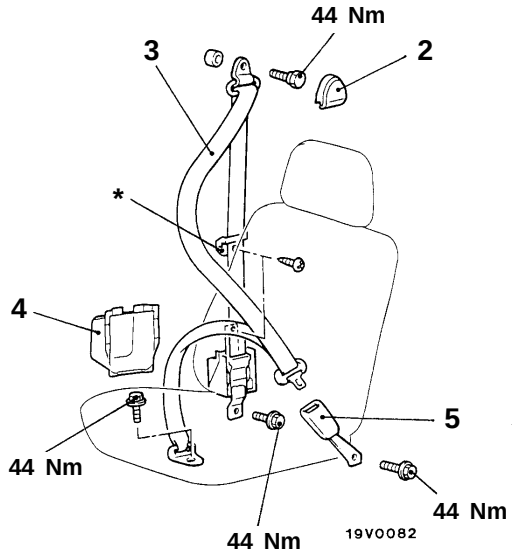

<BENCH SEAT TYPE>

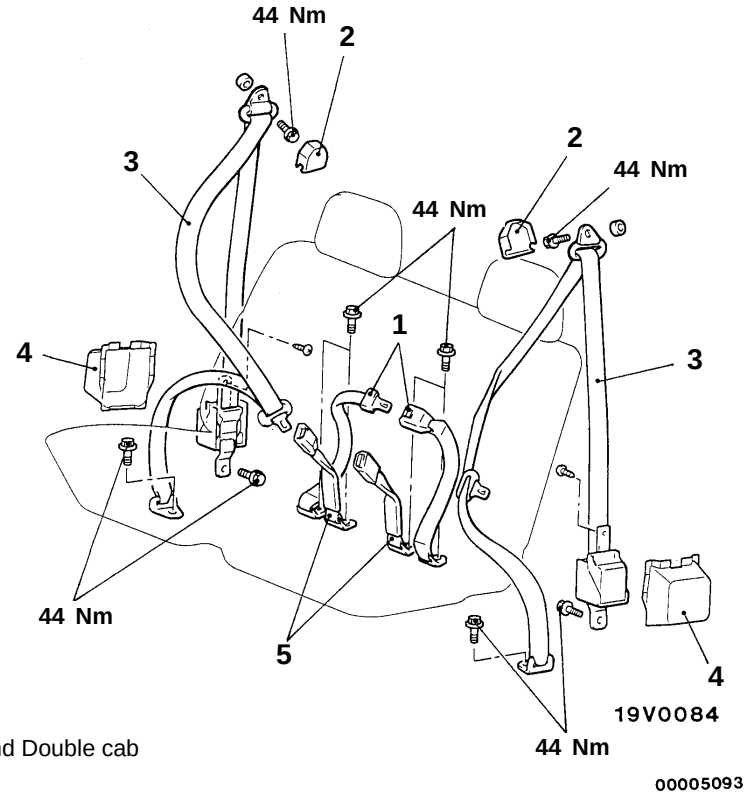

NOTE
*: Club cab and Double cab

1. Center seat belt (Inner, outer)

Outer seat belt removal steps

- Retractor cover <Single cab> (Refer to P. 52A-8.)
- Quarter trim, lower <Club cab> (Refer to P. 52A-9.)
- Center pillar trim, lower <Double cab> (Refer to P. 52A-10, 11.)

2. Sash guide cover
3. Outer seat belt
4. Waterproof cover

Inner seat belt removal steps

- Rear floor console (Refer to P. 52A-7.)

5. Inner seat belt

REAR SEAT BELT

52300160101

REMOVAL AND INSTALLATION

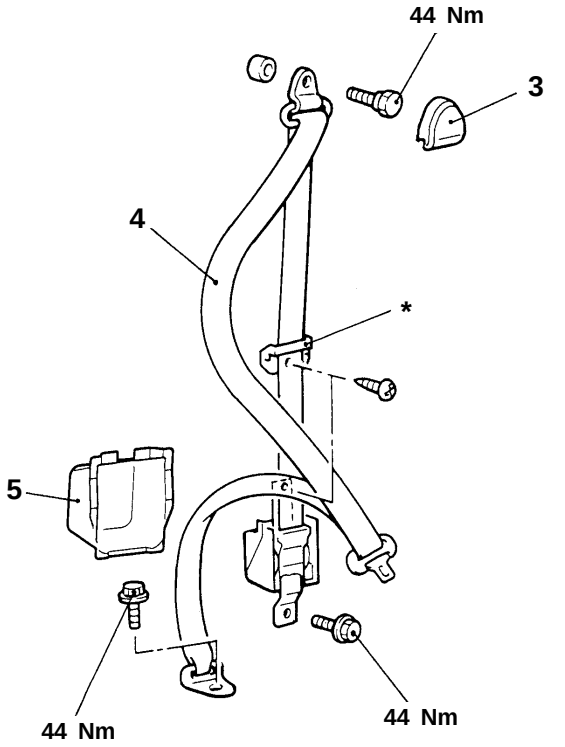

19V0083

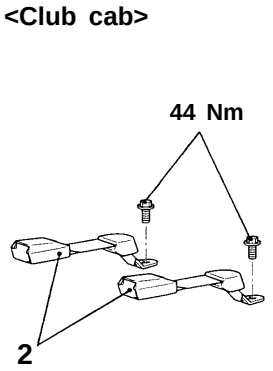

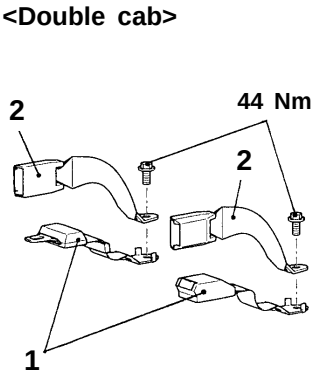

19V0085

NOTE
*: Club cab

00005094

Removal steps

- Rear seat <Double cab> (Refer to P. 52A-17.)
1. Inner, outer seat belt (center seat belt)
2. Inner seat belt
- Quarter trim <Club cab> (Refer to P.52A-9.)
- Retractor cover <Double cab> (Refer to P. 52A-10.)
3. Sash guide cover
4. Outer seat belt
5. Waterproof cover

NOTES

GROUP 52A
INTERIOR

GENERAL

OUTLINE OF CHANGE

- The service procedures have been established to correspond to the adoption of the under cover box and floor box.

INSTRUMENT PANEL

REMOVAL AND INSTALLATION

For installation of the instrument panel, the bolts and screws described below are used. They are indicated by symbols in the illustration.

Name	Symbol	Size mm (D x L)	Colour	Shape
Tapping screw	A	5 x 12	–	A00Z0010
	B	5 x 16		
	C	5 x 12	Black	
	D	5 x 16		
	E	5 x 20		19X0639
	F	5 x 12	–	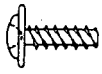 B00Z0010
	G	5 x 16		
	H	5 x 16	Black	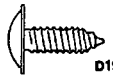 D19N0001
Washer assembled screw	I	5 x 12	–	C00Z0010
	J	5 x 16		
	K	5 x 20	Black	
Washer assembled bolt	L	6 x 8	–	D00Z0010
	M	6 x 16		
	N	8 x 16		
	O	6 x 16		F00Z0010
Machine screw	P	4 x 8	–	J00Z0010

D = Thread diameter
L = Effective thread length

CAUTION: SRS
When removing and installing the instrument panel (vehicles equipped with SRS), do not let it bump against the SRS diagnosis unit.

Pre-removal and Post-installation Operation
- Floor Console Assembly Removal and Installation (Refer to P. 52A-7*.)
- Steering Wheel and Column Cover Removal and Installation (Refer to GROUP 37A*.)

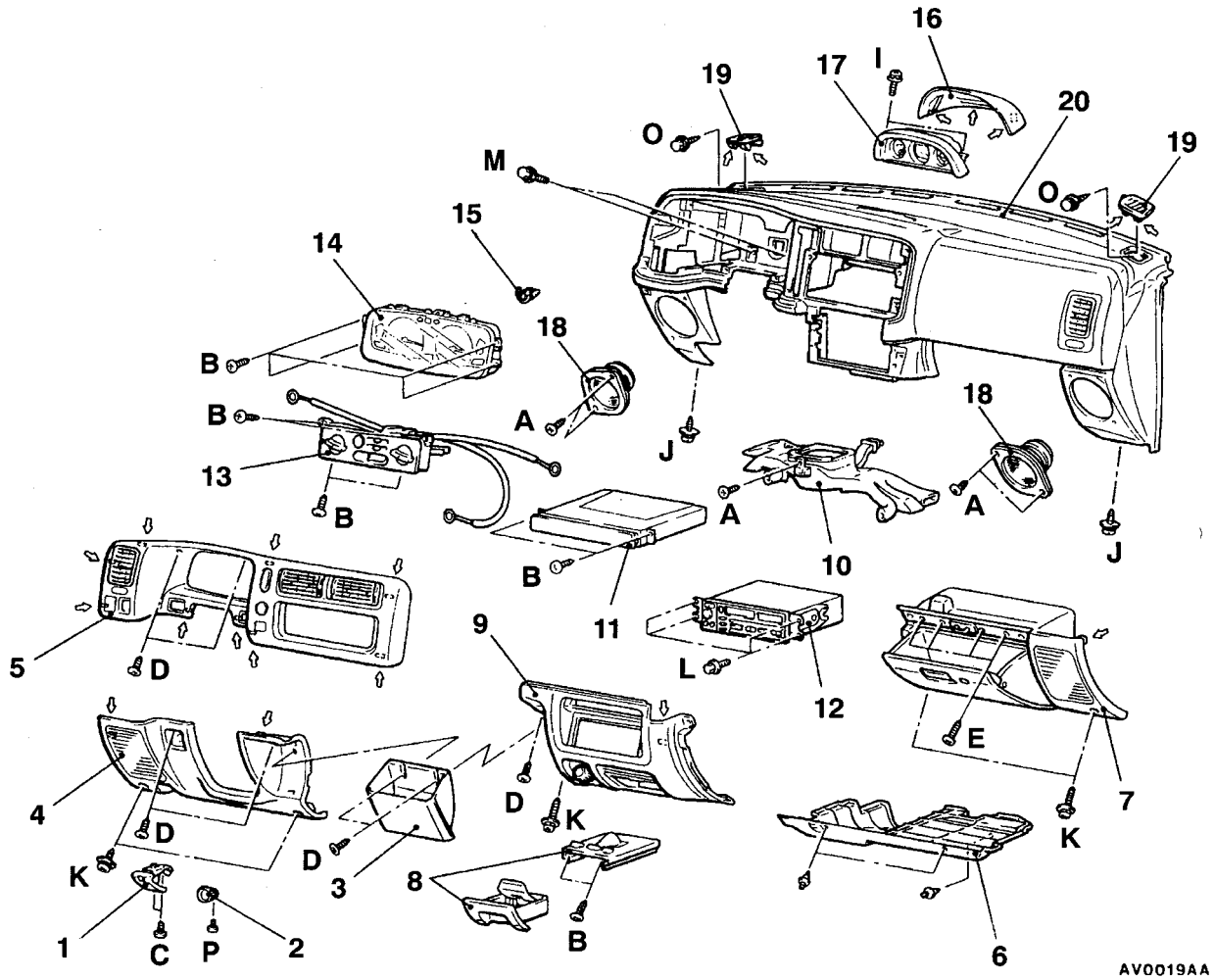

NOTE
⇦: Metal clip position

Removal steps

1. Hood lock release handle
2. Throttle cable knob <Diesel-powered vehicles>
3. Under cover box
4. Driver side under cover
5. Meter bezel assembly
6. Under cover
7. Glove box assembly
8. Ashtray assembly
9. Center under cover
10. Foot duct
11. Cup holder assembly
12. Radio and tape player

◀A▶

13. Heater control assembly (Refer to GROUP 55*.)
14. Combination meter
15. Adapter
16. Multi-meter panel <4WD>
17. Multi-meter assembly <4WD>
18. Speaker
19. Side defroster grille
20. Instrument panel assembly

NOTE
*: Refer to '97 L200 Workshop Manual <Pub. No. PWTE96E1>.

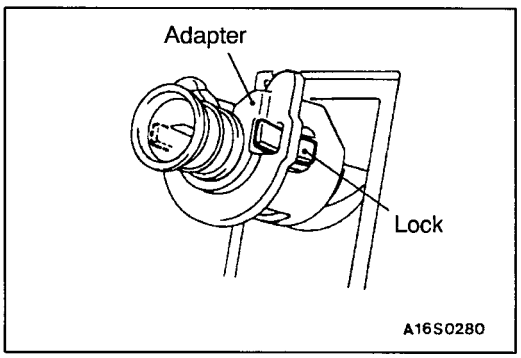

REMOVAL SERVICE POINT

◀A▶ ADAPTER REMOVAL

1. Remove the adapter lock from the instrument panel.
2. Pull the speedometer cable slightly into the passenger compartment, and remove the adapter.

FLOOR CONSOLE

REMOVAL AND INSTALLATION

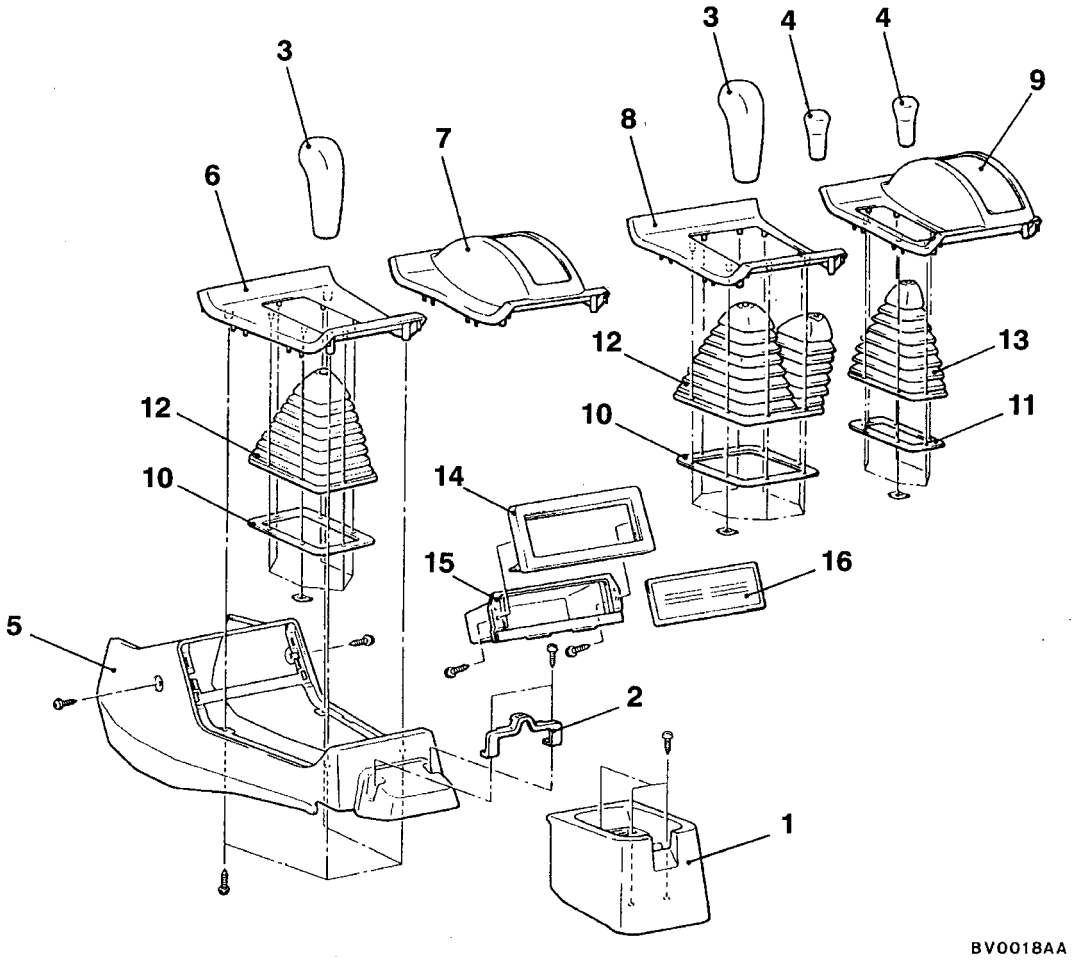

Removal steps

1. Floor box
2. Floor box bracket
3. Transmission shift lever knob <M/T>
4. Transfer shift lever knob <4WD>
5. Front floor console assembly
6. Console panel A <2WD-M/T>
7. Console panel B <2WD-A/T>
8. Console panel C <4WD-M/T>
9. Console panel D <4WD-A/T>
10. Shift lever boots reinforcement <M/T>
11. Transfer lever boots reinforcement <4WD-A/T>
12. Shift lever boots <M/T>
13. Transfer lever boots <4WD-A/T>
14. Console panel
15. Box <Vehicles without SRS>
16. Radio plug <Vehicles with SRS>

GROUP 52A
INTERIOR

GENERAL

OUTLINE OF CHANGE

Headrestraints have been added for the rear seat on the club cab model. Therefore, service procedure has been added. <Optional>

REAR SEAT <CLUB CAB>

REMOVAL AND INSTALLATION

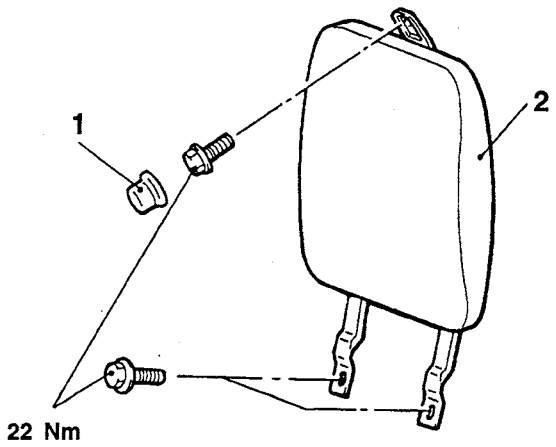

AV0650AA

Removal steps

- Seatback assembly
1. Cap
2. Headrestraint

SERVICE BULLETIN

MITSUBISHI MOTORS

QUALITY INFORMATION ANALYSIS
OVERSEAS SERVICE DEPT. MITSUBISHI MOTORS CORPORATION

SERVICE BULLETIN	**No.:** MSB-00E00-003		
	Date: 2000-05-30	**<Model>**	**<M/Y>**
Subject:	YEAR MODEL CHANGES FOR 2001 L200	(EC)L200(K60, K70)	00-10
Group:	GENERAL	**Draft No.:** 00SY0022915	
INFORMATION/ CORRECTION	**INTERNATIONAL CAR ADMINISTRATIO OFFICE**	T.NITTA - PROJECT LEADER AFTER SALES SERVICE & CS PROMOTION	

1. Description:

This Service Bulletin informs you of the year model changes for the 2001 L200

2. Applicable Manuals:

Manual	Pub. No.	Language	Page(s)
2000 L200 Workshop Manual Chassis	PWTE96E1-D	(English)	
	PWTS96E1-D	(Spanish)	
	PWTF96E1-D	(French)	
	PWTG96E1-D	(German)	

3. Details:

L200

WORKSHOP MANUAL SUPPLEMENT

FOREWORD

This Manual outlines changes in servicing proc e-dures related to the chassis including vehicle i n-spections, adjustments and improvements in the newly equipped models.

TECHNICAL INFORMATION MANUAL	PYTE96E1
WORKSHOP MANUAL	
ENIGINE GROUP	PWEE___ (looseleaf edition)
CHASSIS GROUP	PWTE96E1
	PWTE96E1-B (SUPPLEMENT)
	PWTE96E1-C (SUPPLEMENT)
	PWTE96E1-D (SUPPLEMENT)
ELECTRICAL WIRING	PHTE96E1
	PHTE96E1-A
	PHTE96E1-B
	PHTE96E1-D
	PHTE96E1-D (SUPLEMTENT)
BODY REPAIR MANUAL	PBTE96E1
PARTS CATALOGUE	T603B00□D□

All information, illustrations and product d e-scriptions contained in this manual are current as at the time of publication. We, however, re-serve the right to make changes at any time without prior notice or obligation.

MITSUBISHI MOTORS CORPORATION

© Mitsubishi Motors Corporation 2000

General 00

Engine Lubrication 12

Body 42

Interior and Supplemental Restraint System (SRS) 52

Chassis Electrical 54

GROUP 00
GENERAL

VEHICLE IDENTIFICATION

MODELS

Model Code		Engine model	Transmission model	Fuel supply system
K62T	JERDEL6	4G63-SOHC (1,997mℓ)	R4AW2 (2WD-4A/T	MPI
	ENDEL6		R5M21 (2WD-5M/T)	
K64T	ENDL6	4D56 (2,477mℓ)	R5M21 (2WD-M/T)	Fuel injection
	ENDR6			
	CENDL6			
	JENDL6			
K75T	CENDEL6	4G64-SOHC (2,351 mℓ)	V5M21 (4WD-5M/T)	MPI
	GJENXEL6			
K74T	ENDFL6	4D56- Turbocharger with intercooler (2,477mℓ)	V5MT1 (4WD-5M/T	Fuel injection
	ENDFR6			
	JERDFL6		V4AW2 (AWD-4A/T	
	GJERXFL6		V5MT1 (4WD-5M/T	
	GJENXFL6			
	GJENXFR6			
	CENDFL6			
	GCENXFL6			
	JENDFL6			
	JENDFR6			
	JENHFL6			

CHASSIS NUMBER

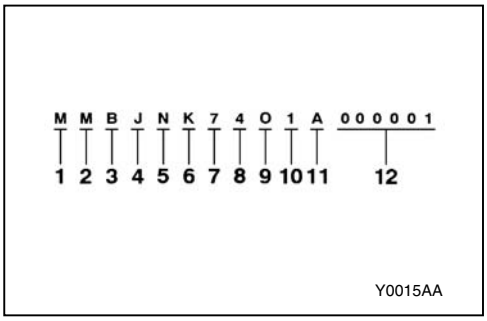

No.	Items		Contents
1	Continent	M	ASIA
2	Country	M	THAILAND
3	Register code	B	Follow register
4	Body shape	C	Club cab
		J	Double cab
		O	Single cab
		Y	Single cab without rear body
		Z	Double cab without rear body
5	Transmission type	N	5-speed manual transmission
		R	4-speed automatic transmission
6	Vehicle line	K	Mitsubushi L200
7	Body type	6	Long wheelbase
		7	4WD, Long wheelbase
8	Engine type	2	4G63: 1,997mℓ petrol engine
		4	4D56:2,477mℓ diesel engine
		5	4G64: 2,351 mℓ petrol engine
9	Internal production control code	A	A, B, C…etc 0 (zero): No meaning
10	Model year	1*	2001
11	Plant	A	A, C: LARDKRABANG factory D, F: LAEMCHABANG factory
12	Serial number	-	-

NOTE
*: Indicates changes.

NOTES

GROUP 12

ENGINE LUBRICATION

GENERAL

OUTLINE OF CHANGES

- A quality of the engine oil has been changed.

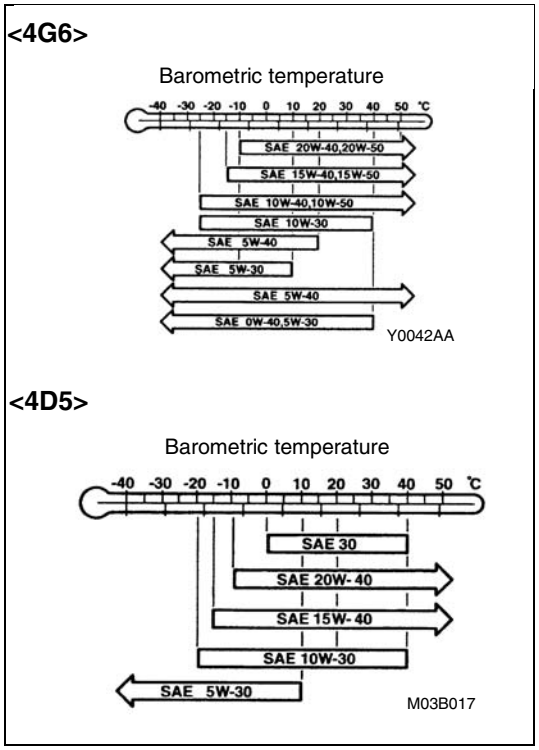

ON-VEHICLE SERVICE

specified engine oil (ACEA and API classification):
<4G6> ACEA A1, A2, A3/API SG or higher
<4D5> ACEA B1, B2, B3, B4/API CD or higher

NOTES

GROUP 42

BODY

GENERAL

OUTLINE OF CHANGES

The following service procedures have been added due to the introduction of the keyless entry system as an optional equipment <GLS>.

KEYLESS ENTRY SYSTEM

SPECIAL TOOL

Tool	Number	Name	Use
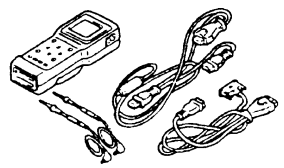	MB991502	MUT-II sub assembly	Encrypted codes recording

TROUBLESHOOTING

DIAGNOSIS FUNCTION

INPUT SIGNAL INSPECTION PROCEDURE

1. Connect the MUT-II to the diagnosis connector to check input signal. (Refer to ’97 L200 Workshop Manual GROUP 00 – How to Use Troubleshooting/Inspection Service Points.)
2. The following input signals can be checked:
   - Ignition switch (IG1, ACC)
   - Driver’s door switch
   - Every door switch
   - Key reminder switch
   - Driver’s door lock actuator
   - Keyless entry transmitter (LOCK, UNLOCK)

   NOTE
   If the MUT-II cannot check all the input signals, the diagnosis circuit may be defective.

ETACS FUNCTION ADJUSTMENT PROCEDURE

The following functions can be adjusted by operating input switches, The adjustments will be stored in th ECU memory even after a battery cable is disconnected:

- Switching of keyless entry answerback function (From activation to deactivation, or vice versa)
- Initialisation of the above function (From deactivation)

1. Entry conditions to the adjustment mode
   The ETACS-ECU sounds a buzzer once when all of the following conditions are satisfied, and then enters the adjustment mode:
   - Diagnosis control: ON (Connect the MUT-II.)
   - Key reminder switch: OFF
   - Ignition switch: LOCK (OFF
   - Door switch: OFF (Close the door)
   - If all of the conditions above are satisfied, the tailgate switch will be turned in for more than 10 seconds.

2. Exit conditions from the adjustment mode
   The ETACS-ECU cancels the adjustment mode when any of the following conditions is satisfied:
   - Diagnosis control: OFF (Disconnect the MUT-II>)
   - Key reminder switch: ON (Pull out the ignition key.)
   - Ignition switch: Other than LOCK (OFF)
   - Door switch: ON (Open the door)
   - After the ETACS_ECU has entered the adjustment mode, no adjustment is made within 3 minutes (If any adjustment is made within 3 minutes, the ETACS-ECU monitors an adjustment operation for other 3 minutes.
   - Other warning buzzer(s) sounds
3. Adjustment of functions

Function	Adjustment procedure
Keyless entry answerback function	When the transmitter lock switch is turned on twice continuously within 2 seconds, the lock answerback function toggles on and off. • If the function toggles on, the buzzer sounds once (default condition). • If the function toggles off, the buzzer sounds twice, When the transmitter unlock switch is turned on twice continuously within 2 seconds, the unlock answerback function toggles on and off. • If the function toggles on, the buzzer sounds once (default condition). • If the function toggles off, the buzzer sounds twice,
Initialisation of all the ETACS functions (From deactivation to activation)	When the tailgate switch remains on for more than 20 seconds, th buzzer sounds twice and he answer-back function of the keyless entry system is initialised. The buzzer will sound in 10 seconds (indicating that the ETACS-ECU enters the adjustment mode), but the washer switch must remains off for 20 seconds in order to initialise all the functions. If the tailgate switch remains on for more than 20 seconds without entering the adjustment mode, the system enters the adjustment mode in 10 seconds, but does not initialise all of the functions.

INSPECTION CHART FOR TROUBLE SYMPTOMS

Trouble symptom	Inspection procedure No.	Reference page
None of the doors can be locked or unlocked using th transmitter.	1	42-3
All of the doors can be locked and unlocked using th transmitter, but the room lamp or turn-signal lamp does not flash or illuminate. (However, the room lamp operates normally when the doors are opened and closed.)	2	42-4
Encrypted codes cannot be registered.	3	42-5

INSPECTION PROCEDURE FOR TROUBLE SYMPTOMS

INSPECTION PROCEDURE 1

None of the doors can be locked or unlocked using the transmitter.	Probable cause
The cause may be a malfunction of the transmitter or ETACS-ECU, defective connection between ETACS-ECU and junction block, defective power supply voltage to ETACS-ECU input line due to commercial equipment, or the lock and unlock signals are not being sent to the ETACS-ECU.	• Malfunction of transmitter • Malfunction of ETACS-ECU • Malfunction of key reminder switch • Malfunction of wiring harness or connector • Malfunction of door switch • Defective connection between ETACS-ECU and junction block • Defective power supply voltage to ETACS-ECU input line due to commercial equipment

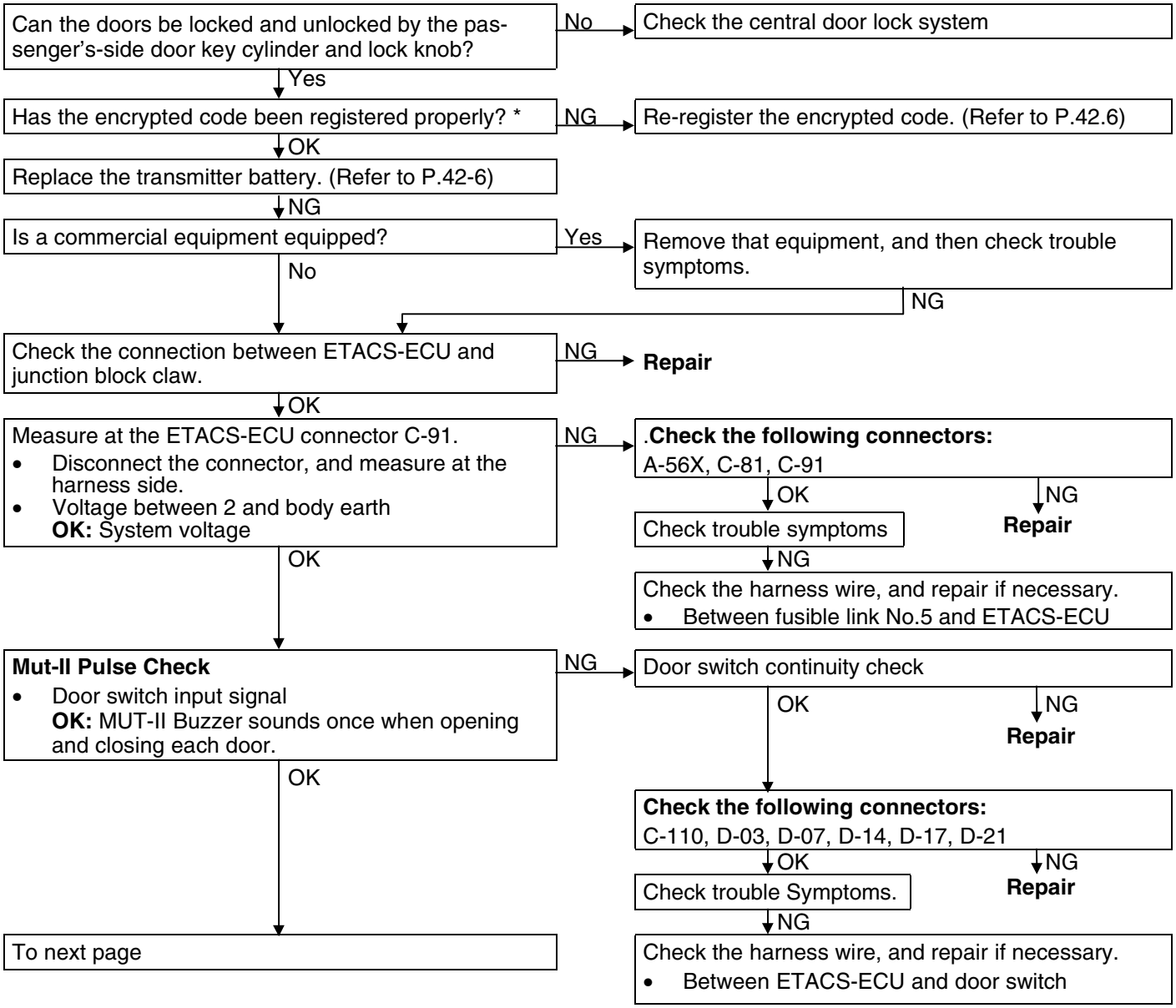

NOTE

*: This should be done if a transmitter, receiver or ETACS-ECU has been replaced, and if a secret cod has not been registered properly

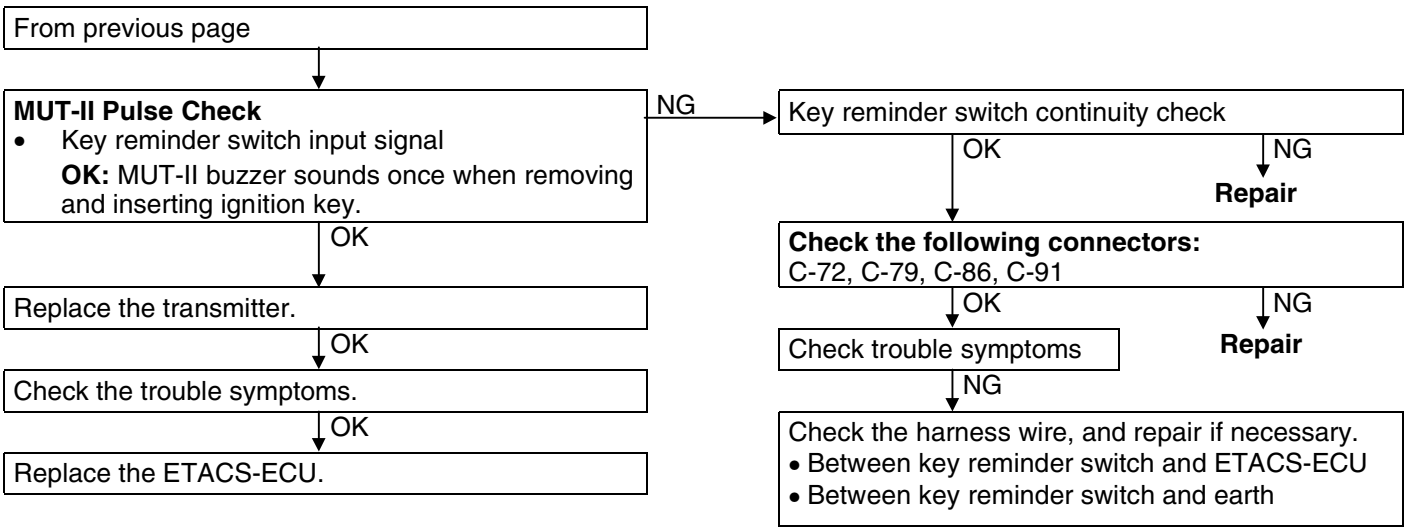

INSPECTION PROCEDURE 2

All of the doors can be locked and unlocked using th transmitter, but the room lamp or turn-signal lamp does not flash or illuminate. (However, the room lamp operates normally when the doors are opened and closed.)	Probable cause
If neither room lamp nor turn-signal lamp flash/illuminate, the cause may be a malfunction of the ETACS-ECU or driver's-side door lock actuator. If either room lamp or turn-signal lamp does not flash/illuminate, the cause may be a malfunction of the room lamp circuit or turn-signal lamp.	• Malfunction of ETACS-ECU • Malfunction of driver's door lock actuator • Burnt turn-signal lamp bulb • Malfunction of connector or wiring harness

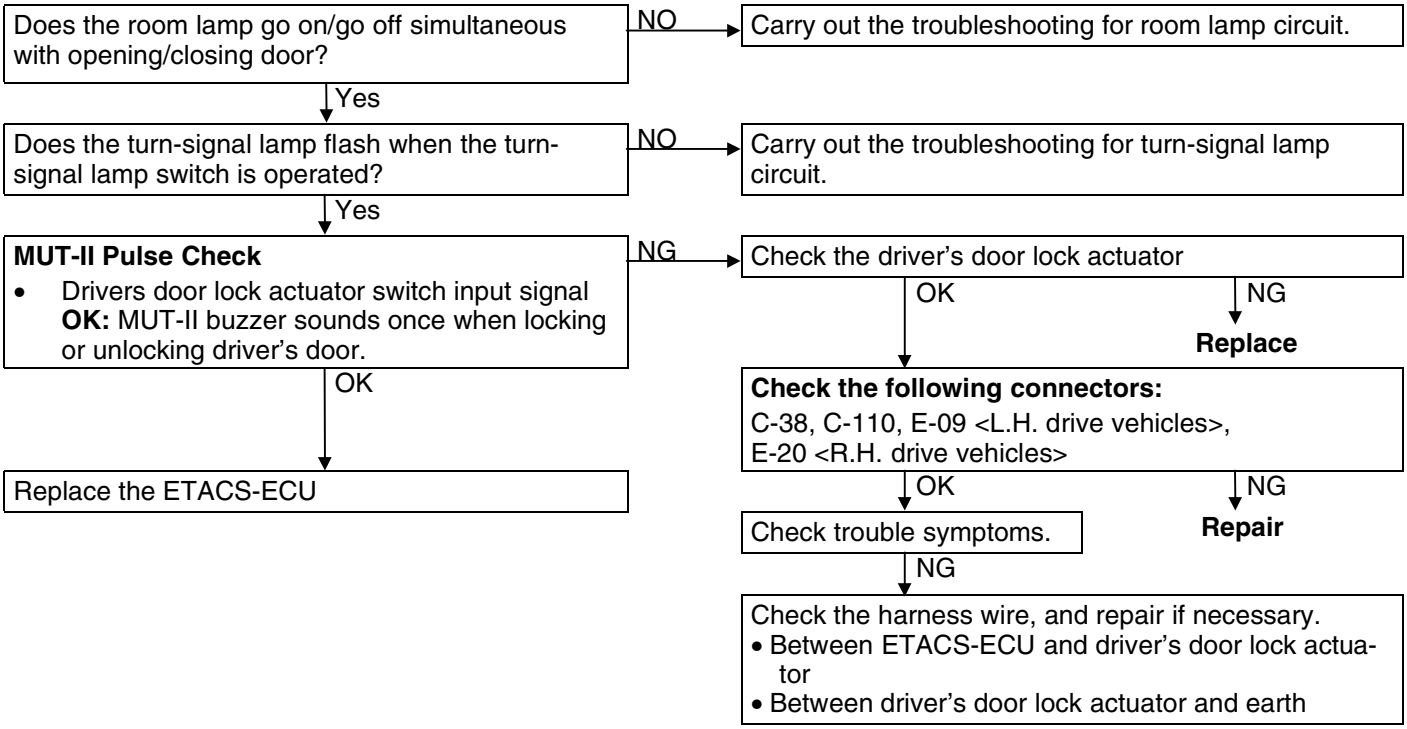

INSPECTION PROCEDURE 3

Encrypted codes cannot be registered	Probable cause
The cause may be a malfunction of the diagnosis connector, ETACS-ECU or diagnosis output circuit.	• Malfunction of MUT-II • Malfunction of connector or wiring harness • Malfunction of ETACS-ECU

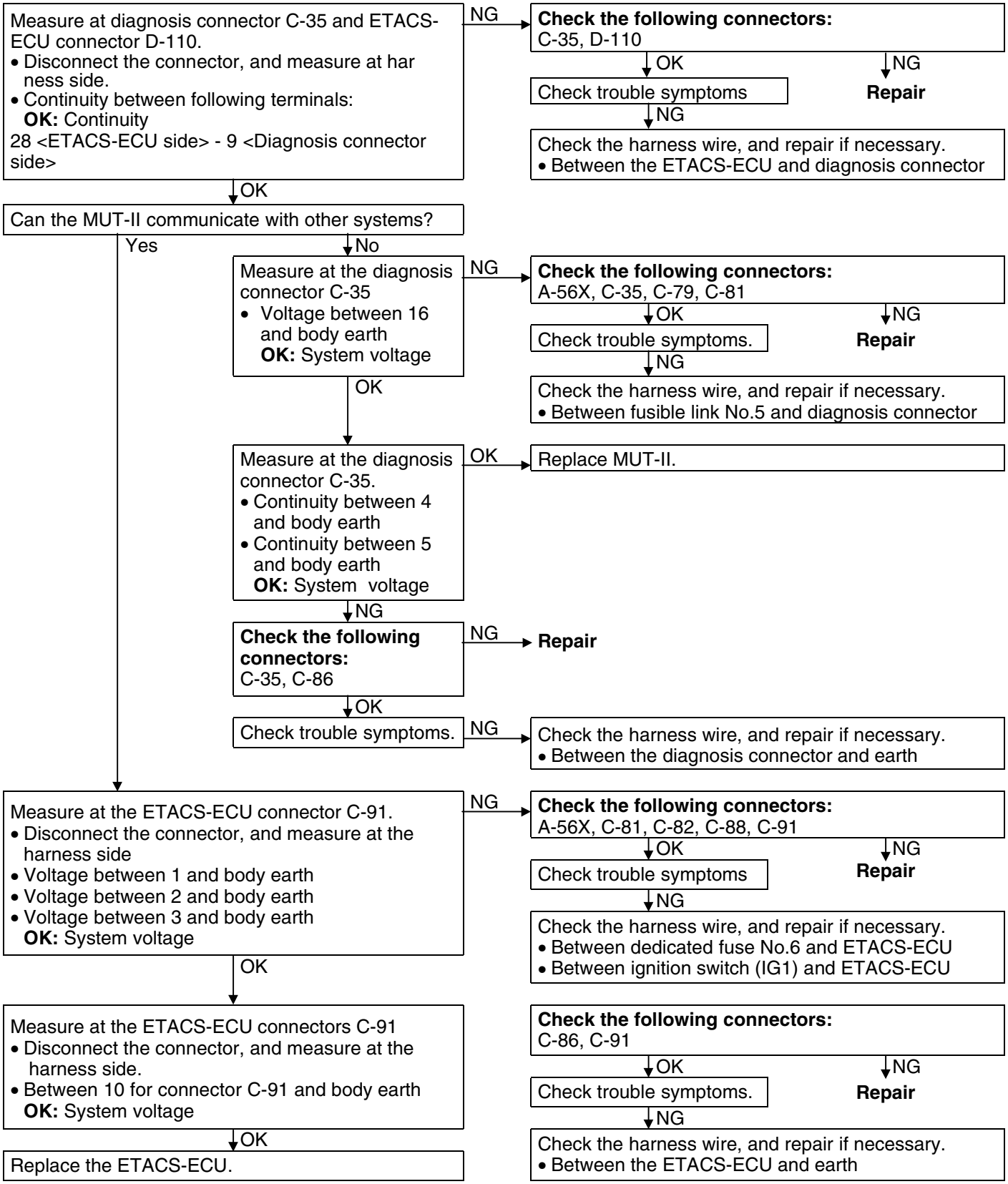

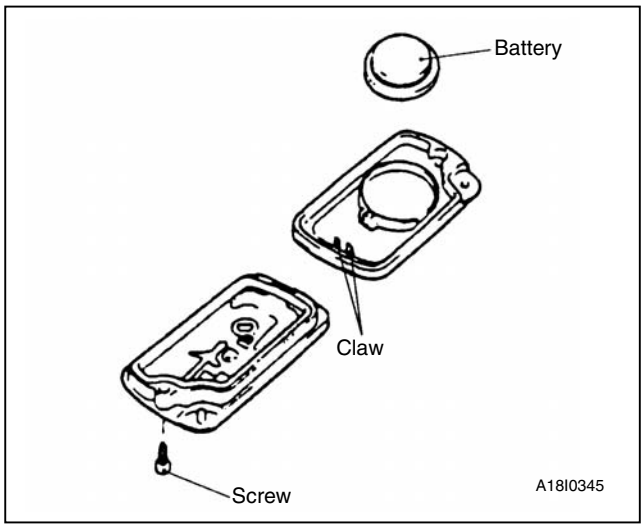

ON – VEHICLE SERVICE

HOW TO REPLACE A BATTERY OF THE TRANSMITTER

1. Remove the set screw to remove the battery from the transmitter.
   Install a battery with its (+) side face-down.
   Battery required for replacement:
   Coin type battery CR2032
3. Insert the claw, and then assemble the transmitter.
   Caution
   Do not let water or dust stick to the inside of the transmitter when it is open. Also, do not touch the precision electronic device.
4. Check to see if the keyless entry system operates.

SECRET CODE REGISTRATION METHOD

Each individual secret code is registered inside the transmitter, and so it is necessary to register these codes with the EEPROM inside the ETACS-ECU in the following cases.

- When either the transmitter or ETACS-ECU in the following cases.
- If a second transmitter is to be used;
- If it appears that a problem is occurring because of faulty registration of a code.

A maximum of two different codes can be stored in the memory area of the EEPROM (two different transmitters can be used).

When the code for the first transmitter is registered, th previously- registered codes for two transmitters are cleared.

Therefore, if you are using more than two or are addin a second transmitter, the codes for all the transmitters must be registered at the same time.

1. Check that the doors lock normally when the key is used.
2. Connect the MUT-II to the diagnosis connector
   NOTE
   This will connect terminal (1) of the diagnosis con nectar to earth, and the system will be in secret code registration standby mode.
   Caution
   Always turn the ignition switch to OFF before connecting and disconnecting the MUT-II

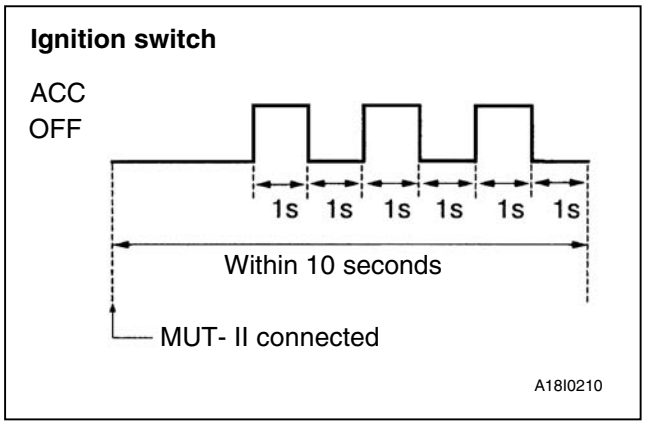

3. Within 10 seconds after connecting the MUT-II, turn the ignition switch to ACC ON for 1 second an then to OFF for 1 second; repeat this procedure three times.

   NOTE

   The doors will lock and unlock once at this tim and the system will switch to registration mode.
4. Press the lock switch or unlock switch; of th transmitter switch, and then press it two times within 10 seconds of the first press. This will register the code.
5. After registration is completed, the doors will be automatically locked and unlocked once.
6. If you are using two transmitters or have added a second transmitter, the same registration procedure should be carried out for the second transmitter, and it should be carried out within one minute after registration of the code for the first transmitter has been completed. After the second registration is completed, the doors will be automatically locked and unlocked once.
7. Registration mode will be terminated under the following conditions.

- When the secret codes for two transmitters hav been registered;
- When one minute has passed after registration mode started;
- If the MUT-II is disconnected (earth is released);
- If the ignition switch is tuned to ON;

8. After registration mode has been completed, carry out the followings to make sure that the keyless entry system operates.

- Pull the ignition key out.
- Close the all doors.

KEYLESS ENTRY SYSTEM

REMOVAL AND INSTALLATION

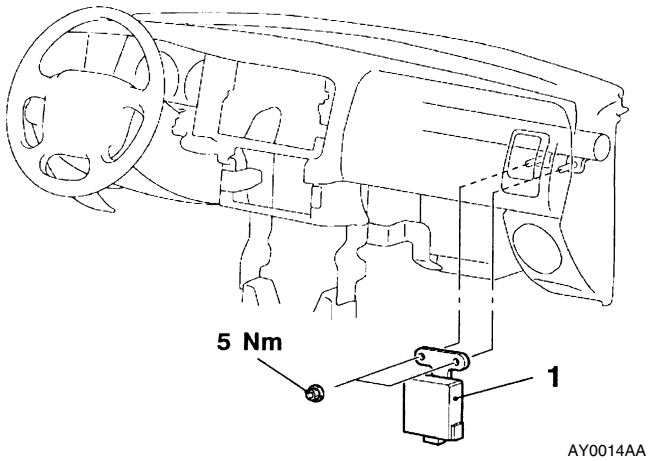

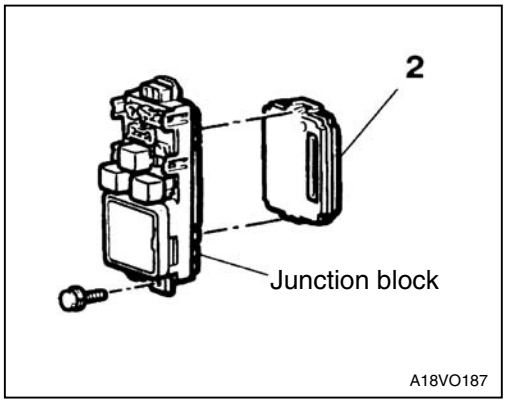

Keyless entry receiver-ECU removal steps

- Glove box assembly (Refer to GROUP 52A*.)

1. Keyless entry receiver-ECU

ETACS-ECU removal

2. ETACS-ECU

NOTE

*: Refer to ’97 L200 Workshop Manual <Pub. No. PWTE96E1>

GROUP 52A
INTERIOR

GENERAL
OUTLINE OF CHANGE

- The following service procedures have been added due to the introduction of the adjustable seat belt anchor.
- On dual cab models, three-point ELR/child seat fixing mechanism (ALR) seat belts have been added for rear seat as an optional equipment. The service procedures are the same as previous one.

FRONT SEAT BELT
REMOVAL AND INSTALLATION

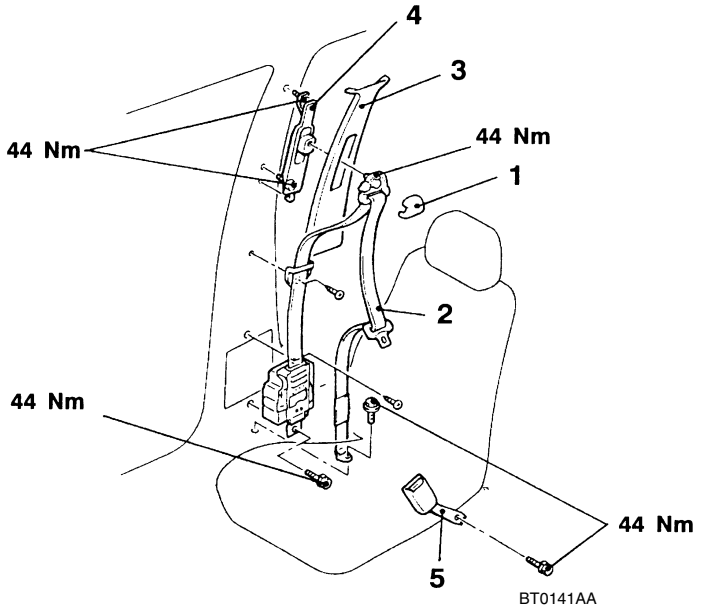

Outer seat belt removal steps

- Center pillar trim, lower or quarter trim, lower (refer to P.52A*.)

1. Sash guide cover
2. Outer seat belt
3. Center pillar trim, upper or quarter trim, upper (refer to P.52A*.)
4. Adjustable seat belt anchor.

Inner seat belt removal steps

- Front seat (refer to P.52A*.)

5. Inner seat belt

NOTE

*: Refer to ’97 L200 Workshop Manual <Pub. No. PWTE96E1>.

NOTES

GROUP 54
CHASSIS ELECTRAL

GENERAL
OUTLINE IF CHANGES
- The following procedure has been added due to the addition of the high-stop lamp <4WD>.

HIGH-MOUNTED STOP LAMP
REMOVAL AND INSTALLATION

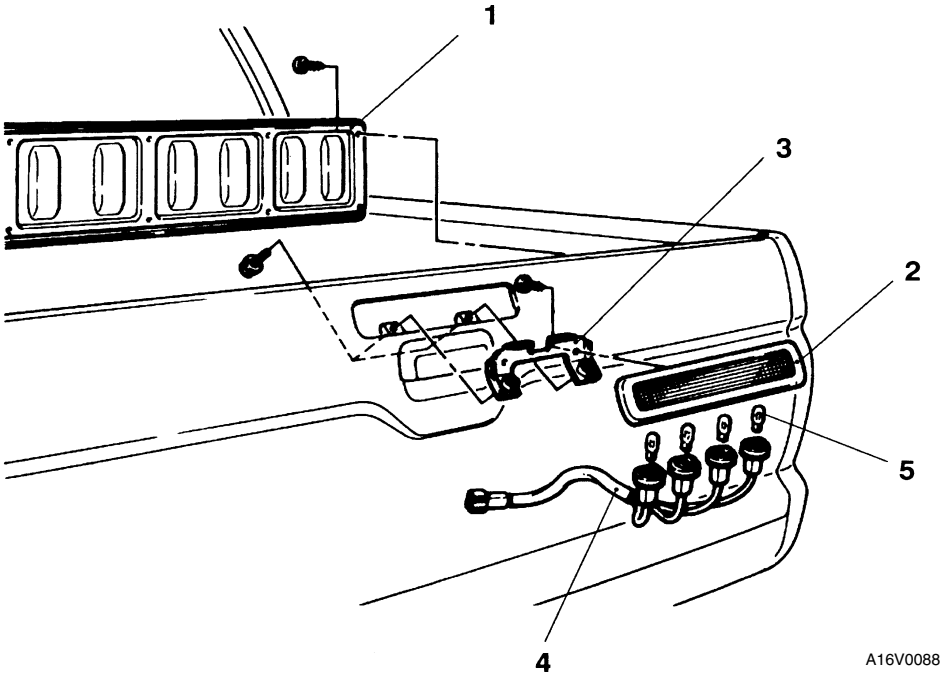

Removal steps
1. Rear gate panel
2. High mounted stop lamp
3. Lamp bracket
4. Bulb socket assembly
5. Bulb

SUPPLEMENTAL RESTRAINT SYSTEM (SRS)

Click on the applicable bookmark to selected the required model year

SUPPLEMENTAL RESTRAINT SYSTEM (SRS)

CONTENTS

52409000131

GENERAL INFORMATION 2

SRS SERVICE PRECAUTIONS 3

SERVICE SPECIFICATIONS 5

SPECIAL TOOLS 5

TEST EQUIPMENT 5

SEALANT 6

TROUBLESHOOTING 6

SRS MAINTENANCE 15

POST-COLLISION DIAGNOSIS 19

INDIVIDUAL COMPONENT SERVICE 21

WARNING/CAUTION LABELS 22

FRONT IMPACT SENSORS 23

SRS DIAGNOSIS UNIT (SDU) 26

AIR BAG MODULE AND CLOCK SPRING 28

AIR BAG MODULE DISPOSAL PROCEDURES 34

- Undeployed Air Bag Module Disposal 34
- Deployed Air Bag Module Disposal Procedures 38

SENSOR CABLE INSTALLATION PROCEDURES 39

CAUTION

- **Carefully read and observe the information in the SRS SERVICE PRECAUTIONS (P.52B-3.) prior to any service.**
- **For information concerning troubleshooting or maintenance, always observe the procedures in the Troubleshooting (P.52B-6.) section.**
- **If any SRS components are removed or replaced in connection with any service procedures, be sure to follow the procedures in the INDIVIDUAL COMPONENT SERVICE section (P.52-21.) for the components involved.**
- **If you have any questions about the SRS, please contact your local distributor.**

GENERAL INFORMATION

52400010164

To improve safety, the SRS is available as optional part. These system enhance collision safety by restraining the driver in case of an accident.
The SRS consists of an air bag module, SRS diagnosis unit (SDU), SRS warning lamp, two front impact sensors and clock spring. Air bag is located in the centre of the steering wheel. Air bag has a folded air bag and an inflator unit. The control unit under the instrument panel, which monitors the system and has a safing G sensor. The warning lamp on the instrument panel indicates the operational status of the SRS. Each front impact sensor is located left and right fender shield panel. The clock spring is installed in the steering column. Only authorized service personnel should do work on or around the SRS components. Those service personnel should read this manual carefully before starting any such work. Extreme care must be used when servicing the SRS to avoid injury to the service personnel (by inadvertent deployment of the air bag) or the driver (by rendering the SRS inoperative).

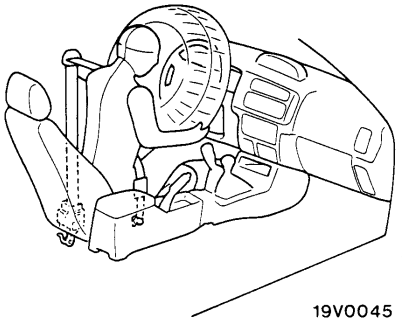

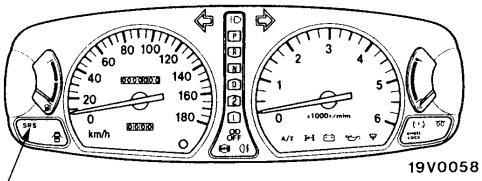

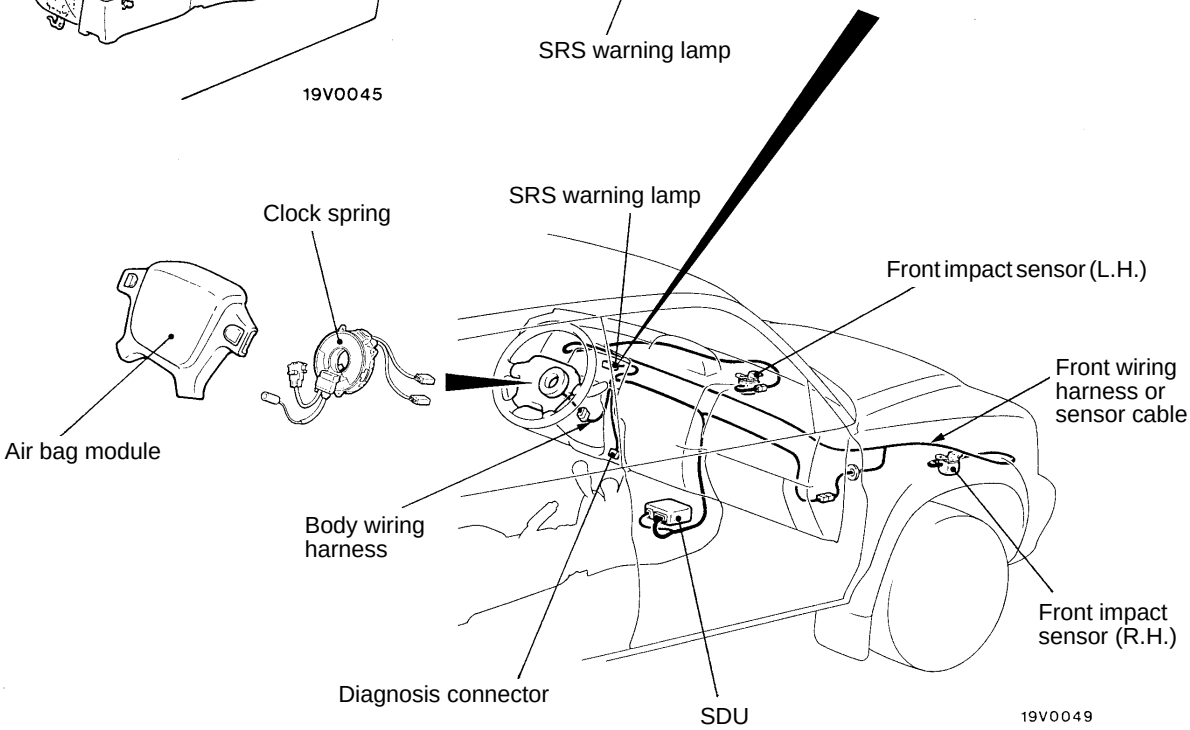

00005049

SRS SERVICE PRECAUTIONS

52400030160

1. In order to avoid injury to yourself or others from accidental deployment of the air bag during servicing, read and carefully follow all the precautions and procedures described in this manual.
2. Do not use any electrical test equipment on or near SRS components, except those specified on P.52B-5.
3. **Never Attempt to Repair the Following Components:**
   - SRS Diagnosis unit (SDU)
   - Clock Spring
   - Air Bag Module
   - Front impact sensor

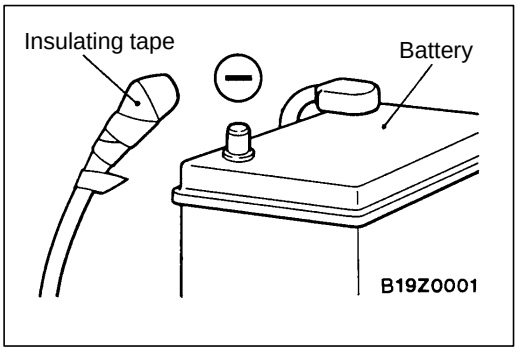

4. **After disconnecting the battery cable, wait 60 seconds or more before proceeding with the following work. The SRS system is designed to retain enough voltage to deploy the air bag for a short time even after the battery has been disconnected, so serious injury may result from unintended air bag deployment if work is done on the SRS system immediately after the battery cables are disconnected. Wind a tape around the disconnected (–) terminal for insulation.**

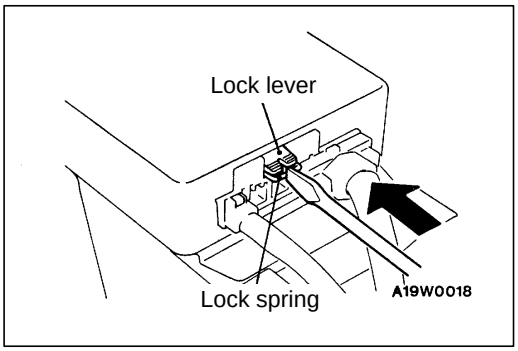

5. To unlock the SDU connector, place a flat-tipped screwdriver against the lock spring at the lock lever notch and push the spring toward the unit. In this case, do not force the lock lever up.

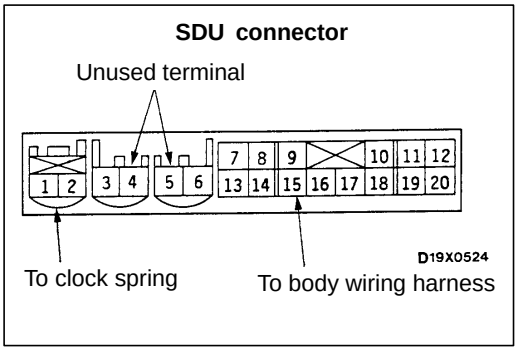

6. Do not attempt to repair the wiring harness connectors of the SRS. If any of the connectors are diagnosed as faulty, replace the wiring harness. If the wires are diagnosed as faulty, replace or repair the wiring harness according to the following table.

Harness connector (No. of terminals, colour)	SDU terminal No.	Destination of harness	Corrective action
2 pins, red	1, 2	Body wiring harness → Clock spring	Replace clock spring
–	3, 4	–	–
–	5, 6	–	–
14 pins, red	7, 8	–	–
	9	Body wiring harness → Diagnosis connector	Correct or replace each wiring harness
	10	Body wiring harness → Front wiring harness → Ignition switch (ST)	
	11	Body wiring harness → Junction block (fuse No.11)	
	12	Body wiring harness → Junction block (fuse No.10)	
	13	Body wiring harness → Combination meter (SRS warning lamp)	
	14	–	–
	15	Body wiring harness → Front wiring harness → Front impact sensor (+) (R.H.)	Sensor cable* installation procedures (Refer to P.52B-39.)
	16	Body wiring harness → Front wiring harness → Front impact sensor (+) (L.H.)	
	17	Body wiring harness → Front wiring harness → Front impact sensor (–) (L.H.)	
	18	Body wiring harness → Front wiring harness → Front impact sensor (–) (R.H.)	
	19, 20	Body wiring harness → Earth	Correct or replace each wiring harness

NOTE
The sensor cable marked with * is available as service part.

7. SRS components should not be subjected to heat over 93°C, so remove the SRS diagnosis unit, air bag module, clock spring and front impact sensors before drying or baking the vehicle after painting.
8. Whenever you finish servicing the SRS, check warning lamp operation to make sure that the system functions properly. (Refer to P.52B-16.)
9. Make certain that the ignition switch is OFF when the MUT-II is connected or disconnected.
10. If you have any questions about the SRS, please contact your local distributor.

    NOTE
    SERIOUS INJURY CAN RESULT FROM UNINTENDED AIR BAG DEPLOYMENT, SO USE ONLY THE PROCEDURES AND EQUIPMENT SPECIFIED IN THIS MANUAL.

SERVICE SPECIFICATIONS

52400040071

Items	Standard value
Front impact sensor resistance Ω	2,000 ± 20
Clock spring resistance Ω	Less than 0.4

SPECIAL TOOLS

52400070148

Tool	Number	Name	Use
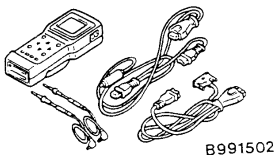	MB991502	MUT-II sub assembly	• Reading diagnosis codes • Erasing diagnosis code • Reading trouble period • Reading erase times
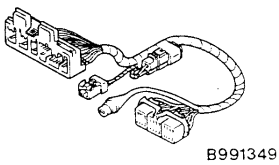	MB991349	SRS Check harness	Checking the SRS electrical circuitry
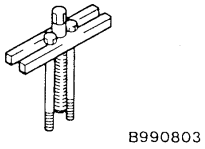	MB990803	Steering wheel puller	Steering wheel removal
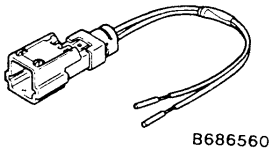	MB686560	SRS air bag adapter harness A	Deployment of air bag module inside the vehicle
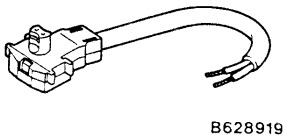	MB628919	SRS air bag adapter harness B	Deployment of air bag module outside the vehicle

TEST EQUIPMENT

52400080035

Tool	Name	Use
	Digital multi-meter	Checking the SRS electrical circuitry Use a multi-meter for which the maximum test current is 2 mA or less at the minimum range of resistance measurement

SEALANT

52400060015

Item	Specified sealant	Remark
Sensor cable	3M ATD Part No. 8625 or equivalent	Ribbon sealer

TROUBLESHOOTING

52400310097

STANDARD FLOW OF DIAGNOSTIC TROUBLESHOOTING

Refer to GROUP 00 – How to Use Troubleshooting/Inspection Service Points.

DIAGNOSIS FUNCTION

52400320083

DIAGNOSIS CODES CHECK

Connect the MUT-II to the diagnosis connector (16-pin) under the instrument under cover, then check diagnosis codes.
(Refer to GROUP 00 – How to Use Troubleshooting/Inspection Service Points.)

ERASING DIAGNOSIS CODES

Refer to GROUP 00 – How to Use Troubleshooting/Inspection Service Points.

INSPECTION CHART FOR DIAGNOSIS CODES

52400330123

Inspect according to the inspection chart that is appropriate for the malfunction code.

Code No.	Diagnosis item	Reference page
11, 12, 13	Front impact sensor system	52B-7
21, 22	Air bag module (squib) system	52B-8
31, 32	SDU capacitor system	52B-9
33*	Cranking signal system	52B-10
34*	Connector lock system	52B-11
41*	IG_1 (A) power circuit system	52B-11
42*	IG_1 (B) power circuit system	52B-12
43	SRS warning lamp drive circuit system Lamp does not illuminate*	52B-13
	SRS warning lamp drive circuit system Lamp does not switch off	52B-14
44	SRS warning lamp drive circuit system	52B-14
45	SDU non-volatile memory (EEPROM) and A/D converter system	52B-14

NOTE
(1) *: If the vehicle condition returns to normal, the diagnosis code will be automatically erased, and the SRS warning lamp will return to normal.
(2) If the vehicle has a discharged battery it will store the fault codes 41 or 42. When these diagnosis codes are displayed, check the battery.

INSPECTION PROCEDURE CLASSIFIED BY DIAGNOSIS CODE

Code No.11, 12 or 13 Front impact sensor system	Probable cause
• These diagnosis codes are output if there is abnormal resistance between the input terminals of the front impact sensor. The trouble causes for each code No. are as follows. (Refer to the chart 1.) • Diagnosis codes 11, 12 and 13 are sometimes generated in combination with malfunction codes relating to the air bag module (squib) (code Nos. 21 and 22), but sometimes only one may be output instead of both being memorized. Because of this, the air bag module should also be inspected at the same time. The relationships between the codes are as follows. (Refer to the chart 2.)	• Malfunction of front impact sensor • Malfunction of wiring harnesses of connectors • Malfunction of SDU

CHART 1

Code No.	Trouble Symptom
11	• Short in front impact sensor or harness short • Short in front impact sensor or air bag module (squib) harnesses leading to the vehicle body earth • Short in front impact sensor or air bag module (squib) harnesses leading to the power supply
12	• Open circuit in either left or right front impact sensor open harness • Short in front impact sensor or air bag module (squib) harness leading to the power supply
13	• Open circuit in both left and right front impact sensors or open harness • Short in front impact sensor or air bag module (squib) harnesses leading to the power supply

CHART 2

Item		Front impact sensor		
		Short	Open circuit (1 sensor)	Open circuit (2 sensors)
Air bag module (squib)	Short	11 or 21	12 or 21	13 or 21
	Open circuit	11 or 22	12 or 22	13 or 22

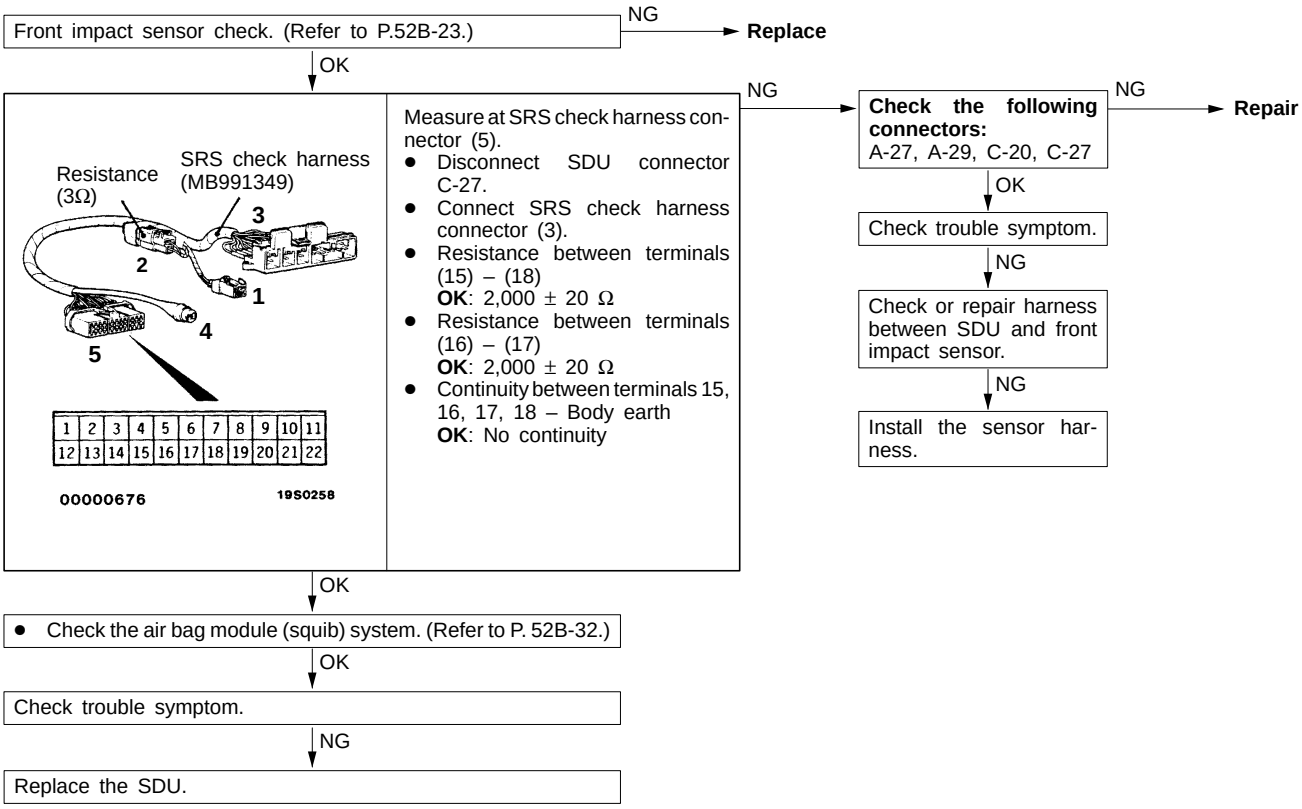

Code No. 21 or 22 Air bag module (squib) system	Probable cause
(1) These diagnosis codes are output if there is abnormal resistance between the input terminals of the air bag module (squib). The trouble causes for each code No. are as follows. (Refer to chart 1.) (2) Diagnosis codes 21 and 22 are sometimes generated in combination with malfunction codes relating to the front impact sensor (code Nos. 11, 12 and 13), but sometimes only one may be output instead of both being memorized. Because of this, the front impact sensor should also be inspected at the same time. The relationships between the codes are as follows. (Refer to chart 2.)	● Malfunction of clock spring ● Malfunction of wiring harnesses or connectors ● Malfunction of air bag module (squib) ● Malfunction of SDU

Chart 1

Code No.	Trouble Symptom
21	● Short in air bag module (squib) or harness short ● Short in clock spring ● Short in air bag module (squib) or front impact sensor harnesses leading to the power supply
22	● Open circuit in air bag module (squib) or open harness ● Open circuit in clock spring ● Malfunction of connector contact ● Short in air bag module (squib) or front impact sensor harnesses leading to the power supply

Chart 2

Item		Front impact sensor		
		Short	Open circuit (1 sensor)	Open circuit (2 sensors)
Air bag module (squib)	Short	11 or 21	12 or 21	13 or 21
	Open circuit	11 or 22	12 or 22	13 or 22

Caution

Do not attempt to measure the air bag module (squib) circuit resistance. Use of a tester in measuring the circuit resistance will supply current to the squib, or erroneous deployment due to static electricity could cause serious injury.

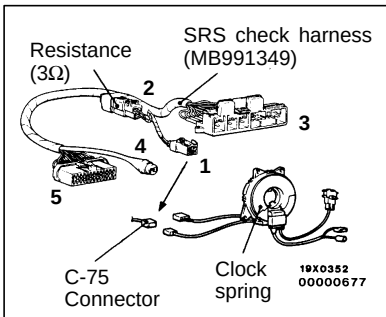

MUT-II DIAGNOSIS CODE

- Disconnect clock spring connector C-75.
- Connect SRS check harness connector (1)
- Erase diagnosis code memory Are code Nos. 21 and 22 output?

No → Clock spring check. (Refer to P.52B-32.) → NG → **Replace**

OK → **Chuck the following connectors:** C-75, C-76 → NG → **Repair**

OK → Check trouble symptom.

NG → Replace the air bag module (squib).

Yes ↓

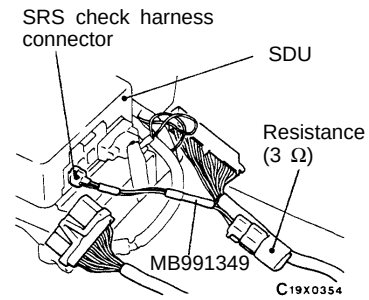

MUT-II DIAGNOSE CODE

- Connect clock spring connector C-75
- Disconnect SDU connector C-28
- Connect SRS check harness connector (1)
- Erase diagnosis code memory Are code Nos. 21 and 22 output?

No → Check the harness wire between the SDU and clock spring, and repair if necessary.

Yes → Check the front impact sensor system (Refer to P.52B-25.)

OK → Replace the SDU.

Code No. 31 or 32 SDU capacitor system	Probable cause
These diagnosis codes are output if the voltage at the SDU capacitor terminals is higher (No. 31) or lower (No. 32) than the specified value for 5 seconds or more. However, if diagnosis code Nos. 41 and 42 are being output due to a drop in battery voltage, code No. 32 will not be detected.	• Malfunction of front impact sensor • Malfunction of SDU

The capacitor inside the SDU is probably defective, so replace the SDU. However, code No. 32 could also be a result of a short in the front impact sensor, so inspection of the front impact sensor system should also be carried out. (Refer to P. 52B-25.)

Code No. 33 Cranking signal system	Probable cause
The cranking signal is provided in order to prevent mistaken detection of power supply voltage drops at the IG_1 terminal during cranking. This diagnosis code is output if the cranking signal is output for a continuous period of 45 seconds or more (cranking signal harness is shorted to the power supply). However, if the vehicle condition returns to normal (except when cranking), diagnosis code No. 33 will be automatically erased, and the SRS warning lamp will switch off.	• Malfunction of wiring harnesses or connectors • Malfunction of SDU

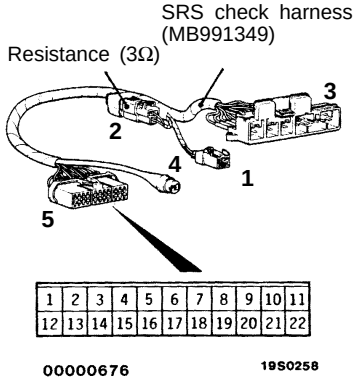

Measure at SRS check harness connector (5).
- Disconnect SDU connector C-27.
- Connect SRS check harness connector (3).
- Continuity between terminals (19) – (20)
  OK: Continuity

NG → **Check the following connectors:** C-27, C-86 → NG → **Repair**

OK → Check trouble symptoms.

NG → Check the harness wire between each, SDU and earth, and repair if necessary.

OK ↓

Measure at SRS check harness connector (5).
- Disconnect SDU connector
- Connect SRS check harness connector (3)
- Ignition switch ON
- Voltage between terminal (10) and body earth
  OK: 0 V

NG → **Check the following connectors:** <Petrol-powered vehicles (M/T)> C-20, C-27 <Petrol-powered vehicles (A/T)> C-27, C-57 <Diesel-powered vehicles> C-20, C-27 → NG → **Repair**

OK → Check trouble symptoms.

NG → Check the harness between the SDU and ignition switch (ST) <Petrol-powered vehicles> or SDU and starter relay <Diesel-powered vehicles>, and repair if necessary.

OK → Replace the SDU.

Code No. 34 Connector lock system	Probable cause
This diagnosis code is output if the double lock shorting bar of the SDU connector is detected to be open. However, if the vehicle condition returns to normal, diagnosis code No. 34 will be automatically erased, and the SRS warning lamp will switch off.	• Malfunction of connectors • Malfunction of SDU

Is the SDU engagement detection mechanism operating correctly?
- No → Insert the connector securely and lower the lock lever to lock the connector.
- Yes ↓ Replace the SDU.

Code No. 41 IG_1 (A) power circuit system	Probable cause
This diagnosis code is output if the voltage between the IG_1 (A) terminal and the earth is lower than the specified value for a continuous period of 5 seconds or more. However, if the vehicle condition returns to normal, diagnosis code No. 41 will be automatically erased, and the SRS warning lamp will switch off.	• Malfunction of wiring harnesses or connectors • Malfunction of SDU

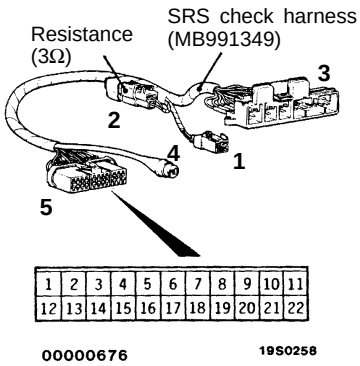

Measure at SRS check harness connectors (5).
- Disconnect SDU connector C-27.
- Connect SRS check harness connector (3).
- Continuity between terminals (19) – (20)

OK: Continuity

- NG → **Check the following connectors:** C-27, C-86
  - NG → **Repair**
  - OK ↓ Check trouble symptom.
    - NG ↓ Check the harness wire between the SDU and earth, and repair if necessary.
- OK ↓ Measure at SRS check harness connector (5).
  - Ignition switch ON
  - Voltage between terminal (12) and body earth

  OK: 9 V or more
  - NG → **Check the following connectors:** C-27, C-87, C-88
    - NG → **Repair**
    - OK ↓ Check trouble symptoms.
      - NG ↓ Check the harness between the SDU and ignition switch IG_1 (A), and repair if necessary.
  - OK ↓ Replace the SDU.

Code No. 42 IG_1 (B) power circuit system	Probable cause
This diagnosis code is output if the voltage between the IG_1 terminal and the earth is lower than the specified value for a continuous period of 5 seconds or more. However, if the vehicle condition returns to normal, diagnosis code No. 42 will be automatically erased, and the SRS warning lamp will switch off.	• Malfunction of wiring harness or connectors

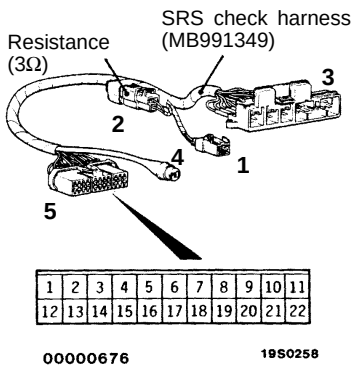

Measure at SRS check harness connector (5).
- Disconnect SDU connector C-27.
- Connect SRS check harness connector (3).
- Continuity between terminals (19) – (20)
  OK: Continuity

NG → **Check the following connectors:** C-27, C-86 → NG → **Repair**

OK → Check trouble symptom.

NG → Check the harness between the SDU and earth, and repair if necessary.

OK ↓

Measure at SRS check harness connector (5).
- Ignition switch: ON
- Voltage between the terminal (11) and body earth.
  OK: 9 V or more

NG → **Check the following connectors:** C-27, C-86, C-88 → NG → **Repair**

OK → Check trouble symptom.

NG → Check the harness wire between the SDU and ignition switch IG_1 (B), and repair if necessary.

OK ↓

Replace the SDU.

Code No. 43 SRS warning lamp drive circuit system (Lamp does not illuminate.)	Probable cause
This diagnosis code is output when an open circuit occurs for a continuous period of 5 seconds while the SDU is monitoring the SRS warning lamp and the lamp is OFF (transistor OFF). However, if this code is output due to an open circuit, if the vehicle condition returns to normal, this diagnosis code No. 43 will be automatically erased, and the SRS warning lamp will return to normal.	• Malfunction of wiring harnesses or connectors • Blown bulb • Malfunction of SDU • Malfunction of combination meter

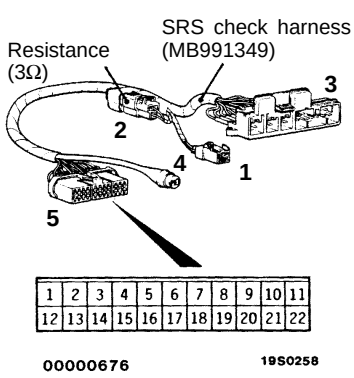

Measure at SRS check harness connectors (5).
- Disconnect SDU connector C-27.
- Connect SRS check harness connector (3).
- Continuity between terminals (19) – (20)
  OK: Continuity

NG → **Check the following connectors:** C-27, C-86 → NG → **Repair**

OK → Check trouble symptom.

NG → Check the harness wire between the SDU and earth, and repair if necessary.

OK → Measure at SRS check harness connector (5).
- Ignition switch ON
- Connect terminal (13) to body earth.
  OK: Lamp illuminates.

NG → Blown SRS warning lamp bulb check. → NG → **Repair**

OK → **Check the following connectors:** C-27, C-86, C-87, C-88 → NG → **Repair**

OK → Check trouble symptom.

NG → Check the harness wire between the SDU and ignition switch (IG_1), and repair if necessary. → NG → **Repair**

OK → Replace the combination meter.

OK → Replace the SDU.

Code No.43 SRS warning lamp drive circuit system (Lamp does not switch off.)	Probable cause
This diagnosis code is output when a short to earth occurs in the harness between the lamp and the SDU while SDU is monitoring the SRS warning lamp and the lamp is ON.	● Malfunction of wiring harnesses or connectors ● Malfunction of SDU ● Malfunction of combination meter

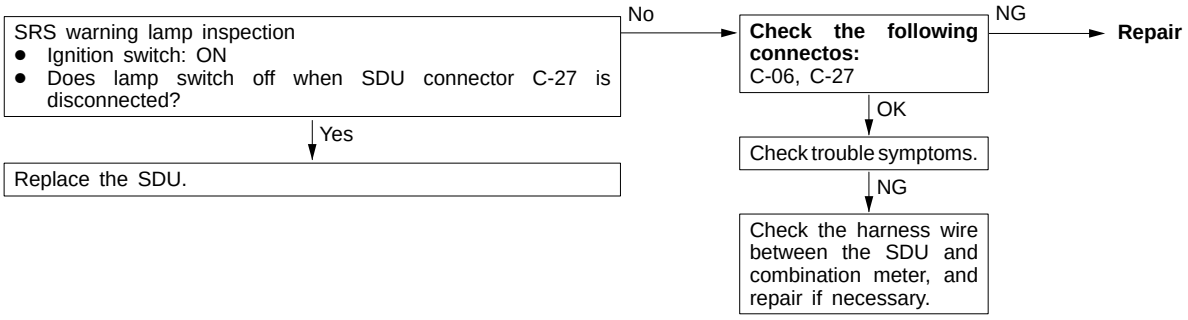

Code No.44 SRS warning lamp drive circuit system	Probable cause
This diagnosis code is output when a short occurs in the lamp drive circuit or a malfunction of the output transistor inside the SDU is detected while the SDU is monitoring the SRS warning lamp drive circuit.	● Malfunction of wiring harnesses or connectors ● Malfunction of SDU

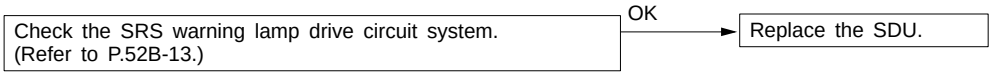

Code No.45 SDU non-volatile memory (EEPROM) and A/D converter system	Probable cause
This diagnosis code is output if there is a malfunction in the SDU non-volatile memory (EEPROM) and A/D converter.	● Malfunction of SDU

Replace the SDU.

INSPECTION CHART FOR TROUBLE SYMPTOMS

52400340126

Get an understanding of the trouble symptoms and check according to the inspection procedure chart.

Trouble symptom		Inspection procedure No.	Reference page
Communication with MUT-II is not possible.	Communication with all systems is not possible.	1	52B-15
	Communication is not possible with SRS only.	2	52B-15
When the ignition key is turned to “ON” (engine stopped), the SRS warning lamp does not illuminate.		Refer to diagnosis code No.43.	52B-13
After the ignition switch is turned to ON, the SRS warning lamp is still on after approximately 7 seconds have passed.		Refer to diagnosis code No.43.	52B-14

INSPECTION PROCEDURE FOR TROUBLE SYMPTOMS

Inspection Procedure 1

Communication with MUT-II is not possible. (Communication with all systems is not possible.)	Probable cause
The cause is probably a power supply system (including earth circuit) of the diagnosis line.	• Malfunction of connectors • Malfunction of wiring harness

Refer to GROUP 13A – Troubleshooting.

Inspection Procedure 2

Communication with MUT-II is not possible. (Communication is not possible with SRS only.)	Probable cause
If communication is not possible with the SRS only, the cause is probably an open circuit in the diagnosis output circuit of the SRS or in the power circuit (including earth circuit).	• Malfunction of wiring harnesses or connectors • Malfunction of SDU

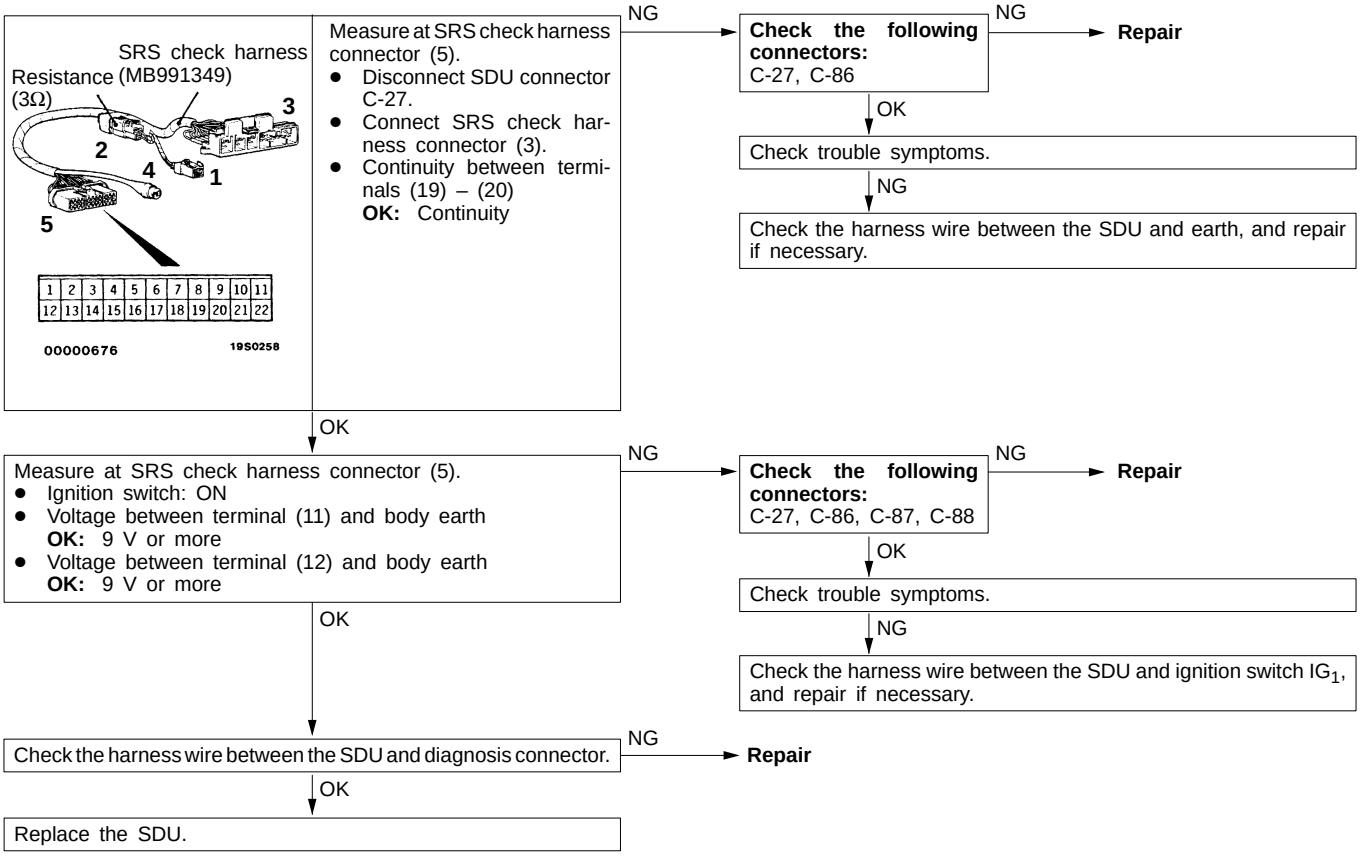

SRS MAINTENANCE

52400390114

The SRS must be inspected by an authorized dealer 10 years after the date of vehicle registration.

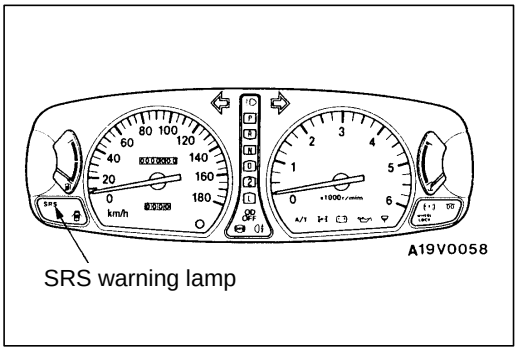

SRS WARNING LAMP CHECK

Turn the ignition key to the “ON” position. Does the SRS warning lamp illuminate for about 7 seconds, turn off and then remain extinguished for at least 5 seconds? If yes, SRS system is functioning properly. If no, consult page 52B-6.

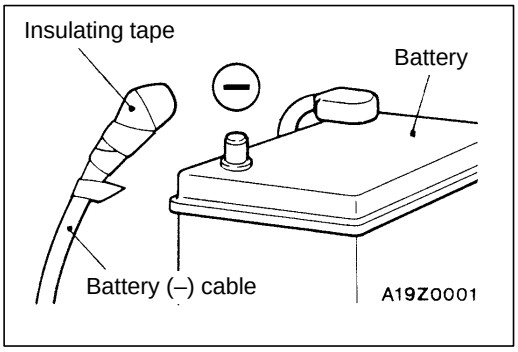

SRS COMPONENT VISUAL CHECK

Turn the ignition key to the “LOCK” position, disconnect the negative battery cable and tape the terminal.

Caution
Wait at least 60 seconds after disconnecting the battery cable before doing any further work. (Refer to P.52B-3.)

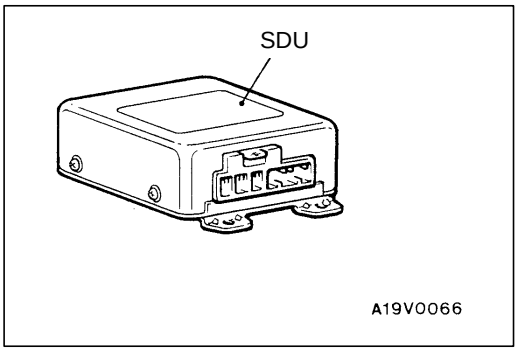

SRS DIAGNOSIS UNIT (SDU)

1. Check SDU case and brackets for dents, cracks, deformation or rust.

   Caution
   The SRS may not activate if the SDU is not installed properly, which could result in serious injury or death to the vehicle’s driver.

2. Check connector for damage, and terminals for deformation or rust.
   Replace SDU if it fails visual check.
   (Refer to P.52B-26.)

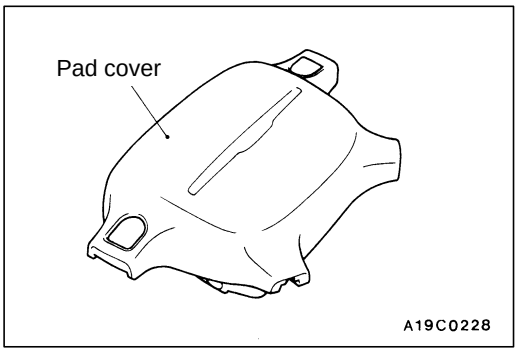

AIR BAG MODULES, STEERING WHEEL AND CLOCK SPRING

1. Remove the air bag modules, steering wheel and clock spring. (Refer to P.52B-28.)

   Caution
   The removed air bag modules should be stored in a clean, dry place with the pad cover face up.

2. Check pad cover for dents, cracks or deformation.

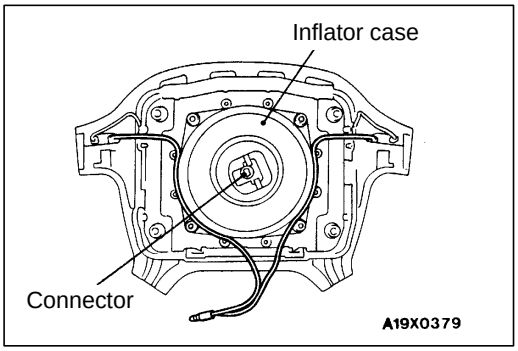

3. Check connector for damage, terminals deformities, and harness for binds.
4. Check air bag inflator case for dents, cracks or deformities.
5. Check harness and connectors for damage, and terminals for deformation.

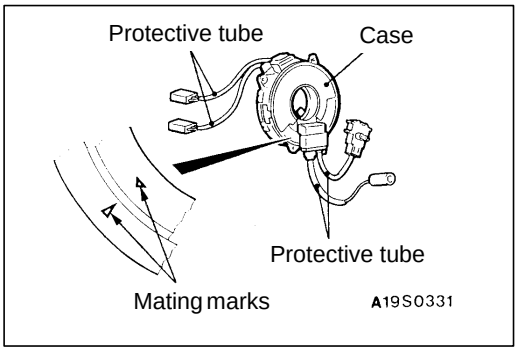

6. Check clock spring connectors and protective tube for damage, and terminals for deformation.
7. Visually check the clock spring case for damage.
8. Align the mating marks of the clock spring and, after turning the vehicle's front wheels to straight-ahead position, install the clock spring to the column switch.

   Mating Mark Alignment

   Turn the clock spring clockwise fully, and then turn back it approx. 3 4/5 turns counterclockwise to align the mating marks.

   Caution
   If the clock spring's mating mark is not properly aligned, the steering wheel may not be completely rotational during a turn, or the flat cable within the clock spring may be severed, obstructing normal operation of the SRS and possibly leading to serious injury to the vehicle's driver.

9. Install the steering column covers, steering wheel and the air bag module.
10. Check steering wheel for noise, binds of difficult operation.
11. Check steering wheel for excessive free play.
    REPLACE ANY VISUALLY INSPECTED PART IF IT FAILS THAT INSPECTION. (Refer to P.52B-28.)

    Caution
    The SRS may not activate if any of the above components is not installed properly, which could result in serious injury or death to the vehicle's driver.

BODY WIRING HARNESS AND FRONT WIRING HARNESS

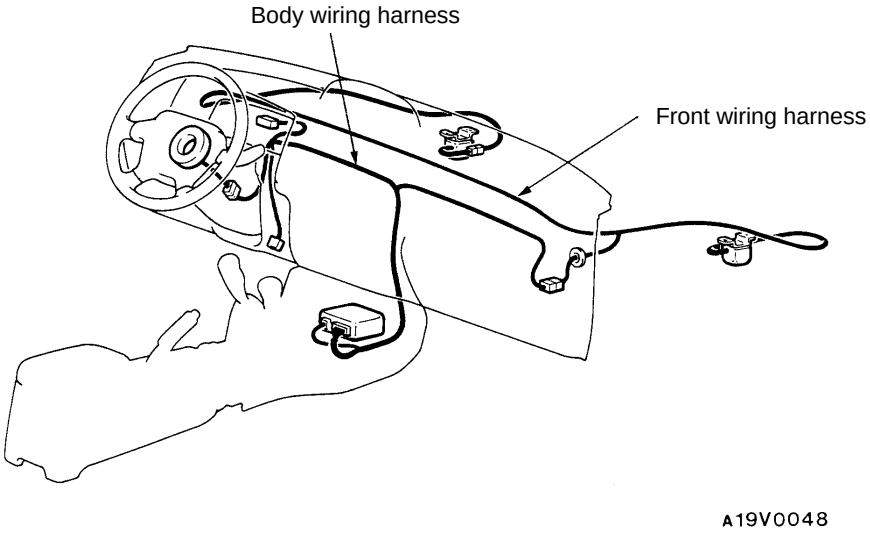

1. Check connector for poor connection.
2. Check harnesses for binds, connectors for damage, and terminals for deformation.
   REPLACE ANY CONNECTORS OR HARNESS THAT FAIL THE VISUAL CHECK. (Refer to P. 52B-3.)

   Caution
   The SRS may not activate if SRS harnesses or connectors are damaged or improperly connected, which could result in serious injury or death to the vehicle's driver.

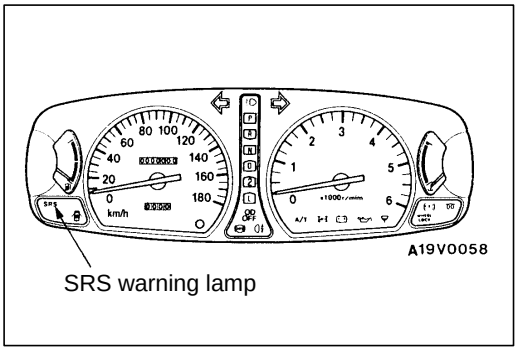

POST-INSTALLATION CHECK

Reconnect the negative battery terminal. Turn the ignition key to the "ON" position. Does the SRS warning lamp illuminate for about 7 seconds, turn off and then remain extinguished for at least 5 seconds? If yes, SRS system is functioning properly. If no, consult page 52B-6.

POST-COLLISION DIAGNOSIS 52400110154

To inspect and service the SRS after a collision (whether or not the air bag has deployed), perform the following steps.

SRS DIAGNOSIS UNIT MEMORY CHECK

1. Connect the MUT-II to the diagnosis connector (16-pin).

   Caution
   Turn off the ignition switch before connecting or disconnecting the MUT-II.

2. Read (and write down) all displayed diagnosis codes. (Refer to P. 52B-6.)

   NOTE
   If the battery power supply has been disconnected or disrupted by the collision, the MUT-II cannot communicate with the SRS diagnosis unit. Inspect and, if necessary, repair the body wiring harness before proceeding further.

3. Read the data list (fault duration and how many times memories are erased) using the MUT-II.

Data list

No.	Service Data Item	Applicability
91	How long a problem has lasted	Maximum time to be stored: 9999 minutes (approximately 7 days)
92	Number indicating houw often the memory is cleared	Maximum time to be stored: 250

4. Erase the diagnosis codes and after waiting 5 seconds or more read (and write down) all displayed diagnosis codes. (Refer to P.52B-6.)

REPAIR PROCEDURE

WHEN AIR BAG DEPLOYS IN A COLLISION.

1. Replace the following parts with new ones.
   - SRS diagnosis unit (SDU) (Refer to P. 52B-26.)
   - Air bag module (Refer to P. 52B-28.)
   - Front impact sensors (Refer to P. 52B-23.)

2. Check the following parts and replace if there are any malfunctions.
   - Clock spring (Refer to P. 52B-28.)
   - Steering wheel, steering column and intermediate joint
     (1) Check wiring harness (built into steering wheel) and connectors for damage, and terminals for deformation.
     (2) Install air bag module to check fit or alignment with steering wheel.
     (3) Check steering wheel for noise, binds or difficult operation and excessive free play.
3. Check harnesses for binding, connectors for damage, poor connections, and terminals for deformation. (Refer to P.52B-18.)

WHEN AIR BAG DOES NOT DEPLOY IN LOW-SPEED COLLISION.

Check the SRS components. If the SRS components are showing any visible damage such as dents, cracks, or deformation, replace them with new ones. Concerning parts removed for inspection, replacement with new parts and cautionary points for working, refer to appropriate INDIVIDUAL COMPONENT SERVICE, P.52B-21.

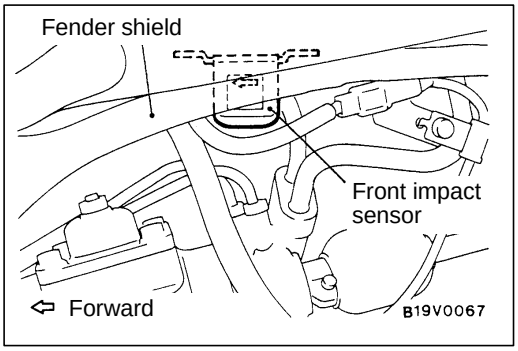

Front impact sensors

1. Check fender shield panel for deformation or rust.
2. Check front impact sensor for dents, cracks, deformation or rust.
3. Check sensor harnesses for binds, connectors for damage, and terminals for deformation.

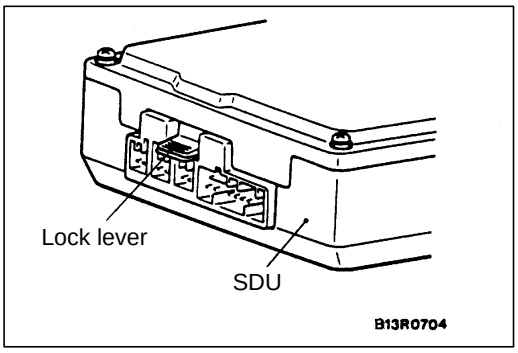

SRS diagnosis unit (SDU)

1. Check SDU case and brackets for dents, cracks or deformation.
2. Check connectors and lock lever for damage, and terminals for deformation.

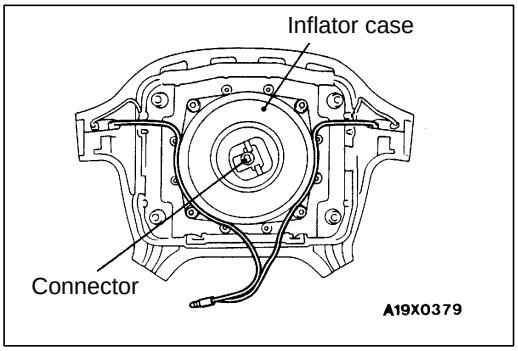

Air bag module

1. Check pad cover for dents, cracks or deformation.
2. Check connector for damage, terminals deformities, and harness for binds.
3. Check air bag inflator case for dents, cracks or deformities.
4. Install air bag module to steering wheel to check fit or alignment with the wheel.

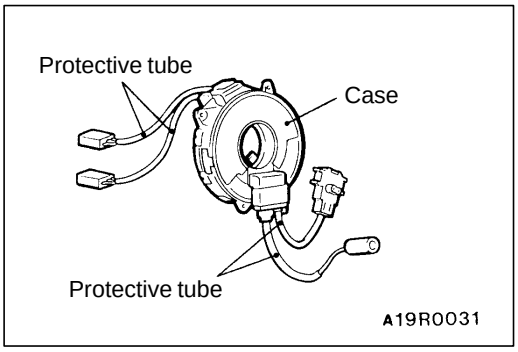

Clock spring

1. Check clock spring connectors and protective tube for damage, and terminals for deformation.
2. Visually check the case for damage.

Steering wheel, steering column and intermediate joint

1. Check wiring harness (built into steering wheel) and connectors for damage, and terminals for deformation.
2. Install air bag module to check fit or alignment with steering wheel.
3. Check steering wheel for noise, binds or difficult operation and excessive free play.

Harness connector (body and front wiring harness)

Check harnesses for binding, connectors for damage, poor connection, and terminals for deformation. (Refer to P. 52B-18.)

INDIVIDUAL COMPONENT SERVICE

52400290148

If the SRS components are to be removed or replaced as a result of maintenance, troubleshooting, etc., follow each procedure (P.52B-23 – P.52B-33.)

Caution

1. **SRS components should not be subjected to heat over 93°C, so remove the SRS diagnosis unit, air bag module, clock spring and front impact sensors before drying or baking the vehicle after painting.**
2. **If the SRS components are removed for the purpose of check, sheet metal repair, painting, etc., they should be stored in a clean, dry place until they are reinstalled.**

WARNING/CAUTION LABELS

52400300063

A number of caution labels relating to the SRS are found in the vehicle, as shown in the following illustration. Follow label instructions when servicing SRS. If labels are dirty or damaged, replace them with new ones.

Steering wheel

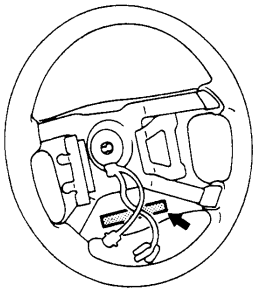

Air bag module

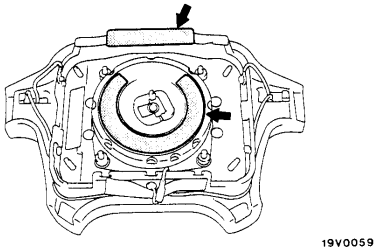

Clock spring

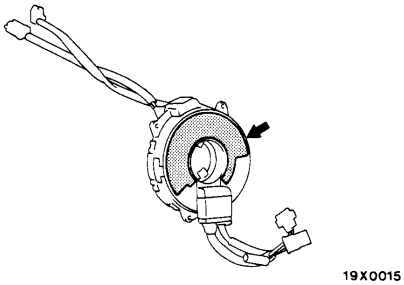

Glove box

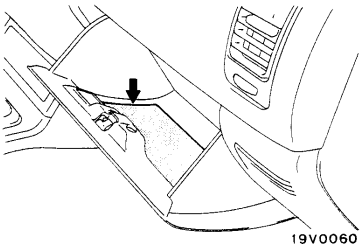

Sun visor

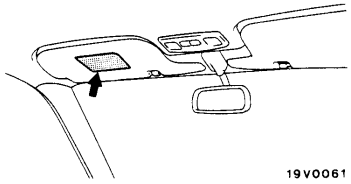

SDU

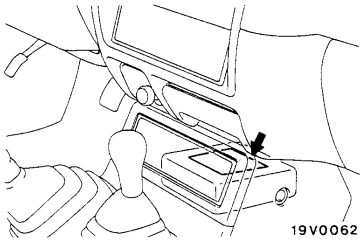

Hood

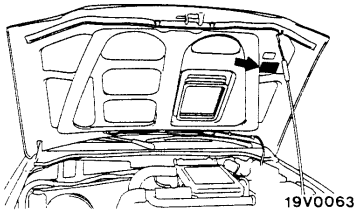

Frame <2WD>

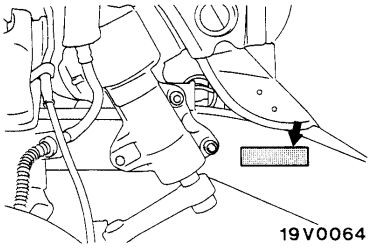

Frame <4WD>

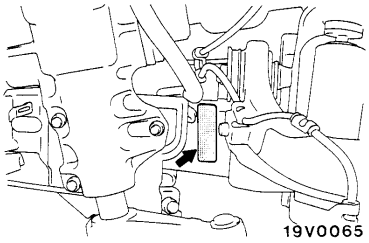

00005050

FRONT IMPACT SENSORS

52400150071

Caution

1. **Never repair or disassemble a front impact sensor. If faulty, replace it.**
2. **Handle the front impact sensors very carefully, taking care not to drop them or otherwise subject them to impact. If a sensor is seen to be dented, cracked, deformed or rusted, replace it with a new one.**
3. **Replace sensor with new ones after the air bag has deployed.**

REMOVAL AND INSTALLATION

Pre-removal Operation
- Turn the ignition key to the ”LOCK” position.

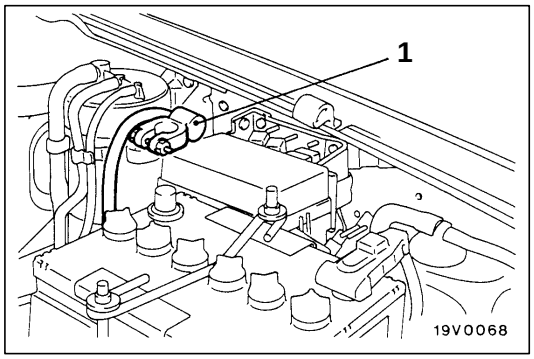

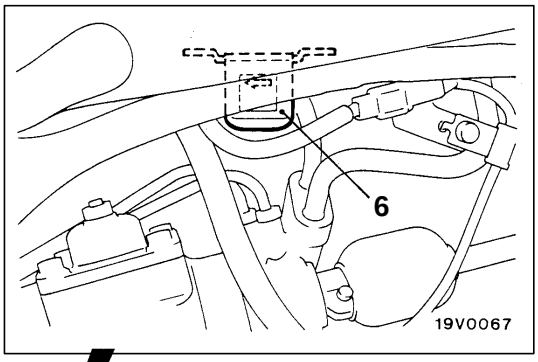

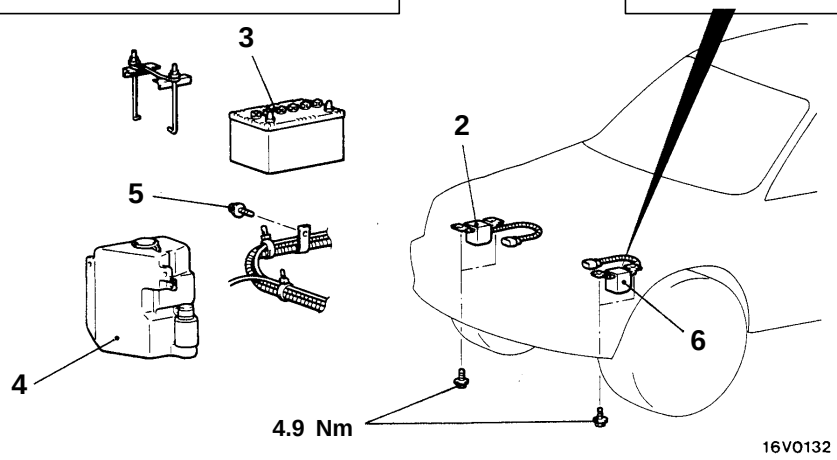

00005051

Removal steps

- ▶C◀ ● Post-installation inspection
- ◀A▶ 1. Negative (–) Battery cable connection
- ▶B◀ 2. Front impact sensor (R.H.)
- 3. Battery
- 4. Windshield washer tank
- 5. Wiring harness clamp bolt
- ▶B◀ 6. Front impact sensor (L.H.)
- ▶A◀ ● Pre-installation inspection

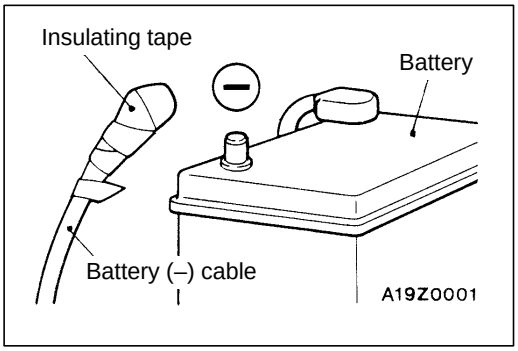

REMOVAL SERVICE POINT

◀A▶ NEGATIVE (–) BATTERY CABLE DISCONNECTION

Disconnect the negative battery cable from the battery and tape the terminal.

Caution
Wait at least 60 seconds after disconnecting the battery cable before doing any further work. (Refer to P. 52B-3, No. 4.)

INSTALLATION SERVICE POINTS

▶A◀ PRE-INSTALLATION INSPECTION

To mount the new front impact sensor, visually check it and measure the resistance between the terminals. (Refer to the previous item “INSPECTION”)

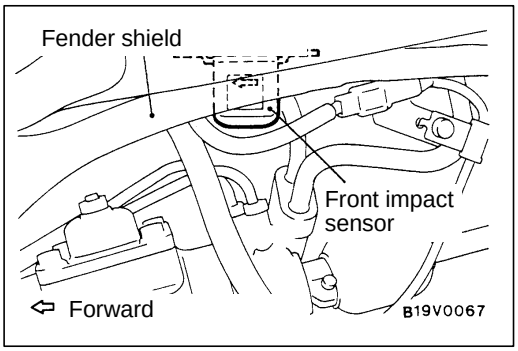

▶B◀ FRONT IMPACT SENSOR INSTALLATION

1. Securely connect the connector.
2. Set the front impact sensor toward the front of the vehicle as shown by the arrow in the illustration, and install it securely.

   Caution
   The SRS may not activate properly if a front impact sensor is not installed properly, which could result in serious injury or death to the vehicle’s driver.

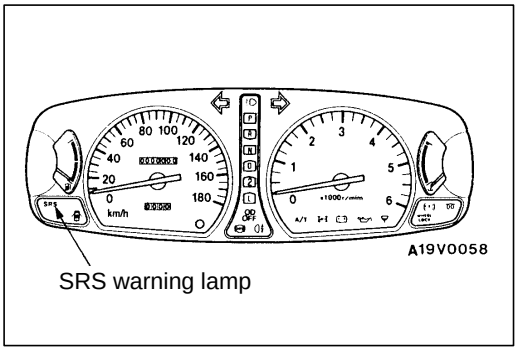

▶C◀ POST-INSTALLATION INSPECTION

1. Reconnect the negative battery terminal.
2. Turn the ignition key to the “ON” position.
3. Does the “SRS” warning lamp illuminate for about 7 seconds, and then remain extinguished for at least 45 seconds after turning OFF?
4. If yes, SRS system is functioning properly.
   If no, consult page 52B-6.

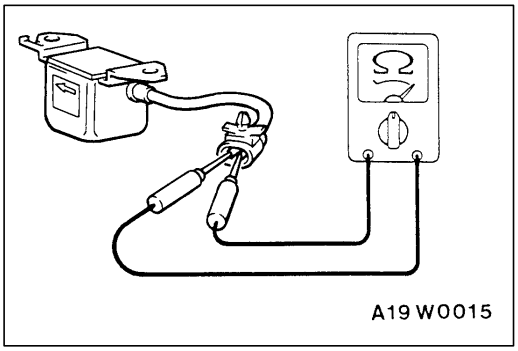

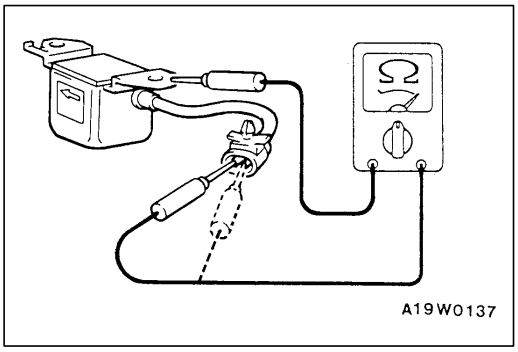

INSPECTION

52400160067

1. Check the front impact sensor for dents, cracks, deformation or rust.

   Caution
   If a dent, crack, deformation or rust is detected, replace with a new sensor.

2. Measure the resistance between terminals and check whether it is within the standard value.

   Standard value: 2,000 ± 20Ω

   Caution
   Always replace the sensor with a new one if the resistance is not within the standard value.

3. Check fender shield panel for deformation or rust.
4. Check the continuity between the terminal and bracket. If there is a continuity, the insulation is malfunctioned, and replace the sensor with a new one.

SRS DIAGNOSIS UNIT (SDU)

52400210113

Caution

1. **Disconnect the battery (–) terminal and wait for 60 seconds or more before starting work. Furthermore, the disconnected battery terminal should be covered with tape to insulate it. (Refer to P.52B-3, No.4.)**
2. **Never attempt to disassemble or repair the SDU. If faulty, replace it.**
3. **Do not drop or subject the SDU to impact or vibration. If denting, cracking, deformation, or rust are discovered in the SDU, replace it with a new SDU. Discard the old one.**
4. **After deployment of an air bag, replace the SDU with a new one.**
5. **Never use an ohmmeter on or near the SDU, and use only the special test equipment described on P.52B-5.**

REMOVAL AND INSTALLATION

Pre-removal Operation
- Turn the ignition key to the "LOCK" position.
- Front Floor Console Removal (Refer to GROUP 52A.)

Post-installation Operation
- Front Floor Console Installation (Refer to GROUP 52A.)

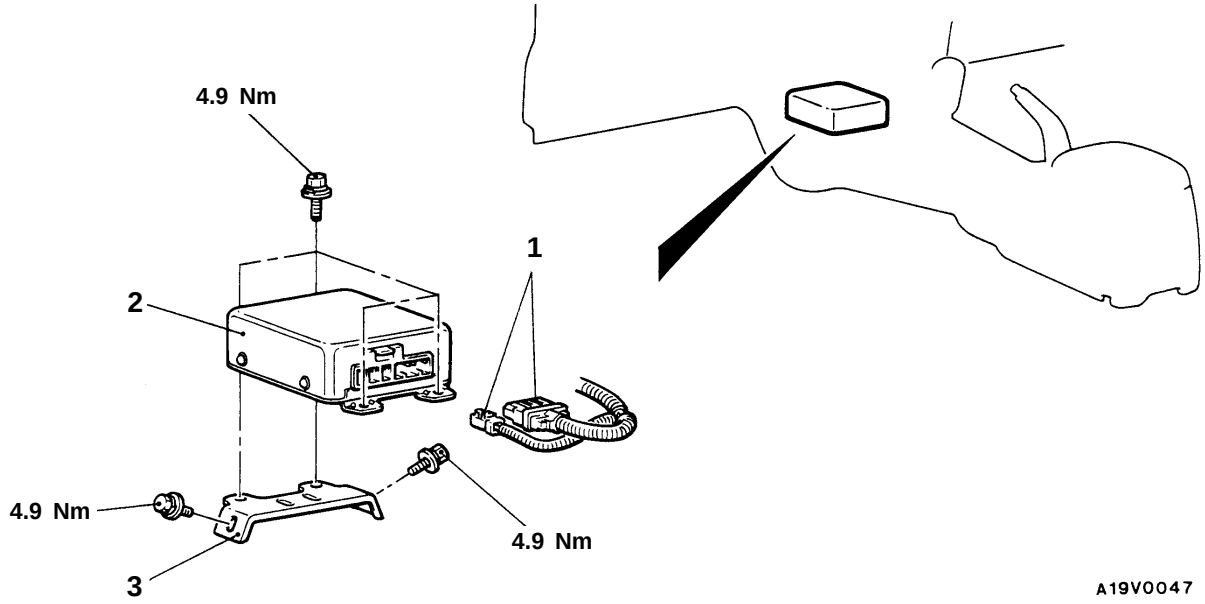

Removal steps

▶C◀ ● Post-installation inspection
● Negative (–) battery cable connection
◀A▶ ▶B◀ 1. Harness connector
▶A◀ 2. SRS diagnosis unit (SDU)
3. SRS diagnosis unit (SDU) bracket

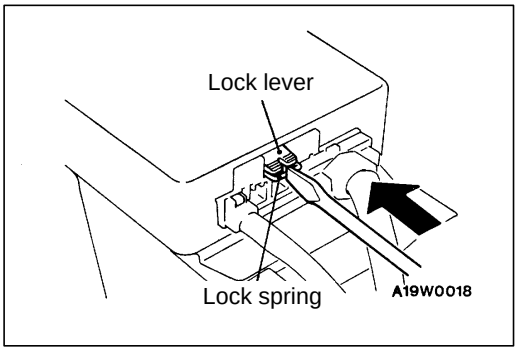

REMOVAL SERVICE POINTS

◀A▶ HARNESS CONNECTOR DISCONNECTION

1. To unlock the SDU connector, place a flat-tipped screwdriver against the lock spring at the lock lever notch and push the spring toward the unit.

   Caution
   Do not use excessive force to raise the lock lever.

2. While pushing the locks of each connector downwards, remove each connector from the SDU.

   Caution
   Because a double lock mechanism is employed for the SDU connectors, be careful not to exert undue force to remove the connectors, as this will damage them.

INSTALLATION SERVICE POINTS

▶A◀ SRS DIAGNOSIS UNIT (SDU) INSTALLATION

Caution
The SRS may not activate if SDU is not installed properly, which could result in serious injury or death to the vehicle's driver.

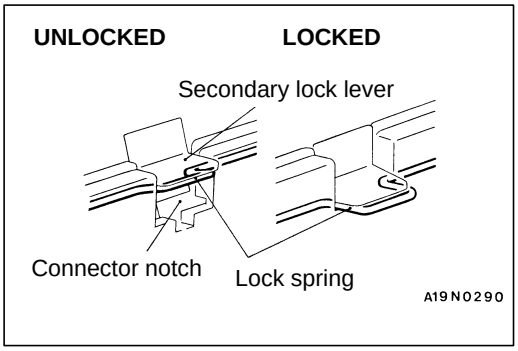

▶B◀ HARNESS CONNECTOR CONNECTION

After connecting each harness connector securely and correctly to the SDU, be sure to press down the lock lever of the SDU.

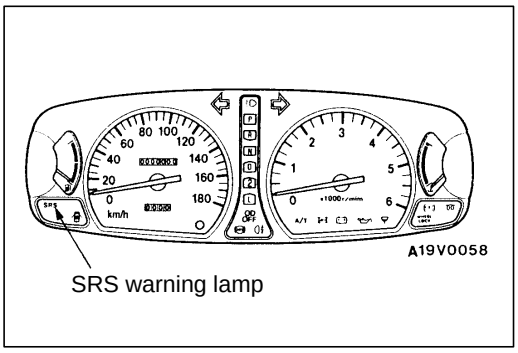

▶C◀ POST-INSTALLATION INSPECTION

1. Reconnect the negative battery terminal.
2. Turn the ignition key to the "ON" position.
3. Does the "SRS" warning lamp illuminate for about 7 seconds, and then remain extinguished for at least 45 seconds after turning OFF?
4. If yes, SRS system is functioning properly. If no, consult page 52B-6.

INSPECTION

52400220093

- Check the SDU and brackets for dents, cracks or deformation.
- Check connector for damage, and terminals for deformation.

Caution
If a dent, crack, deformation or rust is discovered, replace the SDU with a new one.

NOTE
For checking of the SDU other than described above, refer to the section concerning troubleshooting. (Refer to P.52B-6.)

AIR BAG MODULE AND CLOCK SPRING

52400240143

Caution

1. **Disconnect the battery (–) terminal and wait for 60 seconds or more before starting work. Furthermore, the disconnected battery terminal should be covered with tape to insulate it. (Refer to P.52B-3, No.4.)**
2. **Never attempt to disassemble or repair the air bag modules or clock spring.**
   If faulty, replace it.
3. **Do not drop the air bag modules or clock spring or allow contact with water, grease or oil.**
   Replace it if a dent, crack, deformation or rust is detected.
4. **The air bag modules should be stored on a flat surface and placed so that the pad surface is facing upward.**
   Do not place anything on top of it.
5. **Do not expose the air bag modules to temperatures over 93°C.**
6. **After deployment of an air bag, replace the clock spring with a new one.**
7. **Wear gloves and safety glasses when handling air bags that have already deployed.**
8. **An undeployed air bag module should only be disposed of in accordance with the procedures (Refer to P.52B-34.)**

REMOVAL AND INSTALLATION

Pre-removal Operation
- After setting the steering wheel and the front wheels to the straight ahead position, remove the ignition key.

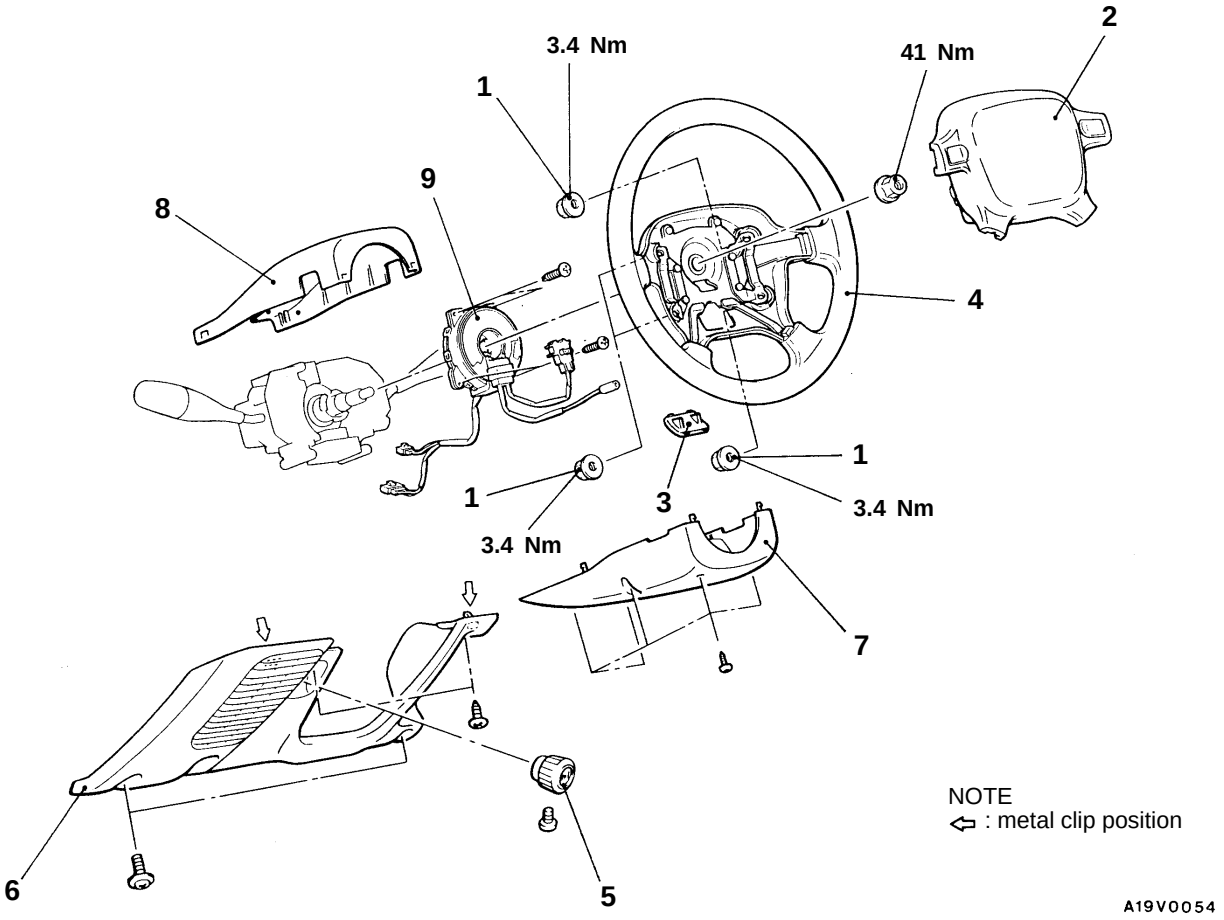

Air bag module removal steps

	▶D◀	● Post-installation inspection
		● Negative (–) battery cable connection
		1. Air bag module mounting nut
◀A▶		2. Air bag module
	▶A◀	● Pre-installation inspection

Clock spring removal steps

	▶D◀	● Post-installation inspection
		● Negative (–) battery cable connection
		1. Air bag module mounting nut
◀A▶		2. Air bag module
		3. Cover
◀B▶	▶C◀	4. Steering wheel
		5. Throttle cable knob <Diesel-powered vehicles>
		6. Driver side under cover
		7. Column cover lower
		8. Column cover, upper
◀C▶	▶B◀	9. Clock spring
	▶A◀	● Pre-installation inspection

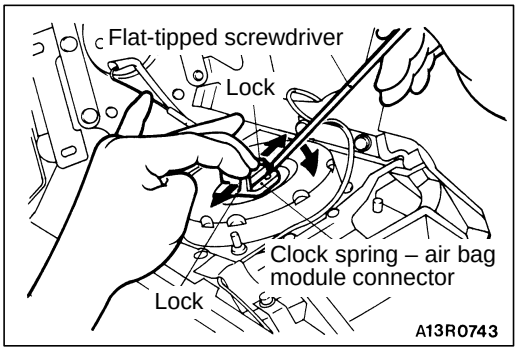

REMOVAL SERVICE POINTS

◀A▶ AIR BAG MODULE REMOVAL

When disconnecting the connector of the clock spring from the air bag module, press the air bag's lock towards the outer side to spread it open. Use a flat-tipped screwdriver, as shown in the figure at the left, to pry so as to remove the connector gently.

Caution

1. **When disconnect the air bag module-clock spring connector, take care not to apply excessive force to it.**
2. **The removed air bag module should be stored in a clean, dry place with the pad cover face up.**

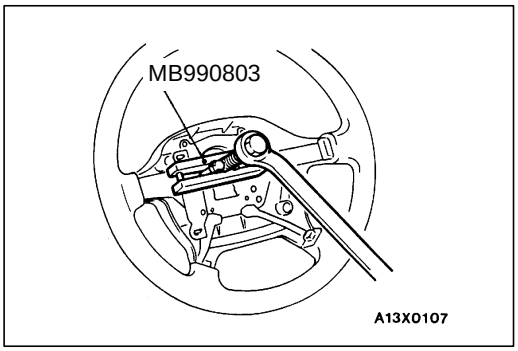

◀B▶ STEERING WHEEL REMOVAL

Caution

Do not hammer on the steering wheel. Doing so may damage the collapsible column mechanism.

◀C▶ CLOCK SPRING REMOVAL

Caution

The removed clock spring should be stored in a clean, dry place.

INSTALLATION SERVICE POINTS

▶A◀ PRE-INSTALLATION INSPECTION

1. When installing the new air bag modules and clock spring, refer to "INSPECTION".

   Caution

   Dispose of air bag modules only according to the specified procedure. (Refer to P.52B-34.)

2. Connect the battery (–) terminal.
3. Connect the MUT-II to the diagnosis connector.

   Caution

   Turn off the ignition switch before connecting or disconnecting the MUT-II.

4. Turn the ignition key to the "ON" position.

5. Conduct self-diagnosis using the MUT-II to ensure entire SRS operates properly, except open circuit of air bag modules.
6. Turn the ignition key to the “LOCK” position, disconnect the negative battery cable and tape the terminal.

   Caution
   Wait at least 60 seconds after disconnecting the battery cable before doing any further work.
   (Refer to P.52B-3, No.4.)

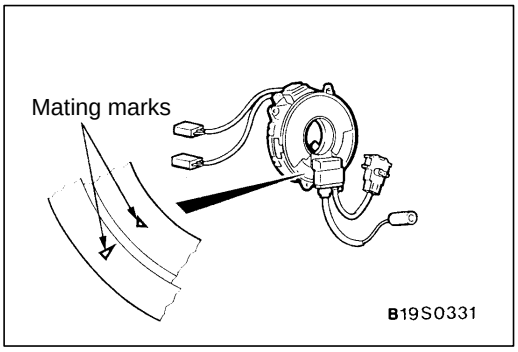

▶B◀ CLOCK SPRING INSTALLATION

Align the mating marks of the clock spring and, after turning the front wheels to the straight-ahead position, install the clock spring to the column switch.

Mating Mark Alignment

Turn the clock spring clockwise fully, and then turn back it approx. 3 4/5 turns counterclockwise to align the mating marks.

Caution
If the clock spring’s mating marks are not properly aligned, the steering wheel may not be completely rotational during a turn, or the flat cable within the clock spring may be severed, obstructing normal operation of the SRS and possibly leading to serious injury to the vehicle’s driver.

▶C◀ STEERING WHEEL INSTALLATION

1. Before installation the steering wheel, be sure to first turn the vehicle’s front wheels to the straight-ahead position and align the mating marks of the clock spring.

   Caution
   Be sure when installing the steering wheel, that the harness of the clock spring does not become caught or tangled.

2. After clamping, turn the steering wheel all the way in both directions to confirm that steering is normal.

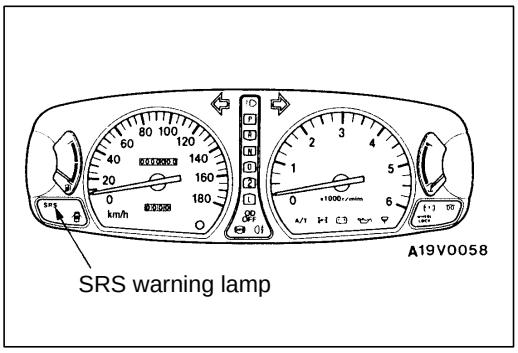

▶D◀ POST-INSTALLATION INSPECTION

1. Reconnect the negative battery terminal.
2. Turn the ignition key to the “ON” position.
3. Does the “SRS” warning lamp illuminate for about 7 seconds, and then remain extinguished for at least 45 seconds after turning OFF?
4. If yes, SRS system is functioning properly.
   If no, consult page 52B-6.

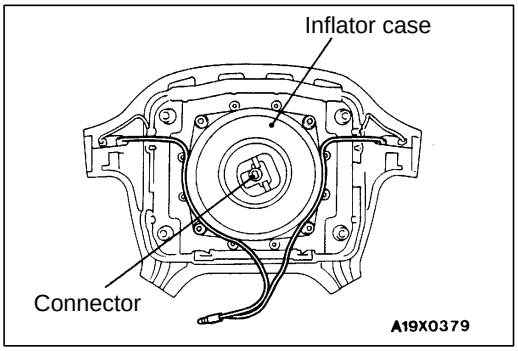

INSPECTION

52400250146

AIR BAG MODULE CHECK

If any improper part is found during the following inspection, replace the air bag module with a new one.
Dispose the old one according to the specified procedure. (Refer to P.52B-34.)

Caution
Never attempt to measure the circuit resistance of the air bag module (squib) even if you are using the specified tester. If the circuit resistance is measured with a tester, accidental air bag deployment will result in serious personal injury.

1. Check pad cover for dents, cracks or deformation.
2. Check connectors for damage, terminals for deformation, and harness for binds.
3. Check air bag inflator case for dents, cracks or deformation.
4. Install the air bag module to steering wheel to check fit or alignment with the wheel.

Caution
If dents, cracks, deformation, or rust are discovered in the air bag module, replace it with a new one.
Dispose of the old one according to the specified procedure. (Refer to P.52B-34.)

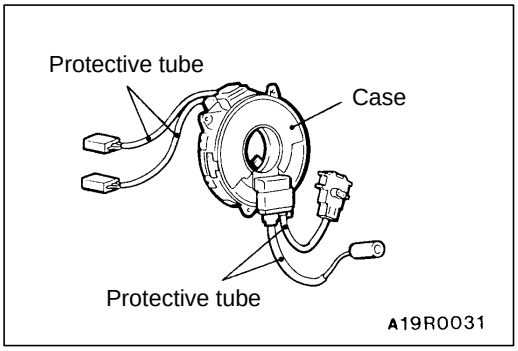

CLOCK SPRING CHECK

If, as result of following checks, even one abnormal point is discovered, replace the clock spring with a new one.

1. Check connectors and protective tube for damage, and terminals for deformation.
2. Visually check the case for damage.

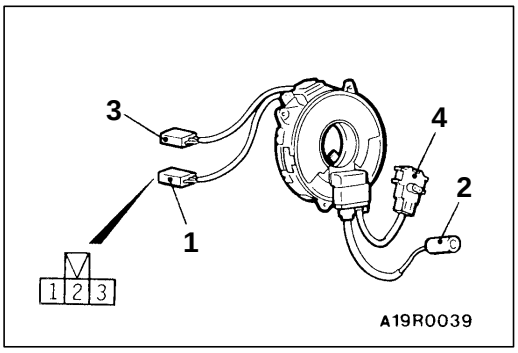

3. Check that there is continuity between terminal (3) of the clock spring No.1 connector and the No. 2 connector.

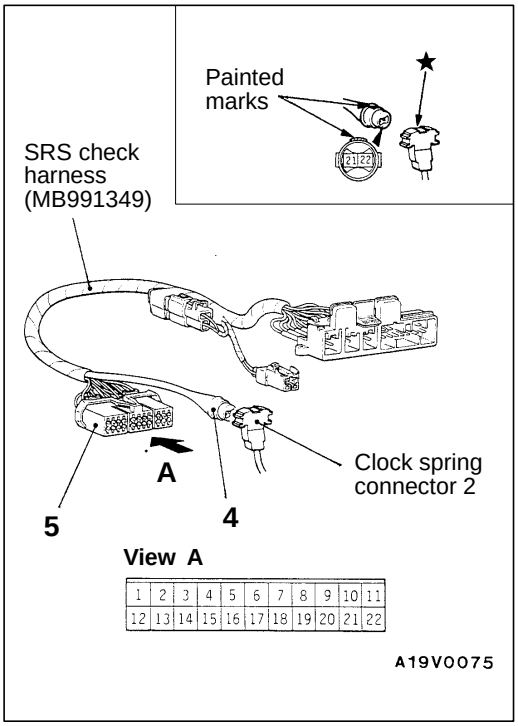

4. When joining SRS Check harness connector No. 4 and 2 align paint of the No. 4 with the * portion of the No. 2 connector of the clock spring.
5. Check for continuity between terminal 21 and terminal 22 of SRS Check harness connector No. 5.

AIR BAG MODULE DISPOSAL PROCEDURES

52400120157

Before either disposing of a vehicle equipped with air bag, or prior to disposing of the air bag module, be sure to first follow the procedures described below to deploy the air bag.

UNDEPLOYED AIR BAG MODULE DISPOSAL

Caution

1. **If the vehicle is to be scrapped, or otherwise disposed of, deploy the air bag inside the vehicle. If the vehicle will continue to be operated and only the air bag module are to be disposed of, deploy the air bag outside the vehicle.**
2. **Since a large amount of smoke is produced when the air bag are deployed, select a well-ventilated site. Moreover, never attempt the test near a smoke sensor.**
3. **Since there is a loud noise when the air bag are deployed, avoid residential areas whenever possible. If anyone is nearby, give warning of the impending noise.**
4. **Suitable ear protection should be worn by personnel performing these procedures or by people in the immediate area.**

DEPLOYMENT INSIDE THE VEHICLE

(when disposing of a vehicle)

1. Open all windows and doors of the vehicle. Move the vehicle to an isolated spot.
2. Disconnect the negative (–) and positive (+) battery cables from the battery terminals, and then remove the battery from the vehicle.

   Caution
   Wait at least 60 seconds after disconnecting the battery cables before doing any further work. (Refer to P. 52B-3, No. 4.)

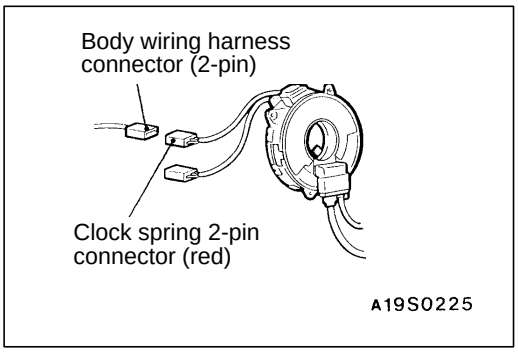

3. To deploy the air bag module.
   (1) Remove the steering column cover, lower.
   (2) Remove the connection between the clock spring 2-pin connector (red) and the body wiring harness connector.

NOTE
If the clock spring connector is disconnected from the body wiring harness, both electrodes of the clock spring connector will be automatically shorted to prevent unintended deployment of the air bag due to static electricity, etc.

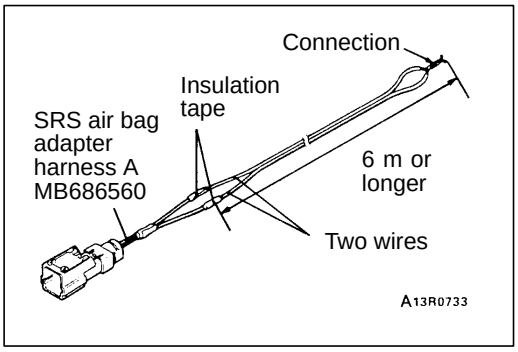

4. Connect two wires, each six meters or longer, to the two leads of SRS air bag adapter harness A and cover the connections with insulation tape. The other ends of the two wires should be connected to each other (short-circuited), to prevent sudden unexpected deployment of the air bag.

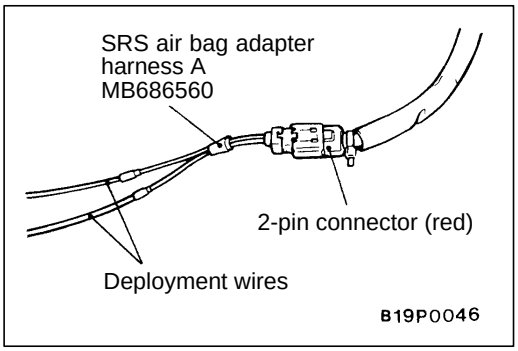

5. Connect the clock spring 2-pin connector (red) to SRS air bag adapter harness A and pass the deployment wires out of the vehicle.

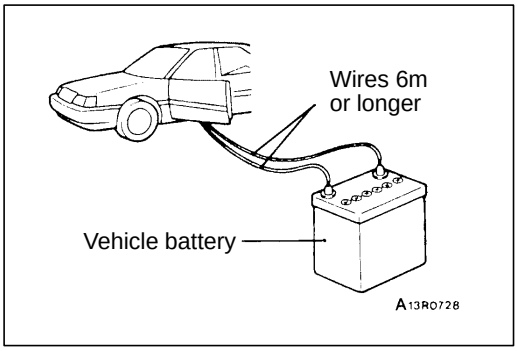

6. At a location as far away from the vehicle as possible, disconnect the two connected wires from each other, and connect them to the two terminals of the battery (which has been removed from the vehicle) to deploy the air bag.

Caution

1. **Before deploying the air bag in this manner, first check to be sure that there is no one in or near the vehicle. Wear safety glasses.**
2. **The inflator will be quite hot immediately following the deployment, so wait at least 30 minutes to allow it to cool before attempting to handle it. Although not poisonous, do not inhale gas from air bag deployment.**
   See Deployed Air Bag Module Disposal Procedures (P.52B-38.) for post-deployment handling instructions.
3. **If the air bag module fails to deploy when the procedures above are followed, do not go near the module. Contact your local distributor.**

DEPLOYMENT OUTSIDE THE VEHICLE

Caution

1. **This should be carried out in a wide, flat area at least 6 m away from obstacles and other people.**
2. **Do not perform deployment outside, if a strong wind is blowing, and if there is even a slight breeze, the air bag module should be placed and deployed downwind from the battery.**

1. Disconnect the negative (–) and positive (+) battery cables from the battery terminals, and then remove the battery from the vehicle.

   Caution
   Wait at least 60 seconds after disconnecting the battery cables before doing any further work. (Refer to P.52B-3, No.4.)

2. Remove the air bag module from the vehicle. (Refer to P.52B-28.)

   Caution
   The air bag module should be stored on a flat surface and placed so that the pad cover face up. Do not place anything on top of it.

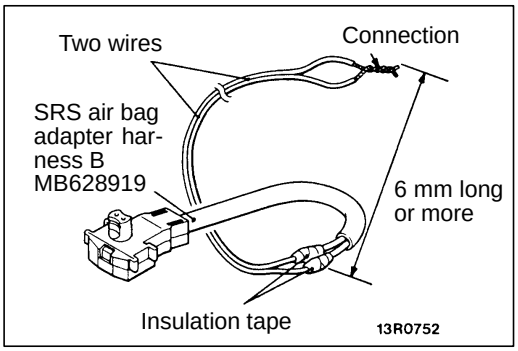

3. Connect two wires, each six meters long or more, to the two leads of SRS air bag adapter harness B, and cover the connections with insulation tape. The other ends of the two wires should be connected to each other (short-circuited), to prevent sudden unexpected deployment of the air bag.

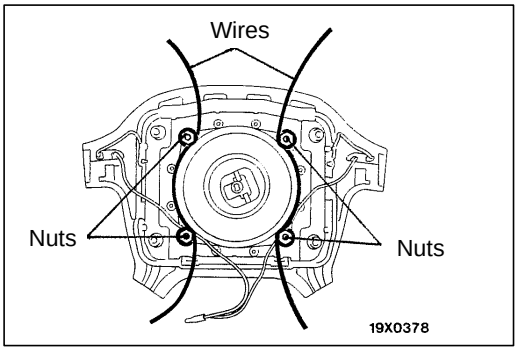

4. Install nuts that are no longer needed to the four bolts on the rear side of the air bag module, and tie on some thick wire to secure to the wheel.
5. Take the SRS air bag adaptor harness B that is connected to the wires, pass it beneath the tyre attached to a wheel, and connect it to the air bag module.

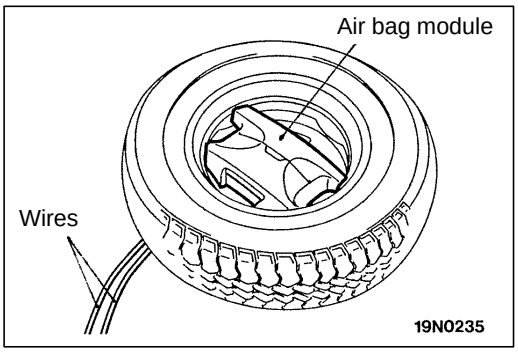

6. Insert the air bag module into the wheel, and secure it with the wires that are tied to the bolts, with the air bag facing upward.

   Caution
   Leave some space below the wheel for the adaptor harness. If there is no space, the reaction when the air bag deploys could damage the adaptor harness.

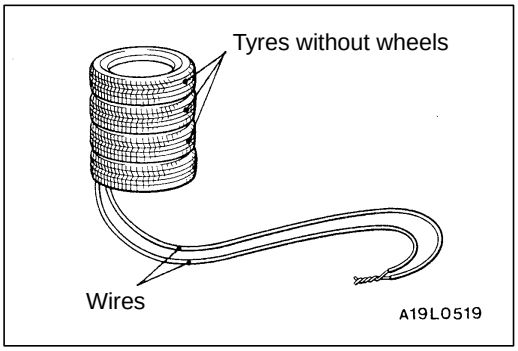

7. Place three old tyres with no wheels on top of the tyre secured to the air bag module.

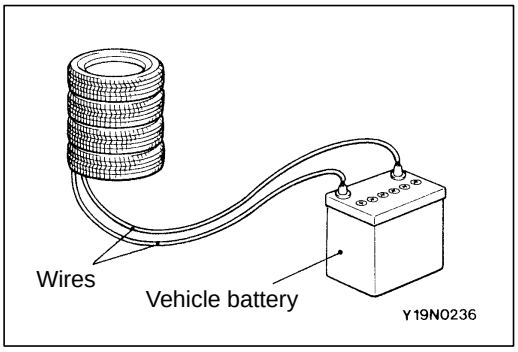

8. At a location as far away from the air bag module as possible, and from a shielded position, disconnect the two connected wires from each other, and connect them to the two terminals of the battery (which has been removed from the vehicle) to deploy the air bag.

   Caution
   1. **Before deployment, check carefully to be sure that no one is nearby.**
   2. **The inflator will be quite hot immediately following deployment, so wait at least 30 minutes to allow it to cool before attempting to handle it . Although the gas resulting from air bag deployment is not poisonous, it should not be inhaled. Refer to the Deployed Aid Bag Module Disposal Procedures (P.52B-38) for post-deployment handling instructions.**
   3. **If the air bag fails to deploy when the procedures above are followed, do not go near the module. Contact your local distributor.**

DEPLOYED AIR BAG MODULE DISPOSAL PROCEDURES

After deployment or operation, the air bag module should be disposed of in the same manner as any other scrap parts, adhering to local laws and/or legislation that may be in force except that the following points should be carefully noted during disposal.

1. The inflator will be quite hot immediately following deployment, so wait at least 30 minutes to allow it cool before attempting to handle it.
2. Do not put water or oil on the air bag after deployment.
3. There may be, adhered to the deployed air bag module, material that could irritate the eye and/or skin, so wear gloves and safety glasses when handling a deployed air bag module. IF AFTER FOLLOWING THESE PRECAUTIONS, ANY MATERIAL DOES GET INTO THE EYES OR ON THE SKIN, IMMEDIATELY RINSE THE AFFECTED AREA WITH A LARGE AMOUNT OF CLEAN WATER.
   IF ANY IRRITATION DEVELOPS, SEEK MEDICAL ATTENTION.

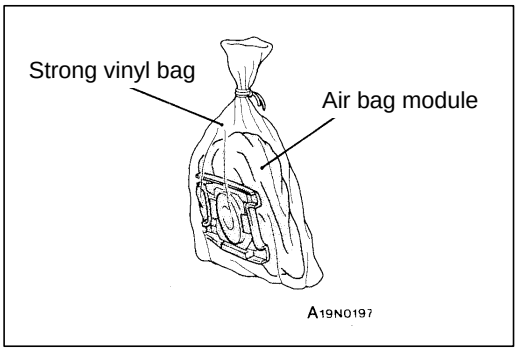

4. Tightly seal the air bag module in a strong vinyl bag for disposal.
5. Be sure to always wash your hands after completing this operation.

SENSOR CABLE INSTALLATION PROCEDURES

52400130013

If there is a malfunction in the front wiring harness between the front impact sensor and body wiring harness, install the sensor cable. (Refer to P. 52B-4.)

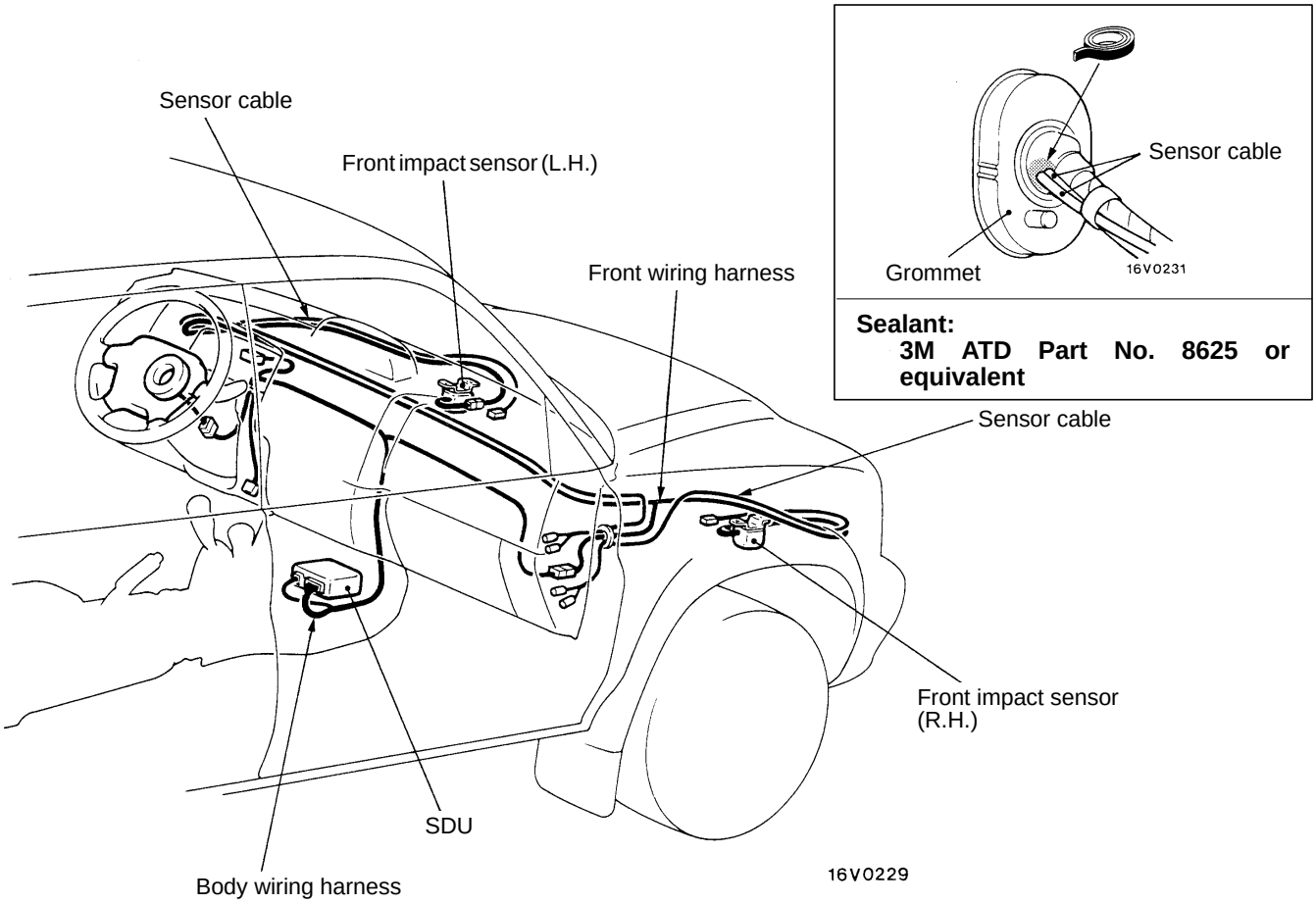

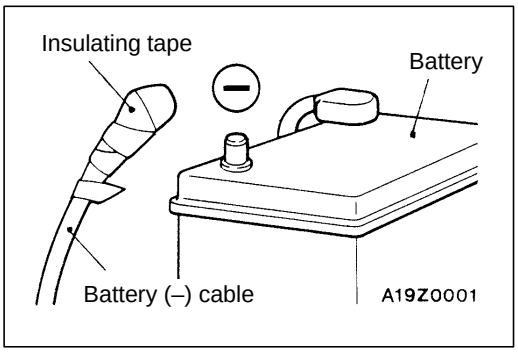

1. Disconnect the negative battery cable and tape the terminal.

   Caution
   Wait at least 60 seconds after disconnecting the battery cable before doing any further work. (Refer to P. 52B-3, No. 4.)

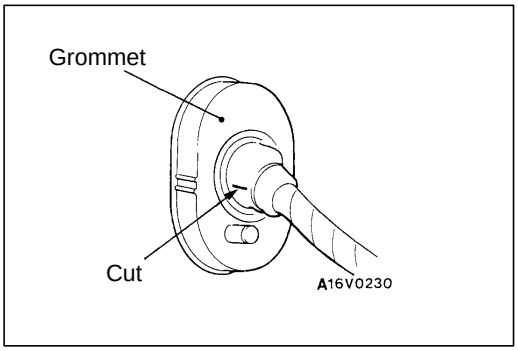

2. Make a cut in the grommet in the place shown in the illustration, and pass the sensor cable through the cut.

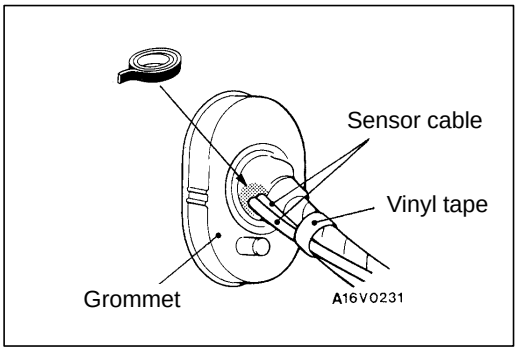

3. Run the sensor cable along the front wiring harness, and then secure the cable to the harness with insulation tape.
4. Apply the specified sealant to the grommet cut portion.
5. Connect the sensor cable to the impact sensor and to the body wiring harness.

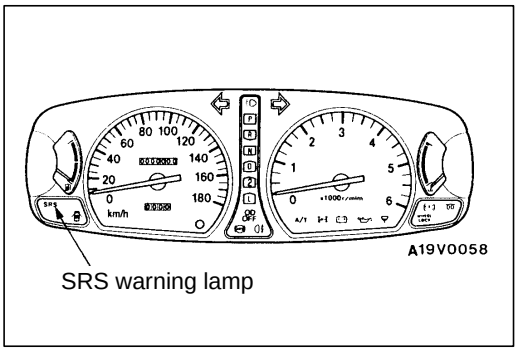

POST-INSTALLATION INSPECTION

1. Reconnect the negative battery terminal.
2. Turn the ignition key to the “ON” position.
3. Does the “SRS” warning lamp illuminate for about 7 seconds, and then remain extinguished for at least 45 seconds after turning OFF?
4. If yes, SRS system is functioning properly. If no, consult page 52B-6.

GROUP 52B
SUPPLEMENTAL RESTRAINT SYSTEM (SRS)

GENERAL

OUTLINE OF CHANGES

The SRS air bag control unit (SRS–ECU) has been modified due to passenger's air bag newly used. Also, driver's air bag module has been modified. Therefore, service procedures have been added, although the other procedures than the below remain the same as before.

SRS SERVICE PRECAUTIONS

1. In order to avoid injury to yourself or others from accidental deployment of the air bag during servicing, read and carefully follow all the precautions and procedures described in this manual.
2. Do not use any electrical test equipment on or near SRS components, except those specified on the basic manual.
3. **Never Attempt to Repair the Following Components:**
   - SRS air bag control unit (SRS-ECU)
   - Front impact sensors
   - Clock Spring
   - Air Bag Modules (Driver's and front passenger's sides)

If these components are diagnosed as faulty, just replace in accordance with the INDIVIDUAL COMPONENT SERVICE procedures. Refer to P.52B-13.

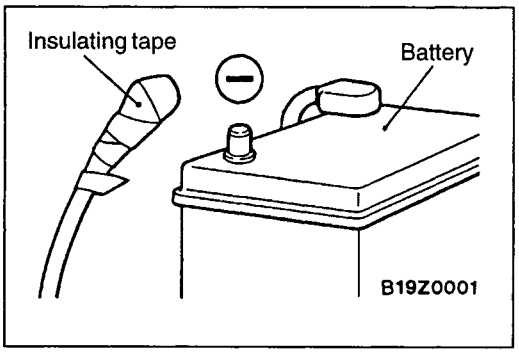

After negative battery cable disconnection, wait at least 60 seconds before any further work. Also, wind the terminal with insulating tape. The SRS–ECU condenser retains enough voltage for some time to deploy the air bags even after the battery has been disconnected. So, doing any work in this period of time could result in unintended air bag deployment, leading to serious injury.

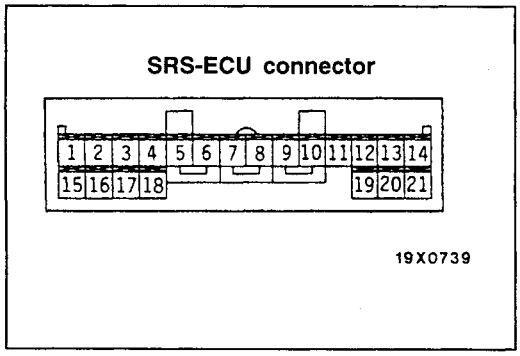

Do not repair the SRS air bag wiring harness connector. If faulty, just replace. If the wiring harness is faulty, replace or repair according to the following table.

SRS-ECU terminal No.	Harness connector (No. of terminals, colour)	Destination of harness	Corrective action
1 to 4	21 pins, yellow	–	–
5		Body wiring harness → Clock spring → Air bag module (Driver's side)	Repair or replace each wiring harness. Replace clock spring.
6			
7		Body wiring harness → Air bag module (Front passenger's side)	Repair or replace each wiring harness.
8			
9,10		–	–
11		Body wiring harness → Diagnosis connector	Repair or replace each wiring harness.
12, 17		Body wiring harness → Front wiring harness→Front impact sensor (L.H.)	Sensor cable* installation procedures
13		Body wiring harness → Junction block (fuse No.11)	Repair or replace each wiring harness.
14		Body wiring harness → Junction block (fuse No.10)	
15		Body wiring harness → SRS warning lamp	
16		–	–
18, 19		Body wiring harness → Front wiring harness→Front impact sensor (R.H.)	Sensor cable* installation procedures
20, 21		Body wiring harness → Earth	Repair or replace body wiring harness.

NOTE
*: The sensor cable is available as service part.

6. Do not expose the SRS components to heat over 93°C, so remove the SRS-ECU, air bag modules, clock spring and front impact sensors before drying or baking the vehicle after painting.
7. Whenever you finish servicing the SRS, check warning lamp operation to make sure that the system functions properly.
8. Make certain that the ignition switch is off when the MUT-II is connected and disconnected.
9. If you have any questions about the SRS, please contact your local distributor.

   NOTE
   SERIOUS INJURY CAN RESULT FROM UNINTENDED AIR BAG DEPLOYMENT, SO USE ONLY THE PROCEDURES AND EQUIPMENT SPECIFIED IN THIS MANUAL.

TROUBLESHOOTING

INSPECTION CHART FOR DIAGNOSIS CODES

Inspect according to the inspection chart that is appropriate for the malfunction code.

Code No.	Diagnosis item		Reference page
11, 12, 13	Front impact sensor system		52B-4
14	Analog G-sensor system in the SRS-ECU		52B-5
15,16	Safing G-sensor system in the SRS-ECU		52B-5
21, 22, 61, 62	Driver's air bag module (squib) system		52B-6
24, 25, 64, 65	Front passenger's air bag module (squib) system		52B-7
31, 32	SRS-ECU capacitor system		52B-5
34*	Connector lock system		52B-7
35	SRS-ECU (deployed air bag) system		52B-8
41*	IG_1 (A) power circuit system		52B-8
42*	IG_1 (B) power circuit system		52B-8
43	SRS warning lamp drive circuit system	Lamp does not illuminate.*	52B-9
		Lamp does not switch off.	52B-9
44*	SRS warning lamp drive circuit system		52B-10
45	SRS-ECU non-volatile memory (EEPROM) and A/D converter system		52B-5
51, 52	Driver's air bag module (squib ignition drive circuit) system		52B-5
54, 55	Front passenger's air bag module (squib ignition drive circuit) system		52B-5

NOTE
1. *: If the vehicle condition returns to normal, the diagnosis code is automatically erased, and the SRS warning lamp turns off.
2. If the vehicle has a discharged battery, it stores the fault code 41 or 42. When either is displayed, check the battery.

INSPECTION PROCEDURE CLASSIFIED BY DIAGNOSIS CODE

Code No.11, 12 or 13 Front impact sensor system	Probable cause
These diagnostic trouble codes are output if there is abnormal resistance between the input terminals of the front impact sensors. The trouble causes for each diagnosis code No. are as follows.	• Malfunction of front impact sensors • Malfunction of wiring harness of connectors • Malfunction of SRS-ECU

Code No.	Trouble
11	• Short circuit in front impact sensors or harness • Short circuit in front impact sensors harness leading to the vehicle body ground • Short circuit in front impact sensors harness leading to the power supply
12	• Open circuit in either left or right front impact sensors or harness • Short circuit in front impact sensors harness leading to the power supply
13	• Open circuit in both left and right front impact sensors or harness • Short circuit in front impact sensors harness leading to the power supply

Check the front impact sensors.
- NG → **Replace**
- OK ↓

Measure at SRS check harness connector (5).
- Disconnect SRS-ECU connector C-27.
- Connect SRS check harness connector 3.
- Resistance between terminals (12) and (17).
  OK: 2,000 ± 40 Ω
- Resistance between terminals (18) and (19).
  OK: 2,000 ± 40 Ω

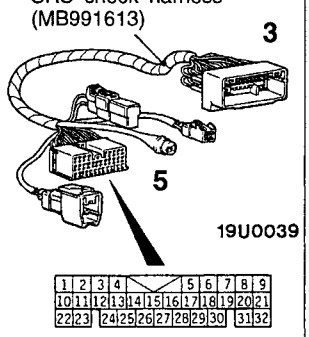

- NG → **Check the following connectors:** A-29, C-20, C-27
  - NG → **Repair**
  - OK ↓
  - **Check trouble symptom.**
    - NG ↓
    - Check the harness wire between the SRS-ECU and front impact sensors, and repair if necessary.
- OK ↓

Replace the SRS-ECU.

Code No.14, 15, 16, 31, 32, 45, 51, 52, 54, 55 System inside SRS-ECU	Probable cause
These diagnostic trouble codes are displayed when a fault is detected in the SRS-ECU. The trouble causes for each diagnosis code No. are as follows.	• Malfunction of SRS-ECU

Code No.	Defective part	Trouble
14	Analog G-sensor	• When the analog G-sensor is not operating • When the characteristics of the analog G-sensor are abnormal • When the output from the analog G-sensor is abnormal
15	Safing G-sensor	• Short circuit in the safing G-sensor
16		• Open circuit in the safing G-sensor
31	Capacitor	• Voltage at the capacitor terminal is higher than the specified value for five seconds or more
32		• Voltage at the capacitor terminal is lower than the specified value for five seconds or more (this is not detected if diagnostic trouble code No.41 or 42 indicating battery voltage drop has been output.)
45	Non-volatile memory (EE-PROM) and A/D converter	• When the non-volatile memory (EEPROM) and A/D converter system are abnormal
51	Driver's air bag module (squib ignition drive circuit)	• Short circuit in the squib ignition drive circuit
52		• Open circuit in the squib ignition drive circuit
54	Front passenger's air bag module (squib ignition drive circuit)	• Short circuit in the squib ignition drive circuit
55		• Open circuit in the squib ignition drive circuit

Replace the SRS-ECU.

Code No.21, 22, 61 or 62 Driver's air bag module (squib) system	Probable cause
These diagnosis codes are displayed if there is abnormal resistance between the input terminals of the driver's air bag module (squib). The trouble causes for each diagnosis code No. are as follows.	• Malfunction of clock spring • Malfunction of wiring harnesses or connectors • Malfunction of driver's air bag module (squib) • Malfunction of SRS-ECU

Code No.	Trouble
21	• Short in driver's air bag module (squib) or harness short • Short in clock spring
22	• Open circuit in driver's air bag module (squib) or open harness • Open circuit in clock spring • Poor connector contact
61	• Short in driver's air bag module (squib) harness leading to the power supply
62	• Short in driver's air bag module (squib) harness leading to the earth

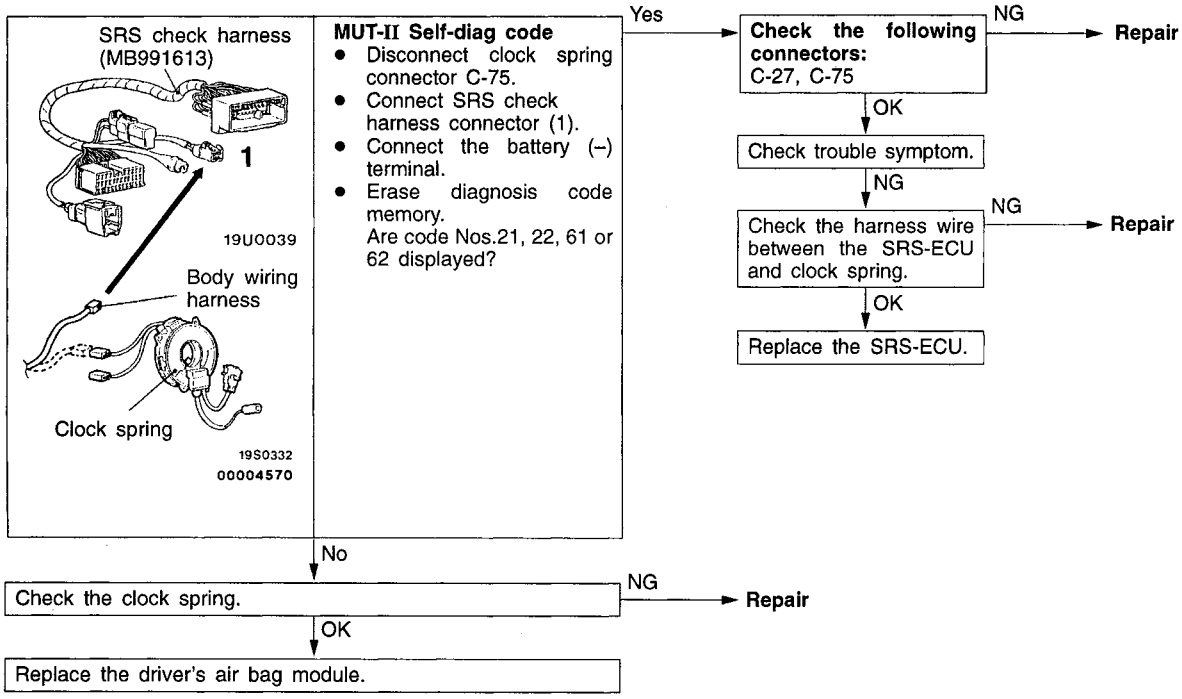

Code No.24, 25, 64 or 65 Front passenger's side air bag module (squib) system	Probable cause
These diagnosis codes are displayed if there is abnormal resistance between the input terminals of the driver's air bag module (squib). The trouble causes for each diagnosis code No. are as follows.	• Malfunction of wiring harnesses or connectors • Malfunction of front passenger's side air bag module (squib) • Malfunction of SRS-ECU

Code No.	Trouble
24	• Short circuit in front passenger's air bag module (squib) or harness short
25	• Open circuit in front passenger's air bag module (squib) or open harness • Poor connector contact
64	• Short circuit in front passenger's air bag module (squib) harness leading to the power supply
65	• Short circuit in front passenger's air bag module (squib) harness leading to the earth

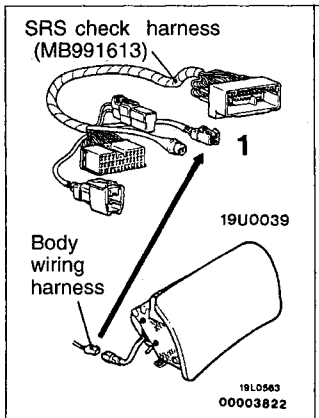

MUT-II Self-diag code
- Disconnect front passenger's side air bag module connector C-100.
- Connect SRS check harness connector (1).
- Connect the battery (–) terminal.
- Erase diagnosis code memory.

Are code Nos.24, 25, 64 or 65 displayed?

Yes → **Check the following connectors:** C-27, C-100 → NG → **Repair**

OK → Check trouble symptom.

NG → Check the harness wire between the front passenger's air bag module (squib) and SRS-ECU. → NG → **Repair**

OK → Replace the SRS-ECU.

No → Replace the front passenger's air bag module.

Code No.34 Connector lock system	Probable cause
This diagnosis code is displayed if a poor connection of the SRS-ECU is detected. However, if the vehicle condition returns to normal, diagnosis code No.34 will be automatically erased, and the SRS warning lamp will switch off.	• Malfunction of connectors • Malfunction of SRS-ECU

Check the following connector: C-27 → NG → **Repair**

OK → Replace the SRS-ECU.

Code No.35 SRS-ECU (deployed air bag) system	Probable cause
This diagnosis code is displayed after the air bag deploys. If this code is output before the air bag has deployed, the cause is probably a malfunction inside the SRS-ECU.	• Malfunction of SRS-ECU

Replace the SRS-ECU.

Code No.41 Power circuit system (fuse No.10 circuit) Code No.42 Power circuit system (fuse No.11 circuit)	Probable cause
Code No.41 is displayed if the voltage between the IG_1 terminal (SRS-ECU, terminal 14) and the earth is lower than the specifited value for a continuous period of five seconds or more. Code No.42 is displayed if the voltage between the IG_1 terminal (SRS-ECU, terminal 13) and the earth is lower than the specified value for a continuous period of five seconds or more. Automatically erased, and the SRS warning lamp will switch off. If the vehicle has a discharged battery it will store the fault codes 41 and 42. When these diagnosis codes are displayed, check the battery.	• Malfunction of wiring harness or connectors • Malfunction of SRS-ECU

SRS check harness (MB991613)

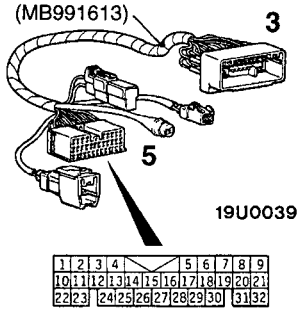

Measure at SRS check harness connector (5).
- Disconnect SRS-ECU connector C-27.
- Connect SRS check harness connector (3).
- Continuity between terminal (20) and (21)
  OK: Continuity

NG → **Check the following connectors:** C-27, C-86 → NG → **Repair**

OK → Check trouble symptom.

NG → Check the harness wire between the SRS-ECU and earth, and repair if necessary.

OK ↓

Measure at SRS check harness connector (5).
- Disconnect SRS-ECU connector C-27.
- Connect SRS check harness connector (3).
- Connect the battery (–) terminal.
- Ignition switch: ON
- Voltage between terminal (14) and body earth <code No.41>
  OK: 9V or more
- Voltage between terminal (13) and body earth <code No.42>
  OK: 9V or more

NG → **Check the following connectors:** C-27, C-86, C-87, C-88 → NG → **Repair**

OK → Check trouble symptom.

NG → Check the harness wire between the SRS-ECU and ignition switch IG_1, and repair if necessary.

OK ↓

Replace the SRS-ECU.

Code No.43 SRS warning lamp drive circuit system (Lamp does not illuminate.)	Probable cause
This diagnosis code is displayed when an open circuit occurs for a continuous period of 5 seconds while the SRS-ECU in monitoring the SRS warning lamp and the lamp is OFF (transistor OFF). However, if this code is displayed due to an open circuit, if the vehicle condition returns to normal, this diagnosis code No.43 will be automatically erased, and the SRS warning lamp will return to normal.	• Malfunction of wiring harnesses or connectors • Blown bulb • Malfunction of SRS-ECU • Malfunction of combination meter

SRS check harness (MB991613)

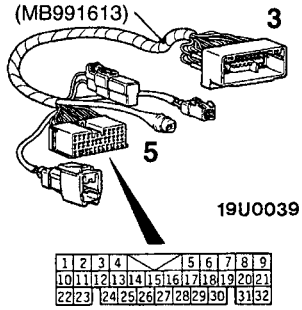

Measure at SRS check harness connector (5).
- Disconnect SRS-ECU connector C-27.
- Connect SRS check harness connector (3).
- Continuity between terminal (20) and (21)
  OK: Continuity

NG → **Check the following connectors:** C-27, C-86 → NG → **Repair**

OK → Check trouble symptom.

NG → Check the harness wire between the SRS-ECU and earth, and repair if necessary.

OK ↓

Measure at SRS check harness connector (5).
- Disconnect SRS-ECU connector C-27.
- Connect SRS check harness connector (3).
- Connect the battery (–) terminal.
- Ignition switch: ON
- Connect terminal (15) to the body earth.
  OK: Lamp illuminates

NG → Check the bulb for blowing. → NG → **Repair**

OK → **Check the following connectors:** C-06, C-79, C-88 → NG → **Repair**

OK → Check trouble symptom.

NG → Check the harness wire between the SRS-ECU and ignition switch (IG_1). → NG → **Repair**

OK → Replace the combination meter.

OK → Replace the SRS-ECU.

Code No.43 SRS warning lamp drive circuit system (Lamp does not switch off.)	Probable cause
This diagnosis code is displayed when a short to earth occurs in the harness between the lamp and the SRS-ECU while SRS-ECU is monitoring the SRS warning lamp and the lamp is ON.	• Malfunction of wiring harnesses or connectors • Malfunction of SRS-ECU • Malfunction of combination meter

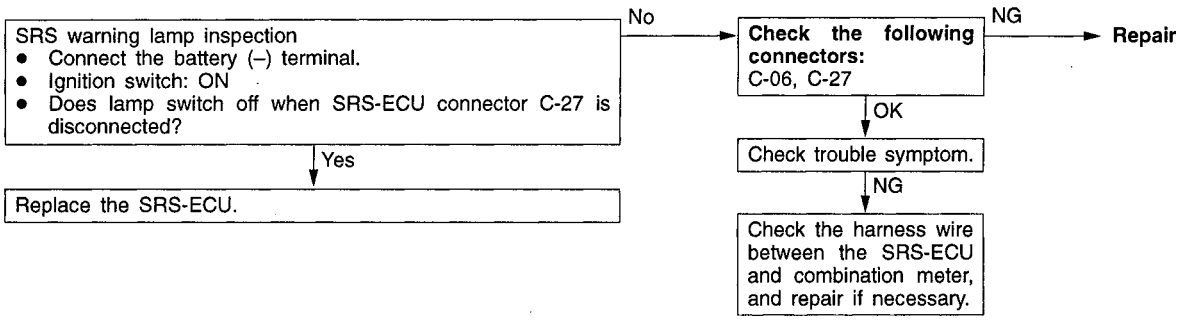

Code No.44 SRS warning lamp drive circuit system	Probable cause
This diagnosis code is displayed when a short occurs in the lamp drive circuit or a malfunction of the output transistor inside the SRS-ECU is detected while the SRS-ECU is monitoring the SRS warning lamp drive circuit.	• Malfunction of wiring harnesses or connectors • Malfunction of SRS-ECU

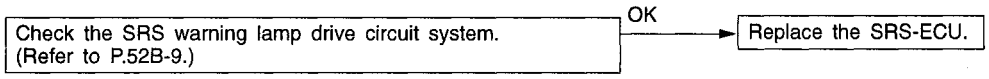

POST-COLLISION DIAGNOSIS

To inspect and service the SRS after a collision (whether or not the air bags have deployed), perform the following steps.

SRS DIAGNOSIS UNIT MEMORY CHECK

1. Connect the MUT-II to the diagnosis connector (16-pin).

   Caution
   Turn off the ignition switch before connecting and disconnecting the MUT-II.

2. Read (and write down) all displayed diagnosis codes. (Refer to P. 52B-3.)

   NOTE
   If the battery power supply has been shut by the collision, the MUT-II cannot communicate with the SRS diagnosis unit. Inspect and, if necessary, repair the body wiring harness before proceeding further.

3. Read the data list (fault duration and how many times memories are erased) using the MUT-II.

Data list

No.	Service Data Item	Applicability
91	How long a problem has lasted	Maximum time to be stored: 9999 minutes (approximately 7 days)
92	Number indicating how often the memory is cleared	Maximum time to be stored: 250

4. Erase the diagnosis codes and after waiting 5 seconds or more read (and write down) all displayed diagnosis codes. (Refer to P.52B-3.)

REPAIR PROCEDURE

WHEN AIR BAGS DEPLOY IN COLLISION

1. Replace the following parts with new ones.
   - SRS–ECU (Refer to P.52B-14.)
   - Air bag modules (driver's and front passenger's sides) (Refer to P.52B-15.)
   - Front impact sensors

2. Check the following parts and replace if malfunction is present.
   - Clock spring
   - Steering wheel, steering column and intermediate joint
     (1) Check the wiring harness (built into steering wheel) and connectors for damage, and terminals for deformation.
     (2) Install the air bag module (driver's side) to check fit or alignment with the steering wheel.
     (3) Check the steering wheel for noise, binds or difficult operation and excessive free play.
3. Check the harnesses for binding, the connectors for damage and poor connection, and the terminals for deformation.
   (Refer to P.52B-1.)

WHEN AIR BAGS DO NOT DEPLOY IN LOW-SPEED COLLISION

Check the SRS components. If the SRS components are showing any visible damage such as dents, cracks, or deformation, replace them with new ones. Concerning parts removed for inspection, replacement with new parts and cautionary points for working, refer to appropriate INDIVIDUAL COMPONENT SERVICE, P.52B-13.

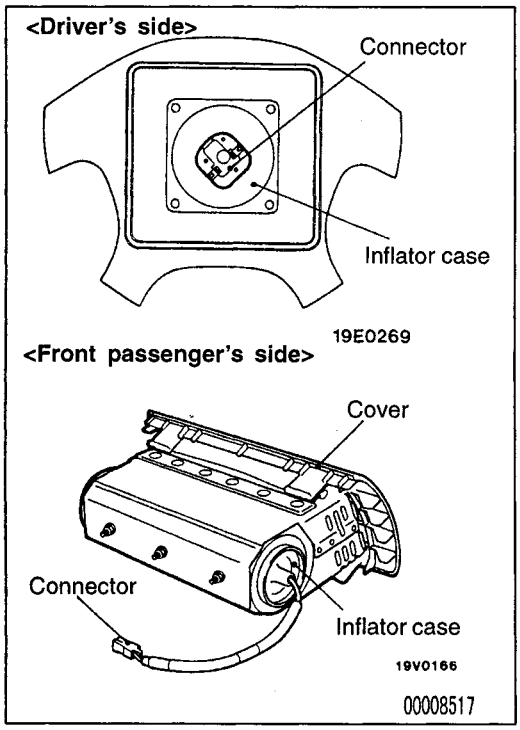

Air bag modules

1. Check the pad cover for dents, cracks or deformation.
2. Check the connector for damage, the terminals for deformation, and the harness for binds.
3. Check the air bag inflator case for dents, cracks and deformation.
4. Install the air bag module to the steering wheel to check fit or alignment with the steering wheel.

INDIVIDUAL COMPONENT SERVICE

If the SRS components are to be removed or replaced as a result of maintenance, troubleshooting, and so on, follow each procedure (P.52B-14 – P.52B-18.)

Caution

1. **Do not expose the SRS components to heat over 93°C, so remove the SRS diagnosis unit, air bag modules, clock spring and front impact sensors before drying or baking the vehicle after painting.**
2. **If the SRS components are removed for the purpose of check, sheet metal repair, painting, and so on, store them in a clean, dry place until they are reinstalled.**

WARNING/CAUTION LABELS

Caution labels relating to the SRS are found in the vehicle, as shown below. Follow label instructions when servicing SRS. If the labels are dirty or damaged, replace them with new ones.

Steering wheel

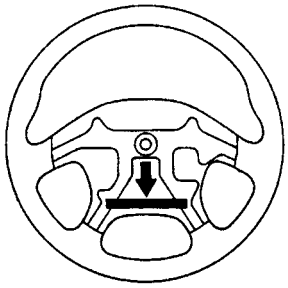

19E0267

Air bag module (driver's side)

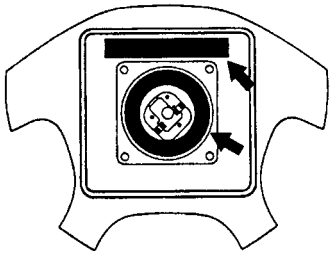

19E0268

Air bag module (front passenger's side)

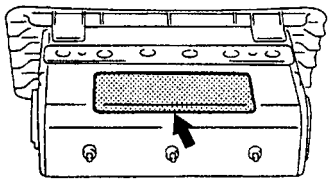

19V0127

Sun visor

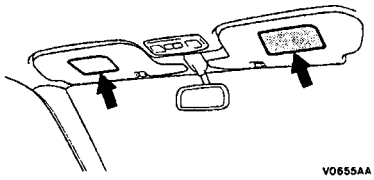

V0655AA

Instrument panel

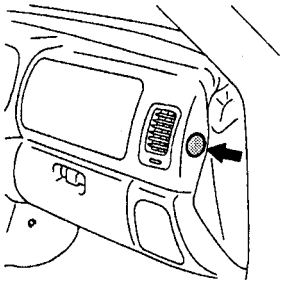

V0656AA

00008516

SRS AIR BAG CONTROL UNIT (SRS-ECU)

Caution

1. **Disconnect the negative battery terminal and wait at least 60 seconds before any further work. Also, wind the disconnected terminal with insulating tape. (Refer to P.52B-1.)**
2. **Never disassemble or repair the SRS-ECU. If faulty, replace.**
3. **Do not drop or subject the SRS-ECU to impact or vibration. If dents, cracks, deformation, or rust are discovered in the SRS-ECU, replace it with a new SRS-ECU. Discard the old one.**
4. **After deployment of the air bags, replace the SRS-ECU with a new one.**
5. **Never use an ohmmeter on or near the SRS-ECU. Use only the special test equipment described on the basic manual.**

REMOVAL AND INSTALLATION

Pre-removal Operation
- Turn the ignition key to "LOCK".
- Floor Console Removal

Post-installation Operation
- Floor Console Installation

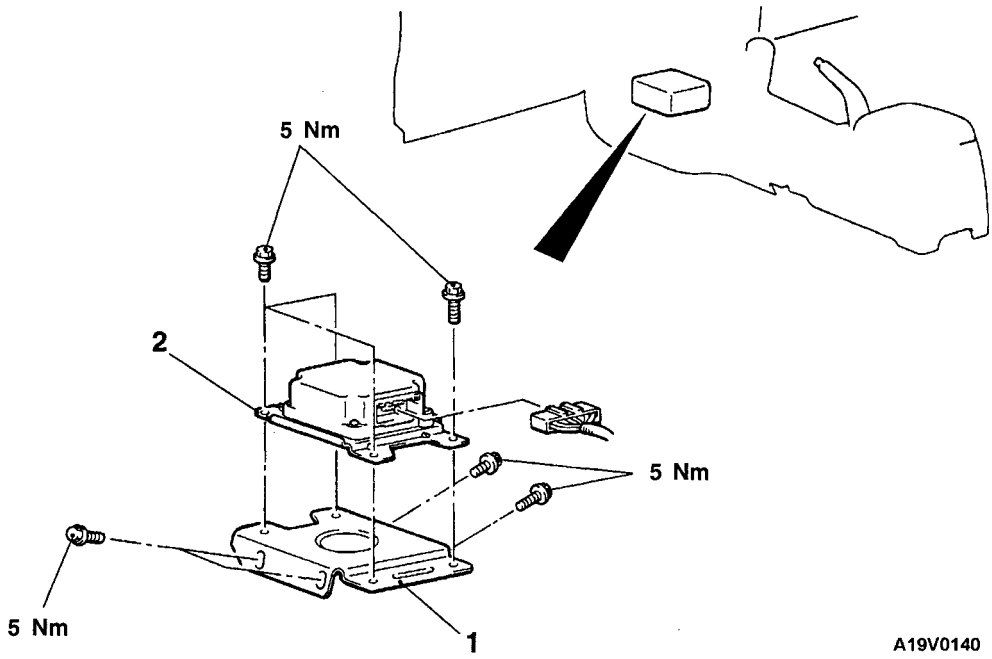

Removal steps

▶B◀ • Post-installation inspection
• Negative battery cable connection
1. SRS-ECU bracket

▶A◀ 2. SRS-ECU

INSTALLATION SERVICE POINTS

▶A◀ SRS-ECU INSTALLATION

Caution
The SRS may not activate if SRS-ECU is not installed properly, which could result in serious injury or death to the vehicle's driver or front passenger.

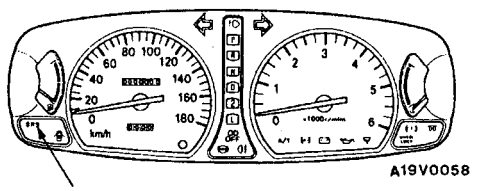

▶B◀ POST-INSTALLATION INSPECTION

1. Reconnect the negative battery terminal.
2. Turn the ignition key to "ON".
3. Does the "SRS warning lamp" illuminate for about 7 seconds, and then remain extinguished for at least 5 seconds after turning the ignition switch off?
4. If yes, SRS system is functioning properly.
   If no, go to P.52B-3.

INSPECTION

- Check the SRS-ECU and brackets for dents, cracks or deformation.
- Check the connector for damage, and the terminals for deformation.

Caution
If dents, cracks, deformation or rust are discovered, replace the SRS-ECU with a new one.

NOTE
For checking of the SRS-ECU other than described above, refer to the section concerning troubleshooting. (Refer to P.52B-3.)

AIR BAG MODULES

Caution

1. **Disconnect the negative battery terminal and wait at least 60 seconds before any further work. Also, wind the disconnected terminal with insulating tape. (Refer to P.52B-1)**
2. **Never disassemble or repair the air bag modules.**
   If faulty, replace.
3. **Do not drop the air bag modules or allow contact with water, grease or oil.**
   Replace if dents, cracks, deformation or rust are detected.
4. **Store the air bag modules on a flat surface with the pad covers upwards.**
   Do not place anything on top of them.
5. **Do not expose the air bag modules to heat over 93°C.**
6. **After deployment of the air bags, replace the air bag modules.**
7. **Wear gloves and safety glasses when handling the deployed air bags.**
8. **Dispose of undeployed air bag modules in accordance with the procedures (Refer to P.52B-19.)**

REMOVAL AND INSTALLATION

<Air bag module (driver's side)>

Pre-removal Operation
- After setting the steering wheel and the front wheels to the straight ahead position, removal the ignition key.

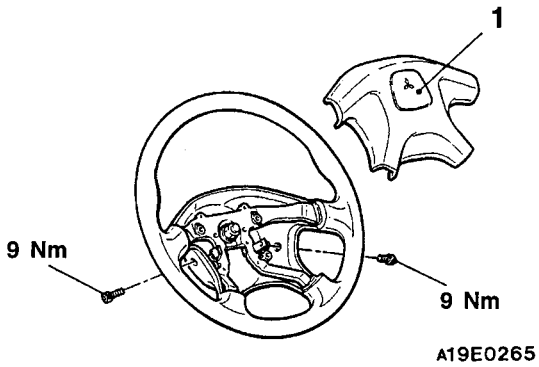

Air bag module removal steps

▶C◀ • Post-installation inspection
• Negative battery cable connection

◀A▶ 1. Air bag module

▶A◀ • Pre-installation inspection

<Air bag module (front passenger's side)>

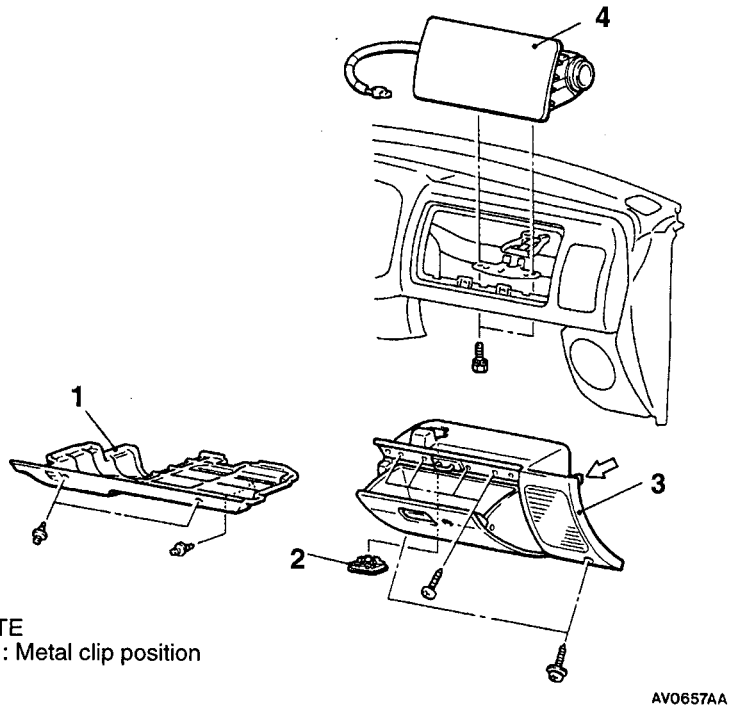

NOTE
⇦ : Metal clip position

Air bag module removal steps

▶C◀ • Post-installation inspection
• Negative battery cable connection
1. Under cover

▶B◀ 2. Connector plug
3. Glove box assembly

◀B▶ 4. Air bag module

▶A◀ • Pre-installation inspection

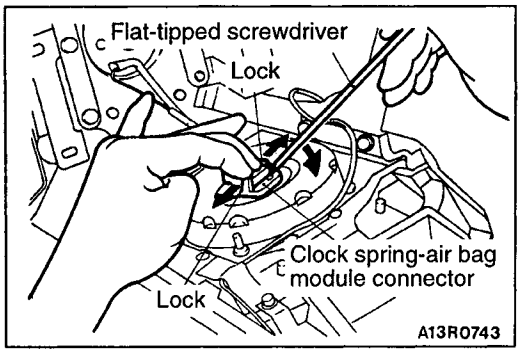

REMOVAL SERVICE POINTS

◀A▶ AIR BAG MODULE REMOVAL (DRIVER'S SIDE)

When disconnecting the clock spring-air bag module connector, push the air bag lock outwards to spread. Then, pry out the connector gently, using a flat-tipped screwdriver, as shown.

Caution

(1) When disconnecting the clock spring - air bag module connector, take care not to apply excessive force.

(2) Store the air bag module in a flat surface with the pad cover upwards.

◀B▶ AIR BAG MODULE REMOVAL (FRONT PASSENGER'S SIDE)

Caution

Store the air bag module in a flat surface with the pad cover upwards.

INSTALLATION SERVICE POINTS

▶A◀ PRE-INSTALLATION INSPECTION

1. When installing new air bag modules and clock spring, refer to "INSPECTION".

   Caution

   Dispose of the old air bag modules only according to the specified procedure. (Refer to P.52B-19.)

2. Connect the negative battery terminal.
3. Connect the MUT-II to the diagnosis connector.

   Caution

   Make certain that the ignition switch is off when the MUT-II is connected and disconnected.

4. Turn the ignition key "ON".
5. Conduct self-diagnosis using the MUT-II to ensure the entire SRS operates properly, except open circuit of the air bag modules.
6. Turn the ignition key to "LOCK", then disconnect the negative battery cable. Wind the terminal with insulating tape.

   Caution

   Wait at least 60 seconds after disconnecting the battery cable before doing any further work. (Refer to P.52B-1.)

▶B◀CONNECTOR PLUG INSTALLATION

Install the combined connectors of passenger's air bag module and the body wiring harness behind the connector plug. Then, install the connector plug to the glove box assembly.

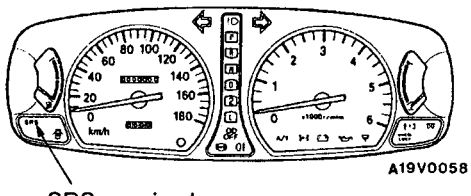

▶C◀ POST-INSTALLATION INSPECTION

1. Reconnect the negative battery terminal.
2. Turn the ignition key "ON".
3. Does the "SRS warning lamp" illuminate for about 7 seconds, and then remain extinguished for at least 5 seconds after turning the ignition switch off?
4. If yes, the SRS is functioning properly.
   If no, go to P.52B-3.

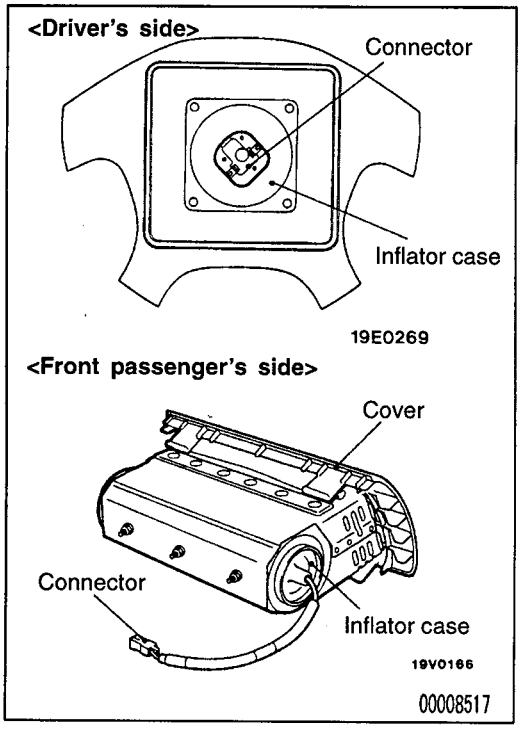

INSPECTION

AIR BAG MODULE CHECK

If any improper part is found during the following inspection, replace the air bag modules with a new one.
Dispose the old one according to the specified procedure. (Refer to P.52B-19.)

Caution
Never attempt to measure circuit resistance of the air bag modules (squib) even if you are using the specified tester. If the circuit resistance is measured with a tester, accidental air bag deployment will result in serious personal injury.

1. Check the pad cover for dents, cracks or deformation.
2. Check the connectors for damage, the terminals for deformation, and the harness for binds.
3. Check the air bag inflator case for dents, cracks or deformation.
4. Install the air bag module (driver's side) to steering wheel to check fit or alignment with the steering wheel.
5. Install the air bag module (front passenger's side) to the instrument panel and crossmember. Then, check fit and alignment.
6. Install the air bag module cover (front passenger's side) to the instrument panel to check fit and alignment.

Caution
If dents, cracks, deformation, or rust are discovered in the air bag module, replace it with a new one.
Dispose of the old one according to the specified procedures. (Refer to P.52B-19.)

AIR BAG MODULE (FRONT PASSENGER'S SIDE) DISPOSAL PROCEDURES

Before disposing of the air bag or the vehicle equipped with it, follow these procedures below to deploy the air bag.

UNDEPLOYED AIR BAG MODULE (FRONT PASSENGER'S SIDE) DISPOSAL

Caution

1. **If the vehicle is to be scrapped or otherwise disposed of, deploy the air bags inside the vehicle. If the vehicle is used and only the air bag modules is disposed of, deploy the air bags outside the vehicle.**
2. **Since a large amount of smoke is produced when the air bag is deployed, avoid residential areas whenever possible.**
3. **Since there is loud noise when the air bags are deployed, avoid residential areas whenever possible. If anyone is nearby, give warning of the impending noise.**
4. **Personnel performing these procedures or nearby people must wear ear plugs.**

DEPLOYMENT INSIDE THE VEHICLE

(when disposing of a vehicle)

1. Open all windows and doors of the vehicle. Move the vehicle to an isolated spot.
2. Disconnect the negative and positive battery cables from the battery terminals, and then remove the battery from the vehicle.

   Caution
   Wait at least 60 seconds after disconnecting the battery cables before doing any further work.
   (Refer to P.52B-1.)

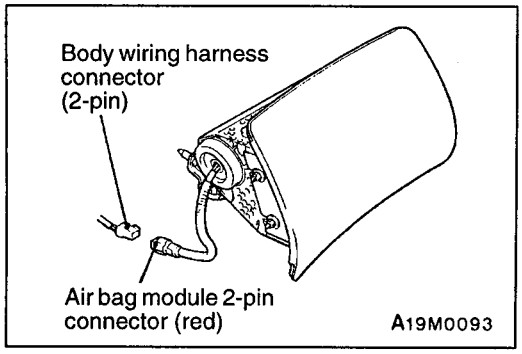

3. To deploy the air bag module:
   (1) Remove the glove box. (Refer to P.52B-16.)
   (2) Remove the connection between the air bag module connector (red 2-pin) and the body wiring harness connector.

   NOTE
   If the air bag module connector is disconnected from the body wiring harness, both electrodes of the air bag module connector is automatically shorted to prevent unintended deployment of the air bag due to static electricity, and so on.

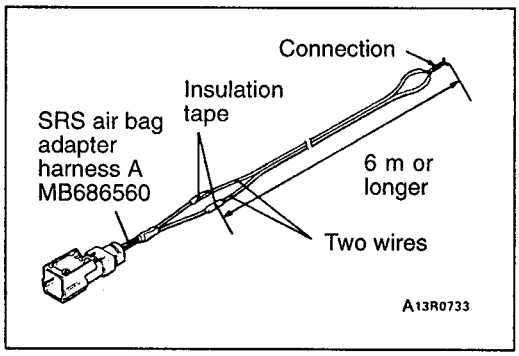

4. Connect two wires, each six meters or longer, to the two leads of SRS air bag adapter harness A and cover the connections with insulation tape. Connect the other ends of the two wires to each other (short-circuited), to prevent sudden unexpected deployment of the air bag.

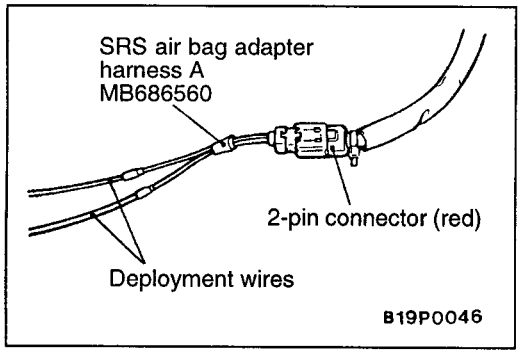

5. Connect the air bag module 2-pin connector (red) to SRS air bag adapter harness A and pass the deployment wires out of the vehicle.

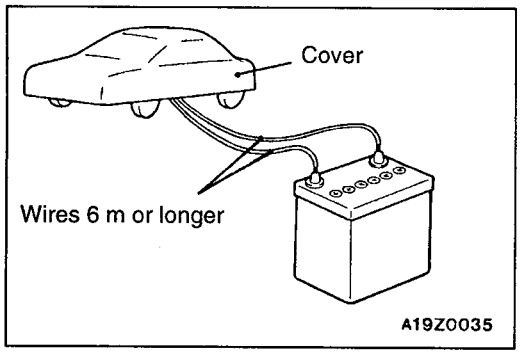

6. Close all the doors with the windows closed and place a cover over the vehicle to minimize the amount of noise.

   Caution
   If the glass is damaged, it may break. So, the car must be covered.

7. At a location as far away from the vehicle as possible, disconnect the two connected wires from each other, and connect them to the two terminals of the battery (which has been removed from the vehicle) to deploy the air bag.

   Caution
   1. **Before deploying the air bag in this manner, first check that no one is in or near the vehicle. Wear safety glasses.**
   2. **The inflator will be quite hot immediately following the deployment, so wait at least 30 minutes to allow it to cool before attempting to handle it. Although not poisonous, do not inhale gas from air bag deployment. See Deployed Air Bag Module Disposal Procedures (P.52B-23) for post-deployment handling instructions.**

3. **If the air bag module fails to deploy when the procedures above are followed, do not go near the module. Contact your local distributor.**

8. After deployment, dispose of the air bag module according to the Deployed Air Bag Module (Front Passenger's Side) Disposal Procedures. (Refer to P.52B-23.)

DEPLOYMENT OUTSIDE THE VEHICLE

Caution

1. **This must be carried out in a wide, flat area at least 6 m away from obstacles and other people.**
2. **Do not deploy the air bag outside if a strong wind is blowing. Even in a slight breeze, deploy the air bag module downwind from the battery.**

1. Disconnect the negative and positive battery cables from the battery terminals, and then remove the battery from the vehicle.

   Caution
   Wait at least 60 seconds after disconnecting the battery cables before doing any further work. (Refer to P.52B-1.).

2. Remove the air bag module from the vehicle. (Refer to P.52B-16.)

   Caution
   Store the air bag module on a flat surface with the pad cover upwards. Do not place anything on it.

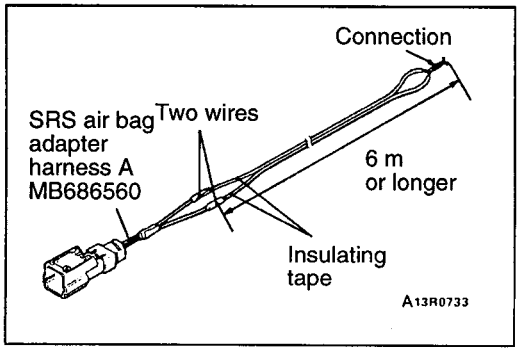

3. Connect two wires, each six meters or longer, to the two leads of SRS air bag adapter harness A, and cover the connection with insulating tape. Connect the other ends of the two wires to each other (short-circuited), to prevent sudden unexpected deployment of the air bag module.

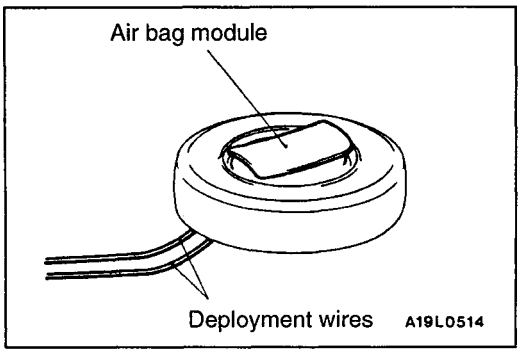

4. Set the air bag module as follow:
   (1) Connect the deployment wires to the SRS air bag adaptor harness A, pass it beneath the tyre, and wheel assembly, and connect it to the air bag module.
   (2) Pass the thick wires into the hole of the air bag module bracket, and secure it to the wheel of the old tyre with wheel (4 locations), with the air bag facing upwards.

   Caution
   1) Leave some space below the wheel for the deployment wires.
   If there is no space, the reaction of the air bag deployment could result in damage of the adaptor harness.
   2) Position the connector of the SRS air bag adapter harness A so as not to be caught under the tyre while deployment takes place.

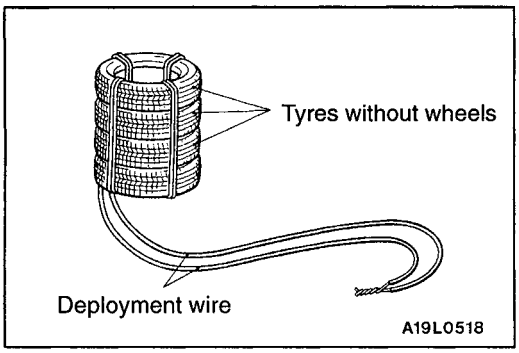

   (3) Place three old tyres, without wheels, onto the wheel secured to the air bag module, and secure all the tyres with ropes (4 locations).

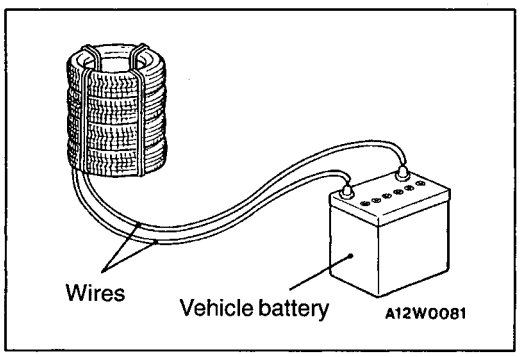

5. At a location as far away from the air bag module as possible, and from a shielded position, disconnect the two connected wires from each other, and connect them to the two terminals of the battery (which has been removed from the vehicle) to deploy the air bag.

   Caution
   (1) Before deployment, check that no one is nearby.
   (2) The inflator will be quite hot immediately following the deployment, so wait at least 30 minutes to allow it to cool before attempting to handle it. Although not poisonous, do not inhale gas from air bag deployment. See Deployed Air Bag Module (Front passenger's side) Disposal Procedures (P.52B-23) for post-deployment handling instructions.

(3) If the air bag fails to deploy when the procedures above are followed, do not go near the module. Contact your local distributor.

6. After deployment, dispose of the air bag module according to the Deployed Air Bag Module Disposal Procedures.

DEPLOYED AIR BAG MODULE (FRONT PASSENGER'S SIDE) DISPOSAL PROCEDURES

After deployment, dispose of the air bag module in the same manner as any other scrap parts, adhering to local laws and/or legislation that may be in force except that the following points should be carefully noted during disposal.

1. The inflator will be quite hot immediately following deployment, so wait at least 30 minutes to allow it cool before attempting to handle it.
2. Do not put water or oil on the air bag after deployment.
3. There may be, adhered to the deployed air bag module, material that could irritate the eye and/or skin, so wear gloves and safety glasses when handling a deployed air bag module. IF AFTER FOLLOWING THESE PRECAUTIONS, ANY MATERIAL DOES GET INTO THE EYES OR ON THE SKIN, IMMEDIATELY RINSE THE AFFECTED AREA WITH A LARGE AMOUNT OF CLEAN WATER.
   IF ANY IRRITATION DEVELOPS, SEEK MEDICAL ATTENTION.

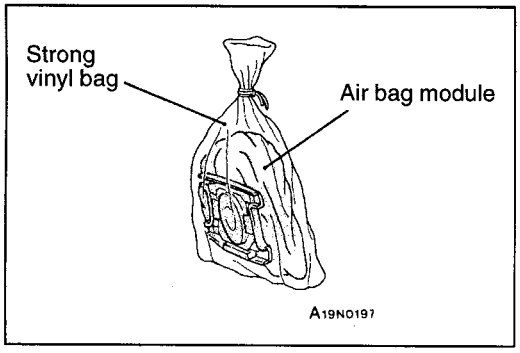

4. Tightly seal the air bag module in a strong vinyl bag for disposal.
5. Be sure to always wash your hands after completing this operation.

SERVICE BULLETIN

MITSUBISHI MOTORS

PRODUCTION GROUP, AFTER SALES SERVICE DEP.
MITSUBISHI MOTOR SALES EUROPE BV

SERVICE BULLETIN	**No.:** ESB-97E52-502	
	Date: 1997-09-26	

		<Model>	**<M/Y>**
Subject:	CORRECTION TO CAUTION ON AIR BAG MODULE AND CLOCK SPRING	(EC,EXP) ECLIPSE (D30)	96-10
Group:	SUPPLEMENTAL RESTRAIN	(EC,EXP) L2000 (K60, K70)	96-10
CORRECTION	O. Kai - E.V.P. & G.M. After Sales Service Dept.	(EC,EXP) CARISMA	96-10

1. Description:

This Service Bulletin informs you that caution on air bag module and clock spring has been corrected.

2. Applicable Manuals:

Manual	Pub. No.	Language	Page(s)
'96 CARISMA Workshop Manual chassis	PWDE9502	(English)	52B-22
	PWDS9503	(Spanish)	
	PWDF9504	(French)	
	PWDG9505	(German)	
	PWDD9506	(Dutch)	
	PWDW9507	(Swedish)	
	PWDI96E1	(Italian)	
'96 ECLIPSE Workshop Manual chassis	PWUE95E1	(English)	52B-24
	PWUS95E1	(Spanish)	
	PWUF95E1	(French)	
	PWUG95E1	(German)	
	PWUD95E1	(Dutch)	52B-25
	PWUI95E1	(Italian)	
'97 L200 Workshop Manual chassis	PWTE96E1	(English)	52B-28
	PWTS96E1	(Spanish)	
	PWTF96E1	(French)	
	PWTG96E1	(German)	

3. Details:

'96 CARISMA Workshop Manual chassis, Page 52B-22
'96 ECLIPSE Workshop Manual chassis, Page 52B-24
'97 L200 Workshop Manual, Page 52B-28

INSPECTION

52400220031

- Check the SRS-ECU and brackets for dents, cracks or deformation.
- Check connectors and lock lever for damage, and terminals for deformation

Caution
If a dent, crack, deformation or rust is discovered, replace the SRS-ECU with a new one.

NOTE
For checking of the SRS-ECU other than described above, refer to the section concerning troubleshooting. (Refer to P.52B-5.)

AIR BAG MODULES AND CLOCK SPRING

52400240044

Caution

1. **Disconnect the battery (-) terminal and wait for 60 seconds or more before starting work. Furthermore, the disconnected battery terminal should be covered with tape to insulate it. (Refer to P.52B-3)**
2. **Never attempt to disassemble or repair the air bag modules or clock spring.**
   If faulty, replace it.
3. **do not drop the air bag modules or clock spring or allow contact with water, grease or oil.**
   Replace it if a dent, crack, deformation or rust is detected.
4. **The air bag modules should be stored on a flat surface and placed so that the pad surface is facing upward.**
   Do not place anything on top of it.
5. **Do not expose the air bag modules to temperatures over 93° C.**
6. ~~**After deployment of an air bag, replace the clock spring with a new one.**~~
7. **Wear gloves and safety glasses when handling air bags that have already deployed.**
8. **An undeployed air bag module should only be disposed of in accordance with the procedures (Refer to P.52B-31.)**

<Correct>

After deployment of an air bag, replace the air bag modules. Check the clock spring, and if faulty, replace it with a new part.

AIR BAG MODULES AND CLOCK SPRING

52400230010

Caution

1. **Disconnect the negative battery cable from the battery and tape the terminal**

   Caution
   Wait at lest 60 seconds after disconnecting the battery cable before doing any further work. (Refer to P.52B-4.)

2. **Never attempt to disassemble or repair the air bag module or clock spring. If faulty, replace it.**
3. **Do not drop the air bag module or clock spring or allow contact with water, grease or oil. Replace it if a dent, cracks deformation or rust are detected.**
4. **The air bag modules should be stored on a flat surface and placed so that the pad surface is facing upward.**
   Do not place anything on top of the air bag modules.
5. **Do not expose the air bag module to temperature over 93° C.** **<Incorrect>**
6. ~~**After deployment of an air bag, replace the clock spring.**~~
7. **Wear gloves and safety goggles when handling an air bag that has deployed.**
8. **An undeployed air bag module should only be disposed of in accordance with the specified procedures. (Refer to P.52B-30)**

52400240105

After deployment of an air bag, replace the air bag modules. Check the clock spring, and if faulty, replace it with a new part.

<Correct>

REMOVAL AND INSTALLATION

<Air bag module (Driver's side), Clock spring>

Pre-removal Operation
Set the steering wheel and the front wheels to the straight ahead position, and then remove the ignition key.

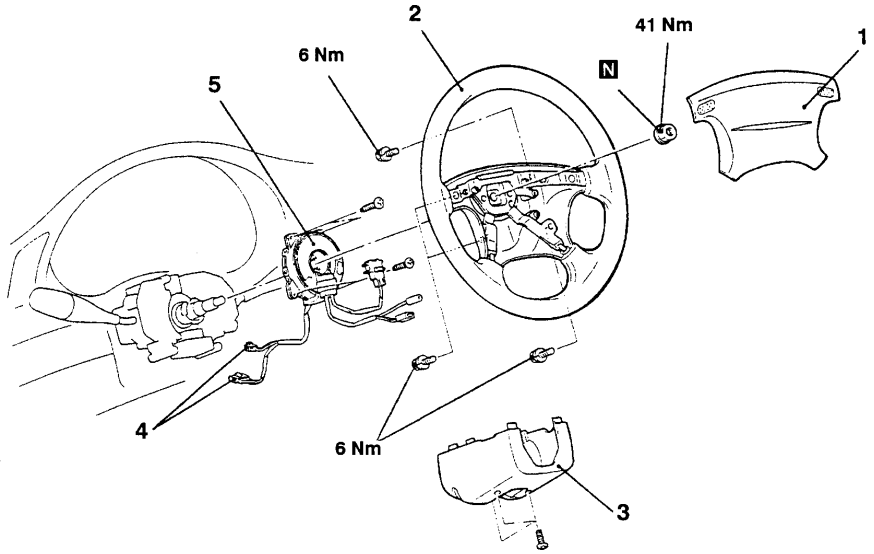

S19X0566

Clock spring removal steps

- ▶E◀ • Post-installation inspection
- • Negative (-) battery cable connection
- ◀A▶ ▶D◀ 1. Air bag module (Driver's side)
- ◀B▶ ▶C◀ 2. Steering wheel
- 3. Column cover lower
- 4. Clock spring and body wiring harness connection
- ▶B◀ 5. Clock spring
- ▶A◀ • Pre-installation inspection

Air bag module (Driver's side) removal steps

- ▶E◀ • Post-installation inspection
- • Negative (-) battery cable connection
- ▶D◀ 2. Air bag module (Driver's side)
- ▶A◀ • Pre-installation inspection

INSPECTION

52400220093

- Check the SDU and brackets for dents, cracks or deformation.
- Check connector for damage, and terminals for deformation

Caution
If a dent, crack, deformation or rust is discovered, replace the SDU with a new one.

NOTE
For checking of the SDU other than described above, refer to the section concerning troubleshooting. (Refer to P.52B-6.)

AIR BAG MODULES AND CLOCK SPRING

52400240143

Caution

1. **Disconnect the battery (-) terminal and wait for 60 seconds or more before starting work. Furthermore, the disconnected battery terminal should be covered with tape to insulate it. (Refer to P.52B-3)**
2. **Never attempt to disassemble or repair the air bag modules or clock spring.**
   If faulty, replace it.
3. **do not drop the air bag modules or clock spring or allow contact with water, grease or oil.**
4. **Replace it if a dent, crack, deformation or rust is detected.**
4. **The air bag modules should be stored on a flat surface and placed so that the pad surface is facing upward.**
   Do not place anything on top of it.
5. **Do not expose the air bag modules to temperatures over 93° C.**
6. **After deployment of an air bag, replace the clock spring with a new one.**
7. **Wear gloves and safety glasses when handling air bags that have already deployed.**
8. **An undeployed air bag module should only be disposed of in accordance with the procedures (Refer to P.52B-31.)**

<Incorrect>

After deployment of an air bag, replace the air bag modules. Check the clock spring, and if faulty, replace it with a new part.

<Correct>

SERVICE BULLETIN

MITSUBISHI MOTORS

QUALITY INFORMATION ANALYSIS
OVERSEAS SERVICE DEPT. MITSUBISHI MOTORS CORPORATION

SERVICE BULLETIN	**No.:** MSB-97E52-001		
	Date: 1997-04-30	**<Model>**	**<M/Y>**
Subject:	ADDITION OF SRS AIR BAG MAINTENANCE PROCEDURE	ALL MODELS	91-10
Group:	INTERIOR	**Draftno:** 96-AL-022	
INFORMATION	**OVERSEAS SERVICE DEPT**	R. USAMI - MANAGER QUALITY INFORMATION ANALYSIS	

1. Description:

In the SRS air bag troubleshooting, items of cause of trouble in the inspection procedure for each diagnostic trouble code, have been added.

2. Applicable Vehicles:

- '91~'10 SIGMA
- '92~'10 3000GT
- '91~'10 COLT/LANCER
- '93~'10 GALANT
- '92~'10 SPACE RUNNER/SPACE WAGON
- '95~'10 L400
- '91~'10 PAJERO/MONTERO
- '97~'10 L200

3. Applicable Manuals:

Manual	Pub. No.	Language	Page(s)
SIGMA Workshop Manual chassis	PWGE9004-G	(English)	52B-14
	PWGS9005-F	(Spanish)	
	PWGF9006-F	(French)	
	PWGG9007-F	(German)	
	PWGD9008-F	(Dutch)	
	PWGW900-F	(Swedish)	
3000GT Workshop Manual chassis	PWUE9119-D	(English)	52B-12
'97 3000GT Workshop Manual chassis Supplement	PWUE9119-F	(English)	52B-6
COLT/LANCER Workshop Manual chassis	PWME9117-D	(English)	52B-12
	PWMS9118-D	(Spanish)	
	PWMF9119-D	(French)	
	PWMG9120-D	(German)	
	PWMD9121-D	(Dutch)	
	PWMW9122-D	(Swedish)	

Manual	Pub. No.	Language	Page(s)
95'COLT/LANCER Workshop Manual chassis Supplement	PWME9117-E	(English)	52B-7
	PWMS9118-E	(Spanish)	
	PWMF9119-E	(French)	
	PWMG9120-E	(German)	
	PWMD9121-E	(Dutch)	
	PWMW9122-E	(Swedish)	
'97 COLT/LANCER Workshop Manual chassis Supplement	PWME9117-F	(English)	52B-5
	PWMS9118-F	(Spanish)	
	PWMF9119-F	(French)	
	PWMG9120-F	(German)	
	PWMD9121-F	(Dutch)	
	PWMW9122-F	(Swedish)	
'96 COLT/LANCER Workshop Manual chassis	PWME9511	(English)	52B-8
	PWMS9512	(Spanish)	
	PWMF9513	(French)	
	PWMG9514	(German)	
	PWMD9515	(Dutch)	
	PWMW9516	(Swedish)	
GALANT Workshop Manual chassis	PWDE9211-B	(English)	52B-13
	PWDS9212-B	(Spanish)	
	PWDF9213-B	(French)	
	PWDG9214-B	(German)	52B-11
	PWDD9215-B	(Dutch)	52B-13
	PWDW9216-B	(Swedish)	
'96 GALANT Workshop Manual chassis Supplement	PWDE9211-D	(English)	52B-7
	PWDS9212-D	(Spanish)	
	PWDF9213-D	(French)	
	PWDG9214-D	(German)	
	PWDD9215-D	(Dutch)	
	PWDW9216-D	(Swedish)	
SPACE RUNNER/SPACE WAGON Workshop Manual chassis	PWDE9104-D	(English)	52B-9
	PWDS9105-D	(Spanish)	
	PWDF9106-D	(French)	
	PWDG9107-D	(German)	
	PWDD9108-D	(Dutch)	
	PWDW9109-D	(Swedish)	
'95 SPACE RUNNER/SPACE WAGON Workshop Manual chassis Supplement	PWDE9104-E	(English)	52B-8
	PWDS9105-E	(Spanish)	
	PWDF9106-E	(French)	
	PWDG9107-E	(German)	
	PWDD9108-E	(Dutch)	
	PWDW9109-E	(Swedish)	

Manual	Pub.No.	Language	Page(s)
’97 SPACE RUNNER/SPACE WAGON Workshop Manual chassis Supplement	PWDE9104-G	(English)	52B-6
	PWDS9105-G	(Spanish)	
	PWDF9106-G	(French)	
	PWDG9107-G	(German)	
	PWDD9108-G	(Dutch)	
	PWDW9109-G	(Swedish)	
’95 L400 Workshop Manual chassis	PWWE9410	(English)	52B-9
	PWWS9411	(Spanish)	
	PWWG9412	(French)	
	PWWG9413	(German)	
	PWWD9415	(Dutch)	
	PWWW9416	(Swedish)	
’97 L400 Workshop Manual chassis Supplement	PWWE9410-B	(English)	52B-5
	PWWS9411-B	(Spanish)	
	PWWG9412-B	(French)	
	PWWG9413-B	(German)	
	PWWD9415-B	(Dutch)	
	PWWW9416-B	(Swedish)	
PAJERO Workshop Manual chassis	PWJE9086-F	(English)	52B-10
MONTERO Workshop Manual chassis	PWJS9087-F	(Spanish)	
PAJERO Workshop Manual chassis	PWJF9088-F	(French)	
	PWJG9089-F	(German)	
	PWJD9090-F	(Dutch)	
	PWJW9091-F	(Swedish)	
’96 PAJERO Workshop Manual chassis Supplement	PWJE9086-G	(English)	52B-10
’96 MONTERO Workshop Manual chassis Supplement	PWJS9087-G	(Spanish)	
’96 PAJERO Workshop Manual chassis Supplement	PWJF9088-G	(French)	
	PWJG9089-G	(German)	
	PWJD9090-G	(Dutch)	
	PWJW9091-G	(Swedish)	
’97PAJERO Workshop Manual chassis Supplement	PWJE9086-H	(English)	52B-6, 52B-7
’97 MONTERO Workshop Manual chassis Supplement	PWJS9087-H	(Spanish)	
’97 PAJERO Workshop Manual chassis Supplement	PWJF9088-H	(French)	
	PWJG9089-H	(German)	
	PWJD9090-H	(Dutch)	52B-7
	PWJW9091-H	(Swedish)	52B-6, 52B-7
’97 L200 Workshop Manual chassis	PWTE96E1	(English)	52B-8

4. Details:

- SIGMA Workshop Manual chassis, Page 5
- 3000GT Workshop Manual chassis, Page 6
- ’97 3000GT Workshop Manual chassis Supplement, Page 7
- COLT/LANCER Workshop Manual chassis, Page 8
- 95’COLT/LANCER Workshop Manual chassis Supplement, Page 9
- ’97 COLT/LANCER Workshop Manual chassis Supplement, Page 10
- ’96 COLT/LANCER Workshop Manual chassis Supplement, Page 11
- GALANT Workshop Manual chassis, Page 12
- ’96 GALANT Workshop Manual chassis Supplement, Page 13
- SPACE RUNNER/SPACE WAGON Workshop Manual chassis, Page 14
- ’95 SPACE RUNNER/SPACE WAGON Workshop Manual chassis, Page 15
- ’97 SPACE RUNNER/SPACE WAGON Workshop Manual chassis, Page 16
- ’95 L400 Workshop Manual chassis, Page 17
- ’97 L400 Workshop Manual chassis Supplement, Page 18
- PAJERO Workshop Manual chassis, Page 19
- MONTERO Workshop Manual chassis, Page 19
- ’96 PAJERO Workshop Manual chassis Supplement, Page 20
- ’96 MONTERO Workshop Manual chassis Supplement, Page 20
- ’97 PAJERO Workshop Manual chassis Supplement, Page 21
- ’97 MONTERO Workshop Manual chassis Supplement, Page 22
- ’97 L200 Workshop Manual chassis, Page 23

TEST 2	SRS WARNING LAMP DOES NOT ILLUMINATE

(1) Read (and write down) all of the displayed diagnosis codes and service data (fault duration and how many times memories are erased) using the Multi- use Tester <vehicles without front passenger's air bag> or MUT-II <all models>

NOTE
(1) if the Multi-use Tester or Mut-II displays "CAN'T COMM". check the Multi-use Tester or MUT-II and vehicle side diagnosis connector for poor connections (Refer to P.52B-12.) and perform TEST 4.
(2) Maximum stored period: 9999 minutes (approximately 7 days)
(3) Maximum number of times to be stored: 250

(4) Check diagnosis codes against SELF-DIAGNOSIS QUICK REFERENCE CHART and perform service indicated there.

SELF-DIAGNOSIS QUICK REFERENCE CHART

After carrying out test 1 or 2, use the following table to repair.

Diagnosis code No.	Explanation	Service
-	Normal. The SRS is in good order	-
11	The circuits for the front impact sensor are shorted together, the (-) side of the harness between the air bag module and the SDU is shorted to the earth, or the (+) side of the harness between the front impact sensor and the SDU is shorted to the earth	Perform TEST 5 <Vehicles without front passenger's air bag> L.H. drive vehicles refer to P 52B-22 R.H. drive vehicles: refer to P. 52B-26 <Vehicles with Front passenger's air bag> refer to P.52B-32
12	Right or left impact sensor circuit is open, or the wire from the sensor to the SDU is open-circuit.	
13	Right and left impact sensor circuits are open or the wires from the sensors to the SDU are open-circuit	
21	The circuits for the driver's side air bag module (squib) are shorted together other or the circuit is earthed.	Perform TEST 6 <Vehicles without front passenger's air bag> L.H. drive vehicles: refer to P52B-35 R.H. drive vehicles refer to P.52B-39 <Vehicles with front passenger's air bag>: refer to P.52B-45
22	The driver's side air bag module (squib) circuit is open or the wire from the driver's side air bag module to the SDU (clock spring) is open circuit, the harness connection is defective, or the (+) side of the harness between the driver's side air bag module and the SDU is shorted to the earth. Disconnected connector in driver's side air bag module (squib). Open-circuit in clock spring due to inappropriate neutral position. **<Added>**	
24	The circuits for the front passenger's side air bag module (squib) are shorted together other or the circuit is earthed.	Perform TEST 13 (Refer to P.52B-64)
25	The front passenger's side air bag module (squib) circuit is open or the wire from the front passenger's side air bag module to the SDU (clock spring) is open circuit, the harness connection is defective or the (+) side of the harness between the front passenger's side air bag module and the SDU is shorted to the earth.	

TEST 2	SRS WARNING LAMP DOES NOT ILLUMINATE

(1) Read (and write down) all of the displayed diagnosis codes and service data (fault duration and how many times memories are erased) using the Multi-use Tester <1993 models> or MUT-II <all models>

NOTE
(1) if the Multi-use Tester or Mut-II displays “CAN’T COMM”. check the Multi-use Tester or MUT-II and vehicle side diagnosis connector for poor connections (Refer to P.52B-10.) and perform TEST 4.
(2) Maximum stored period: 9999 minutes (approximately 7 days)
(3) Maximum number of times to be stored: 250

(4) Check diagnosis codes against SELF-DIAGNOSIS QUICK REFERENCE CHART and perform service indicated there.

SELF-DIAGNOSIS QUICK REFERENCE CHART

After carrying out test 1 or 2, use the following table to repair.

Diagnosis code No.	Explanation	Service
-	Normal. The SRS is in good order	-
11	The circuits for the front impact sensor are shorted together, the (-) side of the harness between the air bag module and the SDU is shorted to the earth, or the (+) side of the harness between the front impact sensor and the SDU is shorted to the earth	Perform TEST 5 <Vehicles without front passenger’s air bag> refer to P 52B-20 <Vehicles with Front passenger’s air bag> refer to P.52B-24
12	Right or left impact sensor circuit is open, or the wire from the sensor to the SDU is open-circuit.	
13	Right and left impact sensor circuits are open or the wires from the sensors to the SDU are open-circuit	
21	The circuits for the driver’s side air bag module (squib) are shorted together other or the circuit is earthed.	Perform TEST 6 <Vehicles without front passenger’s air
22	The driver’s side air bag module (squib) circuit is open or the wire from the driver’s side air bag module to the SDU (clock spring) is open circuit, the harness connection is defective, or the (+) side of the harness between the driver’s side air bag module and the SDU is shorted to the earth. Disconnected connector in driver’s side air bag module (squib). Open-circuit in clock spring due to inappropriate neutral position. **<Added>**	bag> refer to P52B-27 <Vehicles with front passenger’s air bag>: refer to P.52B-31
24	The circuits for the front passenger’s side air bag module (squib) are shorted together other or the circuit is earthed.	Perform TEST 13 (Refer to P.52B-47)
25	The front passenger’s side air bag module (squib) circuit is open or the wire from the front passenger’s side air bag module to the SDU (clock spring) is open circuit, the harness connection is defective or the (+) side of the harness between the front passenger’s side air bag module and the SDU is shorted to the earth.	

Code No. 15 Safing G-sensor system in the SRS-ECU	Probable cause
This code is output if there is a short or open circuit between the terminals of the safing G-sensor inside the SRS-ECU. The trouble causes for each diagnosis code No. Are as follows	• Malfunction of SRS-ECU

Code No.	Trouble symptom
15	Short circuit in the safing G-sensor
16	Open circuit in the safing G-sensor

Replace the SRS-ECU

Code No. 21, 22, 61 or 62 Driver's side air bag module (squib) system	Probable cause
These diagnosis codes are output if there is abnormal resistance between the input terminals of the driver's side air bag module (squib). The trouble causes for each diagnosis code No. Are as follows. **<Added>**	• Malfunction of clock spring • Open-circuit in clock spring due to inappropriate neutral position • Malfunction of wiring harness or connectors • Malfunction of driver's side air bag module (squib) • Malfunction of SRS-ECU

Code No.	Trouble symptoms
21	• Short in driver's side air bag module (squib) or harness short • Short in clock spring
22	• Open circuit in driver's side air bag module (squib) or open harness • Open circuit in clock spring • Disconnected connector in the driver's side air bag module (squib). • Open circuit in clock spring due to inappropriate neutral position. **<Added>** • Malfunction of connector contact
61	• Short in driver's side air bag module (squib) harness leading to the power supply
62	• Short in driver's side air bag module (squib) harness leading to the earth

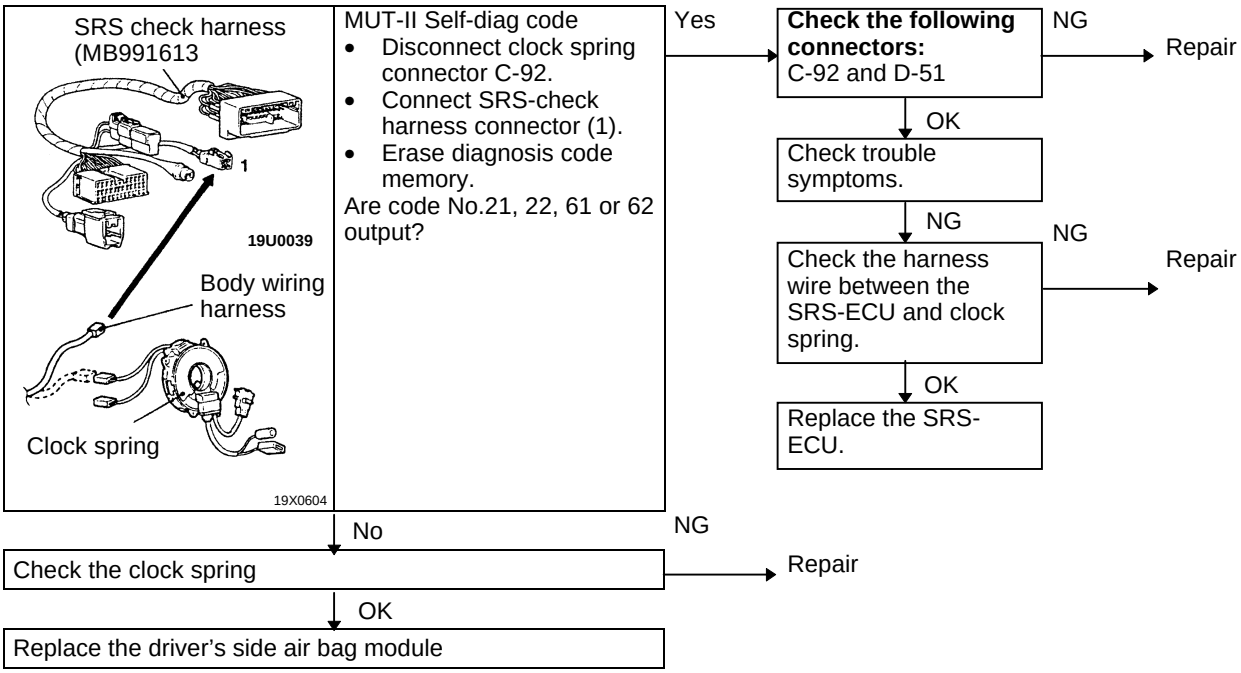

Code No. 21, 22	Air bag module (squib) system	Probable cause of trouble
(Explanation)	These codes are output when the resistance value between the air bag module (squib) terminals in the SDU is out of the normal range. The probable causes of trouble associated with the respective code Nos. Are as follows.	• Defective clock spring • Open circuit in clock spring due to inappropriate neutral position • Defective harness, connector • Defective air bag module (squib) • Defective SDU

Code No.	Probable cause of trouble
21	• Air bag module (squib) or harness short-circuited • Clock spring short-circuited
22	• Air bag module (squib) or harness open-circuited • Clock spring open-circuited • Disconnected connector in the driver's side air bag module (squib) • Open-circuit in clock spring due to inappropriate neutral position • Connector in loose contact

<Added>

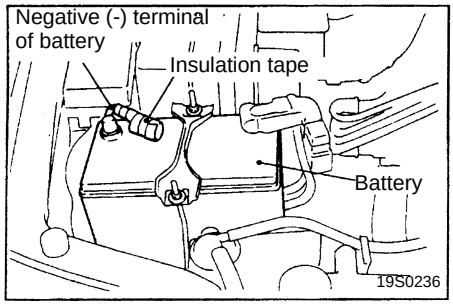

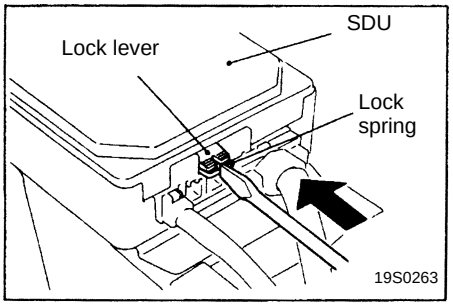

Caution

1. **After the ignition switch has been placed at the LOCK position and the negative (-) terminal of the battery has been disconnected, wait for more than 60 seconds before starting work. Wind a tape around the disconnected (-) terminal for insulation. (Refer to P.52B-4, No. 5)**
2. **Do not attempt to measure the air bag module (squib) circuit resistance. Use of a tester in measuring the circuit resistance will supply current to the squib, or erroneous deployment due to static electricity could cause serious injury.**
3. **To unlock the SDU connector, place a flat-tipped screwdriver against the lock spring at the lock lever notch and push the spring toward the unit. In this case, do not force the lock lever up.**

INSPECTION PROCEDURE FOR DIAGNOSIS CODES

Code No. 21,22 Air bag module (Driver's side squib) system	Probable cause of trouble
(Explanation) These codes are output when the resistance value between the air bag module (squib) terminals in the SDU is out of the normal range. The probable causes of trouble associated with the respective codes Nos. are as follows. <Refer to the chart 1.> **<Added>**	Defective clock spring Open-circuit in clock spring due to inappropriate neutral position Defective harness, connector Defective air bag module (driver's side squib) Defective SDU

CHART 1

Code No.	Probable cause of trouble
21	• Air bag module (driver's side squib) or harness short-circuited • Clock spring short-circuited
22	• Air bag module (driver's side squib) or harness open-circuited • Clock spring open-circuited • Disconnected connector in the driver's side air bag module (squib) • Open-circuit in clock spring due to inappropriate neutral position **<Added>** • Connector in loose contact

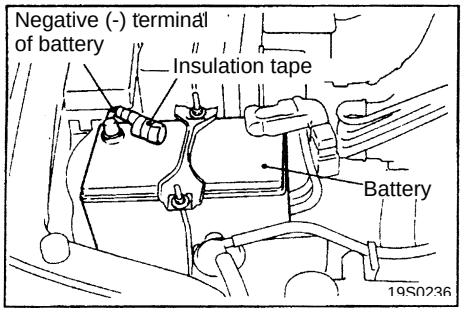

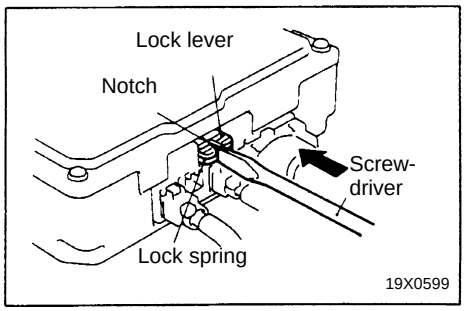

Caution

1. **After the ignition switch has been placed at the LOCK position and the negative (-) terminal of the battery has been disconnected, wait for more than 60 seconds before starting work. Wind a tape around the disconnected (-) terminal for insulation. (Refer to P.52B-4, No. 5)**
2. **Do not attempt to measure the air bag module (squib) circuit resistance. Use of a tester in measuring the circuit resistance will supply current to the squib, or erroneous deployment due to static electricity could cause serious injury**
3. **To unlock the SDU connector, place a flat-tipped screwdriver against the lock spring at the lock lever notch and push the spring toward the unit. In this case, do not force the lock lever up.**

TROUBLESHOOTING

INSPECTION CHART FOR DIAGNOSIS CODES

Inspect according to the inspection chart that is appropriate for the malfunction code.

Code No.	Diagnosis item		Reference page
14	Analog G-sensor system in the SRS-ECU		-
15, 16	Safing G-sensor system in the SRS-ECU		-
21, 22, 61, 62	Driver's side air bag module (squib) system		52B-5
24, 25, 64, 65	Front passenger's side air bag module (squib) system		52B-6
31, 32	SRS-ECU capacitor system		-
34*	Connector lock system		-
35	SRS-ECU capacitor system		-
41*	IG_1 (A) power circuit system		52B-7
42*	IG_1 (B) power circuit system		52B-7
43	SRS warning lamp drive circuit system	Lamp does not illuminate. *	52B-7
		Lamp does not switch off.	-
44	SRS warning lamp drive circuit system		-
45	SRS-ECU non volatile memory (EEPROM) and A/D converter system		-
51, 52	Driver's side air bag module (squib ignition drive circuit) system		-
54, 55	Front passenger's side sir bag module (squib ignition drive circuit) system		-

NOTE
(1) *: if the vehicle condition return to normal, the diagnosis code will be automatically erased, and the SRS warning lamp will return to normal.
(2) If the vehicle has a discharged battery it will store the fault codes 41 or 42. When these diagnosis codes are displayed, check the battery.

INSPECTION PROCEDURE CLASSIFIED BY DIAGNOSIS CODE

Code No. 21,22, 61 or 62 Driver's side air bag module (squib) system	**Probable cause**
These diagnosis codes are output if there is abnormal resistance between the input terminals of the driver's side air bag module (squib). The trouble causes for each diagnosis code No. are as follows. **<Added>**	• Malfunction of clock spring • Open-circuit in clock spring due to inappropriate neutral position. • Malfunction of wiring harnesses or connectors • Malfunction of driver's side air bag module (squib) • Malfunction of SRS-ECU

Code No.	Trouble symptoms
21	• Short in driver's side air bag module (squib) or harness short • Short in clock spring
22	• Open circuit in driver's side air bag module (squib) or open harness • Open circuit in clock spring • Disconnected connector in the driver's side air bag module (squib). • Open circuit in clock spring due to inappropriate neutral position. **<Added>** • Malfunction of connector contact
61	• Short in driver's side air bag module (squib) harness leading to the power supply
62	• Short in driver's side air bag module (squib) harness leading to the earth

Code No. 15 Safing G-sensor system in the SRS-ECU	Probable cause
This code is output if there is a short or open circuit between the terminals of the safing G-sensor inside the SRS-ECU. The trouble causes for each diagnosis code No. Are as follows	• Malfunction of SRS-ECU

Code No.	Trouble symptom
15	Short circuit in the safing G-sensor
16	Open circuit in the safing G-sensor

Replace the SRS-ECU

Code No. 21, 22, 61 or 62 Driver's side air bag module (squib) system	Probable cause
These diagnosis codes are output if there is abnormal resistance between the input terminals of the driver's side air bag module (squib). The trouble causes for each diagnosis code No. are as follows. **<Added>**	• Malfunction of clock spring • Open-circuit in clock spring due to inappropriate neutral position • Malfunction of wiring harness or connectors • Malfunction of driver's side air bag module (squib) • Malfunction of SRS-ECU

Code No.	Trouble symptoms
21	• Short in driver's side air bag module (squib) or harness short • Short in clock spring
22	• Open circuit in driver's side air bag module (squib) or open harness • Open circuit in clock spring • Disconnected connector in the driver's side air bag module (squib). • Open circuit in clock spring due to inappropriate neutral position. **<Added>** • Malfunction of connector contact
61	• Short in driver's side air bag module (squib) harness leading to the power supply
62	• Short in driver's side air bag module (squib) harness leading to the earth

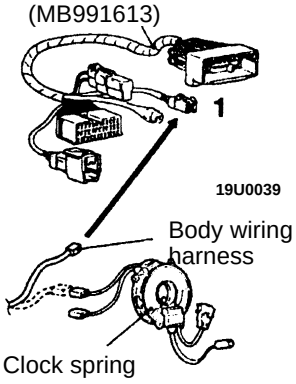

MUT-II Self-diag code
- Disconnect clock spring connector B-57.
- Connect SRS-check harness connector (1).
- Erase diagnosis code memory.

Are code No.21, 22, 61 or 62 output?

Yes → **Check the following connectors:** B-57, B-15 → NG → Repair

OK → Check trouble symptoms. → NG → Check the harness wire between the SRS-ECU and clock spring. → NG → Repair

OK → Replace the SRS- ECU.

No → Check the clock spring (Refer to P.52B-30.) → NG → Repair

OK → Replace the driver's side air bag module

Code No. 21 or 22	Air bag module (driver's side squib) system	Probable cause

(Comment)

(1) These codes are output if there is abnormal resistance between the input terminals of the air bag module (driver's side squib).
The trouble causes for each code No. are as follow

Code No.	Trouble Symptom
21	• Short in air bag module (driver's side squib) or harness short • Short in clock spring • Short in air bag module (driver's side squib) or front impact sensor harnesses leading to the power supply
22	• Open circuit in air bag module (driver's side squib) or open harness • Disconnected connector in the driver's side air bag module (squib) • Open-circuit in clock spring due to inappropriate neutral position • Malfunction of connector contact • Short in air bag module (driver's side squib) or front impact sensor harnesses leading to the power supply

Probable cause:
- Malfunction of clock spring
- Open circuit in clock spring due to inappropriate neutral position
- Malfunction of harness or connectors
- Malfunction of air bag module (driver's side squib)
- Malfunction of SDU

<Added>

(2) Diagnosis codes 21 and 22 are sometimes generated in combination with malfunction codes relating to the front impact sensor (code Nor. 11, 12 and 13), but sometimes only one should also be inspected at the same time.
The relationships between the codes are as follows.

		Front impact sensor		
		Short	Open circuit (1 sensor)	Open circuit (2 sensors)
Air bag module (driver's side squib)	Short	11 or 21	12 or 21	13 or 21
	Open circuit	11 or 22	12 or 22	13 or 22

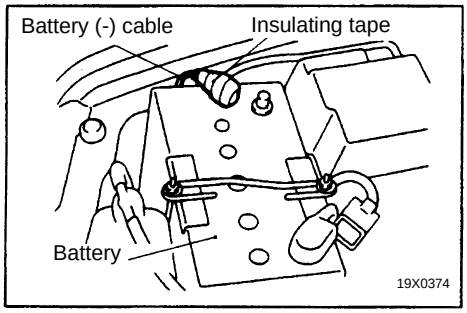

Caution

1. **Turn the ignition key to the "LOCK" position, disconnect the negative battery cable and tape the terminal. Wait at least 60 seconds after disconnecting the battery cable before doing any further work. (Refer to P. 52B-6)**

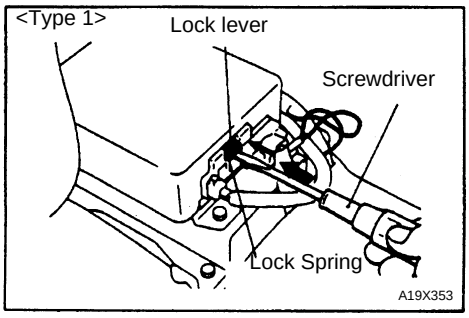

2. **Remove the SDU connector lock by the following procedure.**
   If there is no notch in the connector lock lever (Type 1).
   Place a (-) screwdriver against the lock spring (metal section) of the connector lock lever as shown in the illustration, and push the spring horizontally toward the inside of the unit.
   (1) Do not use excessive force to raise the lock lever.
   (2) Do not insert the screwdriver into the gap between the lock lever and the lock spring.

Code No. 21,22 Air bag module (Driver's side squib) system	Probable cause
These diagnosis codes are output if there is abnormal resistance between the input terminals of the air bag module (driver's side squib). The trouble causes for each code No. are as follows	• Malfunction of clock spring • Open-circuit in clock spring due to inappropriate neutral position • Malfunction of harnesses or connectors • Malfunction of air bag module (driver's side squib) • Malfunction of SRS-ECU

Code No.	Trouble symptom
21	• Short in air bag module (driver's side squib) or harness short • Short in clock spring
22	• Open circuit in air bag module (driver's side squib) or open harness • Open circuit in clock spring • Disconnected connector in the driver's side air bag module (squib). • Open circuit in clock spring due to inappropriate neutral position. **<Added>** • Malfunction of connector contact
61	• Short in air bag module (driver's side squib) harness leading to the power supply
62	• Short in air bag module (driver's side squib) harness leading to the earth

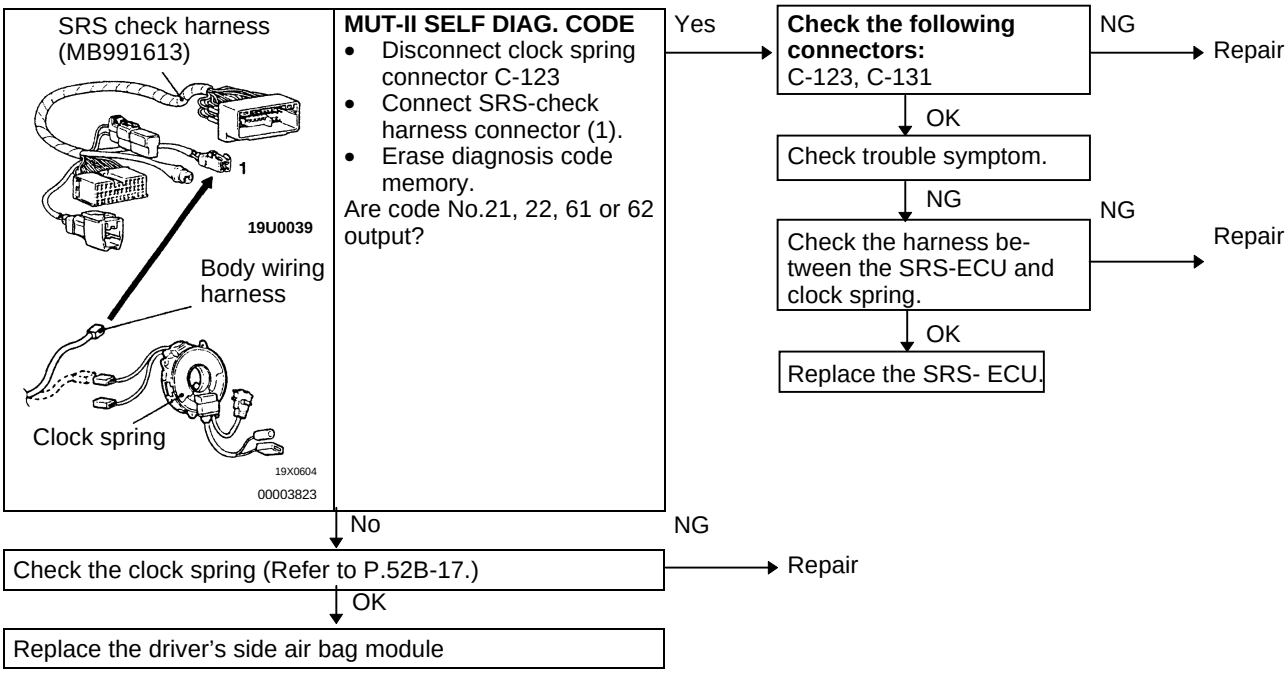

TEST 2	SRS WARNING LAMP DOES NOT ILLUMINATE

(1) Read (and write down) all of the displayed diagnosis codes and service data (fault duration and how many times memories are erased) using the MUT or MUT-II

NOTE
(1) if the MUT or MUT-II displays “CAN’T COMM”. check the MUT or MUT-II and vehicle side diagnosis connector for poor connections (Refer to P.52B-7.) and perform TEST 6.
(2) Maximum stored period: 9999 minutes (approximately 7 days)
(3) Maximum number of times to be stored: 250

(4) Check diagnosis codes against SELF-DIAGNOSIS QUICK REFERENCE CHART and perform service indicated there.

SELF-DIAGNOSIS QUICK REFERENCE CHART

After carrying out test 2 or 3, use the following table to repair.

Diagnosis code No.	Explanation	Service
-	Normal. The SRS is in good order	-
14	Analog G sensor output signal is abnormal Analog G sensor does not function or its characteristic is abnormal	Replace the SDU (Refer to P.52B-34.)
15	The circuits for the safing impact sensor are shorted together or the circuit is earthed	
16	The safing input sensor circuit is open or the wire from the air module to the SDU is open circuit	
21	The circuits for the air bag module (squib) are shorted together other or the circuit is earthed.	Perform TEST 7
22	The air bag module (squib) circuit is open or the wire from the air bag module to the SDU (clock spring) is open circuit, the harness connection is defective, or the (+) side of the harness between the air bag module and the SDU is shorted to the earth. Disconnected connector in driver’s side air bag module (squib). Open-circuit in clock spring due to inappropriate neutral position. **<Added>**	
31	The DC/DC converter (integrated in the SDU) terminal voltage is higher than the specified value for 5 seconds.	Replace the SDU (Refer to P.52B-34.)

INSPECTION PROCEDURE CLASSIFIED BY DIAGNOSTIC TROUBLE

Code No. 14 Analog G-sensor system in the SDU	Probable cause
(Comment) The SDU monitors the output of the analog G sensor inside the SDU. It outputs this code when any of the following are detected • When the analog G sensor is not operating • When the characteristics of the analog G sensor are abnormal	• Malfunction of SDU

The cause is probably a malfunction of the analog G-sensor inside the SDU, so replace the SDU

Code No. 15 or 16Safing G-sensor system in the SDU	Probable cause
(Comment) This code is output if the resistance between the terminals of the safing G sensor inside the SDU is different from normal. The trouble causes for each diagnosis code No. are as follows	• Malfunction of SDU

Code No.	Trouble symptom
15	Short circuit in the safing G-sensor
16	Open circuit in the safing G-sensor

Code No. 21 or 22 Driver's side Air bag module (squib) system	Probable cause
(Comment) These diagnosis codes are output if there is abnormal resistance between the input terminals of the air bag module (driver's side squib). The trouble causes for each code No. are as follows **<Added>**	• Malfunction of clock spring • Open-circuit in clock spring due to inappropriate neutral position • Malfunction of harnesses or connectors • Malfunction of air bag module (driver's side squib) • Malfunction of SRS-ECU

Code No.	Trouble Symptom
21	• Short in air bag module (driver's side squib) or harness short • Short in clock spring
22	• Open circuit in Air bag module (driver's side squib) or harness • Open circuit in clock spring • Disconnected connector in the driver's side air bag module (squib) • Open-circuit in clock spring due to inappropriate neutral position • Malfunction of connector contact **<Added>**

Code No. 21,22, or 61 Air bag module (driver's side squib) system	Probable cause
These diagnosis codes are output if there is abnormal resistance between the input terminals of the air bag module (driver's side squib). The trouble causes for each diagnosis code No. are as follows. **<Added>**	• Malfunction of clock spring • Open-circuit in clock spring due to inappropriate neutral position. • Malfunction of harnesses or connectors • Malfunction of air bag module (driver's side squib) • Malfunction of SRS-ECU

Code No.	Trouble symptoms
21	• Short in air bag module (driver's side squib) or harness short • Short in clock spring
22	• Open circuit in air bag module (driver's side squib) or open harness • Open circuit in clock spring • Disconnected connector in the driver's side air bag module (squib). • Open circuit in clock spring due to inappropriate neutral position. • Malfunction of connector contact **<Added>**
61	• Short in air bag module (driver's side squib) harness leading to the power supply

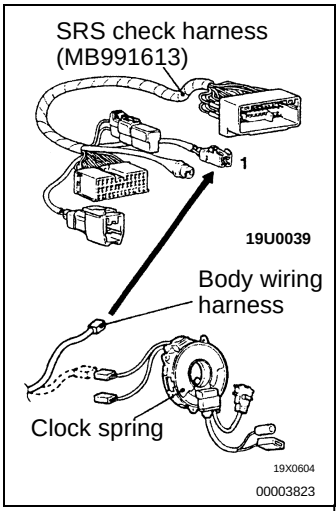

MUT-II SELF DIAG. CODE
- Disconnect clock spring connector C-77
- Connect SRS-check harness connector (1).
- Connect negative battery cable
- Erase diagnosis code memory

Are code No.21, 22, or 61 output?

Yes → **Check the following connectors:** C-77, E-74
- NG → Repair
- OK → Check trouble symptom.
  - NG → Check the harness between the SRS-ECU and clock spring.
    - NG → Repair
    - OK → Replace the SRS- ECU

No → Check the clock spring
- NG → Repair
- OK → Replace the driver's air bag module

Code No. 21 or 22 Air bag module (Driver's side squib) system	Probable cause
(Comment) (1) These diagnosis codes are output if there is abnormal resistance between the input terminals of the air bag module (driver's side squib). The trouble causes for each code No. are as follows (2) Diagnosis codes 21 and 22 are sometimes generated in combination with malfunction codes relating to the front impact sensor (code Nos. 11, 12 and 13), but sometimes only one may be output instead of both being memorised. Because of this, the front impact sensor should also be inspected at the same time. The relationship between the codes are as follows. (Refer to chart 2.)	• Malfunction of clock spring • Open-circuit in clock spring due to inappropriate neutral position • Malfunction of harnesses or connectors • Malfunction of air bag module (driver's side squib) • Malfunction of SDU **<Added>**

Chart 1

Code No.	Trouble symptom
21	• Short in air bag module (driver's side squib) or harness short • Short in clock spring
22	• Open circuit in air bag module (driver's side squib) or open harness • Open circuit in clock spring • Disconnected connector in the driver's side air bag module (squib). • Open circuit in clock spring due to inappropriate neutral position. **<Added>** • Malfunction of connector contact

Chart 2

Item		Front impact sensor		
		Short	Open circuit (1 sensor)	Open circuit (2 sensors)
Air bag module (driver's side squib)	Short	11 or 21	12 or 21	13 or 21
	Open circuit	11 or 22	12 or 22	13 or 22

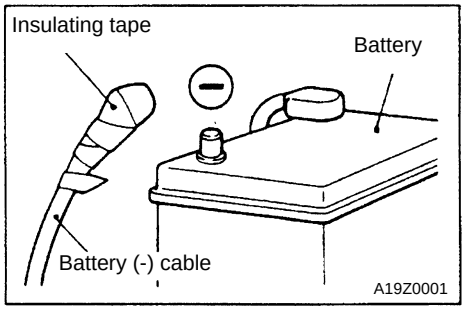

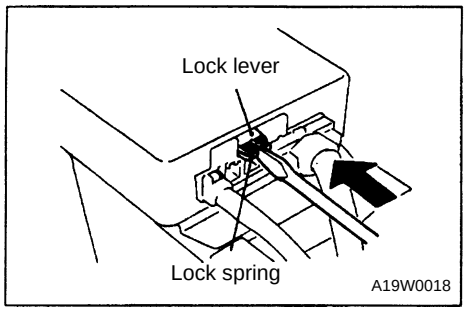

Caution

1. **After the ignition switch has been placed at the LOCK position and the negative (-) terminal of the battery has been disconnected, wait for more than 60 seconds before starting work. Wind a tape around the disconnected (-) terminal for insulation. (Refer to P.52B-3, No.5)**
2. **do not attempt to measure the air bag module (squib) circuit resistance. Use of a tester in measuring the circuit resistance will supply current to the squib, or erroneous deployment due to static electricity could cause serious injury**
3. **To unlock the SDU connector, place a flat-tipped screwdriver against the lock spring at the lock lever notch and push the spring toward the unit. In this case, do not force the lock lever up.**

Code No. 15 or 16Safing G-sensor system in the SRS-ECU	Probable cause
This code is output if there is a short or open circuit between the terminals of the safing G-sensor inside the SRS-ECU. The trouble causes for each diagnosis code No. Are as follows	• Malfunction of SRS-ECU

Code No.	Trouble symptom
15	Short circuit in the safing G-sensor
16	Open circuit in the safing G-sensor

Replace the SRS-ECU

Code No. 21 or 22 Driver's side air bag module (squib) system	Probable cause
These diagnosis codes are output if there is abnormal resistance between the input terminals of the driver's side air bag module (squib). The trouble causes for each diagnosis code No. Are as follows. **<Added>**	• Malfunction of clock spring • Open-circuit in clock spring due to inappropriate neutral position • Malfunction of wiring harness or connectors • Malfunction of driver's side air bag module (squib) • Malfunction of SRS-ECU

Code No.	Trouble symptoms
21	• Short in driver's side air bag module (squib) or harness short • Short in clock spring
22	• Open circuit in driver's side air bag module (squib) or open harness • Open circuit in clock spring • Disconnected connector in the driver's side air bag module (squib). • Open circuit in clock spring due to inappropriate neutral position. **<Added>** • Malfunction of connector contact

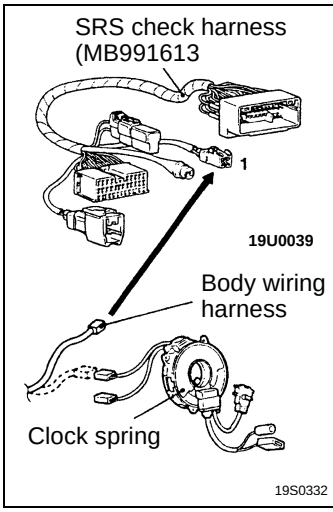

MUT-II Self-diagnosis code
- Disconnect clock spring connector C-49
- Connect SRS-check harness connector (1).
- Erase diagnosis code memory.

Are code Nos.21 or 22 output?

Yes → **Check the following connectors:** C-36 and D-49 → NG → Repair

OK → Check trouble symptoms.

NG → Check the harness wire between the SRS-ECU and clock spring. → NG → Repair

OK → Replace the SRS-ECU.

No → Check the clock spring (Refer to P.52B-15.) → NG → Repair

OK → Replace the driver's side air bag module

Code No. 21 or 22	Air bag module (squib) system	Probable cause

(Comment)

(1) These diagnosis codes are output if there is abnormal resistance between the input terminals of the air bag module (squib).
The trouble causes for each code No. are as follow

Code No.	Trouble Symptom
21	• Short in air bag module (squib) or harness short • Short in clock spring • Short in air bag module (squib) or front impact sensor harnesses leading to the power supply
22	• Open circuit in air bag module (driver's side squib) or open harness • Open circuit in clock spring • Disconnected connector in the driver's side air bag module (squib) • Open-circuit in clock spring due to inappropriate neutral position • Malfunction of connector contact • Short in air bag module (squib) or front impact sensor harnesses leading to the power supply

Probable cause:
- Malfunction of clock spring
- Open circuit in clock spring due to inappropriate neutral position
- Malfunction of harness or connectors
- Malfunction of air bag module (squib)
- Malfunction of SDU

<Added>

(2) Diagnosis codes 21 and 22 are sometimes generated in combination with malfunction codes relating to the front impact sensor (code Nor. 11, 12 and 13), but sometimes only one should also be inspected at the same time.
The relationships between the codes are as follows.

		Front impact sensor		
		Short	Open circuit (1 sensor)	Open circuit (2 sensors)
Air bag module (squib)	Short	11 or 21	12 or 21	13 or 21
	Open circuit	11 or 22	12 or 22	13 or 22

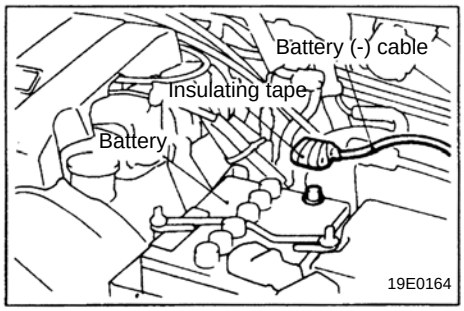

1. Turn the ignition key to the "LOCK" position, disconnect the negative battery cable and tape the terminal.

   Caution
   Wait at least 60 seconds after disconnecting the battery cable before doing any further work. (Refer to P. 52B-4)

2. Remove the floor console assembly. (Refer to GROUP 52A - Floor Console.)

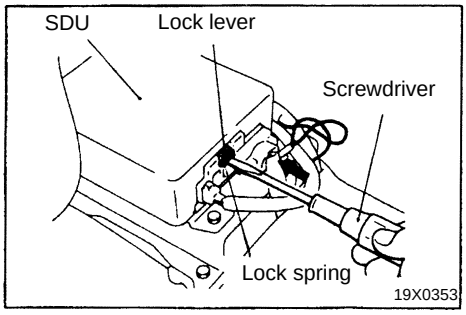

3. Place a flat-tipped (-) screwdriver against the lock spring (metal portion) of the SDU connector lock lever, and push the spring horizontally toward the inside of the unit.

   Caution
   1. Do not use excessive force to raise the lock lever (green)
   2. do not insert the screwdriver into the gap between the lock lever (green) and the lock spring (metal portion).

4. Disconnect the red 14-pin connector from the SDU.

Code No. 21 or 22 Driver's air bag module (squib) system	Probable cause
(1) These diagnosis codes are output if there is abnormal resistance between the input terminals of the driver's air bag module (squib) . Refer to table 1 for the conditions for output of each diagnosis code. (2) Diagnosis codes 21 and 22 are sometimes generated in combination with diagnosis codes relating to the front impact sensor (code Nos. 11, 12 and 13), but sometimes only one may be output instead of both being memorised. Because of this, the front impact sensor should also be inspected al the same time. Refer to table 2 for the failure mode combinations.	• malfunction of clock spring • Open-circuit in clock spring due to inappropriate neutral position • Malfunction of harnesses or connectors • Malfunction of air bag module (driver's side squid) • Malfunction of SDU **<Added>**

TABLE 1: CONDITIONS FOR OUTPUT OF EACH DIAGNOSIS CODE

Code No.	Trouble symptoms
21	• Short in air bag module (driver's side squib) or harness short • Short in clock spring • Short in driver's side air bag module (squib) or front impact sensor harnesses leading to the power supply
22	• Open circuit in air bag module (driver's side squib) or open harness • Open circuit in clock spring • Disconnected connector in the driver's side air bag module (squib). • Open circuit in clock spring due to inappropriate neutral position. **<Added>** • Malfunction of connector contact • Short in driver's air bag module (squib) or front impact sensor harnesses leading to the power supply

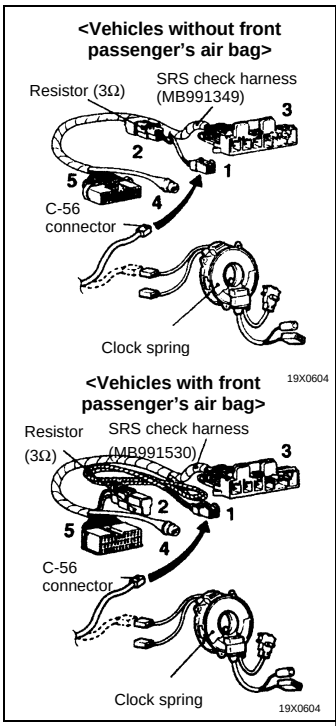

MUT-II SELF DIAG. CODE
- Disconnect clock spring connector C-56
- Connect SRS-check harness connector (1).
- Erase diagnosis code memory.

Are code Nos. 21 or 22 output?

NG → Clock spring inspection → NG → Repair
OK → **Check the following connectors:** C-49 and C-56 → NG → Repair
OK → Check trouble symptoms.
NG → Replace the air bag module (driver's side squib)

Yes → To next page

INSPECTION PROCEDURE CLASSIFIED BY DIAGNOSTIC TROUBLE

Code No. 14 Analog G-sensor system in the SRS-ECU	Probable cause
The SRS-ECU monitors the output of the analog G-sensor inside the SRS-ECU. It outputs this code when any of the following are detected • When the analog-G sensor is not operating • When the characteristics of the analog-G sensor are abnormal • When the output from the analog G-sensor is abnormal	• Malfunction of SRS-ECU

Replace the SRS-ECU

Code No.15 or 16 Safing G-sensor system in the SRS-ECU	Probable cause
This code is output if there is a short or open circuit between the terminals of the safing G-sensor inside the SRS-ECU. The trouble causes for each diagnosis code No. Are as follows	• Malfunction of SRS-ECU

Code No.	Trouble Symptom
15	Short circuit in the safing G-sensor
16	Open circuit in the safing G-sensor

Replace the SRS-ECU

Code No. 21, 22 or 61 Air bag module (driver's side squib) system	Probable cause
These diagnosis codes are output if there is abnormal resistance between the input terminals of the air bag module (driver's side squib). The trouble causes for each code No. are as follows **<Added>**	• Malfunction of clock spring • Open-circuit in clock spring due to inappropriate neutral position • Malfunction of harnesses or connectors • Malfunction of air bag module (driver's side squib) • Malfunction of SRS-ECU

Code No.	Trouble symptoms
21	• Short in air bag module (driver's side squib) or harness short • Short in clock spring
22	• Open circuit in air bag module (driver's side squib) or open harness • Open circuit in clock spring • Disconnected connector in the driver's side air bag module (squib). • Open circuit in clock spring due to inappropriate neutral position. **<Added>** • Malfunction of connector contact
61	• Short in air bag module (driver's side squib) harness leading to the power supply

Check the clock spring → NG → Repair

OK ↓

SRS check harness (MB991613)

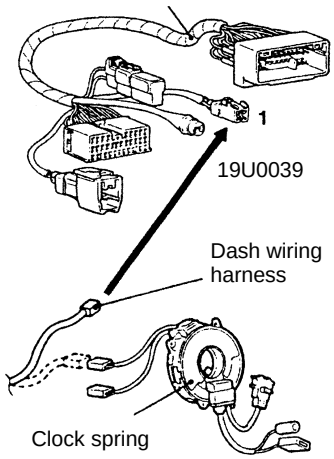

19X0604

MUT-II SELF DIAG. CODE
- Disconnect clock spring connector C-56.
- Connect SRS check harness connector (1).
- Connect negative battery cable.
- Erase diagnosis code memory.

Are code Nos.21, 22 or 61 output?

No → **Check the following connector:** C-56 and Air bag module connector → NG → Repair

OK ↓

Check trouble symptom.

NG ↓

Replace the driver's air bag module

Yes ↓

Check the following connectors: C-56, C-128

OK ↓

Check trouble symptom.

NG ↓

SRS check harness (MB991613)

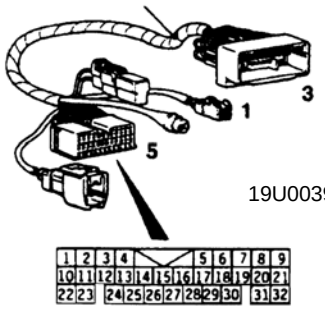

19L0567

Check the harness between the SRS-ECU and clock spring.
- Disconnect clock spring connector C-56.
- Connect SRS check harness connector (1).
- Disconnect SRS-ECU connector C-128.
- Connector SRS check harness connector (3)
- Resistance between terminals (5) - (6)
  OK: Approx. 3Ω

NG → Repair

OK → Replace the SRS-ECU.

Code No. 21 or 22 Air bag module (squib) system	Probable cause
(1) These diagnosis codes are output if there is abnormal resistance between the input terminals of the air bag module (squib). The trouble causes for each code No. are as follows (Refer to chart 1.) (2) Diagnosis codes 21 and 22 are sometimes generated in combination with malfunction codes relating to the front impact sensor (code Nos. 11, 12 and 13), but sometimes only one may be output instead of both being memorised. Because of this, the front impact sensor should also be inspected at the same time. The relationship between the codes are as follows. (Refer to chart 2.)	• Malfunction of clock spring • Disconnected connector in the driver's side air bag module (squib) • Open-circuit in clock spring due to inappropriate neutral position • Malfunction of harnesses or connectors • Malfunction of air bag module (squib) • Malfunction of SDU **<Added>**

Chart 1

Code No.	Trouble symptom
21	• Short in air bag module (squib) or harness short • Short in clock spring • Short in air bag module (squib) or front impact sensor harnesses leading to the power supply
22	• Open circuit in air bag module (squib) or open harness • Open circuit in clock spring • Disconnected connector in the driver's side air bag module (squib). • Open circuit in clock spring due to inappropriate neutral position. **<Added>** • Malfunction of connector contact • Short in air bag module (squib) or front impact sensor harnesses leading to the power supply

Chart 2

Item		Front impact sensor		
		Short	Open circuit (1 sensor)	Open circuit (2 sensors)
Air bag module (squib)	Short	11 or 21	12 or 21	13 or 21
	Open circuit	11 or 22	12 or 22	13 or 22

Caution

Do not attempt to measure the air bag module (squib) circuit resistance. Use of a tester in measuring the circuit resistance will supply current to the squib, or erroneous deployment due to static electricity could cause serious injury.

SERVICE BULLETIN

MITSUBISHI MOTORS

QUALITY INFORMATION ANALYSIS
OVERSEAS SERVICE DEPT. MITSUBISHI MOTORS CORPORATION

SERVICE BULLETIN	**No.:** MSB-97E52-004		
	Date: 1998-02-15	**<Model>**	**<M/Y>**
Subject:	CHANGE IN ATTACHMENT POSITION OF SRS AIR BAG CAUTION LABEL	(EC,EXP)L200 (K60,K70)	97-10
Group:	SUPPLEMENTAL RESTRAINT	**Draftno:** 97-SY-029	
INFORMATION	**OVERSEAS SERVICE DEPT**	R. USAMI - MANAGER QUALITY INFORMATION ANALYSIS	

1. Description:

This Service Bulletin informs you of change in attachment position of the SRS air bag caution label.

2. Applicable Manuals:

Manual	Pub. No.	Language	Page(s)
L200 Technical Information Manual	PYTE96E1	(English)	6-10
L200 Workshop Manual	PWTE96E1	(English)	52B-22
	PWTS96E1	(Spanish)	
	PWTF96E1	(French)	
	PWTG96E1	(German)	

3. Effective Date:

From October 1997

4. Details:

Interior - Supplemental Restraint System (SRS), page 2
SRS - Warning / Caution Labels, page 3

WARNING/CAUTION LABELS

A number of caution labels relating to the SRS can be found in the vehicle, as shown in the following illustration. Follow label instruction when servicing SRS.

Steering wheel

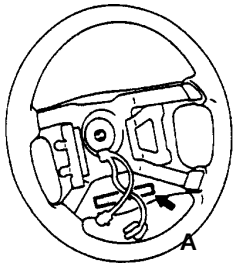

19N0245

Air bag module

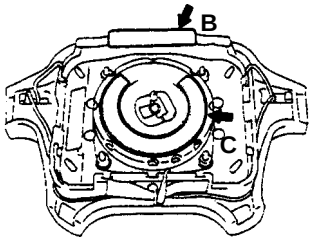

19V0059

Clock spring

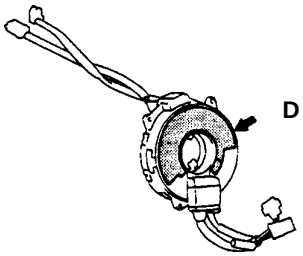

19X0015

Glove box

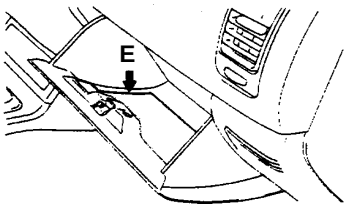

19V0060

Sun visor

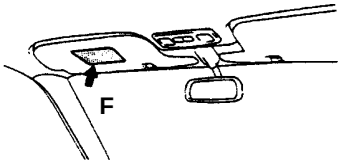

19V0061

SDU

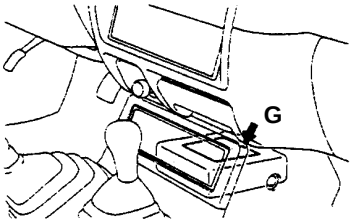

19V0062

Hood

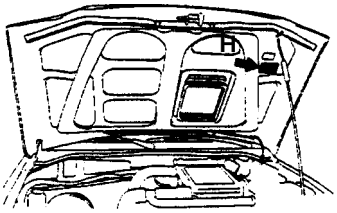

19V0063

Frame <2WD>

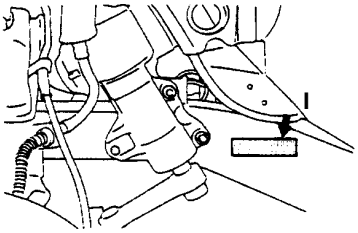

19V0064

<Added>

Frame <4WD> ***1**

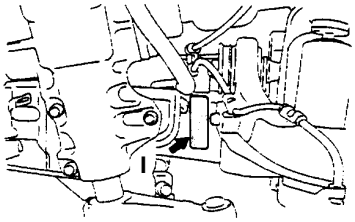

19V0065

<Added>

Frame <4WD>*2

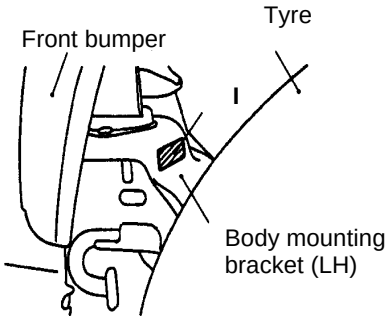

V0205AA

NOTE

Label **I** is attached in position either at Frame <4WD>*1 or at Frame <4WD>*2

WARNING/CAUTION LABELS

52400300063

A number of caution labels relating to the SRS are found in the vehicle, as shown in the following illustration. Follow label instructions when servicing SRS. If labels are dirty or damaged, replace them with new ones.

Steering wheel

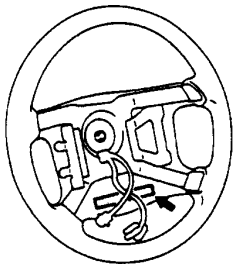

19N0245

Air bag

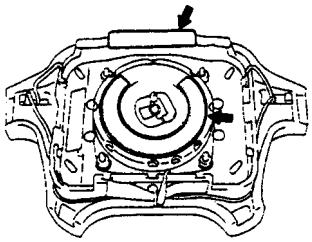

19V0059

Clock spring

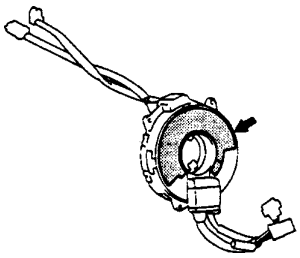

19X0015

Glove box

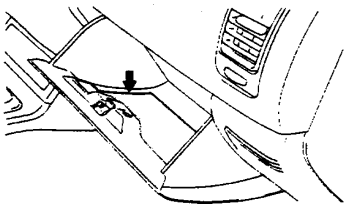

19V0060

Sun visor

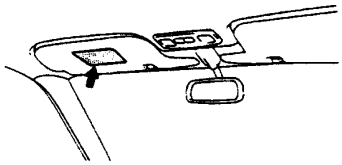

19V0061

SDU

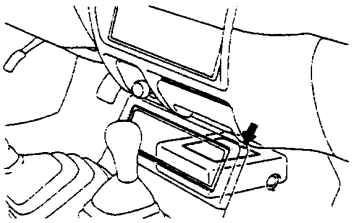

19V0062

Hood

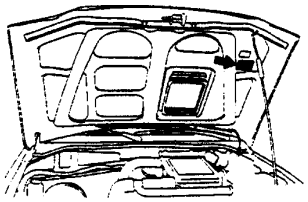

19V0063

Frame <2WD>

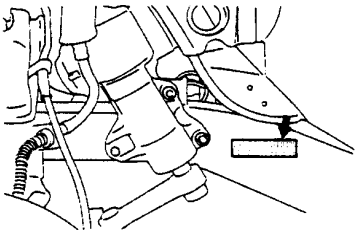

19V0064

<Added>

Frame <4WD> ***1**

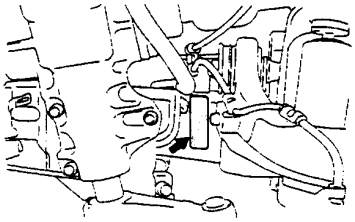

19V0065

<Added>

00005050

Frame <4WD>*2

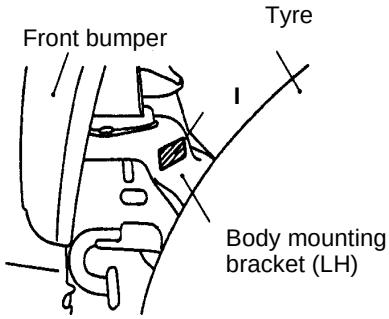

V0205AA

NOTE
The label for Frame <4WD> is attached in position either at Frame <4WD>*1 or at Frame <4WD>*2.

SERVICE BULLETIN

QUALITY INFORMATION ANALYSIS
OVERSEAS SERVICE DEPT. MITSUBISHI MOTORS CORPORATION

SERVICE BULLETIN	No.: MSB-98E52-502	
	Date: 1999-10-31	

Subject:	CORRECTION TO ERASING OF DIAGNOSIS CODES
Group:	INTERIOR
Draft No.:	98AL070710
CORRECTION	OVERSEAS SERVICE DEPT

T.NITTA - VICE GENERAL MANAGER
QUALITY INFORMATION ANALYSIS

<Model>	<M/Y>
(EX,EXP)ECLIPSE	98-10
(D30)	98-10
(EX,EXP)GALANT	98-10
(E50-80)	98-10
(EX,EXP)L200 (K00)	98-10
(EX,EXP)L300 (P0,	98-10
P10, P20, P30)	98-10
(EX,EXP)COLT (CJ0A)	
(EX,EXP)LANCER (CK0A)	
(EX,EXP)CARISMA	

1. Description:

This Service Bulletin informs you of correction to erasing of the diagnosis codes.

2. Applicable Manuals:

Manual	Pub. No.	Language	Page(s)
'96 COLT/LANCER Workshop Manual CHASSIS	PWME9511	(English)	52B-6
	PWMS9512	(Spanish)	
	PWMF9513	(French)	
	PWMG9514	(German)	
	PWMD9515	(Dutch)	
	PWMW9516	(Swedish)	
'98 COLT/LANCER Workshop Manual CHASSIS	PWME9511-A	(English)	52B-5
	PWMS9512-A	(Spanish)	
	PWMF9513-A	(French)	
	PWMG9514-A	(German)	
	PWMD9515-A	(Dutch)	
	PWMW9516-A	(Swedish)	
'96 ECLIPSE Workshop Manual CHASSIS	PWUE95E1	(English)	52B-6
	PWUS95E1	(Spanish)	
	PWUF95E1	(French)	
	PWUG95E1	(German)	
	PWUD95E1	(Dutch)	
	PWUI95E1	(Italian)	
'97 GALANT Workshop Manual CHASSIS	PWDE9611	(English)	52B-8
	PWDS9612	(Spanish)	
	PWDF9613	(French)	
	PWDG9614	(German)	
	PWDD9615	(Dutch)	
	PWDW9616	(Swedish)	

Manual	Pub. No.	Language	Page(s)
’96 CARISMA Workshop Manual CHASSIS	PWDE9502	(English)	52B-6
	PWDS9503	(Spanish)	
	PWDF9504	(French)	
	PWDG9505	(German)	
	PWDD9506	(Dutch)	
	PWDW9507	(Swedish)	
	PWDI95E1	(Italian)	
’97 L200 Workshop Manual CHASSIS	PWTE95E1	(English)	52B-6
	PWTS95E1	(Spanish)	
	PWTF95E1	(French)	
	PWTG95E1	(German)	
’98 L300 Workshop Manual CHASSIS	PWWE8608-Q	(English)	52B-6
	PWWS8613-Q	(Spanish)	
	PWWF8612-Q	(French)	
	PWWG8609-Q	(German)	
	PWWD8610-Q	(Dutch)	
	PWWW8611-Q	(Swedish)	

3. Details:

’96 COLT/LANCER Workshop Manual CHASSIS, page 3
’98 COLT/LANCER Workshop Manual CHASSIS, page 4
’96 ECLIPSE Workshop Manual CHASSIS, page 5
’97 GALANT Workshop Manual CHASSIS, page 6
’96 CARISMA Workshop Manual CHASSIS, page 7
’97 L200 Workshop Manual CHASSIS, page 8
’98 L300 Workshop Manual CHASSIS, page 9

SPECIAL TOOLS

52400070117

Tool	Number	Name	Use
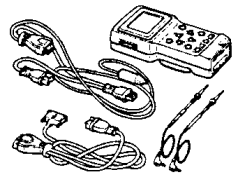	MB991502	MUT-II sub assembly	• Reading diagnosis codes • Erasing diagnosis code • Reading trouble period • Reading erase times
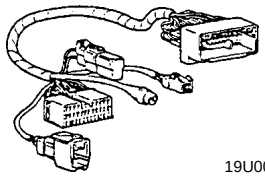 19U0039	MB991613	SRS check harness	Checking the SRS electrical circuitry
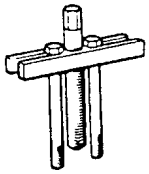	MB990803	Steering wheel puller	Steering wheel removal
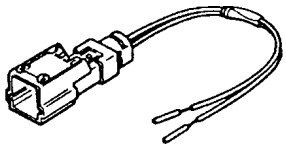	MB686560	SRS air bag adapter harness A	• Deployment of air bag modules and seat belt with pre-tensioner inside the vehicle • Deployment of air bag module (front passenger's side) outside the vehicle
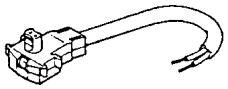	MR203491 or MB628919	SRS air bag adapter harness B	Deployment of air bag module (driver's side) outside the vehicle

TEST EQUIPMENT

52400080035

Tool	Name	Use
13R074B	Digital multi-meter	Checking the SRS electrical circuitry Use a multi-meter for which the maximum test current is 2 mA or less at the minimum range of resistance measurement

TROUBLESHOOTING

52400310097

STANDARD FLOW OF DIAGNOSTIC TROUBLESHOOTING

Refer to GROUP 00 – How to Use Troubleshooting/Inspection Service Points.

DIAGNOSIS FUNCTION

52400320063

DIAGNOSIS CODE CHECK

Connect the MUT-II to the diagnosis connector (16 –pin) under the instrument under cover, then check diagnosis codes. (Refer to GROUP 00 – How to Use Troubleshooting/Inspection Service Points.)

ERASING DIAGNOSIS CODES

~~Refer to GROUP 00 – How to Use Troubleshooting/Inspection Service Points.~~ **<Incorrect>**

WHEN USING THE MUT-II
Connect the MUT-II to the diagnosis connector and erase the diagnosis code.
Caution
Turn off the ignition switch before connecting or disconnecting the MUT-II.

<Correct>

TROUBLESHOOTING

STANDARD FLOW OF DIAGNOSTIC TROUBLESHOOTING

Refer to GROUP 00 – How to Use Troubleshooting/Inspection Service Points.

DIAGNOSIS FUNCTION

DIAGNOSIS CODE CHECK

Connect the MUT-II to the diagnosis connector (16 –pin) under the instrument under cover, then check diagnosis codes.
(Refer to GROUP 00 – How to Use Troubleshooting/Inspection Service Points.)

ERASING DIAGNOSIS CODES

~~Refer to GROUP 00 – How to Use Troubleshooting/Inspection Service Points.~~ **<Incorrect>**

INSPECTION CHART FOR DIAGNOSIS CODES

Inspect according to the inspection chart that is appropriate for the malfunction code.

Code No.	Diagnosis Item		Reference Page
14	Analog G-sensor system in the SRS-ECU		52B-6
15, 16	Front impact safing G sensor system inside SRS-ECU		52B-6
17	Side impact safing G sensor system inside SRS-ECU		52B-6
21, 22, 61, 62	Driver's side air bag module (squib) system		52B-7
24, 25, 64, 65	Front passenger's side air bag module (squib) system		52B-8
31, 32	SRS-ECU capacitor system		52B-8
34*	Connector lock system		52B-9
35	SRS-ECU (deployed air bag) system		52B-9
41*	IG_1 (A) power circuit system		52B-9
42*	IG_1 (B) power circuit system		52B-9
43	SRS warning lamp driver circuit system	Lamp does not illuminate.*	52B-10
		Lamp does not switch off.	52B-10
44*	SRS warning lamp drive circuit system		52B-10
45	Internal circuit system of non-volatile memory (EEPROM) inside SRS-ECU		52B-11
51, 52	Driver's side air bag module (squib ignition drive circuit) system		52B-11
54, 55	Front passenger's side air bag module (squib ignition drive circuit) system		52B-11
71, 72, 75, 76	Side air bag module (R.H.) (squib) system		52B-11
73, 74	Side air bag module (R.H.) (squib) ignition drive circuit system		52B-12
79, 93	Side air bag module (L.H.) communication system		52B-12
81, 82, 85, 86	Side air bag module (L.H.) (squib) system		52B-12
83, 84	Side air bag module (L.H.) (squib) ignition drive circuit system		52B-13

<Correct>

WHEN USING THE MUT-II
Connect the MUT-II to the diagnosis connector and erase the diagnosis code.
Caution
Turn off the ignition switch before connecting or disconnecting the MUT-II.

TROUBLESHOOTING

52400090038

STANDARD FLOW OF DIAGNOSTIC TROUBLESHOOTING

Refer to GROUP 00 – How to Use Troubleshooting/Inspection Service Points.

DIAGNOSIS FUNCTION

DIAGNOSIS CODE CHECK

Connect the MUT-II to the diagnosis connector (16 –pin) under the instrument under cover, then check diagnosis codes.
(Refer to GROUP 00 – How to Use Troubleshooting/Inspection Service Points.)

ERASING DIAGNOSIS CODES

~~Refer to GROUP 00 – How to Use Troubleshooting/Inspection Service Points.~~ **<Incorrect>**

<Correct>

WHEN USING THE MUT-II
Connect the MUT-II to the diagnosis connector and erase the diagnosis code.
Caution
Turn off the ignition switch before connecting or disconnecting the MUT-II.

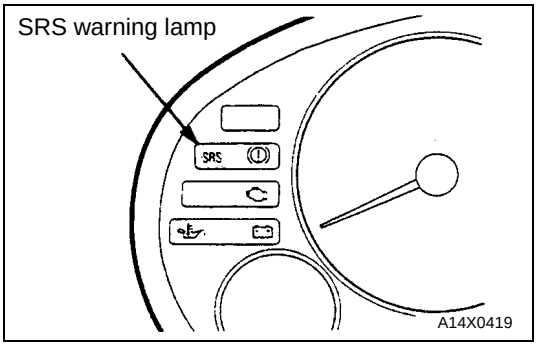

SRS WARNING LAMP INSPECTION

1. Check that the SRS warning lamp illuminates when teh ignition switch is in the ON position.
2. Check that it illuminates for approximately 7 seconds and then switches off.
3. If the above is not the case, check the diagnosis codes.

TEST EQUIPMENT

52400080035

Tool	Name	Use
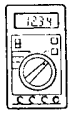	Digital multi-meter	Checking the SRS electrical circuitry Use a multi-meter for which the maximum test current is 2 mA or less at the minimum range of resistance measurement

TROUBLESHOOTING

52400310097

STANDARD FLOW OF DIAGNOSTIC TROUBLESHOOTING

Refer to GROUP 00 – How to Use Troubleshooting/Inspection Service Points.

DIAGNOSIS FUNCTION

52400320063

DIAGNOSIS CODE CHECK

Connect the MUT-II to the diagnosis connector (16 –pin) under the instrument under cover, then check diagnosis codes. (Refer to GROUP 00 – How to Use Troubleshooting/Inspection Service Points.)

ERASING DIAGNOSIS CODES

~~Refer to GROUP 00 – How to Use Troubleshooting/Inspection Service Points.~~ **<Incorrect>**

<Correct>

WHEN USING THE MUT-II
Connect the MUT-II to the diagnosis connector and erase the diagnosis code.
Caution
Turn off the ignition switch before connecting or disconnecting the MUT-II.

INSPECTION CHART FOR DIAGNOSIS CODES

52400330222

Inspect according to the inspection chart that is appropriate for the malfunction code.

Code No.	Diagnosis Item		Reference Page
14	Analog G-sensor system in the SRS-ECU		52B-9
15, 16	Front impact safing G sensor system inside SRS-ECU		52B-9
17	Side impact safing G senosr system insided SRS-ECU		52B-10
21, 22, 61, 62	Driver's side air bag module (squib) system		52B-10
24, 25, 64, 65	Front passenger's side air bag module (squib) system		52B-11
31, 32	SRS-ECU capacitor system		52B-11
34*	Connector lock system		52B-12
35	SRS-ECU (deployed air bag) system		52B-12
41*	IG_1 (A) power circuit system		52B-12
42*	IG_1 (B) power circuit system		52B-13
43	SRS warning lamp drive circuit system	Lamp does not illuminate.*	52B-14
		Lamp does not switch off.	52B-15
44*	SRS warning lamp drive circuit system		52B-15
45	Internal circuit system of non-volatile memory (EEPROM) inside SRS-ECU		52B-15

DIAGNOSIS FUNCTION

DIAGNOSIS CODE CHECK

Connect the MUT-II to the diagnosis connector (16 –pin) under the instrument under cover, then check diagnosis codes. (Refer to GROUP 00 – How to Use Troubleshooting/Inspection Service Points.)

ERASING DIAGNOSIS CODES

~~Refer to GROUP 00 – How to Use Troubleshooting/Inspection Service Points.~~ **<Incorrect>**

<Correct>

WHEN USING THE MUT-II
Connect the MUT-II to the diagnosis connector and erase the diagnosis code.
Caution
Turn off the ignition switch before connecting or disconnecting the MUT-II.

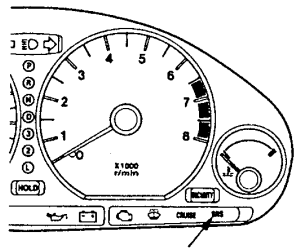

"SRS" WARNING LAMP CHECK

Turn the ignition with the key "ON" position. Does the "SRS" warning lamp illuminate for about 7 seconds, turn OFF and the remain extinguished for at least 5 seconds? If yes, SRS system is functioning properly. If no, consult page 52B-6.

INSPECTION CHART FOR DIAGNOSIS CODES

Inspect according to the inspection chart that is appropriate for the malfunction code.

Code No.	Diagnosis Item		Reference Page
14	Analog G-sensor system		52B-7
15	Safing G sensor system		52B-7
21, 22	Driver's side air bag module (squib) system		52B-7
24*1, 25*1	Front passenger's side air bag module (squib) system		52B-8
26, 27	Driver's side pre-tensioner (squib) system		52B-9
28, 29	Front passenger's side pre-tensioner (squib) system		52B-9
31, 32	SRS-ECU capacitor system		52B-10
35	SRS-ECU system (ignition of the air bag or activation of the seat belt pre-tensioner completed)		52B-10
41*2	IG1 (A) power circuit system		52B-10
42*2	IG1 (B) power circuit system		52B-11
43*2	SRS warning lamp drive circuit system	Lamp does not illuminate	52B-12
		Lamp does not switch off	52B-13
44*2	SRS warning lamp drive circuit system		52B-13

SEALANT

52400060015

Item	Specified sealant	Remark
Sensor cable	3M ATD Part No. 8625 or equivalent	Ribbon sealer

TROUBLESHOOTING

52400310097

STANDARD FLOW OF DIAGNOSTIC TROUBLESHOOTING

Refer to GROUP 00 – How to Use Troubleshooting/Inspection Service Points.

DIAGNOSIS FUNCTION

52400320063

DIAGNOSIS CODE CHECK

Connect the MUT-II to the diagnosis connector (16 –pin) under the instrument under cover, then check diagnosis codes. (Refer to GROUP 00 – How to Use Troubleshooting/Inspection Service Points.)

ERASING DIAGNOSIS CODES

~~Refer to GROUP 00 – How to Use Troubleshooting/Inspection Service Points.~~ **<Incorrect>**

<Correct>

WHEN USING THE MUT-II
Connect the MUT-II to the diagnosis connector and erase the diagnosis code.
Caution
Turn off the ignition switch before connecting or disconnecting the MUT-II.

INSPECTION CHART FOR DIAGNOSIS CODES

52400330123

Inspect according to the inspection chart that is appropriate for the malfunction code.

Code No.	Diagnosis Item	Reference Page
11, 12, 13	Front impact sensor system	52B-7
21, 22	Air bag module (squib) system	52B-8
31, 32	SDU capacitor system	52B-9
33*	Cranking signal system	52B-10
34*	Connector lock system	52B-11
41*	IG_1 (A) power circuit system	52B-11
42*	IG_1 (B) power circuit system	52B-12
43	SRS warning lamp drive circuit system Lamp does not illuminate*	52B-13
	SRS warning lamp drive circuit system Lamp does not switch off	52B-14
44	SRS warning lamp drive circuit system	52B-14
45	SDU non-volatile memory (EEPROM) and A/D converter system	52B-14

NOTE
(1) *: If the vehicle condition returns to normal, the diagnosis code will be automatically erased, and the SRS warning lamp will return to normal.
(2) If the vehicel has a discharged battery it will store the fault codes 41 or 42. When these diagnosis codes are displayed, check the battery.

TEST EQUIPMENT

Tool	Name	Use
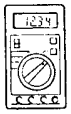	Digital multi-meter	Checking the SRS electrical circuitry Use a multi-meter for which the maximum test current is 2 mA or less at the minimum range of resistance measurement

TROUBLESHOOTING

STANDARD FLOW OF DIAGNOSTIC TROUBLESHOOTING

Refer to GROUP 13 – Service Adjustment Procedures (MPI). (Refer to the '95 L300 Workshop Manual <Pub. No. PWWE9409(1/2)>.)

DIAGNOSIS FUNCTION

DIAGNOSIS CODE CHECK

Connect the MUT-II to the diagnosis connector (16 –pin) under the instrument under cover, then check diagnosis codes.
Refer to GROUP 13 – Service Adjustment Procedures (MPI). (efer to the '95 L300 Workshop Manual <Pub. No. PWWE9409(1/2)>.)

ERASING DIAGNOSIS CODES

<Incorrect>

~~Refer to GROUP 13 – Service Adjustment Procedures (MPI). (efer to the '95 L300 Workshop Manual <Pub. No. PWWE9409(1/2)>.)~~

<Correct>

WHEN USING THE MUT-II
Connect the MUT-II to the diagnosis connector and erase the diagnosis code.
Caution
Turn off the ignition switch before connecting or disconnecting the MUT-II.

INSPECTION CHART FOR DIAGNOSIS CODES

Inspect according to the inspection chart that is appropriate for the malfunction code.

Code No.	Diagnosis Item		Reference Page
14	Analog G-sensor system in the SRS-ECU		52B-7
15, 16	Safing G sensor system inside SRS-ECU		52B-7
21, 22, 51, 54*[1], 61, 64*[1]	Driver's side air bag module (squib) system		52B-8
24, 25, 51, 54, 61, 64	Front passenger's side air bag module (squib) system		52B-9
31, 32	SRS-ECU capacitor system		52B-19
34*[2]	Connector lock system		52B-10
35	SRS-ECU (deployed air bag) system		52B-10
41*[2]	IG_1 (A) power circuit system (fuse No. 14 circuit)		52B-10
42*[2]	IG_1 (B) power circuit system(fuse No. 15 circuit)		52B-10
43	SRS warning lamp drive circuit system	Lamp does not illuminate.*[2]	52B-11
		Lamp does not switch off.	52B-12
44*	SRS warning lamp drive circuit system		52B-12
45	Internal circuit system of non-volatile memory (EEPROM) inside SRS-ECU		52B-12

SERVICE BULLETIN

MITSUBISHI MOTORS

QUALITY INFORMATION ANALYSIS
OVERSEAS SERVICE DEPT. MITSUBISHI MOTORS CORPORATION

SERVICE BULLETIN	**No.:** MSB-01E52-001		
	Date: 2001-07-16	**<Model>**	**<M/Y>**
Subject:	MODIFICATION TO SRS-ECU AND FRONT IMPACT SENSOR	(EC)L200(K60,K70)	97-99
Group:	INTERIOR	**Draft No.:** 00SY011308	
INFORMATION	**INTERNATIONAL CAR ADMINISTRATION OFFICE**	T.MASAKI-MANAGER TECHNICAL SERVICE PLANNING	

1. Description:

The modified SRS-ECU and front impact sensor have been employed.

2. Applicable Manuals:

Manual	Pub. No.	Language	Page(s)
'97 L200 Workshop Manual Chassis	PWTE96E1	(English)	52B-5, 15, 25
	PWTS96E1	(Spanish)	
	PWTF96E1	(French)	
	PWTG96E1	(German)	
'99 L200 Workshop Manual Chassis Supplement	PWTE96E1-C	(English)	52B-1, 2, 4, 8, 9
	PWTS96E1-C	(Spanish)	
	PWTF96E1-C	(French)	
	PWTG96E1-C	(German)	

3. Interchangeability:

Not Interchangeable.

4. Effective Date:

From February 1, 2000 (Engineering change No.: YW5519)
From February 21, 1999 for KD shipments.

SERVICE SPECIFICATIONS

52400040071

Items	Standard value
Front impact sensor resistance Ω	~~2,000 ± 20~~ **<Old>** (Up to January 31, 2000) 820 ± 82 **<New>** (From February 1, 2000)
Clock spring resistance Ω	Less than 0.4

SPECIAL TOOLS

52400070148

Tool	Number	Name	Use
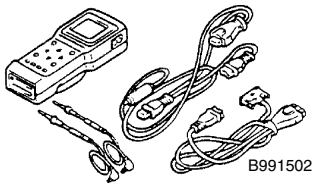 B991502	MB991502	MUT-II sub assembly	• Reading diagnosis codes • Erasing diagnosis codes • Reading trouble period • Reading erase times
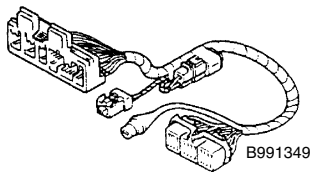 B991349	MB991349	SRS Check harness	Checking the SRS electrical circuitry
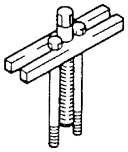 B990803	MB990803	Steering wheel puller	Steering wheel removal
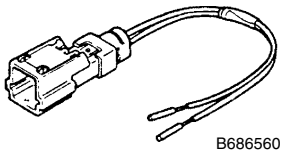 B686560	MB686560	SRS air bag adapter harness A	Deployment of air bag module inside the vehicle
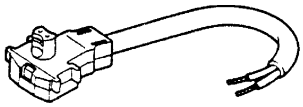 B628919	MB628919	SRS air bag adapter harness B	Deployment of air bag module outside the vehicle

TEST EQUIPMENT

52400080035

Tool	Name	Use
13R0746	Digital multi-meter	Checking the SRS electrical circuitry Use a multi-meter for which the maximum test current is 2 mA or less at the minimum range of resistance measurement

INSPECTION PROCEDURE FOR TROUBLE SYMPTOMS

Inspection Procedure 1

Communication with MUT-II is not possible. (Communication with all systems is not possible.)	Probable cause
The cause is probably a power supply system (including earth circuit) of the diagnosis line	• Malfunction of connectors • Malfunction of wiring harness

Refer to GROUP 13A – Troubleshooting.

Inspection Procedure 2

Communication with MUT-II is not possible. (Communication is not possible with SRS only.)	Probable cause
If communication is not possible with the SRS only, the cause is probably an open circuit in the diagnosis output circuit of the SRS or in the power circuit (including earth circuit).	• Malfunction of wiring harnesses or connectors • Malfunction of SDU

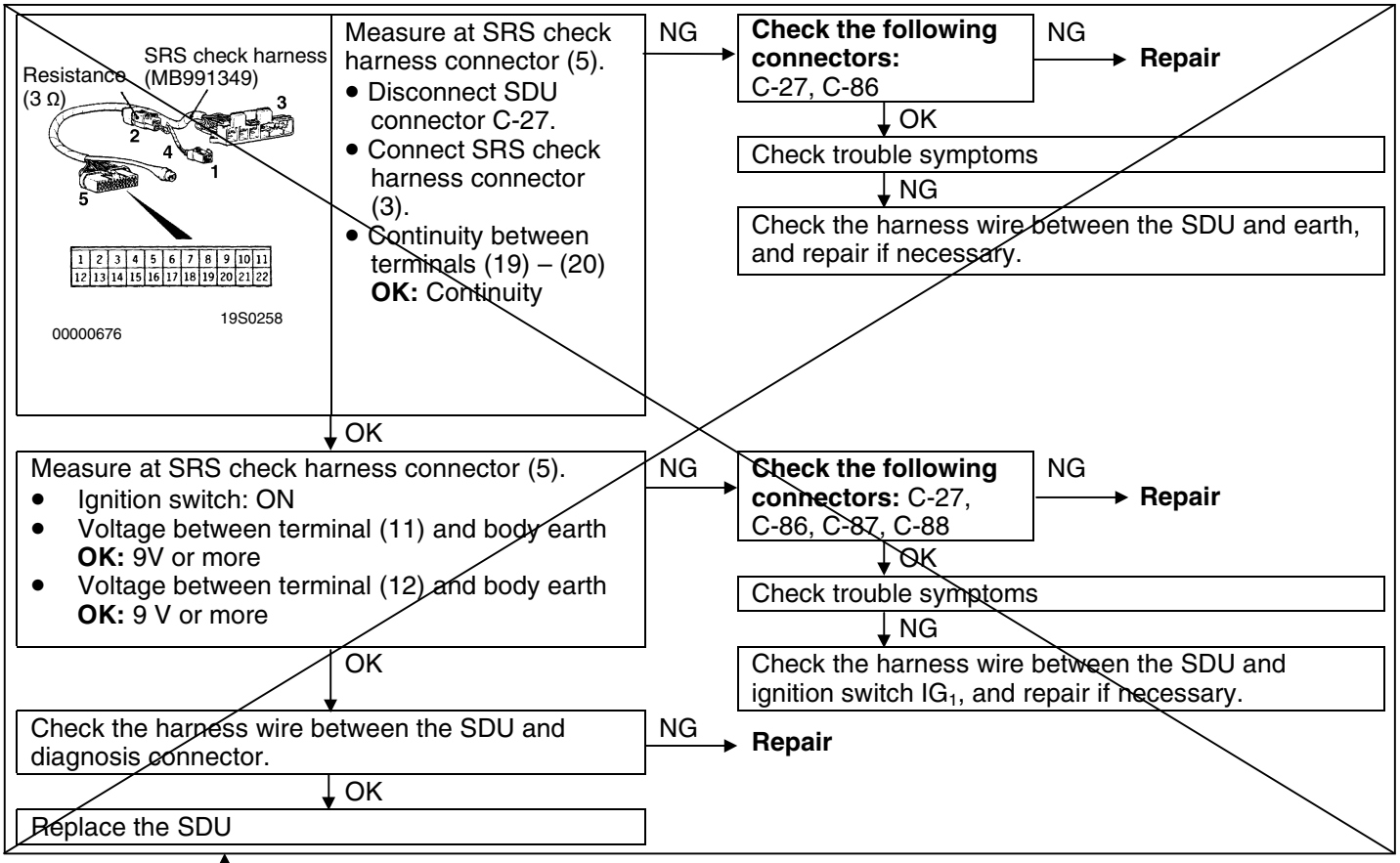

<Old>

Next page added here.

SRS MAINTENANCE

52400390114

The SRS must be inspected by an authorized dealer 10 years after the date vehicle registration.

<Added>

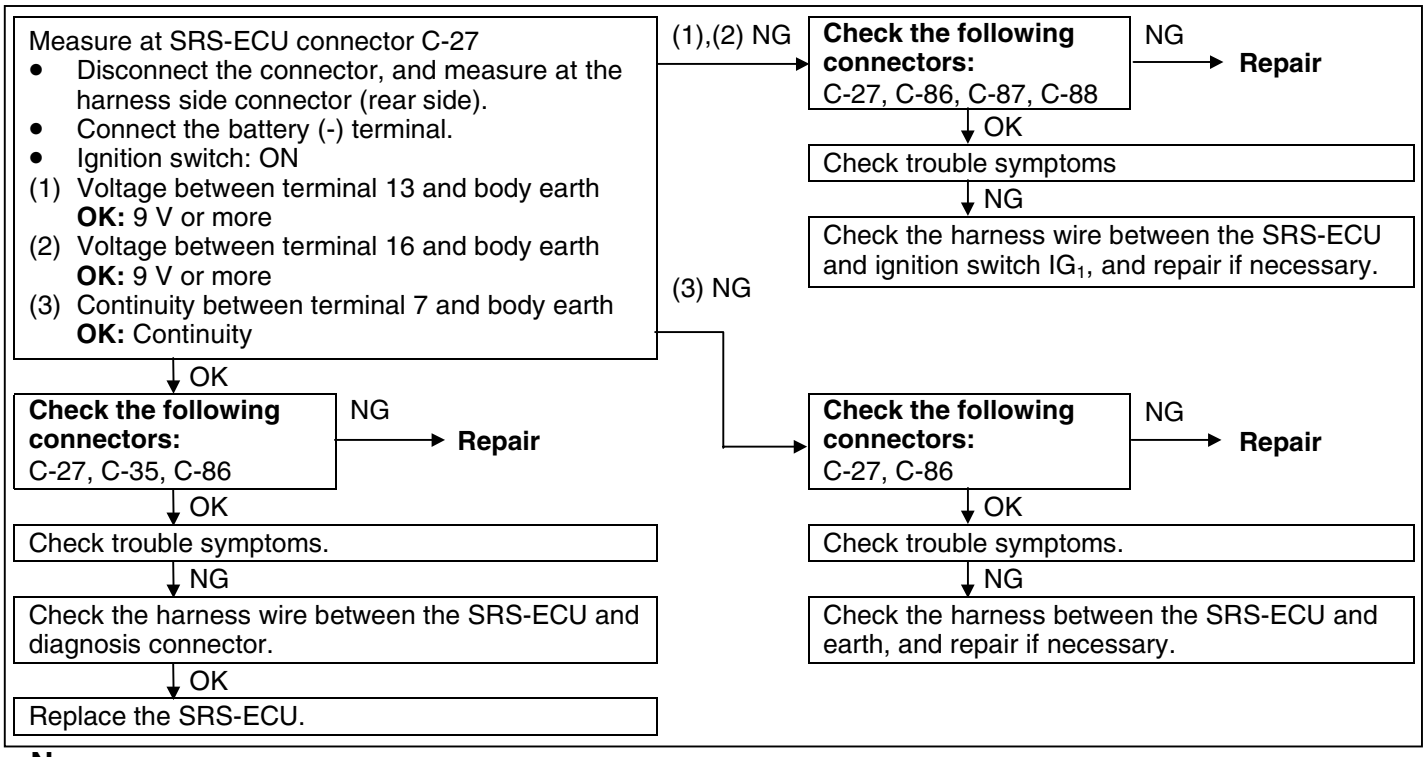
Measure at SRS-ECU connector C-27
• Disconnect the connector, and measure at the harness side connector (rear side).
• Connect the battery (-) terminal.
• Ignition switch: ON
(1) Voltage between terminal 13 and body earth
OK: 9 V or more
(2) Voltage between terminal 16 and body earth
OK: 9 V or more
(3) Continuity between terminal 7 and body earth
OK: Continuity
(1),(2) NG
Check the following connectors:
C-27, C-86, C-87, C-88
NG
Repair
OK
Check trouble symptoms
NG
Check the harness wire between the SRS-ECU and ignition switch IG1, and repair if necessary.
(3) NG
OK
Check the following connectors:
C-27, C-35, C-86
NG
Repair
OK
Check trouble symptoms.
NG
Check the harness wire between the SRS-ECU and diagnosis connector.
OK
Replace the SRS-ECU.
Check the following connectors:
C-27, C-86
NG
Repair
OK
Check trouble symptoms.
NG
Check the harness between the SRS-ECU and earth, and repair if necessary.

<New>

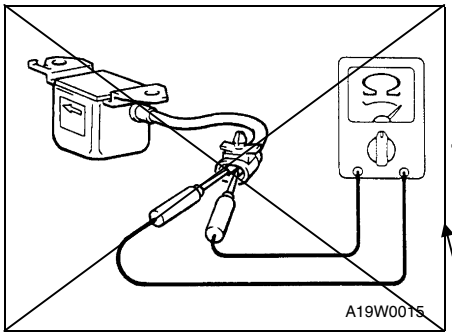

<Old>

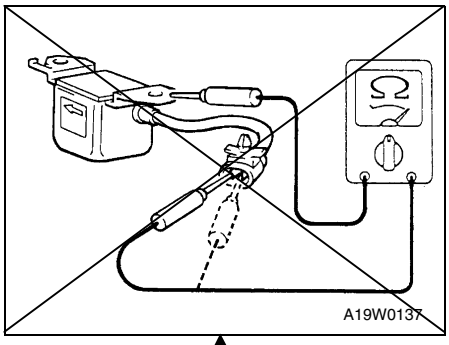

<Old>

INSPECTION

52400160067

1. Check the front impact sensor for dents, cracks, deformation or rust.

   Caution
   If a dent, crack, deformation or rust is detected, replace with a new sensor.

2. Measure the resistance between terminals and check whether it is within the standard value.
   Standard value: ~~2,000 ± 20 Ω~~ <Old> ← 820 ± 82 Ω <New>

   Caution
   Always replace the sensor with a new one if the resistance is not within the standard value.

3. Check fender shield panel for deformation or rust.
4. Check the continuity between the terminal and bracket.
   If there is a continuity, the insulation is malfunctioned, and replace the sensor with a new one.

<New>

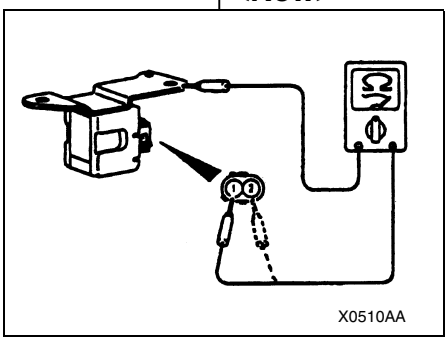

<New>

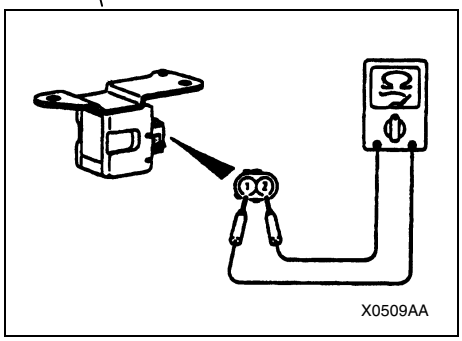

GROUP 52B
SUPPLEMENT RESTRAINT SYSTEM (SRS)

GENERAL

OUTLINE OF CHANGES

The SRS air bag control unit (SRS-ECU) has been modified due to passenger’s air bag newly used. Also, driver’s air bag module has been modified. Therefore, service procedures have been added, although the other procedures than the below remain the same as before.

SRS SERVICE PRECAUTIONS

1. In order to avoid injury to yourself or others from accidental deployment of the air bag during servicing, read and carefully follow all the precautions and procedures described in this manual.
2. Do not use any electrical test equipment on or near SRS components, except those specified on the basic manual.
3. **Never Attempt to Repair the Following Components:**
   - SRS air bag control unit (SRS-ECU)
   - Front impact sensors
   - Clock spring
   - Air Bag Modules (Driver’s and front passenger’s sides)

If these components are diagnosed as faulty, just replace in accordance with the INDIVIDUAL COMPONENT SERVICE procedures. Refer to P.52B-13.

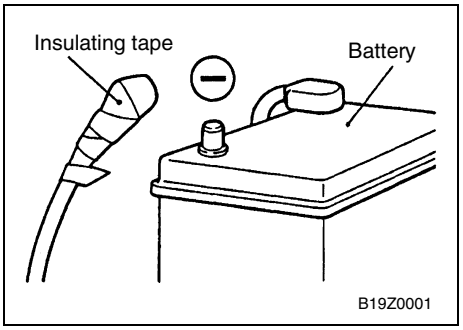

After negative battery cable disconnection, wait at least 60 seconds before any further work. Also, wind the terminal with insulating tape. The SRS-ECU condenser retains enough voltage for some time to deploy the air bags even after the battery has been disconnected. So, doing any work in this period of time could result in unintended air bag deployment, leading to serious injury.

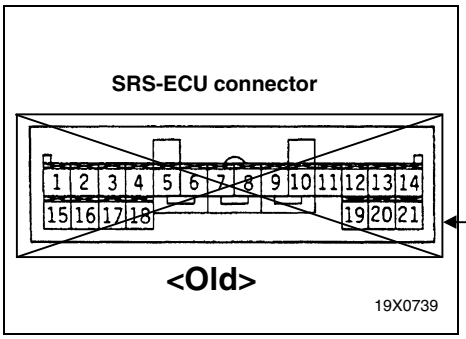

Do not repair the SRS air bag wiring harness connector. If faulty, just replace. If the wiring harness is faulty, replace or repair according to the following table.

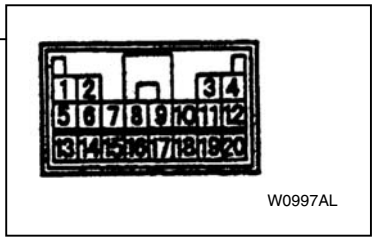

<New>	SRS-ECU terminal No. <Old>	Harness connector (No. of terminals, colour)	Destination of harness	Corrective action
17 to 19	~~1 to 4~~	~~21~~ pins, yellow <Old> / 20 <New>	-	-
11	~~5~~		Body wiring harness → Clock spring → Airbag module (Driver’s side)	Repair or replace each wiring harness. Replace clock spring.
12	~~6~~			
9	~~7~~		Body wiring harness → Airbag module (Front passenger’s side)	Repair or replace each wiring harness.
10	~~8~~			
5, 6	~~9, 10~~		-	-
20	~~11~~		Body wiring harness → Diagnosis connector	Repair or replace each wiring harness.
3, 4	~~12, 17~~		Body wiring harness → Front wiring harness → Front impact sensor (L.H.)	Sensor cable* installation procedures
	13		Body wiring harness → Junction block (fuse No. 11)	Repair or replace each wiring harness.
16	~~14~~		Body wiring harness → Junction block (fuse No. 10)	
8	~~15~~		Body wiring harness → SRS warning lamp	
14, 15	~~16~~		-	-
1, 2	~~18, 19~~		Body wiring harness → Front wiring harness → Front impact sensor (R.H.)	Sensor cable* installation procedures
7	~~20, 21~~		Body wiring harness → Earth	Repair or replace body wiring harness.

NOTE
*: The sensor cable is available as service part.

6. Do not expose the SRS components to heat over 93°C, so remove the SRS-ECU, air bag modules, clock spring and front impact sensors before drying or baking the vehicle after painting.
7. Whenever you finish servicing the SRS, check warning lamp operation to make sure that the system functions properly.
8. Make certain that the ignition switch is off when the MUT-II is connected and disconnected.
9. If you have any questions about the SRS, please contact your local distributor.

NOTE
SERIOUS INJURY CAN RESULT FROM UNINTENDED AIR BAG DEPLOYMENT, SO USE ONLY THE PROCEDURES AND EQUIPMENT SPECIFIED IN THIS MANUAL.

INSPECTION PROCEDURE CLASSIFIED BY DIAGNOSIS CODE

Code No. 11, 12, or 13 Front impact sensor system	Probable cause
These diagnostic trouble codes are output if there is abnormal resistance between the input terminals of the front impact sensors. The trouble causes for each diagnosis code No. are as follows.	• Malfunction of front impact sensors • Malfunction of wiring harness of connectors • Malfunction of SRS-ECU

Code No.	Trouble
11	• Short circuit in front impact sensors of harness • Short circuit in front impact sensors harness leading to the vehicle body ground • Short circuit in front impact sensors harness leading to the power supply
12	• Open circuit in either left or right front impact sensors or harness • Short circuit in front impact sensors harness leading to the power supply
13	• Open circuit in both left and right front impact sensors or harness • Short circuit in front impact sensors harness leading to the power supply

Check the front impact sensors. → NG → **Replace**

↓ OK

SRS check harness (MB991613)

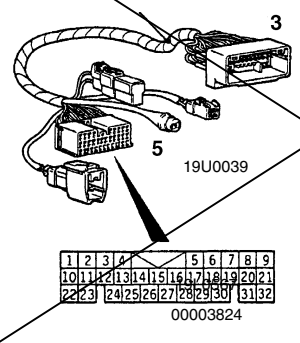

Measure at SRS check harness connector (5).
- Disconnect SRS-ECU connector C-27
- Connect SRS check harness connector 3.
- Resistance between terminals (12) and (17).
  OK: 2,000 ± 40 Ω
- Resistance between terminals (18) and (19).
  OK: 2,000 ± 40 Ω

NG → **Check the following connectors:** A-29, C-20, C-27 → NG → **Repair**

↓ OK

Check trouble symptom.

↓ NG

Check the harness wire between the SRS-ECU and front impact sensors, and repair if necessary.

<Old>

↓ OK

Replace the SRS-ECU

<New>

Measure at SRS-ECU connector C-27
- Disconnect the connector and measure at the harness side (Rear side)
- Connect the battery (-) terminal
- Resistance between terminal (1) and (2).
  OK: 820 ± 82 Ω
- Resistance between terminal (3) and (4).
  OK: 820 ± 82 Ω

Code No.35 SRS-ECU (deployed air bag) system	Probable cause
This diagnosis code is displayed after the air bag deploys. If this code is output before the air bag has deployed, the cause is probably a malfunction inside the SRS-ECU.	• Malfunction of SRS-ECU

Replace the SRS-ECU

Code No.41 Power circuit system (fuse No.10 circuit) Code No.42 Power circuit system (fuse No.11 circuit)	Probable cause
Code No.41 is displayed if the voltage between the IG_1 terminal (SRS-ECU, terminal 14) and the earth is lower than the specified value for a continuous period of five seconds or more. Code No.42 is displayed if the voltage between the IG_1 terminal (SRS-ECU, terminal 13) and the earth is lower than the specified value for a continuous period of five seconds or more. Automatically erased, and the SRS warning lamp will switch off. If the vehicle has a discharged battery it will store the fault codes 41 and 42. When these diagnosis codes are displayed, check the battery.	• Malfunction of wiring harness or connectors • Malfunction of SRS-ECU

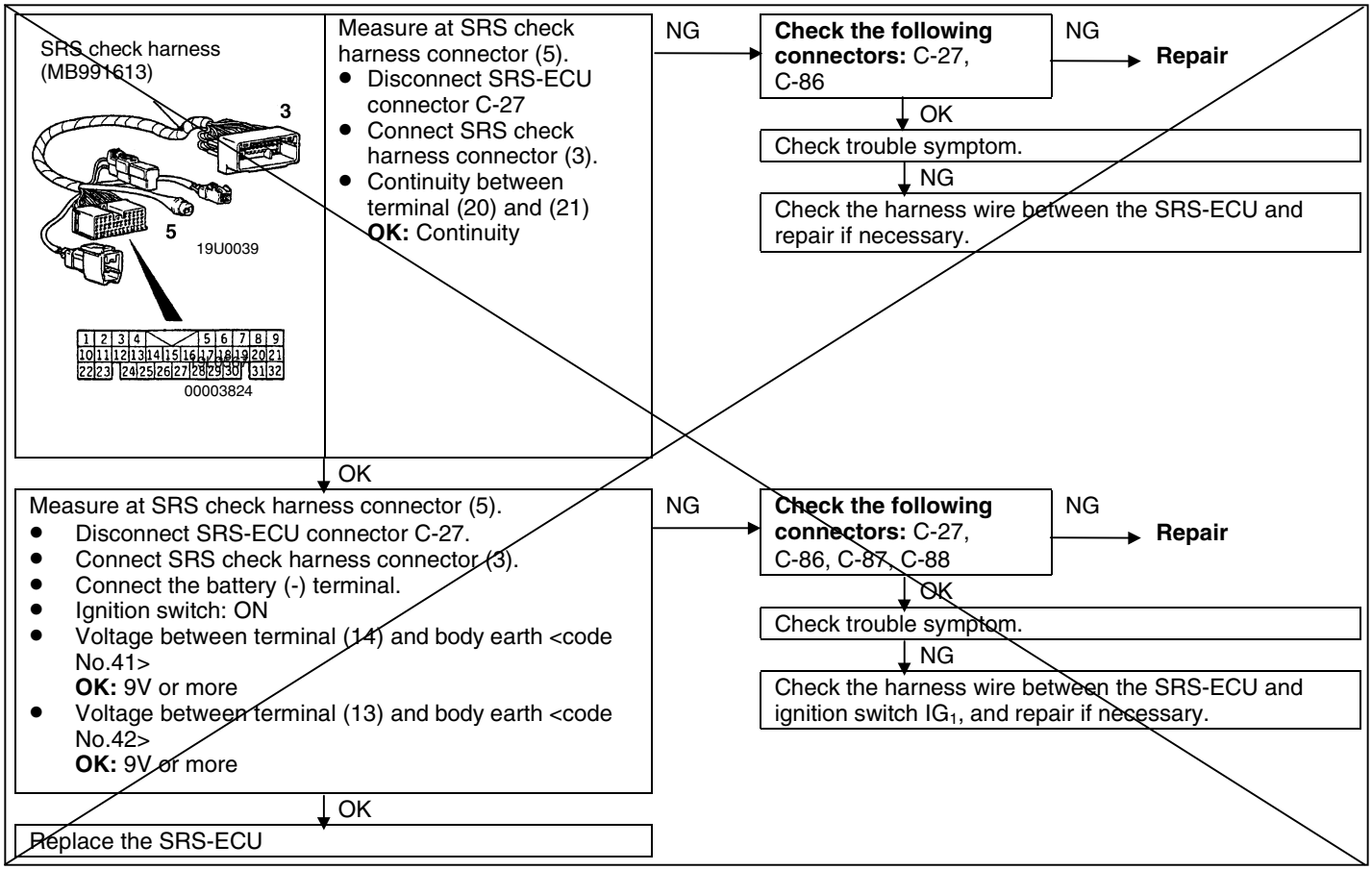

<Old>

Next page added here.

<Added>

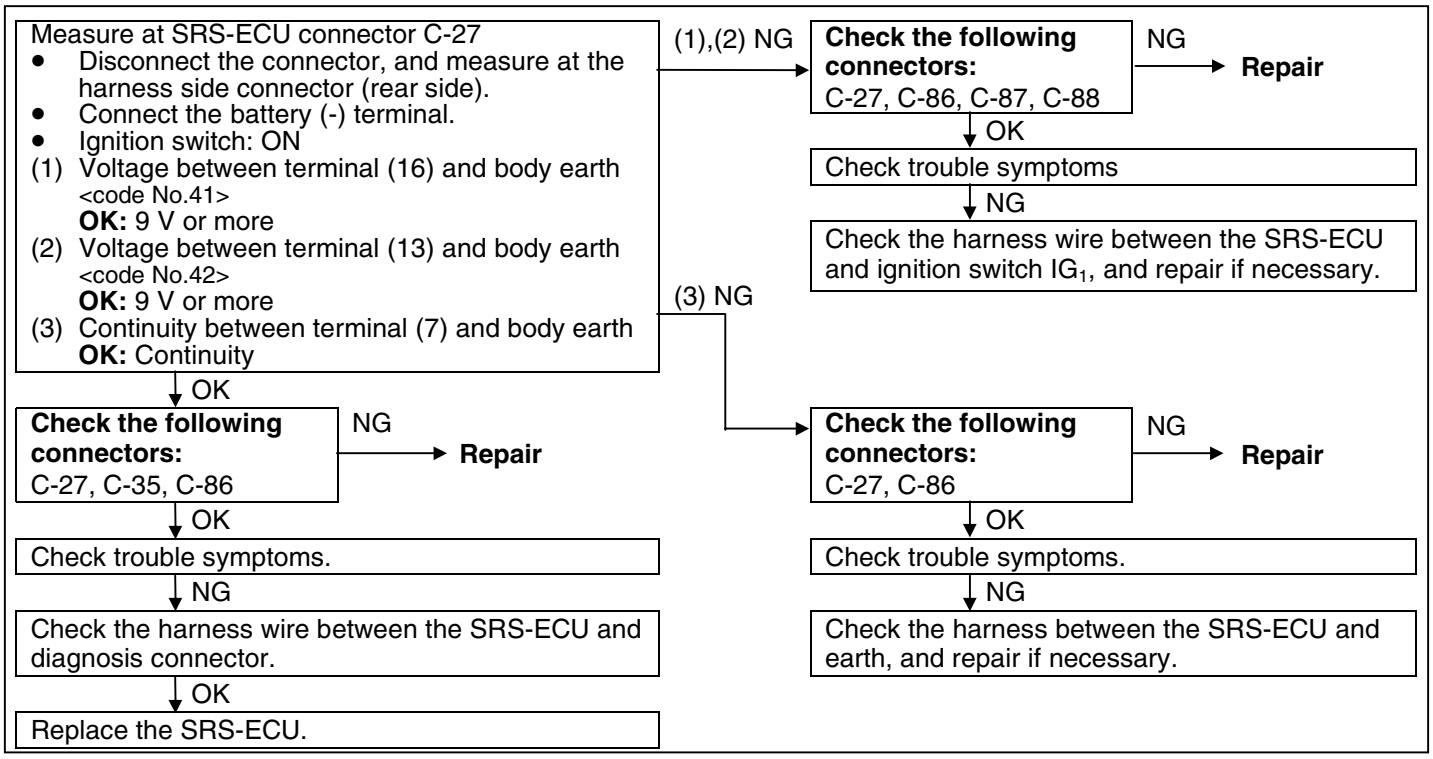
Measure at SRS-ECU connector C-27
• Disconnect the connector, and measure at the harness side connector (rear side).
• Connect the battery (-) terminal.
• Ignition switch: ON
(1) Voltage between terminal (16) and body earth <code No.41>
OK: 9 V or more
(2) Voltage between terminal (13) and body earth <code No.42>
OK: 9 V or more
(3) Continuity between terminal (7) and body earth
OK: Continuity
(1),(2) NG
Check the following connectors:
C-27, C-86, C-87, C-88
NG
Repair
OK
Check trouble symptoms
NG
Check the harness wire between the SRS-ECU and ignition switch IG1, and repair if necessary.
(3) NG
OK
Check the following connectors:
C-27, C-35, C-86
NG
Repair
OK
Check trouble symptoms.
NG
Check the harness wire between the SRS-ECU and diagnosis connector.
OK
Replace the SRS-ECU.
Check the following connectors:
C-27, C-86
NG
Repair
OK
Check trouble symptoms.
NG
Check the harness between the SRS-ECU and earth, and repair if necessary.

<New>

Code No. 43, SRS warning lamp drive circuit system (Lamp does not illuminate.)	Probable cause
This diagnosis code is displayed when an open circuit occurs for a continuous period of 5 seconds while the SRS-ECU in monitoring the SRS warning lamp and the lamp is OFF (transistor OFF). However, if this code is displayed due to an open circuit, if the vehicle condition returns to normal, this diagnosis code No.43 will be automatically erased, and the SRS warning lamp will return to normal.	• Malfunction of wiring harnesses or connectors • Blown bulb • Malfunction of SRS-ECU • Malfunction of combination meter

<Old>

SRS check harness (MB991613)

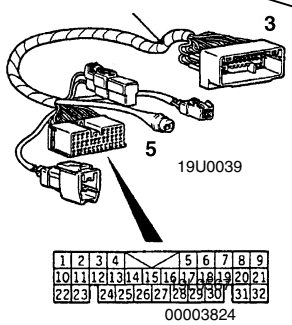

Measure at SRS check harness connector (5).
- Disconnect SRS-ECU connector C-27
- Connect SRS check harness connector (3).
- Continuity between terminal (20) and (21)

OK: Continuity

NG → **Check the following connectors:** C-27, C-86 → NG → **Repair**

OK → Check trouble symptom.

NG → Check the harness wire between the SRS-ECU and earth, and repair if necessary.

OK ↓

Measure at SRS check harness connector (5).
- Disconnect SRS-ECU connector C-27.
- Connect SRS check harness connector (3).
- Connect the battery (-) terminal.
- Ignition switch: ON
- Connect terminal (15) to the body earth.

OK: Lamp illuminates

NG → Check the bulb for blowing. → NG → **Repair**

OK → **Check the following connectors:** C-06, C-79 C-88 → NG → **Repair**

OK → Check trouble symptom.

NG → Check the harness wire between the SRS-ECU and ignition switch (IG_1). → NG → **Repair**

OK → Replace the combination meter.

OK ↓

Replace the SRS-ECU

<New>

SRS warning lamp inspection.
- Connect the battery (-) terminal
- Ignition switch: ON
- Does the lamp illuminate when SRS-ECU connector C-27 is disconnected?

OK: Lamp illuminates

CHASSIS ELECTRICAL

Click on the applicable bookmark to selected the required model year

CHASSIS ELECTRICAL

CONTENTS

54109000129

BATTERY 4

SERVICE SPECIFICATION 4

ON-VEHICLE SERVICE 4

Fluid Level and Specific Gravity Check 4

Charging 5

Battery Testing Procedure 6

IGNITION SWITCH AND IMMOBILIZER SYSTEM 7

SPECIAL TOOL 7

TROUBLESHOOTING 7

IGNITION SWITCH AND IMMOBILIZER SYSTEM 19

COMBINATION METERS 25

SERVICE SPECIFICATION 25

SEALANT 25

SPECIAL TOOLS 26

TROUBLESHOOTING 27

ON-VEHICLE SERVICE 28

Speedometer Check 28

Tachometer Check 28

Fuel Gauge Simple Check 29

Fuel Gauge Unit Check 29

Engine Coolant Temperature Gauge Simple Check 31

Engine Coolant Temperature Gauge Unit Check 31

COMBINATION METERS 32

CONTINUED ON NEXT PAGE

WARNINGS REGARDING SERVICING OF SUPPLEMENTAL RESTRAINT SYSTEM (SRS) EQUIPPED VEHICLES

WARNING!

(1) Improper service or maintenance of any component of the SRS, or any SRS-related component, can lead to personal injury or death to service personnel (from inadvertent firing of the air bag) or to the driver (from rendering the SRS inoperative).

(2) Service or maintenance of any SRS component or SRS-related component must be performed only at an authorized MITSUBISHI dealer.

(3) MITSUBISHI dealer personnel must thoroughly review this manual, and especially its GROUP 52B – Supplemental Restraint System (SRS) before beginning any service or maintenance of any component of the SRS or any SRS-related component.

NOTE

The SRS includes the following components: impact sensors, SRS diagnosis unit, SRS warning lamp, air bag module, clock spring and interconnecting wiring. Other SRS-related components (that may have to be removed/installed in connection with SRS service or maintenance) are indicated in the table of contents by an asterisk (*).

MULTI-METER 35
TROUBLESHOOTING 35
ON-VEHICLE SERVICE 36
Voltmeter Simple Test 36
MULTI-METER 37
OUTSIDE THERMO SENSOR 38
SERVICE SPECIFICATIONS 38
OUTSIDE THERMO SENSOR 38
HEADLAMP* 39
SERVICE SPECIFICATIONS 39
SPECIAL TOOLS 39
TROUBLESHOOTING 40
ON-VEHICLE SERVICE 46
Headlamp Aiming 46
Intensity Measurement 47
Bulb Replacement 47
HEADLAMP 48
FRONT COMBINATION LAMP* 51
SIDE TURN-SIGNAL LAMP* 52
REAR COMBINATION LAMP* 53
REAR FOG LAMP 54
SPECIAL TOOL 54
REAR FOG LAMP 54
RHEOSTAT 56
SPECIAL TOOL 56
RHEOSTAT 56
HAZARD WARNING LAMP SWITCH 57
SPECIAL TOOL 57
HAZARD WARNING LAMP SWITCH 57
HORN 58
CIGARETTE LIGHTER 59
CLOCK 60
SPECIAL TOOL 60
CLOCK 60
RADIO AND TAPE PLAYER 61
SPECIAL TOOL 61
TROUBLESHOOTING 61
Quick-reference Troubleshooting Chart 61
Chart 62
Radio and Tape Player with Anti-theft System 77
RADIO AND TAPE PLAYER 80
SPEAKER 81
ANTENNA 82
SPECIAL TOOL 82
ANTENNA 82

CONTINUED ON NEXT PAGE

REAR WINDOW DEFOGGER 83

SPECIAL TOOL 83

ON-VEHICLE SERVICE 83

Printed-heater Line Check 83

REAR WINDOW DEFOGGER SWITCH ... 84

RADIATOR FAN MOTOR
..... Refer to GROUP 14

INTERCOOLER (INTERCOOLER FAN MOTOR) ..... Refer to GROUP 15

REAR DIFFERENTIAL LOCK
..... Refer to GROUP 27

SERVICE BRAKES (ABS)
..... Refer to GROUP 35B, 35C

DOOR GLASS AND REGULATOR (POWER WINDOWS)
..... Refer to GROUP 42

DOOR HANDLE AND LATCH (DOOR LOCKING) ..... Refer to GROUP 42

WINDSHIELD WIPER AND WASHER
..... Refer to GROUP 51

HEADLAMP WASHER
..... Refer to GROUP 51

DOOR MIRROR (ELECTRONIC CONTROLLED DOOR MIRROR)
..... Refer to GROUP 51

FRONT SEAT (HEATED SEAT)
..... Refer to GROUP 52A

SRS AIR BAG
..... Refer to GROUP 52B

HEATER ..... Refer to GROUP 55

AIR CONDITIONER
..... Refer to GROUP 55

BATTERY

54100030028

SERVICE SPECIFICATION

Item	Specification
Specific gravity of the battery fluid	1.220 – 1.290 [20°C]

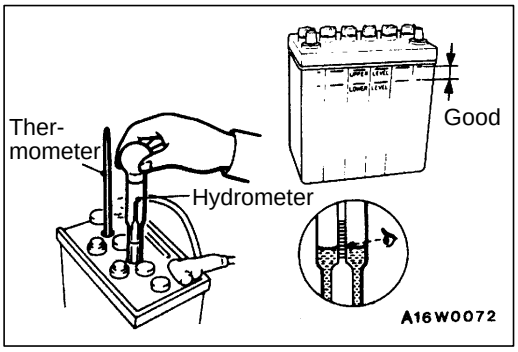

ON-VEHICLE SERVICE

54100090026

FLUID LEVEL AND SPECIFIC GRAVITY CHECK

1. Inspect whether or not the battery fluid is between the UPPER LEVEL and LOWER LEVEL marks.
2. Use a hydrometer and thermometer to check the specific gravity of the battery fluid.

   Standard value: 1.220 – 1.290 [20°C]

   The specific gravity of the battery fluid varies with the temperature, so use the following formula to calculate the specific gravity for 20°C. Use the calculated value to determine whether or not the specific gravity is satisfactory.

   D20=Dt+0.0007 (t – 20)

   D20: Specific gravity of the battery fluid calculated for 20°C.

   Dt: Actually measured specific gravity

   t: Actually measured temperature

CHARGING

54100110029

1. When charging a battery while still installed in the vehicle, disconnect the battery cables to prevent damage to electrical parts.
2. The current normally used for charging a battery should be approximately 1/10th of the battery capacity.
3. When performing a quick-charging due to lack of time, etc., the charging current should never exceed the battery capacity as indicated in amperes.
4. Determining if charging is completed.
   (1) If the specific gravity of the battery fluid reaches 1.250–1.290 and remains constant for at least one hour.
   (2) If the voltage of each cell reaches 2.5–2.8 V and remains constant for at least one hour.

Caution

1. **Be careful since the battery fluid level may rise during charging.**
2. **Keep all sources of fire away while charging because there is a danger of explosion.**
3. **Be careful not to do anything that could generate sparks while charging.**
4. **When charging is completed, replace the battery caps, pour clean water over the battery to remove any sulfuric acid and dry.**

BATTERY TESTING PROCEDURE

54100120107

TEST STEP

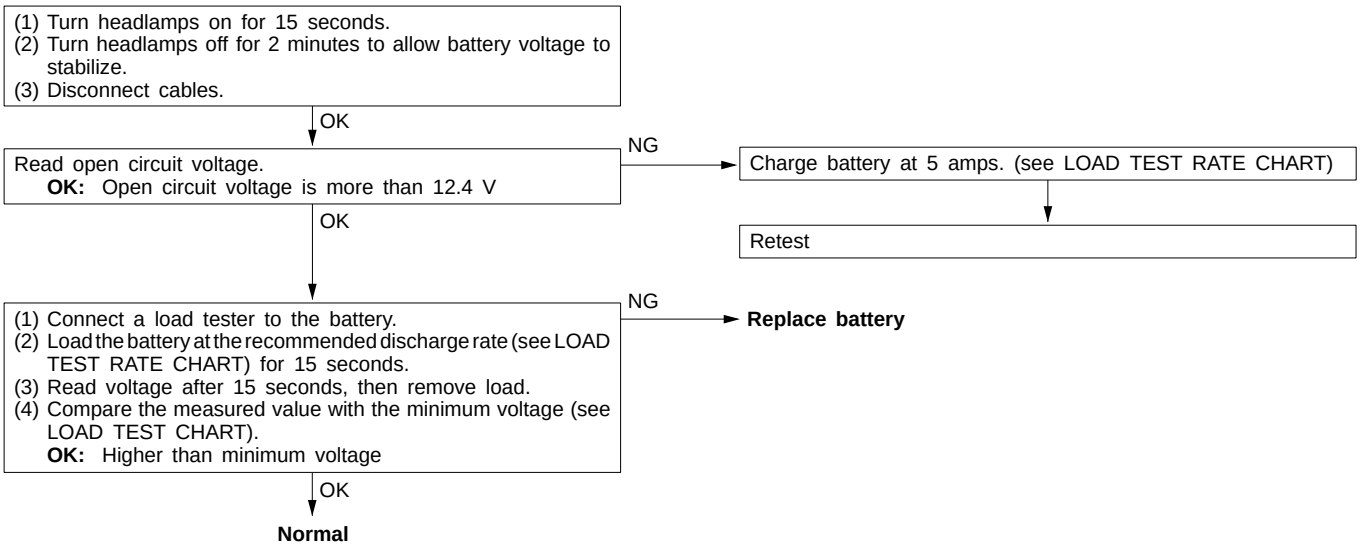

LOAD TEST RATE CHART

Battery type	50B24R	55D23R	55B24R	75D26R	80D26R	95D31R
Charging time when fully discharged h [5-amp rated current charging]	8	10	8	12	12	14
Load test (Amps)	190	170	210	240	290	310

LOAD TEST CHART

Temperature °C	21 and above	16	10	4	–1	–7	–12	–18
Minimum voltage V	9.6	9.5	9.4	9.3	9.1	8.9	8.7	8.5

IGNITION SWITCH AND IMMOBILIZER SYSTEM

54300060238

SPECIAL TOOL

Tool	Number	Name	Use
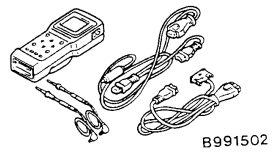	MB991502	MUT-II sub assembly	● ETACS-ECU input signal checking ● Immobilizer system check (Diagnosis display using the MUT-II) ● Registration of the ID code ● Resetting the code to the factory setting <Diesel-powered vehicles> ● Change of the password

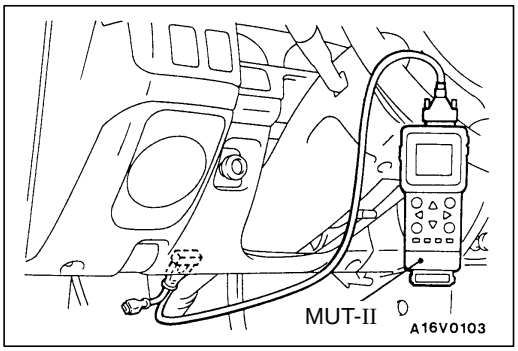

TROUBLESHOOTING
Ignition Switch

54300700109

DIAGNOSIS FUNCTION <VEHICLES WITH ETACS-ECU>

INPUT SIGNAL INSPECTION POINTS

1. Connect the MUT-II to the diagnosis connector.
2. If buzzer of the MUT-II sounds once when a switch is operated (ON/OFF), the ETACS-ECU input signal for that switch circuit system is normal.

INSPECTION CHART FOR TROUBLE SYMPTOMS

54300720235

Trouble symptoms		Inspection procedure	Reference page
Communication with MUT-II is impossible.	Communication with all systems is impossible.	1	54-8
	Communication with one-shot pulse input signal only is impossible.	2	54-8
Ignition key hole illumination lamp system	Even if the driver's side door is opened, the key hole illumination lamp does not illuminate.	3	54-8
	The key hole illumination lamp remains illuminated.	4	54-9

INSPECTION PROCEDURE FOR TROUBLE SYMPTOMS

Inspection Procedure 1

Communication with MUT-II is impossible. (Communication with all systems is impossible.)	Probable cause
The cause is probably a defective power supply system (including earth) for the diagnosis line.	● Malfunction of connector ● Malfunction of harness wire

Refer to GROUP 13A – Troubleshooting.

Inspection Procedure 2

Communication with MUT-II is impossible. (Communication with the one-shot pulse input signal only is impossible.)	Probable cause
The cause is probably a defective one-shot pulse input circuit system of the diagnosis line.	● Malfunction of connector ● Malfunction of harness wire ● Malfunction of ETACS-ECU

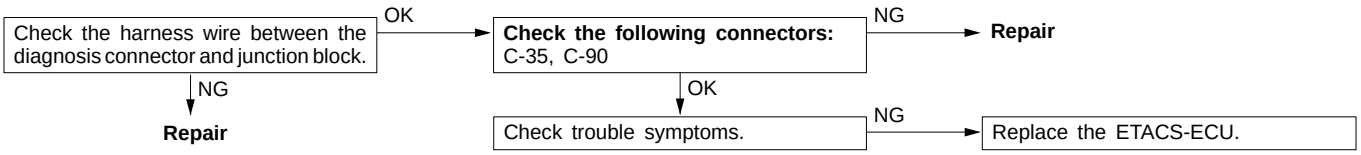

Inspection Procedure 3

Even if the driver's side door is opened, the key hole illumination lamp does not illuminate.	Probable cause
The cause is probably a defective key hole illumination lamp circuit system or a defective driver's side door switch input circuit system.	● Malfunction of driver's side door switch ● Malfunction of key hole illumination lamp ● Malfunction of harness or connector ● Malfunction of ETACS-ECU

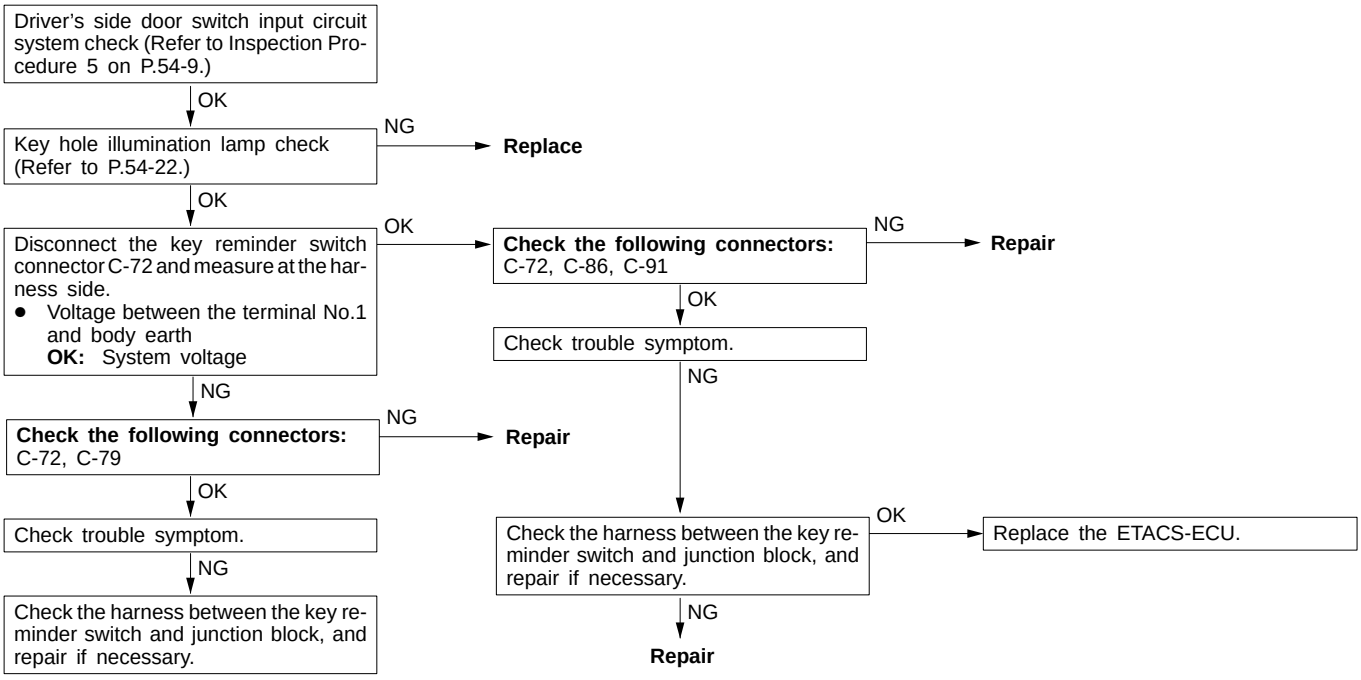

Inspection Procedure 4

Key hole illumination lamp remains illuminated.	Probable cause
The cause is probably a short harness or a defective ETACS-ECU.	● Malfunction of harness ● Malfunction of ETACS-ECU

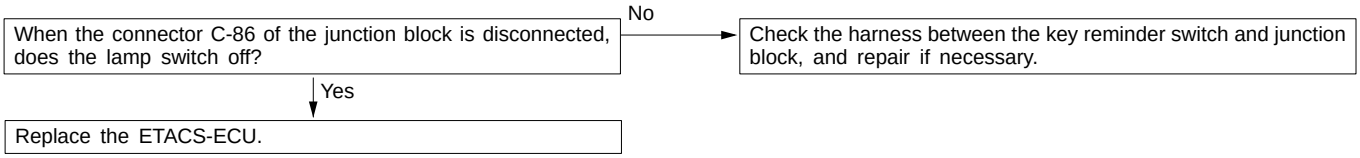

Inspection Procedure 5

Driver's side door switch input circuit system check

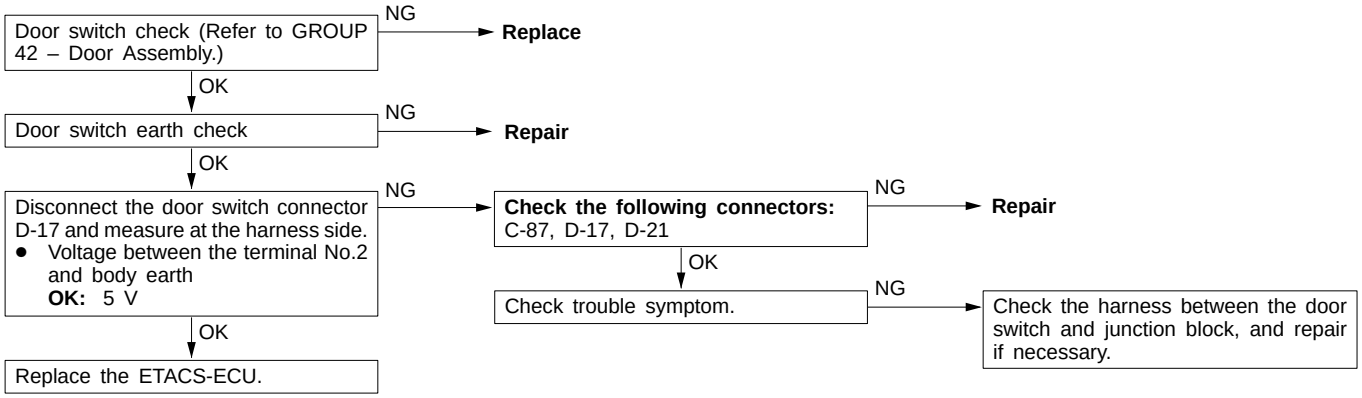

Immobilizer System

Caution

1. **The ID code should always be re-registered when replacing the immobilizer-ECU. <Petrol-powered vehicles>**
2. **If the immobilizer-ECU has been replaced, you will need to re-register the ignition key ID codes and to reset the code for the fuel cut valve controller to the factory setting. <Diesel-powered vehicles>**
3. **If the immobilizer-ECU has been replaced with a new part, the password (vehicle secret code) which has been stored in the immobilizer-ECU for each vehicle will be replaced by the password (secret code) specified by the customer.**

STANDARD FLOW OF DIAGNOSIS TROUBLESHOOTING

54300690024

Refer to GROUP 00 – How To Use Troubleshooting/Inspection Service Points.

DIAGNOSIS FUNCTION

54300700116

DIAGNOSIS CODES CHECK

Refer to GROUP 00 – How To Use Troubleshooting/Inspection Service Points.

ERASING DIAGNOSIS CODES

Refer to GROUP 00 – How To Use Troubleshooting/Inspection Service Points.

Caution

The diagnosis codes which result from disconnecting the battery cables cannot be erased.

INSPECTION CHART FOR DIAGNOSIS CODES <PETROL-POWERED VEHICLES>

54300710027

Diagnosis code No.	Inspection items	Reference page
11	Transponder communication system or radio interference of ID code	54-11
12*	ID code are not the same or are not registered	54-11
21	Communication system between MUT-II and engine-ECU	54-12
31	EEPROM abnormality inside immobilizer-ECU	54-12

NOTE
*: Diagnosis code No. 12 is not recorded.

INSPECTION PROCEDURE FOR DIAGNOSIS CODES <PETROL-POWERED VEHICLES>

Code No.11 Transponder communication system or radio interference of ID code	Probable cause
• The ID code of the transponder is not sent to the immobilizer-ECU immediately after the ignition switch is turned to ON position. • If the engine is started while several ignition keys are in the vicinity, then interference between the different keys may occur, which will cause this code to be generated.	• Radio interference of ID code • Malfunction of transponder • Malfunction of ignition key ring antenna • Malfunction of harness or connector • Malfunction of immobilizer-ECU

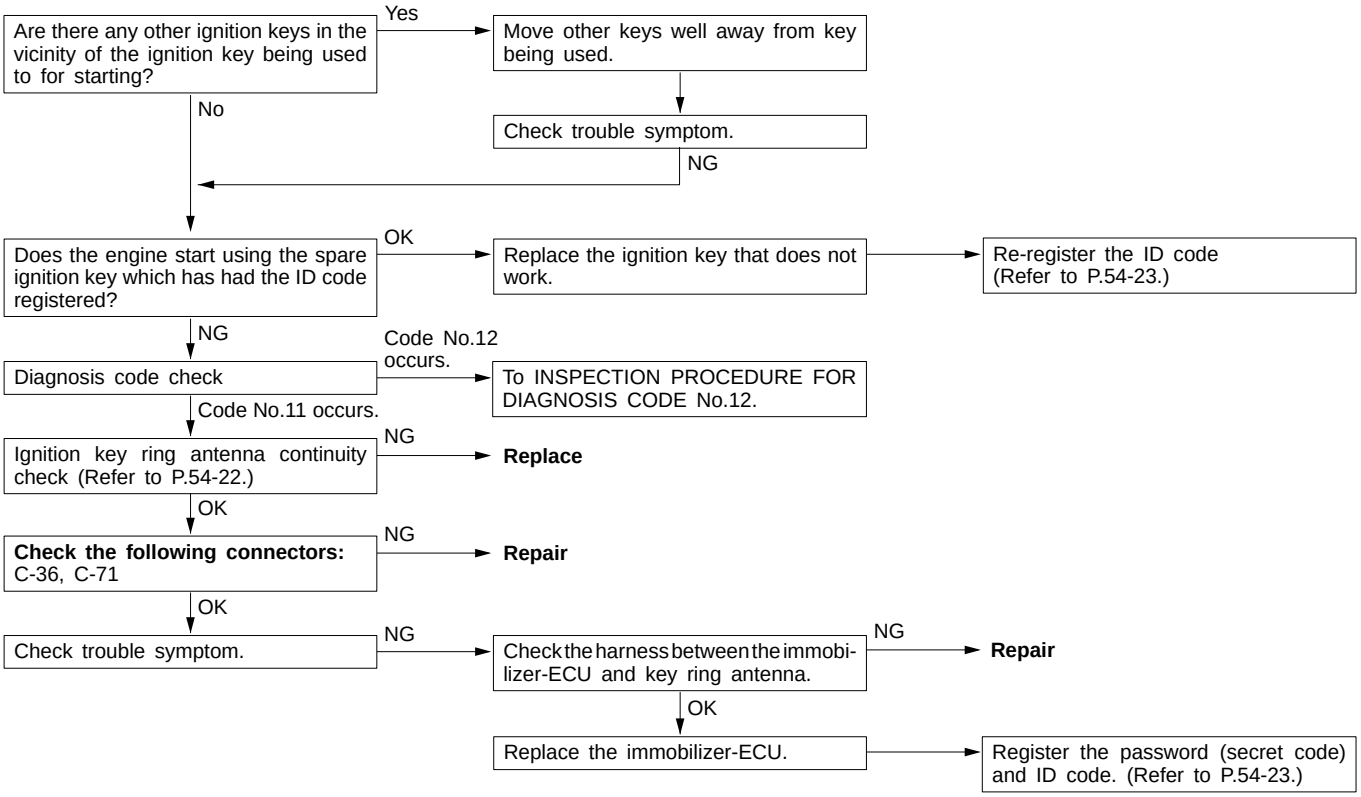

Code No.12 ID codes are not the same or not registered.	Probable cause
The ID code which is sent from the transponder is not the same as the ID code which is registered in the immobilizer-ECU.	• The ID code in the ignition key being used has not been properly registered. • Malfunction of immobilizer-ECU

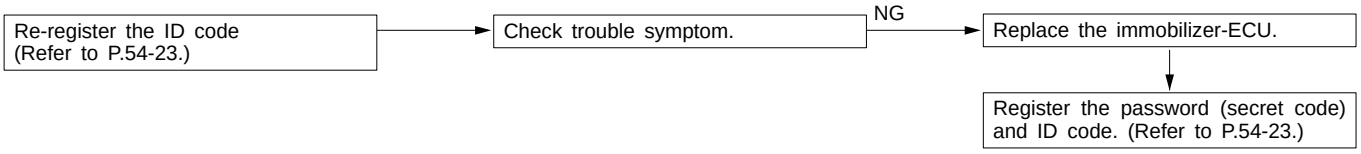

Code No.21 Communication system between MUT-II and engine-ECU	Probable cause
After the ignition switch turned to ON, the confirmation code is not received from the engine-ECU within allowable time, or an abnormal code is received.	● Malfunction of harness or connector ● Malfunction of engine-ECU ● Malfunction of immobilizer-ECU

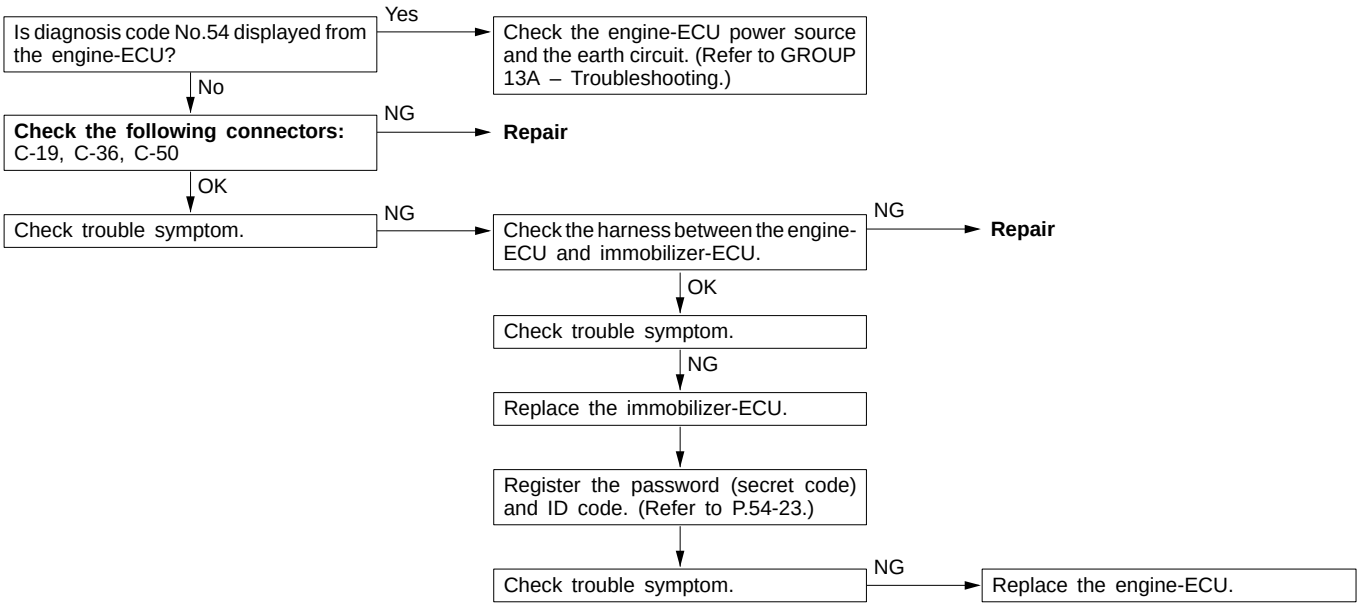

Code No.31 EEPROM abnormality inside immobilizer-ECU	Probable cause
No data has been written to the EEPROM inside the immobilizer-ECU.	● Malfunction of immobilizer-ECU

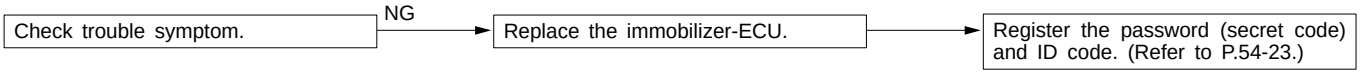

INSPECTION CHART FOR DIAGNOSIS CODES <DIESEL-POWERED VEHICLES>

54300710034

Diagnosis code No.	Inspection items	Reference page
11	Transponder communication system or radio interference of ID code	54-11
12*	ID codes are not the same or not registered	54-11
21	Communication system between fuel cut valve controller and immobilizer-ECU	54-13
22	Malfunction of fuel cut valve controller system	54-14
23	Identification codes are not identical	54-14
31	EEPROM abnormality inside immobilizer-ECU	54-12

NOTE
*: diagnosis code No.12 is recorded.

INSPECTION PROCEDURE FOR DIAGNOSIS CODES <DIESEL-POWERED VEHICLES>

For diagnosis code numbers other than those listed below, refer to “PETROL-POWERED VEHICLES”.

Code No.21 Communication system between fuel cut valve controller and immobilizer-ECU	**Probable cause**
The confirmation code is not sent from the fuel cut valve controller within the specified time after the ignition key is turned to ON or, an incorrect code is sent.	● Malfunction of harness or connector ● Malfunction of fuel cut valve controller ● Malfunction of immobilizer-ECU

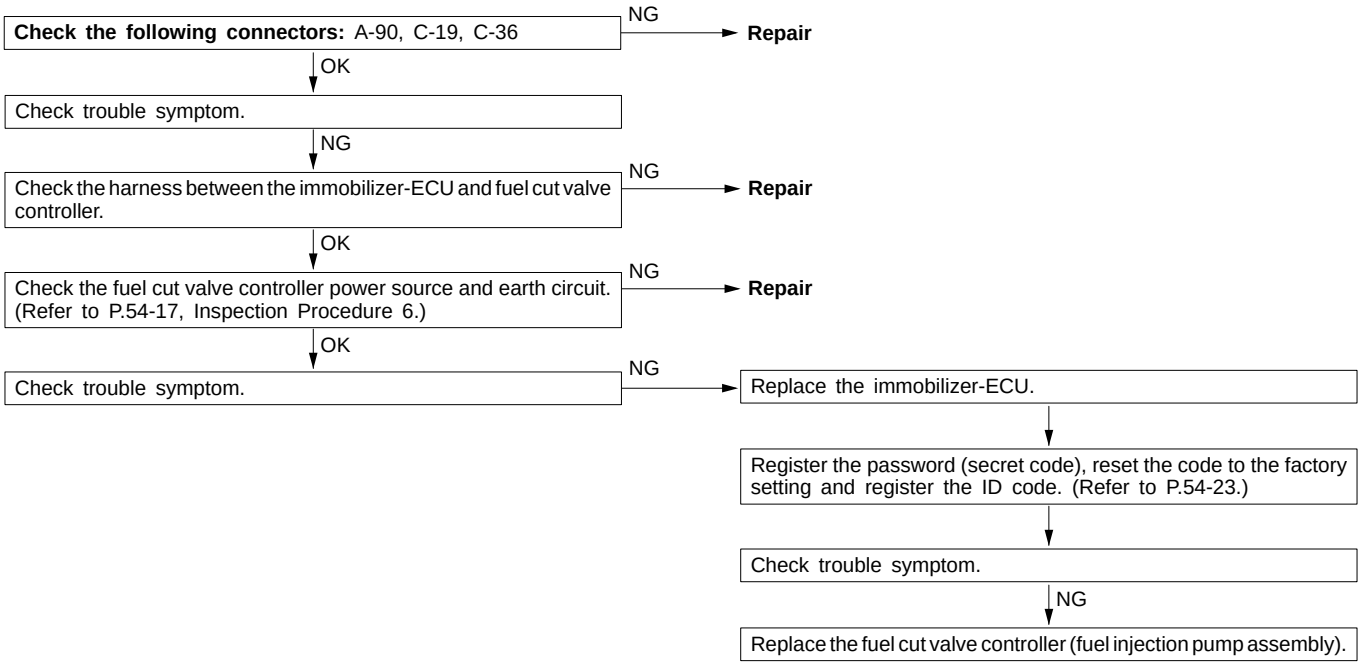

Code No.22 Malfunction of fuel cut valve controller system	Probable cause
The cause is probably a malfunction of the fuel cut valve controller.	● Malfunction of fuel cut valve controller

Check the fuel cut valve controller power source and earth circuit. (Refer to P.54-17, Inspection Procedure 6.)
↓ OK
Check trouble symptom. → NG → Replace the fuel cut valve controller (fuel injection pump assembly).

Code No.23 Identification codes are not identical	Probable cause
The identification code received from the immobilizer-ECU is not identical to the identification code that has been recorded in the fuel cut valve controller.	● Resetting the code to the factory setting is not made using the MUT-II ● Malfunction of fuel cut valve controller

Use the MUT-II to reset the code to the factory setting. (Refer to P.54-23.)
↓
Check trouble symptom. → NG → Replace the fuel cut valve controller (fuel injection pump assembly).
↓
Check trouble symptom.
↓ NG
Replace the immobilizer-ECU.
↓
Register the password (secret code), reset the code to the factory setting and register the ID code. (Refer to P.54-23.)

INSPECTION CHART FOR TROUBLE SYMPTOMS

54300720242

Trouble symptom	Inspection procedure No.	Reference page
Communication with MUT-II is impossible	1	54-15
ID code cannot be registered using the MUT-II	2	54-15
Engine does not start (Cranking but no initial combustion). <Petrol-powered vehicles>	3	54-16
Engine does not start (Cranking but no initial combustion). <Diesel-powered vehicles>	4	54-16
Malfunction of the immobilizer-ECU power source and earth circuit	5	54-17
Malfunction of the fuel cut valve controller power source and earth circuit <Diesel-powered vehicles>	6	54-17

INSPECTION PROCEDURE FOR TROUBLE SYMPTOMS

Inspection Procedure 1

Communication with MUT-II is impossible	Probable cause
The cause is probably that a malfunction of the diagnosis line or the immobilizer-ECU ia not functioning.	● Malfunction of diagnosis line ● Malfunction of harness or connector ● Malfunction of immobilizer

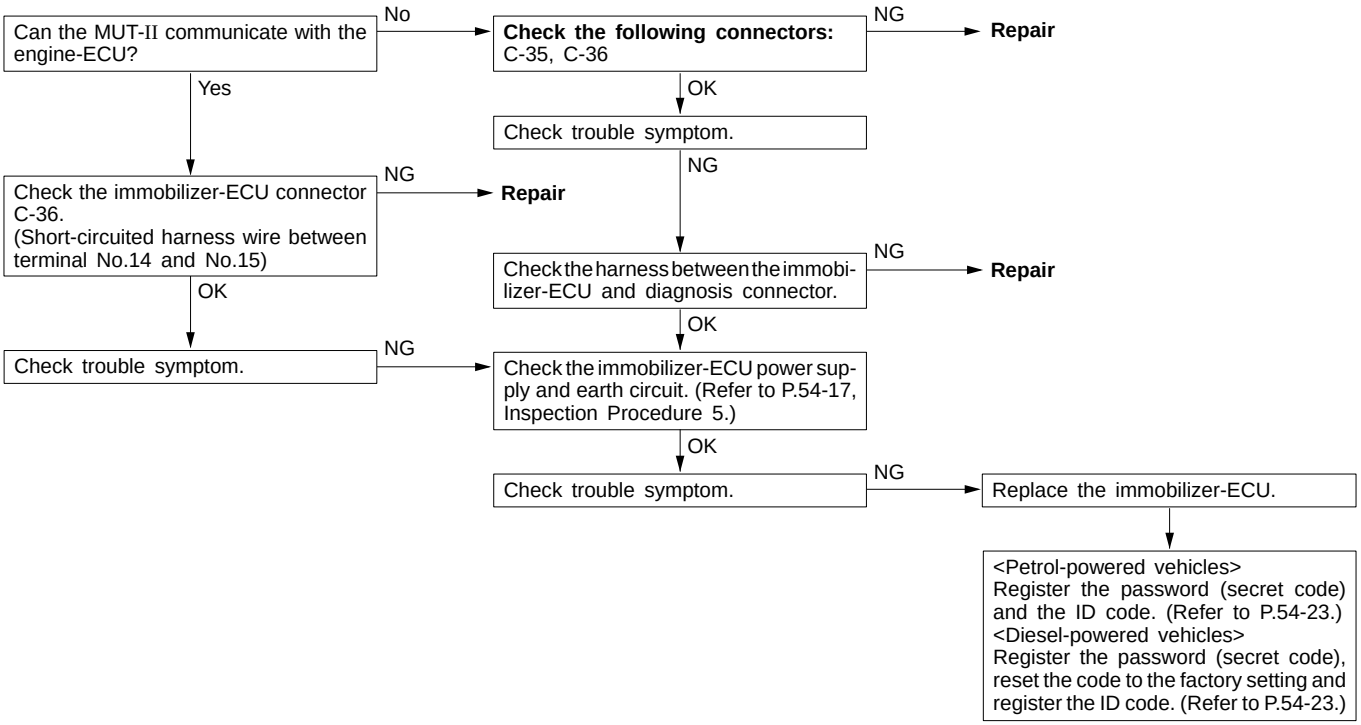

Inspection Procedure 2

ID code cannot be registered using the MUT-II	Probable cause
The cause is probably that there is no ID code registered in the immobilizer-ECU or there is a malfunction of the immobilizer-ECU.	● Malfunction of transponder ● Malfunction of ignition key ring antenna ● Malfunction of harness or connector ● Malfunction of immobilizer-ECU

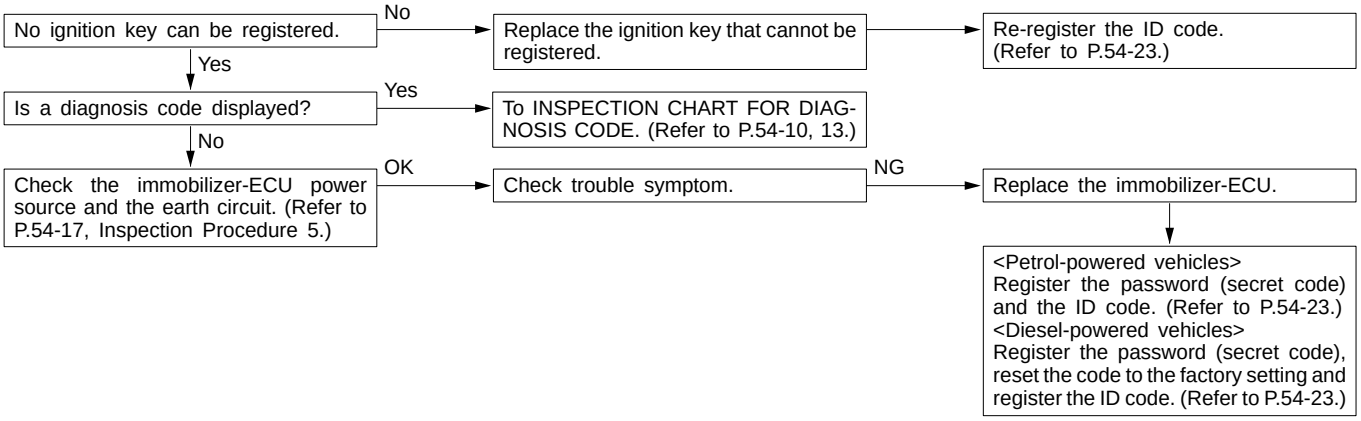

Inspection Procedure 3

Engine does not start (Cranking but no initial combustion). <Petrol-powered vehicles>	Probable cause
If the fuel injectors are not operating, there might be a problem with the MPI system in addition to a malfunction of the immobilizer system. It is normal for this to occur if an attempt is made to start the engine using a key that has not been properly registered.	● Malfunction of MPI system ● Malfunction of immobilizer-ECU

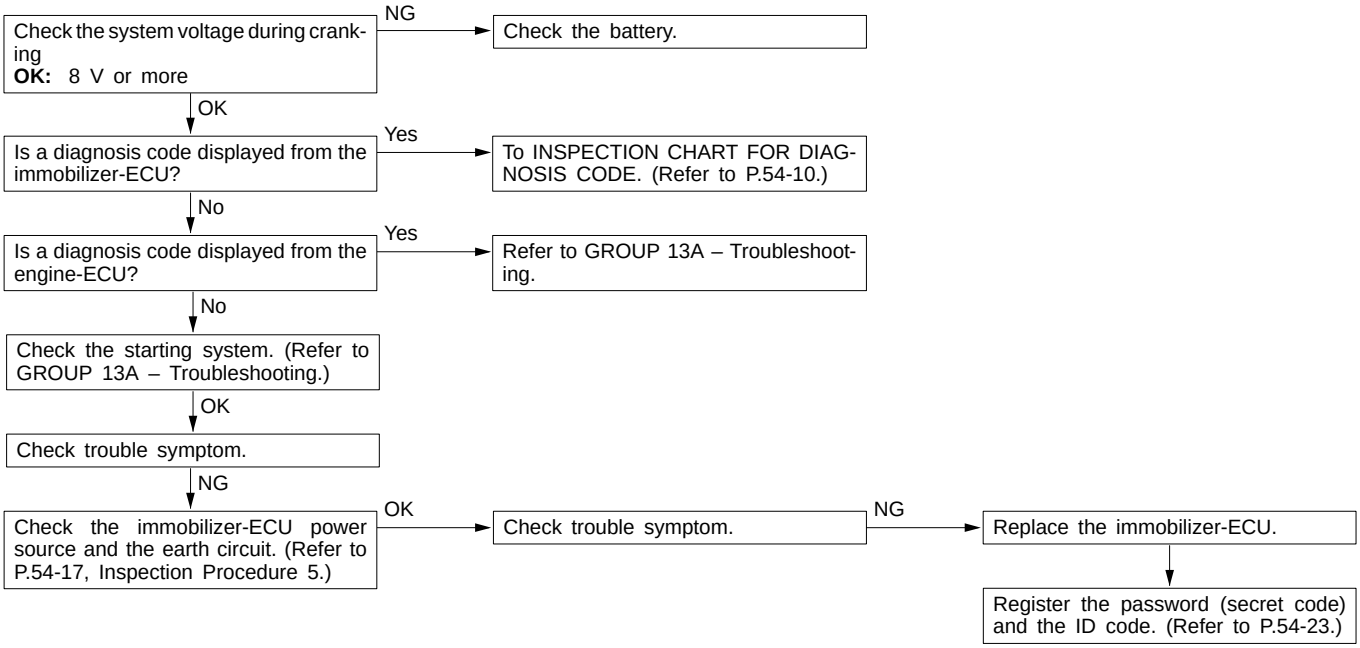

Inspection Procedure 4

Engine does not start (Cranking but no initial combustion). <Diesel-powered vehicles>	Probable cause
If no fuel injection, there might be a problem with the fuel injection system in addition to a malfunction of the immobilizer system. It is normal for this to occur if an attempt is made to start the engine using a key that has not been properly registered.	● Malfunction of diesel fuel injection system ● Malfunction of immobilizer-ECU

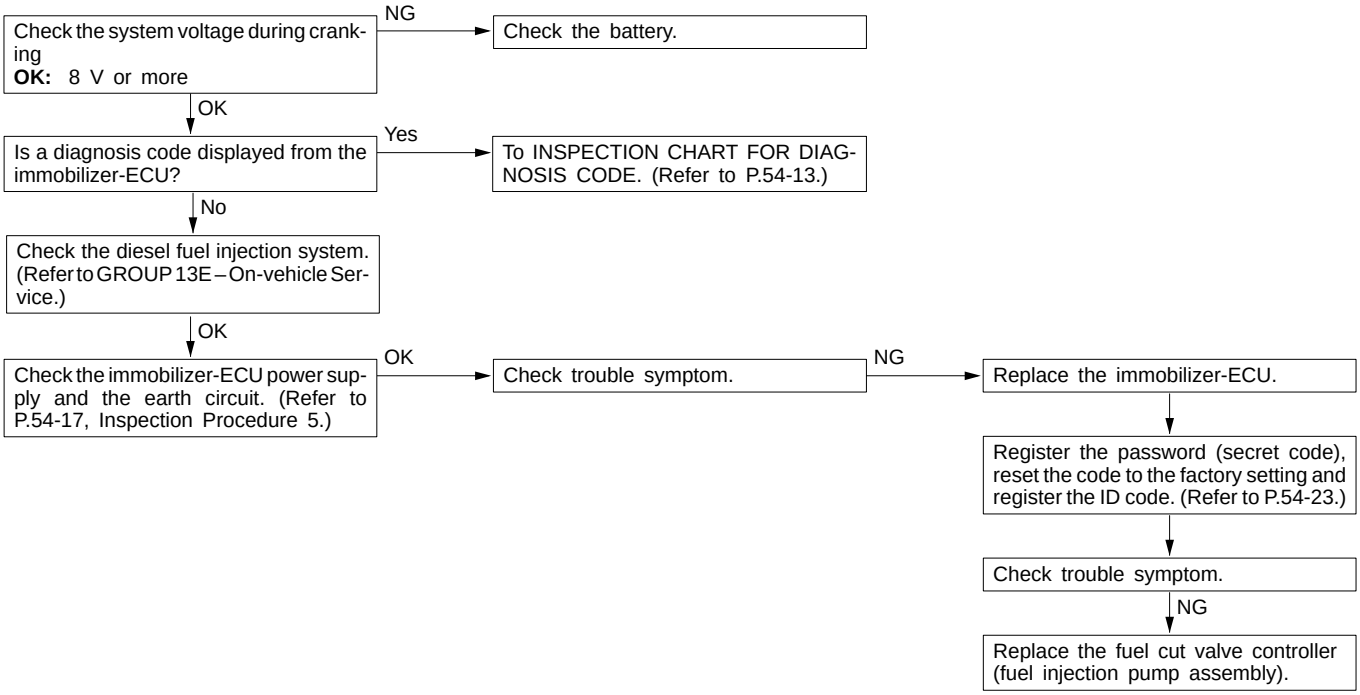

Inspection Procedure 5

Malfunction of the immobilizer-ECU power source and earth circuit

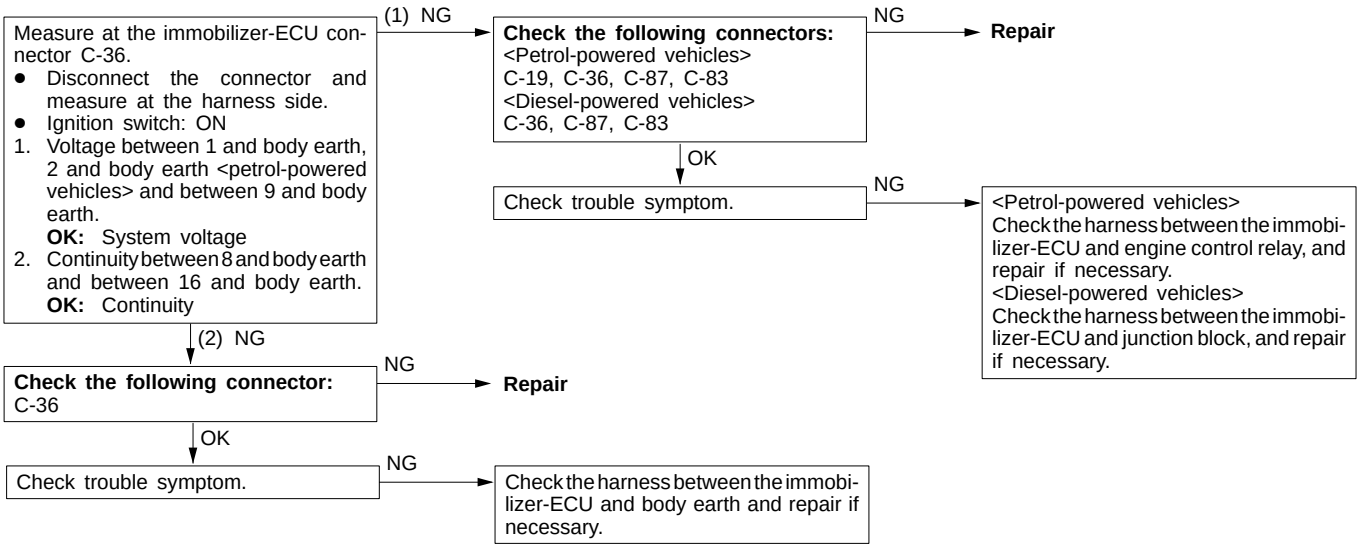

Inspection Procedure 6

Malfunction of the fuel cut valve controller power source and earth circuit <Diesel-powered vehicles>

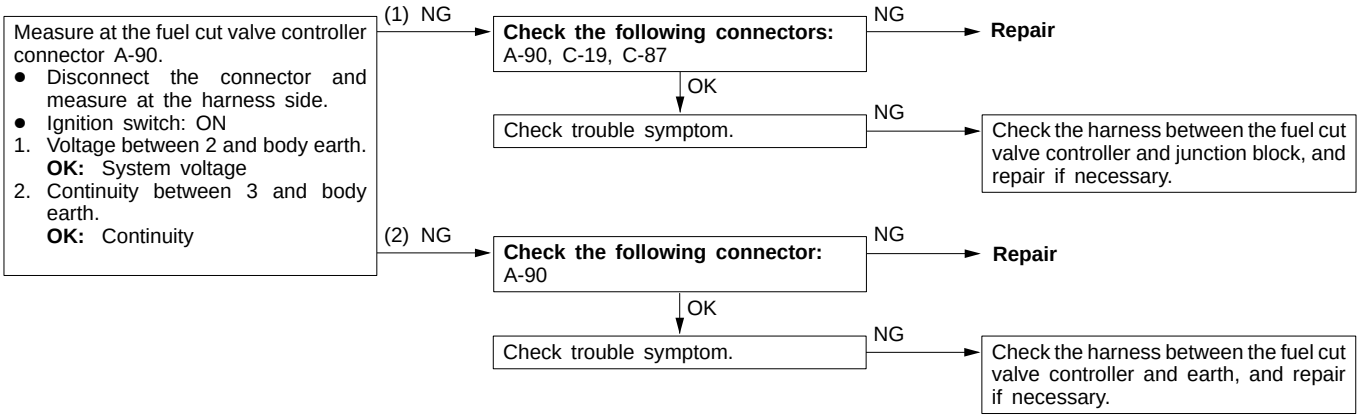

CHECK AT IMMOBILIZER-ECU

54300760022

Terminal Voltage Check Chart

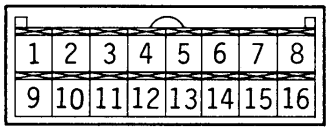

16W0390

Terminal No.	Signal	Checking requirements	Terminal voltage
1	Immobilizer-ECU power supply (Back-up)	Ignition switch: ON	System voltage
2	Ignition switch-IG <Petrol-powered vehicles>	Ignition switch: OFF	0 V
		Ignition switch: ON	System voltage
8	Immobilizer-ECU earth	Always	0 V
9	Immobilizer-ECU power supply	Ignition switch: ON	System voltage
16	Immobilizer-ECU earth	Always	0 V

IGNITION SWITCH AND IMMOBILIZER SYSTEM

54300210138

REMOVAL AND INSTALLATION

Caution: SRS
Before removal of air bag module and clock spring, refer to GROUP 52B – SRS Service Precautions and Air Bag Module and Clock Spring.

<Vehicles without immobilizer system>

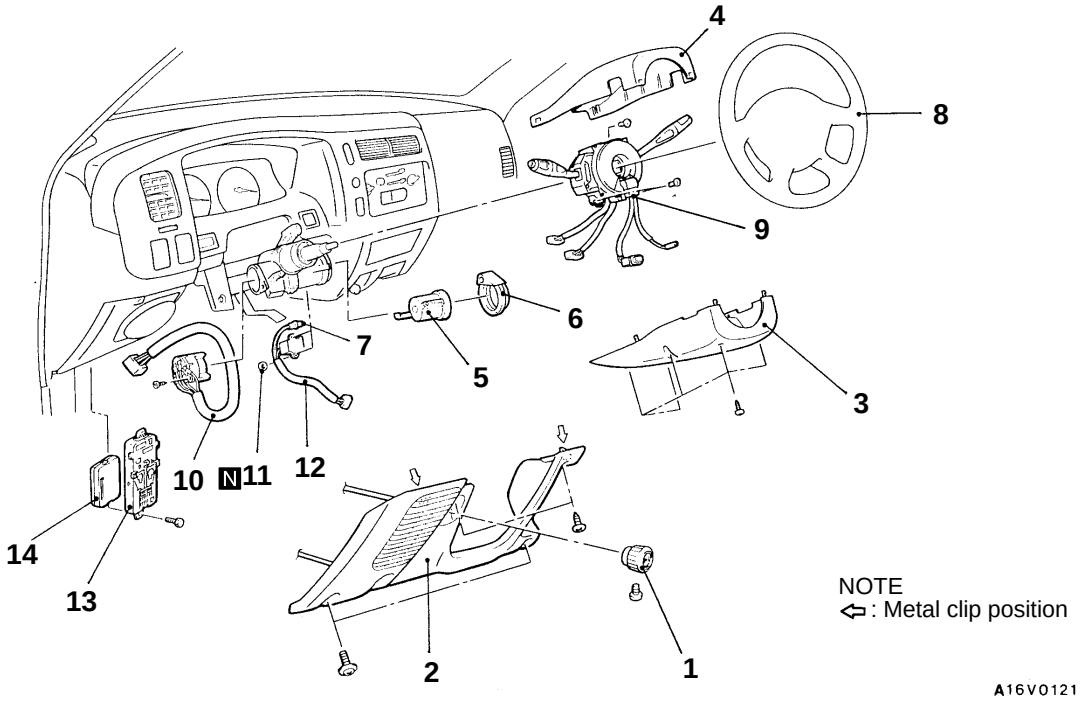

Steering lock cylinder and key hole illumination lamp removal steps

1. Throttle cable knob <Diesel-powered vehicles>
2. Driver's side under cover
3. Column cover, lower
4. Column cover, upper
5. ◀A▶ Steering lock cylinder
6. ◀B▶ Ignition key cylinder illumination ring
7. Key hole illumination lamp

ETACS-ECU or buzzer-ECU removal steps

1. Throttle cable knob <Diesel-powered vehicles>
2. Driver's side under cover
13. Junction block
14. ETACS-ECU or buzzer-ECU

Ignition switch and key reminder switch removal steps

1. Throttle cable knob <Diesel-powered vehicles>
2. Driver's side under cover
3. Column cover, lower
4. Column cover, upper
8. Steering wheel (Refer to GROUP 37A.)
9. ▶A◀ Column switch assembly
10. Ignition switch
11. Push nut
12. Key reminder switch

<Vehicles with immobilizer system>

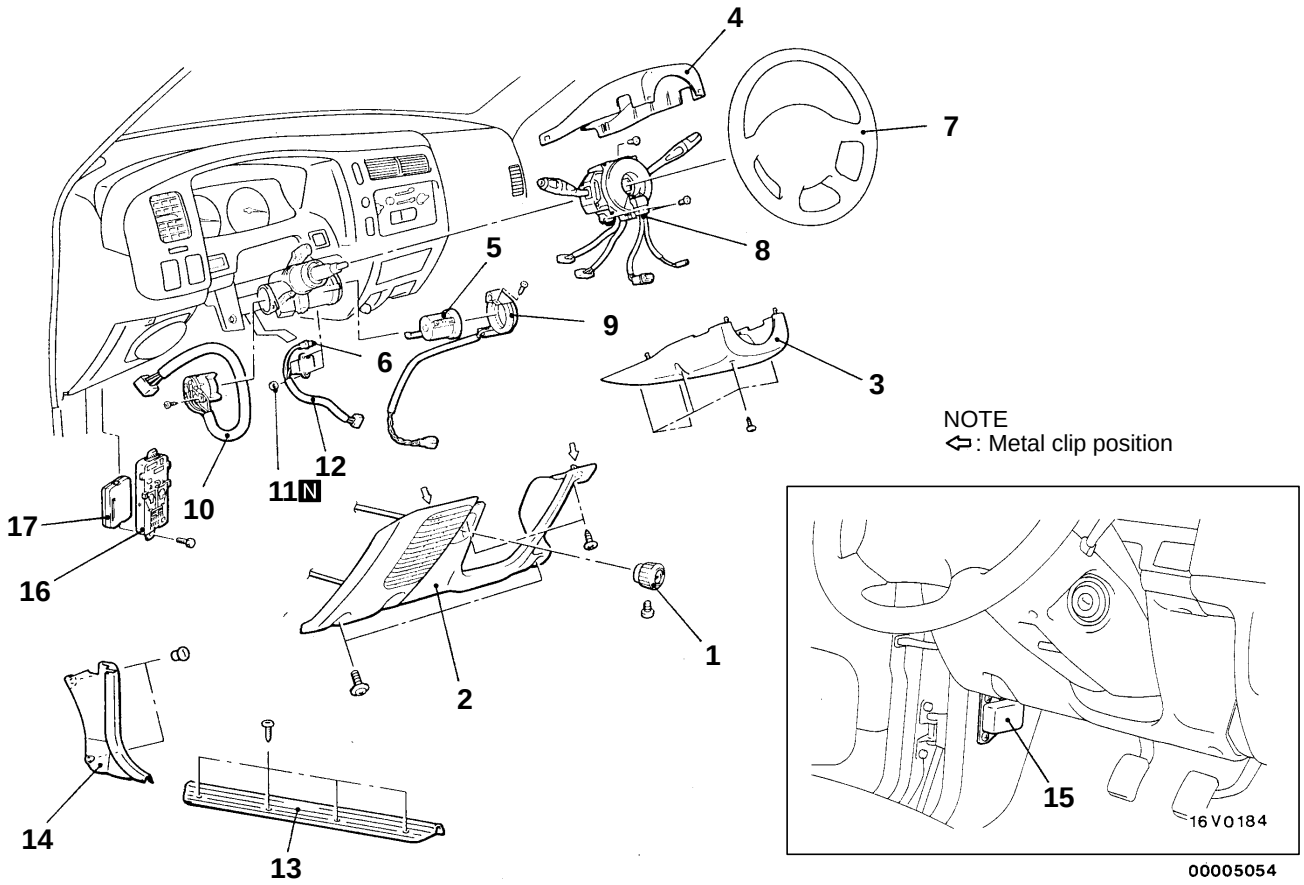

Steering lock cylinder and key hole illumination lamp removal steps

1. Throttle cable knob <Diesel-powered vehicles>
2. Driver's side under cover
3. Column cover, lower
4. Column cover, upper
◀A▶ 5. Steering lock cylinder
6. Key hole illumination lamp

ETACS-ECU or buzzer-ECU removal steps

1. Throttle cable knob <Diesel-powered vehicles>
2. Driver's side under cover
16. Junction block
17. ETACS-ECU or buzzer-ECU

Ignition switch, key reminder switch and ignition key ring antenna removal steps

1. Throttle cable knob <Diesel-powered vehicles>
2. Driver's side under cover
3. Column cover, lower
4. Column cover, upper
7. Steering wheel (Refer to GROUP 37A.)
▶A◀ 8. Column switch assembly
9. Ignition key ring antenna
10. Ignition switch
11. Push nut
12. Key reminder switch

Immobilizer-ECU removal steps

13. Front scuff plate (driver's side)
14. Cowl side trim (driver's side)
15. Immobilizer-ECU

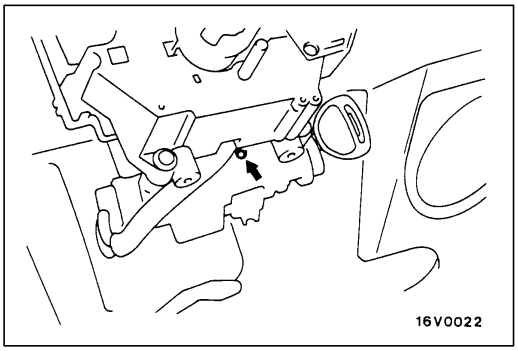

REMOVAL SERVICE POINTS

◀A▶ STEERING LOCK CYLINDER REMOVAL

1. Insert the key in the steering lock cylinder and turn it to the “ACC” position.
2. Using a cross-tip (+) screwdriver (small) or a similar tool, push the lock pin of the steering lock cylinder inward and then pull the steering lock cylinder toward you.

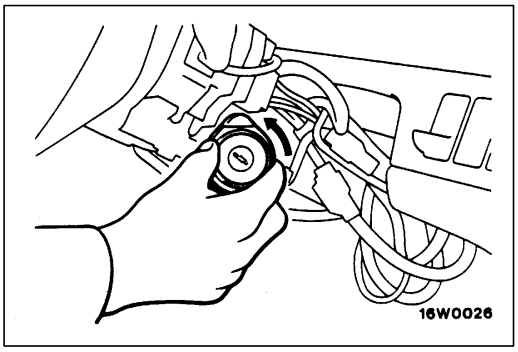

◀B▶ IGNITION KEY CYLINDER ILLUMINATION RING REMOVAL

Turn the ignition key cylinder illumination ring to the left and remove it.

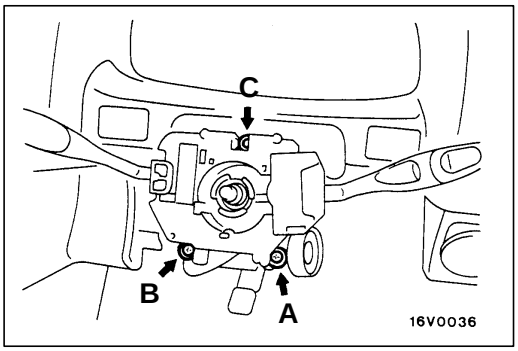

INSTALLATION SERVICE POINT

▶A◀ COLUMN SWITCH ASSEMBLY INSTALLATION

Tighten the column switch assembly mounting screws to the specified torque in the order of A, B and C.

Tightening torque: 25 Nm

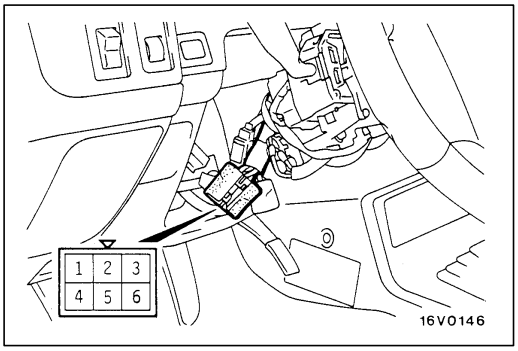

INSPECTION

54300220124

IGNITION SWITCH CONTINUITY CHECK

1. Remove the driver’s side under cover.
2. Remove the column cover lower and upper.
3. Disconnect the wiring connector from the ignition switch.
4. Operate the switch and check the continuity between the terminals.

Ignition key position	Terminal No.				
	1	2	4	5	6
LOCK					
ACC	○				○
ON	○	○	○		○
START	○	○		○	

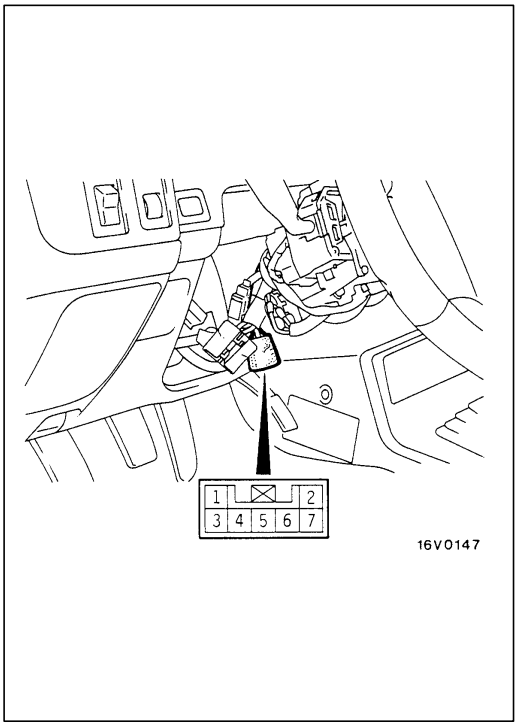

KEY REMINDER SWITCH CONTINUITY CHECK

54300770063

1. Remove the driver's side under cover.
2. Remove the column cover lower and upper.
3. Disconnect the wiring connector from the key reminder switch.
4. Check the continuity between the terminal when the ignition key is pulled out of and inserted into the steering lock cylinder.

Ignition key position	Terminal No.				
	1	*	2	4	6
Pulled out		ILL			
Inserted		ILL			

NOTE
*: Vehicles with key hole illumination lamp

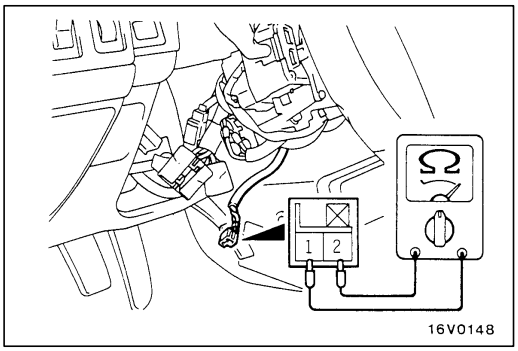

IGNITION KEY RING ANTENNA CONTINUITY CHECK

54300930027

Use a circuit tester to check the continuity between the terminals.

ID CODE REGISTRATION METHOD AND RESETTING THE CODE TO THE FACTORY SETTING

54300810048

Register the ID code in the immobilizer-ECU and then reset the code to the factory setting after parts have been replaced.

Replacement part	Petrol-powered vehicles	Diesel-powered vehicles	
	ID code registration	ID code registration	Resetting the code to the factory setting
Ignition key	Necessary	Necessary	Not necessary
Ignition key ring antenna	Not necessary	Not necessary	Not necessary
Immobilizer-ECU	Necessary	Necessary	Necessary
Engine-ECU <Petrol-powered vehicles>	Not necessary	–	–
Fuel cut valve controller (fuel injection pump) <Diesel-powered vehicles>	–	Not necessary	Not necessary (New part) Necessary (Used part)

ID Code Registration Method

If using an ignition key that has just been newly purchased, or if the immobilizer-ECU has been replaced, you will need to register the ID codes for each ignition key being used into the immobilizer-ECU. (A maximum of eight different ID codes can be registered.)
Moreover, when the immobilizer-ECU has been replaced, you will need to use the MUT-II to input the vehicle secret code and to register the password (secret code) that the user specifies into the immobilizer-ECU. (Refer to the MUT-II instruction manual.)

Caution
Because registering of the ID codes is carried out after all previously-registered codes have been erased, you should have ready all of the ignition keys that have already been registered.

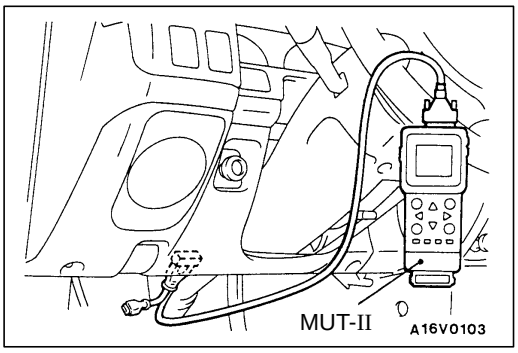

1. Connect the MUT-II to the diagnosis connector.

   Caution
   Turn off the ignition switch before connecting or disconnecting of the MUT-II.

2. Check that the diagnosis code No.54 is not being generated by the engine-ECU. If it is being generated check according to the Troubleshooting Procedures.

3. Use the ignition key that is to be registered to turn on the ignition switch.
4. Use the MUT-II to register the ID code. If you are registering two or more codes, use the next key to the registered to turn on the ignition switch without disconnecting the MUT-II.
5. Disconnect the MUT-II. This complete the registration operation.
6. Check that the engine can be started with each of the ignition keys.
7. Check the diagnosis output from the engine-ECU, and erase code No.54 if it appears.

Resetting the code to the factory setting <Diesel-powered vehicles>

Refer to the MUT-II INSTRUCTION MANUAL on handling the MUT-II.

NOTE
Resetting the code to the factory setting refers to the process of clearing the identification code which has been recorded in the fuel cut valve controller and switching the controller to learning mode. After this resetting is carried out, the identification code in the immobilizer-ECU will be recorded in the controller the next time the ignition switch is turned to the ON.

1. Connect the MUT-II to the diagnosis connector.

   Caution
   Turn off the ignition switch before connecting or disconnecting of the MUT-II.

2. Turn on the ignition switch.
3. Use the MUT-II to reset the code to the factory setting.

   NOTE
   Approximately 16 minutes are required to complete resetting the code to the factory setting.

4. Disconnect the MUT-II

COMBINATION METERS

54300030116

SERVICE SPECIFICATIONS

Items			Standard value
Speedometer indication error km/h (mph)		40 (20)	40 – 48 (20 – 25)
		80 (40)	80 – 92 (40 – 47)
		120 (60)	120 – 136 (60 – 69)
		160 (80)	160 – 180 (80 – 91)
		– (100)	– (100 – 114)
Tachometer indication error r/min	Petrol-powered vehicles	700	±100
		3,000	±150
		5,000	±250
		6,000	±300
	Diesel-powered vehicles	700	±100
		3,000	±150
		4,750	±160
		5,000	±250
Fuel gauge unit resistance Ω	Float point F		1 – 5
	Float point E		103 – 117
Fuel gauge unit float height mm	A (Float point F)		214.1
	B (Float point E)		251.2
Fuel gauge resistance Ω	Power supply and earth		192
	Power supply and fuel gauge		107
	Fuel gauge and earth		85
Engine coolant temperature gauge resistance Ω	Power supply and earth		191
	Power supply and engine coolant temperature gauge		103
	Engine coolant temperature gauge and earth		88
Engine coolant temperature gauge unit resistance (at 70 °C) Ω			104 ± 13.5

SEALANT

54300050075

Items	Specified sealant	Remark
Engine coolant temperature gauge unit threaded portion	3M Adhesive nut locking No. 4171 or equivalent	Drying sealant

SPECIAL TOOLS

54300060245

Tool	Number	Name	Use
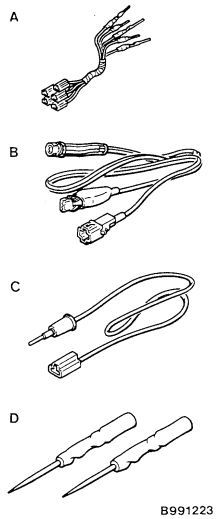	MB991223 A: MB991219 B: MB991220 C: MB991221 D: MB991222	Harness set A: Test harness B: LED harness C: LED harness adapter D: Probe	● Fuel gauge simple check ● Engine coolant temperature gauge simple check <Diesel-powered vehicles> A: Connector pin contact pressure check B, C: Power circuit check D: Commercial tester connection
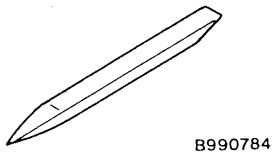	MB990784	Ornament remover	Removal of meter bezel assembly

TROUBLESHOOTING

54300720259

INSPECTION CHART FOR TROUBLE SYMPTOMS

Trouble symptom	Inspection procedure	Reference page
Tachometer does not work.	1	54-27

INSPECTION PROCEDURE FOR TROUBLE SYMPTOMS

Inspection Procedure 1

Tachometer does not work.	Probable cause
The ignition signal may not be input from the engine, or there may be a malfunction in the power supply or earth circuit.	● Malfunction of tachometer ● Malfunction of harness or connector

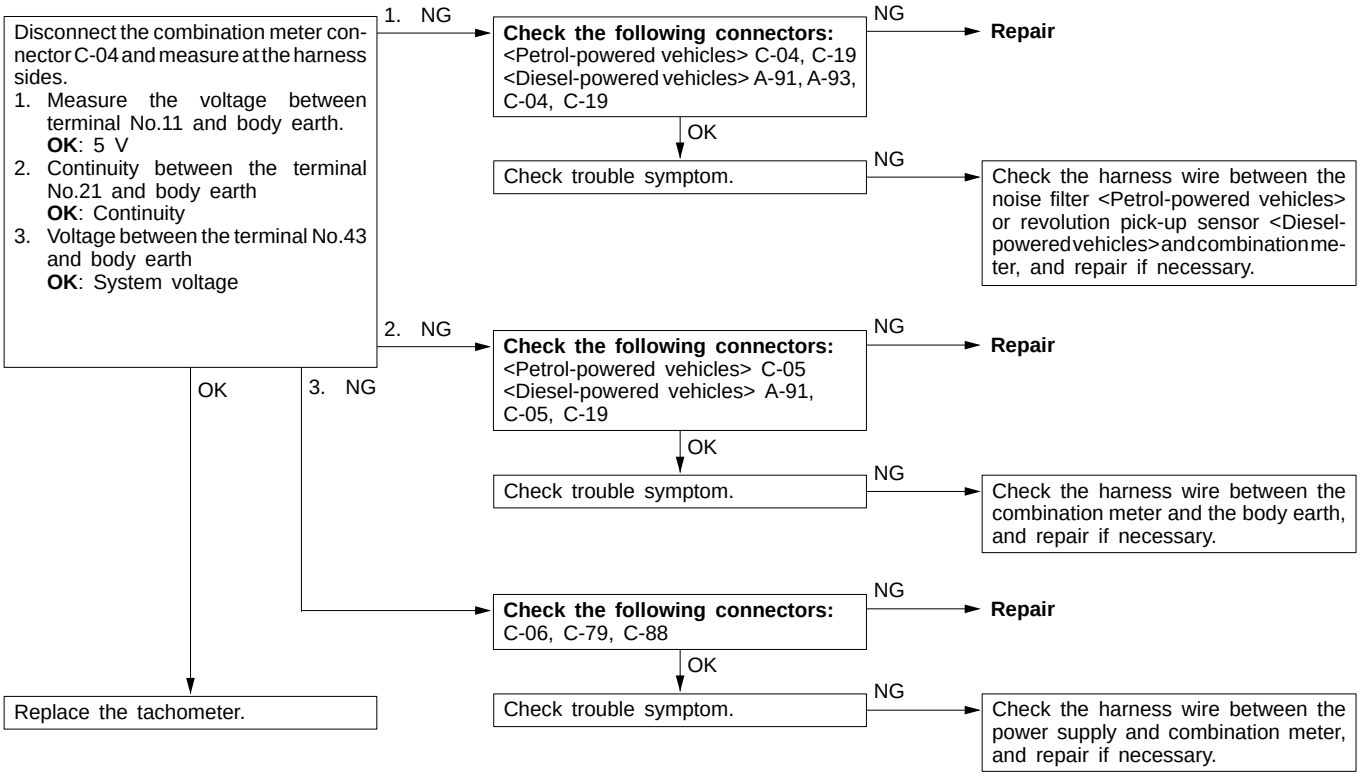

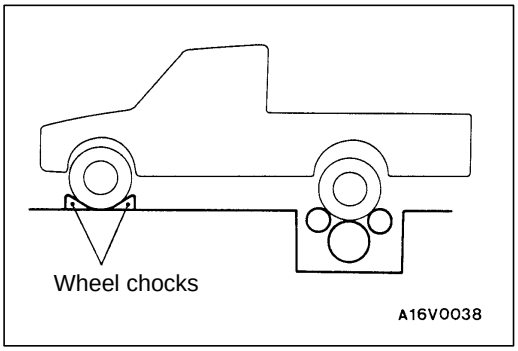

ON-VEHICLE SERVICE

54300090091

SPEEDOMETER CHECK

1. Adjust the pressure of tyres.to the specified level. (Refer to GROUP 31 – On-vehicle Service.)
2. Set the vehicle onto a speedometer tester and use wheel chocks to hold the front wheels.

   Caution
   Place the transfer shift lever to 2H position. <4WD>

3. Check if the speedometer indicator range is within the standard values.

   Caution
   Do not operate the clutch suddenly. Do not increase/decrease speed rapidly while testing.

   Standard value:

Standard indication km/h (mph)	Allowance range km/h (mph)
40 (20)	40 – 48 (20 – 25)
80 (40)	80 – 92 (40 – 47)
120 (60)	120 – 136 (60 – 69)
160 (80)	160 – 180 (80 – 91)
– (100)	– (100 – 114)

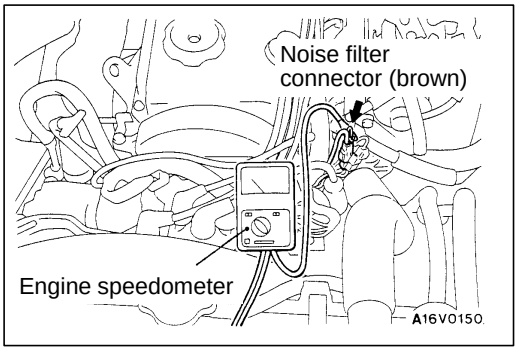

TACHOMETER CHECK

54300100091

<Petrol-powered vehicles>

1. Insert a paper clip in the noise filter connector from the harness side, and attach the engine speedometer.

   NOTE
   For tachometer inspection, use of a fluxmeter-type engine speedometer is recommended. (Because a fluxmeter only needs to be clipped to the high tension cable.)

2. Compare the readings of the engine speedometer and the tachometer at every engine speed, and check if the variation are within the standard values.

   Standard value:
   700 r/min: ±100 r/min
   3,000 r/min: ±150 r/min
   5,000 r/min: ±250 r/min
   6,000 r/min: ±300 r/min

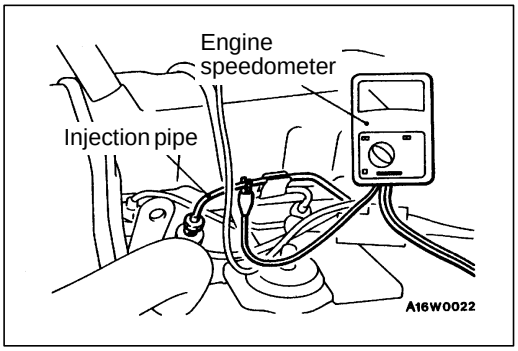

<Diesel-powered vehicles>

1. Connect the engine speedometer to the injection pipe.
2. Compare the readings of the engine speedometer and the tachometer at every engine speed, and check if the variation are within the standard values.

   Standard value:
   700 r/min: ±100 r/min
   3,000 r/min: ±150 r/min
   4,750 r/min: ±160 r/min
   5,000 r/min: ±250 r/min

FUEL GAUGE SIMPLE CHECK

54300110117

Remove the fuel gauge unit connector.
↓
Use the special tool to connect a test lamp (12 V – 3.4 W) to the harness connector. (Refer to Fig.1)
↓
When the ignition switch is turned to ON, the test lamp illuminates.
- OK → The needle of the fuel gauge moves.
  - OK → Replace the fuel gauge unit.
  - NG → Replace the fuel gauge.
- NG → Repair the harness.

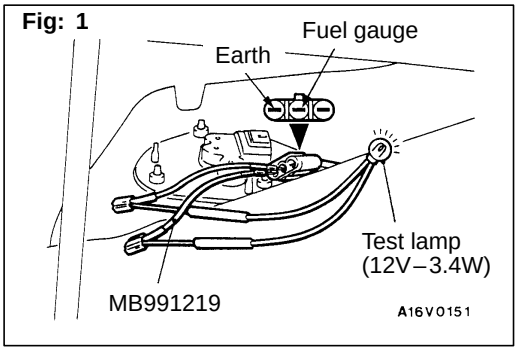

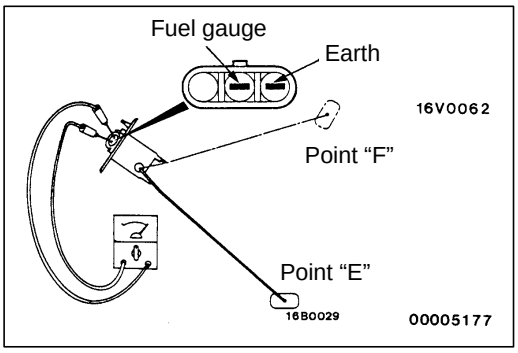

FUEL GAUGE UNIT CHECK

54300120158

Remove the fuel gauge unit from the fuel tank.

FUEL GAUGE UNIT RESISTANCE

1. Check that resistance value between the fuel gauge terminal and earth terminal is at standard value when fuel gauge unit float is at point F (highest) and point E (lowest).

   Standard value:
   Point F: 1 – 5 Ω
   Point E: 103 – 117 Ω

2. Check that resistance value changes smoothly when float moves slowly between point F (highest) and point E (lowest).

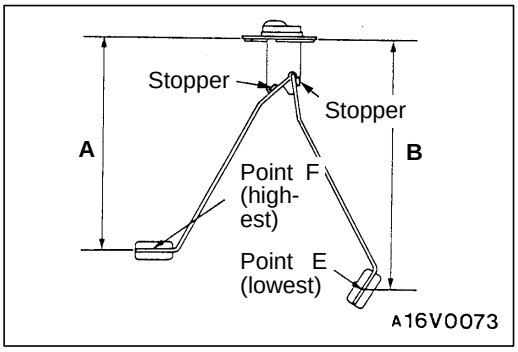

FUEL GAUGE UNIT FLOAT HEIGHT

Move float and measure the height A at point F (highest) and B at point E (lowest) with float arm touching stopper.

Standard value:
A: 214.1 mm
B: 251.2 mm

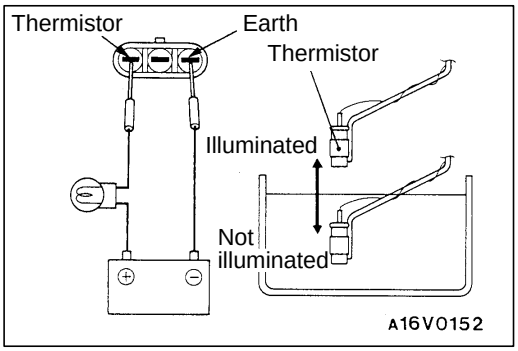

THERMISTOR

1. Connect fuel gauge unit (thermistor) to battery via test lamp (12 V – 3.4 W). Immerse in water.
2. Condition is good if lamp goes off when the thermistor is immersed in water and goes on when it is taken out of water.

Caution
After finishing this test, wipe the unit, dry and install it in the fuel tank.

ENGINE COOLANT TEMPERATURE GAUGE SIMPLE CHECK

54300140123

Remove the engine coolant temperature gauge unit connector.

↓

Connect a test lamp (12 V – 3.4 W) between the harness side connector and the earth.
NOTE
For diesel-powered vehicles, use the special tool to check. (See the illustration below.)

↓

When the ignition switch is turned to ON, the test lamp illuminates.

- NG → Replace the harness.
- OK → The needle of the engine coolant temperature gauge moves.
  - NG → Replace the engine coolant temperature gauge.
  - OK → Replace the engine coolant temperature gauge unit.

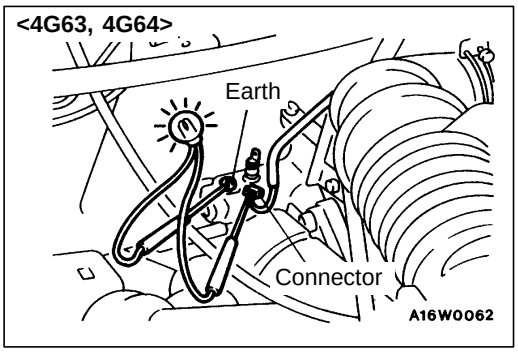

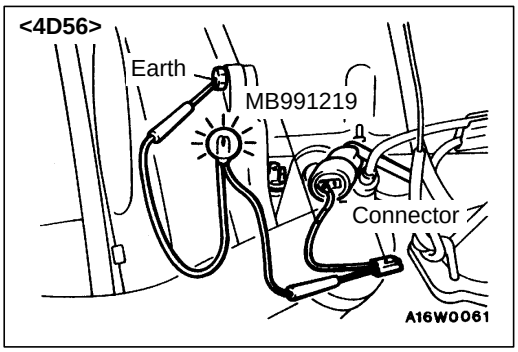

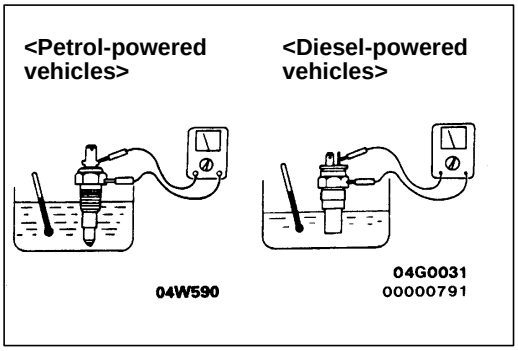

ENGINE COOLANT TEMPERATURE GAUGE UNIT CHECK

54300150157

1. Bleed the engine coolant.
   (Refer to GROUP 14 – On-vehicle Service.)
2. Remove the engine coolant temperature gauge unit.
3. Immerse the unit in 70°C water to measure the resistance.

   Standard value: 104 ± 13.5 Ω

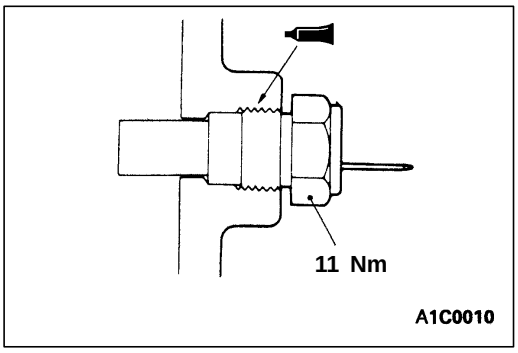

4. After checking, apply the specified adhesive around the thread of engine coolant temperature gauge unit.

   Specified sealant:
   3M Adhesive Nut Locking No. 4171 or equivalent

5. Add engine coolant.
   (Refer to GROUP 14 – On-vehicle Service.)

COMBINATION METERS

54300290125

REMOVAL AND INSTALLATION

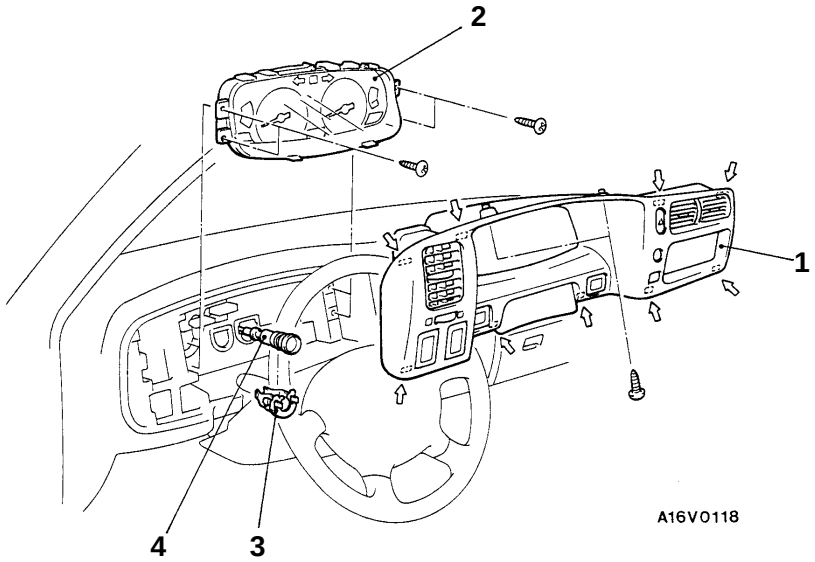

NOTE
⇦: metal clip position

Removal steps

1. Meter bezel assembly
2. Combination meter
3. ◀A▶ Adapter
4. ◀B▶ ▶A◀ Speedometer cable

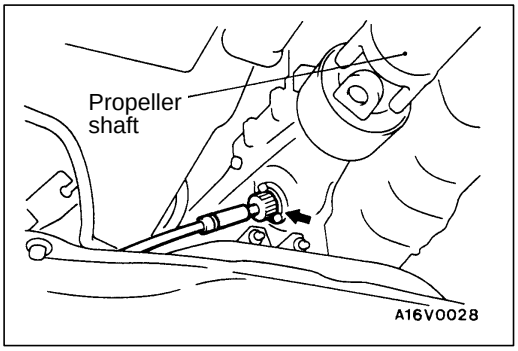

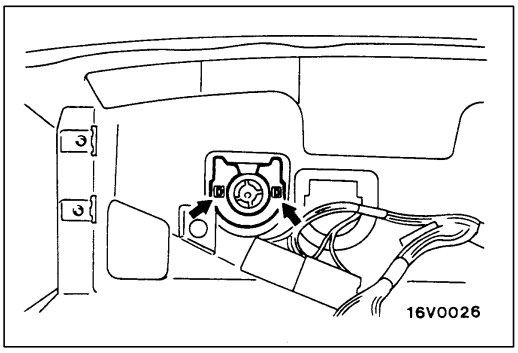

REMOVAL SERVICE POINT

◀A▶ ADAPTER REMOVAL

1. Disconnect the speedometer cable from the transmission.
2. Unlock the adapter and then remove the adapter by pulling it into the passenger compartment along with the speedometer cable.

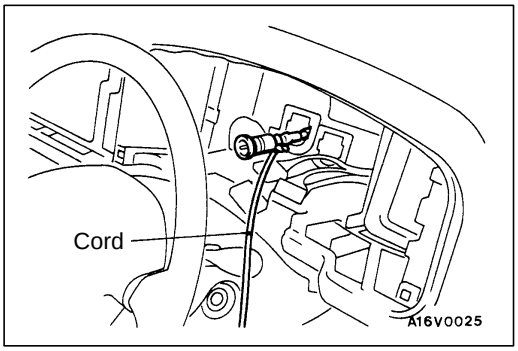

◀B▶ SPEEDOMETER CABLE REMOVAL

After tying a cord to the speedometer cable, remove the grommet and pull the speedometer cable out into the engine compartment.

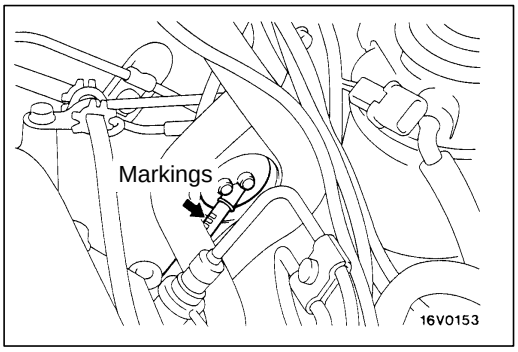

INSTALLATION SERVICE POINT

▶A◀ SPEEDOMETER CABLE INSTALLATION

1. Install the grommet to the toeboard so that the speedometer cable is facing downwards.
2. Pull the speedometer cable until you can see the markings.

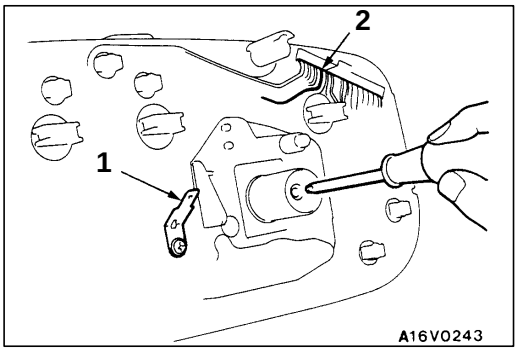

INSPECTION

54300300101

REED SWITCH CONTINUITY CHECK

Using a circuit tester, check that continuity and discontinuity alternates between terminals 1 and 2 four times at every rotation of the shaft of the speedometer cable connection.

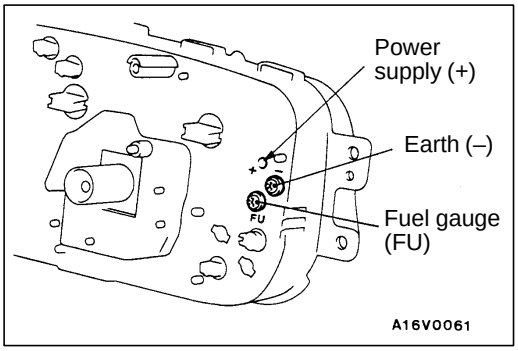

FUEL GAUGE RESISTANCE CHECK

1. Remove the power supply tightening screw.
2. Use a circuit tester to measure the resistance between the terminals.

   NOTE
   The terminal positions are indicated by FU, – and +.

   Standard value:
   Power supply (+) – Earth (–): 192 Ω
   Power supply (+) – Fuel gauge (FU): 107 Ω
   Fuel gauge (FU) – Earth (–): 85 Ω

   Caution
   When inserting the test probe into the power supply terminal, be careful not to touch the printed board.

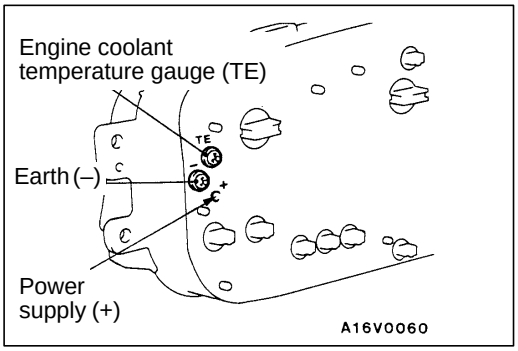

ENGINE COOLANT TEMPERATURE GAUGE RESISTANCE CHECK

1. Remove the power supply tightening screw.
2. Use a circuit tester to measure the resistance between the terminals.

   NOTE
   The terminal positions are indicated by TE, – and +.

   Standard value:
   Power supply (+) – Earth (–): 191 Ω
   Power supply (+) – Engine coolant temperature gauge (TE): 103 Ω
   Engine coolant temperature gauge (TE) – Earth (–): 88 Ω

   Caution
   When inserting the test probe into the power supply terminal, be careful not to touch the printed board.

MULTI-METER

54300720266

TROUBLESHOOTING

INSPECTION CHART FOR TROUBLE SYMPTOMS

Trouble symptom	Inspection procedure No.	Reference page
Actual outside temperature is different from thermometer.	1	54-35
Outside temperature is not displayed.	2	54-36

INSPECTION PROCEDURE FOR TROUBLE SYMPTOMS

Inspection Procedure 1

Actual outside temperature is different from thermometer.	Probable cause
The defective internal resistance of the thermo sensor or thermometer may be present.	● Malfunction of outside thermo sensor ● Malfunction of harness or connector ● Malfunction of thermometer

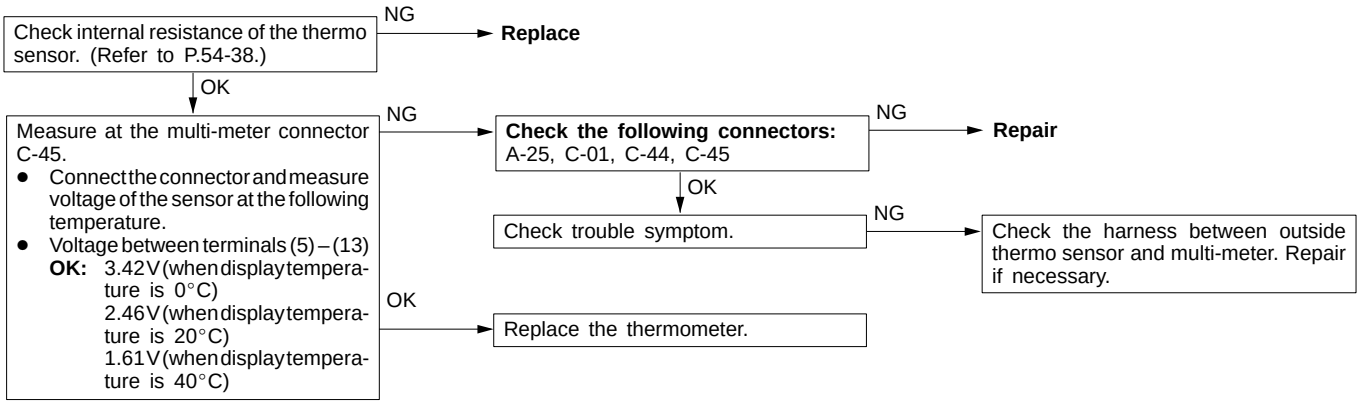

Inspection Procedure 2

Outside temperature is not displayed.	Probable cause
A harness, connector or the thermometer may be defective.	● Malfunction of harness or connector ● Malfunction of thermometer

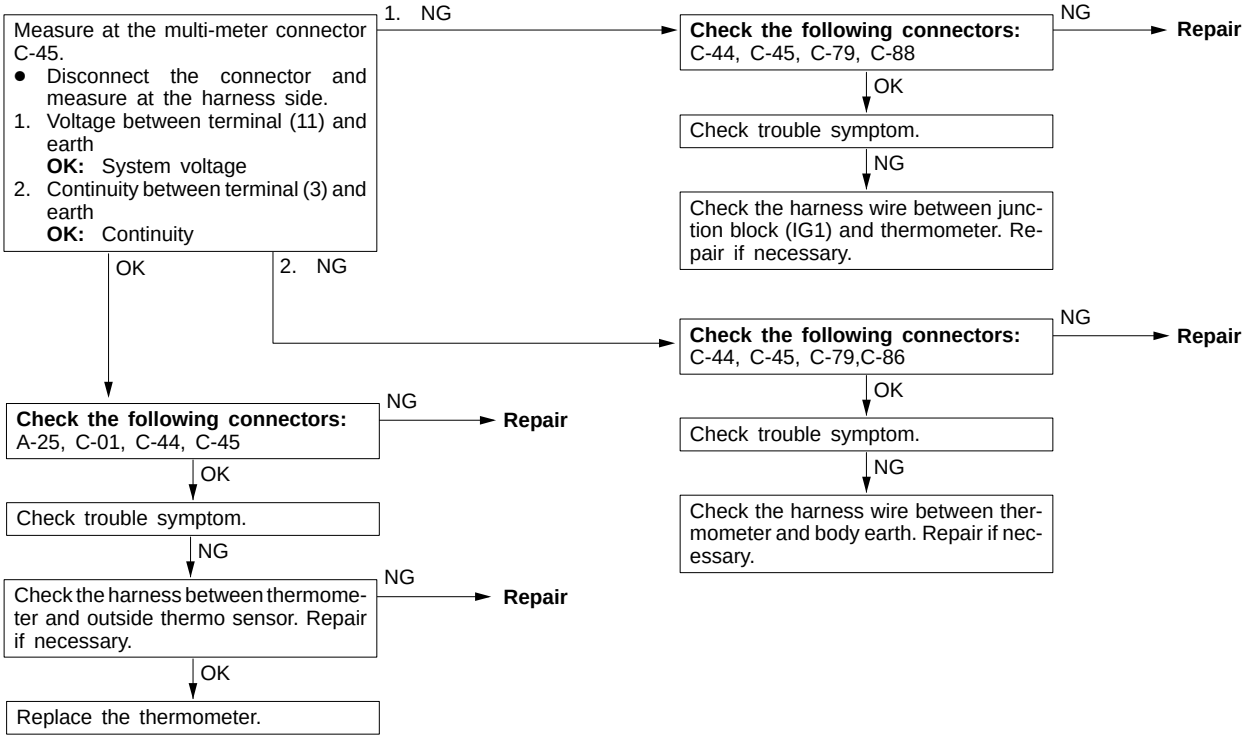

ON-VEHICLE SERVICE

54300170023

VOLTMETER SIMPLE TEST

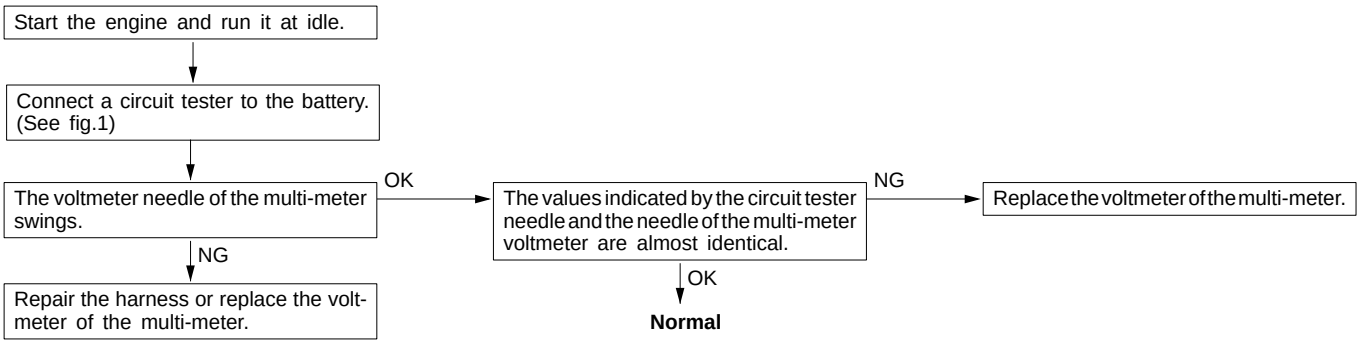

Fig.1

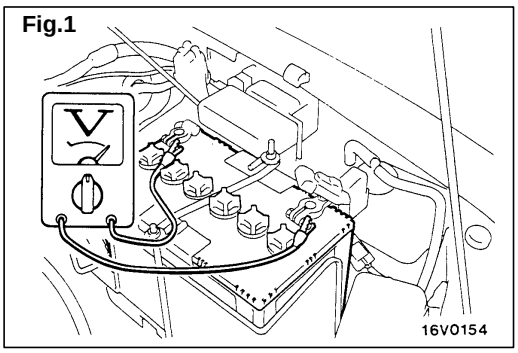

MULTI-METER

54300390023

REMOVAL AND INSTALLATION

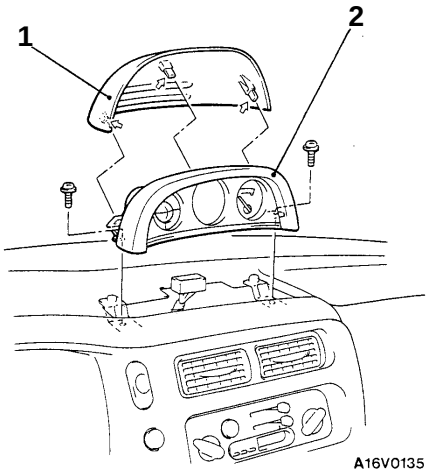

NOTE
⇦: metal clip position

Removal steps

1. Multi-meter panel
2. Multi-meter

DISASSEMBLY AND REASSEMBLY

54300410026

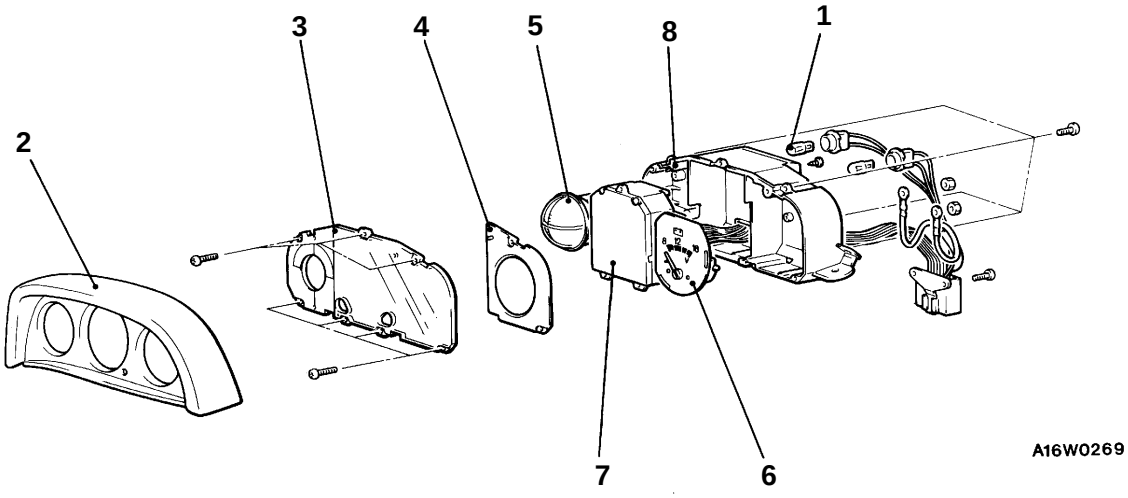

Disassembly steps

1. Bulb
2. Meter garnish
3. Meter glass
4. Window plate
5. Inclinometer
6. Voltmeter
7. Thermometer
8. Meter case

OUTSIDE THERMO SENSOR

54300030123

SERVICE SPECIFICATIONS

Items		Standard value
Internal resistance of outside thermo sensor Ω	At 20°C	Approx. 1,200
	At 40°C	Approx. 500

OUTSIDE THERMO SENSOR

54300950016

REMOVAL AND INSTALLATION

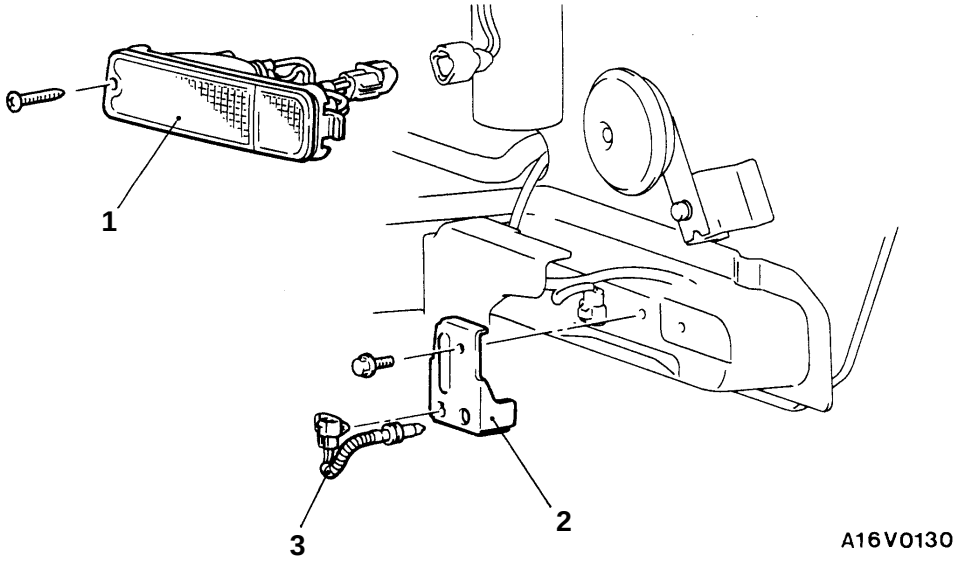

1. Front combination lamp (L.H.)
2. Bracket
3. Outside thermo sensor

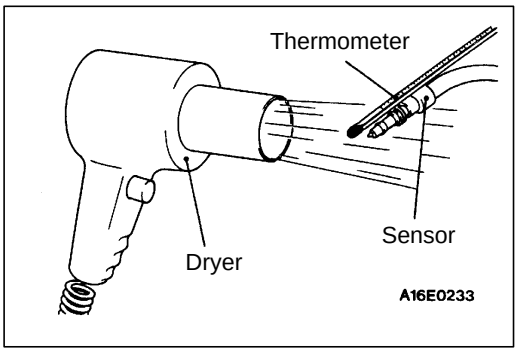

INSPECTION

54300960019

OUTSIDE THERMO SENSOR INTERNAL RESISTANCE CHECK

Check the internal resistance of the outside thermo sensor are at the standard values at temperatures of 20°C and 40°C.

Standard value:

Approx. 1,200 Ω (at 20°C)
Approx. 500 Ω (at 40°C)

HEADLAMP

54200030052

SERVICE SPECIFICATIONS

Items		Standard value	Limit
Headlamp aiming for low beam	Vertical direction	60 mm below horizontal (H)	–
	Horizontal direction	Position where the 15° sloping section intersects the vertical line (V)	–
Headlamp intensity cd		–	30,000 or more

SPECIAL TOOLS

54200060327

Tool	Number	Name	Use
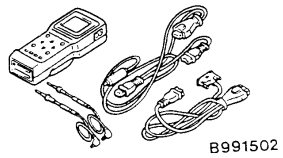	MB991502	MUT-II sub assembly	ETACS-ECU input signal checking
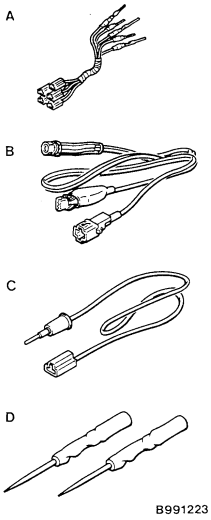	MB991223 A: MB991219 B: MB991220 C: MB991221 D: MB991222	Harness set A: Test harness B: LED harness C: LED harness adapter D: Probe	Making voltage and resistance measurements during troubleshooting A: Connector pin contact pressure inspection B, C: Power circuit inspection D: Commercial tester connection

TROUBLESHOOTING

54200900025

The special tool (MB991223) should always be used to measure voltages and resistances when carrying out troubleshooting.

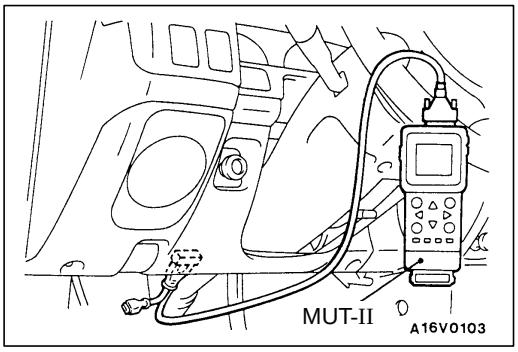

DIAGNOSIS FUNCTION

INPUT SIGNAL INSPECTION POINTS <VEHICLES WITH ETACS-ECU>

1. Connect the MUT-II to the diagnosis connector.
2. If buzzer of the MUT-II sounds once when a switch is operated (ON/OFF), the ETACS-ECU input signal for that switch circuit system is normal.

INSPECTION CHART FOR TROUBLE SYMPTOMS

54200910042

Trouble symptoms		Inspection procedure	Reference page
Communication with MUT-II is impossible. <Vehicles with ETACS-ECU>	Communication with all systems is impossible.	1	54-41
	Communication with one-shot pulse input signal only is impossible.	2	54-41
The lighting monitor buzzer doesn't sound under the following conditions while tail lamps or headlamps illuminate. ● When the ignition switch is turned to OFF and the driver's side door is open.		3	54-41
Headlamp leveling does not occur when the headlamp leveling switch is operated.		5	54-43
The headlamps do not illuminate when the vehicle is in the following condition and the ignition switch is at the ON position. However, the headlamps illuminate when the lighting switch is moved to the HEAD position. <Vehicles with daytime running lamp system> ● Lighting switch: OFF ● Passing switch: OFF		6	54-44
The headlamps do not switch off when the vehicle is in the following condition and the lighting switch is moved to the TAIL position. <Vehicles with daytime running lamp system> ● Ignition switch: OFF ● Passing switch: OFF		7	54-45

INSPECTION PROCEDURE FOR TROUBLE SYMPTOMS

Inspection Procedure 1

Communication with MUT-II is impossible. (Communication with all systems is impossible.)	Probable cause
The cause is probably a defective power supply system (including earth) for the diagnosis line.	● Malfunction of connector ● Malfunction of harness wire

Refer to GROUP 13A – Troubleshooting.

Inspection Procedure 2

Communication with MUT-II is impossible. (Communication with the one-shot pulse input signal only is impossible.)	Probable cause
The cause is probably a defective one-shot pulse input circuit system of the diagnosis line.	● Malfunction of connector ● Malfunction of harness wire ● Malfunction of ETACS-ECU

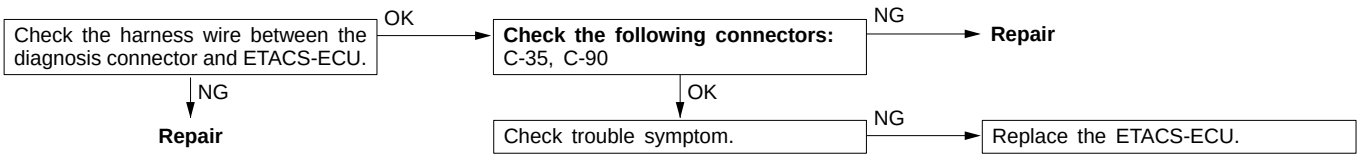

Inspection Procedure 3

The ignition switch is turned to the OFF position and the driver's side door is opened while the tail lamps or headlamps are operating, but the light reminder warning buzzer does not sound.	Probable cause
The cause is probably a defective lighting switch input circuit system or a defective driver's side door switch input circuit system.	● Malfunction of driver's side door switch ● Malfunction of harness or connector ● Malfunction of buzzer-ECU or ETACS-ECU

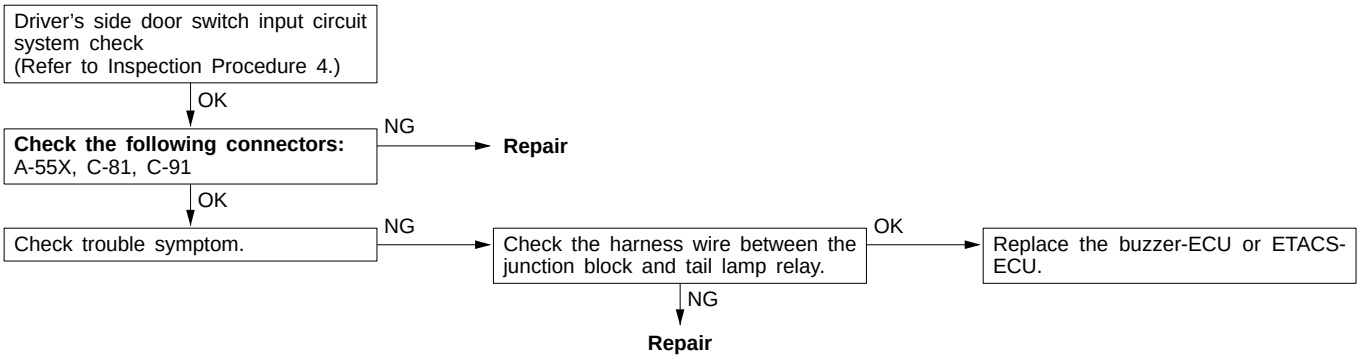

Inspection Procedure 4

Driver's side door switch input circuit system check

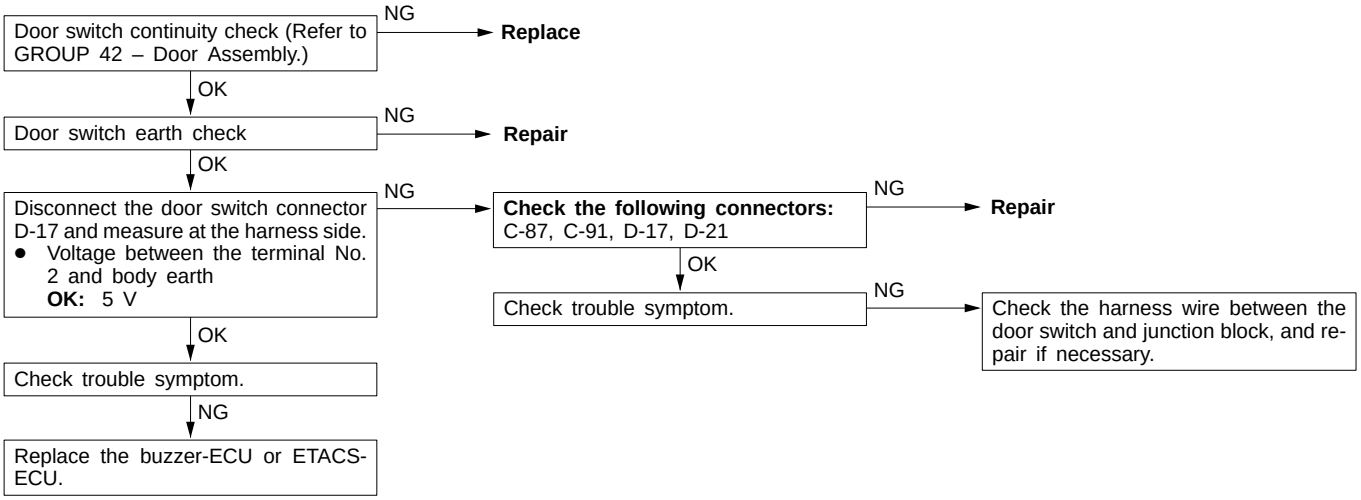

Inspection procedure 5

Headlamp leveling does not occur when the headlamp leveling switch is operated.	Probable cause
The cause is probably a malfunction of the headlamp leveling switch circuit system or a malfunction of the headlamp leveling unit circuit system. If there is a blown fuse, there may also be a short-circuit in a harness.	● Malfunction of fuse ● Malfunction the headlamp leveling switch ● Malfunction of connector ● Malfunction of harness wire ● Malfunction of the headlamp leveling unit

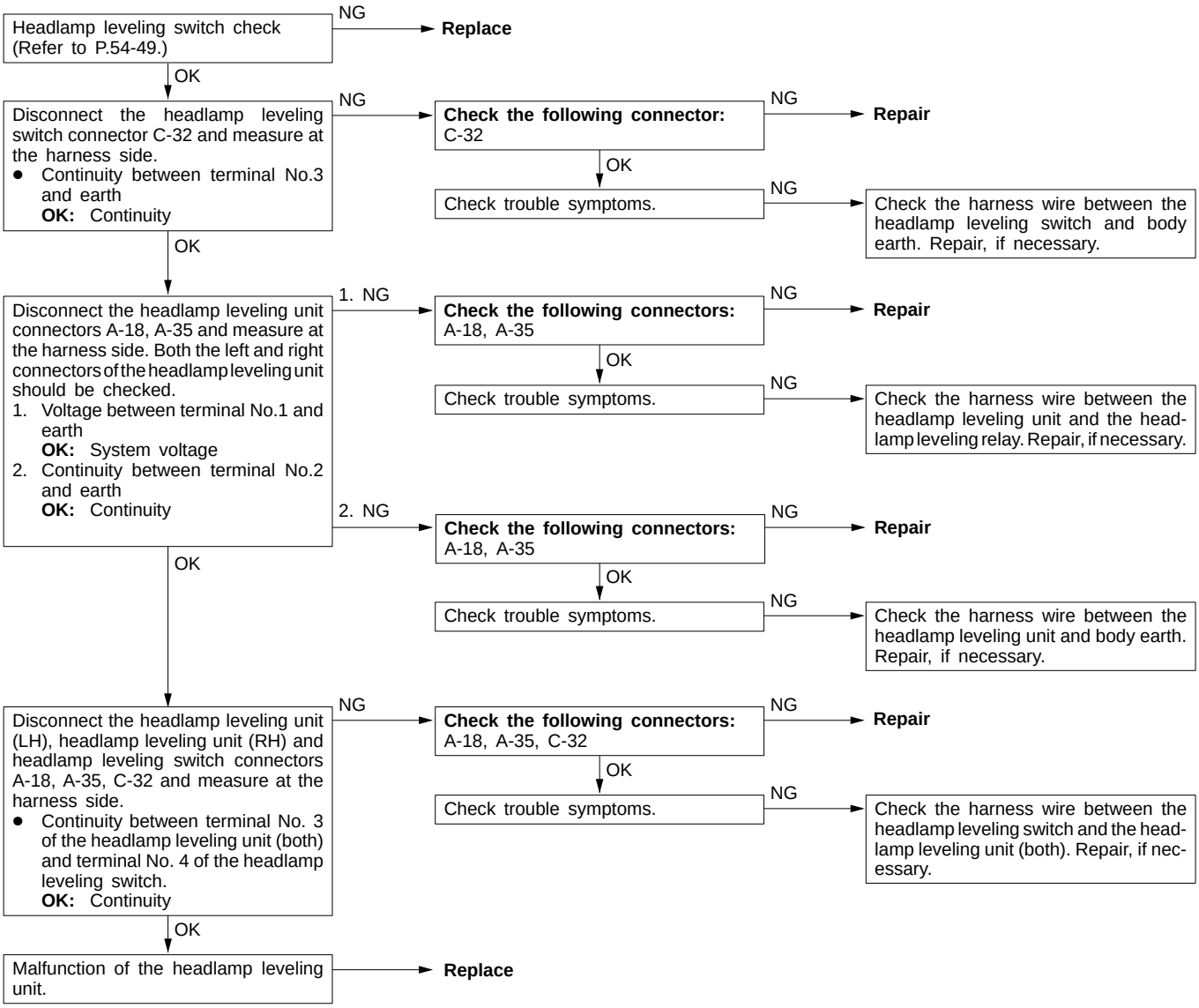

Inspection procedure 6

The headlamps do not illuminate when the vehicle is in the following condition and the ignition switch is moved to the ON position. However, they illuminate when the lighting switch is moved to the HEAD position. **<Vehicles with daytime running lamp>** ● **Lighting switch: OFF** ● **Passing switch: OFF**	**Probable cause**
The cause is probably a malfunction of the daytime running lamp control unit (DRL-ECU) circuit system. If there is a blown fuse, there may also be a short-circuit in a harness.	● Malfunction of fuse ● Malfunction of connector ● Malfunction of harness wire ● Malfunction of the DRL relay (1) ● Malfunction of the DRL-ECU

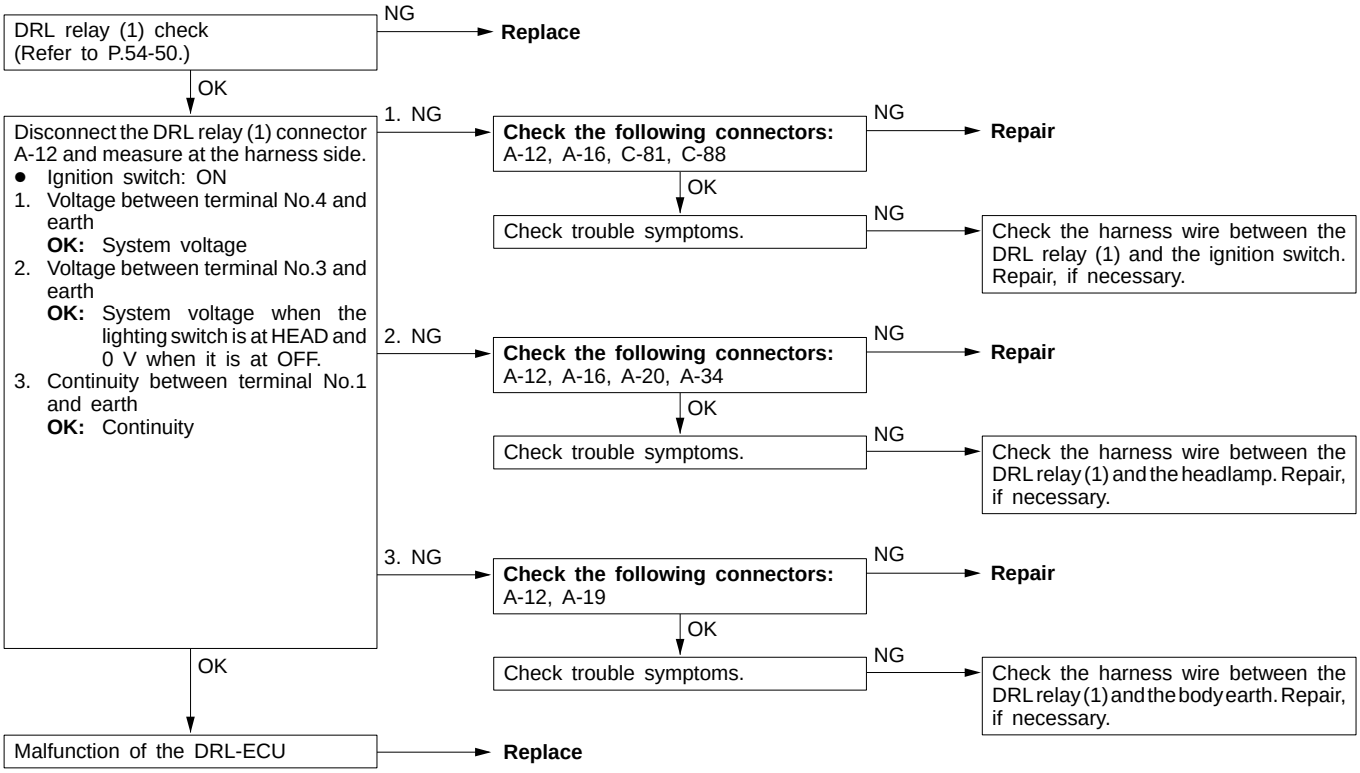

Inspection procedure 7

The headlamps do not switch off when the vehicle is in the following condition and the lighting switch is moved to the TAIL position. <Vehicles with daytime running lamp> ● Ignition switch: OFF ● Passing switch: OFF	Probable cause
The cause is probably a malfunction of the daytime running lamp control unit (DRL-ECU) circuit system. If there is a blown fuse, there may also be a short-circuit in a harness.	● Malfunction of fuse ● Malfunction of connector ● Malfunction of harness wire ● Malfunction of the tail lamp relay ● Malfunction of the DRL-ECU

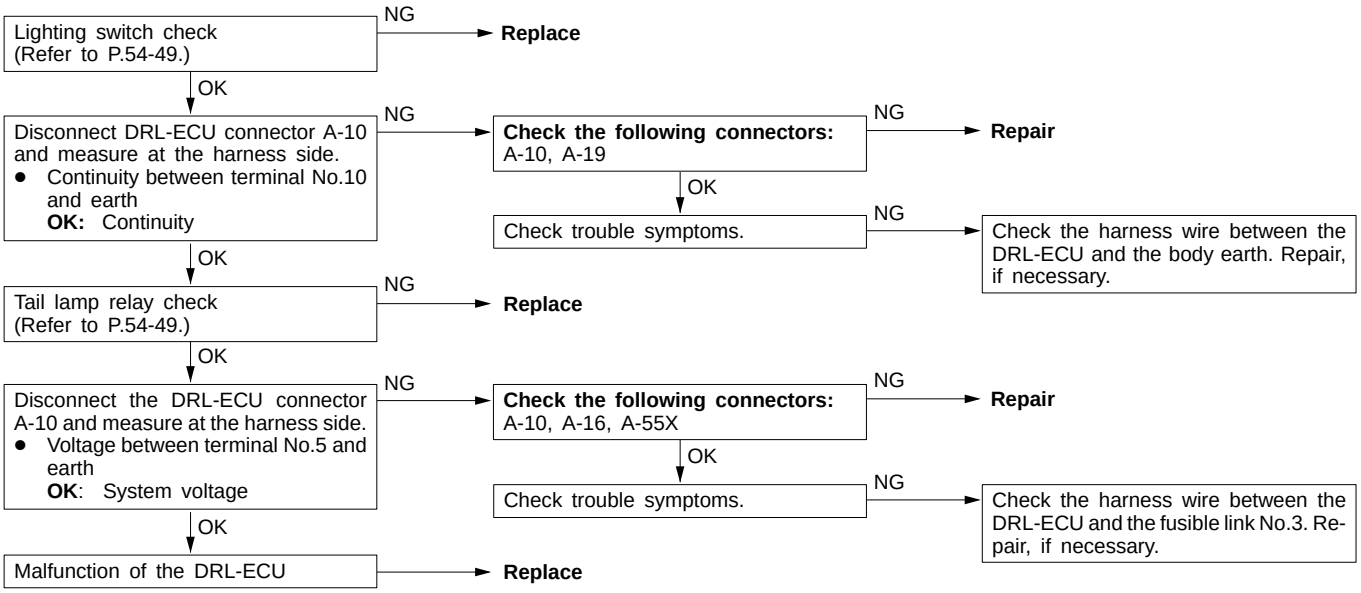

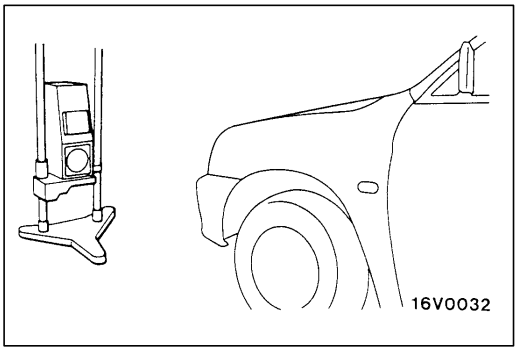

ON-VEHICLE SERVICE

54200090111

HEADLAMP AIMING

<USING A BEAMSETTING EQUIPMENT>

1. The headlamps should be aimed with the proper beamsetting equipment, and in accordance with the equipment manufacture's instructions.

   NOTE
   If there are any regulations pertinent to the aiming of headlamps in the area where the vehicle is to be used, adjust so as to meet those requirements.

2. Alternately turn the adjusting screw to adjust the headlamp aiming.

<USING A SCREEN>

1. Inflate the tyres to the specified pressures and there should be no other load in the vehicles other than driver or substituted weight of approximately 75 kg placed in driver's position.
2. Set the distance between the screen and the centre of the headlamps as shown in the illustration.

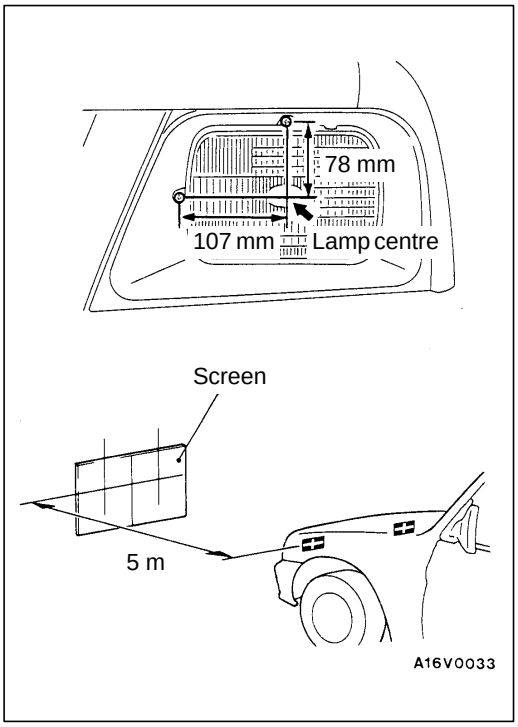

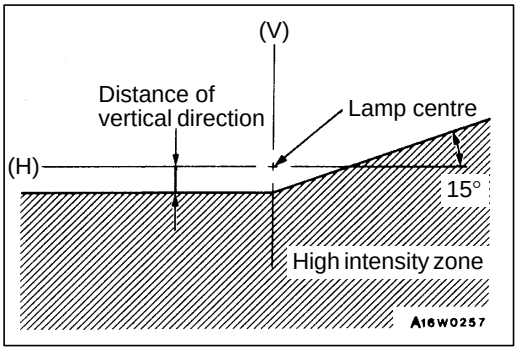

3. Check if the beam shining onto the screen is at the standard value.

   Standard value:
   (Vertical direction)
   60 mm below horizontal (H)

   (Horizontal direction)
   Position where the 15° sloping section intersects the vertical line (V)

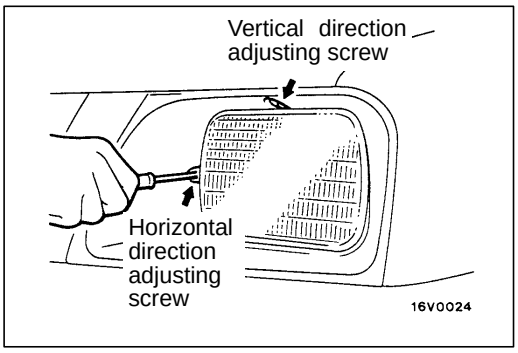

4. Alternately turn the adjusting screw to adjust the headlamp aiming.

   Caution
   Be sure to adjust the aiming adjustment screw in the tightening direction.

INTENSITY MEASUREMENT

54200100074

Using a photometer, and following its manufacture's instruction manual, measure the headlamp intensity and check to be sure that the limit value is satisfied.

Limit: 30,000 cd or more

NOTE

1. When measuring the intensity, maintain an engine speed of 2,000 r/min, with the battery in the charging condition.
2. There may be special local regulations pertaining to headlamp intensity, be sure to make any adjustments necessary to satisfy such regulations.
3. If an illuminometer is used to make the measurements, convert its values to photometer values by using the following formula.

   $I = Er^2$ Where:
   - I = intensity (cd)
   - E = illumination (lux)
   - r = distance (m) from headlamps to illuminometer

BULB REPLACEMENT

54200130141

<Headlamp Bulb>

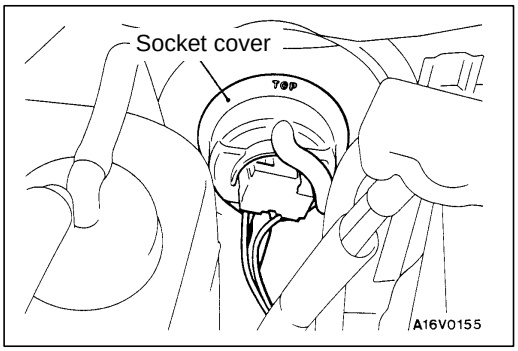

1. Disconnect the connector.
2. Remove the socket cover.

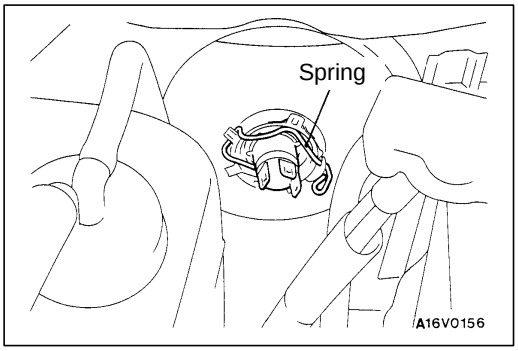

3. Unhook the spring which secures the bulb, and then remove the bulb.

   Caution
   Do not touch the surface of the bulb with hands or dirty gloves. If the surface does become dirty, clean it with alcohol or thinner, and let it dry thoroughly before installing.

HEADLAMP

54200180030

REMOVAL AND INSTALLATION

CAUTION: SRS
Before removal of air bag module and clock spring, refer to GROUP 52B – SRS Service Precautions and Air Bag Module and Clock Spring.

Post-installation Operation
- Headlamp Aiming Adjustment (Refer to P.54-46.)

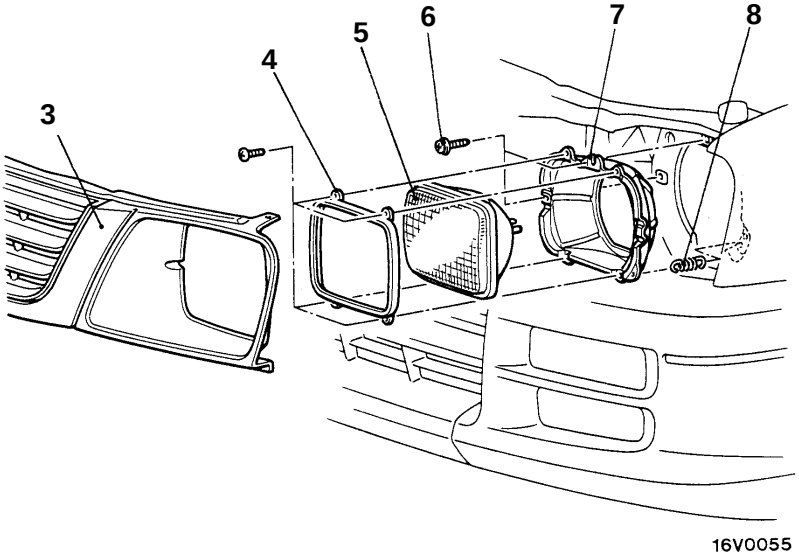

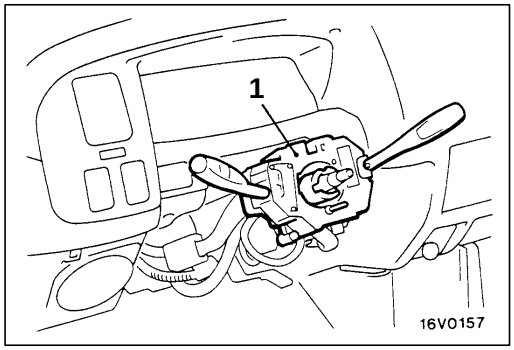

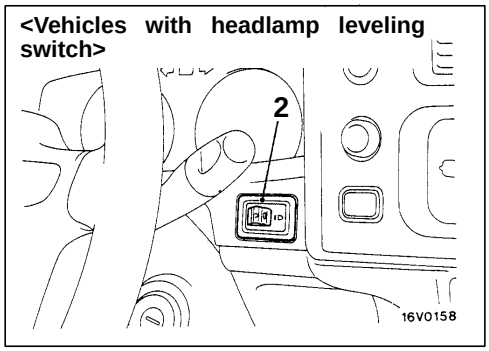

00005055

1. Column switch <Lighting switch and dimmer/passing switch>
   (Refer to GROUP 37A – Steering Wheel and Shaft.)
2. Headlamp leveling switch

Headlamp removal steps

3. Radiator grille (Refer to GROUP 51 – Grille, Moulding, Garnish.)
4. Retaining ring
5. Headlamp
6. Adjusting screw
7. Mounting ring or mounting ring and leveling actuator assembly
8. Extension spring

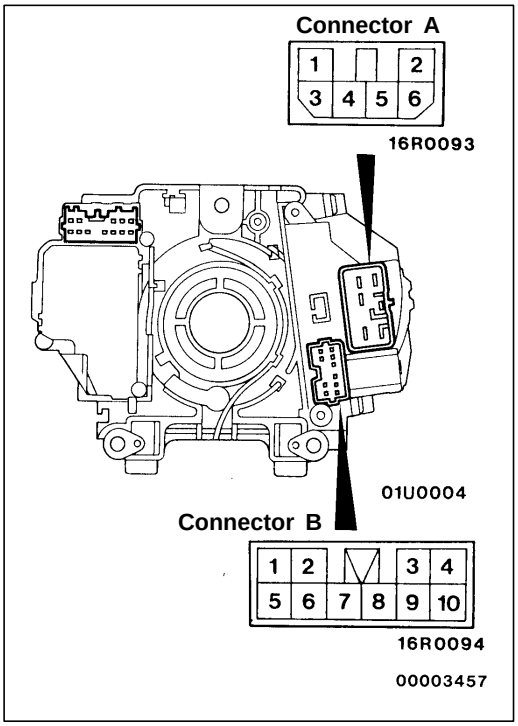

INSPECTION

54200800066

LIGHTING SWITCH AND DIMMER/PASSING SWITCH CONTINUITY CHECK

Switch position		Connector A–terminal No.					Connector B–terminal No.					
		1	2	3	4	6	3	5	6	7	8	9
LIGHTING SWITCH	OFF											
	TAIL							○		○		
	HEAD	○						○	○	○		
DIMMER/ PASSING SWITCH	LOWER			○	○							
	UPPER				○	○						
	PASSING	○	○	○	○ ○	○* ○						

NOTE
* indicates continuity when the dimmer switch in the lower beam position.

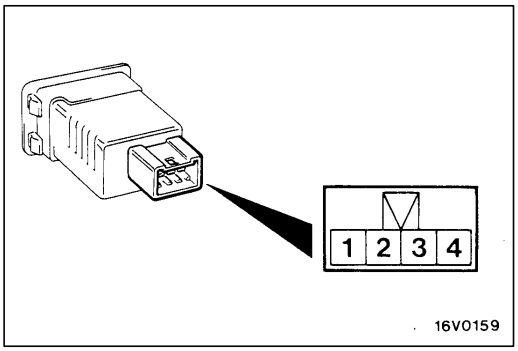

HEADLAMP LEVELING SWITCH CHECK

54200810038

Check the resistance between the terminals when the headlamp leveling switch is operated.

Switch position	0	1	2	3	4
Resistance measurement between terminal No.3 and 4 Ω	120	300	620	1,100	2,000

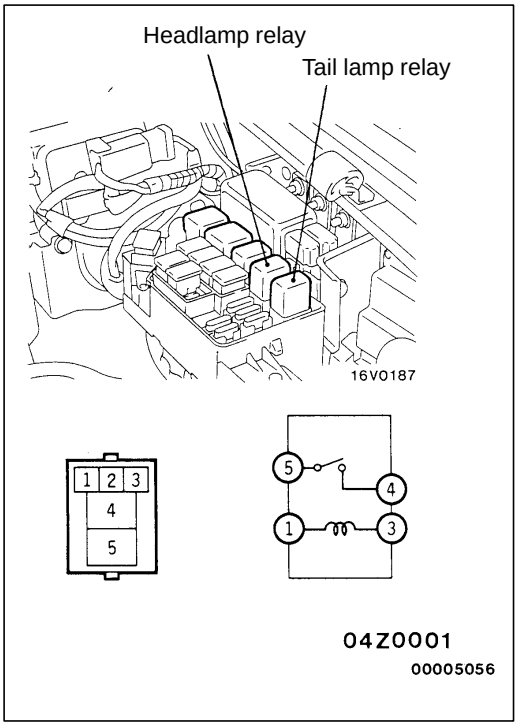

HEADLAMP RELAY AND TAIL LAMP RELAY CONTINUITY CHECK

54200820109

Battery voltage	Terminal No.			
	1	3	4	5
Supplied	⊕	⊖	○	○
Not supplied	○	○		

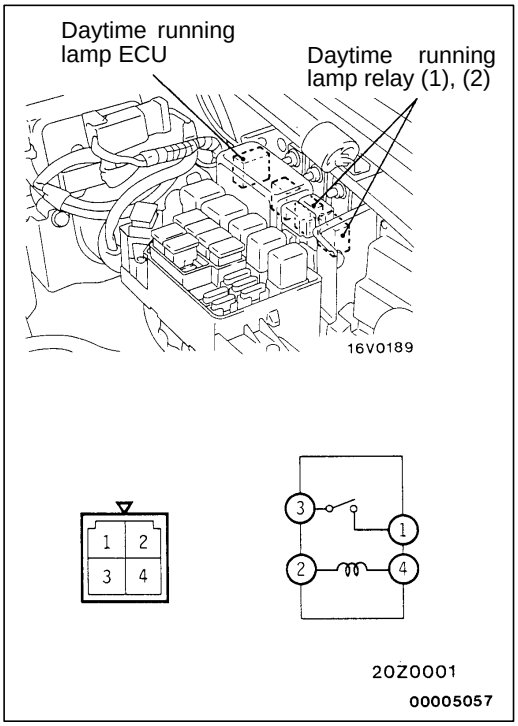

DAYTIME RUNNING LAMP RELAY (1) AND (2) CONTINUITY CHECK <L.H. drive vehicles>

54200830034

Battery voltage	Terminal No.			
	1	2	3	4
Supplied	○	⊕	○	⊖
Not supplied		○		○

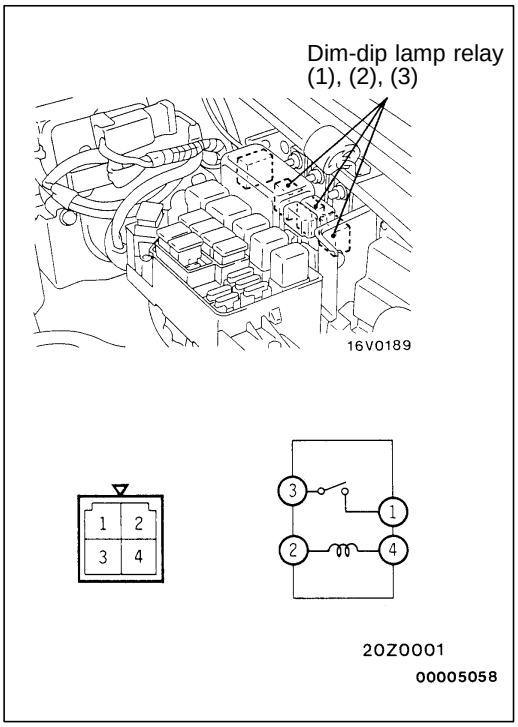

DIM-DIP LAMP RELAY (1), (2) AND (3) CONTINUITY CHECK <R.H. drive vehicles>

54200840020

Battery voltage	Terminal No.			
	1	2	3	4
Supplied	○	⊕	○	⊖
Not supplied		○		○

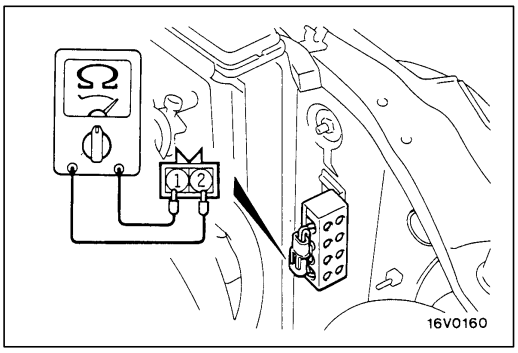

RESISTOR RESISTANCE CHECK <R.H. drive vehicles>

54200850023

Disconnect the resistor connector, and measure the resistance between the terminal No.1 and No.2.

Standard value: Approx. 1 Ω

FRONT COMBINATION LAMP

54200950013

REMOVAL AND INSTALLATION

CAUTION: SRS
Before removal of air bag module and clock spring, refer to GROUP 52B – Service Precautions and Air Bag Module and Clock Spring.

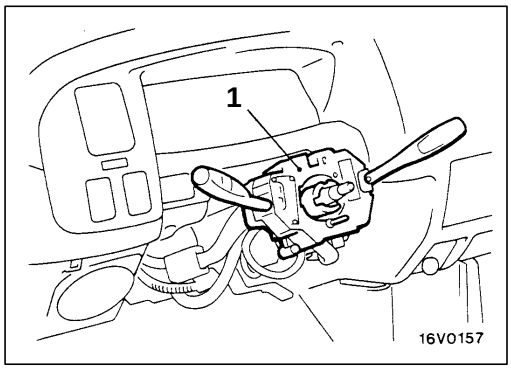

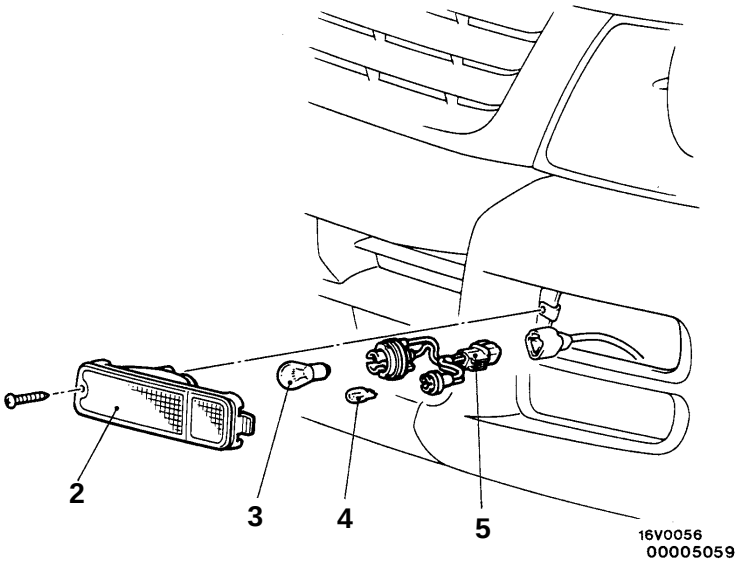

Column switch removal

1. Column switch <Lighting switch and turn-signal lamp switch> (Refer to GROUP 37A – Steering Wheel and Shaft.)

Front combination lamp removal steps

2. Front combination lamp
3. Bulb (For turn-signal lamp)
4. Bulb (For position lamp)
5, Bulb socket assembly

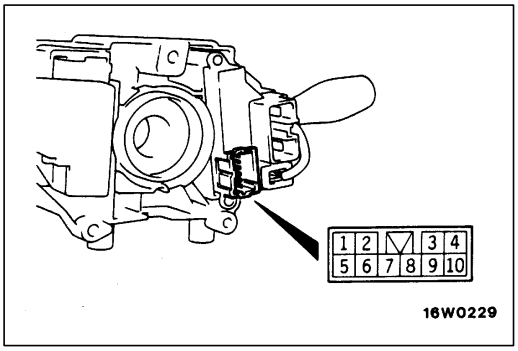

INSPECTION

54200760074

LIGHTING SWITCH AND TURN-SIGNAL LAMP SWITCH CONTINUITY CHECK

Switch position		Terminal No.				
		3	5	7	8	9
LIGHTING SWITCH	OFF					
	TAIL		○	○		
TURN-SIGNAL LAMP SWITCH	R.H.				○	○
	OFF					
	L.H.	○			○	

SIDE TURN-SIGNAL LAMP

54200330053

REMOVAL AND INSTALLATION

CAUTION: SRS
Before removal of air bag module and clock spring, refer to GROUP 52B – Service Precautions and Air Bag Module and Clock Spring.

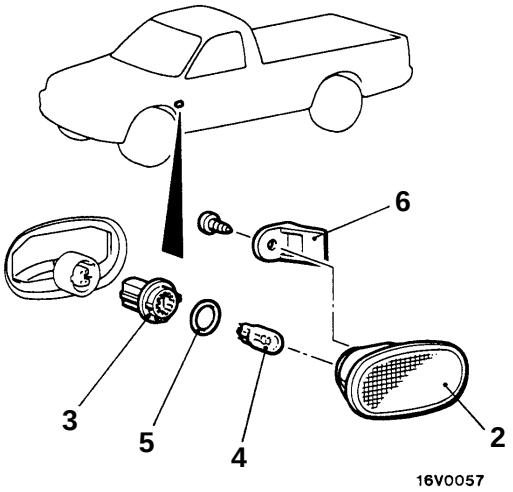

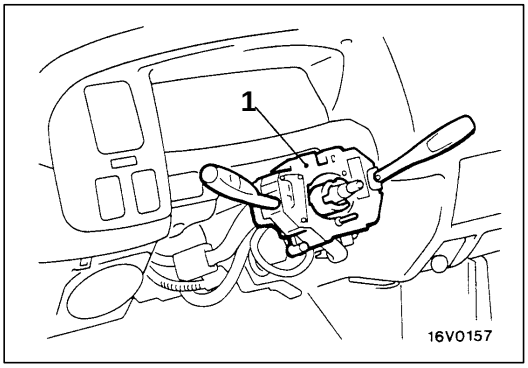

00005060

Column switch removal

1. Column switch <Turn-signal lamp switch> (Refer to GROUP 37A – Steering Wheel and Shaft.)

◀A▶

Side turn-signal lamp removal steps

2. Side turn-signal lamp
3. Bulb socket
4. Bulb
5. Packing
6. Hook

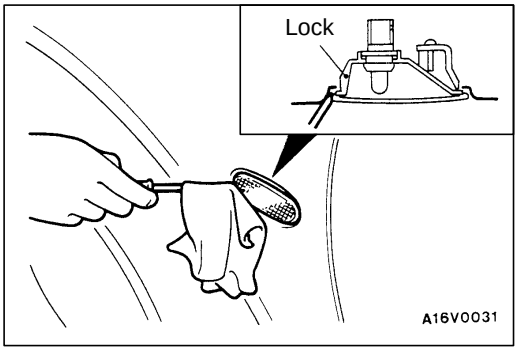

REMOVAL SERVICE POINT

◀A▶ SIDE TURN-SIGNAL LAMP REMOVAL

Use a flat-tipped screw driver or similar tool to remove the lock from the fender panel, and then remove the side turn-signal lamp.

INSPECTION

54200760081

TURN-SIGNAL LAMP SWITCH CONTINUITY CHECK

Refer to P.54-51.

REAR COMBINATION LAMP

54200390075

REMOVAL AND INSTALLATION

Caution: SRS
Before removal of air bag module and clock spring, refer to GROUP 52B – SRS Service Precautions and Air Bag Module and Clock Spring.

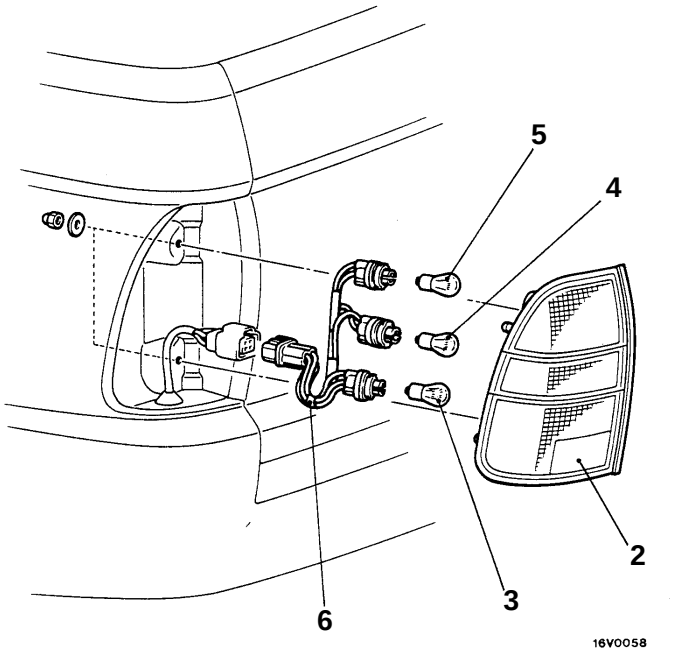

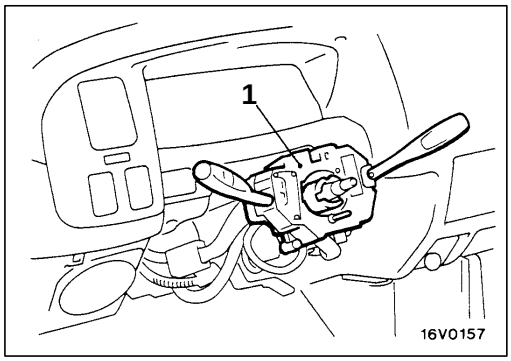

00005061

1. Column switch <Lighting switch and turn-signal lamp switch> (Refer to GROUP 37A – Steering Wheel and Shaft.)

Rear combination lamp removal steps

2. Rear combination lamp
3. Bulb (For tail and stop lamp)
4. Bulb (For back-up lamp)
5. Bulb (For turn-signal lamp)
6. Bulb socket assembly

INSPECTION

54200760098

LIGHTING SWITCH AND TURN-SIGNAL LAMP SWITCH CONTINUITY CHECK

Refer to P.54-51.

TAIL LAMP RELAY CONTINUITY CHECK

54200780094

Refer to P.54-49.

REAR FOG LAMP

54200060334

SPECIAL TOOL

Tool	Number	Name	Use
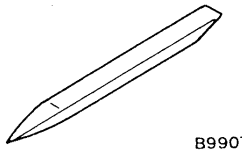	MB990784	Ornament remover	Fog lamp switch removal

REAR FOG LAMP

54200980012

REMOVAL AND INSTALLATION

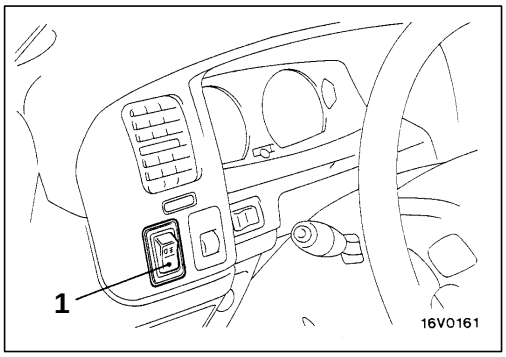

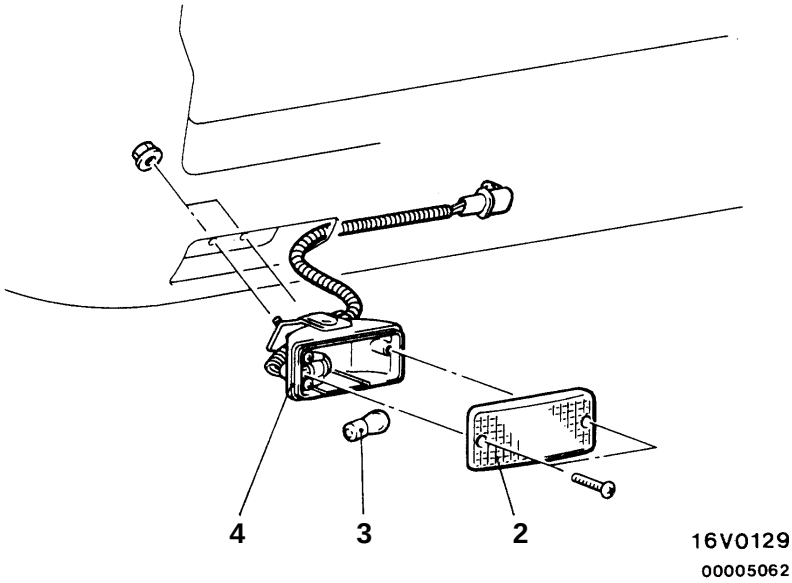

Removal steps

1. Rear fog lamp switch
2. Lens
3. Bulb
4. Rear fog lamp body assembly

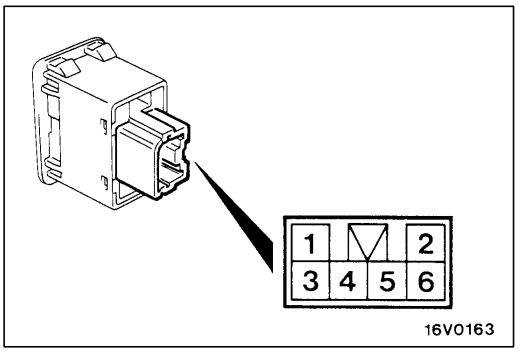

INSPECTION

54200920014

REAR FOG LAMP SWITCH CONTINUITY CHECK

Switch position	Terminal No.				
	1	ILL	2	3	6
OFF	○	⦶		○	
ON	○	⦶	○	○	○

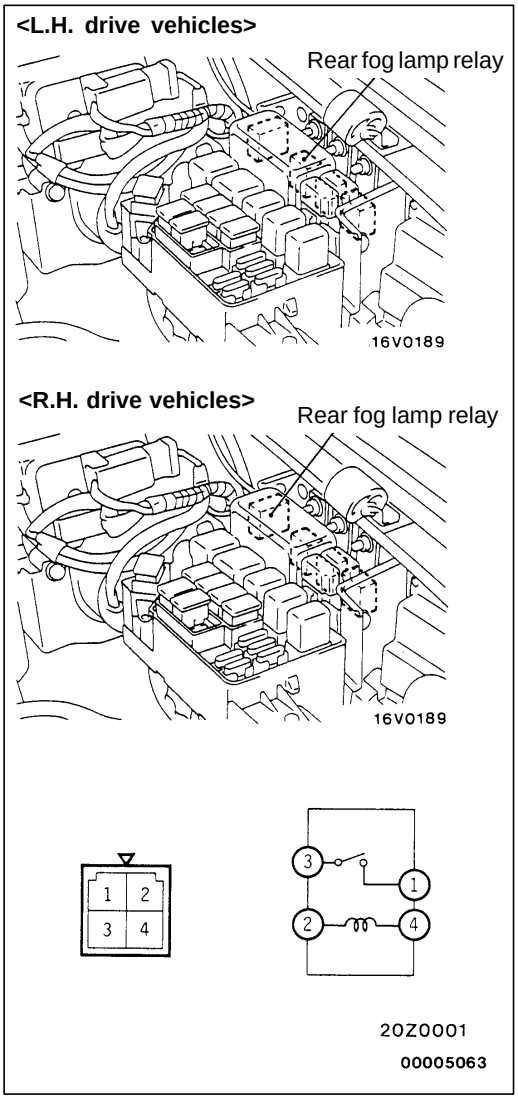

REAR FOG LAMP RELAY CONTINUITY CHECK

54200930017

Battery voltage	Terminal No.			
	1	2	3	4
Supplied	○	⊕	○	⊖
Not supplied		○		○

RHEOSTAT

54200060341

SPECIAL TOOL

Tool	Number	Name	Use
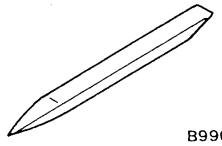 B990784	MB990784	Ornament remover	Rheostat removal

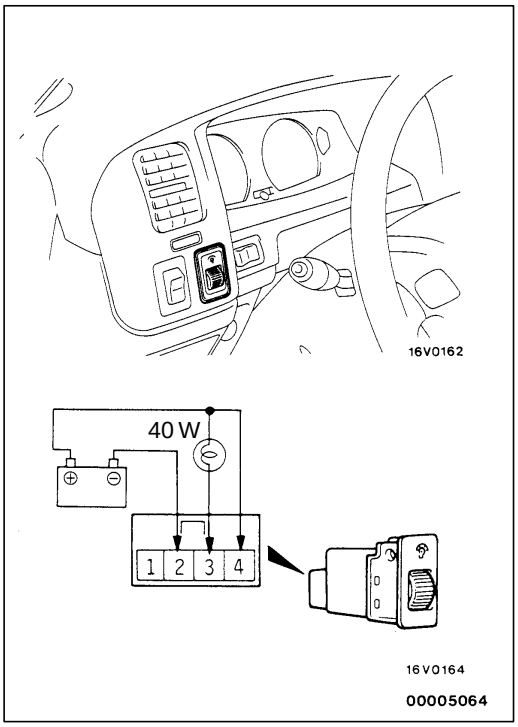

RHEOSTAT

54200610096

INSPECTION

1. Connect the battery and the test lamp (40 W) as shown in the illustration.
2. Operate the rheostat and if the brightness changes smoothly without switching off, then the rheostat function is normal.

HAZARD WARNING LAMP SWITCH

54200060358

SPECIAL TOOL

Tool	Number	Name	Use
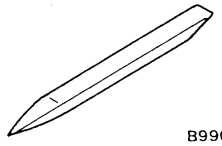 B990784	MB990784	Ornament remover	Meter bezel assembly removal

HAZARD WARNING LAMP SWITCH

54200660084

REMOVAL AND INSTALLATION

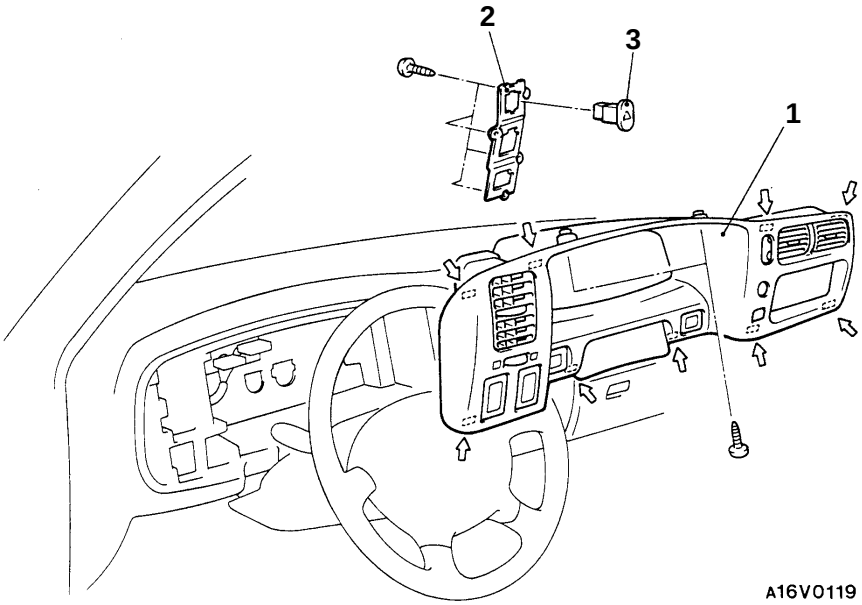

NOTE
⇦ : metal clip position

Removal steps

1. Meter bezel assembly
2. Switch holder
3. Hazard warning lamp switch

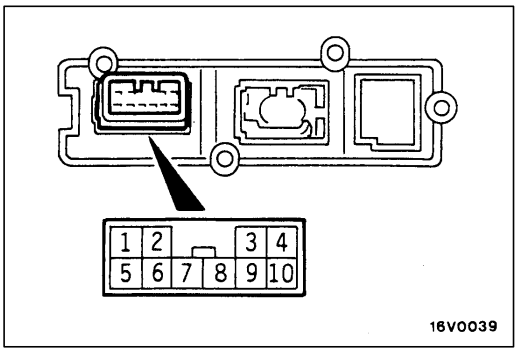

INSPECTION

54200670100

HAZARD WARNING LAMP SWITCH CONTINUITY CHECK

Switch position	Terminal No.								
	1	2	4	5	6	7	9	ILL	10
OFF									
ON				○	———	○	○	⦶	○
	○	○	○	○	○		○	⦶	○

HORN

54300790038

REMOVAL AND INSTALLATION

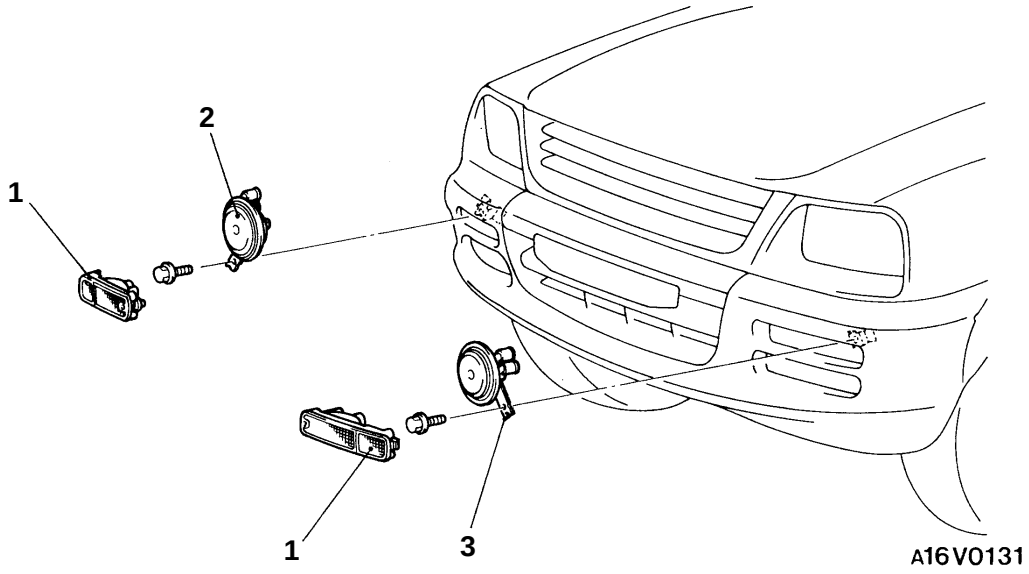

Removal steps

1. Front combination lamp
2. Horn (High sound)
3. Horn (Low sound)

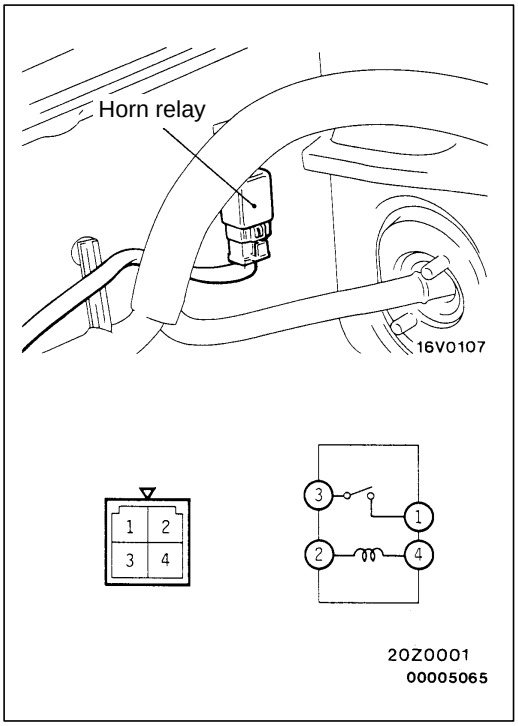

INSPECTION

54200650012

HORN RELAY CONTINUITY CHECK <Vehicles with SRS>

Battery voltage	Terminal No.			
	1	2	3	4
Supplied	○	⊕	○	⊖
Not supplied		○		○

CIGARETTE LIGHTER

54300560097

REMOVAL AND INSTALLATION

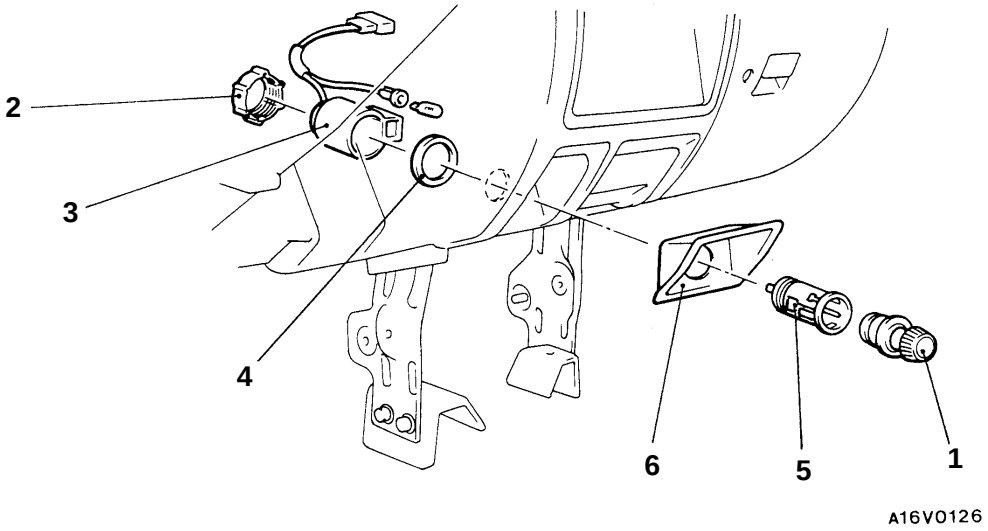

Removal steps

- Front floor console assembly (Refer to GROUP 52A.)

1. Plug
2. Fixing ring
3. Socket case
4. Socket washer
5. Socket
6. Protector

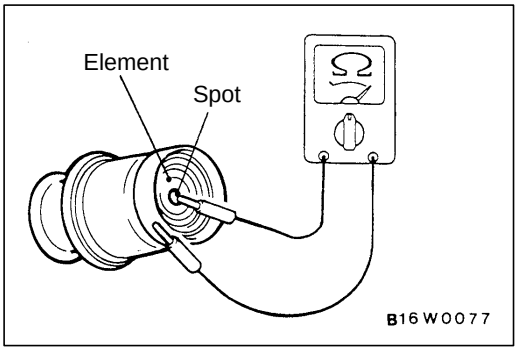

INSPECTION

54300570113

- Take out the plug, and check for a worn edge on the element spot connection, and for shreds of tobacco or other material on the element.
- Using a circuit tester, check the continuity of the element.

CLOCK

54300060252

SPECIAL TOOL

Tool	Number	Name	Use
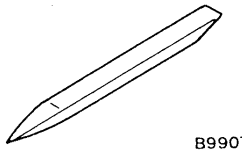	MB990784	Ornament remover	Meter bezel assembly removal

CLOCK

54300590058

REMOVAL AND INSTALLATION

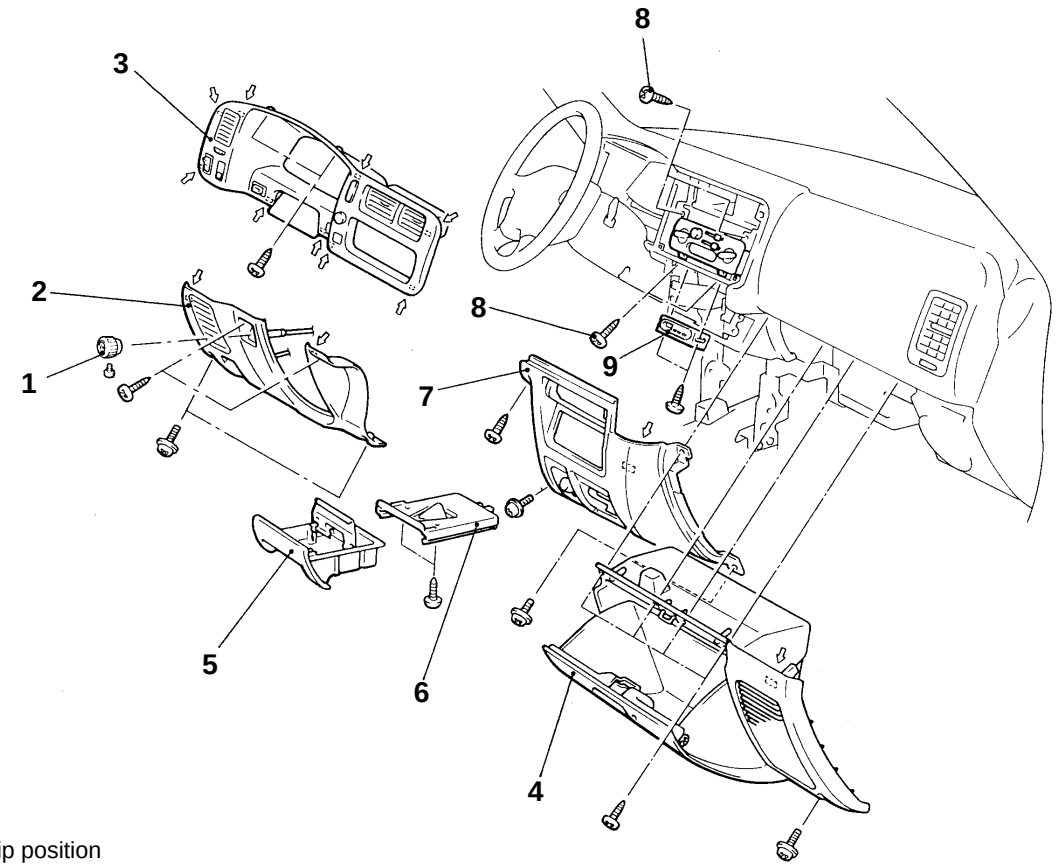

NOTE
⇦: metal clip position

A16V0122

Removal steps

- Front floor console assembly (Refer to GROUP 52A.)
1. Throttle cable knob <Diesel-powered vehicles>
2. Driver's side under cover
3. Meter bezel assembly
4. Glove box assembly
5. Ashtray
6. Ashtray bracket
7. Center under cover
8. Heater control panel assembly mounting screw
9. Clock

RADIO AND TAPE PLAYER

54400060057

SPECIAL TOOL

Tool	Number	Name	Use
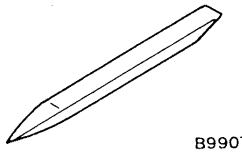	MB990784	Ornament remover	Meter bezel assembly removal

TROUBLESHOOTING

54400070142

QUICK-REFERENCE TROUBLESHOOTING CHART

Items	Problem symptom	Relevant chart
Noise	Noise appears at certain places when travelling (AM).	A-1
	Noise appears at certain places when travelling (FM).	A-2
	Mixed with noise, only at night (AM).	A-3
	Broadcasts can be heard but both AM and FM have a lot of noise.	A-4
	There is more noise either on AM or on FM.	A-5
	There is noise when starting the engine.	A-6
	Some noise appears when there is vibration or shocks during travelling.	A-7
	Noise sometimes appears on FM during travelling.	A-8
	Ever-present noise.	A-9
Radio	When switch is set to ON, no power is available.	B-1
	No sound from one speaker.	B-2
	There is noise but no reception for both AM and FM or no sound from AM, or no sound from FM.	B-3
	Insufficient sensitivity.	B-4
	Distortion on AM or on both AM and FM.	B-5
	Distortion on FM only.	B-6
	Too few automatic select stations.	B-7
	Insufficient memory (preset stations are erased).	B-8

NOTE
Refer to problem symptoms of AM radio for MW radio.

Items	Problem symptom	Relevant chart
Tape player	Cassette tape will not be inserted.	C-1
	No sound.	C-2
	No sound from one speaker.	C-3
	Sound quality is poor, or sound is weak.	C-4
	Cassette tape will not be ejected.	C-5
	Uneven revolution. Tape speed is fast or slow.	C-6
	Faulty auto reverse.	C-7
	Tape gets caught in mechanism.	C-8

CHART

A. NOISE

A-1 Noise appears at certain places when travelling (AM).

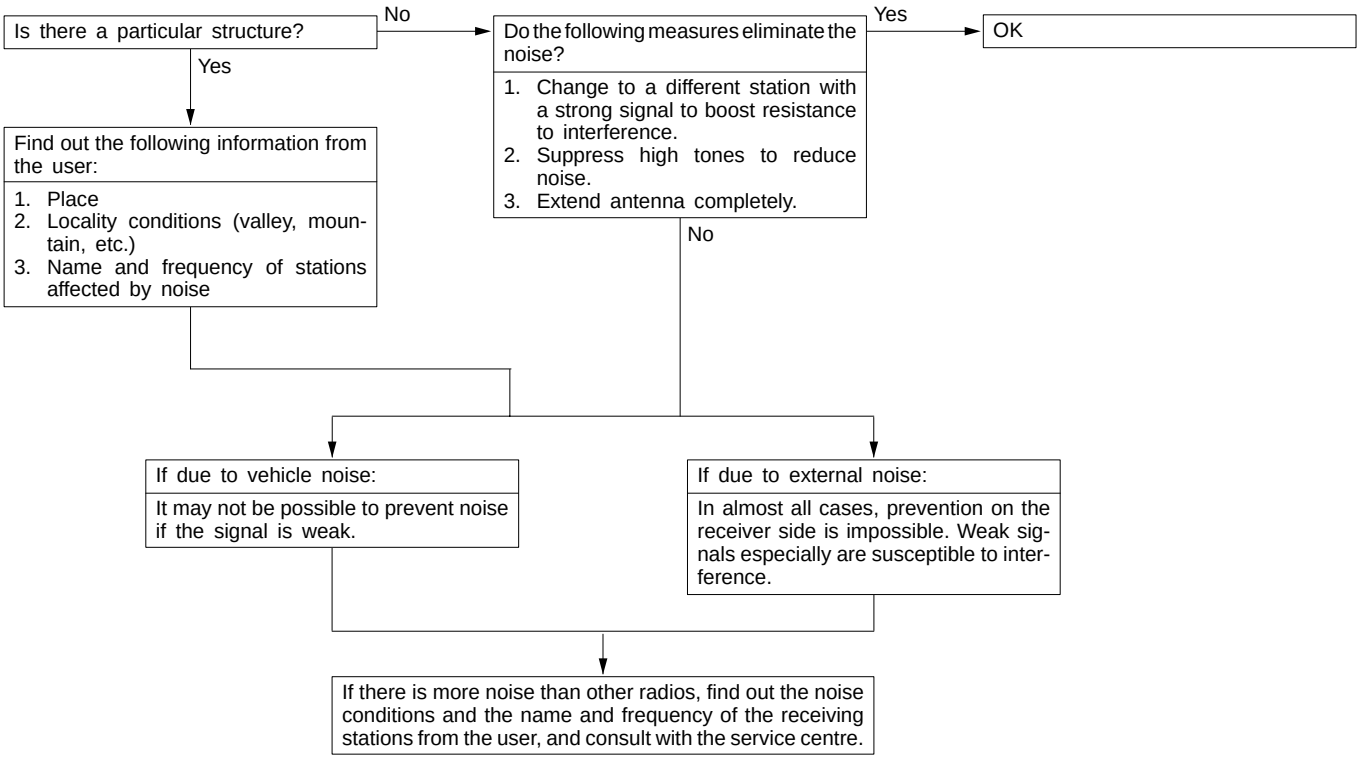

A-2 Noise appears at certain places when travelling (FM).

Do the following measures eliminate the noise?

- Change to a different station with a strong signal to boost resistance to interference.
- Suppress high tones to reduce noise.
- Extend antenna completely.

Yes → OK

No ↓

If there is more noise than other radios, find out the noise conditions and the name and frequency of the receiving stations from the user, and consult with the service centre.

NOTE
About FM waves:
FM waves have the same properties as light, and can be deflected and blocked. Wave reception is not possible in the shadow of obstructions such as buildings or mountains.

1. The signal becomes weak as the distance from the station's transmission antenna increases. Although this may vary according to the signal strength of the transmitting station and intervening geographical formation or buildings, the area of good reception is approx. 20–25 km for stereo reception, and 30–40 km for monaural reception.
2. The signal becomes weak when an area of shadow from the transmitting antenna (places where there are obstructions such as mountains or buildings between the antenna and the car), and noise will appear. <This is called first fading, and gives a steady buzzing noise.>
3. If a direct signal hits the antenna at the same time as a signal reflected by obstructions such as mountains or buildings, interference of the two signals will generate noise. During travelling, noise will appear each time the vehicle's antenna passes through this kind of obstructed area. The strength and interval of the noise varies according to the signal strength and the conditions of deflection. <This is called multipath noise, and is a repetitious buzzing.>
4. Since FM stereo transmission and reception has a weaker field than monaural, it is often accompanied by a hissing noise.

FM Broadcast Good Reception Areas

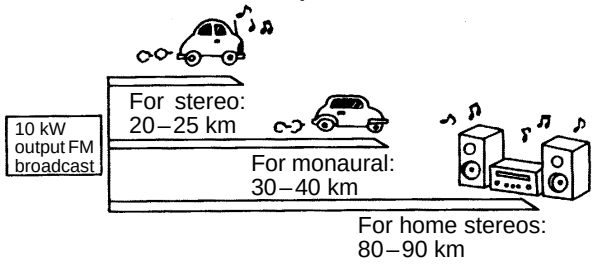

FM Signal Characteristics and Signal Interference

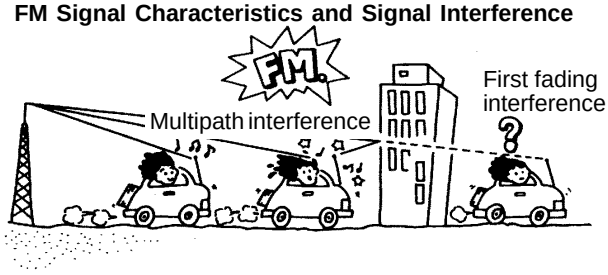

16W0268

A-3 Mixed with noise, only at night (AM).

The following factors can be considered as possible causes of noise appearing at night.

1. Factors due to signal conditions: Due to the fact that long-distance signals are more easily received at night, even stations that are received without problem during the day may experience interference in a general worsening of reception conditions. The weaker a station is the more susceptible it is to interference, and a change to a different station or the appearance of a beating sound* may occur.
   Beat sound*: Two signals close in frequency interfere with each other, creating a repetitious high-pitched sound. This sound is generated not only by sound signals but by electrical waves as well.
2. Factors due to vehicle noise: Alternator noise may be a cause.

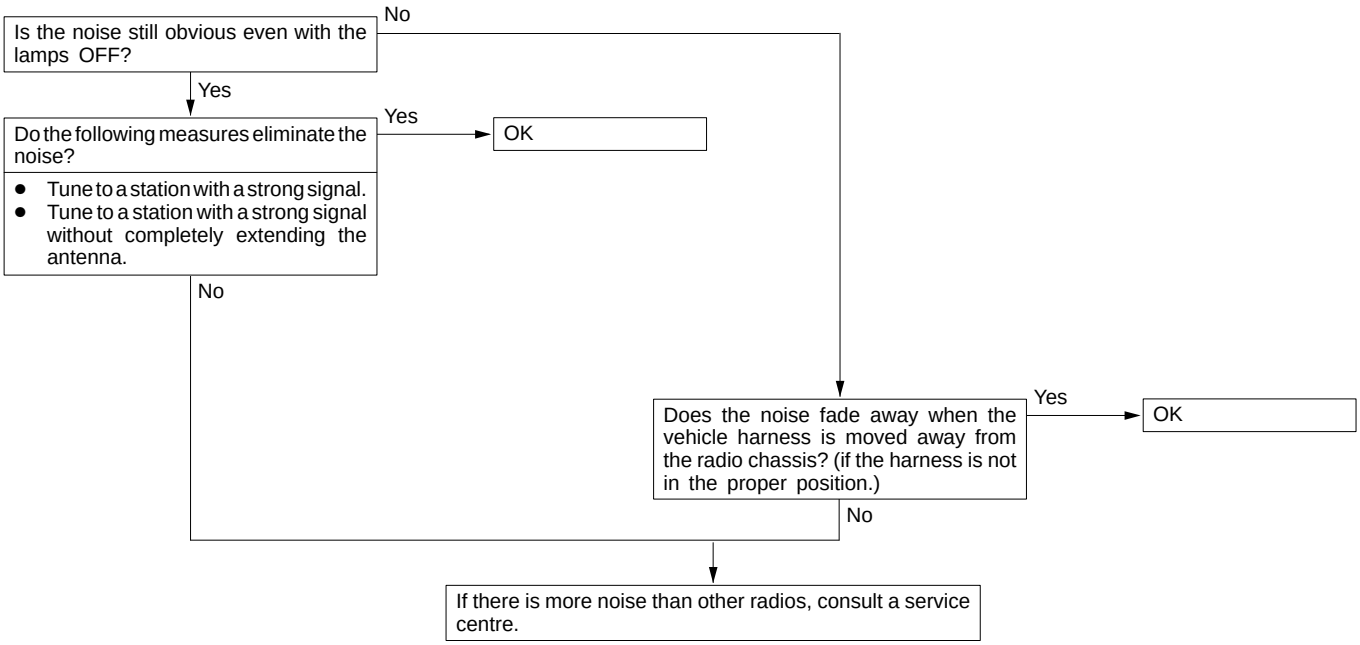

A-4 Broadcasts can be heard but both AM and FM have a lot of noise.

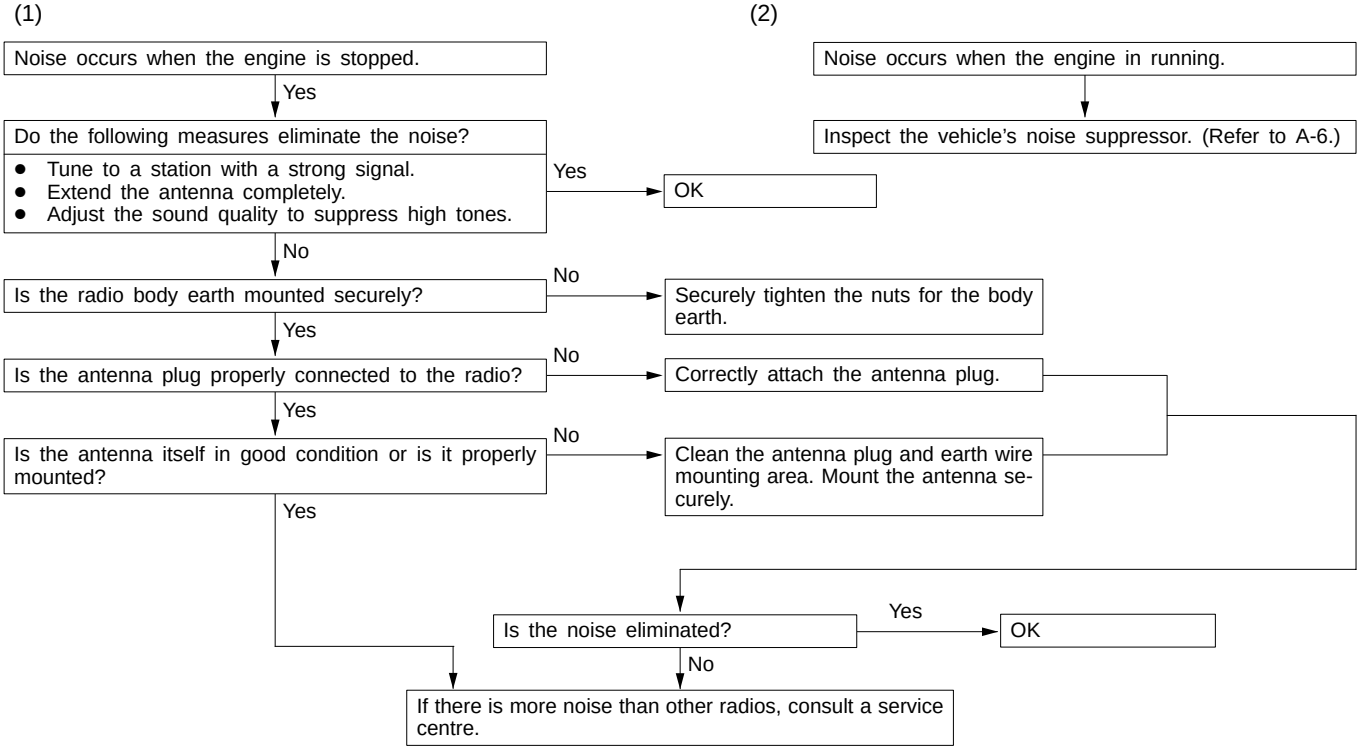

NOTE
About noise encountered during FM reception only. Due to differences in FM and AM systems, FM is not as susceptible as AM to interference from engines, power lines, lightning, etc. On the other hand, there are cases due to the characteristics of FM waves of noise or distortion generated by typical noise interference (first fading and multipath). (Refer to A-2.)
<Noise (hissing) occurs in weak signal areas such as mountainous regions, but this is not due to a problem with the radio.>

A-5 There is more noise either on AM or on FM.

1. There is much noise only on AM.
   Due to differences in AM and FM systems, AM is more susceptible to noise interference.

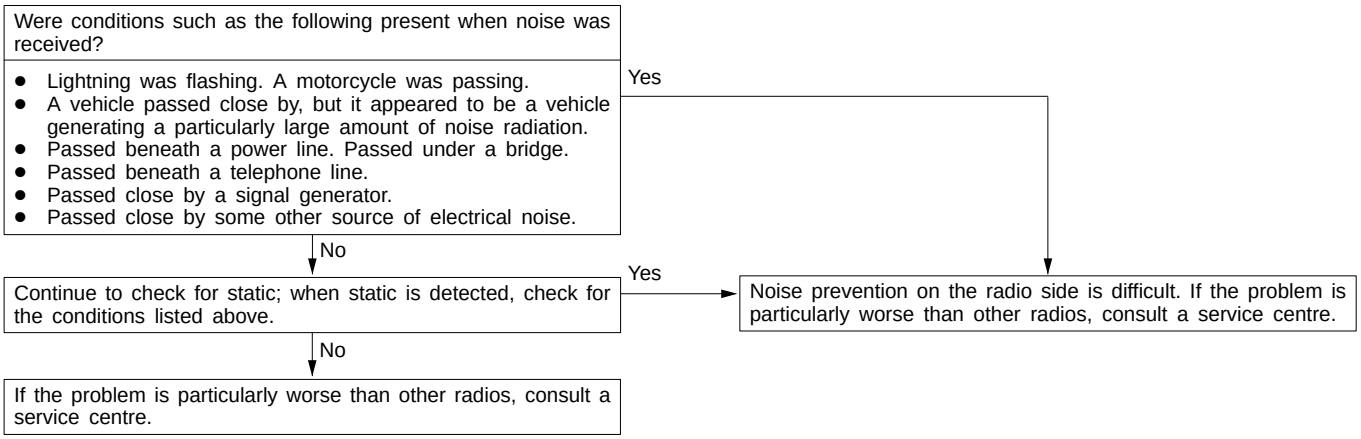

2. There is much noise only on FM.
   Due to differences in FM and AM systems, FM is not as susceptible as AM to interference from engines, power lines, lightning, etc. On the other hand, there are cases due to the characteristics of FM waves of noise or distortion generated by typical noise interference (first fading and multipath). (Refer to A-2) <Noise (hissing) occurs in weak signal areas such as mountainous regions, but this is not due to a problem with the radio.>

A-6 There is noise when starting the engine.

Noise type Sounds are in parentheses ( ).	Conditions	Cause	Remedy
AM, FM: Ignition noise (Popping, snapping, cracking, buzzing)	● Increasing the engine speed causing the popping sound to speed up, and volume decreases. ● Disappears when the ignition switch is turned to ACC.	● Mainly due to the spark plugs. ● Due to the engine noise.	● Check or replace the earth cable. (Refer to Fig. 1, 2, 3 and 4 on P.54-67, 68.) ● Check or replace the noise capacitor. (Refer to Fig. 5 and 6 on P.54-68.)
Other electrical components	–	Noise may appear as electrical components become older.	Repair or replace electrical components.
Static electricity (Cracking, crinkling)	● Disappears when the vehicle is completely stopped. ● Severe when the clutch is engaged.	Occurs when parts or wiring move for some reason and contact metal parts of the body.	Return parts or wiring to their proper position.
	● Various noises are produced depending on the body part of the vehicle.	Due to detachment from the body of the front hood, bumpers, exhaust pipe and muffler, suspension, etc.	Tighten the mounting bolts securely. Cases where the problem is not eliminated by a single response to one area are common, due to several body parts being imperfectly earthed.

Caution

1. **Connecting a high tension cable to the noise filter may destroy the noise filter and should never be done.**
2. **Check that there is no external noise. Since failure caused by this may result in misdiagnosis due to inability to identify the noise source, this operation must be performed.**
3. **Noise prevention should be performed by suppressing strong sources of noise step by step.**

NOTE

1. Capacitor
   The capacitor does not pass D.C. current, but as the number of waves increases when it passes A.C. current, impedance (resistance against A.C.) decreases, and current flow is facilitated. A noise suppressing condenser which takes advantage of this property is inserted between the power line for the noise source and the earth. This suppresses noise by earthing the noise component (A.C. or pulse signal) to the body of the vehicle.
2. Coil
   The coil passes D.C. current, but impedance rises as the number of waves increases relative to the A.C. current. A noise suppressing coil which takes advantage of this property is inserted into the power line for the noise source, and works by preventing the noise component from flowing or radiating out of the line.

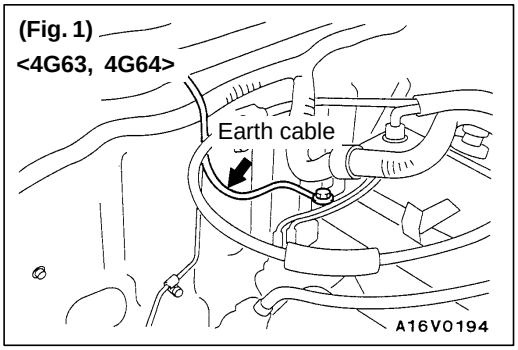

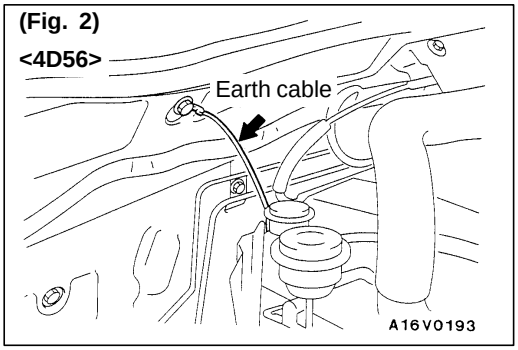

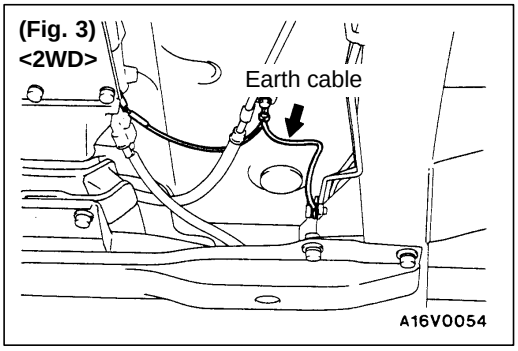

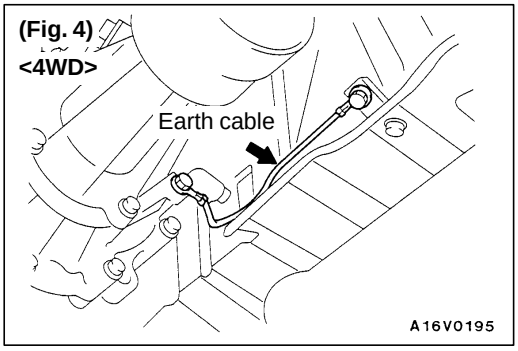

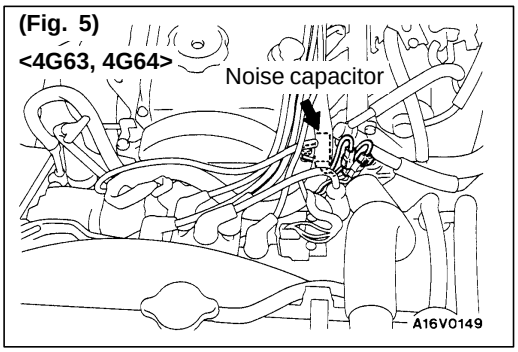

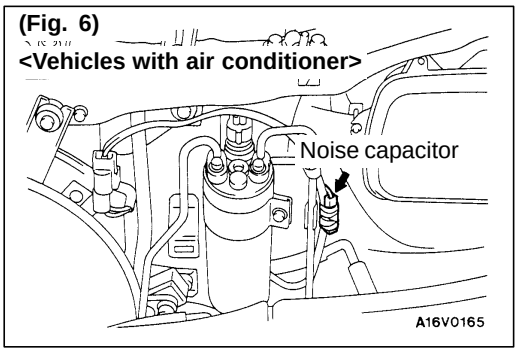

A-7 Some noise appears when there is vibration or shocks during travelling.

- Are connectors properly connected?
  - No → Ensure proper connection.
  - Yes ↓
- Does noise appear when the radio switch is turned on while the vehicle is stopped and the radio is struck while tuned away from a station?
  - No → Static electricity noise: Body static electric from the shock absorber rubber bushings used to prevent vibration, tyres, etc. occurs because of separation from the earth, causing a buzzing noise. Since no measures can be taken on the radio side, other steps should be taken to discharge the static electricity of the vehicle body.
  - Yes ↓
- Is the radio correctly earthed? (Is the mounting screw tightened securely?)
  - No → Tighten the screw securely.
  - Yes ↓
- Is the antenna correctly earthed? (If noise appears when the antenna is moved, this means the earth is not securely connected.)
  - No → If rust is present at the antenna earth screw, clean and tighten the earth securely.
  - Yes ↓
- Repair or replace radio.

A-8 Noise sometimes appears on FM during travelling.

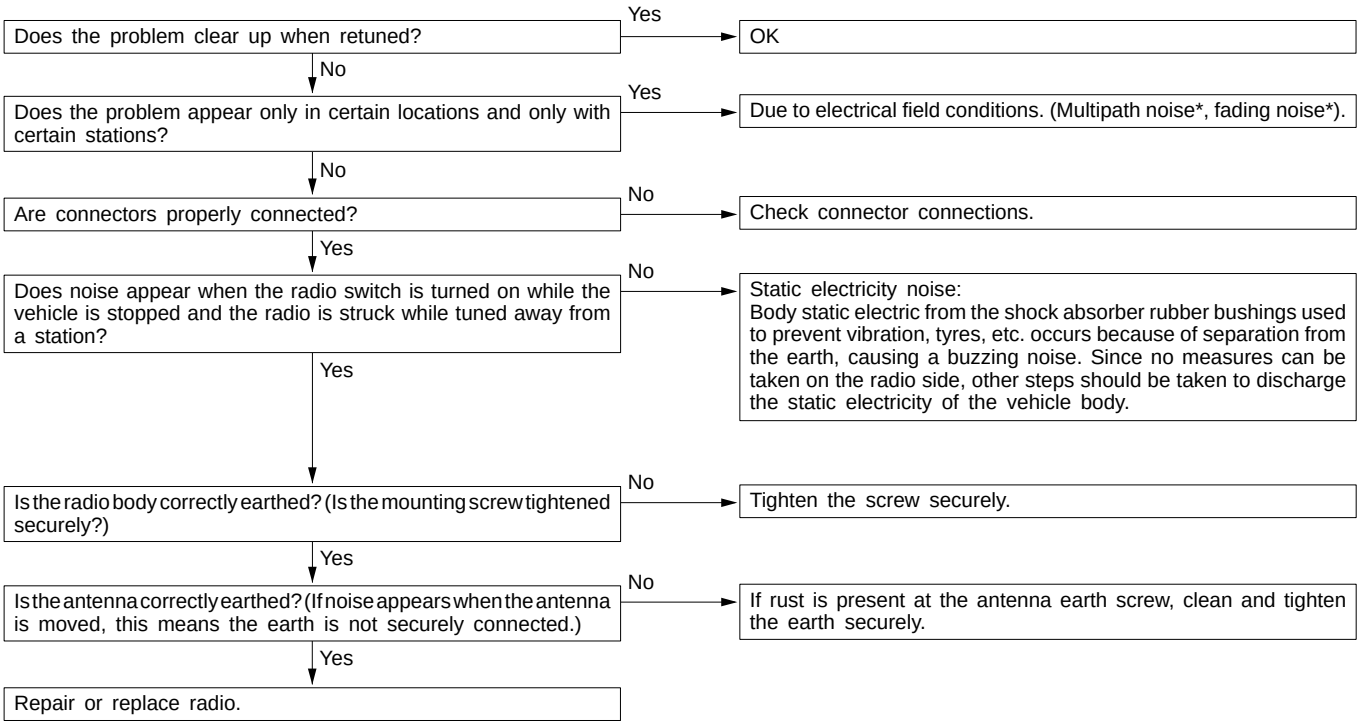

* About multipath noise and fading noise
Because the frequency of FM waves is extremely high, it is highly susceptible to effects from geological formations and buildings. These effects disrupt the broadcast signal and obstruct reception in several ways.

- Multipath noise
  This describes the echo that occurs when the broadcast signal is reflected by a large obstruction and enters the receiver with a slight time delay relative to the direct signal (repetitious buzzing).
- Fading noise
  This is a buzzing noise that occurs when the broadcast beam is disrupted by obstructing objects and the signal strength fluctuates intricately within a narrow range.

A-9 Ever-present noise.

Noise is often created by the following factors, and often the radio is OK when it is checked individually.

- Travelling conditions of the vehicle
- Terrain of area travelled through
- Surrounding buildings
- Signal conditions
- Time period

For this reason, if there are still problems with noise even after the measures described in steps A-1 to A-8 have been taken, get information on the factors listed above as well as determining whether the problem occurs with AM or FM, the station names, frequencies, etc., and contact a service centre.

B. RADIO

B-1 No power is supplied when the switch is set to ON.

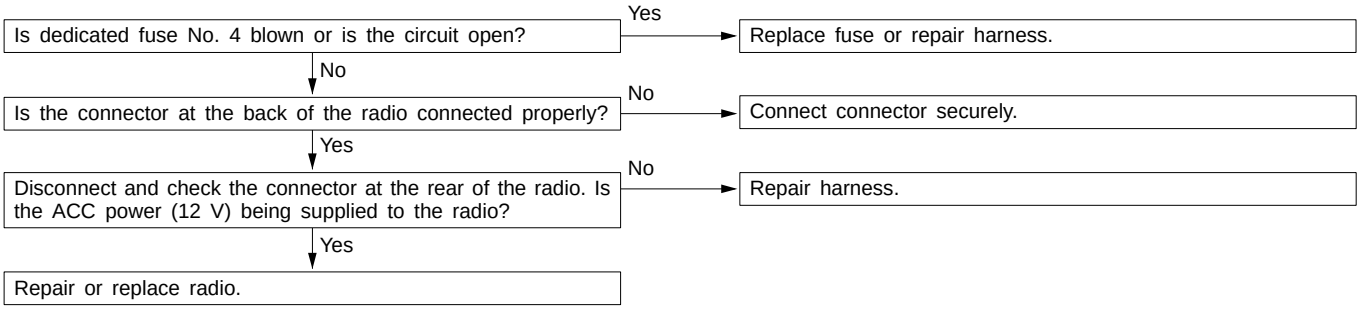

B-2 No sound from one speaker.

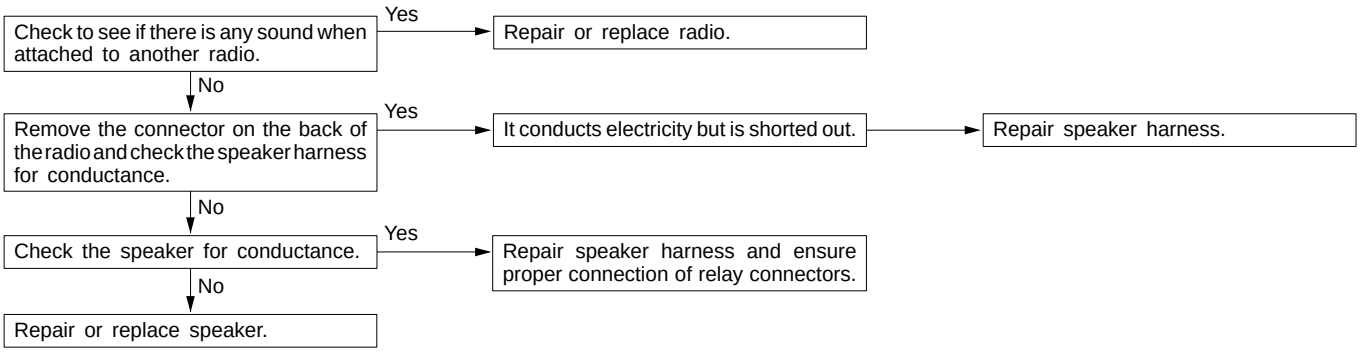

B-3 There is noise but no reception for both AM and FM or no sound from AM, or no sound from FM.

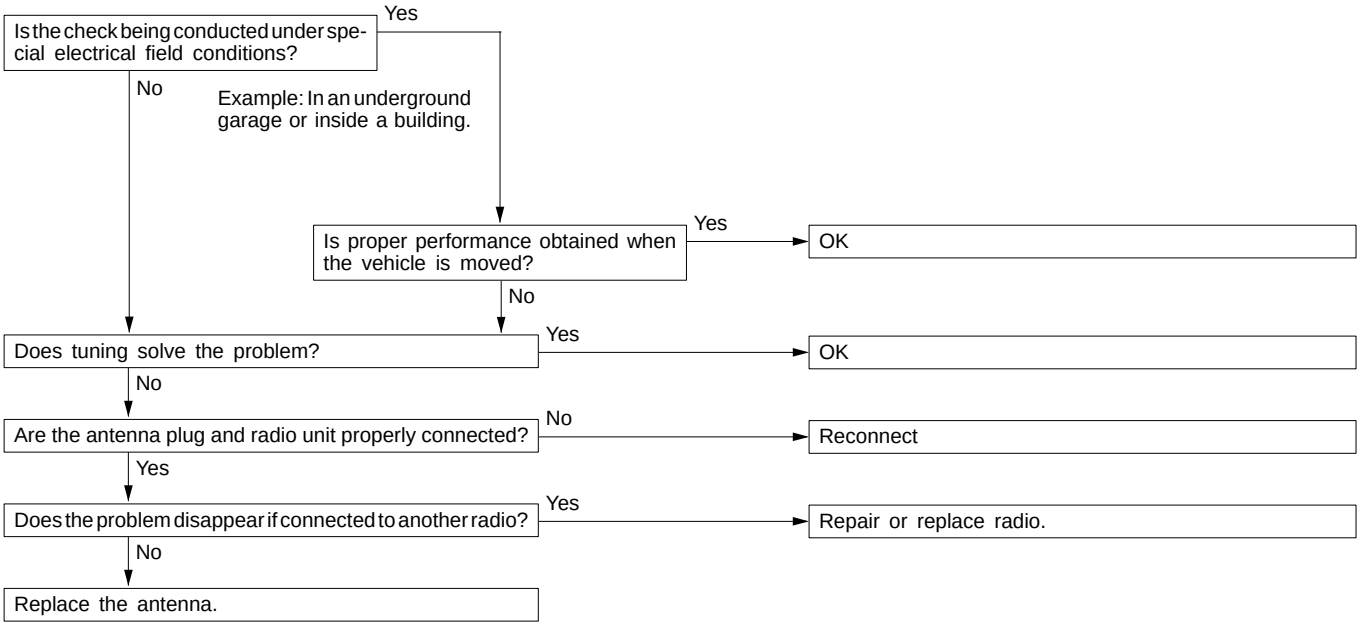

B-4 Insufficient sensitivity.

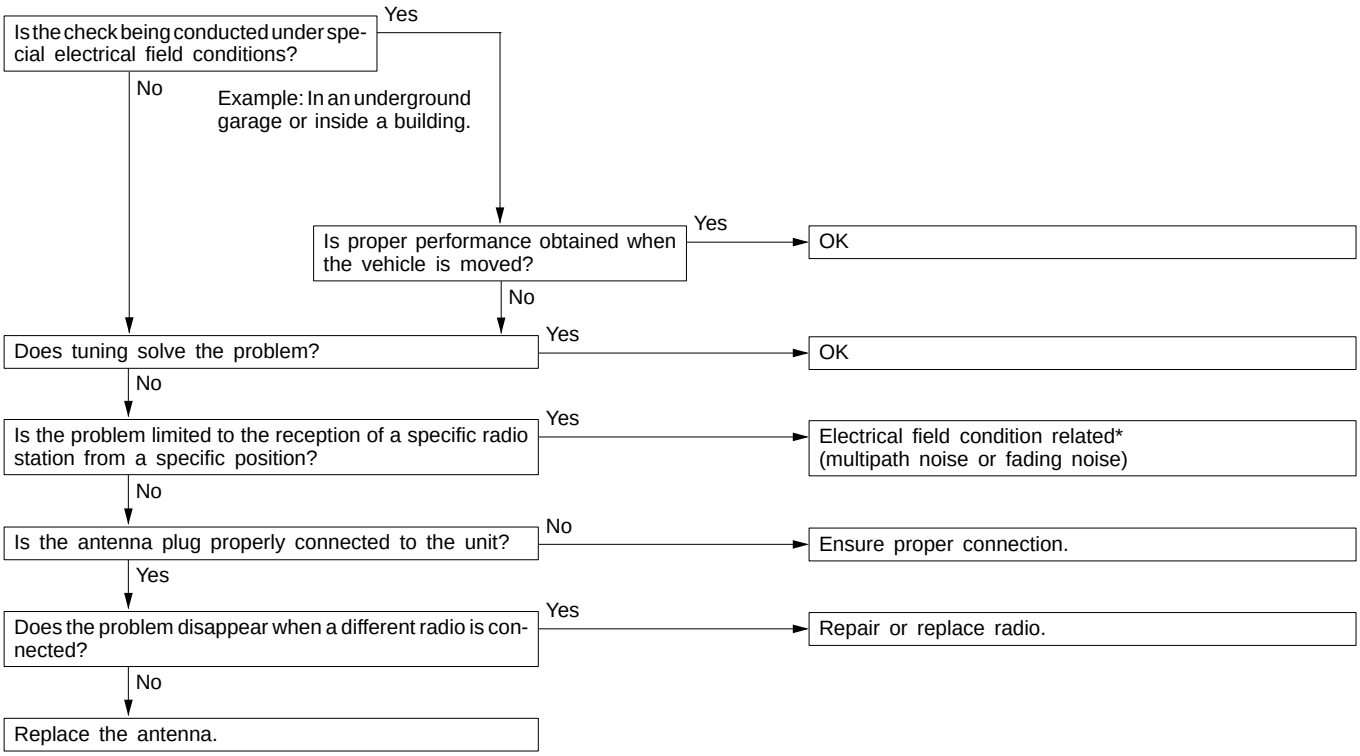

* For multipath noise and fading noise problems, refer to P. 54-69.

B-5 Distortion on AM or on both AM and FM.

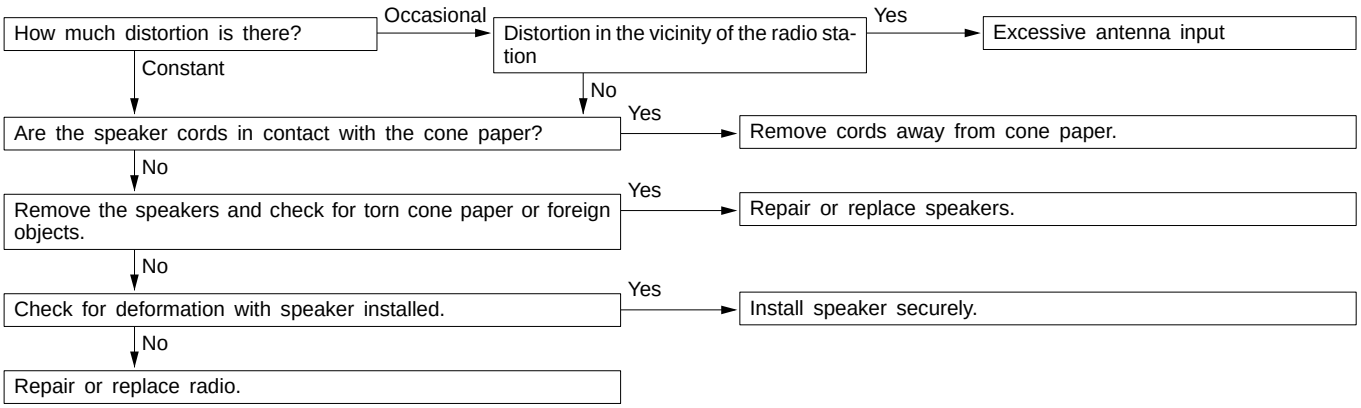

B-6 Distortion on FM only

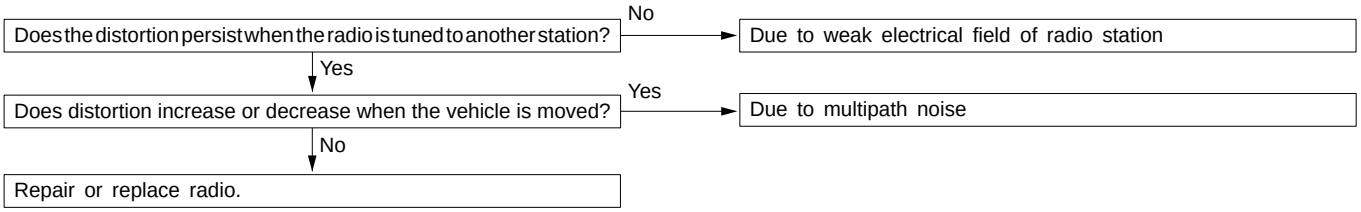

B-7 Too few automatic select stations.

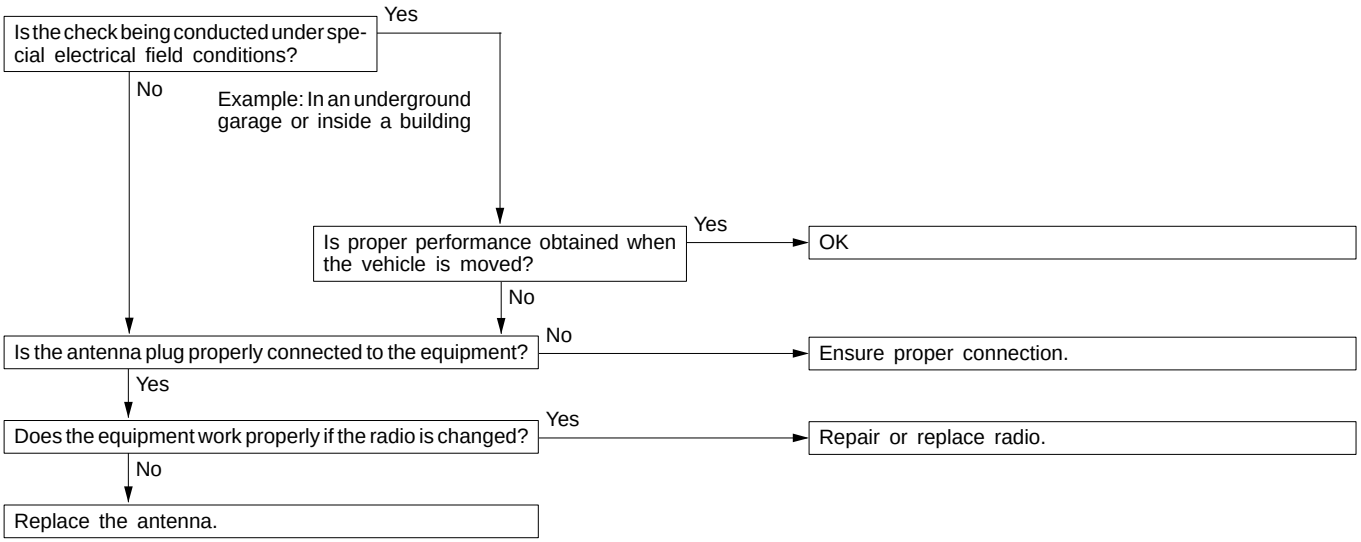

B-8 Insufficient memory (preset stations are erased).

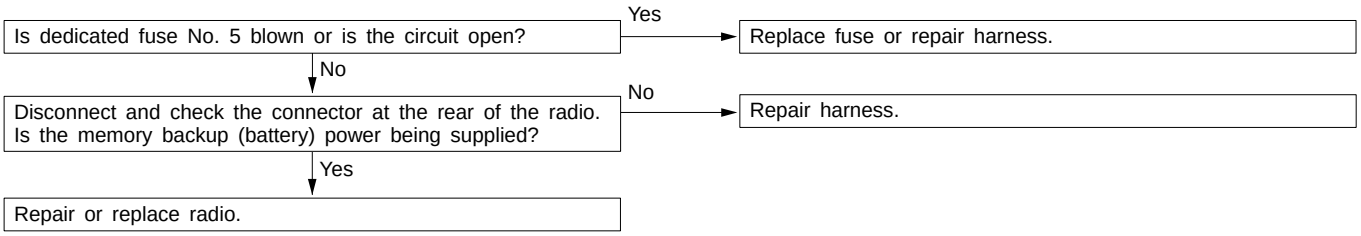

C. TAPE PLAYER

C-1 Cassette tape will not be inserted.

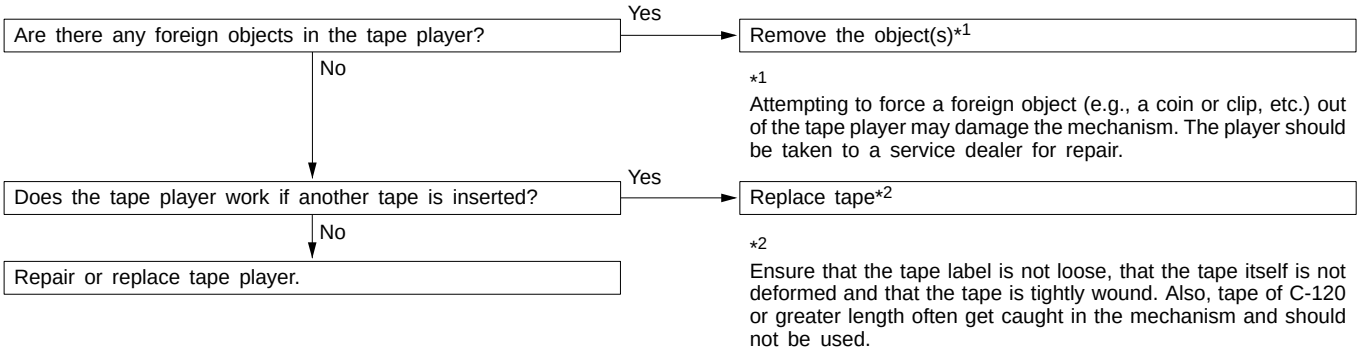

C-2 No sound (even after a tape has been inserted).

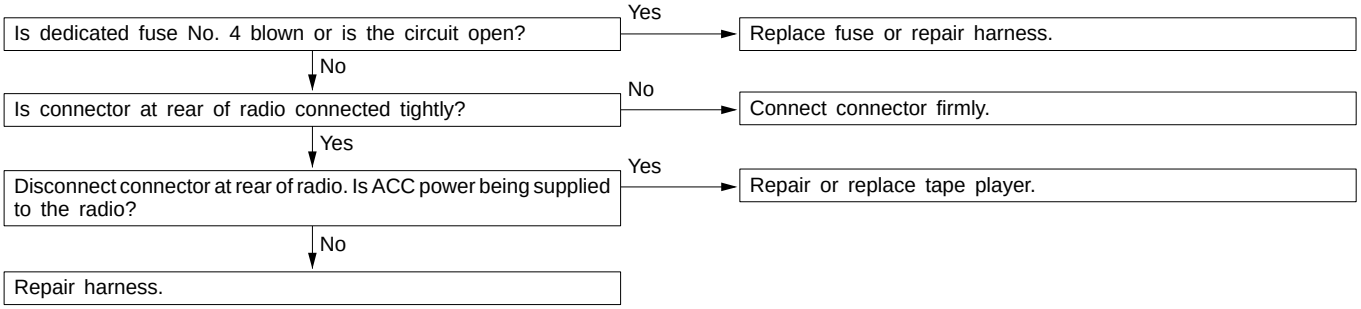

C-3 No sound from one speaker.

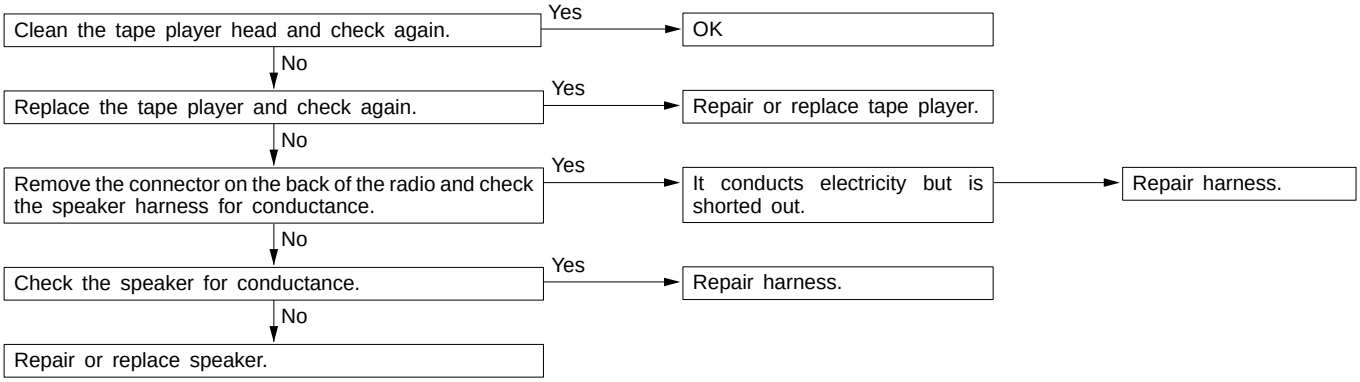

C-4 Sound quality is poor, or sound is weak.

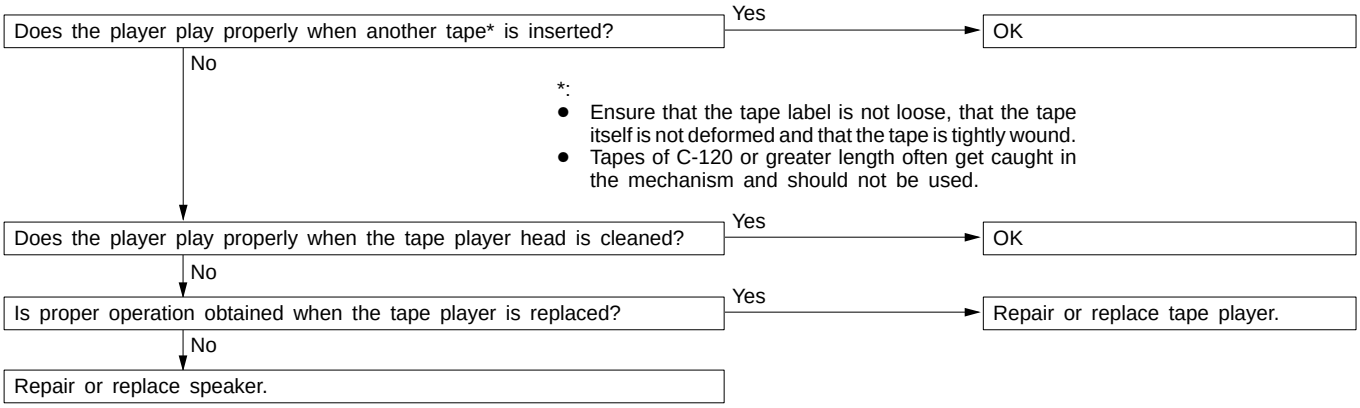

C-5 Cassette tape will not be ejected.

The problems covered here are all the result of the use of a bad tape (deformed or not properly tightened) or of a malfunction of the tape player itself. Malfunctions involving the tape becoming caught in the mechanism and ruining the case are also possible, and attempting to force the tape out of the player can cause damage to the mechanism. The player should be taken to a service dealer for repair.

C-6 Uneven revolution. Tape speed is fast or slow.

Does the player play OK if the tape*1 is changed?
- Yes → OK
- No ↓

*1
Ensure that the tape label is not loose, that the tape itself is not deformed and that the tape is tightly wound. Also, tape of C-120 or greater length often get caught in the mechanism and should not be used.

Are there any foreign objects *2 inside the tape player?
- Yes → Remove foreign object(s).
- No ↓

*2
Attempting to force a foreign object (e.g., a coin or clip, etc.) out of the tape player may damage the mechanism. The player should be taken to a service dealer for repair.

Is the head or capstan roller dirty? (Refer to the illustration below.)
- Yes → Clean.
- No ↓

Repair or replace tape player.

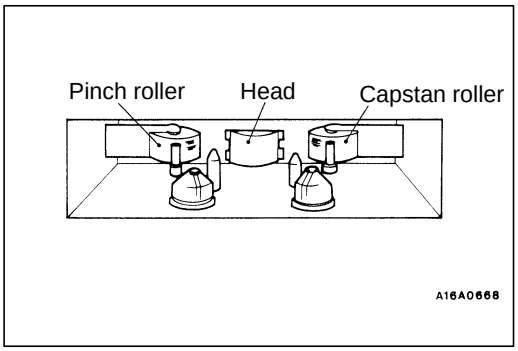

C-7 Faulty auto reverse.

Does the player play OK if the tape* is changed?
- Yes → OK
- No ↓

*:
- Ensure that the tape label is not loose, that the tape itself is not deformed and that the tape is tightly wound.
- Tapes of C-120 or greater length often get caught in the mechanism and should not be used.

Does the problem only occur while the vehicle is being driven?
- No → Repair or replace tape player.
- Yes ↓

Is the tape player properly installed to the vehicle?
- No → Ensure tape player installation.
- Yes ↓

Repair or replace tape player.

C-8 Tape gets caught in mechanism*1.

*1
When the tape is caught in the mechanism, the case may not eject. When this occurs, do not try to force the tape out as this may damage the tape player mechanism. Take the cassette to a service dealer for repair.

Does the player play OK if the tape*2 is changed?

Yes → Tape used is bad.

No ↓

*2
Ensure that the tape label is not loose, that the tape itself is not deformed and that the tape is tightly wound. Also, tapes of C-120 or greater length often get caught in the mechanism and should not be used.

Repair or replace tape player.

RADIO AND TAPE PLAYER WITH ANTI-THEFT SYSTEM

54400430032

- After the power supply to the radio and tape player has been interrupted for an hour or more, the anti-theft system will prevent the radio and tape player from working, even if the power supply is restored. Problem with the anti-theft system can be found using the flow chart below.

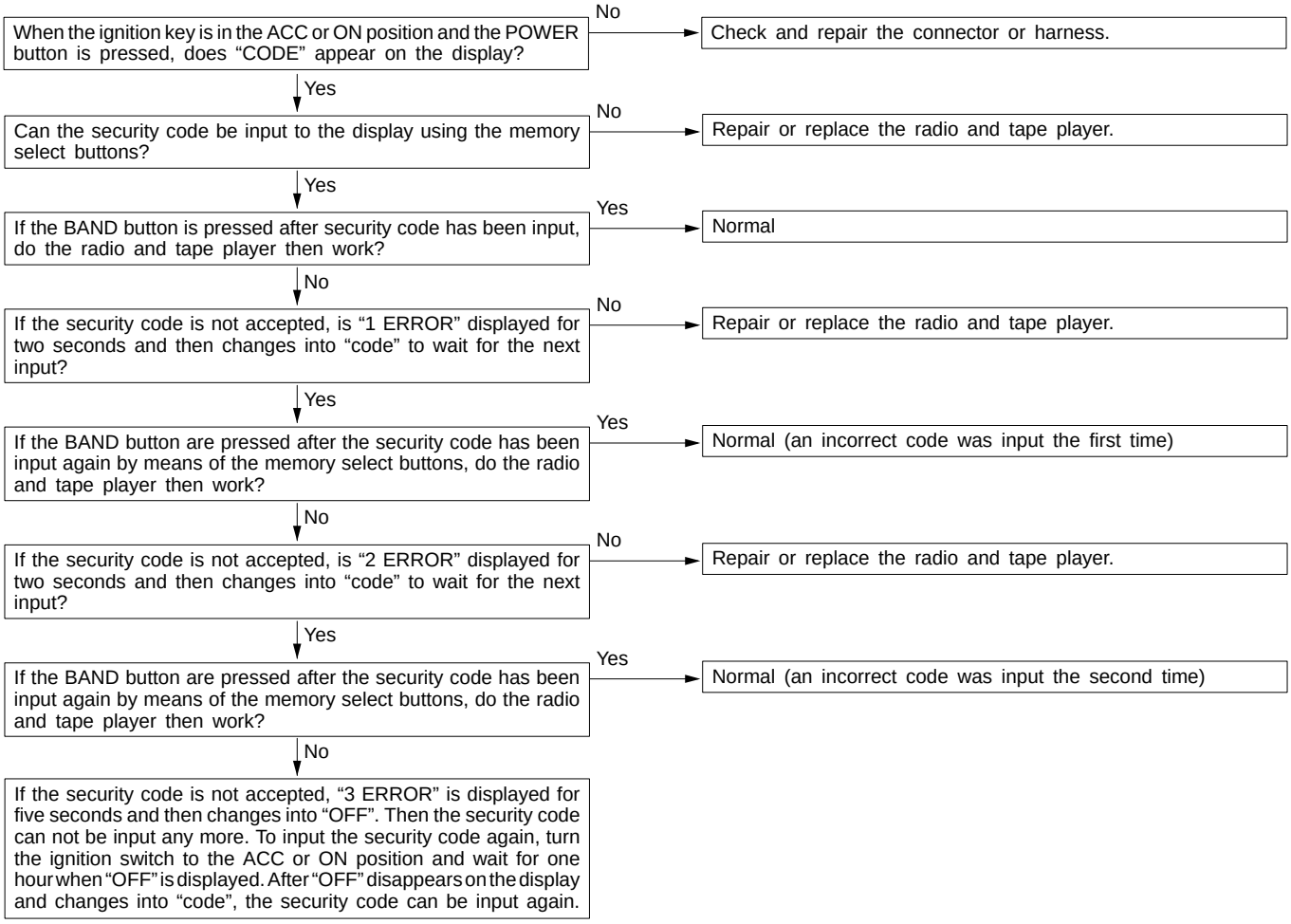

PROCEDURE FOR INPUT OF SECURITY CODE FOR RADIO AND TAPE PLAYER WITH ANTI-THEFT SYSTEM

54400440042

The radio and tape player does not work in the following states.

- Power supply to the radio and tape player has been suspended for more than an hour continuously by removing the cable from the battery terminal for disconnecting the harness connectors.
- The power supply to the radio and tape player has been suspended for more than an hour owing to blown fuse or discharged battery.
- The radio and tape player has been replaced.

If the radio and tape player does not work for these causes, input the security code by the following procedure.

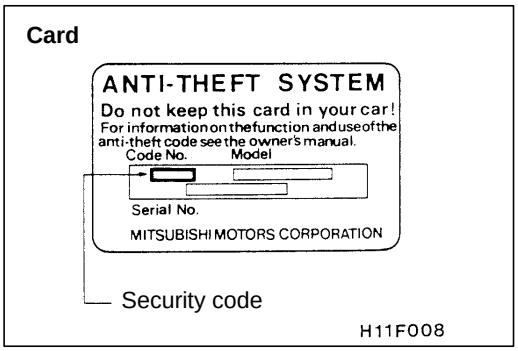

1. Using any of the following methods, confirm the security code.
   (1) Read the security code indicated on the cards retained by the car.

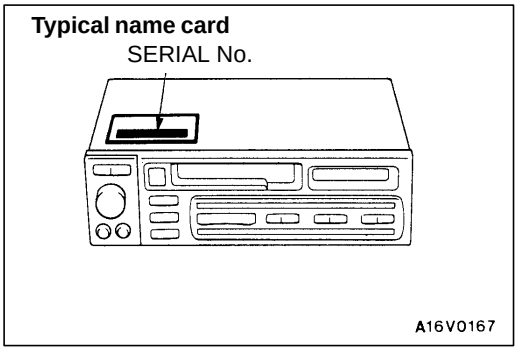

   (2) If the security code is unknown owing to the user's loss of the card:
      a. Remove the radio and tape player, referring to P.54-80.
      b. Read the serial No. stamped on the radio and tape player.
      c. Look up the security code (anti-theft code table) corresponding to the serial number, or ask the authorized Mitsubishi dealer.

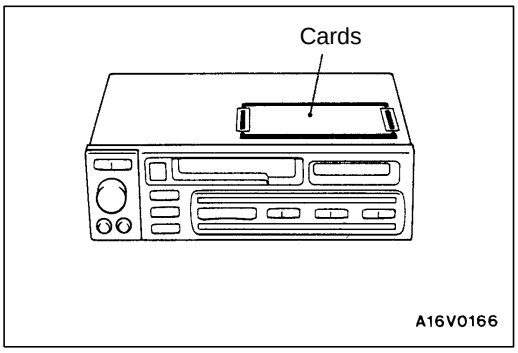

   (3) When the radio and tape player is replaced:
   Read the security code on the cards attached to the upper surface of the replacement radio and tape player.

NOTE
Deliver the two cards to the user.

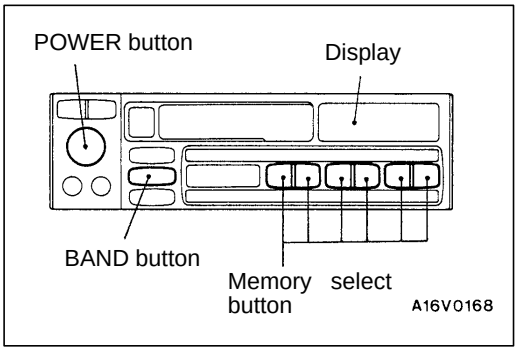

2. Return the power supply from the battery to the normal condition.
3. Turn the ignition key to the “ACC” or “ON” position.
4. Press the POWER button, and “CODE” will be displayed.

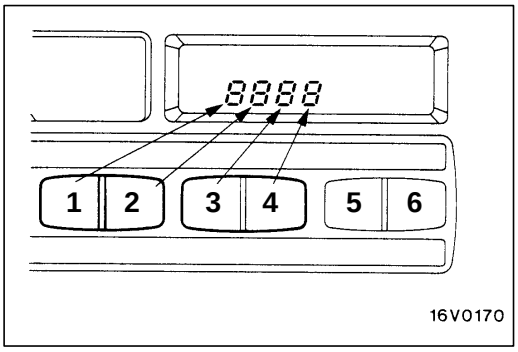

5. Press No.1 through No.4 memory select button to set the four-digit security code shown on the card.
   Every time each digit key is pressed, the figure changes as follows: 0→1→2.....9→0
6. Press the BAND button, and a beep will be heard and the radio and tape player will work.
7. If the security code is not accepted, “1 ERROR” is displayed. In a few minutes, it will change to “CODE”. Then repeat the steps 5 and 6.

   NOTE
   (1) If an incorrect security code is input, the anti-theft system will allow three attempts at most to input the correct code.
   (2) The second error is displayed as “2 ERROR”. When the third error is made, “3 ERROR” is displayed and then the display changes to “OFF”. If this should occur, the unit will not work any more.
   (3) To input the security code again, turn the ignition switch to the ACC or ON position and wait for one hour when “OFF” is displayed. After “OFF” disappears on the display and changes into “CODE”, the security code can be input again.

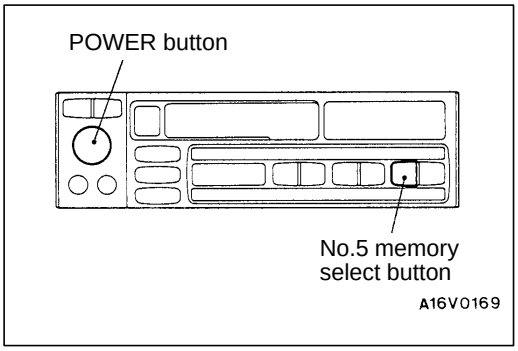

5-minute operation mode

To facilitate replacement or check, the radio and tape player can be operated for five minutes without inputting the security code.

1. Press the POWER button and No.5 memory select button together to operate the radio and tape player.
2. In five minutes the unit will not be able to work, and “CODE” will be displayed to indicate that the security code can be input again.

RADIO AND TAPE PLAYER

54400140072

REMOVAL AND INSTALLATION

Pre-removal and Post-installation Operation
- Front Floor Console Assembly Removal and Installation (Refer to GROUP 52A.)
- Driver's Side Under Cover, Meter Bezel Assembly, Glove Box Assembly, Center Under Cover Removal and Installation (Refer to GROUP 52A – Instrument Panel.)

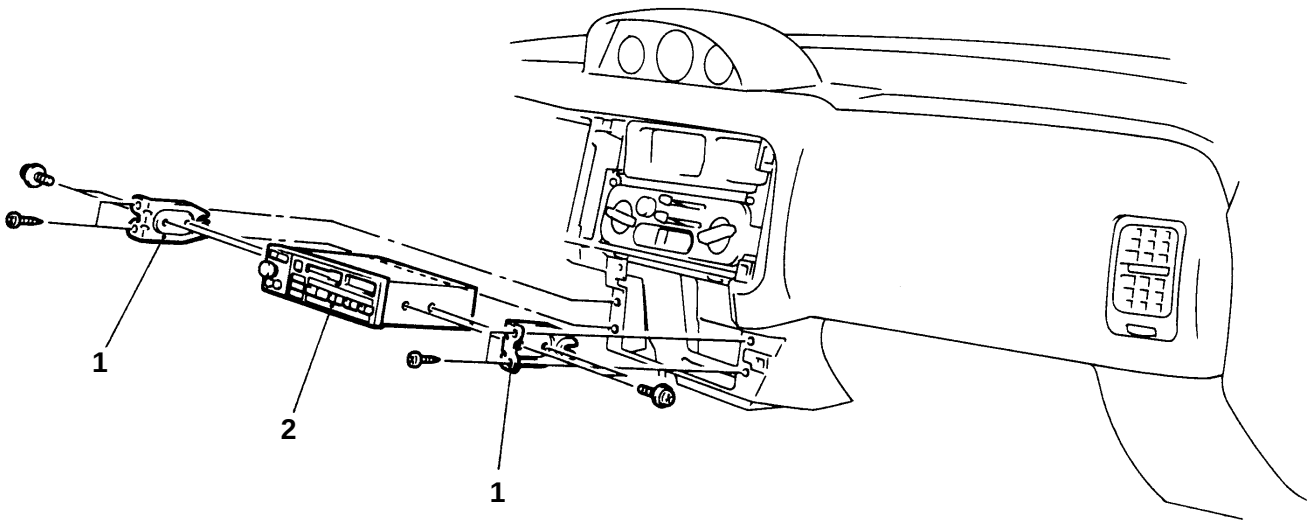

A16V0134

Removal steps

1. Radio bracket
2. Radio and tape player

SPEAKER

54400260167

REMOVAL AND INSTALLATION

<FRONT SPEAKER>

Driver's side

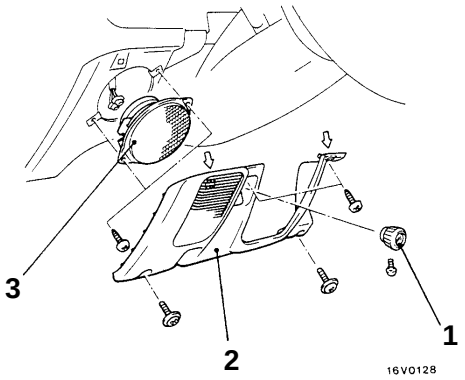

Passenger's side

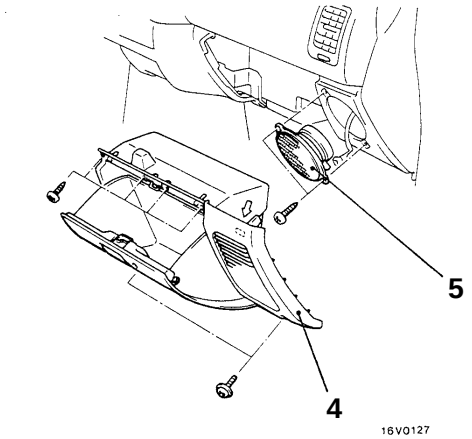

NOTE
⇦ : metal clip position

00005066

Removal steps <Driver's side>

1. Throttle cable knob <Diesel-powered vehicles>
2. Under cover
3. Speaker

<Passenger's side>

4. Glove box assembly
5. Speaker

<REAR SPEAKER>

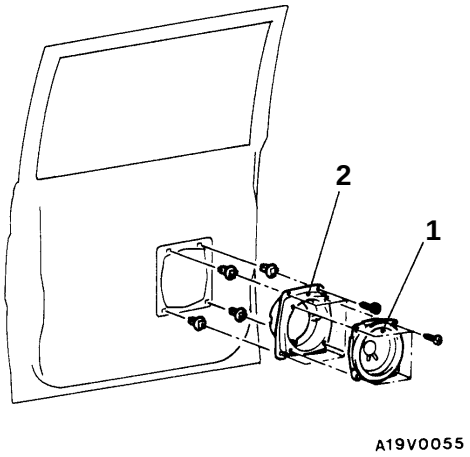

Removal steps

- Rear door trim (Refer to GROUP 42 – Door Trim and Waterproof Film.)

1. Speaker
2. Speaker cover

ANTENNA

54400060064

SPECIAL TOOL

Tool	Number	Name	Use
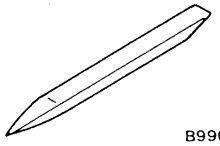	MB990784	Ornament remover	Meter bezel assembly removal

ANTENNA

54400290111

REMOVAL AND INSTALLATION

Pre-removal and Post-installation Operation
- Front Floor Console Assembly Removal and Installation (Refer to GROUP 52A.)
- Driver's Side Under Cover, Meter Bezel Assembly, Glove Box Assembly, Center Under Cover Removal and Installation (Refer to GROUP 52A – Instrument Panel.)

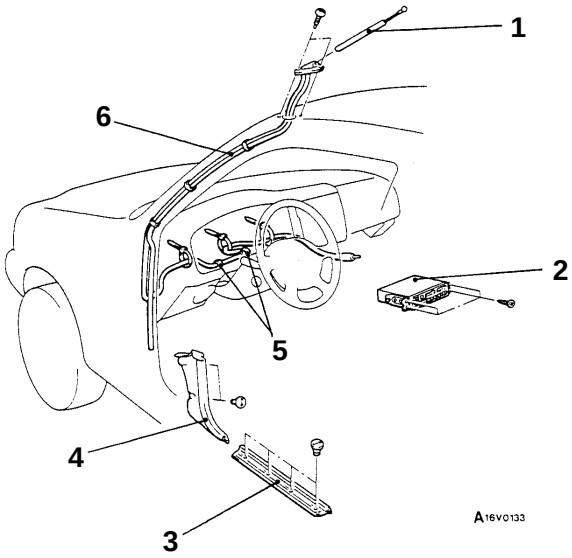

Removal steps

1. Pole
2. Radio and tape player
3. Front scuff plate (driver's side)

◀A▶

4. Cowl side trim (driver's side)
5. Cable clipped portion
6. Antenna base

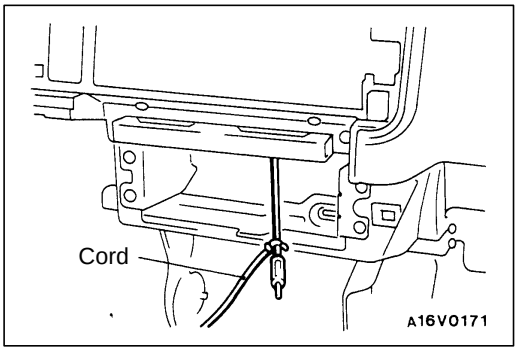

REMOVAL SERVICE POINT

◀A▶ ANTENNA BASE REMOVAL

1. Tie a cord to the end of the feeder cable.

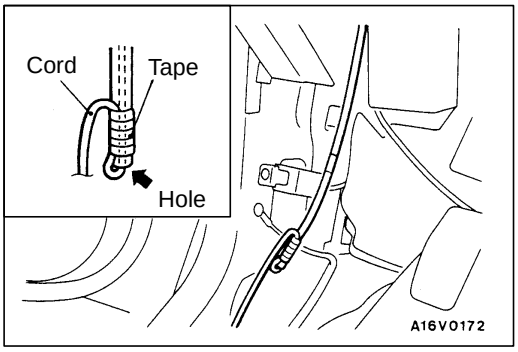

2. Pull out the antenna base until the end of the drain pipe can be seen.
3. Pass the cord through the hole in the end of the drain pipe and wrap it with vinyl tape.

   Caution
   Wrap it securely so that the cord will not come off.
4. Pull out the antenna base little by little to remove it.

REAR WINDOW DEFOGGER

54300060269

SPECIAL TOOL

Tool	Number	Name	Use
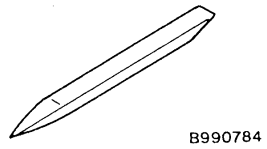 B990784	MB990784	Ornament remover	Meter bezel assembly removal

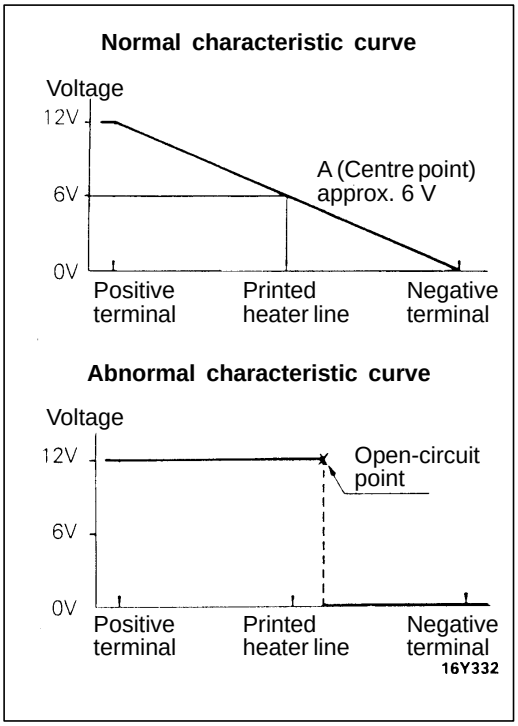

ON-VEHICLE SERVICE

54300180033

PRINTED-HEATER LINE CHECK

1. Run engine at 2,000 r/min. Check heater element with battery at full.
2. Turn ON rear window defogger switch. Measure heater element voltage with circuit tester at rear window glass centre A.
   Condition is good if it indicates about 6V.
3. If 12 V is indicated at A, there is a break in the negative terminals from A.
   Move test bar slowly to negative terminal to detect where voltage changes suddenly (0V).
4. If 0 V is indicated at A, there is a break in the positive terminals from A. Defect where the voltage changes suddenly (12 V) in the same method described above.

REAR WINDOW DEFOGGER SWITCH

54300620085

REMOVAL AND INSTALLATION

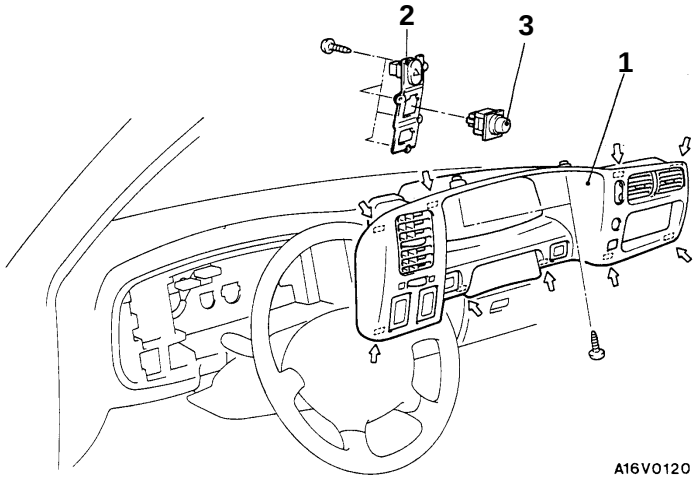

NOTE
⇦: metal clip position

Removal steps

1. Meter bezel assembly
2. Switch holder
3. Rear window defogger switch

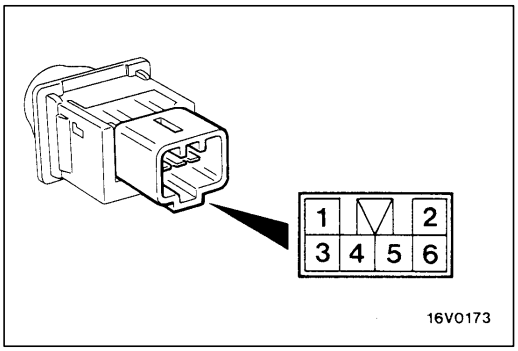

INSPECTION

54300630033

DEFOGGER SWITCH CONTINUITY CHECK

Switch position	Terminal No.							
	1	ILL	5	2	IND	6	3	4
OFF	○	⊘	○	○	⊘	○		
ON	○	⊘	○	○	⊘	○	○	○

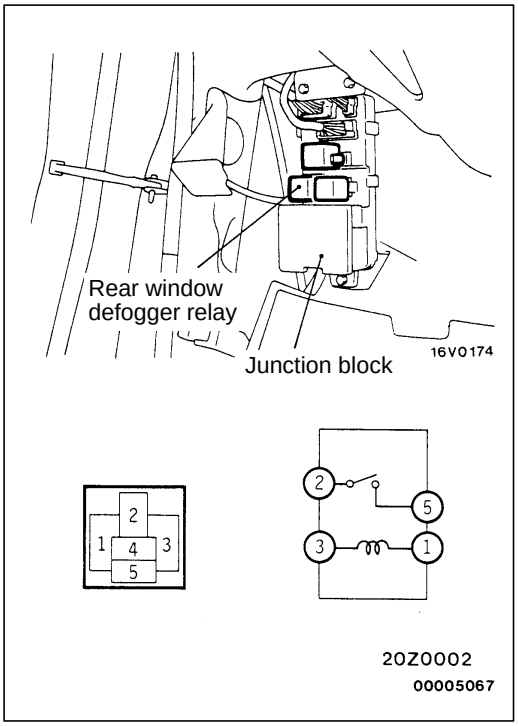

REAR WINDOW DEFOGGER RELAY CONTINUITY CHECK

54300680083

Battery voltage	Terminal No.			
	1	2	3	5
Power is not supplied	○		○	
Power is supplied	⊕	○	⊖	○

GROUP 54
CHASSIS ELECTRICAL

GENERAL

OUTLINE OF CHANGES

- The troubleshooting procedures have been changed to correspond to the change of the immobilizer-ECU.
- The service procedures have been established to correspond to the change of the rear fog lamp switch.
- The service procedures have been established to correspond to the adoption of the rear window defogger timer.

IGNITION SWITCH AND IMMOBILIZER SYSTEM

TROUBLESHOOTING

Immobilizer System

INSPECTION CHART FOR DIAGNOSIS CODES <PETROL-POWERED VEHICLES>

Diagnosis code No.	Inspection items	Reference page
11*	Transponder communication system or radio interference of ID code	★
12*	ID code are not the same or are not registered	★
21	Communication system between MUT-II and engine-ECU	★
31	EEPROM abnormality inside immobilizer-ECU	★
32	IG signal circuit system	54-2
33*	Starting prevention mode activated due to incorrect operation	54-2

NOTE
(1) If the system condition returns to normal, the diagnosis code with mark * will automatically erased.
(2) ★: Refer to '97 L200 Workshop Manual <Pub. No. PWTE96E1>.

INSPECTION PROCEDURE FOR DIAGNOSIS CODES <PETROL-POWERED VEHICLES>

Code No.32 IG signal circuit system	Probable cause
The ignition switch signal is not being input to the immobilizer-ECU.	• Malfunction of wiring harness or connector • Malfunction of the ignition switch • Malfunction of the immobilizer-ECU

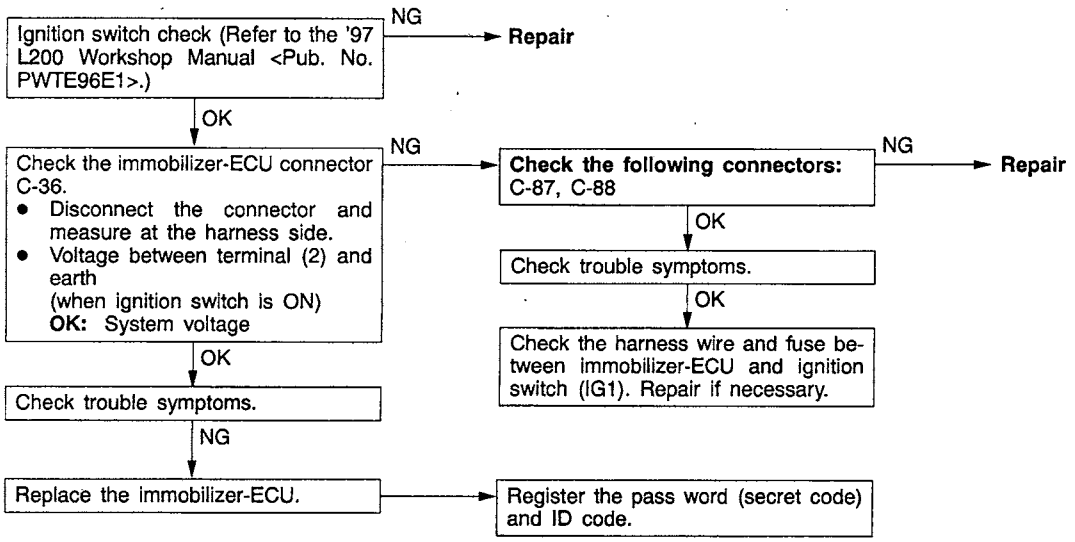

Code No.33 Starting prevention mode activated due to incorrect operation	Probable cause
The ID codes do not match for a total of 5 continuous operations.	• The ID code in the ignition key being used has not been properly registered. • Malfunction of the immobilizer-ECU • Malfunction of the transponder

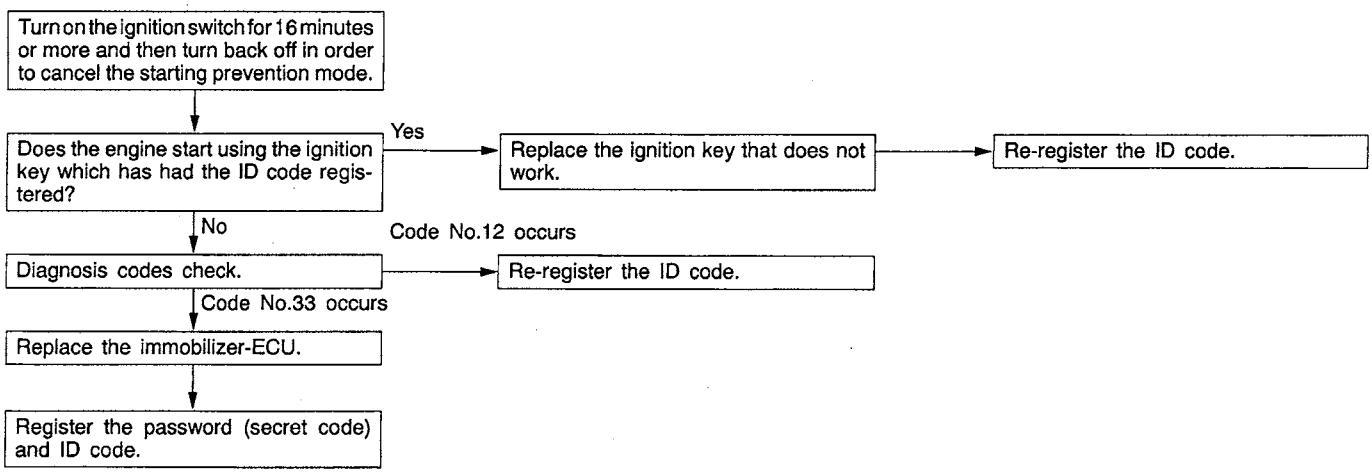

INSPECTION CHART FOR DIAGNOSIS CODES <DIESEL-POWERED VEHICLES>

Diagnosis code No.	Inspection items	Reference page
11*	Transponder communication system or radio interference of ID code	★
12*	ID code are not the same or are not registered	★
21	Communication system between fuel cut valve controller and immobilizer-ECU	★
22	Malfunction of fuel cut valve controller system	★
23	Identification codes are not identical	★
31	EEPROM abnormality inside immobilizer-ECU	★
33*	Starting prevention mode activated due to incorrect operation	54-3

NOTE
(1) If the system condition returns to normal, the diagnosis code with mark * will automatically erased.
(2) ★: Refer to '97 L200 Workshop Manual <Pub. No. PWTE96E1>.

Code No.33 Starting prevention mode activated due to incorrect operation	Probable cause
The ID codes do not match for a total of 5 continuous operations.	• The ID code in the ignition key being used has not been properly registered. • Malfunction of the immobilizer-ECU • Malfunction of the transponder

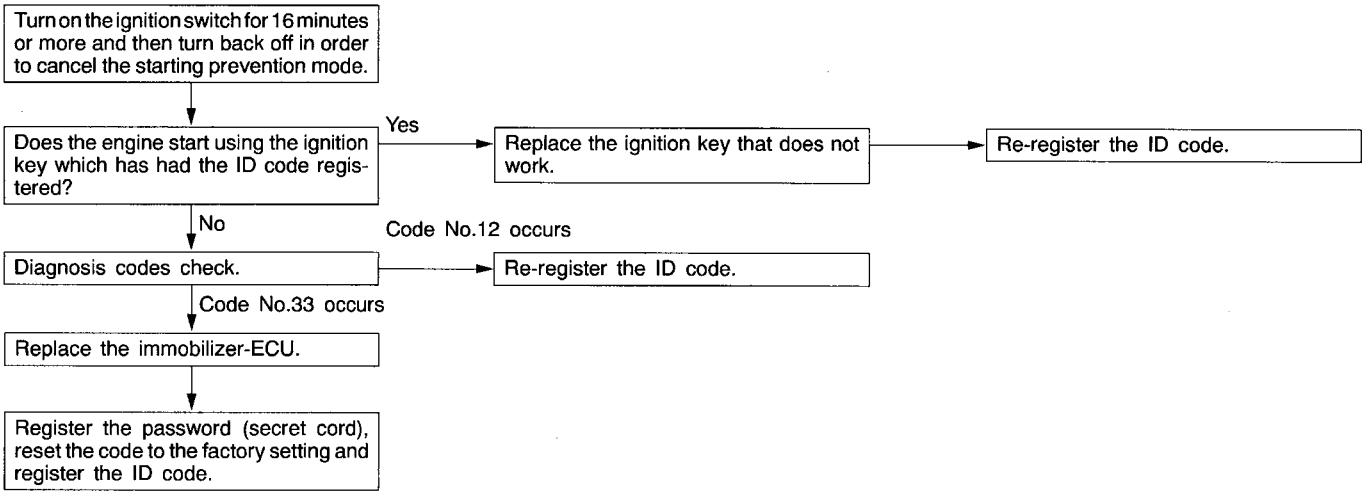

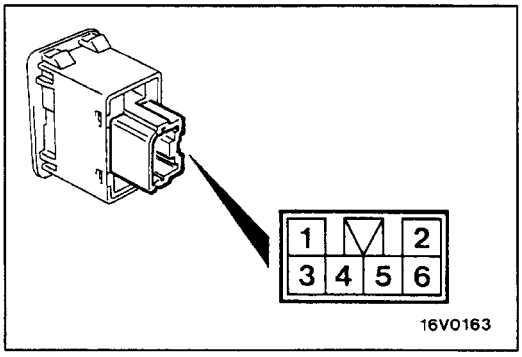

REAR FOG LAMP

REAR FOG LAMP

INSPECTION

REAR FOG LAMP SWITCH CONTINUITY CHECK

Switch position	Terminal No.				
	1	2	ILL	3	6
OFF		○	⊘		○
ON	○	○	⊘	○	○

REAR WINDOW DEFOGGER

REAR WINDOW DEFOGGER SWITCH

REMOVAL AND INSTALLATION

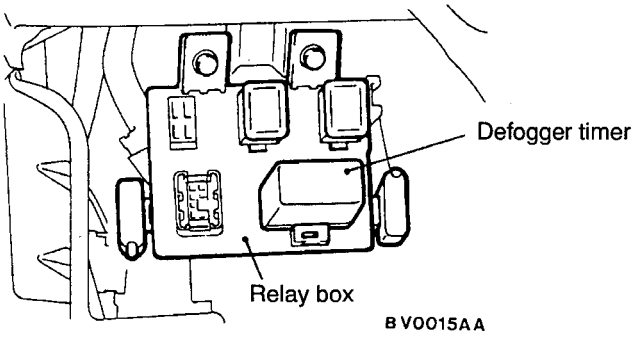

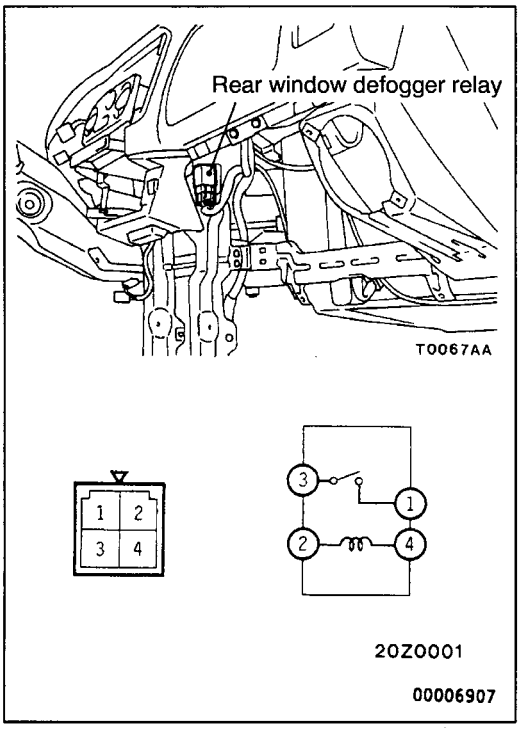

INSPECTION

REAR WINDOW DEFOGGER RELAY CONTINUITY CHECK

Battery voltage	Terminal No.			
	1	2	3	4
Supplied	○	⊖	○	⊕
Not supplied		○		○

GROUP 54
CHASSIS ELECTRICAL

HEADLAMP

GENERAL

OUTLINE OF CHANGE(S)

The headlamps have been modified. Therefore, service procedure has been changed.

SERVICE SPECIFICATIONS

Item		Standard value
Headlamp aiming for low beam	Vertical direction	60 mm below horizontal (H)
	Horizontal direction	Position where the 15° sloping section intersects the vertical line (V)

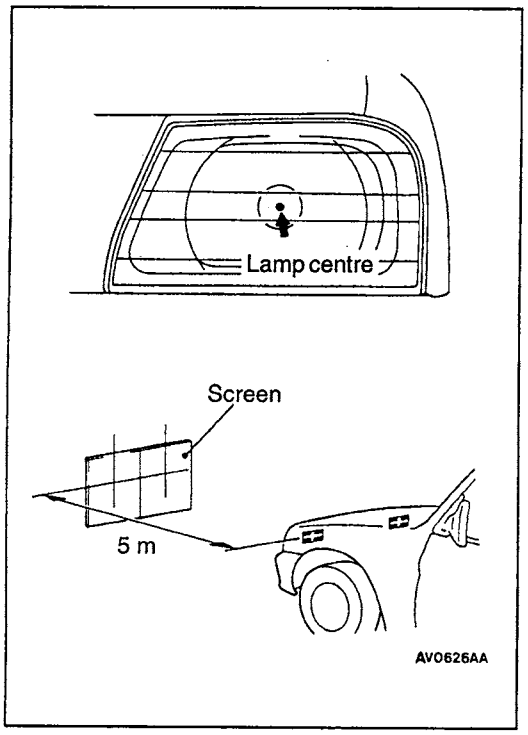

ON-VEHICLE SERVICE

HEADLAMP AIMING

<USING A SCREEN>

1. Inflate the tyres to the specified pressures and there must be no other load in the vehicles other than a driver or substituted weight of approximately 75 kg placed in driver's position.
2. Set the distance between the screen and the centre of the headlamps, as shown.

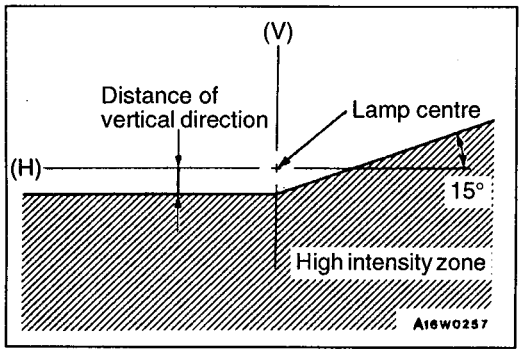

3. Check that the beam shining onto the screen is at the standard value.

   Standard value: <For lower beam>
   (Vertical direction)
   60 mm below horizontal (H)
   (Horizontal direction)
   Position where the 15° sloping section intersects the vertical line (V)

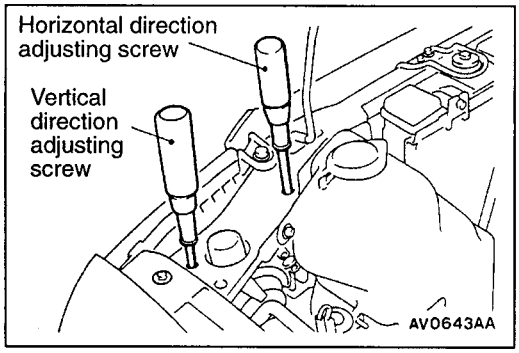

4. Alternately turn the adjusting screws to adjust the headlamp aiming.

   Caution
   Be sure to adjust the aiming adjustment screws in the tightening direction.

HEADLAMP

REMOVAL AND INSTALLATION

Post–installation Operation
- Headlamp Aiming Adjustment (Refer to P.54-1.)

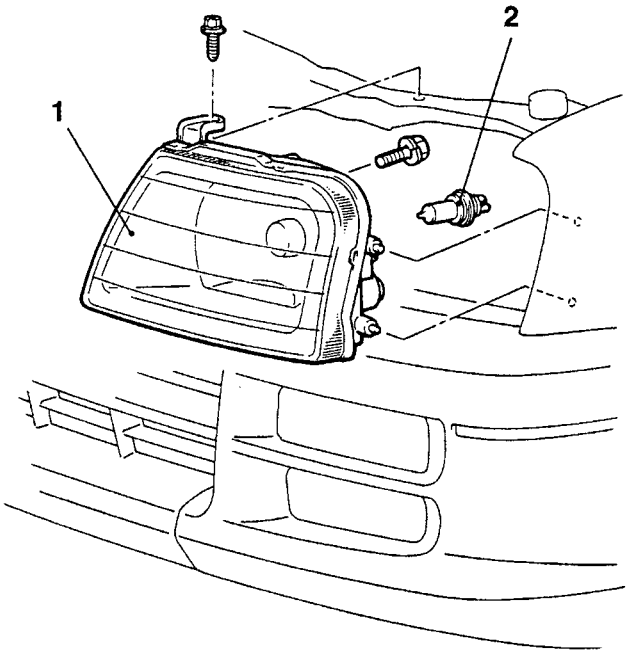

Removal steps
- Radiator grille (Refer to GROUP 51 – Grille.)

1. Headlamp
2. Bulb

GROUP 54
CHASSIS ELECTRICAL

GENERAL

OUTLINE OF CHANGE

The following service procedures have been revised due to the change in the immobilizer-ECU.
- Troubleshooting
- Encrypted code registration method

IMMOBILIZER SYSTEM

TROUBLESHOOTING

INSPECTION CHART FOR DIAGNOSIS CODES <4G6>

Diagnosis code No.	Inspection items	Reference page
11	Transponder communication system or radio interference of encrypted code	54-2
12	Encrypted code are not the same or are not registered	54-2

NOTE
Diagnosis code is not recorded.

INSPECTION PROCEDURE FOR DIAGNOSIS CODES <4G6>

Code No.11 Transponder communication system or radio interference of encrypted code	Probable cause
• The encrypted code of the transponder is not sent to the immobilizer-ECU immediately after the ignition switch is turned to ON position. • If the engine is started while several ignition keys are in the vicinity, then interference between the different keys may occur, which will cause this code to be generated.	• Radio interference of encrypted code • Malfunction of transponder • Malfunction of ignition key ring antenna • Malfunction of harness or connector • Malfunction of immobilizer-ECU

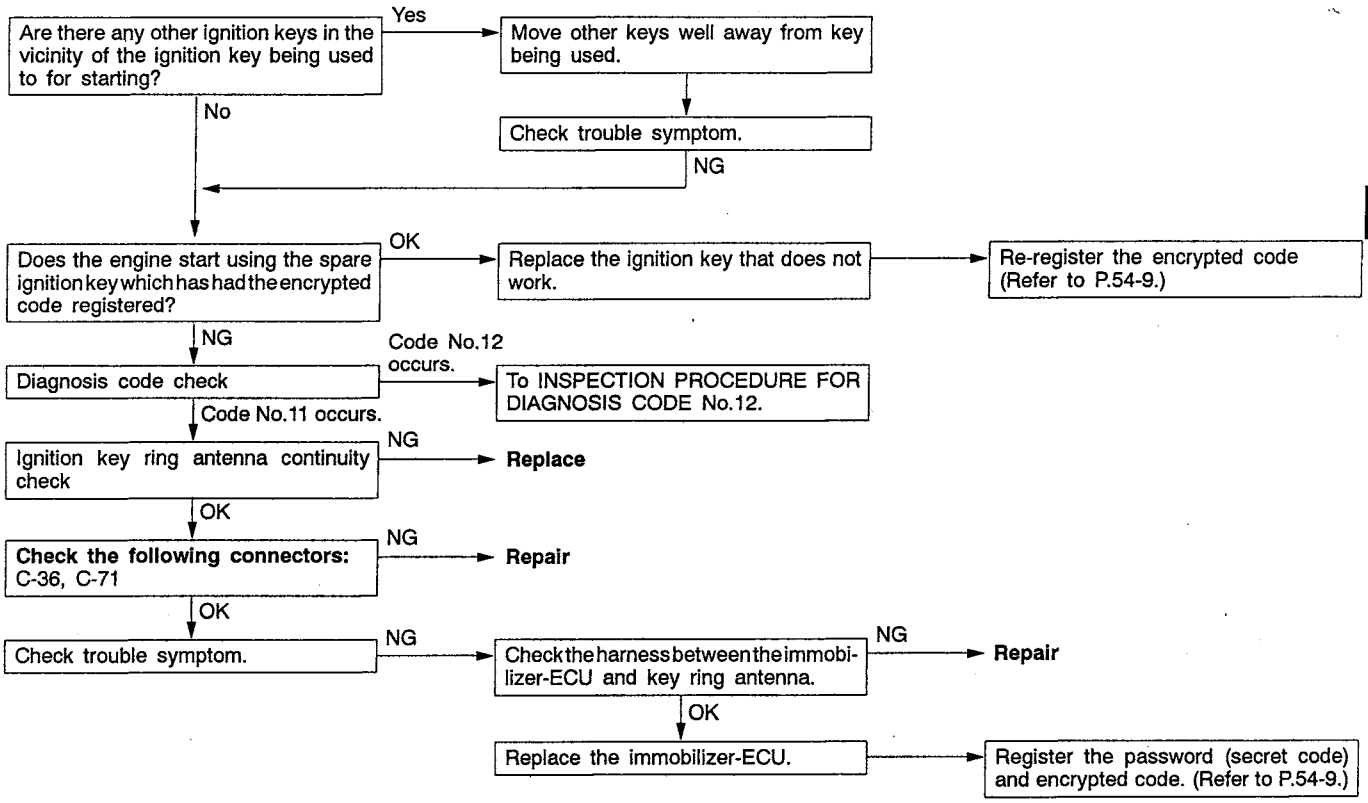

Code No.12 Encrypted codes are not the same or not registered.	Probable cause
The encrypted code which is sent from the transponder is not the same as the encrypted code which is registered in the immobilizer-ECU.	• The encrypted code in the ignition key being used has not been properly registered. • Malfunction of immobilizer-ECU

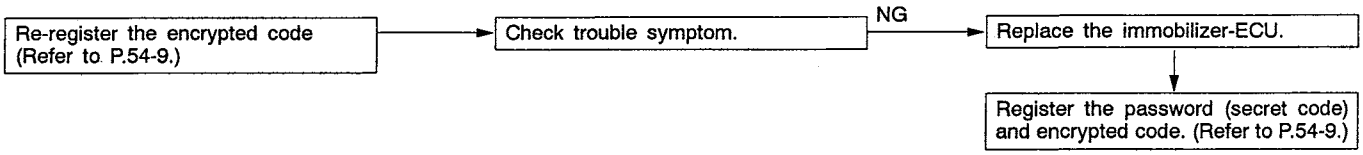

INSPECTION CHART FOR DIAGNOSIS CODES <4D5>

Diagnosis code No.	Inspection items	Reference page
11*	Transponder communication system or radio interference of encrypted code	54-2
12*	Encrypted codes are not the same or not registered	54-2
21	Communication system between fuel cut valve controller and immobilizer-ECU	54-3
22	Malfunction of fuel cut valve controller system	54-4
23*	Identification codes are not identical	54-4

NOTE
*: diagnosis code Nos. 11, 12, 23 are recorded.

INSPECTION PROCEDURE FOR DIAGNOSIS CODES <4D5>

For diagnosis code numbers other than those listed below, refer to "INSPECTION PROCEDURE FOR DIAGNOSIS CODES <4G6>".

Code No.21 Communication system between fuel cut valve controller and immobilizer-ECU	**Probable cause**
The confirmation code is not sent from the fuel cut valve controller within the specified time after the ignition key is turned to ON or, an incorrect code is sent.	• Malfunction of harness or connector • Malfunction of fuel cut valve controller • Malfunction of immobilizer-ECU

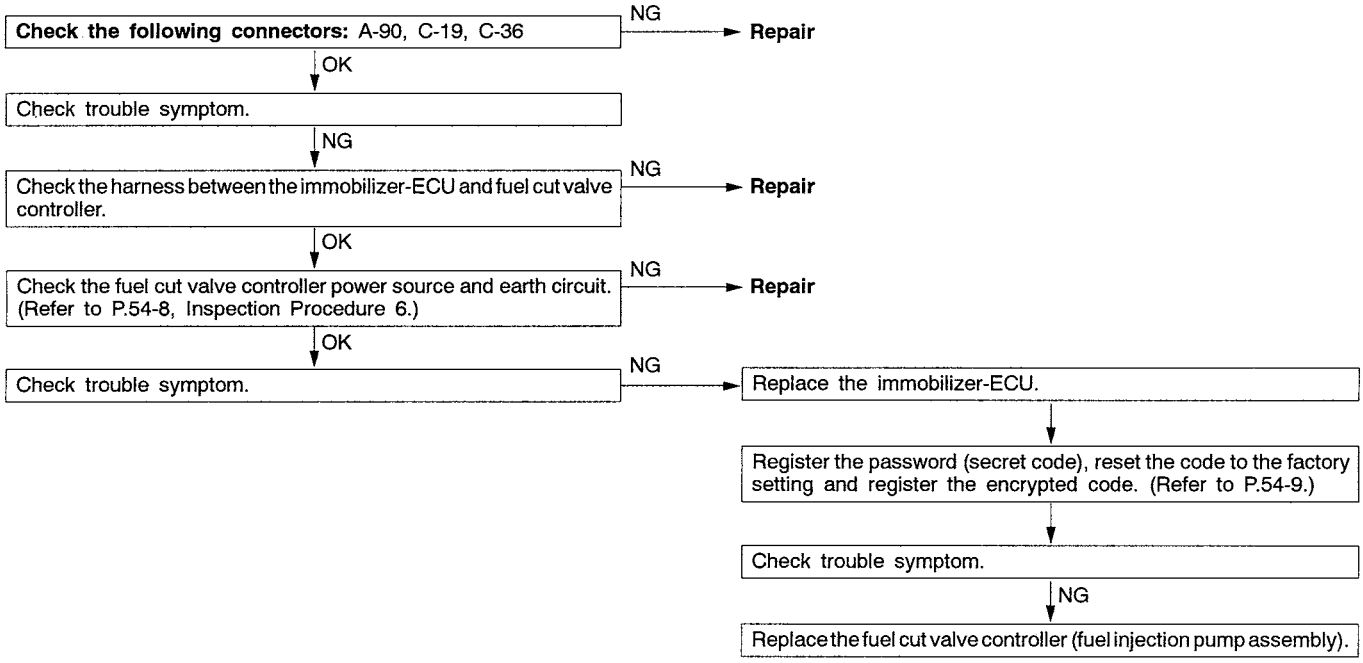

Code No.22 Malfunction of fuel cut valve controller system	Probable cause
The cause is probably a malfunction of the fuel cut valve controller.	• Malfunction of fuel cut valve controller

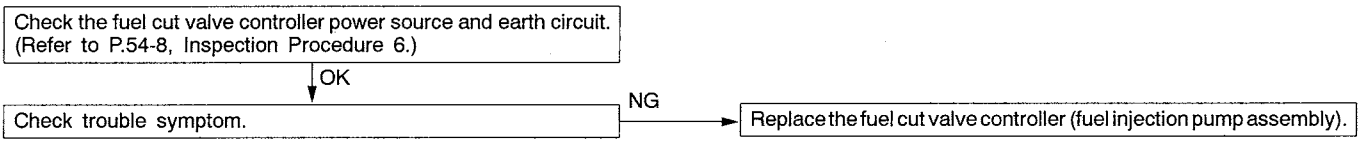

Code No.23 Identification codes are not identical	Probable cause
The identification code received from the immobilizer-ECU is not identical to the identification code that has been recorded in the fuel cut valve controller.	• Resetting the code to the factory setting is not made using the MUT-II • Malfunction of fuel cut valve controller

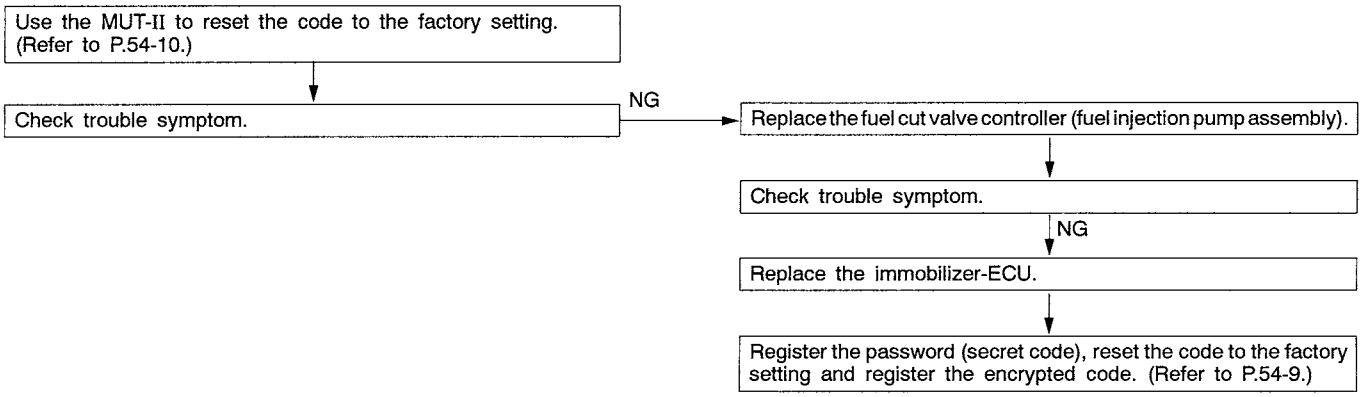

INSPECTION CHART FOR TROUBLE SYMPTOMS

Trouble symptom	Inspection procedure No.	Reference page
Communication with MUT-II is impossible	1	54-5
Encrypted code cannot be registered using the MUT-II	2	54-6
Engine does not start (Cranking but no initial combustion). <4G6>	3	54-6
Engine does not start (Cranking but no initial combustion). <4D5>	4	54-7
Malfunction of the immobilizer-ECU power source and earth circuit	5	54-8
Malfunction of the fuel cut valve controller power source and earth circuit <4D5>	6	54-8

INSPECTION PROCEDURE FOR TROUBLE SYMPTOMS

Inspection Procedure 1

Communication with MUT-II is impossible	Probable cause
The cause is probably that a malfunction of the diagnosis line or the immobilizer-ECU is not functioning.	• Malfunction of diagnosis line • Malfunction of harness or connector • Malfunction of immobilizer-ECU

<4G6>

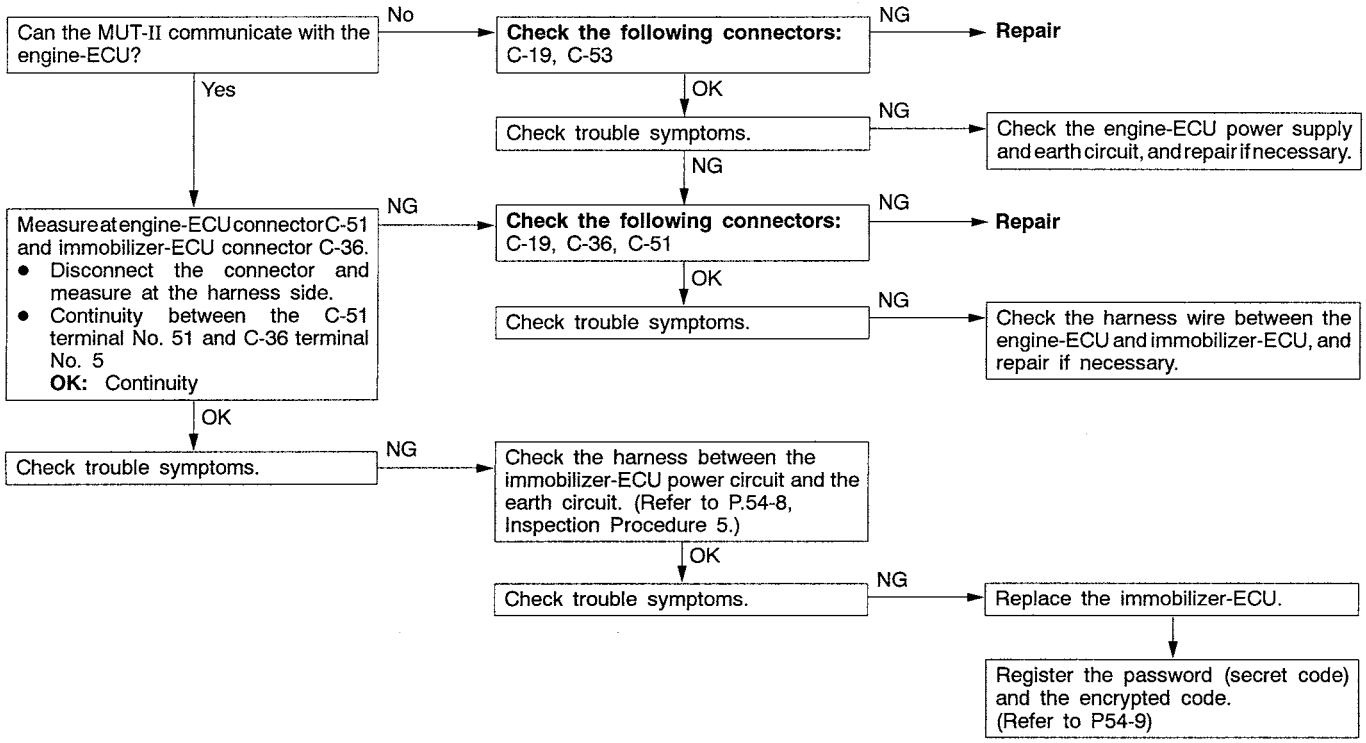

<4D5>

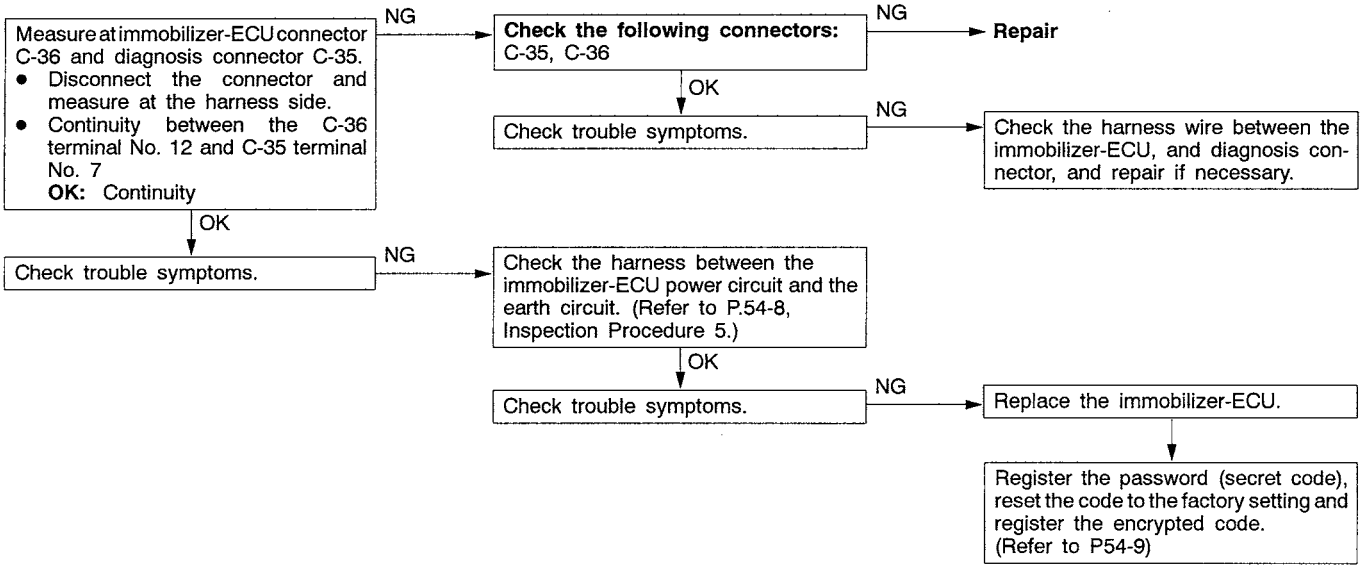

Inspection Procedure 2

Encrypted code cannot be registered using the MUT-II	Probable cause
The cause is probably that there is no encrypted code registered in the immobilizer-ECU or there is a malfunction of the immobilizer-ECU.	• Malfunction of transponder • Malfunction of ignition key ring antenna • Malfunction of harness or connector • Malfunction of immobilizer-ECU

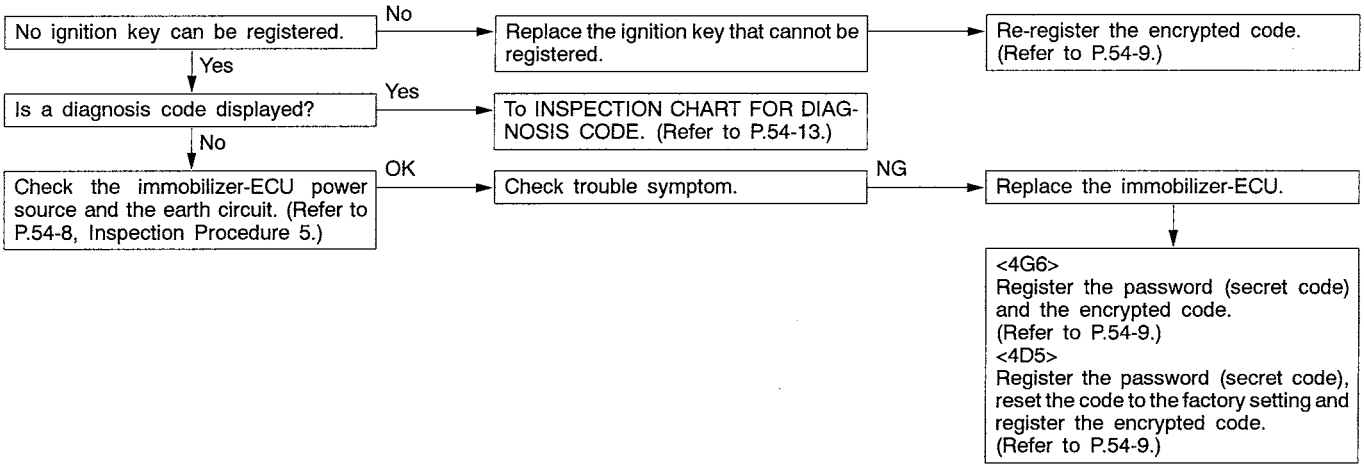

Inspection Procedure 3

Engine does not start (Cranking but no initial combustion). <4G6>	Probable cause
If the fuel injectors are not operating, there might be a problem with the MPI system in addition to a malfunction of the immobilizer system. It is normal for this to occur if an attempt is made to start the engine using a key that has not been properly registered.	• Malfunction of MPI system • Malfunction of immobilizer-ECU

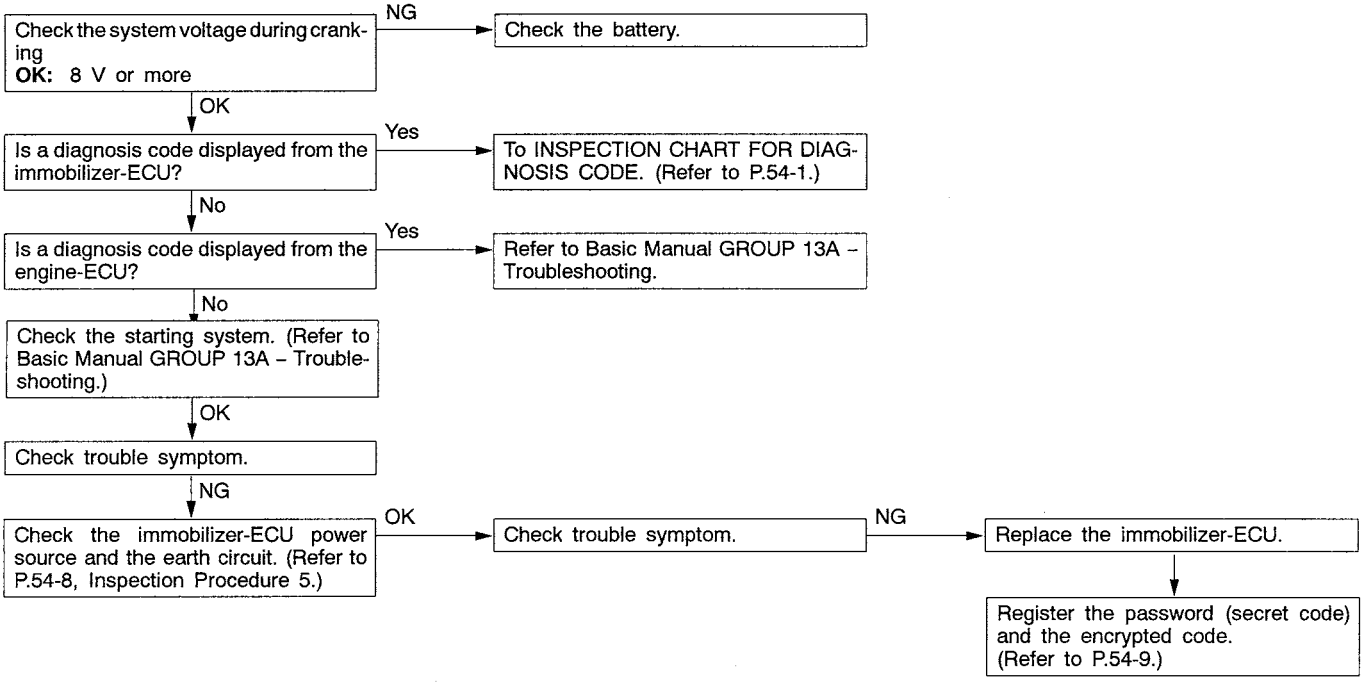

Inspection Procedure 4

Engine does not start (Cranking but no initial combustion). <4D5>	Probable cause
If no fuel injection, there might be a problem with the fuel injection system in addition to a malfunction of the immobilizer system. It is normal for this to occur if an attempt is made to start the engine using a key that has not been properly registered.	• Malfunction of diesel fuel injection system • Malfunction of immobilizer-ECU

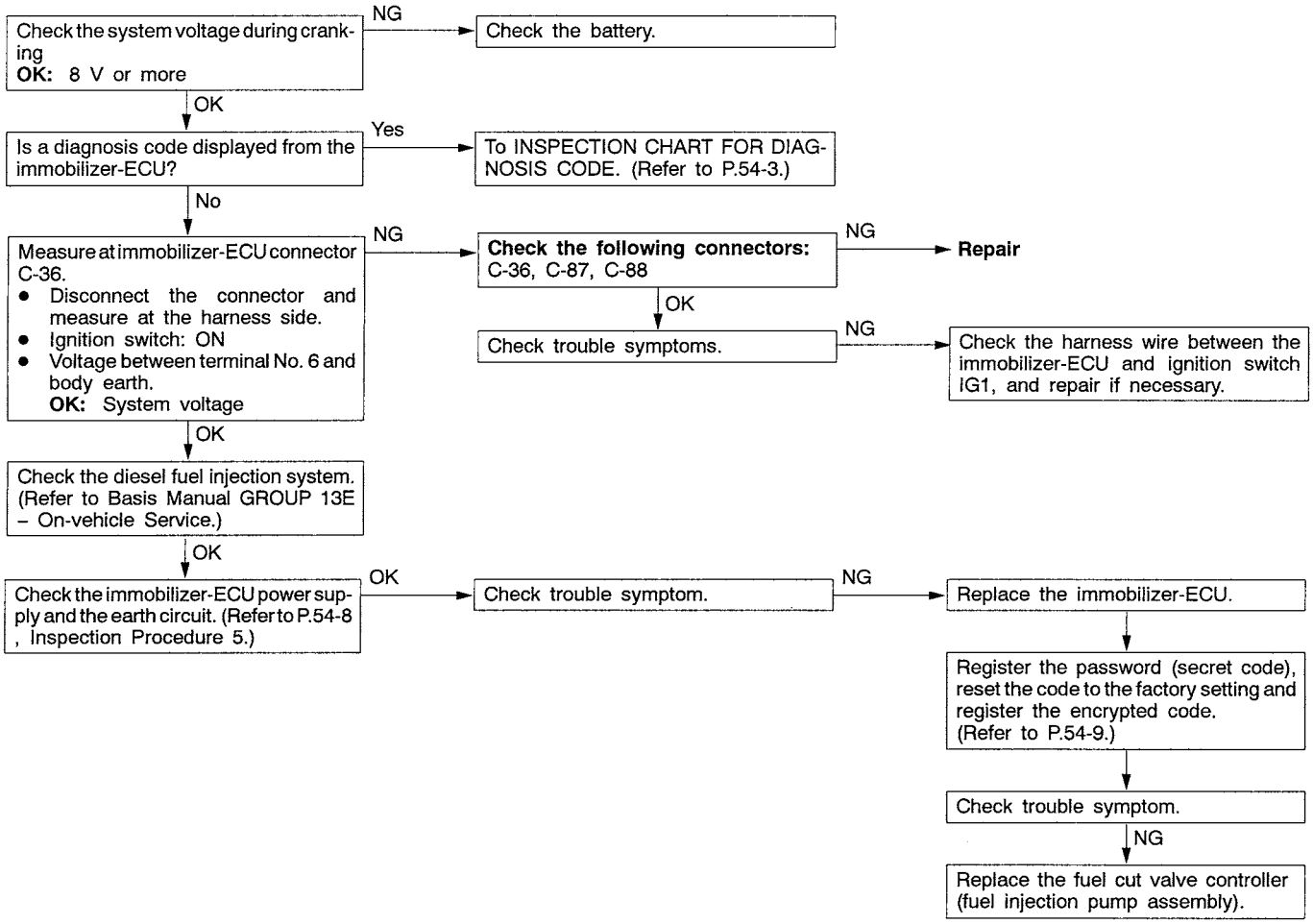

Inspection Procedure 5

Malfunction of the immobilizer-ECU power source and earth circuit

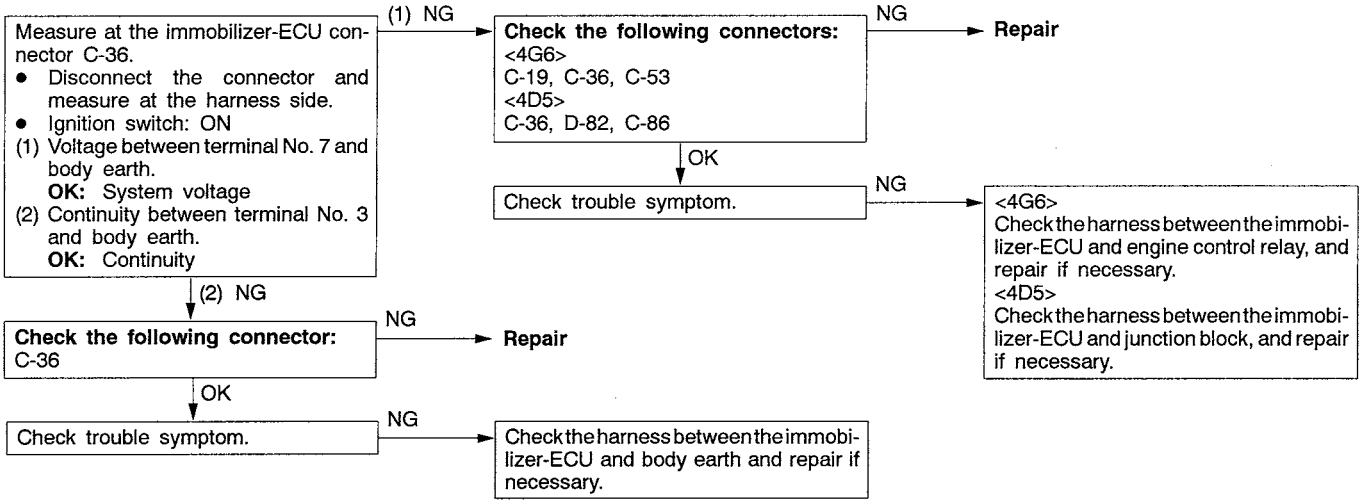

Inspection Procedure 6

Malfunction of the fuel cut valve controller power source and earth circuit <4D5>

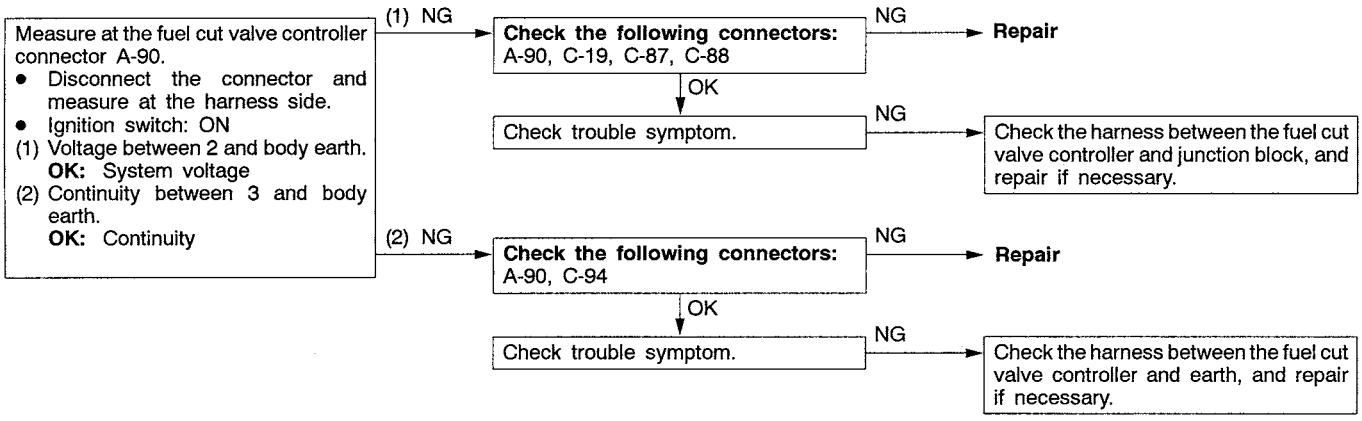

CHECK AT IMMOBILIZER-ECU

Terminal Voltage Check Chart

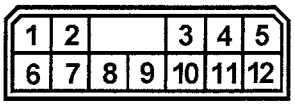

20F0191

Terminal No.	Signal	Checking requirements	Terminal voltage
3	Immobilizer-ECU earth	Always	0 V
6	Ignition switch-IG <4D5>	Ignition switch: OFF	0 V
		Ignition switch: ON	System voltage
7	Immobilizer-ECU power supply <4G6>	Always	System voltage
	Immobilizer-ECU power supply <4D5>	Ignition switch: OFF or approx. 5 or more seconds after switch has been turned from ON to OFF.	0 V
		Ignition switch: ON or within approx. 5 seconds after switch has been turned from ON to OFF.	System voltage

Encrypted Code Registration Method

If using an ignition key that has just been newly purchased, or if the immobilizer-ECU has been replaced, you will need to register the encrypted codes for each ignition key being used into the immobilizer-ECU. (A maximum of eight different encrypted codes can be registered.)
Moreover, when the immobilizer-ECU has been replaced, you will need to use the MUT-II to input the vehicle secret code and to register the password (secret code) that the user specifies into the immobilizer-ECU. (Refer to the "MUT-II REFERENCE MANUAL" or "MUT-II OPERATING INSTRUCTIONS")

Caution
Because registering of the encrypted codes is carried out after all previously-registered codes have been erased, you should have ready all of the ignition keys that have already been registered.

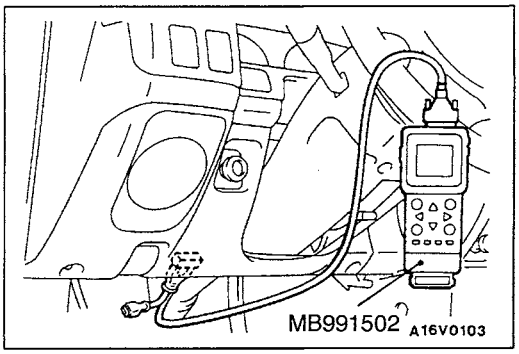

1. Connect the MUT-II to the diagnosis connector.

   Caution
   Turn off the ignition switch before connecting or disconnecting the MUT-II.

2. Check that the diagnosis code No.54 is not being generated by the engine-ECU. If it is being generated check according to the Troubleshooting Procedures.

3. Use the ignition key that is to be registered to turn on the ignition switch.
4. Use the MUT-II to register the encrypted code. To register the second or subsequent key, leave the MUT-II connected and remove the first registered key. Within 5 seconds insert the key to be registered and turn on the ignition switch.

   NOTE
   After 5 seconds have elapsed, the key registration must be repeated from the beginning because the key registration mode terminates.
5. This complete the registration operation. Turn the ignition switch OFF and leave it for approx. 10 seconds.
6. Check that the engine can be started with each of the ignition keys.
7. Check the diagnosis output from the engine-ECU, and erase code No.54 if it appears.

Resetting the code to the factory setting <4D5>

Refer to the "MUT-II REFERENCE MANUAL" or "MUT-II OPERATING INSTRUCTIONS" on handling the MUT-II.

NOTE
Resetting the code to the factory setting refers to the process of clearing the identification code which has been recorded in the fuel cut valve controller and switching the controller to learning mode. After this resetting is carried out, the identification code in the immobilizer-ECU will be recorded in the controller the next time the ignition switch is turned to the ON.

1. Connect the MUT-II to the diagnosis connector.

   Caution
   Turn off the ignition switch before connecting or disconnecting the MUT-II.

2. Turn on the ignition switch.
3. Use the MUT-II to reset the code to the factory setting.

   NOTE
   Approximately 16 minutes are required to complete resetting the code to the factory setting.

4. Disconnect the MUT-II.

NOTES

SERVICE BULLETIN

MITSUBISHI MOTORS

QUALITY INFORMATION ANALYSIS
OVERSEAS SERVICE DEPT. MITSUBISHI MOTORS CORPORATION

SERVICE BULLETIN	**No.:** MSB-00E00-003		
	Date: 2000-05-30	**<Model>**	**<M/Y>**
Subject:	YEAR MODEL CHANGES FOR 2001 L200	(EC)L200(K60, K70)	00-10
Group:	GENERAL	**Draft No.:** 00SY0022915	
INFORMATION/ CORRECTION	**INTERNATIONAL CAR ADMINISTRATIO OFFICE**	T.NITTA - PROJECT LEADER AFTER SALES SERVICE & CS PROMOTION	

1. Description:

This Service Bulletin informs you of the year model changes for the 2001 L200

2. Applicable Manuals:

Manual	Pub. No.	Language	Page(s)
2000 L200 Workshop Manual Chassis	PWTE96E1-D	(English)	
	PWTS96E1-D	(Spanish)	
	PWTF96E1-D	(French)	
	PWTG96E1-D	(German)	

3. Details:

L200

WORKSHOP MANUAL SUPPLEMENT

FOREWORD

This Manual outlines changes in servicing proc e-dures related to the chassis including vehicle i n-spections, adjustments and improvements in the newly equipped models.

TECHNICAL INFORMATION MANUAL	PYTE96E1
WORKSHOP MANUAL	
ENIGINE GROUP	PWEE___ (looseleaf edition)
CHASSIS GROUP	PWTE96E1
	PWTE96E1-B (SUPPLEMENT)
	PWTE96E1-C (SUPPLEMENT)
	PWTE96E1-D (SUPPLEMENT)
ELECTRICAL WIRING	PHTE96E1
	PHTE96E1-A
	PHTE96E1-B
	PHTE96E1-D
	PHTE96E1-D (SUPLEMTENT)
BODY REPAIR MANUAL	PBTE96E1
PARTS CATALOGUE	T603B00□D□

All information, illustrations and product d e-scriptions contained in this manual are current as at the time of publication. We, however, re-serve the right to make changes at any time without prior notice or obligation.

MITSUBISHI MOTORS CORPORATION

© Mitsubishi Motors Corporation 2000

General 00

Engine Lubrication 12

Body 42

Interior and Supplemental Restraint System (SRS) 52

Chassis Electrical 54

GROUP 00
GENERAL

VEHICLE IDENTIFICATION

MODELS

Model Code		Engine model	Transmission model	Fuel supply system
K62T	JERDEL6	4G63-SOHC (1,997mℓ)	R4AW2 (2WD-4A/T	MPI
	ENDEL6		R5M21 (2WD-5M/T)	
K64T	ENDL6	4D56 (2,477mℓ)	R5M21 (2WD-M/T)	Fuel injection
	ENDR6			
	CENDL6			
	JENDL6			
K75T	CENDEL6	4G64-SOHC (2,351 mℓ)	V5M21 (4WD-5M/T)	MPI
	GJENXEL6			
K74T	ENDFL6	4D56- Turbocharger with intercooler (2,477mℓ)	V5MT1 (4WD-5M/T	Fuel injection
	ENDFR6			
	JERDFL6		V4AW2 (AWD-4A/T	
	GJERXFL6		V5MT1 (4WD-5M/T	
	GJENXFL6			
	GJENXFR6			
	CENDFL6			
	GCENXFL6			
	JENDFL6			
	JENDFR6			
	JENHFL6			

CHASSIS NUMBER

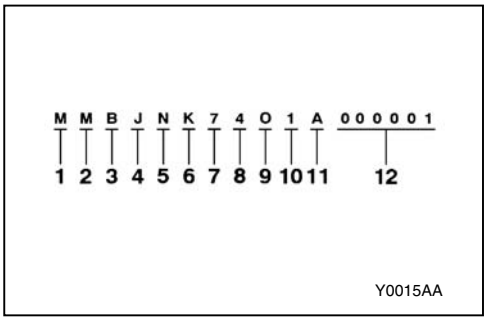

No.	Items		Contents
1	Continent	M	ASIA
2	Country	M	THAILAND
3	Register code	B	Follow register
4	Body shape	C	Club cab
		J	Double cab
		O	Single cab
		Y	Single cab without rear body
		Z	Double cab without rear body
5	Transmission type	N	5-speed manual transmission
		R	4-speed automatic transmission
6	Vehicle line	K	Mitsubushi L200
7	Body type	6	Long wheelbase
		7	4WD, Long wheelbase
8	Engine type	2	4G63: 1,997mℓ petrol engine
		4	4D56:2,477mℓ diesel engine
		5	4G64: 2,351 mℓ petrol engine
9	Internal production control code	A	A, B, C…etc 0 (zero): No meaning
10	Model year	1*	2001
11	Plant	A	A, C: LARDKRABANG factory D, F: LAEMCHABANG factory
12	Serial number	-	-

NOTE
*: Indicates changes.

NOTES

GROUP 12

ENGINE LUBRICATION

GENERAL

OUTLINE OF CHANGES

- A quality of the engine oil has been changed.

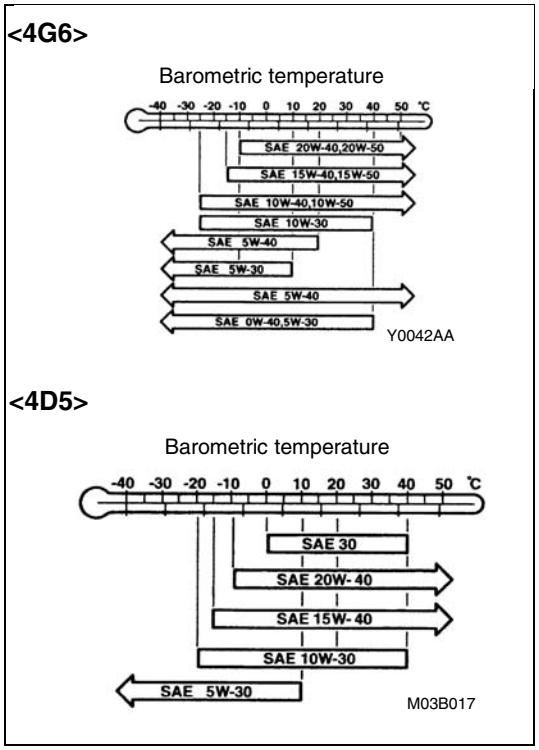

ON-VEHICLE SERVICE

specified engine oil (ACEA and API classification):
<4G6> ACEA A1, A2, A3/API SG or higher
<4D5> ACEA B1, B2, B3, B4/API CD or higher

NOTES

GROUP 42

BODY

GENERAL

OUTLINE OF CHANGES

The following service procedures have been added due to the introduction of the keyless entry system as an optional equipment <GLS>.

KEYLESS ENTRY SYSTEM

SPECIAL TOOL

Tool	Number	Name	Use
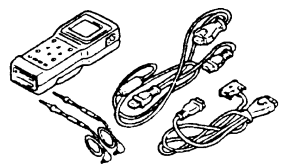	MB991502	MUT-II sub assembly	Encrypted codes recording

TROUBLESHOOTING

DIAGNOSIS FUNCTION

INPUT SIGNAL INSPECTION PROCEDURE

1. Connect the MUT-II to the diagnosis connector to check input signal. (Refer to ’97 L200 Workshop Manual GROUP 00 – How to Use Troubleshooting/Inspection Service Points.)
2. The following input signals can be checked:
   - Ignition switch (IG1, ACC)
   - Driver’s door switch
   - Every door switch
   - Key reminder switch
   - Driver’s door lock actuator
   - Keyless entry transmitter (LOCK, UNLOCK)

   NOTE
   If the MUT-II cannot check all the input signals, the diagnosis circuit may be defective.

ETACS FUNCTION ADJUSTMENT PROCEDURE

The following functions can be adjusted by operating input switches, The adjustments will be stored in th ECU memory even after a battery cable is disconnected:

- Switching of keyless entry answerback function (From activation to deactivation, or vice versa)
- Initialisation of the above function (From deactivation)

1. Entry conditions to the adjustment mode
   The ETACS-ECU sounds a buzzer once when all of the following conditions are satisfied, and then enters the adjustment mode:
   - Diagnosis control: ON (Connect the MUT-II.)
   - Key reminder switch: OFF
   - Ignition switch: LOCK (OFF
   - Door switch: OFF (Close the door)
   - If all of the conditions above are satisfied, the tailgate switch will be turned in for more than 10 seconds.

2. Exit conditions from the adjustment mode
   The ETACS-ECU cancels the adjustment mode when any of the following conditions is satisfied:
   - Diagnosis control: OFF (Disconnect the MUT-II>)
   - Key reminder switch: ON (Pull out the ignition key.)
   - Ignition switch: Other than LOCK (OFF)
   - Door switch: ON (Open the door)
   - After the ETACS_ECU has entered the adjustment mode, no adjustment is made within 3 minutes (If any adjustment is made within 3 minutes, the ETACS-ECU monitors an adjustment operation for other 3 minutes.
   - Other warning buzzer(s) sounds
3. Adjustment of functions

Function	Adjustment procedure
Keyless entry answerback function	When the transmitter lock switch is turned on twice continuously within 2 seconds, the lock answerback function toggles on and off. • If the function toggles on, the buzzer sounds once (default condition). • If the function toggles off, the buzzer sounds twice, When the transmitter unlock switch is turned on twice continuously within 2 seconds, the unlock answerback function toggles on and off. • If the function toggles on, the buzzer sounds once (default condition). • If the function toggles off, the buzzer sounds twice,
Initialisation of all the ETACS functions (From deactivation to activation)	When the tailgate switch remains on for more than 20 seconds, th buzzer sounds twice and he answer-back function of the keyless entry system is initialised. The buzzer will sound in 10 seconds (indicating that the ETACS-ECU enters the adjustment mode), but the washer switch must remains off for 20 seconds in order to initialise all the functions. If the tailgate switch remains on for more than 20 seconds without entering the adjustment mode, the system enters the adjustment mode in 10 seconds, but does not initialise all of the functions.

INSPECTION CHART FOR TROUBLE SYMPTOMS

Trouble symptom	Inspection procedure No.	Reference page
None of the doors can be locked or unlocked using th transmitter.	1	42-3
All of the doors can be locked and unlocked using th transmitter, but the room lamp or turn-signal lamp does not flash or illuminate. (However, the room lamp operates normally when the doors are opened and closed.)	2	42-4
Encrypted codes cannot be registered.	3	42-5

INSPECTION PROCEDURE FOR TROUBLE SYMPTOMS

INSPECTION PROCEDURE 1

None of the doors can be locked or unlocked using the transmitter.	Probable cause
The cause may be a malfunction of the transmitter or ETACS-ECU, defective connection between ETACS-ECU and junction block, defective power supply voltage to ETACS-ECU input line due to commercial equipment, or the lock and unlock signals are not being sent to the ETACS-ECU.	• Malfunction of transmitter • Malfunction of ETACS-ECU • Malfunction of key reminder switch • Malfunction of wiring harness or connector • Malfunction of door switch • Defective connection between ETACS-ECU and junction block • Defective power supply voltage to ETACS-ECU input line due to commercial equipment

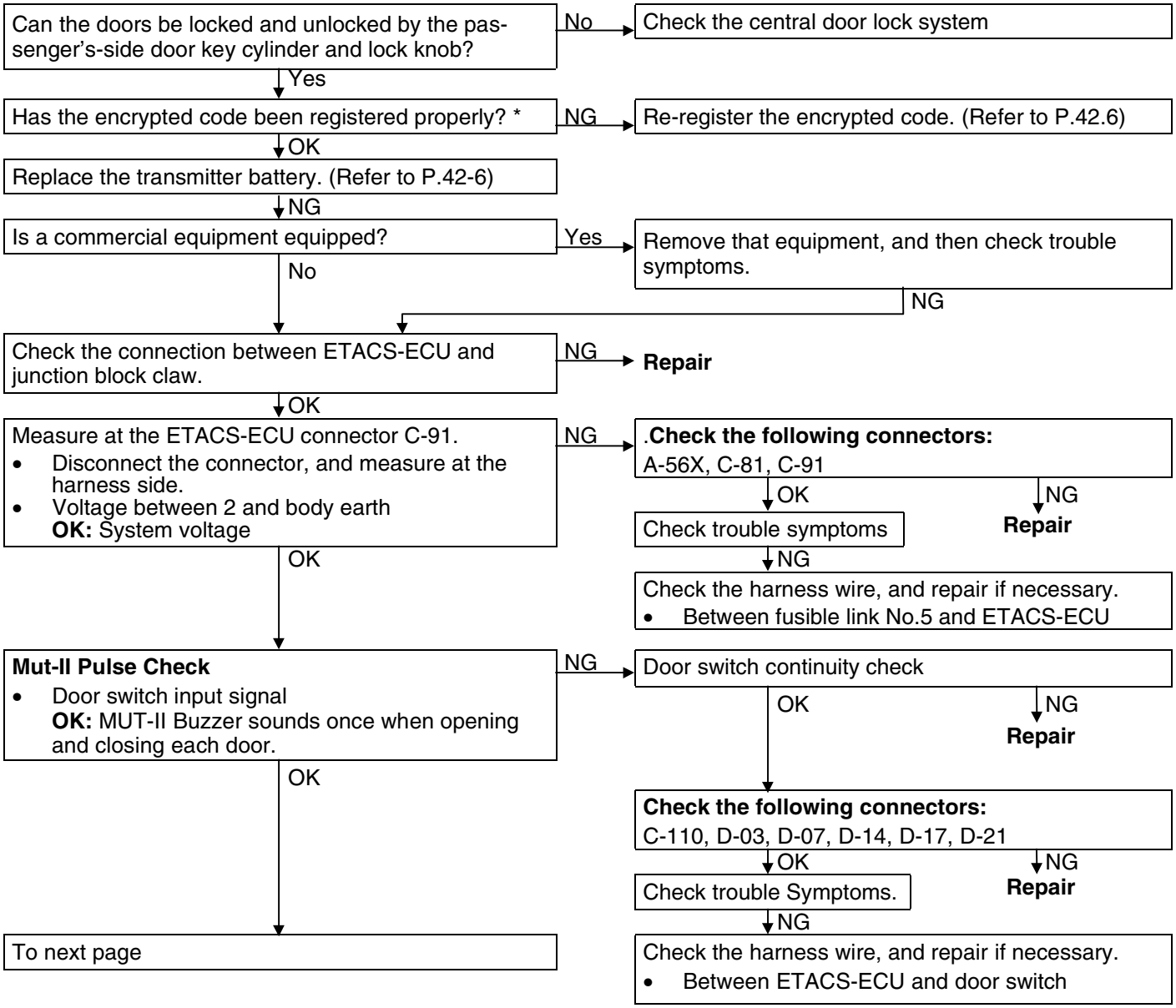

NOTE

*: This should be done if a transmitter, receiver or ETACS-ECU has been replaced, and if a secret cod has not been registered properly

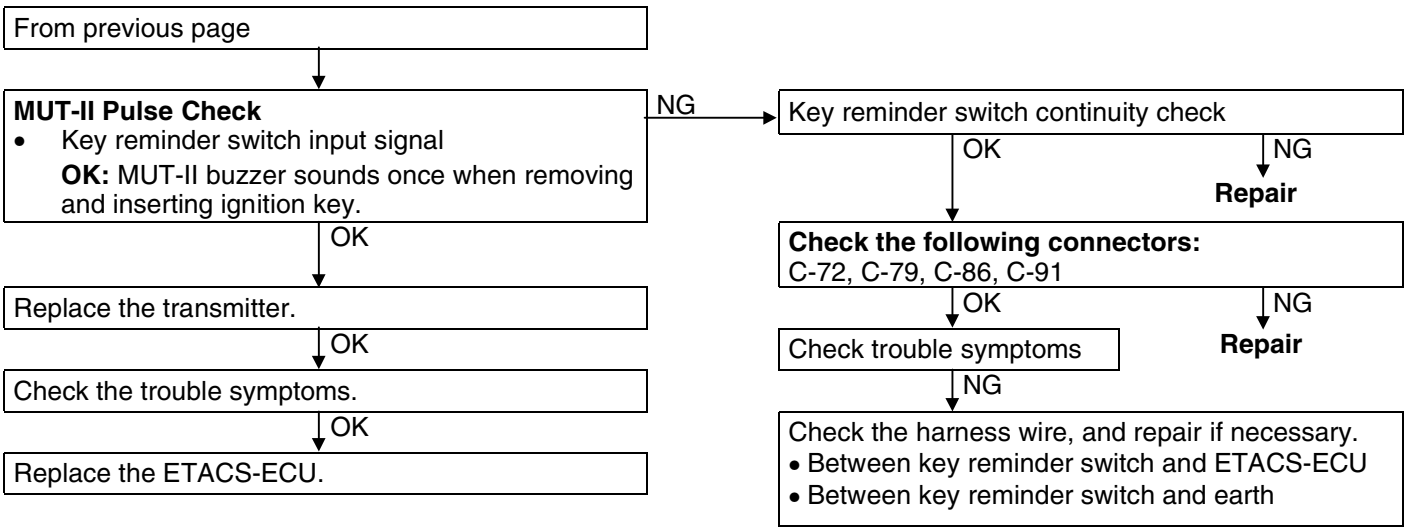

INSPECTION PROCEDURE 2

All of the doors can be locked and unlocked using th transmitter, but the room lamp or turn-signal lamp does not flash or illuminate. (However, the room lamp operates normally when the doors are opened and closed.)	Probable cause
If neither room lamp nor turn-signal lamp flash/illuminate, the cause may be a malfunction of the ETACS-ECU or driver's-side door lock actuator. If either room lamp or turn-signal lamp does not flash/illuminate, the cause may be a malfunction of the room lamp circuit or turn-signal lamp.	• Malfunction of ETACS-ECU • Malfunction of driver's door lock actuator • Burnt turn-signal lamp bulb • Malfunction of connector or wiring harness

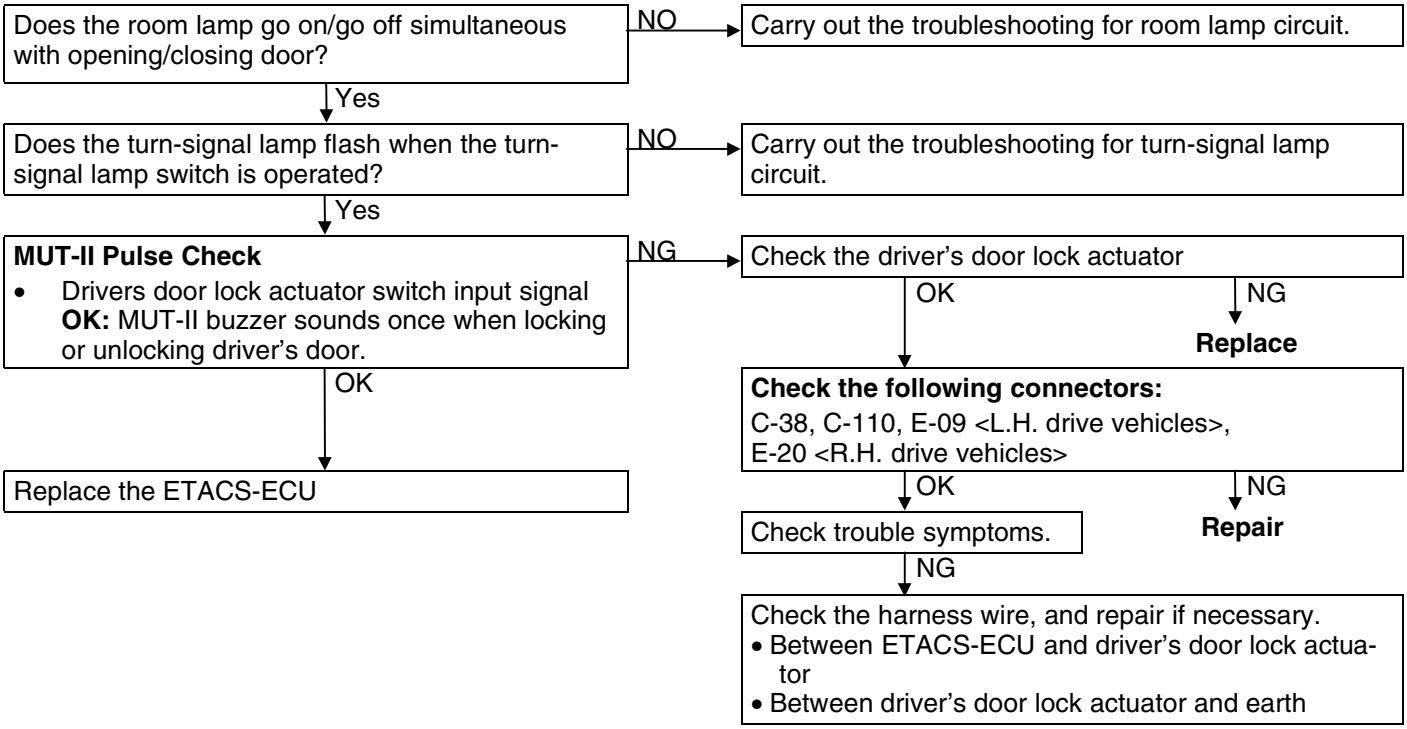

INSPECTION PROCEDURE 3

Encrypted codes cannot be registered	Probable cause
The cause may be a malfunction of the diagnosis connector, ETACS-ECU or diagnosis output circuit.	• Malfunction of MUT-II • Malfunction of connector or wiring harness • Malfunction of ETACS-ECU

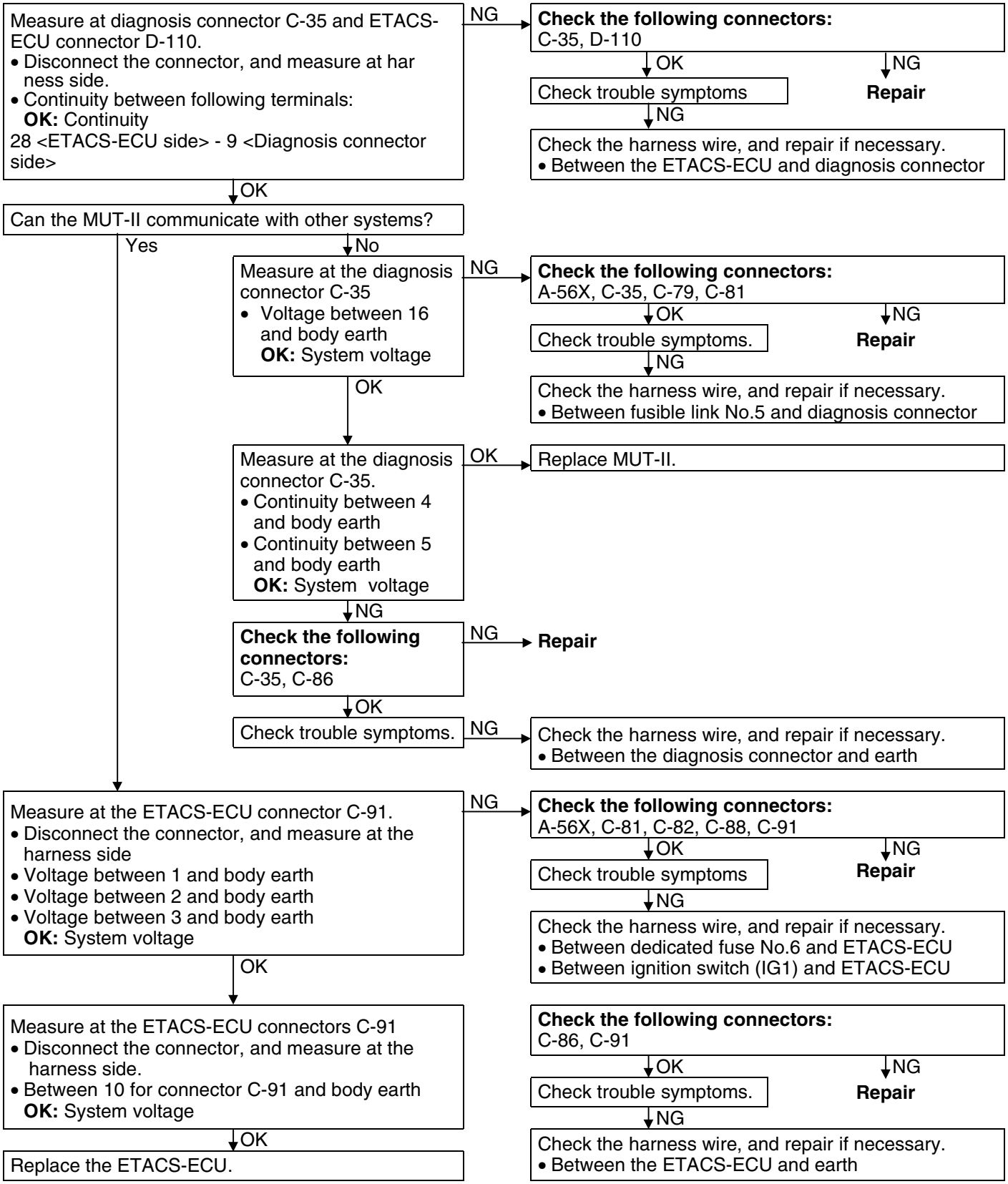

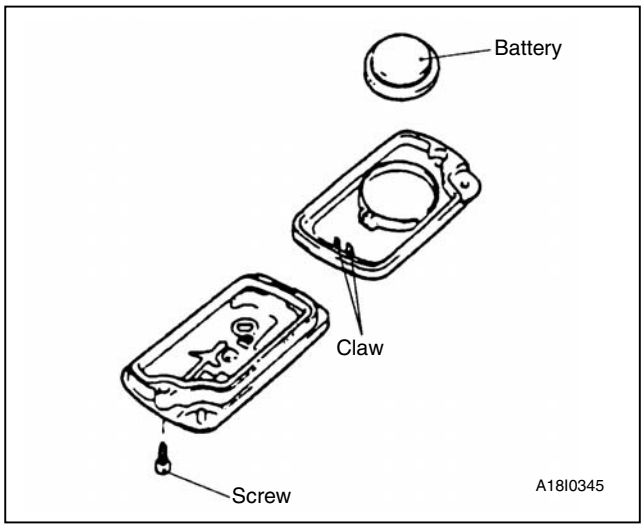

ON – VEHICLE SERVICE

HOW TO REPLACE A BATTERY OF THE TRANSMITTER

1. Remove the set screw to remove the battery from the transmitter.
   Install a battery with its (+) side face-down.
   Battery required for replacement:
   Coin type battery CR2032
3. Insert the claw, and then assemble the transmitter.
   Caution
   Do not let water or dust stick to the inside of the transmitter when it is open. Also, do not touch the precision electronic device.
4. Check to see if the keyless entry system operates.

SECRET CODE REGISTRATION METHOD

Each individual secret code is registered inside the transmitter, and so it is necessary to register these codes with the EEPROM inside the ETACS-ECU in the following cases.

- When either the transmitter or ETACS-ECU in the following cases.
- If a second transmitter is to be used;
- If it appears that a problem is occurring because of faulty registration of a code.

A maximum of two different codes can be stored in the memory area of the EEPROM (two different transmitters can be used).

When the code for the first transmitter is registered, th previously- registered codes for two transmitters are cleared.

Therefore, if you are using more than two or are addin a second transmitter, the codes for all the transmitters must be registered at the same time.

1. Check that the doors lock normally when the key is used.
2. Connect the MUT-II to the diagnosis connector
   NOTE
   This will connect terminal (1) of the diagnosis con nectar to earth, and the system will be in secret code registration standby mode.
   Caution
   Always turn the ignition switch to OFF before connecting and disconnecting the MUT-II

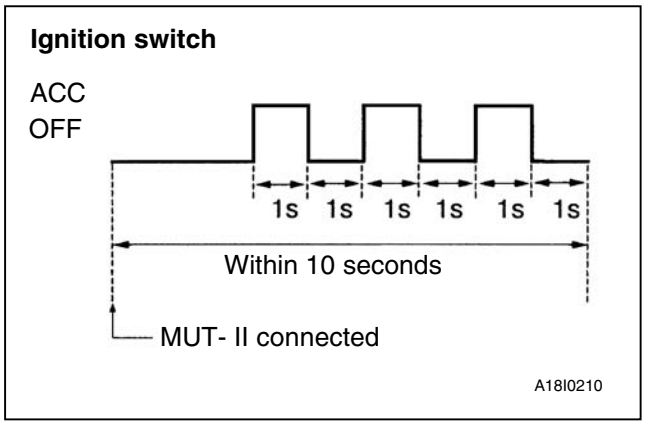

3. Within 10 seconds after connecting the MUT-II, turn the ignition switch to ACC ON for 1 second an then to OFF for 1 second; repeat this procedure three times.

   NOTE

   The doors will lock and unlock once at this tim and the system will switch to registration mode.
4. Press the lock switch or unlock switch; of th transmitter switch, and then press it two times within 10 seconds of the first press. This will register the code.
5. After registration is completed, the doors will be automatically locked and unlocked once.
6. If you are using two transmitters or have added a second transmitter, the same registration procedure should be carried out for the second transmitter, and it should be carried out within one minute after registration of the code for the first transmitter has been completed. After the second registration is completed, the doors will be automatically locked and unlocked once.
7. Registration mode will be terminated under the following conditions.

- When the secret codes for two transmitters hav been registered;
- When one minute has passed after registration mode started;
- If the MUT-II is disconnected (earth is released);
- If the ignition switch is tuned to ON;

8. After registration mode has been completed, carry out the followings to make sure that the keyless entry system operates.

- Pull the ignition key out.
- Close the all doors.

KEYLESS ENTRY SYSTEM

REMOVAL AND INSTALLATION

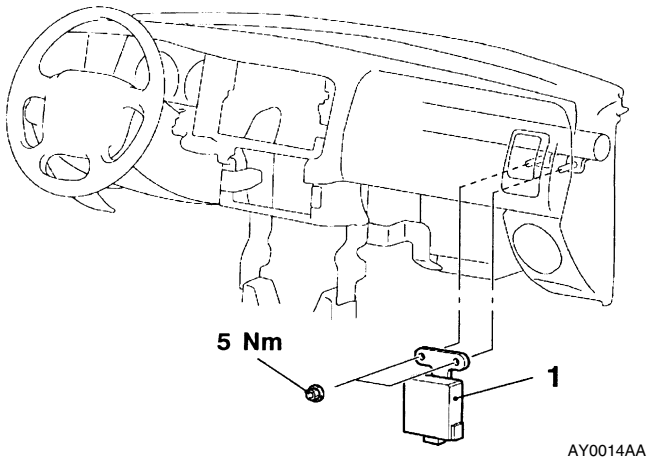

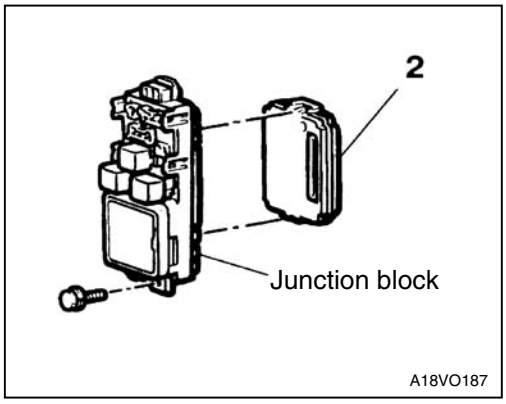

Keyless entry receiver-ECU removal steps

- Glove box assembly (Refer to GROUP 52A*.)

1. Keyless entry receiver-ECU

ETACS-ECU removal

2. ETACS-ECU

NOTE

*: Refer to ’97 L200 Workshop Manual <Pub. No. PWTE96E1>

GROUP 52A
INTERIOR

GENERAL
OUTLINE OF CHANGE

- The following service procedures have been added due to the introduction of the adjustable seat belt anchor.
- On dual cab models, three-point ELR/child seat fixing mechanism (ALR) seat belts have been added for rear seat as an optional equipment. The service procedures are the same as previous one.

FRONT SEAT BELT
REMOVAL AND INSTALLATION

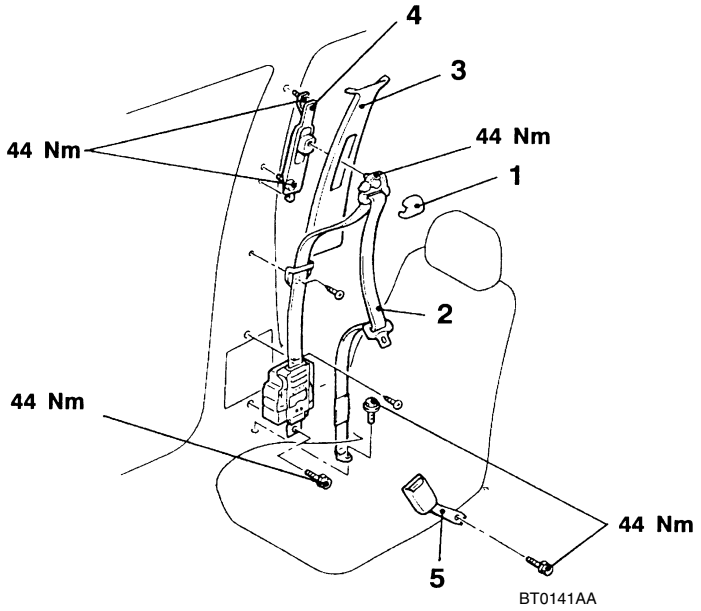

Outer seat belt removal steps

- Center pillar trim, lower or quarter trim, lower (refer to P.52A*.)

1. Sash guide cover
2. Outer seat belt
3. Center pillar trim, upper or quarter trim, upper (refer to P.52A*.)
4. Adjustable seat belt anchor.

Inner seat belt removal steps

- Front seat (refer to P.52A*.)

5. Inner seat belt

NOTE

*: Refer to ’97 L200 Workshop Manual <Pub. No. PWTE96E1>.

NOTES

GROUP 54
CHASSIS ELECTRAL

GENERAL
OUTLINE IF CHANGES
- The following procedure has been added due to the addition of the high-stop lamp <4WD>.

HIGH-MOUNTED STOP LAMP
REMOVAL AND INSTALLATION

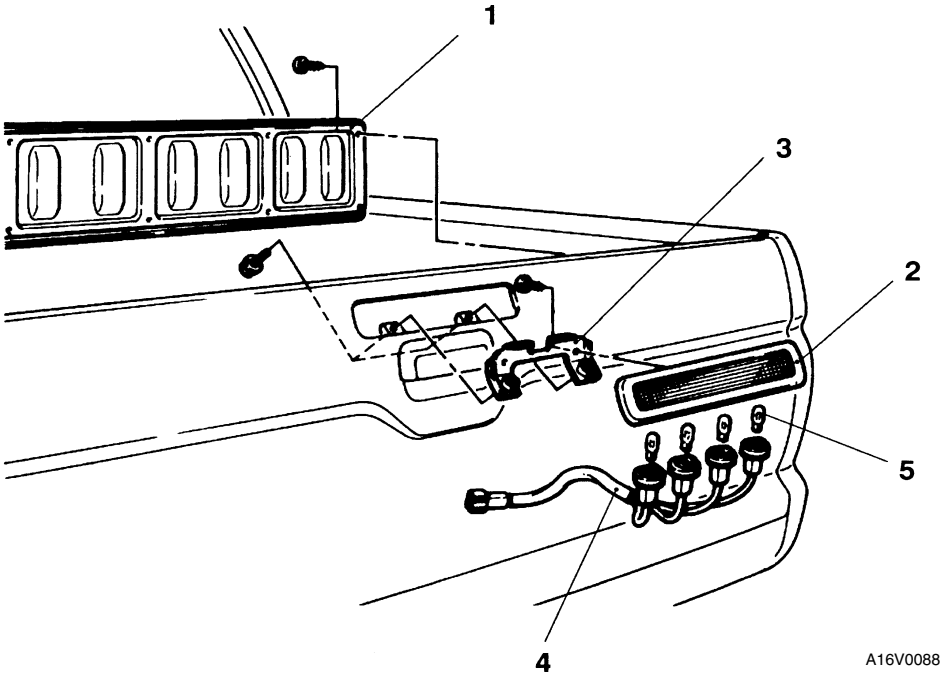

Removal steps
1. Rear gate panel
2. High mounted stop lamp
3. Lamp bracket
4. Bulb socket assembly
5. Bulb

GROUP 54
CHASSIS ELECTRICAL

GENERAL

OUTLINE OF CHANGE

The following service procedure of the immobilizer system has been changed. The same procedures as before are applied except for the items shown below.

- The troubleshooting has been changed due to the addition to the 4D56 engine which complies with emission regulation step III.

IMMOBILIZER SYSTEM

The same troubleshooting and ignition key registration method as 4G6 engine are applied except for the following.
Refer to 2000 L200 Workshop Manual. (Pub. No. PWTE96E1–D)

INSPECTION CHART FOR TROUBLE SYMPTOMS

Trouble symptom	Inspection procedure No.	Reference page
Communication with MUT-II is not possible.	1	54-1
Encrypted code cannot be registered using the MUT-II.	2	54-2
Engine does not start (Cranking but no initial combustion).	3	54-2
Malfunction of the immobilizer-ECU power source and earth circuit.	4	54-3

INSPECTION PROCEDURE FOR TROUBLE SYMPTOMS <4D56-Step III>

Inspection Procedure 1

Communication with MUT-II is impossible	Probable cause
The cause is probably that a malfunction of the diagnosis line or the immobilizer-ECU is not functioning.	• Malfunction of diagnosis line • Malfunction of harness or connector • Malfunction of immobilizer-ECU

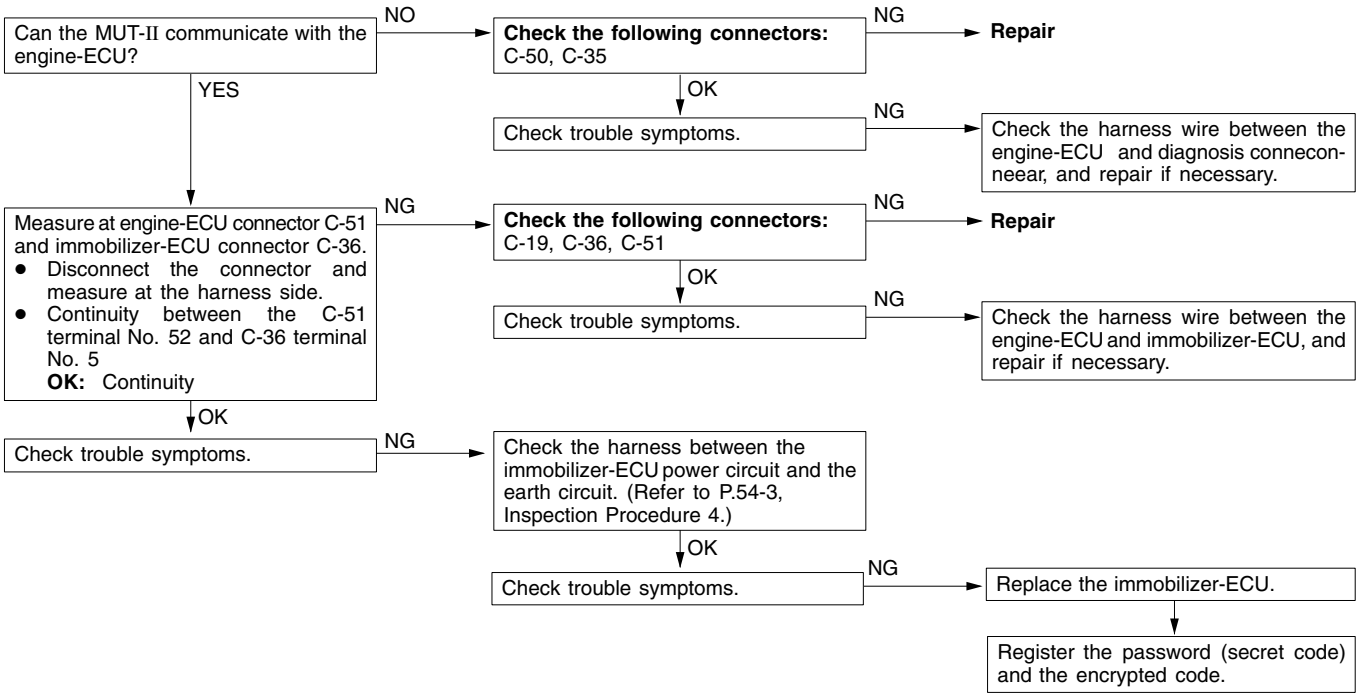

Inspection Procedure 2

Encrypted code cannot be registered using the MUT-II	Probable cause
The cause is probably that there is no encrypted code registered in the immobilizer-ECU or there is a malfunction of the immobilizer-ECU.	• Malfunction of transponder • Malfunction of ignition key ring antenna • Malfunction of harness or connector • Malfunction of immobilizer-ECU

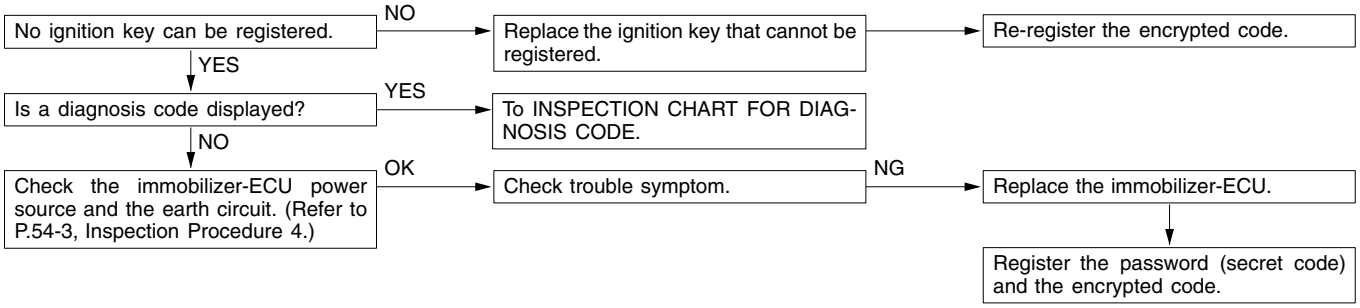

Inspection Procedure 3

Engine does not start (Cranking but no initial combustion).	Probable cause
If no fuel injection, there might be a problem with the fuel injection system in addition to a malfunction of the immobilizer system. It is normal for this to occur if an attempt is made to start the engine using a key that has not been properly registered.	• Malfunction of diesel fuel injection system • Malfunction of immobilizer-ECU

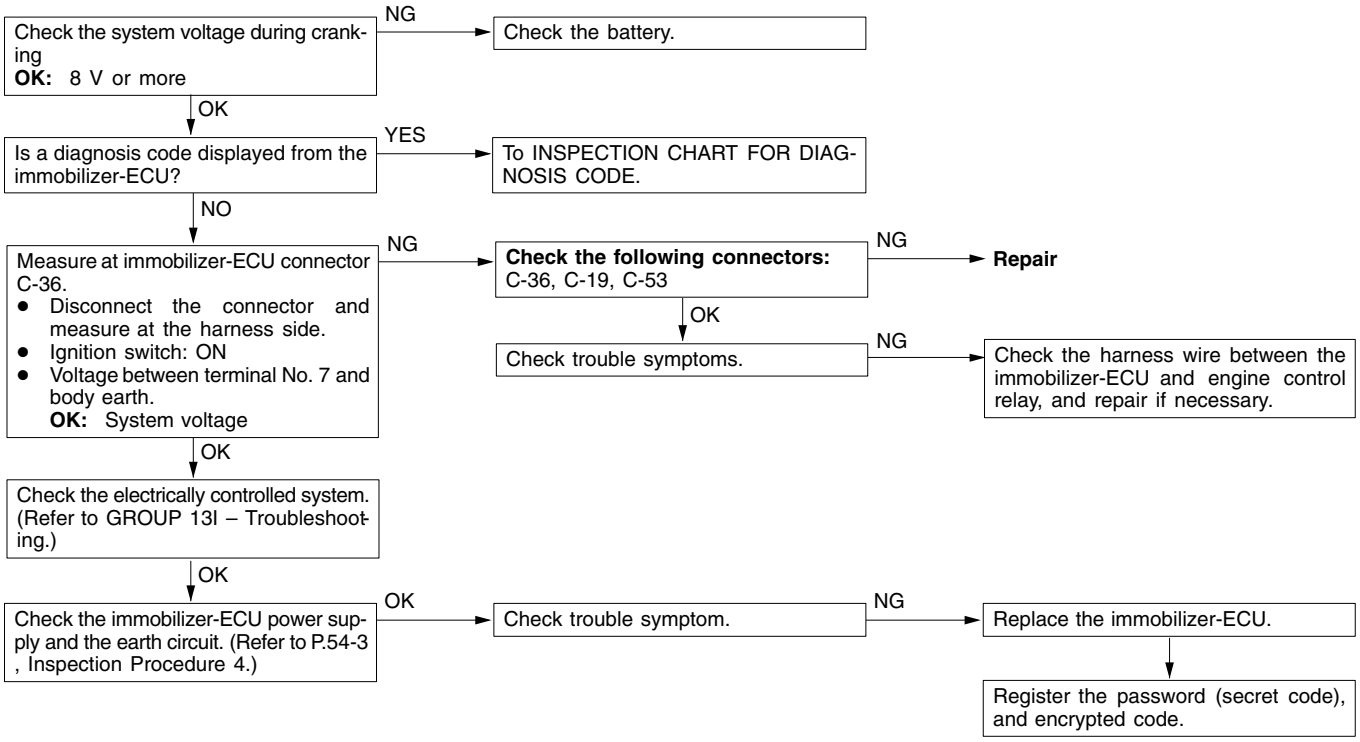

Inspection Procedure 4

Malfunction of the immobilizer-ECU power source and earth circuit

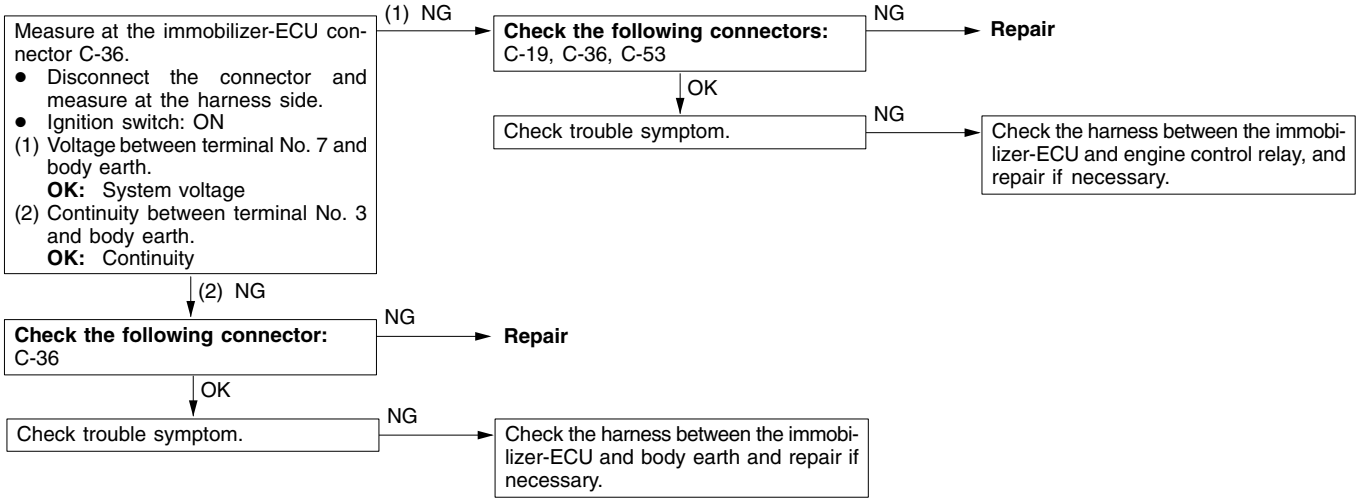

CHECK AT IMMOBILIZER-ECU

Terminal Voltage Check Chart

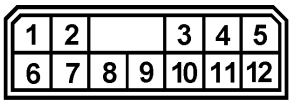

20F0191

Terminal No.	Signal	Checking requirements	Terminal voltage
3	Immobilizer-ECU earth	Always	0 V
7	Immobilizer-ECU power supply	Ignition switch: OFF or approx. 5 or more seconds after switch has been turned from ON to OFF.	0 V
		Ignition switch: ON or within approx. 5 or more seconds after switch has been turned from ON to OFF	System voltage

NOTES

HEATER, AIR CONDITIONER AND VENTILATION

Click on the applicable bookmark to selected the required model year

HEATER, AIR CONDITIONER AND VENTILATION

CONTENTS

55109000089

GENERAL INFORMATION 3
Safety Precautions 3
SERVICE SPECIFICATIONS 4
LUBRICANTS 4
SEALANT 4
SPECIAL TOOL 5
TROUBLESHOOTING 5
ON-VEHICLE SERVICE 6
Sight Glass Refrigerant Level Test 6
Magnetic Clutch Test 7
Receiver Drier Test 7
Dual Pressure Switch Check 7
Compressor Drive Belt Adjustment 7
Charging 8
Performance Test 13
Refrigerant Leak Repair 14
Compressor Noise 15
Power Relay Continuity Check 15
Idle-up Operation Check 16

CONTINUED ON NEXT PAGE

WARNINGS REGARDING SERVICING OF SUPPLEMENTAL RESTRAINT SYSTEM (SRS) EQUIPPED VEHICLES

WARNING!

(1) Improper service or maintenance of any component of the SRS, or any SRS-related component, can lead to personal injury or death to service personnel (from inadvertent firing of the air bag) or to the driver (from rendering the SRS inoperative).

(2) Service or maintenance of any SRS component or SRS-related component must be performed only at an authorized MITSUBISHI dealer.

(3) MITSUBISHI dealer personnel must thoroughly review this manual, and especially its GROUP 52B – Supplemental Restraint System (SRS) before beginning any service or maintenance of any component of the SRS or any SRS-related component.

NOTE
The SRS includes the following components: impact sensors, SRS diagnosis unit, SRS warning lamp, air bag module, clock spring and interconnecting wiring. Other SRS-related components (that may have to be removed/installed in connection with SRS service or maintenance) are indicated in the table of contents by an asterisk (*).

Vacuum Actuator Check <Diesel-powered Vehicles> 18

Idle-up Solenoid Valve Check <Diesel-powered Vehicles> 19

Lever Position Switch Check <Diesel-powered Vehicles (A/T)> 20

HEATER CONTROL ASSEMBLY AND A/C SWITCH 21

HEATER UNIT AND HEATER CORE* 24

BLOWER ASSEMBLY AND RESISTOR 26

EVAPORATOR <VEHICLES WITH A/C> 28

COMPRESSOR AND TENSION PULLEY* 30

CONDENSER AND CONDENSER FAN MOTOR 33

REFRIGERANT LINE* 35

ENGINE COOLANT TEMPERATURE SWITCH <Diesel-powered Vehicles> 37

IDLE-UP SYSTEM <Diesel-powered Vehicles> 39

LEVER POSITION SWITCH <Diesel-powered Vehicles (A/T)> 40

VENTILATORS* 41

GENERAL INFORMATION

55200010121

The heater system uses a two-way-flow full-air-mix system that features high performance and low operating noise, and includes an independent face air blowing function and a cool air bypass function.

The A/C system is basically the same as the conventional system, but a new refrigerant system has been adopted as a response to restrictions on the use of chlorofluorocarbons.

Items		Specifications
Heater unit	Type	Two-way-flow full-air-mix system
Heater control assembly		Dial type
Compressor	Model	Inclined-plate type <DKS-15CH>
Dual pressure switch kPa	High-pressure switch	ON → OFF: 2,648, OF→F ON: 2,059
	Low-pressure switch	ON → OFF: 177, OFF → ON: 186
Refrigerant and quantity g		R-134a (HFC-134a), Approx. 550–600

SAFETY PRECAUTIONS

Because R-134a refrigerant is a hydrofluorocarbon (HFC) which contains hydrogen atoms in place of chlorine atoms, it will not cause damage to the ozone layer.
Refrigerant R-134a is transparent and colourless in both the liquid and vapour state. Since it has a boiling point of –29.8°C, at atmospheric pressure, it will be a vapour at all normal temperatures and pressures. The vapour is heavier than air, non-flammable, and nonexplosive. The following precautions must be observed when handling R-134a.

Caution
Wear safety goggles when servicing the refrigeration system.

R-134a evaporates so rapidly at normal atmospheric pressures and temperatures that it tends to freeze anything it contacts. For this reason, extreme care must be taken to prevent any liquid refrigerant from contacting the skin and especially the eyes. Always wear safety goggles when servicing the refrigeration part of the A/C system. Keep a bottle of sterile mineral oil handy when working on the refrigeration system. Should any liquid refrigerant get into the eyes, use a few drops of mineral oil to wash them out. R-134a is rapidly absorbed by the oil. Next splash the eyes with plenty of cold water. Call your doctor immediately even though irritation has ceased after treatment.

Caution
Do not heat R-134a above 40°C

In most instances, moderate heat is required to bring the pressure of the refrigerant in its container above the pressure of the system when charging or adding refrigerant.
A bucket or large pan of hot water not over 40°C is all the heat required for this purpose. Do not heat the refrigerant container with a blow torch or any other means that would raise temperature and pressure above this temperature. Do not weld or steam clean on or near the system components or refrigerant lines.

Caution
Keep R-134a containers upright when charging the system.

When metering R-134a into the refrigeration system keep the supply tank or cans in an upright position. If the refrigerant container is on its side or upside down, liquid refrigerant will enter the system and damage the compressor.

Caution
1. **The leak detector for R-134a should be used to check for refrigerant gas leaks.**
2. **Do not allow liquid refrigerant to touch bright metal.**

Refrigerant will tarnish bright metal and chrome surfaces, and in combination with moisture can severely corrode all metal surfaces.

SERVICE SPECIFICATIONS

55200030141

Items		Standard value
Idle speed r/min	4G6	750±100
	4D5	750±100
Idle up speed r/min		900±50
Resistor (for blower motor) <L.H. drive vehicles> Ω		LO: 2.21, ML: 0.97, MH: 0.35
Resistor (for blower motor) <R.H. drive vehicles> Ω		LO: 2.81, ML: 1.28, MH: 0.33
Air gap (Magnetic clutch) mm		0.3 – 0.6
Engine coolant temperature switch (for A/C cut-off) <4D5> C°	ON (continuity)	108 or less
	OFF (no continuity)	115 or more
Engine coolant temperature switch (for condenser fan) <4D5> C°	ON (continuity)	102 or more
	OFF (no continuity)	97 or less

LUBRICANTS

55200040137

Items	Specified lubricants	Quantity
Each connection of refrigerant line	ZXL100PG	As required
Compressor refrigerant unit lubricant mℓ	ZXL100PG	180

SEALANT

55200050048

Item	Specified sealant	Remark
Engine coolant temperature switch threaded part	3M Nut Locking Part No. 4171 or equivalent	Drying sealant

SPECIAL TOOL

55100060017

Tool	Number	Name	Use
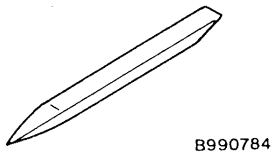	MB990784	Ornament remover	Meter bezel assembly removal

TROUBLESHOOTING

55200070150

TROUBLESHOOTING PROCEDURES

Trouble symptom	Problem cause	Remedy	Reference page
When the ignition switch is “ON”, the A/C does not operate.	A/C compressor relay is defective	Replace A/C compressor relay	55-16
	Magnetic clutch is defective	Replace the A/C compressor	55-6, 30
	Refrigerant leak or overfilling of refrigerant	Replenish the refrigerant, repair the leak or take out some of the refrigerant	55-6, 14
	Dual pressure switch is defective	Replace the dual pressure switch	55-7, 35
	A/C switch is defective	Replace the A/C switch	55-21, 23
	Blower switch is defective	Replace the blower switch	55-21, 23
	Thermostat is defective	Replace the Thermostat	55-29
	Engine coolant temperature switch (for A/C cut-off) is defective <Diesel-powered vehicles>	Replace the engine coolant temperature switch	55-37, 38
	Engine-ECU is defective <Petrol-powered vehicles>	Replace the engine-ECU	–
When the A/C is operating, temperature inside the passenger compartment doesn’t decrease (cool air is not emitted).	Refrigerant leak	Replenish the refrigerant and repair the leak	55-14
	Dual pressure switch is defective	Replace the dual pressure switch	55-7, 35
	Thermostat is defective	Replace the Thermostat	55-29

Trouble symptom	Problem cause	Remedy	Reference page
Blower fan and motor doesn't turn	Blower relay is defective	Replace the blower relay	55-15
	Blower fan and motor is defective	Replace the blower fan and motor	55-26, 27
	Blower resistor is defective	Replace the blower resistor	55-26, 27
	Blower switch is defective	Replace the blower switch	55-21, 23
Blower fan and motor doesn't stop turning.	Short circuit of the harness between the blower fan and motor and the blower switch	Repair the harness	–
	Blower switch is defective	Replace the blower switch	55-21, 23
When the A/C is operating condenser fan does not turn.	Condenser fan motor is defective	Replace the condenser fan motor	55-33, 34
	Condenser fan relay is defective	Replace the condenser fan relay	55-16

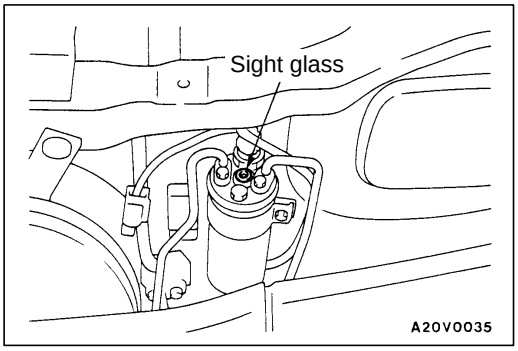

ON-VEHICLE SERVICE

55200840096

SIGHT GLASS REFRIGERANT LEVEL TEST

The sight glass is a refrigerant level indicator. To check the refrigerant level, clean the sight glass and start the vehicle engine. Push the A/C button to operate the compressor, place the blower switch to high and move the temperature control lever to max cool. After operating for a few minutes in this manner, check the sight glass.

1. If the sight glass is clear, the magnetic clutch is engaged, the compressor discharge line is warm and the compressor inlet line is cool; the system has a full charge.
2. If the sight glass is clear, the magnetic clutch is engaged and there is no significant temperature difference between compressor inlet and discharge lines; the system has lost some refrigerant.
3. If the sight glass shows foam or bubbles, the system could be low on charge. The system has to be recharged with refrigerant.

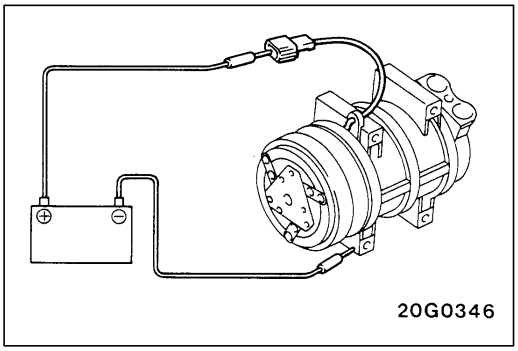

MAGNETIC CLUTCH TEST

55200850099

1. Disconnect the connector (1P) to the magnetic clutch.
2. Connect battery (+) voltage directly to the connector for the magnetic clutch.
3. If the magnetic clutch is normal, there will be “click”. If the pulley and armature do not make contact (‘click’), there is a malfunction.

RECEIVER DRIER TEST

55200860078

Operate the unit and check the piping temperature by touching the receiver drier outlet and inlet.
If there is a difference in the temperatures, the receiver drier is restricted.
Replace the receiver drier.

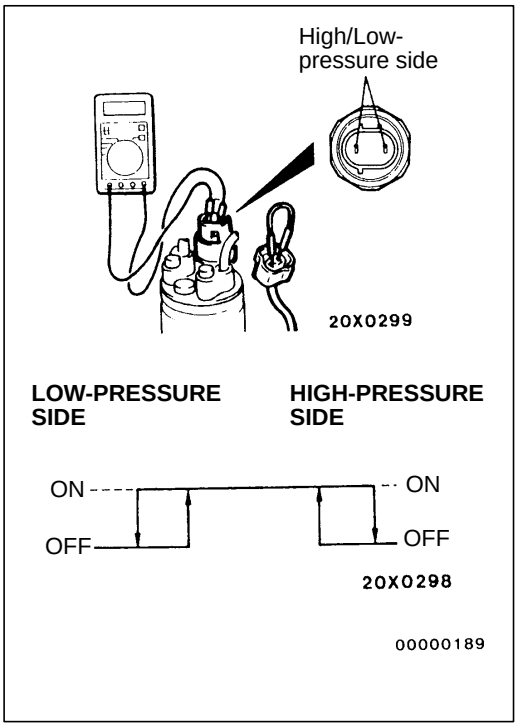

DUAL PRESSURE SWITCH CHECK

55201040129

1. Remove the dual pressure switch connector and connect the high/low-pressure side terminals located on the harness side as shown in the illustration.
2. Install a gauge manifold to the high-pressure side service valve of the refrigerant line. (Refer to Performance Test.)
3. When the high/low-pressure sides of the dual pressure switch are at operation pressure (ON) and there is continuity between the respective terminals, then the condition is normal. If there is no continuity, replace the switch.

Unit: kPa

Items	Switch position	
	OFF → ON	ON → OFF
Low-pressure side	186	177
High-pressure side	2,059	2,648

COMPRESSOR DRIVE BELT ADJUSTMENT

55200100101

Refer to GROUP 11 – On-vehicle Service.

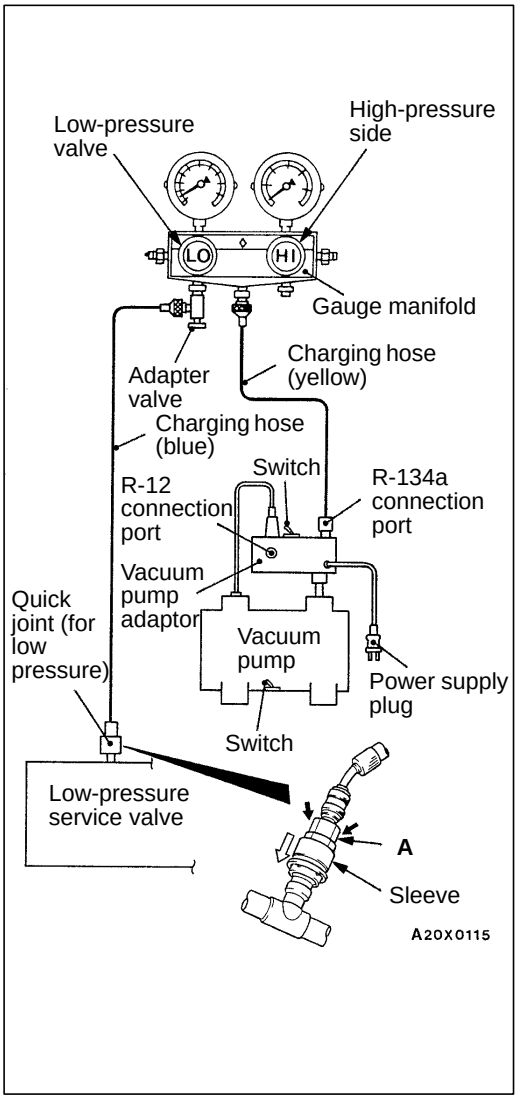

CHARGING

55200120121

1. With the handles turned back all the way (valve closed), install the adaptor valve to the low-pressure side of the gauge manifold.
2. Connect the charging hose (blue) to the adaptor valve.
3. Connect the quick joint (for low-pressure) to the charging hose (blue).
4. Connect the quick joint (for low-pressure) to the low-pressure service valve.

   NOTE
   The low-pressure service valve should be connected to the suction hose.

   Caution
   1. Use tools that are suited to R-134a.
   2. To install the quick joint, press section "A" firmly against the service valve until a click is heard. When connecting, run your hand along the hose while pressing to ensure that there are no bends in the hose.

5. Close the high and low-pressure valves of the gauge manifold.
6. Install the vacuum pump adaptor to the vacuum pump.
7. Connect the vacuum pump plug to the vacuum pump adaptor.
8. Connect the charging hose (yellow) to the R-134a connection port of the vacuum pump adaptor.
9. Tighten the adaptor valve handle (valve open).
10. Open the low-pressure valve of the gauge manifold.
11. Turn the power switch of the vacuum pump to the ON position.

    NOTE
    Even if the vacuum pump power switch is turned ON, the vacuum pump will not operate because of the power supply connection in step (7).

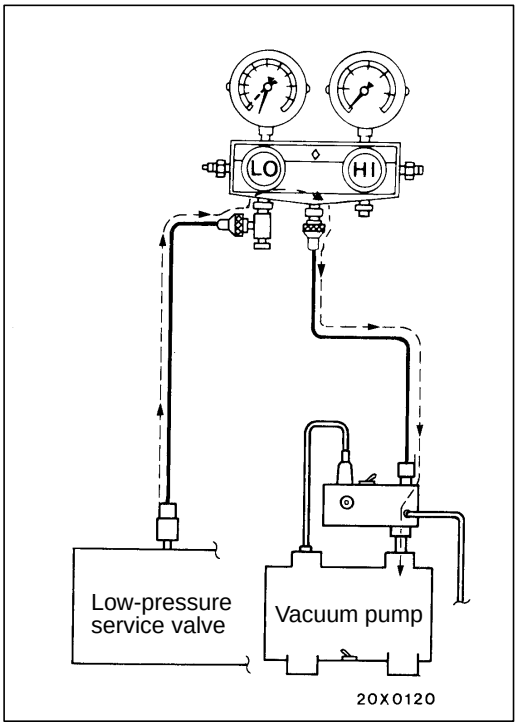

12. Turn the vacuum pump adaptor switch to the R-134a side to start the vacuum pump.

    Caution
    Do not operate the compressor for evacuation.

13. Evacuate to a vacuum reading of 100 kPa or higher (takes approx. 10 minutes).
14. Turn the vacuum pump adaptor switch OFF and allow to stand it for 5 minutes.

    Caution
    Do not operate the compressor in the vacuum condition; damage may occur.

15. Carry out a leak test. (Good if the negative pressure does not drop.)

    Caution
    If the negative pressure drops, increase the tightness of the connections, and then repeat the evacuation procedure from step (12).

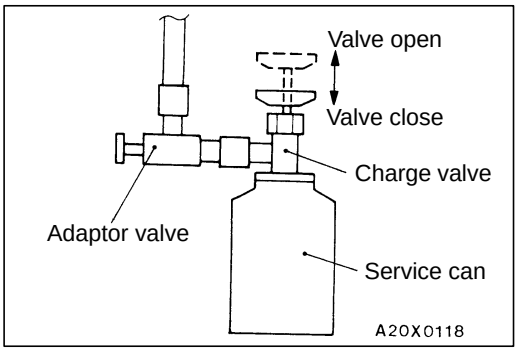

16. With the handle turned back all the way (valve open), install the charging valve to the service van.
17. Turn the handle of the adaptor valve back all the way (valve closed), remove it from the gauge manifold and install the service can.
18. Tighten the handle of the charging valve (valve closed) to puncture the service can.

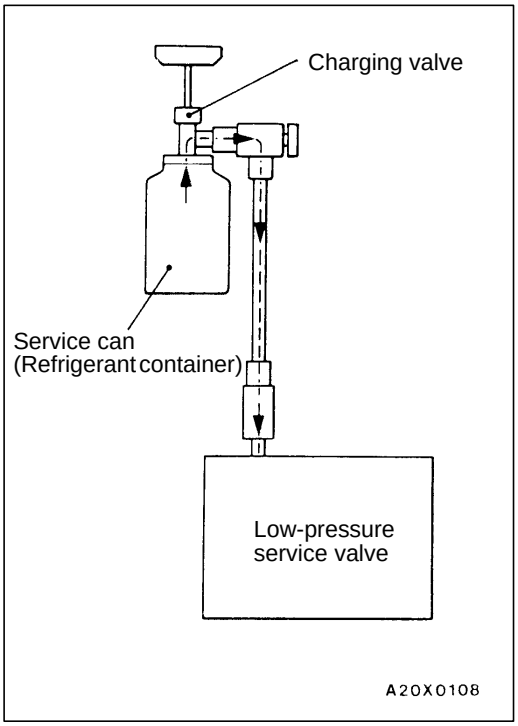

19. Turn the handle of the charging valve back (valve open) and tighten the handle of the adaptor valve (valve open) to charge the system with refrigerant.

    Caution
    If the service can is inverted, liquid refrigerant may be drawn into the compressor damaging it by liquid compression. Keep the service can upright to ensure that refrigerant is charged in gas state.

20. If the refrigerant is not drawn in, turn the handle of the adaptor valve back all the way (valve closed).
21. Check for gas leaks using a leak detector.
    If a gas leak is detected, re-tighten the connections, and then repeat the charging procedure from evacuation in step (12).

    Caution
    The leak detector for R-134a should be used.

22. Start the engine.
23. Operate the A/C and set to the lowest temperature (MAX. COOL).
24. Fix the engine speed at 1,500 r/min.
25. Tighten the handle of the adaptor valve (valve open) to charge the required volume of refrigerant.

    Caution
    If the service can is inverted, liquid refrigerant may be drawn into the compressor damaging it by liquid compression. Keep the service can upright to ensure that refrigerant is charged in gas state.

26. After charging with refrigerant, turn the handle of the adaptor valve back all the way (valve closed).
27. Tighten the charging valve handle (valve closed).
    Remove the quick joint (for low-pressure) from the low-pressure service valve.

    NOTE
    If the service can is not emptied completely, keep the handles of the charging valve and adaptor valve closed for the next charging.

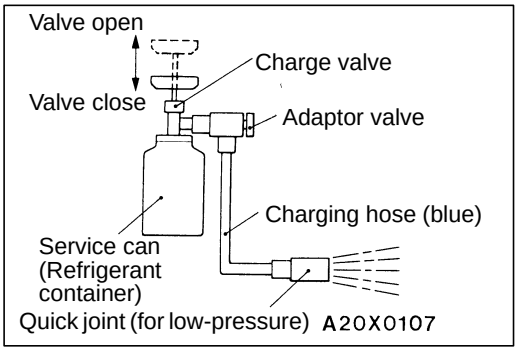

CORRECTING LOW REFRIGERANT LEVEL IN CASE THE SERVICE CAN IS USED.

1. Install the charge valve with the handle turned all the way back (valve open) to the service can.
2. Install the adaptor valve with the handle turned all the way back (valve close) to the charging valve.
3. Connect the charging hose (blue) to the adaptor valve.
4. Connect the charging hose (blue) to the quick joint (for low-pressure).
5. Tighten the handle of the charge valve (valve close), and pierce the service can.
6. Turn the handle of the adaptor valve to bleed the air.

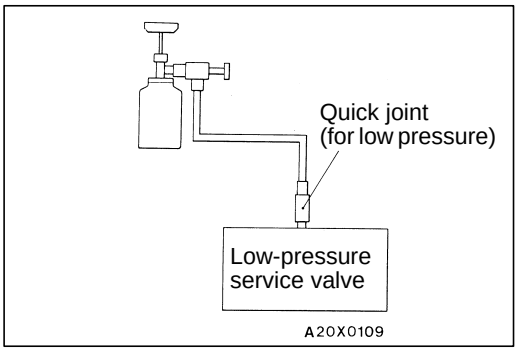

7. Install the quick joint (for low-pressure) to the low-pressure service valve.

   NOTE
   The low-pressure service valve should be connected to the suction hose.

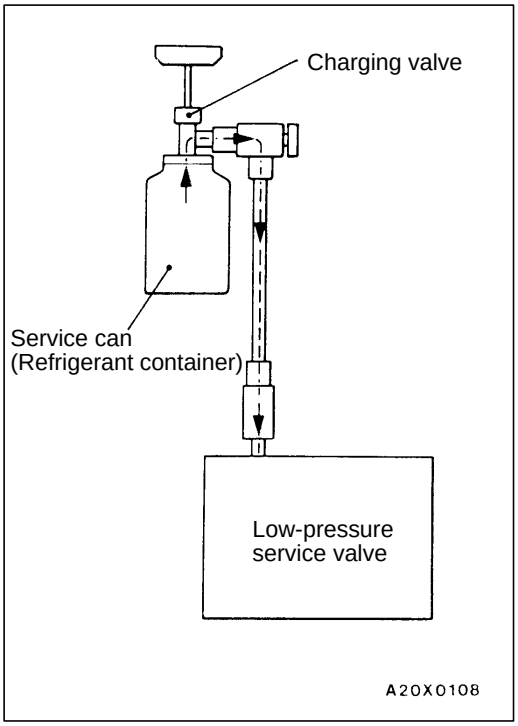

8. Start the engine.
9. Operate the air conditioner and set at the lowest temperature (MAX. COOL).
10. Fix the engine speed at 1,500 r/min.
11. Tighten the handle of the adaptor valve (valve open), and replenish refrigerant while checking the quantity through the sight glass.

    Caution
    If the service can is inverted, liquid refrigerant may be draw into the compressor damaging it by liquid compression. Keep the service can upright to ensure that refrigerant is changed in gas state.

12. After replenishing is completed, turn the handle of the adaptor valve all the way back (valve close), and remove the quick joint.

    NOTE
    When there is remainder of refrigerant in the service can, keep it for next use with the charge value and the valve of the adaptor valve being closed.

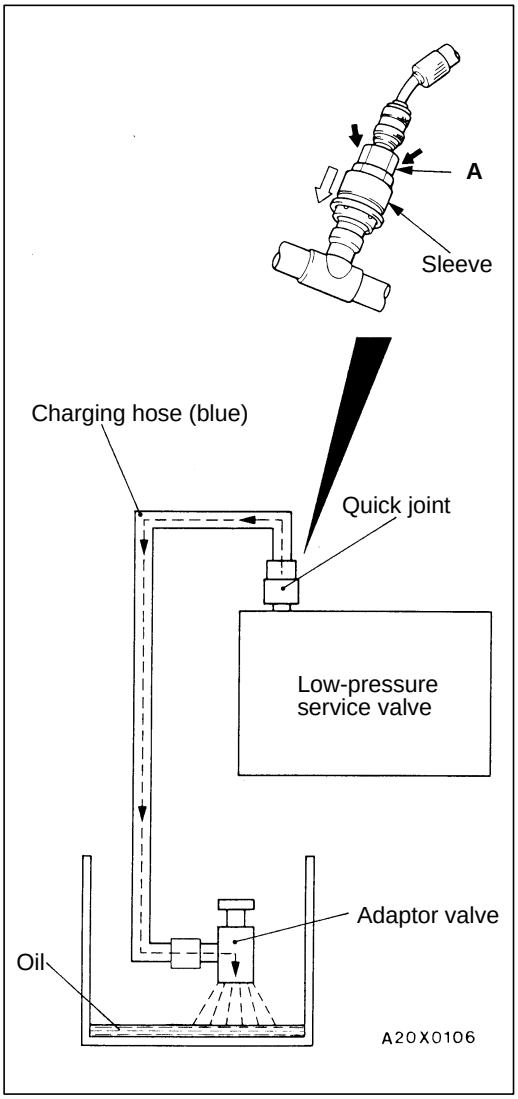

DISCHARGING SYSTEM

1. Run the engine at an engine speed of 1,200–1,500 r/min for approximately 5 minutes with the A/C operating to return to the oil.

   NOTE
   Returning the oil will be more effective if it is done while driving.

2. Stop the engine.
3. Connect the charging hose (blue) to the adaptor valve with its handle turned back all the way (valve closed).
4. Connect the quick joint to the charging hose (blue).
5. Install the quick joint to the low-pressure service valve.

   NOTE
   The low-pressure service valve should be connected to the suction hose.

   Caution
   To connect the quick joint, press section "A" firmly against the service valve until a click is heard.
   When connecting, run your hand along the hose while pressing to ensure that there are no bends in the hose.

6. Place the adaptor valve inside the container and discharge the refrigerant by opening the handle gradually so that oil does not gush out.

   NOTE
   Any oil remaining in the container should be returned to the A/C system.

REFILLING OF OIL IN THE A/C SYSTEM

Too little oil will provide inadequate compressor lubrication and cause a compressor failure. Too much oil will increase discharge air temperature.
When a compressor is installed at the factory, it contains 180 mℓ of refrigerant oil. While the A/C system is in operation, the oil is carried through the entire system by the refrigerant. Some of this oil will be trapped and retained in various parts of the system.
When the following system components are changed, it is necessary to add oil to the system to replace the oil being removed with the component.

Compressor oil: ZXL100PG

Quantity
Condenser: 30 mℓ
Evaporator: 50 mℓ
Suction hose: 10 mℓ
Receiver: 10 mℓ

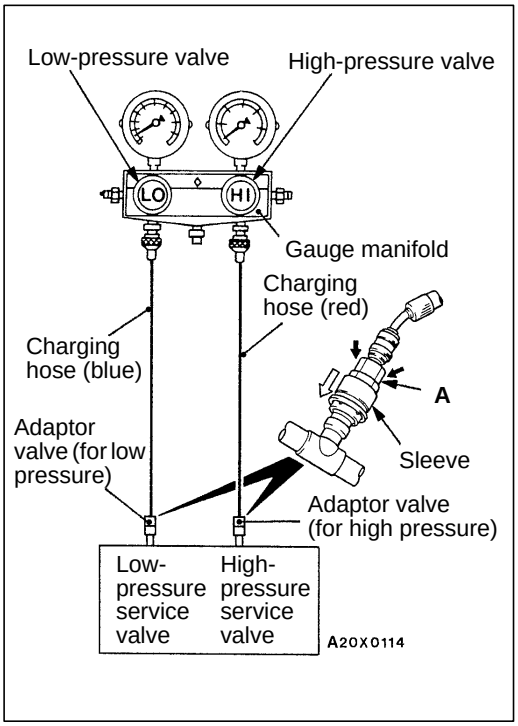

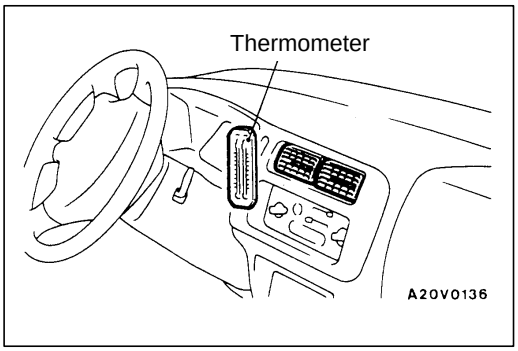

PERFORMANCE TEST

55200140127

1. The vehicles to be tested should be in a place that is not in direct sunlight.
2. Close the high and low-pressure valve of the gauge manifold.
3. Connect the charging hose (blue) to the low-pressure valve and connect the charging hose (red) to the high-pressure valve of the gauge manifold.
4. Install the quick joint (for low-pressure) to the charging hose (blue), and connect the quick joint (for high-pressure) to the charging hose (red).
5. Connect the quick joint (for low-pressure) to the low-pressure service valve and connect the quick joint (for high-pressure) to the high-pressure service valve.

   NOTE
   The high-pressure service valve is on discharge hose and the low-pressure service valve is on the suction hose.

   Caution
   To connect the quick joint, press section "A" firmly against the service valve until a click is heard.
   When connecting, run your hand along the hose while pressing to ensure that there are no bends in the hose.
6. Start the engine.
7. Set the controls to the A/C as follows:
   A/C switch: A/C – ON position
   Mode selection: Face position
   Temperature control: Max. cooling position
   Air selection: Recirculation position
   Blower switch: HI (Fast) position
8. Adjust engine speed to 1,000 r/min with A/C clutch engaged.
9. Engine should be warmed up with doors and windows closed.
10. Insert a thermometer in the left center A/C outlet and operate the engine for 20 minutes.
11. Note the discharge air temperature.

    NOTE
    If the clutch cycles, take the reading before the clutch disengages.

Performance Temperature Chart

Garage ambient temperature °C	20	25	35	40
Discharge air temperature °C	3.6 – 9.5	4.0 – 11.0	7.0 – 9.0	11.0 – 13.8
Compressor high pressure kPa	1,120	1,236	1,814	2,050
Compressor low pressure kPa	115	131	152	175

REFRIGERANT LEAK REPAIR 55200150083

LOST CHARGE

If the system has lost all charge due to a leak:
1. Evacuate the system. (See procedure.)
2. Charge the system with approximately one pound of refrigerant.
3. Check for leaks.
4. Discharge the system.
5. Repair leaks.
6. Replace receiver drier.

   Caution
   Replacement filter-drier units must be sealed while in storage. The drier used in these units will saturate water quickly upon exposure to the atmosphere. When installing a drier, have all tools and supplies ready for quick reassembly to avoid keeping the system open any longer than necessary.

7. Evacuate and charge system.

LOW CHARGE

If the system has not lost all of its refrigerant charge; locate and repair all leaks. If it is necessary to increase the system pressure to find the leak (because of an especially low charge) add refrigerant. If it is possible to repair the leak without discharging the refrigerant system, use the procedure for correcting low refrigerant level.

HANDLING TUBING AND FITTINGS

Kinks in the refrigerant tubing or sharp bends in the refrigerant hose lines will greatly reduce the capacity of the entire system. High pressures are produced in the system when it is operating. Extreme care must be exercised to make sure that all connections are pressure tight. Dirt and moisture can enter the system when it is opened for repair or replacement of lines or components. The following precautions must be observed. The system must be completely discharged before opening any fitting of connection in the refrigeration system. Open fittings with caution even after the system has been discharged. If any pressure is noticed as a fitting is loosened, allow trapped pressure to bleed off very slowly.
Never attempt to rebend formed lines to fit. Use the correct line for the installation you are servicing. A good rule for the flexible hose lines is keep the radius of all bends at least 10 times the diameter of the hose.
Sharper bends will reduce the flow of refrigerant. The flexible hose lines should be routed so that they are at least 80 mm from the exhaust manifold. It is good practice to inspect all flexible hose lines at least once a year to make sure they are in good condition and properly routed.
Unified plumbing connections with O-rings, these O-rings are not reusable.

COMPRESSOR NOISE 55200870095

You must first know the conditions when the noise occurs. These conditions are: weather, vehicle speed, in gear or neutral, engine temperature or any other special conditions.
Noises that develop during A/C operation can often be misleading. For example: what sounds like a failed front bearing or connecting rod, may be caused by loose bolts, nuts, mounting brackets, or a loose clutch assembly. Verify accessory drive belt tension (power steering or alternator).
Improper accessory drive belt tension can cause a misleading noise when the compressor is engaged and little or no noise when the compressor is disengaged.
Drive belts are speed-sensitive. That is, at different engine speeds, and depending upon belt tension, belts can develop unusual noises that are often mistaken for mechanical problems within the compressor.

ADJUSTMENT

1. Select a quiet area for testing. Duplicate conditions as much as possible. Switch compressor on and off several times to clearly identify compressor noise. To duplicate high ambient conditions (high head pressure), restrict air flow through condenser. Install manifold gauge set to make sure discharge pressure doesn't exceed 2,070 kPa.
2. Tighten all compressor mounting bolts, clutch mounting bolt, and compressor drive belt. Check to assure clutch coil is tight (no rotation or wobble).
3. Check refrigerant hoses for rubbing or interference that can cause unusual noises.
4. Check refrigerant charge. (See "Charging System".)
5. Recheck compressor noise as in Step 1.
6. If noise still exists, loosen compressor mounting bolts and retorque. Repeat Step 1.
7. If noise continues, replace compressor and repeat Step 1.

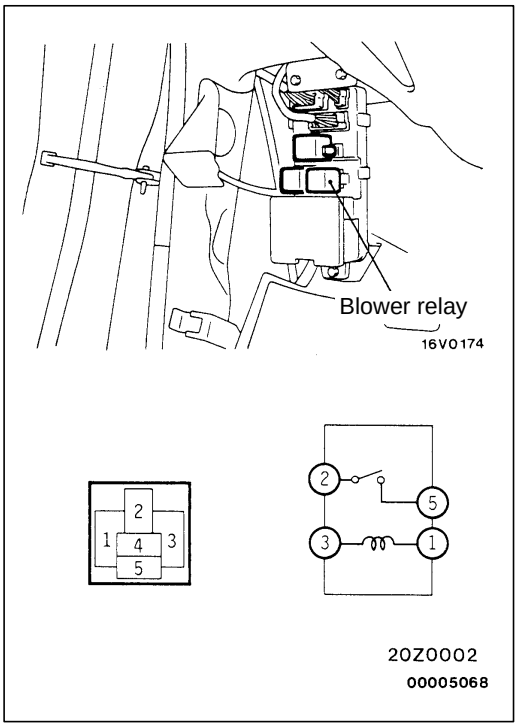

POWER RELAY CONTINUITY CHECK 55200880142

BLOWER RELAY

Battery voltage	Terminal No.			
	1	3	2	5
Power is not supplied	○	○		
Power is supplied	⊕	⊖	○	○

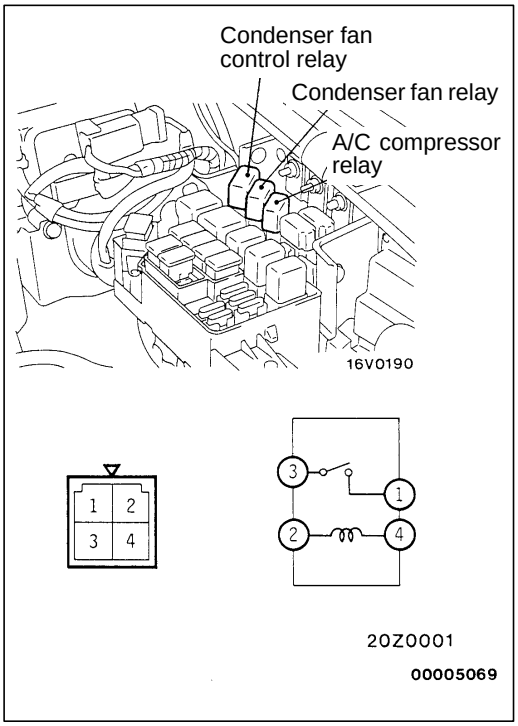

A/C COMPRESSOR RELAY, CONDENSER FAN RELAY, CONDENSER FAN CONTROL RELAY

Battery voltage	Terminal No.			
	2	4	1	3
Power is not supplied	○	○		
Power is supplied	⊕	⊖	○	○

IDLE-UP OPERATION CHECK

55200160147

<Petrol-powered vehicles>

1. Before inspection and adjustment, set vehicle in the following condition:
   - Engine coolant temperature: 80–90°C
   - Lights, electric cooling fan and accessories: Set to OFF
   - Transmission: Neutral (N or P for vehicles with A/T)
   - Steering wheel: Straightforward
2. Check whether or not the idling speed is the standard value.

   Standard value: 750 ± 100 r/min
3. When the A/C is running after turning the A/C switch to ON, and the blower switch to the MH or HI position, check to be sure that the idle speed is at the standard value.

   Standard value: 900 ± 50 r/min

   NOTE
   There is no necessity to make an adjustment, because the idling speed is automatically adjusted by the ISC system. If, however, there occurs a deviation from the standard value for some reason, check the ISC system. (Refer to GROUP 13A – On-vehicle Service.)

<Diesel-powered vehicles>

1. Before inspection and adjustment, set vehicle in the following condition:
   - Engine coolant temperature: 80 – 90 °C
   - Lights, electric cooling fan and accessories: Set to OFF
   - Transmission: Neutral (N or P for vehicles with A/T)
   - Steering wheel: Straight forward
2. Check whether or not the idling speed is the standard value.

   Standard value: 750 ± 100 r/min
3. If there is a deviation of the idling speed from the standard value, adjust the idling speed. (Refer to GROUP 11 – On-vehicle Service.)
4. Check to be sure that the idling speed becomes the standard value when the A/C switch is switched ON and the A/C is activated.

   Standard value: 900 ± 50 r/min

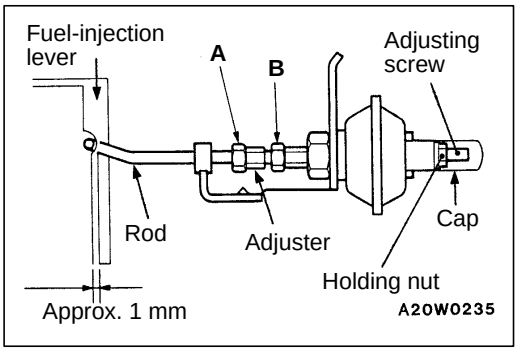

5. If there is a deviation of the idling speed from the standard value, adjust the idling speed by the following the procedures.
   (1) Loosen nuts (A) and (B).
   (2) Adjust, by using the adjuster, so that the end of the vacuum actuator's rod is at the position indicated in the illustration.
   (3) Securely tighten nuts (A) and (B).
   (4) After activating the vacuum actuator, check to be sure that the rod and the lever do not contact when the activation is cancelled.
   (5) Remove the cap and loosen the nut for holding.
   (6) Adjust to the specified r/min by turning the adjusting screw.
   (7) Securely tighten the holding nut, and then attach the cap.

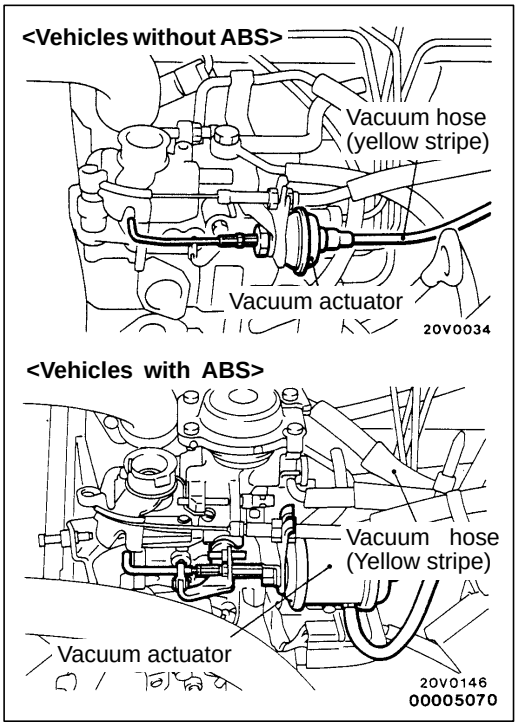

VACUUM ACTUATOR CHECK <Diesel-powered Vehicles>

55200890039

1. Pull off the vacuum hose (yellow stripe) connected to the vacuum actuator.

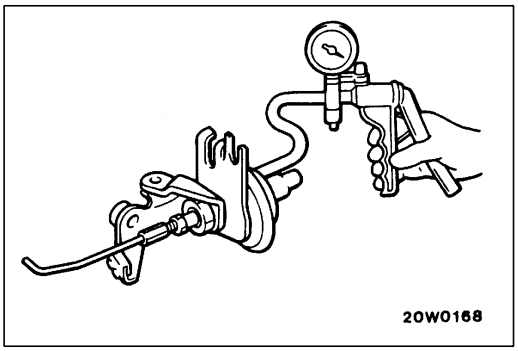

2. Connect a manual vacuum pump to the nipple of the vacuum actuator.
3. Check to be sure that the vacuum actuator rod starts to contact when 8 kPa of negative pressure is applied, and that the rod contracts to its full stroke when 12 kPa of negative pressure is applied.
4. Disconnect the manual vacuum pump from the vacuum actuator, and connect the vacuum hose (yellow stripe) to the vacuum actuator.
5. Start the engine and let it run at idle. Then cover the end of the vacuum hose (yellow stripe) with a finger and check the negative pressure when the A/C switch is turned on and off.

A/C switch	Negative pressure at hose end
OFF	No
ON	Yes

Caution
Be careful, when connecting the vacuum hose not to damage it.

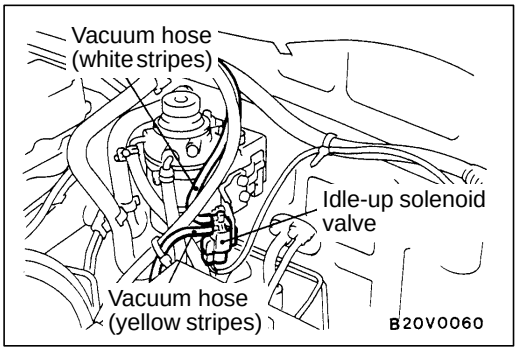

IDLE-UP SOLENOID VALVE CHECK <Diesel-powered Vehicles>

55201120014

1. Disconnect the vacuum hoses (white stripes, yellow stripes) from the solenoid valve.
2. Disconnect the harness connector.

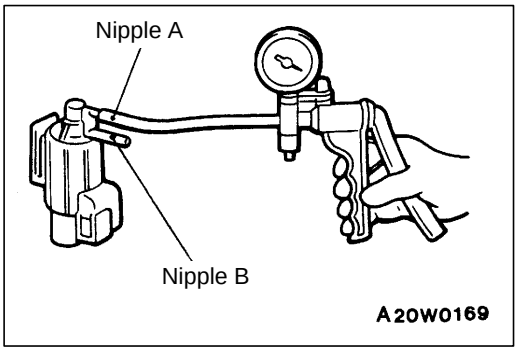

3. Connect a manual vacuum pump to the nipple A.

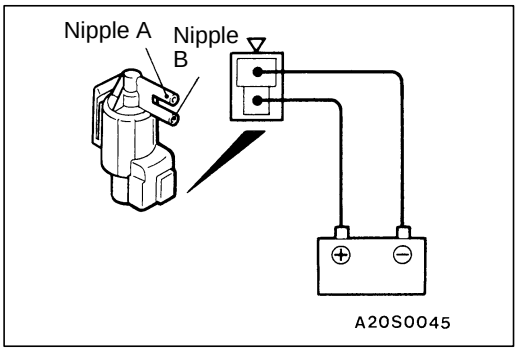

4. Check air-tightness by applying a vacuum with voltage applied directly from the battery to the solenoid valve terminal and without applying voltage.

Battery voltage	Nipple B	Vacuum condition
Applied	Open	Vacuum leaks from nipple B
	Blocked with finger *1	Vacuum is maintained
Not applied	Open	Vacuum is maintained
	Blocked with finger *2	

NOTE
In case of mark *1, a vacuum can be felt but in case of mark *2, a vacuum can not be felt.

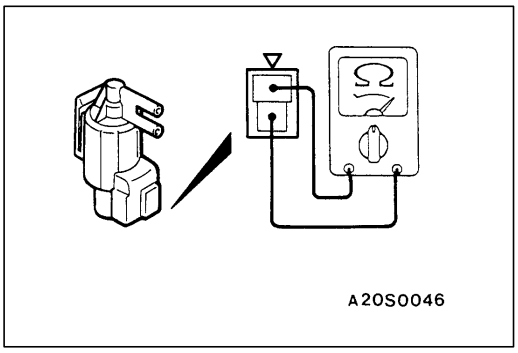

5. Measure the resistance of the solenoid valve.

   Standard value: Approx. 40 Ω
6. When disconnecting the vacuum hose, always make a mark so that the hose can be reconnected at original position.

LEVER POSITION SWITCH CHECK <Diesel-powered Vehicles (A/T)>

55200800018

1. Before inspection, set the vehicle to the following condition.
   - Ignition switch: ON (Do not start the engine)
   - Blower switch: ON (LO, HL, HM or HI position)
   - A/C switch: ON
2. When the vehicle is at full acceleration (accelerator pedal depression amount is approximately 90% ± 7%), check that the magnetic clutch turns OFF for a period of approximately 7 seconds.
3. If there is a malfunction, adjust the installation position of the lever position switch by the following procedure.
   (1) Check that the idle speed is at the standard value, and adjust it if necessary.

   Standard value: 750 ± 100 r/min

   (2) Adjust the accelerator cable.
   (3) Depress the accelerator pedal fully to fully open the throttle lever of the fuel injection pump.

   Caution
   When fully opening the throttle lever of the fuel injection pump, always open it by the accelerator pedal, not from the injection pump side.

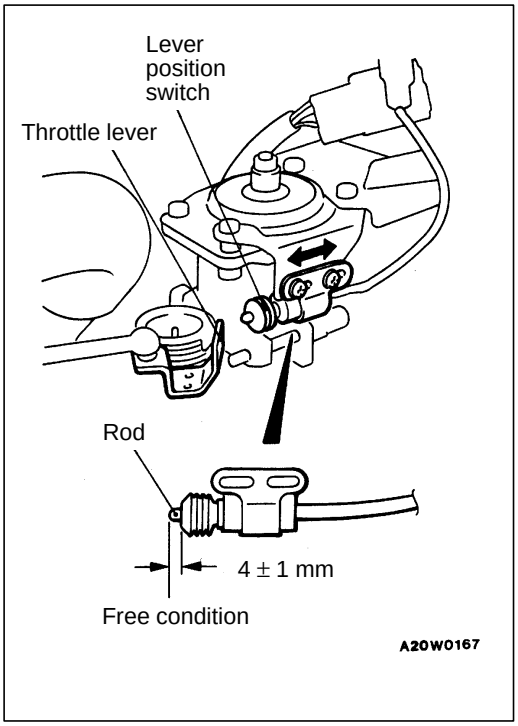

   (4) Adjust the stroke of the lever position switch rod by moving the lever position switch so that the rod is pushed down 4 ± 1 mm from the free position.

HEATER CONTROL ASSEMBLY AND A/C SWITCH

55200240049

REMOVAL AND INSTALLATION

Pre-removal and Post-installation Operation
- Front Floor Console Assembly Removal and Installation (Refer to GROUP 52A.)
- Driver Side Under Cover, Meter Bezel Assembly, Glove Box Assembly, Centre Under Cover Removal and Installation (Refer to GROUP 52A – Instrument Panel.)

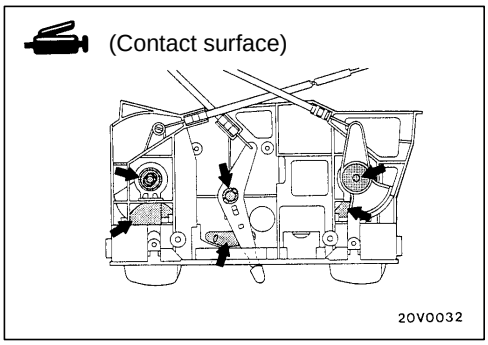

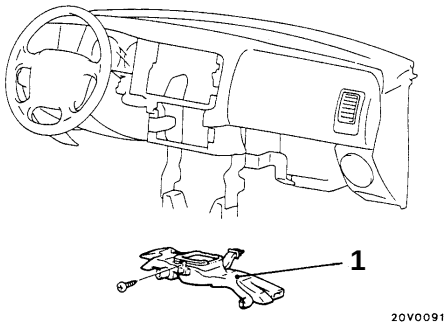

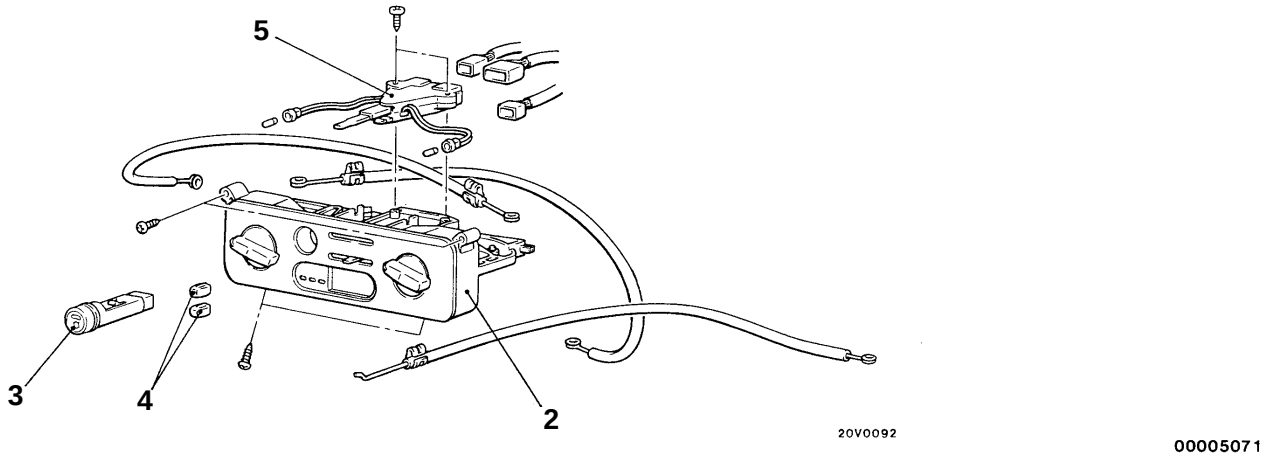

Removal steps

1. Foot duct
◀A▶ ▶A◀ 2. Heater control assembly
3. A/C switch
4. Knob
5. Blower switch

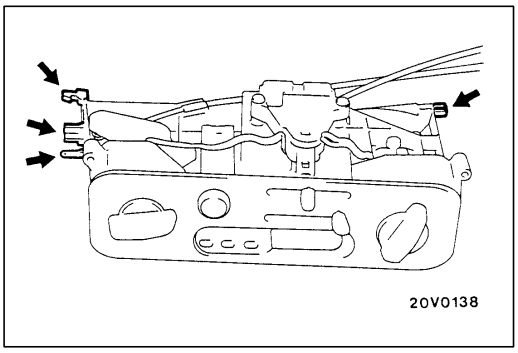

REMOVAL SERVICE POINT

◀A▶ HEATER CONTROL ASSEMBLY REMOVAL

1. Remove the heater control assembly mounting screws.
2. Bend the bosses, which are inserted into the centre reinforcement.
3. Remove the heater control assembly.

   NOTE
   This service point is first removal of heater control panel.

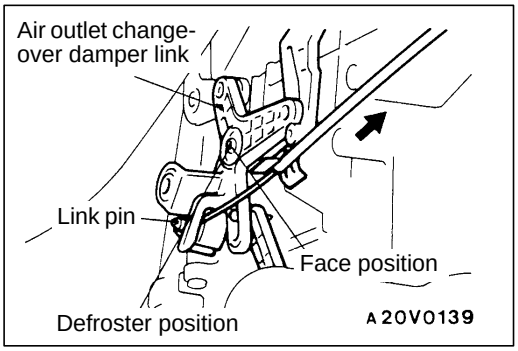

INSTALLATION SERVICE POINT

▶A◀ HEATER CONTROL ASSEMBLY INSTALLATION

1. Follow the steps below to install the air outlet changeover damper link cable.
   (1) Set the air outlet changeover control knob on the heater control assembly to the defroster position.
   (2) Set the air outlet changeover damper link of the heater unit to the defroster position as shown in the illustration, and then connect the cable to the link pin.
   (3) Push the outer cable in the direction of the arrow so that there is no looseness, and then secure it with clip.

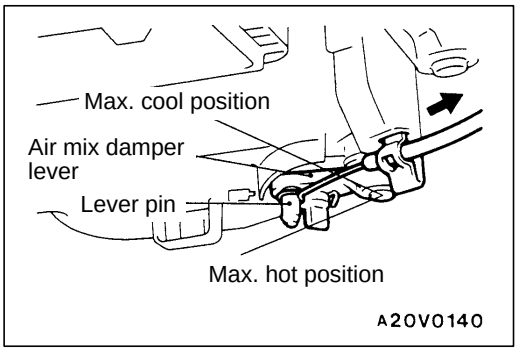

2. Follow the steps below to instal the air mix damper lever cable.
   (1) Set the temperature control knob on the heater control assembly to the max. hot position.
   (2) Set the air mix damper lever of the heater unit to the max. hot position as shown in the illustration, and then connect the cable to the lever pin.
   (3) Push the outer cable in the direction of the arrow so that there is no looseness, and then secure it with clip.

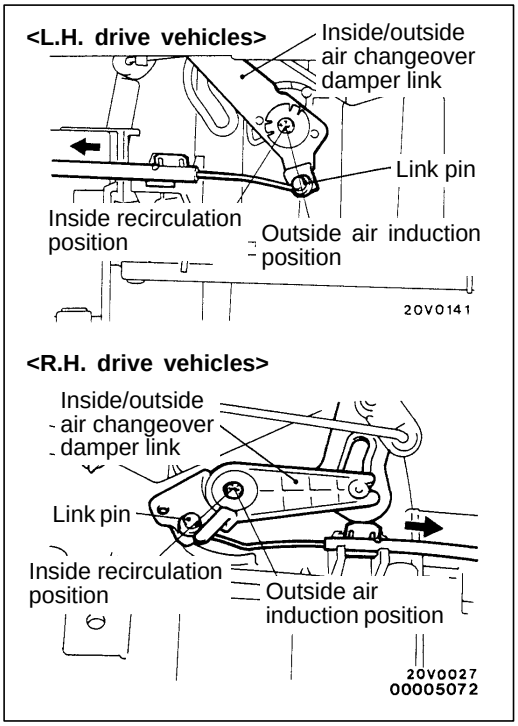

3. Follow the steps below to install the inside/outside air changeover damper link cable.
   (1) Set the inside/outside air changeover control knob on the heater control assembly to the inside recirculation position.
   (2) Set the inside/outside air changeover damper link of the blower assembly to the inside recirculation position as shown in the illustration, and then connect the cable to the link pin.
   (3) Push the outer cable in the direction of the arrow so that there is no looseness, and then secure it with clip.
4. After installation, ensure that each damper operates smoothly by operating the heater control assembly knob.

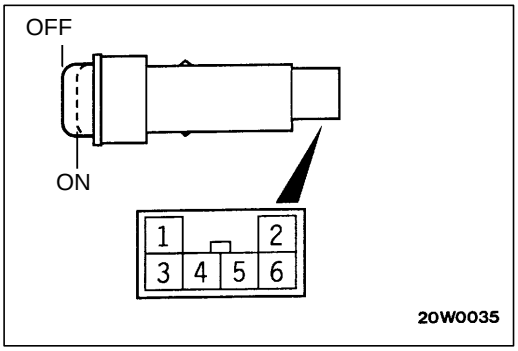

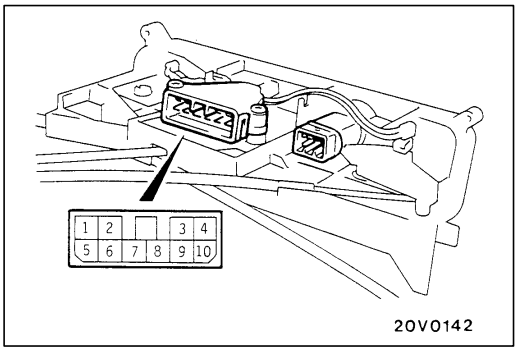

INSPECTION

55200220074

A/C SWITCH CONTINUITY CHECK

Switch position	Terminal No.						
	1	4	IND	5	3	ILL	6
OFF		○	○	○	○	○	○
ON	○	○	○	○	○	○	○

BLOWER SWITCH CONTINUITY CHECK

55200900060

Lever position	Terminal No.									
	1	ILL	5	2	3	6	7	8	9	10
OFF	○	○	○							
LO	○	○	○	○	○	○	○			
ML	○	○	○	○	○	○		○		
MH	○	○	○	○	○	○			○	
HI	○	○	○	○	○	○				○

HEATER UNIT AND HEATER CORE

55100190136

REMOVAL AND INSTALLATION

Pre-removal and Post-installation Operation
- Refrigerant Discharging and Charging <Vehicles with A/C> (Refer to P. 55-8.)
- Engine Coolant Draining and Refilling (Refer to GROUP 14 – On-vehicle Service.)
- Instrument Panel Removal and Installation (Refer to GROUP 52A.)
- Joint Duct Removal and Installation <Vehicles without A/C> (Refer to P.55-26.)

Caution: SRS
When removing and installing the heater unit from vehicles equipped with SRS, do not let it bump against the SRS diagnostic unit or the components.

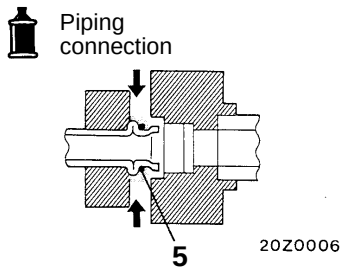

Compressor oil: ZXL 100PG

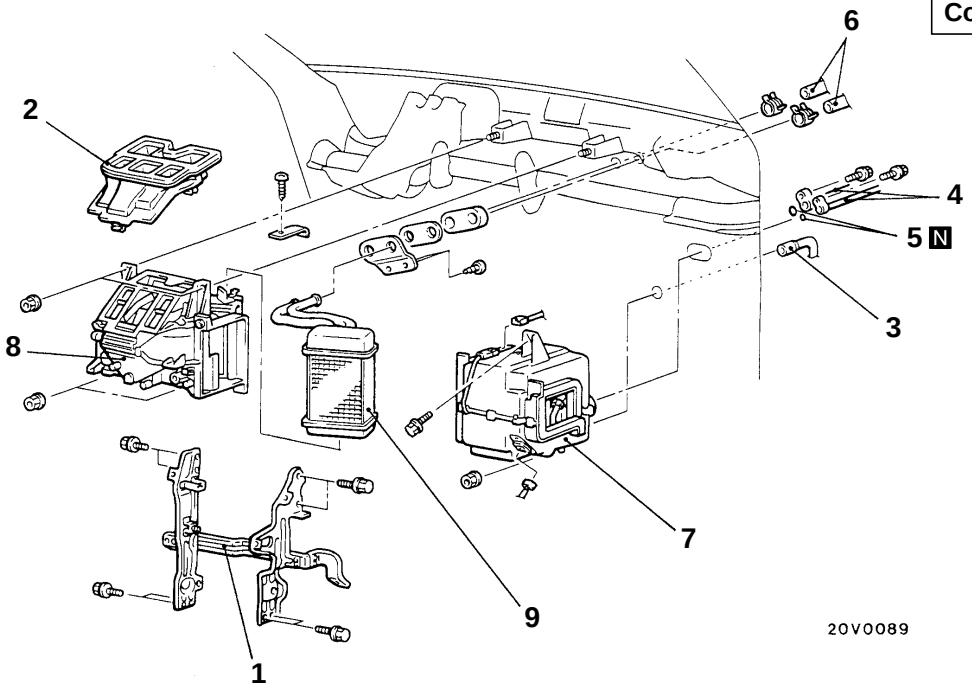

00005073

Removal steps

1. Center reinforcement
2. Center ventilation duct
3. Drain hose <Vehicles with A/C>
4. ◀A▶ Suction pipe or hose and discharge pipe connection <Vehicles with A/C>
5. O-ring
6. Heater hose connection
7. ▶A◀ Evaporator <Vehicles with A/C>
8. Heater unit
9. Heater core

REMOVAL SERVICE POINTS

◀A▶ SUCTION PIPE OR HOSE, DISCHARGE PIPE DISCONNECTION

Plug the disconnected hose and the evaporator nipple not to let foreign matter get into them.

Caution
Seal the hoses completely, otherwise the compressor oil and receiver will absorb water vapor easily.

INSTALLATION SERVICE POINT

▶A◀ EVAPORATOR INSTALLATION

When replacing the evaporator, refill with a specified amount of compressor oil and install it (to the vehicle).

Compressor oil: ZXL 100PG
Quantity: 50 mℓ

BLOWER ASSEMBLY AND RESISTOR

55100280147

REMOVAL AND INSTALLATION

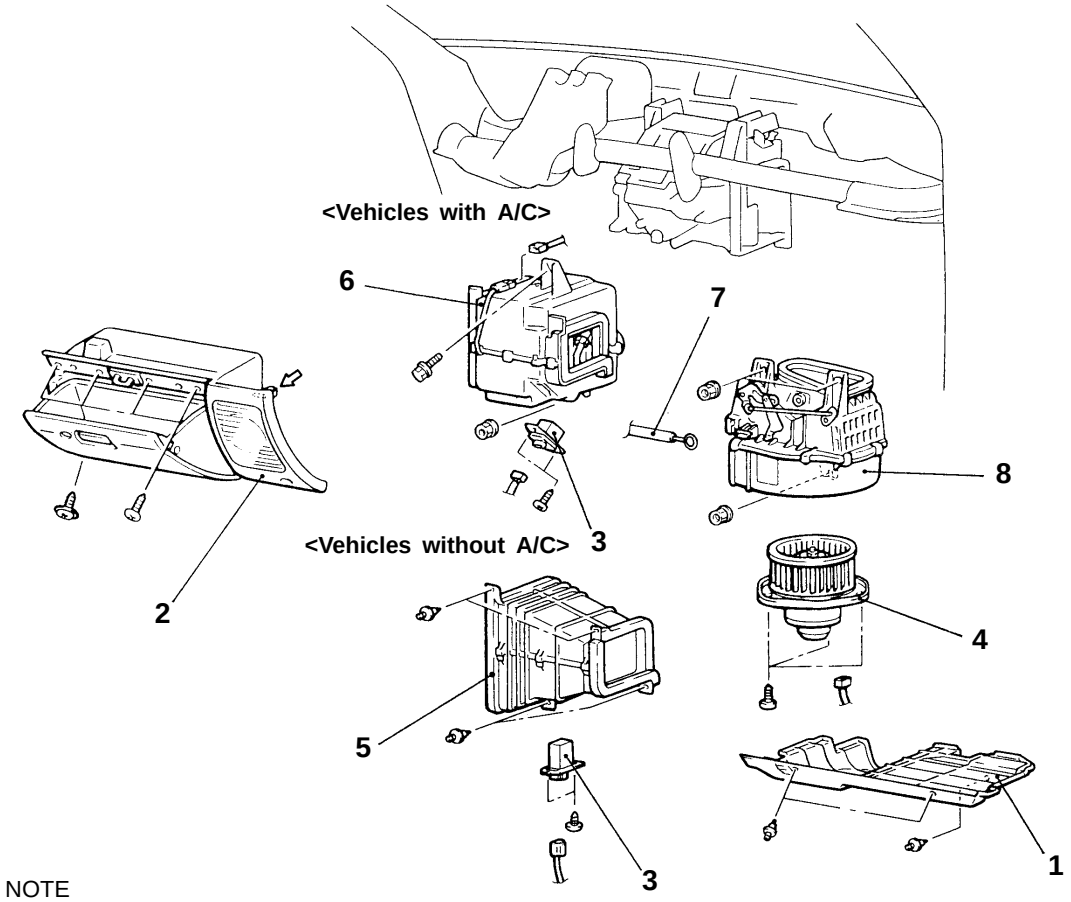

NOTE
⇦ : metal clip position

Resistor, blower fan and motor removal steps

1. Under cover
2. Glove box assembly
3. Resistor
4. Blower fan and motor

Blower case removal steps

- Instrument panel (Refer to GROUP 52A.)

5. Joint duct <Vehicles without A/C>
6. Evaporator <Vehicles with A/C> (Refer to P. 55-28.)

▶A◀ 7. Inside/outside air changeover damper cable connection

8. Blower case assembly

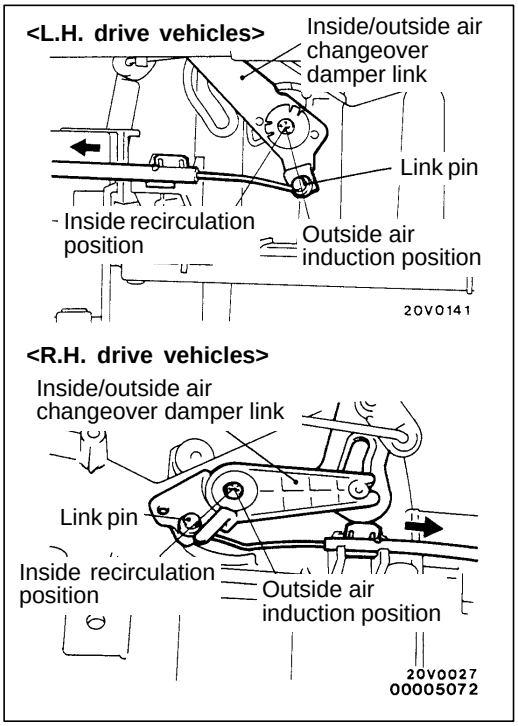

INSTALLATION SERVICE POINT

▶A◀ INSIDE/OUTSIDE AIR CHANGEOVER DAMPER CABLE INSTALLATION

1. Set the inside/outside air changeover control knob on the heater control assembly to the inside recirculation position.
2. Set the inside/outside air changeover damper link of the blower assembly to the inside recirculation position as shown in the illustration, and then connect the cable to the link pin.
3. Push the outer cable in the direction of the arrow so that there is no looseness, and then secure it with clip.

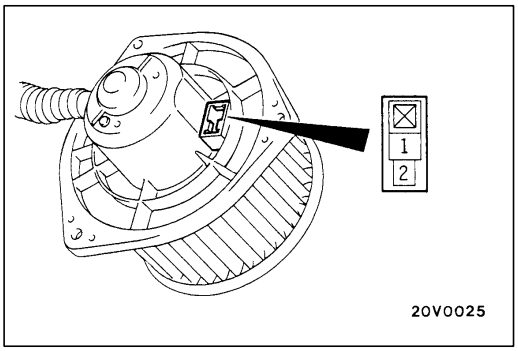

INSPECTION

55100290072

BLOWER FAN AND MOTOR CHECK

When battery voltage is applied between the terminals, check that the motor operates. Also, check that there is no abnormal noise.

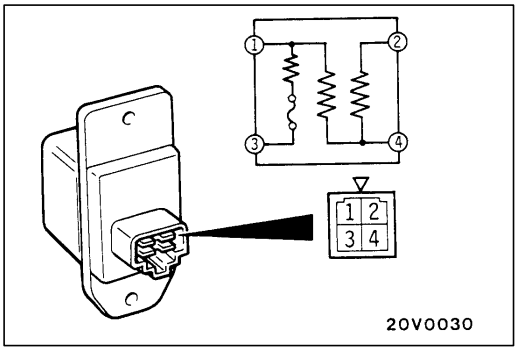

RESISTOR CHECK

Use a circuit tester to measure the resistance between the terminals as indicated below. Check that the measured value is at the standard value.

Standard value:
<L.H. drive vehicles>

Measurement terminal	Standard value Ω
Between terminals 3 and 2 (LO)	2.21
Between terminals 3 and 4 (ML)	0.97
Between terminals 3 and 1 (MH)	0.35

<R.H. drive vehicles>

Measurement terminal	Standard value Ω
Between terminals 3 and 2 (LO)	2.81
Between terminals 3 and 4 (ML)	1.28
Between terminals 3 and 1 (MH)	0.33

EVAPORATOR <VEHICLES WITH A/C>

55200360110

REMOVAL AND INSTALLATION

Pre-removal and Post-installation Operation
- Refrigerant Discharging and Charging (Refer to P. 55-8.)
- Under Cover, Glove Box Assembly Removal and Installation (Refer to GROUP 52A – Instrument Panel.)

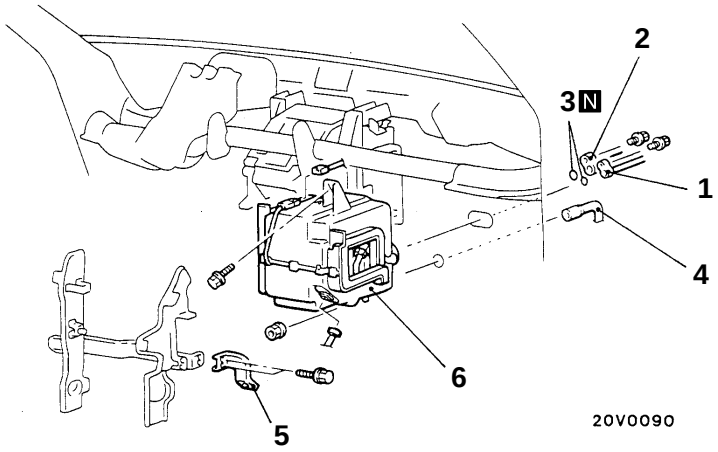

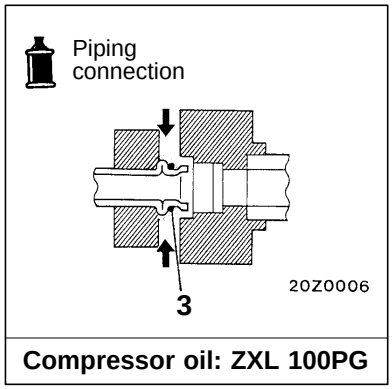

Removal steps

◀A▶ 1. Suction pipe or hose connection
◀A▶ 2. Discharge pipe connection
3. O-ring
4. Drain hose
5. Center frame B
▶A◀ 6. Evaporator

REMOVAL SERVICE POINT

◀A▶ SUCTION PIPE OR HOSE, DISCHARGE PIPE DISCONNECTION

Plug the disconnected hose and the evaporator nipple not to let foreign matter get into them.

Caution
Seal the hoses completely, otherwise the compressor oil and receiver will absorb water vapour easily.

INSTALLATION SERVICE POINT

▶A◀ EVAPORATOR INSTALLATION

When replacing the evaporator, refill it with a specified amount of compressor oil and install it (to the vehicle).

Compressor oil: ZXL 100PG
Quantity: 50 mℓ

DISASSEMBLY AND REASSEMBLY

55200380109

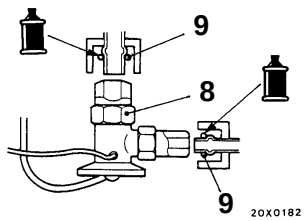

Compressor oil: ZXL 100PG

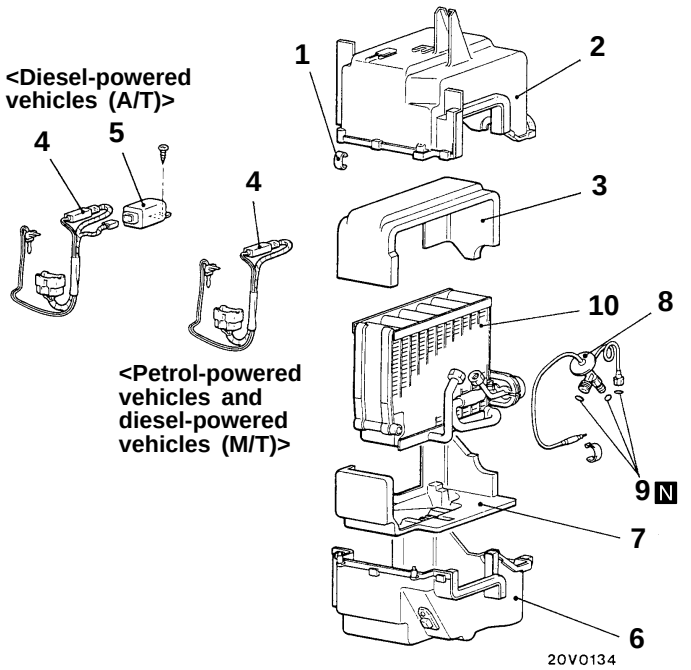

Disassembly steps

1. Clip
2. Evaporator cover (upper)
3. Lining, upper
4. Thermostat
5. Compressor-ECU <Diesel-powered vehicles (A/T)>
6. Evaporator cover (lower)
7. Lining, lower
8. Expansion valve
9. O-ring
10. Evaporator

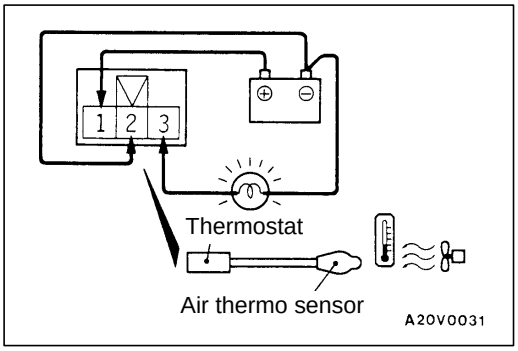

INSPECTION

55200370038

THERMOSTAT, AIR THERMO SENSOR CHECK

1. Apply battery voltage between the thermostat terminals shown in the illustration, and connect a test lamp to terminal (3).
2. Blow cool air onto the air thermo sensor and check that the test lamp switches off when the cool air temperature becomes approximately 3 °C or less.

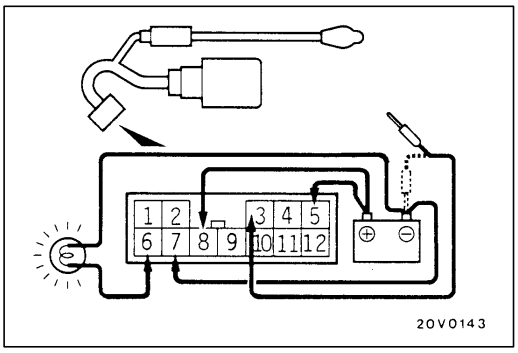

COMPRESSOR-ECU SIMPLE TEST <Diesel-powered Vehicles (A/T)>

1. Check to be sure that thermostat has no defect.
2. Apply battery voltage between the connecters shown in the illustration, and connect a test lamp to terminal (6).
3. Check that the test lamp illuminates for 7 seconds only when terminal (3) is earthed.

COMPRESSOR AND TENSION PULLEY

55200410174

REMOVAL AND INSTALLATION

Pre-removal Operation
- Refrigerant Discharging (Refer to P. 55-12.)
- Battery Removal

Post-installation Operation
- Drive Belt Tension Adjustment (Refer to GROUP 11 – On-vehicle Service.)
- Battery Installation
- Refrigerant Charging (Refer to P. 55-8.)

CAUTION: SRS
When removing and installing the compressor from vehicles equipped with SRS, do not let it bump against the front impact sensor (L.H.).

<4G63, 4G64>

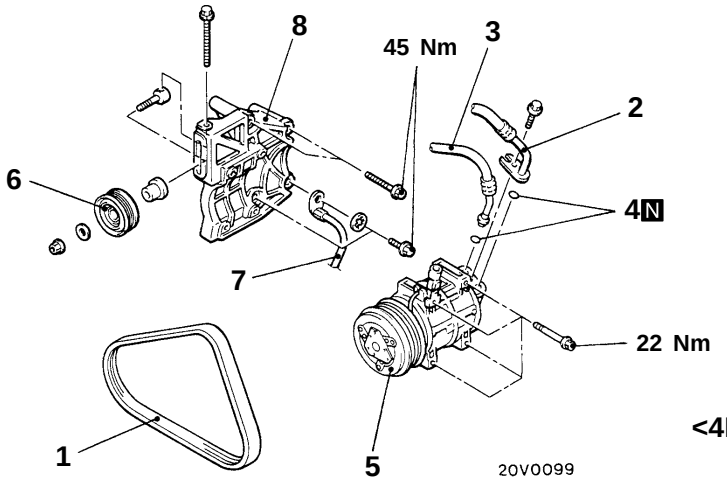

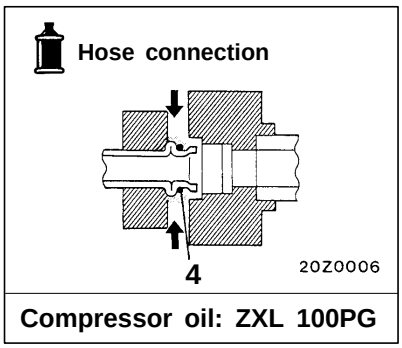

<4D56>

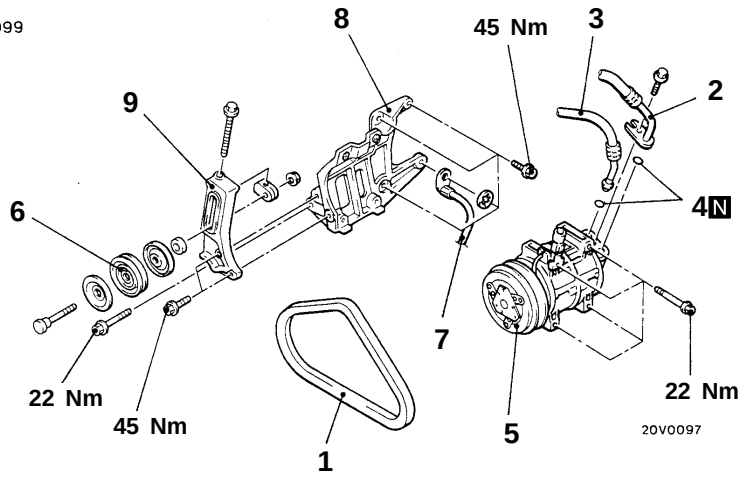

00005076

Removal steps

◀A▶ 1. Drive belt
◀B▶ 2. Suction hose connection
◀B▶ 3. Discharge hose connection
4. O-ring
◀C▶ ▶A◀ 5. Compressor
6. Tension pulley
7. Earth cable connection
8. Compressor bracket
9. Tension pulley bracket assembly <4D56>

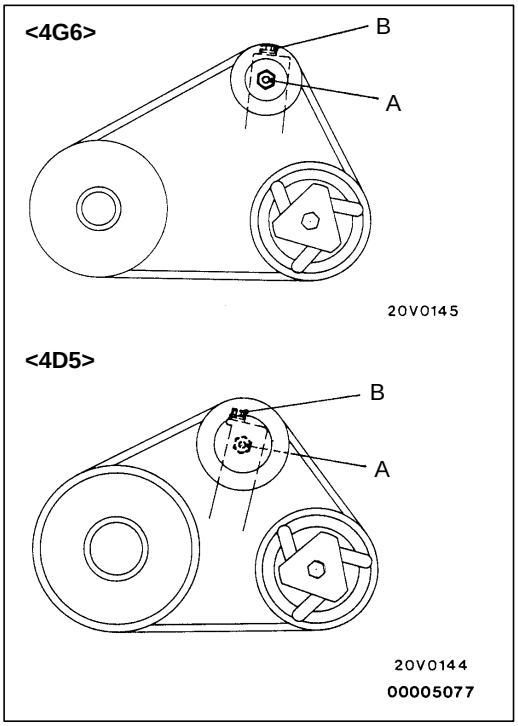

REMOVAL SERVICE POINTS

◀A▶ DRIVE BELT REMOVAL

1. Loosen the nut “A” for holding.
2. Loosen the bolt “B” for adjustment.
3. Remove the drive belt.

◀B▶ SUCTION HOSE, DISCHARGE HOSE DISCONNECTION

Plug the disconnected hose and the compressor nipple not to let foreign matter get into them.

Caution
Seal the hoses completely, otherwise the compressor oil and receiver will absorb water vapour easily.

◀C▶ COMPRESSOR REMOVAL

When doing this work, be careful not to spill the compressor oil.

INSTALLATION SERVICE POINT

▶A◀ COMPRESSOR INSTALLATION

If a new compressor is installed, first adjust the amount of oil according to the procedures described below, and then install the compressor.

(1) Measure the amount (X mℓ) of oil within the removed compressor.
(2) Drain (from the new compressor) the amount of oil calculated according to the following formula, and then install the new compressor.
New compressor oil amount

180 mℓ – X mℓ = Y mℓ

NOTE
(1) Y mℓ indicates the amount of oil in the refrigerant line, the condenser, the evaporator etc.
(2) When replacing the following parts at the same times as the compressor, subtract the rated oil amount of the each part from Y mℓ and discharge from the new compressor.

Quantity
Evaporator: 50 mℓ
Condenser: 30 mℓ
Suction hose: 10 mℓ
Receiver: 10 mℓ

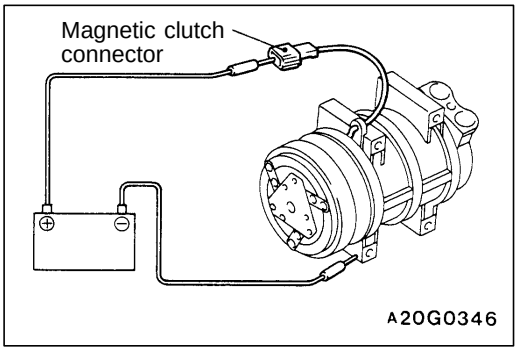

INSPECTION

COMPRESSOR MAGNETIC CLUTCH OPERATION CHECK

55200850105

Connect the battery (+) terminal to the compressor side terminal, and earth the battery (–) terminal to the body of the compressor. The condition is normal if the sound of the magnetic clutch (click) can be heard.

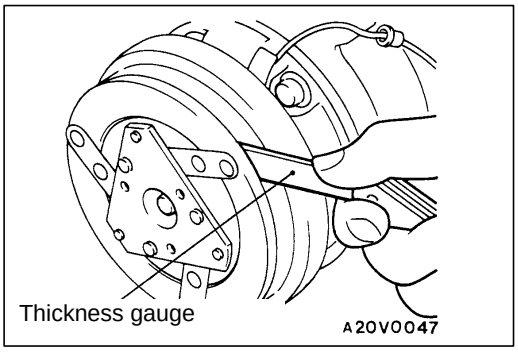

COMPRESSOR MAGNETIC CLUTCH AIR GAP CHECK

55201110011

Check whether or not the air gap of the clutch is within the standard value.

Standard value: 0.3 – 0.6 mm

CONDENSER AND CONDENSER FAN MOTOR

55200670138

REMOVAL AND INSTALLATION

Pre-removal and Post-installation Operation
- Radiator Grille Removal and Installation (Refer to GROUP 51.)
- Front Bumper Removal and Installation (Refer to GROUP 51.)
- Hood Latch Removal and Installation (Refer to GROUP 42 – Hood.)

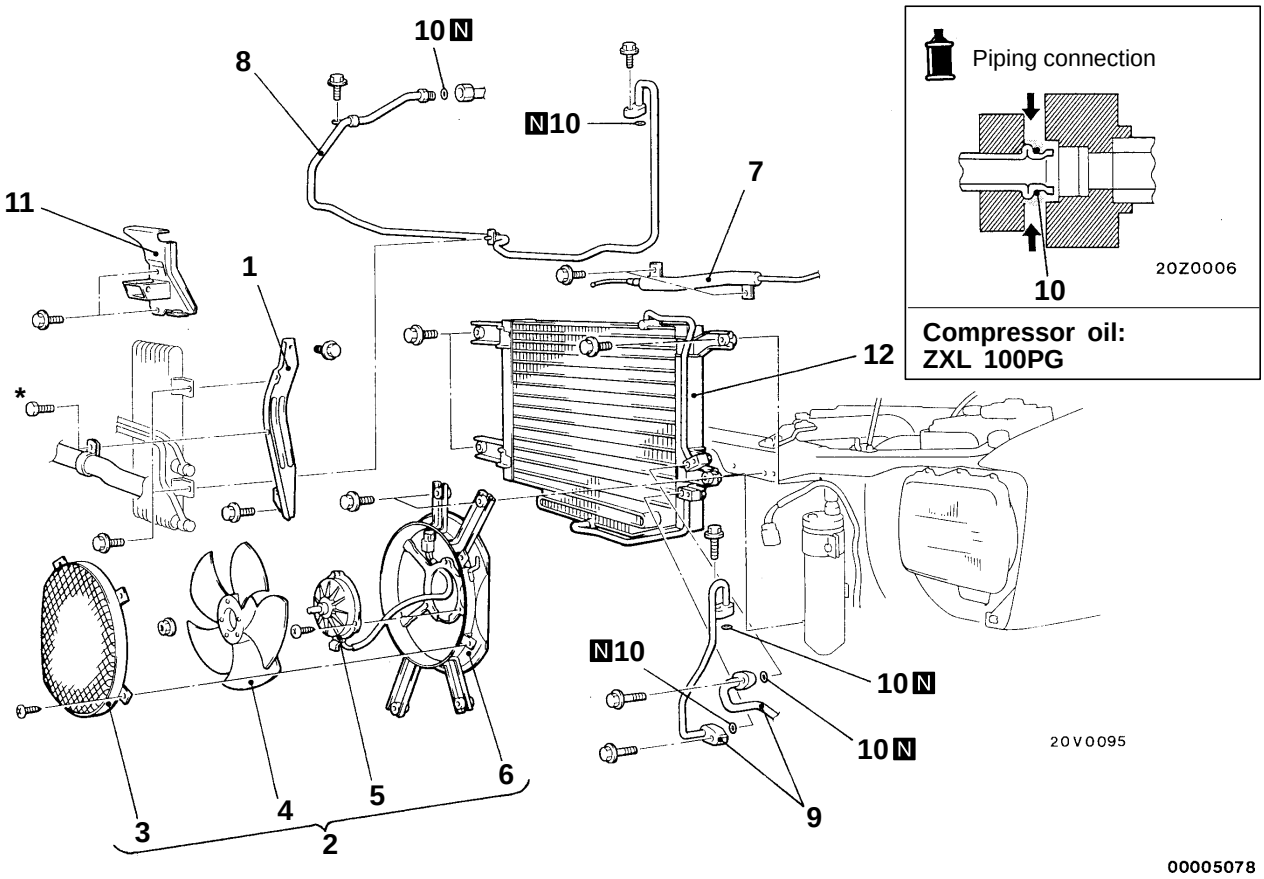

NOTE
*: L.H. drive vehicles

Condenser fan motor removal steps
1. Hood lock stay
2. Condenser fan motor and shroud assembly
3. Net
4. Condenser fan
5. Condenser fan motor
6. Shroud

Condenser removal steps
- Refrigerant Discharging and Charging (Refer to P.55-8.)
- Engine oil cooler <Diesel-powered vehicles> (Refer to GROUP 12.)

1. Hood lock stay
2. Condenser fan motor and shroud assembly
7. Cable protector
8. ◀A▶ Discharge pipe B <L.H. drive vehicles>
9. ◀A▶ Discharge hose, discharge pipe A and condenser connection
10. O-ring
11. Bumper Support (R.H.) <L.H. drive vehicles>
12. ▶A◀ Condenser

REMOVAL SERVICE POINTS

◀A▶ DISCHARGE PIPE "B"/DISCHARGE PIPE "A"/DISCHARGE HOSE DISCONNECTION

Plug the disconnected pipe, hose and the condenser nipple not to let foreign matter get into them.

Caution
Seal the hoses completely, otherwise the compressor oil and receiver will absorb water vapour easily.

INSTALLATION SERVICE POINT

▶A◀ CONDENSER INSTALLATION

When replacing the condenser, refill it with a specified amount of compressor oil and install it. (to the vehicle).

Compressor oil: ZXL 100PG
Quantity: 30 mℓ

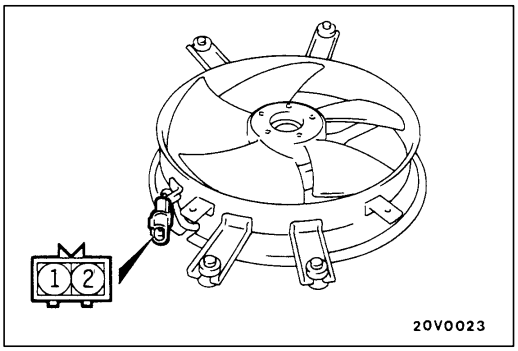

INSPECTION

55200680094

CONDENSER FAN MOTOR CHECK

Check to be sure that the condenser fan motor operates when battery voltage is applied to terminal 1 and terminal 2 earthed.

REFRIGERANT LINE

55200640146

REMOVAL AND INSTALLATION

<L.H. DRIVE VEHICLES>

Pre-removal and Post-installation Operation
- Refrigerant Discharging and Charging (Refer to P. 55-8.)
- Radiator Grill Removal and Installation (Refer to GROUP 51.)
- Front Bumper Removal and Installation (Refer to GROUP 51.)
- Battery Removal and Installation
- Windshield Washer Tank Removal and Installation (Refer to GROUP 51 – Windshield Wiper and Washer.)

CAUTION: SRS
When removing and installing the suction pipe or discharge pipe C from vehicles equipped with SRS, do not let it bump against the front impact sensor (R.H.).

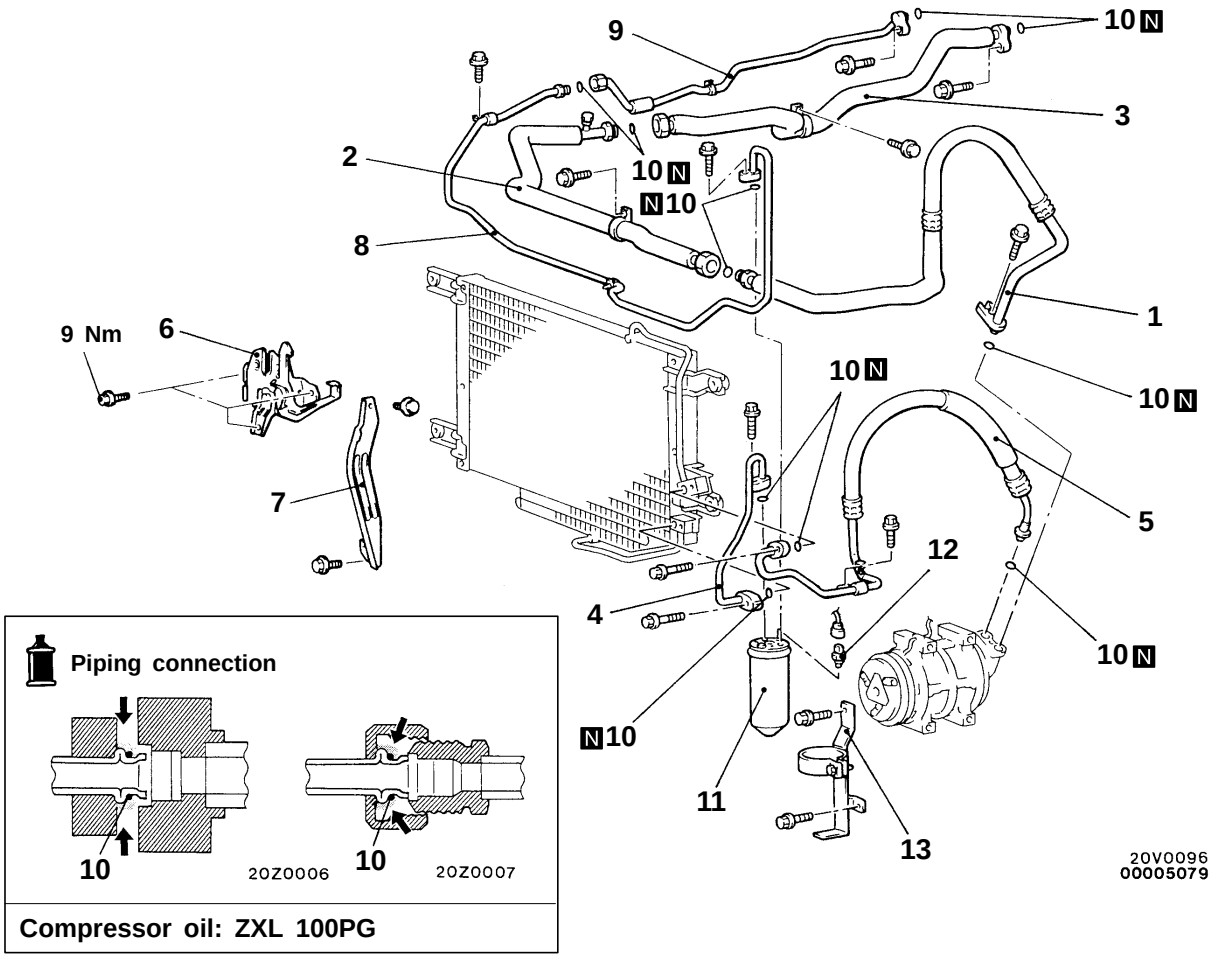

Compressor oil: ZXL 100PG

◀A▶ ▶A◀ 1. Suction hose
◀A▶ 2. Suction pipe
- Power steering oil reservoir (Refer to GROUP 37A – Power Steering Hose.)

◀A▶ 3. Suction pipe
◀A▶ 4. Discharge pipe A
◀A▶ 5. Discharge hose
6. Hood latch
7. Hood lock stay
- Engine oil cooler <Diesel-powered vehicles> (Refer to GROUP 12.)

◀A▶ 8. Discharge pipe B
◀A▶ 9. Discharge pipe C
10. O-ring
◀A▶ ▶A◀ 11. Receiver assembly
12. Dual pressure switch
13. Receiver bracket

<R.H. DRIVE VEHICLES>

Pre-removal and Post-installation Operation
- Refrigerant Discharging and Charging (Refer to P. 55-8.)
- Radiator Grille Removal and Installation (Refer to GROUP 51.)
- Front Bumper Removal and Installation (Refer to GROUP 51.)

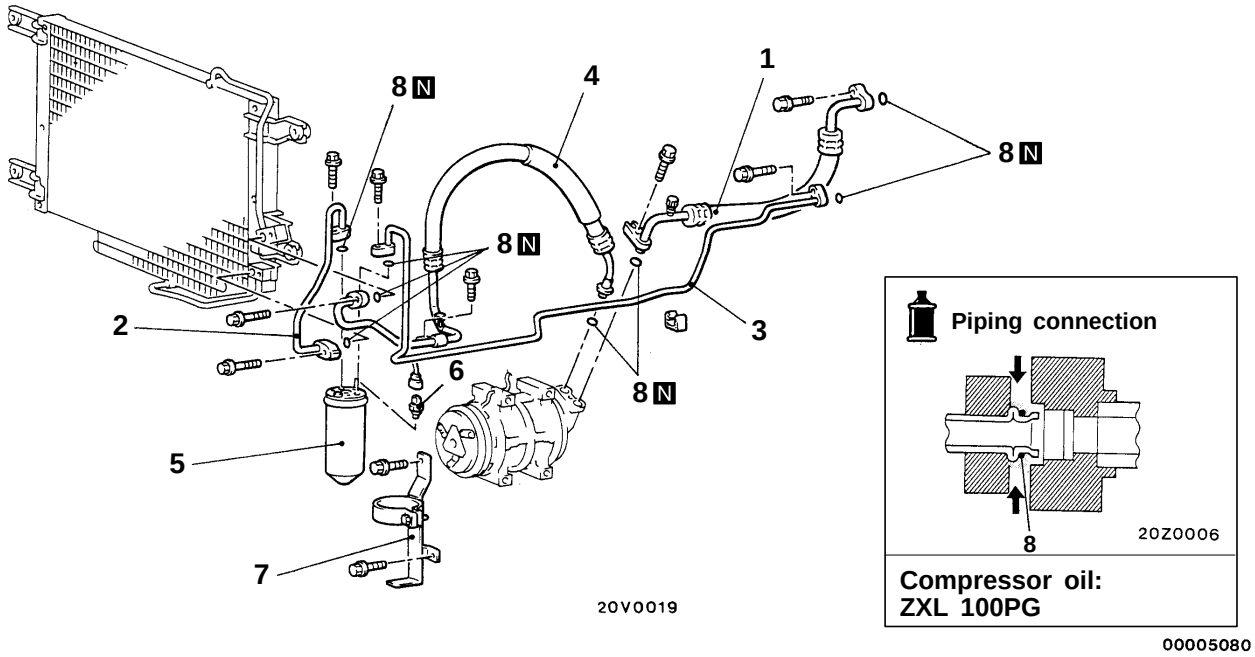

◀A▶ ▶A◀ 1. Suction hose
◀A▶ 2. Discharge pipe A
◀A▶ 3. Discharge pipe B
◀A▶ 4. Discharge hose
◀A▶ ▶A◀ 5. Receiver assembly
6. Dual pressure switch
7. Receiver bracket
8. O-ring

REMOVAL SERVICE POINT

◀A▶ HOSE/PIPE/RECEIVER ASSEMBLY DISCONNECTION

Plug the disconnected hose, the receiver, the evaporator and the compressor nipple not to let foreign matter get into them.

Caution
Seal the hoses completely, otherwise the compressor oil and receiver will absorb water vapour easily.

INSTALLATION SERVICE POINT

▶A◀ SUCTION HOSE/RECEIVER ASSEMBLY INSTALLATION

When replacing the suction hose or receiver assembly, refill them with a specified amount of compressor oil, and then install them.

Compressor oil: ZXL 100PG

Quantity:
Suction hose: 10 mℓ
Receiver assembly: 10 mℓ

ENGINE COOLANT TEMPERATURE SWITCH <Diesel-powered Vehicles>

55200730058

REMOVAL AND INSTALLATION

Pre-removal and Post-installation Operation
- Coolant Refilling (Refer to GROUP 14 – On-vehicle Service.)
- Intercooler Removal and Installation <Vehicles with intercooler> (Refer to GROUP 15.)

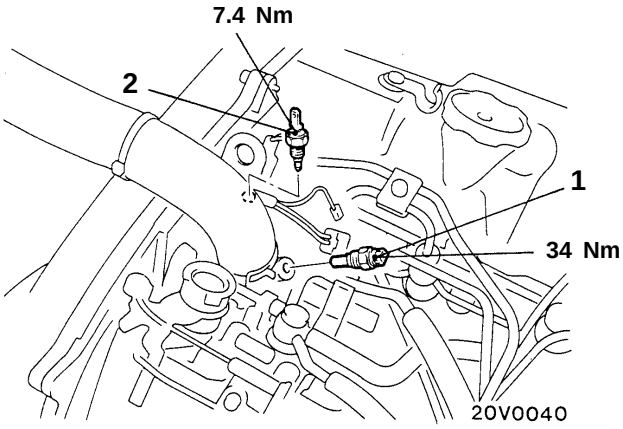

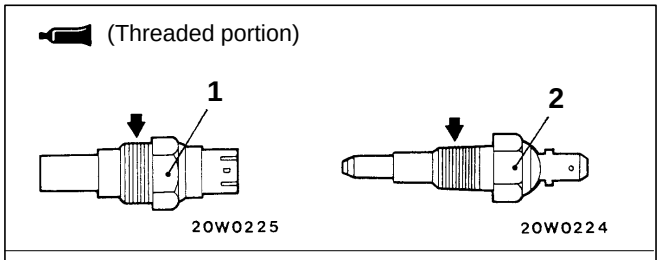

Sealant:
3M Nut Locking Part No. 4171 or equivalent

00005081

1. Engine coolant temperature switch (for A/C cut-off)
2. Engine coolant temperature switch (for condenser fan)

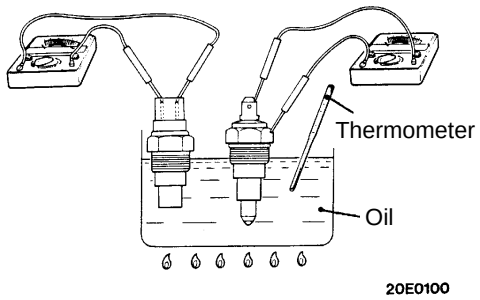

<For A/C cut-off>

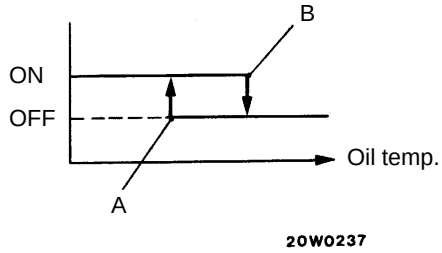

<For condenser fan>

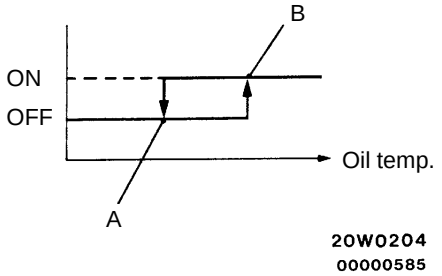

INSPECTION

55200740037

ENGINE COOLANT TEMPERATURE SWITCH CONTINUITY CHECK

1. Dip the engine coolant temperature switch in oil and heat the oil with a gas burner or similar item.

   Caution
   Do not heat any more than is necessary.

2. Check the continuity with a circuit tester as the temperature of the oil changes, and the condition is normal if the continuity is within the following ranges.

   Standard value:

Engine coolant temperature switch	Temperature	Continuity
For A/C cut-off	Less than 108 °C (Temperature at point A)	ON (Continuity)
	More than 115 °C (Temperature at point B)	OFF (No continuity)
For condenser fan	Less than 97 °C (Temperature at point A)	OFF (No continuity)
	More than 102 °C (Temperature at point B)	ON (Continuity)

IDLE-UP SYSTEM <Diesel-powered Vehicles>

55200810011

REMOVAL AND INSTALLATION

Pre-removal Operation
- Intercooler Removal <Vehicle with intercooler> (Refer to GROUP 15.)

Post-installation Operation
- Accelerator Cable Adjustment (Refer to GROUP 17 – On-vehicle Service.)
- Throttle Cable Adjustment <A/T> (Refer to GROUP 23 – On-vehicle Service.)
- Intercooler Installation <Vehicles with intercooler> (Refer to GROUP 15.)
- Idle-up Operation Check (Refer to P. 55-16.)

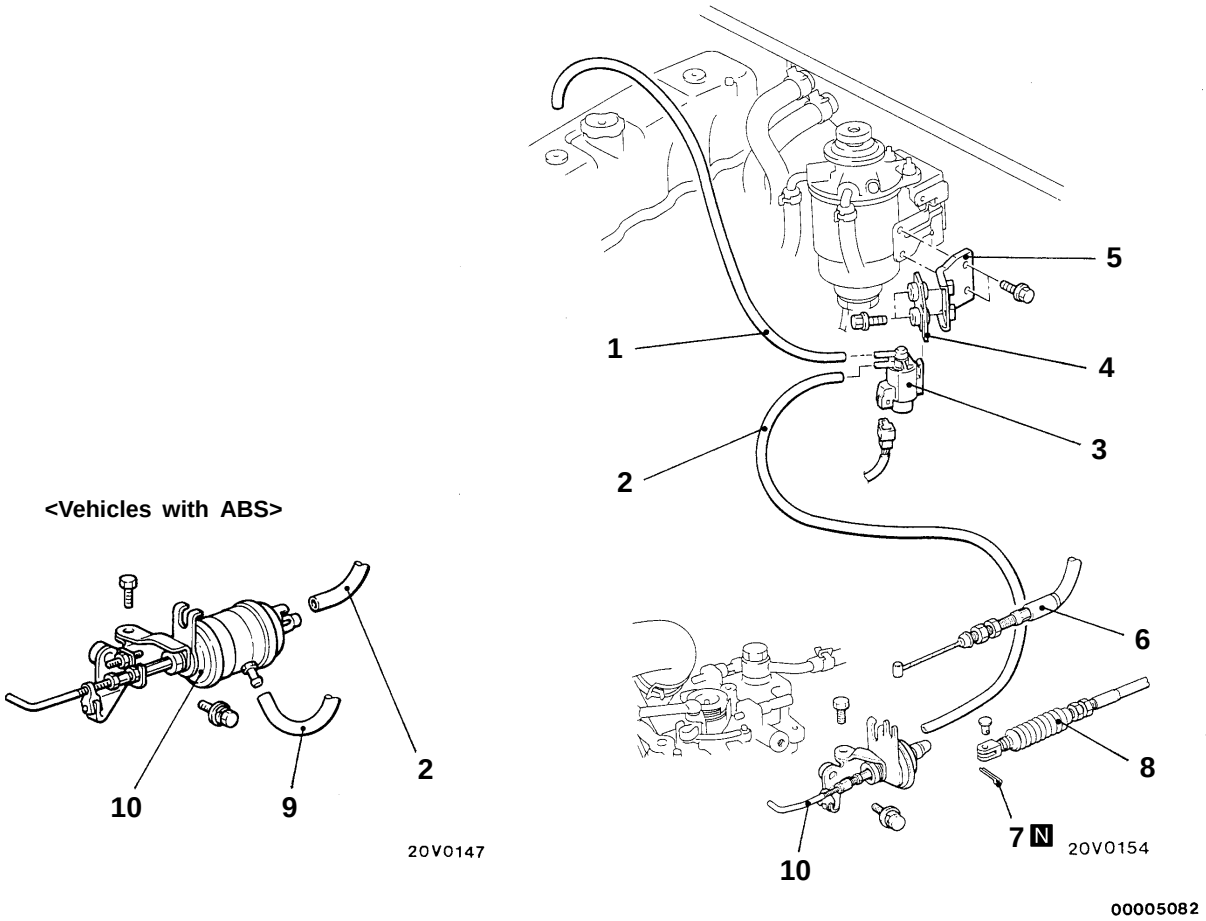

Idle-up solenoid valve removal steps

1. Vacuum hose (white stripe) connection
2. Vacuum hose (yellow stripe) connection
3. Idle-up solenoid valve
4. Solenoid valve bracket B
5. Solenoid valve bracket A

Vacuum actuator assembly removal steps

2. Vacuum hose (yellow stripe) connection
6. Accelerator cable connection
7. Split pin <A/T>
8. Throttle cable connection <A/T>
9. Vacuum hose (blue stripe) <Vehicles with ABS>
10. Vacuum actuator assembly

LEVER POSITION SWITCH <Diesel-powered Vehicles (A/T)> 55200790018

REMOVAL AND INSTALLATION

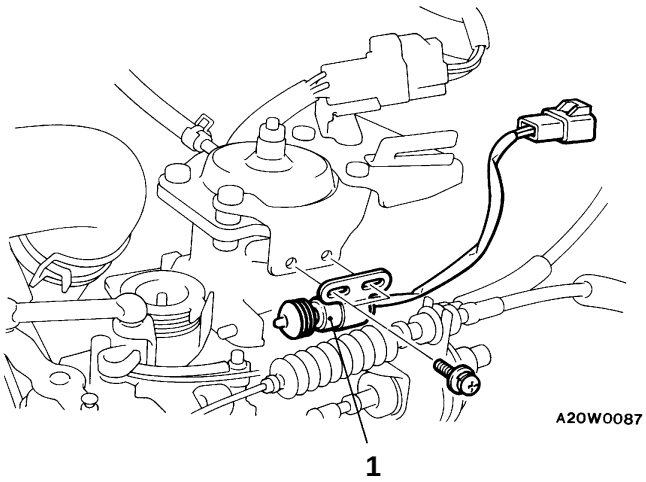

▶A◀ 1. Lever-position switch

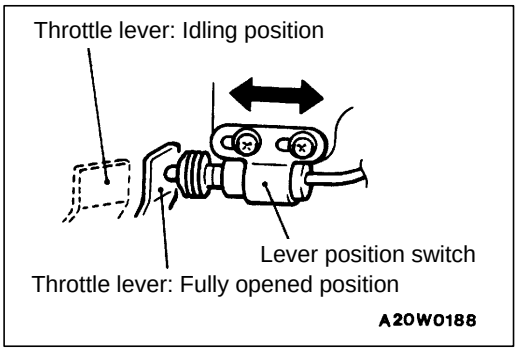

INSTALLATION SERVICE POINT

▶A◀ LEVER POSITION SWITCH CHECK

1. Check that the idle speed is at the standard value, and adjust it if necessary.

   Standard value: 750 ± 100 r/min

2. Adjust the accelerator cable.
3. Depress the accelerator pedal fully to fully open the throttle lever of the fuel injection pump.

   Caution
   When fully opening the throttle lever of the fuel injection pump, always open it by the accelerator pedal, not from the injection pump side.

4. Adjust the stroke of the lever position switch rod by moving the lever position switch so that the rod is pushed down 4 ± 1 mm from the free position.

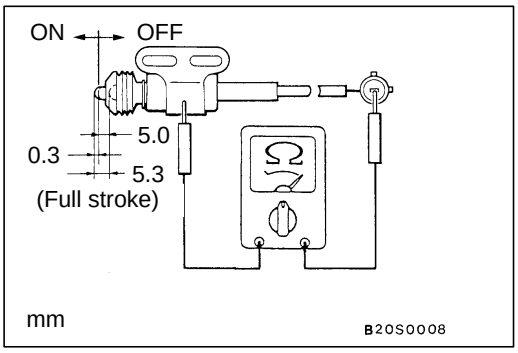

INSPECTION 55200800025

1. Connect a circuit tester as shown in the illustration, and check that there is continuity in the section 0.3 mm from the full length (full stroke), and that there is no continuity for the remainder of the stroke (5.0 mm).
2. If there is a defect, replace the component.

VENTILATORS

55300160065

REMOVAL AND INSTALLATION

Caution: SRS
When removing and installing the assembly from vehicles equipped with SRS, do not let it bump against the SRS diagnosis unit or the components.

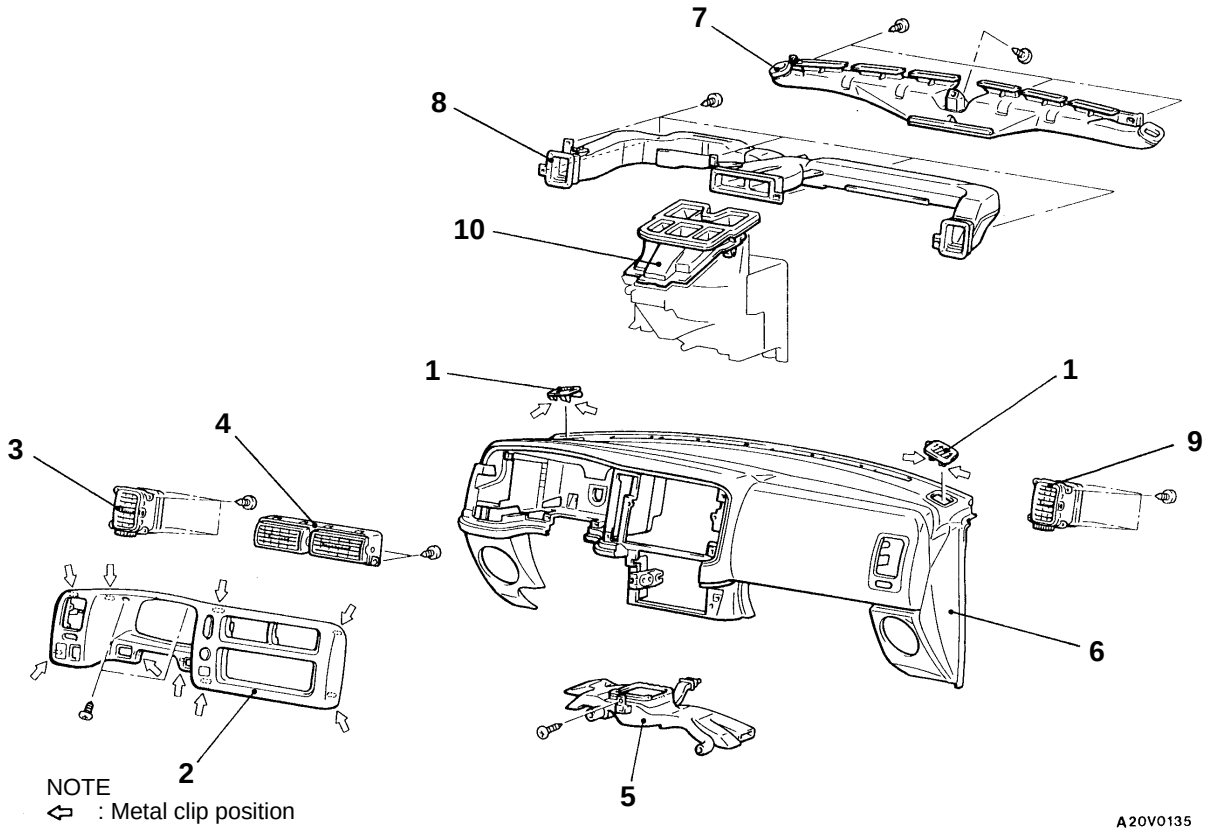

1. Side defroster grille

Air outlet assembly (Driver's side) and centre outlet assembly removal steps

2. Meter bezel assembly
3. Air outlet assembly (Driver's side)
4. Centre outlet assembly

Foot duct removal steps

- Front floor console assembly (Refer to GROUP 52A – Floor Console.)

5. Foot duct

Defroster nozzle, distribution duct, air outlet assembly (Passenger's side) and centre ventilation duct removal steps

6. Instrument panel (Refer to GROUP 52A.)
7. Defroster nozzle
8. Distribution duct
9. Air outlet assembly (Passenger's side)
10. Centre ventilation duct

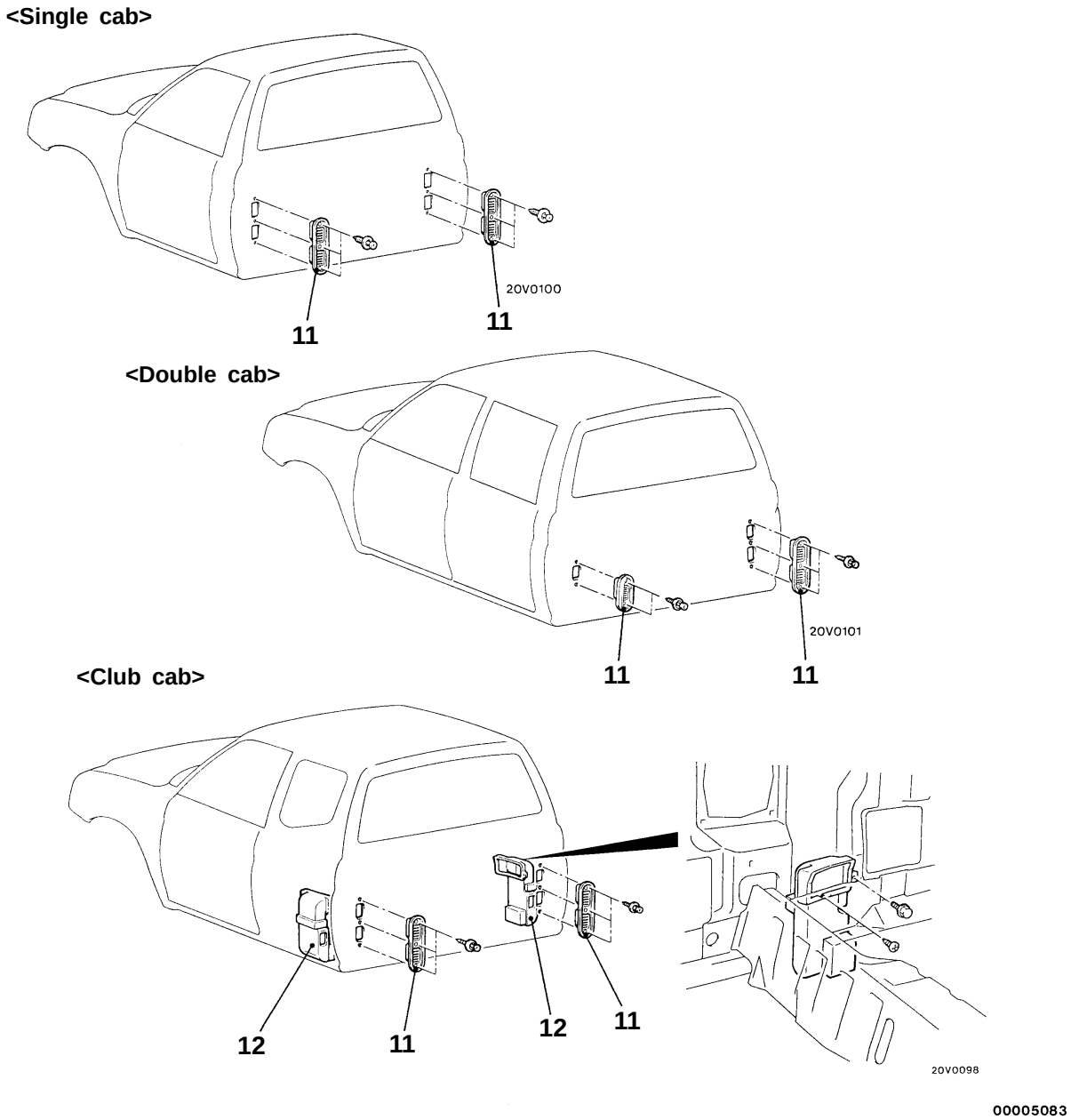

<Single cab>

Air outlet duct assembly removal steps

- Rear body (Refer to GROUP 42.)

11. Air outlet duct assembly

<Double cab>

Air outlet duct assembly removal steps

- Rear body (Refer to GROUP 42.)

11. Air outlet duct assembly

<Club cab>

Air outlet duct assembly removal steps

- Rear body (Refer to GROUP 42.)

11. Air outlet duct assembly

Rear ventilation duct removal steps

- Back panel trim, lower (Refer to GROUP 52A – Trims.)
- Quarter trim, lower (Refer to GROUP 52A – Trims.)

12. Rear ventilation duct

GROUP 55
HEATER, AIR CONDITIONER AND VENTILATION

GENERAL

OUTLINE OF CHANGE

- The service procedures have been established to correspond to the adoption of the rear heater.

SERVICE SPECIFICATION

Items	Standard value
Resistor Ω	3.9

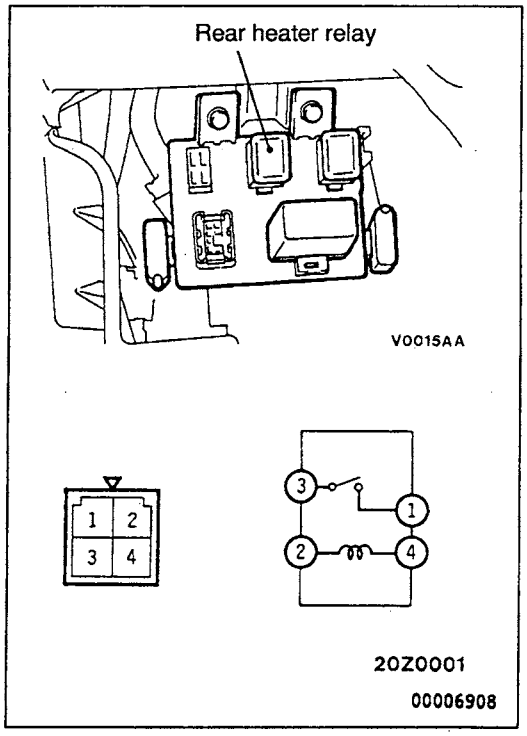

ON-VEHICLE SERVICE

POWER RELAY CONTINUITY CHECK

REAR HEATER RELAY

Battery voltage	Terminal No.			
	1	2	3	4
Power is not supplied		○		○
Power is supplied	○	⊖	○	⊕

REAR HEATER UNIT

REMOVAL AND INSTALLATION

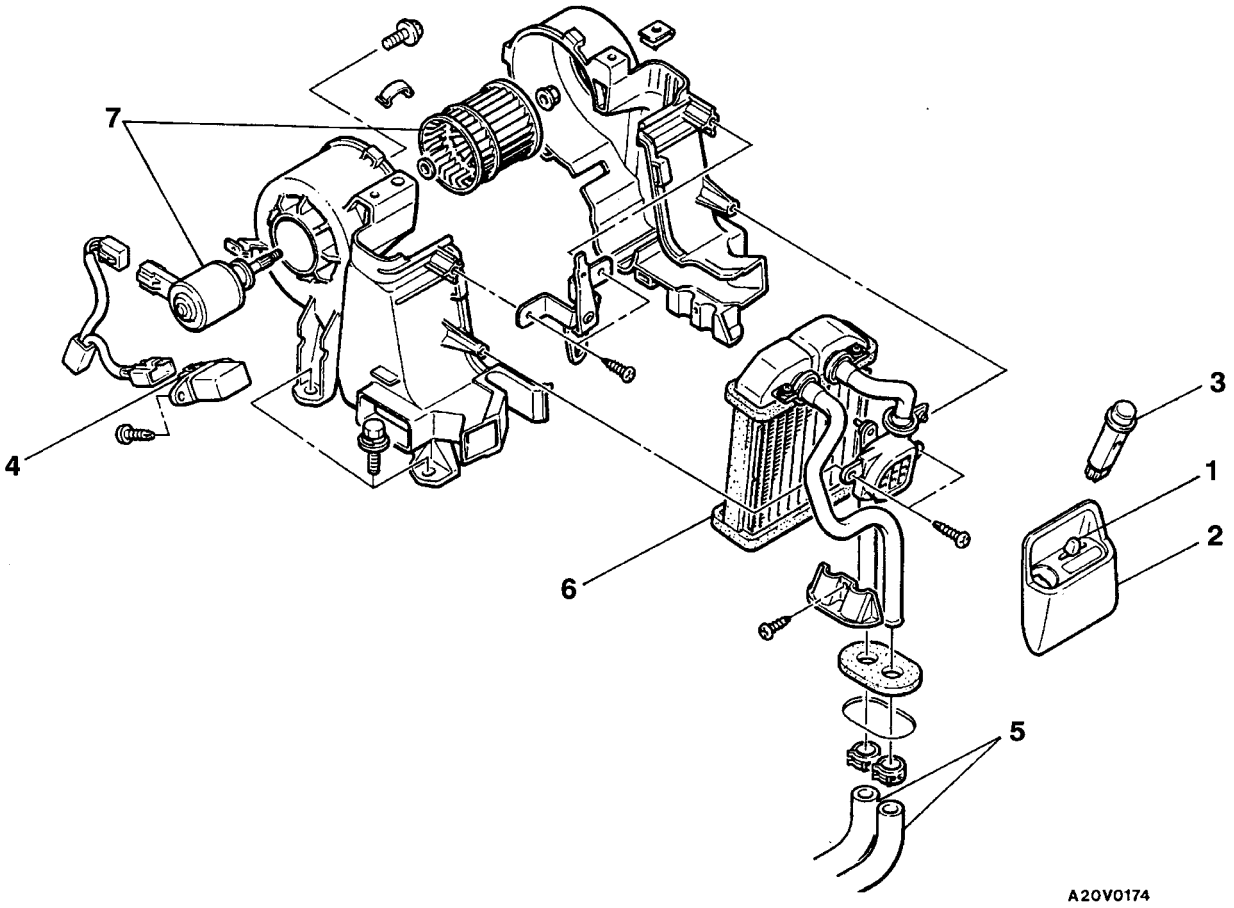

Rear heater unit switch removal steps

1. Knob
2. Rear heater control panel assembly
3. Rear heater switch

Fan motor assembly removal steps

- Rear floor console (Refer to GROUP 52A - Floor Console*.)

4. Resistor
- Draining and supplying of coolant (Refer to GROUP 14 - On-vehicle Service.)

5. Rear heater hose connection
6. Rear heater core assembly
7. Rear blower motor assembly

NOTE
*: Refer to '97 L200 Workshop Manual <Pub. No. PWTE96E1>.

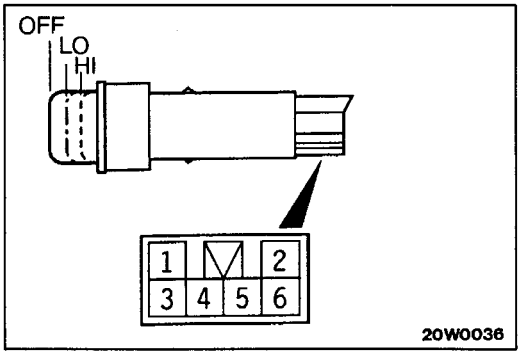

INSPECTION

REAR HEATER SWITCH CONTINUITY CHECK

Level position	Terminal No.							
	1	2	4	IND	5	3	ILL	6
OFF						○	⊗	○
LO		○	○	GREEN ▶	○	○	⊗	○
HI	○	○	○	ORANGE ▶	○	○	⊗	○

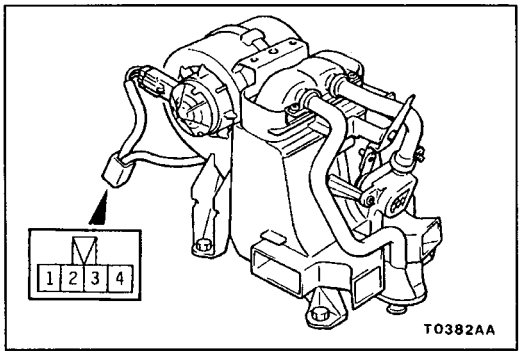

REAR BLOWER MOTOR INSPECTION

Check that the motor rotates when the battery voltage is applied between the terminals. Make sure that there is no abnormal noise from the motor at this time.

Battery connection terminal				Motor operation (HI)
1	2	3	4	
⊕		⊖		Rotates (HI)
⊕			⊖	Rotates (LO)

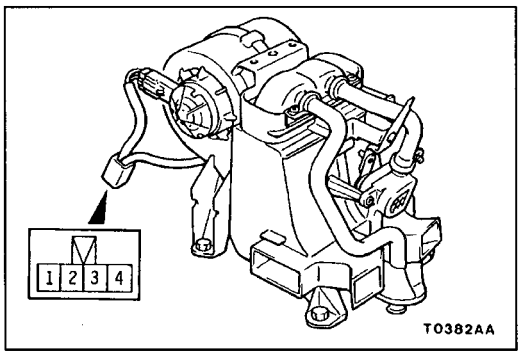

RESISTOR CHECK

Use an ohmmeter to check the resistance between terminals number 3 and number 4.
Check that the measured value is at the standard value.

Standard value: 3.9 Ω

NOTES

GROUP 55
HEATER, AIR CONDITIONER AND VENTILATION

GENERAL

OUTLINE OF CHANGE

The numerical values on the high-pressure side of the dual pressure switch have been changed. Therefore, service procedure has been changed.

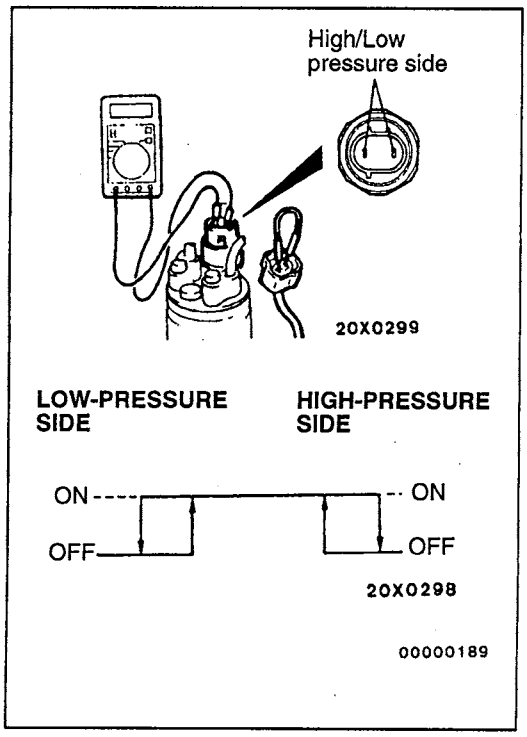

ON-VEHICLE SERVICE

DUAL PRESSURE SWITCH CHECK

1. Remove the dual pressure switch connector and connect the high/low-pressure side terminals located on the harness side, as shown.
2. Install a gauge manifold to the high-pressure side service valve of the refrigerant line. (Refer to Performance Test.)
3. When the high/low pressure sides of the dual pressure switch are at operation pressure (ON) and there is continuity between the respective terminals, then the condition is normal. If there is no continuity, replace the switch.

Unit: kPa

Items	Switch position	
	OFF → ON	ON → OFF
Low-pressure side	186	177
High-pressure side	2,354	2,942

NOTES

SERVICE BULLETIN

MITSUBISHI MOTORS

QUALITY INFORMATION ANALYSIS
OVERSEAS SERVICE DEPT. MITSUBISHI MOTORS CORPORATION

SERVICE BULLETIN	**No.:** MSB-99E55-503		
	Date: 1999-12-15	**<Model>**	**<M/Y>**
Subject:	OMISSION OF DISASSEMBLY / REASSEMBLY OF A/C COMPRESSOR ASSEMBLY	(EC,EXP) L200 (K00)	97-10
Group:	HEATER, A/C & VENTILATION	**Draft No.:** 99SY060115	
CORRECTION	**INTERNATIONAL CAR ADMINISTRATION OFFICE**	T.NITTA - PROJECT LEADER AFTER SALES SERVICE & CS PROMOTION	

1. Description:

Omission has been rectified of a description of the disassembly / reassembly of the A/C compressor assembly under Compressor and Tension Pulley.

2. Applicable Manuals:

Manual	Pub. No.	Language	Page(s)
'97 L200 Workshop Manual Chassis	PWTE96E1	(English)	55-5, 32
	PWTS96E1	(Spanish)	
	PWTF96E1	(French)	
	PWTG96E1	(German)	

3. Details:

'97 L200 Workshop Manual Chassis, page 2,3,4,5

SPECIAL TOOL

55100060017

Tool	Number	Name	Use
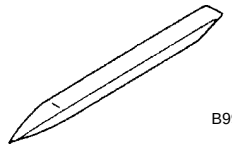 B990784	MB990784	Ornament remover	Meter bezel assembly removal

TROUBLESHOOTING

55200070150

Trouble symptom	Problem cause	Remedy	Reference page
When the ignition switch is “ON” the A/C does not operate.	A/C compressor relay is defective	Replace A/C compressor relay	55-16
	Magnetic clutch is defective	Replace the A/C compressor	55-6, 30
	Refrigerant leak or overfilling of refrigerant	Replenish the refrigerant, repair the leak or take out some of the refrigerant	55-6, 14
	Dual pressure switch is defective	Replace the dual pressure switch	55-7, 35
	A/C switch is defective	Replace the A/C switch	55-21, 23
	Blower switch is defective	Replace the blower switch	55-21, 23
	Thermostat is defective	Replace the Thermostat	55-29
	Engine coolant temperature switch (for A/C cut-off) is defective <Diesel-powered vehicles>	Replace the engine coolant temperature switch	55-37, 38
	Engine-ECU is defective <Petrol-powered vehicles>	Replace the engine-ECU	–
When the A/C is operating, temperature inside the passenger compartment doesn’t decrease (cool air is not emitted)	Refrigerant leak	Replenish the refrigerant and repair the leak	55-14
	Dual pressure switch is defective	Replace the dual pressure switch	55-7, 35
	Thermostat is defective	Replace the Thermostat	55-29

<Added>

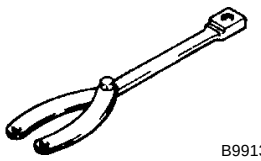 B991367	MB991367	Special spanner	Removal and installation of armature mounting nut of compressor.
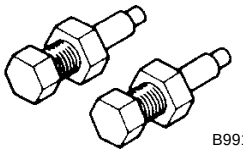 B991386	MB991386	Pin	

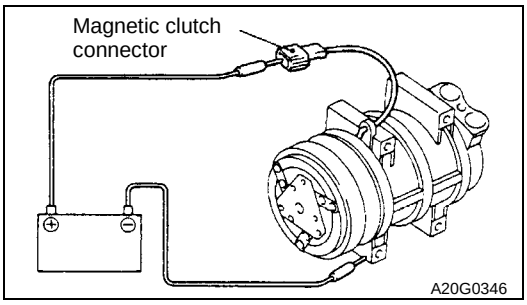

INSPECTION

COMPRESSOR MAGNETIC CLUTCH OPERATION CHECK 55200850105

Connect the battery (+) terminal to the compressor side terminal, and earth the battery (-) terminal to the body of the compressor. The condition is normal if the sound of the magnetic clutch (click) can be heard.

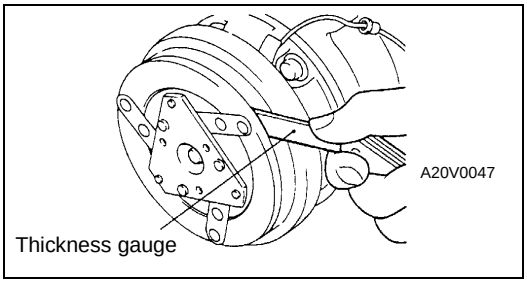

COMPRESSOR MAGNETIC CLUTCH AIR GAP CHECK 55201110011

Check whether or not the air gap of the clutch is within the standard value.

Standard value: 0.3 – 0.6 mm

See the Following two pages.

MAGNETIC CLUTCH

DISASSEMBLY AND REASSEMBLY

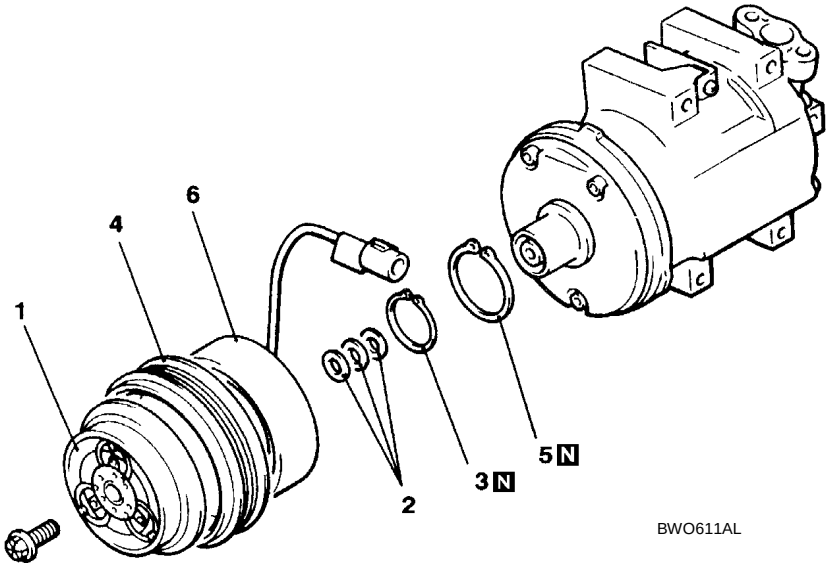

Magnetic clutch disassembly steps

▶B◀ • Air gap adjustement

◀A▶ 1. Armature plate

2. Shims

▶A◀ 3. Snap ring

4. Rotor

5. Snap ring

6. Clutch coil

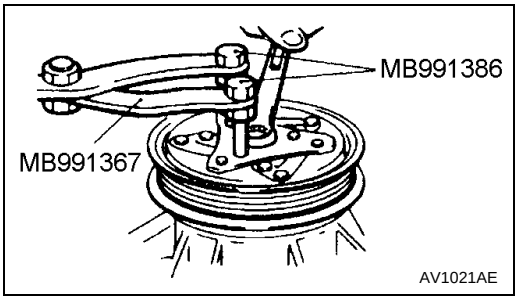

DISASSEMBLY SERVICE POINTS

◀A▶ ARMATURE PLATE REMOVAL

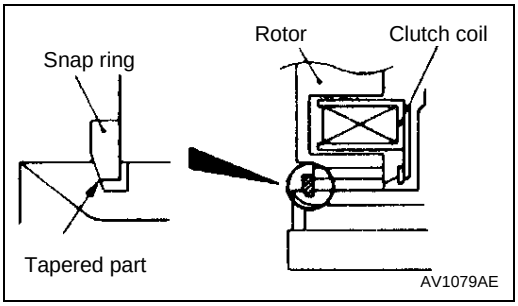

REASSEMBLY SERVICE POINTS

▶A◀ SNAP RING INSTALLATION

Install the snap ring so that the tapered surface is at the outer side.

<Added>

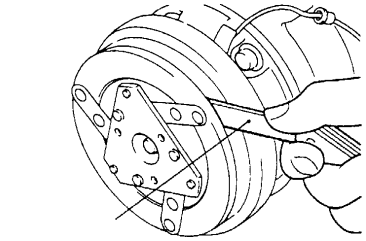

▶B◀ AIR GAP ADJUSTMENT

Check whether or not the air gap of the clutch is within the standard value.

Standard value: 0.3 – 0.6 mm
Note
If there is a deviation of the air gap from the standard value, make the necesarry adjustement by adjusting the number of shims.

<Added>

AUTOMATIC AIR CONDITIONER

Click on the applicable bookmark to selected the required model year

AUTOMATIC AIR CONDITIONER

CONTENTS

GENERAL 2
Outline of Change 2
SERVICE SPECIFICATIONS 2
SPECIAL TOOLS 2
TROUBLESHOOTING 3
ON VEHICLE SERVICE 20
Blower High Speed Relay Continuity Check . . . 20
Idle-up Inspection <4D56> 20
AUTOMATIC AIR CONDITIONER CONTROL PANEL ASSEMBLY (A/C-ECU) 21
MOTOR 22
HEATER UNIT 25
EVAPORATOR 27
PHOTO SENSOR 28
AMBIENCE TEMPERATURE SENSOR 29
REFRIGER LINE 30
THROTTLE CABLE 31

GENERAL

OUTLINE OF CHANGE

The following service procedures have been added as an automatic A/C has been equipped as standard. Other service procedures are the same as before.

SERVICE SPECIFICATIONS

Item		Typical value
Air mixing damper control potentiometer resistance kΩ	MAX HOT	Around 0.18
	MAX COOL	Around 4.82
Mode selection damper control potentiometer resistance kΩ	DEF position	Around 0.18
	FACE position	Around 4.82

SPECIAL TOOLS

Tool	Number	Name	Use
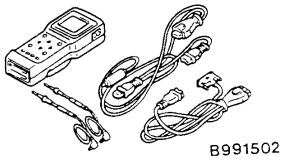 B991502	MB991502	MUT-II sub-assembly	Automatic air conditioner inspection
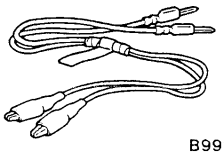 B991529	MB991529	Diagnosis code check harness	Automatic air conditioner inspection when using voltmeter
A 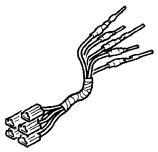 B 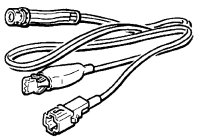 C 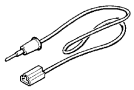 D C991223	MB991223 A: MB991219 B: MB991220 C: MB991221 D: MB991222	Harness set A: Check harness B: LED harness C: LED harness adapter D: Probe	Checking continuity and measuring voltage at harness or connector A: For checking connector pin contact pressure B: For checking the power supply circuit C: For checking the power supply circuit D: For connecting commercial tester

TROUBLESHOOTING

DIAGNOSIS TROUBLESHOOTING FLOW

Refer to '97 L200 Workshop Manual (Pub. No. PWTE96E1) GROUP 00 – How to Use Troubleshooting/Inspection Service Points.

DIAGNOSIS FUNCTION

METHOD OF READING DIAGNOSIS CODES

METHOD OF ERASING DIAGNOSIS CODES

Connect the MUT-II to the 16-pin diagnosis connector.
(Refer to '97 L200 Workshop Manual <Pub. No. PWTE96E1> GROUP 00 – How to Use Troubleshooting/Inspection Service Points.)

INSPECTION CHART FOR DIAGNOSIS CODES

Code No.	Diagnosis item	Reference page
11	Inside air temperature sensor system (open circuit)	55B-3
12	Inside air temperature sensor system (short circuit)	55B-3
13	Ambient temperature sensor system (open circuit)	55B-4
14	Ambient temperature sensor system (short circuit)	55B-4
15	Heater water temperature sensor system (open circuit)	55B-4
16	Heater water temperature sensor system (short circuit)	55B-4
21	Air thermo sensor system (open circuit)	55B-5
22	Air thermo sensor system (short circuit)	55B-5
31	Potentiometer system for the air mixing damper	55B-5
32	Potentiometer system for the mode selection damper	55B-6
41	Air mixing damper control motor drive system	55B-6
42	Mode selection damper control motor drive system	55B-7

INSPECTION PROCEDURE FOR DIAGNOSIS CODES

Code No.11, 12 Inside air temperature sensor system	Probable cause
Code No.11 is set when the inside air temperature circuit inside the A/C-ECU is open. Meanwhile, code No.12 is set when it is short.	Malfunction of the A/C-ECU

Replace the automatic A/C control panel assembly (A/C-ECU).

Code No.13, 14 Ambient temperature sensor system	Probable cause
Code No.13 is set when the ambient temperature sensor circuit is open. Meanwhile, code No.14 is set when it is short.	• Malfunction of the ambient temperature sensor • Malfunction of connector or harness • Malfunction of the A/C-ECU

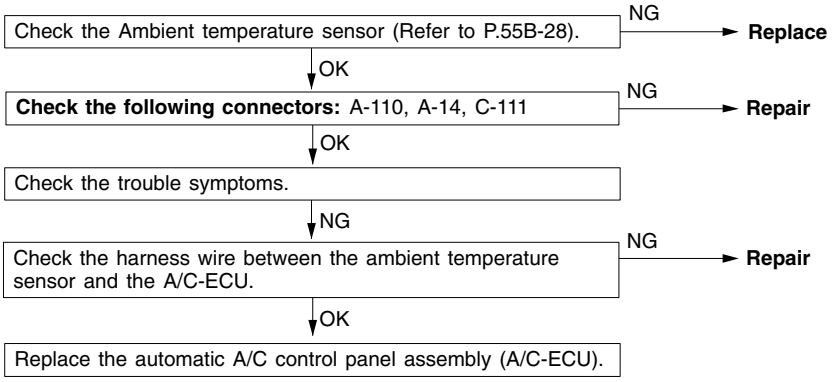

Code No.15, 16 Heater water temperature sensor system	Probable cause
Code No.15 is output when the heater water temperature sensor circuit is open. Code No.16 is output when that circuit is short.	• Malfunction of the heater water temperature sensor • Malfunction of connector or harness • Malfunction of the A/C-ECU

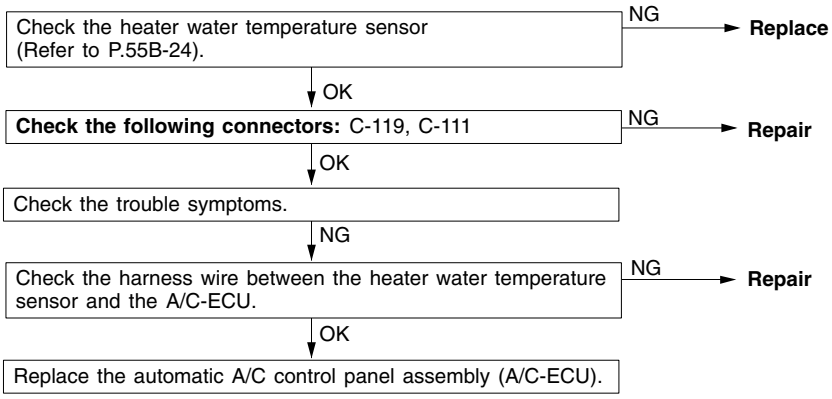

Code No.21, 22 Air thermo sensor system	Probable cause
Code No.21 is set when the air thermo sensor circuit is open. Meanwhile, code No.22 is set when it is short.	• Malfunction of the air thermo sensor • Malfunction of connector or harness • Malfunction of the A/C-ECU

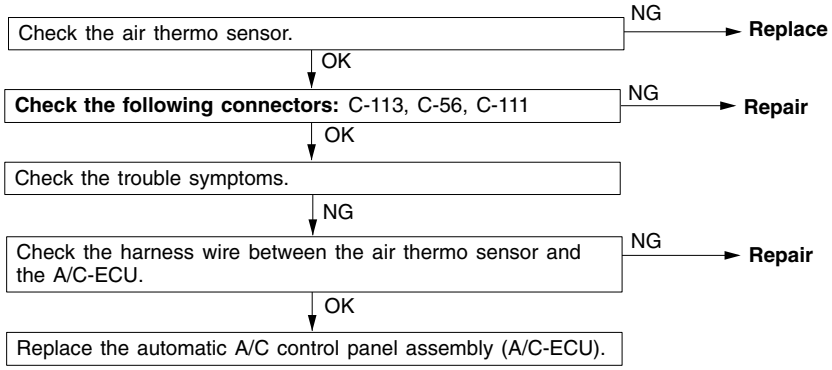

Code No.31 Potentiometer system for the air mixing damper	Probable cause
This diagnosis code is set when the potentiometer for the air mix damper does not send any signal to the A/C-ECU due to short or open circuit.	• Malfunction of the potentiometer system for the air mix damper • Malfunction of connector or harness • Malfunction of the A/C-ECU

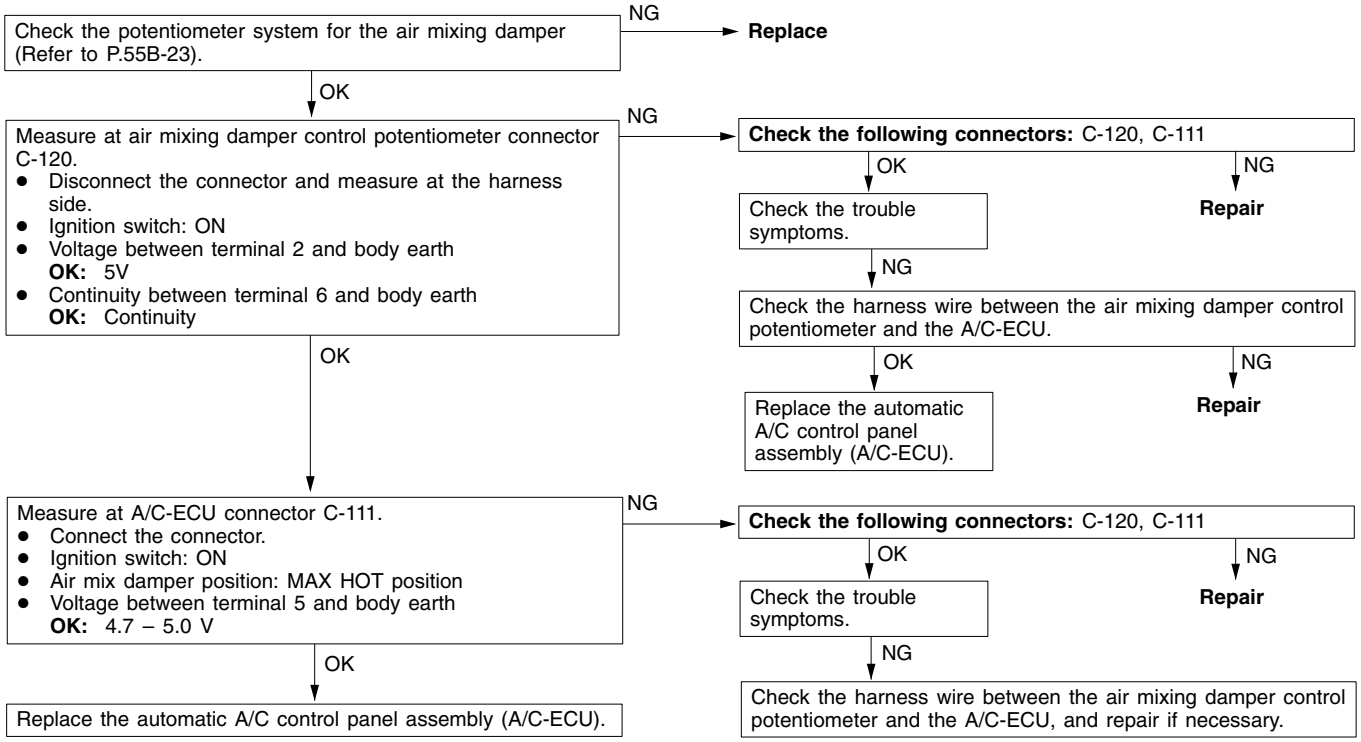

Code No.32 Potentiometer system for the mode selection damper	Probable cause
This diagnosis code is set when the potentiometer for the mode selection does not send any signal to the A/C-ECU due to open or short circuit.	• Malfunction of the potentiometer for the mode selection damper • Malfunction of connector or harness • Malfunction of the A/C-ECU

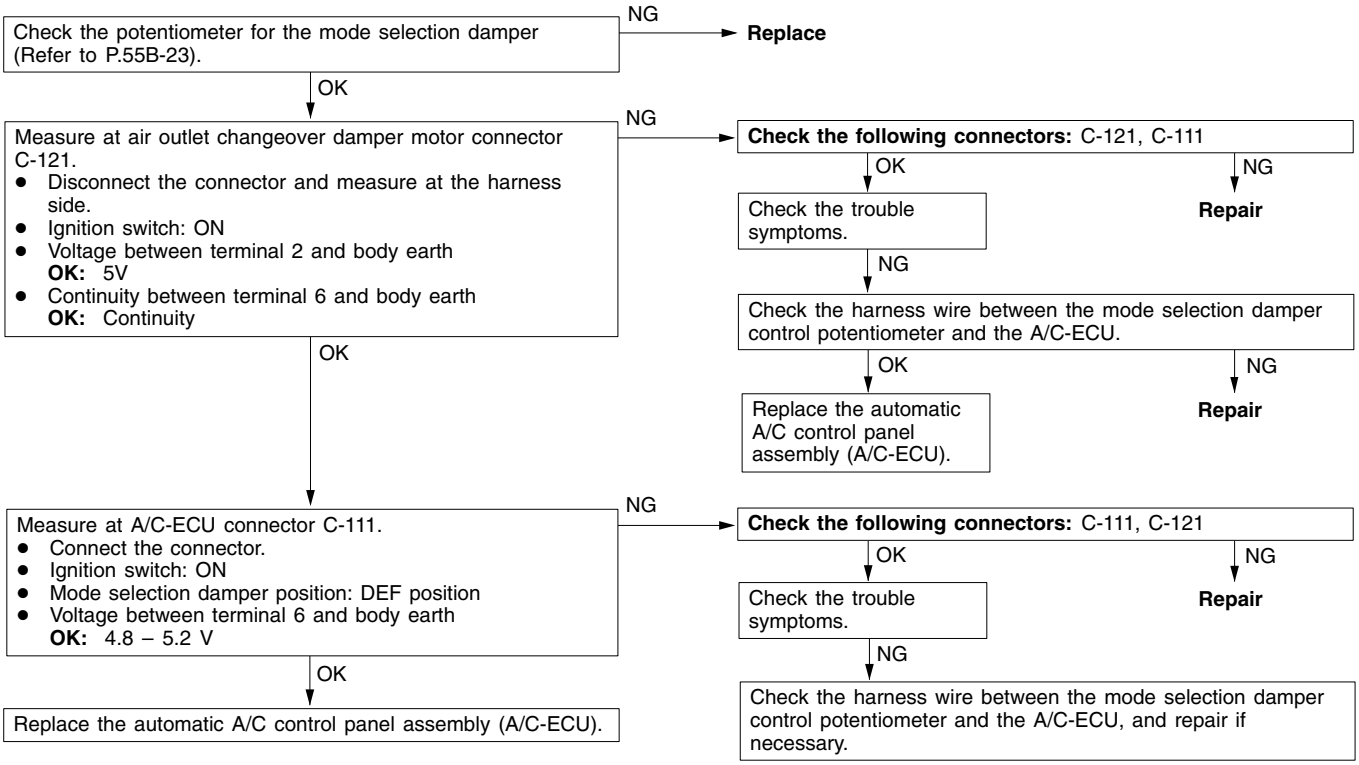

Code 41 air mixing damper control motor drive system	Probable cause
This code is output when the air mixing damper control motor could not turn as far as the set aperture.	• Air mixing damper control motor fault • Connector or harness fault • A/C-ECU fault

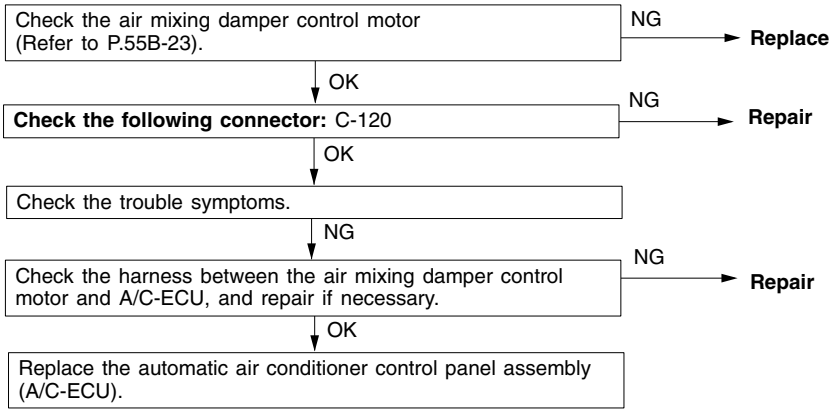

Code 42 mode selection damper control motor drive system	Probable cause
This code is output when the mode selection damper control motor could not turn as far as the set aperture.	● Mode selection damper control motor fault ● Connector or harness fault ● A/C-ECU fault

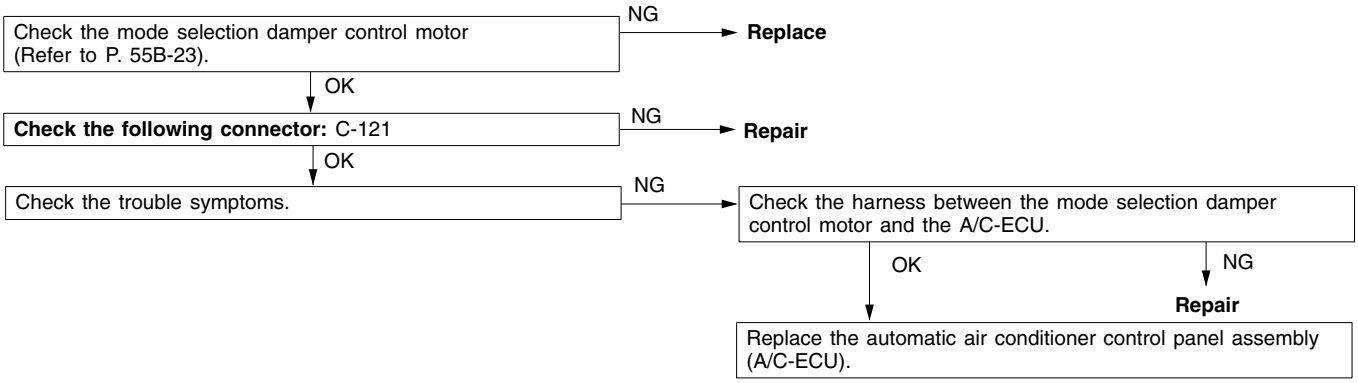

INSPECTION CHART FOR TROUBLE SYMPTOMS

Trouble symptom	Inspection procedure No.	Reference page
Communication with MUT-II is not possible.	1	55B-8
The air conditioner does not operate at all.	2	55B-9
The air conditioner display does not appear on the display.	3	55B-9
A/C outlet air temperature can not be set.	4	55B-10
The blower motor does not operate.	5	55B-11
The blower motor does not operate at high speed.	6	55B-12
The blower air volume can not be changed.	7	55B-13
Air outlet vent cannot be changed.	8	55B-14
outside/Inside air changeover is not possible.	9	55B-14
The condenser fan motor does not operate <4G64>.	10	55B-15
The condenser fan motor does not operate <4D56>.	11	55B-16

INSPECTION PROCEDURES FOR TROUBLE SYMPTOMS

Inspection procedure 1

Communication with the MUT-II is not possible.	Probable cause
If communication with all other systems is not possible, there is a high possibility that there is a malfunction of the diagnosis line. If only the A/C system can not communicate with the MUT-II, the diagnosis line between the diagnosis connector and the A/C-ECU may be defective.	• Malfunction of harness or connector • Malfunction of the A/C-ECU

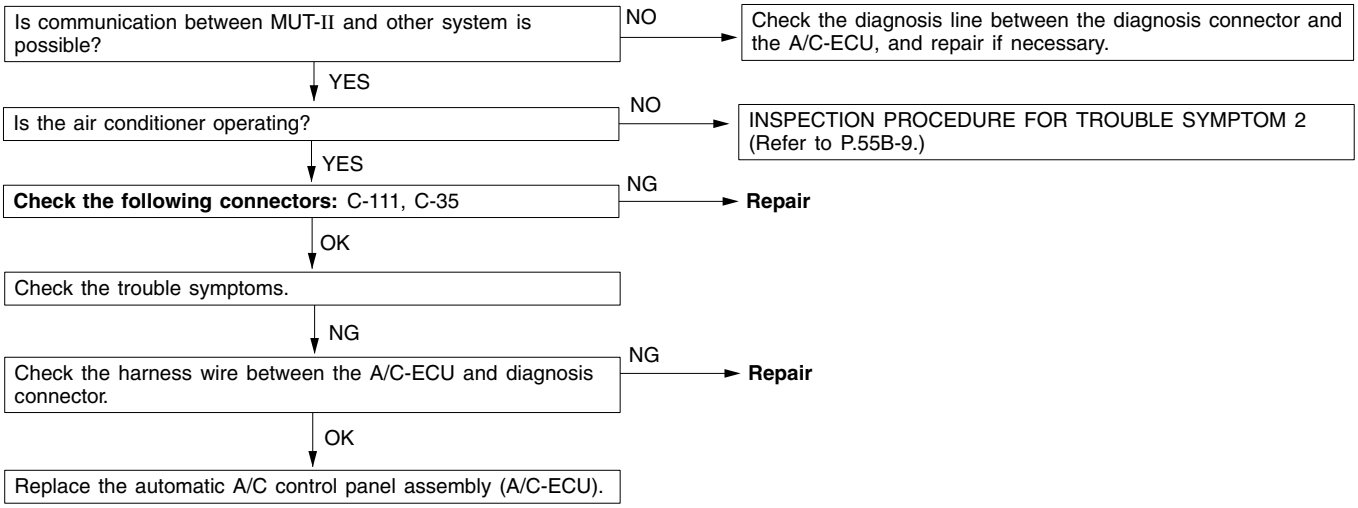

Inspection procedure 2

The air conditioner does not operate at all.	Probable cause
The power supply system (including earth) for the A/C-ECU may be defective. In addition, the A/C-ECU may be inoperative due to a defective harness (such as short).	• Malfunction of harness or connector • Malfunction of the A/C-ECU

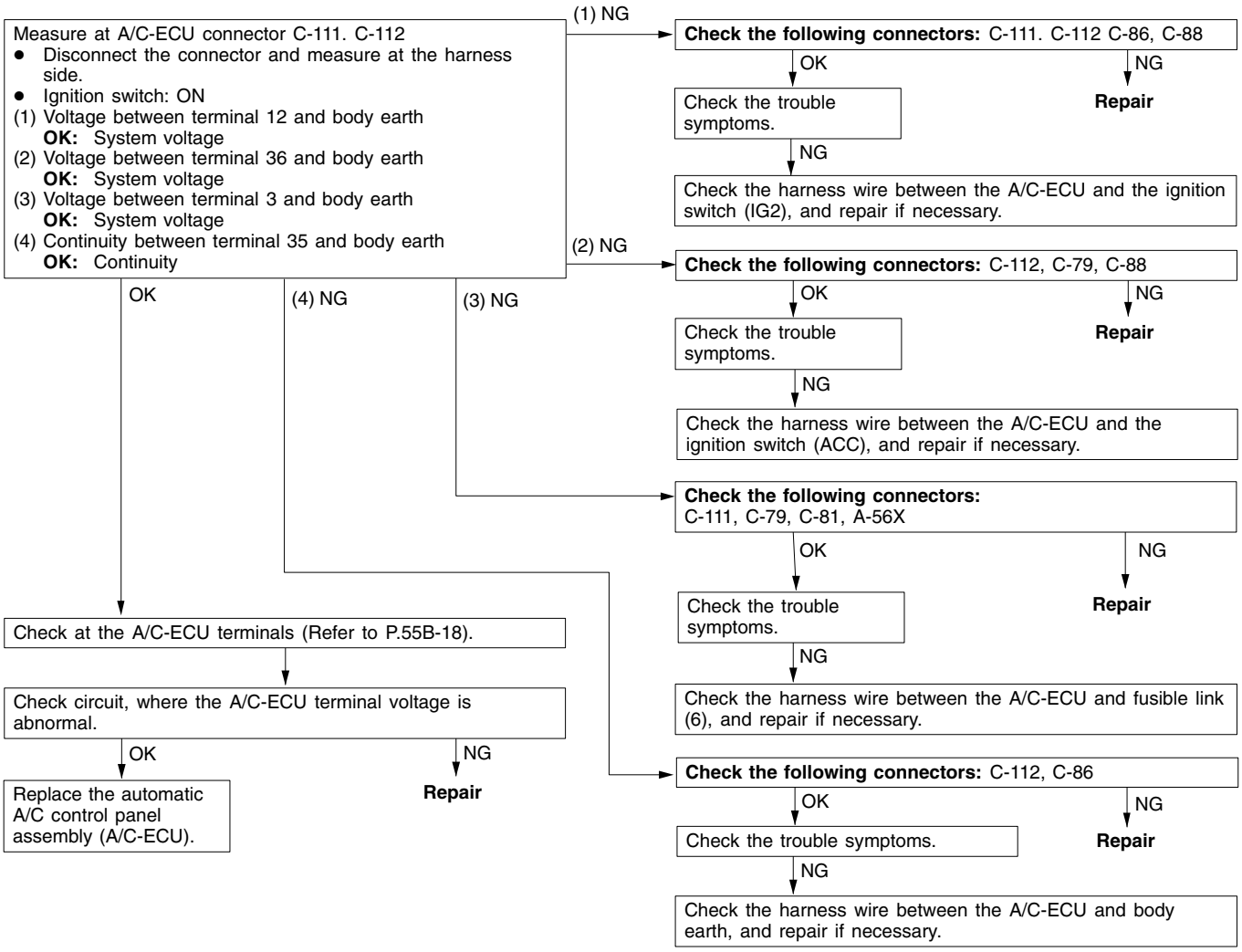

Inspection procedure 3

The air conditioner display does not appear on the display.	Probable cause
Check the harness wires between the A/C-ECU and the center display, and repair if necessary.	• Malfunction of harness or connector • Malfunction of the A/C-ECU

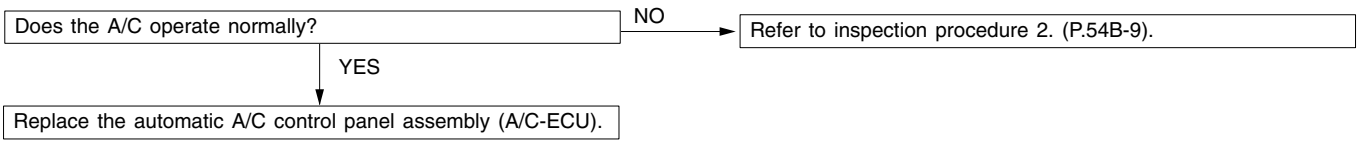

Inspection procedure 4

A/C outlet air temperature can not be set.	Probable cause
If the air outlet temperature can not be changed after a A/C temperature is set, sensor(s) or the air mixing damper may be defective.	• Malfunction of the inside air temperature sensor • Malfunction of the ambient temperature sensor • Malfunction of the heater water temperature sensor • Malfunction of the photo sensor • Malfunction of the air mixing damper control motor • Malfunction of harness or connector • Malfunction of the A/C-ECU

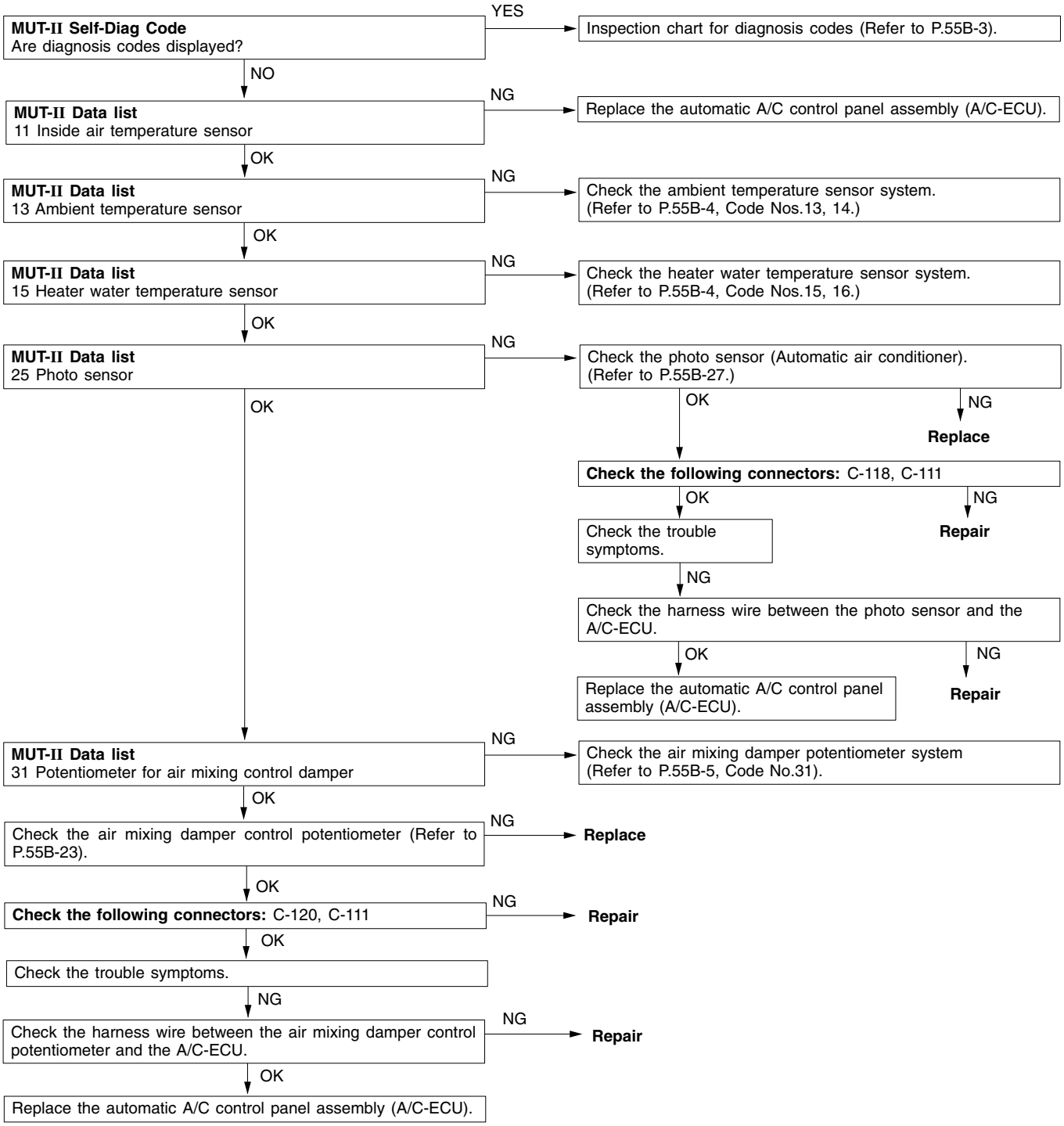

Inspection procedure 5

The blower motor does not operate.	Probable cause
If no air comes out of the blower even though the blower switch is on, the cause is probably a malfunction of the front blower relay circuit.	• Malfunction of the front blower relay • Malfunction of the blower motor • Malfunction of harness or connector • Malfunction of the A/C-ECU

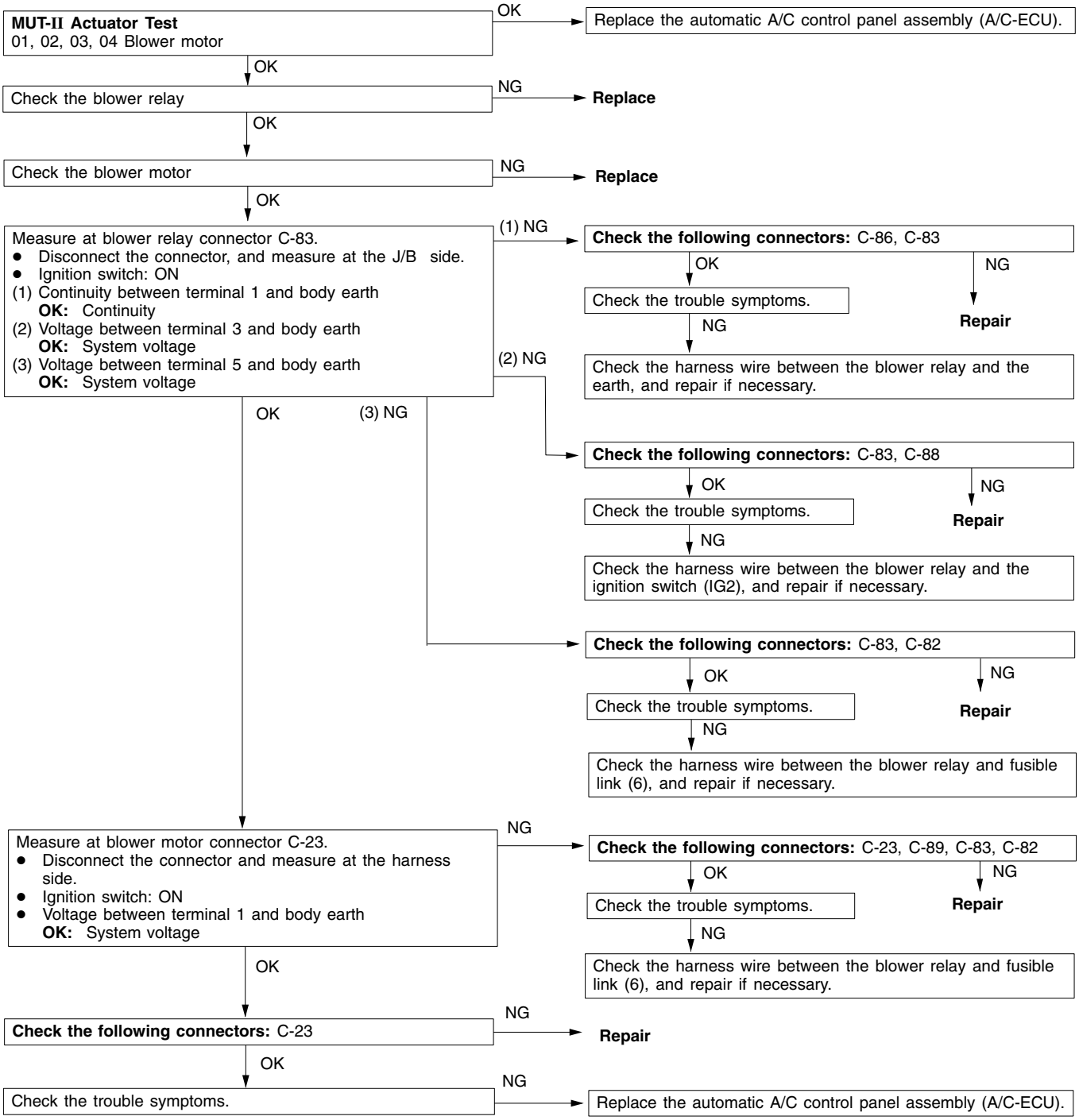

Inspection procedure 6

The blower motor does not operate at high speed.	Probable cause
If the blower motor does not operate at high speed when the temperature is set to 17 or 32, the blower high speed relay circuit system may be defective.	• Malfunction of the blower high speed relay • Malfunction of harness or connector • Malfunction of the A/C-ECU

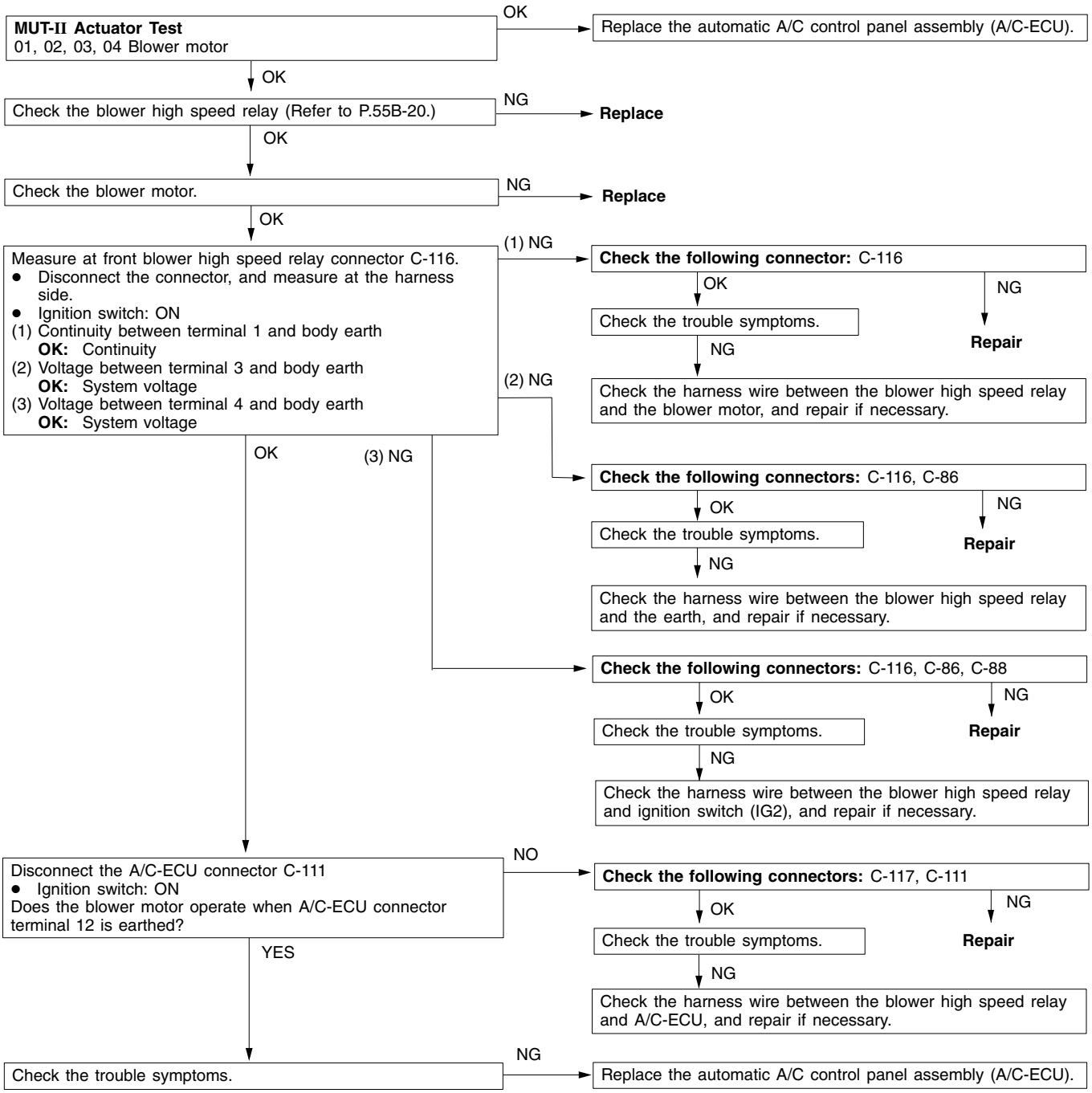

Inspection procedure 7

The blower air volume can not be changed.	Probable cause
If the air volume can not be controlled, the power transistor circuit may be defective.	• Malfunction of the power transistor • Malfunction of harness or connector • Malfunction of the A/C-ECU

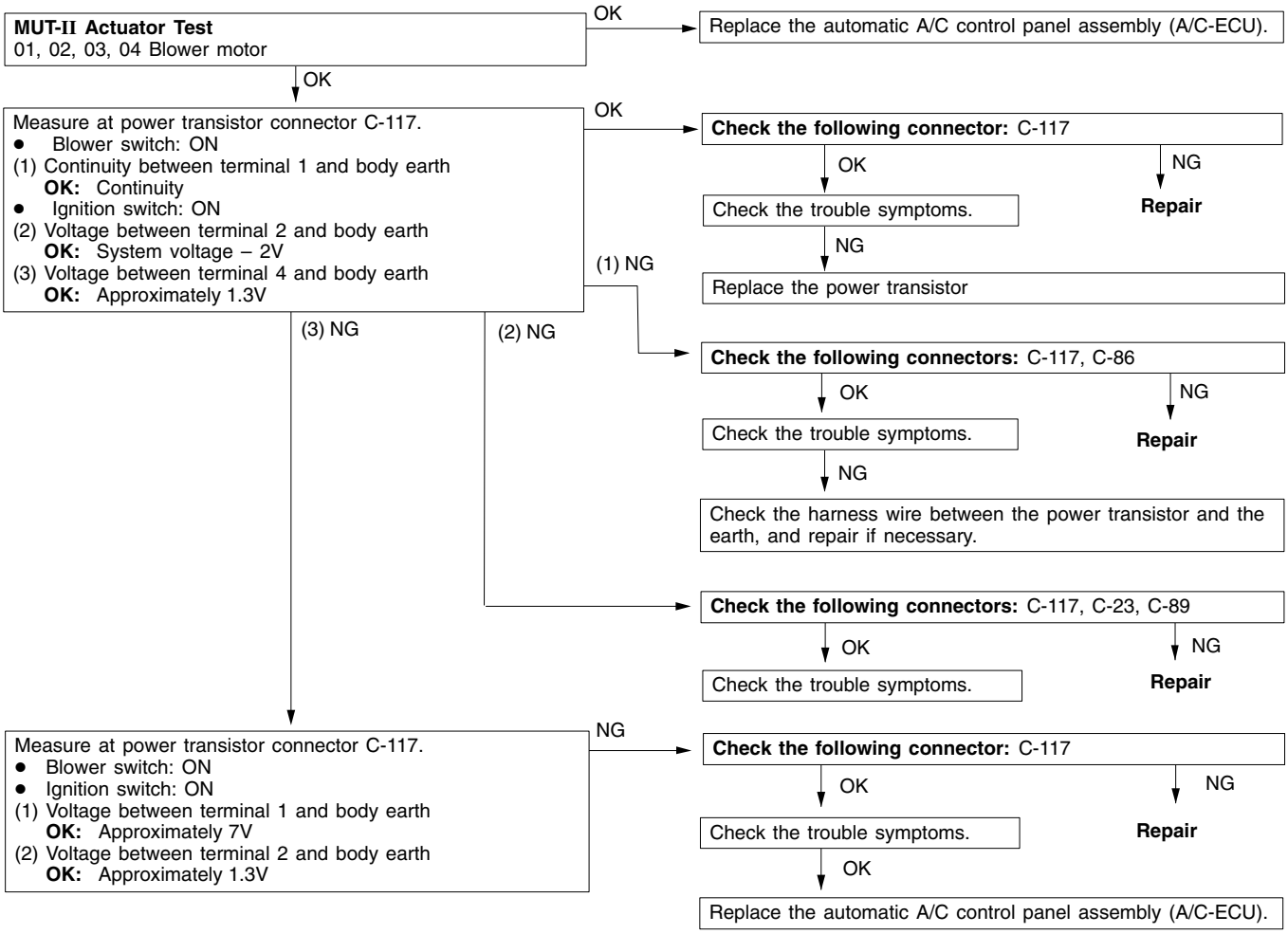

Inspection procedure 8

Air outlet vent cannot be changed.	Probable cause
When the air outlet vents cannot be changed even if the changeover switch is operated, the mode selection damper control circuit may be defective.	• Malfunction of the mode selection damper control motor • Malfunction of the mode selection damper control potentiometer • Malfunction of harness or connector • Malfunction of the A/C-ECU

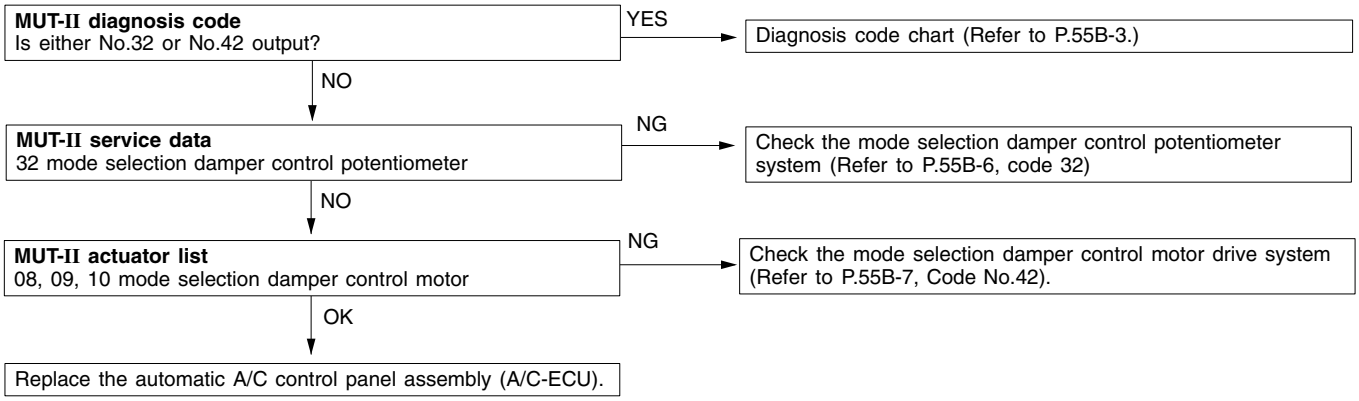

Inspection procedure 9

outside/inside air changeover is not possible.	Probable cause
When inside air cannot be changed to outside air or vice versa even if its changeover switch is on, the outside/inside air selection damper control system may be defective.	• Malfunction of the outside/inside air selection damper control motor • Malfunction of harness or connector • Malfunction of the A/C-ECU

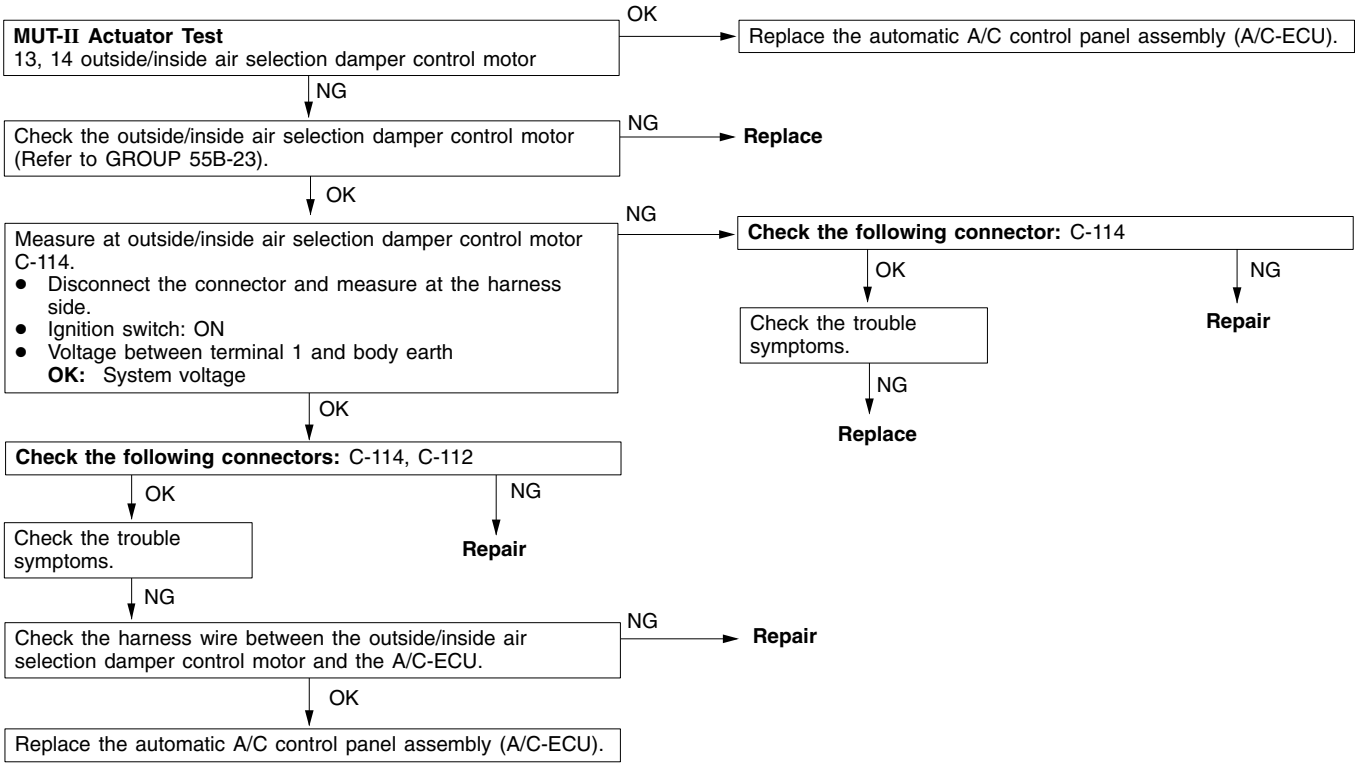

Inspection procedure 10

The condenser fan motor does not operate <4G64>.	Probable cause
If the condenser fan does not operate, the condenser fan relay or motor may be defective.	• Malfunction of the condenser fan relay • Malfunction of the condenser fan motor • Malfunction of harness or connector

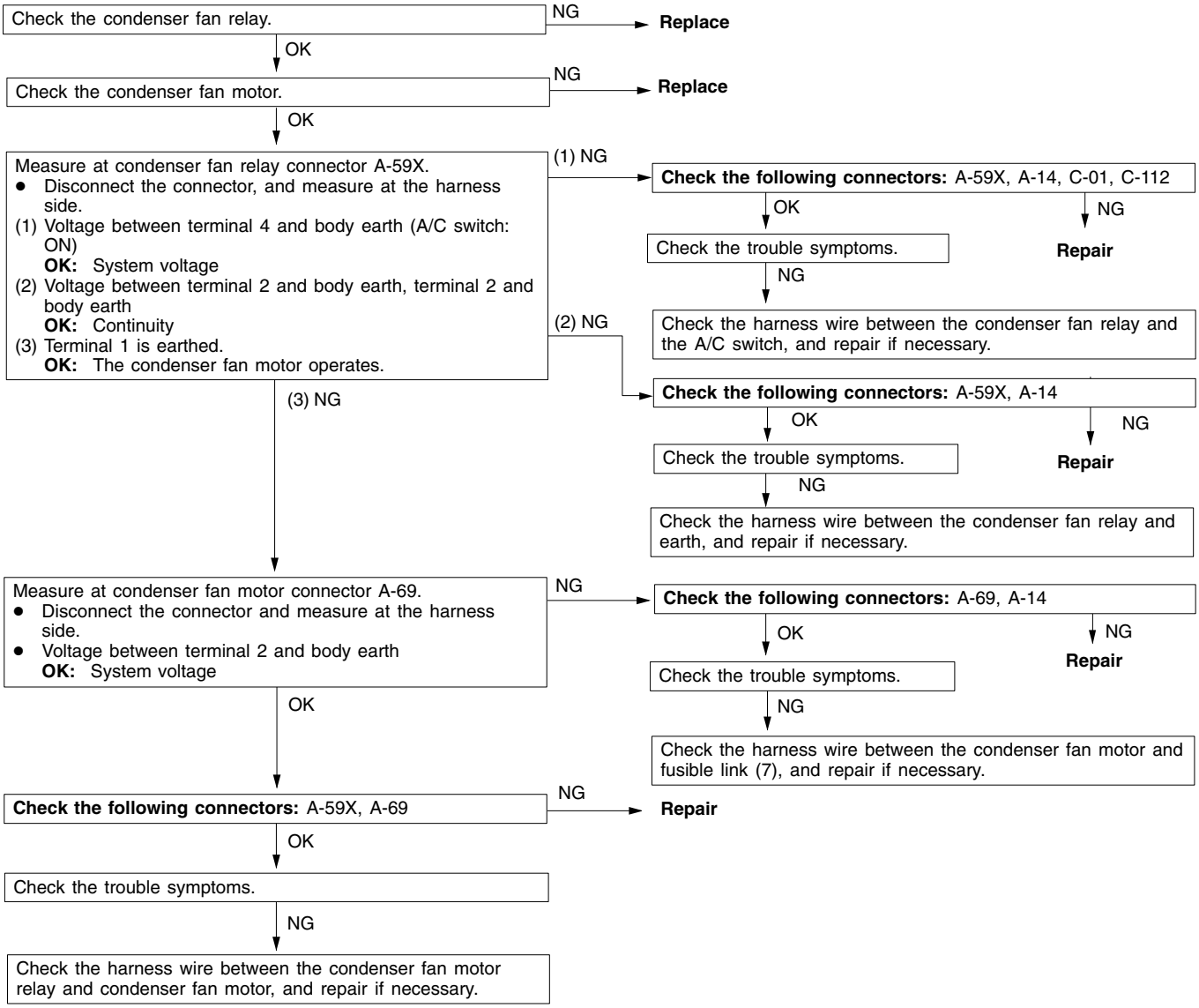

Inspection procedure 11

The condenser fan motor does not operate <4D56>.	Probable cause
If the condenser fan motor does not operate, the condenser fan relay or motor may be defective.	• Malfunction of the condenser fan relay • Malfunction of the condenser fan motor • Malfunction of harness or connector

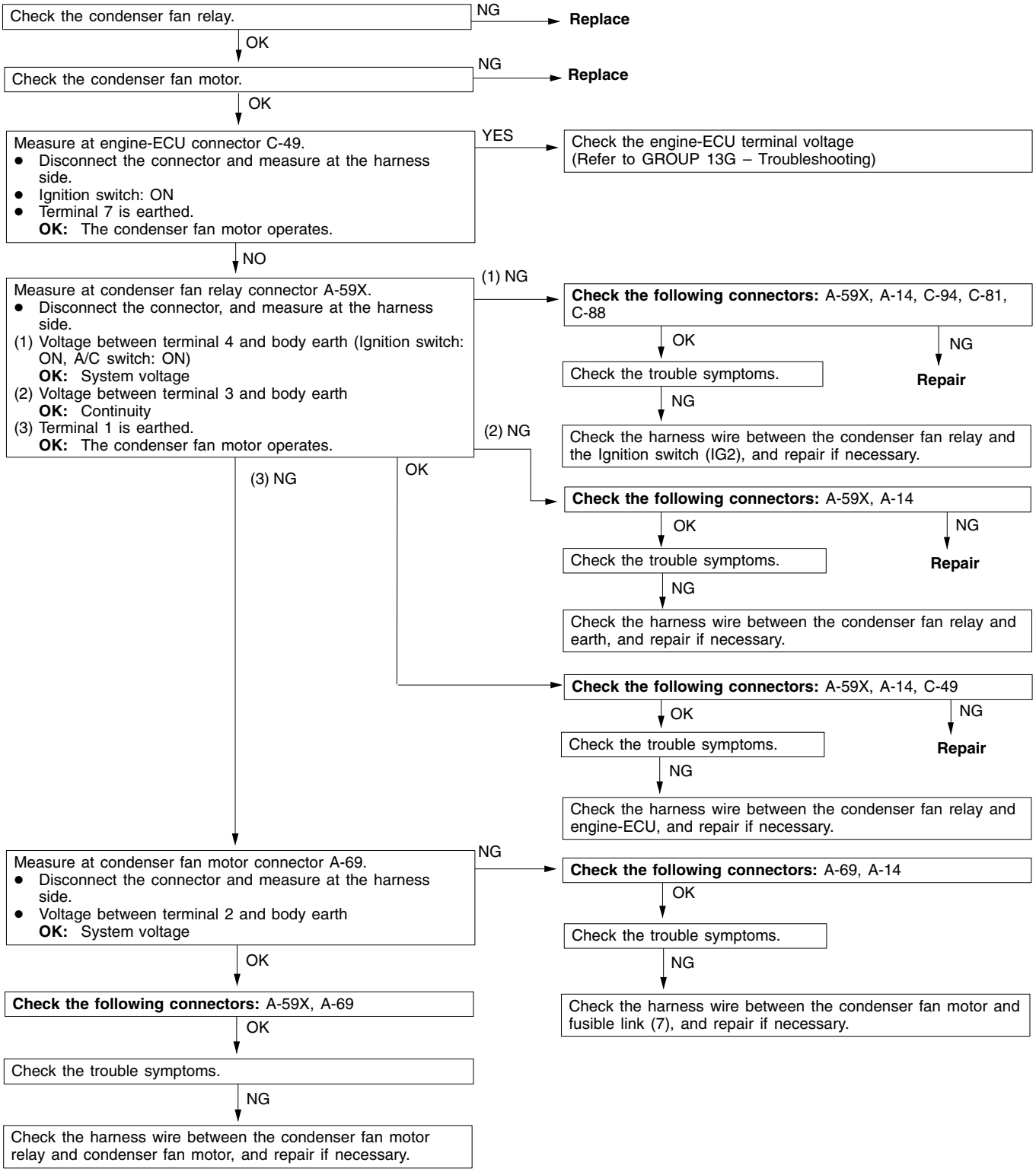

DATA LIST REFERENCE TABLE

Item No.	Check item	Inspection contents	
11	Inside air temperature sensor	Ignition switch: ON	Inside air temperature and temperature displayed on the MUT-II are identical.
13	Ambient temperature sensor	Ignition switch: ON	Outside air temperature and temperature displayed on the MUT-II are identical.
15	Heater water temperature sensor	Ignition switch: ON	Heater core surface temperature and temperature displayed on the MUT-II are identical.
21	Air thermo sensor	Ignition switch: ON	Evaporator outlet temperature and temperature displayed on the MUT-II are identical.
25	Photo sensor	Ignition switch: ON	Amount of incident light is proportional to voltage displayed on the MUT-II.
31	Potentiometer for the air mixing damper control	Ignition switch: ON Damper position: MAX HOT	Opening angle: Approximately 100%
		Ignition switch: ON Damper position: MAX COOL	Opening angle: Approximately 0%
32	Potentiometer for the mode selection damper control	Ignition switch: ON Damper position: FACE	Opening angle: Approximately 0%
		Ignition switch: ON Damper position: FOOT	Opening angle: Approximately 50%
		Ignition switch: ON Damper position: FOOT/DEF	Opening angle: Approximately 75%
		Ignition switch: ON Damper position: DEF	Opening angle: Approximately 100%

ACTUATOR TEST TABLE

Item No.	Check item	Drive Contents
01	Blower motor	Stopped
02		Low speed
03		Medium speed
04		High speed
05	Air mixing damper control motor	Opening angle: Approximately 0%
06		Opening angle: Approximately 50%
07		Opening angle: Approximately 100%
08	Mode selection damper control motor	FACE
09		FOOT
10		DEF
11	Compressor ON/OFF	OFF
12		ON
13	Outside/inside air selection damper control motor	Outside air
14		Inside air

CHECK AT A/C-ECU TERMINALS

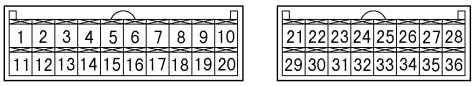

W0763AU

Terminal No.	Check item	Check conditions	Normal condition
1	Power transistor collector output	When blower switch OFF position	System voltage
		When blower switch LO position	Approximately 7V
		When blower switch HI position	Faint voltage (0.5 V)
2	Power transistor base output	When blower switch OFF position	0 V
		When blower switch LO position	Approximately 1.3V
		When blower switch HI position	Approximately 2.5V
3	Backup power supply	At all times	System voltage
4	Input from heater water temperature sensor	When sensor temperature: 25°C (4 kΩ)	2.3 – 2.9 V
5	Input to air mixing damper control potentiometer	When the damper is moving to the MAX. HOT position	4.7 – 5.0 V
6	Input to mode selection damper control potentiometer	When the damper flap is moving to the DEF position	4.8 – 5.2 V
7	Input from ambient temperature sensor	When sensor temperature: 25°C (4 kΩ)	2.3 – 2.9 V
8	Input from air thermo sensor	Sensor temperature: 25°C (4 kΩ)	2.3 – 2.9 V
9	Photo sensor (–)	Illuminance 1000 lux	5.0 – 7.6 mV
		Illuminance 100 lux	0.5 – 0.76 mV
10	Sensor power supply	At all times	4.8 – 5.2 V
12	Blower high speed relay	Blower switch: HI	1.5V or less
		Blower switch: except HI	System voltage
13	Earth	At all times	Continuity
16	Power supply to ignition switch (IG2)	Ignition switch: ON	System voltage
17	Diagnosis output	Ignition switch: ON	A voltmeter needle fluctuates between 0 and 12 V.
18	Diagnosis control output	Ignition switch: ON	System voltage – 2V
19	Photo sensor (+)	At all times	0 V
20	Earth to potentiometer	At all times	0 V
21	Mode selection damper control motor (FACE)	When the damper flap is moving to the FACE position.	10 V
		When the damper flap is moving to the DEF position.	Faint voltage (0.5 V)
22	Air mixing damper control motor (MAX COOL)	When the damper flap is moving to the MAX COOL position.	10 V
		When the damper flap is moving to the MAX HOT position.	Faint voltage (0.5 V)

Terminal No.	Check item	Check conditions	Normal condition
23	Outside/inside air selection damper control motor (Outside)	When the damper flap is moving to the outside position.	10 V
		When the damper flap is moving to the inside position.	Faint voltage (0.5 V)
24	Mode selection damper control motor (DEF)	When the damper flap is moving to the DEF position.	10 V
		When the damper flap is moving to the FACE position.	Faint voltage (0.5 V)
25	Air mixing damper control motor (MAX HOT)	When the damper flap is moving to the MAX HOT position.	10 V
		When the damper flap is moving to the MAX COOL position.	Faint voltage (0.5 V)
26	Outside/inside air selection damper control motor (Inside)	When the damper flap is moving to the inside position.	10 V
		When the damper flap is moving to the outside position.	Faint voltage (0.5 V)
29	Illumination earth	At all times	Continuity
30	Power supply to illumination	Lighting switch: ON	System voltage
34	A/C output	When the A/C is OFF	0 V
		When the A/C is ON	System voltage
35	Earth	At all times	Continuity

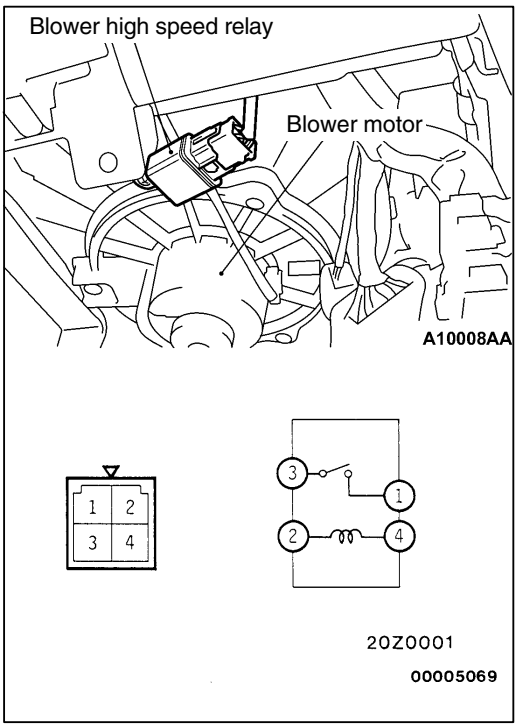

ON-VEHICLE SERVICE

BLOWER HIGH SPEED RELAY CONTINUITY CHECK

Battery voltage	Terminal No.			
	2	4	1	3
Power is not supplied	○	○		
Power is supplied	⊕	⊖	○	○

IDLE-UP INSPECTION <4D56>

(1) Before the check, set the following conditions.
- Engine cooling water temperature: 80‘90
- Lamps, electric cooling fan, accessories operations: OFF
- Transmission: N range

(2) Confirm that the idling speed is set to the typical value.

Standard value: 750 ± 30 rpm

NOTE
The idling speed does not need adjusting as it is automatically controlled by the ISC system.

(3) Check that the idling speed conforms with the standard value when the A/C switch is turned ON and the air conditioning operates.

Standard value: 850 ± 50 r/min

AUTOMATIC AIR CONDITIONER CONTROL PANEL ASSEMBLY (A/C-ECU)

REMOVAL AND INSTALLATION

Pre-removal and Post-installation Operations
- Driver Side Under Cover, Meter Bezel Assembly, Glove Box Assembly, Center Under Cover Removal and Installation (Refer to GROUP 52A – Instrument Panel.)*

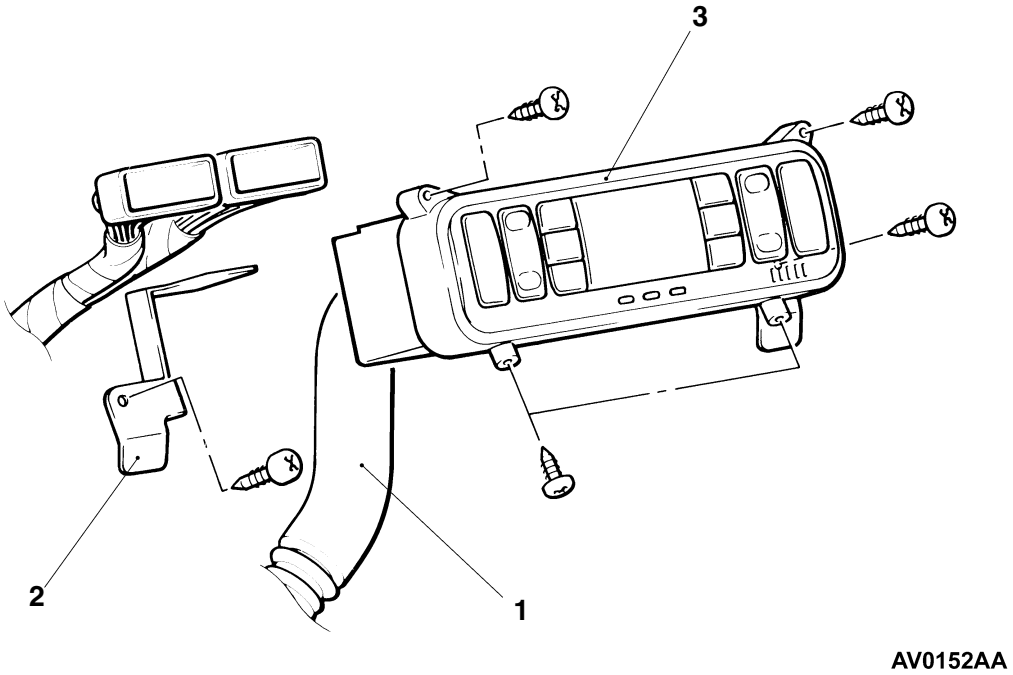

Removal steps
1. Aspirator hose
2. Automatic air conditioner control panel bracket
3. Automatic air conditioner control panel assembly (A/C-ECU)

NOTE:
*: Refer to the '97 L200 Workshop Manual (Pub. No. PWTE96E1)

MOTOR

REMOVAL AND INSTALLATION

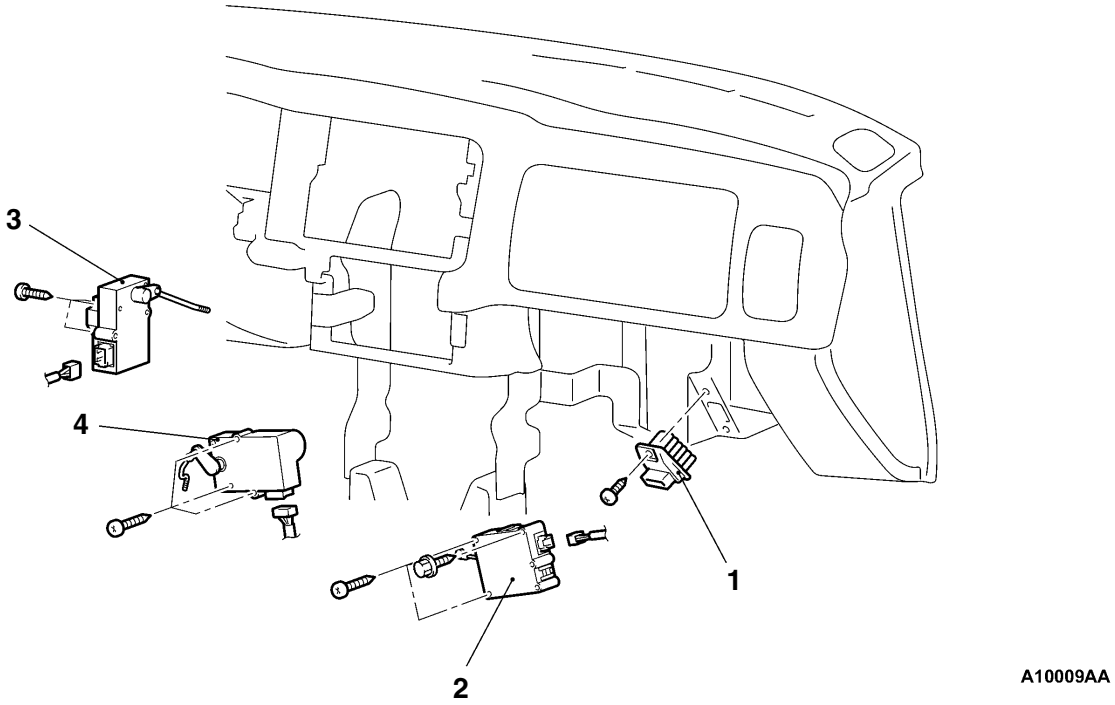

Power transistor removal steps

- Glove box assembly (Refer to GROUP 52A.)*

1. Power transistor

Outside/inside air selection damper control motor removal steps

- Glove box assembly (Refer to GROUP 52A.)*

2. Outside/inside air selection damper control motor

Mode selection damper control motor removal steps

- Driver side under cover (Refer to GROUP 52A.)*

3. Mode selection damper control motor

Air mixing damper control motor removal steps

- Front floor console, Glove box assembly (Refer to GROUP 52A.)*
- Driver side under cover (Refer to GROUP 52A.)*
- Meter bezel assembly (Refer to GROUP 52A.)*
- Center reinforcement A (Refer to GROUP 52A.)*

4. Air mixing damper control motor

NOTE:
*: Refer to the ’97 L200 Workshop Manual (Pub. No. PWTE96E1)

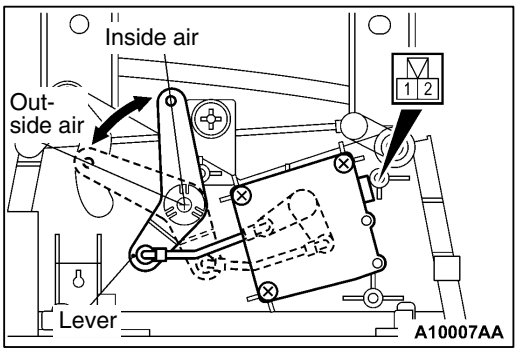

INSPECTION

OUTSIDE/INSIDE AIR SELECTION DAMPER CONTROL MOTOR CHECK

Battery connection terminal lever operation		Operating the lever
1	2	
⊕	⊖	Turn to outside air side
⊖	⊕	Turn to cabin air side

Caution
When the lever is in the inside air position or outside air position, no power is supplied.

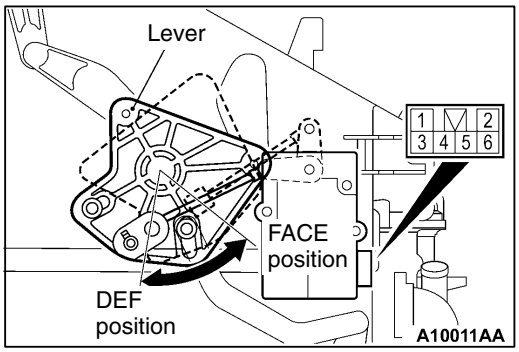

MODE SELECTION DAMPER CONTROL MOTOR CHECK

Battery connection terminal		Lever operation
1	3	
⊕	⊖	Turn to DEF. side.
⊖	⊕	Turn to FACE side.

NOTE
When the lever is in the FACE position or DEF position, no power is supplied.

POTENTIOMETER CHECK

When measuring the resistance between connector terminals nos. 2 and 5, and between terminals 5 and 6 under the same conditions as the mode selection damper control motor check, confirm that the resistance gradually fluctuates within the standard value range.

Standard value: 0.18 – 4.82 kΩ

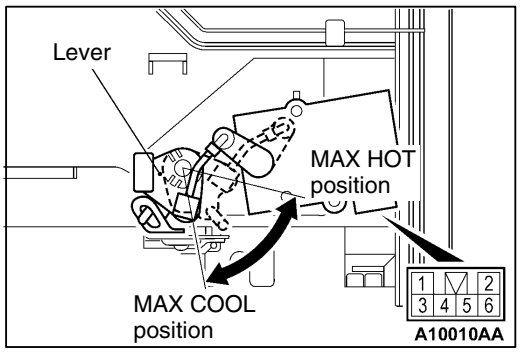

AIR MIXING DAMPER CONTROL MOTOR CHECK

Battery connection terminal		Lever operation
1	3	
⊕	⊖	Turn to COOL side.
⊖	⊕	Turn to HOT side.

NOTE
When the lever is in the MAX HOT position or MAX COOL position, no power is supplied.

Potentiometer Check

When measuring the resistance between connector terminals nos. 2 and 5, and between terminals 5 and 6 under the same conditions as the air mixing damper motor check, confirm that the resistance gradually fluctuates within the standard value range.

Standard value: 0.18 – 4.82 kΩ

HEATER UNIT

REMOVAL AND INSTALLATION

Pre-removal and Post-installation Operation
- Refrigerant Discharging and Charging
- Engine Coolant Draining and Refilling
- Instrument Panel Removal and Installation
- Joint Duct Removal and Installation

Caution: SRS
When removing and installing the heater unit from vehicles equipped with SRS, do not let it bump against the SRS diagnostic unit or the components.

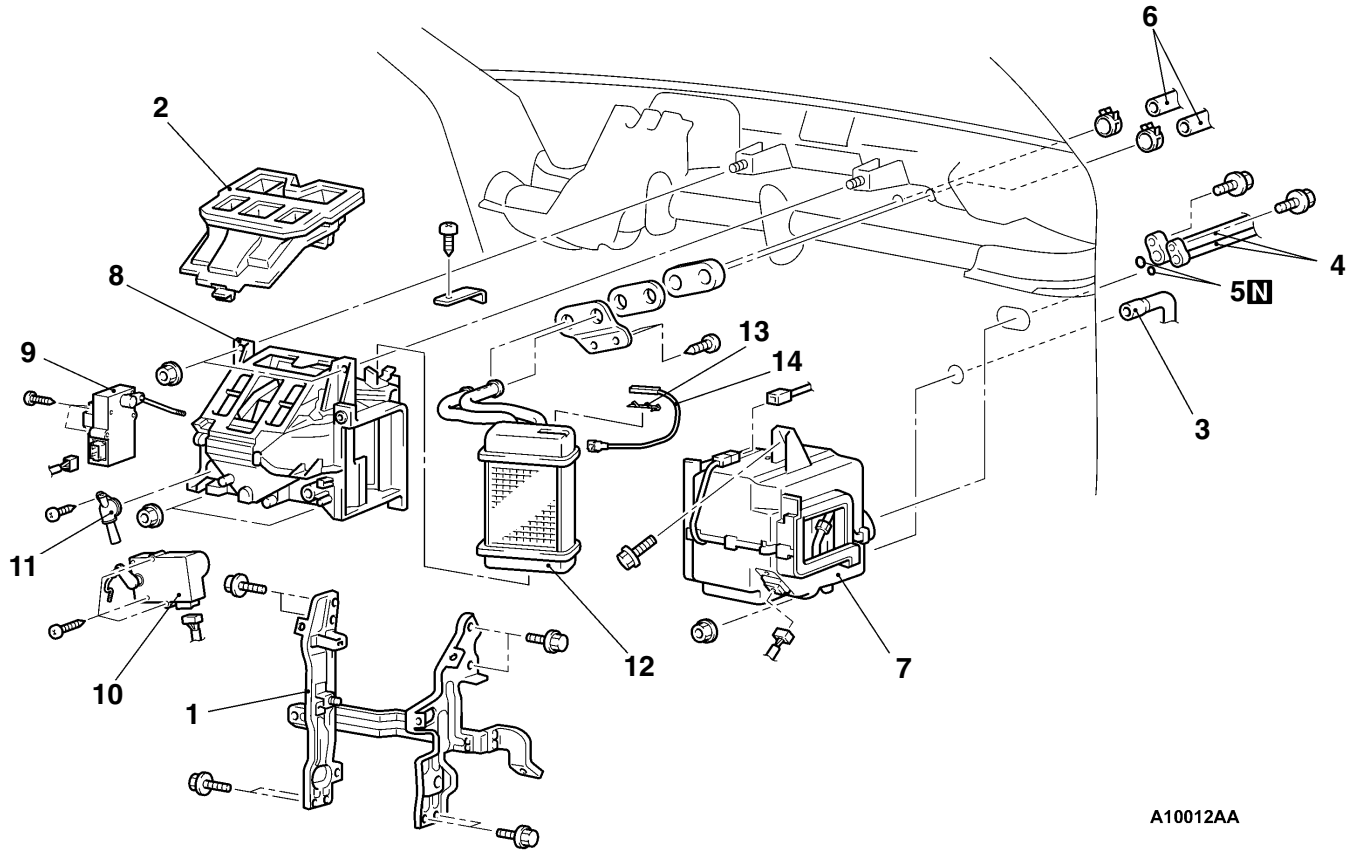

Removal steps

1. Center reinforcement
2. Center ventilation duct
3. Drain hose
◀A▶ 4. Liquid pipe B and suction pipe connection
5. O-ring
6. Heater hose connection
7. Evaporator
8. Heater unit
9. Mode selection damper control motor
10. Air mixing damper control motor
11. Aspirator
12. Heater core
◀B▶ ▶A◀ 13. Heater water temperature sensor clip
14. Heater water temperature sensor

REMOVAL SERVICE POINTS

◀A▶ LIQUID PIPE B/SUCTION PIPE DISCONNECTION

To prevent the entry of dust or other foreign bodies, plug the dismantled pipes and nipples.

◀B▶CLIP/HEATER WATER TEMPERATURE SENSOR REMOVAL

Remove the clip from the side of the heater unit and lift the heater water temperature sensor out of the heater unit.

INSTALLATION SERVICE POINTS

▶A◀HEATER WATER TEMPERATURE SENSOR/CLIP INSTALLATION

Insert the heater water temperature sensor into the mounting hole on the side of the heater unit and secure the sensor with the clip.

NOTE
As the compressor oil and receiver are highly moisture absorbent, use a non-porous material to plug the hoses and nipples.

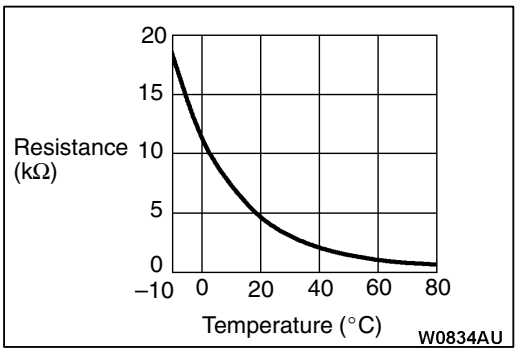

INSPECTION

HEATER WATER TEMPERATURE SENSOR CHECK

Measure the resistance between the sensor terminals under at least two different temperatures. The resistance values should generally match those in the graph.

EVAPORATOR

DISASSEMBLY AND REASSEMBLY

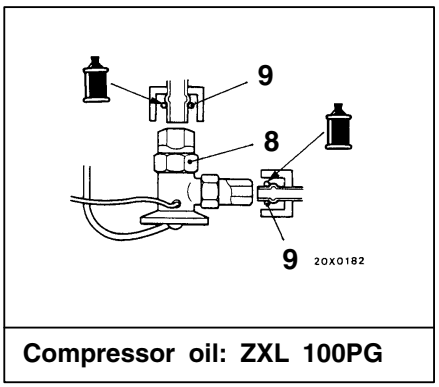

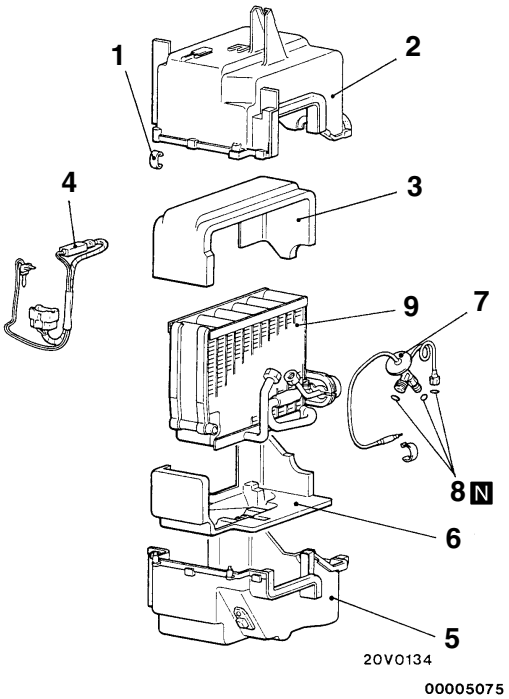

Disassembly steps

1. Clip
2. Evaporator cover (upper)
3. Lining, upper
4. Thermostat
5. Evaporator cover (lower)
6. Lining, lower
7. Expansion valve
8. O-ring
9. Evaporator

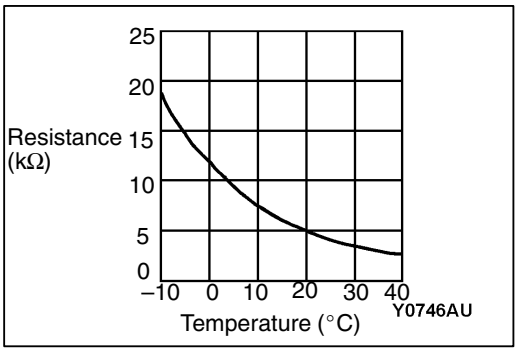

INSPECTION

AIR THERMO SENSOR CHECK

Measure the resistance between the sensor terminals under at least two different temperatures. The resistance values should generally match those in the graph.

NOTE
The temperature at the check should not exceed the range in the graph.

PHOTO SENSOR

REMOVAL AND INSTALLATION

- Instrument Panel Removal and Installation (Refer to GROUP 52A.)*

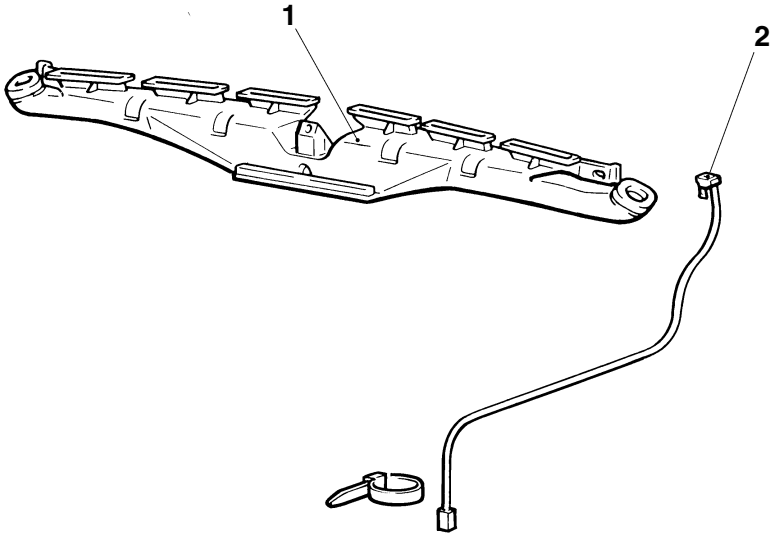

A10014AA

Removal steps

1. Defroster nozzle
2. Photo sensor

NOTE:
*: Refer to the '97 L200 Workshop Manual (Pub. No. PWTE96E1)

INSPECTION

PHOTO SENSOR CHECK

When the full automatic air conditioner is operating, cover the insolation sensor photo-sensor with your hand. If the blower speed drops, it is normal. If the blower speed does not drop, replace the photo sensor.

AMBIENCE TEMPERATURE SENSOR

REMOVAL AND INSTALLATION

- Front bumper (Refer to GROUP 51.)

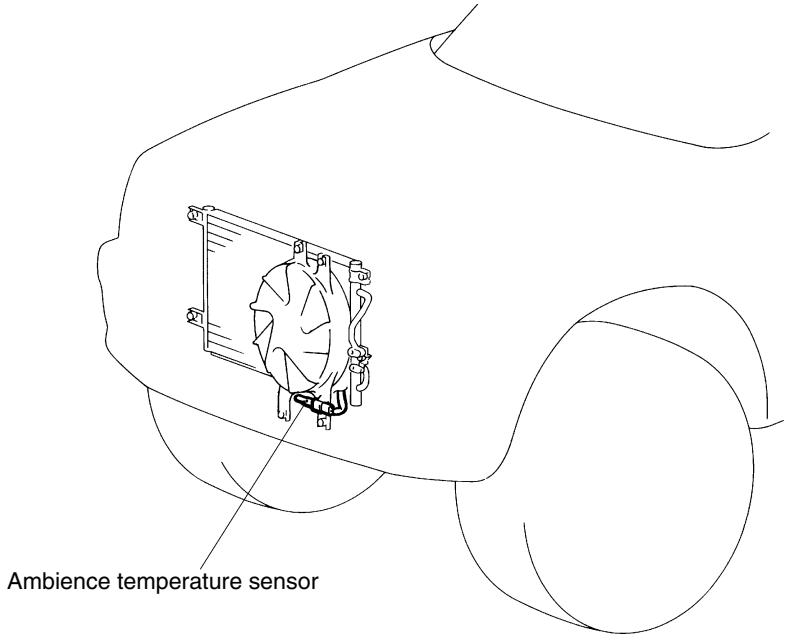

AV0202AA

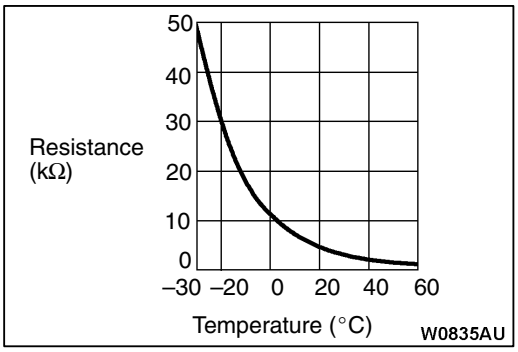

INSPECTION

AMBIENCE TEMPERATURE SENSOR CHECK

Measure the resistance between the sensor terminals under at least two different temperatures. The resistance values should generally match those in the graph.

REFRIGER LINE

REMOVAL AND INSTALLATION

Pre-removal and Post-installation Operations
- Refrigerant Discharging and Charging
- Radiator Grill Removal and Installation
- Front Bumper Removal and Installation
- Battery Removal and Installation
- Windshield Washer Tank Removal and Installation

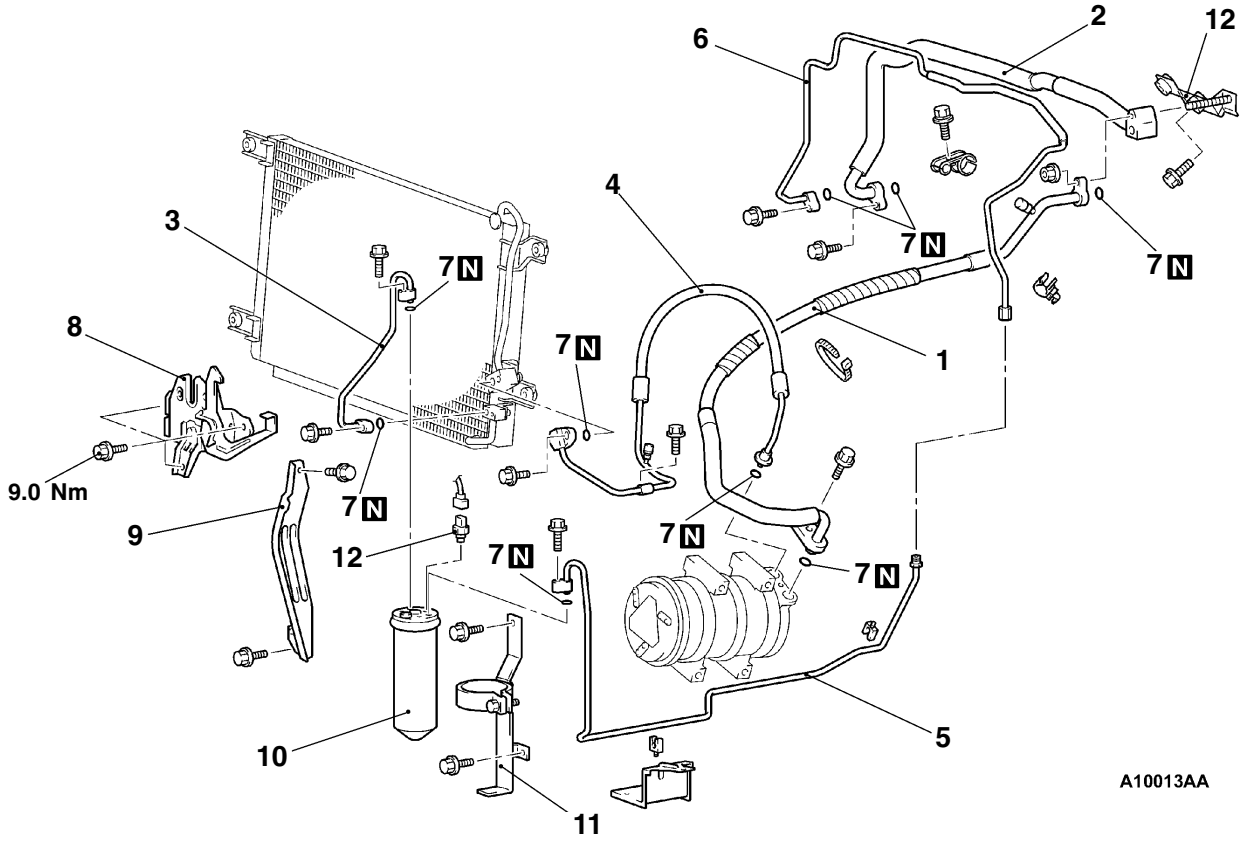

Removal steps

◀A▶ 1. Suction flexible hose
◀A▶ 2. Suction pipe A
◀A▶ 3. Liquid pipe A
◀A▶ 4. Discharge hose
◀A▶ 5. Liquid pipe B
◀A▶ 6. Liquid pipe C
7. O-ring
8. Hood latch
9. Hood lock stay
10. Receiver assembly
11. Receiver bracket
12. Suction pipe braclet

REMOVAL SERVICE POINTS

◀A▶ REMOVAL OF HOSES AND PIPES

To prevent the entry of dust or other foreign bodies, plug the condenser, compressor, pipes and nipples.

THROTTLE CABLE

REMOVAL AND INSTALLATION

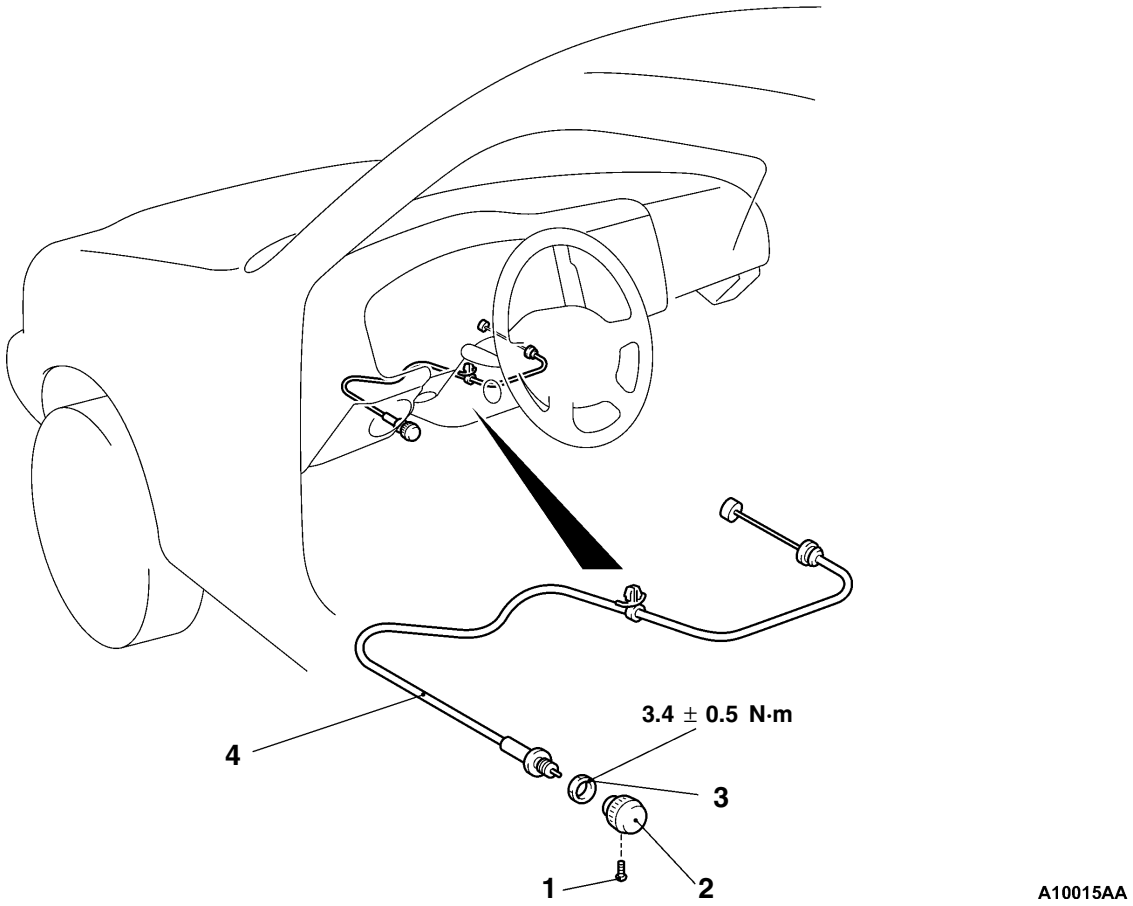

Removal steps

1. Screw
2. Knob
3. Nut
4. Throttle cable

NOTES