YAMAHA 2014

SERVICE MANUAL

FZ09E
FZ09EC

FZ-09

LIT-11616-27-39 1RC-28197-10

EAS20050

FZ09E
FZ09EC
SERVICE MANUAL

First edition, August 2013

Printed in U.S.A.
P/N LIT-11616-27-39

EAS20071

IMPORTANT

This manual was produced by the Yamaha Motor Company, Ltd. primarily for use by Yamaha dealers and their qualified mechanics. It is not possible to include all the knowledge of a mechanic in one manual. Therefore, anyone who uses this book to perform maintenance and repairs on Yamaha vehicles should have a basic understanding of mechanics and the techniques to repair these types of vehicles. Repair and maintenance work attempted by anyone without this knowledge is likely to render the vehicle unsafe and unfit for use.

This model has been designed and manufactured to perform within certain specifications in regard to performance and emissions. Proper service with the correct tools is necessary to ensure that the vehicle will operate as designed. If there is any question about a service procedure, it is imperative that you contact a Yamaha dealer for any service information changes that apply to this model. This policy is intended to provide the customer with the most satisfaction from his vehicle and to conform to federal environmental quality objectives.

Yamaha Motor Company, Ltd. is continually striving to improve all of its models. Modifications and significant changes in specifications or procedures will be forwarded to all authorized Yamaha dealers and will appear in future editions of this manual where applicable.

TIP

- This Service Manual contains information regarding periodic maintenance to the emission control system. Please read this material carefully.
- Designs and specifications are subject to change without notice.

EAS20081

IMPORTANT MANUAL INFORMATION

Particularly important information is distinguished in this manual by the following notations.

⚠	**This is the safety alert symbol. It is used to alert you to potential personal injury hazards. Obey all safety messages that follow this symbol to avoid possible injury or death.**
⚠ WARNING	**A WARNING indicates a hazardous situation which, if not avoided, could result in death or serious injury.**
NOTICE	**A NOTICE indicates special precautions that must be taken to avoid damage to the vehicle or other property.**
TIP	A TIP provides key information to make procedures easier or clearer.

EAS20091

HOW TO USE THIS MANUAL

This manual is intended as a handy, easy-to-read reference book for the mechanic. Comprehensive explanations of all installation, removal, disassembly, assembly, repair and check procedures are laid out with the individual steps in sequential order.

- The manual is divided into chapters and each chapter is divided into sections. The current section title "1" is shown at the top of each page.
- Sub-section titles "2" appear in smaller print than the section title.
- To help identify parts and clarify procedure steps, there are exploded diagrams "3" at the start of each removal and disassembly section.
- Numbers "4" are given in the order of the jobs in the exploded diagram. A number indicates a disassembly step.
- Symbols "5" indicate parts to be lubricated or replaced.
  Refer to "SYMBOLS".
- A job instruction chart "6" accompanies the exploded diagram, providing the order of jobs, names of parts, notes in jobs, etc. This step explains removal and disassembly procedure only. For installation and assembly procedure, reverse the steps.
- Jobs "7" requiring more information (such as special tools and technical data) are described sequentially.

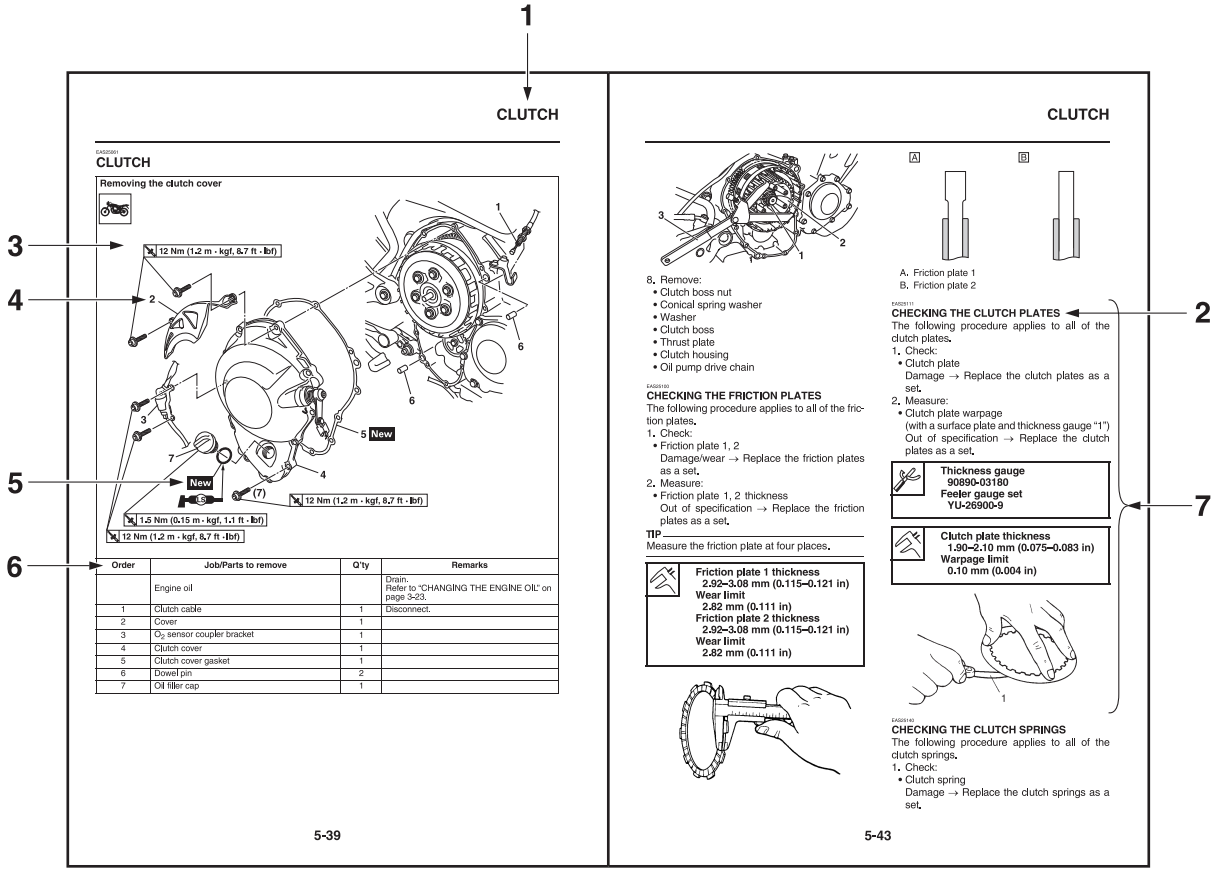

EAS20101

SYMBOLS

The following symbols are used in this manual for easier understanding.

TIP

The following symbols are not relevant to every vehicle.

SYMBOL	DEFINITION	SYMBOL	DEFINITION
	Serviceable with engine mounted	G	Gear oil
	Filling fluid	M	Molybdenum disulfide oil
	Lubricant	BF	Brake fluid
	Special tool	B	Wheel bearing grease
	Tightening torque	LS	Lithium-soap-based grease
	Wear limit, clearance	M	Molybdenum disulfide grease
	Engine speed	S	Silicone grease
	Electrical data	LT	Apply locking agent (LOCTITE®).
E	Engine oil	New	Replace the part with a new one.
S	Silicone fluid		

EAS20110

TABLE OF CONTENTS

GENERAL INFORMATION

EAS20130
IDENTIFICATION

EAS20140
VEHICLE IDENTIFICATION NUMBER
The vehicle identification number “1” is stamped into the right side of the steering head pipe.

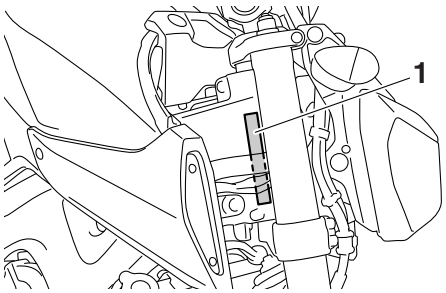

EAS20150
MODEL LABEL
The model label “1” is affixed to the frame. This information will be needed to order spare parts.

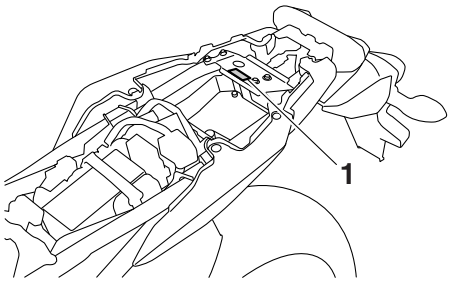

EAS20170

FEATURES

EAS1RC1101

OUTLINE OF THE FI SYSTEM

The main function of a fuel supply system is to provide fuel to the combustion chamber at the optimum air-fuel ratio in accordance with the engine operating conditions and the atmospheric temperature. In the conventional carburetor system, the air-fuel ratio of the mixture that is supplied to the combustion chamber is created by the volume of the intake air and the fuel that is metered by the jet used in the respective carburetor.

Despite the same volume of intake air, the fuel volume requirement varies by the engine operating conditions, such as acceleration, deceleration, or operating under a heavy load. Carburetors that meter the fuel through the use of jets have been provided with various auxiliary devices, so that an optimum air-fuel ratio can be achieved to accommodate the constant changes in the operating conditions of the engine.

As the requirements for the engine to deliver more performance and cleaner exhaust gases increase, it becomes necessary to control the air-fuel ratio in a more precise and finely tuned manner. To accommodate this need, this model has adopted an electronically controlled fuel injection (FI) system, in place of the conventional carburetor system. This system can achieve an optimum air-fuel ratio required by the engine at all times by using a microprocessor that regulates the fuel injection volume according to the engine operating conditions detected by various sensors.

The adoption of the FI system has resulted in a highly precise fuel supply, improved engine response, better fuel economy, and reduced exhaust emissions.

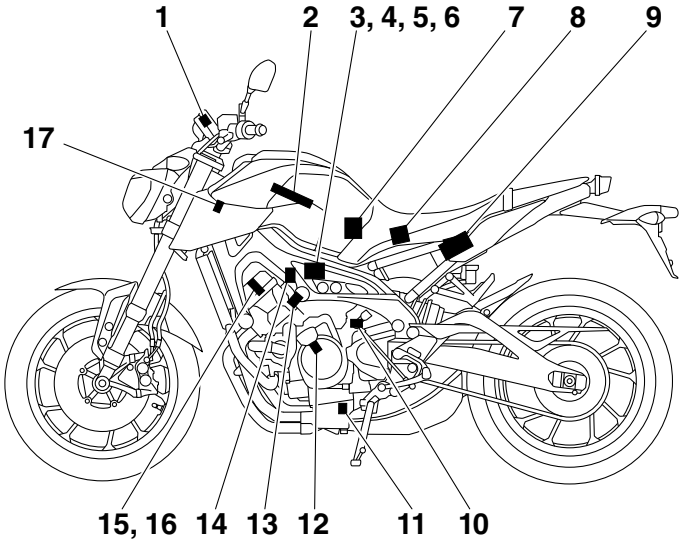

1. Engine trouble warning light
2. ECU (engine control unit)
3. Throttle position sensor
4. Accelerator position sensor
5. Intake air pressure sensors
6. Throttle servo motor
7. Fuel pump
8. Lean angle sensor
9. Battery
10. Speed sensor
11. O_2 sensor
12. Crankshaft position sensor
13. Coolant temperature sensor
14. Injectors
15. Ignition coils
16. Spark plugs
17. Intake air temperature sensor

EAS1RC1102

FI SYSTEM

The fuel pump delivers fuel to the fuel injector via the fuel filter. The pressure regulator maintains the fuel pressure that is applied to the fuel injector at a certain level. Accordingly, when the energizing signal from the ECU energizes the fuel injector, the fuel passage opens, causing the fuel to be injected into the intake manifold only during the time the passage remain open.

Therefore, the longer the length of time the fuel injector is energized (injection duration), the greater the volume of fuel that is supplied. Conversely, the shorter the length of time the fuel injector is energized (injection duration), the lesser the volume of fuel that is supplied.

The injection duration and the injection timing are controlled by the ECU. Signals that are input from the throttle position sensor, accelerator position sensor, coolant temperature sensor, lean angle sensor, crankshaft position sensor, intake air pressure sensor, intake air temperature sensor, speed sensor and O_2 sensor enable the ECU to determine the injection duration. The injection timing is determined through the signals from the crankshaft position sensor. As a result, the volume of fuel that is required by the engine can be supplied at all times in accordance with the driving conditions.

Illustration is for reference only.

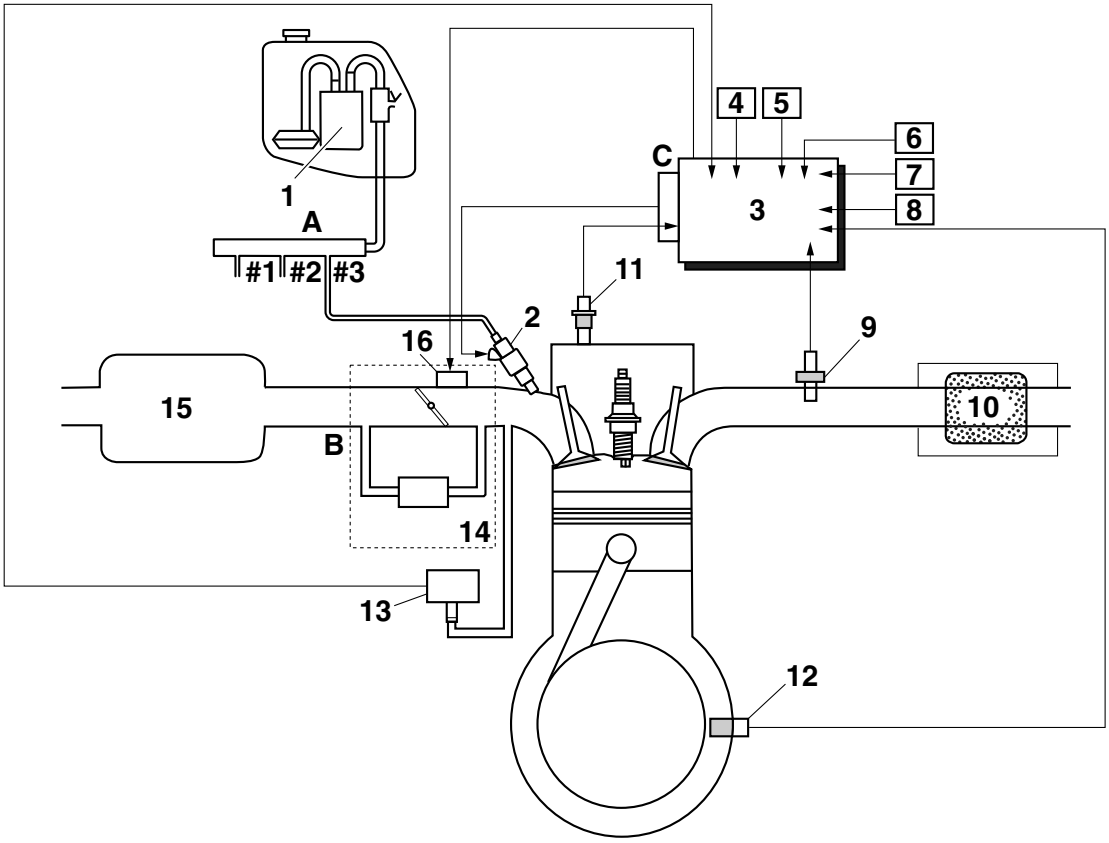

1. Fuel pump
2. Injector
3. ECU (engine control unit)
4. Throttle position sensor
5. Accelerator position sensor
6. Speed sensor
7. Lean angle sensor
8. Intake air temperature sensor
9. O_2 sensor
10. Catalytic converter
11. Coolant temperature sensor
12. Crankshaft position sensor
13. Intake air pressure sensor
14. Throttle body
15. Air filter case
16. Throttle servo motor

A. Fuel system
B. Air system
C. Control system

EAS1RC1103

INSTRUMENT FUNCTIONS

Multi-function meter unit

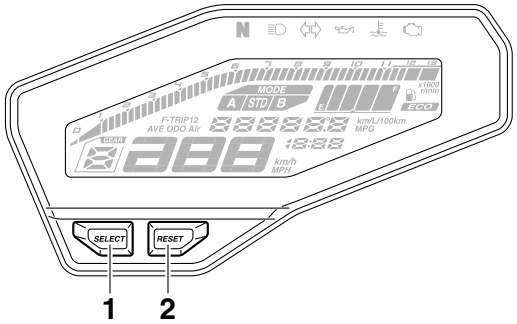

1. “SELECT” button
2. “RESET” button

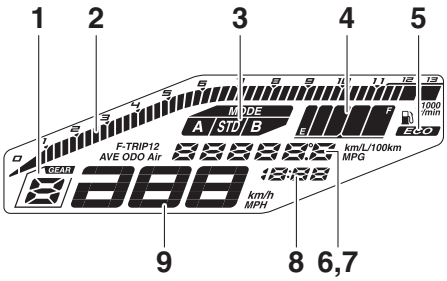

1. Transmission gear display
2. Tachometer
3. Drive mode display
4. Fuel meter
5. Eco indicator “ECO”
6. Multi-function display
7. Self-diagnosis device
8. Clock
9. Speedometer

EWA12423

WARNING

Be sure to stop the vehicle before making any setting changes to the multi-function meter unit. Changing settings while riding can distract the operator and increase the risk of an accident.

The multi-function meter unit is equipped with the following:
- a speedometer
- a tachometer
- a clock
- a fuel meter
- an eco indicator
- a transmission gear display
- a drive mode display (which shows the selected drive mode)
- a multi-function display
- a self-diagnosis device
- a brightness control mode

TIP
- Be sure to turn the key to “ON” before using the “SELECT” and “RESET” buttons.
- To switch the speedometer and multi-function displays between kilometers and miles, press the “SELECT” button for at least one second.

Tachometer

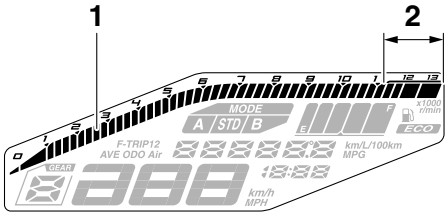

1. Tachometer
2. Tachometer red zone

The tachometer allows the rider to monitor the engine speed and keep it within the ideal power range.
When the key is turned to “ON”, the tachometer will sweep across the r/min range and then return to zero r/min in order to test the electrical circuit.

ECA10032

NOTICE

Do not operate the engine in the tachometer red zone.
Red zone: 11250 r/min and above

Clock

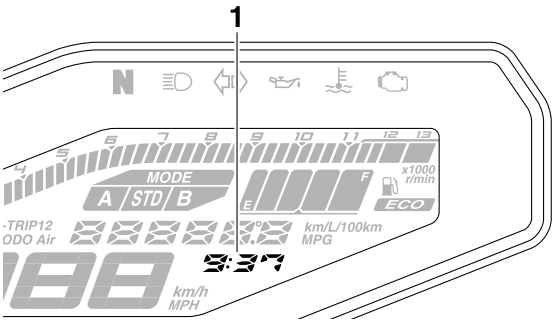

1. Clock

The clock displays when the key is turned to “ON”. In addition, the clock can be displayed for 10 seconds by pushing the “SELECT” button when the main switch is in the “OFF”, “LOCK” or “P⋚” position.

To set the clock

1. Turn the key to “ON”.
2. Push the “SELECT” button and “RESET” button together for at least two seconds.
3. When the hour digits start flashing, push the “RESET” button to set the hours.
4. Push the “SELECT” button, and the minute digits will start flashing.
5. Push the “RESET” button to set the minutes.
6. Push the “SELECT” button and then release it to start the clock.

Fuel meter

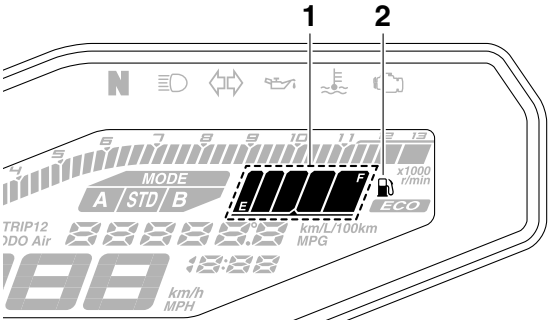

1. Fuel meter
2. Fuel level warning indicator “⛽”

The fuel meter indicates the amount of fuel in the fuel tank. The display segments of the fuel meter disappear towards “E” (Empty) as the fuel level decreases. When the last segment and fuel level warning indicator “⛽” start flashing, refuel as soon as possible.

TIP

This fuel meter is equipped with a self-diagnosis system. If a problem is detected in the electrical circuit, the following cycle is repeated until the malfunction is corrected: fuel level segments and fuel level warning indicator “⛽” flash eight times, then go off for approximately 3 seconds. (Refer to “CHECKING THE FUEL METER/FUEL LEVEL WARNING LIGHT” on page 8-105.)

Eco indicator

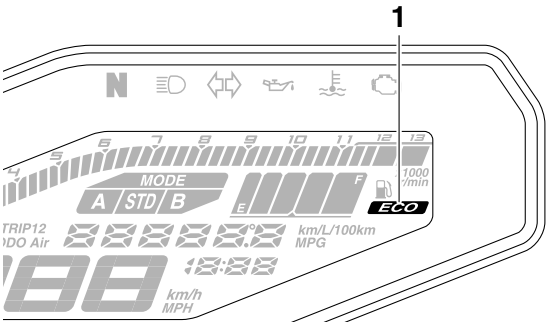

1. Eco indicator “ECO”

This indicator comes on when the vehicle is being operated in an environmentally friendly, fuel-efficient manner. The indicator goes off when the vehicle is stopped.

TIP

Consider the following tips to reduce fuel consumption:

- Avoid high engine speeds during acceleration.
- Travel at a constant speed.
- Select the transmission gear that is appropriate for the vehicle speed.

Transmission gear display

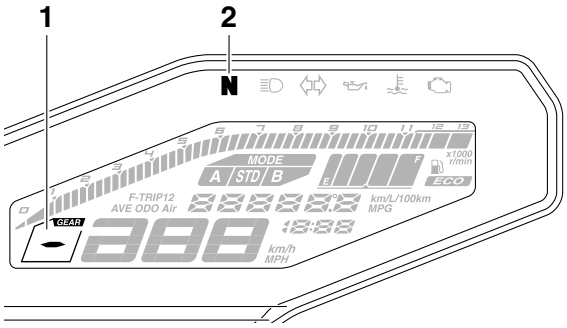

1. Transmission gear display
2. Neutral indicator light “N”

This display shows the selected gear. The neutral position is indicated by “–” and by the neutral indicator light.

Drive mode display

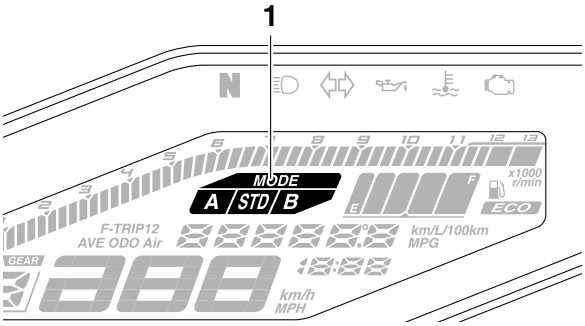

1. Drive mode display

This display indicates which drive mode has been selected: “STD”, “A” or “B”. For more details on the modes and on how to select them, refer to “D-mode (drive mode)” on page 1-8.

Multi-function display

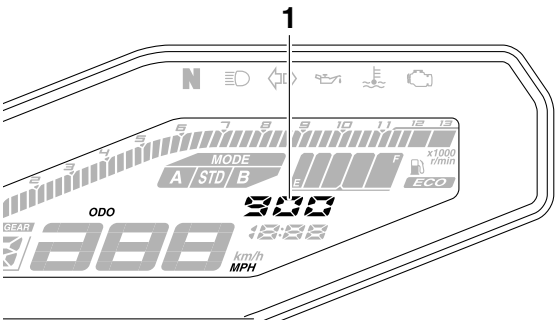

1. Multi-function display

The multi-function display is equipped with the following:
- an odometer
- two tripmeters (which show the distance traveled since they were last set to zero)
- a fuel reserve tripmeter (which shows the distance traveled since the left segment of the fuel meter started flashing)
- a coolant temperature display
- an air intake temperature display
- an instantaneous fuel consumption display
- an average fuel consumption display

Push the “SELECT” button to switch the display between the instantaneous fuel consumption mode “km/L”, “L/100 km” or “MPG”, average fuel consumption mode “AVE_ _._ km/L”, “AVE_ _._ L/100 km” or “AVE_ _._ MPG”, coolant temperature mode “°F”, air intake temperature mode “Air_ _ °F”, odometer mode “ODO”, and tripmeter modes “TRIP 1” and “TRIP 2” in the following order:

km/L, L/100 km or MPG → AVE_ _._ km/L, AVE_ _._ L/100 km or AVE_ _._ MPG → °F → Air_ _ °F → ODO → TRIP 1 → TRIP 2

TIP

Push the “RESET” button to switch the display in the reverse order.

If the fuel level warning indicator “⛽” and left segment of the fuel meter start flashing, the display automatically changes to the fuel reserve tripmeter mode “F-TRIP” and starts counting the distance traveled from that point. In that case, push the “SELECT” button to switch the display between the various tripmeter, odometer, instantaneous fuel consumption and average fuel consumption modes in the following order:

F-TRIP → km/L, L/100 km or MPG → AVE_ _._ km/L, AVE_ _._ L/100 km or AVE_ _._ MPG → °F → Air_ _ °F → ODO → TRIP 1 → TRIP 2 → F-TRIP

To reset a tripmeter, select it by pushing the “SELECT” button, and then push the “RESET” button for at least one second.
If you do not reset the fuel reserve tripmeter manually, it resets itself automatically and the display returns to the prior mode after refueling and traveling 5 km (3 mi).

Instantaneous fuel consumption display

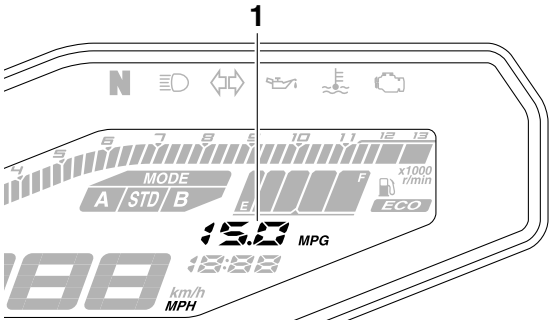

1. Instantaneous fuel consumption display

The instantaneous fuel consumption display can be set to either “km/L”, “L/100 km” or “MPG”.
- “km/L”: The distance that can be traveled on 1.0 L of fuel under the current riding conditions is shown.
- “L/100 km”: The amount of fuel necessary to travel 100 km under the current riding conditions is shown.
- “MPG”: The distance that can be traveled on 1.0 US gal of fuel under the current riding conditions is shown.

To switch between the instantaneous fuel consumption displays, push the “SELECT” button for one second when one of the displays is shown.

TIP

If traveling at speeds under 20 km/h (12 mi/h), “_ _._” is displayed.

Average fuel consumption mode

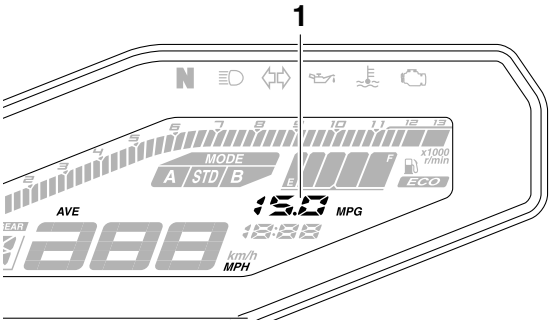

1. Average fuel consumption display

The average fuel consumption display can be set to either “AVE_ _._ km/L”, “AVE_ _._ L/100 km” or “AVE_ _._ MPG”.
This display shows the average fuel consumption since it was last reset.

- “AVE_ _._ km/L”: The average distance that can be traveled on 1.0 L of fuel is shown.
- “AVE_ _._ L/100 km”: The average amount of fuel necessary to travel 100 km is shown.
- “AVE_ _._ MPG”: The average distance that can be traveled on 1.0 US gal of fuel is shown.

To switch between the average fuel consumption displays, push the “SELECT” button for one second when one of the displays is shown.
To reset the average fuel consumption display, select it by pushing the “SELECT” button, and then push the “RESET” button for at least one second.

TIP

After resetting an average fuel consumption display, “_ _._” is shown for that display until the vehicle has traveled 1 km (0.6 mi).

Coolant temperature display

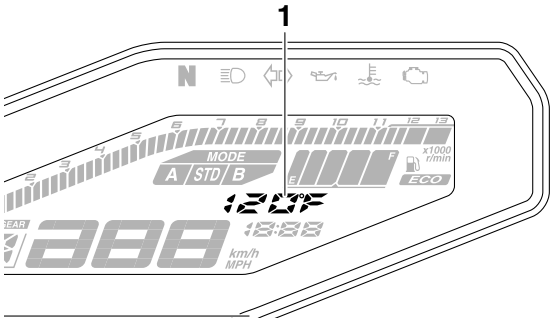

1. Coolant temperature display

This display shows the coolant temperature from 104 °F to 242 °F in 1 °F increments.
If the message “HI” flashes, stop the vehicle, then stop the engine, and let the engine cool.

TIP

- When the coolant temperature is below 104 °F, “LO” will be displayed.
- The coolant temperature varies with changes in the weather and engine load.

Air intake temperature display

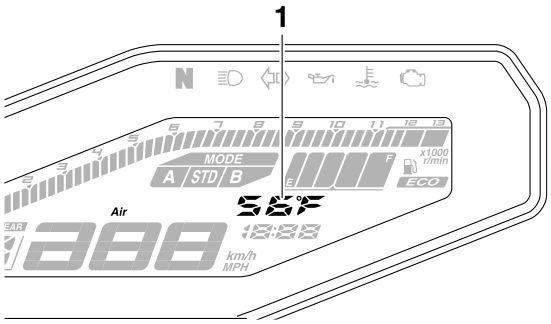

1. Air intake temperature display

The air intake temperature display indicates the temperature of the air drawn into the air filter case.
This display shows the air intake temperature from 14 °F to 210 °F in 1 °F increments.

TIP

- 14 °F will be displayed even if the air intake temperature falls below 14 °F.
- The air intake temperature may vary from the ambient temperature.

Self-diagnosis device

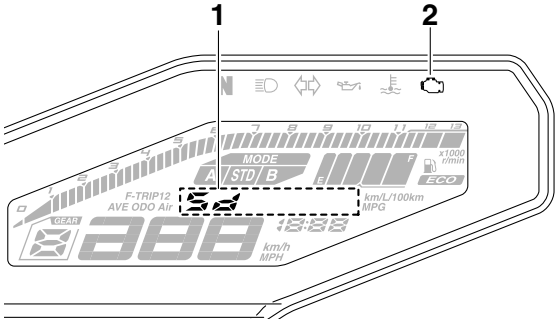

1. Error code display
2. Engine trouble warning light “ ”

This model is equipped with a self-diagnosis device for various electrical circuits.
If a problem is detected in any of those circuits, the engine trouble warning light will come on and the display will indicate an error code.
If the display indicates any error codes, note the code number, and then check the fuel injection system. (Refer to “FUEL INJECTION SYSTEM” on page 8-31.)

ECA11591

NOTICE

If the display indicates an error code, the vehicle should be checked as soon as possible in order to avoid engine damage.

Brightness control mode

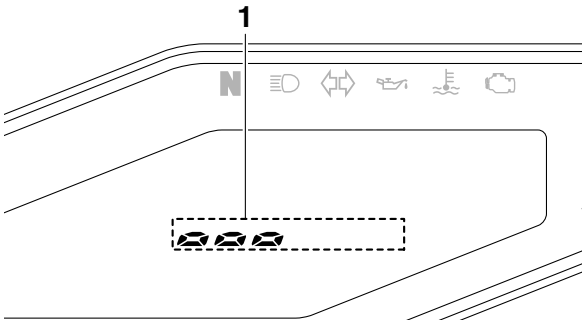

1. Brightness level display

This function allows you to adjust the brightness of the multi-function meter unit panel to suit the outside lighting conditions.

To adjust the brightness

1. Turn the key to “OFF”.
2. While pushing the “SELECT” button, turn the key to “ON” and continue pushing the button until the display switches to the brightness control mode.
3. Push the “RESET” button to set the brightness level.
4. Push the “SELECT” button to return to the original display.

D-mode (drive mode)

D-mode is an electronically controlled engine performance system with three mode selections (“STD”, “A”, and “B”).

Push the drive mode switch “MODE” to switch between modes.

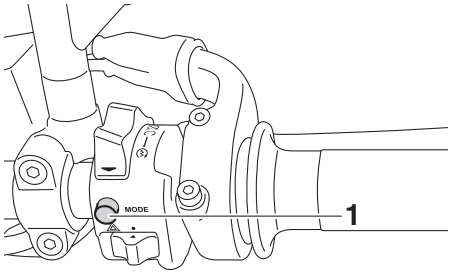

1. Drive mode switch “MODE”

TIP

Before using D-mode, make sure you understand its operation along with the operation of the drive mode switch.

Mode “STD”

Mode “STD” is suitable for various riding conditions.

This mode allows the rider to enjoy smooth and sporty drivability from the low-speed range to the high-speed range.

Mode “A”

Mode “A” offers a sportier engine response in the low- to mid-speed range compared to mode “STD”.

Mode “B”

Mode “B” offers response that is somewhat less sharp compared to mode “STD” for riding situations that require especially sensitive throttle operation.

EAS1RC1109

YCC-T (Yamaha Chip Controlled Throttle)

Mechanism characteristics

Yamaha developed the YCC-T system employing the most advanced electronic control technologies. Electronic control throttle systems have been used on automobiles, but Yamaha has developed a faster, more compact system specifically for the needs of a sports motorcycle. The Yamaha-developed system has a high-speed calculating capacity that produces computations of running conditions every 1/1000th of a second.

The YCC-T system is designed to respond to the throttle action of the rider by having the ECU instantaneously calculate the ideal throttle valve opening and generate signals to operate the motor-driven throttle valves and thus actively control the intake air volume.

The ECU contains two CPUs with a capacity about five times that of conventional units, making it possible for the system to respond extremely quickly to the slightest adjustments made by the rider. In particular, optimized control of the throttle valve opening provides the optimum volume of intake air for easy-to-use torque, even in a high-revving engine.

Aims and advantages of using YCC-T

- Increased engine power
  By shortening the air intake path, higher engine speed is possible → Increased engine power.
- Improved driveability
  Air intake volume is controlled according to the operating conditions → Improved throttle response to meet engine requirement.
  Driving force is controlled at the optimal level according to the transmission gear position and engine speed → Improved throttle control.
- Engine braking control
  Due to the throttle control, optimal engine braking is made possible.
- Simplified idle speed control (ISC) mechanism
  The bypass mechanism and ISC actuator are eliminated → A simple mechanism is used to maintain a steady idle speed.
- Reduced weight
  Compared to using a sub-throttle mechanism, weight is reduced.

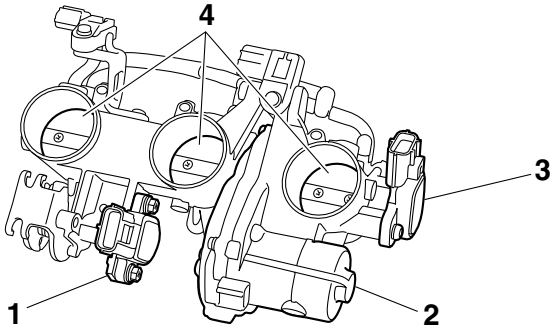

1. Accelerator position sensor
2. Throttle servo motor
3. Throttle position sensor
4. Throttle valves

YCC-T system outline

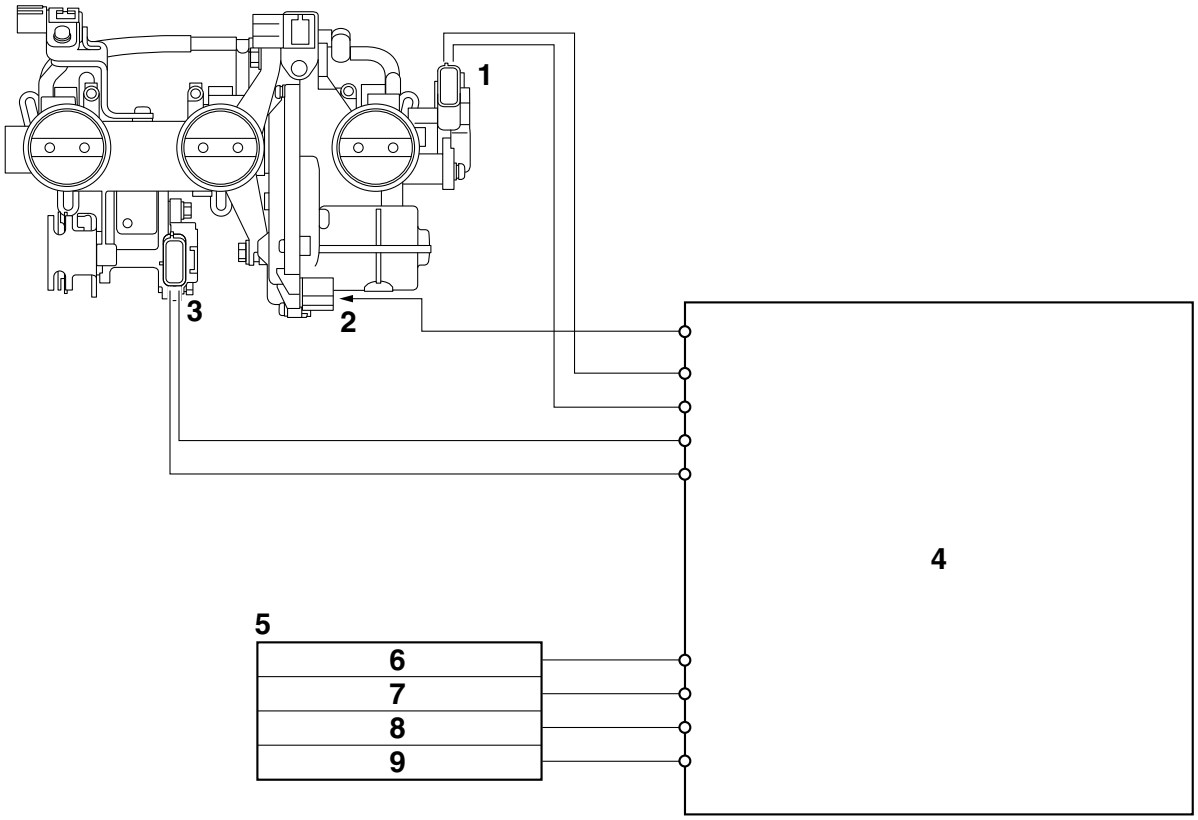

1. Throttle position sensor
2. Throttle servo motor
3. Accelerator position sensor
4. ECU (engine control unit)
5. Sensor input
6. Gear position sensor
7. Crankshaft position sensor
8. Speed sensor
9. Coolant temperature sensor

EAS20180
IMPORTANT INFORMATION

EAS20190
PREPARATION FOR REMOVAL AND DISASSEMBLY

1. Before removal and disassembly, remove all dirt, mud, dust and foreign material.

2. Use only the proper tools and cleaning equipment.
   Refer to “SPECIAL TOOLS” on page 1-18.
3. When disassembling, always keep mated parts together. This includes gears, cylinders, pistons and other parts that have been “mated” through normal wear. Mated parts must always be reused or replaced as an assembly.

4. During disassembly, clean all of the parts and place them in trays in the order of disassembly. This will speed up assembly and allow for the correct installation of all parts.
5. Keep all parts away from any source of fire.

EAS20200
REPLACEMENT PARTS

Use only genuine Yamaha parts for all replacements. Use oil and grease recommended by Yamaha for all lubrication jobs. Other brands may be similar in function and appearance, but inferior in quality.

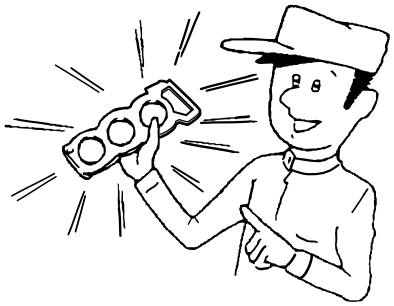

EAS20210
GASKETS, OIL SEALS AND O-RINGS

1. When overhauling the engine, replace all gaskets, seals and O-rings. All gasket surfaces, oil seal lips and O-rings must be cleaned.
2. During reassembly, properly oil all mating parts and bearings and lubricate the oil seal lips with grease.

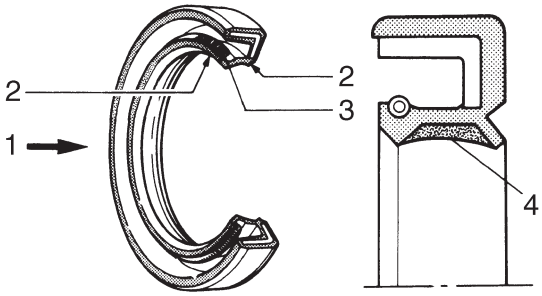

1. Oil
2. Lip
3. Spring
4. Grease

EAS20220
LOCK WASHERS/PLATES AND COTTER PINS

After removal, replace all lock washers/plates “1” and cotter pins. After the bolt or nut has been tightened to specification, bend the lock tabs along a flat of the bolt or nut.

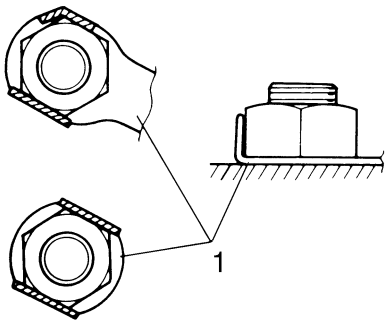

EAS20231
BEARINGS AND OIL SEALS

Install bearings “1” and oil seals “2” so that the

manufacturer marks or numbers are visible. When installing oil seals, lubricate the oil seal lips with a light coat of lithium-soap-based grease. Oil bearings liberally when installing, if appropriate.

ECA13300

NOTICE

Do not spin the bearing with compressed air because this will damage the bearing surfaces.

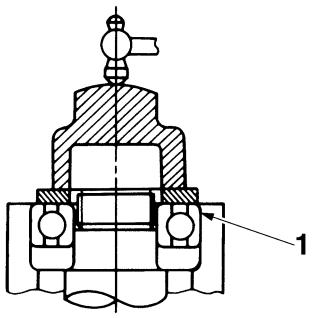

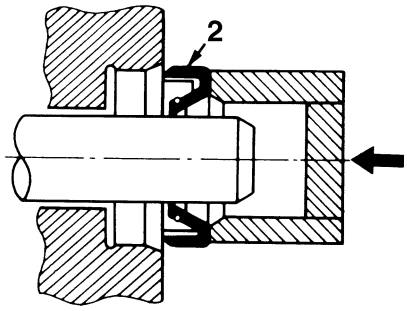

EAS20240

CIRCLIPS

Before reassembly, check all circlips carefully and replace damaged or distorted circlips. Always replace piston pin clips after one use. When installing a circlip “1”, make sure the sharp-edged corner “2” is positioned opposite the thrust “3” that the circlip receives.

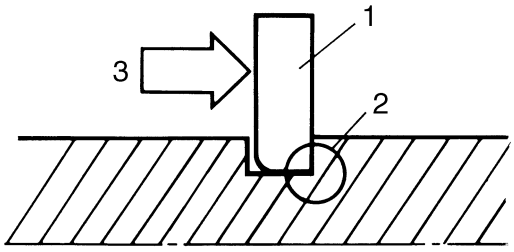

EAS32080

RUBBER PARTS

Check rubber parts for deterioration during inspection. Some of the rubber parts are sensitive to gasoline, flammable oil, grease, etc. Do not allow any items other than the specified one to contact the parts.

EAS30380

BASIC SERVICE INFORMATION

EAS30390

QUICK FASTENERS

Rivet type

1. Remove:
   - Quick fastener

TIP

To remove the quick fastener, push its pin with a screwdriver, then pull the fastener out.

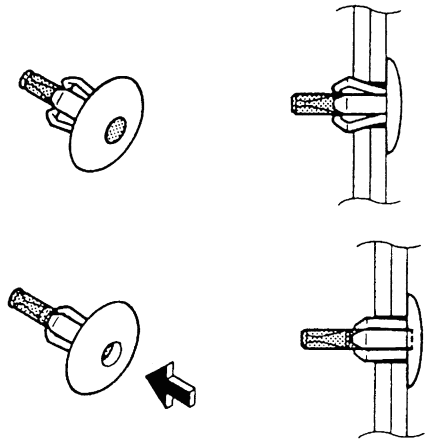

2. Install:
   - Quick fastener

TIP

To install the quick fastener, push its pin so that it protrudes from the fastener head, then insert the fastener into the part to be secured and push the pin “a” in with a screwdriver. Make sure that the pin is flush with the fastener’s head.

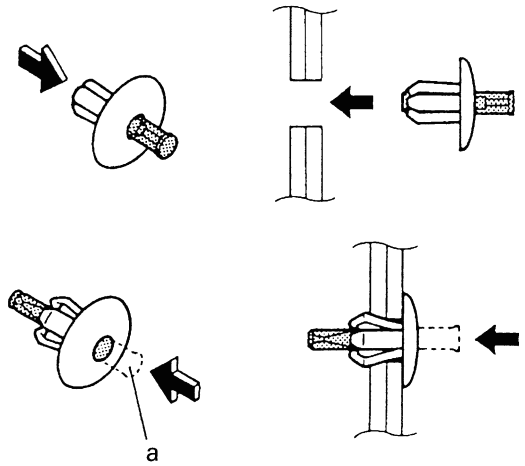

Screw type

1. Remove:
   - Quick fastener

TIP

To remove the quick fastener, loosen the screw with a screwdriver, then pull the fastener out.

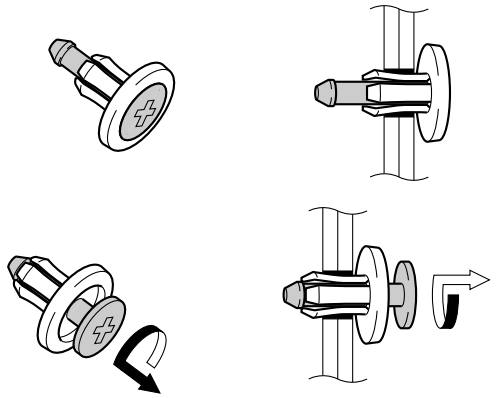

2. Install:
   - Quick fastener

TIP

To install the quick fastener, insert the fastener into the part to be secured and tighten the screw “a”.

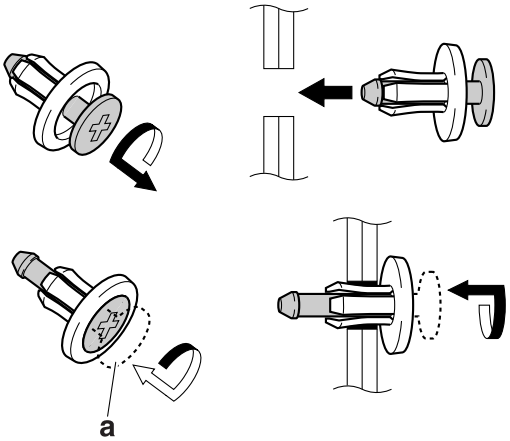

EAS30401

ELECTRICAL SYSTEM

Electrical parts handling

ECA16600

NOTICE

Never disconnect a battery lead while the engine is running; otherwise, the electrical components could be damaged.

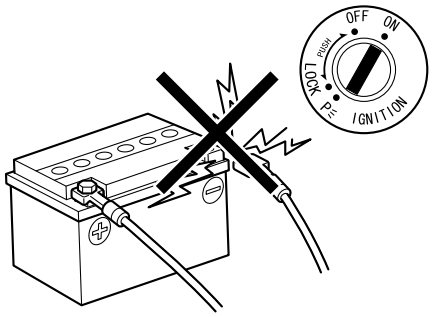

ECA16750

NOTICE

When disconnecting the battery leads from

the battery, be sure to disconnect the negative battery lead first, then the positive battery lead. If a tool or similar item contacts the vehicle while only the negative battery lead is connected, a spark could be generated, which is extremely dangerous.

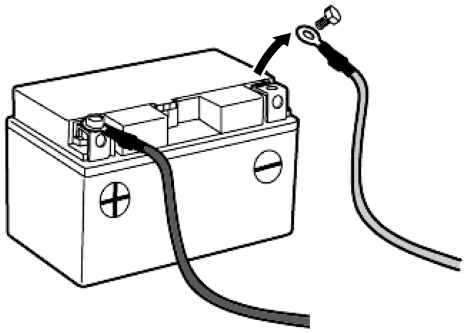

TIP

If a battery lead is difficult to disconnect due to rust on the battery terminal, remove the rust using hot water.

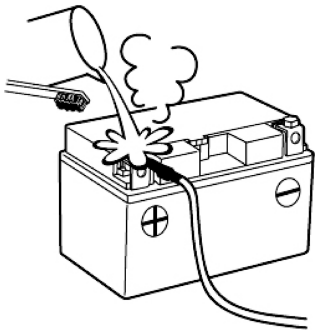

ECA16760

NOTICE

Be sure to connect the battery leads to the correct battery terminals. Reversing the battery lead connections could damage the electrical components.

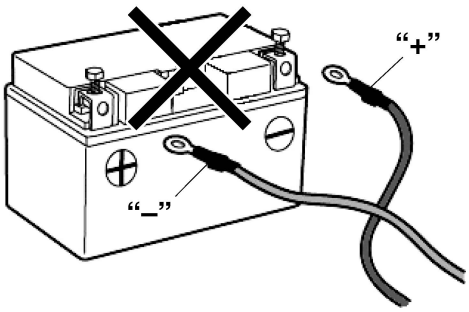

ECA16770

NOTICE

When connecting the battery leads to the battery, be sure to connect the positive battery lead first, then the negative battery lead. If a tool or similar item contacts the vehicle while only the negative battery lead is connected, a spark could be generated, which is extremely dangerous.

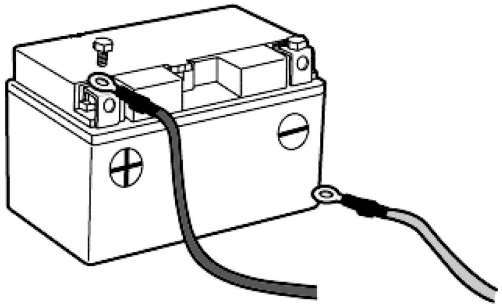

ECA16610

NOTICE

Turn the main switch to "OFF" before disconnecting or connecting an electrical component.

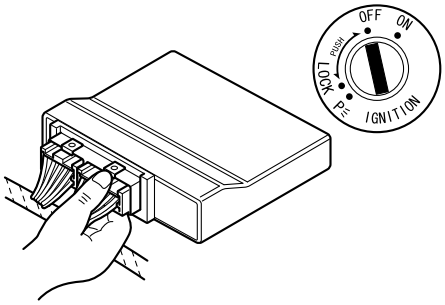

ECA16620

NOTICE

Handle electrical components with special care, and do not subject them to strong shocks.

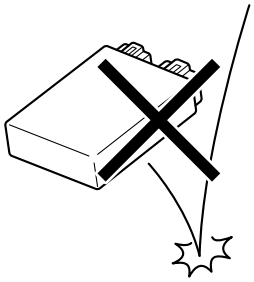

ECA16630

NOTICE

Electrical components are very sensitive to and can be damaged by static electricity. Therefore, never touch the terminals and be sure to keep the contacts clean.

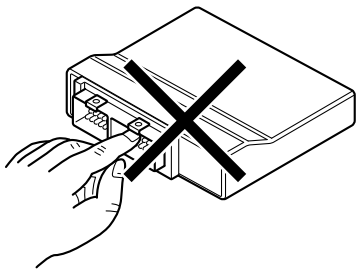

TIP

When resetting the ECU by turning the main switch to “OFF”, be sure to wait approximately 5 seconds before turning the main switch back to “ON”.

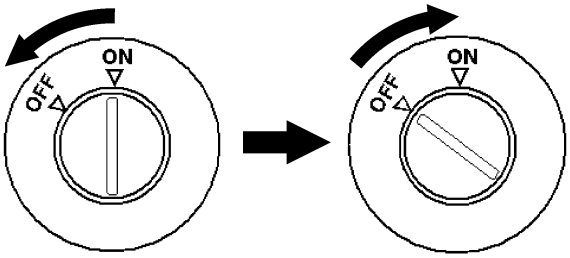

Checking the electrical system

TIP

Before checking the electrical system, make sure that the battery voltage is at least 12 V.

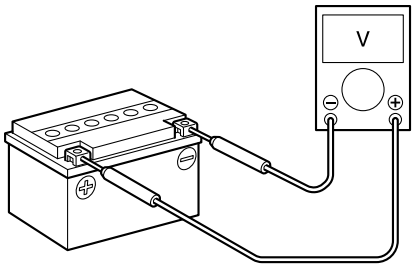

ECA14371

NOTICE

Never insert the tester probes into the coupler terminal slots. Always insert the probes from the opposite end “a” of the coupler, taking care not to loosen or damage the leads.

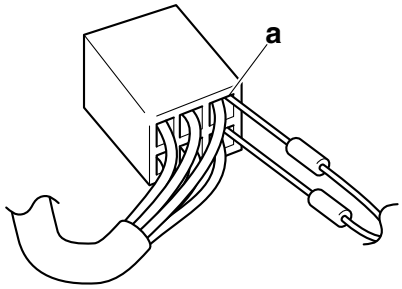

ECA16640

NOTICE

For waterproof couplers, never insert the tester probes directly into the coupler. When performing any checks using a waterproof coupler, use the specified test harness or a suitable commercially available test harness.

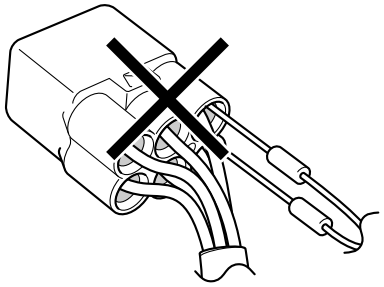

Checking the connections

Check the leads, couplers, and connectors for stains, rust, moisture, etc.

1. Disconnect:
   - Lead
   - Coupler
   - Connector

ECA16780

NOTICE

- **When disconnecting a coupler, release the coupler lock, hold both sections of the coupler securely, and then disconnect the coupler.**
- **There are many types of coupler locks; therefore, be sure to check the type of coupler lock before disconnecting the coupler.**

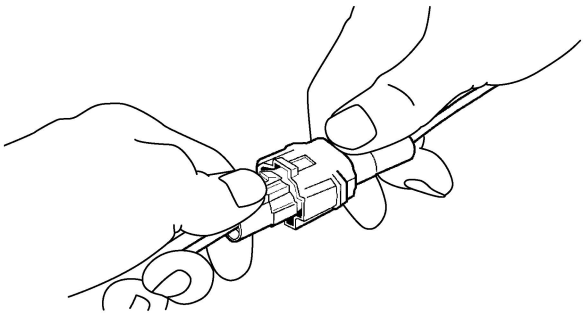

ECA16790

NOTICE

When disconnecting a connector, do not pull the leads. Hold both sections of the connector securely, and then disconnect the connector.

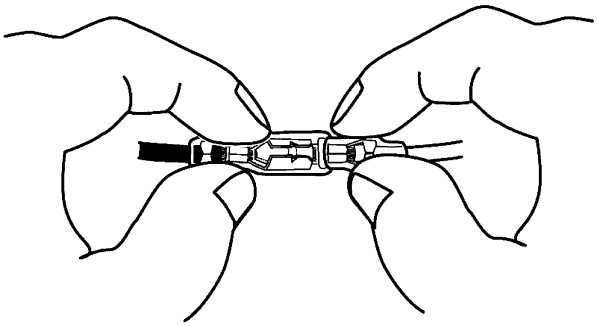

2. Check:
   - Lead
   - Coupler
   - Connector
     Moisture → Dry with an air blower.
     Rust/stains → Connect and disconnect several times.

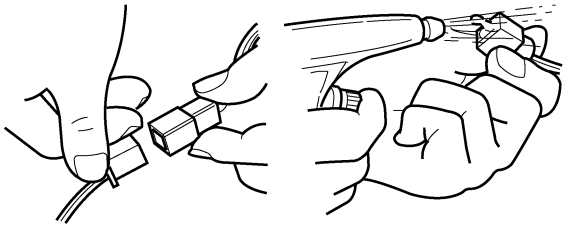

3. Connect:
   - Lead
   - Coupler
   - Connector

TIP

- When connecting a coupler or connector, push both sections of the coupler or connector together until they are connected securely.
- Make sure all connections are tight.

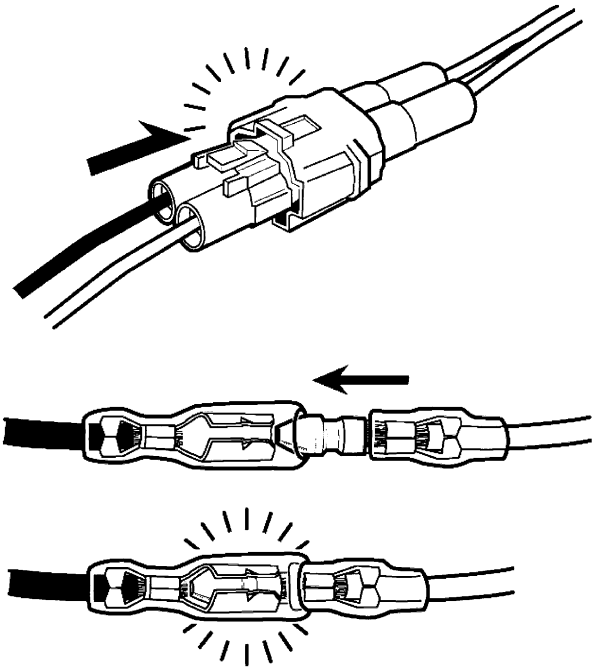

4. Check:
   - Continuity
     (with the pocket tester)

Pocket tester
90890-03112
Analog pocket tester
YU-03112-C

TIP

- If there is no continuity, clean the terminals.
- When checking the wire harness, perform steps (1) to (3).
- As a quick remedy, use a contact revitalizer available at most part stores.

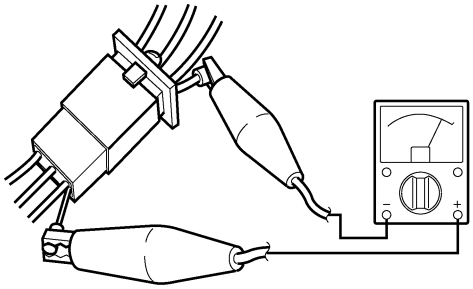

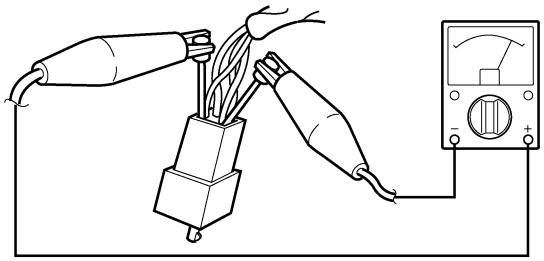

5. Check:
   - Resistance

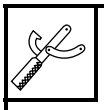

Pocket tester
90890-03112
Analog pocket tester
YU-03112-C

TIP
The resistance values shown were obtained at the standard measuring temperature of 20 °C (68 °F). If the measuring temperature is not 20 °C (68 °F), the specified measuring conditions will be shown.

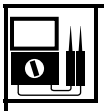

Intake air temperature sensor resistance
5.40–6.60 kΩ at 0 °C (32 °F)
290–390 Ω at 80 °C (176 °F)

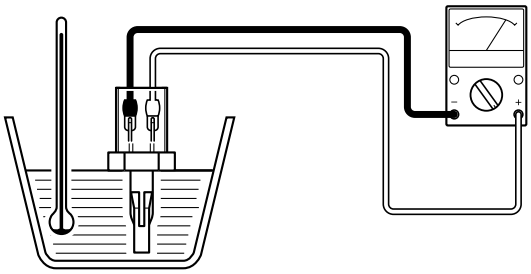

EAS20260

SPECIAL TOOLS

The following special tools are necessary for complete and accurate tune-up and assembly. Use only the appropriate special tools as this will help prevent damage caused by the use of inappropriate tools or improvised techniques. Special tools, part numbers or both may differ depending on the country. When placing an order, refer to the list provided below to avoid any mistakes.

TIP

- For U.S.A. and Canada, use part number starting with “YM-”, “YU-”, or “ACC-”.
- For others, use part number starting with “90890-”.

Tool name/Tool No.	Illustration	Reference pages
Ring nut wrench 90890-01268 Spanner wrench YU-01268	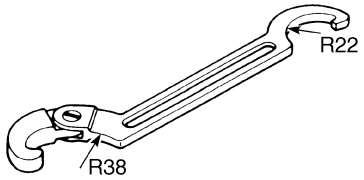	4-61
Piston pin puller set 90890-01304 Piston pin puller YU-01304	90890-01304 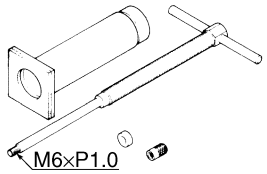 YU-01304 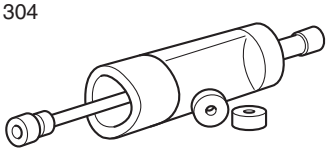	5-61
Radiator cap tester 90890-01325 Mityvac cooling system tester kit YU-24460-A	90890-01325 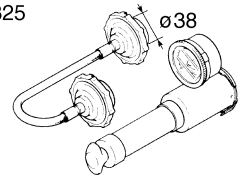 YU-24460-A 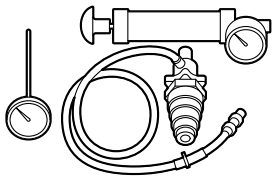	6-2
Radiator cap tester adapter 90890-01352 Pressure tester adapter YU-33984	90890-01352 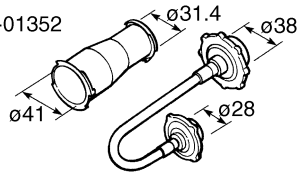 YU-33984 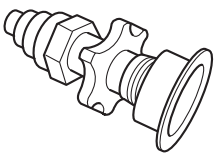	6-2

Tool name/Tool No.	Illustration	Reference pages
Flywheel puller 90890-01362 Heavy duty puller YU-33270-B	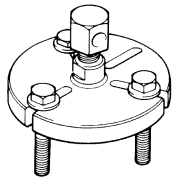	5-32
Steering nut wrench 90890-01403 Exhaust flange nut wrench YU-A9472	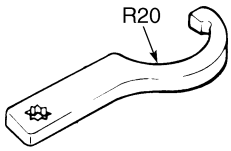	3-18, 4-61
Damper rod holder 90890-01423 Damping rod holder YM-01423	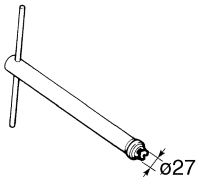	4-52, 4-53
Oil filter wrench 90890-01426 YU-38411	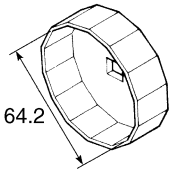	3-23
Rod holder 90890-01434 Damper rod holder double ended YM-01434	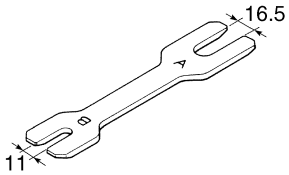	4-51, 4-56, 4-57
Rod puller attachment (M10) 90890-01436 Universal damping rod bleeding tool set YM-A8703	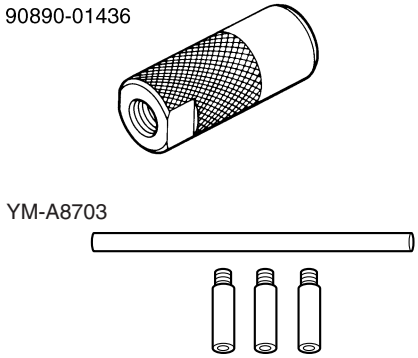	4-55, 4-56, 4-57

Tool name/Tool No.	Illustration	Reference pages
Rod puller 90890-01437 Universal damping rod bleeding tool set YM-A8703	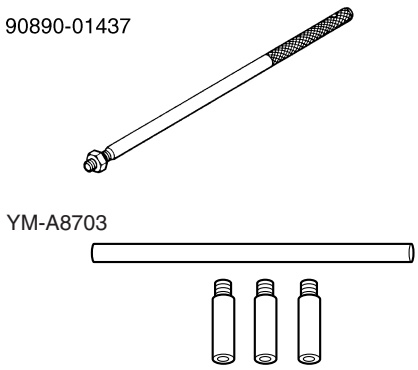	4-55, 4-56, 4-57
Fork spring compressor 90890-01441 YM-01441	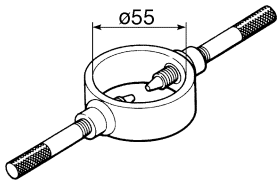	4-51, 4-56, 4-57
Fork seal driver 90890-01442 Adjustable fork seal driver (36–46 mm) YM-01442	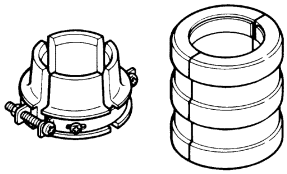	4-54, 4-55
Pivot shaft wrench adapter 90890-01476	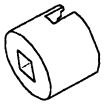	5-7, 5-8
Pivot shaft wrench 90890-01485 Frame mount insert wrench YM-01485	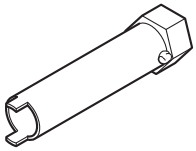	5-7
Pivot shaft wrench 90890-01518 Frame spanner socket YM-01518	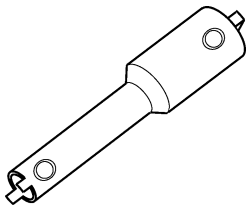	5-7, 5-8
Drive chain cut & rivet tool 90890-01550 YM-01550	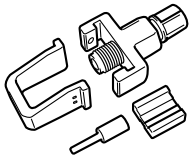	4-71, 4-73

Tool name/Tool No.	Illustration	Reference pages
Sheave holder 90890-01701 Primary clutch holder YS-01880-A	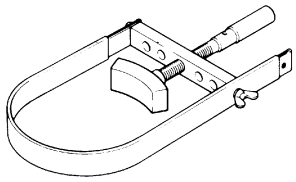	5-32, 5-33
Compression gauge 90890-03081 Engine compression tester YU-33223	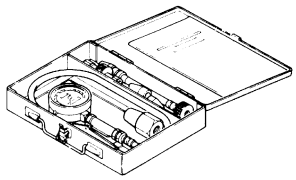	5-1
Vacuum gauge 90890-03094 Vacuummate YU-44456	90890-03094 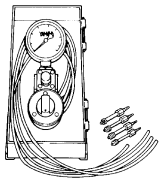 YU-44456 	3-8
Pocket tester 90890-03112 Analog pocket tester YU-03112-C	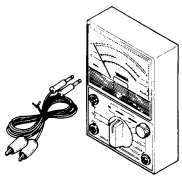	1-16, 1-17, 8-91, 8-92, 8-93, 8-97, 8-98, 8-99, 8-100, 8-101, 8-103, 8-104, 8-105, 8-106, 8-107, 8-108, 8-110, 8-111
Oil pressure adapter H 90890-03139	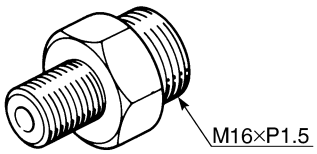	3-24
Pressure gauge 90890-03153 YU-03153	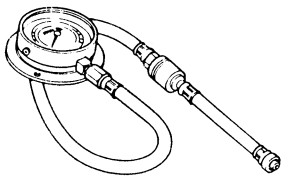	3-24, 7-11
Carburetor angle driver 2 90890-03173	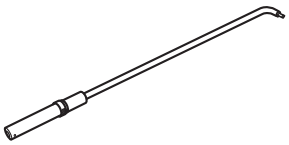	3-9

Tool name/Tool No.	Illustration	Reference pages
Digital circuit tester 90890-03174 Model 88 Multimeter with tachometer YU-A1927	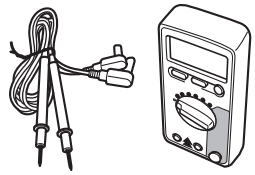	5-37, 8-102, 8-103, 8-109
Fuel pressure adapter 90890-03176 YM-03176	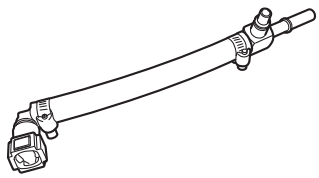	7-11
Thickness gauge 90890-03180 Feeler gauge set YU-26900-9	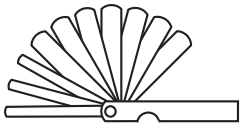	3-5, 5-20, 5-43
Test harness S– pressure sensor (3P) 90890-03207 YU-03207	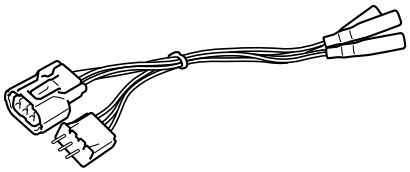	8-105, 8-109
Test harness- lean angle sensor (6P) 90890-03209 YU-03209	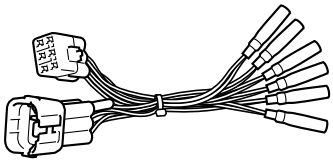	8-101
Fuel injector pressure adapter 90890-03210 YU-03210	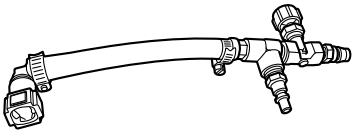	7-11
Yamaha diagnostic tool 90890-03215	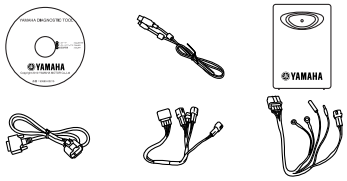	8-37
Valve spring compressor 90890-04019 YM-04019	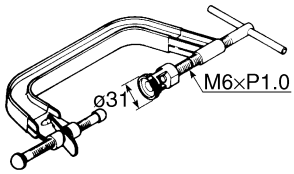	5-23, 5-28
Middle driven shaft bearing driver 90890-04058 Middle drive bearing installer 40 & 50 mm YM-04058	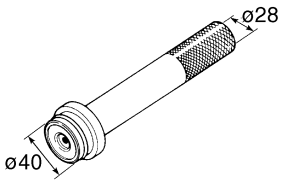	6-11

Tool name/Tool No.	Illustration	Reference pages
Mechanical seal installer 90890-04078 Water pump seal installer YM-33221-A	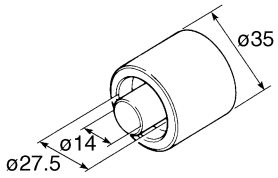	6-11
Universal clutch holder 90890-04086 YM-91042	90890-04086 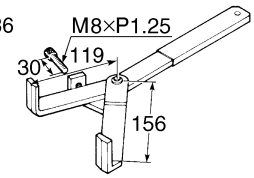 YM-91042 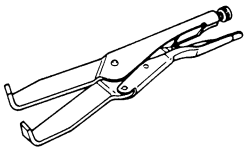	5-42, 5-45
Valve lapper 90890-04101 Valve lapping tool YM-A8998	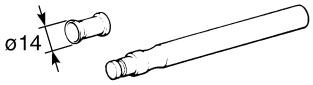	3-6
Valve spring compressor attachment 90890-04108 Valve spring compressor adapter 22 mm YM-04108	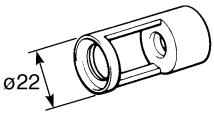	5-23, 5-28
Valve guide remover (ø4.5) 90890-04116 Valve guide remover (4.5 mm) YM-04116	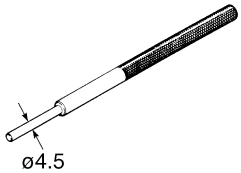	5-25
Valve guide installer (ø4.5) 90890-04117 Valve guide installer (4.5 mm) YM-04117	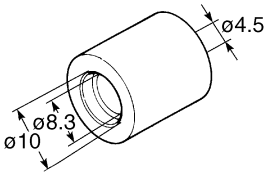	5-25
Valve guide reamer (ø4.5) 90890-04118 Valve guide reamer (4.5 mm) YM-04118	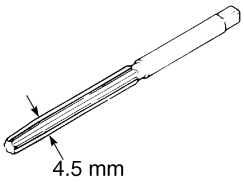	5-25

Tool name/Tool No.	Illustration	Reference pages
Extension 90890-04136	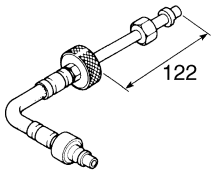	5-1
Piston installing tool 90890-04161 YM-04161	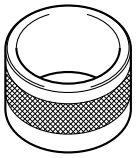	5-68
Camshaft wrench 90890-04162 YM-04162	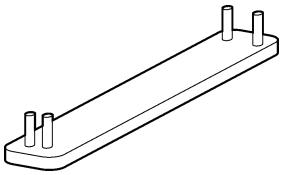	5-12, 5-14
Ignition checker 90890-06754 Oppama pet-4000 spark checker YM-34487	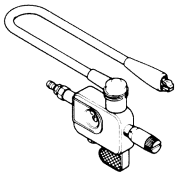	8-100
Yamaha bond No.1215 (Three bond No.1215®) 90890-85505	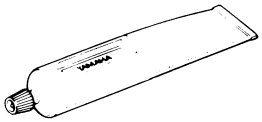	5-34, 5-57

SPECIFICATIONS

EAS20280

GENERAL SPECIFICATIONS

Model	
Model	FZ09E 1RC4 FZ09EC 1RC5
Dimensions	
Overall length	2075 mm (81.7 in)
Overall width	815 mm (32.1 in)
Overall height	1135 mm (44.7 in)
Seat height	815 mm (32.1 in)
Wheelbase	1440 mm (56.7 in)
Ground clearance	135 mm (5.31 in)
Minimum turning radius	3037 mm (119.6 in)
Weight	
Curb weight	FZ09E 188 kg (414 lb) FZ09EC 189 kg (417 lb)
Maximum load	FZ09E 177 kg (390 lb) FZ09EC 176 kg (388 lb)

EAS20290

ENGINE SPECIFICATIONS

Engine	
Engine type	Liquid cooled 4-stroke, DOHC
Displacement	847 cm^3
Cylinder arrangement	Inline 3-cylinder
Bore × stroke	78.0 × 59.1 mm (3.07 × 2.33 in)
Compression ratio	11.50 : 1
Standard compression pressure (at sea level)	1530 kPa/680 r/min (15.3 kgf/cm^2/680 r/min, 217.6 psi/680 r/min)
Minimum–maximum	1330–1710 kPa/680 r/min (13.3–17.1 kgf/cm^2/680 r/min, 189.2–243.2 psi/680 r/min)
Starting system	Electric starter
Fuel	
Recommended fuel	Premium unleaded gasoline (Gasohol (E10) acceptable)
Fuel tank capacity	14.0 L (3.70 US gal, 3.08 Imp.gal)
Fuel reserve amount	2.8 L (0.74 US gal, 0.62 Imp.gal)
Engine oil	
Recommended brand	YAMALUBE
Type	SAE 10W-30, 10W-40, 10W-50, 15W-40, 20W-40 or 20W-50
Recommended engine oil grade	API service SG type or higher, JASO standard MA
Lubrication system	Wet sump
Engine oil quantity	
Quantity (disassembled)	3.40 L (3.59 US qt, 2.99 Imp.qt)
Without oil filter cartridge replacement	2.40 L (2.54 US qt, 2.11 Imp.qt)
With oil filter cartridge replacement	2.70 L (2.85 US qt, 2.38 Imp.qt)
Oil filter	
Oil filter type	Cartridge
Oil pump	
Oil pump type	Trochoid
Inner-rotor-to-outer-rotor-tip clearance	Less than 0.120 mm (0.0047 in)
Limit	0.20 mm (0.0079 in)
Outer-rotor-to-oil-pump-housing clearance	0.09–0.19 mm (0.0035–0.0075 in)
Limit	0.21 mm (0.0083 in)
Oil-pump-housing-to-inner-and-outer-rotor clearance	0.06–0.13 mm (0.0024–0.0051 in)
Limit	0.16 mm (0.0065 in)
Oil pressure	230.0 kPa/5000 r/min@100 °C (2.3 kgf/cm^2/5000 r/min, 33.4 psi/5000 r/min@212 °F)
Bypass valve opening pressure	80.0–120.0 kPa (0.80–1.20 kgf/cm^2, 11.6–17.4 psi)
Relief valve operating pressure	670.0–810.0 kPa (6.70–8.10 kgf/cm^2, 97.2–117.5 psi)
Cooling system	
Radiator capacity (including all routes)	1.93 L (2.04 US qt, 1.70 Imp.qt)
Coolant reservoir capacity (up to the maximum level mark)	0.25 L (0.26 US qt, 0.22 Imp.qt)

Radiator cap opening pressure	93.3–122.7 kPa (0.93–1.23 kgf/cm^2, 13.5–17.8 psi)
Radiator core	
Width	340.0 mm (13.39 in)
Height	222.6 mm (8.76 in)
Depth	22.0 mm (0.87 in)
Water pump	
Water pump type	Single suction centrifugal pump
Reduction ratio	47/47 × 29/22 (1.318)
Impeller shaft tilt limit	0.15 mm (0.006 in)
Spark plug(s)	
Manufacturer/model	NGK/CPR9EA9
Spark plug gap	0.8–0.9 mm (0.031–0.035 in)
Cylinder head	
Combustion chamber volume	19.09–20.69 cm^3 (1.16–1.26 cu.in)
Warpage limit	0.10 mm (0.0039 in)
Camshaft	
Drive system	Chain drive (right)
Camshaft cap inside diameter	24.500–24.521 mm (0.9646–0.9654 in)
Camshaft journal diameter	24.459–24.472 mm (0.9630–0.9635 in)
Camshaft-journal-to-camshaft-cap clearance	0.028–0.062 mm (0.0011–0.0024 in)
Camshaft lobe dimensions	
Lobe height (Intake)	36.290–36.390 mm (1.4287–1.4327 in)
Limit	36.190 mm (1.4248 in)
Base circle diameter (Intake)	27.950–28.050 mm (1.1004–1.1043 in)
Limit	27.850 mm (1.0965 in)
Lobe height (Exhaust)	35.720–35.820 mm (1.4063–1.4102 in)
Limit	35.620 mm (1.4024 in)
Base circle diameter (Exhaust)	27.978–28.078 mm (1.1015–1.1054 in)
Limit	27.878 mm (1.0976 in)
Camshaft runout limit	0.030 mm (0.0012 in)
Timing chain	
Tensioning system	Automatic
Valve, valve seat, valve guide	
Valve clearance (cold)	
Intake	0.11–0.20 mm (0.0043–0.0079 in)
Exhaust	0.26–0.30 mm (0.0102–0.0118 in)
Valve dimensions	
Valve head diameter (intake)	30.90–31.10 mm (1.2165–1.2244 in)
Valve head diameter (exhaust)	24.90–25.10 mm (0.9803–0.9882 in)
Valve seat contact width (intake)	0.90–1.10 mm (0.0354–0.0433 in)
Limit	1.60 mm (0.06 in)
Valve seat contact width (exhaust)	1.10–1.30 mm (0.0433–0.0512 in)
Limit	1.80 mm (0.07 in)
Valve stem diameter (intake)	4.475–4.490 mm (0.1762–0.1768 in)
Limit	4.445 mm (0.1750 in)
Valve stem diameter (exhaust)	4.460–4.475 mm (0.1756–0.1762 in)
Limit	4.430 mm (0.1744 in)
Valve guide inside diameter (intake)	4.500–4.512 mm (0.1772–0.1776 in)
Limit	4.542 mm (0.1788 in)

Valve guide inside diameter (exhaust)	4.500–4.512 mm (0.1772–0.1776 in)
Limit	4.542 mm (0.1788 in)
Valve-stem-to-valve-guide clearance (intake)	0.010–0.037 mm (0.0004–0.0015 in)
Limit	0.080 mm (0.0032 in)
Valve-stem-to-valve-guide clearance (exhaust)	0.025–0.052 mm (0.0010–0.0020 in)
Limit	0.100 mm (0.0039 in)
Valve stem runout	0.010 mm (0.0004 in)
Valve spring	
Free length (intake)	39.31 mm (1.55 in)
Limit	37.34 mm (1.47 in)
Free length (exhaust)	37.78 mm (1.49 in)
Limit	35.89 mm (1.41 in)
Installed length (intake)	32.90 mm (1.30 in)
Installed length (exhaust)	32.00 mm (1.26 in)
Spring rate K1 (intake)	32.15 N/mm (3.28 kgf/mm, 183.58 lbf/in)
Spring rate K2 (intake)	43.93 N/mm (4.48 kgf/mm, 250.84 lbf/in)
Spring rate K1 (exhaust)	30.11 N/mm (3.07 kgf/mm, 171.93 lbf/in)
Spring rate K2 (exhaust)	41.48 N/mm (4.23 kgf/mm, 236.85 lbf/in)
Installed compression spring force (intake)	192.00–220.00 N (19.58–22.43 kgf, 43.16–49.46 lbf)
Installed compression spring force (exhaust)	162.00–186.00 N (16.52–18.97 kgf, 36.42–41.81 lbf)
Spring tilt (intake)	1.7 mm (0.07 in)
Spring tilt (exhaust)	1.6 mm (0.06 in)
Winding direction (intake)	Clockwise
Winding direction (exhaust)	Clockwise
Cylinder	
Bore	78.000–78.010 mm (3.0709–3.0713 in)
Taper limit	0.050 mm (0.0020 in)
Out of round limit	0.050 mm (0.0020 in)
Piston	
Piston-to-cylinder clearance	0.010–0.035 mm (0.0004–0.0014 in)
Limit	0.150 mm (0.0059 in)
Diameter	77.975–77.990 mm (3.0699–3.0705 in)
Measuring point (from piston skirt bottom)	12.0 mm (0.47 in)
Offset	0.00 mm (0.0000 in)
Piston pin bore inside diameter	17.002–17.013 mm (0.6694–0.6698 in)
Limit	17.043 mm (0.6710 in)
Piston pin outside diameter	16.990–16.995 mm (0.6689–0.6691 in)
Limit	16.970 mm (0.6681 in)
Piston-pin-to-piston-pin-bore clearance	0.007–0.023 mm (0.0003–0.0009 in)
Piston ring	
Top ring	
Ring type	Barrel
End gap (installed)	0.15–0.25 mm (0.0059–0.0098 in)
Limit	0.50 mm (0.0197 in)
Ring side clearance	0.030–0.065 mm (0.0012–0.0026 in)
Limit	0.115 mm (0.0045 in)
2nd ring	
Ring type	Taper

End gap (installed)	0.30–0.45 mm (0.0118–0.0177 in)
Limit	0.80 mm (0.0315 in)
Ring side clearance	0.020–0.055 mm (0.0008–0.0022 in)
Limit	0.115 mm (0.0045 in)
Oil ring	
End gap (installed)	0.10–0.40 mm (0.0039–0.0157 in)
Connecting rod	
Oil clearance	0.027–0.051 mm (0.0011–0.0020 in)
Bearing color code	1. Blue 2. Black 3. Brown 4. Green
Crankshaft	
Runout limit	0.030 mm (0.0012 in)
Big end side clearance	0.160–0.262 mm (0.0063–0.0103 in)
Journal oil clearance	0.014–0.038 mm (0.0006–0.0015 in)
Bearing color code	0.White 1.Blue 2.Black 3.Brown 4.Green
Balancer	
Balancer drive method	Gear
Balancer shaft runout limit	0.030 mm (0.0012 in)
Balancer shaft journal to balancer shaft bearing clearance	0.024–0.048 mm (0.0009–0.0019 in)
Bearing color code	1.Blue 2.Black 3.Brown 4.Green 5.Yellow
Clutch	
Clutch type	Wet, multiple-disc
Clutch release method	Outer pull, rack and pinion pull
Clutch lever free play	10.0–15.0 mm (0.39–0.59 in)
Friction plate 1 thickness	2.92–3.08 mm (0.115–0.121 in)
Wear limit	2.82 mm (0.111 in)
Plate quantity	7 pcs
Friction plate 2 thickness	2.92–3.08 mm (0.115–0.121 in)
Wear limit	2.82 mm (0.111 in)
Plate quantity	2 pcs
Clutch plate thickness	1.90–2.10 mm (0.075–0.083 in)
Plate quantity	8 pcs
Warpage limit	0.10 mm (0.004 in)
Clutch spring free length	52.50 mm (2.07 in)
Limit	49.88 mm (1.96 in)
Spring quantity	6 pcs
Transmission	
Transmission type	Constant mesh 6-speed
Primary reduction ratio	1.681 (79/47)
Secondary reduction ratio	2.813 (45/16)
Final drive	Chain
Operation	Left foot operation
Gear ratio	
1st	2.667 (40/15)
2nd	2.000 (38/19)
3rd	1.619 (34/21)
4th	1.381 (29/21)
5th	1.190 (25/21)
6th	1.037 (28/27)
Main axle runout limit	0.08 mm (0.0032 in)
Drive axle runout limit	0.08 mm (0.0032 in)

Shifting mechanism	
Shift mechanism type	Shift drum and guide bar
Shift fork guide bar bending limit	0.050 mm (0.0020 in)
Shift fork thickness	5.76–5.89 mm (0.2268–0.2319 in)
Air filter	
Air filter element	Oil-coated paper element
Fuel pump	
Pump type	Electrical
Maximum consumption amperage	3.3 A
Fuel injector	
Model/quantity	297500-1110/3
Throttle body	
Type/quantity	FZ09E EACW41-B1/1 FZ09EC EACW41-B3/1
ID mark	FZ09E 1RC1 00 FZ09EC 1RC5 10
Throttle position sensor	
Resistance	1.20–2.80 kΩ
Output voltage (at idle)	0.63–0.73 V
Accelerator position sensor	
Resistance	1.08–2.52 kΩ
Output voltage	0.63–0.73 V
Air induction system	
Reed valve bending limit	0.4 mm (0.02 in)
Solenoid resistance	20–24 Ω
Idling condition	
Engine idling speed	1100–1300 r/min
CO% (AI system OFF, exhaust pipe)	1.50–3.50 %
Intake vacuum	30.5–34.5 kPa (229–259 mmHg, 9.0–10.2 inHg)
Water temperature	90.0–110.0 °C (194.00–230.00 °F)
Oil temperature	75.0–95.0 °C (167.00–203.00 °F)
Fuel line pressure at idling	300–390 kPa (3.0–3.9 kgf/cm^2, 43.5–56.6 psi)
Throttle grip free play	3.0–5.0 mm (0.12–0.20 in)

EAS20300

CHASSIS SPECIFICATIONS

Chassis	
Frame type	Diamond
Caster angle	25.00 °
Trail	103 mm (4.1 in)
Front wheel	
Wheel type	Cast wheel
Rim size	17M/C x MT3.50
Rim material	Aluminum
Wheel travel	137.0 mm (5.39 in)
Radial wheel runout limit	1.0 mm (0.04 in)
Lateral wheel runout limit	0.5 mm (0.02 in)
Rear wheel	
Wheel type	Cast wheel
Rim size	17M/C x MT5.50
Rim material	Aluminum
Wheel travel	130.0 mm (5.12 in)
Radial wheel runout limit	1.0 mm (0.04 in)
Lateral wheel runout limit	0.5 mm (0.02 in)
Front tire	
Type	Tubeless
Size	120/70 ZR17M/C (58W)
Manufacturer/model	BRIDGESTONE/S20F
Manufacturer/model	DUNLOP/D214F
Wear limit (front)	1.0 mm (0.04 in)
Rear tire	
Type	Tubeless
Size	180/55 ZR17M/C (73W)
Manufacturer/model	BRIDGESTONE/S20R
Manufacturer/model	DUNLOP/D214
Wear limit (rear)	1.0 mm (0.04 in)
Tire air pressure (measured on cold tires)	
Loading condition	0–90 kg (0–198 lb)
Front	250 kPa (2.50 kgf/cm^2, 36 psi)
Rear	290 kPa (2.90 kgf/cm^2, 42 psi)
Loading condition	FZ09E 90–177 kg (198–390 lb) FZ09EC 90–176 kg (198–388 lb)
Front	250 kPa (2.50 kgf/cm^2, 36 psi)
Rear	290 kPa (2.90 kgf/cm^2, 42 psi)
High-speed riding	
Front	250 kPa (2.50 kgf/cm^2, 36 psi)
Rear	290 kPa (2.90 kgf/cm^2, 42 psi)
Front brake	
Type	Dual disc brake
Operation	Right hand operation
Front disc brake	
Disc outside diameter × thickness	298.0 × 4.5 mm (11.73 × 0.18 in)
Brake disc thickness limit	4.0 mm (0.16 in)

Brake disc runout limit (as measured on wheel)	0.10 mm (0.0039 in)
Brake pad lining thickness (inner)	4.5 mm (0.18 in)
Limit	0.5 mm (0.02 in)
Brake pad lining thickness (outer)	4.5 mm (0.18 in)
Limit	0.5 mm (0.02 in)
Master cylinder inside diameter	15.00 mm (0.59 in)
Caliper cylinder inside diameter	30.23 mm (1.19 in)
Caliper cylinder inside diameter	27.00 mm (1.06 in)
Specified brake fluid	DOT 4
Rear brake	
Type	Single disc brake
Operation	Right foot operation
Rear disc brake	
Disc outside diameter × thickness	245.0 × 5.0 mm (9.65 × 0.20 in)
Brake disc thickness limit	4.5 mm (0.18 in)
Brake disc runout limit (as measured on wheel)	0.15 mm (0.0059 in)
Brake pad lining thickness (inner)	6.0 mm (0.24 in)
Limit	1.0 mm (0.04 in)
Brake pad lining thickness (outer)	6.0 mm (0.24 in)
Limit	1.0 mm (0.04 in)
Master cylinder inside diameter	12.7 mm (0.50 in)
Caliper cylinder inside diameter	38.18 mm (1.50 in)
Specified brake fluid	DOT 4
Steering	
Steering bearing type	Angular bearing
Center to lock angle (left)	32.0 °
Center to lock angle (right)	32.0 °
Front suspension	
Type	Telescopic fork
Spring/shock absorber type	Coil spring/oil damper
Front fork travel	137.0 mm (5.39 in)
Fork spring free length	300.3 mm (11.82 in)
Limit	294.3 mm (11.59 in)
Collar length	120.0 mm (4.72 in)
Fork spring installed length	295.3 mm (11.63 in)
Spring rate K1	7.35 N/mm (0.75 kgf/mm, 41.97 lbf/in)
Spring stroke K1	0.0–137.0 mm (0.00–5.39 in)
Inner tube outer diameter	41.0 mm (1.61 in)
Inner tube bending limit	0.2 mm (0.01 in)
Recommended oil	Suspension oil 01
Quantity (left)	472.0 cm^3 (15.96 US oz, 16.65 Imp.oz)
Quantity (right)	458.0 cm^3 (15.48 US oz, 16.15 Imp.oz)
Level (left)	147 mm (5.8 in)
Level (right)	148 mm (5.8 in)
Spring preload adjusting positions	
Minimum	19.0 mm (0.75 in)
Standard	16.0 mm (0.63 in)
Maximum	4.0 mm (0.16 in)

Rebound damping adjusting positions	
Minimum	3 turn(s) out*
Standard	1 3/4 turn(s) out*
Maximum	Adjusting screw fully turned in
	*With the adjusting screw fully turned in
Rear suspension	
Type	Swingarm (link suspension)
Spring/shock absorber type	Coil spring/gas-oil damper
Rear shock absorber assembly travel	60.0 mm (2.36 in)
Spring free length	191.4 mm (7.54 in)
Spring installed length	179.8 mm (7.08 in)
Spring rate K1	99.96 N/mm (10.19 kgf/mm, 570.77 lbf/in)
Spring stroke K1	0.0–60.0 mm (0.00–2.36 in)
Enclosed gas/air pressure (STD)	980 kPa (9.8 kgf/cm^2, 139.4 psi)
Spring preload adjusting positions	
Minimum	1
Standard	4
Maximum	7
Rebound damping adjusting positions	
Minimum	3 turn(s) out*
Standard	1 1/2 turn(s) out*
Maximum	Adjusting screw fully turned in
	*With the adjusting screw fully turned in
Drive chain	
Type/manufacturer	525V10/DAIDO
Number of links	110
Drive chain slack	5.0–15.0 mm (0.20–0.59 in)
15-link length limit	239.3 mm (9.42 in)
Shift pedal	
Installed shift rod length	256.9–258.9 mm (10.11–10.19 in)

EAS20310

ELECTRICAL SPECIFICATIONS

Voltage	
System voltage	12 V
Ignition system	
Ignition system	TCI
Ignition timing (B.T.D.C.)	5.0 °/1200 r/min
Engine control unit	
Model/manufacturer	TBDFK4/DENSO
Ignition coil	
Minimum ignition spark gap	6.0 mm (0.24 in)
Primary coil resistance	1.19–1.61 Ω
Secondary coil resistance	9.35–12.65 kΩ
Lean angle sensor output voltage	
Less than 65°	0.4–1.4 V
More than 65°	3.7–4.4 V
AC magneto	
Standard output	14.0 V, 415 W@5000 r/min
Stator coil resistance	0.152–0.228 Ω (W-W)
Rectifier/regulator	
Regulator type	Semi conductor-short circuit
Regulated voltage (DC)	14.3–14.7 V
Rectifier capacity	50.0 A
Battery	
Model	YTZ10S
Voltage, capacity	12 V, 8.6 Ah
Specific gravity	1.310
Manufacturer	GS YUASA
Ten hour rate charging current	0.86 A
Headlight	
Bulb type	Halogen bulb
Bulb voltage, wattage × quantity	
Headlight	12 V, 60.0 W/55.0 W × 1
Auxiliary light	12 V, 5.0 W × 2
Tail/brake light	LED
Front turn signal/position light	12 V, 21.0 W/5.0 W × 2
Rear turn signal light	12 V, 21.0 W × 2
License plate light	12 V, 5.0 W × 1
Meter lighting	LED
Indicator light	
Neutral indicator light	LED
Turn signal indicator light	LED
Oil level warning light	LED
High beam indicator light	LED
Coolant temperature warning light	LED
Engine trouble warning light	LED

Electric starting system	
System type	Constant mesh
Starter motor	
Power output	0.70 kW
Armature coil resistance	0.0050–0.0150 Ω
Brush overall length	12.0 mm (0.47 in)
Limit	6.50 mm (0.26 in)
Brush spring force	6.03–6.52 N (615–665 gf, 21.71–23.47 oz)
Mica undercut (depth)	0.70 mm (0.03 in)
Starter relay	
Amperage	180.0 A
Coil resistance	4.18–4.62 Ω
Horn	
Horn type	Plane
Quantity	1
Maximum amperage	3.0 A
Coil resistance	1.07–1.11 Ω
Turn signal/hazard relay	
Relay type	Full transistor
Built-in, self-canceling device	No
Oil level switch	
Oil level switch resistance (maximum level position)	484.0–536.0 Ω
Oil level switch resistance (minimum level position)	114.0–126.0 Ω
Fuel sender unit	
Sender unit resistance (full)	9.0–11.0 Ω
Sender unit resistance (empty)	213.0–219.0 Ω
Fuel injection sensor	
Crankshaft position sensor resistance	228–342 Ω (Gy-B)
Intake air pressure sensor output voltage	3.57–3.71 V@101.3 kPa
Intake air temperature sensor resistance	5400–6600 Ω@0 °C (32 °F) 290–390 Ω@80 °C (176 °F)
Coolant temperature sensor resistance	2510–2780 Ω@20 °C (68 °F) 210–221 Ω@100 °C (212 °F)
Fuses	
Main fuse	50.0 A
Headlight fuse	15.0 A
Signaling system fuse	7.5 A
Ignition fuse	15.0 A
Radiator fan fuse	15.0 A
Parking lighting fuse	10.0 A
Fuel injection system fuse	10.0 A
Auxiliary fuse	2.0 A
Backup fuse	7.5 A
Electronic throttle valve fuse	7.5 A
Spare fuse	15.0 A
Spare fuse	10.0 A
Spare fuse	7.5 A

Spare fuse	2.0 A

EAS20320
TIGHTENING TORQUES

EAS20331
GENERAL TIGHTENING TORQUE SPECIFICATIONS

This chart specifies tightening torques for standard fasteners with a standard ISO thread pitch. Tightening torque specifications for special components or assemblies are provided for each chapter of this manual. To avoid warpage, tighten multi-fastener assemblies in a crisscross pattern and progressive stages until the specified tightening torque is reached. Unless otherwise specified, tightening torque specifications require clean, dry threads. Components should be at room temperature.

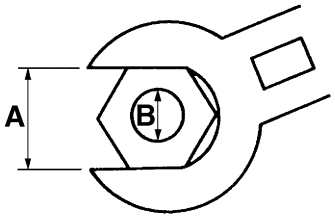

A. Distance between flats
B. Outside thread diameter

A (nut)	B (bolt)	General tightening torques		
		Nm	m·kgf	ft·lbf
10 mm	6 mm	6	0.6	4.3
12 mm	8 mm	15	1.5	11
14 mm	10 mm	30	3.0	22
17 mm	12 mm	55	5.5	40
19 mm	14 mm	85	8.5	61
22 mm	16 mm	130	13	94

EAS20340

ENGINE TIGHTENING TORQUES

Item	Thread size	Q'ty	Tightening torque	Remarks
Spark plug	M10	3	13 Nm (1.3 m·kgf, 9.4 ft·lbf)	
Cylinder head bolt	M9	8	See TIP.	E
Cylinder head bolt	M6	4	10 Nm (1.0 m·kgf, 7.2 ft·lbf)	
Intake camshaft cap bolt	M6	4	10 Nm (1.0 m·kgf, 7.2 ft·lbf)	E
Exhaust camshaft cap bolt	M6	4	10 Nm (1.0 m·kgf, 7.2 ft·lbf)	E
Camshaft cap bolt	M6	8	See TIP.	E
Cylinder head cover bolt	M6	4	10 Nm (1.0 m·kgf, 7.2 ft·lbf)	
Cylinder head stud bolt (exhaust pipe)	M8	6	15 Nm (1.5 m·kgf, 11 ft·lbf)	
Reed valve cover bolt	M6	4	10 Nm (1.0 m·kgf, 7.2 ft·lbf)	LT
Camshaft sprocket bolt	M7	4	24 Nm (2.4 m·kgf, 17 ft·lbf)	
Cylinder head cover breather plate bolt	M5	5	4.0 Nm (0.40 m·kgf, 2.9 ft·lbf)	LT
Timing chain bolt (right side of cylinder head)	M6	1	10 Nm (1.0 m·kgf, 7.2 ft·lbf)	
Connecting rod bolt	M8	6	See TIP.	M
Generator rotor bolt	M12	1	75 Nm (7.5 m·kgf, 54 ft·lbf)	E
Timing chain tensioner bolt	M6	2	10 Nm (1.0 m·kgf, 7.2 ft·lbf)	LT
Timing chain tensioner cap bolt	M6	1	7 Nm (0.7 m·kgf, 5.1 ft·lbf)	
Oil pump bolt	M6	4	10 Nm (1.0 m·kgf, 7.2 ft·lbf)	
Oil pump driven sprocket bolt	M6	1	15 Nm (1.5 m·kgf, 11 ft·lbf)	LT
Oil pump cover screw	M5	1	3.8 Nm (0.38 m·kgf, 2.8 ft·lbf)	
Water pump housing cover bolt	M6	1	10 Nm (1.0 m·kgf, 7.2 ft·lbf)	
Water pump drain bolt	M6	1	10 Nm (1.0 m·kgf, 7.2 ft·lbf)	
Water pump bolt	M6	4	12 Nm (1.2 m·kgf, 8.7 ft·lbf)	
Water jacket joint bolt	M6	2	10 Nm (1.0 m·kgf, 7.2 ft·lbf)	LT
Oil cooler union bolt	M20	1	35 Nm (3.5 m·kgf, 25 ft·lbf)	E
Engine oil drain bolt	M14	1	43 Nm (4.3 m·kgf, 31 ft·lbf)	
Oil strainer bolt	M6	3	10 Nm (1.0 m·kgf, 7.2 ft·lbf)	LT
Oil filter cartridge union bolt	M20	1	70 Nm (7.0 m·kgf, 51 ft·lbf)	E
Oil filter cartridge	M20	1	17 Nm (1.7 m·kgf, 12 ft·lbf)	
Oil pan bolt	M6	15	10 Nm (1.0 m·kgf, 7.2 ft·lbf)	
Throttle cable nut	M6	2	4.5 Nm (0.45 m·kgf, 3.3 ft·lbf)	

Item	Thread size	Q'ty	Tightening torque	Remarks
Throttle body joint clamp screw	M5	6	3.0 Nm (0.30 m·kgf, 2.2 ft·lbf)	
Air filter case cover screw	M5	10	1.6 Nm (0.16 m·kgf, 1.2 ft·lbf)	
Air filter case joint clamp screw	M5	3	2.8 Nm (0.28 m·kgf, 2.0 ft·lbf)	
Fuel injector adapter bolt	M6	2	12 Nm (1.2 m·kgf, 8.7 ft·lbf)	
Air filter case bolt	M6	3	7 Nm (0.7 m·kgf, 5.1 ft·lbf)	
Exhaust pipe nut	M8	6	20 Nm (2.0 m·kgf, 14 ft·lbf)	
Muffler bolt	M8	2	20 Nm (2.0 m·kgf, 14 ft·lbf)	
Muffler protector bolt	M6	3	10 Nm (1.0 m·kgf, 7.2 ft·lbf)	
Crankcase bolt (main journal)	M8	8	See TIP.	
Crankcase bolt	M8	6	24 Nm (2.4 m·kgf, 17 ft·lbf)	E
Crankcase bolt	M6	16	10 Nm (1.0 m·kgf, 7.2 ft·lbf)	E
Clutch cover bolt	M6	11	12 Nm (1.2 m·kgf, 8.7 ft·lbf)	
Crankshaft position sensor bolt	M6	2	10 Nm (1.0 m·kgf, 7.2 ft·lbf)	LT
Crankshaft end cover	M36	1	10 Nm (1.0 m·kgf, 7.2 ft·lbf)	
Timing mark accessing bolt	M8	1	15 Nm (1.5 m·kgf, 11 ft·lbf)	
Drive sprocket cover bolt	M6	3	8 Nm (0.8 m·kgf, 5.8 ft·lbf)	
Generator cover bolt	M6	8	12 Nm (1.2 m·kgf, 8.7 ft·lbf)	
Generator cover bolt	M6	2	12 Nm (1.2 m·kgf, 8.7 ft·lbf)	LT
Main gallery bolt	M16	2	8 Nm (0.8 m·kgf, 5.8 ft·lbf)	
Sub gallery plug	M14	1	6 Nm (0.6 m·kgf, 4.3 ft·lbf)	
Clutch cable holder bolt	M6	2	12 Nm (1.2 m·kgf, 8.7 ft·lbf)	LT
Timing chain cover bolt	M6	8	12 Nm (1.2 m·kgf, 8.7 ft·lbf)	
Starter clutch bolt	M8	3	32 Nm (3.2 m·kgf, 23 ft·lbf)	LT
Clutch boss nut	M20	1	125 Nm (12.5 m·kgf, 90 ft·lbf)	LT
Clutch spring bolt	M6	6	10 Nm (1.0 m·kgf, 7.2 ft·lbf)	
Clutch cable locknut	M8	1	7 Nm (0.7 m·kgf, 5.1 ft·lbf)	
Drive sprocket nut	M22	1	95 Nm (9.5 m·kgf, 69 ft·lbf)	E
Main axle bearing housing bolt	M6	3	12 Nm (1.2 m·kgf, 8.7 ft·lbf)	LT
Shift drum retainer bolt	M6	2	10 Nm (1.0 m·kgf, 7.2 ft·lbf)	LT
Shift shaft spring stopper	M8	1	22 Nm (2.2 m·kgf, 16 ft·lbf)	LT
Shift arm bolt	M6	1	14 Nm (1.4 m·kgf, 10 ft·lbf)	
Gear position sensor bolt	M5	2	4.0 Nm (0.40 m·kgf, 2.9 ft·lbf)	LT
Coolant temperature sensor	M10	1	16 Nm (1.6 m·kgf, 12 ft·lbf)	

Item	Thread size	Q'ty	Tightening torque	Remarks
Intake air pressure sensor screw	M5	2	7 Nm (0.7 m·kgf, 5.1 ft·lbf)	
Stator coil bolt	M6	3	14 Nm (1.4 m·kgf, 10 ft·lbf)	
Oil level switch bolt	M6	2	10 Nm (1.0 m·kgf, 7.2 ft·lbf)	
Starter motor bolt	M6	2	12 Nm (1.2 m·kgf, 8.7 ft·lbf)	
Starter motor lead nut	M6	1	7 Nm (0.7 m·kgf, 5.1 ft·lbf)	
Speed sensor bolt	M6	1	10 Nm (1.0 m·kgf, 7.2 ft·lbf)	
Shift rod locknut (front)	M6	1	8 Nm (0.8 m·kgf, 5.8 ft·lbf)	
Shift rod locknut (rear)	M6	1	8 Nm (0.8 m·kgf, 5.8 ft·lbf)	Left thread
Shift rod joint bolt	M6	1	10 Nm (1.0 m·kgf, 7.2 ft·lbf)	
Adapter bolt (left/right)	M6	2	12 Nm (1.2 m·kgf, 8.7 ft·lbf)	
Oil filler cap	M20	1	1.5 Nm (0.15 m·kgf, 1.1 ft·lbf)	
Starter motor assembly bolt	M5	2	5 Nm (0.5m·kgf, 3.6 ft·lbf)	
Starter motor insulator nut	M6	1	11 Nm (1.1 m·kgf, 8.0 ft·lbf)	
Throttle position sensor screw	M5	2	3.5 Nm (0.35 m·kgf, 2.5 ft·lbf)	
Accelerator position sensor bolt	M5	2	3.5 Nm (0.35 m·kgf, 2.5 ft·lbf)	
Clutch cable and adjust nut	M8	1	7 Nm (0.7 m·kgf, 5.1 ft·lbf)	
Throttle cable and throttle body	M6	2	4.5 Nm (0.45 m·kgf, 3.3 ft·lbf)	
Coolant reservoir bolt	M5	1	0.5 Nm (0.05 m·kgf, 0.37 ft·lbf)	
Coolant reservoir bolt	M6	1	9 Nm (0.9 m·kgf, 6.5 ft·lbf)	
Radiator bolt	M6	2	10 Nm (1.0 m·kgf, 7.2 ft·lbf)	
Radiator fan cover bolt	M6	1	7 Nm (0.7 m·kgf, 5.1 ft·lbf)	
Radiator cap bolt	M5	1	5 Nm (0.5 m·kgf, 3.6 ft·lbf)	
Radiator stay bolt	M6	1	10 Nm (1.0 m·kgf, 7.2 ft·lbf)	

TIP

Camshaft cap bolt

Tighten the bolts to 10 Nm (1.0 m·kgf, 7.2 ft·lbf) following the tightening order.

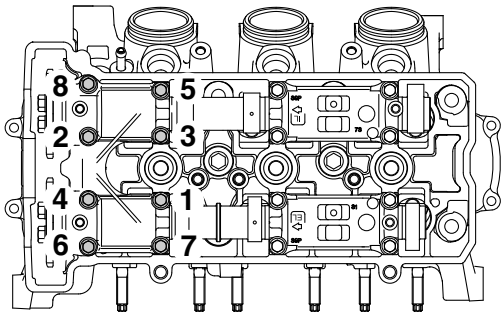

TIP

Cylinder head bolt

1. Tighten the bolts to 25 Nm (2.5 m·kgf, 18 ft·lbf) with a torque wrench following the tightening order.
2. Perform the following procedure to all the bolts one by one in the tightening sequence as shown in the illustration.
   a. Loosen the bolt.
   b. Tighten the bolt to 16 Nm (1.6 m·kgf, 12 ft·lbf) with a torque wrench.
   c. Tighten the bolt further to reach the specified angle 90°.

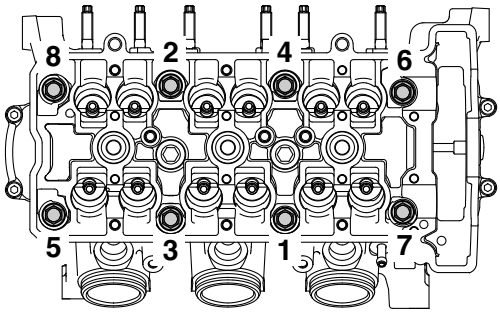

TIP

Connecting rod bolt

1. Tighten the bolts to 20 Nm (2.0 m·kgf, 14 ft·lbf)
2. Tighten the bolts further to reach the specified angle 175°–185°.

TIP

Crankcase bolt (main journal)

1. Lubricate the bolt threads and both sides of the washers with engine oil.
2. Tighten the bolts to 25 Nm (2.5 m·kgf, 18 ft·lbf) in the order shown in the illustration.
3. Fully loosen the bolt “1”, and then tighten the bolt again to the specified torque shown below. Repeat this, one by one, until bolt “8”, in the order shown in the illustration.
   Tightening torque
   Bolts “1” to “6”: 15 Nm (1.5 m·kgf, 11 ft·lbf)
   Bolts “7” and “8”: 18 Nm (1.8 m·kgf, 13 ft·lbf)
4. Tighten the bolts in the order shown in the illustration to the specified angle 60°.

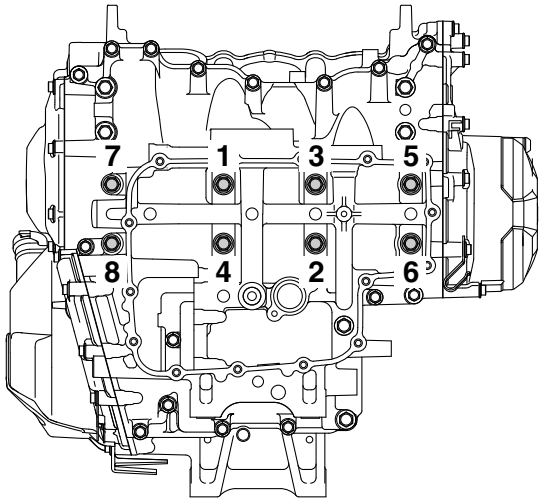

EAS20350

CHASSIS TIGHTENING TORQUES

Item	Thread size	Q'ty	Tightening torque	Remarks
Engine mounting bolt (front upper and front lower)	M10	4	45 Nm (4.5 m·kgf, 33 ft·lbf)	
Engine mounting nut (rear upper)	M10	1	45 Nm (4.5 m·kgf, 33 ft·lbf)	
Engine mounting nut (rear lower)	M10	1	45 Nm (4.5 m·kgf, 33 ft·lbf)	
Engine mounting adjust bolt (front)	M18	1	7 Nm (0.7 m·kgf, 5.1 ft·lbf)	
Engine mounting adjust bolt (rear)	M16	2	7 Nm (0.7 m·kgf, 5.1 ft·lbf)	
Main frame and rear frame nut	M10	4	50 Nm (5.0 m·kgf, 36 ft·lbf)	
Pivot shaft nut	M14	1	110 Nm (11 m·kgf, 80 ft·lbf)	
Relay arm and frame nut	M10	1	61 Nm (6.1 m·kgf, 44 ft·lbf)	
Relay arm and connecting arm nut	M10	1	55 Nm (5.5 m·kgf, 40 ft·lbf)	
Connecting arm and swingarm assembly nut	M10	1	55 Nm (5.5 m·kgf, 40 ft·lbf)	
Rear shock absorber assembly nut (upper)	M10	1	44 Nm (4.4 m·kgf, 32 ft·lbf)	
Rear shock absorber assembly nut (lower)	M10	1	44 Nm (4.4 m·kgf, 32 ft·lbf)	
Drive chain guard bolt	M6	2	7 Nm (0.7 m·kgf, 5.1 ft·lbf)	
Rear fender bolt	M6	3	7 Nm (0.7 m·kgf, 5.1 ft·lbf)	
Swingarm bracket (left) and swingarm bolt	M6	4	7 Nm (0.7 m·kgf, 5.1 ft·lbf)	
Swingarm bracket (right) and swingarm bolt	M6	4	7 Nm (0.7 m·kgf, 5.1 ft·lbf)	
Chain puller adjusting locknut	M8	2	16 Nm (1.6 m·kgf, 12 ft·lbf)	
Upper bracket pinch bolt	M8	2	26 Nm (2.6 m·kgf, 19 ft·lbf)	
Steering stem nut	M22	1	110 Nm (11 m·kgf, 80 ft·lbf)	
Upper handlebar holder bolt	M8	4	22 Nm (2.2 m·kgf, 16 ft·lbf)	
Lower ring nut	M25	2	See TIP.	
Lower handlebar holder nut	M10	2	40 Nm (4.0 m·kgf, 29 ft·lbf)	
Front brake master cylinder holder bolt	M6	2	10 Nm (1.0 m·kgf, 7.2 ft·lbf)	
Front brake hose union bolt	M10	3	30 Nm (3.0 m·kgf, 22 ft·lbf)	
Lower bracket pinch bolt	M8	4	23 Nm (2.3 m·kgf, 17 ft·lbf)	
Main switch and upper bracket	M8	2	23 Nm (2.3 m·kgf, 17 ft·lbf)	
Grip end	M16	2	26 Nm (2.6 m·kgf, 19 ft·lbf)	

Item	Thread size	Q'ty	Tightening torque	Remarks
Front brake master cylinder reservoir cap screw	M4	2	1.5 Nm (0.15 m·kgf, 1.1 ft·lbf)	
Clutch lever holder pinch bolt	M6	1	11 Nm (1.1 m·kgf, 8.0 ft·lbf)	
Horn bolt	M6	1	7 Nm (0.7 m·kgf, 5.1 ft·lbf)	
Front fender bolt	M6	4	10 Nm (1.0 m·kgf, 7.2 ft·lbf)	
Meter bracket bolt	M6	2	7 Nm (0.7 m·kgf, 5.1 ft·lbf)	
Meter assembly screw	M5	3	1.3 Nm (0.13 m·kgf, 0.94 ft·lbf)	
Headlight stay and lower bracket bolt	M6	1	7 Nm (0.7 m·kgf, 5.1 ft·lbf)	
Headlight stay, horn bracket and lower bracket bolt	M6	1	7 Nm (0.7 m·kgf, 5.1 ft·lbf)	
Front brake hose holder and headlight stay bolt	M6	1	7 Nm (0.7 m·kgf, 5.1 ft·lbf)	
Fuel pump bolt	M5	4	4.0 Nm (0.40 m·kgf, 2.9 ft·lbf)	
Fuel tank stay and fuel tank	M6	4	7 Nm (0.7 m·kgf, 5.1 ft·lbf)	
Fuel tank stay and frame	M6	2	7 Nm (0.7 m·kgf, 5.1 ft·lbf)	
Fuel tank and fuel tank bracket	M6	2	7 Nm (0.7 m·kgf, 5.1 ft·lbf)	
Fuel tank bracket and fuel tank bracket assembly bolt	M6	2	7 Nm (0.7 m·kgf, 5.1 ft·lbf)	
Fuel tank cap bolt	M5	4	6 Nm (0.6 m·kgf, 4.3 ft·lbf)	
Air scoop stay and frame bolt	M6	4	7 Nm (0.7 m·kgf, 5.1 ft·lbf)	
Fuel tank bracket assembly and rear frame bolt	M6	4	7 Nm (0.7 m·kgf, 5.1 ft·lbf)	
Seat bracket and rear frame bolt	M6	4	7 Nm (0.7 m·kgf, 5.1 ft·lbf)	
Seat lock assembly and battery box bolt	M6	2	7 Nm (0.7 m·kgf, 5.1 ft·lbf)	
Front wheel axle	M16	1	65 Nm (6.5 m·kgf, 47 ft·lbf)	
Front wheel axle pinch bolt	M8	1	23 Nm (2.3 m·kgf, 17 ft·lbf)	
Front brake caliper bolt	M10	4	35 Nm (3.5 m·kgf, 25 ft·lbf)	
Front brake disc bolt	M6	10	18 Nm (1.8 m·kgf, 13 ft·lbf)	
Rear wheel axle nut	M18	1	150 Nm (15 m·kgf, 108 ft·lbf)	
Rear brake disc bolt	M8	5	30 Nm (3.0 m·kgf, 22 ft·lbf)	
Rear wheel sprocket nut	M10	6	80 Nm (8.0 m·kgf, 58 ft·lbf)	
Brake caliper bleed screw	M8	3	5 Nm (0.5 m·kgf, 3.6 ft·lbf)	
Rear brake master cylinder bolt	M8	2	23 Nm (2.3 m·kgf, 17 ft·lbf)	
Rear brake hose union bolt	M10	2	30 Nm (3.0 m·kgf, 22 ft·lbf)	
Footrest bracket bolt	M10	2	55 Nm (5.5 m·kgf, 40 ft·lbf)	

Item	Thread size	Q'ty	Tightening torque	Remarks
Passenger footrest and rear frame bolt	M8	4	28 Nm (2.8 m·kgf, 20 ft·lbf)	LT
Rear brake fluid reservoir nut	M5	1	3.8 Nm (0.38 m·kgf, 2.8 ft·lbf)	
Sidestand bracket bolt	M10	1	48 Nm (4.8 m·kgf, 35 ft·lbf)	
Sidestand switch bolt	M5	2	4.3 Nm (0.43 m·kgf, 3.1 ft·lbf)	LT
Adapter bracket and frame bolt	M6	2	12 Nm (1.2 m·kgf, 8.7 ft·lbf)	
Battery box and rear frame bolt	M6	2	7 Nm (0.7 m·kgf, 5.1 ft·lbf)	
Mudguard assembly nut	M6	2	7 Nm (0.7 m·kgf, 5.1 ft·lbf)	
Rectifier/regulator bolt	M6	2	7 Nm (0.7 m·kgf, 5.1 ft·lbf)	
Rear side cover and rear frame bolt	M6	4	7 Nm (0.7 m·kgf, 5.1 ft·lbf)	
Rear frame and tail/brake light nut	M6	2	7 Nm (0.7 m·kgf, 5.1 ft·lbf)	
Battery terminal bolt	M5	2	2.2 Nm (0.22 m·kgf, 1.6 ft·lbf)	
Headlight unit side cover bolt (left side and right side)	M6	4	7 Nm (0.7 m·kgf, 5.1 ft·lbf)	
Headlight unit side cover bolt (upper side)	M6	4	0.8 Nm (0.08 m·kgf, 0.59 ft·lbf)	
Front brake lever pivot bolt	M6	1	1.0 Nm (0.10 m·kgf, 0.72 ft·lbf)	S
Front brake lever pivot nut	M6	1	6 Nm (0.6 m·kgf, 4.3 ft·lbf)	
Front brake light switch screw	M4	1	1.2 Nm (0.12 m·kgf, 0.87 ft·lbf)	
Brake pedal nut	M8	1	30 Nm (3.0 m·kgf, 22 ft·lbf)	
Rear brake master cylinder lock-nut	M8	1	18 Nm (1.8 m·kgf, 13 ft·lbf)	
Rear brake caliper bolt (front)	M12	1	27 Nm (2.7 m·kgf, 20 ft·lbf)	S
Rear brake caliper bolt (rear)	M8	1	22 Nm (2.2 m·kgf, 16 ft·lbf)	S and LT
Rear brake pad retaining bolt	M10	1	17 Nm (1.7 m·kgf, 12 ft·lbf)	
Rear brake caliper screw plug	M10	1	2.5 Nm (0.25 m·kgf, 1.8 ft·lbf)	
Rearview mirror (left/right)	M10	2	17 Nm (1.7 m·kgf, 12 ft·lbf)	
Throttle cable housing bolt	M5	2	3.8 Nm (0.38 m·kgf, 2.8 ft·lbf)	
Handlebar switch screw (left/right)	M4	4	2.0 Nm (0.20 m·kgf, 1.4 ft·lbf)	
Front fork cap bolt	M46	2	23 Nm (2.3 m·kgf, 17 ft·lbf)	
Front fork cap bolt locknut	M10	2	15 Nm (1.5 m·kgf, 11 ft·lbf)	
Front fork damper rod assembly bolt	M10	2	23 Nm (2.3 m·kgf, 17 ft·lbf)	LT

Item	Thread size	Q'ty	Tightening torque	Remarks
Thermostat assembly bolt	M6	2	10 Nm (1.0 m·kgf, 7.2 ft·lbf)	
Fuel rail bolt	M6	2	5 Nm (0.5 m·kgf, 3.6 ft·lbf)	
Air scoop bolt	M6	2	1.5 Nm (0.15 m·kgf, 1.1 ft·lbf)	
Canister bolt (for California only)	M6	2	7 Nm (0.7 m·kgf, 5.1 ft·lbf)	
Canister bracket bolt (for California only)	M6	2	7 Nm (0.7 m·kgf, 5.1 ft·lbf)	

TIP

Lower ring nut

1. Tighten the ring nut to approximately 52 Nm (5.2 m·kgf, 38 ft·lbf) with a torque wrench, then loosen the lower ring nut completely.
2. Tighten the lower ring nut to 18 Nm (1.8 m·kgf, 13 ft·lbf).

EAS20360
LUBRICATION POINTS AND LUBRICANT TYPES

EAS20370
ENGINE

Lubrication point	Lubricant
Oil seal lips	LS
O-rings	LS
Coolant hose insertion part	Water or S
Bearings	E
Cylinder head cover bolt gasket and timing chain bolt gasket	S
Camshaft lobes and journals (intake and exhaust)	M
Valve stem seals (intake and exhaust)	S
Valve lifter outer surface (intake and exhaust)	E
Valve stems and stem ends (intake and exhaust)	M
Crankshaft big ends	E
Piston surfaces	E
Piston pins	E
Connecting rod bolts	M
Crankshaft journals	E
Balancer shaft journals	E
Generator rotor assembly	E
Water pump impeller shaft	E
Oil pump rotors (inner and outer)	LS
Oil pump assembly	E
Oil cooler bolts	E
Oil filter cartridge union bolt	E
Oil nozzle O-rings	LS or E
Main gallery bolt O-ring	LS or S
Oil cooler sub gallery O-ring	LS or S
Drive axle sub gallery O-ring	LS or S
Balancer journal bolt O-rings	E
Idler gear inner surface and end	E
Starter clutch outer assembly	E
Starter clutch gear	E

Lubrication point	Lubricant
Primary driven gear end	E
Crankcase cover and clutch pull rod	LS
Clutch housing spacer	E
Clutch boss conical washer	E
Transmission gears inner surface	M
Transmission collar	M
Transmission gears outer surface (shift fork contact parts)	M
Drive sprocket washer	E
Shit drum moving surface	E
Shift fork pin	E
Shift forks guide bar outer surface	E
Shift shaft washer	E
Shift shaft moving surface	E
Crankcase mating surface	Yamaha bond No. 1215 (Three bond No. 1215®)
Stator coil assembly lead grommet	Yamaha bond No. 1215 (Three bond No. 1215®)

EAS20380

CHASSIS

Lubrication point	Lubricant
Steering bearings, seal lip and ball race lip	LS
Tube guide (throttle grip) inner surface and throttle cables	LS
Brake lever pivot bolt and metal-to-metal moving parts	S
Clutch lever pivot bolt, metal-to-metal moving parts and clutch cable end	LS
Swingarm collar outer surface, oil seal lip	LS
Pivot shaft	LS
Swingarm pivot bush outer surface, oil seal lip	LS
Swingarm pivot thrust cover inner surface	LS
Relay arm collar outer surface, oil seal inner lip	LS
Sidestand pivoting point and metal-to-metal moving parts	LS
Sidestand switch contact point	LS
Sidestand hook and spring contact point	LS

Lubrication point	Lubricant
Shift pedal pivoting parts	LS
Rear footrest ball and metal-to-metal moving parts	LS
Shift shaft joint rod moving parts	LS
Front wheel oil seal (left and right)	LS
Rear wheel oil seal	LS
Rear wheel drive hub oil seal	LS
Rear wheel drive hub mating surface	LS
Brake caliper piston seal	BF
Master cylinder inside	BF
Brake caliper piston dust seal	S
Caliper bracket slide pins and/or retaining bolts	S

EAS20390

LUBRICATION SYSTEM CHART AND DIAGRAMS

EAS20400

ENGINE OIL LUBRICATION CHART

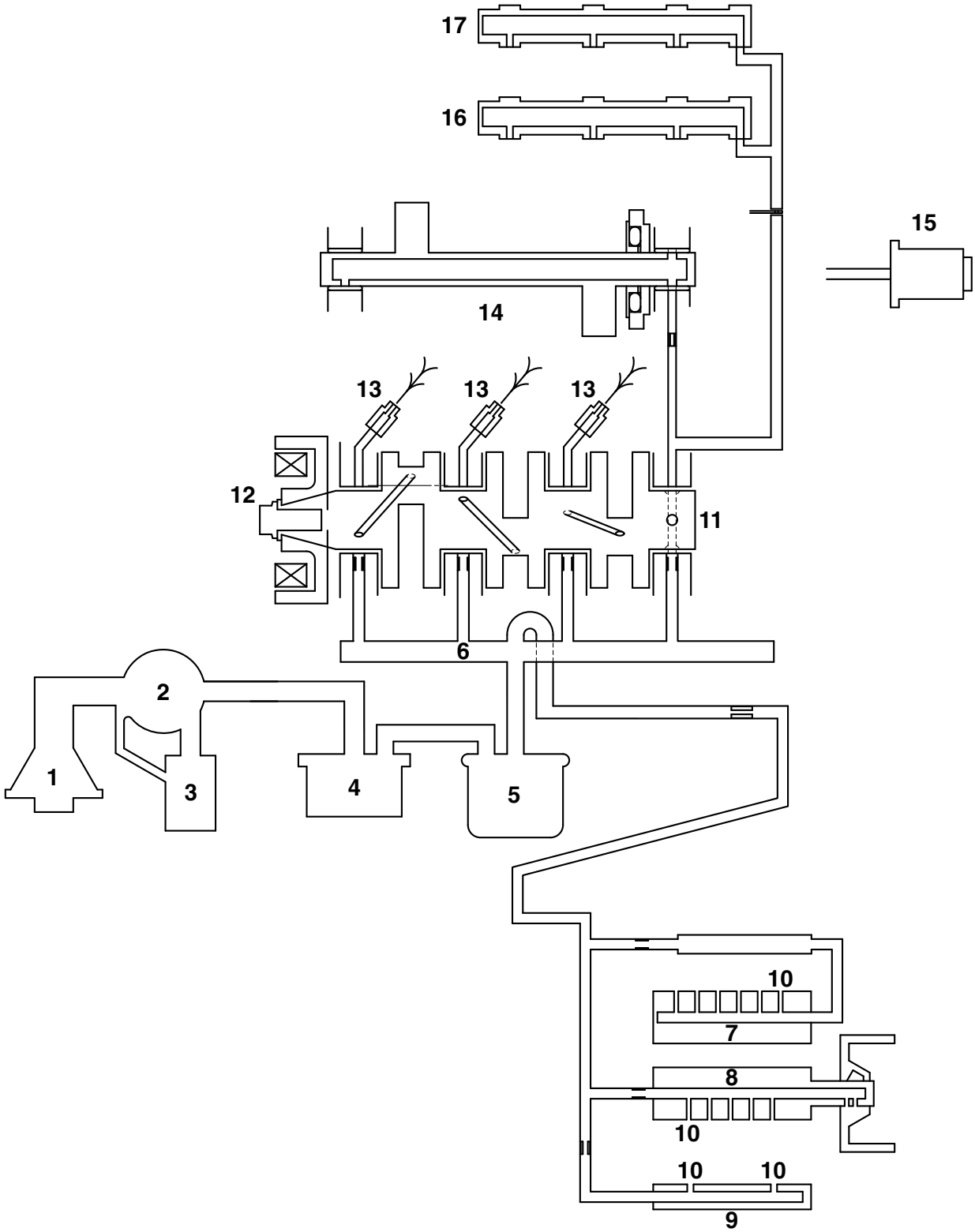

1. Oil strainer
2. Oil pump
3. Relief valve
4. Oil cooler
5. Oil filter cartridge
6. Main gallery
7. Drive axle
8. Main axle
9. Shift fork (upper)
10. Mission shower
11. Crankshaft
12. AC magneto
13. Oil nozzle
14. Balancer shaft
15. Timing chain tensioner
16. Intake camshaft
17. Exhaust camshaft

EAS20410

LUBRICATION DIAGRAMS

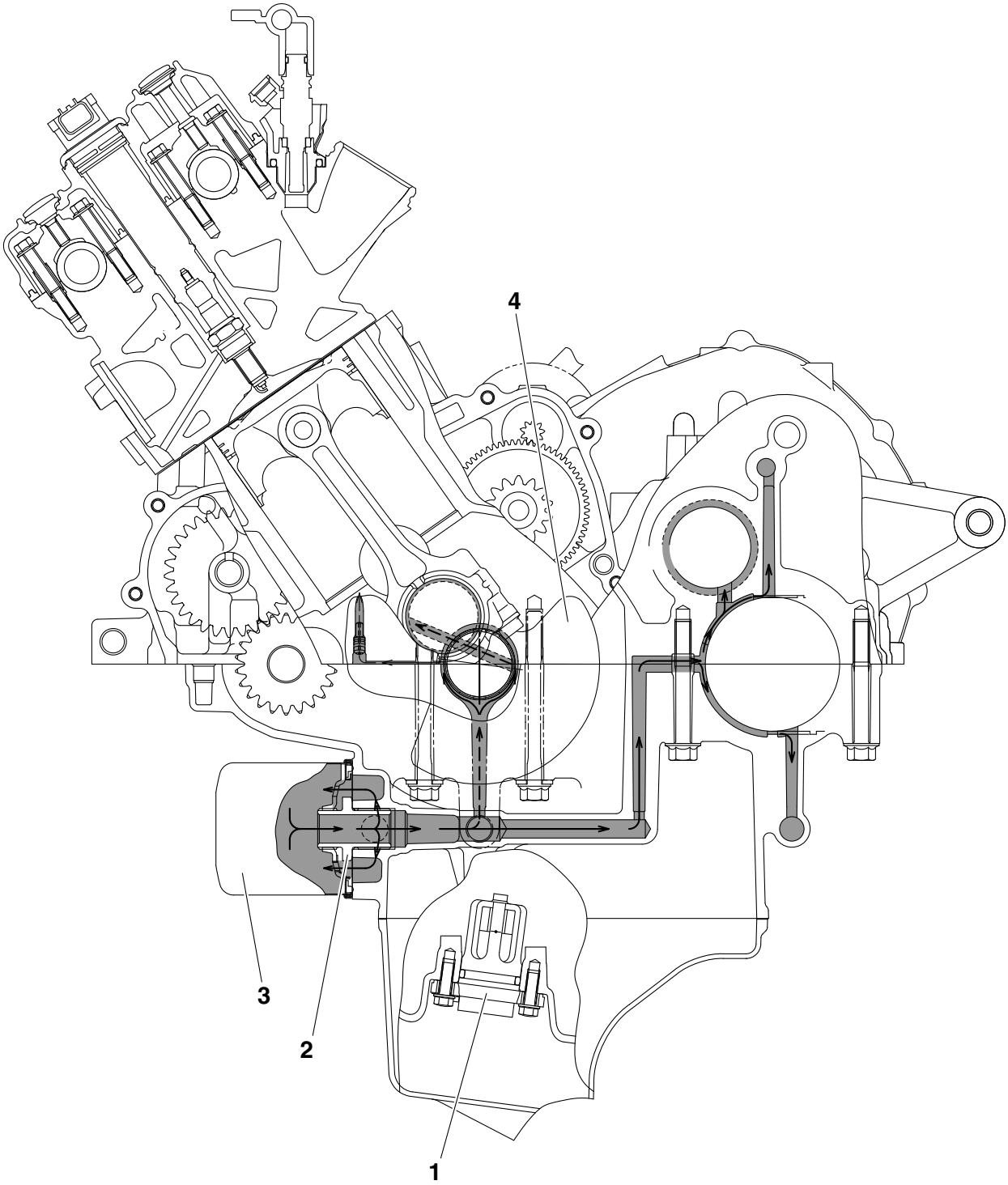

1. Oil level switch
2. Oil filter cartridge union bolt
3. Oil filter cartridge
4. Crankshaft

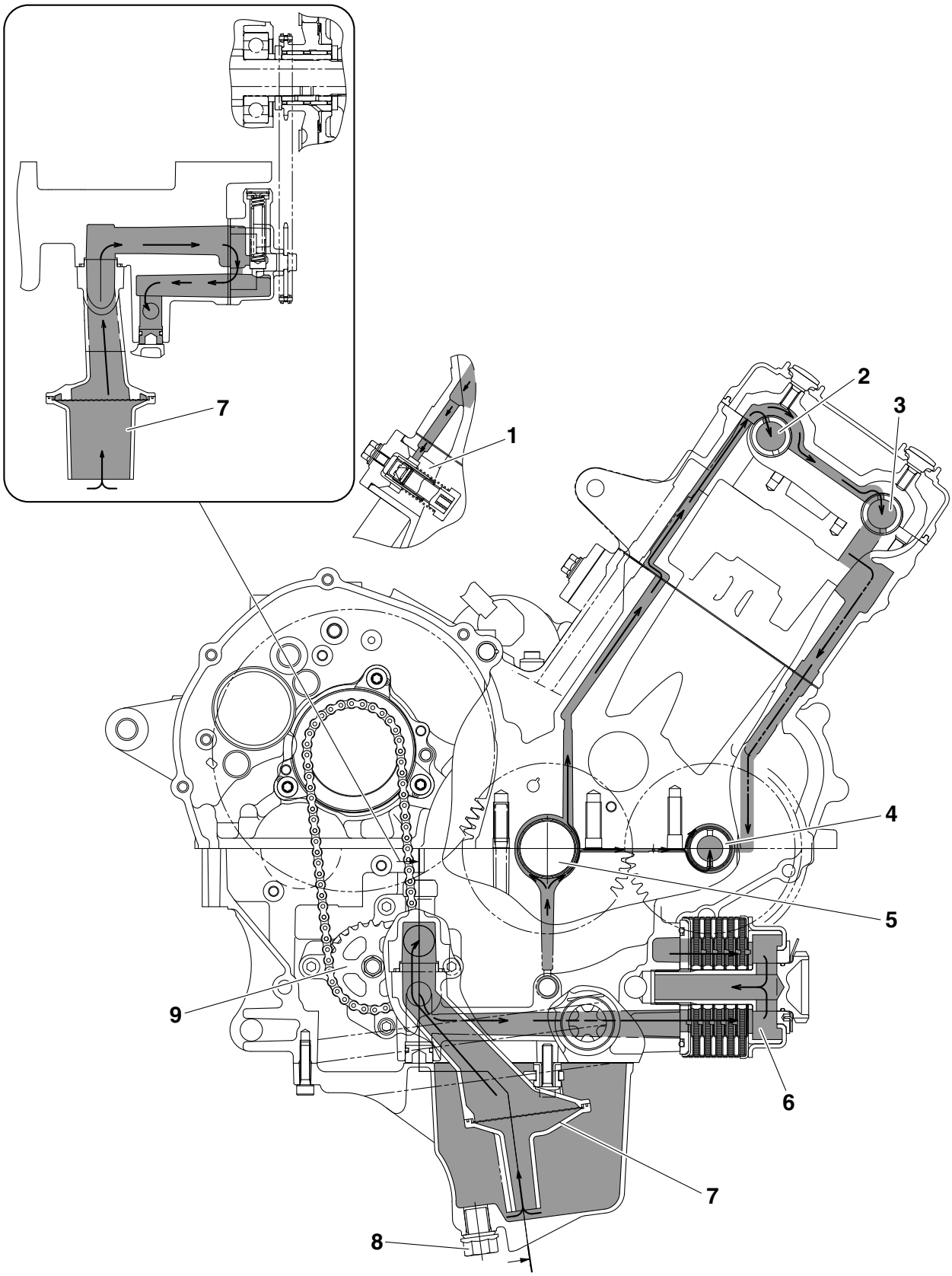
7
1
2
3
4
5
9
6
7
8

1. Timing chain tensioner
2. Intake camshaft
3. Exhaust camshaft
4. Balancer shaft
5. Crankshaft
6. Oil cooler
7. Oil strainer
8. Oil drain bolt
9. Oil pump driven sprocket

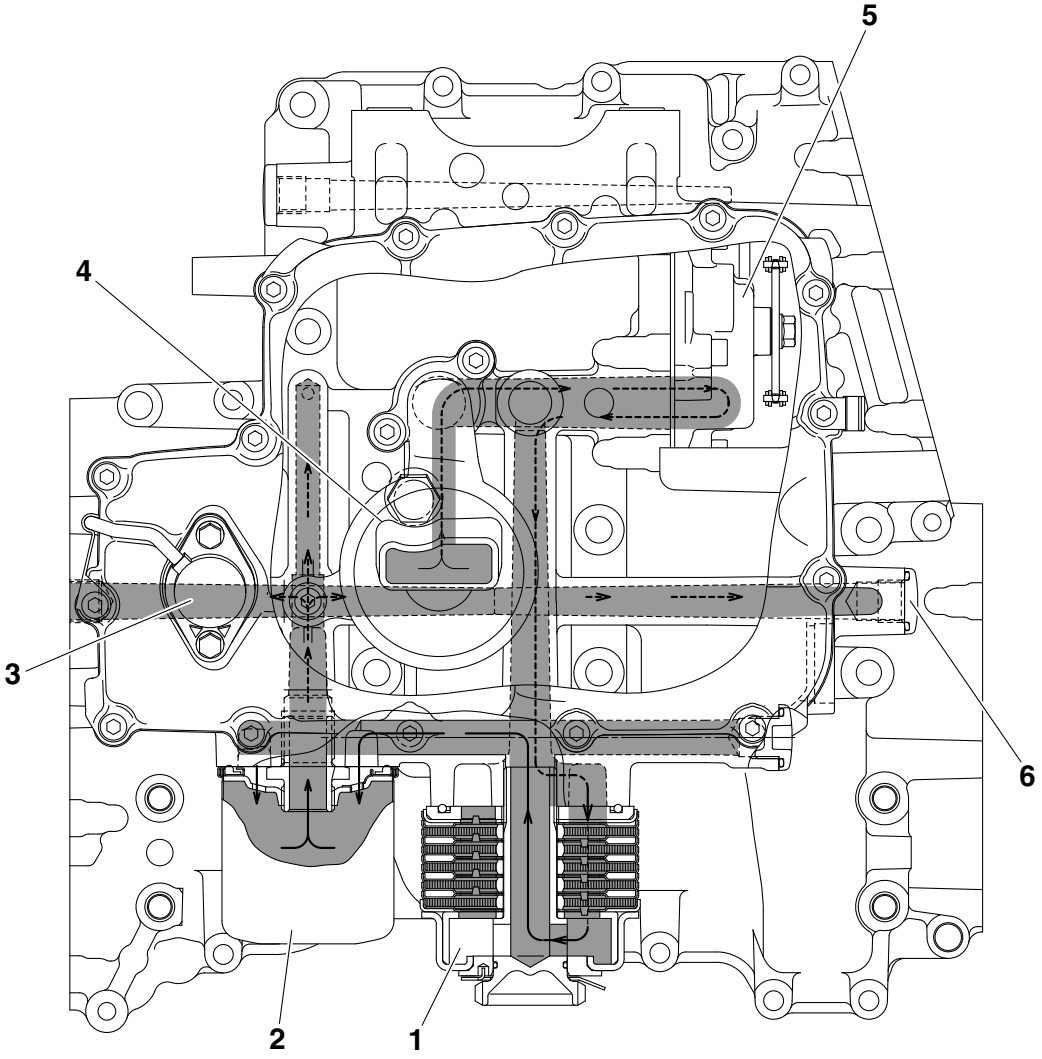
5
4
3
6
2
1

1. Oil cooler
2. Oil filter cartridge
3. Oil level switch
4. Oil strainer
5. Oil pump
6. Main gallery bolt

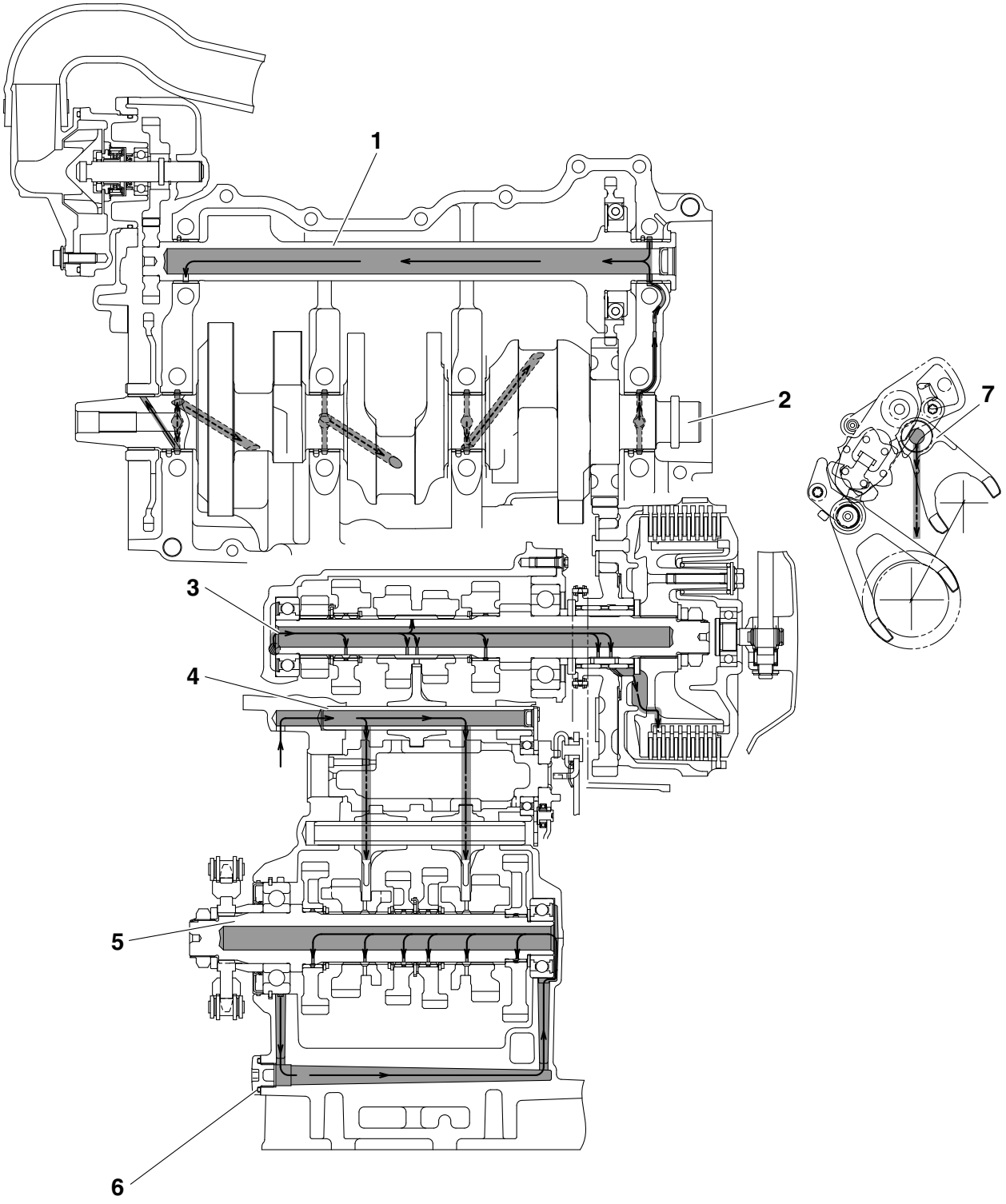
1
2
7
3
4
5
6

1. Balancer shaft
2. Crankshaft
3. Main axle
4. Shift fork guide bar (shift fork-C side)
5. Drive axle
6. Sub gallery bolt
7. Shift fork

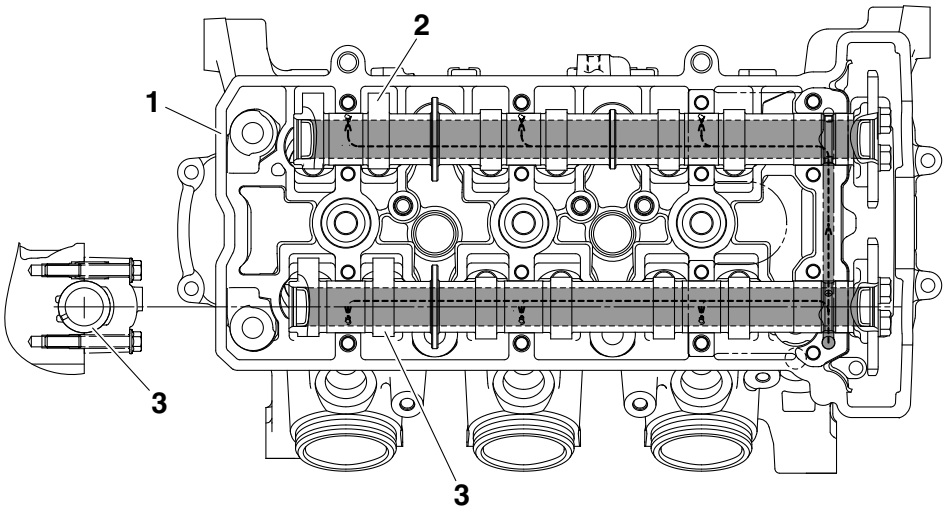
1
2
3
3

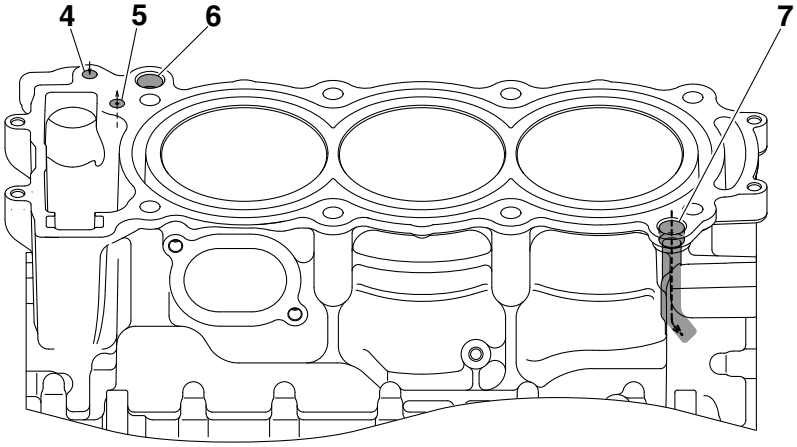
4
5
6
7

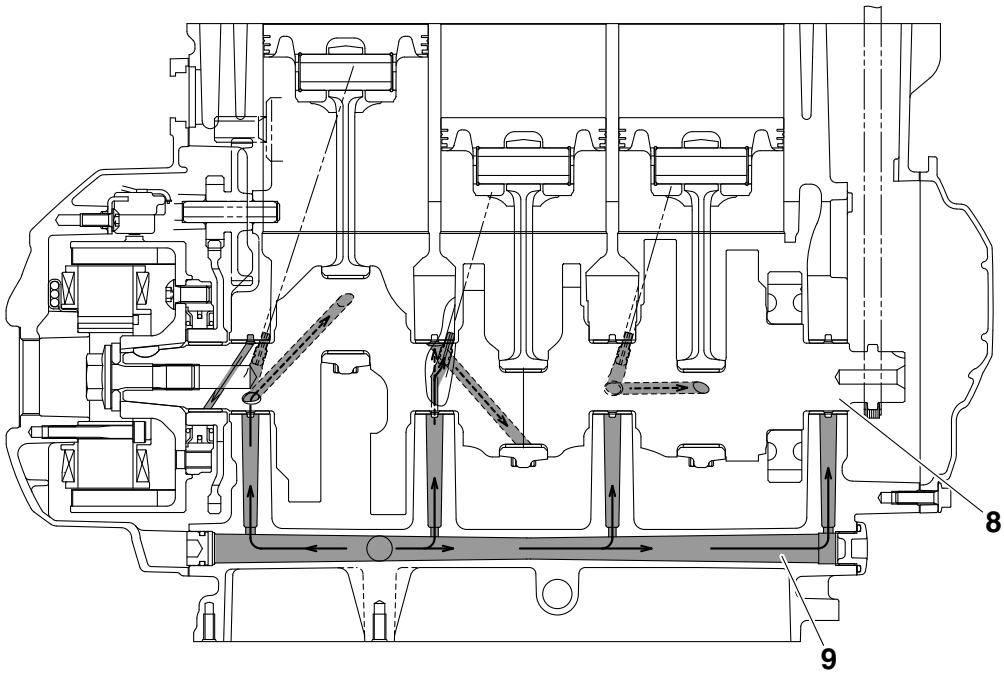
8
9

1. Cylinder head
2. Exhaust camshaft
3. Intake camshaft
4. Oil passage to the timing chain tensioner
5. Oil passage to the cylinder head
6. Oil passage to the clutch chamber
7. Oil return passage from the cylinder head
8. Crankshaft
9. Main gallery

EAS20420

COOLING SYSTEM DIAGRAMS

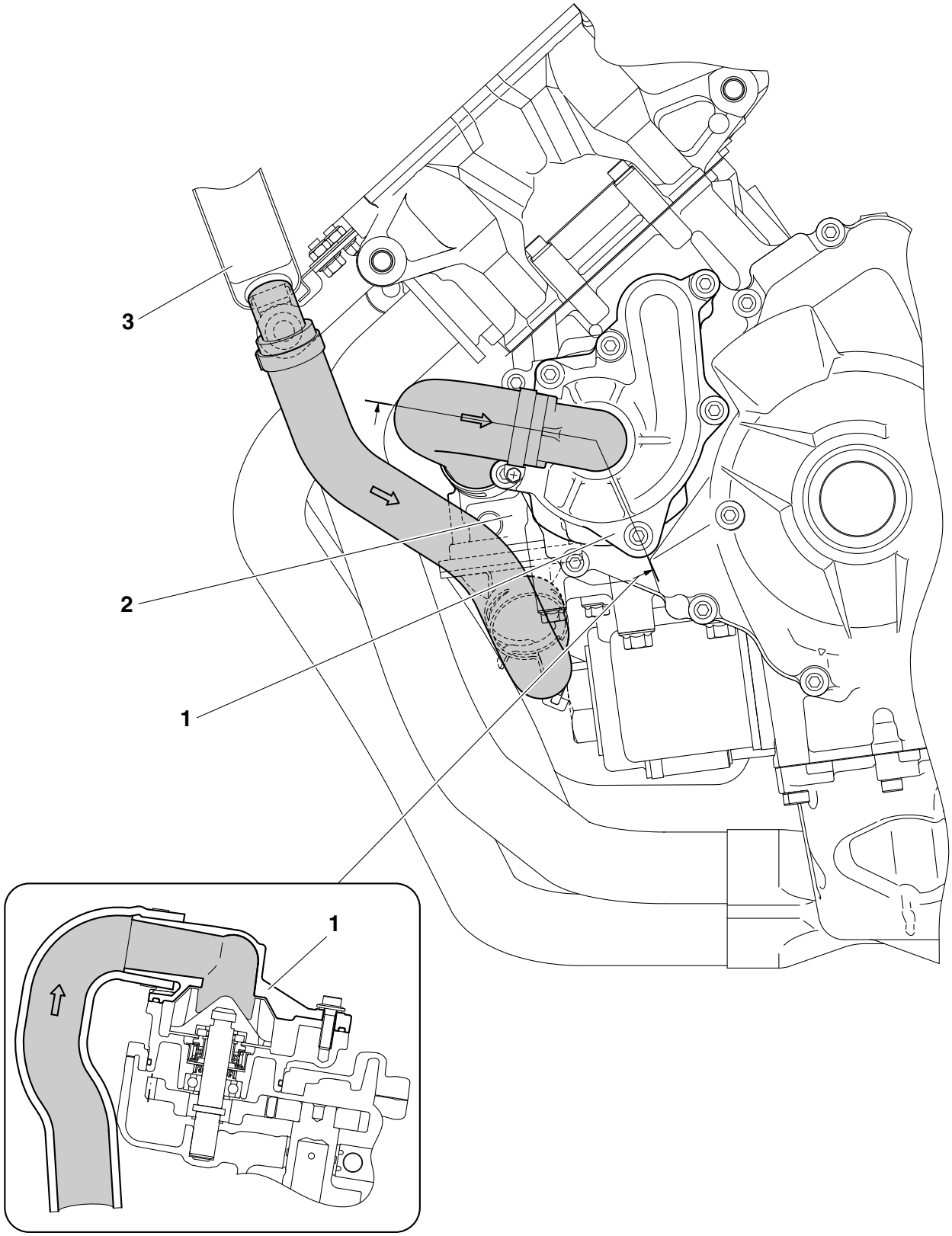

1. Water pump
2. Thermostat
3. Radiator

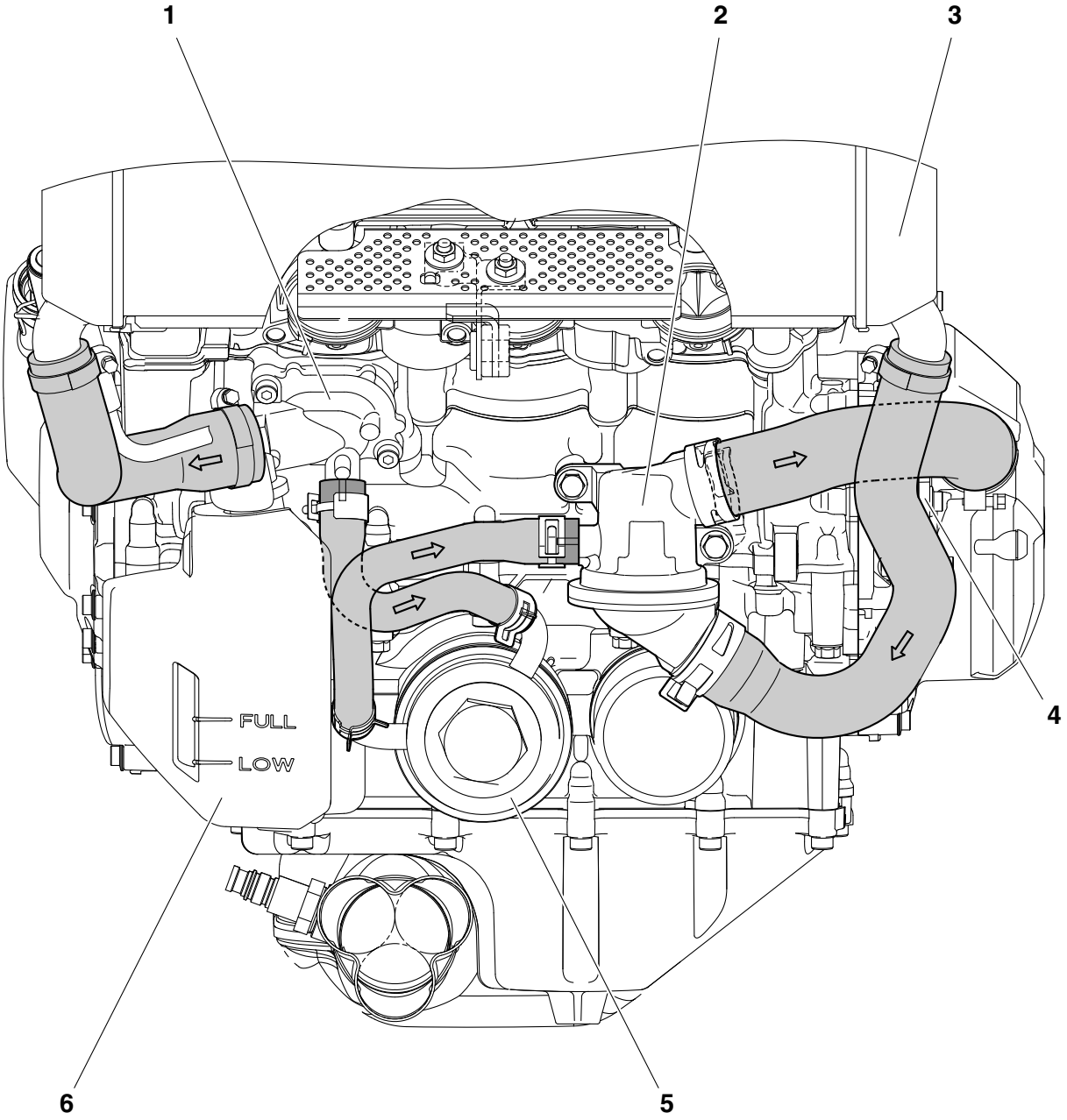
1
2
3
4
5
6
FULL
LOW

1. Water jacket
2. Thermostat
3. Radiator
4. Water pump
5. Oil cooler
6. Coolant reservoir

EAS20430

CABLE ROUTING

Handlebar (top view)

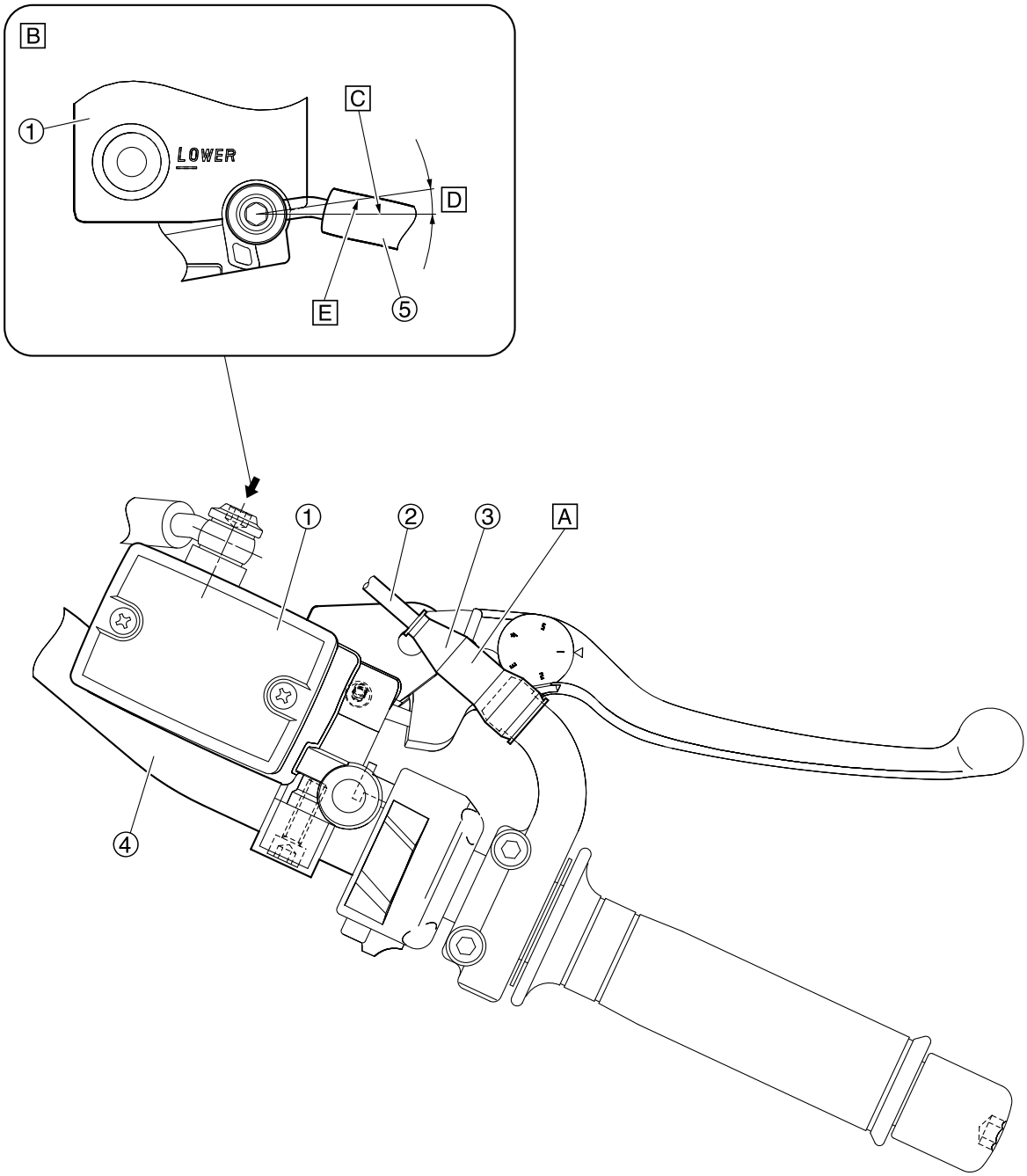

1. Front brake master cylinder
2. Throttle cable
3. Rubber cover
4. Handlebar
5. Front brake hose

A. When installing the rubber cover, silicone water or soapy water may be applied to the inside of the rubber cover.
B. Detailed drawing of around the front brake master cylinder
C. Straight line parallel to the front brake master cylinder reservoir cap
D. 3–13°
E. Center of the metal fitting for the front brake hose

Handlebar (front view)

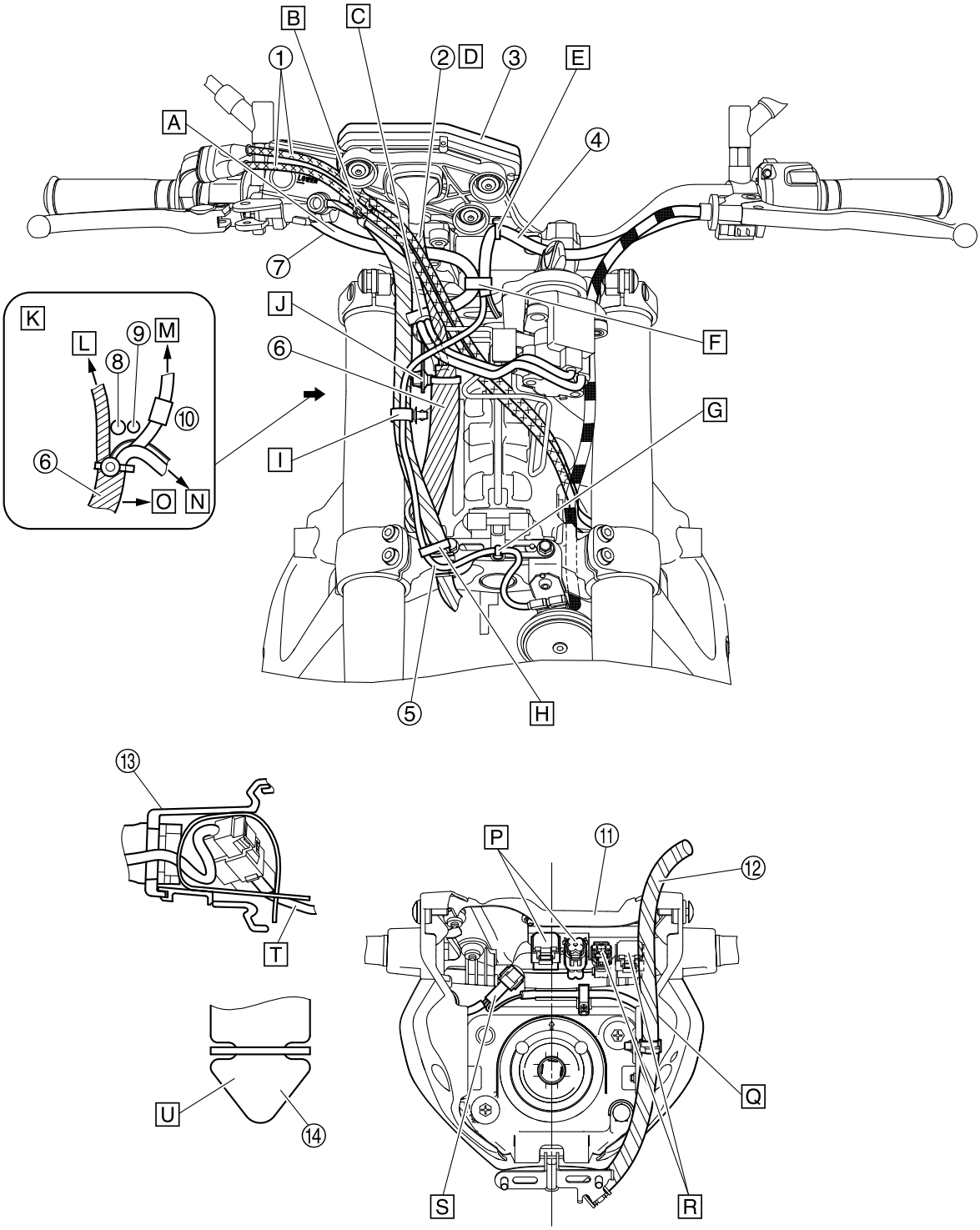

1. Throttle cable
2. Meter lead
3. Meter assembly
4. Left handlebar switch lead
5. Horn lead
6. Wire harness
7. Right handlebar switch lead
8. Main switch lead
9. Horn lead
10. Handlebar switch coupler
11. Headlight
12. Front brake hose
13. Turn signal/position light assembly (left/right)
14. Flap

A. Route the right handlebar switch lead to the rear of the meter lead.
B. Fasten the throttle cables and front brake hose at the center of the metal part with the clamp as shown in the illustration. Face the catch of the clamp on the front brake hose side downward.
C. Route the main switch lead to the cable guide from the top of the vehicle.
D. Route the meter lead behind the throttle cables.
E. Fasten the left handlebar switch lead with the clamp so that the jointed part is facing upward.
F. Fasten the left handlebar switch lead and right handlebar switch lead with the clamp.
G. Fasten the horn lead to the stay with the clamp so that the mating section faces downward.
H. Align the horn lead and the brake hose with the brake hose protector and fasten them to the stay with the clamp.
I. Fasten the brake hose and the horn lead with the headlight clamp.
J. Clamp the wire harness, and then fasten it to the stay.
Hook the either catch of the clamp onto the stay.
K. Outline drawing of around the meter lead
L. To Meter
M. To handlebar switch (left/right)
N. To turn signal/position light (left/right)
To auxiliary light
O. Front of the vehicle
P. Fasten the left handlebar switch coupler to the headlight.
Q. Route the brake hose through the inside of the headlight cover.
R. Fasten the right handlebar switch coupler to the headlight. The order and connection of the leads on the wire harness behind headlight do not matter.
S. Fasten the auxiliary light coupler to the coupler fastened to the headlight.
T. Make sure that the lead of the wire harness protrude from the bottom side of the vehicle.
U. Insert the flap up to the sides of the arrow.

Radiator (front side view and right side view)

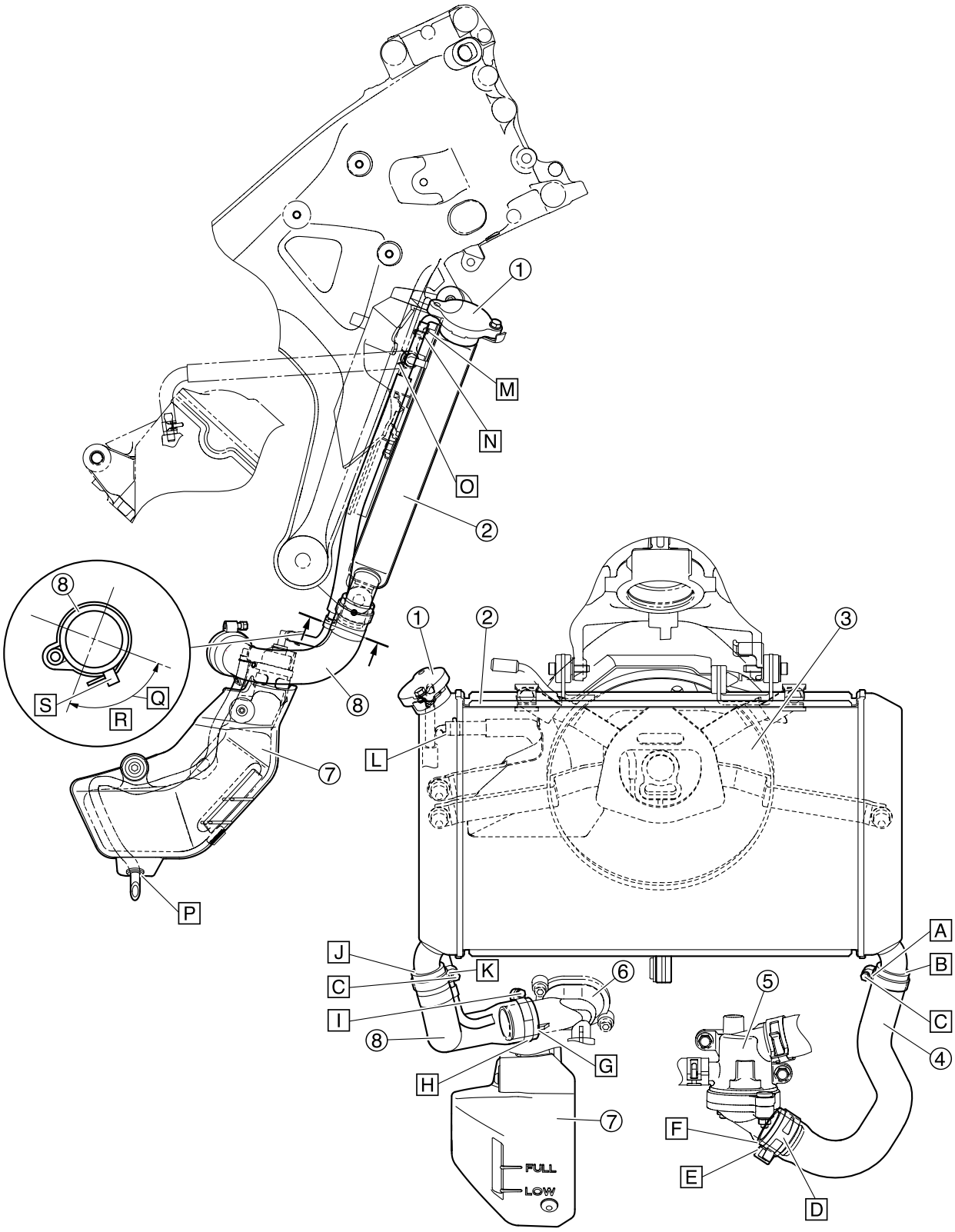

1. Radiator cap
2. Radiator
3. Radiator fan
4. Radiator outlet hose
5. Thermostat assembly
6. Water jacket joint
7. Coolant reservoir
8. Radiator inlet hose

A. Install the radiator outlet hose with its white paint mark facing inward.
B. Install the radiator outlet hose up to the base of the bend in the radiator pipe.
C. Point the hose clamp installation bolt inward.
D. Point the end of the hose clip downward.
E. Align the yellow paint mark of the radiator outlet hose with the rib of the thermostat assembly, and then install it.
F. Install the radiator outlet hose so that the tip of the hose contacts the rib of the thermostat assembly.
G. Install the radiator inlet hose so that the tip of the hose contacts the rib of the water jacket joint.
H. Install the radiator inlet hose with its yellow paint mark facing downward.
I. Point the hose clamp installation bolt upward.
J. Install the radiator inlet hose up to the base of the bend in the radiator pipe.
K. Install the radiator inlet hose with its white paint mark facing inward.
L. Install the radiator hose up to the base of the bend in the radiator pipe.
M. Point the end of the clip outward.
N. Install the coolant reservoir hose up to the base of the bend in the radiator pipe.
O. Point the end of the clip rearward.
P. Install the grommet on the coolant reservoir drain hose to the hole in the coolant reservoir cover.
Q. 90°
R. Place the lock of the hose clamp within the area shown in the illustration, placing as close to the center as possible.
S. Point the tip of the clamp rearward.

Fuel tank (left and bottom view)

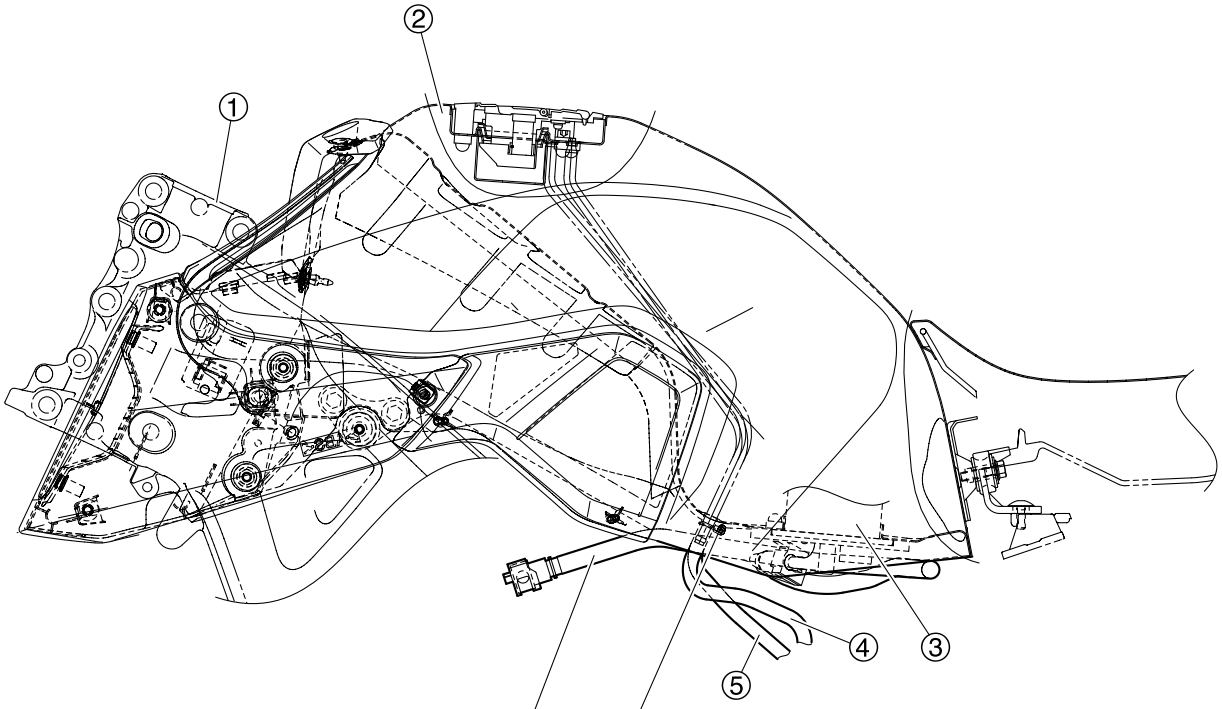

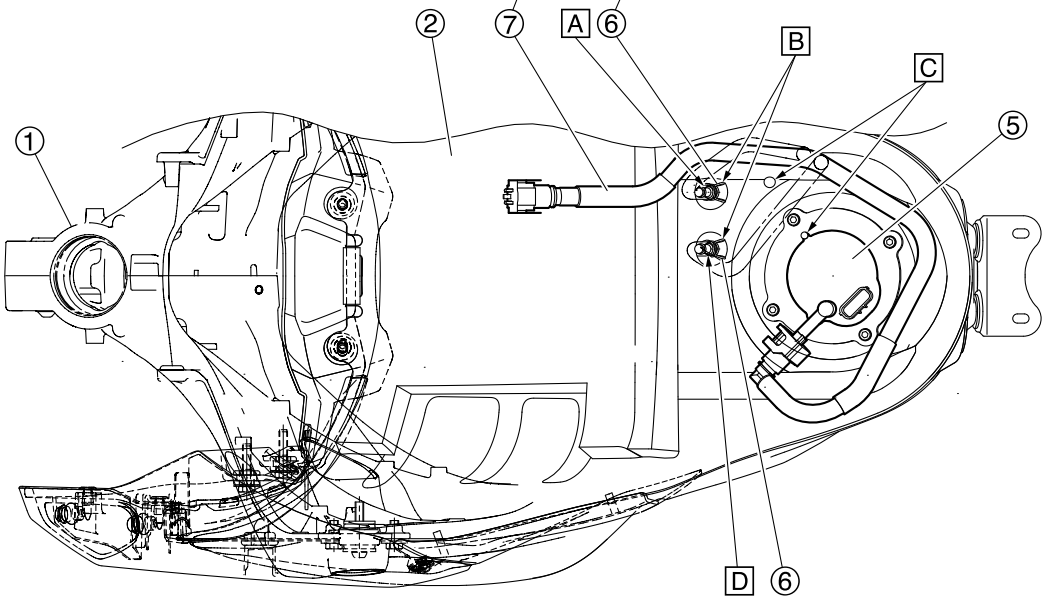

1. Frame
2. Fuel tank
3. Fuel pump
4. Fuel tank drain hose
5. Fuel tank breather hose
6. Clip
7. Fuel hose assembly

A. Insert the fuel tank drain hose up to the section where the fuel tank pipe increases in diameter. Install it so that the white paint mark faces the rearward.
B. Install the clip so that the end is on the paint mark. Do not put it on the clip spool (guard). Point the end to the rear, and store it inside to the fuel hose.
C. Align the fuel pump positioning to the inner panel marking (visual guide during installation).
D. Insert the fuel tank breather hose up to the section where the fuel tank pipe increases in diameter. Install it so that the yellow paint mark faces the rearward.

Canister (for California only)

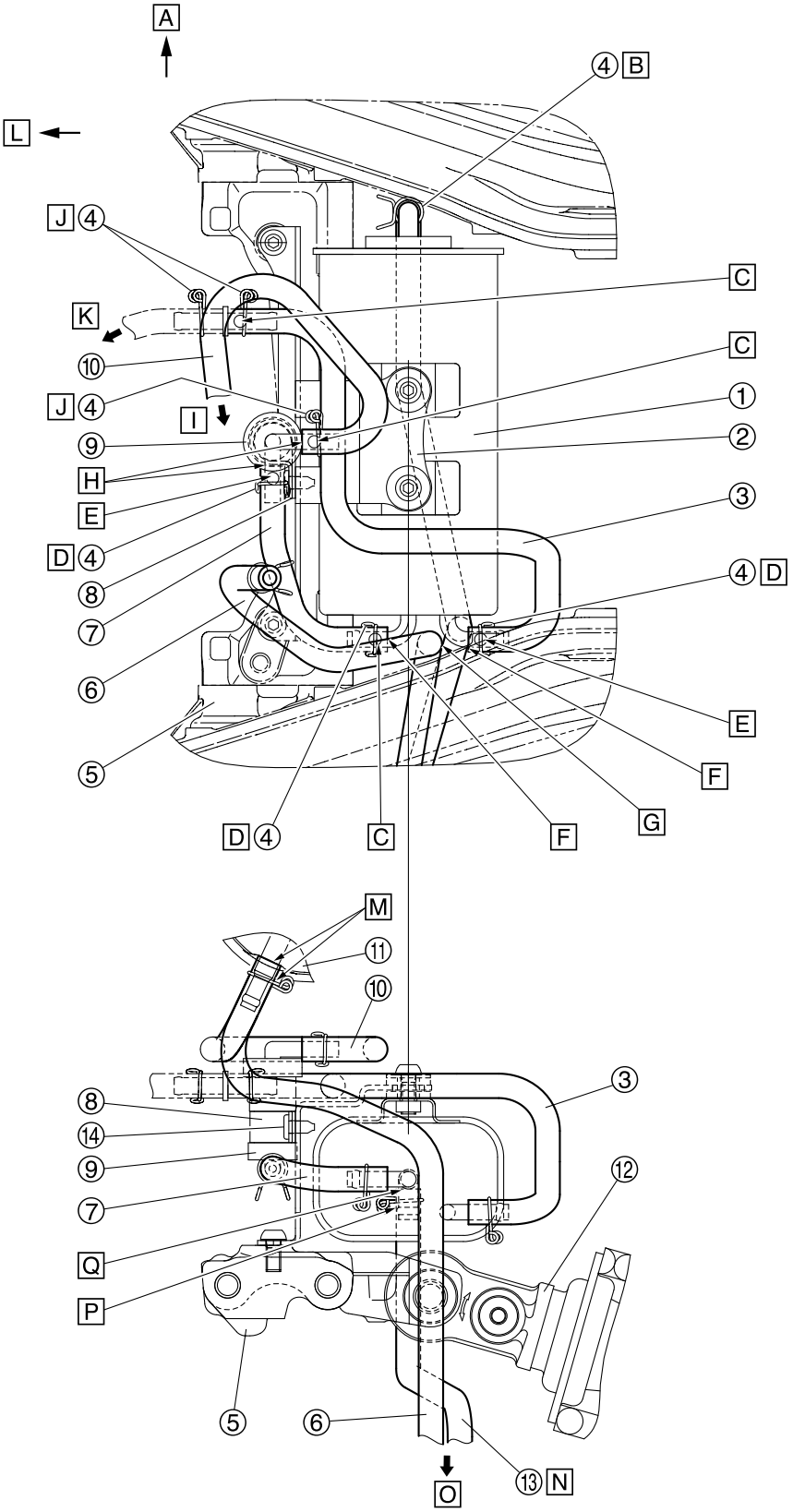

1. Canister
2. Bracket
3. Canister purge hose (hose joint to canister)
4. Clip
5. Frame
6. Fuel tank drain hose
7. Fuel tank breather hose (rollover valve to canister)
8. Clamp
9. Rollover valve
10. Fuel tank breather hose (fuel tank to rollover valve)
11. Fuel tank
12. Rear shock absorber
13. Canister breather hose
14. Rivet

A. Right side of the vehicle
B. Point the end of the clip forward.
Make sure not to install the clip on the raised portion of the hose fitting of the canister.
C. Face the yellow paint mark on the hose upward.
D. Point the end of the clip downward.
Make sure not to install the clip on the raised portion of the hose fitting of the canister.
E. Face the white paint mark on the hose upward.
F. Install the hose up to the base of the bend in the hose fitting of canister.
G. Route the fuel tank drain hose between the canister and the frame.
H. Install the fuel tank breather hose to the rollover valve, making sure that the fuel tank breather hose contacts the rollover valve.
I. To fuel tank
J. Point the end of the clip toward right.
Make sure not to install the clip on the raised portion of the hose fitting of the canister.
K. To throttle bodies
L. Front side of the vehicle
M. Insert the fuel tank drain hose up to the section where the fuel tank pipe increases in diameter with its paint mark facing rearward.
N. Route the canister breather hose under the rear shock absorber.
O. Atmosphere
P. Face the white paint mark on the hose forward.
Q. Install the hose up to the bend in the hose fitting of the canister.

Air filter case and throttle body (top view and left side view)

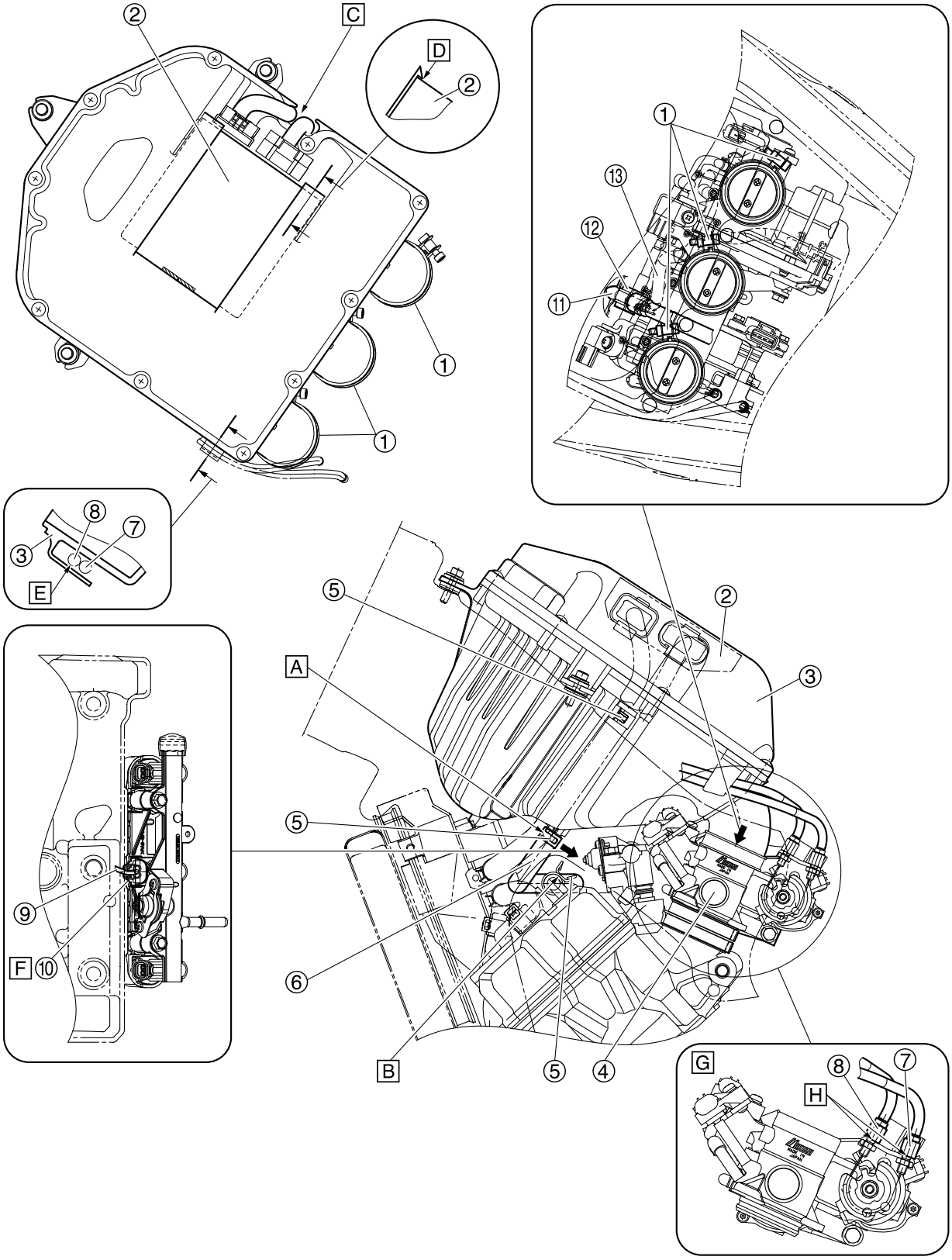

1. Air filter case joint clamp
2. ECU (engine control unit)
3. Air filter case
4. Throttle body
5. Clip
6. Cylinder head breather hose
7. Throttle cable (decelerator cable) (white plating)
8. Throttle cable (accelerator cable) (black plating)
9. Injector lead
10. Injector coupler
11. Fuel rail
12. Fuel hose (black side)
13. Canister purge hose (for California only)

A. Install the breather hose on the yellow paint mark side to the air filter case, with its yellow paint mark facing toward left side of the vehicle.
Point the end of the clip toward left.
B. Install the breather hose so that the tip touches the pipe of the cylinder head.
Install the breather hose on the white paint mark side to the engine.
Install the breather hose so that the white paint mark is in the rear of the vehicle and parallel to the cylinder head mating surfaces.
Install the clip so that the end is in the rear of the vehicle and parallel to the cylinder head mating surfaces.
C. Install the ECU harness by storing it in the recess in the air filter case.
D. Install the ECU so that the hooks on the air filter case go over the ECU edges.
E. Store the throttle cables on the protrusion of the air filter case.
F. Insert the injector coupler all the way in.
G. Instructive drawing for assembling the throttle cables
H. Install the throttle cable so that the nut of the throttle cable touches the stay.

Air cut-off valve (left side view)

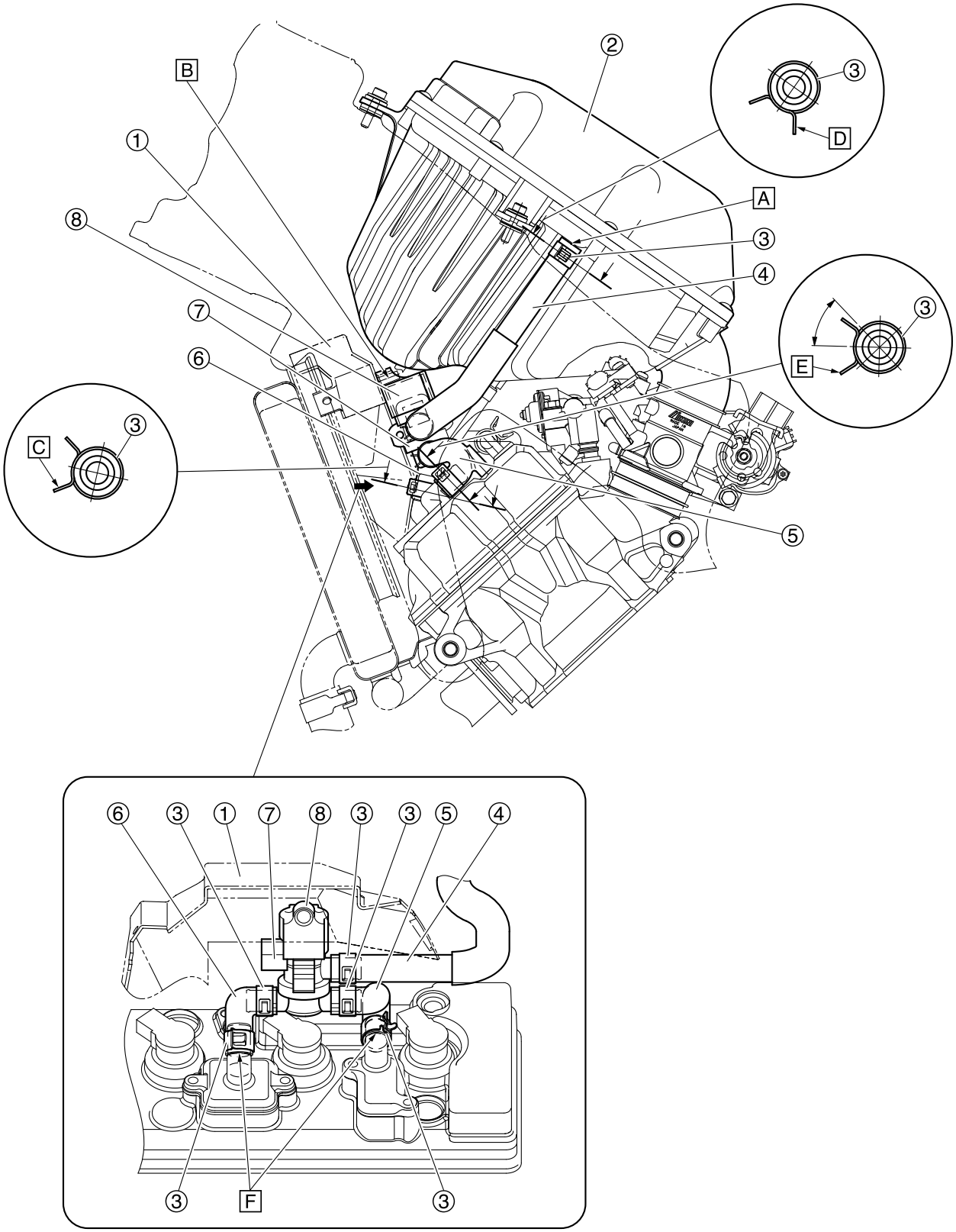

1. Radiator fan cover
2. Air filter case
3. Clip
4. Air induction system hose (air filter case to air cut-off valve)
5. Air induction system hose (air cut-off valve to reed valve cover #1)
6. Air induction system hose (air cut-off valve to reed valve cover #2/#3)
7. Air cut-off valve
8. Air cut-off valve holder

A. Install the air induction system hose (air filter case to air cut-off valve) so that the tip of the hose contacts the air filter case.
B. Insert the protrusion on the radiator fan cover into the hole in the air cut-off valve holder.
C. Point the end of the clip for the air induction system hose (air cut-off valve to reed valve cover #2/#3) forward.
D. Point the end of the clip for the air induction system hose (air filter case to air cut-off valve) to the left.
E. Point the end of the clip for the air induction system hose (air cut-off valve to reed valve cover #1) diagonally left forward.
F. Install the hose so that the tip of the hose touches the protrusion of the pipe.

Frame and engine (right side view)

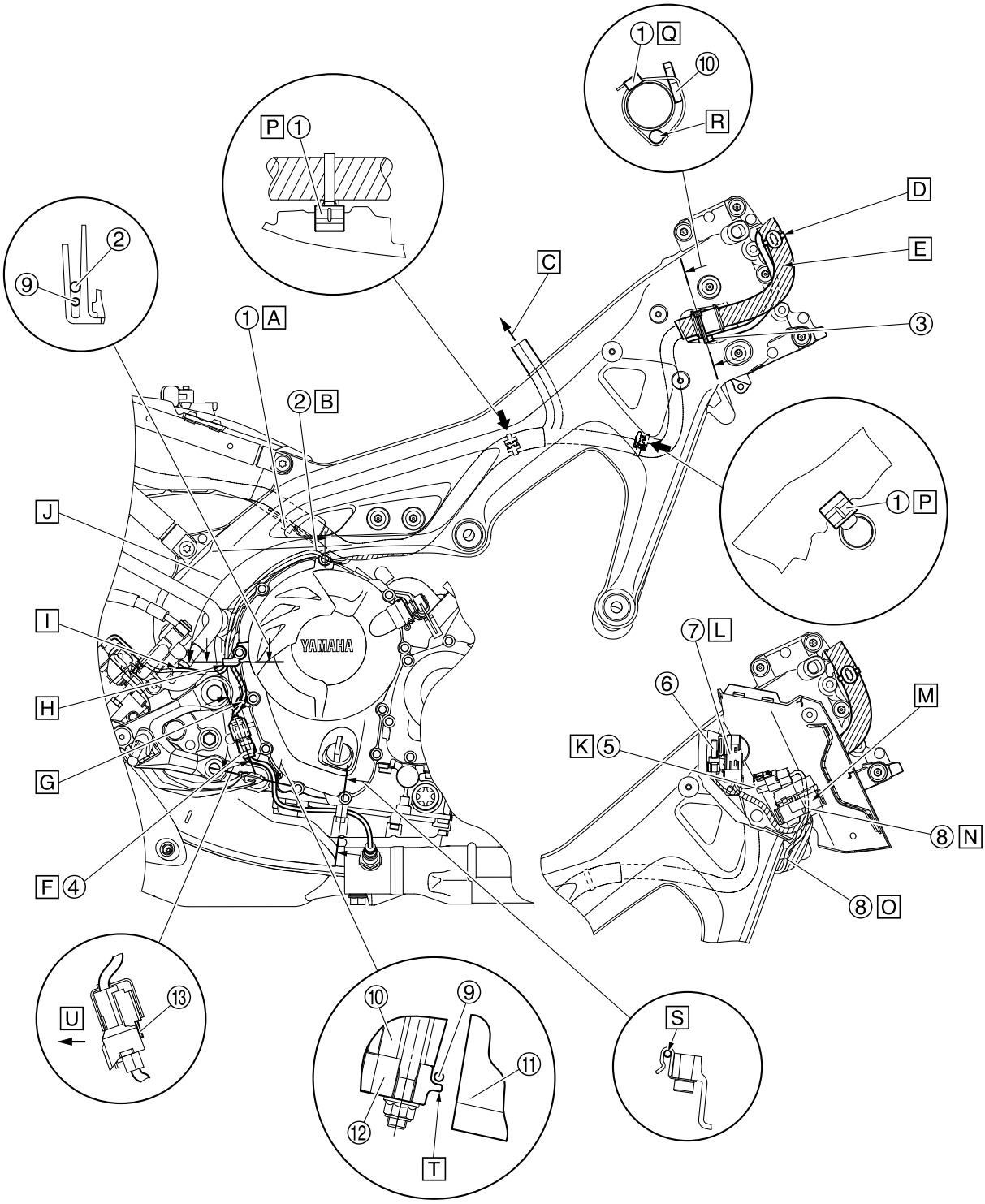

1. Clamp
2. Rear brake light switch lead
3. Positioning tape
4. O_2 sensor coupler
5. Radiator fan motor coupler
6. Auxiliary DC jack
7. Headlight relay
8. Radiator fan motor lead
9. O_2 sensor lead
10. Frame
11. Engine
12. Adapter bracket
13. Bracket

A. Insert the clamp into the long hole in the battery box.
B. Route the rear brake light switch lead outside the wire harness branch to the O_2 sensor lead.
C. To the ECU coupler
D. Install the wire harness clamp to the vehicle before performing “Q”.
To install the clamp, refer to “Handlebar (front view)”.
E. When performing the “Q”, turn the handlebar to the right and position the wire harness as shown in the illustration.
F. Connect the O_2 sensor coupler, and then fasten to the bracket. Make sure that the top of the coupler does not protrude. It is okay if the cover is deformed.
G. Fasten the O_2 sensor lead with the clamp, and then install it on the bracket.
H. Route the O_2 sensor lead and the rear brake light switch lead through the bracket guide.
I. Route the rear brake light switch lead outside brake fluid reservoir hose.
J. It does not matter whether the O_2 sensor lead or the rear brake light switch lead is on top (bottom) in the area shown in the illustration.
K. Connect the radiator fan motor coupler.
L. Insert the rubber bracket for the headlight relay so that it touches the rib of the air scoop stay on the vehicle.
M. Install the fuse box to the rubber bracket, and then insert the rubber bracket so that it touches the rib of the air scoop stay on the vehicle.
Make sure that the fuse box is not removed from the rubber bracket.
N. Route the radiator fan motor lead behind the fuse box.
O. Route the radiator fan motor lead rear side of the vehicle respect to the wire harness.
P. Insert the clamp so that it touches the rim of the frame.
Q. Fasten the grommet of the wire harness and main switch lead with the clamp at the rear side of the grommet and the center of the positioning tape.
Point the tip of the clamp outward, and then cut it.
R. Positioning tape for the main switch lead.
S. Fasten the O_2 sensor lead with the holder.
T. Route O_2 sensor lead inside to the protrusion of the adapter bracket.
U. Inside vehicle

Frame and engine (left side view)

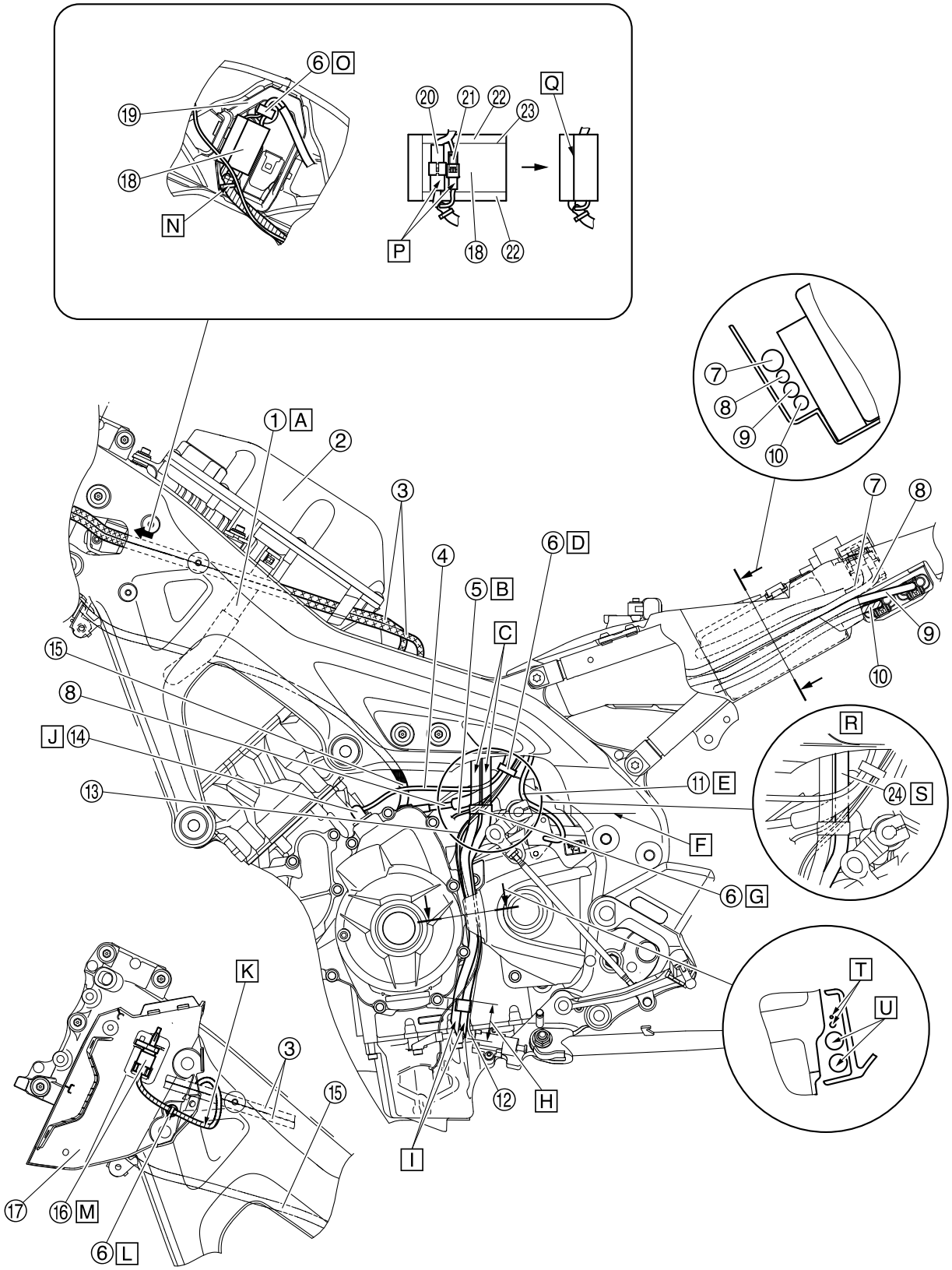

1. Air induction system hose (air filter case to air cut-off valve)
2. Air filter case
3. Throttle cables
4. Stator coil assembly lead
5. Speed sensor lead
6. Clamp
7. Positive battery lead
8. Starter motor lead
9. Stator coil lead
10. Wire harness (to rectifier/regulator)
11. Gear position sensor lead
12. Sidestand switch lead
13. Oil level switch lead
14. Boots
15. Clutch cable
16. Intake air temperature sensor coupler
17. Air scoop stay
18. Wire harness protector
19. Coupler cover
20. Main switch coupler 1
21. Main switch coupler 2
22. Sponge
23. Sponge edge
24. Canister breather hose

A. Route the air induction system hose (air filter case to air cut-off valve) inside the throttle cable.
B. To speed sensor
C. Route the fuel tank drain hose/breather hose outside to the wire harnesses.
D. Fasten the sidestand switch lead, stator coil assembly lead, starter motor lead, oil level switch lead, and the speed sensor lead with the clamp. The order of the leads does not matter. Align the clamp with the tape on the starter motor lead. Do not cut off the clamp end and point it forward.
E. Route the gear position sensor lead inside to the shift arm.
F. Hose bending edge
G. Align the sidestand switch lead, oil level switch lead, fuel tank drain hose, and breather hose with the bending edge of the hose, and then install them. Face the clamp opening to the rearward.
H. 30–50 mm (1.18–1.97 in)
I. Point the tips of fuel tank drain hose and breather hose as shown in the illustration.
J. Place the stator coil assembly lead so that bare copper wires do not protrude from the boots.
K. Route the intake air temperature sensor lead above the throttle cable in the frame, and feed it outside the vehicle through the triangle hole in the frame.
L. Install the clamp to the hole in the air scoop stay.
M. Install the intake air temperature sensor coupler on the rib of the air scoop stay.
N. Install the clamp to the hole in the bottom of the coupler cover.
O. Fasten the main switch coupler to the coupler cover with the clamp.
P. Make sure that the main switch coupler does not protrude from the sponge edge.
Q. Align the wire harness protector with the edge of the Velcro tape and wrap it. However, the tape surface may protrude somewhat.
R. For California only
S. Route the canister breather hose to the inside of the stator coil assembly lead and starter motor lead, also outside to the sidestand switch lead and the oil level switch lead.
T. It does not matter whether the oil level switch lead or the sidestand switch lead is on top.
U. It does not matter whether the fuel tank drain hose or the breather hose is on top but make sure that these hoses are not twisted each other.

Frame (top view)

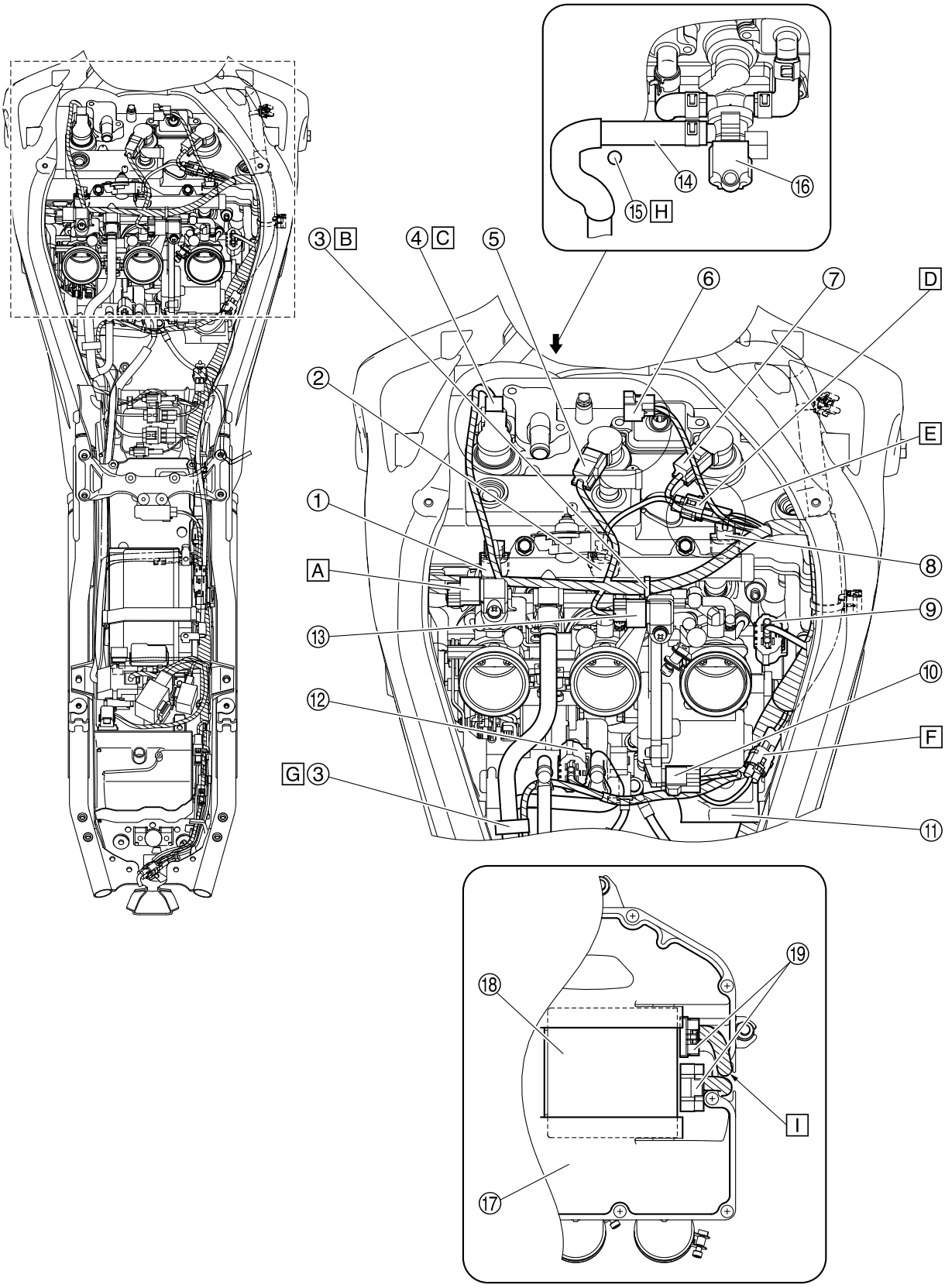

1. Injector coupler #1
2. Injector coupler #2
3. Clamp
4. Ignition coil #1 coupler
5. Ignition coil #2 coupler
6. Air cut-off valve coupler
7. Ignition coil #3 coupler
8. Fuel injector coupler #3
9. Throttle position sensor coupler
10. Throttle servo motor coupler
11. Cross tube
12. Accelerator position sensor coupler
13. Pressure sensor coupler
14. Air induction system hose (air filter case to air cut-off valve)
15. Clutch cable
16. Air cut-off valve
17. Air filter case
18. ECU (engine control unit)
19. ECU (engine control unit) coupler

A. Fold back the intake air pressure sensor lead by the coupler, and then fasten it with tape.
B. Insert the clamp into the fuel rail hole.
C. Fold back the injector lead #1 by the coupler, and then fasten it with tape.
D. Connect the sub-lead to the injector coupler #2. Fasten the injector coupler on the wire harness side with tape.
E. For the air cut-off valve lead, ignition coil lead #3, and fuel injector lead #3, it does not matter which is routed above the others.
F. Route the coolant temperature sensor sub-lead between the cross tube and the wire harness.
G. Fasten the fuel hose at the mark and the wire harness at the positioning tape with the clamp. The opening of the clamp can face either way.
H. Route the clutch cable above to the air induction system hose (air filter case to air cut-off valve).
I. Route the ECU lead for the front of the vehicle through the rib of the air filter case.

Frame (top view)

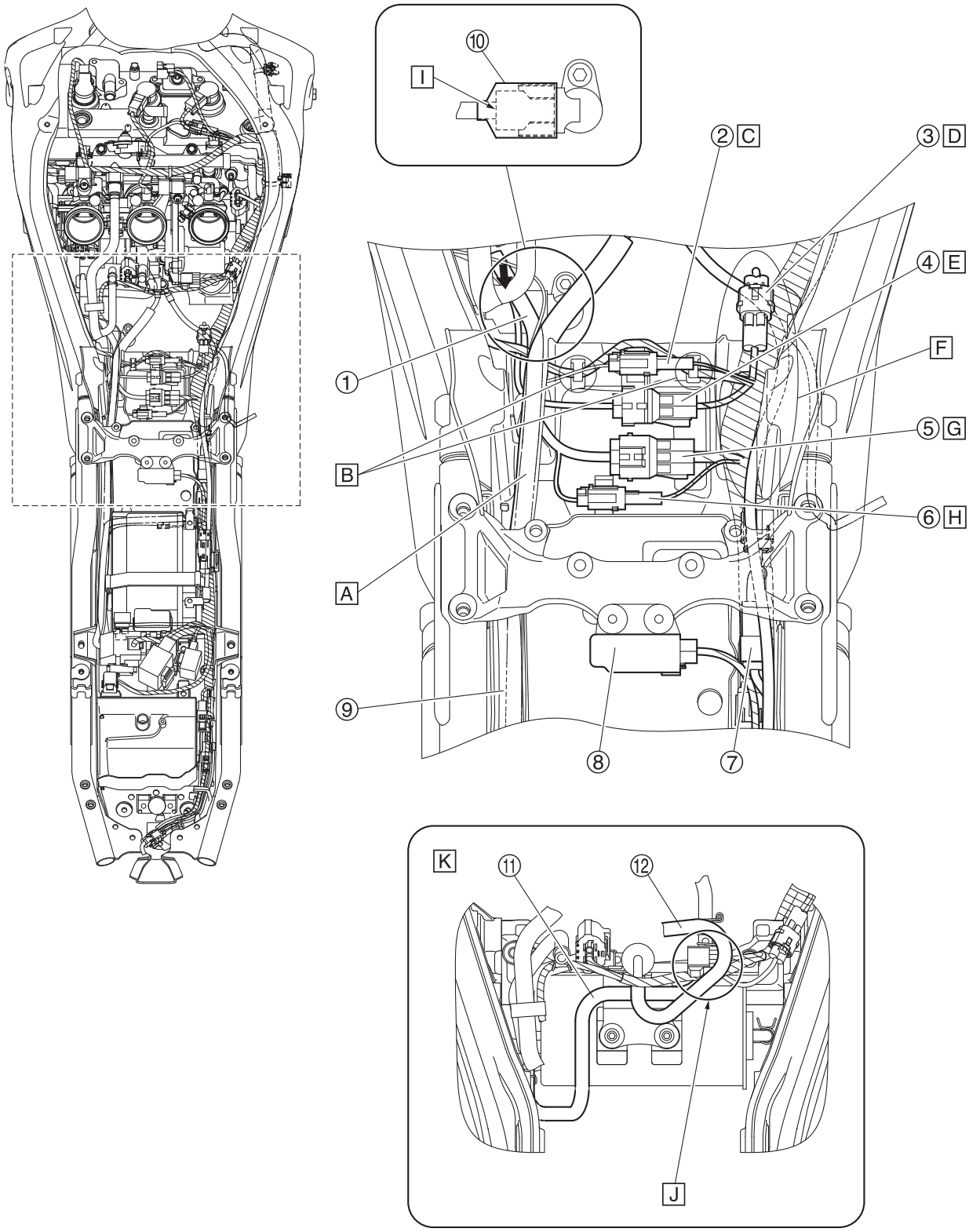

1. Stator coil assembly lead
2. Oil level switch coupler
3. Rear brake light switch coupler
4. Sidestand switch coupler
5. Gear position sensor coupler 1
6. Gear position sensor coupler 2
7. Negative battery lead coupler
8. Lean angle sensor
9. Starter motor lead
10. Cover
11. Canister purge hose (hose joint to canister)
12. Fuel tank breather hose (fuel tank to rollover valve)

A. Leads on the front of the battery box are, from the top of the vehicle, in the following order: starter motor lead, stator coil assembly lead. The orders for other leads do not matter.
B. Hook the speed sensor lead on the cutout of the battery box, as shown in the illustration. Make sure to route it in front of the oil level switch coupler.
C. Fasten the wire harness side of the oil level switch lead to the battery box.
D. Fasten the rear brake light switch lead on the wire harness with tape.
E. Fasten the sidestand switch lead of the wire harness to the battery box.
F. Route the negative battery lead inside to the branch of the O_2 sensor lead and the rear brake light switch lead, and through between the wire harness and the frame. For rear side of the vehicle, route it above the wire harness.
G. Fasten the wire harness side of gear position sensor lead 1 to the battery box.
H. Fasten the wire harness side of gear position sensor lead 2 to the battery box.
I. After connecting the speed sensor coupler, make sure that the coupler edge on the lead side does not protrude from the cover.
J. Route the wire harness between the canister purge hose (hose joint to canister) and the fuel tank breather hose (fuel tank to rollover valve).
K. For California only

Frame (top view)

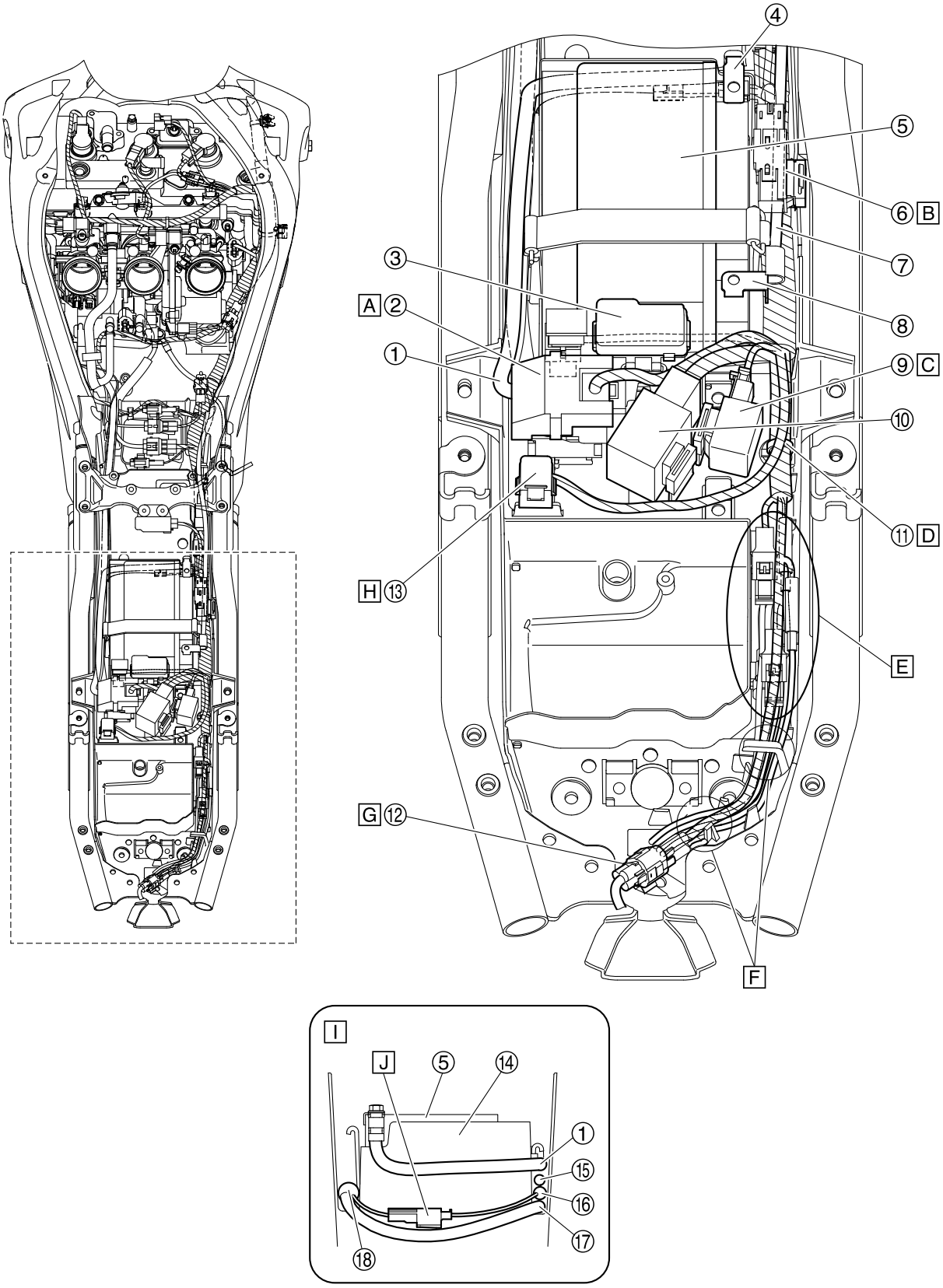

1. Positive battery lead
2. Starter relay
3. Fuse box
4. Positive battery terminal
5. Battery
6. Radiator fan motor relay
7. Negative battery lead
8. Negative battery terminal
9. Turn signal/hazard relay
10. Relay unit
11. Clamp
12. Tail/brake light coupler
13. Yamaha diagnostic tool coupler
14. Battery box
15. Starter motor lead
16. Stator coil lead
17. Wire harness (to rectifier/regulator)
18. Wire harness

A. Install the rubber bracket of the starter relay in the battery box.
B. Install the rubber bracket of the radiator fan motor relay in the battery box. Make sure to route the negative battery lead under the relay.
C. Install the rubber bracket of the turn signal/hazard relay in the battery box.
D. Install the clamp into the hole in the battery box.
E. Connect each rear turn signal coupler to the coupler with the same color. After connecting the license plate light connector, store the turn signal light coupler (left/right) furthest to the bottom of the vehicle. After connecting the other couplers, store them below the tail/brake light lead.
F. Route the tail/brake light lead, turn signal light lead, and license plate light lead through the cutout of the battery box. The order of the leads does not matter.
G. Fasten the wire harness side of the tail/brake light lead to the battery box.
H. Insert the rubber bracket of the Yamaha diagnostic tool coupler to the battery box.
I. Instructional drawing for routes in the front of the battery
J. Fasten the crankshaft position sensor lead of the wire harness with tape.

Front brake (right side view and left side view)

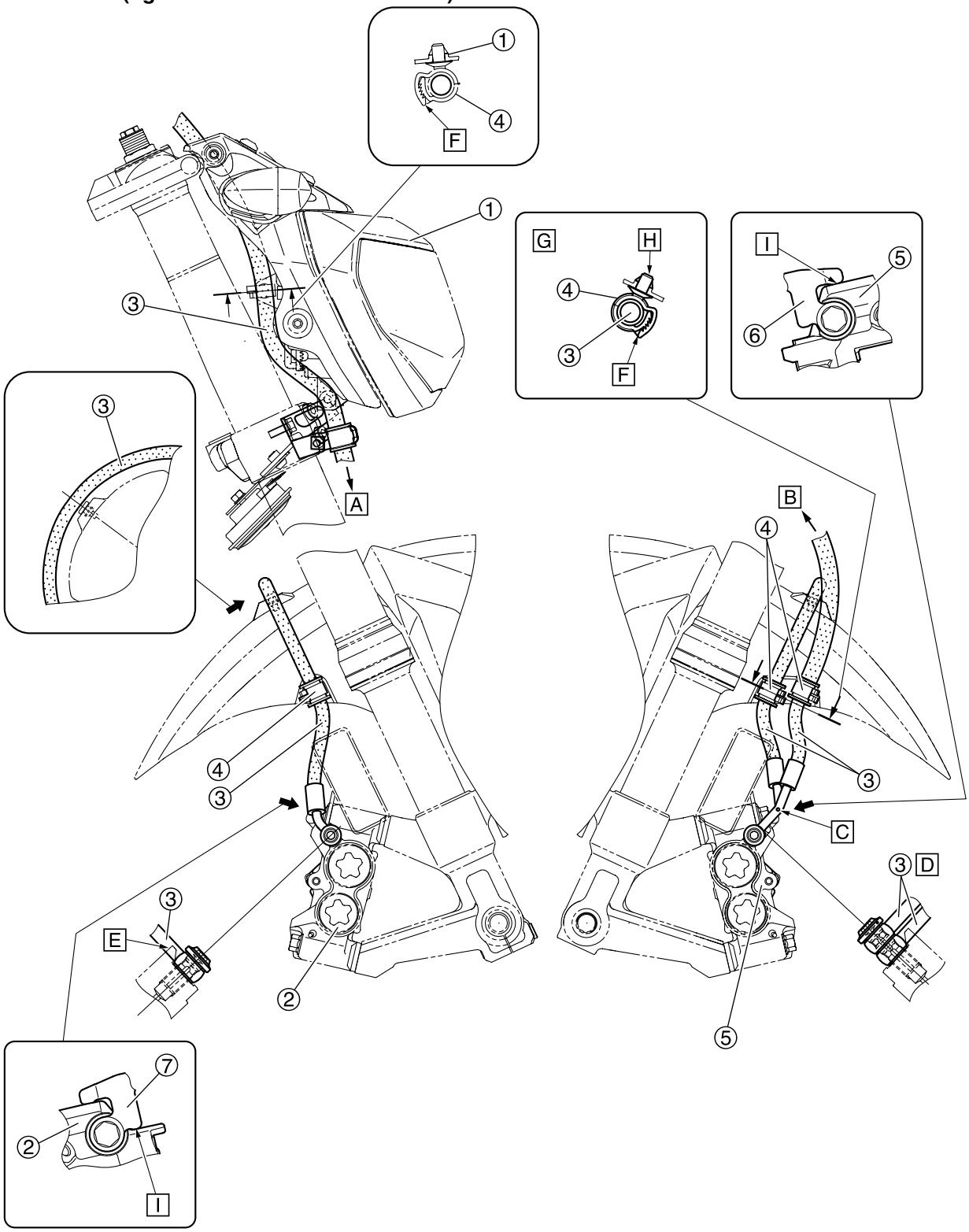

1. Headlight assembly
2. Right brake caliper
3. Front brake hose
4. Clamp
5. Left brake caliper
6. Left reflector
7. Right reflector

A. To left brake caliper
B. To front brake master cylinder
C. Install the front brake hose with its blue paint mark facing outward.
D. Install the brake hose to the right brake caliper so that the brake pipe touches the projection on the brake caliper. Install brake hose from the master cylinder so that it aligned with the direction of the brake pipe to the right brake caliper.
E. Install the brake pipe so that it contacts the projection on the brake caliper.
F. Face the catch of the clamp backward, and then close the clamp until three clicks or more are heard.
G. Same for three clamps
H. Insert the clamp into the front fender securely.
I. When installing the reflector, make sure that the reflector contacts the brake caliper.

Rear brake

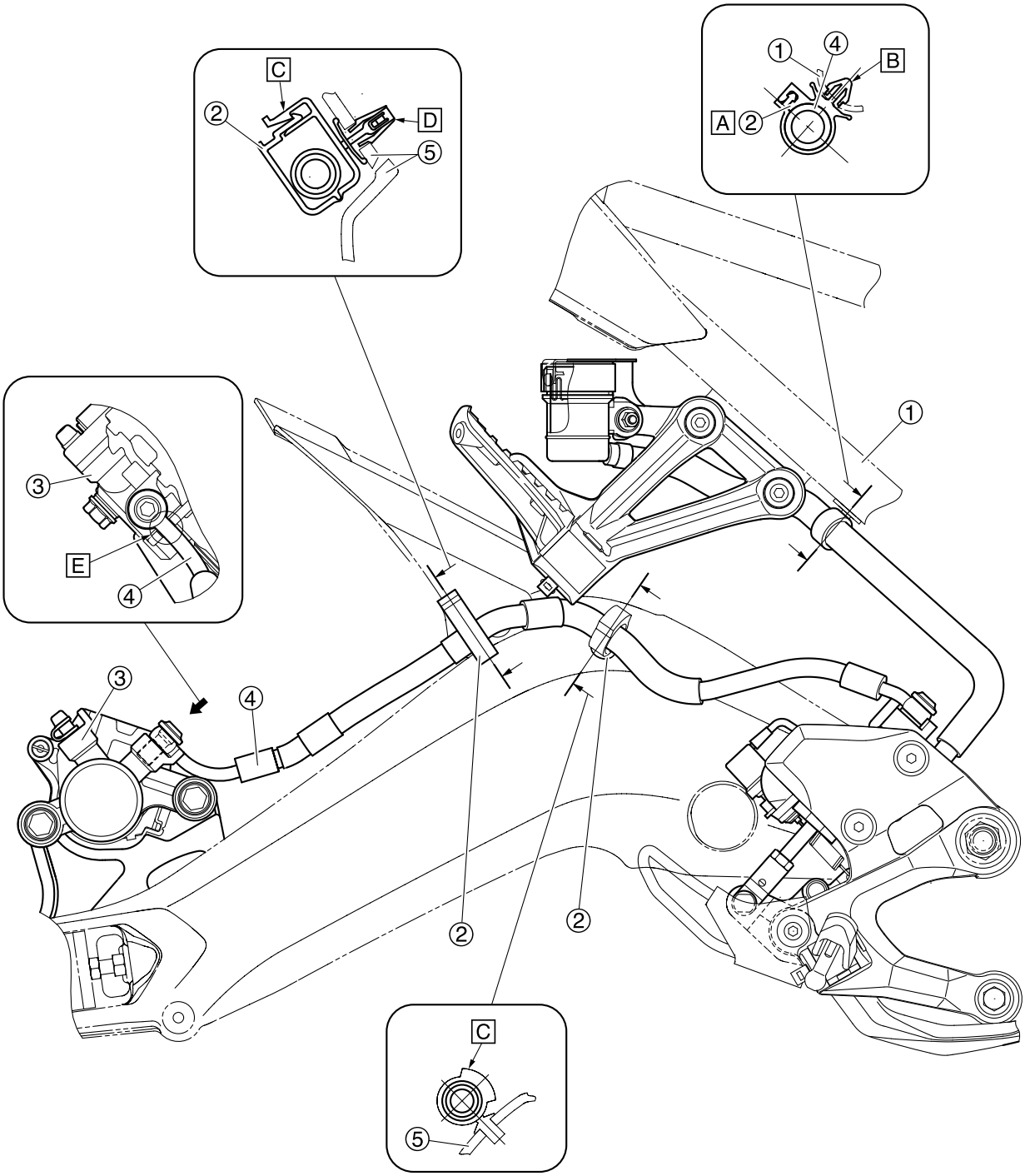

1. Rear frame
2. Clamp
3. Rear brake caliper
4. Rear brake hose
5. Swingarm assembly

A. Install the clamp facing the direction in the illustration.
B. Make sure to install the clamp all the way in the rear frame.
C. Fasten the protector of the brake hose with the clamp. Install the mating section on the top of the vehicle.
D. Make sure to install the clamp all the way in the swingarm assembly.
E. Install the brake pipe so that it aligned with the cut-out in the caliper.

PERIODIC CHECKS AND ADJUSTMENTS

EAS20450

PERIODIC MAINTENANCE

EAS20460

INTRODUCTION

This chapter includes all information necessary to perform recommended checks and adjustments. If followed, these preventive maintenance procedures will ensure more reliable vehicle operation, a longer service life and reduce the need for costly overhaul work. This information applies to vehicles already in service as well as to new vehicles that are being prepared for sale. All service technicians should be familiar with this entire chapter.

TIP

- From 24000 mi (37000 km) or 36 months, repeat the maintenance intervals starting from 8000 mi (13000 km) or 12 months.
- Items marked with an asterisk require special tools, data and technical skills, have a Yamaha dealer perform the service.

EAS1RC1301

PERIODIC MAINTENANCE CHART FOR THE EMISSION CONTROL SYSTEM

No.		ITEM	ROUTINE	INITIAL	ODOMETER READINGS				
				600 mi (1000 km) or 1 month	4000 mi (7000 km) or 6 months	8000 mi (13000 km) or 12 months	12000 mi (19000 km) or 18 months	16000 mi (25000 km) or 24 months	20000 mi (31000 km) or 30 months
1	*	**Fuel line**	• Check fuel hoses for cracks or damage. • Replace if necessary.		√	√	√	√	√
2	*	**Spark plugs**	• Check condition. • Adjust gap and clean. • Replace every 8000 mi (13000 km) or 12 months.		√	Replace.	√	Replace.	√
3	*	**Valve clearance**	• Check and adjust valve clearance when engine is cold.	Every 26600 mi (42000 km)					
4	*	**Crankcase breather system**	• Check breather hose for cracks or damage. • Replace if necessary.		√	√	√	√	√
5	*	**Fuel injection**	• Adjust synchronization.	√	√	√	√	√	√
6	*	**Evaporative emission control system (for California only)**	• Check control system for damage. • Replace if necessary.				√		√
7	*	**Air induction system**	• Check the air cut-off valve, reed valve, and hose for damage. • Replace any damaged parts if necessary.				√		√

EAS1RC1302

GENERAL MAINTENANCE AND LUBRICATION CHART

No.		ITEM	ROUTINE	INITIAL	ODOMETER READINGS				
				600 mi (1000 km) or 1 month	4000 mi (7000 km) or 6 months	8000 mi (13000 km) or 12 months	12000 mi (19000 km) or 18 months	16000 mi (25000 km) or 24 months	20000 mi (31000 km) or 30 months
1	*	**Air filter element**	• Replace.	Every 24000 mi (37000 km)					
2	*	**Clutch**	• Check operation. • Adjust or replace cable.	√	√	√	√	√	√
3	*	**Front brake**	• Check operation, fluid level, and for fluid leakage. • Replace brake pads if necessary.	√	√	√	√	√	√
4	*	**Rear brake**	• Check operation, fluid level, and for fluid leakage. • Replace brake pads if necessary.	√	√	√	√	√	√
5	*	**Brake hoses**	• Check for cracks or damage. • Check for correct routing and clamping.		√	√	√	√	√
			• Replace.	Every 4 years					
6	*	**Brake fluid**	• Replace.	Every 2 years					
7	*	**Wheels**	• Check runout and for damage. • Replace if necessary.		√	√	√	√	√
8	*	**Tires**	• Check tread depth and for damage. • Replace if necessary. • Check air pressure. • Correct if necessary.		√	√	√	√	√
9	*	**Wheel bearings**	• Check bearings for smooth operation. • Replace if necessary.		√	√	√	√	√
10	*	**Swingarm pivot bearings**	• Check operation and for excessive play.		√	√	√	√	√
			• Moderately repack with lithium-soap-based grease.	Every 32000 mi (50000 km)					
11		**Drive chain**	• Check chain slack, alignment and condition. • Adjust and lubricate chain with a special O-ring chain lubricant thoroughly.	Every 500 mi (800 km) and after washing the motorcycle, riding in the rain or riding in wet areas					
12	*	**Steering bearings**	• Check bearing assemblies for looseness.	√	√	√	√	√	√
			• Moderately repack with lithium-soap-based grease.	Every 12000 mi (19000 km)					
13	*	**Chassis fasteners**	• Check all chassis fitting and fasteners. • Correct if necessary.		√	√	√	√	√
14		**Brake lever pivot shaft**	• Apply silicone grease lightly.		√	√	√	√	√
15		**Brake pedal pivot shaft**	• Apply lithium-soap-based grease lightly.		√	√	√	√	√
16		**Clutch lever pivot shaft**	• Apply lithium-soap-based grease lightly.		√	√	√	√	√

No.		ITEM	ROUTINE	INITIAL	ODOMETER READINGS				
				600 mi (1000 km) or 1 month	4000 mi (7000 km) or 6 months	8000 mi (13000 km) or 12 months	12000 mi (19000 km) or 18 months	16000 mi (25000 km) or 24 months	20000 mi (31000 km) or 30 months
17		**Shift pedal pivot shaft**	• Apply lithium-soap-based grease lightly.		√	√	√	√	√
18		**Sidestand pivot**	• Check operation. • Apply lithium-soap-based grease lightly.		√	√	√	√	√
19	*	**Sidestand switch**	• Check operation and replace if necessary.	√	√	√	√	√	√
20	*	**Front fork**	• Check operation and for oil leakage. • Replace if necessary.		√	√	√	√	√
21	*	**Shock absorber assembly**	• Check operation and for oil leakage. • Replace if necessary.		√	√	√	√	√
22	*	**Rear suspension link pivots**	• Check operation. • Correct if necessary.			√		√	
23		**Engine oil**	• Change (warm engine before draining).	√	√	√	√	√	√
24		**Engine oil filter cartridge**	• Replace.	√		√		√	
25	*	**Cooling system**	• Check hoses for cracks or damage. • Replace if necessary.		√	√	√	√	√
			• Change coolant.					√	
26	*	**Front and rear brake switches**	• Check operation.	√	√	√	√	√	√
27	*	**Control cables**	• Apply Yamaha cable lubricant or other suitable cable lubricant thoroughly.	√	√	√	√	√	√
28	*	**Throttle grip**	• Check operation. • Check throttle grip free play, and adjust if necessary. • Lubricate cable and grip housing.		√	√	√	√	√
29	*	**Lights, signals and switches**	• Check operation. • Adjust headlight beam.	√	√	√	√	√	√

TIP

- Air filter
  - This model's air filter is equipped with a disposable oil-coated paper element, which must not be cleaned with compressed air to avoid damaging it.
  - The air filter element needs to be replaced more frequently when riding in unusually wet or dusty areas.
- Hydraulic brake service
  - After disassembling the brake master cylinders and calipers, always change the fluid. Regularly check the brake fluid levels and fill the reservoirs as required.
  - Every two years replace the internal components of the brake master cylinders and calipers, and change the brake fluid.
  - Replace the brake hoses every four years and if cracked or damaged.

EAS21030
CHECKING THE FUEL LINE

The following procedure applies to all of the fuel, vacuum and breather hoses.

1. Remove:
   - Rider seat
     Refer to “GENERAL CHASSIS” on page 4-1.
   - Fuel tank
     Refer to “FUEL TANK” on page 7-1.
2. Check:
   - Fuel hose “1”
   - Fuel tank breather hose “2”
   - Fuel tank drain hose “3”
     Cracks/damage → Replace.
     Loose connection → Connect properly.

ECA14940
NOTICE

Make sure the fuel tank breather hose is routed correctly.

TIP

Before removing the fuel hoses, place a few rags in the area under where it will be removed.

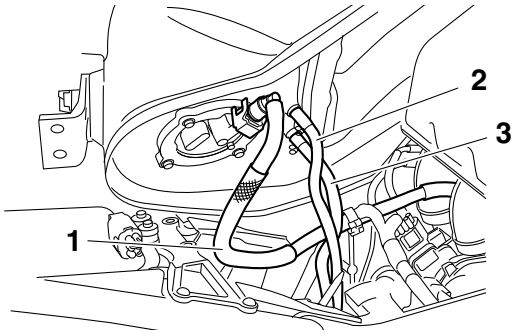

3. Install:
   - Fuel tank
     Refer to “FUEL TANK” on page 7-1.
   - Rider seat
     Refer to “GENERAL CHASSIS” on page 4-1.

EAS20680
CHECKING THE SPARK PLUGS

The following procedure applies to all of the spark plugs.

1. Remove:
   - Rider seat
     Refer to “GENERAL CHASSIS” on page 4-1.
   - Fuel tank
     Refer to “FUEL TANK” on page 7-1.
   - Air filter case
     Refer to “GENERAL CHASSIS” on page 4-1.
   - Air cut-off valve
     Refer to “AIR INDUCTION SYSTEM” on page 7-15.
2. Remove:
   - Ignition coils
   - Spark plugs

ECA13320
NOTICE

Before removing the spark plugs, blow away any dirt accumulated in the spark plug wells with compressed air to prevent it from falling into the cylinders.

3. Check:
   - Spark plug type
     Incorrect → Change.

Manufacturer/model
NGK/CPR9EA9

4. Check:
   - Electrode “1”
     Damage/wear → Replace the spark plug.
   - Insulator “2”
     Abnormal color → Replace the spark plug.
     Normal color is medium-to-light tan.
5. Clean:
   - Spark plug
     (with a spark plug cleaner or wire brush)
6. Measure:
   - Spark plug gap “a”
     (with a wire thickness gauge)
     Out of specification → Regap.

Spark plug gap
0.8–0.9 mm (0.031–0.035 in)

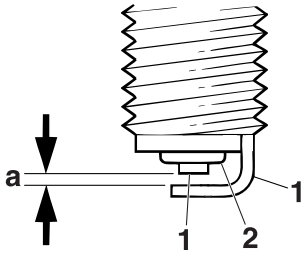

7. Install:
   - Spark plugs
   - Ignition coils

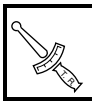

Spark plug
13 Nm (1.3 m·kgf, 9.4 ft·lbf)

TIP

Before installing the spark plug, clean the spark plug and gasket surface.

8. Install:
   - Air cut-off valve
     Refer to “AIR INDUCTION SYSTEM” on

page 7-15.
- Air filter case
  Refer to “GENERAL CHASSIS” on page 4-1.
- Fuel tank
  Refer to “FUEL TANK” on page 7-1.
- Rider seat
  Refer to “GENERAL CHASSIS” on page 4-1.

EAS20490

ADJUSTING THE VALVE CLEARANCE

The following procedure applies to all of the valves.

TIP

Valve clearance adjustment should be made on a cold engine, at room temperature.

---

1. Remove:
   - Rider seat
     Refer to “GENERAL CHASSIS” on page 4-1.
   - Fuel tank
     Refer to “FUEL TANK” on page 7-1.
   - Air filter case
     Refer to “GENERAL CHASSIS” on page 4-1.
   - Air cut-off valve
     Refer to “AIR INDUCTION SYSTEM” on page 7-15.
   - Radiator
     Refer to “RADIATOR” on page 6-1.
2. Remove:
   - Ignition coils
   - Spark plugs
   - Cylinder head cover
   - Cylinder head cover gasket
     Refer to “CAMSHAFTS” on page 5-9.
3. Remove:
   - Timing mark accessing bolt “1”
   - Crankshaft end cover “2”

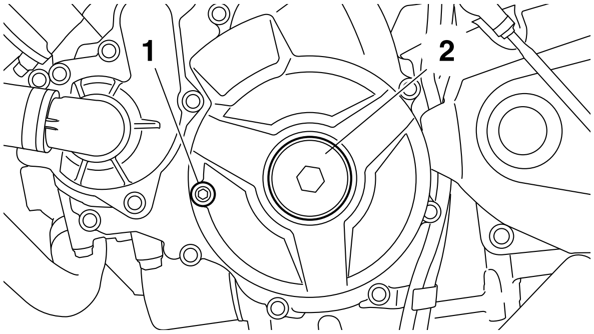

4. Measure:
   - Valve clearance
     Out of specification → Adjust.

Valve clearance (cold)
Intake
0.11–0.20 mm (0.0043–0.0079 in)
Exhaust
0.26–0.30 mm (0.0102–0.0118 in)

▼▼▼▼▼▼▼▼▼▼▼▼▼▼▼▼▼▼▼▼▼▼▼▼▼▼▼▼▼▼▼▼▼▼▼▼

a. Turn the crankshaft counterclockwise.
b. When piston #1 is at TDC on the compression stroke, align the TDC mark “a” on the generator rotor with the generator rotor cover mark “b”.

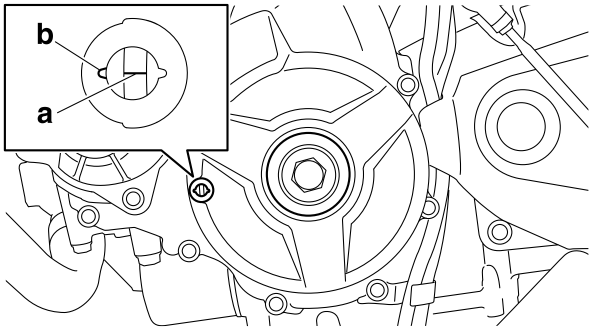

TIP

TDC on the compression stroke can be found when the camshaft lobes are turned away from each other.

---

c. Measure the valve clearance with a thickness gauge “1”.

Thickness gauge
90890-03180
Feeler gauge set
YU-26900-9

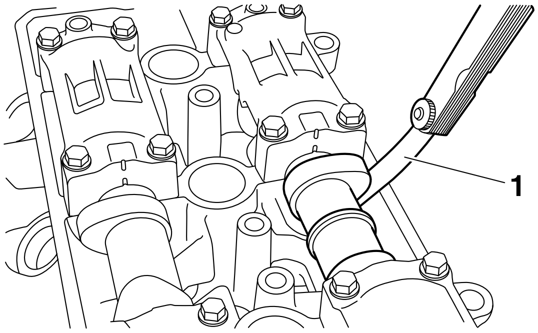

TIP

- If the valve clearance is incorrect, record the measured reading.
- Measure the valve clearance in the following sequence.

Valve clearance measuring sequence
Cylinder #1 → #2 → #3

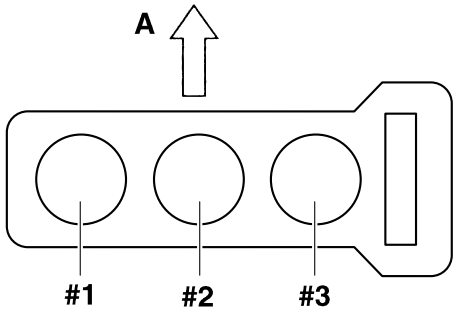

A. Front

d. To measure the valve clearances of the other cylinders, starting with cylinder #1 at TDC, turn the crankshaft counterclockwise as specified in the following table.

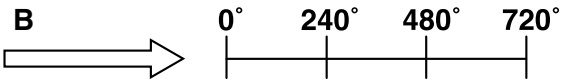

C	#1	D		
	#2		D	
	#3			D

B. Degrees that the crankshaft is turned counterclockwise
C. Cylinder
D. Combustion cycle

Cylinder #2	240°
Cylinder #3	480°

▲▲▲▲▲▲▲▲▲▲▲▲▲▲▲▲▲▲▲▲▲▲▲▲▲▲▲▲▲▲▲▲

5. Remove:
   - Camshaft

TIP
- Refer to "CAMSHAFTS" on page 5-9.
- When removing the timing chain and camshafts, fasten the timing chain with a wire to retrieve it if it falls into the crankcase.

6. Adjust:
   - Valve clearance

▼▼▼▼▼▼▼▼▼▼▼▼▼▼▼▼▼▼▼▼▼▼▼▼▼▼▼▼▼▼▼▼

a. Remove the valve lifter "1" and the valve pad "2" with a valve lapper "3".

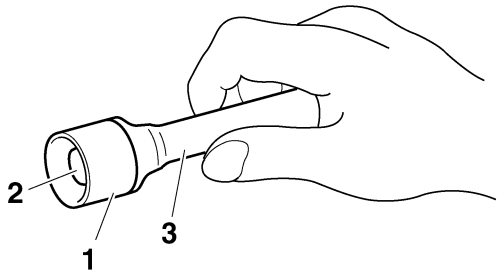

Valve lapper
90890-04101
Valve lapping tool
YM-A8998

TIP
- Cover the timing chain opening with a rag to prevent the valve pad from falling into the crankcase.
- Make a note of the position of each valve lifter "1" and valve pad "2" so that they can be installed in the correct place.

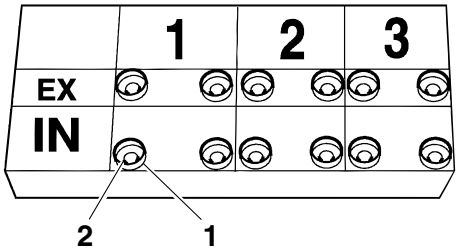

b. Calculate the difference between the specified valve clearance and the measured valve clearance.
   Example:
   Specified valve clearance = 0.11–0.20 mm (0.004–0.008 in)
   Measured valve clearance = 0.25 mm (0.010 in)
   0.25 mm (0.010 in)–0.20 mm (0.008 in) = 0.05 mm (0.002 in)

c. Check the thickness of the current valve pad.

TIP
The thickness "a" of each valve pad is marked in hundredths of millimeters on the side that touches the valve lifter.

Example:
If the valve pad is marked "158", the pad thickness is 1.58 mm (0.062 in).

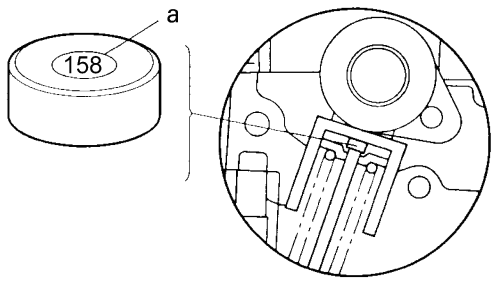

d. Calculate the sum of the values obtained in steps (b) and (c) to determine the required valve pad thickness and the valve pad number.
   Example:
   1.58 mm (0.062 in) + 0.05 mm (0.002 in) = 1.63 mm (0.064 in)
   The valve pad number is 163.
e. Round off the valve pad number according to the following table, and then select the suitable valve pad.

Last digit	Rounded value
0, 1, 2	0
3, 4, 5, 6	5
7, 8, 9	10

TIP
Refer to the following table for the available valve pads.

Valve pad range	Nos. 120–240
Valve pad thickness	1.20–2.40 mm (0.047–0.094 in)
Available valve pads	25 thicknesses in 0.05 mm (0.002 in) increments

   Example:
   Valve pad number = 163
   Rounded value = 165
   New valve pad number = 165
f. Install the new valve pad “1” and the valve lifter “2”.

TIP
- Lubricate the valve pad with molybdenum disulfide oil.
- Lubricate the valve lifter (Top side) with molybdenum disulfide oil.
- Lubricate the valve lifter (Outer side) with engine oil.
- Install the valve lifter and the valve pad in the correct place.
- The valve lifter must turn smoothly when rotated by hand.

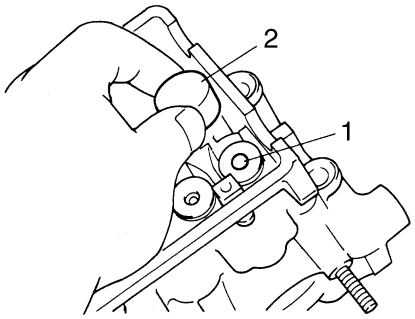

g. Install the exhaust and intake camshafts, timing chain and camshaft caps.

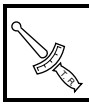	**Camshaft cap bolt** **10 Nm (1.0 m·kgf, 7.2 ft·lbf)**

TIP
- Refer to “CAMSHAFTS” on page 5-9.
- Lubricate the camshaft lobes and camshaft journals.
- First, install the exhaust camshaft.
- Align the camshafts marks with the camshaft cap marks.
- Turn the crankshaft counterclockwise several full turns to seat the parts.

h. Measure the valve clearance again.
i. If the valve clearance is still out of specification, repeat all of the valve clearance adjustment steps until the specified clearance is obtained.

▲▲▲▲▲▲▲▲▲▲▲▲▲▲▲▲▲▲▲▲▲▲▲▲▲▲▲▲▲▲▲▲▲▲

7. Install:
   - All removed parts

TIP
For installation, reverse the removal procedure.

EAS1RC1317

CHECKING THE ENGINE IDLING SPEED

TIP
Prior to adjusting the engine idling speed, the throttle body synchronization should be adjusted properly, the air filter element should be clean, and the engine should have adequate compression.

1. Start the engine and let it warm up for several minutes.
2. Check:
   - Engine idling speed
     Out of specification → Go to next step.

	**Engine idling speed** **1100–1300 r/min**

3. Check:
   - ISC (idle speed control) learning value
     "00" or "01" → Check the intake system.
     "02" → Clean the throttle bodies.
     Refer to "CHECKING AND CLEANING THE THROTTLE BODIES" on page 7-8.

▼▼▼▼▼▼▼▼▼▼▼▼▼▼▼▼▼▼▼▼▼▼▼▼▼▼▼▼▼▼▼▼▼▼

a. Connect the Yamaha diagnostic tool.
   Use the diagnostic code number "67".
   Refer to "SELF-DIAGNOSTIC FUNCTION AND DIAGNOSTIC CODE TABLE" on page 9-5.
b. Check the ISC (idle speed control) leaning value.

▲▲▲▲▲▲▲▲▲▲▲▲▲▲▲▲▲▲▲▲▲▲▲▲▲▲▲▲▲▲▲▲▲▲

EAS1RC1318

SYNCHRONIZING THE THROTTLE BODIES

TIP

Before synchronizing the throttle bodies, check the following items:
- Valve clearance
- Spark plugs
- Air filter element
- Throttle body joints
- Fuel hose
- Exhaust system
- Breather hoses

Checking the throttle body synchronization

1. Stand the vehicle on a level surface.

TIP

Place the vehicle on a suitable stand.

2. Remove:
   - Rider seat
     Refer to "GENERAL CHASSIS" on page 4-1.
   - Fuel tank
     Refer to "FUEL TANK" on page 7-1.
   - Air filter case
     Refer to "GENERAL CHASSIS" on page 4-1.
3. Remove:
   - Caps "1"

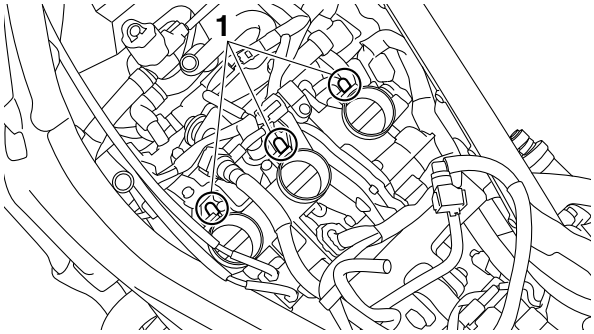

4. Install:
   - Vacuum gauge "1"

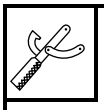	**Vacuum gauge** **90890-03094** **Vacuummate** **YU-44456**

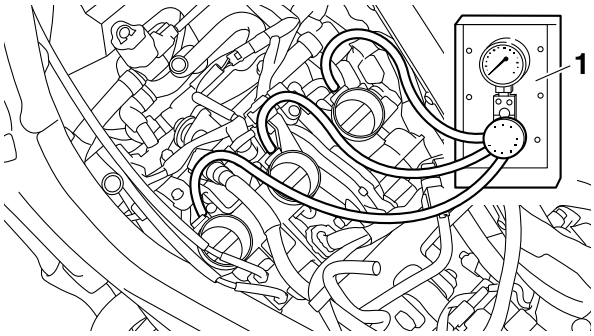

5. Install:
   - Air filter case
     Refer to "GENERAL CHASSIS" on page 4-1.
   - Fuel tank
     Refer to "FUEL TANK" on page 7-1.
6. Check:
   - Throttle body synchronization

▼▼▼▼▼▼▼▼▼▼▼▼▼▼▼▼▼▼▼▼▼▼▼▼▼▼▼▼▼▼▼▼▼▼

a. Start the engine, warm it up for several minutes, and then let it run at the specified engine idling speed.

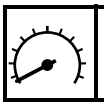	**Engine idling speed** **1100–1300 r/min**

b. Check the vacuum pressure.

	**The difference in vacuum pressure between the throttle bodies should not exceed 1.33 kPa (10 mmHg).**

If out of specification → Adjust the throttle body synchronization.

▲▲▲▲▲▲▲▲▲▲▲▲▲▲▲▲▲▲▲▲▲▲▲▲▲▲▲▲▲▲▲▲▲▲

Adjusting the throttle body synchronization

1. Adjust:
   - Throttle body synchronization

▼▼▼▼▼▼▼▼▼▼▼▼▼▼▼▼▼▼▼▼▼▼▼▼▼▼▼▼▼▼▼▼▼▼

a. Start the engine, warm it up for several minutes, and then let it run at the specified engine idling speed.

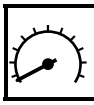	**Engine idling speed** **1100–1300 r/min**

b. Using the throttle body that has the bypass air screw "1" with a white paint mark as the standard, adjust the other throttle bodies by turning its bypass air screw in or out.

ECA1RC1307

NOTICE

Do not turn the bypass air screw (white paint mark) of the throttle body that is the standard. Otherwise, the engine may run roughly at idle and the throttle bodies may not operate properly.

TIP

- Turn the bypass air screw using the carburetor angle driver.
- After each step, rev the engine two or three times, each time for less than a second, and check the synchronization again.
- If a bypass air screw was removed, turn the screw in fully and be sure to synchronize the throttle bodies.
- If the throttle body synchronization can not be adjusted using the bypass air screw, clean or replace the throttle bodies.
- The difference in vacuum pressure between the throttle bodies should not exceed 1.33 kPa (10 mmHg).

	**Carburetor angle driver 2** **90890-03173**

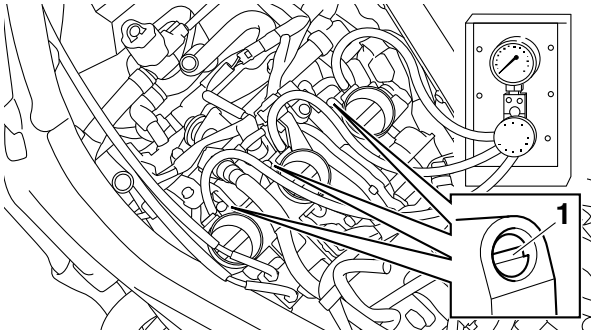

▲▲▲▲▲▲▲▲▲▲▲▲▲▲▲▲▲▲▲▲▲▲▲▲▲▲▲▲▲▲▲▲▲▲

2. Stop the engine and remove the measuring equipment.
3. Install:
   - Caps
4. Install:
   - Air filter case
     Refer to "GENERAL CHASSIS" on page 4-1.
   - Fuel tank
     Refer to "FUEL TANK" on page 7-1.
   - Rider seat
     Refer to "GENERAL CHASSIS" on page 4-1.
5. Adjust:
   - Throttle grip free play
     Refer to "CHECKING THE THROTTLE GRIP" on page 3-28.

	**Throttle grip free play** **3.0–5.0 mm (0.12–0.20 in)**

EAS21010

CHECKING THE THROTTLE BODY JOINTS

1. Remove:
   - Throttle bodies
     Refer to "THROTTLE BODIES" on page 7-5.
2. Check:
   - Throttle body joints "1"
     Cracks/damage → Replace.

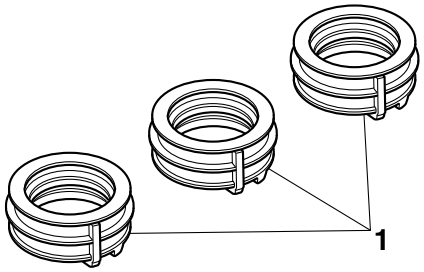

3. Install:
   - Throttle bodies
     Refer to "THROTTLE BODIES" on page 7-5.

EAS21090

CHECKING THE CANISTER (for California only)

1. Remove:
   - Rider seat
     Refer to "GENERAL CHASSIS" on page 4-1.
   - Fuel tank
     Refer to "FUEL TANK" on page 7-1.
2. Check:
   - Canister
   - Canister purge hose
   - Fuel tank breather hose
   - Canister breather hose

Cracks/damage → Replace.
3. Install:
   - Fuel tank
     Refer to “FUEL TANK” on page 7-1.
   - Rider seat
     Refer to “GENERAL CHASSIS” on page 4-1.

EAS1RC1306
CHECKING THE AIR INDUCTION SYSTEM
Refer to “CHECKING THE AIR INDUCTION SYSTEM” on page 7-18.

EAS21050
CHECKING THE CYLINDER HEAD BREATHER HOSE
1. Remove:
   - Air filter case
     Refer to “GENERAL CHASSIS” on page 4-1.
2. Check:
   - Cylinder head breather hose “1”
     Cracks/damage → Replace.
     Loose connection → Connect properly.

ECA14920
NOTICE

Make sure the cylinder head breather hose is routed correctly.

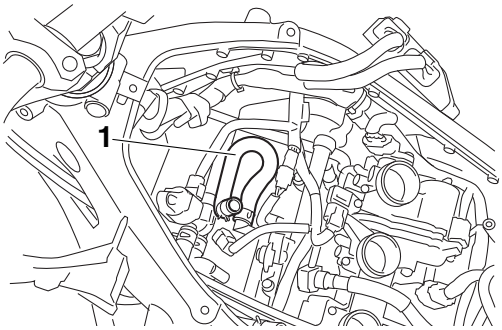

3. Install:
   - Air filter case
     Refer to “GENERAL CHASSIS” on page 4-1.

EAS20961
REPLACING THE AIR FILTER ELEMENT
1. Remove:
   - Rider seat
     Refer to “GENERAL CHASSIS” on page 4-1.
   - Fuel tank
     Refer to “FUEL TANK” on page 7-1.
2. Remove:
   - ECU (engine control unit) “1”
   - Air filter case cover “2”
     Refer to “GENERAL CHASSIS” on page 4-1.

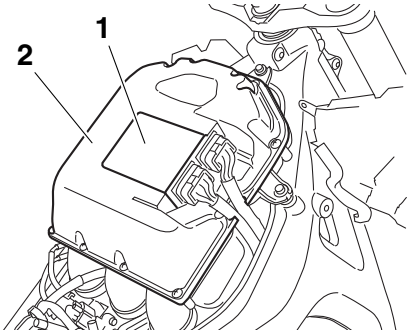

3. Check:
   - Air filter element “1”
   - Air filter seal
     Damage → Replace.

TIP
- Replace the air filter element every 37000 km (24000 mi) of operation.
- The air filter needs more frequent service if you are riding in unusually wet or dusty areas.

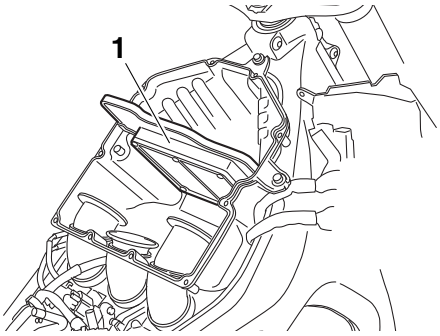

4. Install:
   - Air filter element
   - Air filter case cover
   - ECU (engine control unit)

ECA14401
NOTICE

Never operate the engine without the air filter element installed. Unfiltered air will cause rapid wear of engine parts and may damage the engine. Operating the engine without the air filter element will also affect throttle bodies synchronization, leading to poor engine performance and possible overheating.

TIP
When installing the air filter element into the air filter case cover, make sure that the sealing surfaces are aligned to prevent any air leaks.

5. Install:
   - Fuel tank
     Refer to “FUEL TANK” on page 7-1.
   - Rider seat
     Refer to “GENERAL CHASSIS” on page 4-1.

EAS20870

ADJUSTING THE CLUTCH LEVER FREE PLAY

1. Check:
   - Clutch lever free play "a"
     Out of specification → Adjust.

	**Clutch lever free play** **10.0–15.0 mm (0.39–0.59 in)**

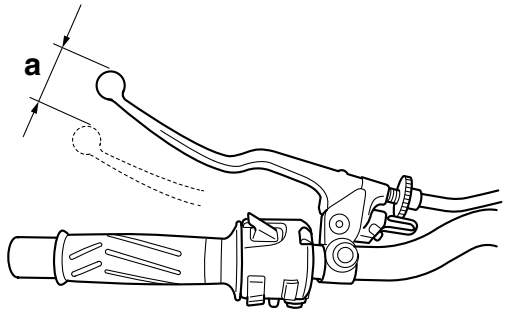

2. Adjust:
   - Clutch lever free play

▼▼▼▼▼▼▼▼▼▼▼▼▼▼▼▼▼▼▼▼▼▼▼▼▼▼▼▼▼▼▼▼▼▼

Handlebar side

a. Turn the adjusting bolt "1" in direction "a" or "b" until the specified Clutch lever free play is obtained.

Direction "a" **Clutch lever free play is increased.** **Direction "b"** **Clutch lever free play is decreased.**

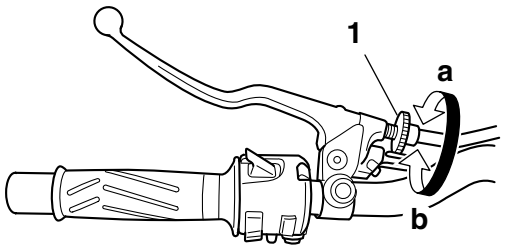

TIP

If the specified clutch lever free play cannot be obtained on the handlebar side of the cable, use the adjusting nut on the engine side.

▲▲▲▲▲▲▲▲▲▲▲▲▲▲▲▲▲▲▲▲▲▲▲▲▲▲▲▲▲▲▲▲▲▲

▼▼▼▼▼▼▼▼▼▼▼▼▼▼▼▼▼▼▼▼▼▼▼▼▼▼▼▼▼▼▼▼▼▼

Engine side

a. Loosen the locknut "1".
b. Turn the adjusting nut "2" in direction "a" or "b" until the specified clutch lever free play is obtained.

Direction "a" **Clutch lever free play is increased.** **Direction "b"** **Clutch lever free play is decreased.**

c. Tighten the locknut "1".

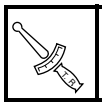	**Locknut** **7 Nm (0.7 m·kgf, 5.1 ft·lbf)**

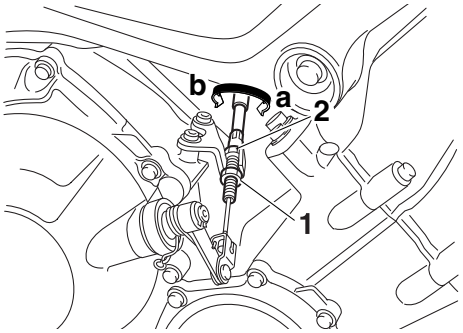

▲▲▲▲▲▲▲▲▲▲▲▲▲▲▲▲▲▲▲▲▲▲▲▲▲▲▲▲▲▲▲▲▲▲

EAS1RC1307

CHECKING THE BRAKE OPERATION

1. Check:
   - Brake operation
     Brake not working properly → Check the brake system.
     Refer to "FRONT BRAKE" on page 4-20 and "REAR BRAKE" on page 4-32.

TIP

Drive on the dry road, operate the front and rear brakes separately and check to see if the brakes are operating properly.

EAS21240

CHECKING THE BRAKE FLUID LEVEL

1. Stand the vehicle on a level surface.

TIP

- Place the vehicle on a suitable stand.
- Make sure the vehicle is upright.

2. Check:
   - Brake fluid level
     Below the minimum level mark "a" → Add the specified brake fluid to the proper level.

	**Front brake** **Specified brake fluid** **DOT 4** **Rear brake** **Specified brake fluid** **DOT 4**

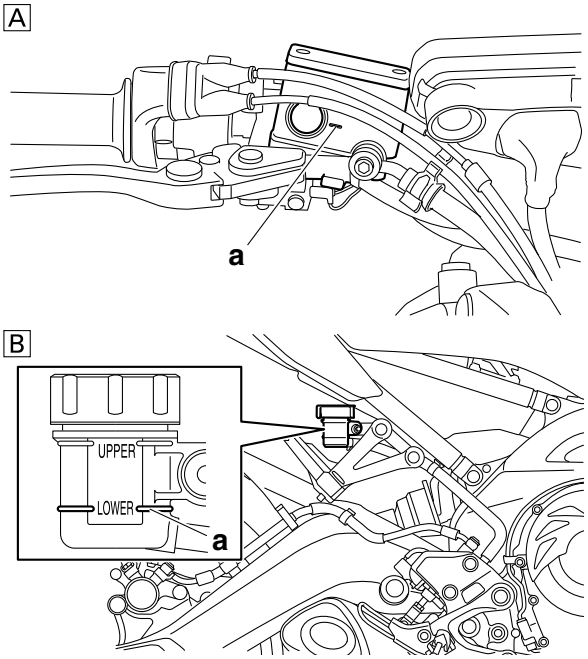

A. Front brake
B. Rear brake

EWA13090

WARNING

- **Use only the designated brake fluid. Other brake fluids may cause the rubber seals to deteriorate, causing leakage and poor brake performance.**
- **Refill with the same type of brake fluid that is already in the system. Mixing brake fluids may result in a harmful chemical reaction, leading to poor brake performance.**
- **When refilling, be careful that water does not enter the brake fluid reservoir. Water will significantly lower the boiling point of the brake fluid and could cause vapor lock.**

ECA13540

NOTICE

Brake fluid may damage painted surfaces and plastic parts. Therefore, always clean up any spilt brake fluid immediately.

TIP

In order to ensure a correct reading of the brake fluid level, make sure the top of the brake fluid reservoir is horizontal.

EAS21160

ADJUSTING THE FRONT DISC BRAKE

1. Adjust:
   - Brake lever position
     (distance “a” from the throttle grip to the brake lever)

TIP

- While pushing the brake lever forward, turn the adjusting dial “1” until the brake lever is in the desired position.
- Be sure to align the setting on the adjusting dial with the arrow mark “2” on the brake lever holder.

Position #1
Distance “a” is the largest.
Position #5
Distance “a” is the smallest.

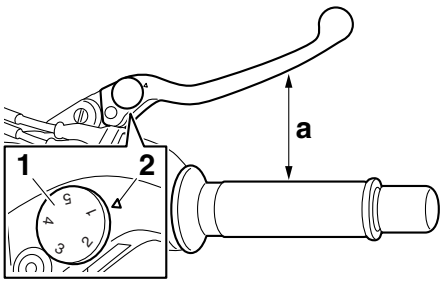

EWA1RC1304

WARNING

- **After adjusting the brake lever position, make sure the pin on the brake lever holder is firmly inserted in the hole in the adjusting dial.**
- **A soft or spongy feeling in the brake lever can indicate the presence of air in the brake system. Before the vehicle is operated, the air must be removed by bleeding the brake system. Air in the brake system will considerably reduce brake performance resulting in loss of control and possibly cause an accident. Therefore, check and if necessary, bleed the brake system.**

ECA13490

NOTICE

After adjusting the brake lever position, make sure there is no brake drag.

EAS21250

CHECKING THE FRONT BRAKE PADS

The following procedure applies to all of the brake pads.

1. Operate the brake.
2. Check:
   - Front brake pad
     Wear indicators “1” almost touch the brake disc → Replace the brake pads as a set.
     Refer to “FRONT BRAKE” on page 4-20.

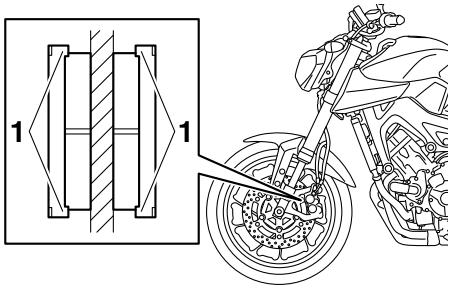

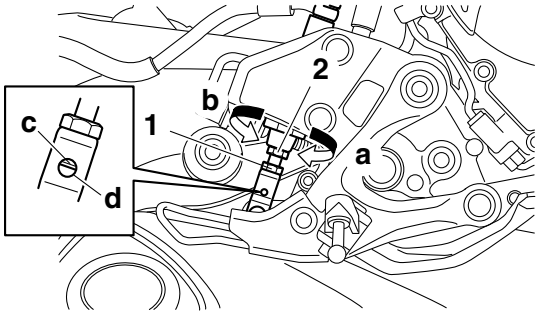

EAS21190

ADJUSTING THE REAR DISC BRAKE

1. Adjust:
   - Brake pedal position

▼▼▼▼▼▼▼▼▼▼▼▼▼▼▼▼▼▼▼▼▼▼▼▼▼▼▼▼▼▼▼▼▼▼

a. Loosen the locknut “1”.
b. Turn the adjusting bolt “2” in direction “a” or “b” until the specified brake pedal position is obtained.

Direction “a” **Brake pedal is raised.** **Direction “b”** **Brake pedal is lowered.**

EWA13070

WARNING

After adjusting the brake pedal position, check that the end of the adjusting bolt “c” is visible through the hole “d”.

c. Tighten the locknut “1” to specification.

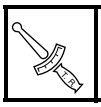	**Locknut** **18 Nm (1.8 m·kgf, 13 ft·lbf)**

EWA1RC1302

WARNING

A soft or spongy feeling in the brake pedal can indicate the presence of air in the brake system. Before the vehicle is operated, the air must be removed by bleeding the brake system. Air in the brake system will considerably reduce braking performance.

ECA13510

NOTICE

After adjusting the brake pedal position, make sure there is no brake drag.

▲▲▲▲▲▲▲▲▲▲▲▲▲▲▲▲▲▲▲▲▲▲▲▲▲▲▲▲▲▲▲▲▲▲

2. Adjust:
   - Rear brake light switch
     Refer to “ADJUSTING THE REAR BRAKE LIGHT SWITCH” on page 3-27.

EAS21260

CHECKING THE REAR BRAKE PADS

The following procedure applies to all of the brake pads.

1. Operate the brake.
2. Check:
   - Rear brake pad
     Wear indicator grooves “1” almost disappeared → Replace the brake pads as a set.
     Refer to “REAR BRAKE” on page 4-32.

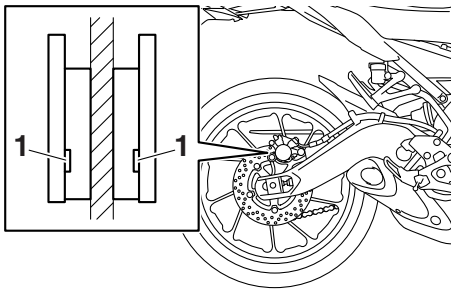

EAS21350

BLEEDING THE HYDRAULIC BRAKE SYSTEM

EWA13100

WARNING

Bleed the hydraulic brake system whenever:
- **the system is disassembled.**
- **a brake hose is loosened, disconnected or replaced.**
- **the brake fluid level is very low.**
- **brake operation is faulty.**

TIP
- Be careful not to spill any brake fluid or allow the brake master cylinder reservoir or brake fluid reservoir to overflow.
- When bleeding the hydraulic brake system, make sure there is always enough brake fluid

before applying the brake. Ignoring this precaution could allow air to enter the hydraulic brake system, considerably lengthening the bleeding procedure.
- If bleeding is difficult, it may be necessary to let the brake fluid settle for a few hours. Repeat the bleeding procedure when the tiny bubbles in the hose have disappeared.

1. Bleed:
   - Hydraulic brake system

▼▼▼▼▼▼▼▼▼▼▼▼▼▼▼▼▼▼▼▼▼▼▼▼▼▼▼▼▼▼▼▼▼▼

a. Fill the brake master cylinder reservoir or brake fluid reservoir to the proper level with the specified brake fluid.
b. Install the diaphragm (brake master cylinder reservoir or brake fluid reservoir).
c. Connect a clear plastic hose “1” tightly to the bleed screw “2”.

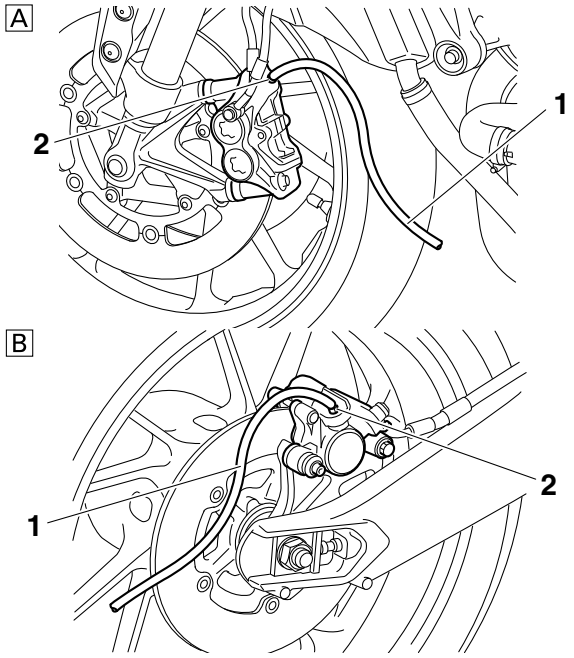

A. Front
B. Rear

d. Place the other end of the hose into a container.
e. Slowly apply the brake several times.
f. Fully pull the brake lever or fully press down the brake pedal and hold it in position.
g. Loosen the bleed screw.

TIP

Loosening the bleed screw will release the pressure and cause the brake lever to contact the throttle grip or the brake pedal to fully extend.

h. Tighten the bleed screw and then release the brake lever or brake pedal.
i. Repeat steps (e) to (h) until all of the air bubbles have disappeared from the brake fluid in the plastic hose.
j. Tighten the bleed screw to specification.

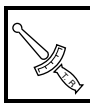	**Brake caliper bleed screw** **5 Nm (0.5 m·kgf, 3.6 ft·lbf)**

k. Fill the brake master cylinder reservoir or brake fluid reservoir to the proper level with the specified brake fluid.
   Refer to “CHECKING THE BRAKE FLUID LEVEL” on page 3-11.

EWA13110

WARNING

After bleeding the hydraulic brake system, check the brake operation.

▲▲▲▲▲▲▲▲▲▲▲▲▲▲▲▲▲▲▲▲▲▲▲▲▲▲▲▲▲▲▲▲▲▲

EAS21280

CHECKING THE FRONT BRAKE HOSES

The following procedure applies to all of the brake hoses and brake hose holders.

1. Check:
   - Brake hose
     Cracks/damage/wear → Replace.
2. Check:
   - Brake hose holder
     Loose → Tighten the holder bolt.
3. Hold the vehicle upright and apply the brake several times.
4. Check:
   - Brake hose
     Brake fluid leakage → Replace the damaged hose.
     Refer to “FRONT BRAKE” on page 4-20.

EAS21290

CHECKING THE REAR BRAKE HOSE

1. Check:
   - Brake hose
     Cracks/damage/wear → Replace.
2. Check:
   - Brake hose holder
     Loose Connection → Tighten the holder bolt.
3. Hold the vehicle upright and apply the rear brake several times.
4. Check:
   - Brake hose
     Brake fluid leakage → Replace the damaged hose.
     Refer to “REAR BRAKE” on page 4-32.

EAS21670

CHECKING THE WHEELS

The following procedure applies to both of the wheels.

1. Check:
   - Wheel
     Damage/out-of-round → Replace.

EWA13260

WARNING

Never attempt to make any repairs to the wheel.

TIP

After a tire or wheel has been changed or replaced, always balance the wheel.

EAS21650

CHECKING THE TIRES

The following procedure applies to both of the tires.

1. Check:
   - Tire pressure
     Out of specification → Regulate.

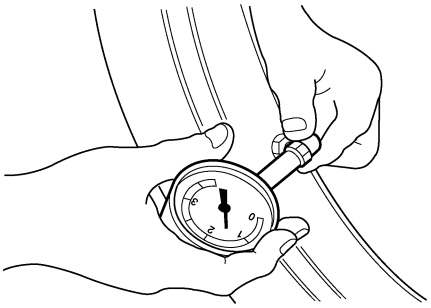

EWA13180

WARNING

- **The tire pressure should only be checked and regulated when the tire temperature equals the ambient air temperature.**
- **The tire pressure and the suspension must be adjusted according to the total weight (including cargo, rider, passenger and accessories) and the anticipated riding speed.**
- **Operation of an overloaded vehicle could cause tire damage, an accident or an injury.**

NEVER OVERLOAD THE VEHICLE.

Tire air pressure (measured on cold tires)
Loading condition
0–90 kg (0–198 lb)
Front
250 kPa (2.50 kgf/cm^2, 36 psi)
Rear
290 kPa (2.90 kgf/cm^2, 42 psi)
Loading condition
FZ09E 90–177 kg (198–390 lb)
FZ09EC 90–176 kg (198–388 lb)
Front
250 kPa (2.50 kgf/cm^2, 36 psi)
Rear
290 kPa (2.90 kgf/cm^2, 42 psi)
High-speed riding
Front
250 kPa (2.50 kgf/cm^2, 36 psi)
Rear
290 kPa (2.90 kgf/cm^2, 42 psi)
Maximum load
FZ09E 177 kg (390 lb)
FZ09EC 176 kg (388 lb)
***Total weight of rider, passenger, cargo and accessories**

2. Check:
   - Tire surfaces
     Damage/wear → Replace the tire.

EWA13190

WARNING

It is dangerous to ride with a worn-out tire. When the tire tread reaches the wear limit, replace the tire immediately.

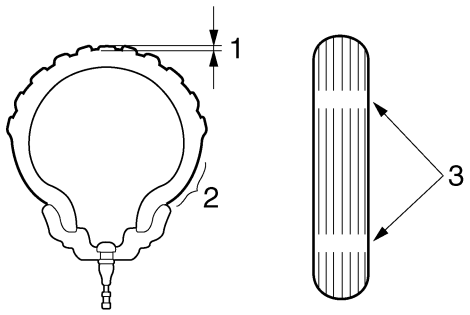

1. Tire tread depth
2. Side wall
3. Wear indicator

Wear limit (front)
1.0 mm (0.04 in)
Wear limit (rear)
1.0 mm (0.04 in)

EWA14090

WARNING

After extensive tests, the tires listed below have been approved by Yamaha Motor Co., Ltd. for this model. The front and rear tires should always be by the same manufacturer and of the same design. No guarantee concerning handling characteristics can be given if a tire combination other than one approved by Yamaha is used on this vehicle.

Front tire
Size
120/70 ZR17M/C (58W)
Manufacturer/model
BRIDGESTONE/S20F
Manufacturer/model
DUNLOP/D214F

Rear tire
Size
180/55 ZR17M/C (73W)
Manufacturer/model
BRIDGESTONE/S20R
Manufacturer/model
DUNLOP/D214

EWA13210

WARNING

New tires have a relatively low grip on the road surface until they have been slightly worn. Therefore, approximately 100 km should be traveled at normal speed before any high-speed riding is done.

TIP

For tires with a direction of rotation mark “1”:
- Install the tire with the mark pointing in the direction of wheel rotation.
- Align the mark “2” with the valve installation point.

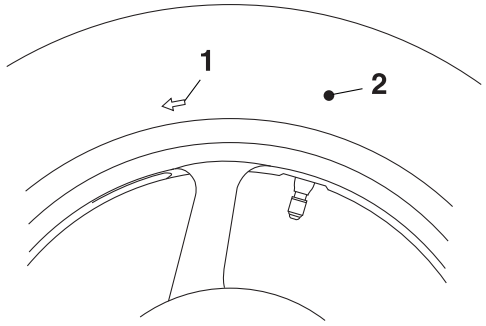

EAS1RC1308

CHECKING THE WHEEL BEARINGS

The following procedure applies to all of the wheel bearings.

1. Check:
   - Wheel bearings
     Refer to “CHECKING THE FRONT WHEEL” on page 4-10 and “CHECKING THE REAR WHEEL” on page 4-17.

EAS1RC1309

CHECKING THE SWINGARM OPERATION

1. Check:
   - Swingarm operation
     Swingarm not working properly → Check the swingarm.
     Refer to “SWINGARM” on page 4-67.
2. Check:
   - Swingarm excessive play
     Refer to “SWINGARM” on page 4-67.

EAS1RC1320

LUBRICATING THE SWINGARM PIVOT

1. Lubricate:
   - Oil seals
   - Collars

Recommended lubricant
Lithium-soap-based grease

Refer to “INSTALLING THE SWINGARM” on page 4-69.

EAS21390

ADJUSTING THE DRIVE CHAIN SLACK

ECA13550

NOTICE

A drive chain that is too tight will overload the engine and other vital parts, and one that is too loose can skip and damage the swingarm or cause an accident. Therefore, keep the drive chain slack within the specified limits.

1. Stand the vehicle on a level surface.

EWA13120

WARNING

Securely support the vehicle so that there is no danger of it falling over.

TIP

Place the vehicle on a suitable stand so that the rear wheel is elevated.

2. Shift the transmission into the neutral position.
3. Check:
   - Drive chain slack "a"
     Out of specification → Adjust.

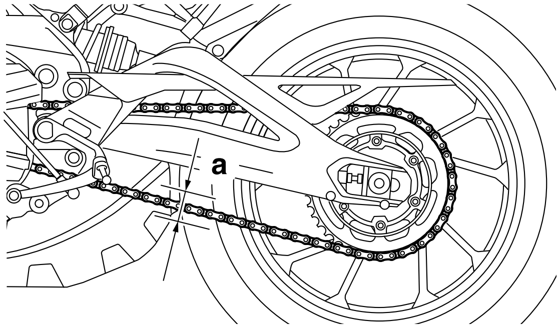

Drive chain slack
5.0–15.0 mm (0.20–0.59 in)

ECA1RC1302

NOTICE

Improper drive chain slack will overload the engine as well as other vital parts of the motorcycle and can lead to chain slippage or breakage. If the drive chain slack is more than 25.0 mm (0.98 in), the chain can damage the frame, swingarm, and other parts. To prevent this from occurring, keep the drive chain slack within the specified limits.

4. Loosen:
   - Wheel axle nut "1"

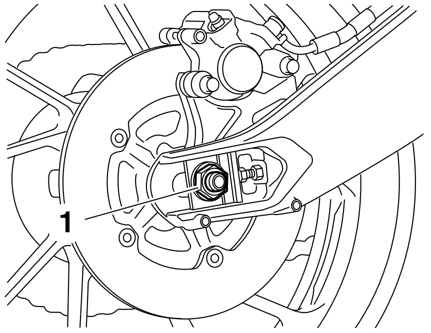

5. Adjust:
   - Drive chain slack

▼▼▼▼▼▼▼▼▼▼▼▼▼▼▼▼▼▼▼▼▼▼▼▼▼▼▼▼▼▼▼▼▼▼

a. Loosen both locknuts "1".
b. Turn both adjusting bolts "2" in direction "a" or "b" until the specified drive chain slack is obtained.

Direction "a"
Drive chain is tightened.
Direction "b"
Drive chain is loosened.

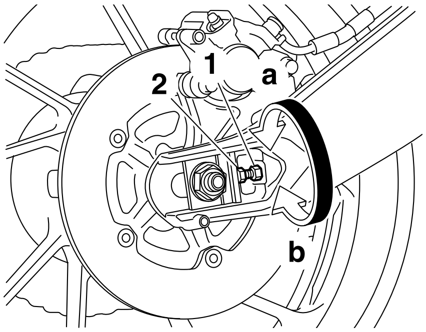

TIP

- To maintain the proper wheel alignment, adjust both sides evenly.
- There should be no clearance between the adjusting block and adjusting bolt.

c. Tighten the wheel axle nut to specification.

Wheel axle nut
150 Nm (15 m·kgf, 108 ft·lbf)

d. Tighten the locknuts to specification.

Locknut
16 Nm (1.6 m·kgf, 12 ft·lbf)

▲▲▲▲▲▲▲▲▲▲▲▲▲▲▲▲▲▲▲▲▲▲▲▲▲▲▲▲▲▲▲▲▲▲

EAS21440

LUBRICATING THE DRIVE CHAIN

The drive chain consists of many interacting parts. If the drive chain is not maintained properly, it will wear out quickly. Therefore, the drive chain should be serviced, especially when the vehicle is used in dusty areas.

This vehicle has a drive chain with small rubber O-rings between each side plate. Steam cleaning, high-pressure washing, certain solvents, and the use of a coarse brush can damage these O-rings. Therefore, use only kerosene to clean the drive chain. Wipe the drive chain dry and thoroughly lubricate it with engine oil or chain lubricant that is suitable for O-ring chains. Do not use any other lubricants on the drive chain since they may contain solvents that could damage the O-rings.

	Recommended lubricant **Chain lubricant suitable for O-ring chains**

EAS21510

CHECKING AND ADJUSTING THE STEERING HEAD

1. Stand the vehicle on a level surface.

EWA13120

WARNING

Securely support the vehicle so that there is no danger of it falling over.

TIP

Place the vehicle on a suitable stand so that the front wheel is elevated.

2. Check:
   - Steering head
     Grasp the bottom of the front fork legs and gently rock the front fork.
     Blinding/looseness → Adjust the steering head.
3. Remove:
   - Upper bracket
4. Adjust:
   - Steering head

▼▼▼▼▼▼▼▼▼▼▼▼▼▼▼▼▼▼▼▼▼▼▼▼▼▼▼▼▼▼▼▼▼▼

a. Remove the lock washer “1”, the upper ring nut “2”, and the rubber washer “3”.

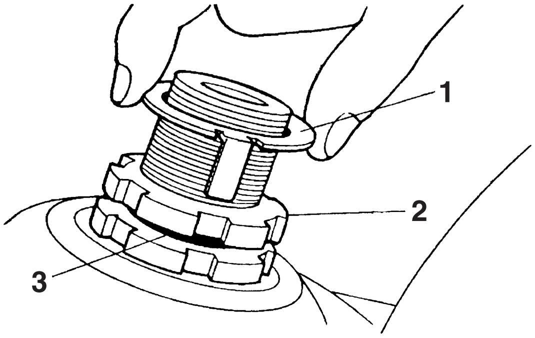

b. Loosen the lower ring nut “4” and then tighten it to specification with a steering nut wrench “5”.

TIP

- Set the torque wrench at a right angle to the steering nut wrench.
- Move the steering to the left and right a couple of times to check that it moves smoothly.

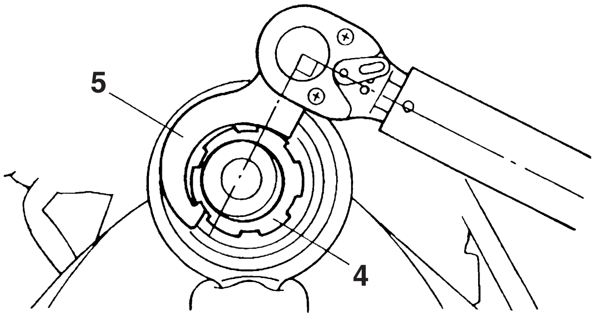

	Steering nut wrench **90890-01403** **Exhaust flange nut wrench** **YU-A9472**

	Lower ring nut (initial tightening torque) **52 Nm (5.2 m·kgf, 38 ft·lbf)**

c. Loosen the lower ring nut “6” completely, then tighten it to specification.

EWA13140

WARNING

Do not overtighten the lower ring nut.

	Lower ring nut (final tightening torque) **18 Nm (1.8 m·kgf, 13 ft·lbf)**

d. Check the steering head for looseness or binding by turning the front fork all the way in both directions. If any binding is felt, remove the lower bracket and check the upper and lower bearings.
   Refer to “STEERING HEAD” on page 4-59.

e. Install the rubber washer “7”.

f. Install the upper ring nut “8”.

g. Finger tighten the upper ring nut, then align the slots of both ring nuts. If necessary, hold the lower ring nut and tighten the upper ring nut until their slots are aligned.

h. Install the lock washer “9”.

TIP

Make sure the lock washer tabs “a” sit correctly in the ring nut slots “b”.

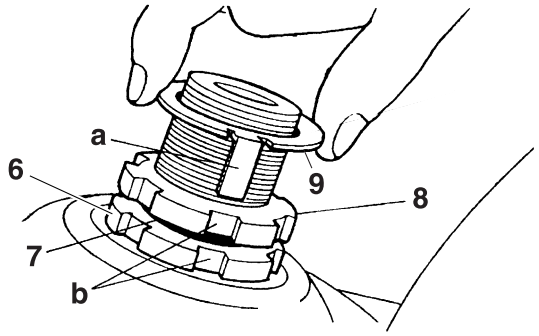

▲▲▲▲▲▲▲▲▲▲▲▲▲▲▲▲▲▲▲▲▲▲▲▲▲▲▲▲▲▲▲▲

5. Install:
   - Upper bracket
     Refer to “HANDLEBAR” on page 4-44.

EAS1RC1321

LUBRICATING THE STEERING HEAD

1. Lubricate:
   - Upper bearing
   - Lower bearing
   - Bearing races

	Recommended lubricant **Lithium-soap-based grease**

EAS1RC1322

CHECKING THE CHASSIS FASTENERS

Make sure that all nuts, bolts, and screws are properly tightened.
Refer to “CHASSIS TIGHTENING TORQUES” on page 2-18.

EAS1RC1303

LUBRICATING THE BRAKE LEVER

Lubricate the pivoting point and metal-to-metal moving parts of the lever.

	Recommended lubricant **Silicone grease**

EAS1RC1304

LUBRICATING THE CLUTCH LEVER

Lubricate the pivoting point and metal-to-metal moving parts of the lever.

	Recommended lubricant **Lithium-soap-based grease**

EAS21710

LUBRICATING THE PEDAL

Lubricate the pivoting point and metal-to-metal moving parts of the pedal.

	Recommended lubricant **Lithium-soap-based grease**

EAS21380

ADJUSTING THE SHIFT PEDAL

TIP

The shift pedal position is determined by the installed shift rod length.

1. Measure:
   - Installed shift rod length “a”
     Incorrect → Adjust.

	Installed shift rod length **256.9–258.9 mm (10.11–10.19 in)**

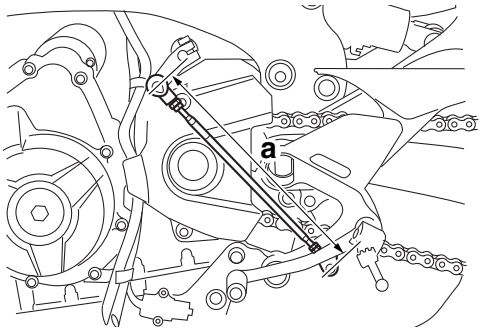

2. Adjust:
   - Installed shift rod length

▼▼▼▼▼▼▼▼▼▼▼▼▼▼▼▼▼▼▼▼▼▼▼▼▼▼▼▼▼▼▼▼

a. Loosen both locknuts “1”.
b. Turn the shift rod “2” in direction “a” or “b” to obtain the correct shift pedal position.

Direction “a” **Installed shift rod length increases.** **Direction “b”** **Installed shift rod length decreases.**

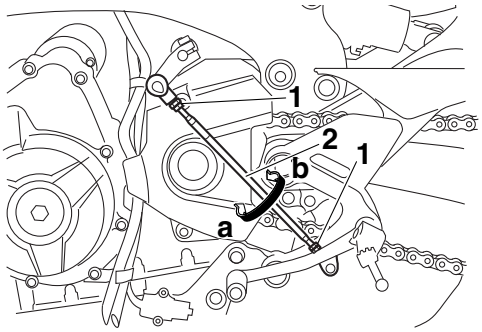

c. Tighten both locknuts.
d. Make sure the installed shift rod length is within specification.

▲▲▲▲▲▲▲▲▲▲▲▲▲▲▲▲▲▲▲▲▲▲▲▲▲▲▲▲▲▲▲▲

EAS1RC1323

CHECKING THE SIDESTAND

1. Check:
   - Sidestand operation
     Check that the sidestand moves smoothly.

Rough movement → Repair or replace.

EAS21721

LUBRICATING THE SIDESTAND

Lubricate the pivoting point, metal-to-metal moving parts and spring contact point of the sidestand.

	Recommended lubricant **Lithium-soap-based grease**

EAS1RC1310

CHECKING THE SIDESTAND SWITCH

Refer to “ELECTRICAL COMPONENTS” on page 8-85.

EAS21531

CHECKING THE FRONT FORK

1. Stand the vehicle on a level surface.

EWA13120

WARNING

Securely support the vehicle so that there is no danger of it falling over.

2. Check:
   - Inner tube
     Damage/scratches → Replace.
   - Front fork leg
     Oil leaks between inner tube and outer tube → Replace the oil seal.
3. Hold the vehicle upright and apply the front brake.
4. Check:
   - Front fork operation
     Push down hard on the handlebar several times and check if the front fork rebounds smoothly.
     Rough movement → Repair.
     Refer to “FRONT FORK” on page 4-48.

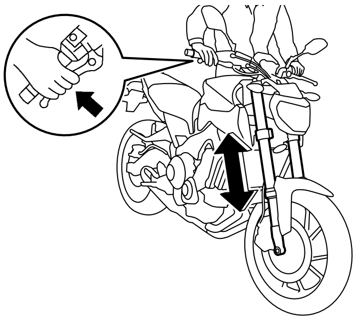

EAS1RC1315

ADJUSTING THE FRONT FORK LEGS

The following procedure applies to both of the front fork legs.

EWA13120

WARNING

Securely support the vehicle so that there is no danger of it falling over.

Spring preload

EWA1RC1303

WARNING

Always adjust both front fork legs evenly. Uneven adjustment can result in poor handling and loss of stability.

ECA13590

NOTICE

Never go beyond the maximum or minimum adjustment positions.

1. Adjust:
   - Spring preload

▼▼▼▼▼▼▼▼▼▼▼▼▼▼▼▼▼▼▼▼▼▼▼▼▼▼▼▼▼▼▼▼▼

a. Turn the adjusting bolt “1” in direction “a” or “b”.

Direction “a”
Spring preload is increased (suspension is harder).
Direction “b”
Spring preload is decreased (suspension is softer).

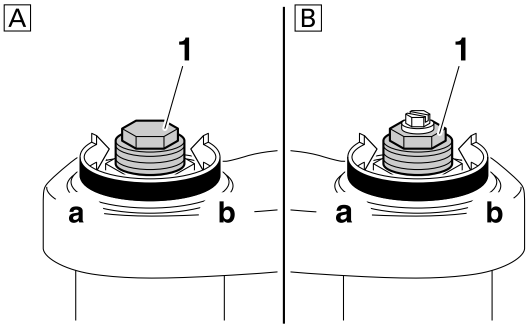

A. Left side
B. Right side

TIP

The spring preload setting is determined by measuring the distance “c” shown in the illustration. The shorter distance “c” is, the higher the spring preload; the longer distance “c” is, the lower the spring preload.

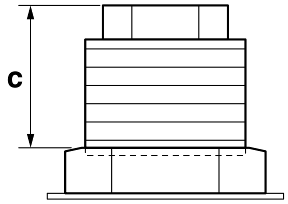

Spring preload adjusting positions
Minimum
19.0 mm (0.75 in)
Standard
16.0 mm (0.63 in)
Maximum
4.0 mm (0.16 in)

▲▲▲▲▲▲▲▲▲▲▲▲▲▲▲▲▲▲▲▲▲▲▲▲▲▲▲▲▲▲▲▲▲▲

Rebound damping (right side only)

ECA13590

NOTICE

Never go beyond the maximum or minimum adjustment positions.

1. Adjust:
   - Rebound damping

▼▼▼▼▼▼▼▼▼▼▼▼▼▼▼▼▼▼▼▼▼▼▼▼▼▼▼▼▼▼▼▼▼▼

a. Turn the adjusting screw "1" in direction "a" or "b".

Direction "a"
Rebound damping is increased (suspension is harder).
Direction "b"
Rebound damping is decreased (suspension is softer).

Rebound damping adjusting positions
Minimum (soft)
3 turn(s) in direction "b"*
Standard
1 3/4 turn(s) in direction "b"*
Maximum (hard)
Adjusting screw fully turned in direction "a"
***With the adjusting screw fully turned in direction "a"**

TIP

Although the total number of turns of a damping force adjusting mechanism may not exactly match the above specifications due to small differences in production, the actual number of turns always represents the entire adjusting range. To obtain a precise adjustment, it would be advisable to check the number of turns of each damping force adjusting mechanism and to modify the specifications as necessary.

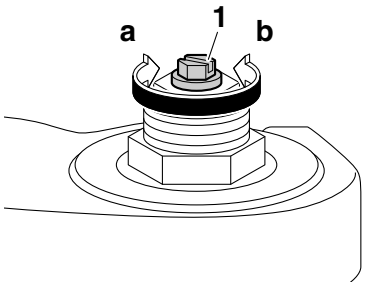

▲▲▲▲▲▲▲▲▲▲▲▲▲▲▲▲▲▲▲▲▲▲▲▲▲▲▲▲▲▲▲▲▲▲

EAS1RC1311

CHECKING THE REAR SHOCK ABSORBER ASSEMBLY

1. Stand the vehicle on a level surface.

EWA13120

WARNING

Securely support the vehicle so that there is no danger of it falling over.

2. Check:
   - Rear shock absorber assembly
     Gas leaks/oil leaks → Replace the rear shock absorber assembly.
     Refer to "CHECKING THE REAR SHOCK ABSORBER ASSEMBLY" on page 4-64.
3. Check:
   - Rear shock absorber assembly operation
   - Rear suspension link pivots
     Push down seat on the vehicle several times and check if the rear shock absorber assembly rebounds smoothly.
     Rough movement → Repair.
     Refer to "REAR SHOCK ABSORBER ASSEMBLY" on page 4-63.

EAS1RC1316

ADJUSTING THE REAR SHOCK ABSORBER ASSEMBLY

EWA13120

WARNING

Securely support the vehicle so that there is no danger of it falling over.

Spring preload

ECA13590

NOTICE

Never go beyond the maximum or minimum adjustment positions.

1. Adjust:
   - Spring preload

▼▼▼▼▼▼▼▼▼▼▼▼▼▼▼▼▼▼▼▼▼▼▼▼▼▼▼▼▼▼▼▼▼▼

a. Adjust the spring preload with the special wrench "1" and extension bar "2" included in

the owner's tool kit.

b. Turn the adjusting ring "3" in direction "a" or "b".
c. Align the desired position on the adjusting ring with the stopper "4".

Direction "a"
Spring preload is increased (suspension is harder).
Direction "b"
Spring preload is decreased (suspension is softer).

Spring preload adjusting positions
Minimum
1
Standard
4
Maximum
7

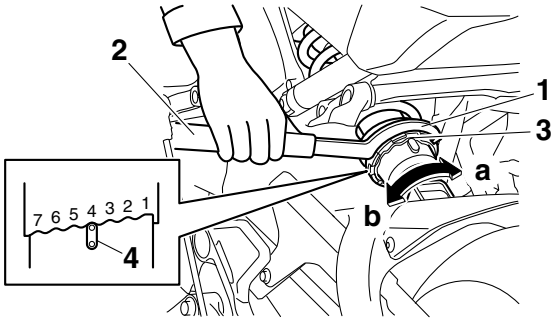

▲▲▲▲▲▲▲▲▲▲▲▲▲▲▲▲▲▲▲▲▲▲▲▲▲▲▲▲▲▲▲▲

Rebound damping

ECA13590

NOTICE

Never go beyond the maximum or minimum adjustment positions.

1. Adjust:
   - Rebound damping

▼▼▼▼▼▼▼▼▼▼▼▼▼▼▼▼▼▼▼▼▼▼▼▼▼▼▼▼▼▼▼▼

a. Turn the adjusting screw "1" in direction "a" or "b".

Direction "a"
Rebound damping is increased (suspension is harder).
Direction "b"
Rebound damping is decreased (suspension is softer).

Rebound damping adjusting positions
Minimum (soft)
3 turn(s) in direction "b"*
Standard
1 1/2 turn(s) in direction "b"*
Maximum (hard)
Adjusting screw fully turned in direction "a"
***With the adjusting screw fully turned in direction "a"**

TIP

To obtain a precise adjustment, it is advisable to check the actual total number of turns of the damping force adjusting mechanism. This adjustment range may not exactly match the specifications listed due to small differences in production.

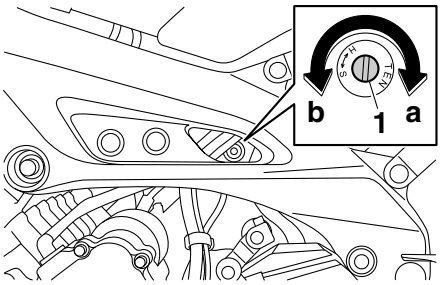

▲▲▲▲▲▲▲▲▲▲▲▲▲▲▲▲▲▲▲▲▲▲▲▲▲▲▲▲▲▲▲▲

EAS1RC1312

CHECKING THE CONNECTING ARM AND RELAY ARM

Refer to "CHECKING THE CONNECTING ARM AND RELAY ARM" on page 4-64.

EAS20731

CHECKING THE ENGINE OIL LEVEL

1. Stand the vehicle on a level surface.

TIP

- Place the vehicle on a suitable stand.
- Make sure the vehicle is upright.

2. Start the engine, warm it up for several minutes, and then turn it off.
3. Check:
   - Engine oil level
     The engine oil level should be between the minimum level mark "a" and maximum level mark "b".
     Below the minimum level mark → Add the recommended engine oil to the proper level.

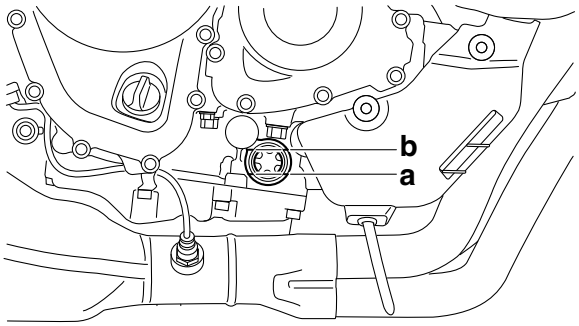

Recommended brand
YAMALUBE
Type
SAE 10W-30, 10W-40, 10W-50, 15W-40, 20W-40 or 20W-50
Recommended engine oil grade
API service SG type or higher, JASO standard MA

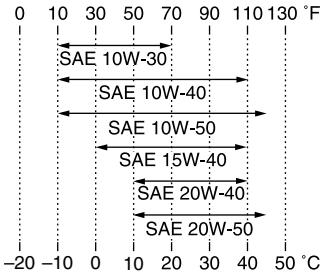

ECA13361

NOTICE

- **Engine oil also lubricates the clutch and the wrong oil types or additives could cause clutch slippage. Therefore, do not add any chemical additives or use engine oils with a grade of "CD" or higher and do not use oils labeled "ENERGY CONSERVING II" or higher.**
- **Do not allow foreign materials to enter the crankcase.**

TIP
Before checking the engine oil level, wait a few minutes until the oil has settled.

4. Start the engine, warm it up for several minutes, and then turn it off.
5. Check the engine oil level again.

TIP
Before checking the engine oil level, wait a few minutes until the oil has settled.

EAS20791

CHANGING THE ENGINE OIL

1. Start the engine, warm it up for several minutes, and then turn it off.
2. Place a container under the engine oil drain bolt.
3. Remove:
   - Engine oil filler cap "1"
   - Engine oil drain bolt "2"
   - Gasket "3"

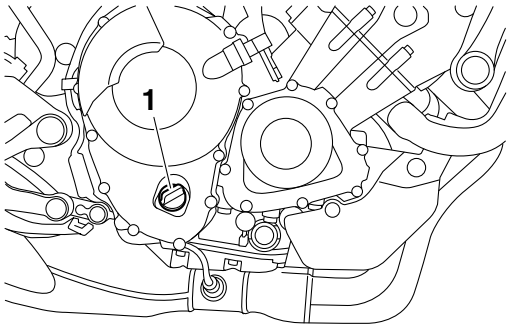

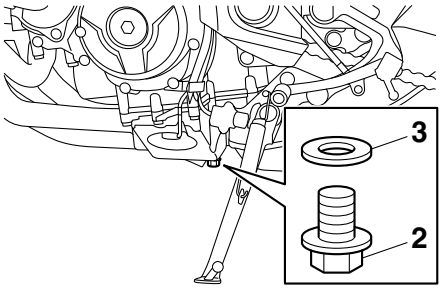

4. Drain:
   - Engine oil
     (completely from the crankcase)
5. If the oil filter cartridge is also to be replaced, perform the following procedure.

▼▼▼▼▼▼▼▼▼▼▼▼▼▼▼▼▼▼▼▼▼▼▼▼▼▼▼▼▼▼▼▼▼▼

a. Remove the oil filter cartridge "1" with an oil filter wrench "2".

Oil filter wrench
90890-01426
YU-38411

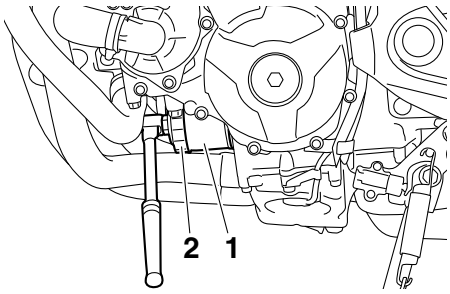

b. Lubricate the O-ring "3" of the new oil filter cartridge with a thin coat of engine oil.

ECA13390

NOTICE

Make sure the O-ring "3" is positioned correctly in the groove of the oil filter cartridge.

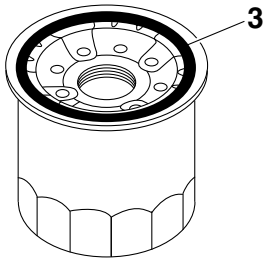

c. Tighten the new oil filter cartridge to specification with an oil filter wrench.

	Oil filter cartridge **17 Nm (1.7 m·kgf, 12 ft·lbf)**

▲▲▲▲▲▲▲▲▲▲▲▲▲▲▲▲▲▲▲▲▲▲▲▲▲▲▲▲▲▲▲▲▲▲

6. Install:
   - Engine oil drain bolt
     (along with the gasket New)

	Engine oil drain bolt **43 Nm (4.3 m·kgf, 31 ft·lbf)**

7. Fill:
   - Crankcase
     (with the specified amount of the recommended engine oil)

	Engine oil quantity **Quantity (disassembled)** **3.40 L (3.59 US qt, 2.99 Imp.qt)** **Without oil filter cartridge replacement** **2.40 L (2.54 US qt, 2.11 Imp.qt)** **With oil filter cartridge replacement** **2.70 L (2.85 US qt, 2.38 Imp.qt)**

8. Install:
   - Engine oil filler cap
     (along with the O-ring New)
9. Start the engine, warm it up for several minutes, and then turn it off.
10. Check:
    - Engine
      (for engine oil leaks)
11. Check:
    - Engine oil level
      Refer to "CHECKING THE ENGINE OIL LEVEL" on page 3-22.

EAS20820

MEASURING THE ENGINE OIL PRESSURE

1. Check:
   - Engine oil level
     Below the minimum level mark "a" → Add the recommended engine oil to the proper level.

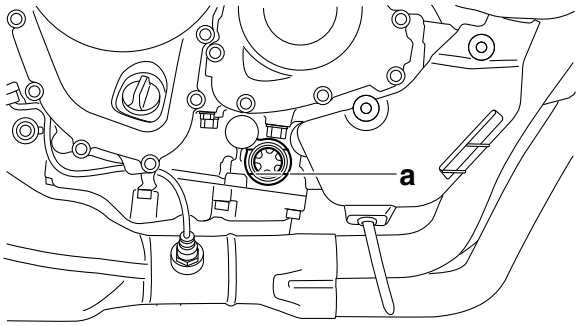

2. Start the engine, warm it up for several minutes, and then turn it off.

ECA13410

NOTICE

When the engine is cold, the engine oil will have a higher viscosity, causing the engine oil pressure to increase. Therefore, be sure to measure the engine oil pressure after warming up the engine.

3. Remove:
   - Main gallery bolt "1"

EWA12980

WARNING

The engine, muffler and engine oil are extremely hot.

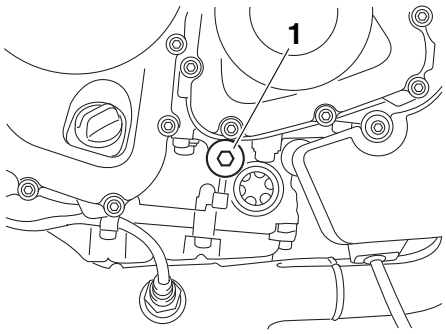

4. Install:
   - Oil pressure gauge "1"
   - Adapter "2"

	Pressure gauge **90890-03153** **YU-03153** **Oil pressure adapter H** **90890-03139**

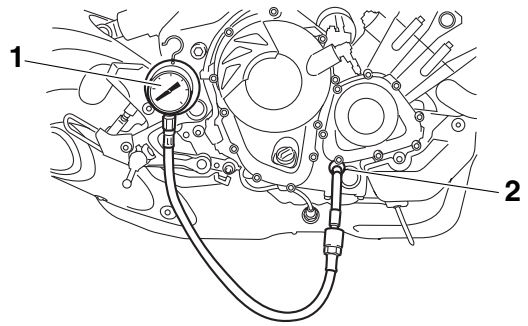

5. Measure:
   - Engine oil pressure
     (at the following conditions)

	**Oil pressure** **230.0 kPa/5000 r/min@100 °C (2.3 kgf/cm^2/5000 r/min, 33.4 psi/5000 r/min@212 °F)**

Out of specification → Check.

Engine oil pressure	Possible causes
Below specification	• Faulty oil pump • Clogged oil filter • Leaking oil passage • Broken or damaged oil seal
Above specification	• Leaking oil passage • Faulty oil filter • Oil viscosity too high

6. Install:
   - Main gallery bolt

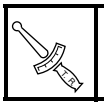	**Main gallery bolt** **8 Nm (0.8 m·kgf, 5.8 ft·lbf)**

ECA1RC1301

NOTICE

Be careful not to tighten too much.

EAS21110

CHECKING THE COOLANT LEVEL

1. Stand the vehicle on a level surface.

TIP

- Place the vehicle on a suitable stand.
- Make sure the vehicle is upright.

2. Check:
   - Coolant level
     The coolant level should be between the maximum level mark “a” and minimum level mark “b”.
     Below the minimum level mark → Add the recommended coolant to the proper level.

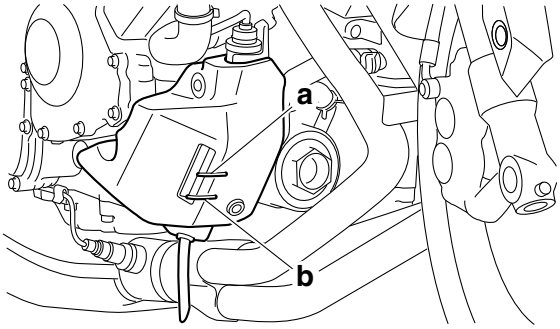

ECA1RC1304

NOTICE

- **Adding water instead of coolant lowers the antifreeze concentration of the coolant. If water is used instead of coolant check, and if necessary, correct the antifreeze concentration of the coolant.**
- **Use only distilled water. However, if distilled water is not available, soft water may be used.**

3. Start the engine, warm it up for several minutes, and then turn it off.
4. Check:
   - Coolant level

TIP

Before checking the coolant level, wait a few minutes until it settles.

EAS21120

CHECKING THE COOLING SYSTEM

1. Check:
   - Radiator “1”
   - Radiator inlet hose “2”
   - Radiator outlet hose “3”
   - Oil cooler “4”
   - Oil cooler inlet hose “5”
   - Oil cooler outlet hose “6”
   - Water jacket joint “7”
   - Water pump inlet pipe “8”
     Cracks/damage → Replace.
     Refer to “RADIATOR” on page 6-1, “OIL COOLER” on page 6-4, “THERMOSTAT” on page 6-6 and “WATER PUMP” on page 6-8.

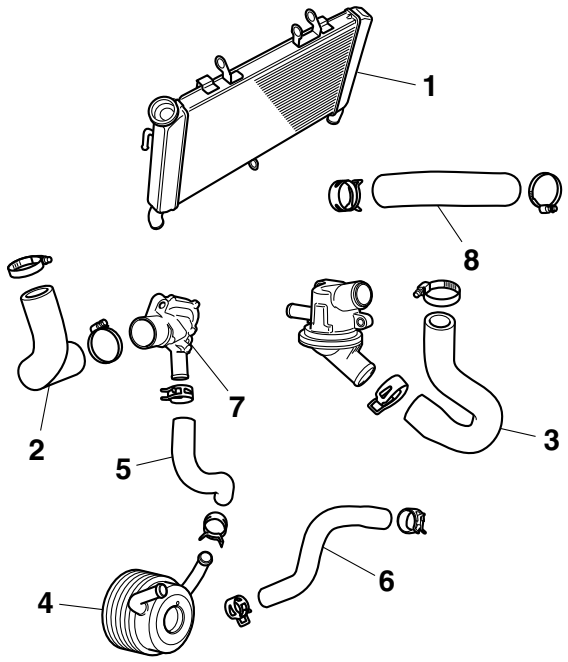

EAS21131

CHANGING THE COOLANT

1. Remove:
   - Radiator cap bolt “1”
   - Radiator cap “2”
   - Radiator cap stopper “3”

EWA13030

WARNING

A hot radiator is under pressure. Therefore, do not remove the radiator cap when the engine is hot. Scalding hot fluid and steam may be blown out, which could cause serious injury. When the engine has cooled, open the radiator cap as follows:
Place a thick rag or a towel over the radiator cap and slowly turn the radiator cap counterclockwise toward the detent to allow any residual pressure to escape. When the hissing sound has stopped, press down on the radiator cap and turn it counterclockwise to remove.

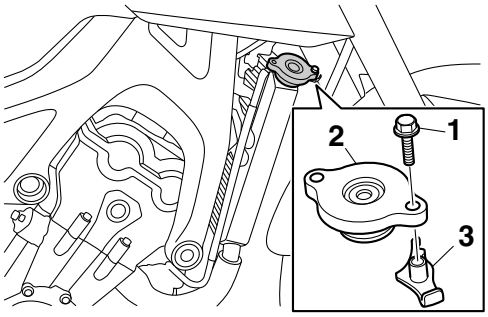

2. Remove:
   - Coolant reservoir bolts “1”
   - Coolant reservoir cover “2”
   - Coolant reservoir “3”
   - Collars “4”

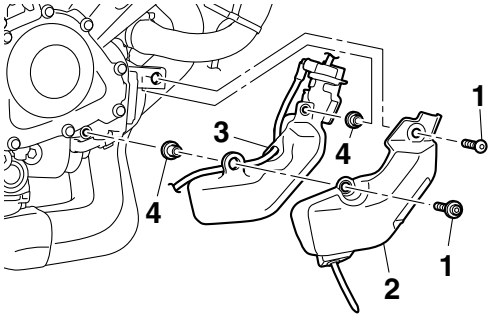

3. Remove:
   - Coolant reservoir cap “1”

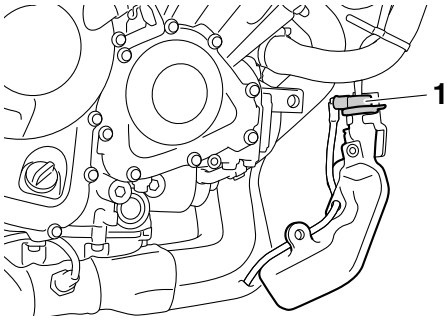

4. Drain:
   - Coolant
     (from the coolant reservoir)
5. Remove:
   - Water pump drain bolt “1”
   - Copper washer “2”

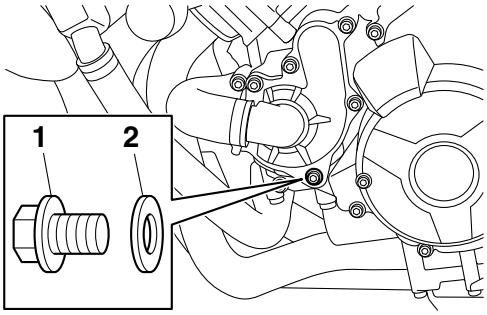

6. Drain:
   - Coolant
     (from the engine and radiator)
7. Install:
   - Water pump drain bolt
   - Copper washer New

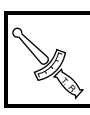	**Water pump drain bolt** **10 Nm (1.0 m·kgf, 7.2 ft·lbf)**

8. Install:
   - Collars

- Coolant reservoir
- Coolant reservoir cover
- Coolant reservoir bolts

Coolant reservoir bolt (M5)
0.5 Nm (0.05 m·kgf, 0.37 ft·lbf)
Coolant reservoir bolt (M6)
9 Nm (0.9 m·kgf, 6.5 ft·lbf)

9. Fill:
   - Cooling system
     (with the specified amount of the recommended coolant)

Recommended antifreeze
High-quality ethylene glycol antifreeze containing corrosion inhibitors for aluminum engines
Mixing ratio
1:1 (antifreeze: water)
Radiator capacity (including all routes)
1.93 L (2.04 US qt, 1.70 Imp.qt)
Coolant reservoir capacity (up to the maximum level mark)
0.25 L (0.26 US qt, 0.22 Imp.qt)

Handling notes for coolant
Coolant is potentially harmful and should be handled with special care.

EWA13040

WARNING

- **If coolant splashes in your eyes, thoroughly wash them with water and consult a doctor.**
- **If coolant splashes on your clothes, quickly wash it away with water and then with soap and water.**
- **If coolant is swallowed, induce vomiting and get immediate medical attention.**

ECA1RC1305

NOTICE

- **Adding water instead of coolant lowers the antifreeze concentration of the coolant. If water is used instead of coolant check, and if necessary, correct the antifreeze concentration of the coolant.**
- **Use only distilled water. However, if distilled water is not available, soft water may be used.**
- **If coolant comes into contact with painted surfaces, immediately wash them with water.**
- **Do not mix different types of antifreeze.**

10. Install:
    - Radiator cap stopper
    - Radiator cap
    - Radiator cap bolt

Radiator cap bolt
5 Nm (0.5 m·kgf, 3.6 ft·lbf)

11. Fill:
    - Coolant reservoir
      (with the recommended coolant to the maximum level mark “a”)

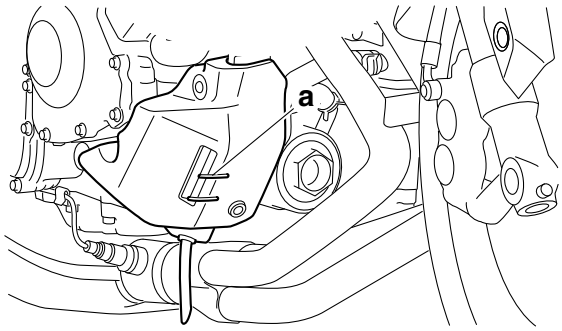

12. Install:
    - Coolant reservoir cap
13. Start the engine, warm it up for several minutes, and then turn it off.
14. Check:
    - Coolant level
      Refer to “CHECKING THE COOLANT LEVEL” on page 3-25.

TIP

Before checking the coolant level, wait a few minutes until the coolant has settled.

EAS1RC1313

CHECKING THE FRONT BRAKE LIGHT SWITCH

Refer to “ELECTRICAL COMPONENTS” on page 8-85.

EAS21330

ADJUSTING THE REAR BRAKE LIGHT SWITCH

TIP

The rear brake light switch is operated by movement of the brake pedal. The rear brake light switch is properly adjusted when the brake light comes on just before the braking effect starts.

1. Check:
   - Rear brake light operation timing
     Incorrect → Adjust.
2. Adjust:
   - Rear brake light operation timing

▼▼▼▼▼▼▼▼▼▼▼▼▼▼▼▼▼▼▼▼▼▼▼▼▼▼▼▼▼▼▼▼▼▼

a. Hold the main body “1” of the rear brake light switch so that it does not rotate and turn the adjusting nut “2” in direction “a” or “b” until the rear brake light comes on at the proper time.

Direction “a”
Brake light comes on sooner.
Direction “b”
Brake light comes on later.

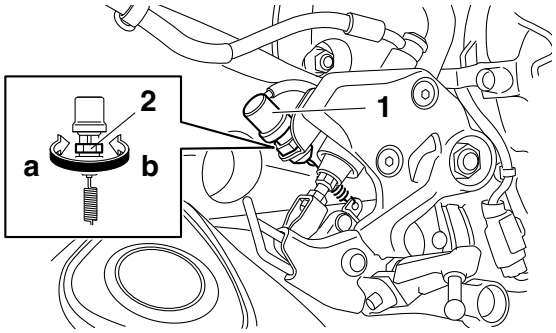

▲▲▲▲▲▲▲▲▲▲▲▲▲▲▲▲▲▲▲▲▲▲▲▲▲▲▲▲▲▲▲▲▲▲

EAS21690

CHECKING AND LUBRICATING THE CABLES

The following procedure applies to all of the inner and outer cables.

EWA13270

WARNING

Damaged outer cable may cause the cable to corrode and interfere with its movement. Replace damaged outer cable and inner cables as soon as possible.

1. Check:
   - Outer cable
     Damage → Replace.
2. Check:
   - Cable operation
     Rough movement → Lubricate.

Recommended lubricant
Engine oil or a suitable cable lubricant

TIP

Hold the cable end upright and pour a few drops of lubricant into the cable sheath or use a suitable lubricating device.

EAS30890

CHECKING THE THROTTLE GRIP

1. Check:
   - Throttle cables
     Damage/deterioration → Replace.
   - Throttle cable installation
     Incorrect → Reinstall the throttle cables.
     Refer to “HANDLEBAR” on page 4-44.
2. Check:
   - Throttle grip movement
     Rough movement → Lubricate or replace the defective part(s).

Recommended lubricant
Suitable cable lubricant

TIP

With the engine stopped, turn the throttle grip slowly and release it. Make sure that the throttle grip turns smoothly and returns properly when released.
Repeat this check with the handlebar turned all the way to the left and right.

3. Check:
   - Throttle grip free play “a”
     Out of specification → Adjust.

Throttle grip free play
3.0–5.0 mm (0.12–0.20 in)

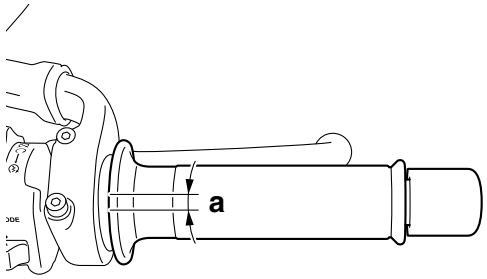

4. Adjust:
   - Throttle grip free play

TIP

Prior to adjusting the throttle grip free play, throttle body synchronization should be adjusted properly.

▼▼▼▼▼▼▼▼▼▼▼▼▼▼▼▼▼▼▼▼▼▼▼▼▼▼▼▼▼▼▼▼▼▼

a. Slide back the rubber cover “1”.
b. Loosen the locknut “2”.
c. Turn the adjusting nut “3” in direction “a” or “b” until the specified throttle grip free play is obtained.

Direction “a”
Throttle grip free play is increased.
Direction “b”
Throttle grip free play is decreased.

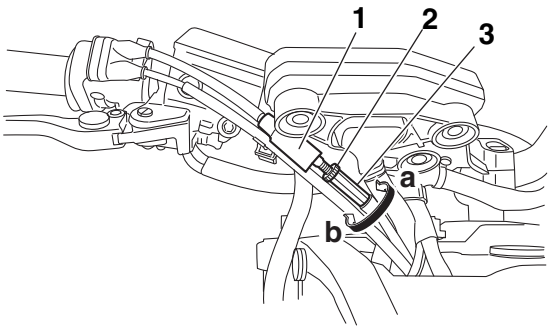

d. Tighten the locknut.
e. Slide the rubber cover to its original position.

TIP
Make sure that the adjusting nut is covered completely by the rubber cover.

▲▲▲▲▲▲▲▲▲▲▲▲▲▲▲▲▲▲▲▲▲▲▲▲▲▲▲▲▲▲▲▲

EAS21760
CHECKING AND CHARGING THE BATTERY
Refer to “CHECKING AND CHARGING THE BATTERY” on page 8-94.

EAS21770
CHECKING THE FUSES
Refer to “CHECKING THE FUSES” on page 8-93.

EAS21790
REPLACING THE HEADLIGHT BULB
1. Remove:
   • Headlight unit side cover bolts “1”

TIP
Lift up the headlight unit “2”, and then remove it from the headlight stay “3”.

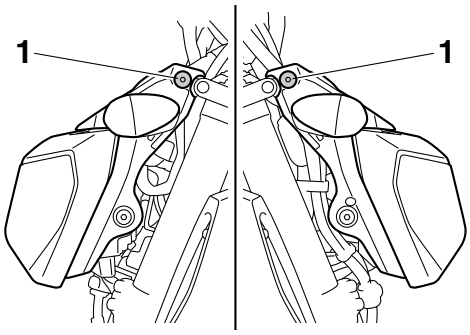

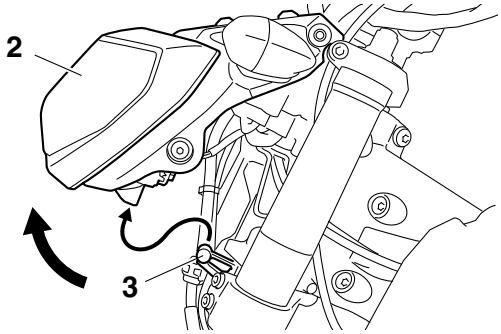

2. Disconnect:
   • Headlight coupler “1”

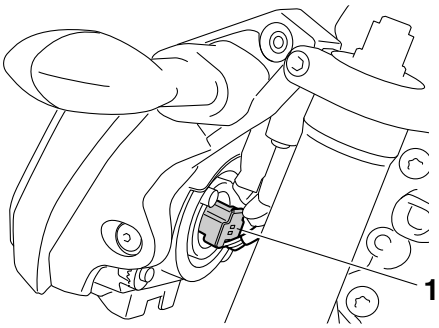

3. Remove:
   • Headlight bulb cover “1”

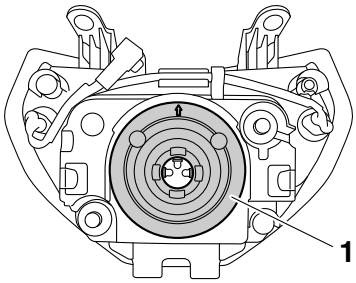

4. Unhook:
   • Headlight bulb holder “1”
5. Remove:
   • Headlight bulb “2”

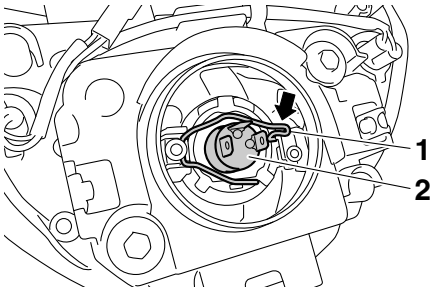

EWA13320
WARNING
Since the headlight bulb gets extremely hot, keep flammable products and your hands away from the bulb until it has cooled down.

6. Install:
   - Headlight bulb New
     Secure the new headlight bulb with the headlight bulb holder.

ECA13690

NOTICE

Avoid touching the glass part of the headlight bulb to keep it free from oil, otherwise the transparency of the glass, the life of the bulb and the luminous flux will be adversely affected. If the headlight bulb gets soiled, thoroughly clean it with a cloth moistened with alcohol or lacquer thinner.

7. Hook:
   - Headlight bulb holder
8. Install:
   - Headlight bulb cover
9. Connect:
   - Headlight coupler "1"

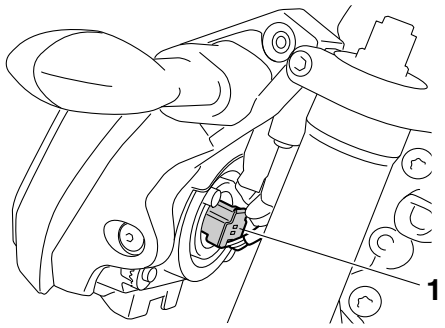

10. Install:
    - Headlight unit "1"

TIP

Install the headlight unit as shown.

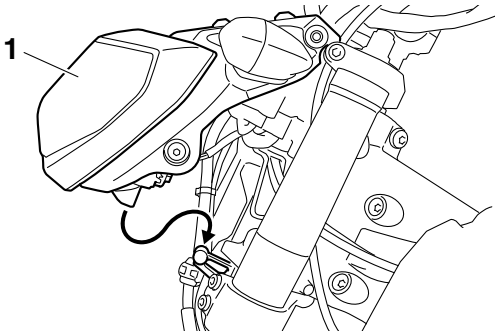

11. Install:
    - Headlight unit side cover bolts

	**Headlight unit side cover bolt 7 Nm (0.7 m·kgf, 5.1 ft·lbf)**

EAS21810

ADJUSTING THE HEADLIGHT BEAM

1. Adjust:
   - Headlight beam (vertically)

▼▼▼▼▼▼▼▼▼▼▼▼▼▼▼▼▼▼▼▼▼▼▼▼▼▼▼▼▼▼▼▼▼▼

a. Turn the adjusting screw "1" in direction "a" or "b".

Direction "a"
Headlight beam is raised.
Direction "b"
Headlight beam is lowered.

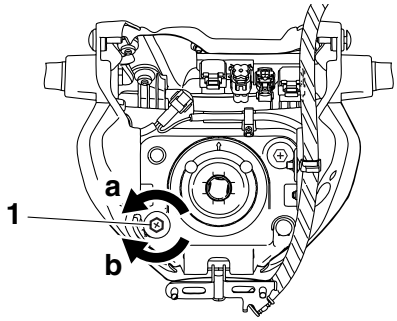

▲▲▲▲▲▲▲▲▲▲▲▲▲▲▲▲▲▲▲▲▲▲▲▲▲▲▲▲▲▲▲▲▲▲

2. Adjust:
   - Headlight beam (horizontally)

▼▼▼▼▼▼▼▼▼▼▼▼▼▼▼▼▼▼▼▼▼▼▼▼▼▼▼▼▼▼▼▼▼▼

TIP

To adjust the headlight beam (horizontally), insert a crosshead screwdriver into the hole "a" and turn the adjusting screw.

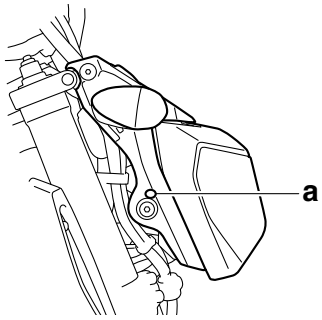

a. Turn the adjusting screw "1" in direction "b" or "c".

Direction "b"
Headlight beam moves to the right.
Direction "c"
Headlight beam moves to the left.

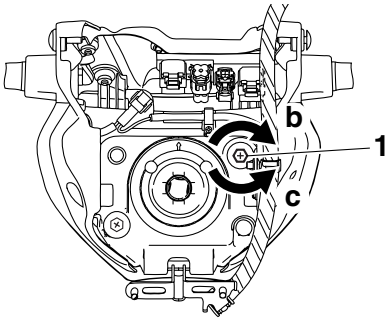
b
1
c

▲▲▲▲▲▲▲▲▲▲▲▲▲▲▲▲▲▲▲▲▲▲▲▲▲▲▲▲▲▲▲▲▲▲

CHASSIS

EAS21830

GENERAL CHASSIS

Removing the seat and battery

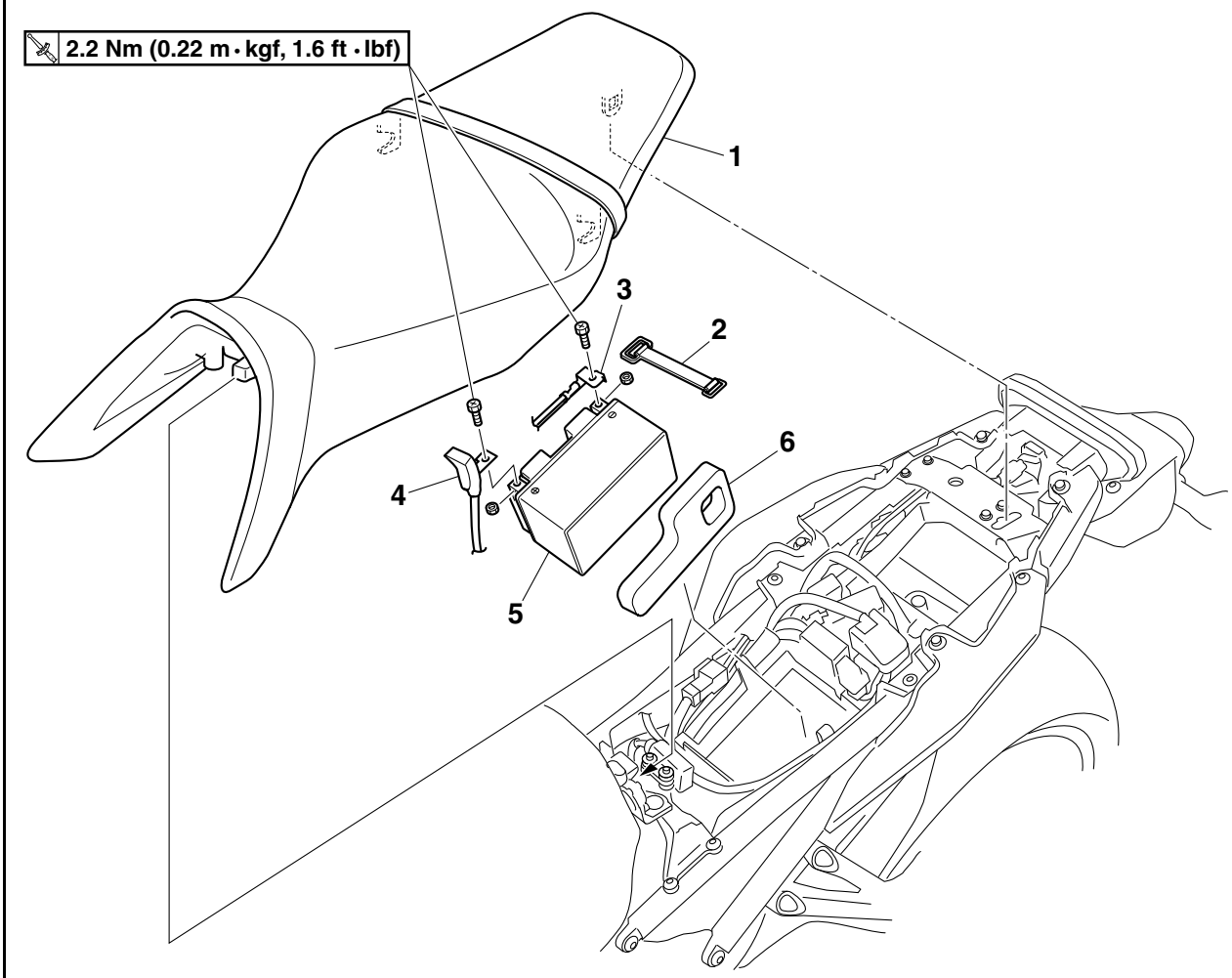

Order	Job/Parts to remove	Q'ty	Remarks
1	Rider seat	1	
2	Battery band	1	
3	Negative battery lead	1	Disconnect.
4	Positive battery lead	1	Disconnect.
5	Battery	1	
6	Spacer	1	

Removing the rear cover

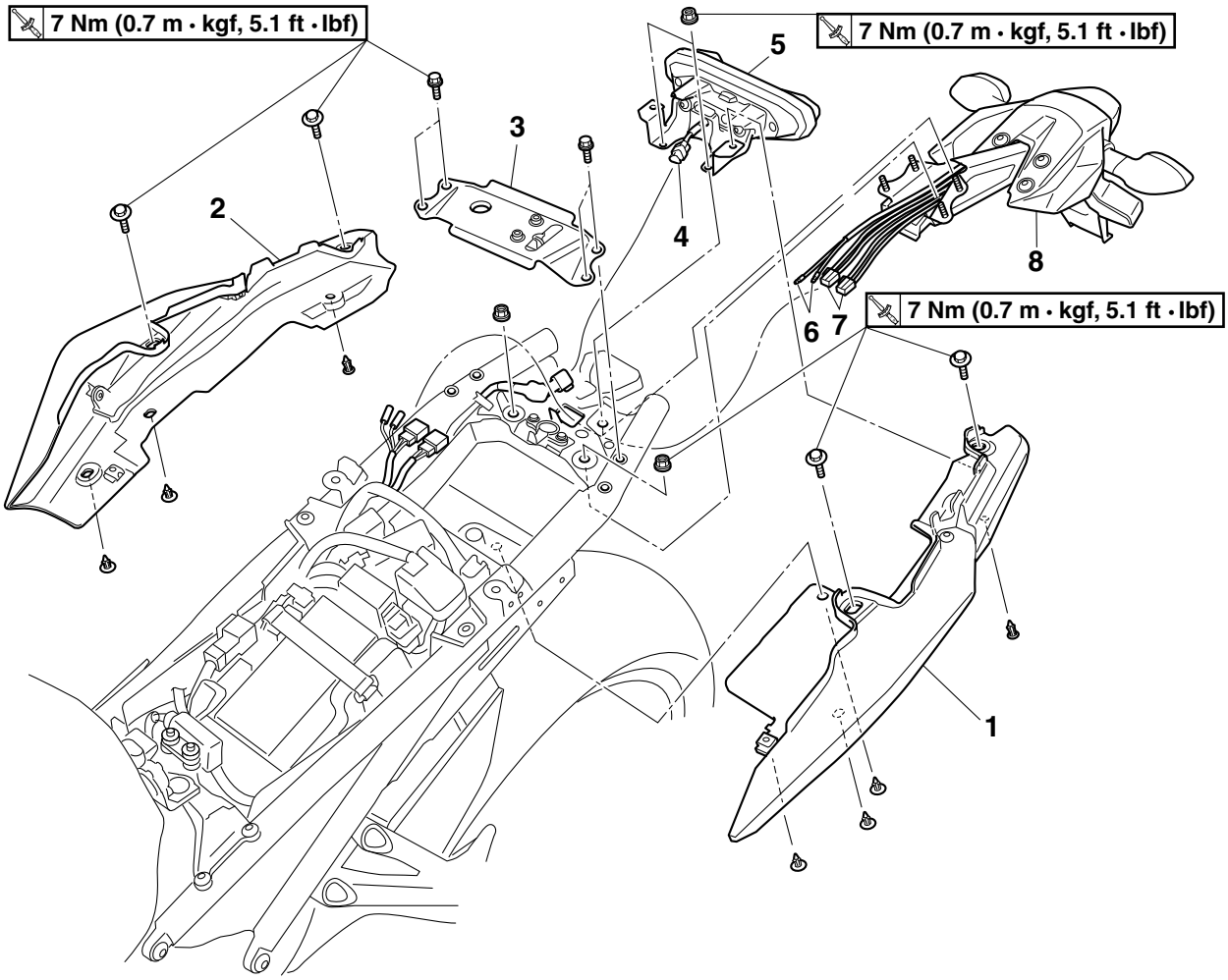

Order	Job/Parts to remove	Q'ty	Remarks
	Rider seat		Refer to "GENERAL CHASSIS" on page 4-1.
1	Rear side cover (left)	1	
2	Rear side cover (right)	1	
3	Seat bracket	1	
4	Tail/brake light coupler	1	Disconnect.
5	Tail/brake light	1	
6	License plate light connector	2	Disconnect.
7	Rear turn signal light coupler	2	Disconnect.
8	Mudguard assembly	1	

Removing the headlight and meter assembly

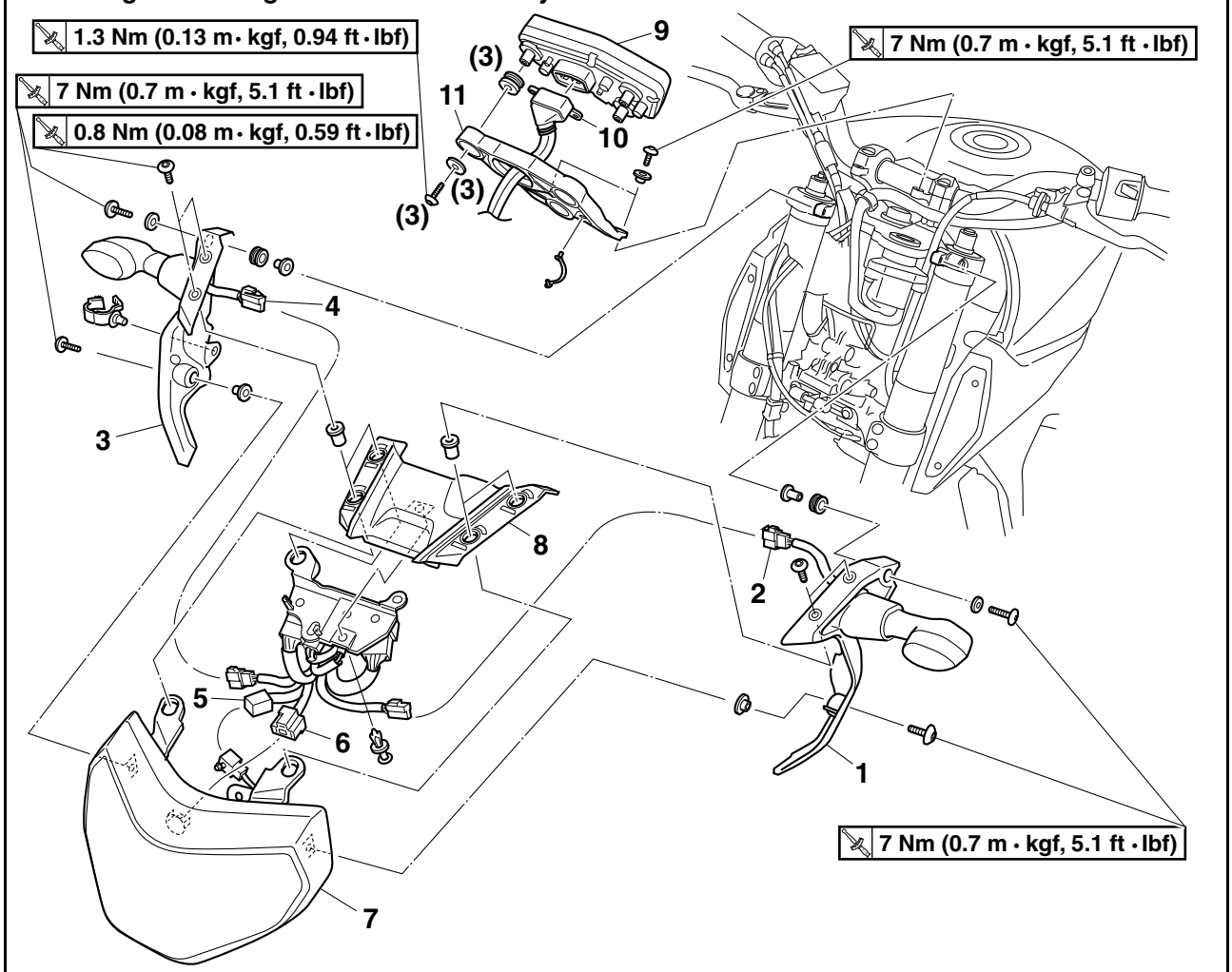

Order	Job/Parts to remove	Q'ty	Remarks
1	Headlight unit side cover (left)	1	
2	Turn signal/position light coupler (left)	1	Disconnect.
3	Headlight unit side cover (right)	1	
4	Turn signal/position light coupler (right)	1	Disconnect.
5	Auxiliary light coupler	1	Disconnect.
6	Headlight coupler	1	Disconnect.
7	Headlight assembly	1	
8	Headlight unit cover	1	
9	Meter assembly	1	
10	Meter assembly coupler	1	Disconnect.
11	Meter bracket	1	

Removing the air scoop and fuel tank cover

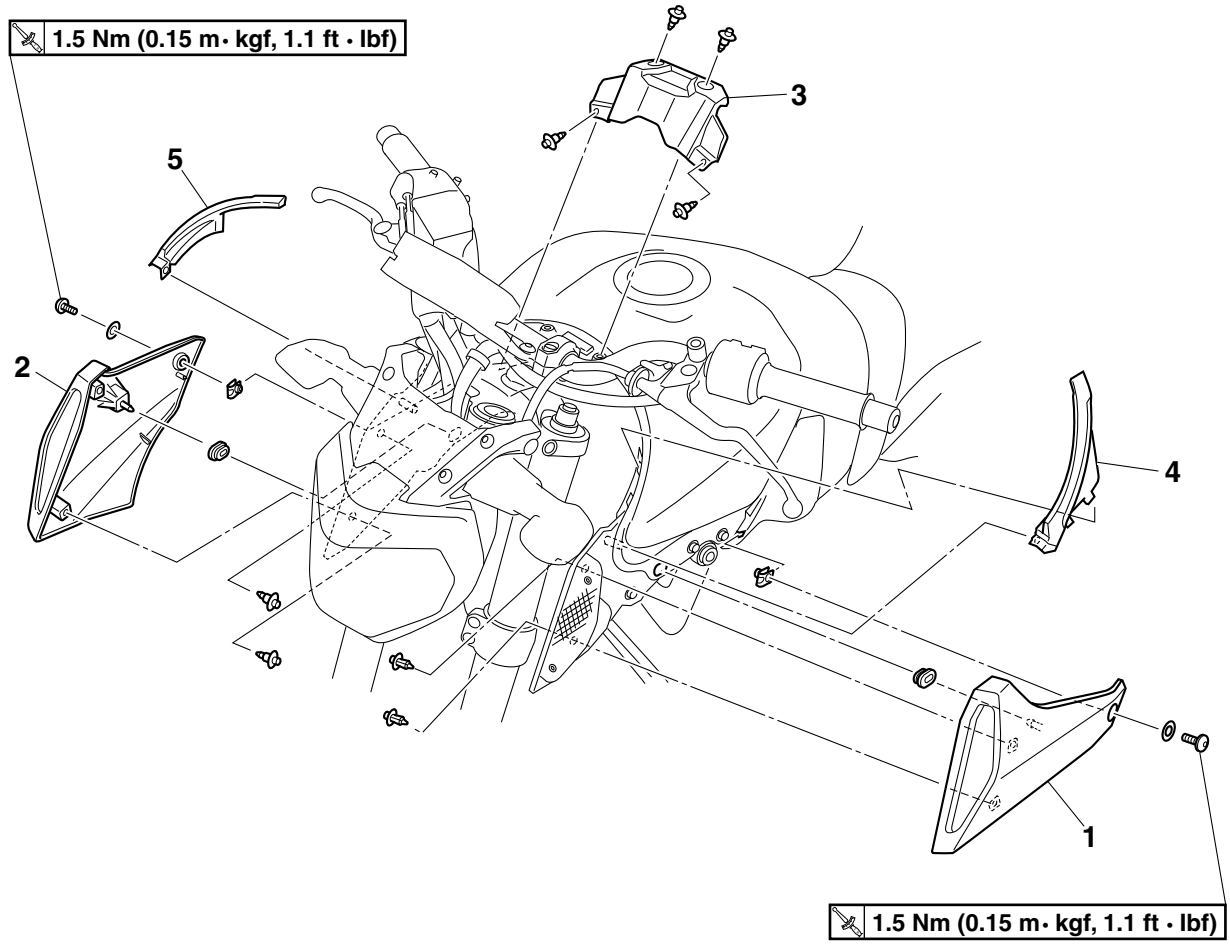

Order	Job/Parts to remove	Q'ty	Remarks
1	Air scoop (left)	1	
2	Air scoop (right)	1	
3	Fuel tank cover	1	
4	Fuel tank mole (left)	1	
5	Fuel tank mole (right)	1	

EAS1RC1401
REMOVING THE AIR SCOOPS
1. Remove:
   • Air scoop (left) “1”

▼▼▼▼▼▼▼▼▼▼▼▼▼▼▼▼▼▼▼▼▼▼▼▼▼▼▼▼▼▼▼▼▼▼

a. Remove the air scoop bolt “2” and quick fasteners “3”.
b. Pull the air scoop off at the areas “a” shown.

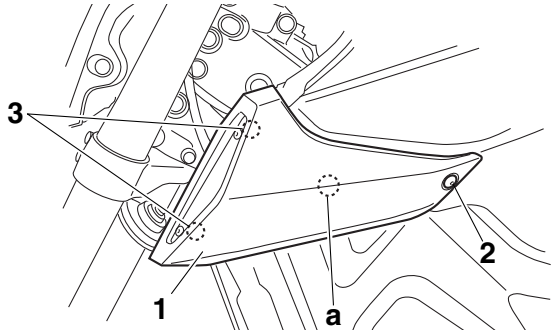

▲▲▲▲▲▲▲▲▲▲▲▲▲▲▲▲▲▲▲▲▲▲▲▲▲▲▲▲▲▲▲▲▲▲

2. Remove:
   • Air scoop (right) “1”

▼▼▼▼▼▼▼▼▼▼▼▼▼▼▼▼▼▼▼▼▼▼▼▼▼▼▼▼▼▼▼▼▼▼

a. Remove the air scoop bolt “2” and quick fasteners “3”.
b. Pull the air scoop off at the areas “a” shown.

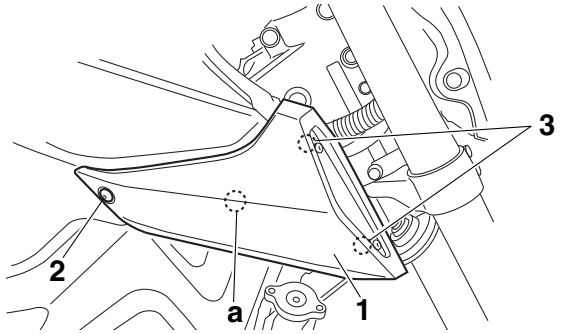

▲▲▲▲▲▲▲▲▲▲▲▲▲▲▲▲▲▲▲▲▲▲▲▲▲▲▲▲▲▲▲▲▲▲

EAS1RC1402
INSTALLING THE AIR SCOOPS
1. Install:
   • Air scoop (left) “1”

▼▼▼▼▼▼▼▼▼▼▼▼▼▼▼▼▼▼▼▼▼▼▼▼▼▼▼▼▼▼▼▼▼▼

a. Insert the projection “a” on the air scoop into the grommet “b” and insert the projection “c” on the air scoop into the hole “d”.
b. Install the air scoop bolt and quick fastener screws, and then tighten the bolts to specification.

	**Air scoop bolt** **1.5 Nm (0.15 m·kgf, 1.1 ft·lbf)**

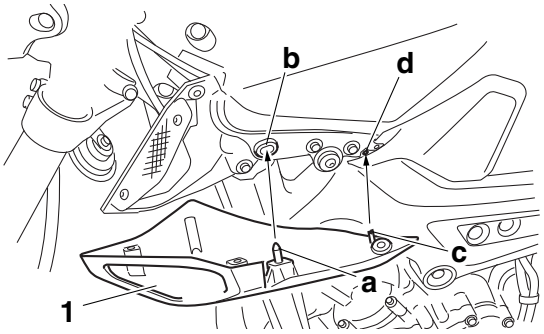

▲▲▲▲▲▲▲▲▲▲▲▲▲▲▲▲▲▲▲▲▲▲▲▲▲▲▲▲▲▲▲▲▲▲

2. Install:
   • Air scoop (right) “1”

▼▼▼▼▼▼▼▼▼▼▼▼▼▼▼▼▼▼▼▼▼▼▼▼▼▼▼▼▼▼▼▼▼▼

a. Insert the projection “a” on the air scoop into the grommet “b” and insert the projection “c” on the air scoop into the hole “d”.
b. Install the air scoop bolt and quick fastener screws, and then tighten the bolts to specification.

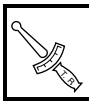	**Air scoop bolt** **1.5 Nm (0.15 m·kgf, 1.1 ft·lbf)**

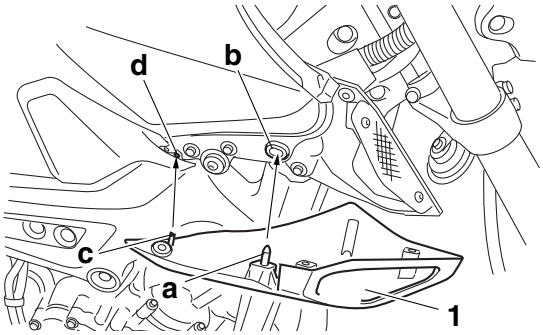

▲▲▲▲▲▲▲▲▲▲▲▲▲▲▲▲▲▲▲▲▲▲▲▲▲▲▲▲▲▲▲▲▲▲

EAS1RC1404
INSTALLING THE FUEL TANK MOLES
1. Install:
   • Fuel tank mole (left) “1”

▼▼▼▼▼▼▼▼▼▼▼▼▼▼▼▼▼▼▼▼▼▼▼▼▼▼▼▼▼▼▼▼▼▼

a. Install the hole “a” in the fuel tank mole onto the projection “b” on the air scoop stay.

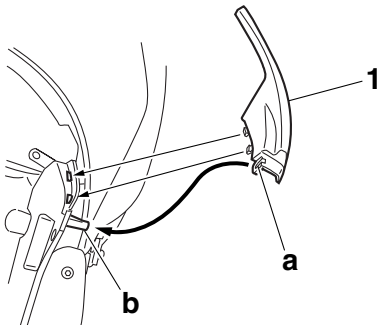

▲▲▲▲▲▲▲▲▲▲▲▲▲▲▲▲▲▲▲▲▲▲▲▲▲▲▲▲▲▲▲▲

2. Install:
   - Fuel tank mole (right) “1”

▼▼▼▼▼▼▼▼▼▼▼▼▼▼▼▼▼▼▼▼▼▼▼▼▼▼▼▼▼▼▼▼

a. Install the hole “a” in the fuel tank mole onto the projection “b” on the air scoop stay.

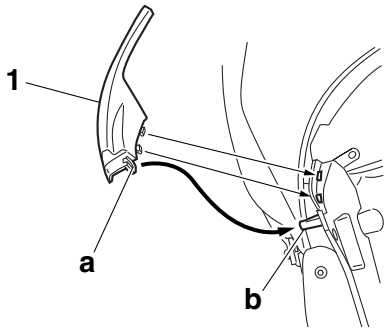

▲▲▲▲▲▲▲▲▲▲▲▲▲▲▲▲▲▲▲▲▲▲▲▲▲▲▲▲▲▲▲▲

Removing the air filter case

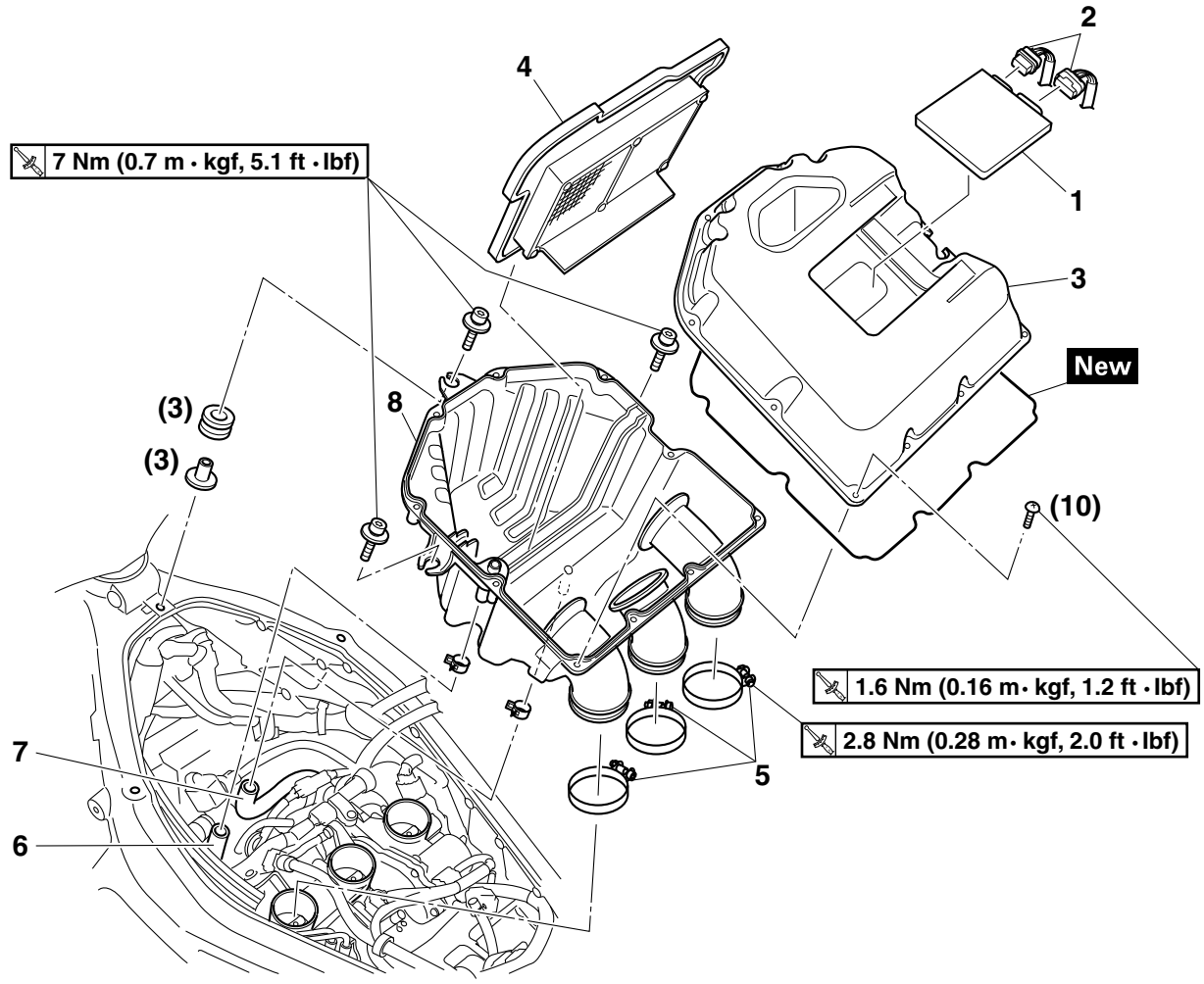

Order	Job/Parts to remove	Q'ty	Remarks
	Rider seat		Refer to "GENERAL CHASSIS" on page 4-1.
	Air scoop/Fuel tank cover		Refer to "GENERAL CHASSIS" on page 4-1.
	Fuel tank		Refer to "FUEL TANK" on page 7-1.
1	ECU (engine control unit)	1	
2	ECU coupler	2	Disconnect.
3	Air filter case cover	1	
4	Air filter element	1	
5	Air filter case joint clamp screw	3	Loosen.
6	Air induction system hose	1	Disconnect.
7	Cylinder head breather hose	1	Disconnect.
8	Air filter case	1	

EAS21870

FRONT WHEEL

Removing the front wheel and brake discs

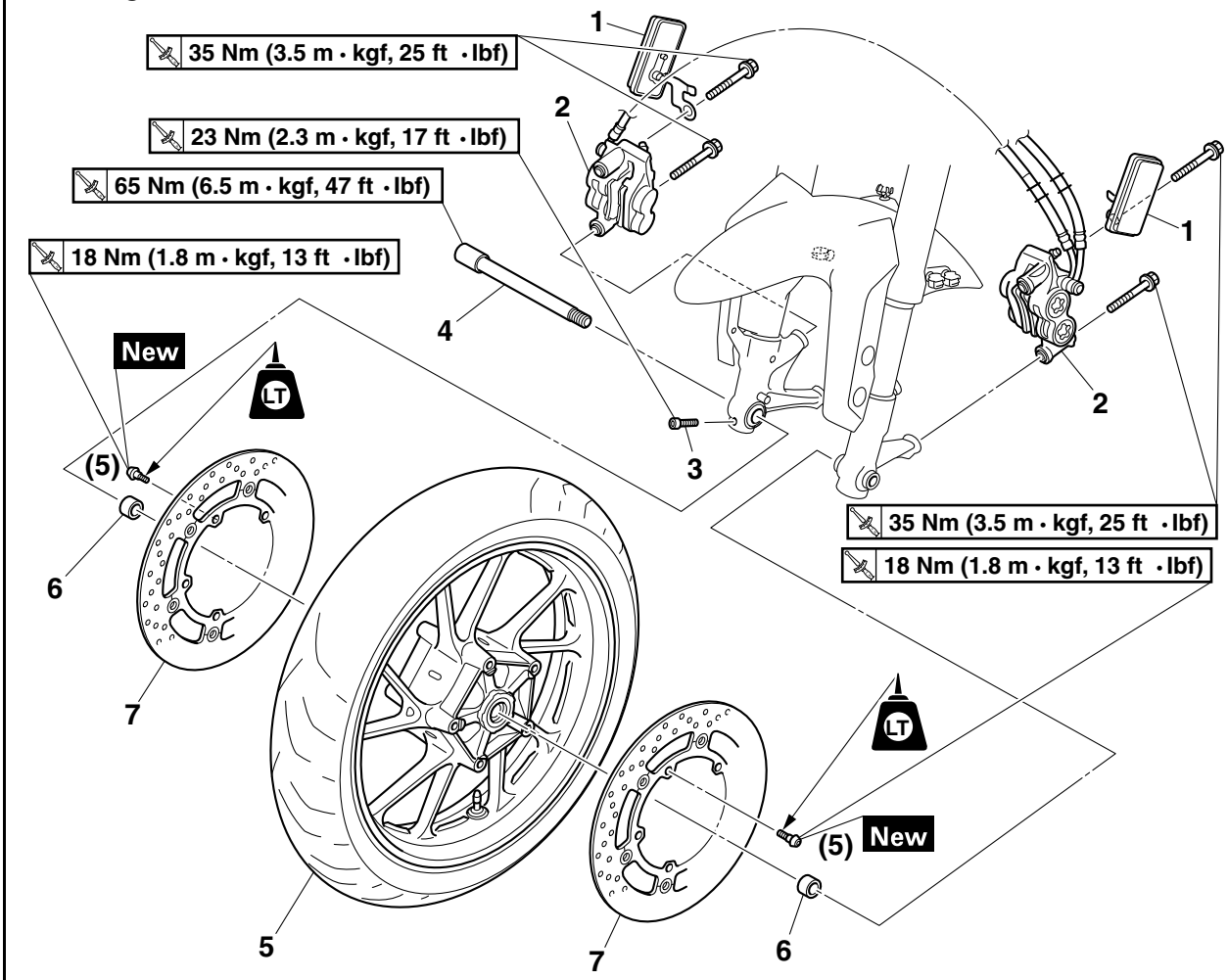

Order	Job/Parts to remove	Q'ty	Remarks
1	Reflector	2	
2	Front brake caliper	2	
3	Wheel axle pinch bolt	1	Loosen.
4	Wheel axle	1	
5	Front wheel	1	
6	Collar	2	
7	Front brake disc	2	

Disassembling the front wheel

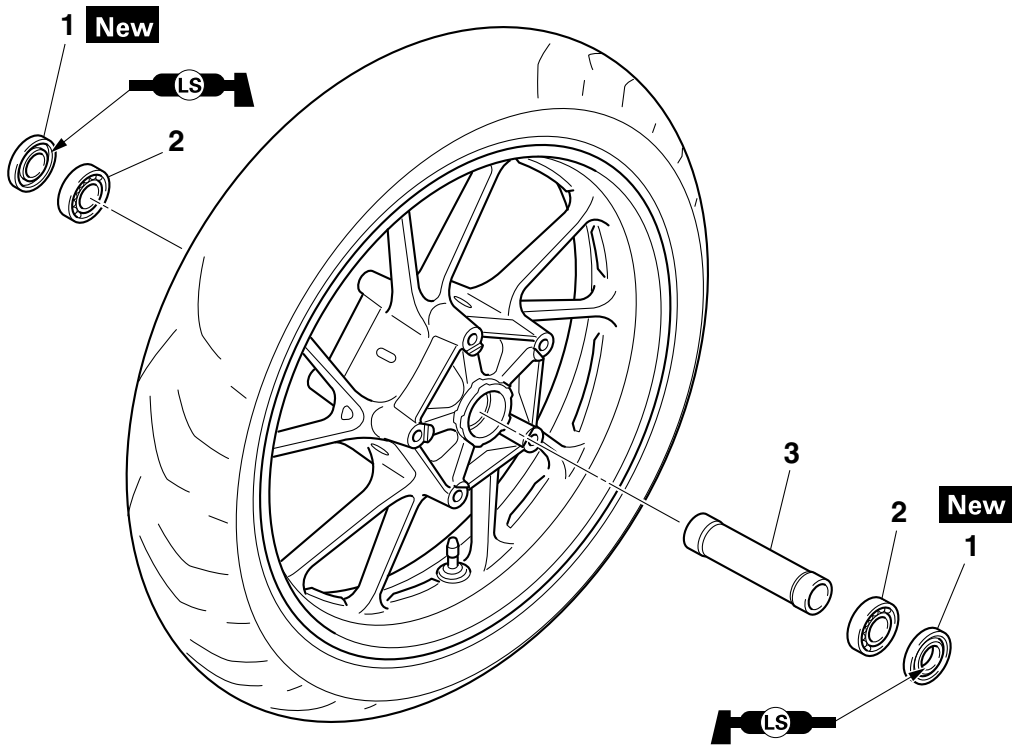

Order	Job/Parts to remove	Q'ty	Remarks
1	Oil seal	2	
2	Wheel bearing	2	
3	Spacer	1	

EAS21900

REMOVING THE FRONT WHEEL

1. Stand the vehicle on a level surface.

EWA13120

WARNING

Securely support the vehicle so that there is no danger of it falling over.

2. Remove:
   - Left brake caliper
   - Right brake caliper

ECA1RC1439

NOTICE

Do not apply the brake lever when removing the brake calipers.

3. Elevate:
   - Front wheel

TIP

Place the vehicle on a suitable stand so that the front wheel is elevated.

4. Loosen:
   - Wheel axle pinch bolt
5. Remove:
   - Wheel axle
   - Front wheel

EAS21910

DISASSEMBLING THE FRONT WHEEL

1. Remove:
   - Oil seals
   - Wheel bearings

▼▼▼▼▼▼▼▼▼▼▼▼▼▼▼▼▼▼▼▼▼▼▼▼▼▼▼▼▼▼▼▼▼▼

a. Clean the surface of the front wheel hub.
b. Remove the oil seals “1” with a flat-head screwdriver.

TIP

To prevent damaging the wheel, place a rag “2” between the screwdriver and the wheel surface.

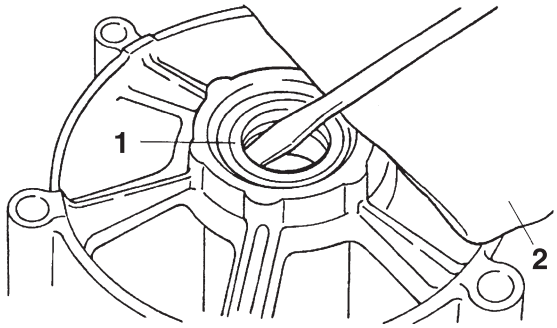

c. Remove the wheel bearings “3” with a general bearing puller.

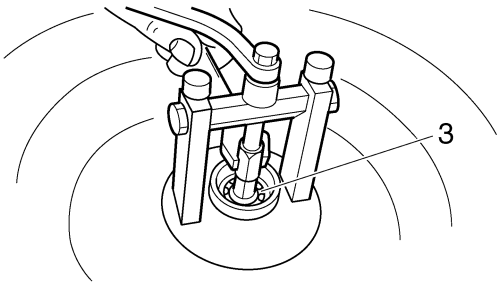

▲▲▲▲▲▲▲▲▲▲▲▲▲▲▲▲▲▲▲▲▲▲▲▲▲▲▲▲▲▲▲▲▲▲

EAS21922

CHECKING THE FRONT WHEEL

1. Check:
   - Wheel axle
     Roll the wheel axle on a flat surface.
     Bends → Replace.

EWA13460

WARNING

Do not attempt to straighten a bent wheel axle.

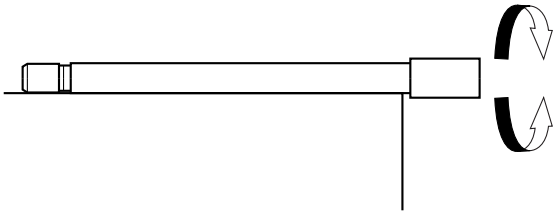

2. Check:
   - Tire
   - Front wheel
     Damage/wear → Replace.
     Refer to “CHECKING THE TIRES” on page 3-15 and “CHECKING THE WHEELS” on page 3-15.
3. Measure:
   - Radial wheel runout “1”
   - Lateral wheel runout “2”
     Over the specified limits → Replace.

Radial wheel runout limit
1.0 mm (0.04 in)
Lateral wheel runout limit
0.5 mm (0.02 in)

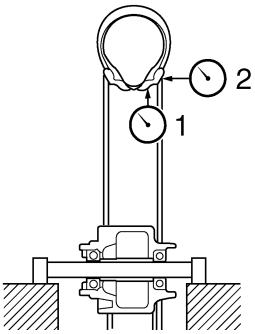

4. Check:
   - Wheel bearings
     Front wheel turns roughly or is loose → Replace the wheel bearings.
   - Oil seal
     Damage/wear → Replace.

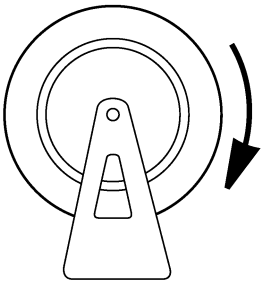

EAS21960

ASSEMBLING THE FRONT WHEEL

1. Install:
   - Wheel bearings New
   - Oil seals New

▼▼▼▼▼▼▼▼▼▼▼▼▼▼▼▼▼▼▼▼▼▼▼▼▼▼▼▼▼▼▼▼▼▼

a. Install the new wheel bearing (right side).

ECA1RC1408

NOTICE

Do not contact the wheel bearing inner race "1" or balls "2". Contact should be made only with the outer race "3".

TIP

Use a socket "4" that matches the diameter of the wheel bearing outer race.

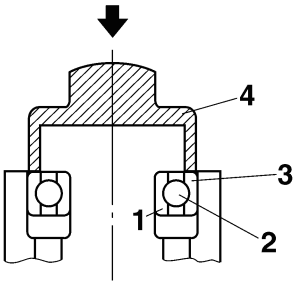

b. Install the spacer.

c. Install the new wheel bearing (left side).

TIP

Place a suitable washer "1" between the socket "2" and the bearing so that both the inner race "3" and outer race "4" are pressed at the same time, and then press the bearing until the inner race makes contact with the spacer "5".

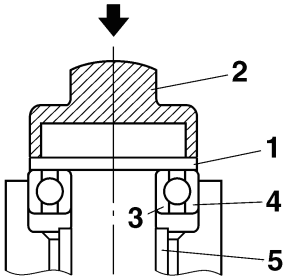

d. Install the new oil seals.

▲▲▲▲▲▲▲▲▲▲▲▲▲▲▲▲▲▲▲▲▲▲▲▲▲▲▲▲▲▲▲▲▲▲

EAS21970

ADJUSTING THE FRONT WHEEL STATIC BALANCE

TIP

- After replacing the tire, wheel or both, the front wheel static balance should be adjusted.
- Adjust the front wheel static balance with the brake disc installed.

1. Remove:
   - Balancing weight(s)
2. Find:
   - Front wheel's heavy spot

TIP

Place the front wheel on a suitable balancing stand.

▼▼▼▼▼▼▼▼▼▼▼▼▼▼▼▼▼▼▼▼▼▼▼▼▼▼▼▼▼▼▼▼▼▼

a. Spin the front wheel.

b. When the front wheel stops, put an "X_1" mark at the bottom of the wheel.

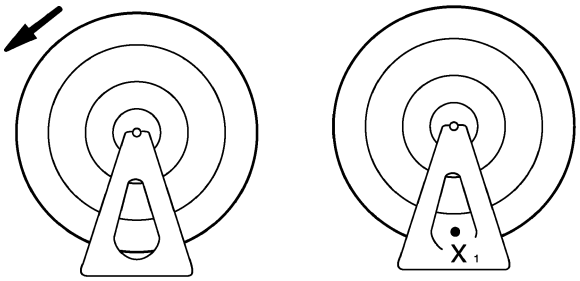

c. Turn the front wheel 90° so that the "X_1" mark is positioned as shown.

d. Release the front wheel.
e. When the wheel stops, put an "X_2" mark at the bottom of the wheel.

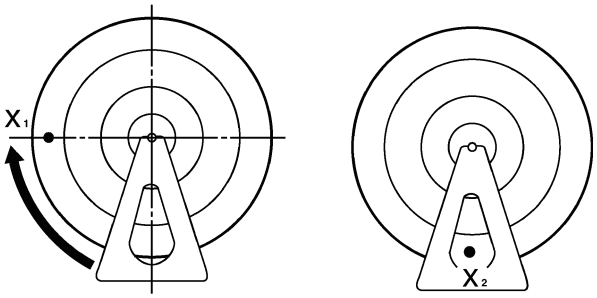

f. Repeat steps (c) through (e) several times until all the marks come to rest at the same spot.
g. The spot where all the marks come to rest is the front wheel's heavy spot "X".

▲▲▲▲▲▲▲▲▲▲▲▲▲▲▲▲▲▲▲▲▲▲▲▲▲▲▲▲▲▲▲▲

3. Adjust:
   • Front wheel static balance

▼▼▼▼▼▼▼▼▼▼▼▼▼▼▼▼▼▼▼▼▼▼▼▼▼▼▼▼▼▼▼▼

a. Install a balancing weight "1" onto the rim exactly opposite the heavy spot "X".

TIP
Start with the lightest weight.

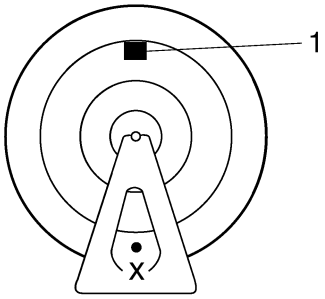

b. Turn the front wheel 90° so that the heavy spot is positioned as shown.

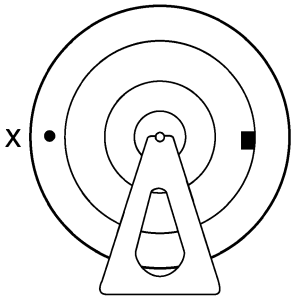

c. If the heavy spot does not stay in that position, install a heavier weight.
d. Repeat steps (b) and (c) until the front wheel is balanced.

▲▲▲▲▲▲▲▲▲▲▲▲▲▲▲▲▲▲▲▲▲▲▲▲▲▲▲▲▲▲▲▲

4. Check:
   • Front wheel static balance

▼▼▼▼▼▼▼▼▼▼▼▼▼▼▼▼▼▼▼▼▼▼▼▼▼▼▼▼▼▼▼▼

a. Turn the front wheel and make sure it stays at each position shown.

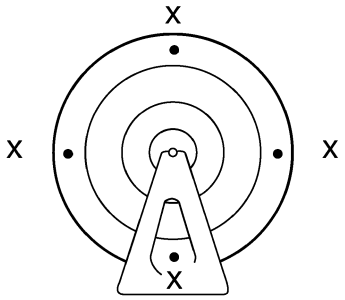

b. If the front wheel does not remain stationary at all of the positions, rebalance it.

▲▲▲▲▲▲▲▲▲▲▲▲▲▲▲▲▲▲▲▲▲▲▲▲▲▲▲▲▲▲▲▲

EAS22000

INSTALLING THE FRONT WHEEL (FRONT BRAKE DISCS)

1. Install:
   • Front brake discs

Front brake disc bolt
18 Nm (1.8 m·kgf, 13 ft·lbf)
LOCTITE®

ECA1RC1409

NOTICE

Replace the brake disc bolts with new ones.

TIP
Tighten the brake disc bolts in stages and in a crisscross pattern.

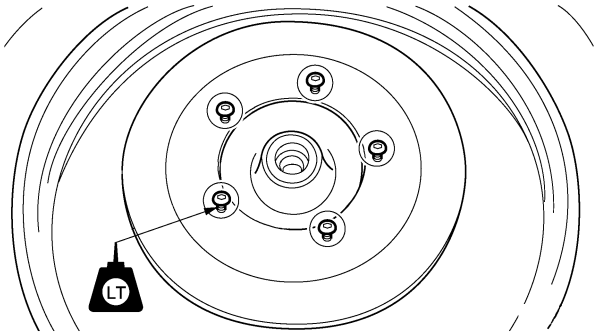

2. Check:
   • Front brake discs
   Refer to "CHECKING THE FRONT BRAKE DISCS" on page 4-25.

3. Lubricate:
   - Oil seal lips

	Recommended lubricant **Lithium-soap-based grease**

4. Install:
   - Collars
   - Front wheel
   - Wheel axle
5. Tighten:
   - Wheel axle
   - Wheel axle pinch bolt

	Wheel axle **65 Nm (6.5 m·kgf, 47 ft·lbf)** **Wheel axle pinch bolt** **23 Nm (2.3 m·kgf, 17 ft·lbf)**

ECA1RC1401

NOTICE

Before tightening the wheel axle, push down hard on the handlebar several times and check if the front fork rebounds smoothly.

TIP

Check that wheel axle end “a” is flush with front folk surface “b” and then tighten the wheel axle pinch bolt. If end “a” is not flush with surface “b”, align the ends manually or with a plastic hammer.

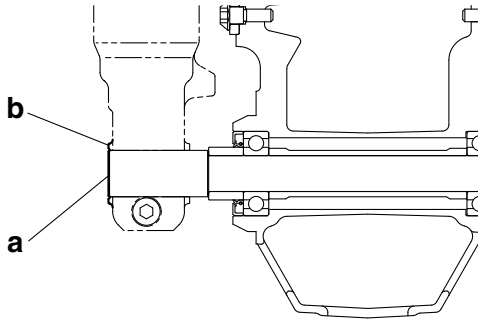

6. Install:
   - Front brake calipers

	Front brake caliper bolt **35 Nm (3.5 m·kgf, 25 ft·lbf)**

EWA13500

WARNING

Make sure the brake hose is routed properly.

EAS22020

REAR WHEEL

Removing the rear wheel

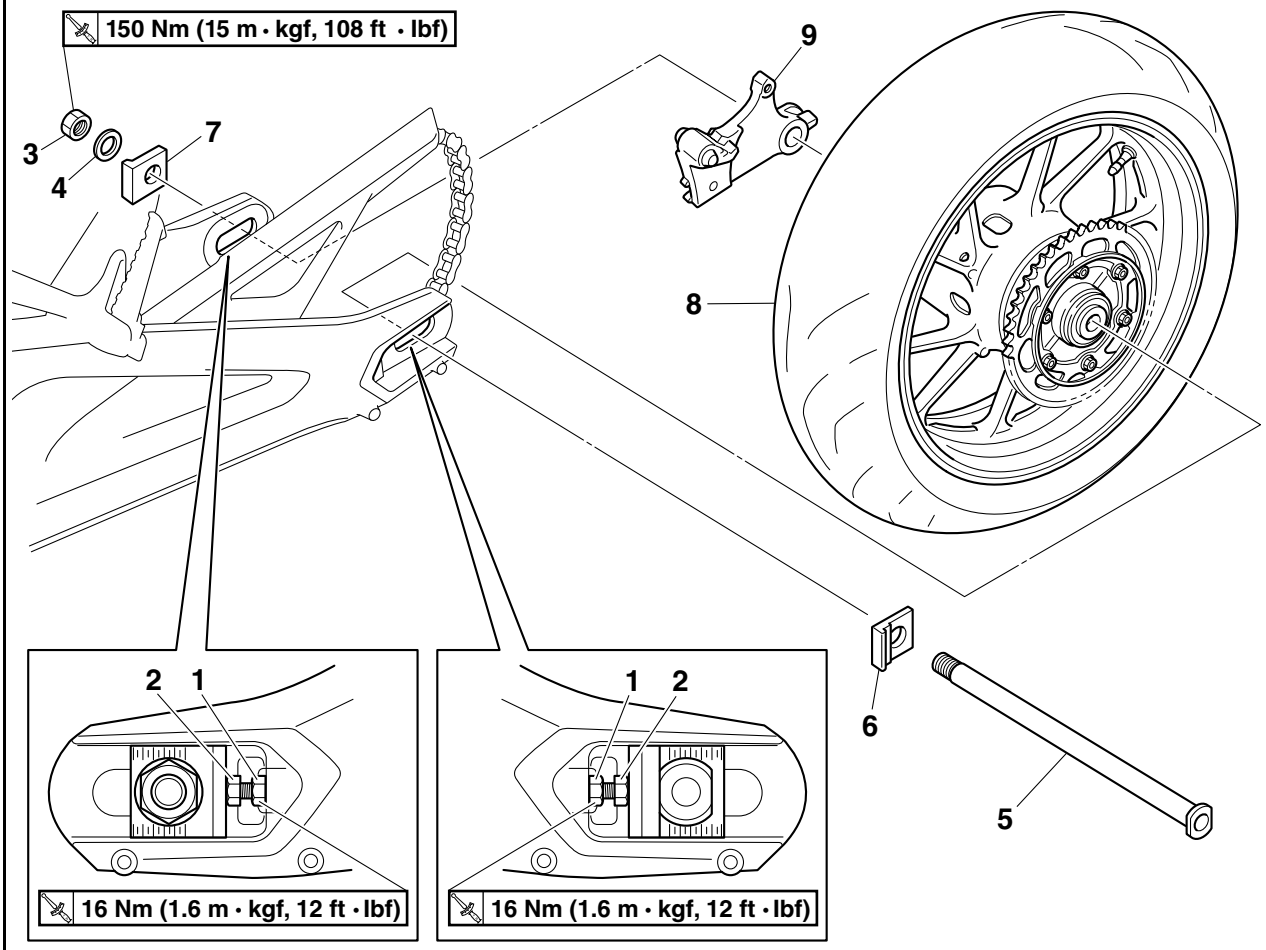

Order	Job/Parts to remove	Q'ty	Remarks
	Rear brake caliper		Refer to "REAR BRAKE" on page 4-32.
1	Locknut	2	Loosen.
2	Adjusting bolt	2	Loosen.
3	Wheel axle nut	1	
4	Washer	1	
5	Wheel axle	1	
6	Adjusting block (left)	1	
7	Adjusting block (right)	1	
8	Rear wheel	1	
9	Brake caliper bracket	1	

Removing the brake disc and rear wheel sprocket

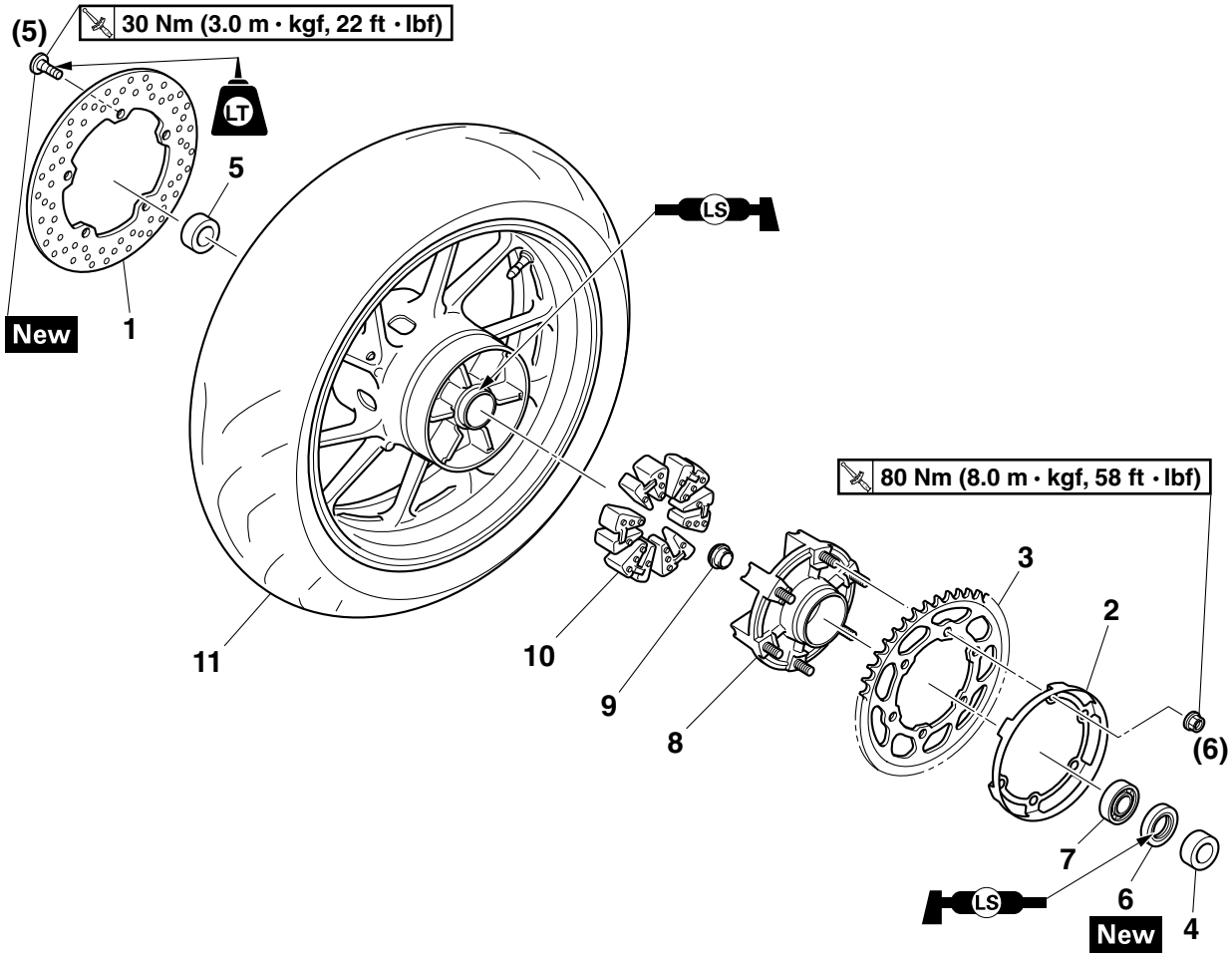

Order	Job/Parts to remove	Q'ty	Remarks
1	Rear brake disc	1	
2	Bracket	1	
3	Rear wheel sprocket	1	
4	Collar	1	
5	Collar	1	
6	Oil seal	1	
7	Bearing	1	
8	Rear wheel drive hub	1	
9	Collar	1	
10	Rear wheel drive hub damper	6	
11	Rear wheel	1	

Disassembling the rear wheel

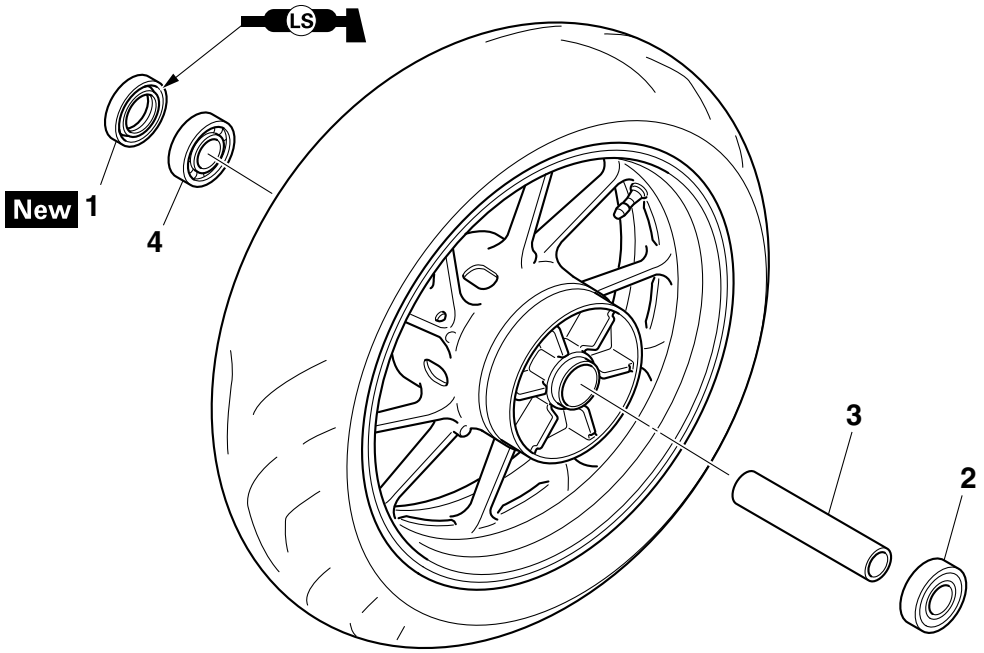

Order	Job/Parts to remove	Q'ty	Remarks
1	Oil seal	1	
2	Wheel bearing	1	
3	Spacer	1	
4	Wheel bearing	1	

EAS22040

REMOVING THE REAR WHEEL

1. Stand the vehicle on a level surface.

EWA13120

WARNING

Securely support the vehicle so that there is no danger of it falling over.

TIP

Place the vehicle on a suitable stand so that the rear wheel is elevated.

2. Remove:
   - Rear brake caliper "1"

ECA1RC1437

NOTICE

Do not depress the brake pedal when removing the brake caliper.

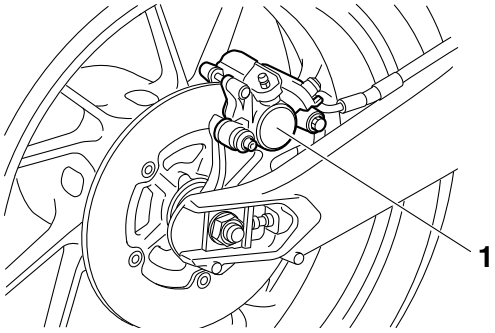

3. Loosen:
   - Locknuts "1"
   - Adjusting bolts "2"

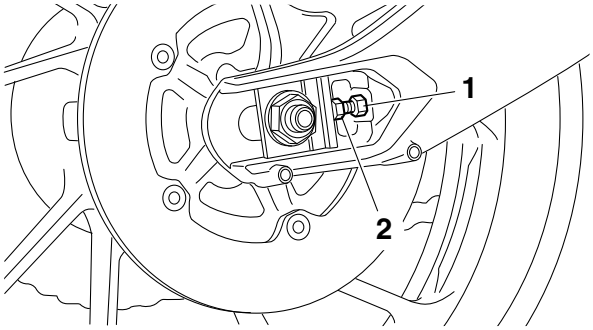

4. Remove:
   - Wheel axle nut "1"
   - Washer
   - Wheel axle "2"
   - Rear wheel
   - Brake caliper bracket

TIP

Push the rear wheel forward and remove the drive chain from the rear wheel sprocket.

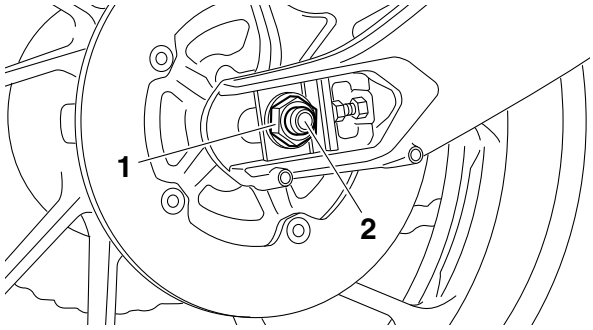

EAS22080

DISASSEMBLING THE REAR WHEEL

1. Remove:
   - Oil seal
   - Wheel bearings
     Refer to "DISASSEMBLING THE FRONT WHEEL" on page 4-10.

EAS22091

CHECKING THE REAR WHEEL

1. Check:
   - Wheel axle
   - Wheel bearings
   - Oil seals
     Refer to "CHECKING THE FRONT WHEEL" on page 4-10.
2. Check:
   - Tire
   - Rear wheel
     Damage/wear → Replace.
     Refer to "CHECKING THE TIRES" on page 3-15 and "CHECKING THE WHEELS" on page 3-15.
3. Measure:
   - Radial wheel runout
   - Lateral wheel runout
     Refer to "CHECKING THE FRONT WHEEL" on page 4-10.

EAS22110

CHECKING THE REAR WHEEL DRIVE HUB

1. Check:
   - Rear wheel drive hub "1"
     Cracks/damage → Replace.
   - Rear wheel drive hub dampers "2"
     Damage/wear → Replace.

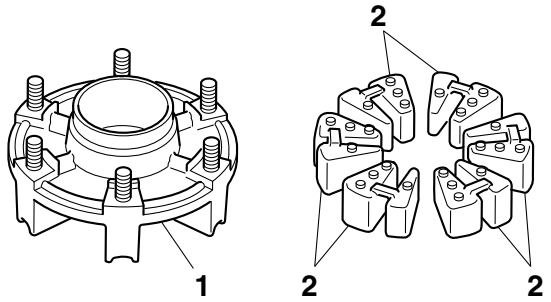

EAS1RC1411

CHECKING AND REPLACING THE REAR WHEEL SPROCKET

1. Check:
   - Rear wheel sprocket
     More than 1/4 tooth “a” wear → Replace the drive sprocket, the rear wheel sprocket and the drive chain as a set.
     Bent teeth → Replace the drive sprocket, the rear wheel sprocket and the drive chain as a set.

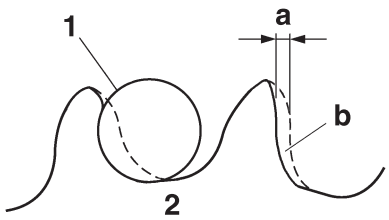

b. Correct

1. Drive chain roller
2. Rear wheel sprocket

2. Replace:
   - Rear wheel sprocket

▼▼▼▼▼▼▼▼▼▼▼▼▼▼▼▼▼▼▼▼▼▼▼▼▼▼▼▼▼▼▼▼▼▼

a. Remove the rear wheel sprocket nuts and the rear wheel sprocket.
b. Clean the rear wheel drive hub with a clean cloth, especially the surfaces that contact the sprocket.
c. Install the new rear wheel sprocket.

	**Rear wheel sprocket nut** **80 Nm (8.0 m·kgf, 58 ft·lbf)**

TIP

Tighten the rear wheel sprocket nuts in stages and in a crisscross pattern.

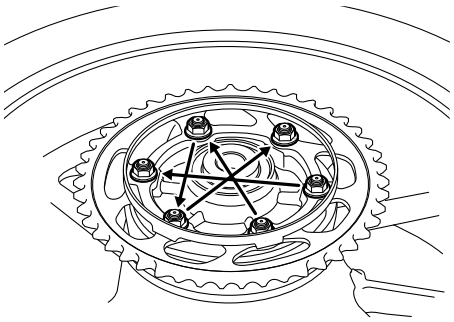

▲▲▲▲▲▲▲▲▲▲▲▲▲▲▲▲▲▲▲▲▲▲▲▲▲▲▲▲▲▲▲▲▲▲

EAS22140

ASSEMBLING THE REAR WHEEL

1. Install:
   - Wheel bearings New
   - Oil seal New
     Refer to “ASSEMBLING THE FRONT WHEEL” on page 4-11.

EAS22150

ADJUSTING THE REAR WHEEL STATIC BALANCE

TIP

- After replacing the tire, wheel or both, the rear wheel static balance should be adjusted.
- Adjust the rear wheel static balance with the brake disc and rear wheel drive hub installed.

1. Adjust:
   - Rear wheel static balance
     Refer to “ADJUSTING THE FRONT WHEEL STATIC BALANCE” on page 4-11.

EAS22160

INSTALLING THE REAR WHEEL (REAR BRAKE DISC)

1. Install:
   - Rear brake disc

	**Rear brake disc bolt** **30 Nm (3.0 m·kgf, 22 ft·lbf)** **LOCTITE®**

ECA1RC1409

NOTICE

Replace the brake disc bolts with new ones.

TIP

Tighten the brake disc bolts in stages and in a crisscross pattern.

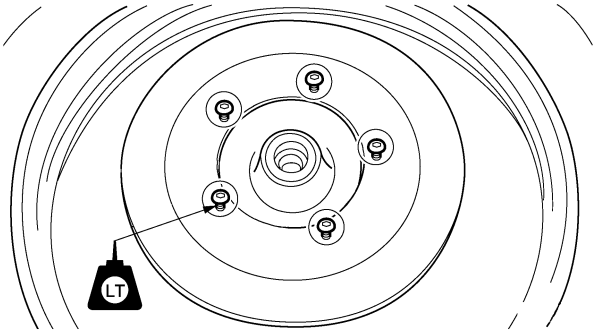

2. Check:
   - Rear brake disc
     Refer to “CHECKING THE REAR BRAKE DISC” on page 4-38.
3. Lubricate:
   - Oil seal lips

	Recommended lubricant **Lithium-soap-based grease**

4. Install:
   - Collars
   - Brake caliper bracket
   - Rear wheel
   - Adjusting blocks
   - Wheel axle
   - Washer
   - Wheel axle nut

TIP
- Do not install the brake caliper.
- Align the projection “a” in the swingarm with the slot “b” of the brake caliper bracket.
- Install the adjusting block so that projection “c” faces to the front of the vehicle.

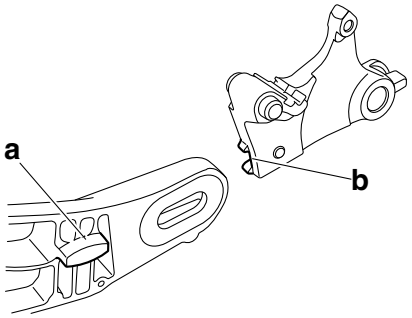

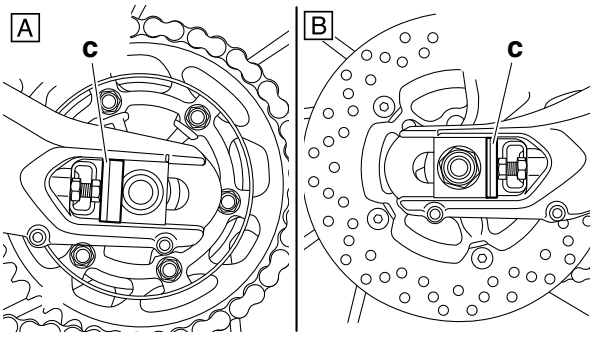

A. Left side
B. Right side

5. Install:
   - Rear brake caliper
   - Rear brake caliper bolts
6. Adjust:
   - Drive chain slack
     Refer to “ADJUSTING THE DRIVE CHAIN SLACK” on page 3-16.

	Drive chain slack **5.0–15.0 mm (0.20–0.59 in)**

7. Tighten:
   - Wheel axle nut
   - Rear brake caliper bolts

	Wheel axle nut **150 Nm (15 m·kgf, 108 ft·lbf)** **Rear brake caliper bolt (front)** **27 Nm (2.7 m·kgf, 20 ft·lbf)** **Rear brake caliper bolt (rear)** **22 Nm (2.2 m·kgf, 16 ft·lbf)** **LOCTITE®**

EWA13500

WARNING

Make sure the brake hose is routed properly.

TIP
When tightening the wheel axle nut, there should be no clearance “a” between the adjusting block “1” and adjusting bolt “2”.

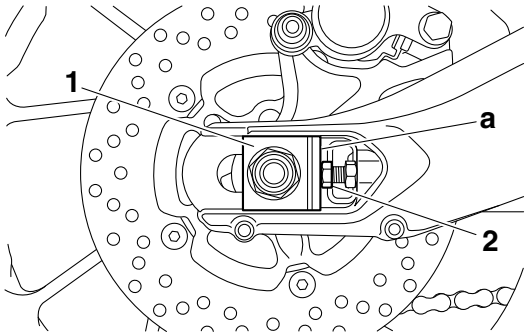

EAS22210

FRONT BRAKE

Removing the front brake pads

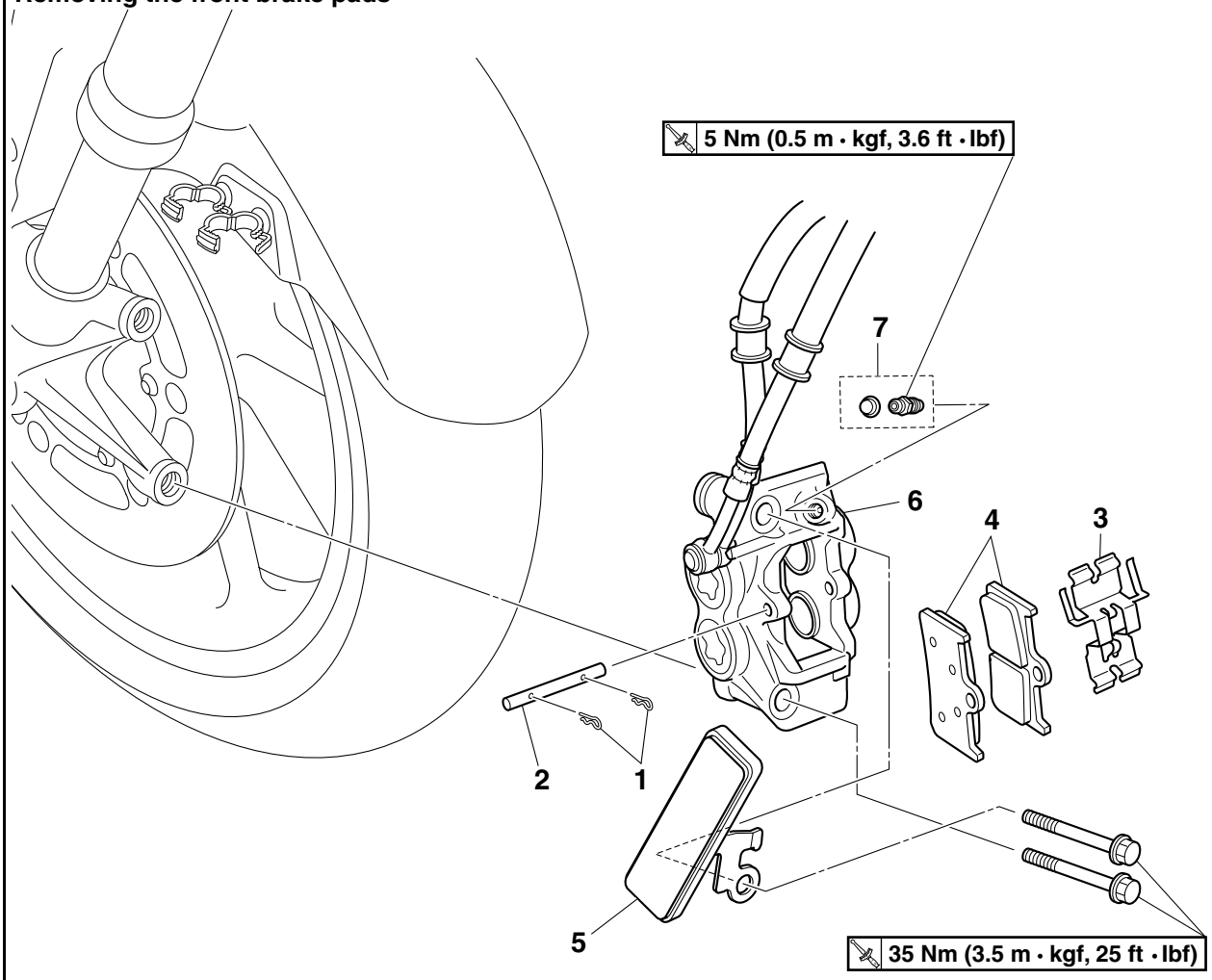

Order	Job/Parts to remove	Q'ty	Remarks
			The following procedure applies to both of the front brake calipers.
1	Brake pad clip	2	
2	Brake pad pin	1	
3	Brake pad spring	1	
4	Brake pad	2	
5	Reflector	1	
6	Front brake caliper	1	
7	Bleed screw	1	

Removing the front brake master cylinder

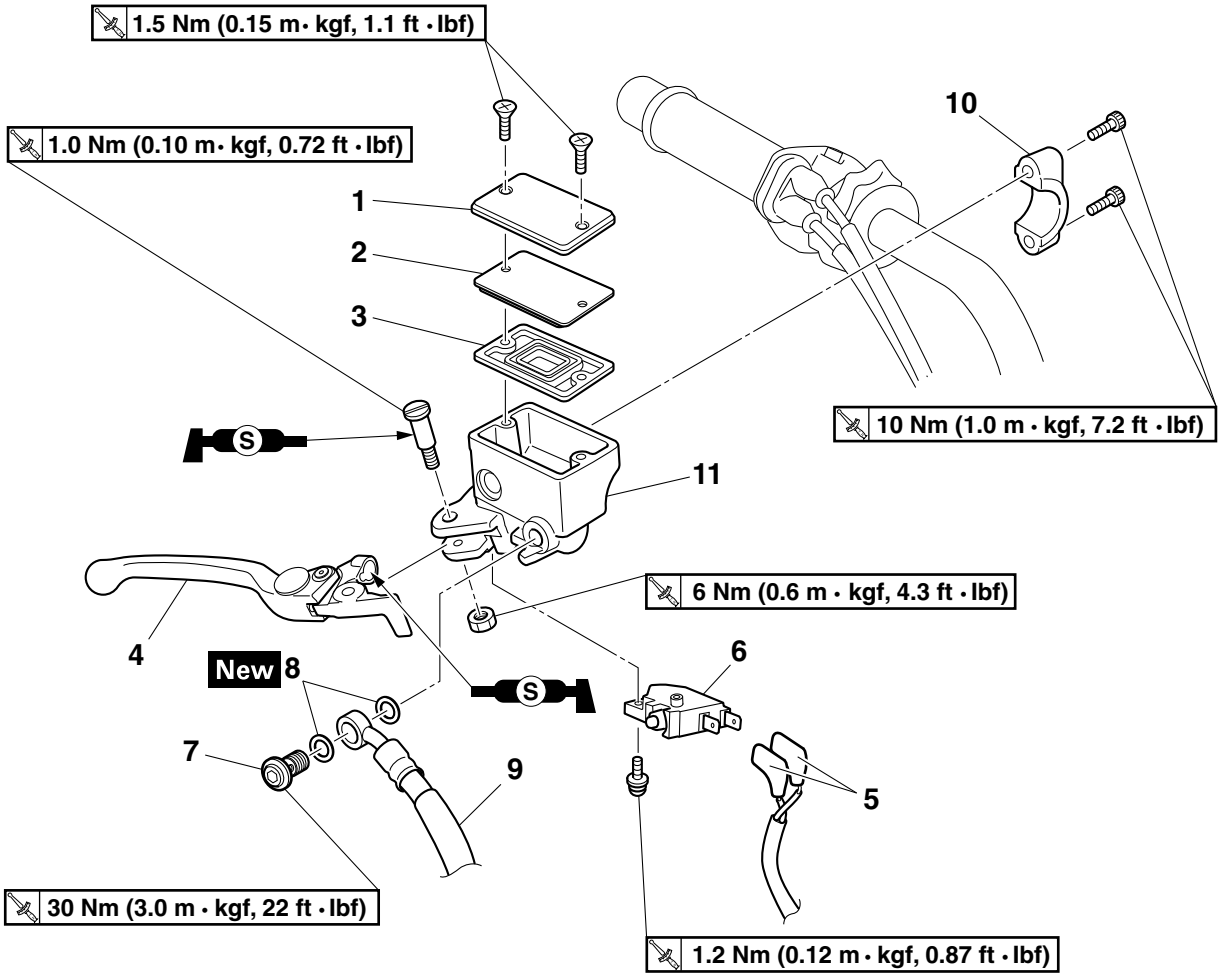

Order	Job/Parts to remove	Q'ty	Remarks
	Right rear view mirror		Refer to "HANDLEBAR" on page 4-44.
	Brake fluid		Drain. Refer to "BLEEDING THE HYDRAULIC BRAKE SYSTEM" on page 3-13.
1	Brake master cylinder reservoir cap	1	
2	Brake master cylinder reservoir diaphragm holder	1	
3	Brake master cylinder reservoir diaphragm	1	
4	Brake lever	1	
5	Front brake light switch lead connector	2	Disconnect.
6	Front brake light switch	1	
7	Brake hose union bolt	1	
8	Brake hose gasket	2	
9	Brake hose	1	
10	Front brake master cylinder holder	1	
11	Front brake master cylinder assembly	1	

Disassembling the front brake master cylinder

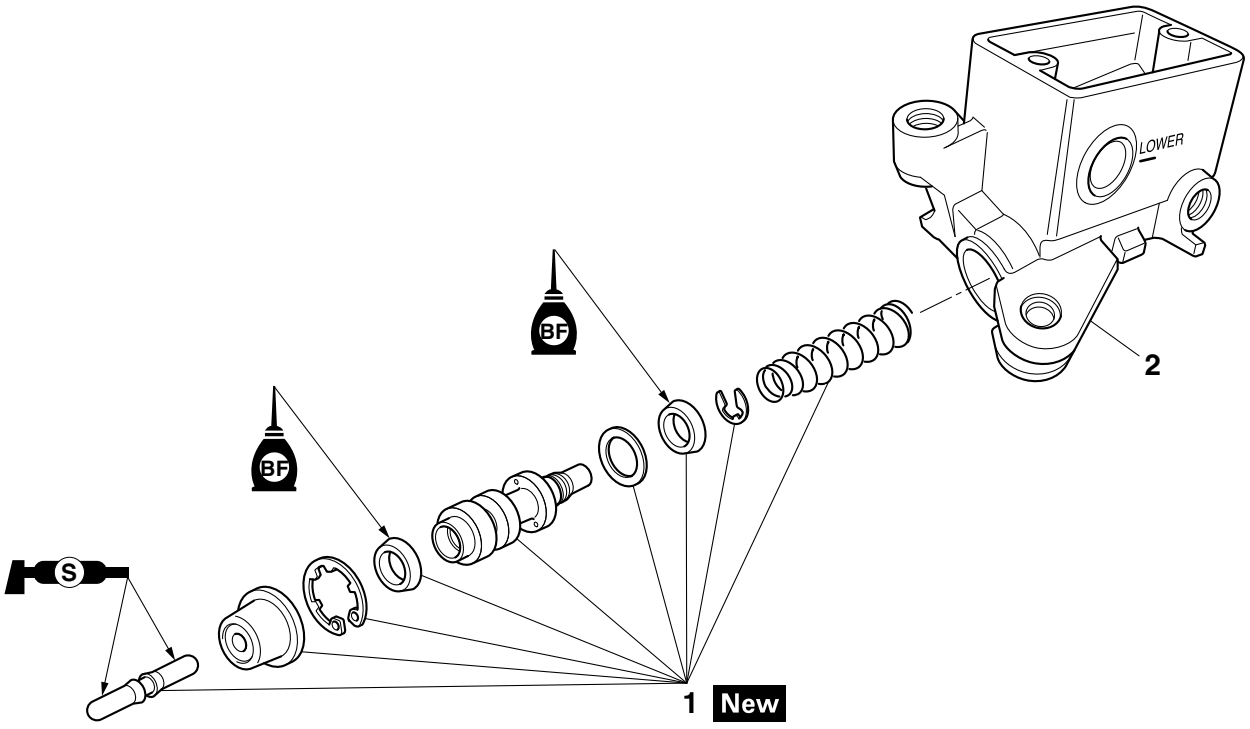

Order	Job/Parts to remove	Q'ty	Remarks
1	Brake master cylinder kit	1	
2	Brake master cylinder body	1	

Removing the front brake calipers

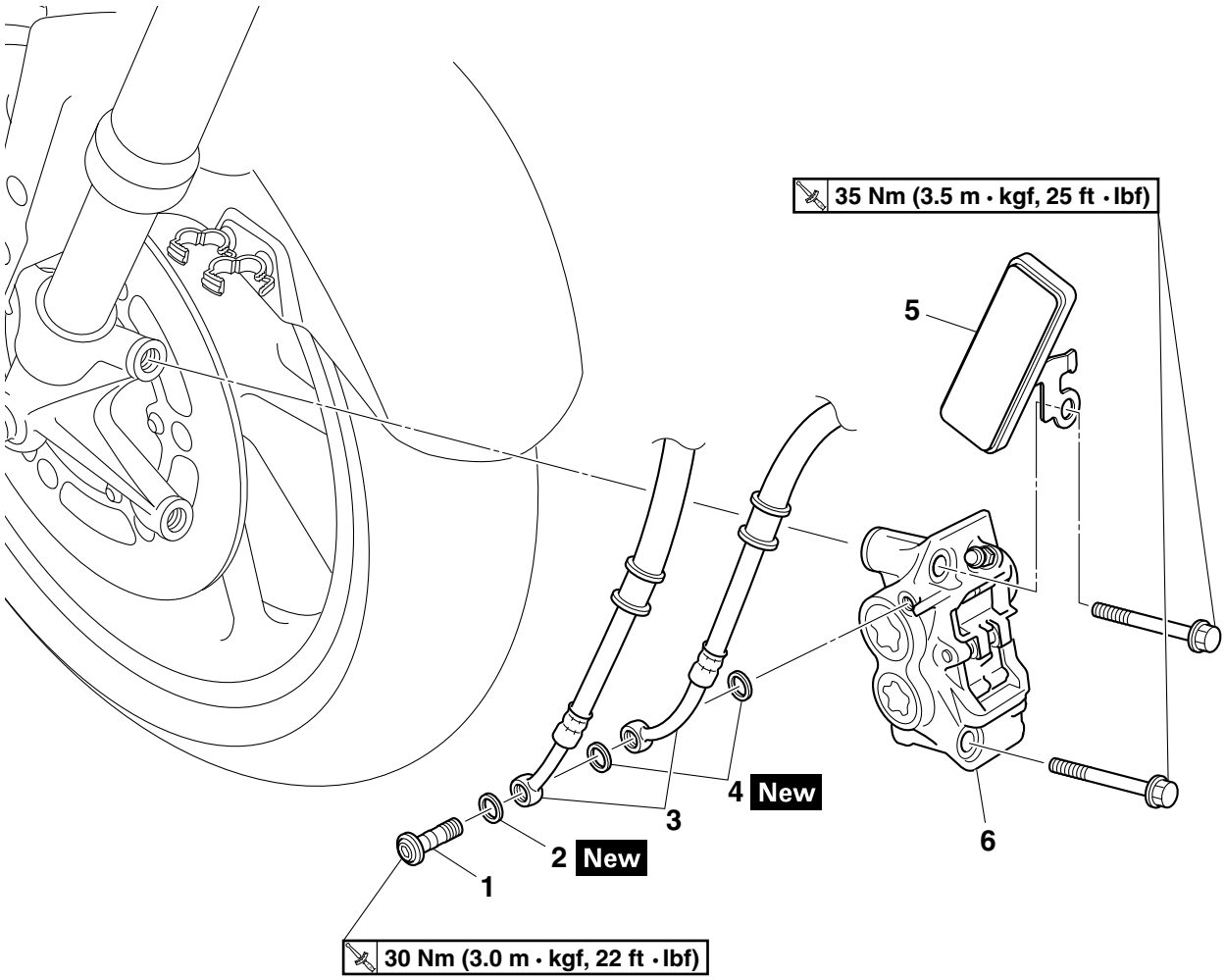

Order	Job/Parts to remove	Q'ty	Remarks
			The following procedure applies to both of the front brake calipers.
	Brake fluid		Drain. Refer to "BLEEDING THE HYDRAULIC BRAKE SYSTEM" on page 3-13.
1	Brake hose union bolt	1	
2	Brake hose gasket	1	
3	Brake hose	2	
4	Brake hose gasket	2	
5	Reflector	1	
6	Front brake caliper	1	

Disassembling the front brake calipers

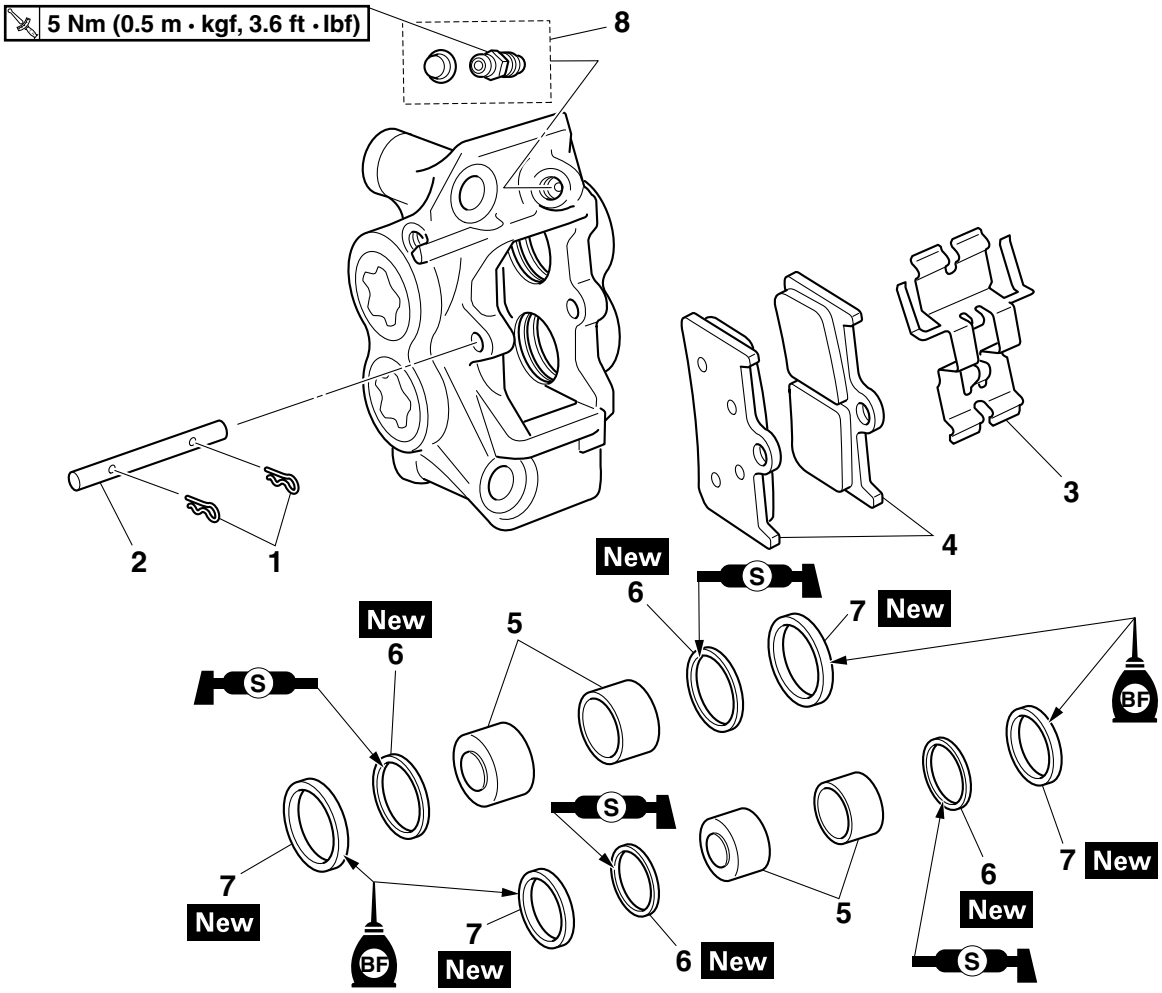

Order	Job/Parts to remove	Q'ty	Remarks
			The following procedure applies to both of the front brake calipers.
1	Brake pad clip	2	
2	Brake pad pin	1	
3	Brake pad spring	1	
4	Brake pad	2	
5	Brake caliper piston	4	
6	Brake caliper piston dust seal	4	
7	Brake caliper piston seal	4	
8	Bleed screw	1	

EAS22220
INTRODUCTION
EWA14101
WARNING

Disc brake components rarely require disassembly. Therefore, always follow these preventive measures:
- **Never disassemble brake components unless absolutely necessary.**
- **If any connection on the hydraulic brake system is disconnected, the entire brake system must be disassembled, drained, cleaned, properly filled, and bled after reassembly.**
- **Never use solvents on internal brake components.**
- **Use only clean or new brake fluid for cleaning brake components.**
- **Brake fluid may damage painted surfaces and plastic parts. Therefore, always clean up any spilt brake fluid immediately.**
- **Avoid brake fluid coming into contact with the eyes as it can cause serious injury.**

FIRST AID FOR BRAKE FLUID ENTERING THE EYES:
- **Flush with water for 15 minutes and get immediate medical attention.**

EAS22240
CHECKING THE FRONT BRAKE DISCS
The following procedure applies to both brake discs.
1. Remove:
   - Front wheel
     Refer to “FRONT WHEEL” on page 4-8.
2. Check:
   - Front brake disc
     Damage/galling → Replace.
3. Measure:
   - Brake disc runout
     Out of specification → Correct the brake disc runout or replace the brake disc.

Brake disc runout limit (as measured on wheel)
0.10 mm (0.0039 in)

▼▼▼▼▼▼▼▼▼▼▼▼▼▼▼▼▼▼▼▼▼▼▼▼▼▼▼▼▼▼▼▼▼▼

a. Place the vehicle on a suitable stand so that the front wheel is elevated.
b. Before measuring the brake disc runout, turn the handlebar to the left or right to ensure that the front wheel is stationary.
c. Remove the brake caliper.
d. Hold the dial gauge at a right angle against the brake disc surface.
e. Measure the runout 1.5 mm (0.06 in) below the edge of the brake disc.

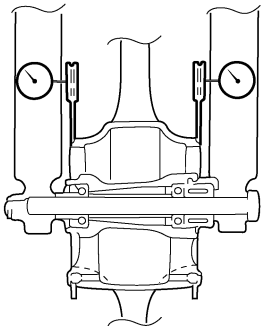

▲▲▲▲▲▲▲▲▲▲▲▲▲▲▲▲▲▲▲▲▲▲▲▲▲▲▲▲▲▲▲▲▲▲

4. Measure:
   - Brake disc thickness
     Measure the brake disc thickness at a few different locations.
     Out of specification → Replace.

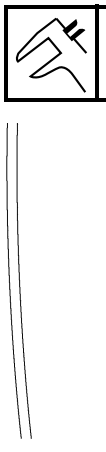

Brake disc thickness limit
4.0 mm (0.16 in)

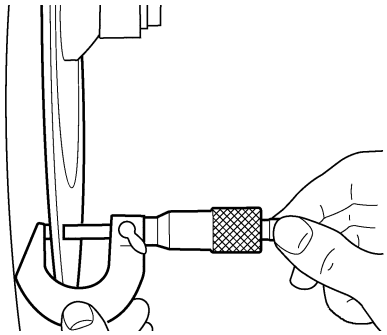

5. Adjust:
   - Brake disc runout

▼▼▼▼▼▼▼▼▼▼▼▼▼▼▼▼▼▼▼▼▼▼▼▼▼▼▼▼▼▼▼▼▼▼

a. Remove the brake disc.
b. Rotate the brake disc by one bolt hole.
c. Install the brake disc.

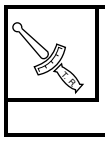

Front brake disc bolt
18 Nm (1.8 m·kgf, 13 ft·lbf)
LOCTITE®

ECA1RC1409
NOTICE

Replace the brake disc bolts with new ones.

TIP
Tighten the brake disc bolts in stages and in a crisscross pattern.

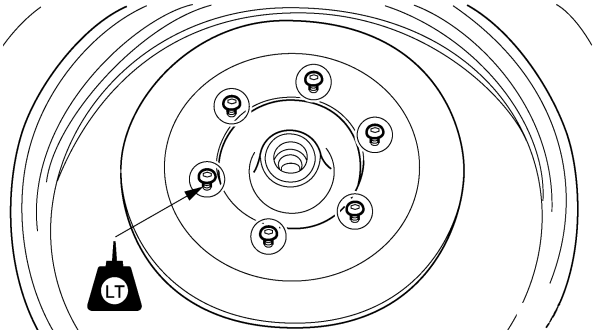

d. Measure the brake disc runout.
e. If out of specification, repeat the adjustment steps until the brake disc runout is within specification.
f. If the brake disc runout cannot be brought within specification, replace the brake disc.

▲▲▲▲▲▲▲▲▲▲▲▲▲▲▲▲▲▲▲▲▲▲▲▲▲▲▲▲▲▲▲▲▲▲

6. Install:
   - Front wheel
     Refer to “FRONT WHEEL” on page 4-8.

EAS22271

REPLACING THE FRONT BRAKE PADS

The following procedure applies to both brake calipers.

TIP

When replacing the brake pads, it is not necessary to disconnect the brake hose or disassemble the brake caliper.

1. Remove:
   - Brake pad clips “1”
   - Brake pad pin “2”
   - Brake pad spring “3”

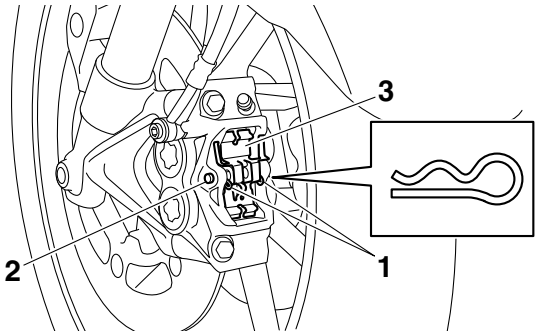

2. Remove:
   - Brake pads “1”

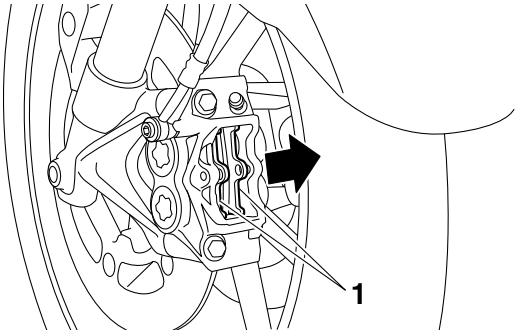

3. Measure:
   - Brake pad wear limit “a”
     Out of specification → Replace the brake pads as a set.

	Brake pad lining thickness (inner) **4.5 mm (0.18 in)** **Limit** **0.5 mm (0.02 in)** **Brake pad lining thickness (outer)** **4.5 mm (0.18 in)** **Limit** **0.5 mm (0.02 in)**

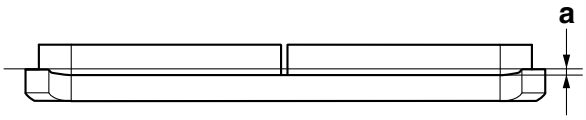

4. Remove:
   - Brake caliper bolts
5. Install:
   - Brake pads
   - Brake pad spring

TIP

Always install new brake pads and new brake pad spring as a set.

▼▼▼▼▼▼▼▼▼▼▼▼▼▼▼▼▼▼▼▼▼▼▼▼▼▼▼▼▼▼▼▼▼▼

a. Connect a clear plastic hose “1” tightly to the bleed screw “2”. Put the other end of the hose into an open container.
b. Loosen the bleed screw and push the brake caliper pistons into the brake caliper with your finger.

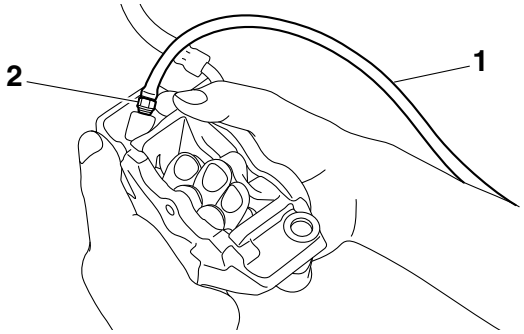

c. Tighten the bleed screw.

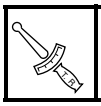	**Brake caliper bleed screw** **5 Nm (0.5 m·kgf, 3.6 ft·lbf)**

d. Install the brake pads and brake pad spring.

TIP

The arrow mark "a" on the brake pad spring must point in the direction of disc rotation.

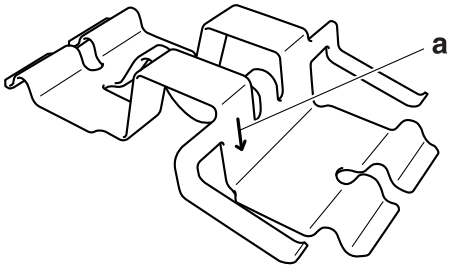

▲▲▲▲▲▲▲▲▲▲▲▲▲▲▲▲▲▲▲▲▲▲▲▲▲▲▲▲▲▲▲▲▲▲

6. Install:
   - Brake pad pin
   - Brake pad clips
   - Front brake caliper

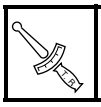	**Front brake caliper bolt** **35 Nm (3.5 m·kgf, 25 ft·lbf)**

7. Check:
   - Brake fluid level
     Below the minimum level mark "a" → Add the specified brake fluid to the proper level.
     Refer to "CHECKING THE BRAKE FLUID LEVEL" on page 3-11.

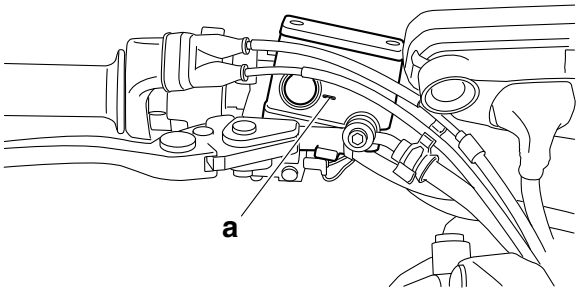

8. Check:
   - Brake lever operation
     Soft or spongy feeling → Bleed the brake system.
     Refer to "BLEEDING THE HYDRAULIC BRAKE SYSTEM" on page 3-13.

EAS22300

REMOVING THE FRONT BRAKE CALIPERS

The following procedure applies to both of the brake calipers.

TIP

Before removing the brake caliper, drain the brake fluid from the entire brake system.

1. Remove:
   - Brake hose union bolts "1"
   - Brake hose gaskets "2"
   - Brake hoses "3"

TIP

Put the end of the brake hose into a container and pump out the brake fluid carefully.

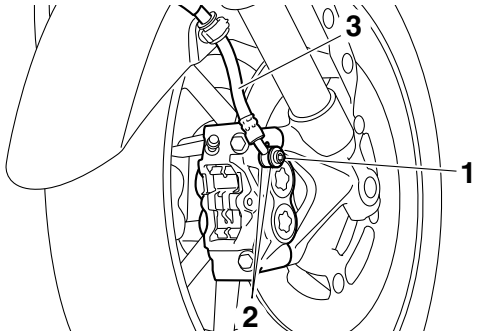

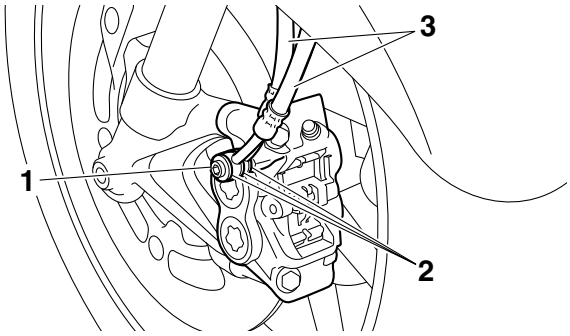

EAS22361

DISASSEMBLING THE FRONT BRAKE CALIPERS

The following procedure applies to both of the brake calipers.

1. Remove:
   - Brake caliper pistons "1"
   - Brake caliper piston dust seals "2"
   - Brake caliper piston seals "3"

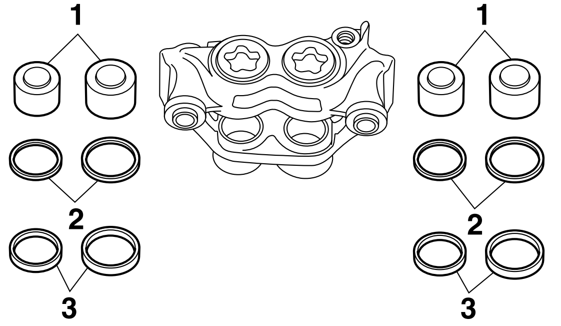

▼▼▼▼▼▼▼▼▼▼▼▼▼▼▼▼▼▼▼▼▼▼▼▼▼▼▼▼▼▼▼▼▼▼

a. Secure the right side brake caliper pistons with a piece of wood “a”.
b. Blow compressed air into the brake hose joint opening “b” to force out the left side pistons from the brake caliper.

EWA1RC1401

WARNING

- **Never try to pry out the brake caliper pistons.**
- **Do not loosen the bolts “4”.**

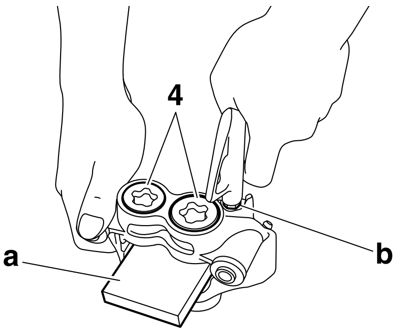

c. Remove the brake caliper piston dust seals and brake caliper piston seals.
d. Repeat the previous steps to force out the right side pistons from the brake caliper.

▲▲▲▲▲▲▲▲▲▲▲▲▲▲▲▲▲▲▲▲▲▲▲▲▲▲▲▲▲▲▲▲▲▲

EAS22391

CHECKING THE FRONT BRAKE CALIPERS

The following procedure applies to both of the brake calipers.

Recommended brake component replacement schedule	
Brake pads	If necessary
Piston seals	Every two years
Piston dust seals	Every two years
Brake hoses	Every four years
Brake fluid	Every two years and whenever the brake is disassembled

1. Check:
   - Brake caliper pistons “1”
     Rust/scratches/wear → Replace the brake caliper pistons.
   - Brake caliper cylinders “2”
     Scratches/wear → Replace the brake caliper assembly.
   - Brake caliper body “3”
     Cracks/damage → Replace the brake caliper assembly.
   - Brake fluid delivery passages
     (brake caliper body)
     Obstruction → Blow out with compressed air.

EWA13611

WARNING

Whenever a brake caliper is disassembled, replace the brake caliper piston dust seals and brake caliper piston seals.

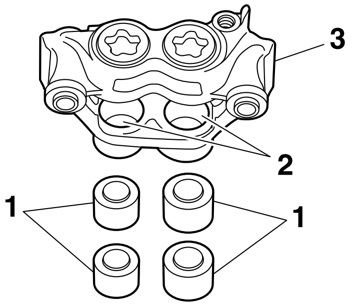

EAS22411

ASSEMBLING THE FRONT BRAKE CALIPERS

EWA13621

WARNING

- **Before installation, all internal brake components should be cleaned and lubricated with clean or new brake fluid.**
- **Never use solvents on internal brake components as they will cause the brake caliper piston dust seals and brake caliper piston seals to swell and distort.**
- **Whenever a brake caliper is disassembled,**

replace the brake caliper piston dust seals and brake caliper piston seals.

	Specified brake fluid **DOT 4**

EAS22440

INSTALLING THE FRONT BRAKE CALIPERS

The following procedure applies to both of the brake calipers.

1. Install:
   - Front brake caliper "1" (temporarily)
   - Brake hose gaskets New
   - Brake hose "2"
   - Brake hose union bolt "3"

	Brake hose union bolt **30 Nm (3.0 m·kgf, 22 ft·lbf)**

EWA13530

WARNING

Proper brake hose routing is essential to insure safe vehicle operation. Refer to "CABLE ROUTING" on page 2-41.

ECA1RC1430

NOTICE

- **When installing the brake hose onto the brake caliper "1", make sure the brake pipe "a" touches the projection "b" on the brake caliper.**
- **Install the brake pipe "c" so that it is aligned with the brake pipe "a".**

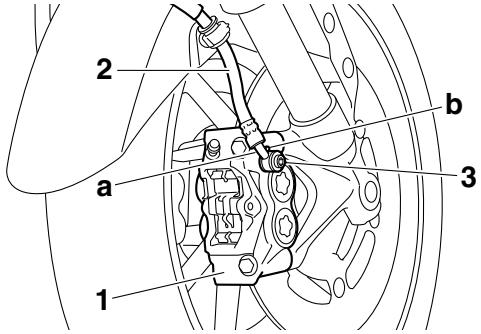

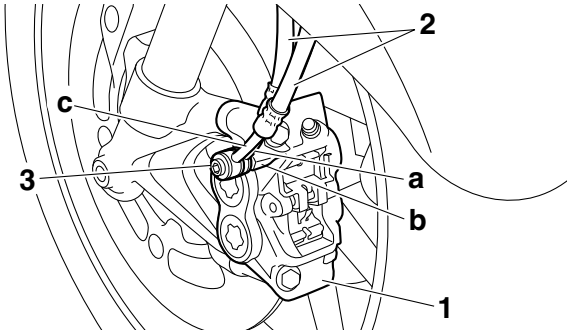

2. Remove:
   - Front brake caliper
3. Install:
   - Brake pads
   - Brake pad spring
   - Brake pad pin
   - Brake pad clips
   - Front brake caliper

	Front brake caliper bolt **35 Nm (3.5 m·kgf, 25 ft·lbf)**

Refer to "REPLACING THE FRONT BRAKE PADS" on page 4-26.

4. Fill:
   - Brake master cylinder reservoir (with the specified amount of the specified brake fluid)

	Specified brake fluid **DOT 4**

EWA13090

WARNING

- **Use only the designated brake fluid. Other brake fluids may cause the rubber seals to deteriorate, causing leakage and poor brake performance.**
- **Refill with the same type of brake fluid that is already in the system. Mixing brake fluids may result in a harmful chemical reaction, leading to poor brake performance.**
- **When refilling, be careful that water does not enter the brake fluid reservoir. Water will significantly lower the boiling point of the brake fluid and could cause vapor lock.**

ECA13540

NOTICE

Brake fluid may damage painted surfaces and plastic parts. Therefore, always clean up any spilt brake fluid immediately.

5. Bleed:
   - Brake system
     Refer to "BLEEDING THE HYDRAULIC BRAKE SYSTEM" on page 3-13.
6. Check:
   - Brake fluid level
     Below the minimum level mark "a" → Add the specified brake fluid to the proper level.
     Refer to "CHECKING THE BRAKE FLUID LEVEL" on page 3-11.

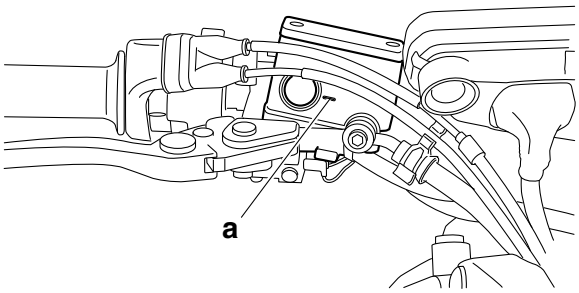

7. Check:
   - Brake lever operation
     Soft or spongy feeling → Bleed the brake system.
     Refer to "BLEEDING THE HYDRAULIC BRAKE SYSTEM" on page 3-13.

EAS22490

REMOVING THE FRONT BRAKE MASTER CYLINDER

TIP

Before removing the front brake master cylinder, drain the brake fluid from the entire brake system.

1. Disconnect:
   - Brake light switch connectors
     (from the front brake light switch)
2. Remove:
   - Brake hose union bolt "1"
   - Brake hose gaskets "2"
   - Brake hose "3"

TIP

To collect any remaining brake fluid, place a container under the master cylinder and the end of the brake hose.

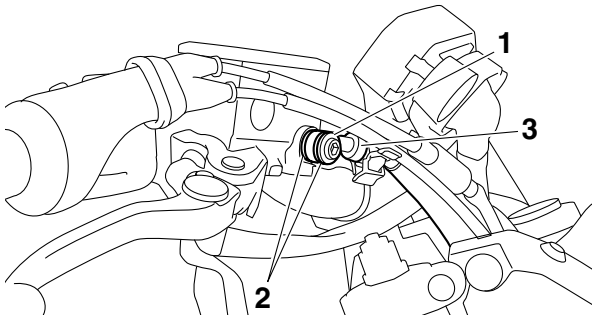

EAS22500

CHECKING THE FRONT BRAKE MASTER CYLINDER

1. Check:
   - Brake master cylinder
     Damage/scratches/wear → Replace.
   - Brake fluid delivery passages
     (brake master cylinder body)
     Obstruction → Blow out with compressed air.
2. Check:
   - Brake master cylinder kit
     Damage/scratches/wear → Replace.
3. Check:
   - Brake master cylinder reservoir "1"
   - Brake master cylinder reservoir diaphragm holder "2"
     Cracks/damage → Replace.
   - Brake master cylinder reservoir diaphragm "3"
     Damage/wear → Replace.

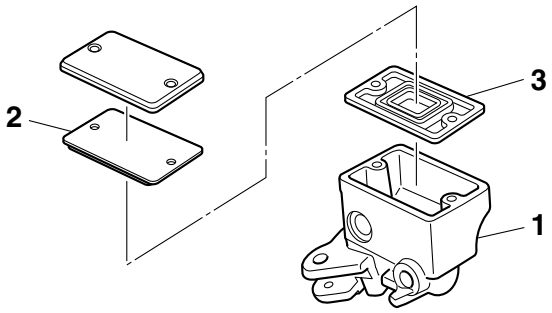

4. Check:
   - Brake hoses
     Cracks/damage/wear → Replace.

EAS22520

ASSEMBLING THE FRONT BRAKE MASTER CYLINDER

EWA13520

WARNING

- **Before installation, all internal brake components should be cleaned and lubricated with clean or new brake fluid.**
- **Never use solvents on internal brake components.**

Specified brake fluid
DOT 4

EAS22530

INSTALLING THE FRONT BRAKE MASTER CYLINDER

1. Install:
   - Front brake master cylinder
   - Front brake master cylinder holder

Front brake master cylinder holder bolt
10 Nm (1.0 m·kgf, 7.2 ft·lbf)

TIP

- Install the front brake master cylinder holder with the "UP" mark "a" facing up.
- Align the end of the front brake master cylinder

holder with the punch mark “b” on the handlebar.
- First, tighten the upper bolt, then the lower bolt.
- There should be more than 11 mm (0.43 in) for clearance between the right handlebar switch and the front brake master cylinder holder. Also, the punch mark should be seen.

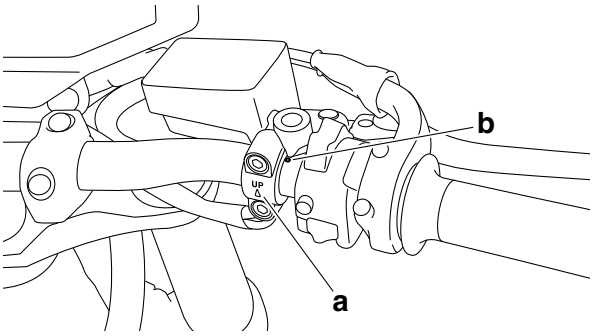

2. Install:
   - Brake hose gaskets New
   - Brake hose
   - Brake hose union bolt

	**Brake hose union bolt** **30 Nm (3.0 m·kgf, 22 ft·lbf)**

EWA13530

WARNING

Proper brake hose routing is essential to insure safe vehicle operation. Refer to “CABLE ROUTING” on page 2-41.

TIP
- Attach the brake hose so that its angle is 3° to 13° against the straight line in parallel with the ceiling plane of the master cylinder.
- While holding the brake hose, tighten the union bolt as shown.
- Turn the handlebar to the left and right to make sure the brake hose does not touch other parts (e.g., wire harness, cables, leads). Correct if necessary.

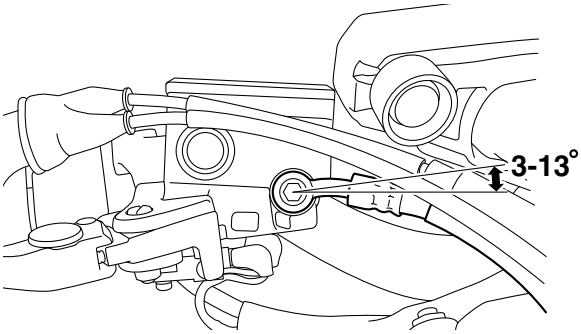

3. Fill:
   - Brake master cylinder reservoir
   (with the specified amount of the specified brake fluid)

	**Specified brake fluid** **DOT 4**

EWA13540

WARNING

- **Use only the designated brake fluid. Other brake fluids may cause the rubber seals to deteriorate, causing leakage and poor brake performance.**
- **Refill with the same type of brake fluid that is already in the system. Mixing brake fluids may result in a harmful chemical reaction, leading to poor brake performance.**
- **When refilling, be careful that water does not enter the brake master cylinder reservoir. Water will significantly lower the boiling point of the brake fluid and could cause vapor lock.**

ECA13540

NOTICE

Brake fluid may damage painted surfaces and plastic parts. Therefore, always clean up any spilt brake fluid immediately.

4. Bleed:
   - Brake system
     Refer to “BLEEDING THE HYDRAULIC BRAKE SYSTEM” on page 3-13.
5. Check:
   - Brake fluid level
     Below the minimum level mark “a” → Add the specified brake fluid to the proper level.
     Refer to “CHECKING THE BRAKE FLUID LEVEL” on page 3-11.

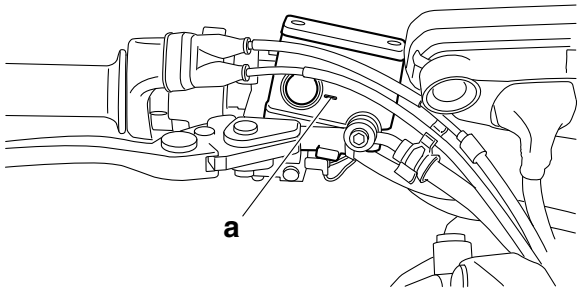

6. Check:
   - Brake lever operation
     Soft or spongy feeling → Bleed the brake system.
     Refer to “BLEEDING THE HYDRAULIC BRAKE SYSTEM” on page 3-13.

EAS22550

REAR BRAKE

Removing the rear brake pads

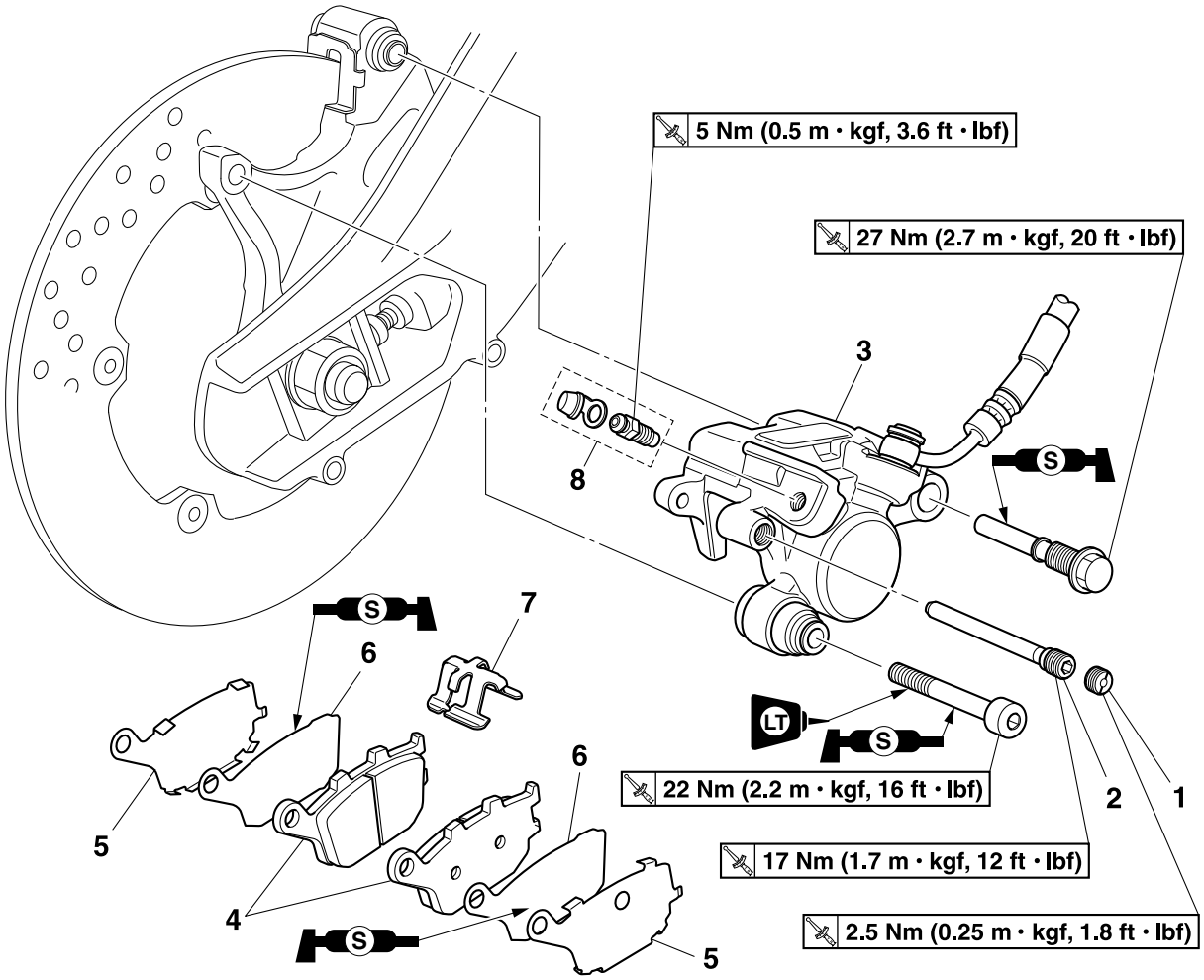

Order	Job/Parts to remove	Q'ty	Remarks
1	Screw plug	1	
2	Brake pad retaining bolt	1	
3	Rear brake caliper	1	
4	Brake pad	2	
5	Brake pad shim	2	
6	Brake pad insulator	2	
7	Brake pad spring	1	
8	Bleed screw	1	

Removing the rear brake master cylinder

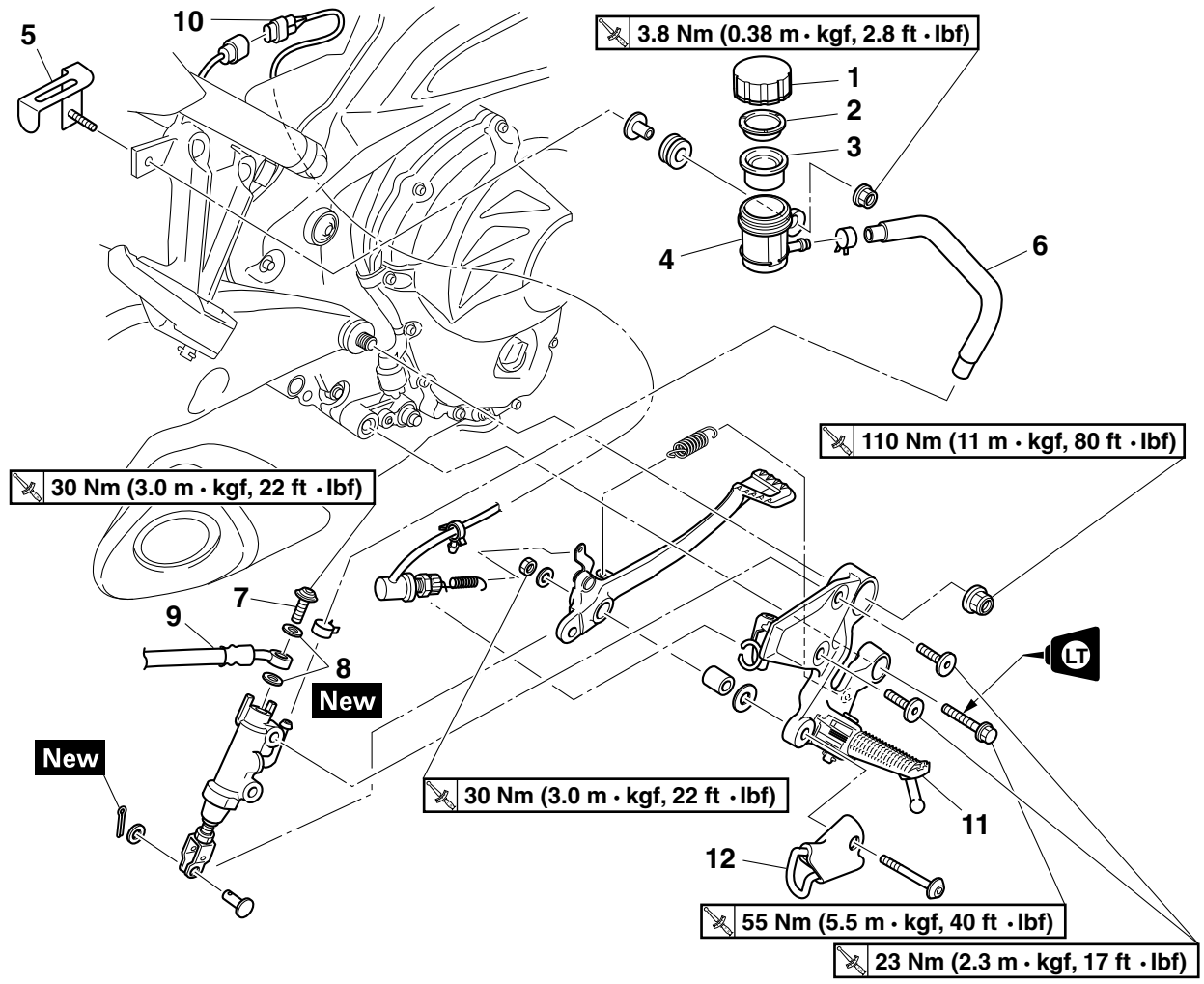

Order	Job/Parts to remove	Q'ty	Remarks
	Rider seat		Refer to "GENERAL CHASSIS" on page 4-1.
	Air scoop/Fuel tank cover		Refer to "GENERAL CHASSIS" on page 4-1.
	Fuel tank		Refer to "FUEL TANK" on page 7-1.
	Brake fluid		Drain. Refer to "BLEEDING THE HYDRAULIC BRAKE SYSTEM" on page 3-13.
1	Brake fluid reservoir cap	1	
2	Brake fluid reservoir diaphragm holder	1	
3	Brake fluid reservoir diaphragm	1	
4	Brake fluid reservoir	1	
5	Brake fluid reservoir holder	1	
6	Brake fluid reservoir hose	1	
7	Brake hose union bolt	1	
8	Brake hose gasket	2	
9	Brake hose	1	
10	Rear brake light switch coupler	1	Disconnect.
11	Right footrest assembly	1	
12	Wire guide	1	

Removing the rear brake master cylinder

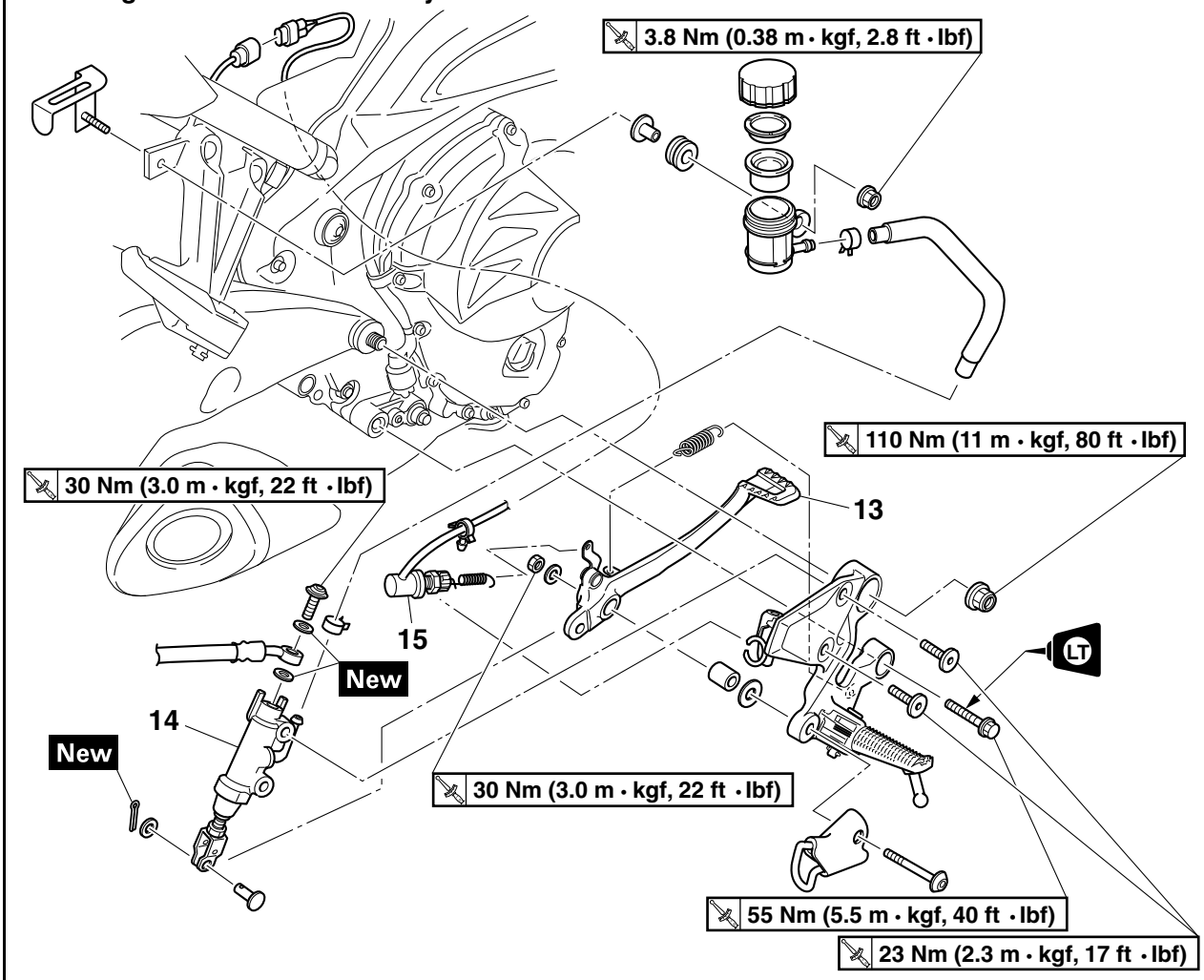

Order	Job/Parts to remove	Q'ty	Remarks
13	Brake pedal	1	
14	Rear brake master cylinder assembly	1	
15	Rear brake light switch	1	

Disassembling the rear brake master cylinder

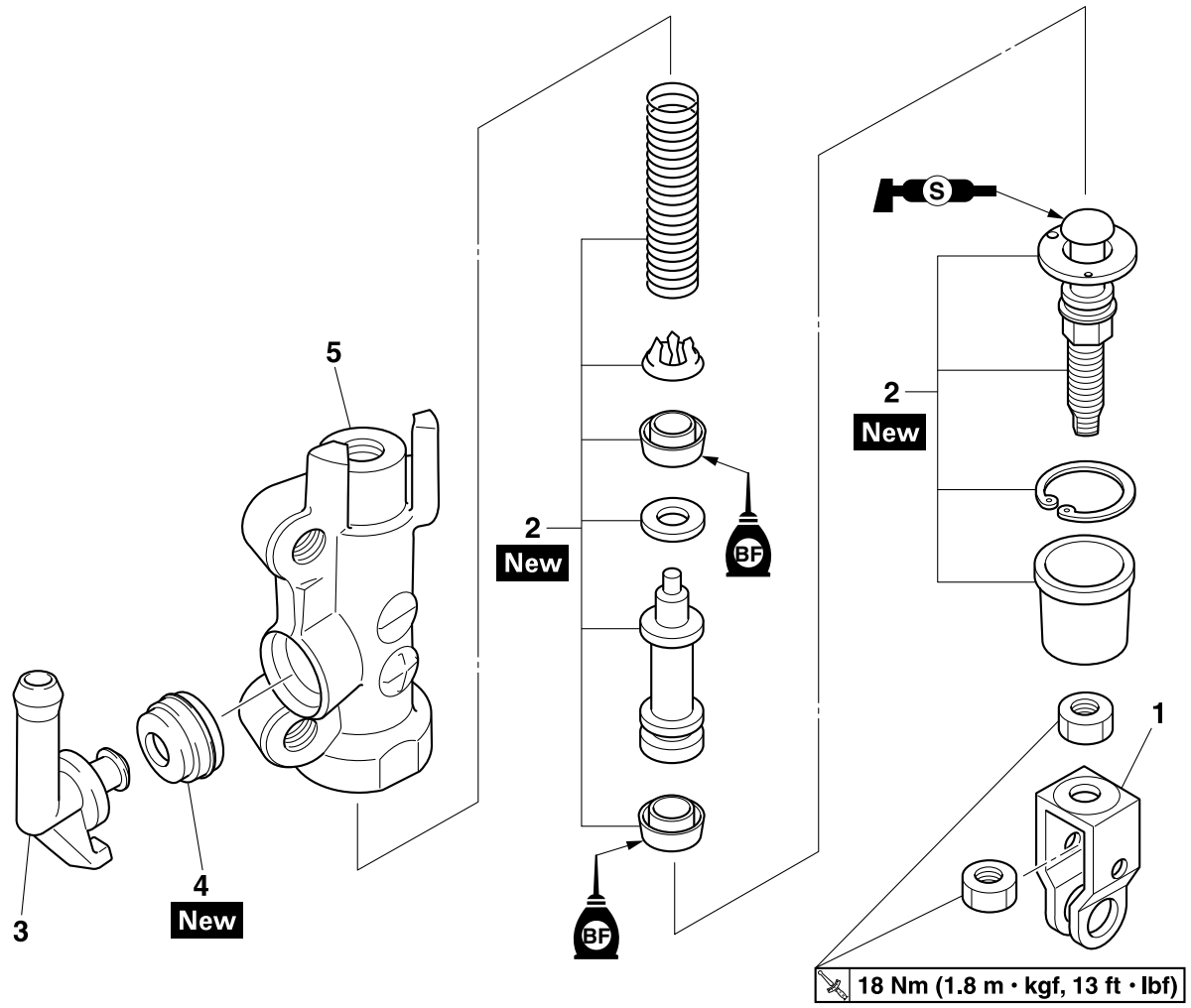

Order	Job/Parts to remove	Q'ty	Remarks
1	Brake master cylinder yoke	1	
2	Brake master cylinder kit	1	
3	Hose joint	1	
4	Bushing	1	
5	Brake master cylinder body	1	

Removing the rear brake caliper

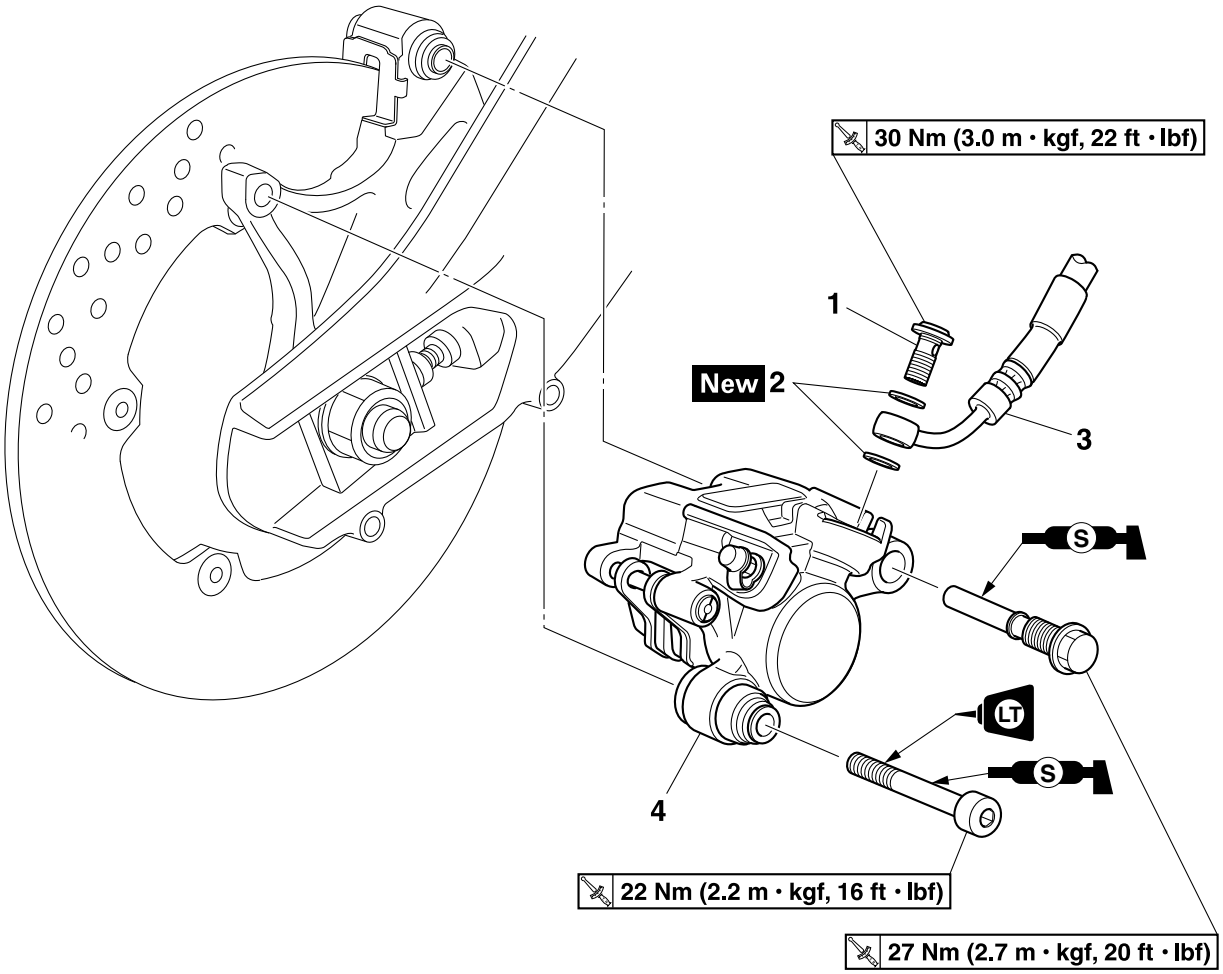

Order	Job/Parts to remove	Q'ty	Remarks
1	Brake hose union bolt	1	
2	Brake hose gasket	2	
3	Brake hose	1	
4	Rear brake caliper	1	

Disassembling the rear brake caliper

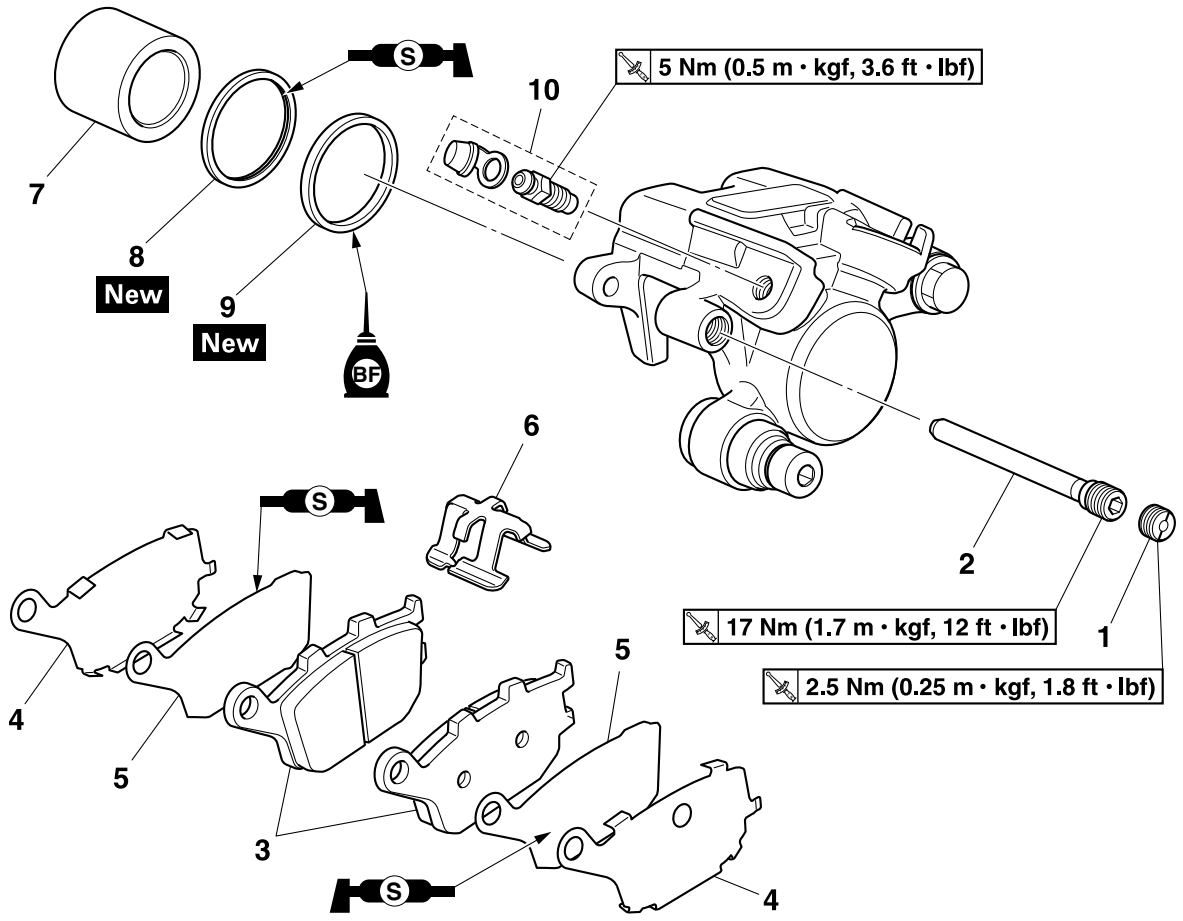

Order	Job/Parts to remove	Q'ty	Remarks
1	Screw plug	1	
2	Brake pad retaining bolt	1	
3	Brake pad	2	
4	Brake pad shim	2	
5	Brake pad insulator	2	
6	Brake pad spring	1	
7	Brake caliper piston	1	
8	Brake caliper piston dust seal	1	
9	Brake caliper piston seal	1	
10	Bleed screw	1	

EAS22561
INTRODUCTION

EWA14101
WARNING

Disc brake components rarely require disassembly. Therefore, always follow these preventive measures:
- **Never disassemble brake components unless absolutely necessary.**
- **If any connection on the hydraulic brake system is disconnected, the entire brake system must be disassembled, drained, cleaned, properly filled, and bled after reassembly.**
- **Never use solvents on internal brake components.**
- **Use only clean or new brake fluid for cleaning brake components.**
- **Brake fluid may damage painted surfaces and plastic parts. Therefore, always clean up any spilt brake fluid immediately.**
- **Avoid brake fluid coming into contact with the eyes as it can cause serious injury.**

FIRST AID FOR BRAKE FLUID ENTERING THE EYES:
- **Flush with water for 15 minutes and get immediate medical attention.**

EAS22570
CHECKING THE REAR BRAKE DISC

1. Remove:
   - Rear wheel
     Refer to “REAR WHEEL” on page 4-14.
2. Check:
   - Rear brake disc
     Damage/galling → Replace.
3. Measure:
   - Brake disc runout
     Out of specification → Correct the brake disc runout or replace the brake disc.
     Refer to “CHECKING THE FRONT BRAKE DISCS” on page 4-25.

Brake disc runout limit (as measured on wheel)
0.15 mm (0.0059 in)

4. Measure:
   - Brake disc thickness
     Measure the brake disc thickness at a few different locations.
     Out of specification → Replace.
     Refer to “CHECKING THE FRONT BRAKE DISCS” on page 4-25.

Brake disc thickness limit
4.5 mm (0.18 in)

5. Adjust:
   - Brake disc runout
     Refer to “CHECKING THE FRONT BRAKE DISCS” on page 4-25.

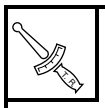

Rear brake disc bolt
30 Nm (3.0 m·kgf, 22 ft·lbf)
LOCTITE®

6. Install:
   - Rear wheel
     Refer to “REAR WHEEL” on page 4-14.

EAS22581
REPLACING THE REAR BRAKE PADS

TIP
When replacing the brake pads, it is not necessary to disconnect the brake hose or disassemble the brake caliper.

1. Measure:
   - Brake pad wear limit “a”
     Out of specification → Replace the brake pads as a set.

Brake pad lining thickness (inner)
6.0 mm (0.24 in)
Limit
1.0 mm (0.04 in)
Brake pad lining thickness (outer)
6.0 mm (0.24 in)
Limit
1.0 mm (0.04 in)

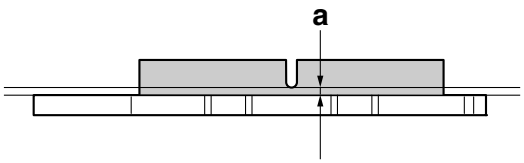

2. Install:
   - Brake pad insulators
   - Brake pad shims
     (onto the brake pads)
   - Brake pad spring
     (into the rear brake caliper)
   - Brake pads

TIP
Always install new brake pads, brake pad insu-

lators, brake pad shims, and brake pad spring as a set.

▼▼▼▼▼▼▼▼▼▼▼▼▼▼▼▼▼▼▼▼▼▼▼▼▼▼▼▼▼▼▼▼▼▼

a. Connect a clear plastic hose “1” tightly to the bleed screw “2”. Put the other end of the hose into an open container.
b. Loosen the bleed screw and push the brake caliper piston into the brake caliper with your finger.

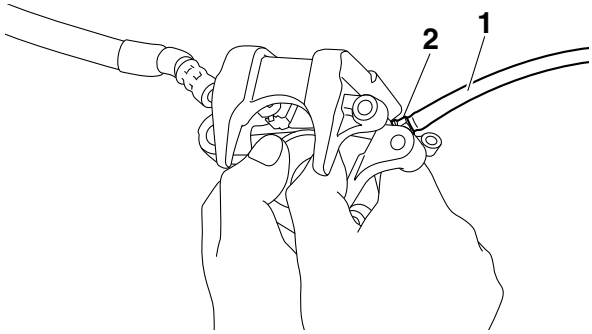

c. Tighten the bleed screw.

	Brake caliper bleed screw **5 Nm (0.5 m·kgf, 3.6 ft·lbf)**

d. Install the brake pad insulators and brake pad shims onto each brake pads.

TIP

Apply silicone grease between the brake pad insulator and brake pad shim.

ECA1RC1416

NOTICE

- **Do not allow grease to contact the brake pads.**
- **Remove any excess grease.**

e. Install the brake pads and brake pad spring.

TIP

The longer tangs “a” of the brake pad spring must point in the direction of the brake caliper piston.

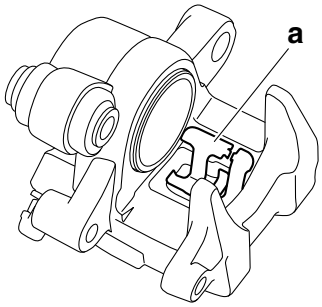

▲▲▲▲▲▲▲▲▲▲▲▲▲▲▲▲▲▲▲▲▲▲▲▲▲▲▲▲▲▲▲▲▲▲

3. Lubricate:
   - Rear brake caliper bolts

	Recommended lubricant **Silicone grease**

ECA1RC1416

NOTICE

- **Do not allow grease to contact the brake pads.**
- **Remove any excess grease.**

4. Install:
   - Rear brake caliper
   - Brake pad retaining bolts
   - Screw plug

	Rear brake caliper bolt (front) **27 Nm (2.7 m·kgf, 20 ft·lbf)** **Rear brake caliper bolt (rear)** **22 Nm (2.2 m·kgf, 16 ft·lbf)** **LOCTITE®** **Brake pad retaining bolt** **17 Nm (1.7 m·kgf, 12 ft·lbf)** **Screw plug** **2.5 Nm (0.25 m·kgf, 1.8 ft·lbf)**

5. Check:
   - Brake fluid level
     Below the minimum level mark “a” → Add the specified brake fluid to the proper level.
     Refer to “CHECKING THE BRAKE FLUID LEVEL” on page 3-11.

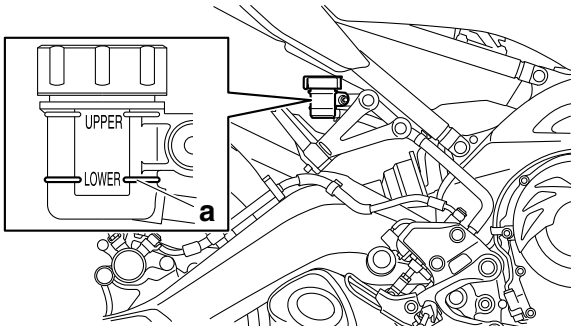

6. Check:
   - Brake pedal operation
     Soft or spongy feeling → Bleed the brake system.
     Refer to “BLEEDING THE HYDRAULIC BRAKE SYSTEM” on page 3-13.

EAS22590

REMOVING THE REAR BRAKE CALIPER

TIP

Before disassembling the brake caliper, drain the brake fluid from the entire brake system.

1. Remove:
   - Brake hose union bolt “1”
   - Brake hose gaskets “2”
   - Brake hose “3”

TIP

Put the end of the brake hose into a container and pump out the brake fluid carefully.

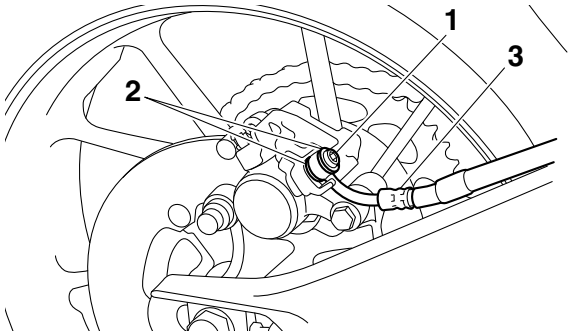

EAS22601

DISASSEMBLING THE REAR BRAKE CALIPER

1. Remove:
   - Brake caliper piston “1”
   - Brake caliper piston dust seal “2”
   - Brake caliper piston seal “3”

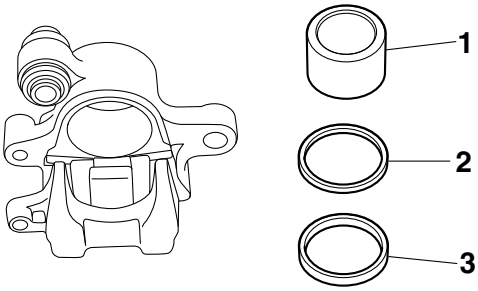

▼▼▼▼▼▼▼▼▼▼▼▼▼▼▼▼▼▼▼▼▼▼▼▼▼▼▼▼▼▼▼▼▼▼

a. Blow compressed air into the brake hose joint opening “a” to force out the piston from the brake caliper.

EWA13550

WARNING

- **Cover the brake caliper piston with a rag. Be careful not to get injured when the piston is expelled from the brake caliper.**
- **Never try to pry out the brake caliper piston.**

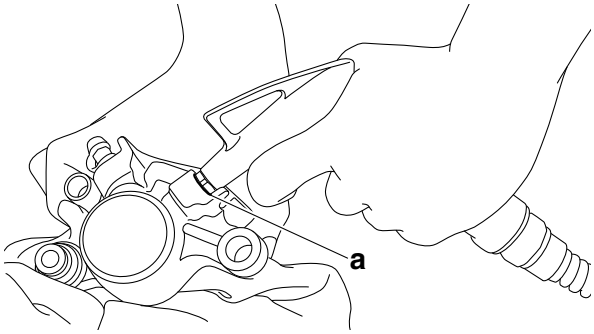

b. Remove the brake caliper piston dust seal and brake caliper piston seal.

▲▲▲▲▲▲▲▲▲▲▲▲▲▲▲▲▲▲▲▲▲▲▲▲▲▲▲▲▲▲▲▲▲▲

EAS22642

CHECKING THE REAR BRAKE CALIPER

Recommended brake component replacement schedule	
Brake pads	If necessary
Piston seal	Every two years
Piston dust seal	Every two years
Brake hoses	Every four years
Brake fluid	Every two years and whenever the brake is disassembled

1. Check:
   - Brake caliper piston “1”
     Rust/scratches/wear → Replace the brake caliper piston.
   - Brake caliper cylinder “2”
     Scratches/wear → Replace the brake caliper assembly.
   - Brake caliper body “3”
     Cracks/damage → Replace the brake caliper assembly.
   - Brake fluid delivery passages (brake caliper body)
     Obstruction → Blow out with compressed air.

EWA1RC1402

WARNING

Whenever a brake caliper is disassembled, replace the brake caliper piston dust seal and brake caliper piston seal.

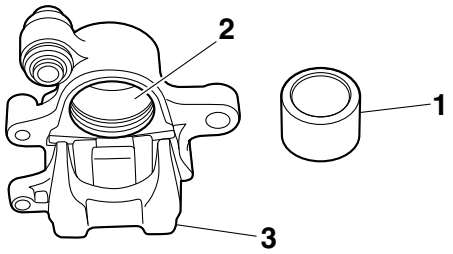

2. Check:
   - Rear brake caliper bracket "1"
     Cracks/damage → Replace.
     Refer to "REAR WHEEL" on page 4-14.

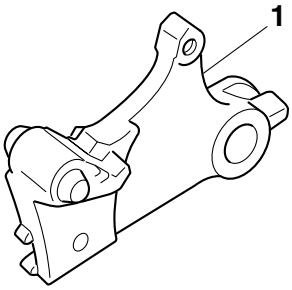

EAS22651

ASSEMBLING THE REAR BRAKE CALIPER

EWA1RC1403

WARNING

- **Before installation, all internal brake components should be cleaned and lubricated with clean or new brake fluid.**
- **Never use solvents on internal brake components as they will cause the brake caliper piston dust seal and brake caliper piston seal to swell and distort.**
- **Whenever a brake caliper is disassembled, replace the brake caliper piston dust seal and brake caliper piston seal.**

	Specified brake fluid **DOT 4**

EAS22670

INSTALLING THE REAR BRAKE CALIPER

1. Install:
   - Rear brake caliper "1"
     (temporarily)
   - Brake hose gaskets New
   - Brake hose "2"
   - Brake hose union bolt "3"

	Brake hose union bolt **30 Nm (3.0 m·kgf, 22 ft·lbf)**

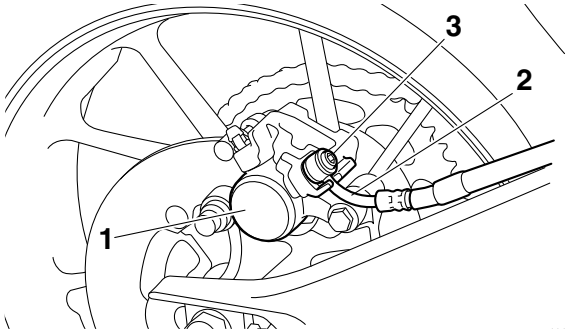

EWA13530

WARNING

Proper brake hose routing is essential to insure safe vehicle operation. Refer to "CABLE ROUTING" on page 2-41.

ECA1RC1402

NOTICE

When installing the brake hose onto the brake caliper "1", make sure the brake pipe "a" passes between the projections "b" on the brake caliper.

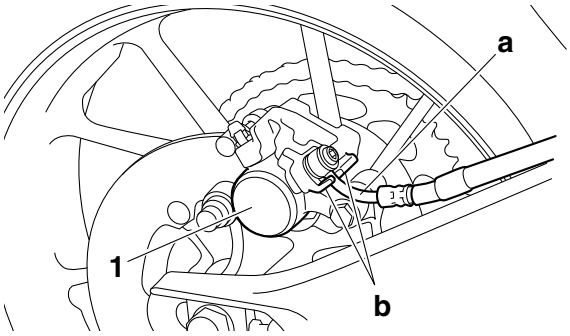

2. Remove:
   - Rear brake caliper
3. Install:
   - Brake pad insulators
   - Brake pad shims
     (onto the brake pads)
   - Brake pad spring
     (into the rear brake caliper)
   - Brake pads
   - Rear brake caliper
     Refer to "REPLACING THE REAR BRAKE PADS" on page 4-38.

	Rear brake caliper bolt (front) **27 Nm (2.7 m·kgf, 20 ft·lbf)** **Rear brake caliper bolt (rear)** **22 Nm (2.2 m·kgf, 16 ft·lbf)** **LOCTITE®** **Brake pad retaining bolt** **17 Nm (1.7 m·kgf, 12 ft·lbf)** **Screw plug** **2.5 Nm (0.25 m·kgf, 1.8 ft·lbf)**

4. Fill:
   - Brake fluid reservoir
     (with the specified amount of the specified brake fluid)

	**Specified brake fluid** **DOT 4**

EWA13090

WARNING

- **Use only the designated brake fluid. Other brake fluids may cause the rubber seals to deteriorate, causing leakage and poor brake performance.**
- **Refill with the same type of brake fluid that is already in the system. Mixing brake fluids may result in a harmful chemical reaction, leading to poor brake performance.**
- **When refilling, be careful that water does not enter the brake fluid reservoir. Water will significantly lower the boiling point of the brake fluid and could cause vapor lock.**

ECA13540

NOTICE

Brake fluid may damage painted surfaces and plastic parts. Therefore, always clean up any spilt brake fluid immediately.

5. Bleed:
   - Brake system
     Refer to "BLEEDING THE HYDRAULIC BRAKE SYSTEM" on page 3-13.
6. Check:
   - Brake fluid level
     Below the minimum level mark "a" → Add the specified brake fluid to the proper level.
     Refer to "CHECKING THE BRAKE FLUID LEVEL" on page 3-11.

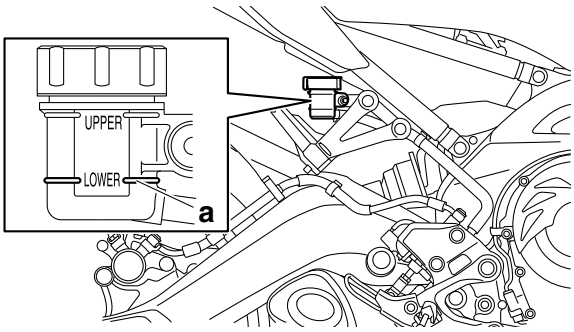

7. Check:
   - Brake pedal operation
     Soft or spongy feeling → Bleed the brake system.
     Refer to "BLEEDING THE HYDRAULIC BRAKE SYSTEM" on page 3-13.

EAS22700

REMOVING THE REAR BRAKE MASTER CYLINDER

1. Remove:
   - Brake hose union bolt "1"
   - Brake hose gaskets "2"
   - Brake hose "3"

TIP

To collect any remaining brake fluid, place a container under the master cylinder and the end of the brake hose.

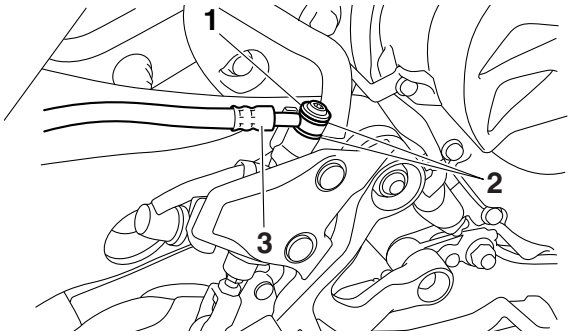

EAS22720

CHECKING THE REAR BRAKE MASTER CYLINDER

1. Check:
   - Brake master cylinder
     Damage/scratches/wear → Replace.
   - Brake fluid delivery passages
     (brake master cylinder body)
     Obstruction → Blow out with compressed air.
2. Check:
   - Brake master cylinder kit
     Damage/scratches/wear → Replace.
3. Check:
   - Brake fluid reservoir "1"
   - Brake fluid reservoir diaphragm holder "2"
     Cracks/damage → Replace.
   - Brake fluid reservoir diaphragm "3"
     Damage/wear → Replace.

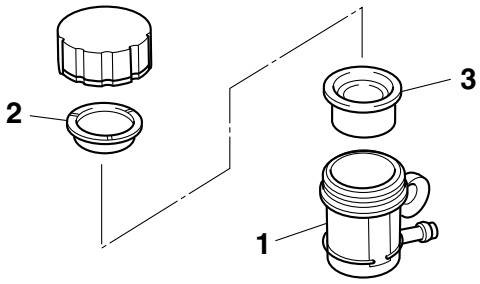

4. Check:
   - Brake hose
   - Brake fluid reservoir hose
     Cracks/damage/wear → Replace.

EAS22730

ASSEMBLING THE REAR BRAKE MASTER CYLINDER

EWA13520

WARNING

- **Before installation, all internal brake components should be cleaned and lubricated with clean or new brake fluid.**
- **Never use solvents on internal brake components.**

	Specified brake fluid **DOT 4**

1. Install:
   - Brake master cylinder kit New

EAS22740

INSTALLING THE REAR BRAKE MASTER CYLINDER

1. Install:
   - Brake hose gaskets New
   - Brake hose
   - Brake fluid reservoir hose
   - Brake hose union bolt

	Brake hose union bolt **30 Nm (3.0 m·kgf, 22 ft·lbf)**

EWA13530

WARNING

Proper brake hose routing is essential to insure safe vehicle operation. Refer to "CABLE ROUTING" on page 2-41.

ECA14160

NOTICE

When installing the brake hose onto the brake master cylinder, make sure the brake pipe touches the projection "a" as shown.

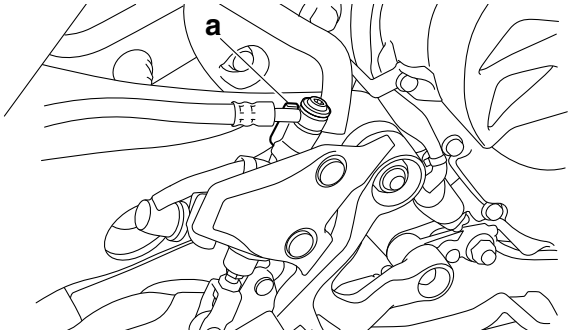

2. Fill:
   - Brake fluid reservoir
     (with the specified amount of the specified brake fluid)

	Specified brake fluid **DOT 4**

EWA13090

WARNING

- **Use only the designated brake fluid. Other brake fluids may cause the rubber seals to deteriorate, causing leakage and poor brake performance.**
- **Refill with the same type of brake fluid that is already in the system. Mixing brake fluids may result in a harmful chemical reaction, leading to poor brake performance.**
- **When refilling, be careful that water does not enter the brake fluid reservoir. Water will significantly lower the boiling point of the brake fluid and could cause vapor lock.**

ECA13540

NOTICE

Brake fluid may damage painted surfaces and plastic parts. Therefore, always clean up any spilt brake fluid immediately.

3. Bleed:
   - Brake system
     Refer to "BLEEDING THE HYDRAULIC BRAKE SYSTEM" on page 3-13.
4. Check:
   - Brake fluid level
     Below the minimum level mark "a" → Add the specified brake fluid to the proper level.
     Refer to "CHECKING THE BRAKE FLUID LEVEL" on page 3-11.

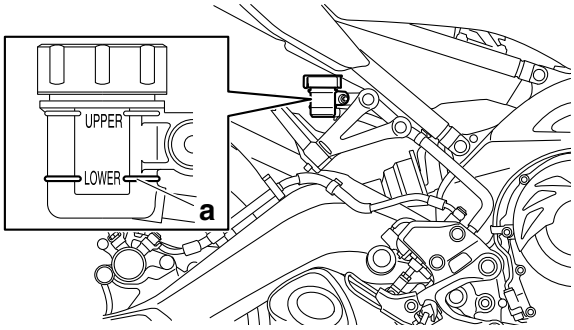

5. Adjust:
   - Brake pedal position
     Refer to "ADJUSTING THE REAR DISC BRAKE" on page 3-13.
6. Adjust:
   - Rear brake light operation timing
     Refer to "ADJUSTING THE REAR BRAKE LIGHT SWITCH" on page 3-27.

EAS22840

HANDLEBAR

Removing the handlebar

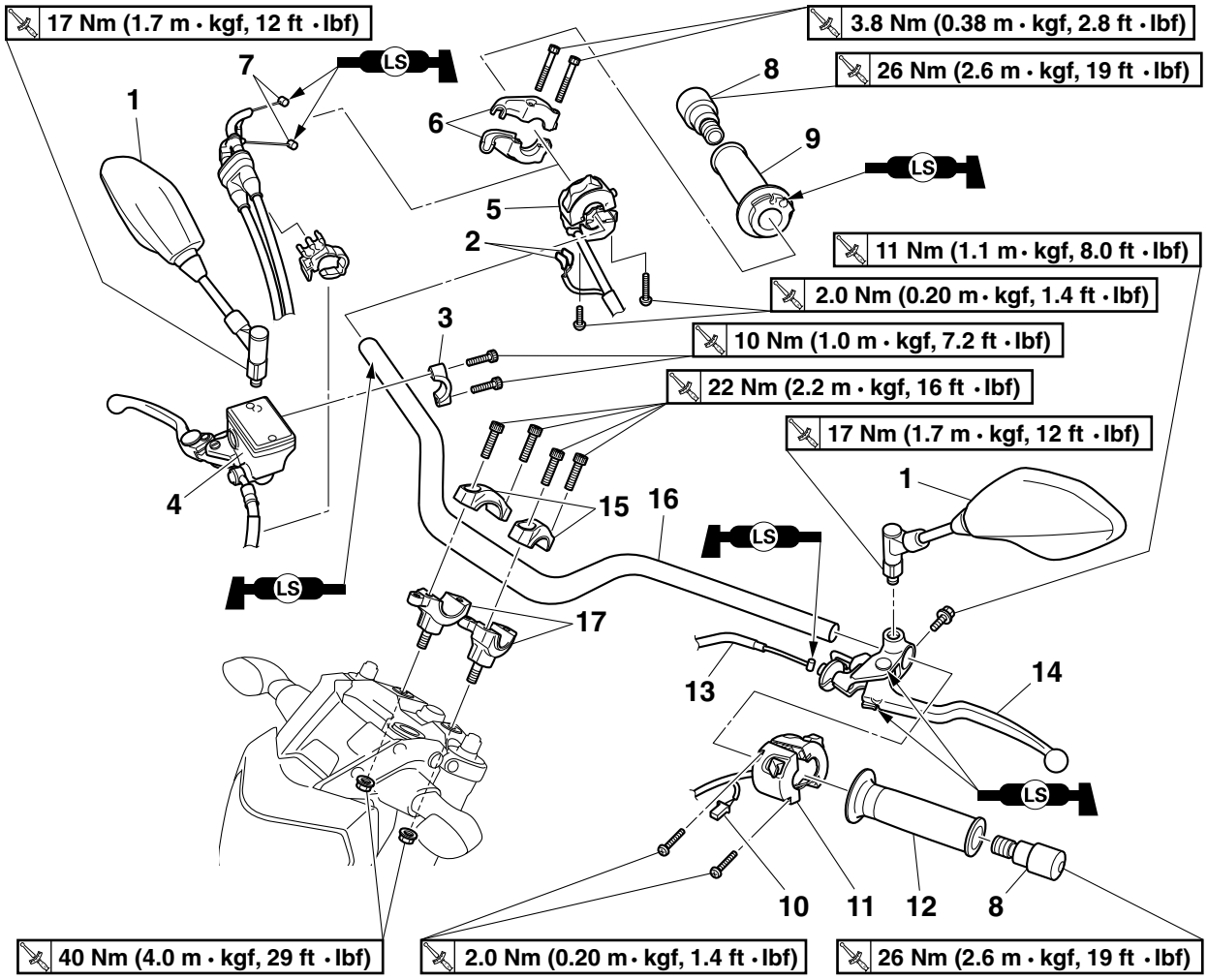

Order	Job/Parts to remove	Q'ty	Remarks
	Meter bracket		Refer to "GENERAL CHASSIS" on page 4-1.
1	Rearview mirror	2	
2	Front brake light switch connector	2	Disconnect.
3	Front master cylinder holder	1	
4	Front brake master cylinder assembly	1	
5	Right handlebar switch	1	
6	Throttle cable housing	2	
7	Throttle cable	2	Disconnect.
8	Grip end	2	
9	Throttle grip	1	
10	Clutch switch coupler	1	Disconnect.
11	Left handlebar switch	1	
12	Handlebar grip	1	
13	Clutch cable	1	Disconnect.
14	Clutch lever holder	1	
15	Upper handlebar holder	2	
16	Handlebar	1	
17	Lower handlebar holder	2	

EAS22860

REMOVING THE HANDLEBAR

1. Stand the vehicle on a level surface.

EWA13120

WARNING

Securely support the vehicle so that there is no danger of it falling over.

2. Remove:
   - Handlebar grip “1”

TIP

Blow compressed air between the left handlebar and the handlebar grip, and gradually push the grip off the handlebar.

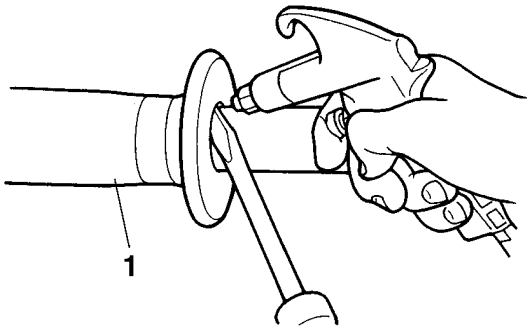

3. Remove:
   - Throttle cable housings “1”
   - Throttle grip “2”

TIP

While removing the throttle cable housing, pull back the rubber cover “3”.

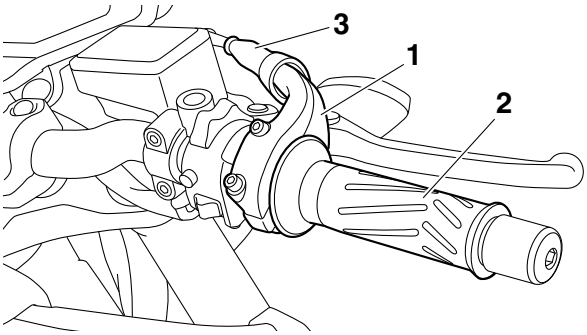

EAS22880

CHECKING THE HANDLEBAR

1. Check:
   - Handlebar
     Bends/cracks/damage → Replace.

EWA13690

WARNING

Do not attempt to straighten a bent handlebar as this may dangerously weaken it.

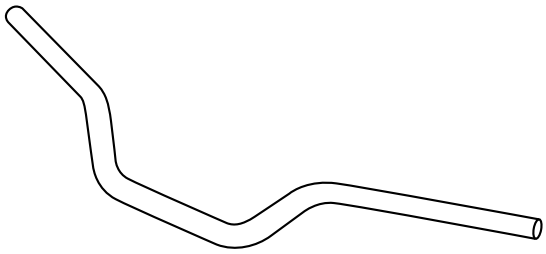

EAS22931

INSTALLING THE HANDLEBAR

1. Stand the vehicle on a level surface.

EWA13120

WARNING

Securely support the vehicle so that there is no danger of it falling over.

2. Install:
   - Lower handlebar holders (temporarily)
   - Handlebar “1”
   - Upper handlebar holders “2”

	Upper handlebar holder bolt 22 Nm (2.2 m·kgf, 16 ft·lbf)

ECA1RC1407

NOTICE

- **First, tighten the bolts on the front side of the upper handlebar holder, and then on the rear side.**
- **Turn the handlebar all the way to the left and right. If there is any contact with the fuel tank, adjust the handlebar position.**

TIP

- Align the punch mark “a” on the handlebar with the left side upper surface of the left lower handlebar holder “3”.
- The upper handlebar holders should be installed with the punch marks “b” facing forward.

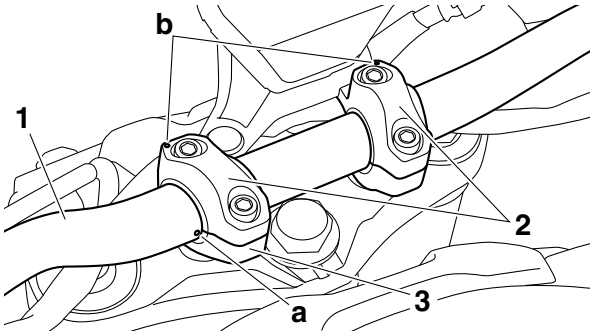

3. Tighten:
   - Lower handlebar holder nuts

	Lower handlebar holder nut 40 Nm (4.0 m·kgf, 29 ft·lbf)

4. Install:
   - Throttle grip “1”
   - Throttle cables
   - Throttle cable housings “2”
   - Grip end

	Grip end 26 Nm (2.6 m·kgf, 19 ft·lbf)

TIP
- Align the projection “a” on the throttle cable housing with the hole “b” in the handlebar.
- There should be 1–3 mm (0.04–0.12 in) of clearance “c” between the throttle grip and the grip end.

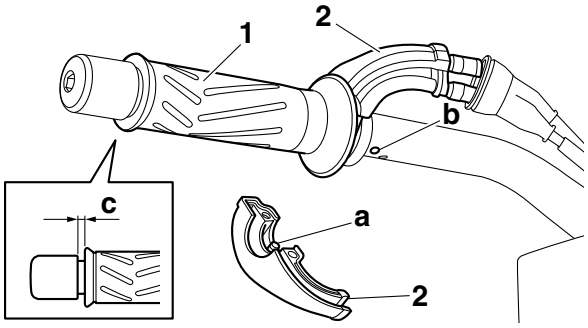

5. Install:
   - Right handlebar switch

	Right handlebar switch screw 2.0 Nm (0.20 m·kgf, 1.4 ft·lbf)

TIP
Align the projection “a” on the right handlebar switch with the hole “b” in the handlebar.

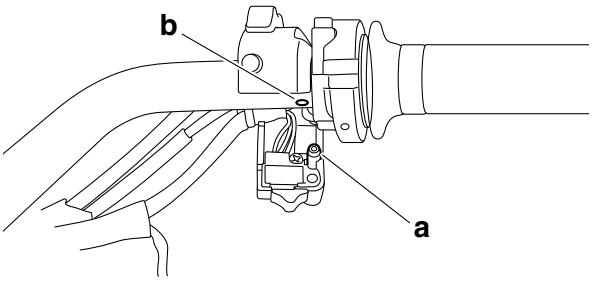

6. Install:
   - Front brake master cylinder assembly
     Refer to “INSTALLING THE FRONT BRAKE MASTER CYLINDER” on page 4-30.
7. Install:
   - Clutch lever holder “1”
   - Clutch cable

	Clutch lever holder pinch bolt 11 Nm (1.1 m·kgf, 8.0 ft·lbf)

TIP
Align the center of slit on the clutch lever holder with the punch mark “a” on the handlebar.

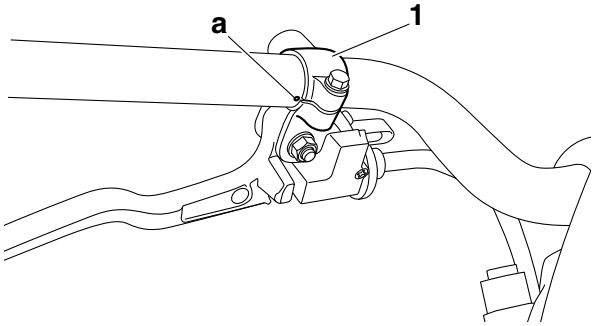

8. Install:
   - Handlebar grip “1”
   - Grip end “2”

	Grip end 26 Nm (2.6 m·kgf, 19 ft·lbf)

▼▼▼▼▼▼▼▼▼▼▼▼▼▼▼▼▼▼▼▼▼▼▼▼▼▼▼▼▼▼▼▼▼▼

a. Apply a thin coat of rubber adhesive onto the end of the left handlebar.
b. Side the handlebar grip over the end of the left handlebar.
c. Wipe off any excess rubber adhesive with a clean rag.

EWA13700

WARNING

Do not touch the handlebar grip until the rubber adhesive has fully dried.

TIP
There should be 1–3 mm (0.04–0.12 in) of clearance “a” between the handlebar grip and the grip end.

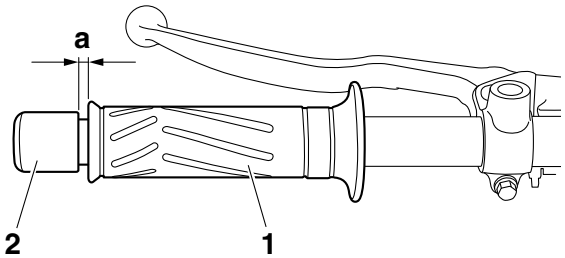

▲▲▲▲▲▲▲▲▲▲▲▲▲▲▲▲▲▲▲▲▲▲▲▲▲▲▲▲▲▲▲▲▲▲

9. Install:
   - Left handlebar switch

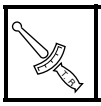	**Left handlebar switch screw** **2.0 Nm (0.20 m·kgf, 1.4 ft·lbf)**

TIP

Align the projection “a” on the left handlebar switch with the hole “b” in the handlebar.

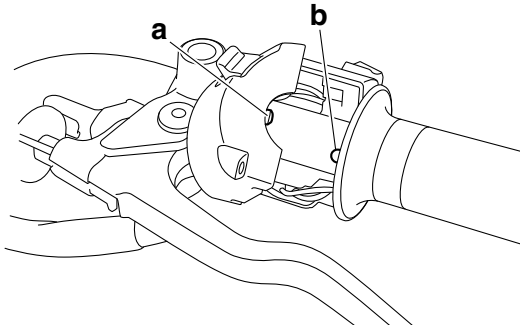

10. Adjust:
   - Throttle grip free play
     Refer to “CHECKING THE THROTTLE GRIP” on page 3-28.

	**Throttle grip free play** **3.0–5.0 mm (0.12–0.20 in)**

11. Adjust:
   - Clutch lever free play
     Refer to “ADJUSTING THE CLUTCH LEVER FREE PLAY” on page 3-11.

	**Clutch lever free play** **10.0–15.0 mm (0.39–0.59 in)**

EAS22950

FRONT FORK

Removing the front fork legs

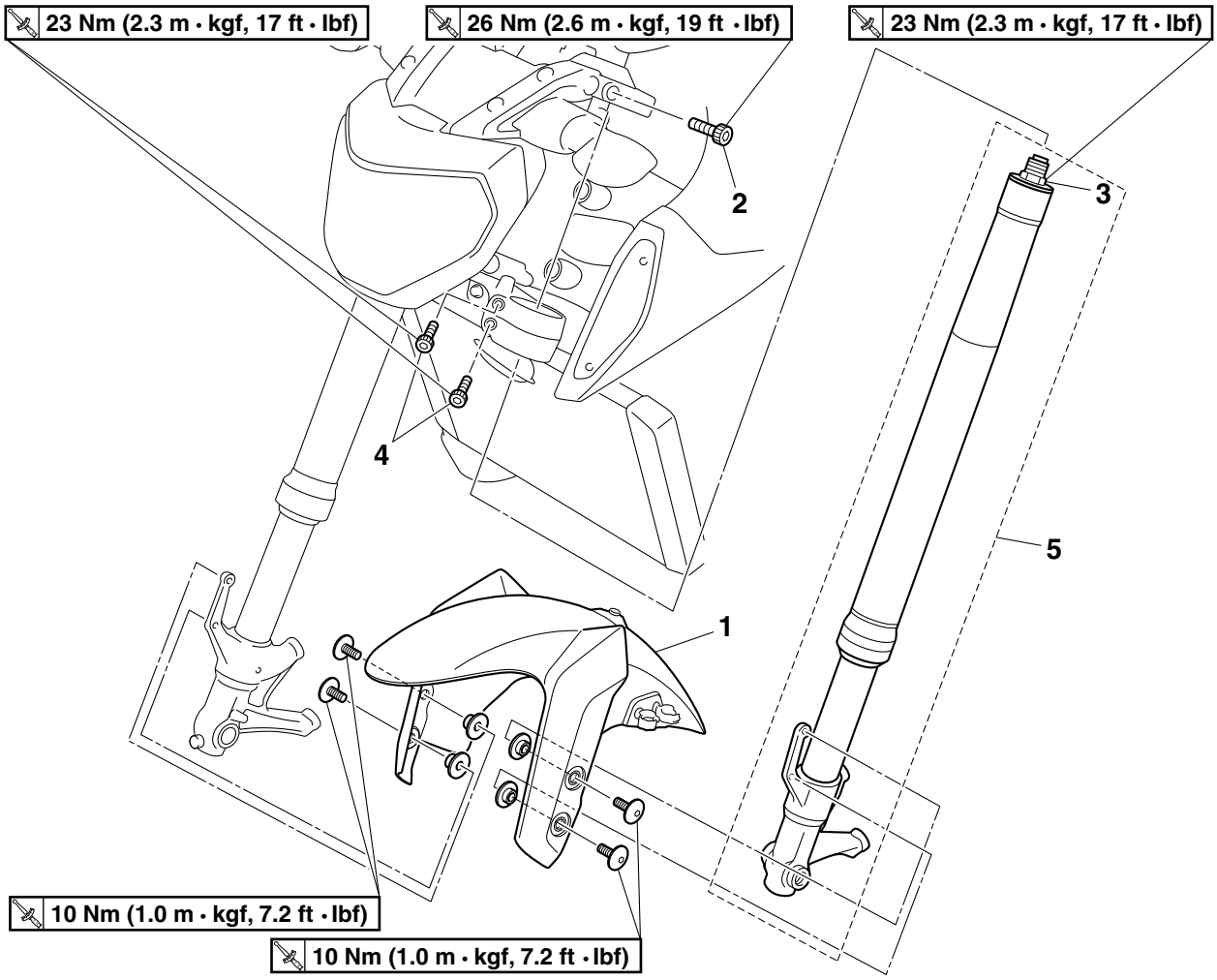

Order	Job/Parts to remove	Q'ty	Remarks
			The following procedure applies to both of the front fork legs.
	Front wheel		Refer to "FRONT WHEEL" on page 4-8.
1	Front fender	1	
2	Upper bracket pinch bolt	1	Loosen.
3	Cap bolt	1	Loosen.
4	Lower bracket pinch bolt	2	Loosen.
5	Front fork leg	1	

Disassembling the left front fork leg

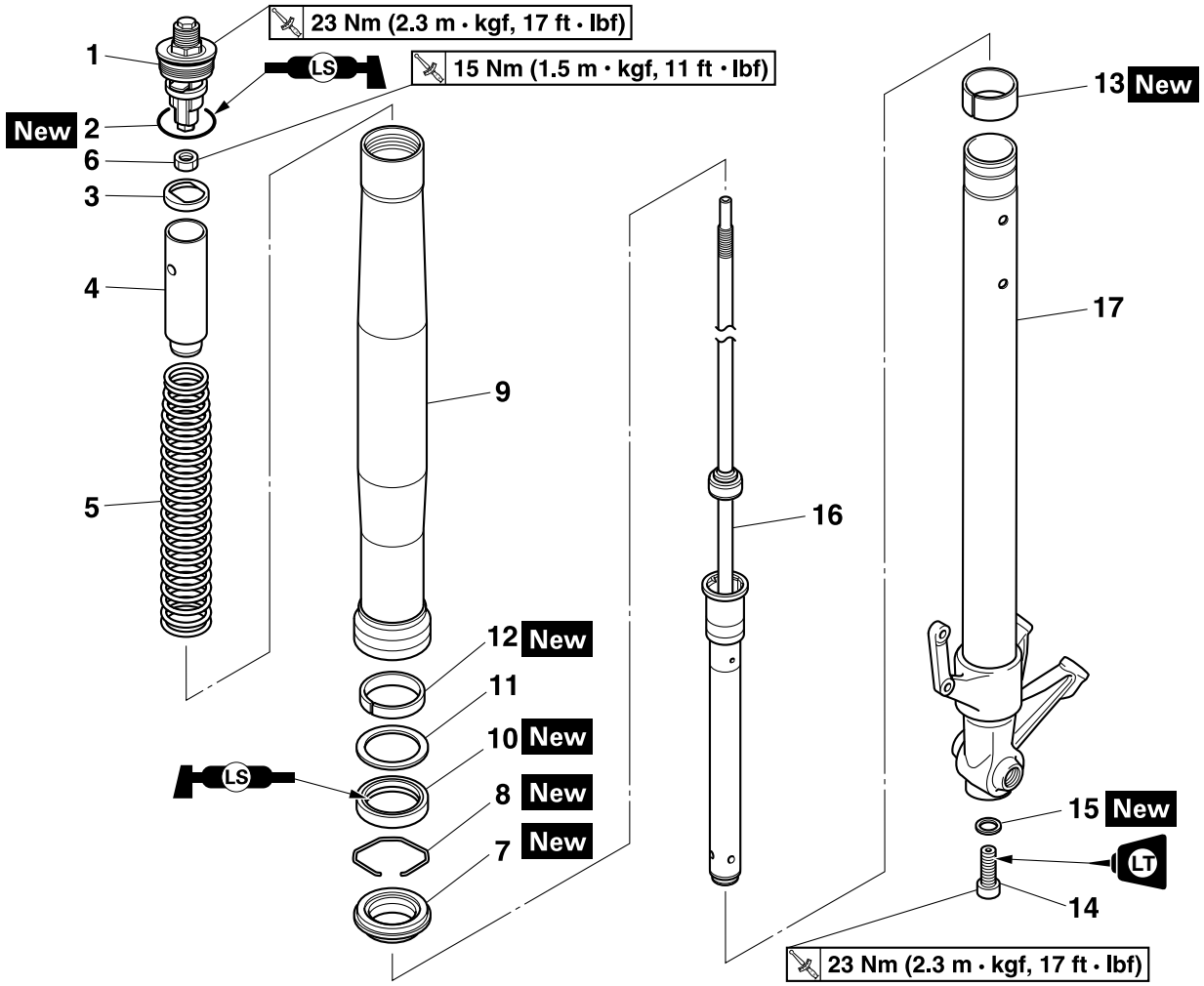

Order	Job/Parts to remove	Q'ty	Remarks
1	Cap bolt	1	
2	O-ring	1	
3	Washer	1	
4	Spacer	1	
5	Fork spring	1	
6	Locknut	1	
7	Dust seal	1	
8	Oil seal clip	1	
9	Outer tube	1	
10	Oil seal	1	
11	Washer	1	
12	Outer tube bushing	1	
13	Inner tube bushing	1	
14	Damper rod assembly bolt	1	
15	Copper washer	1	
16	Damper rod assembly	1	
17	Inner tube	1	

Disassembling the right front fork leg

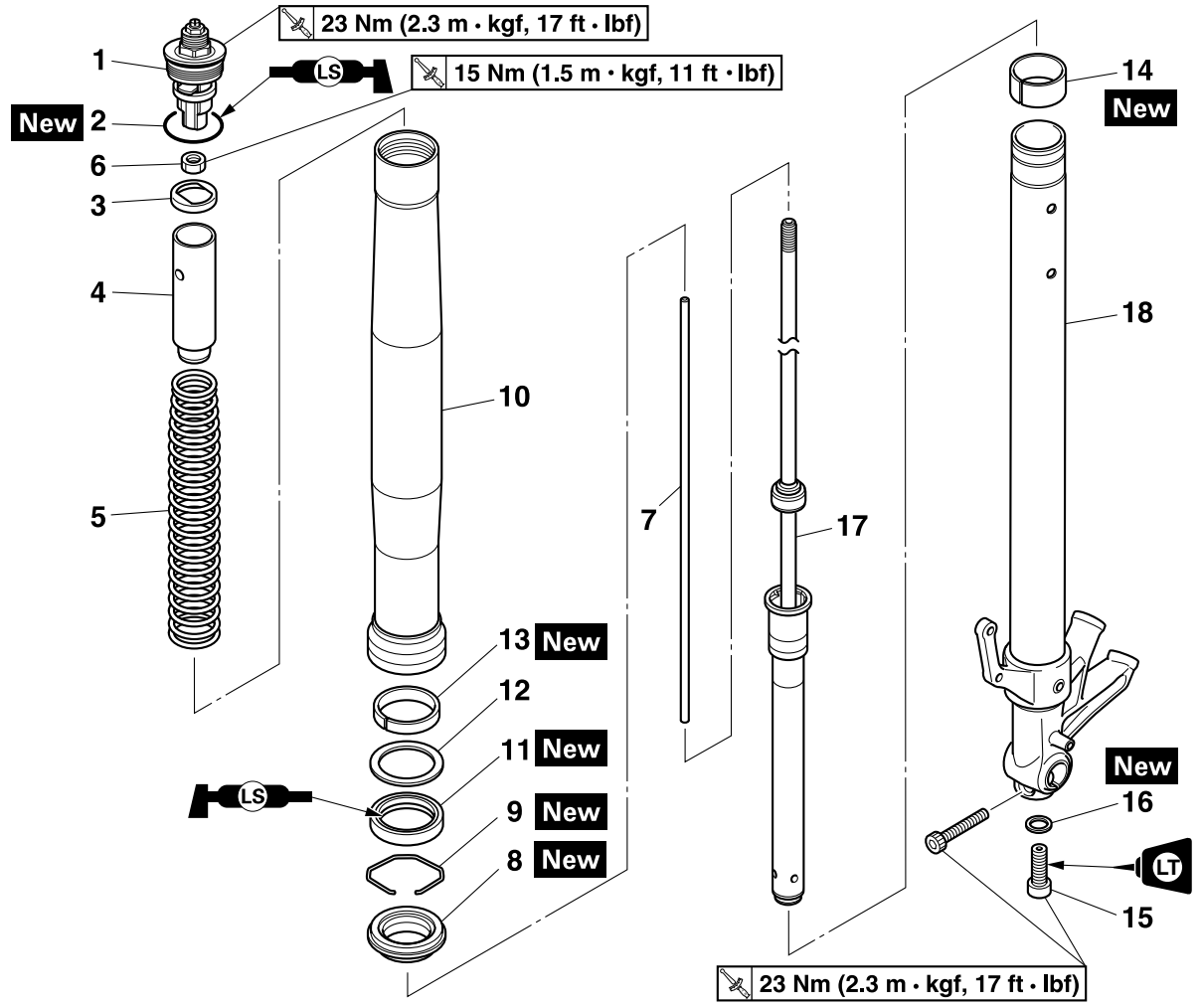

Order	Job/Parts to remove	Q'ty	Remarks
1	Cap bolt	1	
2	O-ring	1	
3	Washer	1	
4	Spacer	1	
5	Fork spring	1	
6	Locknut	1	
7	Damper adjusting rod	1	
8	Dust seal	1	
9	Oil seal clip	1	
10	Outer tube	1	
11	Oil seal	1	
12	Washer	1	
13	Outer tube bushing	1	
14	Inner tube bushing	1	
15	Damper rod assembly bolt	1	
16	Copper washer	1	
17	Damper rod assembly	1	
18	Inner tube	1	

EAS1RC1412

REMOVING THE FRONT FORK LEGS

The following procedure applies to both of the front fork legs.

TIP

Each front fork leg is equipped with a spring preload adjusting bolt, the right fork leg is equipped with a rebound damping force adjusting screw and compression damping force adjusting screw. Pay attention not to mistake the right and left.

1. Stand the vehicle on a level surface.

EWA13120

WARNING

Securely support the vehicle so that there is no danger of it falling over.

TIP

Place the vehicle on a suitable stand so that the front wheel is elevated.

2. Remove:
   - Front brake caliper
     Refer to “FRONT BRAKE” on page 4-20.
   - Front wheel
     Refer to “FRONT WHEEL” on page 4-8.
3. Loosen:
   - Upper bracket pinch bolt “1”
   - Cap bolt “2”
   - Lower bracket pinch bolts “3”

EWA13640

WARNING

Before loosening the upper and lower bracket pinch bolts, support the front fork leg.

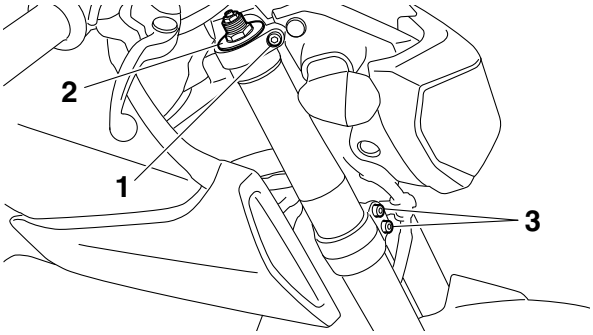

4. Remove:
   - Front fork leg

EAS1RC1413

DISASSEMBLING THE FRONT FORK LEGS

The following procedure applies to both of the front fork legs.

1. Remove:
   - Cap bolt “1”
     (from the damper rod assembly)
   - Washer “2”
   - Spacer “3”
   - Locknut “4”

▼▼▼▼▼▼▼▼▼▼▼▼▼▼▼▼▼▼▼▼▼▼▼▼▼▼▼▼▼▼▼▼▼▼

a. Press down on the spacer with the fork spring compressor “5”.
b. Install the rod holder “6” between the locknut “4” and the spacer “3”.

Fork spring compressor
90890-01441
YM-01441
Rod holder
90890-01434
Damper rod holder double ended
YM-01434

TIP

Use the side of the rod holder that is marked “B”.

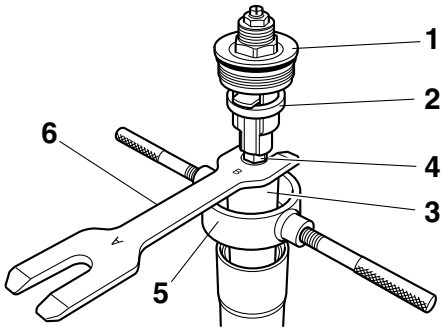

c. Hold the cap bolt and loosen the locknut.
d. Remove the cap bolt and washer.
e. Remove the rod holder and fork spring compressor.
f. Remove the spacer and locknut.

▲▲▲▲▲▲▲▲▲▲▲▲▲▲▲▲▲▲▲▲▲▲▲▲▲▲▲▲▲▲▲▲▲▲

2. Drain:
   - Fork oil

TIP

Stroke the damper rod assembly “1” several times while draining the fork oil.

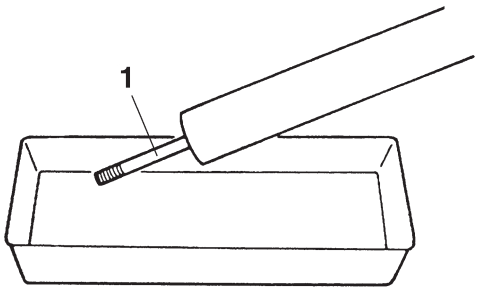

3. Remove:
   - Dust seal “1”
   - Oil seal clip “2”
     (with a flat-head screwdriver)

ECA1RC1404

NOTICE

Do not scratch the outer tube.

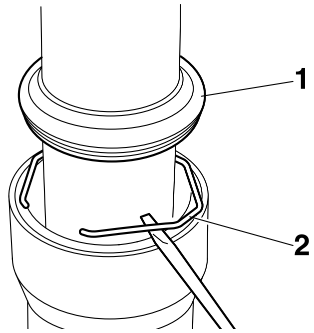

4. Remove:
   - Outer tube

▼▼▼▼▼▼▼▼▼▼▼▼▼▼▼▼▼▼▼▼▼▼▼▼▼▼▼▼▼▼▼▼▼▼▼▼

a. Hold the front fork leg horizontally.
b. Securely clamp the brake caliper bracket in a vise with soft jaws.
c. Separate the outer tube from the inner tube by pulling the outer tube forcefully but carefully.

ECA1RC1424

NOTICE

Excessive force will damage the bushings. Damaged bushings must be replaced.

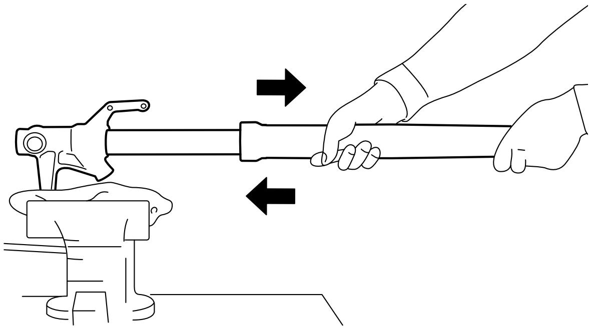

▲▲▲▲▲▲▲▲▲▲▲▲▲▲▲▲▲▲▲▲▲▲▲▲▲▲▲▲▲▲▲▲▲▲▲▲

5. Remove:
   - Damper rod assembly bolt
   - Damper rod assembly

ECA1RC1412

NOTICE

For the damper rod assembly, the right side is used for the rebound operation. Pay attention not to mistake the right and left.

TIP

While holding the damper rod with the damper rod holder “1”, loosen the damper rod assembly bolt.

Damper rod holder
90890-01423
Damping rod holder
YM-01423

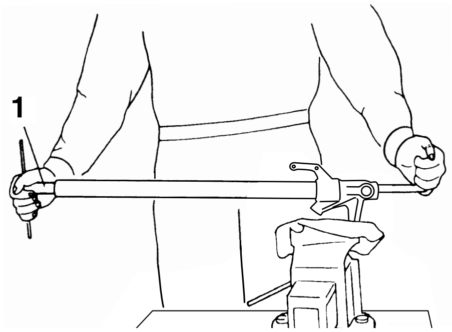

EAS23011

CHECKING THE FRONT FORK LEGS

The following procedure applies to both of the front fork legs.

1. Check:
   - Inner tube “1”
   - Outer tube “2”

   Bends/damage/scratches → Replace.

EWA13650

⚠ WARNING

Do not attempt to straighten a bent inner tube as this may dangerously weaken it.

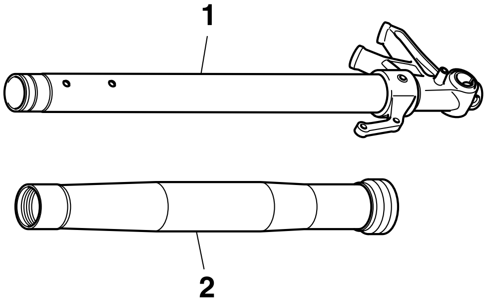

2. Measure:
   - Spring free length “a”

   Out of specification → Replace.

Fork spring free length
300.3 mm (11.82 in)
Limit
294.3 mm (11.59 in)

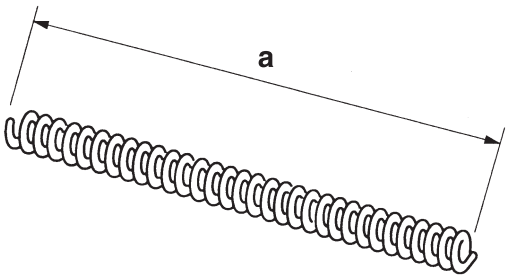

3. Check:
   - Damper rod "1"
     Damage/wear → Replace.
     Obstruction → Blow out all of the oil passages with compressed air.

ECA1RC1405

NOTICE

- **The front fork leg has a very sophisticated internal construction, which are particularly sensitive to foreign material.**
- **When disassembling and assembling the front fork leg, do not allow any foreign material to enter the front fork.**

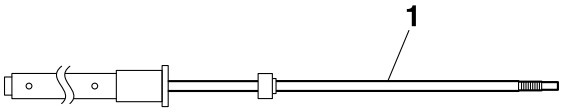

EAS1RC1414

ASSEMBLING THE FRONT FORK LEGS

The following procedure applies to both of the front fork legs.

EWA1RC1404

WARNING

- **Note that the amount of the fork oil is different in the left and right front fork legs. Make sure to fill each of the left and right front fork legs with the specified amount of the fork oil.**
- **If both front fork legs are not filled with the specified amount of the fork oil, it may cause poor handling and a loss of stability.**

TIP

- When assembling the front fork leg, be sure to replace the following parts:
  - Oil seal
  - Oil seal clip
  - Dust seal
  - Copper washer
  - O-ring
- Before assembling the front fork leg, make sure all of the components are clean.

1. Install:
   - Damper rod assembly "1"

ECA1RC1406

NOTICE

Allow the damper rod assembly to slide slowly down the inner tube "2" until it protrudes from the bottom of the inner tube. Be careful not to damage the inner tube.

TIP

The left side damper rod assembly has the two holes of oil path, unlike the right side.

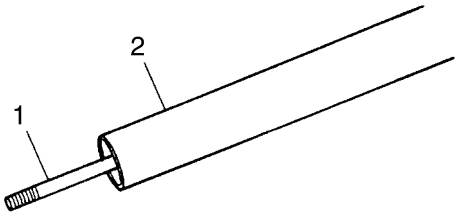

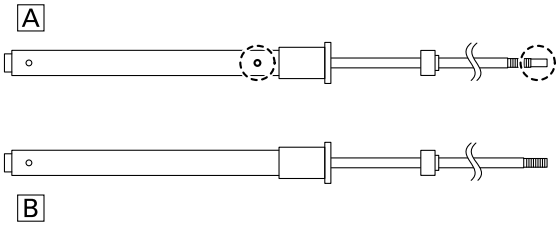

A. Left side
B. Right side

2. Tighten:
   - Damper rod assembly bolt
     (along with the copper washer New)

	**Damper rod assembly bolt** **23 Nm (2.3 m·kgf, 17 ft·lbf)** **LOCTITE®**

TIP

While holding the damper rod assembly with the damper rod holder "1", tighten the damper rod assembly bolt.

	**Damper rod holder** **90890-01423** **Damping rod holder** **YM-01423**

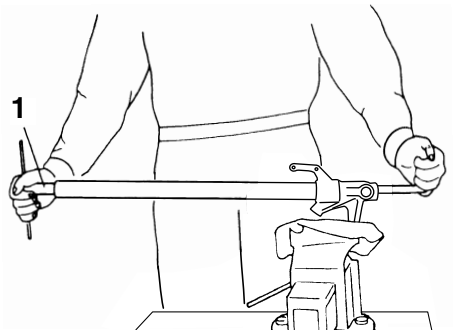

3. Lubricate:
   - Inner tube's outer surface

	Recommended oil **Suspension oil 01**

4. Install:
   - Dust seal "1" New
   - Oil seal clip "2" New
   - Oil seal "3" New
   - Washer "4"
   - Outer tube bushing "5" New
   - Inner tube bushing "6" New

ECA1RC1411

NOTICE

Make sure the numbered side of the oil seal faces bottom side.

TIP

- Before installing the oil seal, lubricate its lips with lithium-soap-based grease.
- Lubricate the outer surface of the inner tube with fork oil.
- Before installing the oil seal, cover the top of the front fork leg with a plastic bag to protect the oil seal during installation.

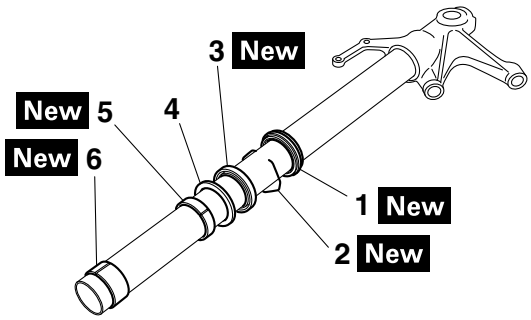

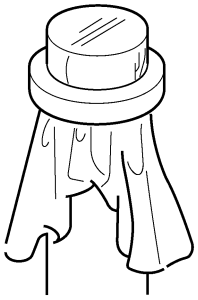

5. Install:
   - Outer tube
     (to the inner tube)
6. Install:
   - Outer tube bushing "1"
   - Washer "2"
     (with the fork seal driver "3")

	Fork seal driver **90890-01442** **Adjustable fork seal driver (36–46 mm)** **YM-01442**

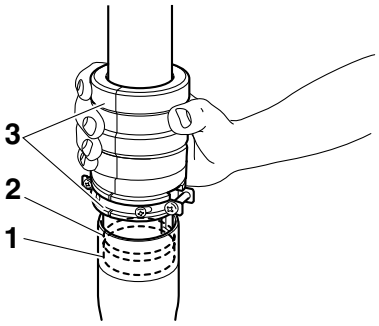

7. Install:
   - Oil seal "1"
     (with the fork seal driver "2")

	Fork seal driver **90890-01442** **Adjustable fork seal driver (36–46 mm)** **YM-01442**

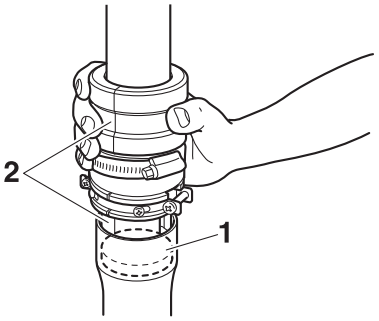

8. Install:
   - Oil seal clip “1”

TIP
Adjust the oil seal clip so that it fits into the outer tube’s groove.

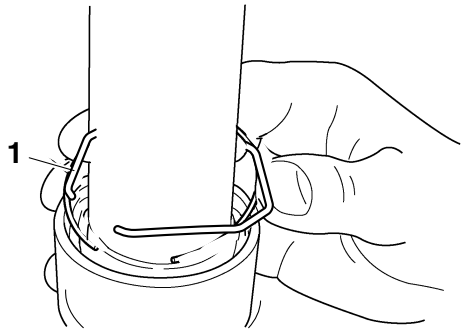

9. Install:
   - Dust seal “1”
     (with the fork seal driver “2”)

	**Fork seal driver** **90890-01442** **Adjustable fork seal driver (36–46 mm)** **YM-01442**

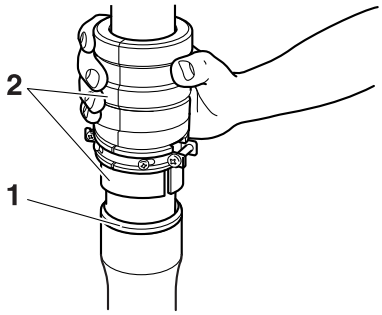

10. Install:
   - Rod puller “1”
   - Rod puller attachment (M10) “2”
     (onto the damper rod “3”)

	**Rod puller** **90890-01437** **Universal damping rod bleeding tool set** **YM-A8703** **Rod puller attachment (M10)** **90890-01436** **Universal damping rod bleeding tool set** **YM-A8703**

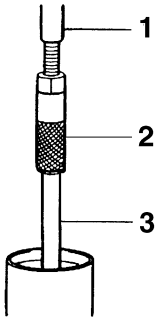

11. Fill:
   - Front fork leg
     (with the specified amount of the recommended fork oil)

	**Recommended oil** **Suspension oil 01** **Quantity (left)** **472.0 cm^3 (15.96 US oz, 16.65 Imp.oz)** **Quantity (right)** **458.0 cm^3 (15.48 US oz, 16.15 Imp.oz)**

ECA14230
NOTICE

- **Be sure to use the recommended fork oil. Other oils may have an adverse effect on front fork performance.**
- **When disassembling and assembling the front fork leg, do not allow any foreign material to enter the front fork.**

12. After filling the front fork leg, slowly stroke the damper rod “1” up and down (at least ten times) to distribute the fork oil.

TIP
Be sure to stroke the damper rod slowly because the fork oil may spurt out.

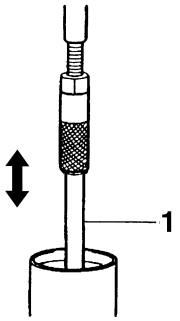

13. Before measuring the fork oil level, wait ten minutes until the oil has settled and the air bubbles have dispersed.

TIP
Be sure to bleed the front fork leg of any residual

air.

14.Measure:
- Front fork leg oil level “a”
  (from the top of the outer tube, with the outer tube fully compressed and without the fork spring)
  Out of specification → Correct.

Level (left)
147 mm (5.8 in)
Level (right)
148 mm (5.8 in)

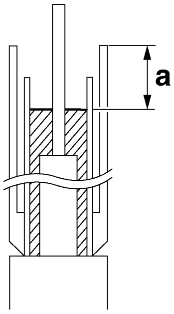

15.Install:
- Fork spring (Left side) “1”
- Spacer (Left side) “2”
- Locknut (Left side) “3”
- Washer (Left side) “4”
- Cap bolt (Left side) “5”
  (along with the O-ring New)

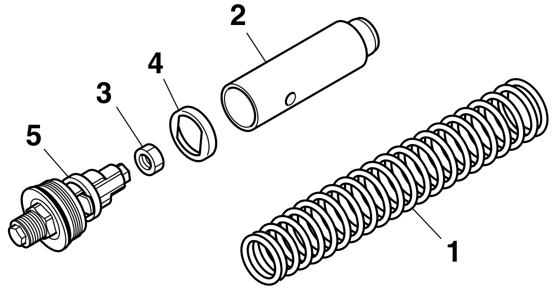

▼▼▼▼▼▼▼▼▼▼▼▼▼▼▼▼▼▼▼▼▼▼▼▼▼▼▼▼▼▼▼▼▼▼▼

a. Remove the rod puller and rod puller attachment.
b. Install the fork spring.

TIP
Install the fork spring with the smaller diameter “a” facing up “A”.

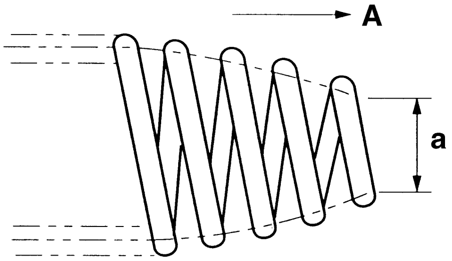

c. Install the locknut all the way onto the damper rod assembly.
d. Install the rod puller and rod puller attachment.
e. Install the spacer.
f. Install the fork spring compressor.
g. Press down on the spacer with the fork spring compressor “1”.
h. Pull up the rod puller and install the rod holder “2” between the locknut “3” and the spacer “4”.

Rod puller
90890-01437
Universal damping rod bleeding tool set
YM-A8703
Rod puller attachment (M10)
90890-01436
Universal damping rod bleeding tool set
YM-A8703
Fork spring compressor
90890-01441
YM-01441
Rod holder
90890-01434
Damper rod holder double ended
YM-01434

TIP
Use the side of the rod holder that is marked “B”.

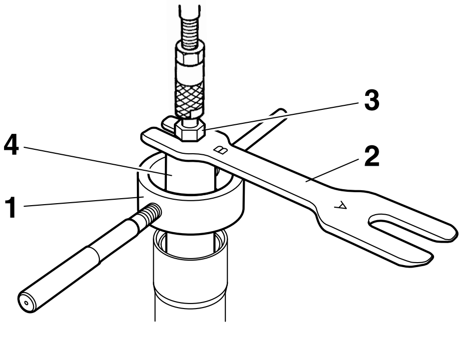

i. Remove the rod puller and rod puller attachment.

j. Install the washer and cap bolt, and then finger tighten the cap bolt.

EWA13670

WARNING

Always use a new cap bolt O-ring.

k. Hold the cap bolt “5” and tighten the locknut “3” to specification.

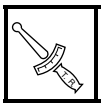	**Locknut** **15 Nm (1.5 m·kgf, 11 ft·lbf)**

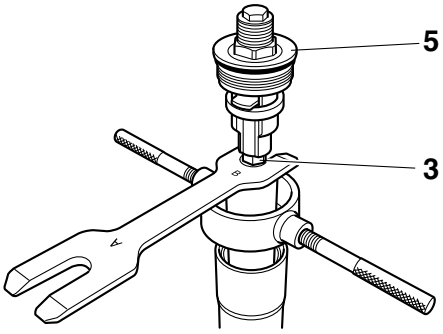

l. Remove the rod holder and fork spring compressor.

▲▲▲▲▲▲▲▲▲▲▲▲▲▲▲▲▲▲▲▲▲▲▲▲▲▲▲▲▲▲▲▲

16.Install:
- Fork spring (Right side) “1”
- Spacer (Right side) “2”
- Locknut (Right side) “3”
- Damper adjusting rod “4”
- Washer (Right side) “5”
- Cap bolt (Right side) “6” (along with the O-ring New)

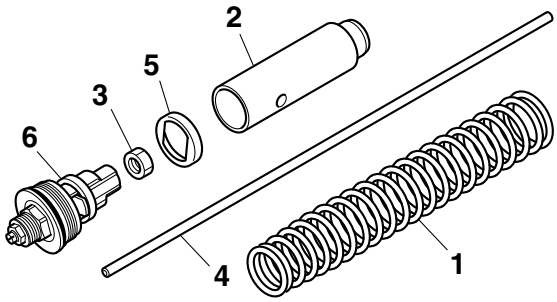

▼▼▼▼▼▼▼▼▼▼▼▼▼▼▼▼▼▼▼▼▼▼▼▼▼▼▼▼▼▼▼▼

a. Remove the rod puller and rod puller attachment.
b. Install the fork spring.

TIP

Install the fork spring with the smaller diameter “a” facing up “A”.

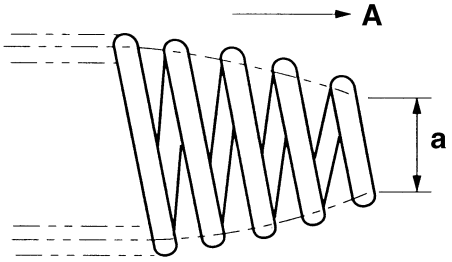

c. Install the locknut all the way onto the damper rod assembly.
d. Install the rod puller and rod puller attachment.
e. Install the spacer.
f. Install the fork spring compressor.
g. Press down on the spacer with the fork spring compressor “1”.
h. Pull up the rod puller and install the rod holder “2” between the locknut “3” and the spacer “4”.

	**Rod puller** **90890-01437** **Universal damping rod bleeding tool set** **YM-A8703** **Rod puller attachment (M10)** **90890-01436** **Universal damping rod bleeding tool set** **YM-A8703** **Fork spring compressor** **90890-01441** **YM-01441** **Rod holder** **90890-01434** **Damper rod holder double ended** **YM-01434**

TIP

Use the side of the rod holder that is marked “B”.

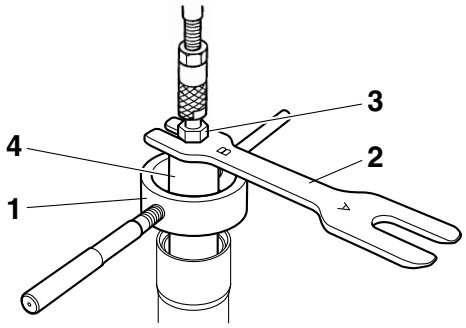

i. Remove the rod puller and rod puller attachment.

j. Position the locknut “3” as specified “b”.

	Distance “b” **12 mm (0.47 in)**

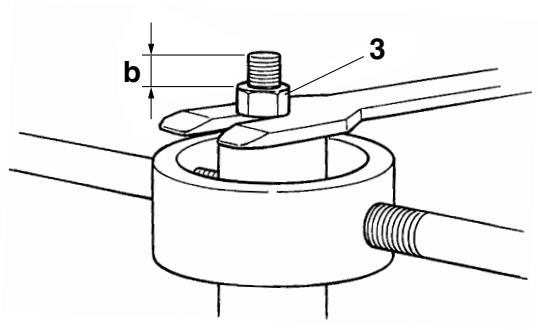

k. Set the cap bolt distance “c” to specification.

	Distance “c” **13 mm (0.51 in)**

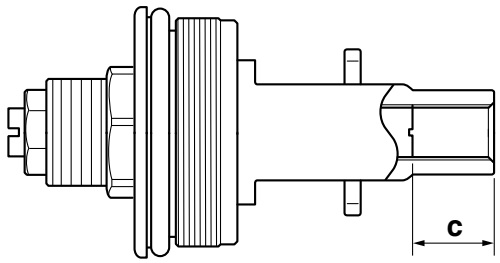

l. Install the damper adjusting rod, washer and cap bolt, and then finger tighten the cap bolt.

EWA13670

WARNING

Always use a new cap bolt O-ring.

m. Hold the cap bolt “5” and tighten the locknut “3” to specification.

	Locknut **15 Nm (1.5 m·kgf, 11 ft·lbf)**

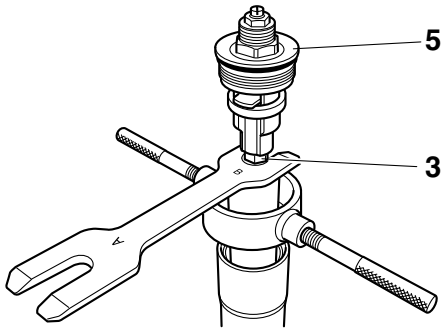

n. Remove the rod holder and fork spring compressor.

▲▲▲▲▲▲▲▲▲▲▲▲▲▲▲▲▲▲▲▲▲▲▲▲▲▲▲▲▲▲▲▲

17. Install:
- Cap bolt
  (to the outer tube)

TIP
- Temporarily tighten the cap bolt.
- When to tighten the cap bolt to the specified torque is after installing the front fork leg to the vehicle and tightening the lower bracket pinch bolts.

EAS23050

INSTALLING THE FRONT FORK LEGS

The following procedure applies to both of the front fork legs.

1. Install:
   - Front fork leg
     Temporarily tighten the upper and lower bracket pinch bolts.

TIP

Make sure the outer tube is flush with the top of the upper bracket.

2. Tighten:
   - Lower bracket pinch bolts “1”

	Lower bracket pinch bolt **23 Nm (2.3 m·kgf, 17 ft·lbf)**

- Cap bolt “2”

	Cap bolt **23 Nm (2.3 m·kgf, 17 ft·lbf)**

- Upper bracket pinch bolt “3”

	Upper bracket pinch bolt **26 Nm (2.6 m·kgf, 19 ft·lbf)**

EWA13680

WARNING

Make sure the brake hoses are routed properly.

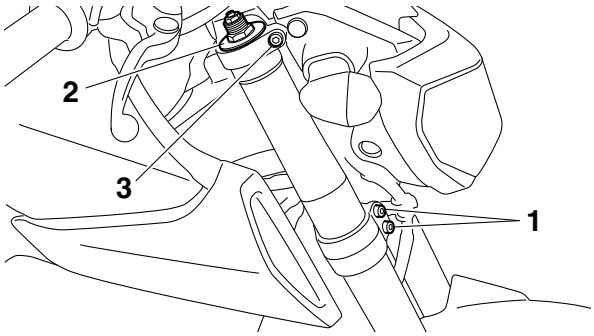

EAS23090

STEERING HEAD

Removing the lower bracket

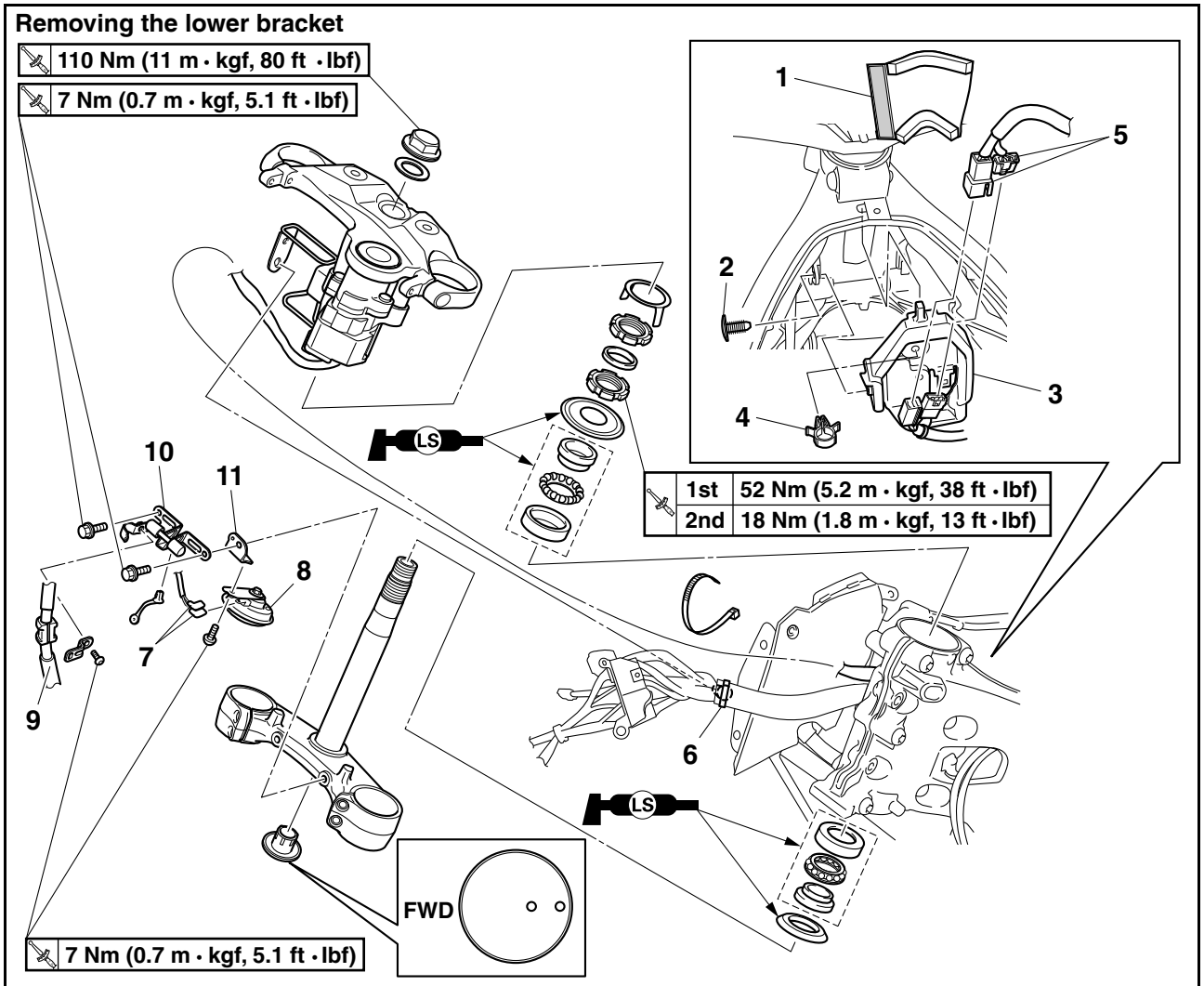

Order	Job/Parts to remove	Q'ty	Remarks
	Fuel tank		Refer to "FUEL TANK" on page 7-1.
	Air filter case		Refer to "GENERAL CHASSIS" on page 4-1.
	Headlight assembly		Refer to "GENERAL CHASSIS" on page 4-1.
	Meter assembly		Refer to "GENERAL CHASSIS" on page 4-1.
	Handlebar		Refer to "HANDLEBAR" on page 4-44.
	Front fork legs		Refer to "FRONT FORK" on page 4-48.
1	Protector	1	
2	Rivet	1	
3	Coupler cover assembly	1	
4	Clamp	1	
5	Main switch coupler	2	Disconnect.
6	Wire harness clamp	1	Disconnect.
7	Horn lead connector	2	Disconnect.
8	Horn	1	
9	Front brake hose	1	
10	Headlight stay	1	
11	Horn bracket	1	

Removing the lower bracket

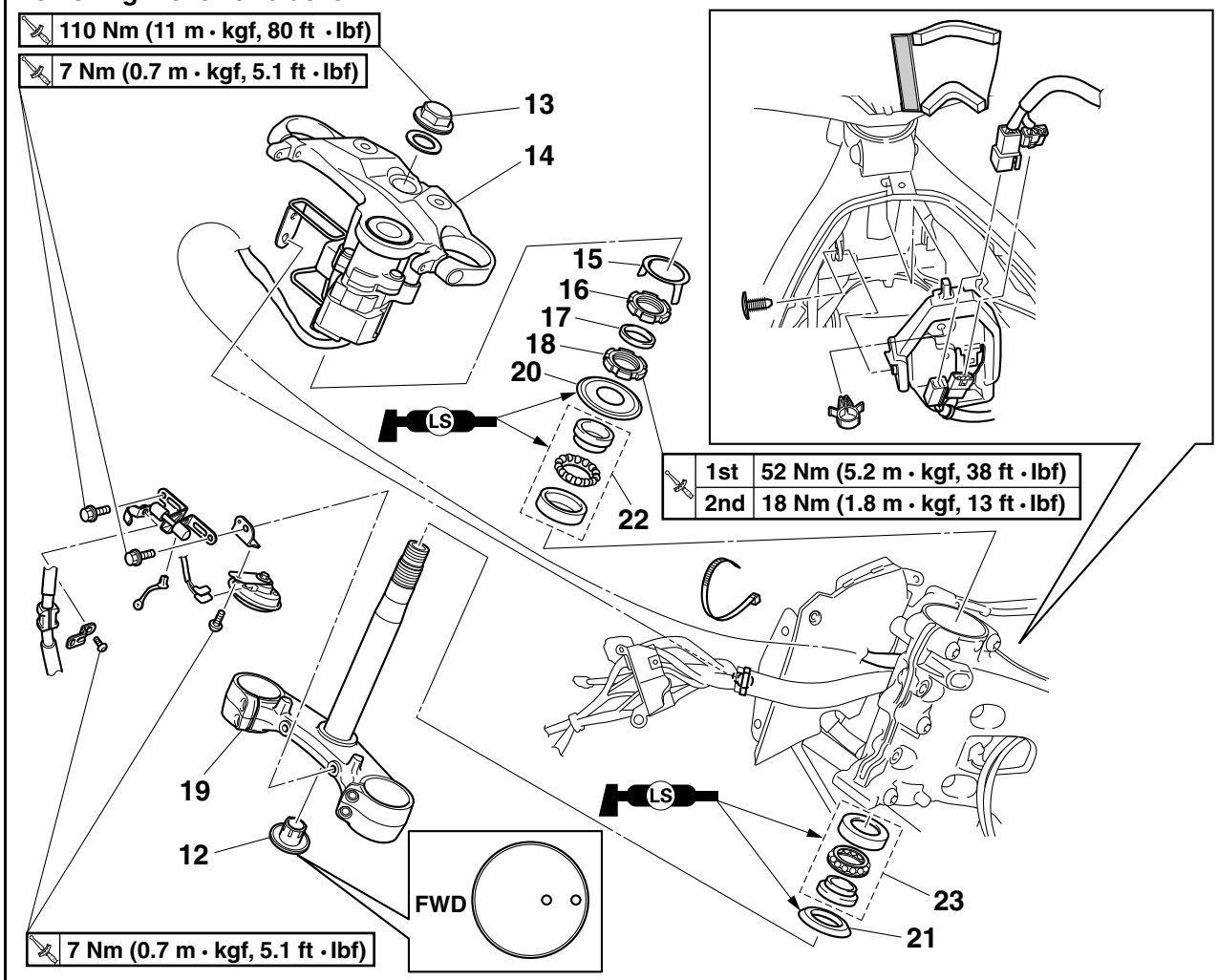

Order	Job/Parts to remove	Q'ty	Remarks
12	Lower bracket cap	1	
13	Steering stem nut	1	
14	Upper bracket	1	
15	Lock washer	1	
16	Upper ring nut	1	
17	Rubber washer	1	
18	Lower ring nut	1	
19	Lower bracket	1	
20	Bearing cover	1	
21	Lower bearing dust seal	1	
22	Upper bearing	1	
23	Lower bearing	1	

EAS23110

REMOVING THE LOWER BRACKET

1. Stand the vehicle on a level surface.

EWA13120

WARNING

Securely support the vehicle so that there is no danger of it falling over.

2. Remove:
   - Upper ring nut
   - Rubber washer
   - Lower ring nut “1”
   - Lower bracket

EWA13730

WARNING

Securely support the lower bracket so that there is no danger of it falling.

TIP

- Hold the lower ring nut with steering nut wrench, and then remove the upper ring nut with the ring nut wrench.
- Remove the lower ring nut with the steering nut wrench “2”.

Ring nut wrench
90890-01268
Spanner wrench
YU-01268
Steering nut wrench
90890-01403
Exhaust flange nut wrench
YU-A9472

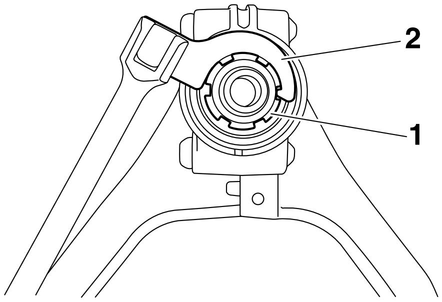

EAS23120

CHECKING THE STEERING HEAD

1. Wash:
   - Bearings
   - Bearing races

Recommended cleaning solvent
Kerosene

2. Check:
   - Bearings “1”
   - Bearing races “2”

Damage/pitting → Replace the bearings and bearing races as a set.

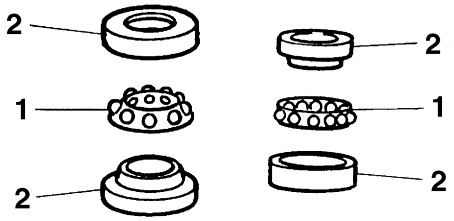

3. Replace:
   - Bearings
   - Bearing races

▼▼▼▼▼▼▼▼▼▼▼▼▼▼▼▼▼▼▼▼▼▼▼▼▼▼▼▼▼▼▼▼▼

a. Remove the bearing races from the steering head pipe “1” with a long rod “2” and hammer.
b. Remove the bearing race “3” from the lower bracket with a floor chisel “4” and hammer.
c. Install a new dust seal and new bearing races.

ECA14270

NOTICE

If the bearing race is not installed properly, the steering head pipe could be damaged.

TIP

- Always replace the bearings and bearing races as a set.
- Whenever the steering head is disassembled, replace the dust seal.

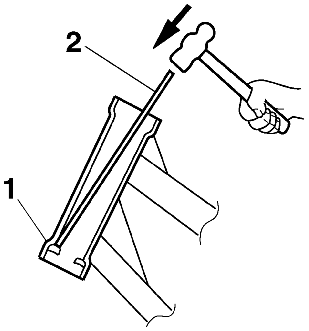

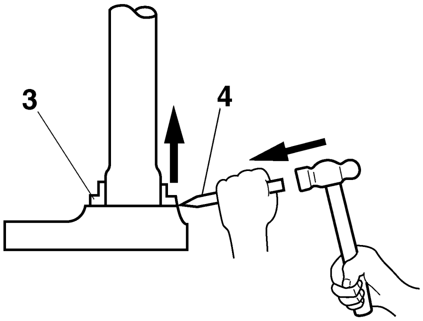

▲▲▲▲▲▲▲▲▲▲▲▲▲▲▲▲▲▲▲▲▲▲▲▲▲▲▲▲▲▲▲▲▲▲

4. Check:
   - Upper bracket
   - Lower bracket
     (along with the steering stem)
     Bends/cracks/damage → Replace.

EAS23140

INSTALLING THE STEERING HEAD

1. Lubricate:
   - Upper bearing
   - Lower bearing

	Recommended lubricant **Lithium-soap-based grease**

2. Install:
   - Lower ring nut “1”
   - Rubber washer “2”
   - Upper ring nut “3”
   - Lock washer “4”
     Refer to “CHECKING AND ADJUSTING THE STEERING HEAD” on page 3-18.

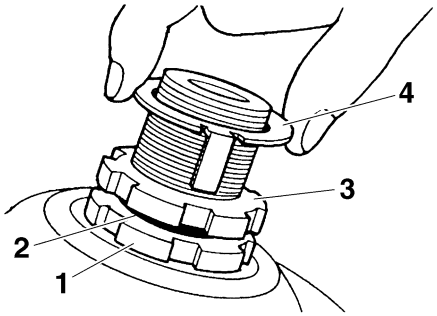

3. Install:
   - Upper bracket
   - Steering stem nut

TIP

Temporarily tighten the steering stem nut.

4. Install:
   - Front fork legs
     Refer to “FRONT FORK” on page 4-48.

TIP

Temporarily tighten the upper and lower bracket pinch bolts.

5. Tighten:
   - Steering stem nut

	Steering stem nut **110 Nm (11 m·kgf, 80 ft·lbf)**

EAS23160

REAR SHOCK ABSORBER ASSEMBLY

Removing the rear shock absorber assembly

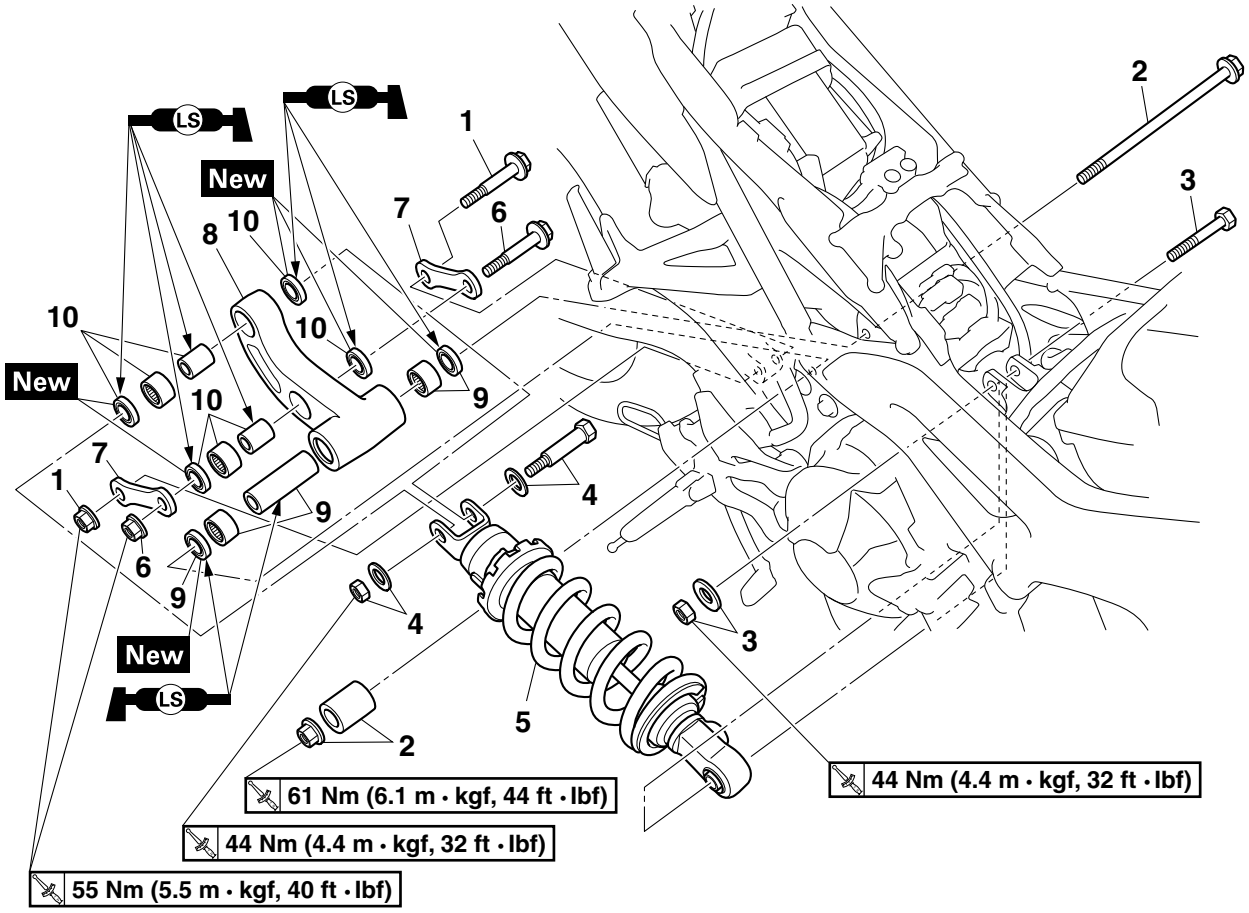

Order	Job/Parts to remove	Q'ty	Remarks
	Rider seat		Refer to "GENERAL CHASSIS" on page 4-1.
	Air scoop/Fuel tank cover		Refer to "GENERAL CHASSIS" on page 4-1.
	Fuel tank		Refer to "FUEL TANK" on page 7-1.
	Muffler assembly		Refer to "ENGINE REMOVAL" on page 5-3.
1	Connecting arm lower nut/bolt	1/1	
2	Relay arm nut/collar/bolt	1/1/1	
3	Rear shock absorber assembly upper nut/washer/bolt	1/1/1	
4	Rear shock absorber assembly lower nut/washer/bolt	1/2/1	
5	Rear shock absorber assembly	1	
6	Connecting arm upper nut/bolt	1/1	
7	Connecting arm	2	
8	Relay arm	1	
9	Collar/oil seal/bearing	1/2/2	
10	Collar/oil seal/bearing	2/4/2	

EAS23180
HANDLING THE REAR SHOCK ABSORBER

EWA13740
WARNING

This rear shock absorber contains highly compressed nitrogen gas. Before handling the rear shock absorber, read and make sure you understand the following information. The manufacturer cannot be held responsible for property damage or personal injury that may result from improper handling of the rear shock absorber.
- **Do not tamper or attempt to open the rear shock absorber.**
- **Do not subject the rear shock absorber to an open flame or any other source of high heat. High heat can cause an explosion due to excessive gas pressure.**
- **Do not deform or damage the rear shock absorber in any way. Rear shock absorber damage will result in poor damping performance.**

EAS23190
DISPOSING OF A REAR SHOCK ABSORBER

1. Gas pressure must be released before disposing of a rear shock absorber. To release the gas pressure, drill a 2–3 mm (0.08–0.12 in) hole through the rear shock absorber at a point 20–25 mm (0.79–0.98 in) from its end as shown.

EWA13760
WARNING

Wear eye protection to prevent eye damage from released gas or metal chips.

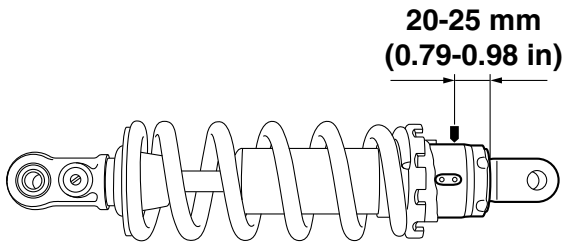

EAS23210
REMOVING THE REAR SHOCK ABSORBER ASSEMBLY

1. Stand the vehicle on a level surface.

EWA13120
WARNING

Securely support the vehicle so that there is no danger of it falling over.

TIP
Place the vehicle on a suitable stand so that the rear wheel is elevated.

2. Remove:
   - Connecting arm lower nut “1”
   - Connecting arm lower bolt
   - Relay arm nut “2”
   - Relay arm bolt

TIP
When removing the bolt, hold the swingarm so that it does not drop down.

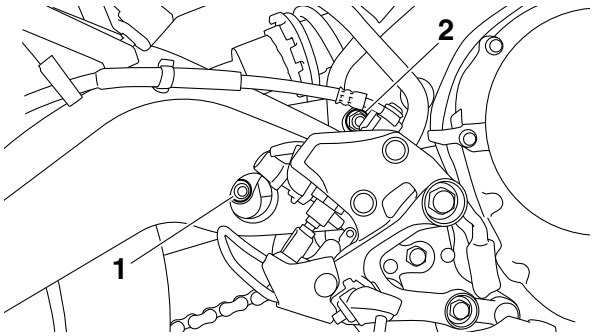

3. Remove:
   - Rear shock absorber assembly upper nut
   - Rear shock absorber assembly upper bolt
   - Rear shock absorber assembly

TIP
Remove the rear shock absorber assembly from between the swingarm and frame.

EAS23240
CHECKING THE REAR SHOCK ABSORBER ASSEMBLY

1. Check:
   - Rear shock absorber rod
     Bends/damage → Replace the rear shock absorber assembly.
   - Rear shock absorber
     Gas leaks/oil leaks → Replace the rear shock absorber assembly.
   - Spring
   - Bushings
     Damage/wear → Replace the rear shock absorber assembly.
   - Bolts
     Bends/damage/wear → Replace.

EAS23261
CHECKING THE CONNECTING ARM AND RELAY ARM

1. Check:
   - Connecting arms “1”
   - Relay arm “2”
     Damage/wear → Replace.

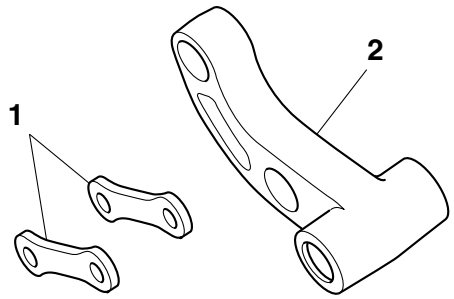

2. Check:
   - Bearings
   - Oil seals
     Damage/pitting → Replace.
3. Check:
   - Collars
     Damage/scratches → Replace.

EAS23272

INSTALLING THE RELAY ARM

1. Lubricate:
   - Collars
   - Oil seals

	Recommended lubricant **Lithium-soap-based grease**

2. Install:
   - Bearings "1"
     (to the relay arm)
   - Oil seals "2" New
     (to the relay arm)

	Installed depth "a" **6.0 mm (0.24 in)** **Installed depth "b"** **7.0 mm (0.28 in)** **Installed depth "c"** **1.5–2.5 mm (0.06–0.10 in)** **Installed depth "d"** **0.5–1.5 mm (0.02–0.06 in)**

TIP

- When installing the oil seals "2" to the relay arm, face the character stamp of the oil seals outside.
- When installing the connecting arms "4" to the relay arm, face the 1RC mark of the connecting arms outside.

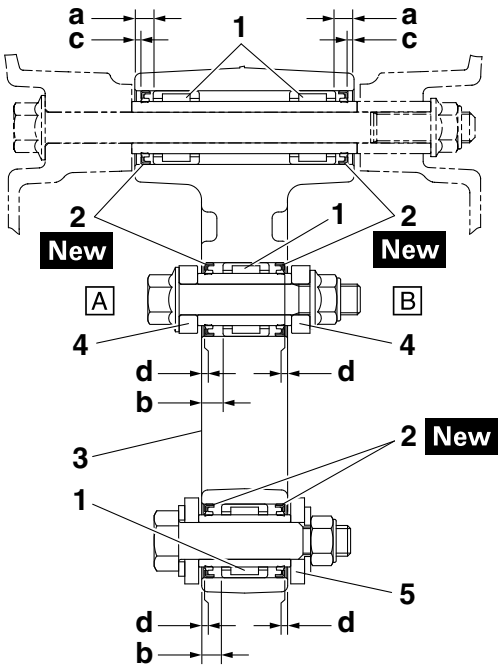

3. Relay arm
4. Connecting arm
5. Rear shock absorber assembly

A. Left side
B. Right side

EAS23311

INSTALLING THE REAR SHOCK ABSORBER ASSEMBLY

1. Install:
   - Rear shock absorber assembly
   - Rear shock absorber assembly upper bolt
   - Rear shock absorber assembly upper nut
   - Relay arm bolt
   - Relay arm nut
   - Connecting arm lower bolt
   - Connecting arm lower nut

TIP

- Install the rear shock absorber assembly upper bolt, relay arm bolt and connecting arm lower bolt from the left.
- When installing the rear shock absorber assembly, lift up the swingarm.
- Install the rear shock absorber assembly with the rebound damping adjusting screw facing the left side of the vehicle.

2. Tighten:
   - Rear shock absorber assembly upper nut
   - Relay arm nut
   - Connecting arm lower nut

Rear shock absorber assembly upper nut
44 Nm (4.4 m·kgf, 32 ft·lbf)
Relay arm nut
61 Nm (6.1 m·kgf, 44 ft·lbf)
Connecting arm lower nut
55 Nm (5.5 m·kgf, 40 ft·lbf)

EAS23330

SWINGARM

Removing the swingarm

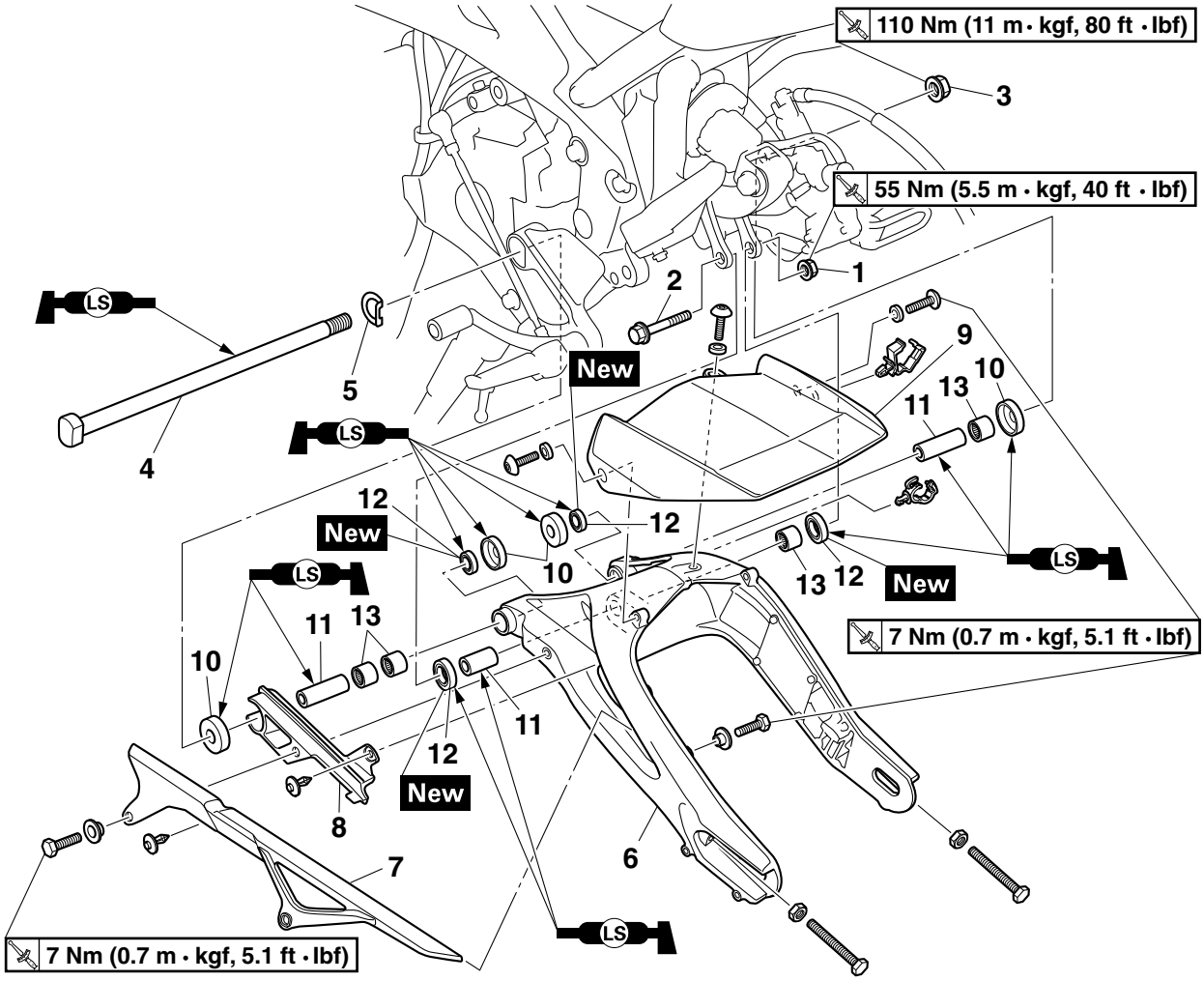

Order	Job/Parts to remove	Q'ty	Remarks
	Rear brake caliper		Refer to "REAR BRAKE" on page 4-32.
	Rear wheel		Refer to "REAR WHEEL" on page 4-14.
	Muffler assembly		Refer to "ENGINE REMOVAL" on page 5-3.
	Chain		Refer to "CHAIN DRIVE" on page 4-70.
1	Connecting arm lower nut	1	
2	Connecting arm lower bolt	1	
3	Pivot shaft nut	1	
4	Pivot shaft	1	
5	Washer	1	
6	Swingarm	1	
7	Drive chain guard	1	
8	Drive chain guide	1	
9	Rear fender	1	
10	Dust cover	4	
11	Collar	3	
12	Oil seal	4	
13	Bearing	4	

EAS23350

REMOVING THE SWINGARM

1. Stand the vehicle on a level surface.

EWA13120

WARNING

Securely support the vehicle so that there is no danger of it falling over.

TIP

Place the vehicle on a suitable stand so that the rear wheel is elevated.

2. Remove:
   - Connecting arm lower nut “1”
   - Connecting arm lower bolt

TIP

When removing the bolt, hold the swingarm so that it does not drop down.

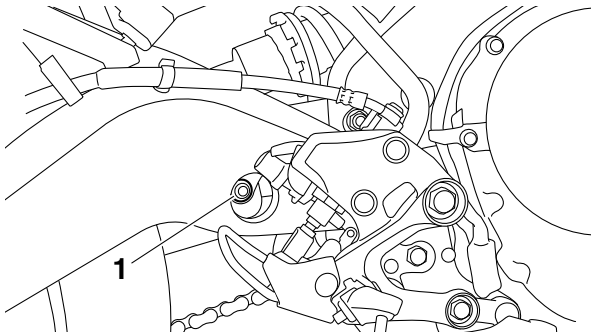

3. Measure:
   - Swingarm side play
   - Swingarm vertical movement

▼▼▼▼▼▼▼▼▼▼▼▼▼▼▼▼▼▼▼▼▼▼▼▼▼▼▼▼▼▼▼▼▼▼

a. Measure the tightening torque of the pivot shaft nut.

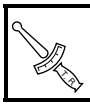	**Pivot shaft nut** **110 Nm (11 m·kgf, 80 ft·lbf)**

b. Check the swingarm side play “A” by moving the swingarm from side to side.
   If the swingarm has side-to-side play, check the spacer, bearings, and dust covers.

c. Check the swingarm vertical movement “B” by moving the swingarm up and down.
   If the swingarm vertical movement is not smooth or if there is binding, check the pivot shaft, collar, bearings, and dust covers.

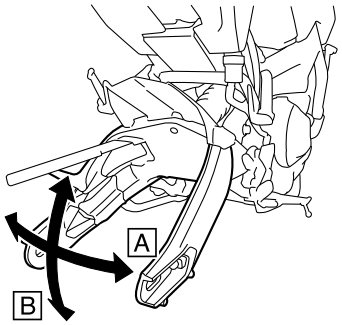

▲▲▲▲▲▲▲▲▲▲▲▲▲▲▲▲▲▲▲▲▲▲▲▲▲▲▲▲▲▲▲▲▲▲

4. Remove:
   - Drive chain
     Refer to “REMOVING THE DRIVE CHAIN” on page 4-71.
   - Swingarm

EAS23361

CHECKING THE SWINGARM

1. Check:
   - Swingarm
     Bends/cracks/damage → Replace.
2. Check:
   - Pivot shaft
     Roll the pivot shaft on a flat surface.
     Bends → Replace.

EWA13770

WARNING

Do not attempt to straighten a bent pivot shaft.

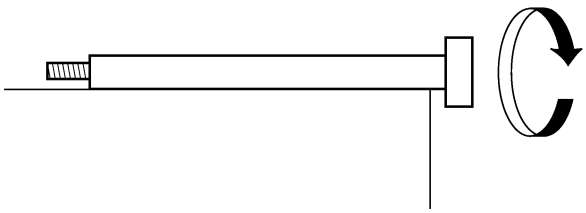

3. Wash:
   - Pivot shaft
   - Dust covers
   - Collars
   - Washer

	**Recommended cleaning solvent** **Kerosene**

4. Check:
   - Dust covers “1”
   - Oil seals “2”
     Damage/wear → Replace.

- Collars “3”
  Damage/scratches → Replace.
- Bearings “4”
  Damage/pitting → Replace.

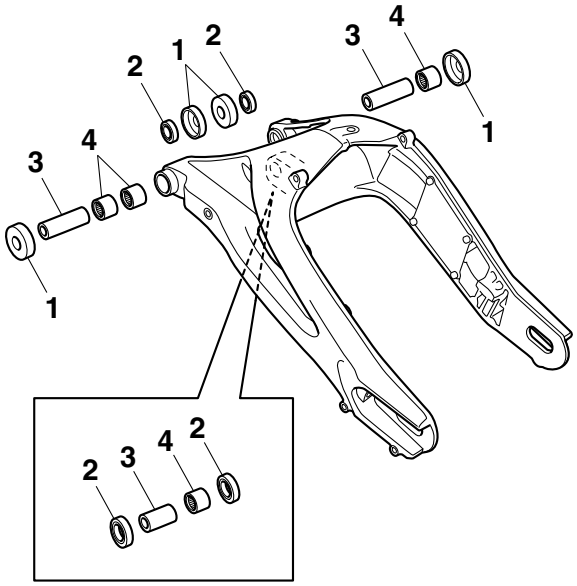

EAS23380

INSTALLING THE SWINGARM

1. Lubricate:
   - Dust covers
   - Pivot shaft
   - Oil seals
   - Collars

	Recommended lubricant **Lithium-soap-based grease**

2. Install:
   - Bearings “1”
     (to the swingarm)
   - Oil seals “2” New
     (to the swingarm)

	Installed depth “a” **2.0 mm (0.08 in)** **Installed depth “b”** **9.0 mm (0.35 in)** **Installed depth “c”** **0.5–1.5 mm (0.02–0.06 in)** **Installed depth “d”** **7.0 mm (0.28 in)** **Installed depth “e”** **1.5–2.5 mm (0.06–0.10 in)**

TIP

When installing the oil seals to the swingarm, face the character stamp of the oil seals outside.

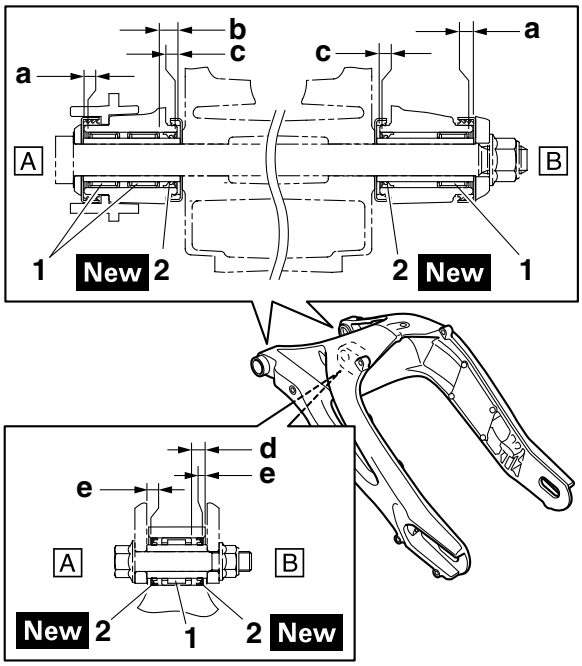

A. Left side
B. Right side

3. Install:
   - Swingarm
   - Pivot shaft

	Pivot shaft nut **110 Nm (11 m·kgf, 80 ft·lbf)**

4. Install:
   - Drive chain
     Refer to “INSTALLING THE DRIVE CHAIN” on page 4-73.
   - Connecting arm lower bolt
   - Connecting arm lower nut

	Connecting arm lower nut **55 Nm (5.5 m·kgf, 40 ft·lbf)**

   - Rear wheel
     Refer to “REAR SHOCK ABSORBER ASSEMBLY” on page 4-63 and “REAR WHEEL” on page 4-14.
5. Adjust:
   - Drive chain slack
     Refer to “ADJUSTING THE DRIVE CHAIN SLACK” on page 3-16.

	Drive chain slack **5.0–15.0 mm (0.20–0.59 in)**

EAS23400

CHAIN DRIVE

Removing the drive chain

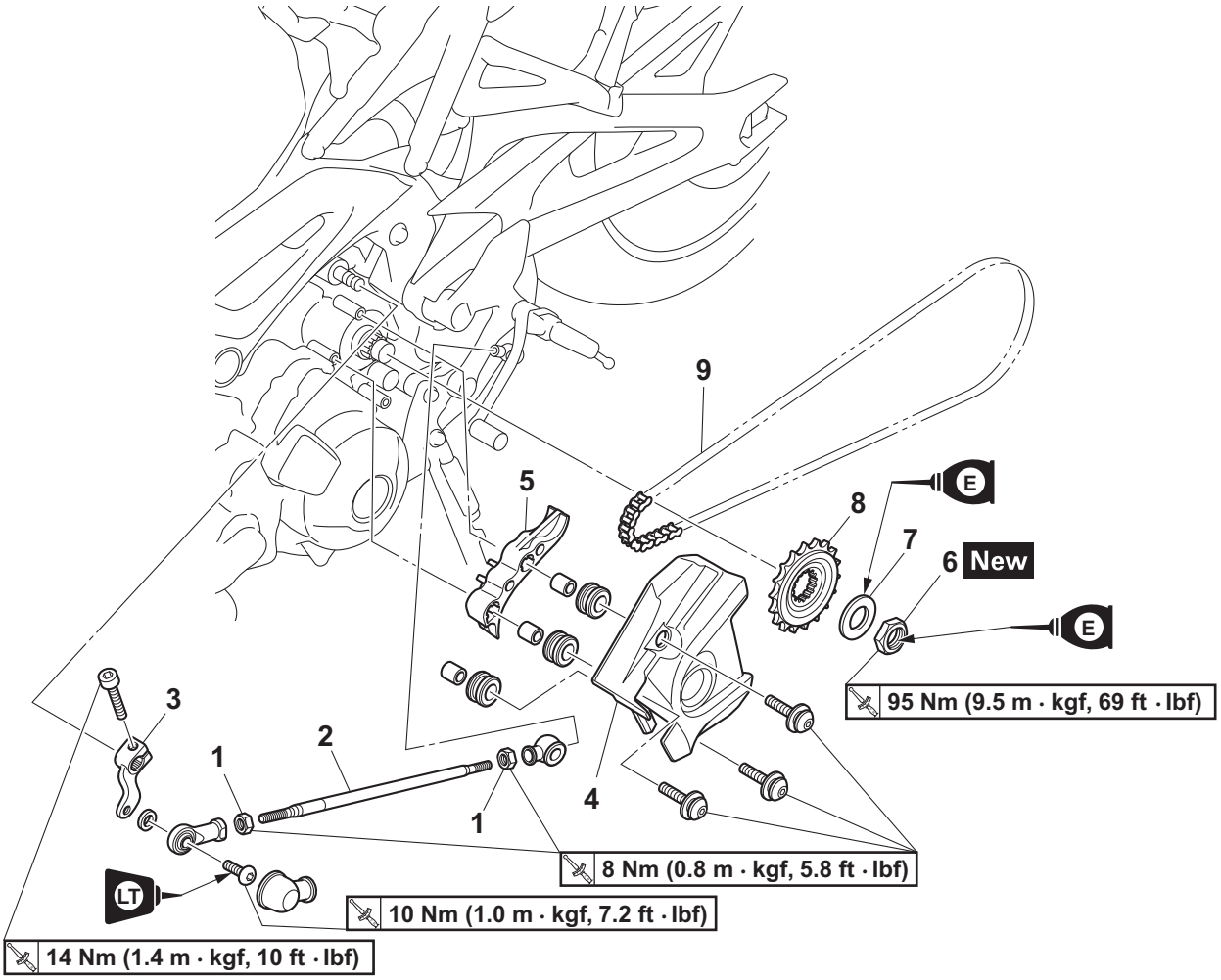

Order	Job/Parts to remove	Q'ty	Remarks
1	Locknut	2	
2	Shift rod	1	
3	Shift arm	1	
4	Drive sprocket cover	1	
5	Drive chain guide	1	
6	Drive sprocket nut	1	
7	Washer	1	
8	Drive sprocket	1	
9	Drive chain	1	

EAS23410
REMOVING THE DRIVE CHAIN

1. Stand the vehicle on a level surface.

EWA13120
WARNING

Securely support the vehicle so that there is no danger of it falling over.

TIP
Place the vehicle on a suitable stand so that the rear wheel is elevated.

2. Straighten the drive sprocket nut rib “a”.

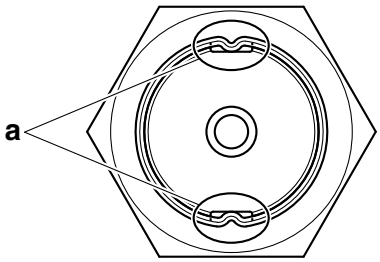

3. Remove:
   - Drive chain

ECA17410
NOTICE

Be sure to put on safety goggles when working.

TIP
Cut the drive chain with the drive chain cut & rivet tool.

Drive chain cut & rivet tool
90890-01550
YM-01550

EAS23441
CHECKING THE DRIVE CHAIN

1. Measure:
   - 15-link section “a” of the drive chain
     Out of specification → Replace the drive chain.

15-link length limit
239.3 mm (9.42 in)

▼▼▼▼▼▼▼▼▼▼▼▼▼▼▼▼▼▼▼▼▼▼▼▼▼▼▼▼▼▼▼▼▼▼

a. Measure the length “b” between the inner sides of the pins and the length “c” between the outer sides of the pins on a 15-link section of the drive chain as shown in the illustration.
b. Calculate the length “a” of the 15-link section of the drive chain using the following formula.
   Drive chain 15-link section length “a” = (length “b” between pin inner sides + length “c” between pin outer sides)/2

TIP
- When measuring a 15-link section of the drive chain, make sure that the drive chain is taut.
- Perform this procedure 2–3 times, at a different location each time.

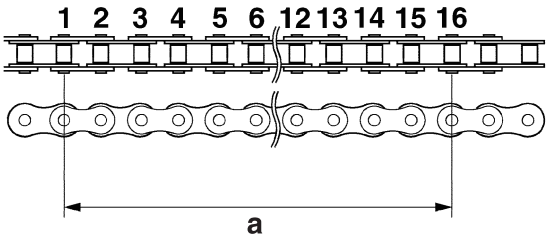

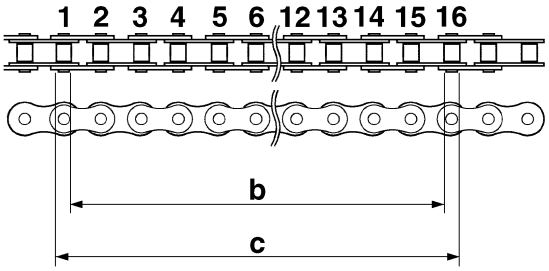

▲▲▲▲▲▲▲▲▲▲▲▲▲▲▲▲▲▲▲▲▲▲▲▲▲▲▲▲▲▲▲▲▲▲

2. Check:
   - Drive chain
     Stiffness → Clean and lubricate or replace.

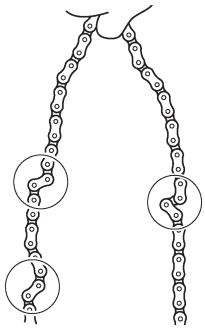

3. Clean:
   - Drive chain

▼▼▼▼▼▼▼▼▼▼▼▼▼▼▼▼▼▼▼▼▼▼▼▼▼▼▼▼▼▼▼▼▼▼

a. Wipe the drive chain with a clean cloth.
b. Put the drive chain in kerosene and remove any remaining dirt.
c. Remove the drive chain from the kerosene and completely dry it.

ECA1RC1403

NOTICE

- **This vehicle has a drive chain with small rubber O-rings "1" between the drive chain side plates. Never use high-pressure water or air, steam, gasoline, certain solvents (e.g., benzine), or a coarse brush to clean the drive chain. High-pressure methods could force dirt or water into the drive chain's internals, and solvents will deteriorate the O-rings. A coarse brush can also damage the O-rings. Therefore, use only kerosene to clean the drive chain.**
- **Do not soak the drive chain in kerosene for more than ten minutes, otherwise the O-rings can be damaged.**

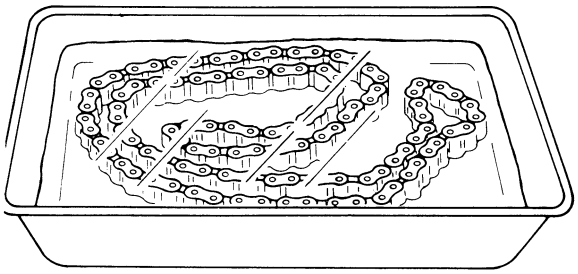

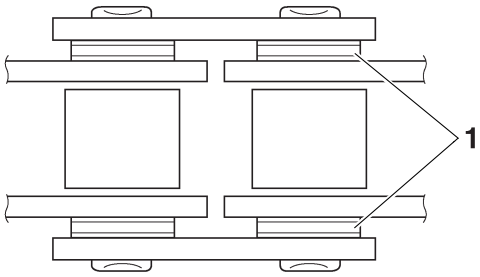

▲▲▲▲▲▲▲▲▲▲▲▲▲▲▲▲▲▲▲▲▲▲▲▲▲▲▲▲▲▲▲▲▲▲

4. Check:
   - O-rings "1"
     Damage → Replace the drive chain.
   - Drive chain rollers "2"
     Damage/wear → Replace the drive chain.
   - Drive chain side plates "3"
     Damage/wear/cracks → Replace the drive chain.

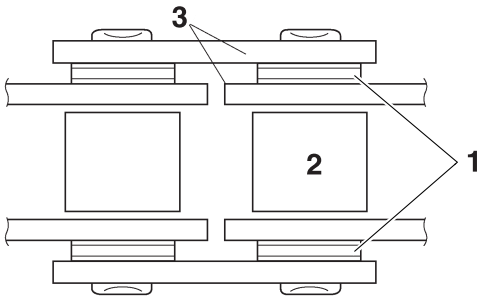

5. Lubricate:
   - Drive chain

	Recommended lubricant **Chain lubricant suitable for O-ring chains**

EAS23460

CHECKING THE DRIVE SPROCKET

1. Check:
   - Drive sprocket
     More than 1/4 tooth "a" wear → Replace the drive sprocket, the rear wheel sprocket and the drive chain as a set.
     Bent teeth → Replace the drive sprocket, the rear wheel sprocket and the drive chain as a set.

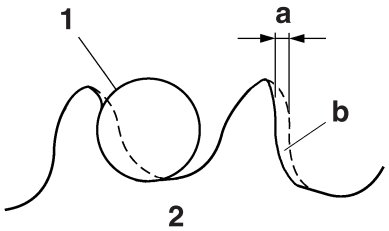

b. Correct

1. Drive chain roller
2. Drive sprocket

EAS23470

CHECKING THE REAR WHEEL SPROCKET

Refer to "CHECKING AND REPLACING THE REAR WHEEL SPROCKET" on page 4-18.

EAS23480

CHECKING THE REAR WHEEL DRIVE HUB

Refer to "CHECKING THE REAR WHEEL DRIVE HUB" on page 4-17.

EAS1RC1403

INSTALLING THE DRIVE CHAIN

1. Install:
   - Drive chain

ECA17410

NOTICE

Be sure to put on safety goggles when working.

TIP

Install the drive chain joint with the drive chain cut & rivet tool.

Drive chain cut & rivet tool
90890-01550
YM-01550

▼▼▼▼▼▼▼▼▼▼▼▼▼▼▼▼▼▼▼▼▼▼▼▼▼▼▼▼▼▼▼▼▼

a. When press fitting the connecting plate “1”, make sure the space “a” between the end of the connecting pin “2” and the connecting plate is 1.2–1.4 mm (0.05–0.06 in).

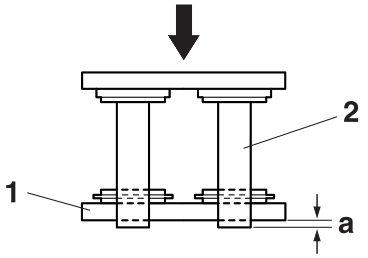

b. After riveting, make sure the diameter between the edges “b” of the connecting pin “2” is 5.5–5.8 mm (0.22–0.23 in).

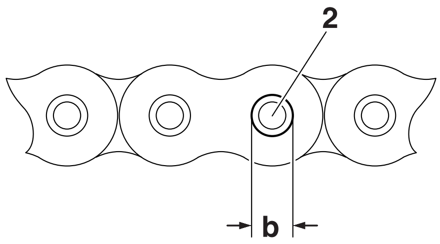

c. After riveting, make sure the space “c”, which is inside of the connecting link “3” and inside of the connecting plate “1”, is 14.1–14.3 mm (0.56–0.65 in).

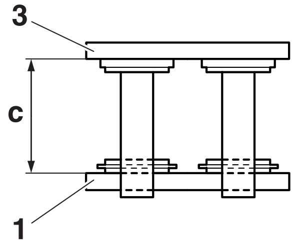

▲▲▲▲▲▲▲▲▲▲▲▲▲▲▲▲▲▲▲▲▲▲▲▲▲▲▲▲▲▲▲▲▲

2. Lubricate:
   - Drive chain

Recommended lubricant
Chain lubricant suitable for O-ring chains

3. Install:
   - Drive sprocket
   - Washer “1”
   - Drive sprocket nut “2” New

Drive sprocket nut
95 Nm (9.5 m·kgf, 69 ft·lbf)

TIP

- While applying the rear brake, tighten the drive sprocket nut.
- Install washer “1” with the “OUT” mark “a” facing out.
- Stake the drive sprocket nut “2” at cutouts “b” in the drive axle.

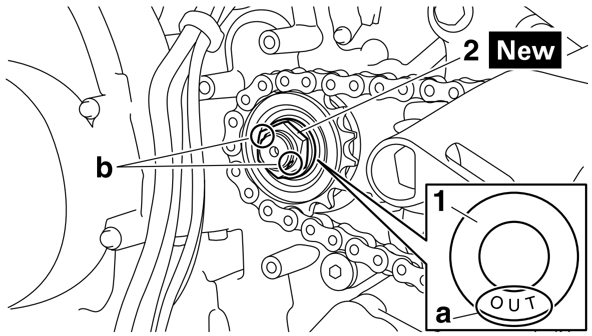

4. Install:
   - Shift arm “1”

TIP

Before installing, make sure to align the mark “a” of the shift shaft with the punch mark “b” of the shift arm.

Shift arm bolt
14 Nm (1.4 m·kgf, 10 ft·lbf)

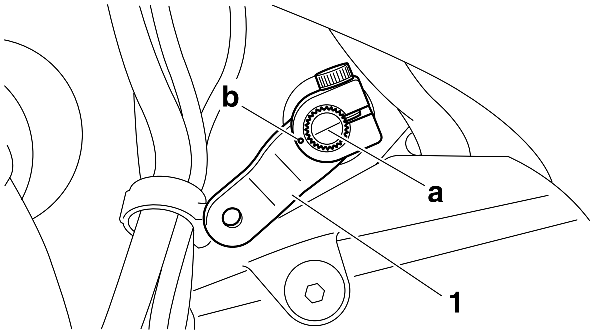

5. Adjust:
   - Drive chain slack

Refer to “ADJUSTING THE DRIVE CHAIN SLACK” on page 3-16.

	Drive chain slack **5.0–15.0 mm (0.20–0.59 in)**

ECA13550

NOTICE

A drive chain that is too tight will overload the engine and other vital parts, and one that is too loose can skip and damage the swingarm or cause an accident. Therefore, keep the drive chain slack within the specified limits.

ENGINE

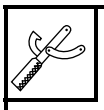

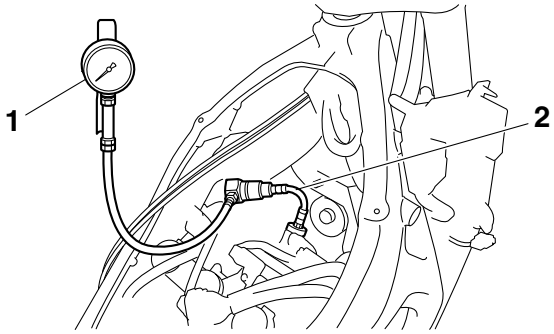

EAS1RC1506

ENGINE INSPECTION

EAS20710

MEASURING THE COMPRESSION PRESSURE

The following procedure applies to all of the cylinders.

TIP

Insufficient compression pressure will result in a loss of performance.

1. Measure:
   - Valve clearance
     Out of specification → Adjust.
     Refer to “ADJUSTING THE VALVE CLEARANCE” on page 3-5.
2. Start the engine, warm it up for several minutes, and then turn it off.
3. Remove:
   - Rider seat
     Refer to “GENERAL CHASSIS” on page 4-1.
   - Fuel tank
     Refer to “FUEL TANK” on page 7-1.
   - Air filter case
     Refer to “GENERAL CHASSIS” on page 4-1.
   - Air cut-off valve
     Refer to “AIR INDUCTION SYSTEM” on page 7-15.
   - Ignition coils
   - Spark plugs
     Refer to “CAMSHAFTS” on page 5-9.

ECA13340

NOTICE

Before removing the spark plugs, use compressed air to blow away any dirt accumulated in the spark plug wells to prevent it from falling into the cylinders.

4. Install:
   - Compression gauge “1”
   - Extension “2”

Compression gauge
90890-03081
Engine compression tester
YU-33223
Extension
90890-04136

5. Measure:
   - Compression pressure
     Out of specification → Refer to steps (c) and (d).

Standard compression pressure (at sea level)
1530 kPa/680 r/min (15.3 kgf/cm^2/680 r/min, 217.6 psi/680 r/min)
Minimum–maximum
1330–1710 kPa/680 r/min (13.3–17.1 kgf/cm^2/680 r/min, 189.2–243.2 psi/680 r/min)

▼▼▼▼▼▼▼▼▼▼▼▼▼▼▼▼▼▼▼▼▼▼▼▼▼▼▼▼▼▼▼▼▼▼▼

a. Set the main switch to “ON”.
b. With the throttle wide open, crank the engine until the reading on the compression gauge stabilizes.

EWA1RC1501

WARNING

To prevent sparking the plug, remove all ignition coil couplers and fuel injector couplers before cranking the engine.

TIP

The difference in compression pressure between cylinders should not exceed 100 kPa (1 kg/cm^2, 15 psi).

c. If the compression pressure is above the maximum specification, check the cylinder head, valve surfaces and piston crown for carbon deposits.
   Carbon deposits → Eliminate.
d. If the compression pressure is below the minimum specification, pour a teaspoonful of engine oil into the spark plug bore and measure again.
   Refer to the following table.

Compression pressure (with oil applied into the cylinder)	
Reading	Diagnosis
Higher than without oil	Piston ring(s) wear or damage → Repair.
Same as without oil	Piston, valves, cylinder head gasket possibly defective → Repair.

▲▲▲▲▲▲▲▲▲▲▲▲▲▲▲▲▲▲▲▲▲▲▲▲▲▲▲▲▲▲▲▲▲▲

6. Install:
   - Spark plugs

	**Spark plug** **13 Nm (1.3 m·kgf, 9.4 ft·lbf)**

7. Install:
   - Ignition coils
     Refer to “CAMSHAFTS” on page 5-9.
   - Air cut-off valve
     Refer to “AIR INDUCTION SYSTEM” on page 7-15.
   - Air filter case
     Refer to “GENERAL CHASSIS” on page 4-1.
   - Fuel tank
     Refer to “FUEL TANK” on page 7-1.
   - Rider seat
     Refer to “GENERAL CHASSIS” on page 4-1.

EAS23711

ENGINE REMOVAL

Removing the muffler and exhaust pipe

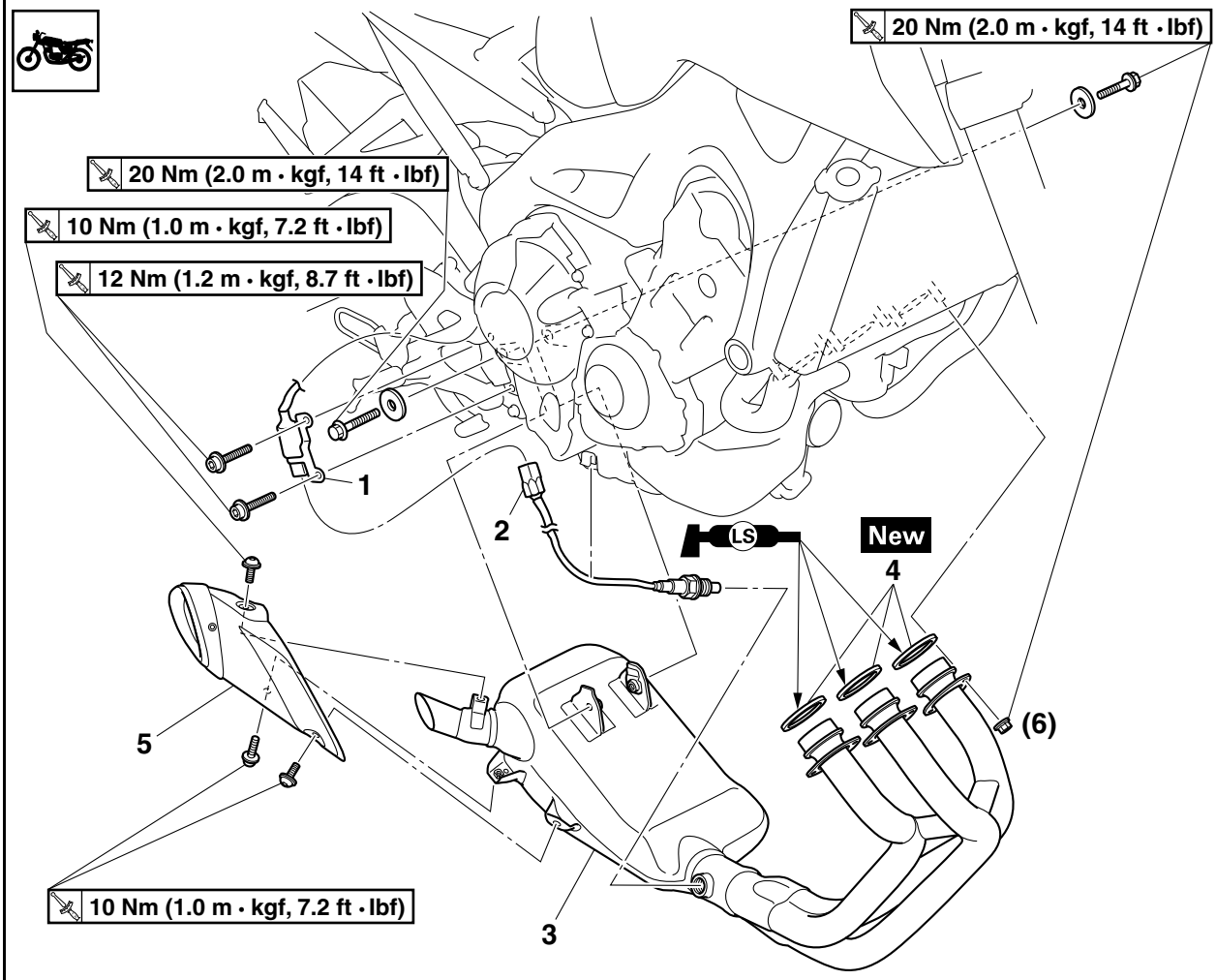

Order	Job/Parts to remove	Q'ty	Remarks
1	O_2 sensor coupler bracket	1	
2	O_2 sensor coupler	1	Disconnect.
3	Muffler assembly	1	
4	Exhaust gasket	3	
5	Muffler protector	1	

Disconnecting the leads and hoses

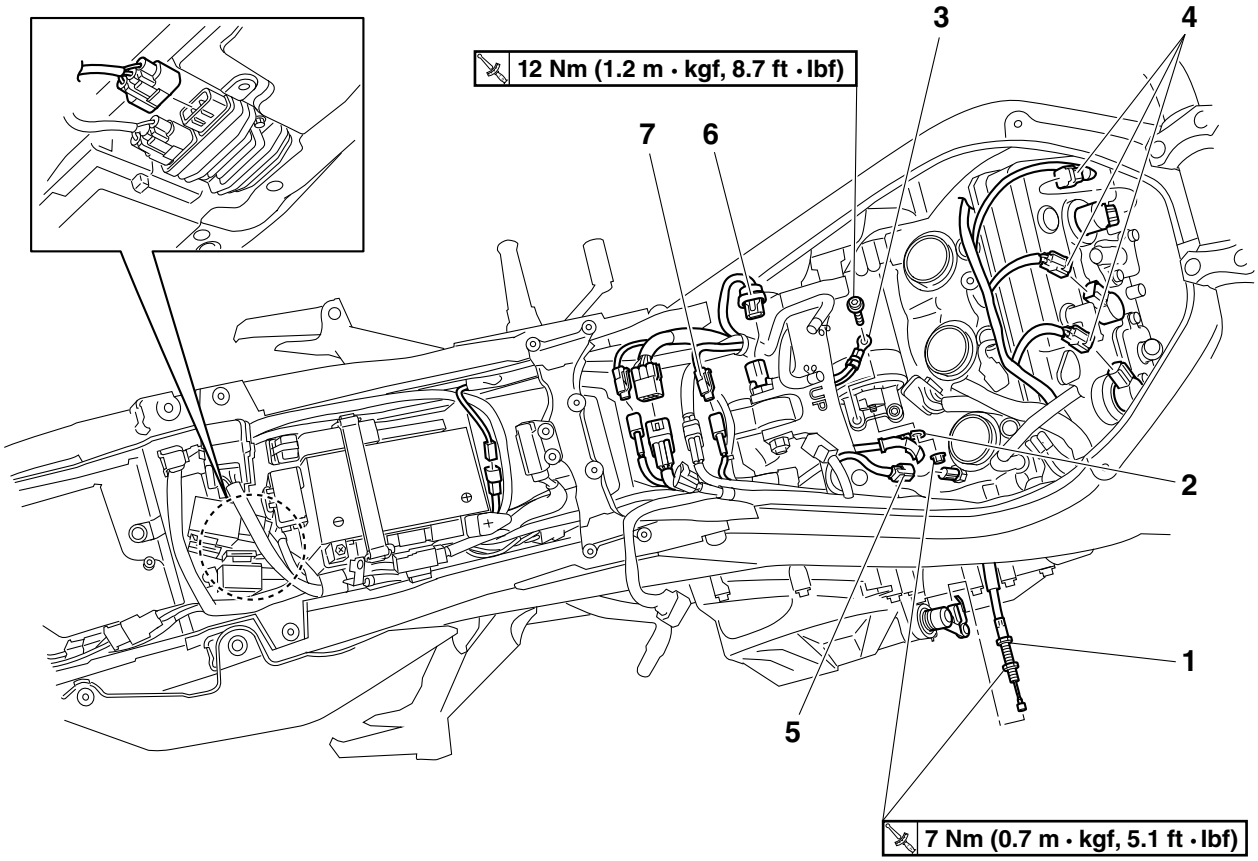

Order	Job/Parts to remove	Q'ty	Remarks
	Rider seat		Refer to "GENERAL CHASSIS" on page 4-1.
	Air scoop/Fuel tank cover/Rear side cover (left)		Refer to "GENERAL CHASSIS" on page 4-1.
	Fuel tank		Refer to "FUEL TANK" on page 7-1.
	Air filter case		Refer to "GENERAL CHASSIS" on page 4-1.
	Throttle bodies		Refer to "THROTTLE BODIES" on page 7-5.
	Fuel rail		Refer to "THROTTLE BODIES" on page 7-5.
	Radiator		Refer to "RADIATOR" on page 6-1.
	Air cut-off valve		Refer to "AIR INDUCTION SYSTEM" on page 7-15.
	Right footrest assembly		Refer to "REAR BRAKE" on page 4-32.
	Drive sprocket		Refer to "CHAIN DRIVE" on page 4-70.
1	Clutch cable	1	Disconnect.
2	Starter motor lead	1	Disconnect.
3	Negative battery lead	1	Disconnect.
4	Ignition coil coupler	3	Disconnect.
5	Coolant temperature sensor coupler	1	Disconnect.
6	Speed sensor coupler	1	Disconnect.
7	Oil level switch coupler	1	Disconnect.

Disconnecting the leads and hoses

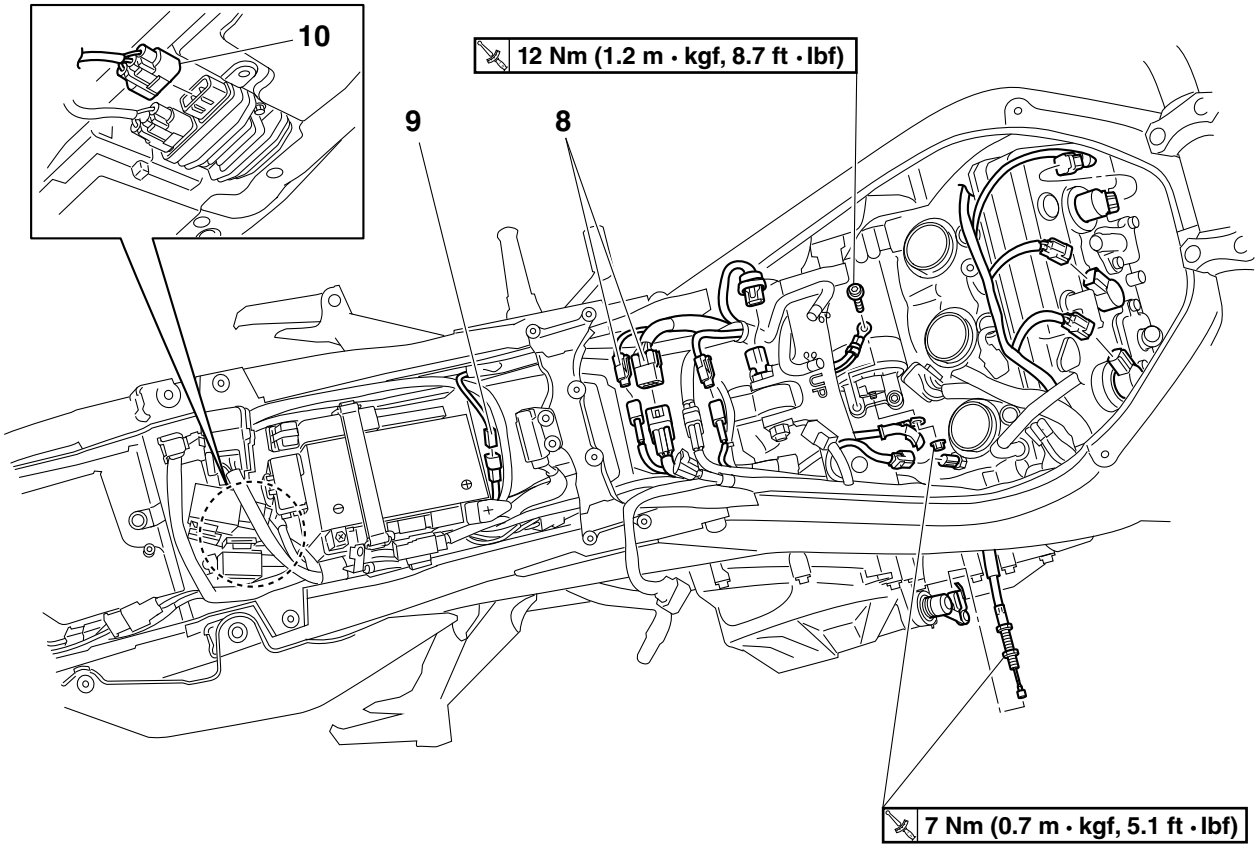

Order	Job/Parts to remove	Q'ty	Remarks
8	Gear position sensor coupler	2	Disconnect.
9	Crankshaft position sensor coupler	1	Disconnect.
10	Stator coil coupler	1	Disconnect.

Removing the engine

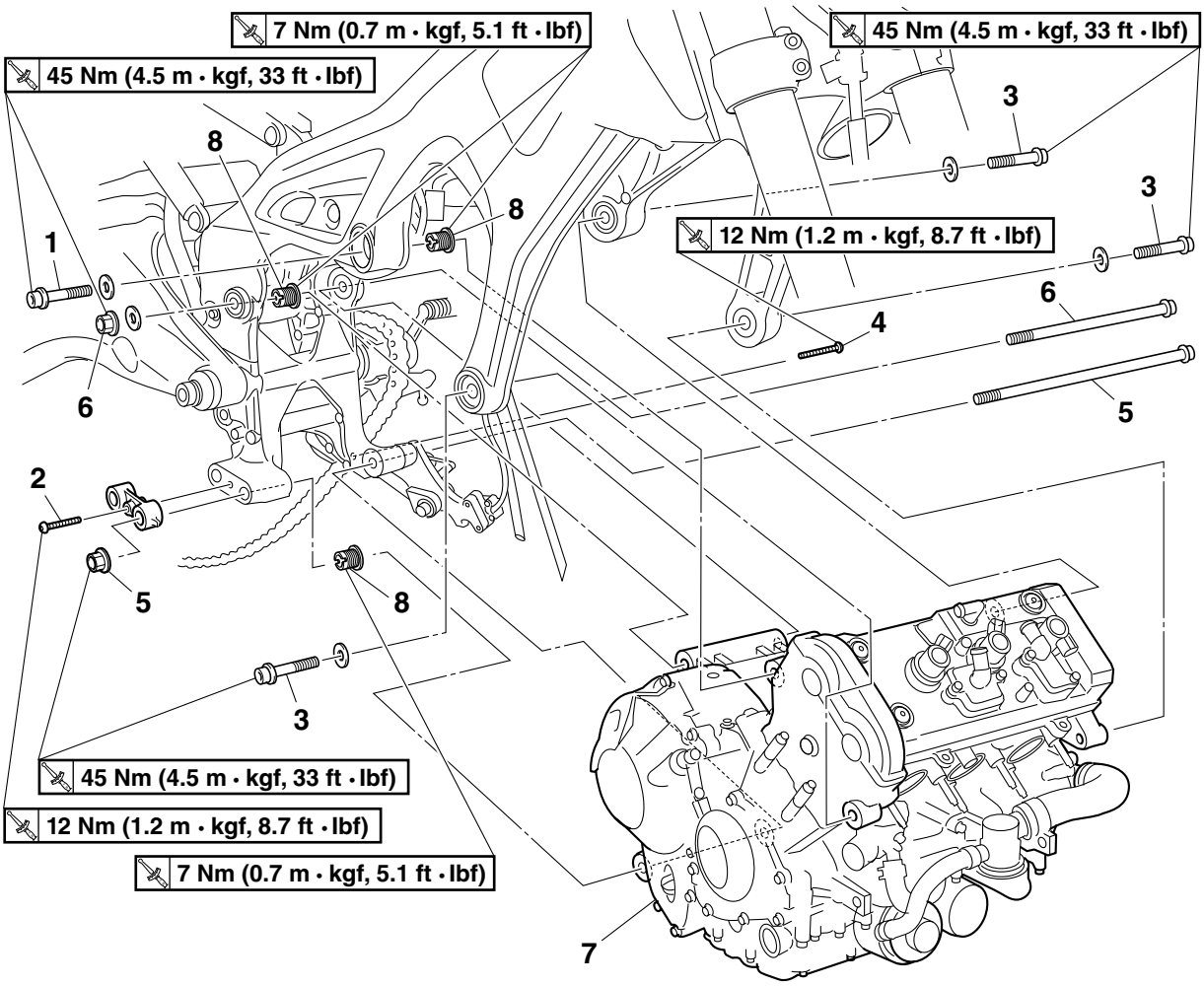

Order	Job/Parts to remove	Q'ty	Remarks
1	Engine mounting bolt (right front upper side)	1	
2	Adapter bolt (right)	1	
3	Engine mounting bolt (right front lower side)/engine mounting bolt (left front lower side)/engine mounting bolt (left front upper side)	1/1/1	
4	Adapter bolt (left)	1	
5	Engine mounting bolt (rear lower side)/engine mounting nut (rear lower side)	1/1	
6	Engine mounting bolt (rear upper side)/engine mounting nut (rear upper side)	1/1	
7	Engine	1	
8	Engine mounting adjust bolt	3	

EAS1RC1501

REMOVING THE ENGINE

1. Loosen:
   - Engine mounting adjust bolt (front)

TIP

Loosen the engine mounting adjust bolt with the pivot shaft wrench “1”.

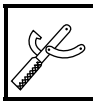

Pivot shaft wrench
90890-01485
Frame mount insert wrench
YM-01485

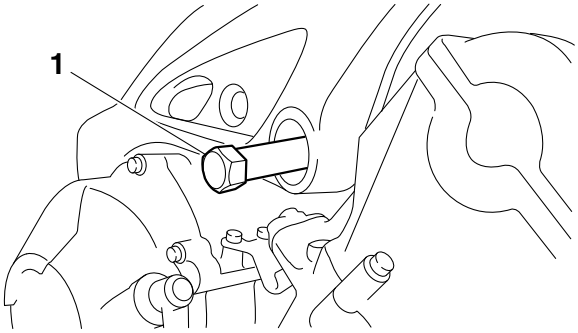

2. Loosen:
   - Engine mounting adjust bolts (rear)

TIP

Loosen the engine mounting adjust bolts with the pivot shaft wrench “1” and pivot shaft wrench adapter “2”.

Pivot shaft wrench
90890-01518
Frame spanner socket
YM-01518
Pivot shaft wrench adapter
90890-01476

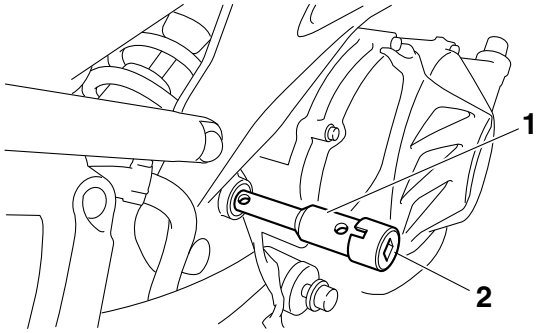

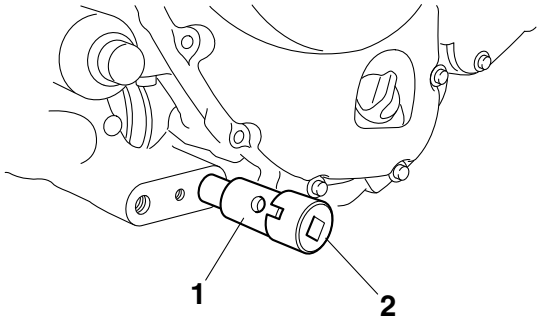

EAS23720

INSTALLING THE ENGINE

1. Install:
   - Engine mounting adjust bolt (front) “1” (temporarily tighten)
   - Engine mounting adjust bolts (rear) “2” (temporarily tighten)
2. Install:
   - Engine
3. Install:
   - Engine mounting bolt (rear upper side) “3”
   - Engine mounting bolt (rear lower side) “4”
4. Install:
   - Adapter bolt (left) “5” (temporarily tighten)
5. Install:
   - Engine mounting bolt (left front upper side) “6”
   - Engine mounting bolt (left front lower side) “7”
   - Engine mounting bolt (right front lower side) “8”

TIP

Temporarily tighten the engine mounting bolts “6”–“8”.

6. Tighten:
   - Engine mounting adjust bolt (front) “1”

TIP

- Tighten the engine mounting adjust bolt to specification with the pivot shaft wrench.
- Make sure that the flange on the engine mounting adjust bolt contacts the engine.

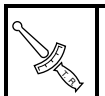

Engine mounting adjust bolt (front)
7 Nm (0.7 m·kgf, 5.1 ft·lbf)

Pivot shaft wrench
90890-01485
Frame mount insert wrench
YM-01485

7. Tighten:
   - Engine mounting adjust bolts (rear) “2”

TIP
- Tighten the engine mounting adjust bolts to specification with the pivot shaft wrench and pivot shaft wrench adapter.
- Make sure that the flange on the engine mounting adjust bolt contacts the engine.

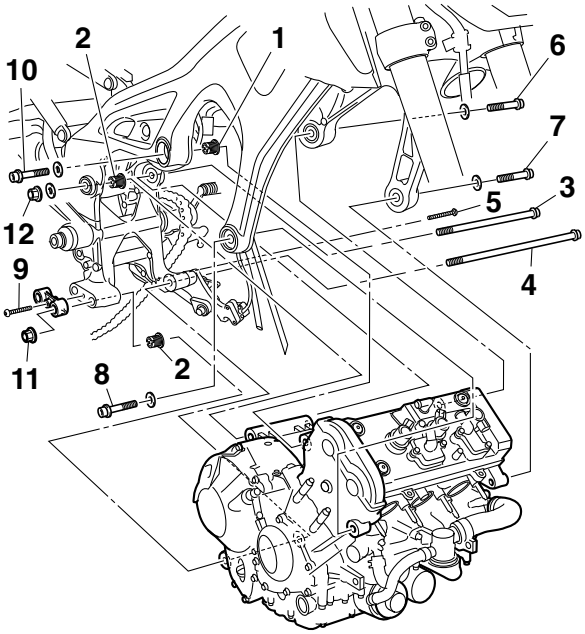

	**Engine mounting adjust bolt (rear)** **7 Nm (0.7 m·kgf, 5.1 ft·lbf)**

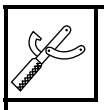	**Pivot shaft wrench** **90890-01518** **Frame spanner socket** **YM-01518** **Pivot shaft wrench adapter** **90890-01476**

8. Install:
   - Adapter bolt (right) “9” (temporarily tighten)
9. Install:
   - Engine mounting bolt (right front upper side) “10”
10. Tighten:
   - Engine mounting nut (rear lower side) “11”
   - Engine mounting nut (rear upper side) “12”

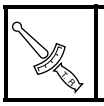	**Engine mounting nut** **45 Nm (4.5 m·kgf, 33 ft·lbf)**

11. Tighten:
   - Engine mounting bolt (right front upper side) “10”
   - Engine mounting bolt (left front upper side) “6”
   - Engine mounting bolt (left front lower side) “7”
   - Engine mounting bolt (right front lower side) “8”

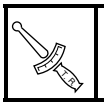	**Engine mounting bolt** **45 Nm (4.5 m·kgf, 33 ft·lbf)**

12. Tighten:
   - Adapter bolt (left) “5”
   - Adapter bolt (right) “9”

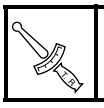	**Adapter bolt** **12 Nm (1.2 m·kgf, 8.7 ft·lbf)**

EAS23760

CAMSHAFTS

Removing the cylinder head cover

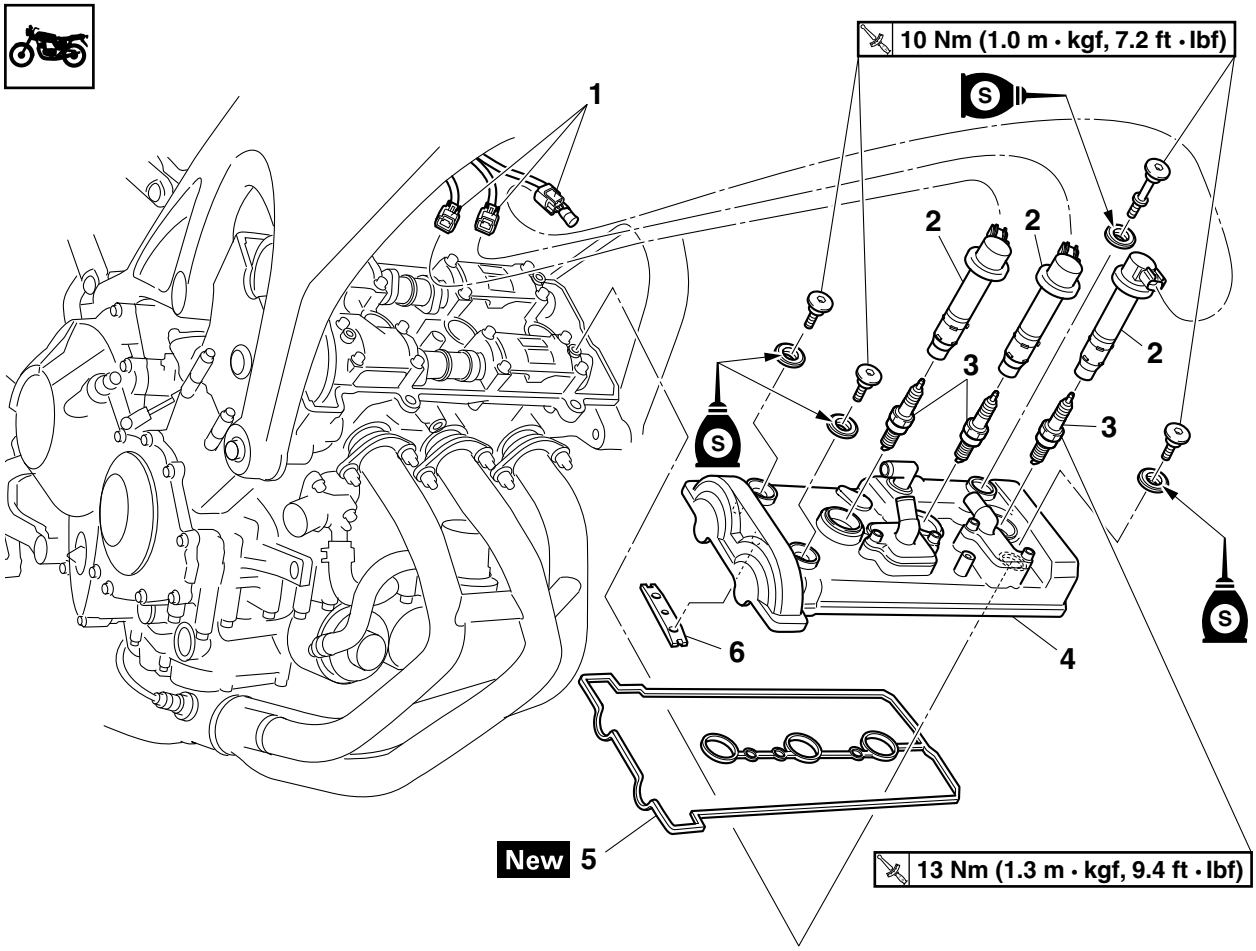

Order	Job/Parts to remove	Q'ty	Remarks
	Rider seat		Refer to "GENERAL CHASSIS" on page 4-1.
	Air scoop/Fuel tank cover		Refer to "GENERAL CHASSIS" on page 4-1.
	Fuel tank		Refer to "FUEL TANK" on page 7-1.
	Air filter case		Refer to "GENERAL CHASSIS" on page 4-1.
	Radiator		Refer to "RADIATOR" on page 6-1.
	Air cut-off valve		Refer to "AIR INDUCTION SYSTEM" on page 7-15.
1	Ignition coil coupler	3	Disconnect.
2	Ignition coil	3	
3	Spark plug	3	
4	Cylinder head cover	1	
5	Cylinder head cover gasket	1	
6	Timing chain guide (top side)	1	

Removing the camshafts

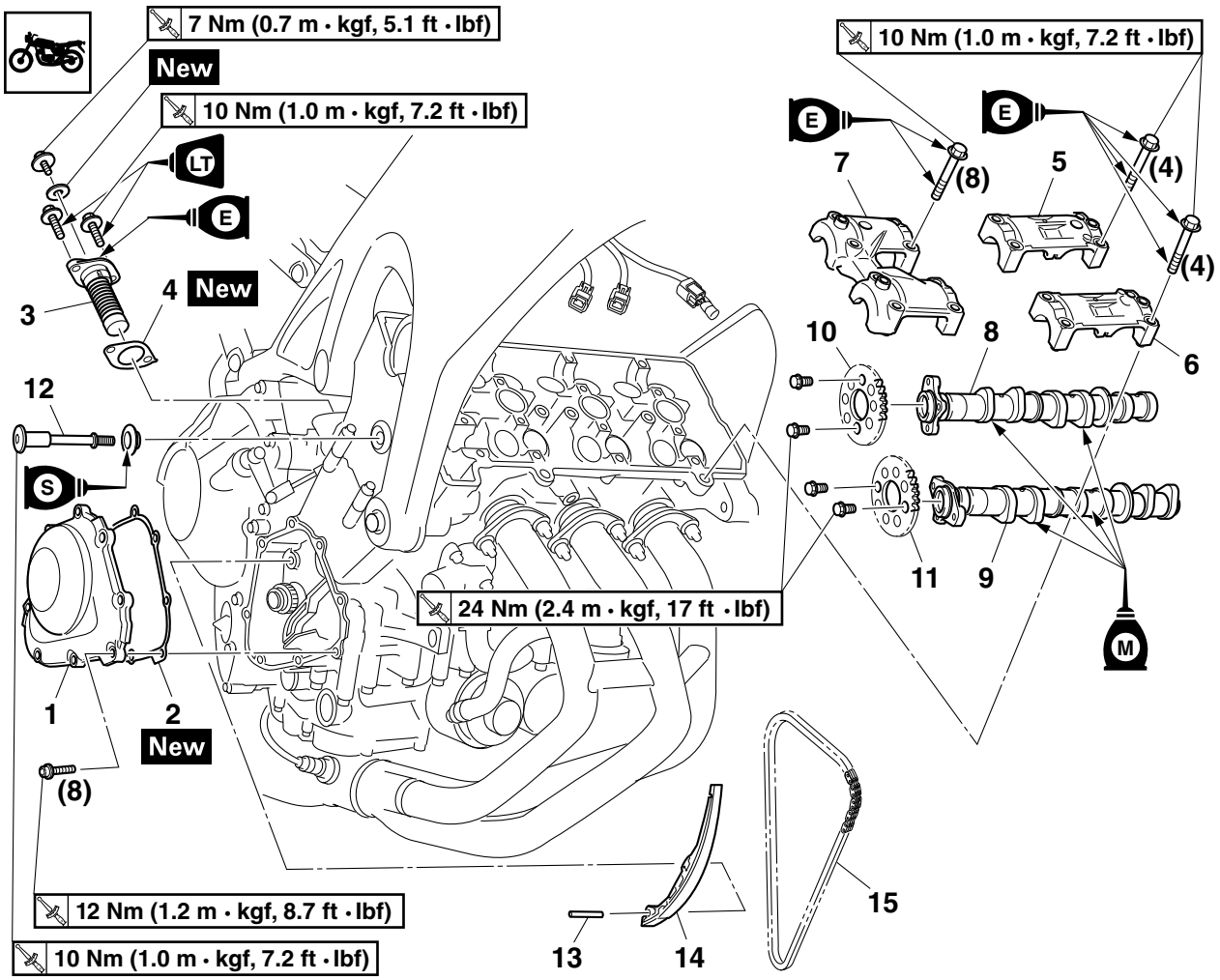

Order	Job/Parts to remove	Q'ty	Remarks
	Crankshaft end cover/Timing mark accessing bolt		Refer to "GENERATOR AND STARTER CLUTCH" on page 5-30.
1	Timing chain cover	1	
2	Timing chain cover gasket	1	
3	Timing chain tensioner	1	
4	Timing chain tensioner gasket	1	
5	Intake camshaft cap	1	
6	Exhaust camshaft cap	1	
7	Camshaft cap	1	
8	Intake camshaft	1	
9	Exhaust camshaft	1	
10	Intake camshaft sprocket	1	
11	Exhaust camshaft sprocket	1	
12	Timing chain bolt	1	
13	Dowel pin	1	
14	Timing chain guide (intake side)	1	
15	Timing chain	1	

EAS23810

REMOVING THE CAMSHAFTS

1. Remove:
   - Timing mark accessing bolt “1”
   - Crankshaft end cover “2”

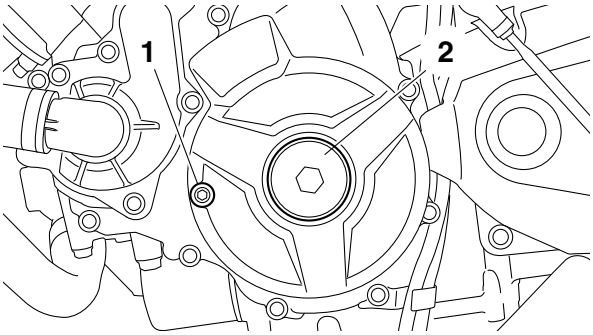

2. Align:
   - Mark “a” on the generator rotor (with the generator rotor cover mark “b”)

▼▼▼▼▼▼▼▼▼▼▼▼▼▼▼▼▼▼▼▼▼▼▼▼▼▼▼▼▼▼▼▼▼▼

a. Turn the crankshaft counterclockwise.
b. When piston #1 is at BTDC125° on the compression stroke, align the BTDC125° mark “a” on the generator rotor with the generator rotor cover mark “b”.

TIP

BTDC125° on the compression stroke can be found when the camshaft lobes are turned away from each other.

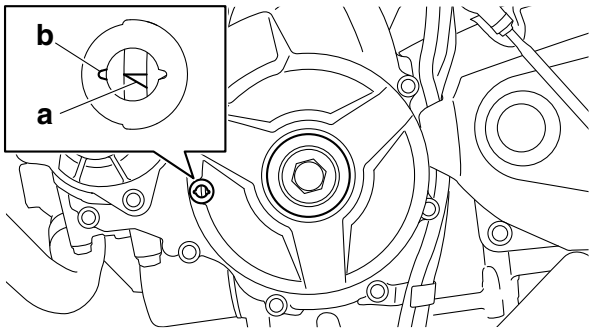

▲▲▲▲▲▲▲▲▲▲▲▲▲▲▲▲▲▲▲▲▲▲▲▲▲▲▲▲▲▲▲▲▲▲

3. Remove:
   - Timing chain tensioner “1”
   - Timing chain tensioner gasket

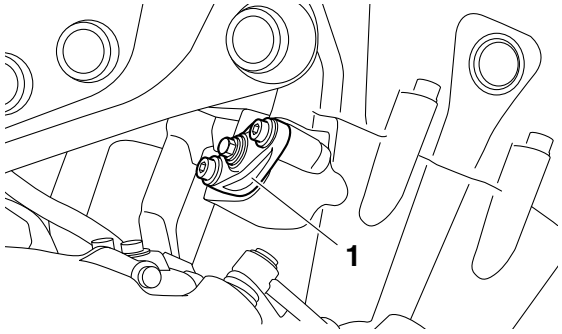

4. Remove:
   - Camshaft cap “1”
   - Intake camshaft cap “2”
   - Exhaust camshaft cap “3”

ECA13720

NOTICE

To prevent damage to the cylinder head, camshafts or camshaft caps, loosen the camshaft cap bolts in stages and in a criss-cross pattern, working from the outside in.

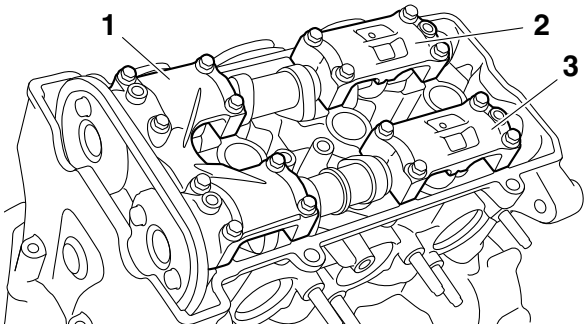

5. Remove:
   - Intake camshaft “1”
   - Exhaust camshaft “2”

TIP

To prevent the timing chain from falling into the crankcase, fasten it with a wire “3”.

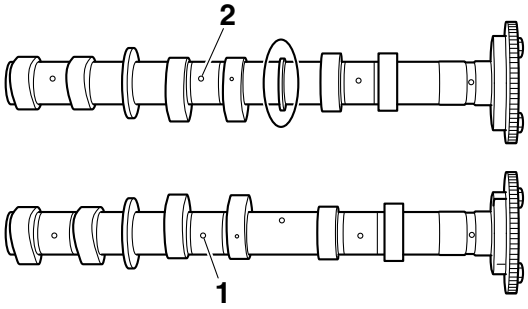

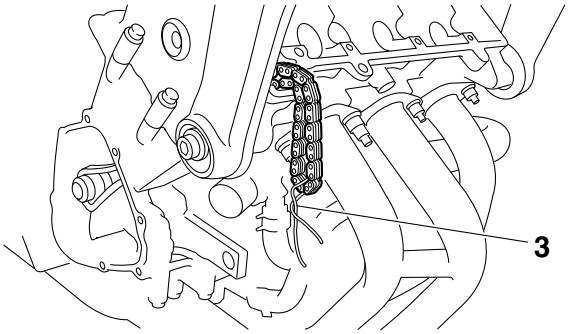

6. Remove:
   - Camshaft sprocket “1”

TIP

Use the camshaft wrench “2” and loosen the camshaft sprocket bolt.

Camshaft wrench
90890-04162
YM-04162

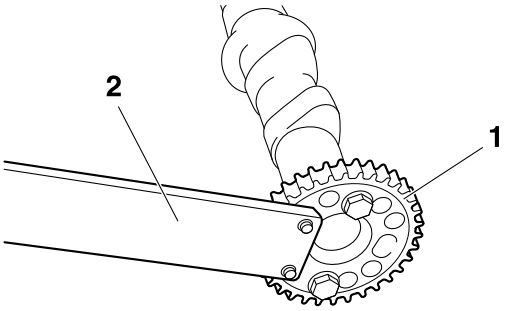

EAS23850

CHECKING THE CAMSHAFTS

1. Check:
   - Camshaft lobes
     Blue discoloration/pitting/scratches → Replace the camshaft.
2. Measure:
   - Camshaft lobe dimensions “a” and “b”
     Out of specification → Replace the camshaft.

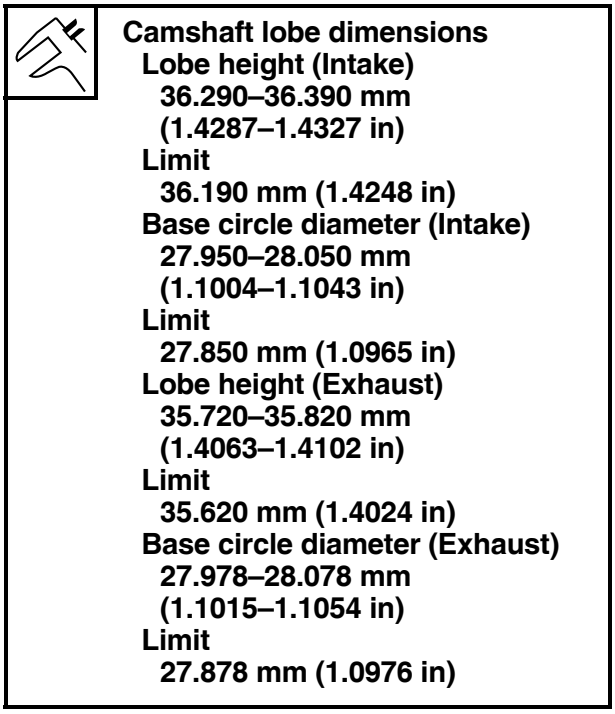

Camshaft lobe dimensions
Lobe height (Intake)
36.290–36.390 mm
(1.4287–1.4327 in)
Limit
36.190 mm (1.4248 in)
Base circle diameter (Intake)
27.950–28.050 mm
(1.1004–1.1043 in)
Limit
27.850 mm (1.0965 in)
Lobe height (Exhaust)
35.720–35.820 mm
(1.4063–1.4102 in)
Limit
35.620 mm (1.4024 in)
Base circle diameter (Exhaust)
27.978–28.078 mm
(1.1015–1.1054 in)
Limit
27.878 mm (1.0976 in)

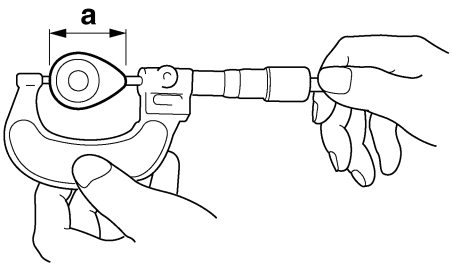

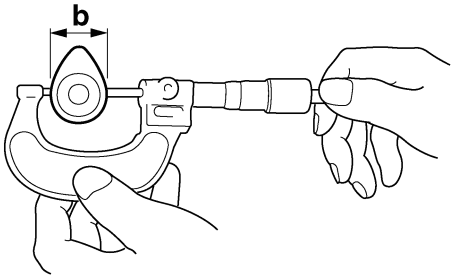

3. Measure:
   - Camshaft runout
     Out of specification → Replace.

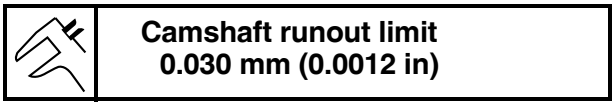

Camshaft runout limit
0.030 mm (0.0012 in)

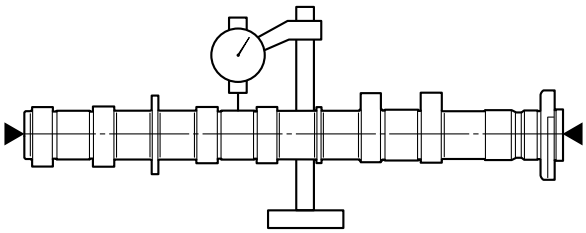

4. Measure:
   - Camshaft-journal-to-camshaft-cap clearance
     Out of specification → Measure the camshaft journal diameter.

Camshaft-journal-to-camshaft-cap clearance
0.028–0.062 mm (0.0011–0.0024 in)

▼▼▼▼▼▼▼▼▼▼▼▼▼▼▼▼▼▼▼▼▼▼▼▼▼▼▼▼▼▼▼▼▼▼

a. Install the camshaft into the cylinder head (without the camshaft caps).
b. Position strip of Plastigauge® “1” onto the camshaft journal as shown.

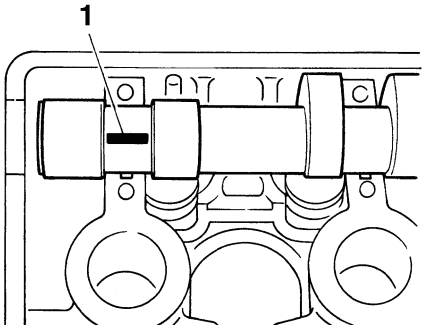

c. Install the dowel pins and camshaft caps.

TIP
- Tighten the camshaft cap bolts in stages and in a crisscross pattern, working from the inner caps out.
- Do not turn the camshaft when measuring the camshaft journal-to-camshaft cap clearance with the Plastigauge®.

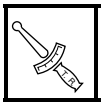	**Camshaft cap bolt** **10 Nm (1.0 m·kgf, 7.2 ft·lbf)**

d. Remove the camshaft caps and then measure the width of the Plastigauge® “2”.

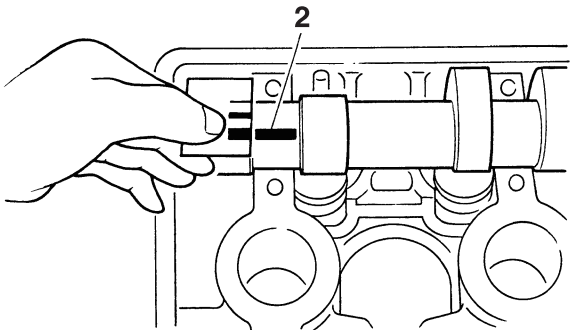

▲▲▲▲▲▲▲▲▲▲▲▲▲▲▲▲▲▲▲▲▲▲▲▲▲▲▲▲▲▲▲▲

5. Measure:
   - Camshaft journal diameter “a”
     Out of specification → Replace the camshaft.
     Within specification → Replace the cylinder head and the camshaft caps as a set.

	**Camshaft journal diameter** **24.459–24.472 mm** **(0.9630–0.9635 in)**

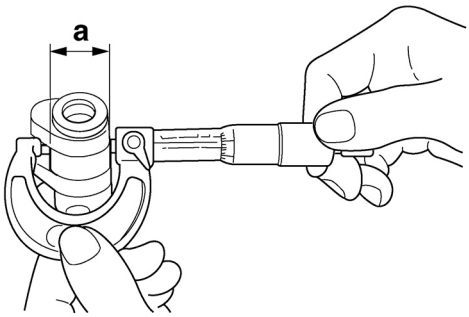

EAS23870

CHECKING THE TIMING CHAIN AND CAMSHAFT SPROCKET

1. Check:
   - Timing chain
     Damage/stiffness → Replace the timing chain and camshaft and camshaft sprocket as a set.
2. Check:
   - Camshaft sprocket
     More than 1/4 tooth wear “a” → Replace the camshaft sprockets and the timing chain as a set.

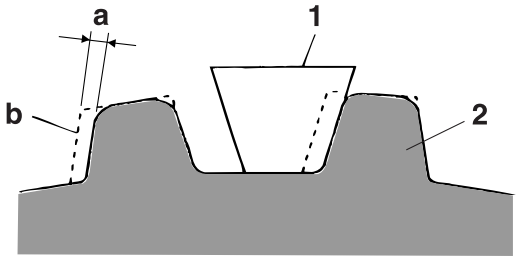

a. 1/4 tooth
b. Correct

1. Timing chain
2. Camshaft sprocket

EAS23950

CHECKING THE TIMING CHAIN GUIDES

The following procedure applies to all of the camshaft sprockets and timing chain guides.

1. Check:
   - Timing chain guide (intake side) “1”
   - Timing chain guide (top side) “2”
     Damage/wear → Replace the defective part(s).

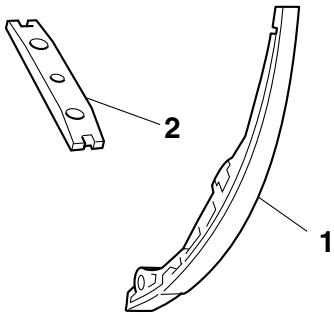

EAS23970

CHECKING THE TIMING CHAIN TENSIONER

1. Check:
   - Timing chain tensioner
     Cracks/damage/rough movement → Replace.

▼▼▼▼▼▼▼▼▼▼▼▼▼▼▼▼▼▼▼▼▼▼▼▼▼▼▼▼▼▼▼▼

a. Lightly press the timing chain tensioner rod into the timing chain tensioner housing by hand.

TIP
While pressing the timing chain tensioner rod, wind it counterclockwise with a hexagon wrench “1” until it stops.

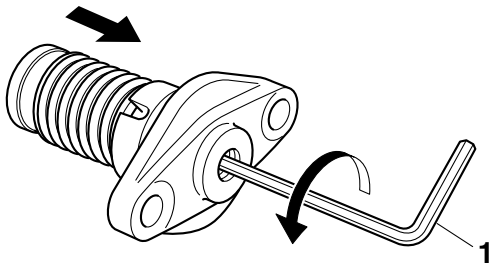

b. Keep pressing the timing chain tensioner rod by hand, remove the hexagon wrench and slowly release the timing chain tensioner rod.
c. Make sure that the timing chain tensioner rod comes out of the timing chain tensioner housing smoothly. If there is rough movement, replace the timing chain tensioner.

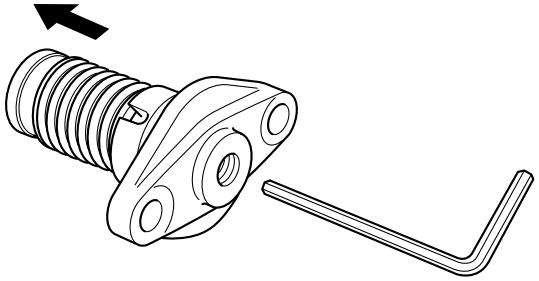

▲▲▲▲▲▲▲▲▲▲▲▲▲▲▲▲▲▲▲▲▲▲▲▲▲▲▲▲▲▲▲▲

EAS24010

INSTALLING THE CAMSHAFTS

1. Remove:
   - Timing mark accessing bolt “1”
   - Crankshaft end cover “2”

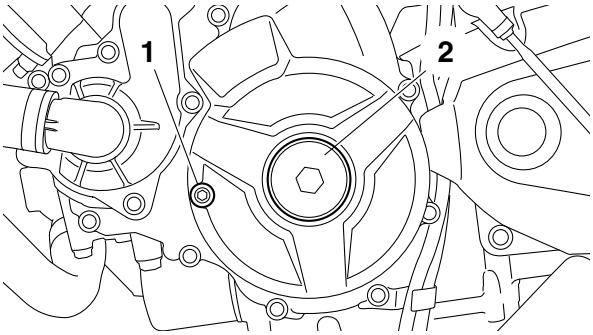

2. Align:
   - Mark “a” on the generator rotor (with the generator rotor cover mark “b”)

▼▼▼▼▼▼▼▼▼▼▼▼▼▼▼▼▼▼▼▼▼▼▼▼▼▼▼▼▼▼▼▼

a. Turn the crankshaft counterclockwise.
b. When piston #1 is at BTDC125° on the compression stroke, align the BTDC125° mark “a” on the generator rotor with the generator rotor cover mark “b”.

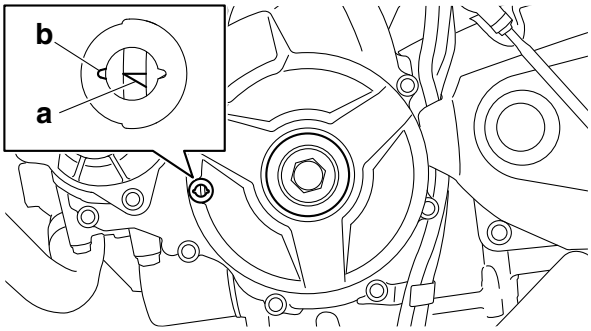

▲▲▲▲▲▲▲▲▲▲▲▲▲▲▲▲▲▲▲▲▲▲▲▲▲▲▲▲▲▲▲▲

3. Install:
   - Intake camshaft sprocket “1”
   - Exhaust camshaft sprocket “2”

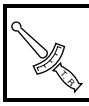	**Camshaft sprocket bolt** **24 Nm (2.4 m·kgf, 17 ft·lbf)**

ECA1RC1505

NOTICE

Be sure to tighten the camshaft sprocket bolts to the specified torque to avoid the possibility of the bolts coming loose and damaging the engine.

TIP

- Install the camshaft projection “a” at the position shown in the illustration.
- Tighten the camshaft sprocket bolt with the camshaft wrench “3”.

	**Camshaft wrench** **90890-04162** **YM-04162**

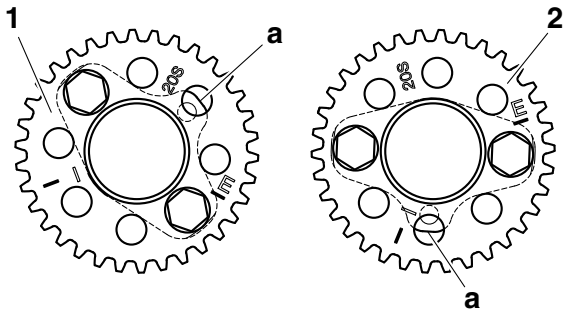

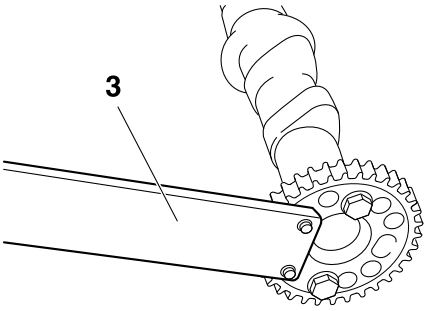

4. Install:
   - Exhaust camshaft “1”
   - Intake camshaft “2”

TIP

- Make sure the punch mark “a” on each camshaft faces up.
- When installing the camshaft, no need to align the mark “b” on the camshaft sprocket.

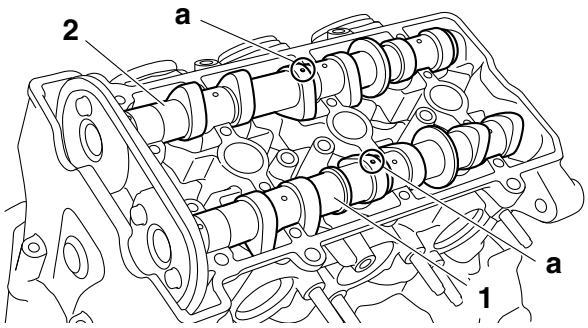

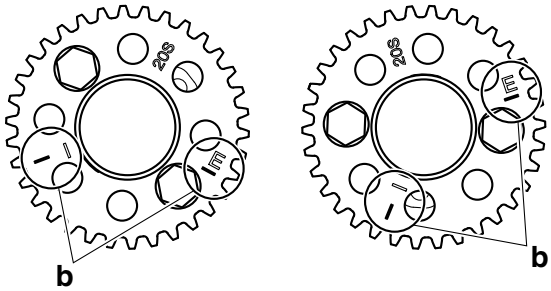

5. Install:
   - Camshaft cap
   - Intake camshaft cap
   - Exhaust camshaft cap

TIP

- Make sure each camshaft cap is installed in its original place. Refer to the identification marks as follows:
  “IL”: Intake left side camshaft cap mark
  “EL”: Exhaust left side camshaft cap mark
- Make sure the arrow mark “a” on each camshaft points toward the right side of the engine.

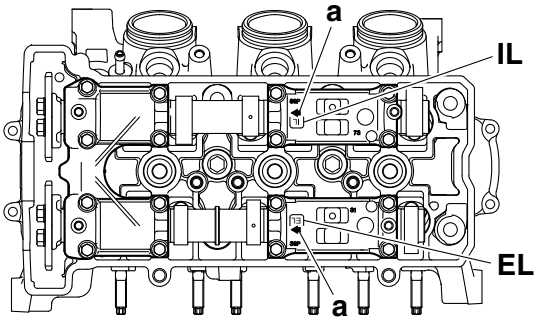

6. Tighten:
   - Camshaft cap bolts

	Camshaft cap bolt **10 Nm (1.0 m·kgf, 7.2 ft·lbf)**

TIP

Tighten the camshaft cap bolts in the tightening sequence as shown.

ECA1RC1506

NOTICE

- **Lubricate the camshaft cap bolts with the engine oil.**
- **The camshaft cap bolts must be tightened evenly or damage to the cylinder head, camshaft caps, and camshafts will result.**
- **Do not turn the crankshaft when installing the camshaft to avoid damage or improper valve timing.**

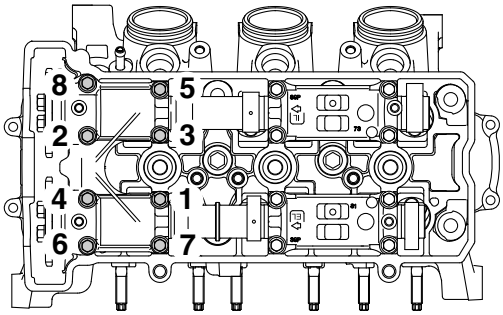

7. Tighten:
   - Camshaft cap bolts “1”

	Camshaft cap bolt **10 Nm (1.0 m·kgf, 7.2 ft·lbf)**

TIP

Tighten the camshaft cap bolts in stages and in a crisscross pattern, working from the inner caps out.

ECA1RC1506

NOTICE

- **Lubricate the camshaft cap bolts with the engine oil.**
- **The camshaft cap bolts must be tightened evenly or damage to the cylinder head, camshaft caps, and camshafts will result.**
- **Do not turn the crankshaft when installing the camshaft to avoid damage or improper valve timing.**

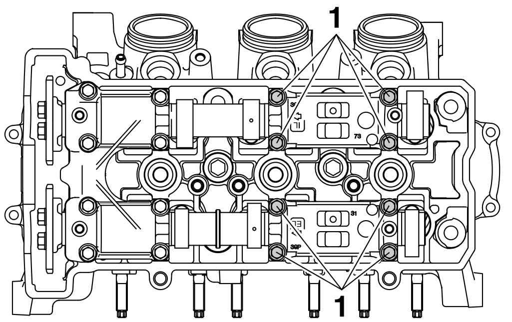

8. Check:
   - Camshaft punch mark “a”
     Make sure the punch mark “a” on the camshaft is aligned with the camshaft cap alignment mark “b”.

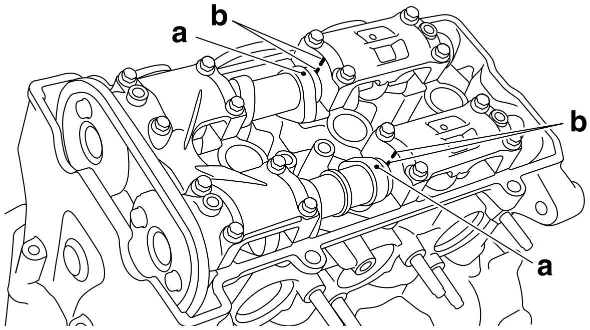

9. Install:
   - Timing chain tensioner
   - Timing chain tensioner gasket **New**

▼▼▼▼▼▼▼▼▼▼▼▼▼▼▼▼▼▼▼▼▼▼▼▼▼▼▼▼▼▼▼▼▼▼

a. Apply a few drops of engine oil to the inside “a” of the timing chain tensioner.

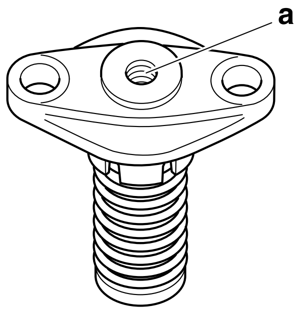

b. While lightly pressing the timing chain tensioner rod by hand, turn the timing chain tensioner rod fully counterclockwise with a hexagon wrench “1”.

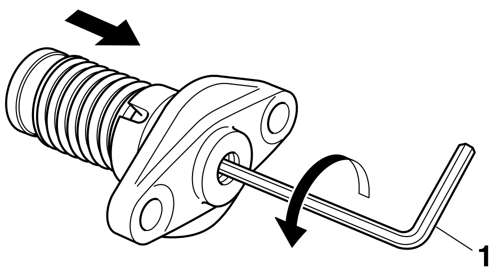

c. Keep pressing the timing chain tensioner rod by hand, remove the hexagon wrench, and then insert the hexagon wrench “2” (Parts No.: 1RC-12228-00) into the timing chain tensioner rod.

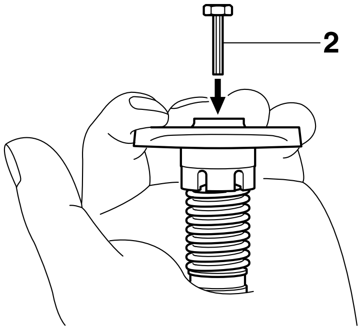

d. Install the timing chain tensioner gasket “3”, the timing chain tensioner “4”, and the timing chain tensioner bolts “5” on the cylinder block.

TIP

Face the section “b” of the gasket inward.

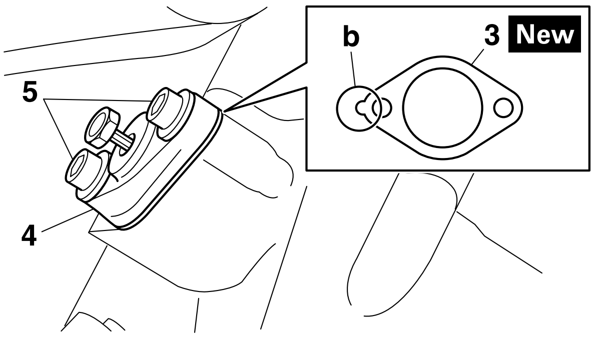

e. Tighten the timing chain tensioner bolts to the specified torque.

Timing chain tensioner bolt
10 Nm (1.0 m·kgf, 7.2 ft·lbf)
LOCTITE®

f. Screw the hexagon wrench by hand until the timing chain tensioner rod touches the timing chain guide, and then tighten 1/4 turn by tool.

TIP

The timing chain tensioner rod is extended by

turning the hexagon wrench clockwise.

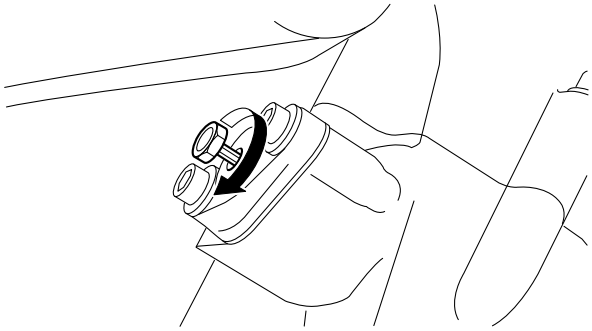

g. Remove the hexagon wrench, and check the timing chain tension.

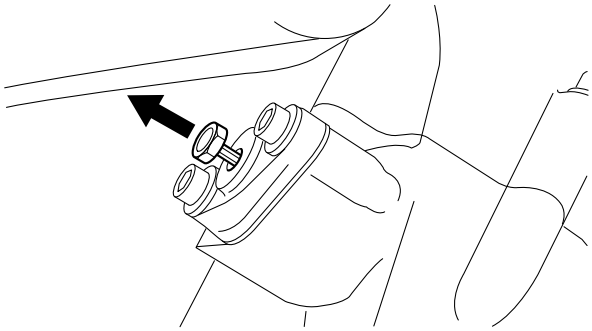

h. Install the timing chain tensioner cap bolt and gasket, and then tighten the timing chain tensioner cap bolt to the specified torque.

	Timing chain tensioner cap bolt 7 Nm (0.7 m·kgf, 5.1 ft·lbf)

▲▲▲▲▲▲▲▲▲▲▲▲▲▲▲▲▲▲▲▲▲▲▲▲▲▲▲▲▲▲▲▲▲▲

10.Turn:
- Crankshaft
  (several turns counterclockwise)

11.Check:
- Mark “a”
  Make sure the mark “a” on the generator rotor is aligned with the generator rotor cover mark “b”.
- Camshaft punch mark “c”
  Make sure the punch mark “c” on the camshaft is aligned with the camshaft cap alignment mark “d”.
  Out of alignment → Adjust.
  Refer to the installation steps above.

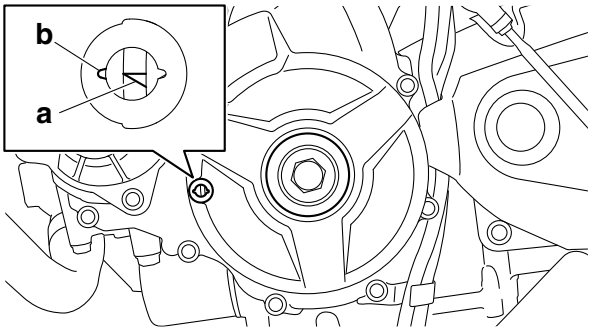

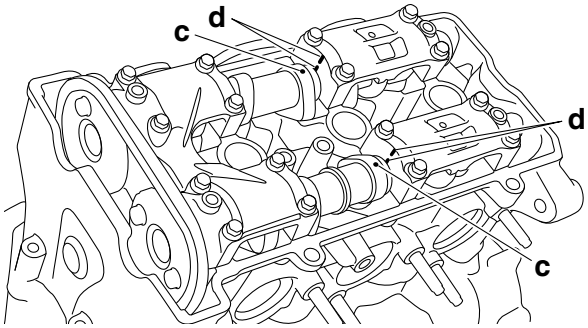

12.Measure:
- Valve clearance
  Out of specification → Adjust.
  Refer to “ADJUSTING THE VALVE CLEARANCE” on page 3-5.

13.Install:
- Timing mark accessing bolt “1”

	Timing mark accessing bolt 15 Nm (1.5 m·kgf, 11 ft·lbf)

- Crankshaft end cover “2”

	Crankshaft end cover 10 Nm (1.0 m·kgf, 7.2 ft·lbf)

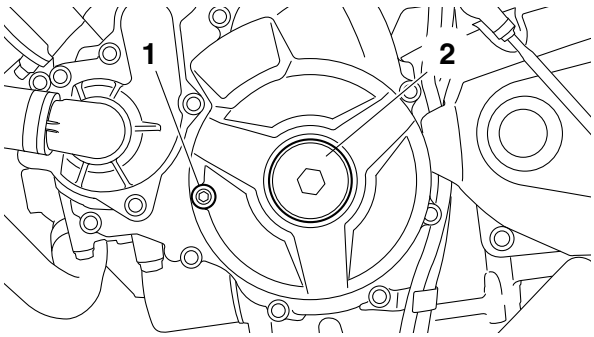

14.Install:
- Timing chain guide (top side)
- Cylinder head cover gasket “1” New
- Cylinder head cover

	Cylinder head cover bolt 10 Nm (1.0 m·kgf, 7.2 ft·lbf)

TIP
After installing the cylinder head gasket “1” to the cylinder head cover, cut off the “a” section.

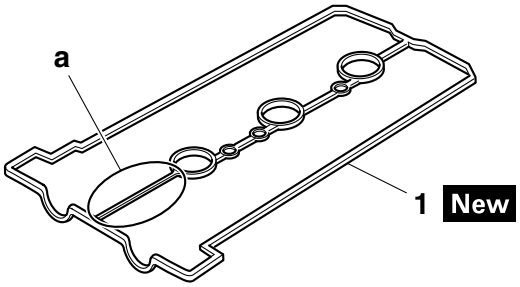

15.Install:
- Spark plugs
- Ignition coils “1”

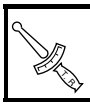	**Spark plug** **13 Nm (1.3 m·kgf, 9.4 ft·lbf)**

TIP
Install the ignition coils “1” in the direction shown in the illustration.

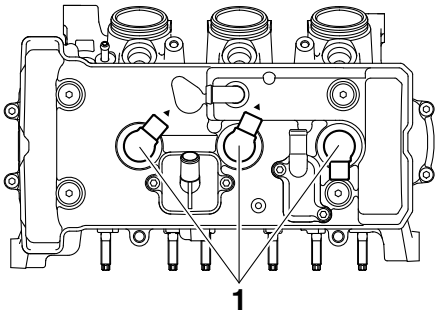

EAS24100

CYLINDER HEAD

Removing the cylinder head

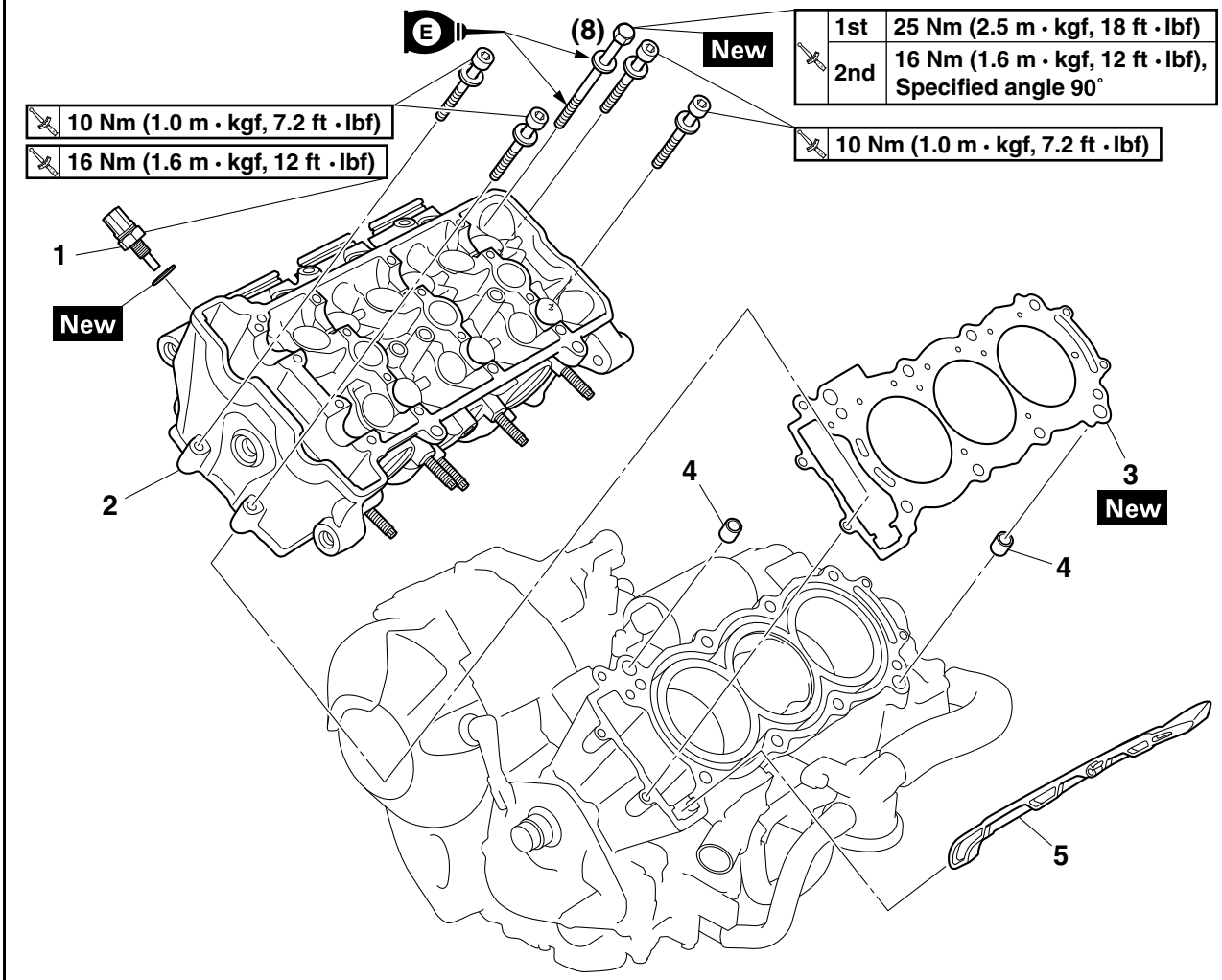

Order	Job/Parts to remove	Q'ty	Remarks
	Engine		Refer to "ENGINE REMOVAL" on page 5-3.
	Intake camshaft		Refer to "CAMSHAFTS" on page 5-9.
	Exhaust camshaft		Refer to "CAMSHAFTS" on page 5-9.
1	Coolant temperature sensor	1	
2	Cylinder head	1	
3	Cylinder head gasket	1	
4	Dowel pin	2	
5	Timing chain guide (exhaust side)	1	

EAS24120

REMOVING THE CYLINDER HEAD

1. Remove:
   - Intake camshaft
   - Exhaust camshaft
     Refer to “REMOVING THE CAMSHAFTS” on page 5-11.
2. Remove:
   - Cylinder head bolts

TIP

- Loosen the bolts in the proper sequence as shown.
- Loosen each bolt 1/2 of a turn at a time. After all of the bolts are fully loosened, remove them.

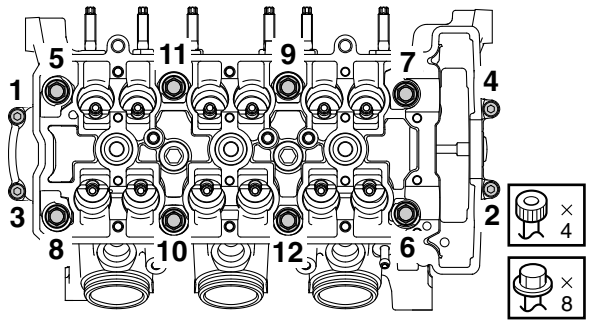

EAS1RC1508

CHECKING THE TIMING CHAIN GUIDE (EXHAUST SIDE)

1. Check:
   - Timing chain guide (exhaust side)
     Damage/wear→Replace.

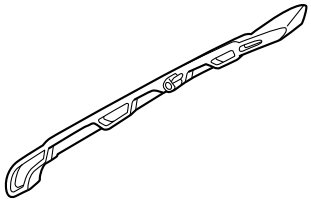

EAS24160

CHECKING THE CYLINDER HEAD

1. Eliminate:
   - Combustion chamber carbon deposits (with a rounded scraper)

TIP

Do not use a sharp instrument to avoid damaging or scratching:

- Spark plug bore threads
- Valve seats

2. Check:
   - Cylinder head
     Damage/scratches → Replace.
   - Cylinder head water jacket
     Mineral deposits/rust → Eliminate.
3. Measure:
   - Cylinder head warpage
     Out of specification → Resurface the cylinder head.

	Warpage limit **0.10 mm (0.0039 in)**

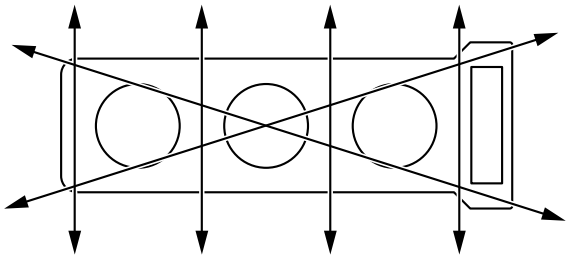

▼▼▼▼▼▼▼▼▼▼▼▼▼▼▼▼▼▼▼▼▼▼▼▼▼▼▼▼▼▼▼▼▼▼▼▼▼▼

a. Place a straightedge “1” and a thickness gauge “2” across the cylinder head.

	Thickness gauge **90890-03180** **Feeler gauge set** **YU-26900-9**

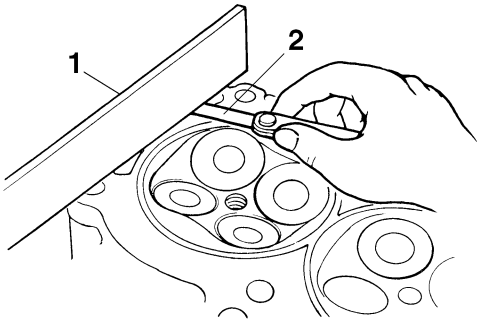

b. Measure the warpage.
c. If the limit is exceeded, resurface the cylinder head as follows.
d. Place a 400–600 grit wet sandpaper on the surface plate and resurface the cylinder head using a figure-eight sanding pattern.

TIP

To ensure an even surface, rotate the cylinder head several times.

▲▲▲▲▲▲▲▲▲▲▲▲▲▲▲▲▲▲▲▲▲▲▲▲▲▲▲▲▲▲▲▲

EAS24240

INSTALLING THE CYLINDER HEAD

1. Install:
   - Timing chain guide (exhaust side) “1”
   - Cylinder head gasket “2” New
   - Dowel pins “3”

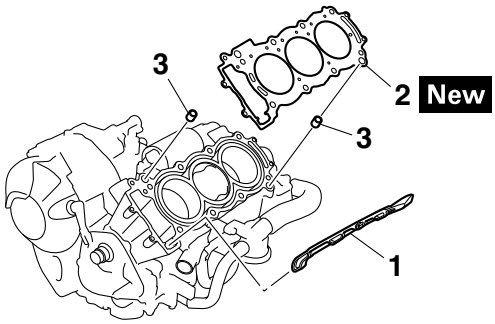

2. Install:
   - Cylinder head
   - Cylinder head bolts (M6)
   - Cylinder head bolts (M9) New

TIP

- Pass the timing chain through the timing chain cavity.
- Lubricate the cylinder head bolt (M9) thread and mating surface with engine oil.

3. Tighten:
   - Cylinder head bolts “1”–“8”
   - Cylinder head bolts “9”–“12”

	**Cylinder head bolt “1”–“8”** **1st: 25 Nm (2.5 m·kgf, 18 ft·lbf)** ***2nd: 16 Nm (1.6 m·kgf, 12 ft·lbf) +90°** **Cylinder head bolt “9”–“12”** **10 Nm (1.0 m·kgf, 7.2 ft·lbf)**

* Following the tightening order, loosen the bolt one by one and then retighten it to the specific torque and the specific angle.

TIP

Tighten the cylinder head bolts “1”–“8” in the tightening sequence as shown and torque them in 2 stages.

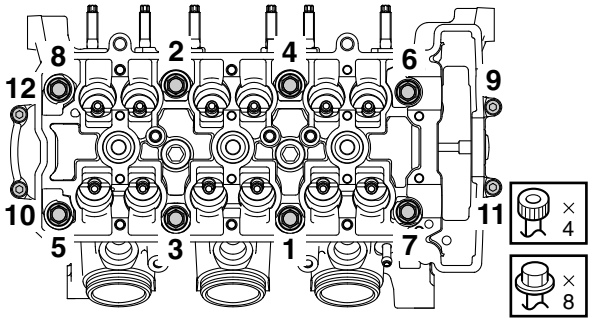

4. Install:
   - Exhaust camshaft
   - Intake camshaft

   Refer to “INSTALLING THE CAMSHAFTS” on page 5-14.

EAS24270

VALVES AND VALVE SPRINGS

Removing the valves and valve springs

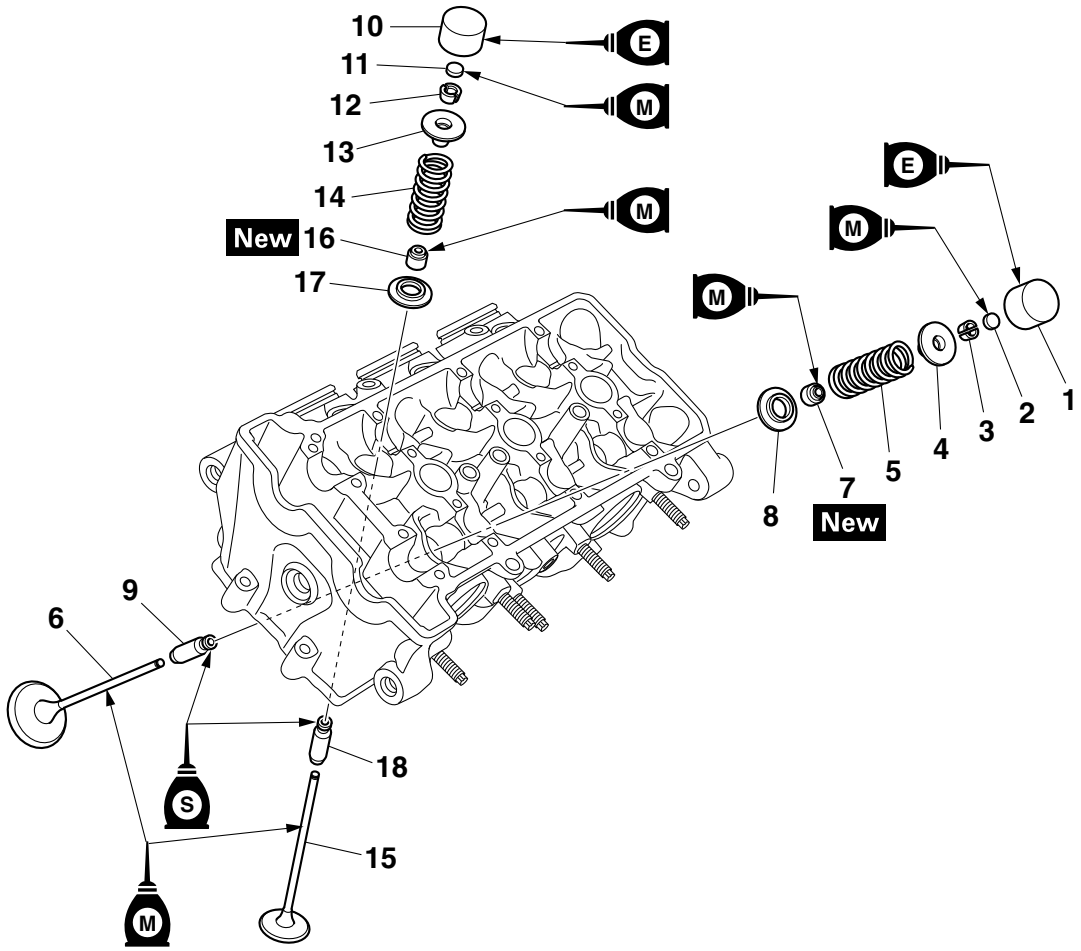

Order	Job/Parts to remove	Q'ty	Remarks
	Cylinder head		Refer to "CYLINDER HEAD" on page 5-19.
1	Intake valve lifter	6	
2	Intake valve pad	6	
3	Intake valve cotter	12	
4	Intake valve spring retainer	6	
5	Intake valve spring	6	
6	Intake valve	6	
7	Intake valve stem seal	6	
8	Intake valve spring seat	6	
9	Intake valve guide	6	
10	Exhaust valve lifter	6	
11	Exhaust valve pad	6	
12	Exhaust valve cotter	12	
13	Exhaust valve spring retainer	6	
14	Exhaust valve spring	6	
15	Exhaust valve	6	
16	Exhaust valve stem seal	6	
17	Exhaust valve spring seat	6	
18	Exhaust valve guide	6	

EAS24280

REMOVING THE VALVES

The following procedure applies to all of the valves and related components.

TIP

Before removing the internal parts of the cylinder head (e.g., valves, valve springs, valve seats), make sure the valves properly seal.

1. Remove:
   - Valve lifter “1”
   - Valve pad “2”

TIP

Make a note of the position of each valve lifter and valve pad so that they can be reinstalled in their original place.

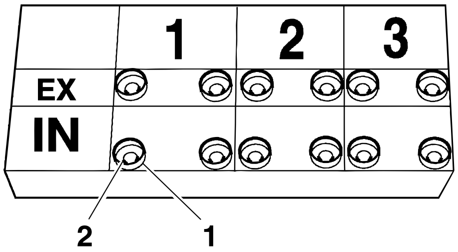

2. Check:
   - Valve sealing
     Leakage at the valve seat → Check the valve face, valve seat, and valve seat width.
     Refer to “CHECKING THE VALVE SEATS” on page 5-25.

▼▼▼▼▼▼▼▼▼▼▼▼▼▼▼▼▼▼▼▼▼▼▼▼▼▼▼▼▼▼▼▼▼

a. Pour a clean solvent “a” into the intake and exhaust ports.

b. Check that the valves properly seal.

TIP

There should be no leakage at the valve seat “1”.

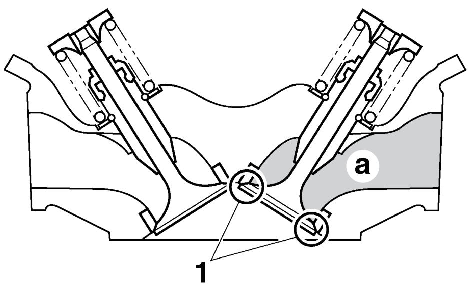

▲▲▲▲▲▲▲▲▲▲▲▲▲▲▲▲▲▲▲▲▲▲▲▲▲▲▲▲▲▲▲▲▲

3. Remove:
   - Valve cotters

TIP

Remove the valve cotters by compressing the valve spring with the valve spring compressor “1” and the valve spring compressor attachment “2”.

Valve spring compressor
90890-04019
YM-04019
Valve spring compressor attachment
90890-04108
Valve spring compressor adapter 22 mm
YM-04108

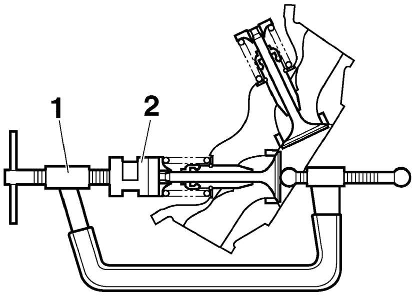

4. Remove:
   - Valve spring retainer “1”
   - Valve spring “2”
   - Valve “3”
   - Valve stem seal “4”
   - Valve spring seat “5”

TIP

Identify the position of each part very carefully so that it can be reinstalled in its original place.

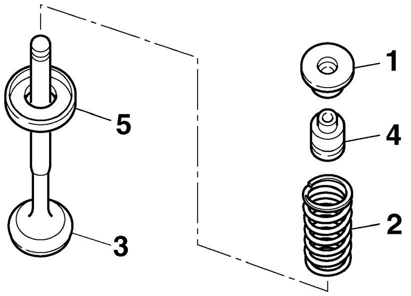

EAS24290

CHECKING THE VALVES AND VALVE GUIDES

The following procedure applies to all of the valves and valve guides.

1. Measure:
   - Valve-stem-to-valve-guide clearance
     Out of specification → Replace the valve

guide.

- Valve-stem-to-valve-guide clearance = Valve guide inside diameter “a” - Valve stem diameter “b”

Valve-stem-to-valve-guide clearance (intake)
0.010–0.037 mm (0.0004–0.0015 in)
Limit
0.080 mm (0.0032 in)
Valve-stem-to-valve-guide clearance (exhaust)
0.025–0.052 mm (0.0010–0.0020 in)
Limit
0.100 mm (0.0039 in)

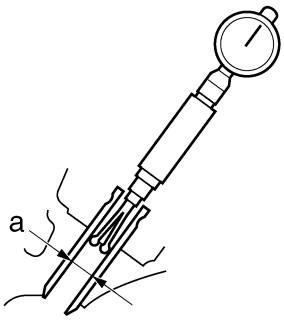

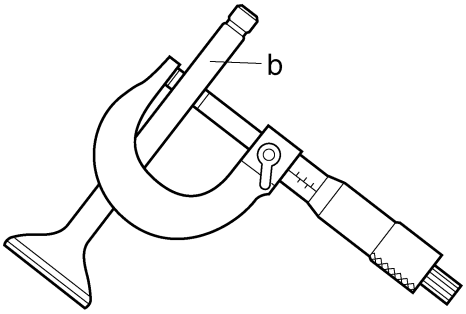

2. Replace:
   - Valve guide

TIP
To ease valve guide removal and installation, and to maintain the correct fit, heat the cylinder head to 100 °C (212 °F) in an oven.

▼▼▼▼▼▼▼▼▼▼▼▼▼▼▼▼▼▼▼▼▼▼▼▼▼▼▼▼▼▼▼▼▼▼

a. Remove the valve guide with the valve guide remover “1”.

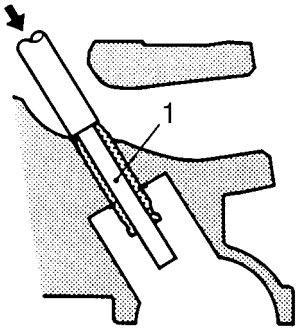

b. Install the new valve guide with the valve guide installer “2” and valve guide remover “1”.

Valve guide position
13.3–13.7 mm (0.52–0.54 in)

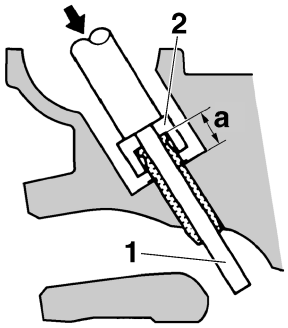

a. Valve guide position

c. After installing the valve guide, bore the valve guide with the valve guide reamer “3” to obtain the proper valve-stem-to-valve-guide clearance.

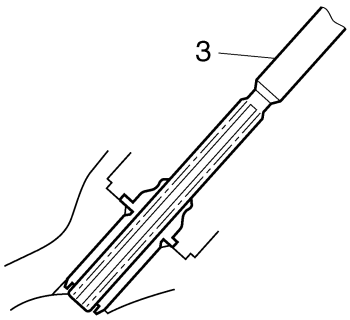

TIP
After replacing the valve guide, reface the valve seat.

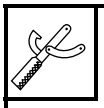

Valve guide remover (ø4.5)
90890-04116
Valve guide remover (4.5 mm)
YM-04116
Valve guide installer (ø4.5)
90890-04117
Valve guide installer (4.5 mm)
YM-04117
Valve guide reamer (ø4.5)
90890-04118
Valve guide reamer (4.5 mm)
YM-04118

▲▲▲▲▲▲▲▲▲▲▲▲▲▲▲▲▲▲▲▲▲▲▲▲▲▲▲▲▲▲▲▲

3. Eliminate:
   - Carbon deposits
     (from the valve face and valve seat)
4. Check:
   - Valve face
     Pitting/wear → Grind the valve face.
   - Valve stem end
     Mushroom shape or diameter larger than the body of the valve stem → Replace the valve.
5. Measure:
   - Valve stem runout
     Out of specification → Replace the valve.

TIP
- When installing a new valve, always replace the valve guide.
- If the valve is removed or replaced, always replace the valve stem seal.

Valve stem runout
0.010 mm (0.0004 in)

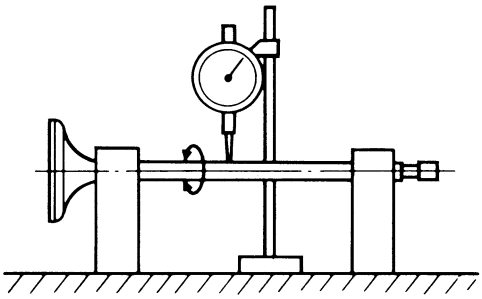

EAS24300

CHECKING THE VALVE SEATS

The following procedure applies to all of the valves and valve seats.

1. Eliminate:
   - Carbon deposits
     (from the valve face and valve seat)
2. Check:
   - Valve seat
     Pitting/wear → Replace the cylinder head.
3. Measure:
   - Valve seat width “a”
     Out of specification → Replace the cylinder head.

Valve seat width
Valve seat width (intake)
0.90–1.10 mm (0.0354–0.0433 in)
Limit
1.60 mm (0.06 in)
Valve seat width (exhaust)
1.10–1.30 mm (0.0433–0.0512 in)
Limit
1.80 mm (0.07 in)

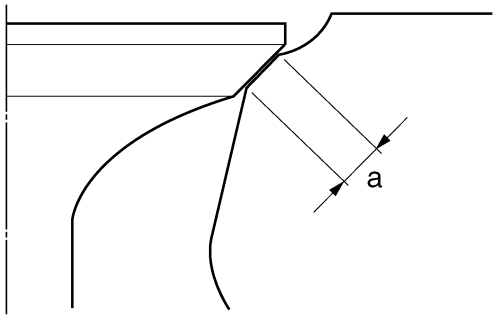

▼▼▼▼▼▼▼▼▼▼▼▼▼▼▼▼▼▼▼▼▼▼▼▼▼▼▼▼▼▼▼▼

a. Apply blue layout fluid “b” onto the valve face.

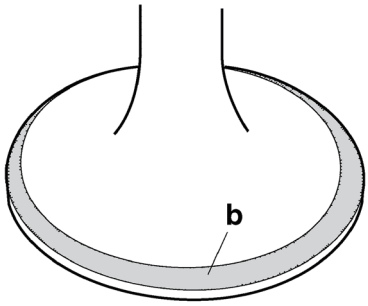

b. Install the valve into the cylinder head.
c. Press the valve through the valve guide and onto the valve seat to make a clear impression.
d. Measure the valve seat width.

TIP
Where the valve seat and valve face contacted one another, the blue layout fluid will have been removed.

▲▲▲▲▲▲▲▲▲▲▲▲▲▲▲▲▲▲▲▲▲▲▲▲▲▲▲▲▲▲▲▲

4. Lap:
   - Valve face

- Valve seat

TIP

After replacing the cylinder head or replacing the valve and valve guide, the valve seat and valve face should be lapped.

▼▼▼▼▼▼▼▼▼▼▼▼▼▼▼▼▼▼▼▼▼▼▼▼▼▼▼▼▼▼▼▼▼▼

a. Apply a coarse lapping compound “a” to the valve face.

ECA13790

NOTICE

Do not let the lapping compound enter the gap between the valve stem and the valve guide.

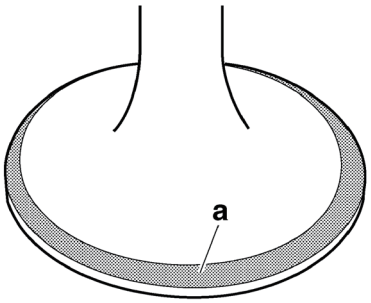

b. Apply molybdenum disulfide oil onto the valve stem.
c. Install the valve into the cylinder head.
d. Turn the valve until the valve face and valve seat are evenly polished, then clean off all of the lapping compound.

TIP

For the best lapping results, lightly tap the valve seat while rotating the valve back and forth between your hands.

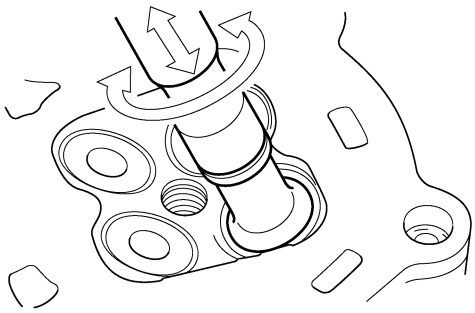

e. Apply a fine lapping compound to the valve face and repeat the above steps.
f. After every lapping procedure, be sure to clean off all of the lapping compound from the valve face and valve seat.
g. Apply blue layout fluid “b” onto the valve face.

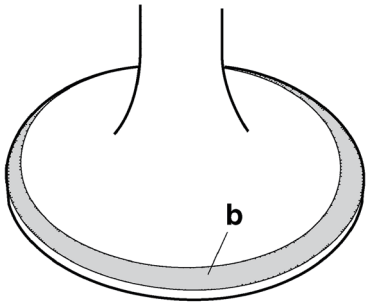

h. Install the valve into the cylinder head.
i. Press the valve through the valve guide and onto the valve seat to make a clear impression.
j. Measure the valve seat width “c” again. If the valve seat width is out of specification, reface and lap the valve seat.

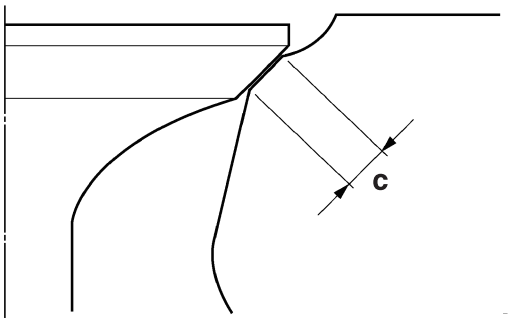

▲▲▲▲▲▲▲▲▲▲▲▲▲▲▲▲▲▲▲▲▲▲▲▲▲▲▲▲▲▲▲▲▲▲

EAS24310

CHECKING THE VALVE SPRINGS

The following procedure applies to all of the valve springs.

1. Measure:
   - Valve spring free length “a”
     Out of specification → Replace the valve spring.

Free length (intake)
39.31 mm (1.55 in)
Limit
37.34 mm (1.47 in)
Free length (exhaust)
37.78 mm (1.49 in)
Limit
35.89 mm (1.41 in)

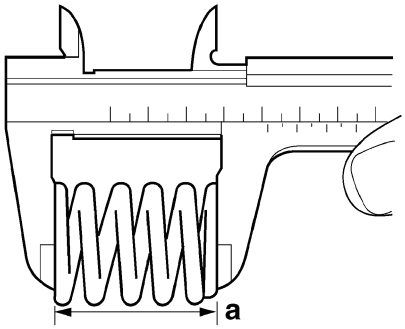

2. Measure:
   - Compressed valve spring force “a”
     Out of specification → Replace the valve spring.

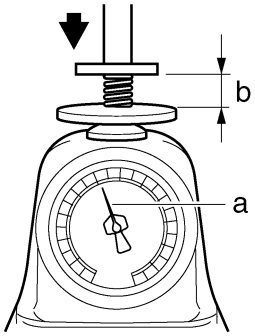

b. Installed length

	Installed compression spring force (intake) **192.00–220.00 N (19.58–22.43 kgf, 43.16–49.46 lbf)** **Installed compression spring force (exhaust)** **162.00–186.00 N (16.52–18.97 kgf, 36.42–41.81 lbf)** **Installed length (intake)** **32.90 mm (1.30 in)** **Installed length (exhaust)** **32.00 mm (1.26 in)**

3. Measure:
   - Valve spring tilt “a”
     Out of specification → Replace the valve spring.

	Spring tilt (intake) **1.7 mm (0.07 in)** **Spring tilt (exhaust)** **1.6 mm (0.06 in)**

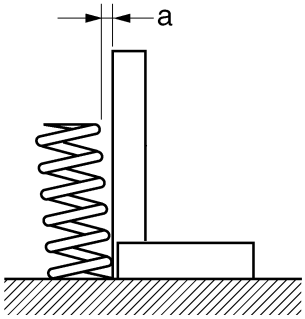

EAS24320

CHECKING THE VALVE LIFTERS

The following procedure applies to all of the valve lifters.

1. Check:
   - Valve lifter
     Damage/scratches → Replace the valve lifters and cylinder head.

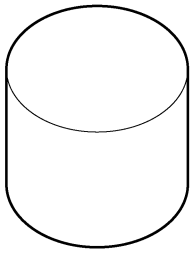

EAS24340

INSTALLING THE VALVES

The following procedure applies to all of the valves and related components.

1. Deburr:
   - Valve stem end
     (with an oil stone)

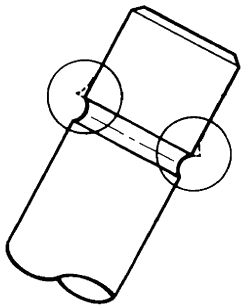

2. Lubricate:
   - Valve stem “1”
   - Valve stem seal “2”
     (with the recommended lubricant)

	Recommended lubricant **Molybdenum disulfide oil**

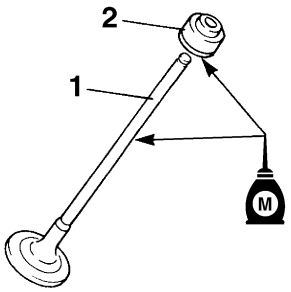

3. Install:
   - Valve spring seat “1”
   - Valve stem seal “2” New
   - Valve “3”
   - Valve spring “4”
   - Valve spring retainer “5”
     (into the cylinder head)

TIP
- Make sure each valve is installed in its original place.
- Install the valve springs with the larger pitch “a” facing up.

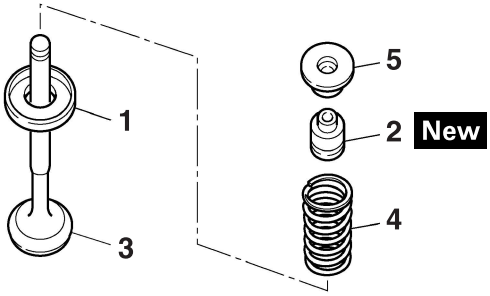

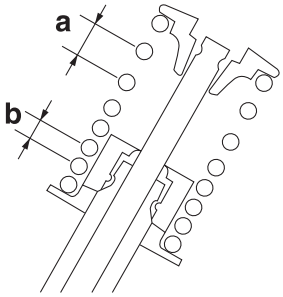

b. Smaller pitch

4. Install:
   - Valve cotters “1”

TIP
Install the valve cotters by compressing the valve spring with the valve spring compressor “2” and the valve spring compressor attachment “3”.

	Valve spring compressor **90890-04019** **YM-04019** **Valve spring compressor attachment** **90890-04108** **Valve spring compressor adapter 22 mm** **YM-04108**

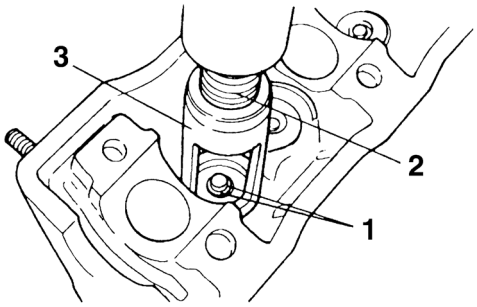

5. To secure the valve cotters onto the valve stem, lightly tap the valve tip with a soft-face hammer.

ECA13800

NOTICE

Hitting the valve tip with excessive force could damage the valve.

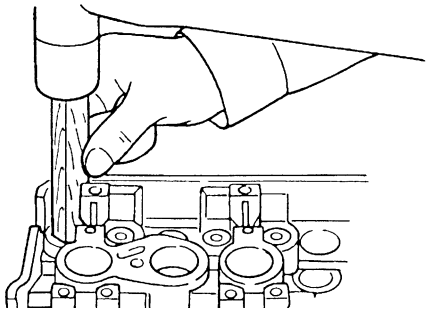

6. Lubricate:
   - Valve pad
     (with the recommended lubricant)

	Recommended lubricant **Molybdenum disulfide oil**

   - Valve lifter
     (with the recommended lubricant)

	Recommended lubricant **Engine oil**

7. Install:
   - Valve pad
   - Valve lifter

TIP

- The valve lifter must move smoothly when rotated with a finger.
- Each valve lifter and valve pad must be reinstalled in its original position.

EAS24480

GENERATOR AND STARTER CLUTCH

Removing the stator coil, generator rotor and starter clutch

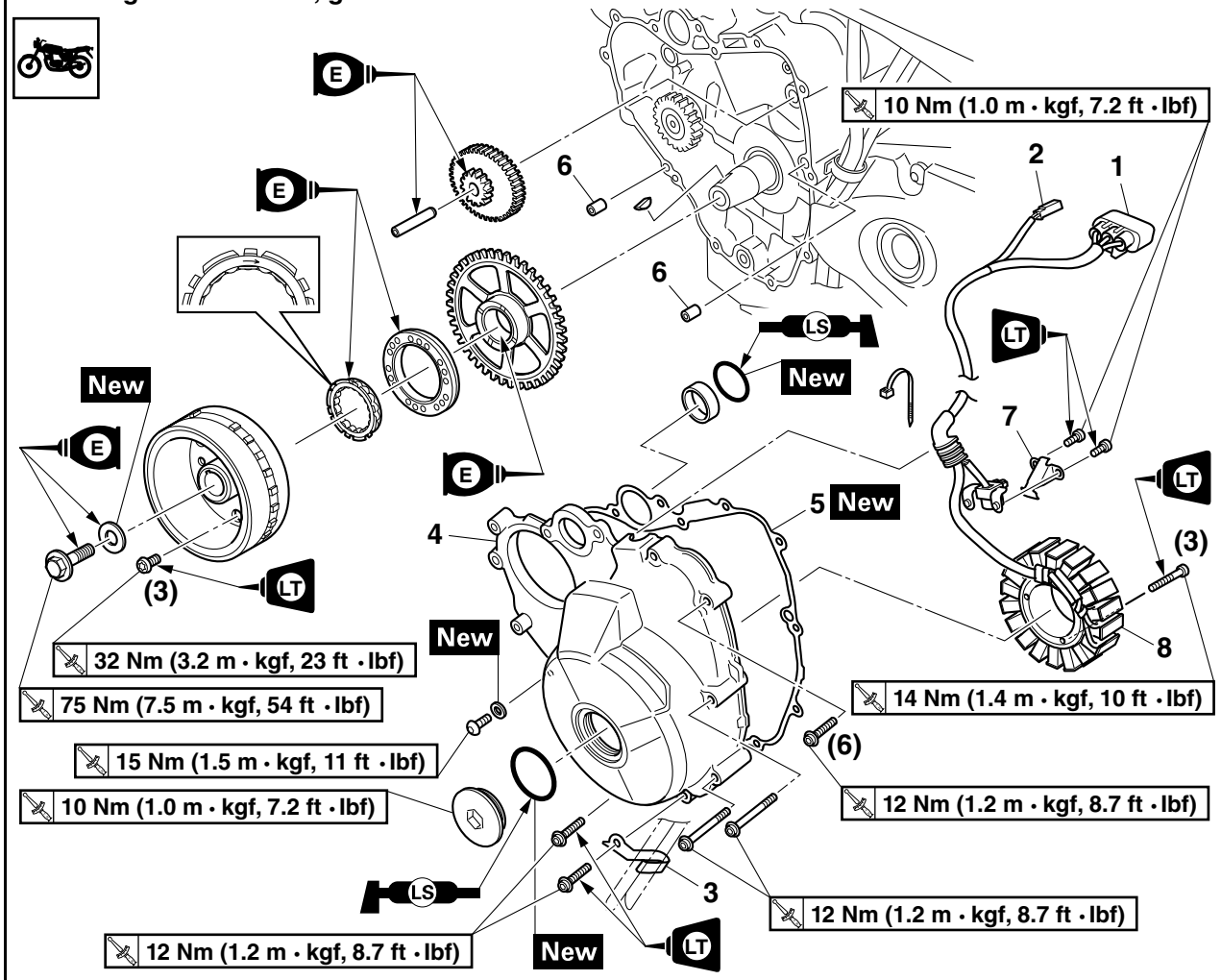

Order	Job/Parts to remove	Q'ty	Remarks
	Rider seat		Refer to "GENERAL CHASSIS" on page 4-1.
	Air scoop/Fuel tank cover		Refer to "GENERAL CHASSIS" on page 4-1.
	Fuel tank		Refer to "FUEL TANK" on page 7-1.
	Rear side cover (left)		Refer to "GENERAL CHASSIS" on page 4-1.
	Water pump		Refer to "WATER PUMP" on page 6-8.
	Engine oil		Drain. Refer to "CHANGING THE ENGINE OIL" on page 3-23.
1	Stator coil coupler	1	Disconnect.
2	Crankshaft position sensor coupler	1	Disconnect.
3	Holder (fuel tank overflow hose and breather hose)	1	
4	Generator cover	1	
5	Generator cover gasket	1	
6	Dowel pin	2	
7	Stator coil lead holder	1	
8	Stator coil assembly (stator coil/crankshaft position sensor)	1	

Removing the stator coil, generator rotor and starter clutch

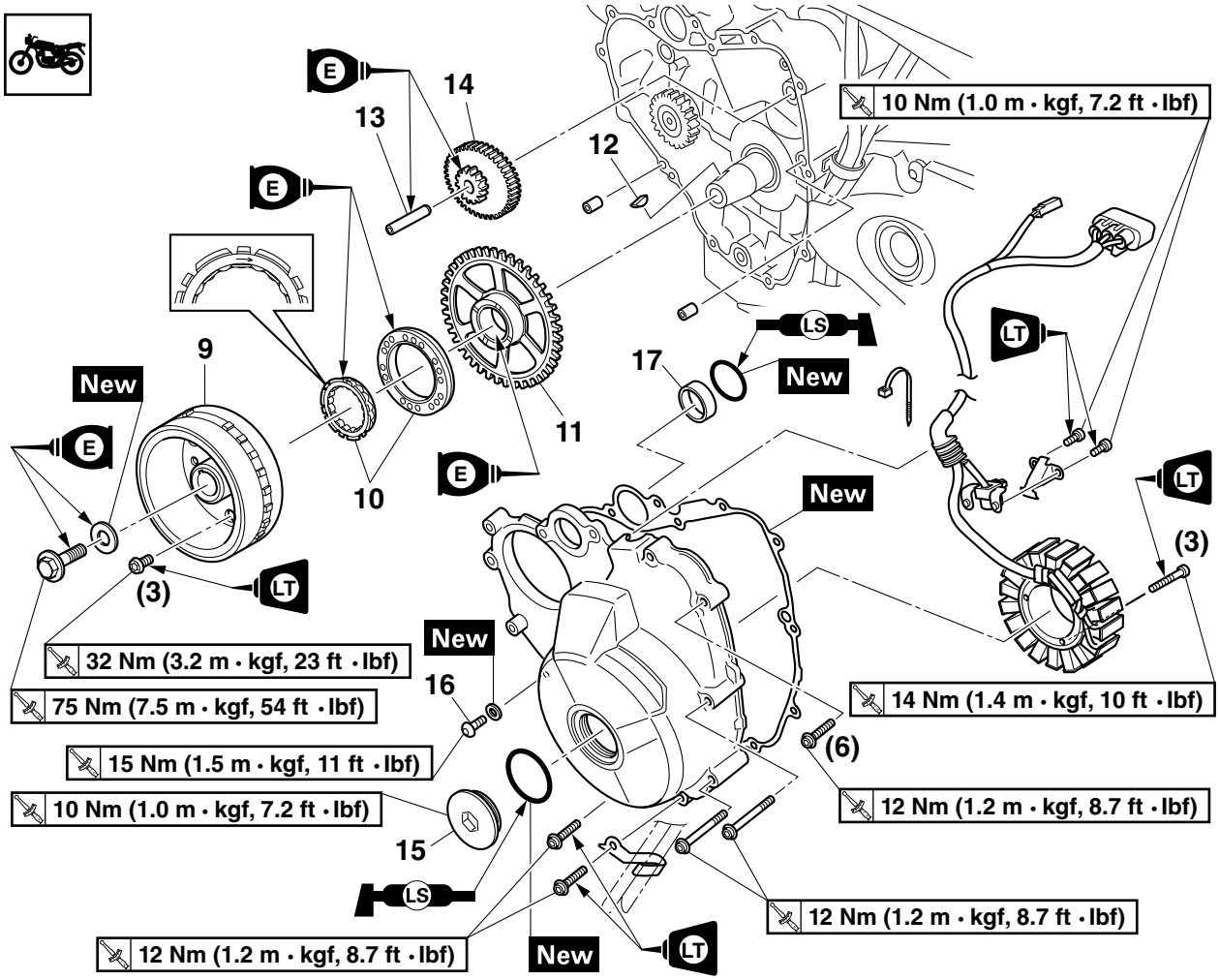

Order	Job/Parts to remove	Q'ty	Remarks
9	Generator rotor	1	
10	Starter clutch	1	
11	Starter clutch gear	1	
12	Woodruff key	1	
13	Starter clutch idle gear shaft	1	
14	Starter clutch idle gear	1	
15	Crankshaft end cover	1	
16	Timing mark accessing bolt	1	
17	Water pump outlet pipe	1	

EAS24490

REMOVING THE GENERATOR

1. Remove:
   - Generator rotor bolt “1”
   - Washer

TIP

While holding the generator rotor “2” with the sheave holder “3”, loosen the generator rotor bolt.

Sheave holder
90890-01701
Primary clutch holder
YS-01880-A

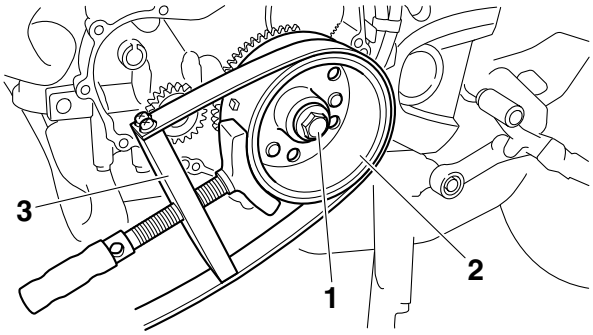

2. Remove:
   - Generator rotor “1”
     (with the flywheel puller “2”)
   - Woodruff key

ECA13880

NOTICE

To protect the end of the crankshaft, place an appropriate sized socket between the flywheel puller set center bolt and the crankshaft.

TIP

- Install the flywheel puller bolts to the threaded holes of the starter clutch.
- Make sure the flywheel puller is centered over the generator rotor.

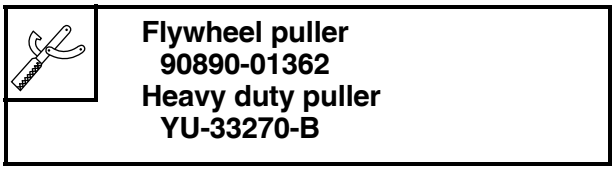

Flywheel puller
90890-01362
Heavy duty puller
YU-33270-B

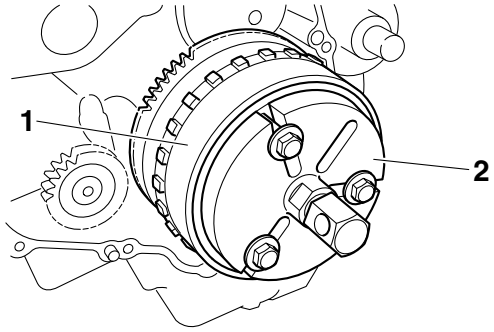

EAS24560

REMOVING THE STARTER CLUTCH

1. Remove:
   - Starter clutch bolts
   - Starter clutch

TIP

While holding the generator rotor “1” with the sheave holder “2”, loosen the starter clutch bolts.

Sheave holder
90890-01701
Primary clutch holder
YS-01880-A

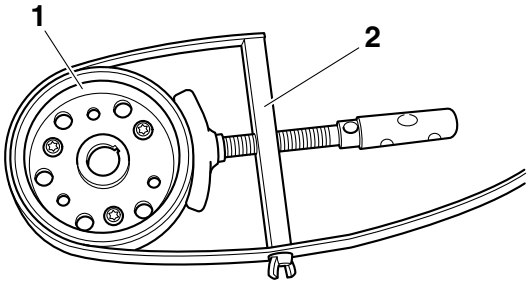

EAS24570

CHECKING THE STARTER CLUTCH

1. Check:
   - Starter clutch rollers
     Damage/wear → Replace.
2. Check:
   - Starter clutch idle gear
   - Starter clutch gear
     Burrs/chips/roughness/wear → Replace the defective part(s).
3. Check:
   - Starter clutch gear contact surfaces
     Damage/pitting/wear → Replace the starter clutch gear.
4. Check:
   - Starter clutch operation

▼▼▼▼▼▼▼▼▼▼▼▼▼▼▼▼▼▼▼▼▼▼▼▼▼▼▼▼▼▼▼▼▼▼

a. Install the starter clutch gear “1” onto the gen-

erator rotor “2” and hold the generator rotor.

b. When turning the starter clutch gear clockwise “A”, the starter clutch and the starter clutch gear should engage, otherwise the starter clutch is faulty and must be replaced.

c. When turning the starter clutch gear counterclockwise “B”, it should turn freely, otherwise the starter clutch is faulty and must be replaced.

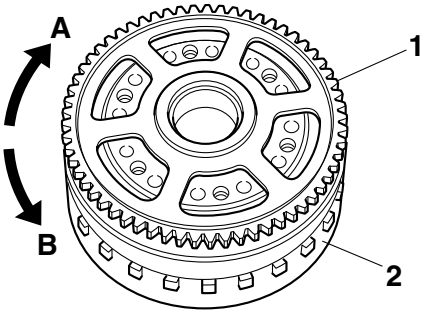

▲▲▲▲▲▲▲▲▲▲▲▲▲▲▲▲▲▲▲▲▲▲▲▲▲▲▲▲▲▲▲▲

EAS24600

INSTALLING THE STARTER CLUTCH

1. Install:
   - Starter clutch “1”

	**Starter clutch bolt** **32 Nm (3.2 m·kgf, 23 ft·lbf)** **LOCTITE®**

TIP

- Install the starter clutch so that the side of the starter clutch roller assembly with the arrow mark “a” is toward the generator rotor “2”.
- While holding the generator rotor with the sheave holder “3”, tighten the starter clutch bolts.

	**Sheave holder** **90890-01701** **Primary clutch holder** **YS-01880-A**

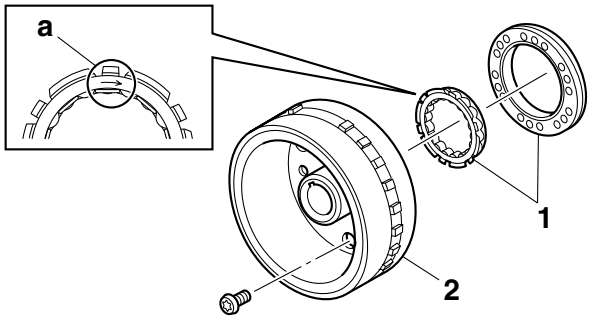

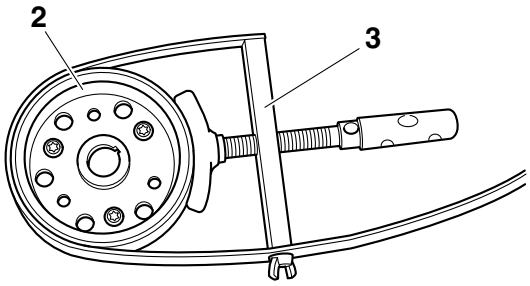

EAS24500

INSTALLING THE GENERATOR

1. Install:
   - Woodruff key
   - Generator rotor
   - Washer New
   - Generator rotor bolt

TIP

- Clean the tapered portion of the crankshaft and the generator rotor hub.
- When installing the generator rotor, make sure the woodruff key is properly seated in the keyway of the crankshaft.
- Lubricate the washer with engine oil.
- Lubricate the generator rotor bolt threads and washer mating surfaces with engine oil.

2. Tighten:
   - Generator rotor bolt “1”

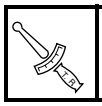	**Generator rotor bolt** **75 Nm (7.5 m·kgf, 54 ft·lbf)**

TIP

While holding the generator rotor “2” with the sheave holder “3”, tighten the generator rotor bolt.

	**Sheave holder** **90890-01701** **Primary clutch holder** **YS-01880-A**

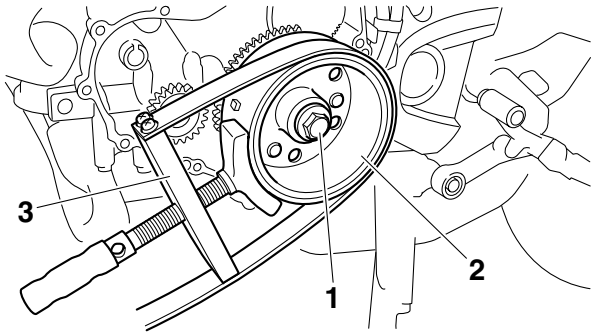

3. Apply:
   - Sealant
     (onto the stator coil assembly lead grommet)

	**Yamaha bond No.1215** **(Three bond No.1215®)** **90890-85505**

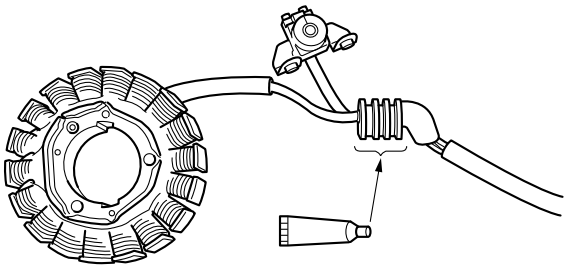

4. Install:
   - Generator cover gasket New
   - Generator cover

	**Generator cover bolt "1"** **12 Nm (1.2 m·kgf, 8.7 ft·lbf)** **LOCTITE®** **Generator cover bolt "2"** **12 Nm (1.2 m·kgf, 8.7 ft·lbf)**

TIP

Tighten the generator cover bolts in stages and in a crisscross pattern.

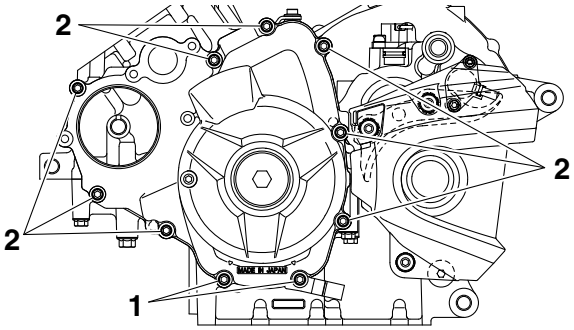

5. Connect:
   - Stator coil coupler
   - Crankshaft position sensor coupler

TIP

To route the stator coil lead, refer to "CABLE ROUTING" on page 2-41.

EAS24780

ELECTRIC STARTER

Removing the starter motor

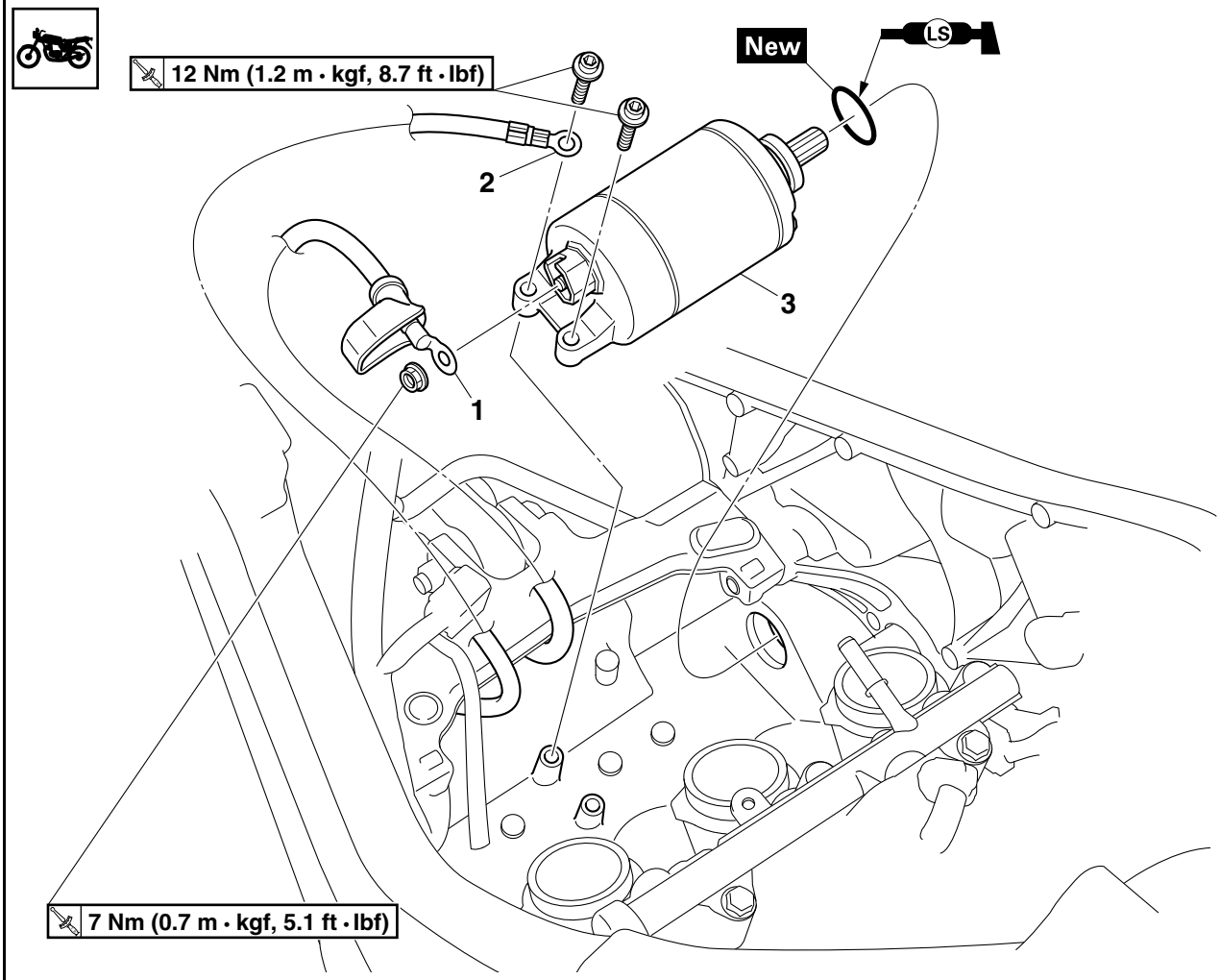

Order	Job/Parts to remove	Q'ty	Remarks
	Rider seat		Refer to "GENERAL CHASSIS" on page 4-1.
	Air scoop/Fuel tank cover		Refer to "GENERAL CHASSIS" on page 4-1.
	Fuel tank		Refer to "FUEL TANK" on page 7-1.
	Air filter case		Refer to "GENERAL CHASSIS" on page 4-1.
	Throttle bodies		Refer to "THROTTLE BODIES" on page 7-5.
1	Starter motor lead	1	Disconnect.
2	Negative battery lead	1	Disconnect.
3	Starter motor	1	

Disassembling the starter motor

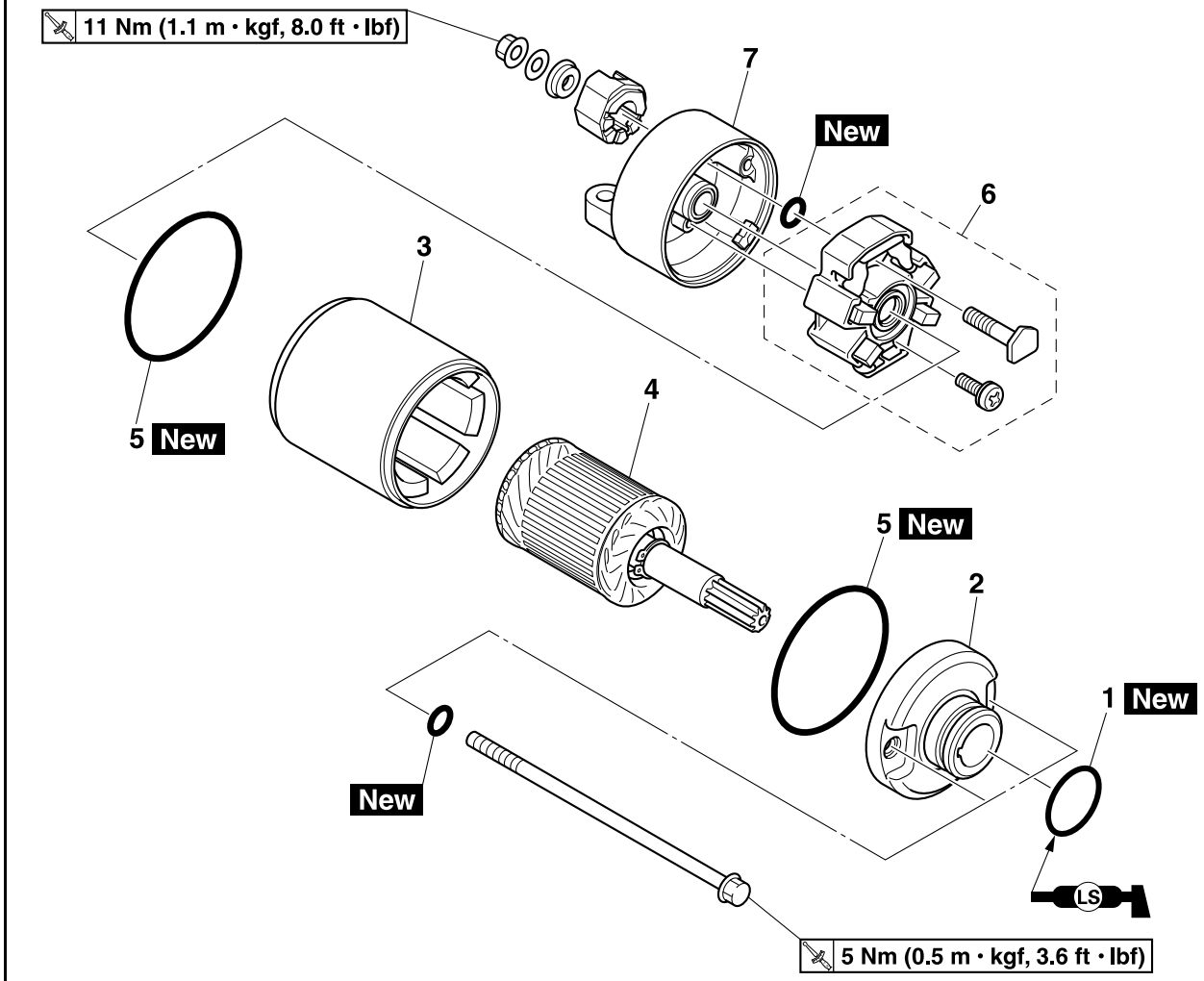

Order	Job/Parts to remove	Q'ty	Remarks
1	O-ring	1	
2	Front cover	1	
3	Starter motor yoke	1	
4	Armature assembly	1	
5	Gasket	2	
6	Brush holder set	1	
7	Rear cover	1	

EAS24791

CHECKING THE STARTER MOTOR

1. Check:
   - Commutator
     Dirt → Clean with 600 grit sandpaper.
2. Measure:
   - Mica undercut “a”
     Out of specification → Scrape the mica to the proper measurement with a hacksaw blade that has been grounded to fit the commutator.

	**Mica undercut (depth)** **0.70 mm (0.03 in)**

TIP

The mica of the commutator must be undercut to ensure proper operation of the commutator.

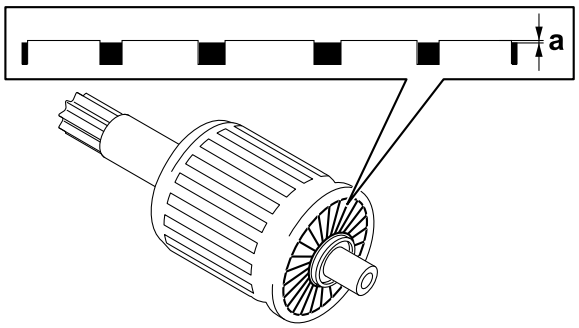

3. Measure:
   - Armature assembly resistances (commutator and insulation)
     Out of specification → Replace the starter motor.

▼▼▼▼▼▼▼▼▼▼▼▼▼▼▼▼▼▼▼▼▼▼▼▼▼▼▼▼▼▼▼▼▼▼

a. Measure the armature assembly resistances with the digital circuit tester.

	**Digital circuit tester** **90890-03174** **Model 88 Multimeter with tachometer** **YU-A1927**

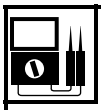	**Armature coil resistance** **0.0050–0.0150 Ω** **Insulation resistance** **Above 1 MΩ at 20 °C (68 °F)**

b. If any resistance is out of specification, replace the starter motor.

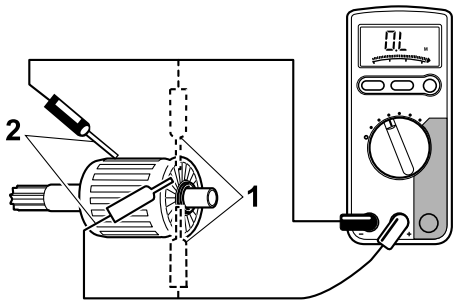

1. Commutator resistance
2. Insulation resistance

▲▲▲▲▲▲▲▲▲▲▲▲▲▲▲▲▲▲▲▲▲▲▲▲▲▲▲▲▲▲▲▲▲▲

4. Measure:
   - Brush length “a”
     Out of specification → Replace the brush holder set.

	**Brush overall length** **12.0 mm (0.47 in)** **Limit** **6.50 mm (0.26 in)**

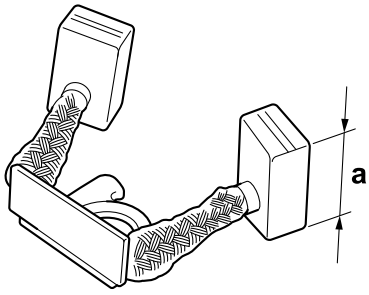

5. Measure:
   - Brush spring force
     Out of specification → Replace the brush holder set.

	**Brush spring force** **6.03–6.52 N (615–665 gf, 21.71–23.47 oz)**

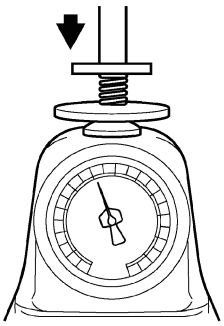

6. Check:
   - Gear teeth
     Damage/wear → Replace the starter motor.

7. Check:
   - Bearing
   - Oil seal
     Damage/wear → Replace the starter motor.

EAS24800

ASSEMBLING THE STARTER MOTOR

1. Install:
   - Brush holder set
   - Insulator “1”

TIP

Install the insulator as shown in the illustration.

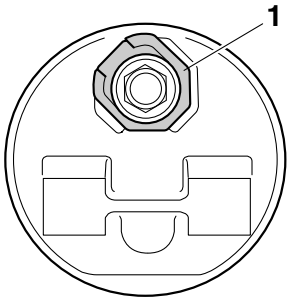

2. Install:
   - Rear cover “1”
   - Starter motor yoke “2”
   - Front cover “3”

TIP

Align the match marks “a” on the starter motor yoke with the match marks “b” on the front and rear cover.

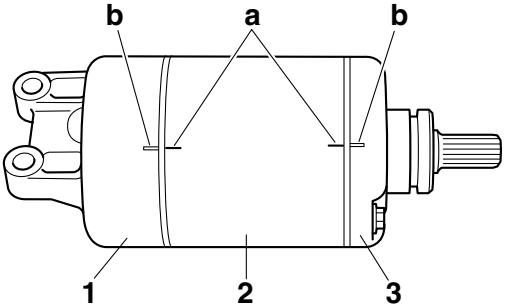

EAS24810

INSTALLING THE STARTER MOTOR

1. Install:
   - Starter motor “1”
   - Negative battery lead “2”
   - Starter motor bolts “3”

TIP

Install the negative battery lead as shown in the illustration.

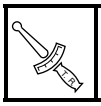	**Starter motor bolt** **12 Nm (1.2 m·kgf, 8.7 ft·lbf)**

2. Connect:
   - Starter motor lead

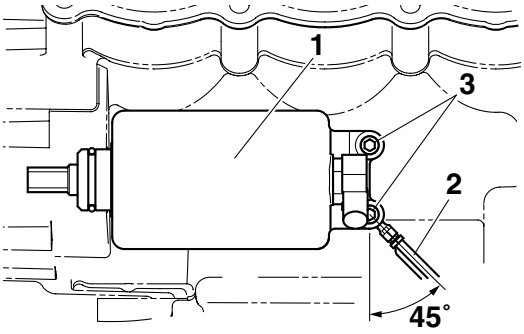

EAS25061

CLUTCH

Removing the clutch cover

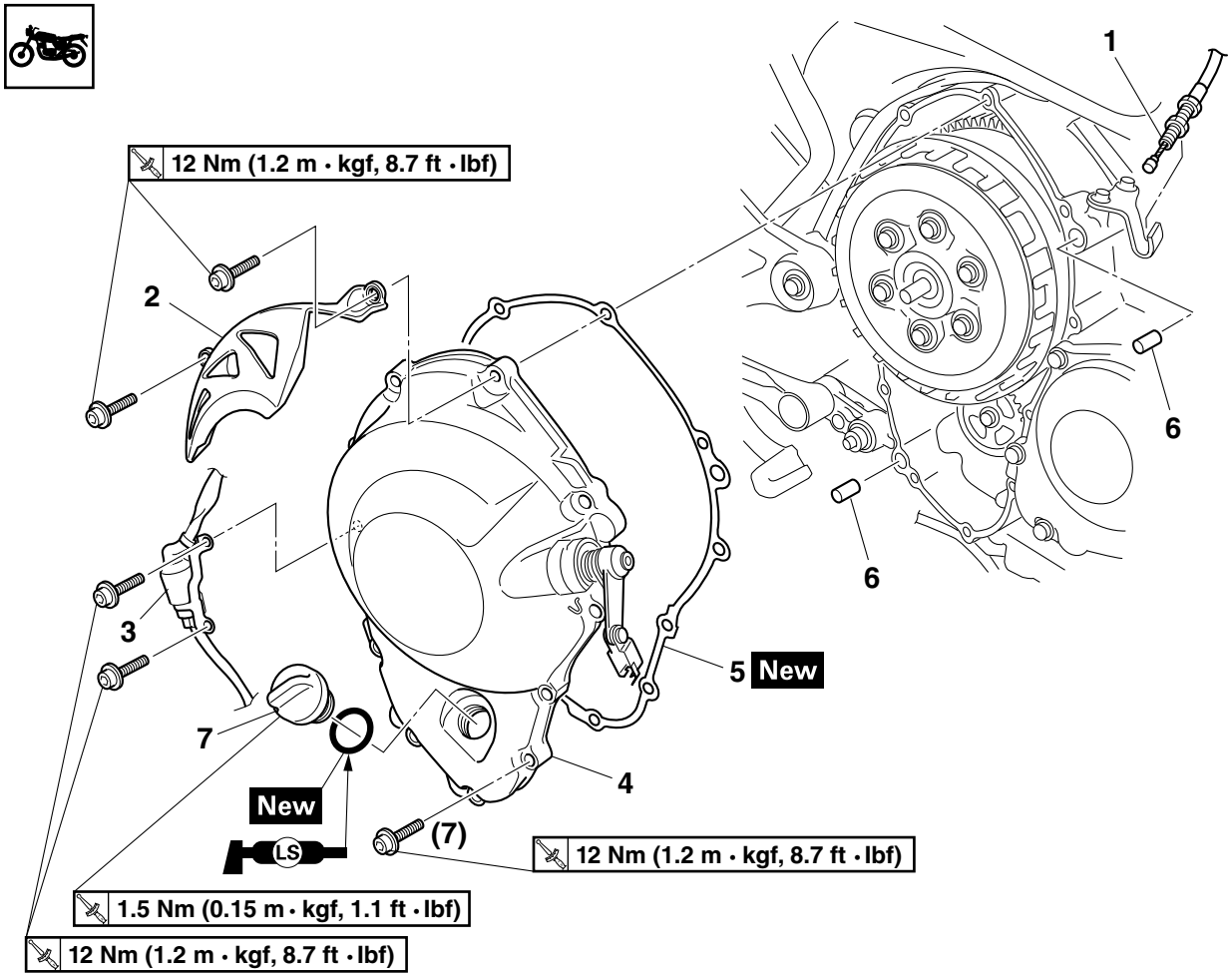

Order	Job/Parts to remove	Q'ty	Remarks
	Engine oil		Drain. Refer to "CHANGING THE ENGINE OIL" on page 3-23.
1	Clutch cable	1	Disconnect.
2	Cover	1	
3	O_2 sensor coupler bracket	1	
4	Clutch cover	1	
5	Clutch cover gasket	1	
6	Dowel pin	2	
7	Oil filler cap	1	

Removing the pull lever shaft

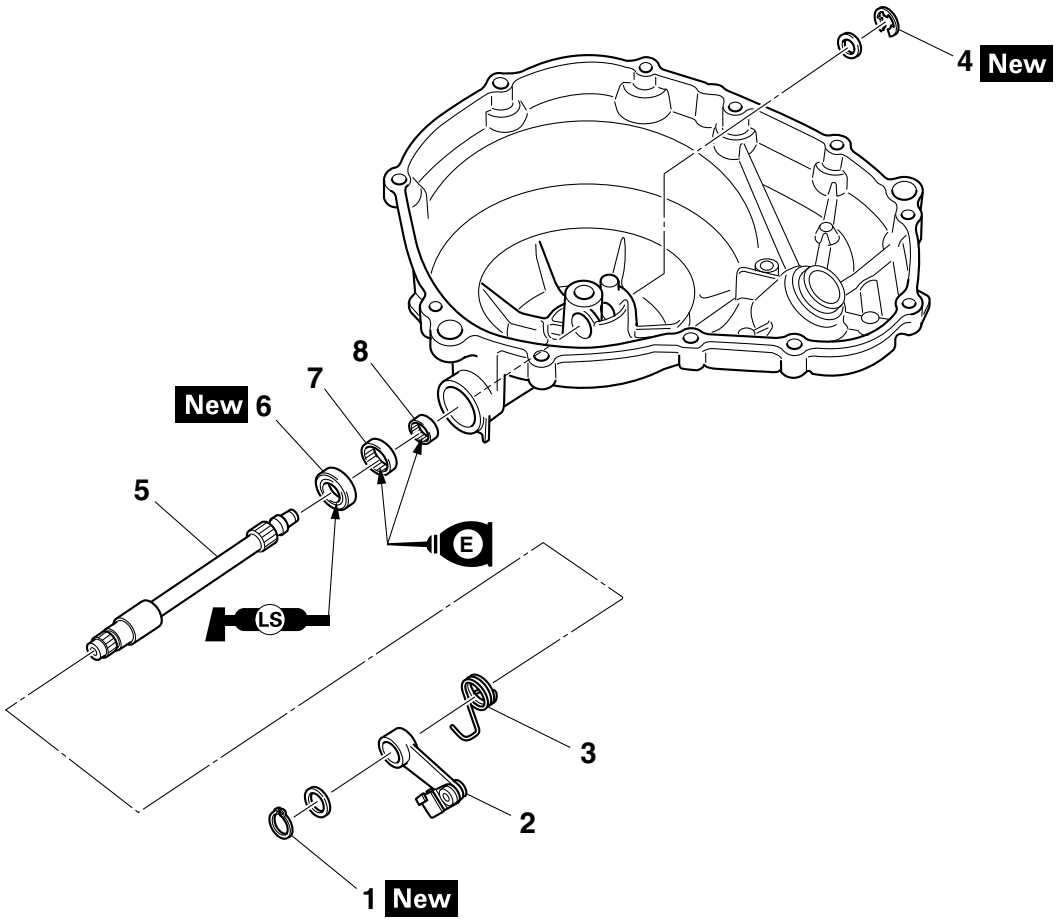

Order	Job/Parts to remove	Q'ty	Remarks
1	Circlip	1	
2	Pull lever	1	
3	Pull lever spring	1	
4	Circlip	1	
5	Pull lever shaft	1	
6	Oil seal	1	
7	Bearing	1	
8	Bearing	1	

Removing the clutch

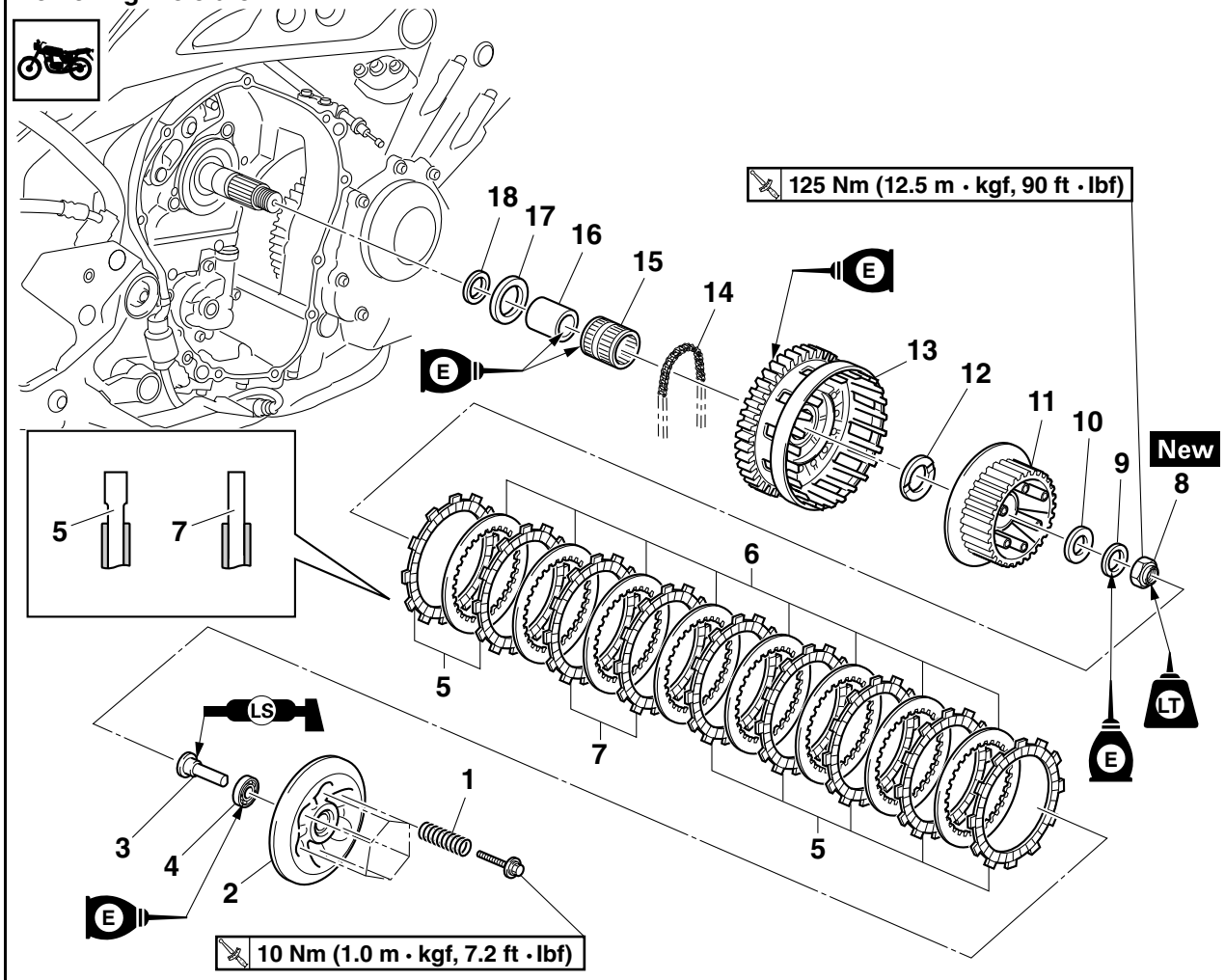

Order	Job/Parts to remove	Q'ty	Remarks
	Oil pump driven sprocket		Refer to "OIL PUMP" on page 5-50.
1	Compression spring	6	
2	Pressure plate	1	
3	Pull rod	1	
4	Bearing	1	
5	Friction plate 1	7	
6	Clutch plate	8	
7	Friction plate 2	2	Green paint mark.
8	Clutch boss nut	1	
9	Conical spring washer	1	
10	Washer	1	
11	Clutch boss	1	
12	Thrust plate	1	
13	Clutch housing	1	
14	Oil pump drive chain	1	
15	Bearing	1	
16	Spacer	1	
17	Thrust plate	1	
18	Thrust plate	1	

EAS30712

REMOVING THE CLUTCH

1. Remove:
   - Cover “1”
   - Clutch cover “2”
   - Gasket

TIP

Loosen each bolt 1/4 of a turn at a time, in stages and in a crisscross pattern.
After all of the bolts are fully loosened, remove them.

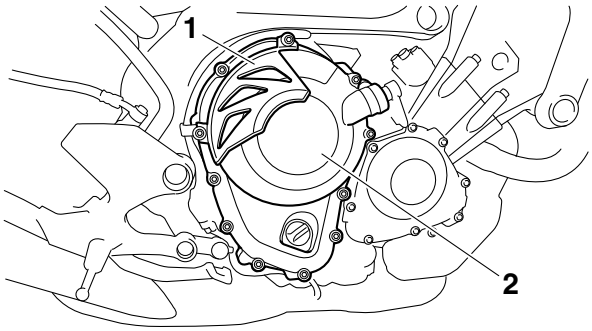

2. Remove:
   - Oil pump driven sprocket “1”
     Refer to “OIL PUMP” on page 5-50.

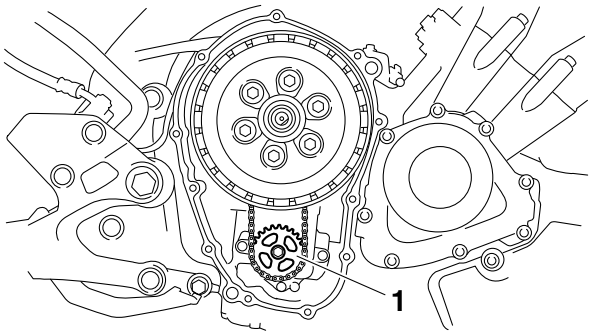

3. Remove:
   - Compression spring bolts “1”
   - Compression springs
   - Pressure plate “2”
   - Pull rod “3”

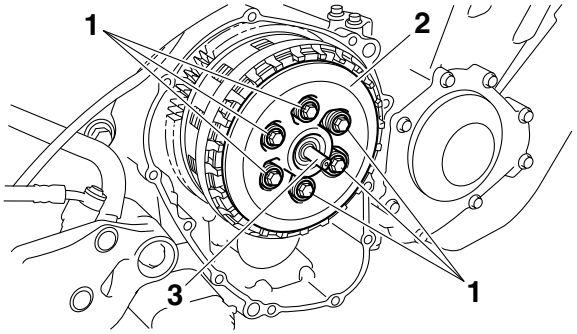

4. Remove:
   - Friction plate 1 “1”

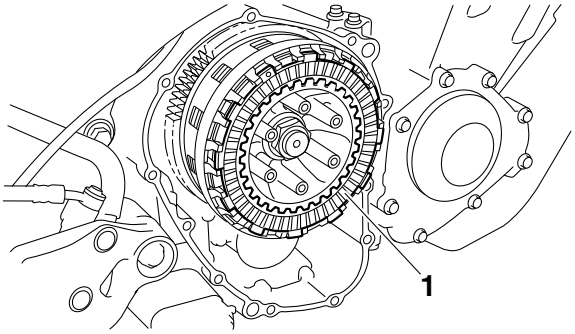

5. Remove:
   - Clutch plate “1”
   - Friction plate 2

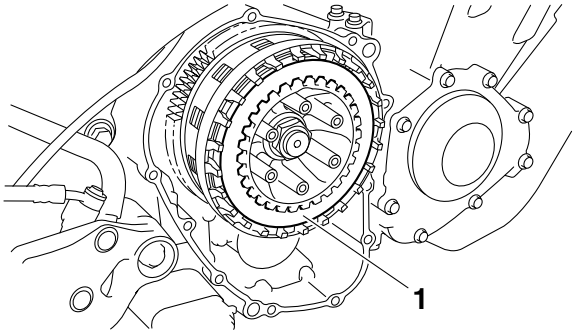

6. Straighten the clutch boss nut rib “a”.

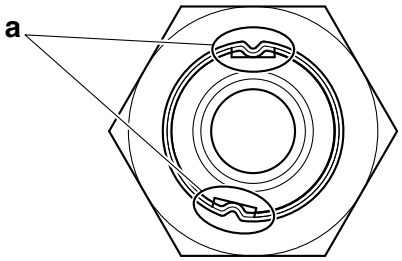

7. Loosen:
   - Clutch boss nut “1”

TIP

While holding the clutch boss “2” with the universal clutch holder “3”, loosen the clutch boss nut.

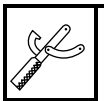

Universal clutch holder
90890-04086
YM-91042

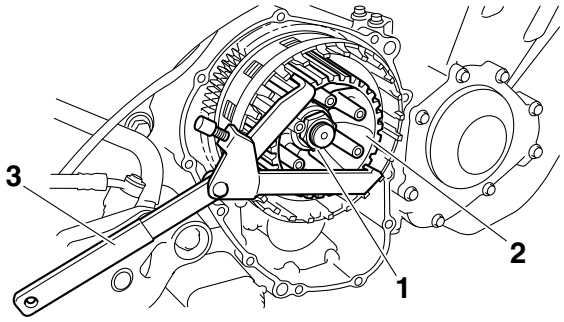

8. Remove:
   - Clutch boss nut
   - Conical spring washer
   - Washer
   - Clutch boss
   - Thrust plate
   - Clutch housing
   - Oil pump drive chain

EAS25100

CHECKING THE FRICTION PLATES

The following procedure applies to all of the friction plates.

1. Check:
   - Friction plate 1, 2
     Damage/wear → Replace the friction plates as a set.
2. Measure:
   - Friction plate 1, 2 thickness
     Out of specification → Replace the friction plates as a set.

TIP

Measure the friction plate at four places.

Friction plate 1 thickness
2.92–3.08 mm (0.115–0.121 in)
Wear limit
2.82 mm (0.111 in)
Friction plate 2 thickness
2.92–3.08 mm (0.115–0.121 in)
Wear limit
2.82 mm (0.111 in)

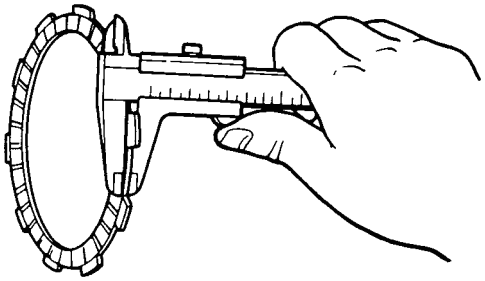

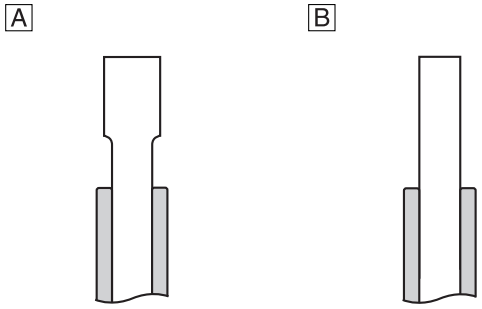

A. Friction plate 1
B. Friction plate 2

EAS25111

CHECKING THE CLUTCH PLATES

The following procedure applies to all of the clutch plates.

1. Check:
   - Clutch plate
     Damage → Replace the clutch plates as a set.
2. Measure:
   - Clutch plate warpage
     (with a surface plate and thickness gauge “1”)
     Out of specification → Replace the clutch plates as a set.

Thickness gauge
90890-03180
Feeler gauge set
YU-26900-9

Clutch plate thickness
1.90–2.10 mm (0.075–0.083 in)
Warpage limit
0.10 mm (0.004 in)

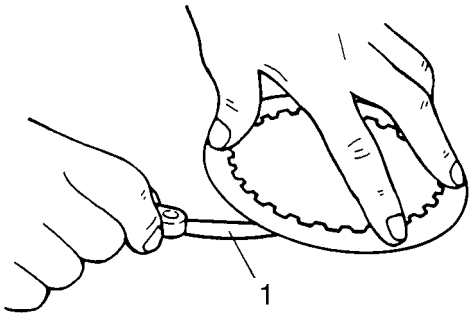

EAS25140

CHECKING THE CLUTCH SPRINGS

The following procedure applies to all of the clutch springs.

1. Check:
   - Clutch spring
     Damage → Replace the clutch springs as a set.

2. Measure:
   - Clutch spring free length “a”
     Out of specification → Replace the clutch springs as a set.

	**Clutch spring free length** **52.50 mm (2.07 in)** **Limit** **49.88 mm (1.96 in)**

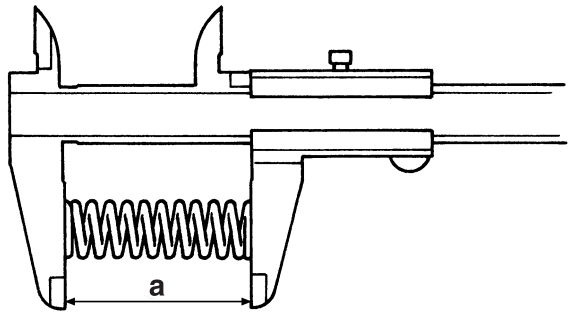

EAS25150

CHECKING THE CLUTCH HOUSING

1. Check:
   - Clutch housing dogs
     Damage/pitting/wear → Deburr the clutch housing dogs or replace the clutch housing.

TIP

Pitting on the clutch housing dogs will cause erratic clutch operation.

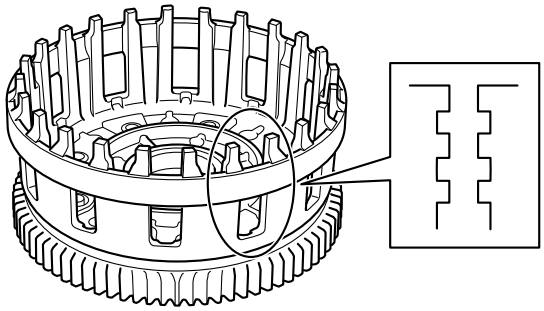

2. Check:
   - Oil pump drive sprocket “1”
     Cracks/damage/wear → Replace.

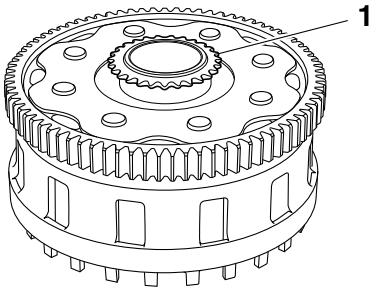

3. Check:
   - Bearing
     Damage/wear → Replace the bearing and clutch housing.

EAS25160

CHECKING THE CLUTCH BOSS

1. Check:
   - Clutch boss splines
     Damage/pitting/wear → Replace the clutch boss.

TIP

Pitting on the clutch boss splines will cause erratic clutch operation.

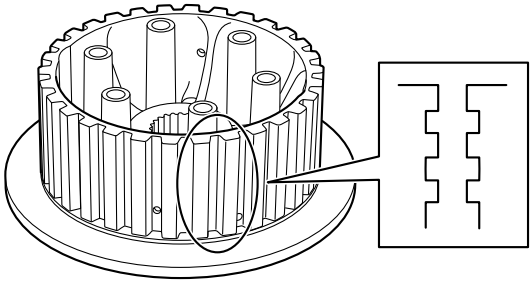

EAS25170

CHECKING THE PRESSURE PLATE

1. Check:
   - Pressure plate “1”
     Cracks/damage → Replace.
   - Bearing “2”
     Damage/wear → Replace.

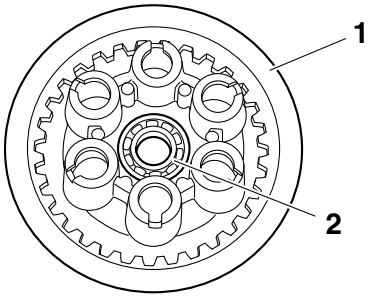

EAS25200

CHECKING THE PRIMARY DRIVE GEAR

1. Check:
   - Primary drive gear
     Damage/wear → Replace the crankshaft and clutch housing as a set.
     Excessive noise during operation → Replace the crankshaft and clutch housing as a set.

EAS25210
CHECKING THE PRIMARY DRIVEN GEAR

1. Check:
   - Primary driven gear “1”
     Damage/wear → Replace the clutch housing and crankshaft as a set.
     Excessive noise during operation → Replace the clutch housing and crankshaft as a set.

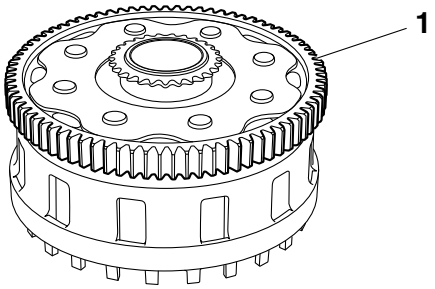

EAS25220
CHECKING THE PULL LEVER SHAFT AND PULL ROD

1. Check:
   - Pull lever shaft pinion gear teeth “1”
   - Pull rod teeth “2”
     Damage/wear → Replace the pull rod and pull lever shaft as a set.

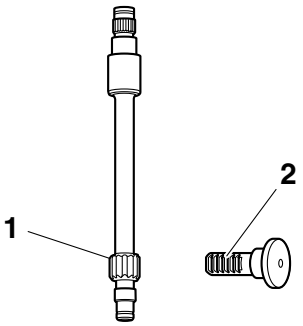

2. Check:
   - Pull rod bearing
     Damage/wear → Replace.

EAS25240
INSTALLING THE CLUTCH

1. Install:
   - Oil pump drive chain “1”
   - Clutch housing “2”

TIP
Install the oil pump drive chain onto the oil pump drive sprocket “a”.

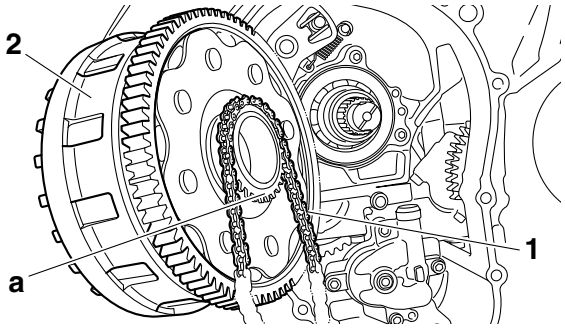

2. Install:
   - Thrust plate
   - Clutch boss “1”
   - Washer
   - Conical spring washer “2”
   - Clutch boss nut “3” New

Clutch boss nut
125 Nm (12.5 m·kgf, 90 ft·lbf)
LOCTITE®

TIP
- Install the conical spring washer on the main axle with the “OUT” mark “a” facing away from the vehicle.
- While holding the clutch boss “1” with the universal clutch holder “4”, tighten the clutch boss nut.
- Stake the clutch boss nut at cutouts “b” in the main axle.

Universal clutch holder
90890-04086
YM-91042

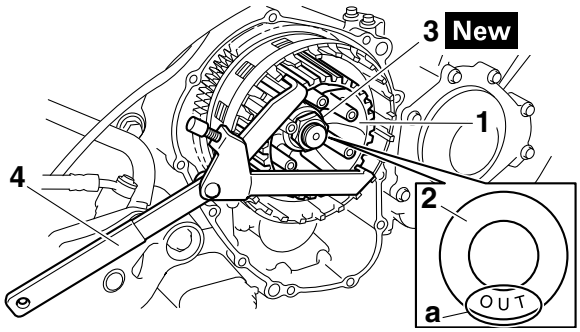

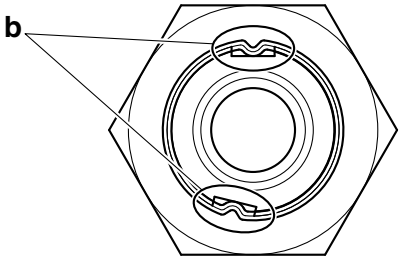

3. Install:
   - Friction plate 1
   - Clutch plate
   - Friction plate 2

TIP
- First, install a friction plate and then alternate between a clutch plate and a friction plate.
- Install the last friction plate “1” offset from the other friction plates “2”, making sure to align a projection on the friction plate with the punch mark “a” on the clutch housing.

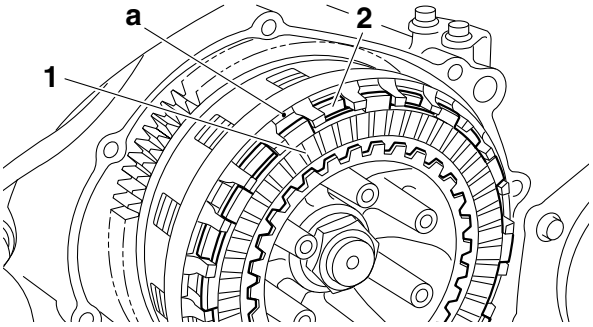

4. Install:
   - Bearing
     (into the pressure plate)
   - Pull rod “1”
   - Pressure plate “2”
   - Clutch springs
   - Clutch spring bolts “3”

	Clutch spring bolt **10 Nm (1.0 m·kgf, 7.2 ft·lbf)**

   - Oil pump driven sprocket “4”

	Oil pump driven sprocket bolt **15 Nm (1.5 m·kgf, 11 ft·lbf)** **LOCTITE®**

TIP
- Tighten the clutch spring bolts in stages and in a crisscross pattern.
- Apply lithium-soap-based grease onto the pull rod.
- Position the pull rod so that the teeth “a” face towards the hole “b”. Then, install the clutch cover.

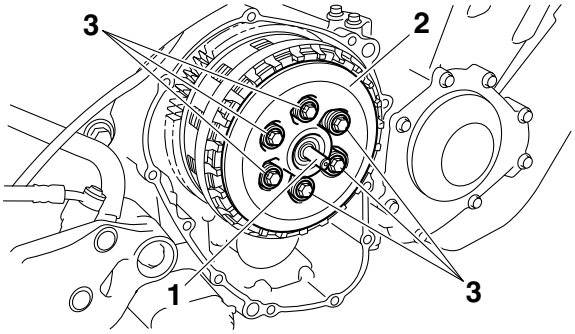

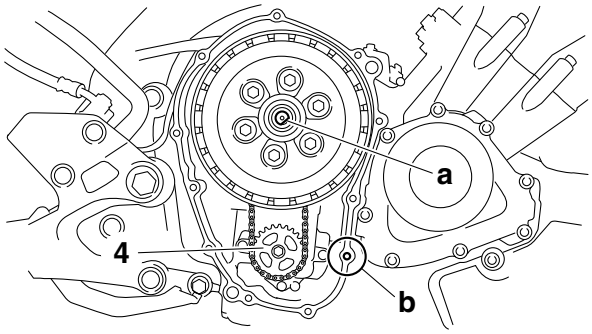

5. Install:
   - Dowel pins
   - Clutch cover gasket New
   - Clutch cover
   - Cover

	Clutch cover bolt **12 Nm (1.2 m·kgf, 8.7 ft·lbf)**

TIP
- Apply engine oil onto the bearing.
- Tighten the clutch cover bolts in stages and in a crisscross pattern.

6. Install:
   - Pull lever

TIP
- Install the pull lever with the “O” mark facing toward lower side.
- When installing the pull lever, push the pull lever and check that the punch mark “a” on the pull lever aligns with the mark “b” on the clutch cover. Make sure that the pull rod teeth and pull lever shaft pinion gear are engaged.

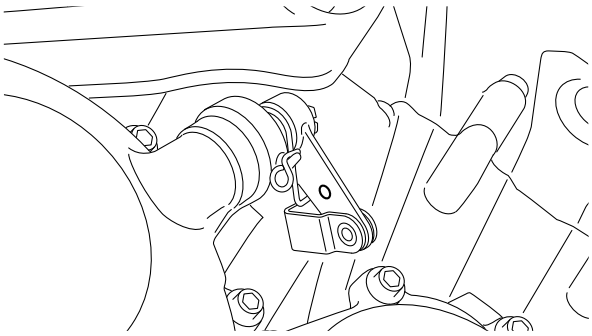

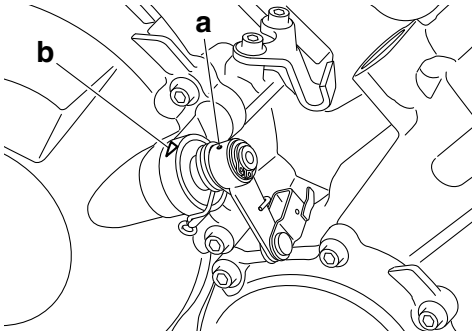

7. Adjust:
   - Clutch lever free play
     Refer to “ADJUSTING THE CLUTCH LEVER FREE PLAY” on page 3-11.

	Clutch lever free play **10.0–15.0 mm (0.39–0.59 in)**

EAS25410

SHIFT SHAFT

Removing the shift shaft and stopper lever

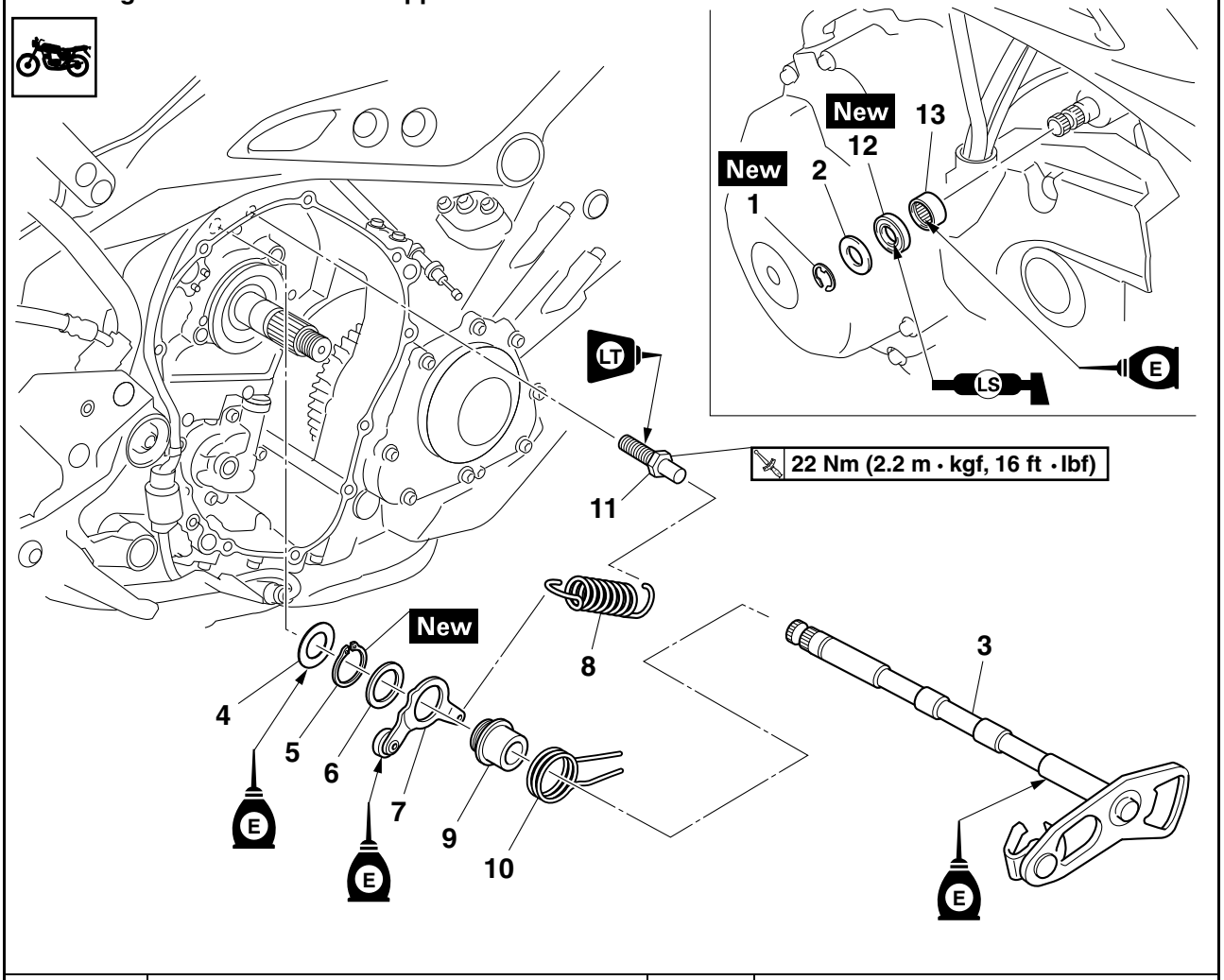

Order	Job/Parts to remove	Q'ty	Remarks
	Clutch assembly		Refer to "CLUTCH" on page 5-39.
	Shift arm		Refer to "CHAIN DRIVE" on page 4-70.
1	Circlip	1	
2	Washer	1	
3	Shift shaft	1	
4	Washer	1	
5	Circlip	1	
6	Washer	1	
7	Stopper lever	1	
8	Stopper lever spring	1	
9	Collar	1	
10	Shift shaft spring	1	
11	Shift shaft spring stopper	1	
12	Oil seal	1	
13	Bearing	1	

EAS25420

CHECKING THE SHIFT SHAFT

1. Check:
   - Shift shaft “1”
     Bends/damage/wear → Replace.
   - Shift shaft spring “2”
   - Collar
     Damage/wear → Replace.

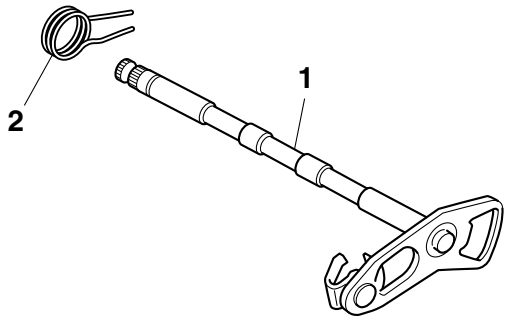

EAS25430

CHECKING THE STOPPER LEVER

1. Check:
   - Stopper lever “1”
     Bends/damage → Replace.
     Roller turns roughly → Replace the stopper lever.

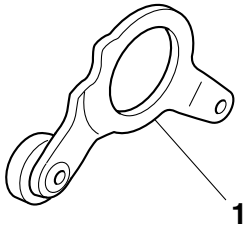

EAS25451

INSTALLING THE SHIFT SHAFT

1. Install:
   - Shift shaft spring stopper “1”
   - Shift shaft assembly
   - Stopper lever spring “2”

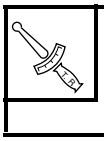

Shift shaft spring stopper
22 Nm (2.2 m·kgf, 16 ft·lbf)
LOCTITE®

TIP

- Hook the end of the shift shaft spring “3” onto the shift shaft spring stopper “1”.
- Hook the ends of the stopper lever spring “2” onto the stopper lever “4” and the crankcase boss “5”.
- Mesh the stopper lever with the shift drum segment assembly.

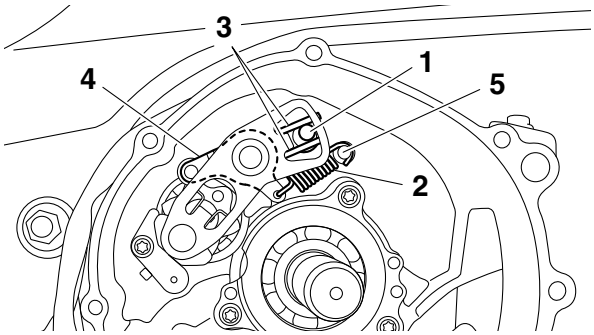

2. Install:
   - Bearing
   - Oil seal New
   - Washer “1”
   - Circlip “2” New

TIP

- Lubricate the oil seal lips with lithium-soap-based grease.
- Lubricate the outer periphery of the oil seal with the silicone fluid.

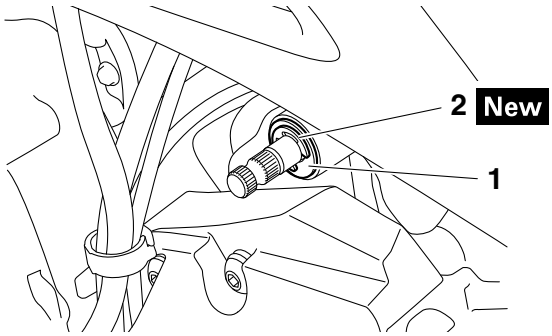

EAS24921

OIL PUMP

Removing the oil pump

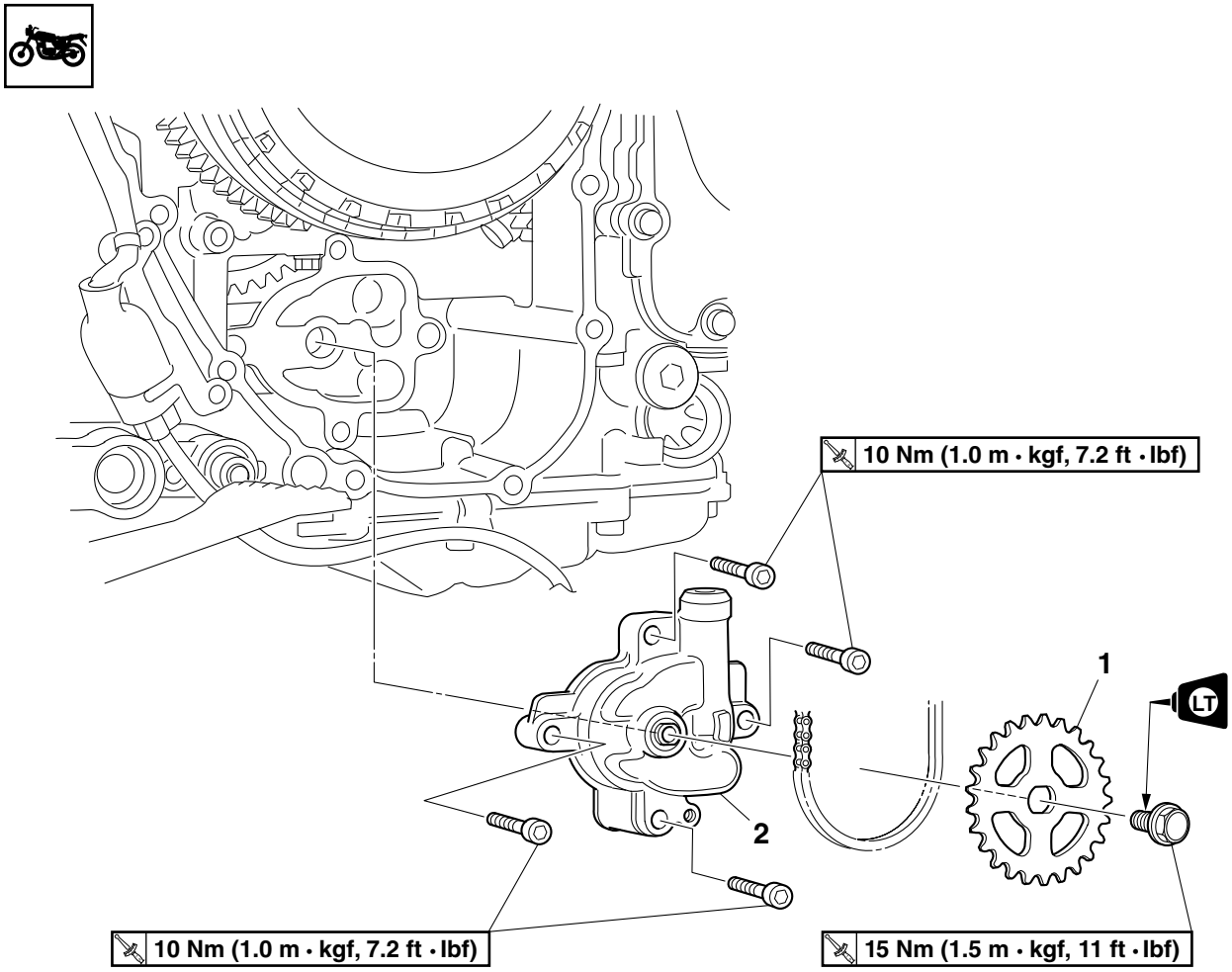

Order	Job/Parts to remove	Q'ty	Remarks
	Clutch cover		Refer to "CLUTCH" on page 5-39.
1	Oil pump driven sprocket	1	
2	Oil pump assembly	1	

Disassembling the oil pump

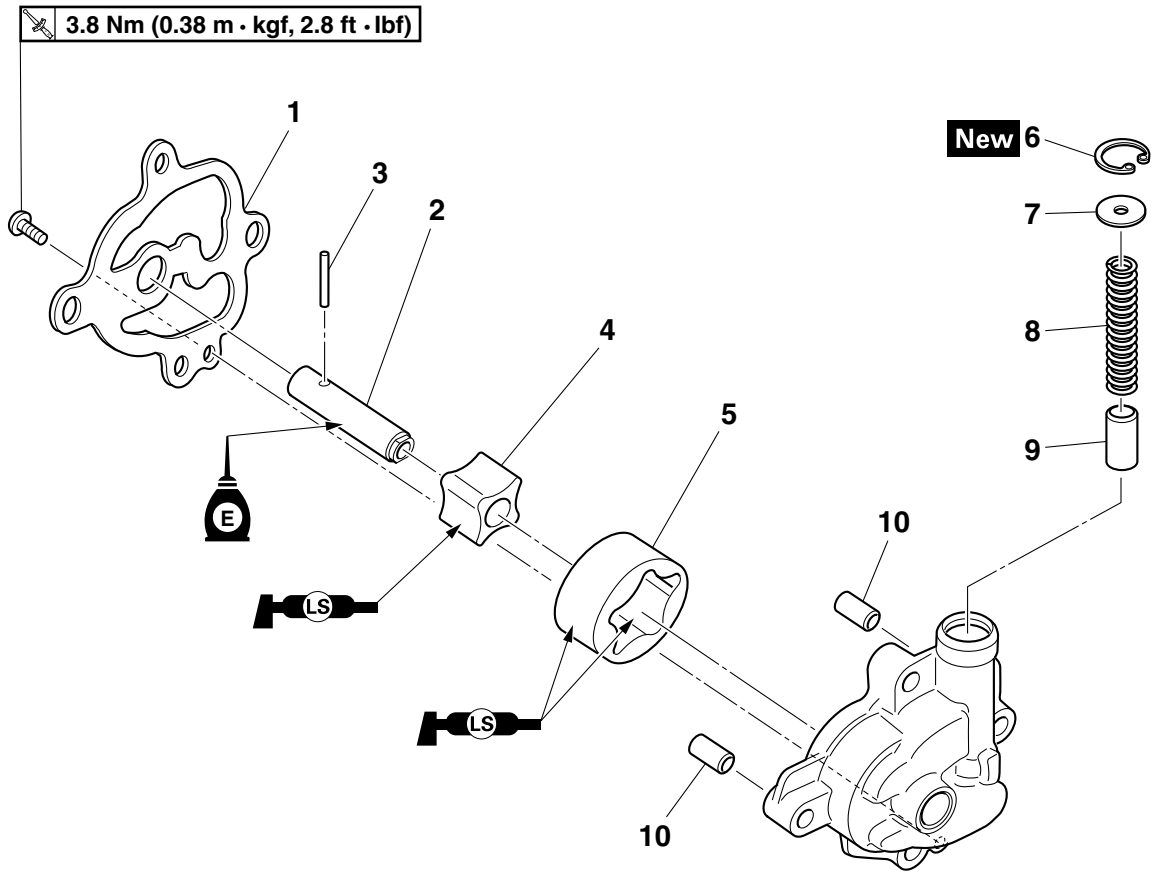

Order	Job/Parts to remove	Q'ty	Remarks
1	Oil pump cover	1	
2	Oil pump shaft	1	
3	Pin	1	
4	Oil pump inner rotor	1	
5	Oil pump outer rotor	1	
6	Circlip	1	Hold down the washer when removing the circlip.
7	Washer	1	
8	Spring	1	
9	Relief valve	1	
10	Dowel pin	2	

EAS25620
CHECKING THE SPROCKET AND CHAIN

1. Check:
   - Oil pump drive sprocket
     Refer to “CHECKING THE CLUTCH HOUSING” on page 5-44.
2. Check:
   - Oil pump drive chain “1”
     Damage/stiffness → Replace the oil pump drive chain and oil pump drive sprocket (clutch housing) as a set.

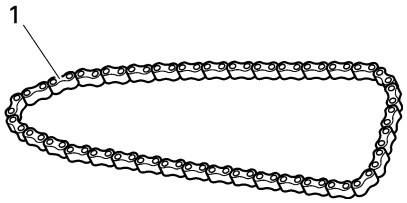

EAS24960
CHECKING THE OIL PUMP

1. Check:
   - Oil pump driven gear “1”
   - Oil pump housing “2”
     Cracks/damage/wear → Replace the defective part(s).

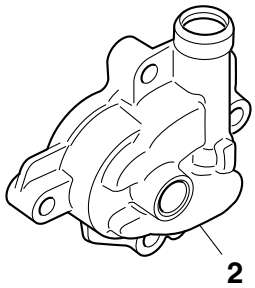

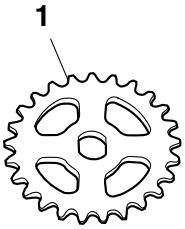

2. Measure:
   - Inner-rotor-to-outer-rotor-tip clearance “a”
   - Outer-rotor-to-oil-pump-housing clearance “b”
   - Oil-pump-housing-to-inner-rotor-and-outer-rotor clearance “c”
     Out of specification → Replace the defective part(s).

Inner-rotor-to-outer-rotor-tip clearance
Less than 0.120 mm (0.0047 in)
Limit
0.20 mm (0.0079 in)
Outer-rotor-to-oil-pump-housing clearance
0.09–0.19 mm (0.0035–0.0075 in)
Limit
0.21 mm (0.0083 in)
Oil-pump-housing-to-inner-and-outer-rotor clearance
0.06–0.13 mm (0.0024–0.0051 in)
Limit
0.16 mm (0.0065 in)

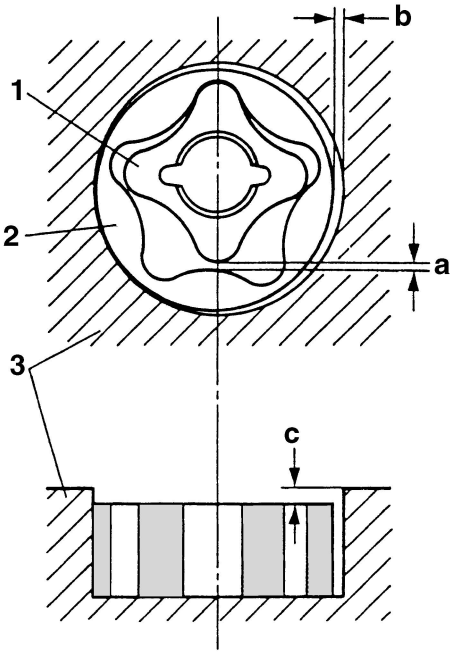

1. Inner rotor
2. Outer rotor
3. Oil pump housing

3. Check:
   - Oil pump operation
     Rough movement → Repeat steps (1) and (2) or replace the defective part(s).

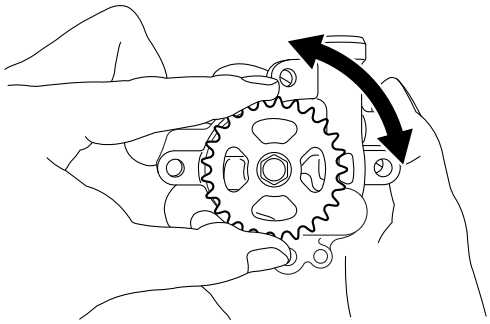

EAS24971

CHECKING THE RELIEF VALVE

1. Check:
   - Relief valve “1”
   - Spring “2”
     Damage/wear → Replace the oil pump assembly.

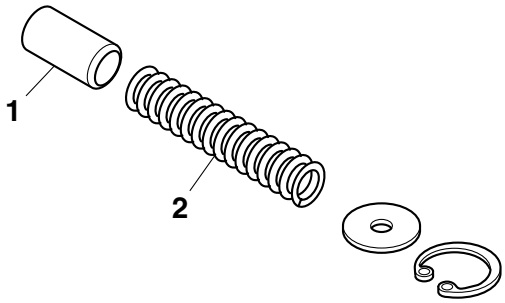

EAS25010

ASSEMBLING THE OIL PUMP

1. Lubricate:
   - Inner rotor
   - Outer rotor
   - Oil pump shaft
     (with the recommended lubricant)

	Recommended lubricant **Engine oil**

2. Install:
   - Outer rotor “1”
   - Inner rotor “2”
   - Pin “3”
   - Oil pump cover “4”
   - Oil pump cover screw

	Oil pump cover screw **3.8 Nm (0.38 m·kgf, 2.8 ft·lbf)**

TIP

Align the pin “3” in the oil pump shaft with the groove in the inner rotor “2”.

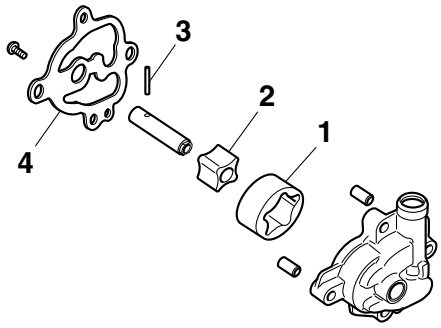

3. Check:
   - Oil pump operation
     Refer to “CHECKING THE OIL PUMP” on page 5-52.

EAS25030

INSTALLING THE OIL PUMP

1. Install:
   - Oil pump “1”
   - Oil pump bolts “2”

	Oil pump bolt **10 Nm (1.0 m·kgf, 7.2 ft·lbf)**

   - Oil pump driven sprocket “3”

	Oil pump driven sprocket bolt **15 Nm (1.5 m·kgf, 11 ft·lbf)** **LOCTITE®**

ECA1RC1508

NOTICE

After installing the oil pump drive chain and driven sprocket, make sure the oil pump turns smoothly.

TIP

- 1RC mark of the oil pump driven sprocket is installed at oil pump side.
- Install the oil pump drive chain onto the oil pump driven sprocket.

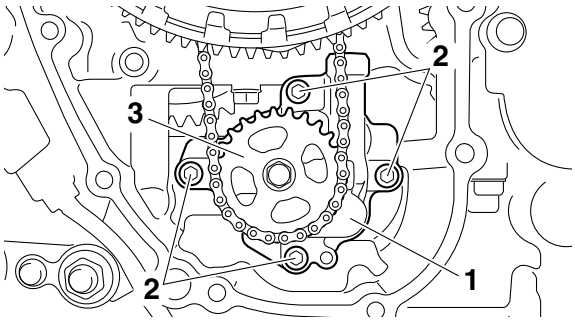

EAS1RC1502

OIL PAN

Removing the oil pan

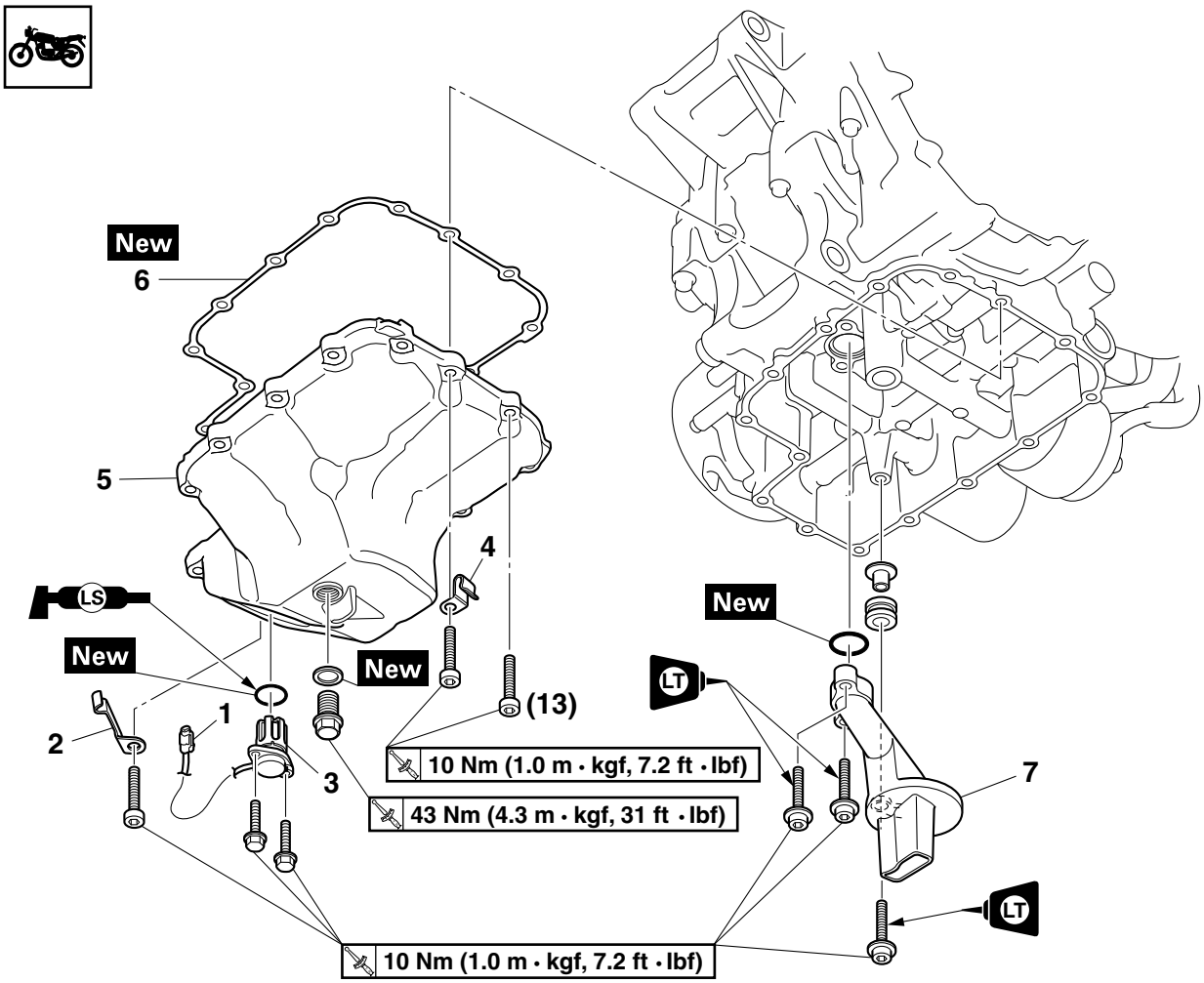

Order	Job/Parts to remove	Q'ty	Remarks
	Rider seat		Refer to "GENERAL CHASSIS" on page 4-1.
	Air scoop/Fuel tank cover		Refer to "GENERAL CHASSIS" on page 4-1.
	Fuel tank		Refer to "FUEL TANK" on page 7-1.
	Muffler assembly		Refer to "ENGINE REMOVAL" on page 5-3.
	Engine oil		Drain. Refer to "CHANGING THE ENGINE OIL" on page 3-23.
1	Oil level switch lead coupler	1	Disconnect.
2	Oil level switch lead holder	1	
3	Oil level switch	1	
4	O_2 sensor lead holder	1	
5	Oil pan	1	
6	Oil pan gasket	1	
7	Oil strainer	1	

EAS24930

REMOVING THE OIL PAN

1. Remove:
   - Oil level switch “1”
   - Oil pan “2”
   - Oil pan gasket

TIP

Loosen each bolt 1/4 of a turn at a time, in stages and in a crisscross pattern. After all of the bolts are fully loosened, remove them.

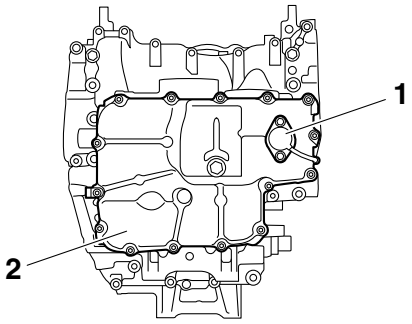

EAS24990

CHECKING THE OIL STRAINER

1. Check:
   - Oil strainer “1”
     Damage → Replace.
     Contaminants → Clean with solvent.

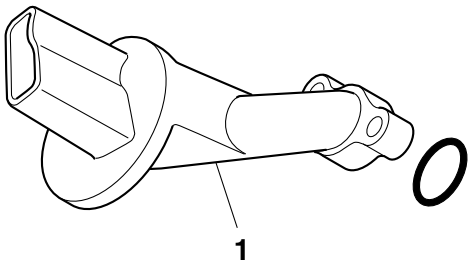

EAS25050

INSTALLING THE OIL PAN

1. Install:
   - Gasket New
   - Oil pan “1”

	**Oil pan bolt** **10 Nm (1.0 m·kgf, 7.2 ft·lbf)**

   - Oil level switch “2”

	**Oil level switch bolt** **10 Nm (1.0 m·kgf, 7.2 ft·lbf)**

   - Engine oil drain bolt “3”

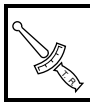	**Engine oil drain bolt** **43 Nm (4.3 m·kgf, 31 ft·lbf)**

EWA12820

WARNING

Always use new copper washers.

TIP

- Tighten the oil pan bolts in stages and in a crisscross pattern.
- Lubricate the oil level switch O-ring with lithium-soap-based grease.

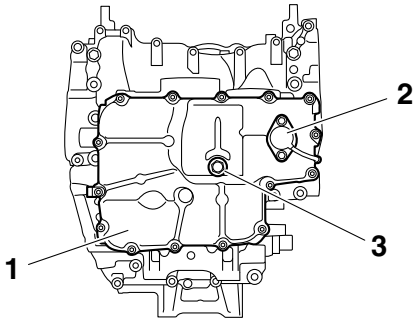

EAS25540

CRANKCASE

Separating the crankcase

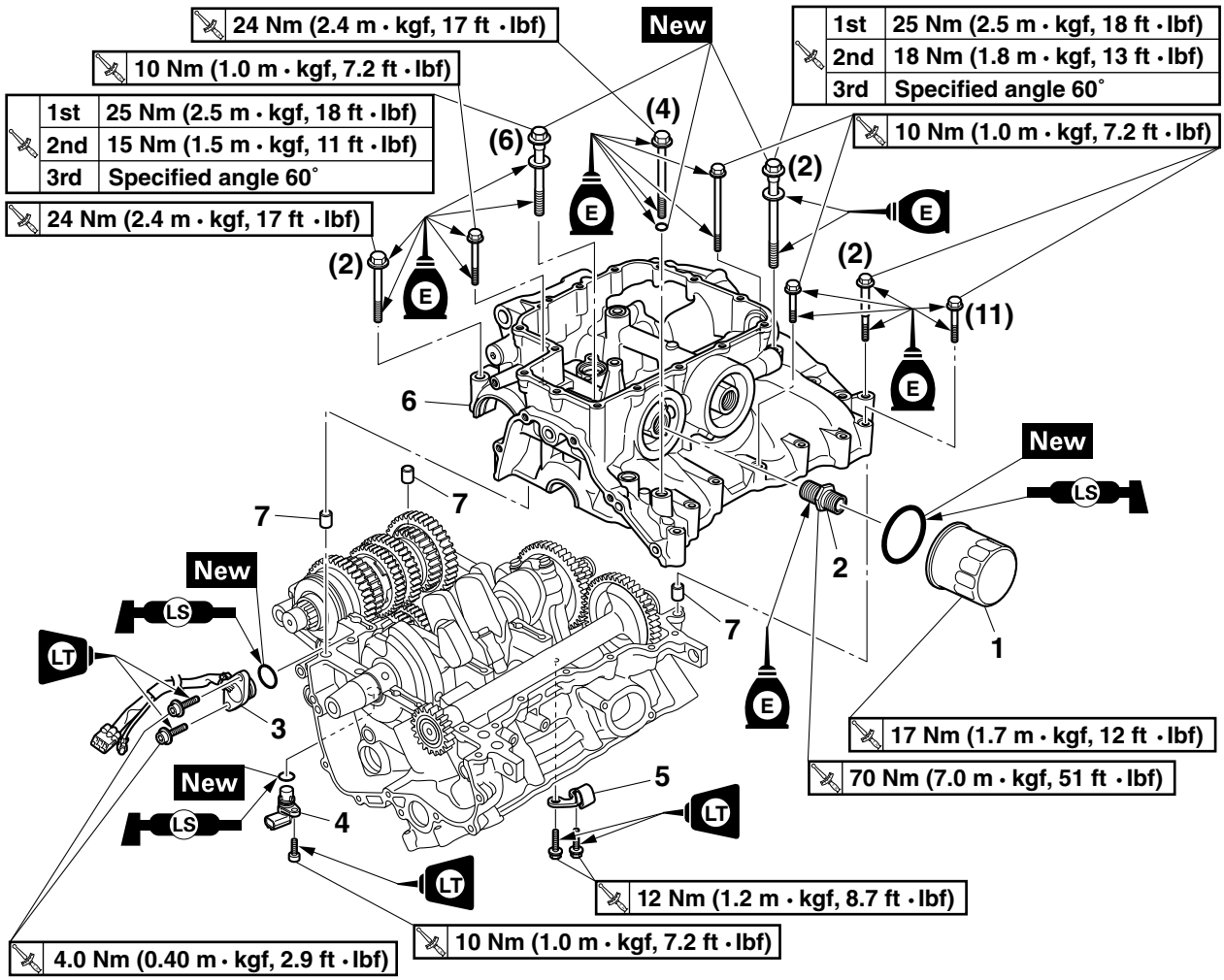

Order	Job/Parts to remove	Q'ty	Remarks
	Engine		Refer to "ENGINE REMOVAL" on page 5-3.
	Cylinder head		Refer to "CYLINDER HEAD" on page 5-19.
	Water pump		Refer to "WATER PUMP" on page 6-8.
	Starter clutch		Refer to "GENERATOR AND STARTER CLUTCH" on page 5-30.
	Starter motor		Refer to "ELECTRIC STARTER" on page 5-35.
	Clutch housing		Refer to "CLUTCH" on page 5-39.
	Oil strainer		Refer to "OIL PAN" on page 5-54.
1	Oil filter cartridge	1	
2	Oil filter cartridge union bolt	1	
3	Gear position sensor	1	
4	Speed sensor	1	
5	Clutch cable holder	1	
6	Lower crankcase	1	
7	Dowel pin	3	

EAS25550

DISASSEMBLING THE CRANKCASE

1. Place the engine upside down.
2. Remove:
   - Crankcase bolts

TIP

- Loosen each bolt 1/4 of a turn at a time, in stages and in a crisscross pattern. After all of the bolts are fully loosened, remove them.
- Loosen the bolts in the proper sequence as shown.
- The numbers embossed on the crankcase indicate the crankcase tightening sequence.

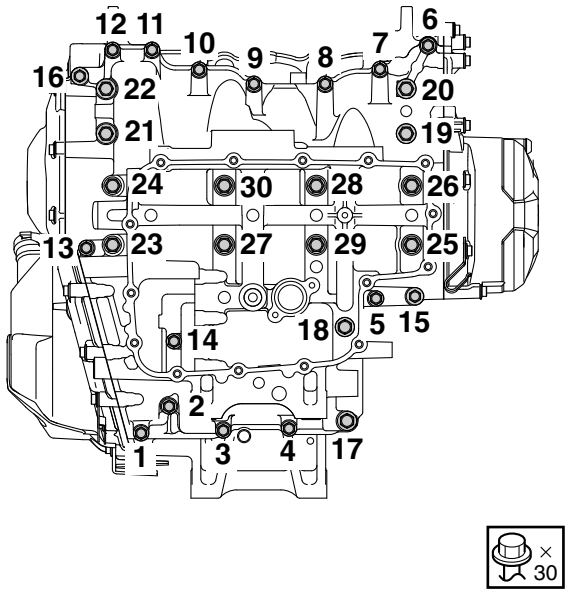

3. Remove:
   - Lower crankcase

ECA13900

NOTICE

Tap on one side of the crankcase with a soft-face hammer. Tap only on reinforced portions of the crankcase, not on the crankcase mating surfaces. Work slowly and carefully and make sure the crankcase halves separate evenly.

4. Remove:
   - Dowel pins
5. Remove:
   - Crankshaft journal lower bearing
   - Balancer shaft journal bearings (from the lower crankcase)

TIP

Identify the position of each part very carefully so that it can be reinstalled in its original place.

EAS25580

CHECKING THE CRANKCASE

1. Thoroughly wash the crankcase halves in a mild solvent.
2. Thoroughly clean all the gasket surfaces and crankcase mating surfaces.
3. Check:
   - Crankcase
     Cracks/damage → Replace.
   - Oil delivery passages
     Obstruction → Blow out with compressed air.

EAS25650

ASSEMBLING THE CRANKCASE

1. Lubricate:
   - Crankshaft journal bearing inner surface (with the recommended lubricant)

	Recommended lubricant **Engine oil**

2. Apply:
   - Sealant (onto the crankcase mating surfaces)

	Yamaha bond No.1215 **(Three bond No.1215®)** **90890-85505**

TIP

Do not allow any sealant to come into contact with the oil gallery or crankshaft journal bearings, or balancer shaft journal bearings.

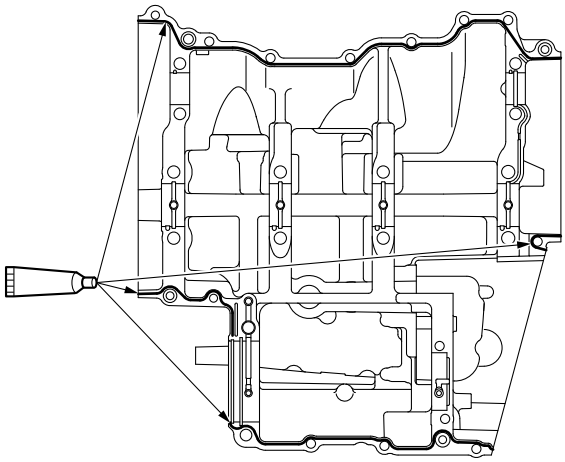

3. Install:
   - Dowel pins

4. Set the shift drum assembly and transmission gears in the neutral position.
5. Install:
   - Lower crankcase “1”
     (onto the upper crankcase “2”)

ECA13980

NOTICE

Before tightening the crankcase bolts, make sure the transmission gears shift correctly when the shift drum assembly is turned by hand.

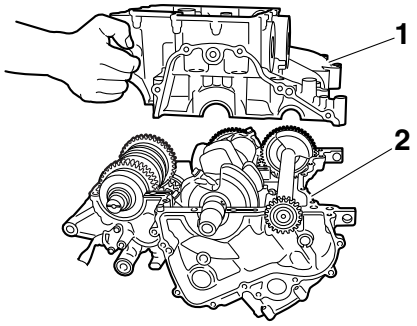

6. Install:
   - Crankcase bolts

TIP

- Lubricate the bolts “1”–“8” thread, mating surfaces and washers with engine oil.
- Lubricate the bolts “9”–“12” thread, mating surfaces and O-rings with engine oil.
- Lubricate the bolts “13”–“30” thread and mating surfaces with engine oil.

- M8 × 100 mm (3.94 in) bolts with washers: “7”, “8” New
- M8 × 85 mm (3.35 in) bolts with washers: “1”–“6” New
- M8 × 78 mm (3.07 in) bolts with new O-rings: “9”–“12”
- M8 × 60 mm (2.36 in) bolts: “13”, “14”
- M6 × 85 mm (3.35 in) bolt: “18”
- M6 × 65 mm (2.56 in) bolts: “15”, “16”
- M6 × 65 mm (2.56 in) bolt: “26”
- M6 × 50 mm (1.97 in) bolts: “17”, “19”–“21”, “23”–“25”, “27”–“30”
- M6 × 40 mm (1.57 in) bolt: “22”

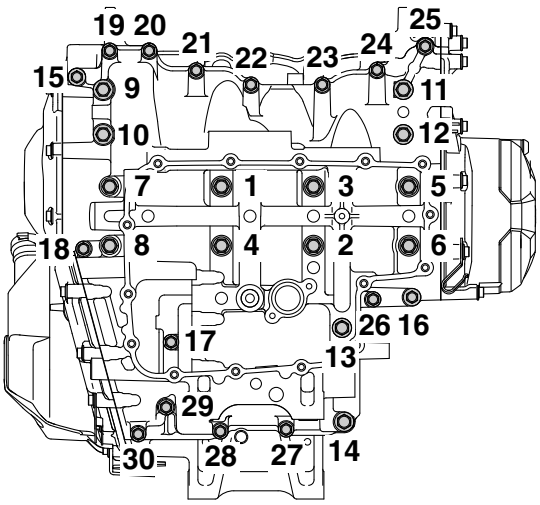

7. Tighten:
   - Crankcase bolts “1”–“8”

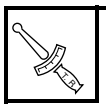

Crankcase bolts “1”–“6”
1st: 25 Nm (2.5 m·kgf, 18 ft·lbf)
***2nd: 15 Nm (1.5 m·kgf, 11 ft·lbf)**
3rd: +60°
Crankcase bolts “7”–“8”
1st: 25 Nm (2.5 m·kgf, 18 ft·lbf)
***2nd: 18 Nm (1.8 m·kgf, 13 ft·lbf)**
3rd: +60°

* Following the tightening order, loosen the bolt one by one and then retighten it to the specific torque.

EWA1RC1504

WARNING

If the crankcase bolt is tightened more than the specified angle, do not loosen the bolt and then retighten it. Instead, replace the crankcase bolt with a new one and perform the procedure again.

ECA1RC1510

NOTICE

Do not use a torque wrench to tighten the crankcase bolt to the specified angle.

TIP

Tighten the bolts in the tightening sequence cast on the crankcase.

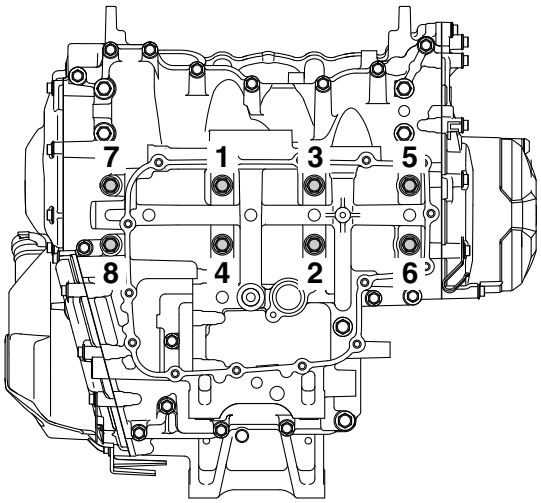

8. Tighten:
   - Crankcase bolts “9”–“30”

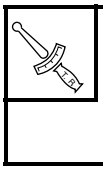

Crankcase bolts “9”–“14”
24 Nm (2.4 m·kgf, 17 ft·lbf)
Crankcase bolts “15”–“30”
10 Nm (1.0 m·kgf, 7.2 ft·lbf)

TIP
Tighten the bolts in the tightening sequence cast on the crankcase.

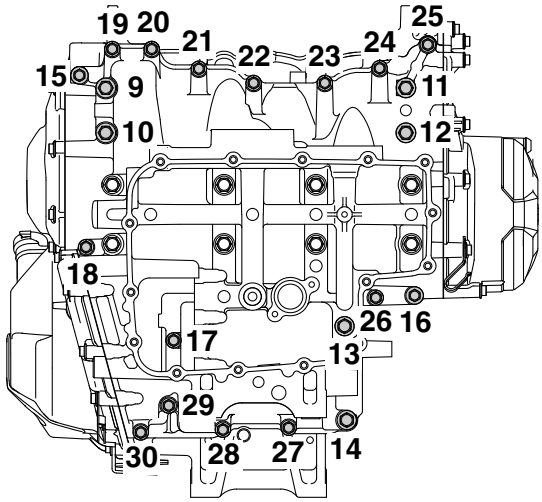

EAS1RC1503

CONNECTING RODS AND PISTONS

Removing the connecting rods and pistons

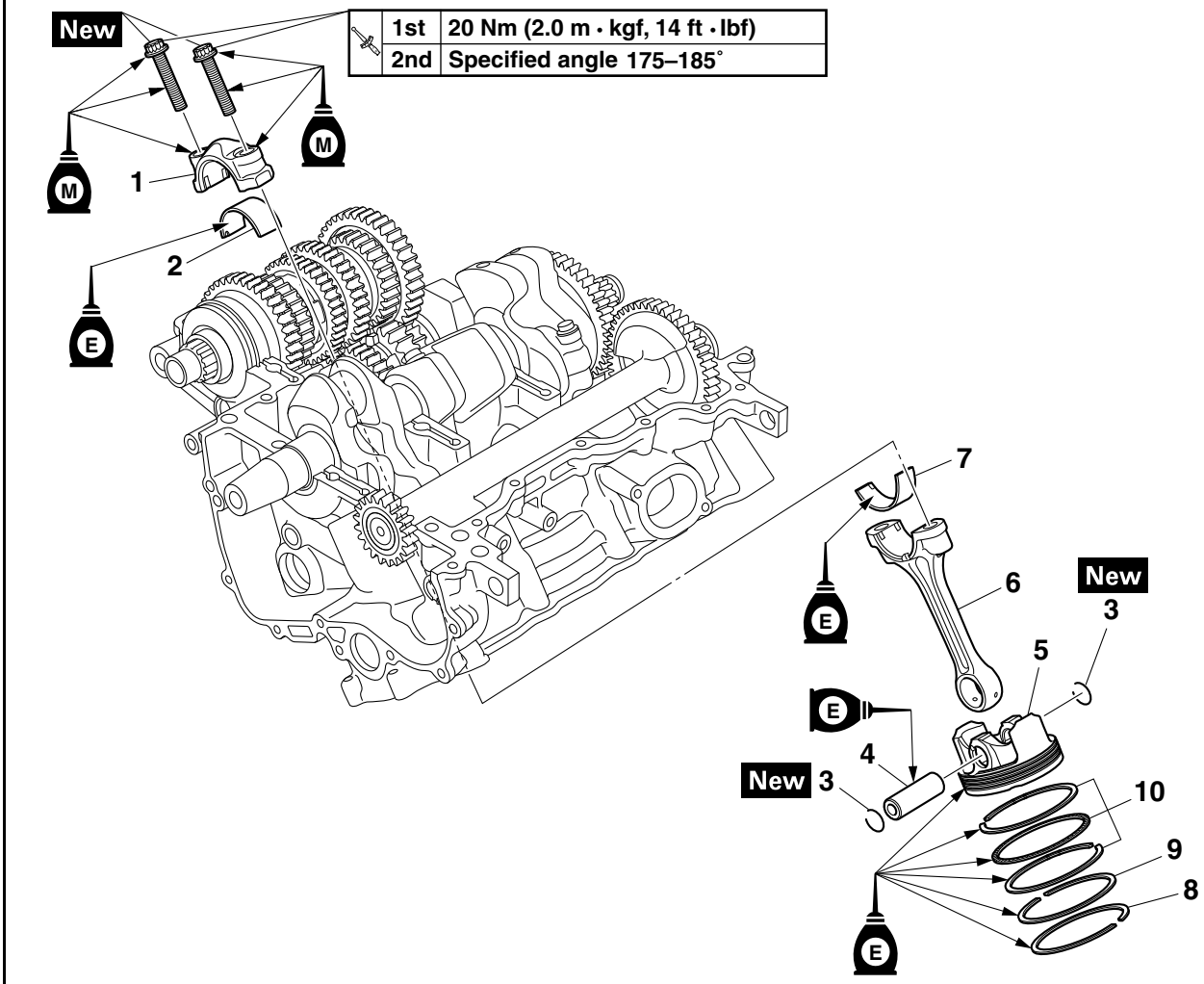

Order	Job/Parts to remove	Q'ty	Remarks
	Lower crankcase		Refer to "CRANKCASE" on page 5-56.
1	Connecting rod cap	3	
2	Big end lower bearing	3	
3	Piston pin clip	6	
4	Piston pin	3	
5	Piston	3	
6	Connecting rod	3	
7	Big end upper bearing	3	
8	Top ring	3	
9	2nd ring	3	
10	Oil ring	3	

EAS26030

REMOVING THE CONNECTING RODS AND PISTONS

The following procedure applies to all of the connecting rods and pistons.

1. Remove:
   - Connecting rod cap “1”
   - Connecting rod
   - Big end bearings

TIP

- Identify the position of each big end bearing so that it can be reinstalled in its original place.
- After removing the connecting rods and connecting rod caps, care should be taken not to damage the mating surfaces of the connecting rods and connecting rod caps.

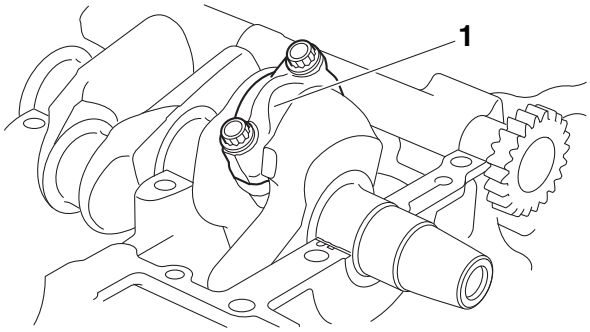

2. Remove:
   - Piston pin clips “1”
   - Piston pin “2”
   - Piston “3”

ECA1RC1504

NOTICE

Do do not use a hammer to drive the piston pin out.

TIP

- For reference during installation, put identification marks on the piston crown.
- Before removing the piston pin, deburr the piston pin clip groove and the piston pin bore area. If both areas are debarred and the piston pin is still difficult to remove, remove it with the piston pin puller set “4”.

Piston pin puller set
90890-01304
Piston pin puller
YU-01304

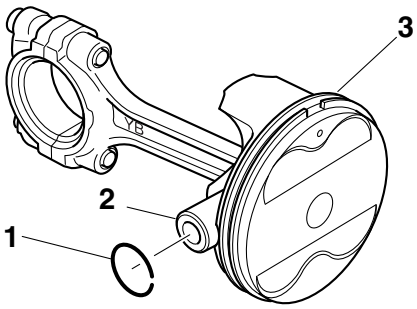

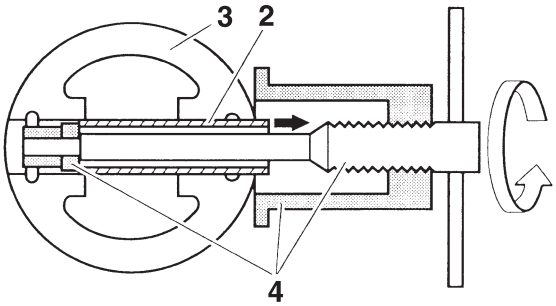

3. Remove:
   - Top ring
   - 2nd ring
   - Oil ring

TIP

When removing a piston ring, open the end gap with your fingers and lift the other side of the ring over the piston crown.

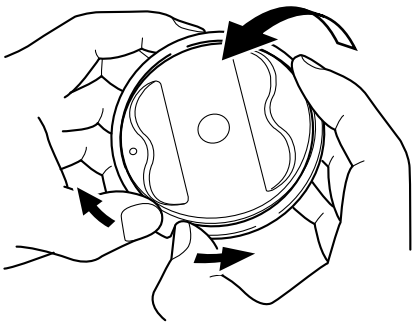

EAS24390

CHECKING THE CYLINDER AND PISTON

1. Check:
   - Piston wall
   - Cylinder wall
     Vertical scratches → Replace the cylinder, and replace the piston and piston rings as a set.
2. Measure:
   - Piston-to-cylinder clearance

▼▼▼▼▼▼▼▼▼▼▼▼▼▼▼▼▼▼▼▼▼▼▼▼▼▼▼▼▼▼▼▼▼▼

a. Measure cylinder bore “C” with the cylinder bore gauge.

TIP

Measure cylinder bore “C” by taking side-to-side

and front-to-back measurements of the cylinder. Then, find the average of the measurements.

Bore
78.000–78.010 mm (3.0709–3.0713 in)
Taper limit
0.050 mm (0.0020 in)
Out of round limit
0.050 mm (0.0020 in)

"C" = maximum of D_1–D_6
Taper limit = maximum of D_1 or D_2 – maximum of D_5 or D_6
Out of round limit = maximum of D_1, D_3 or D_5 - minimum of D_2, D_4 or D_6

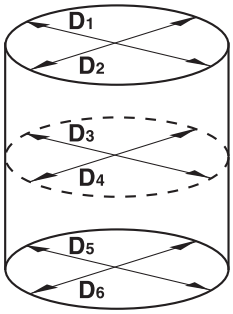

b. If out of specification, replace the cylinder, and replace the piston and piston rings as a set.
c. Measure piston skirt diameter "P" with the micrometer.

Piston
Diameter
77.975–77.990 mm (3.0699–3.0705 in)

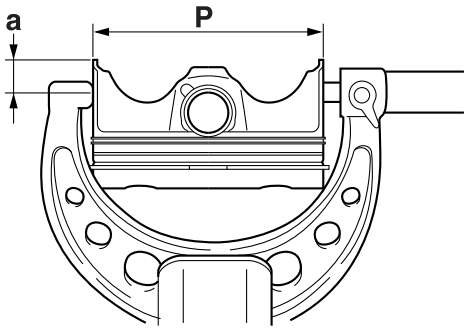

a. 12.0 mm (0.47 in) from the bottom edge of the piston

d. If out of specification, replace the piston and piston rings as a set.
e. Calculate the piston-to-cylinder clearance with the following formula.

Piston-to-cylinder clearance = Cylinder bore "C" - Piston skirt diameter "P"

Piston-to-cylinder clearance
0.010–0.035 mm (0.0004–0.0014 in)
Limit
0.150 mm (0.0059 in)

f. If out of specification, replace the cylinder, and replace the piston and piston rings as a set.

▲▲▲▲▲▲▲▲▲▲▲▲▲▲▲▲▲▲▲▲▲▲▲▲▲▲▲▲▲▲▲▲

EAS24430
CHECKING THE PISTON RINGS

1. Measure:
   - Piston ring side clearance
     Out of specification → Replace the piston and piston rings as a set.

TIP
Before measuring the piston ring side clearance, eliminate any carbon deposits from the piston ring grooves and piston rings.

Piston ring
Top ring
Ring side clearance
0.030–0.065 mm (0.0012–0.0026 in)
Limit
0.115 mm (0.0045 in)
2nd ring
Ring side clearance
0.020–0.055 mm (0.0008–0.0022 in)
Limit
0.115 mm (0.0045 in)

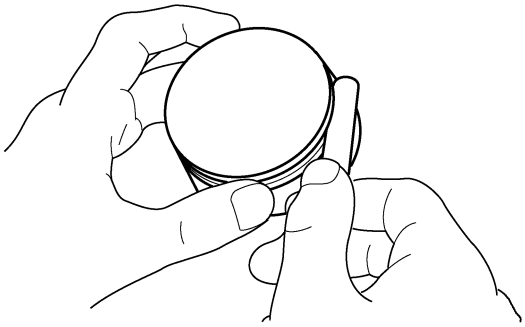

2. Install:
   - Piston ring
     (into the cylinder)

TIP

Use the piston crown to level the piston ring near bottom of cylinder "a", where cylinder wear is lowest.

3. Measure:
   - Piston ring end gap
     Out of specification → Replace the piston ring.

TIP

The oil ring expander spacer's end gap cannot be measured. If the oil ring rail's gap is excessive, replace all three piston rings.

Top ring
End gap (installed)
0.15–0.25 mm (0.0059–0.0098 in)
Limit
0.50 mm (0.0197 in)
2nd ring
End gap (installed)
0.30–0.45 mm (0.0118–0.0177 in)
Limit
0.80 mm (0.0315 in)
Oil ring
End gap (installed)
0.10–0.40 mm (0.0039–0.0157 in)

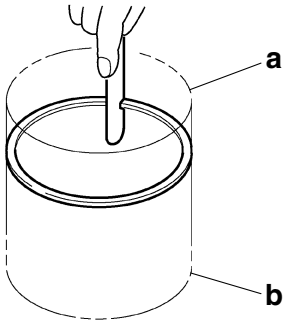

b. Upper of cylinder

EAS24440

CHECKING THE PISTON PIN

The following procedure applies to all of the piston pins.

1. Check:
   - Piston pin
     Blue discoloration/grooves → Replace the piston pin and then check the lubrication system.
2. Measure:
   - Piston pin outside diameter "a"
     Out of specification → Replace the piston pin.

Piston pin outside diameter
16.990–16.995 mm
(0.6689–0.6691 in)
Limit
16.970 mm (0.6681 in)

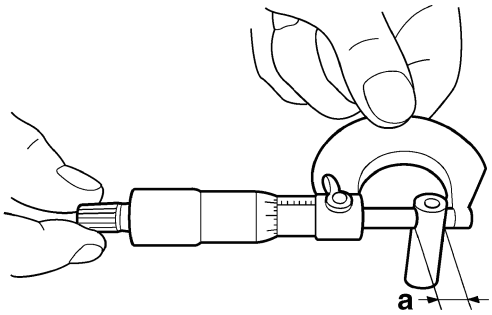

3. Measure:
   - Piston pin bore inside diameter "b"
     Out of specification → Replace the piston.

Piston pin bore inside diameter
17.002–17.013 mm
(0.6694–0.6698 in)
Limit
17.043 mm (0.6710 in)

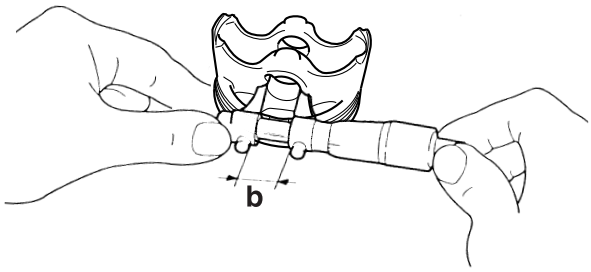

4. Calculate:
   - Piston-pin-to-piston-pin-bore clearance
     Out of specification → Replace the piston pin and piston as a set.

Piston-pin-to-piston-pin-bore clearance = Piston pin bore inside diameter "b" - Piston pin outside diameter "a"

Piston-pin-to-piston-pin-bore clearance
0.007–0.023 mm (0.0003–0.0009 in)

EAS1RC1504

CHECKING THE CONNECTING RODS

1. Measure:
   - Crankshaft-pin-to-big-end-bearing clearance

Out of specification → Replace the big end bearings.

	Oil clearance **0.027–0.051 mm (0.0011–0.0020 in)**

▼▼▼▼▼▼▼▼▼▼▼▼▼▼▼▼▼▼▼▼▼▼▼▼▼▼▼▼▼▼▼▼▼▼

The following procedure applies to all of the connecting rods.

ECA13930

NOTICE

Do not interchange the big end bearings and connecting rods. To obtain the correct crankshaft-pin-to-big-end-bearing clearance and prevent engine damage, the big end bearings must be installed in their original positions.

a. Clean the big end bearings, crankshaft pins, and the inside of the connecting rods halves.
b. Install the big end upper bearing into the connecting rod and the big end lower bearing into the connecting rod cap.

TIP

Align the projections “a” on the big end bearings with the notches “b” in the connecting rod and connecting rod cap.

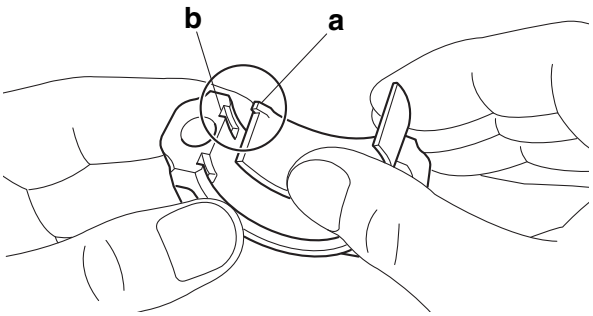

c. Put a piece of Plastigauge® “1” on the crankshaft pin.

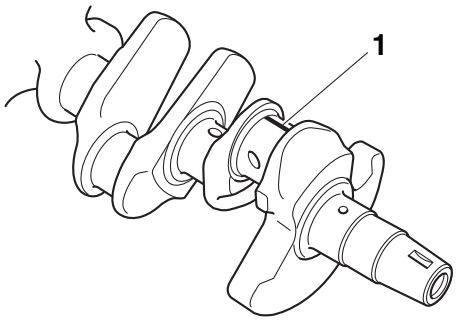

d. Assemble the connecting rod halves.

ECA1RC1501

NOTICE

Tighten the connecting rod bolts using the plastic-region tightening angle method. Always install new bolts.

TIP

- Clean the connecting rod bolts and lubricate the bolt threads and seats with molybdenum disulfide oil.
- Make sure that the projection “a” on the connecting rod cap faces the same direction as the “Y” mark “b” on the connecting rod.
- After installing the big end bearing, assemble the connecting rod and connecting rod cap without installing them onto the crankshaft.

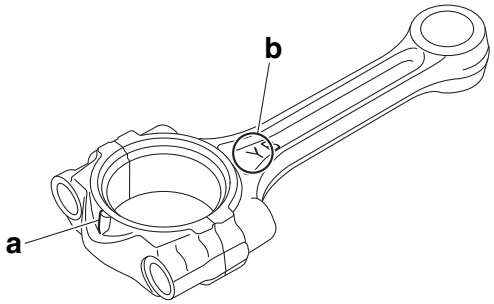

TIP

Install by carrying out the following procedures in order to assemble in the most suitable condition.

e. Tighten the connecting rod bolt while checking that the sections shown “a” and “b” are flush with each other by touching the surface.

	Connecting rod bolt **30 Nm (3.0 m·kgf, 22 ft·lbf)**

TIP

To install the big end bearing, care should be taken not to install it at an angle and the position should not be out of alignment.

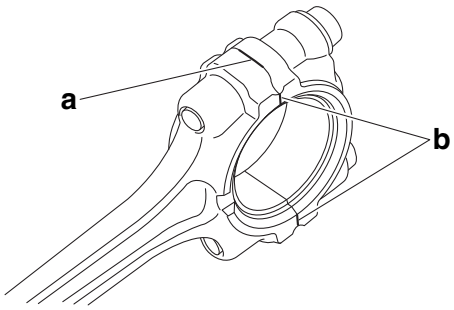

a. Side machined face
b. Thrusting faces

f. Loosen the connecting rod bolt, remove the connecting rod and connecting rod cap and install these parts to the crankshaft with the

big end bearing kept in the current condition.

TIP

- Do not move the connecting rod or crankshaft until the clearance measurement has been completed.
- Make sure that the projection “a” on the connecting rod cap faces the same direction as the “Y” mark “b” on the connecting rod.
- Make sure the “Y” marks “b” on the connecting rods face towards the left side of the crankshaft.

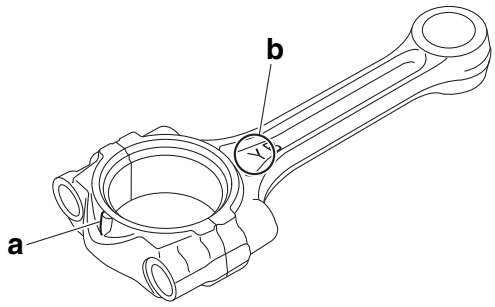

g. Tighten the connecting rod bolts with a torque wrench.

	Connecting rod bolt (1st) **20 Nm (2.0 m·kgf, 14 ft·lbf)**

h. Put a mark “1” on the corner of the connecting rod bolt “2” and the connecting rod cap “3”.

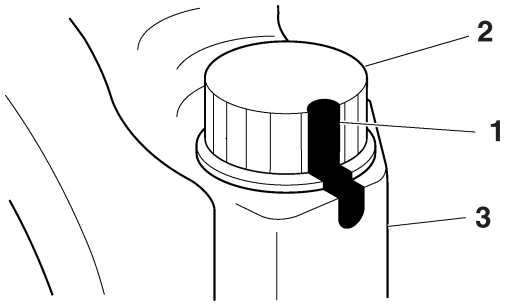

i. Tighten the connecting rod bolts further to reach the specified angle 175°–185°.

	Connecting rod bolt (final) **Specified angle 175°–185°**

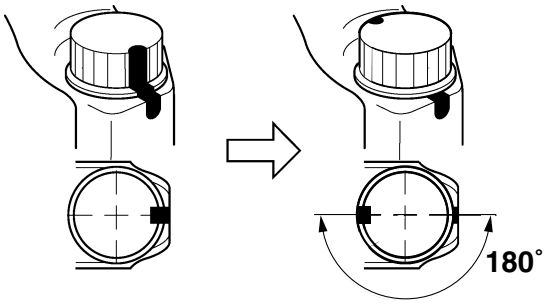

EWA13400

WARNING

If the connecting rod bolt is tightened more than the specified angle, do not loosen the bolt and then retighten it. Instead, replace the connecting rod bolt with a new one and perform the procedure again.

ECA13950

NOTICE

Do not use a torque wrench to tighten the connecting rod bolt to the specified angle.

j. After the installation, check that the section shown “a” is flush with each other by touching the surface.

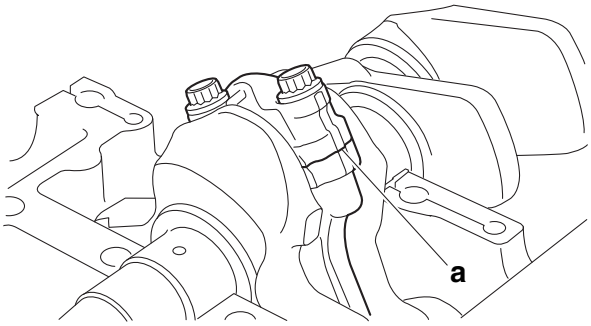

k. Remove the connecting rod and big end bearings.

l. Measure the compressed Plastigauge® width on the crankshaft pin. If the crankshaft-pin-to-big-end-bearing clearance is out of specification, select replacement big end bearings.

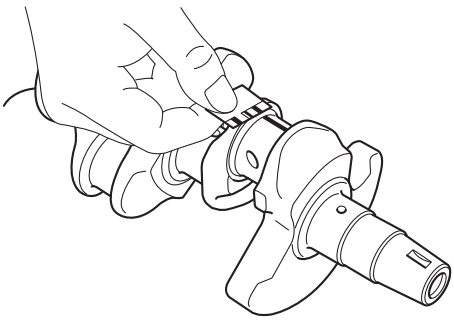

▲▲▲▲▲▲▲▲▲▲▲▲▲▲▲▲▲▲▲▲▲▲▲▲▲▲▲▲▲▲▲▲

2. Select:
   - Big end bearings (P_1–P_3)

TIP

- The numbers "A" stamped into the crankshaft web and the numbers "1" on the connecting rods are used to determine the replacement big end bearings sizes.
- "P_1"–"P_3" refer to the bearings shown in the crankshaft illustration.

For example, if the connecting rod "P_1" and the crankshaft web "P_1" numbers are 5 and 2 respectively, then the bearing size for "P_1" is:

"P_1" (connecting rod) - "P_1" (crankshaft) = 5 - 2 = 3 (brown)

Bearing color code
1. Blue 2. Black 3. Brown 4. Green

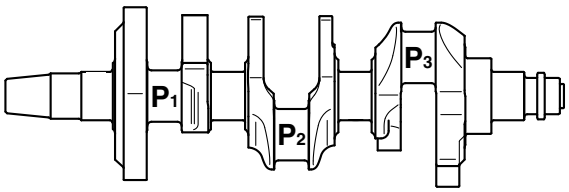

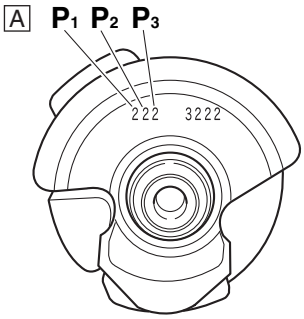

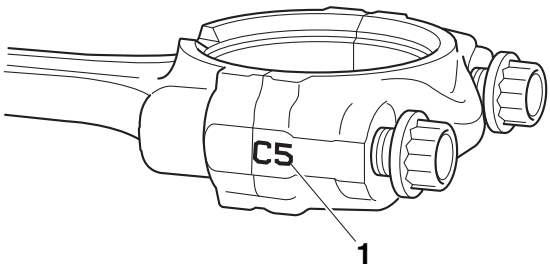

EAS26190

INSTALLING THE CONNECTING ROD AND PISTON

The following procedure applies to all of the connecting rods and pistons.

1. Install:
   - Big end bearings
   - Connecting rod cap
     (onto the connecting rod)

TIP

- Be sure to reinstall each big end bearing in its original place.
- Align the projections "a" on the big end bearings with the notches "b" in the connecting rods and connecting rod caps.
- Make sure that the projection "c" on the connecting rod cap faces the same direction as the "Y" mark "d" on the connecting rod.

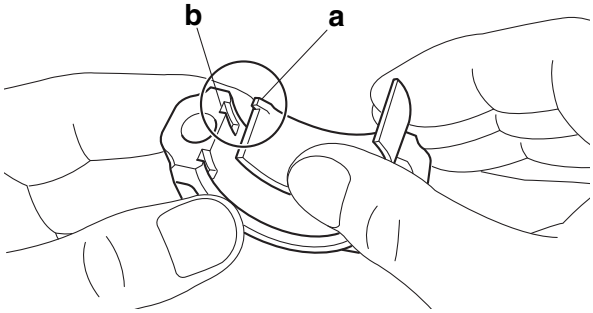

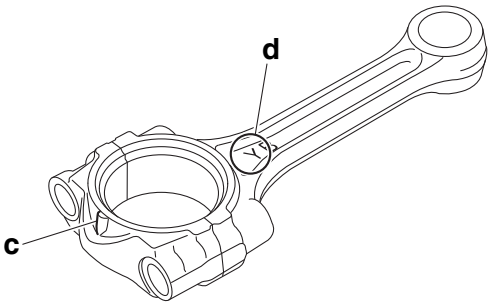

2. Tighten:
   - Connecting rod bolts New

ECA1RC1509

NOTICE

Tighten the connecting rod bolts using the plastic-region tightening angle method. Always install new bolts.

TIP

Install by carrying out the following procedures in order to assemble in the most suitable condition.

▼▼▼▼▼▼▼▼▼▼▼▼▼▼▼▼▼▼▼▼▼▼▼▼▼▼▼▼▼▼▼▼

a. Replace the connecting rod bolts with new ones.
b. Clean the connecting rod bolts and lubricate

the bolt threads and seats with molybdenum disulfide oil.

c. After installing the big end bearing, assemble the connecting rod and connecting rod cap without installing them onto the crankshaft.

d. Tighten the connecting rod bolt while checking that the sections shown “a” and “b” are flush with each other by touching the surface.

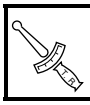	**Connecting rod bolt** **30 Nm (3.0 m·kgf, 22 ft·lbf)**

TIP

To install the big end bearing, care should be taken not to install it at an angle and the position should not be out of alignment.

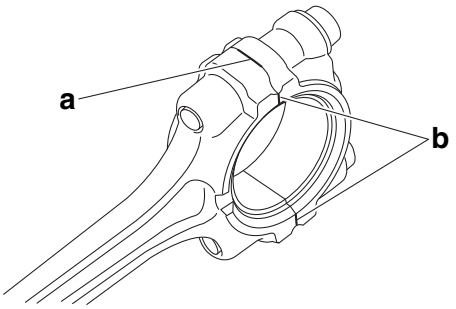

a. Side machined face
b. Thrusting faces

e. Loosen the connecting rod bolt, remove the connecting rod and connecting rod cap and install these parts to the crankshaft with the big end bearing kept in the current condition.

▲▲▲▲▲▲▲▲▲▲▲▲▲▲▲▲▲▲▲▲▲▲▲▲▲▲▲▲▲▲▲▲▲▲

3. Install:
   - Oil ring expander “1”
   - Lower oil ring rail “2”
   - Upper oil ring rail “3”
   - 2nd ring “4”
   - Top ring “5”
     (into the piston)

TIP

Be sure to install the piston rings so that the manufacturer’s marks or numbers “a” face up.

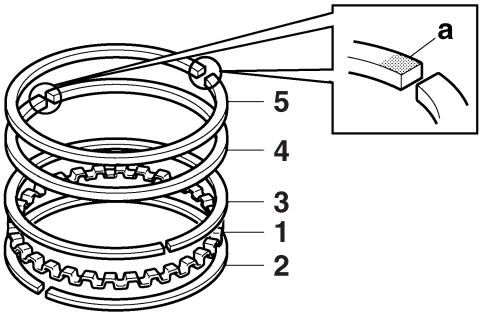

4. Install:
   - Piston “1”
     (onto the respective connecting rod “2”)
   - Piston pin “3”
   - Piston pin clips “4” New

TIP

- Apply engine oil onto the piston pin.
- Make sure that the “Y” mark “a” on the connecting rod faces left when the punch mark “b” on the piston is pointing up as shown.
- Install the piston pin clips, so that the clip ends are 3 mm (0.12 in) “c” or more from the cutout in the piston.
- Reinstall each piston into its original cylinder.

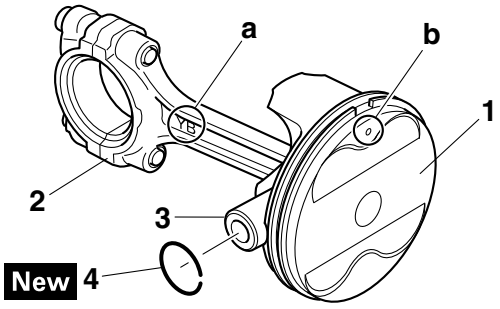

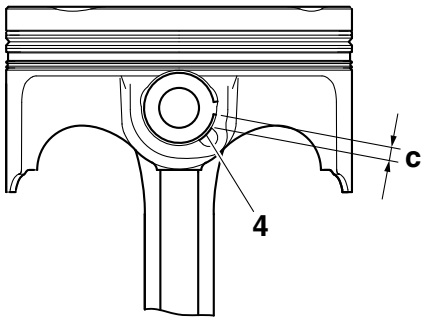

5. Lubricate:
   - Piston
   - Piston rings
   - Cylinder
     (with the recommended lubricant)

	**Recommended lubricant** **Engine oil**

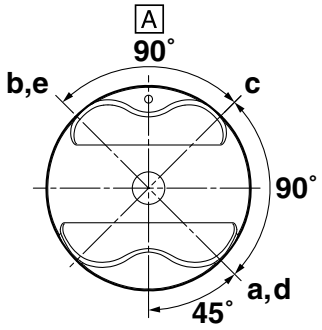

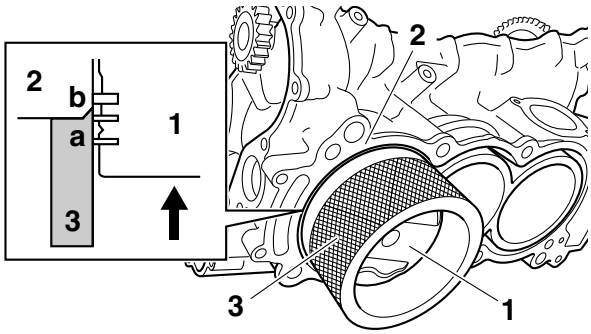

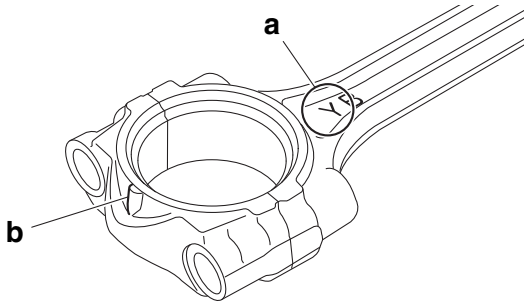

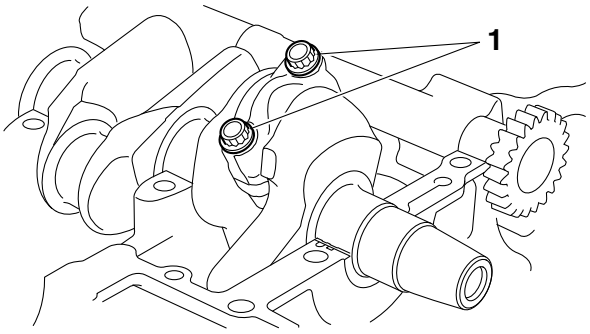

6. Offset:
   - Piston ring end gaps

a. Top ring
b. 2nd ring
c. Upper oil ring rail
d. Oil ring expander
e. Lower oil ring rail

A. Exhaust side

7. Lubricate:
   - Crankshaft pins
   - Connecting rod big end bearing inner surface (with the recommended lubricant)

	Recommended lubricant **Engine oil**

8. Install:
   - Piston assemblies "1" (into the cylinder "2" and onto the crankshaft pin)

	Piston installing tool **90890-04161** **YM-04161**

ECA1RC1502

NOTICE

If the projection "a" of the piston installing tool damages, you cannot use it. Please handle with care.

TIP

Fit the projection "a" of the piston installing tool "3" and blunt-edged part "b" of the cylinder, fix the position of the piston installing tool, and then push the piston up to the cylinder.

9. Install:
   - Connecting rod caps
   - Connecting rod bolts

TIP

- Make sure the "Y" marks "a" on the connecting rods face towards the left side of the crankshaft.
- Make sure that the projection "b" on the connecting rod cap faces the same direction as the "Y" mark "a" on the connecting rod.
- Apply Molybdenum disulfide oil to the bolt threads and seats.

10. Tighten:
    - Connecting rod bolts "1"

▼▼▼▼▼▼▼▼▼▼▼▼▼▼▼▼▼▼▼▼▼▼▼▼▼▼▼▼▼▼▼▼▼▼▼

TIP

Tighten the connecting rod bolts using the following procedure.

a. Tighten the connecting rod bolts with a torque wrench.

	Connecting rod bolt (1st) 20 Nm (2.0 m·kgf, 14 ft·lbf)

b. Put a mark “1” on the corner of the connecting rod bolt “2” and the connecting rod cap “3”.

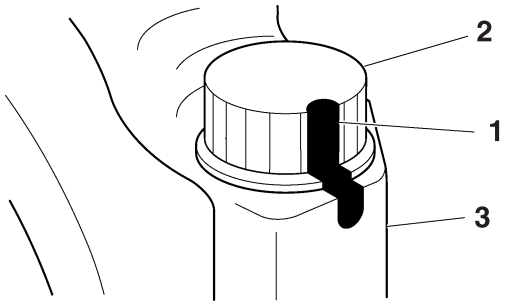

c. Tighten the connecting rod bolts further to reach the specified angle 175°–185°.

	Connecting rod bolt (final) Specified angle 175°–185°

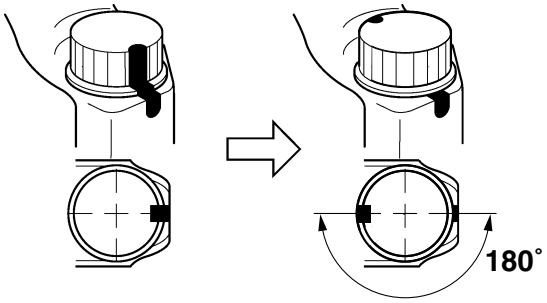

EWA13400

WARNING

If the connecting rod bolt is tightened more than the specified angle, do not loosen the bolt and then retighten it. Instead, replace the connecting rod bolt with a new one and perform the procedure again.

ECA13950

NOTICE

Do not use a torque wrench to tighten the connecting rod bolt to the specified angle.

d. After the installation, check that the section shown “a” is flush with each other by touching the surface.

EWA1RC1503

WARNING

If the connecting rod and cap are not flush with each other, remove the connecting rod bolts and big end bearing and restart from step (1). In this case, make sure to replace the connecting rod bolts.

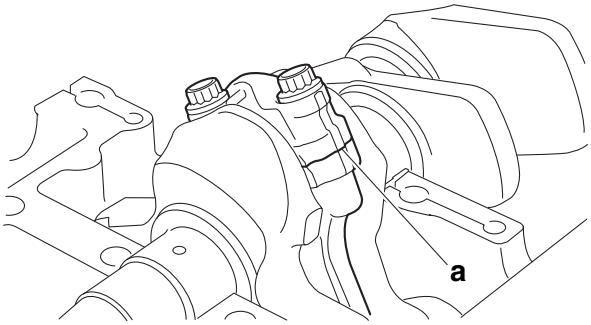

EAS25950

CRANKSHAFT AND BALANCER SHAFT

Removing the crankshaft and balancer shaft

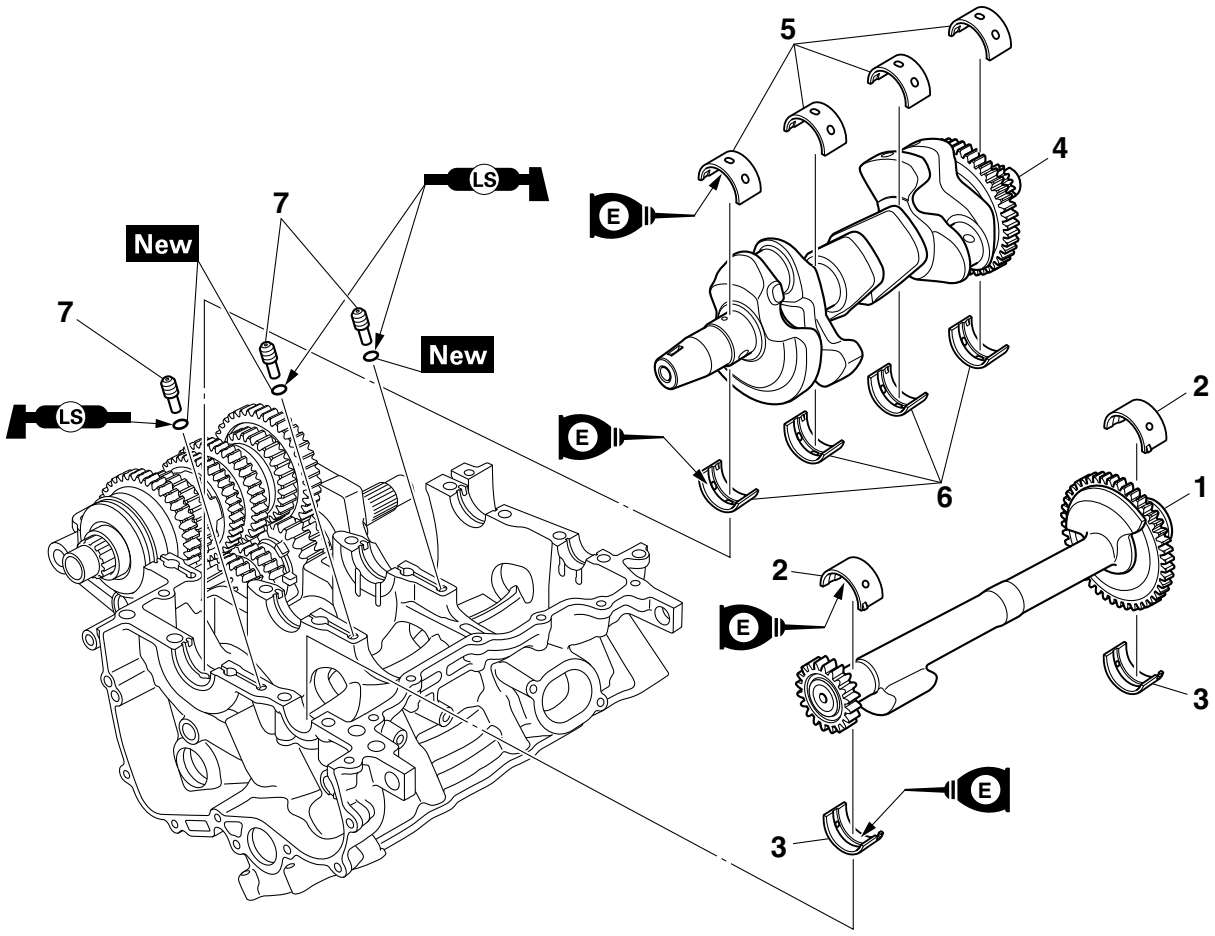

Order	Job/Parts to remove	Q'ty	Remarks
	Lower crankcase		Refer to "CRANKCASE" on page 5-56.
	Connecting rod		Refer to "REMOVING THE CONNECTING RODS AND PISTONS" on page 5-61.
1	Balancer shaft	1	
2	Balancer shaft journal lower bearing	2	
3	Balancer shaft journal upper bearing	2	
4	Crankshaft	1	
5	Crankshaft journal lower bearing	4	
6	Crankshaft journal upper bearing	4	
7	Oil nozzle	3	

EAS25980

REMOVING THE CRANKSHAFT AND BALANCER SHAFT

1. Remove:
   - Balancer shaft “1”
   - Balancer shaft journal bearings
   - Crankshaft assembly “2”
   - Crankshaft journal bearings

TIP

Identify the position of each balancer shaft journal bearings and crankshaft journal bearings so that it can be reinstalled in its original place.

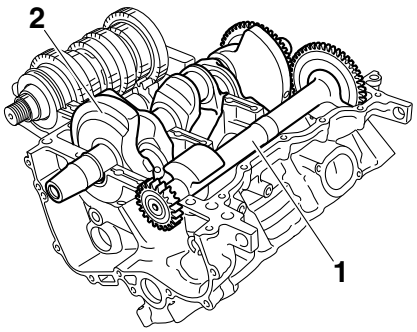

EAS1RC1505

CHECKING THE OIL NOZZLES

The following procedure applies to all of the oil nozzles.

1. Check:
   - Oil nozzle “1”
     Damage/wear → Replace the oil nozzle.
   - Oil passage
     Obstruction → Blow out with compressed air.

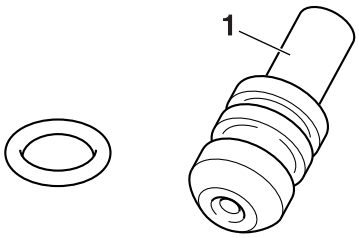

EAS26071

CHECKING THE CRANKSHAFT

1. Measure:
   - Crankshaft runout
     Out of specification → Replace the crankshaft.

	Runout limit **0.030 mm (0.0012 in)**

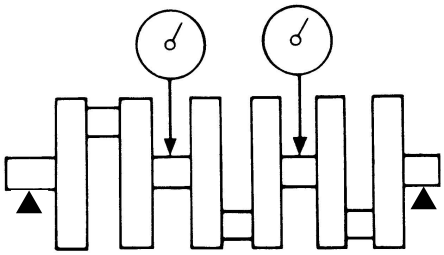

2. Check:
   - Crankshaft journal surfaces
   - Crankshaft pin surfaces
   - Bearing surfaces
     Scratches/wear → Replace the crankshaft.
3. Measure:
   - Crankshaft-journal-to-crankshaft-journal-bearing clearance
     Out of specification → Replace the crankshaft journal bearings.

	Journal oil clearance **0.014–0.038 mm (0.0006–0.0015 in)**

ECA13920

NOTICE

Do not interchange the crankshaft journal bearings. To obtain the correct crankshaft-journal-to-crankshaft-journal-bearing clearance and prevent engine damage, the crankshaft journal bearings must be installed in their original positions.

▼▼▼▼▼▼▼▼▼▼▼▼▼▼▼▼▼▼▼▼▼▼▼▼▼▼▼▼▼▼▼▼▼▼

a. Clean the crankshaft journal bearings, crankshaft journals, and bearing portions of the crankcase.
b. Place the upper crankcase upside down on a bench.
c. Install the crankshaft journal upper bearings “1” and the crankshaft into the upper crankcase.

TIP

Align the projections “a” on the crankshaft journal upper bearings with the notches “b” in the upper crankcase.

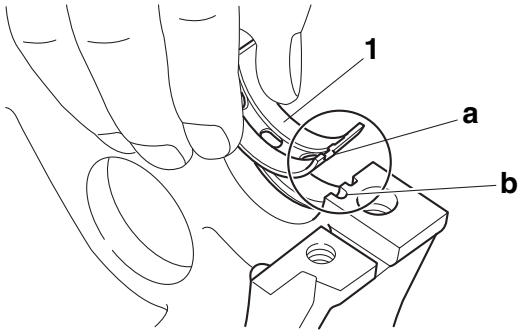

d. Put a piece of Plastigauge® "1" on each crankshaft journal.

TIP

Do not put the Plastigauge® over the oil hole in the crankshaft journal.

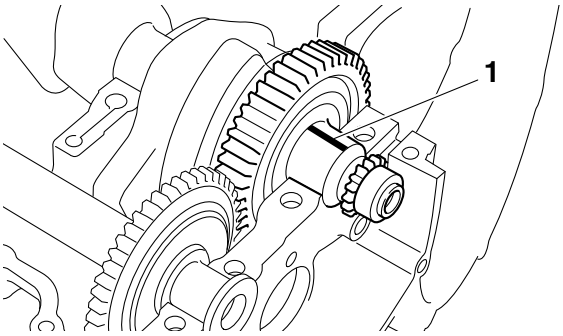

e. Install the crankshaft journal lower bearings "1" into the lower crankcase and assemble the crankcase halves.

TIP

- Align the projections "a" of the crankshaft journal lower bearings with the notches "b" in the lower crankcase.
- Do not move the crankshaft until the clearance measurement has been completed.

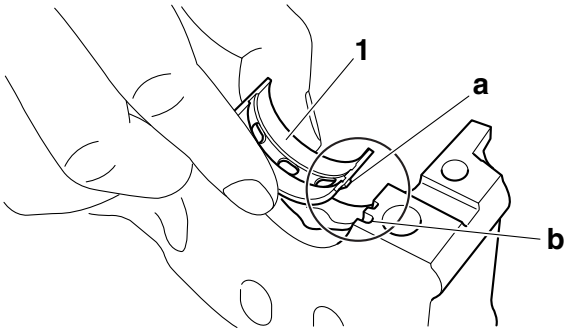

f. Tighten the bolts to specification in the tightening sequence cast on the crankcase.
   Refer to "CRANKCASE" on page 5-56.
g. Remove the lower crankcase and the crankshaft journal lower bearings.
h. Measure the compressed Plastigauge® width "a" on each crankshaft journal.
   If the crankshaft-journal-to-crankshaft-journal-bearing clearance is out of specification, select replacement crankshaft journal bearings.

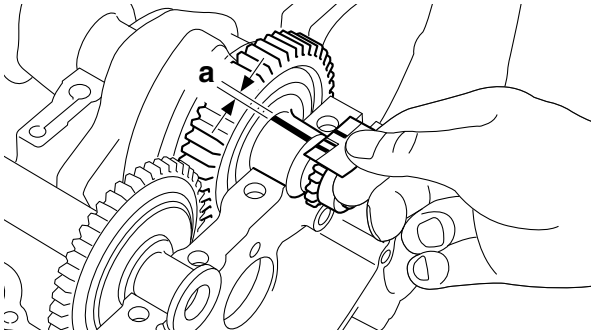

▲▲▲▲▲▲▲▲▲▲▲▲▲▲▲▲▲▲▲▲▲▲▲▲▲▲▲▲▲▲▲▲▲▲

4. Select:
   - Crankshaft journal bearings (J_1–J_4)

TIP

- The numbers "A" stamped into the crankshaft web and the numbers "B" stamped into the lower crankcase are used to determine the replacement crankshaft journal bearing sizes.
- "J_1"–"J_4" refer to the bearings shown in the crankshaft and lower crankcase illustration.
- If "J_1"–"J_4" are the same, use the same size for all of the bearings.

For example, if the crankcase "J_1" and crankshaft web "J_1" numbers are 7 and 2 respectively, then the bearing size for "J_1" is:

"J_1" (crankcase) - "J_1" (crankshaft web) -1 = 7 - 2 - 1 = 4 (green)

Bearing color code
0.White 1.Blue 2.Black 3.Brown 4.Green

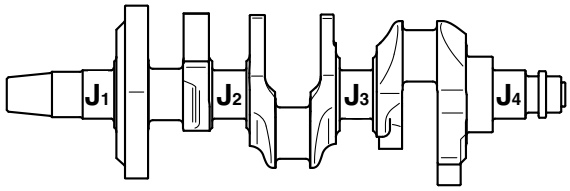

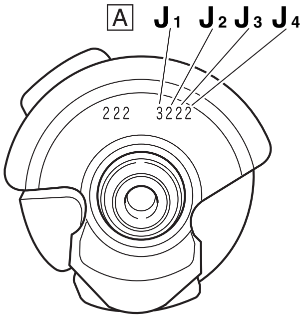

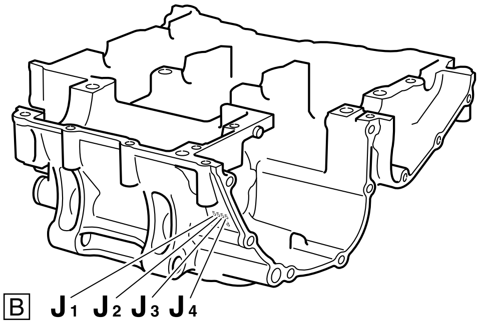

EAS26130

CHECKING THE BALANCER SHAFT

1. Measure:
   - Balancer shaft runout
     Out of specification → Replace the balancer shaft.

	Balancer shaft runout limit **0.030 mm (0.0012 in)**

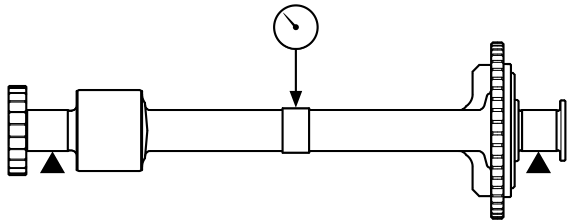

2. Check:
   - Balancer shaft journal surfaces
   - Bearing surfaces
     Scratches/wear → Replace the balancer shaft.
3. Measure:
   - Balancer shaft journal-to-balancer shaft journal bearing clearance
     Out of specification → Replace the balancer shaft journal bearings.

	Balancer shaft journal to balancer shaft bearing clearance **0.024–0.048 mm (0.0009–0.0019 in)**

ECA1RC1511

NOTICE

Do not interchange the balancer shaft journal bearings. To obtain the correct balancer shaft-journal-to-balancer shaft-journal bearing clearance and prevent engine damage, the balancer shaft journal bearings must be installed in their original positions.

▼▼▼▼▼▼▼▼▼▼▼▼▼▼▼▼▼▼▼▼▼▼▼▼▼▼▼▼▼▼▼▼▼▼

a. Clean the balancer shaft journal bearings, balancer shaft journals, and bearing portions of the crankcase.

b. Place the upper crankcase upside down on a bench.

c. Install the balancer shaft journal upper bearings “1” and the balancer shaft into the upper crankcase.

TIP

Align the projections “a” on the balancer shaft journal upper bearings with the notches “b” in the upper crankcase.

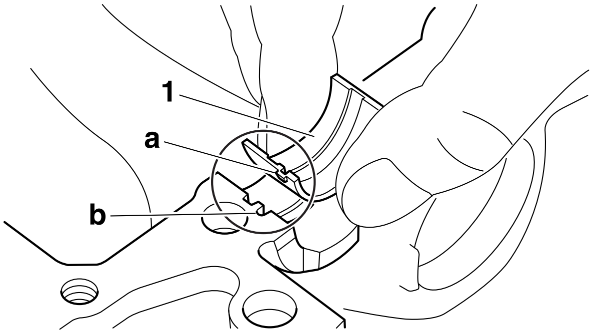

d. Put a piece of Plastigauge® “1” on each balancer shaft journal.

TIP

Do not put the Plastigauge® over the oil hole in the balancer shaft journal.

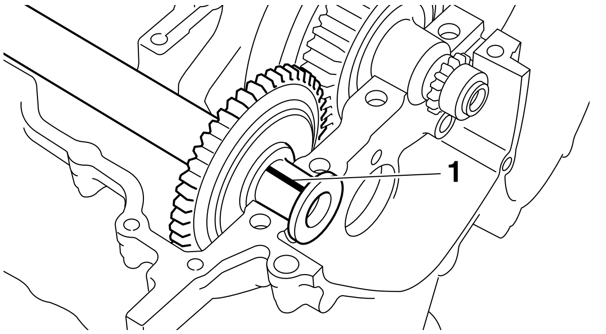

e. Install the balancer shaft journal lower bearings “1” into the lower crankcase and assemble the crankcase halves.

TIP

- Align the projections “a” of the balancer shaft journal lower bearings with the notches “b” in the crankcase.
- Do not move the balancer shaft until the clearance measurement has been completed.

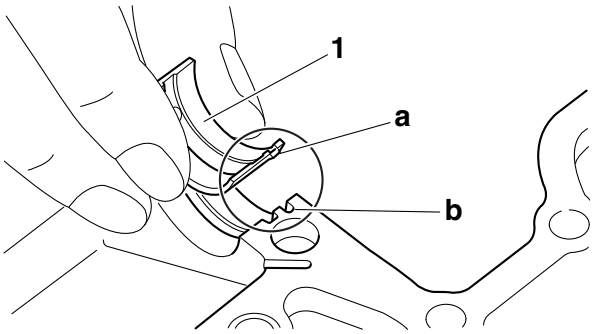

f. Tighten the bolts to specification in the tightening sequence cast on the crankcase. Refer to “CRANKCASE” on page 5-56.
g. Remove the lower crankcase and the balancer shaft journal lower bearings.
h. Measure the compressed Plastigauge® width “a” on each balancer shaft journal. If the balancer shaft-journal-to-balancer shaft-journal-bearing clearance is out of specification, select replacement balancer shaft journal bearings.

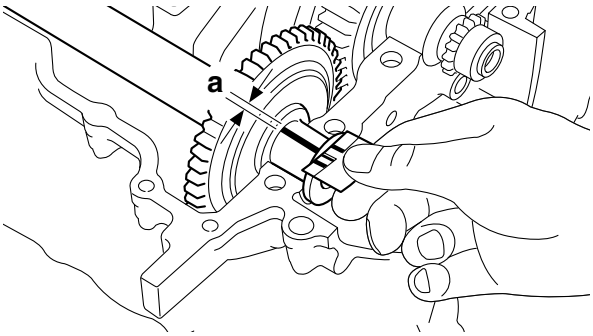

▲▲▲▲▲▲▲▲▲▲▲▲▲▲▲▲▲▲▲▲▲▲▲▲▲▲▲▲▲▲▲▲▲▲

4. Select:
   - Balancer shaft journal bearings (J_1–J_2)

TIP

- The numbers “A” stamped into the balancer shaft web and the numbers “B” stamped into the lower crankcase are used to determine the replacement balancer shaft journal bearing sizes.
- “J_1”–“J_2” refer to the bearings shown in the balancer shaft and lower crankcase illustration.
- If “J_1”–“J_2” are the same, use the same size for all of the bearings.

For example, if the crankcase “J_1” and balancer shaft web “J_1” numbers are 5 and 2 respectively, then the bearing size for “J_1” is:

“J_1” (crankcase) - “J_1” (balancer shaft web) = 5 - 2 = 3 (brown)

Bearing color code
1.Blue 2.Black 3.Brown 4.Green 5.Yellow

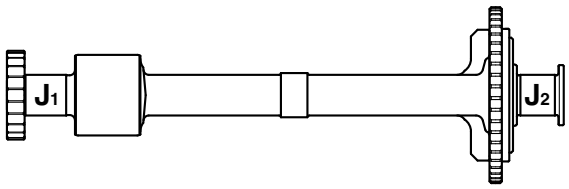

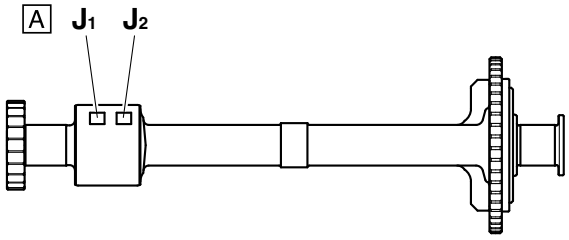

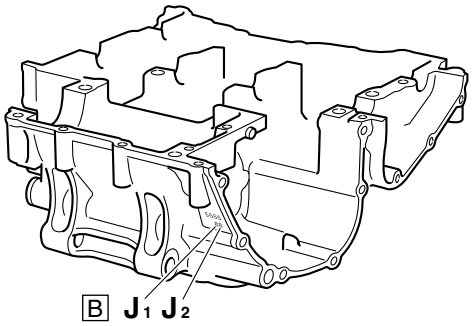

EAS26200

INSTALLING THE CRANKSHAFT

1. Install:
   - Crankshaft journal upper bearings (into the upper crankcase)
   - Crankshaft journal lower bearings (into the lower crankcase)
   - Crankshaft

TIP

- Align the projections “a” on the crankshaft jour-

nal bearings “1” with the notches “b” in the crankcase.
- Be sure to install each crankshaft journal bearings in its original place.

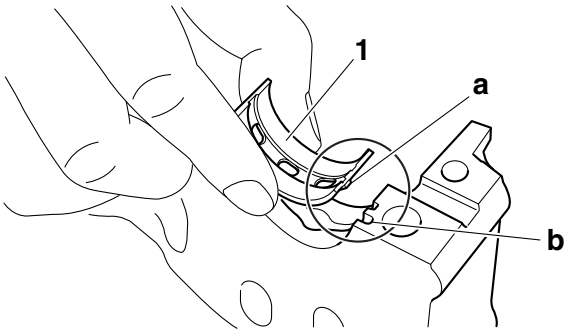

EAS26220

INSTALLING THE BALANCER ASSEMBLY

1. Install:
   - Balancer journal upper bearings (into the upper crankcase)
   - Balancer journal lower bearings (into the lower crankcase)

TIP
- Align the projections “a” on the balancer journal bearings “1” with the notches “b” in the crankcases.
- Be sure to install each balancer journal bearing in its original place.

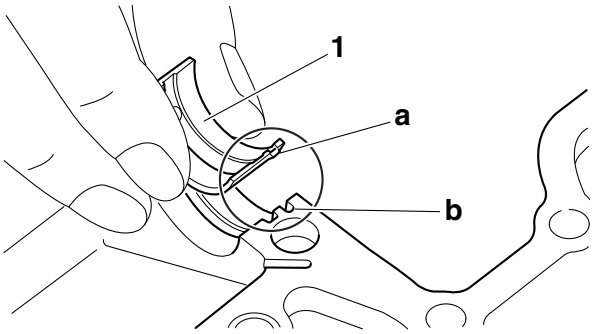

2. Install:
   - Balancer shaft

TIP
Install by aligning the crankshaft match mark “a” and the balancer shaft match mark “b”.

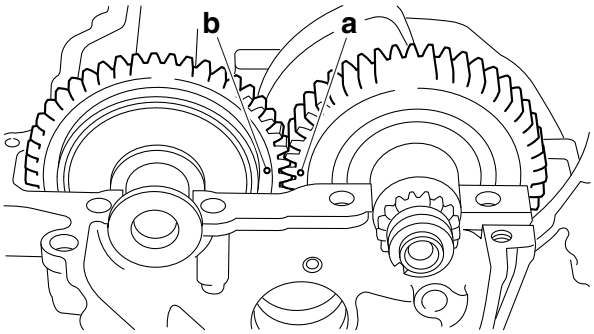

EAS26241

TRANSMISSION

Removing the transmission, shift drum assembly, and shift forks

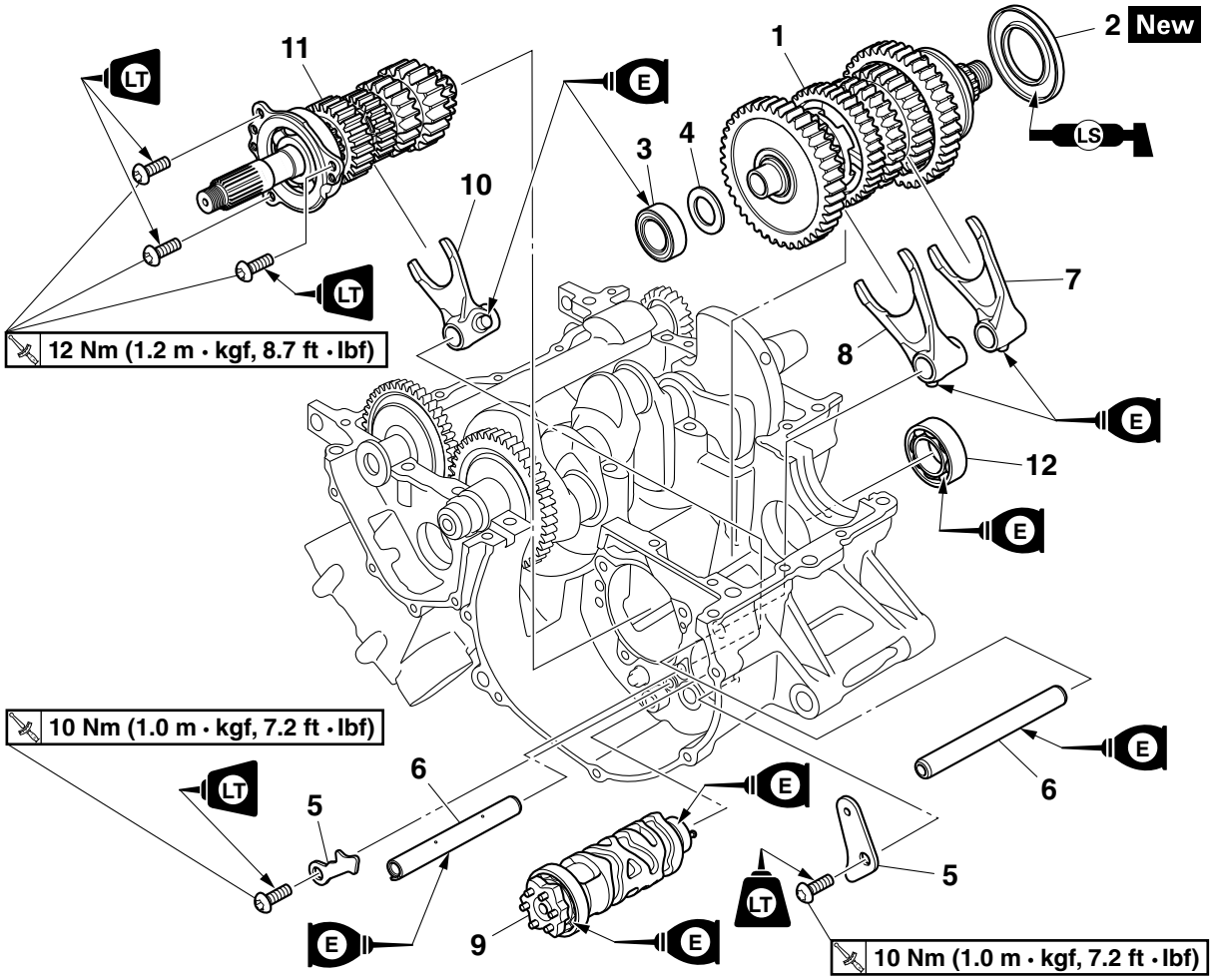

Order	Job/Parts to remove	Q'ty	Remarks
	Lower crankcase		Refer to "CRANKCASE" on page 5-56.
1	Drive axle assembly	1	
2	Oil seal	1	
3	Bearing	1	
4	Washer	1	
5	Shift drum retainer	2	
6	Shift fork guide bar	2	
7	Shift fork-L	1	
8	Shift fork-R	1	
9	Shift drum assembly	1	
10	Shift fork-C	1	
11	Main axle assembly	1	
12	Bearing	1	

Disassembling the main axle assembly

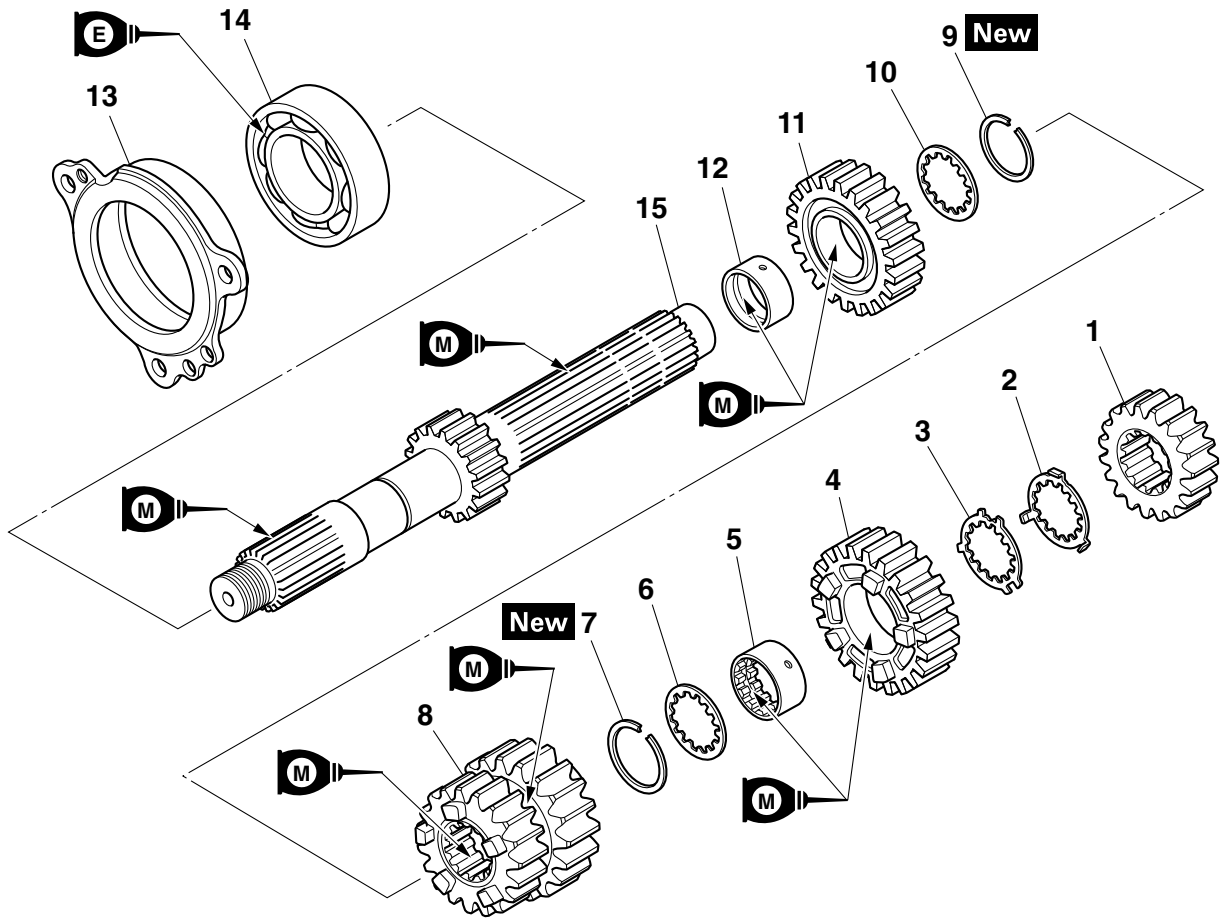

Order	Job/Parts to remove	Q'ty	Remarks
1	2nd pinion gear	1	
2	Toothed lock washer	1	
3	Toothed lock washer retainer	1	
4	6th pinion gear	1	
5	Collar	1	
6	Washer	1	
7	Circlip	1	
8	3rd pinion gear	1	
9	Circlip	1	
10	Washer	1	
11	5th pinion gear	1	
12	Collar	1	
13	Bearing housing	1	
14	Bearing	1	
15	Main axle	1	

Disassembling the drive axle assembly

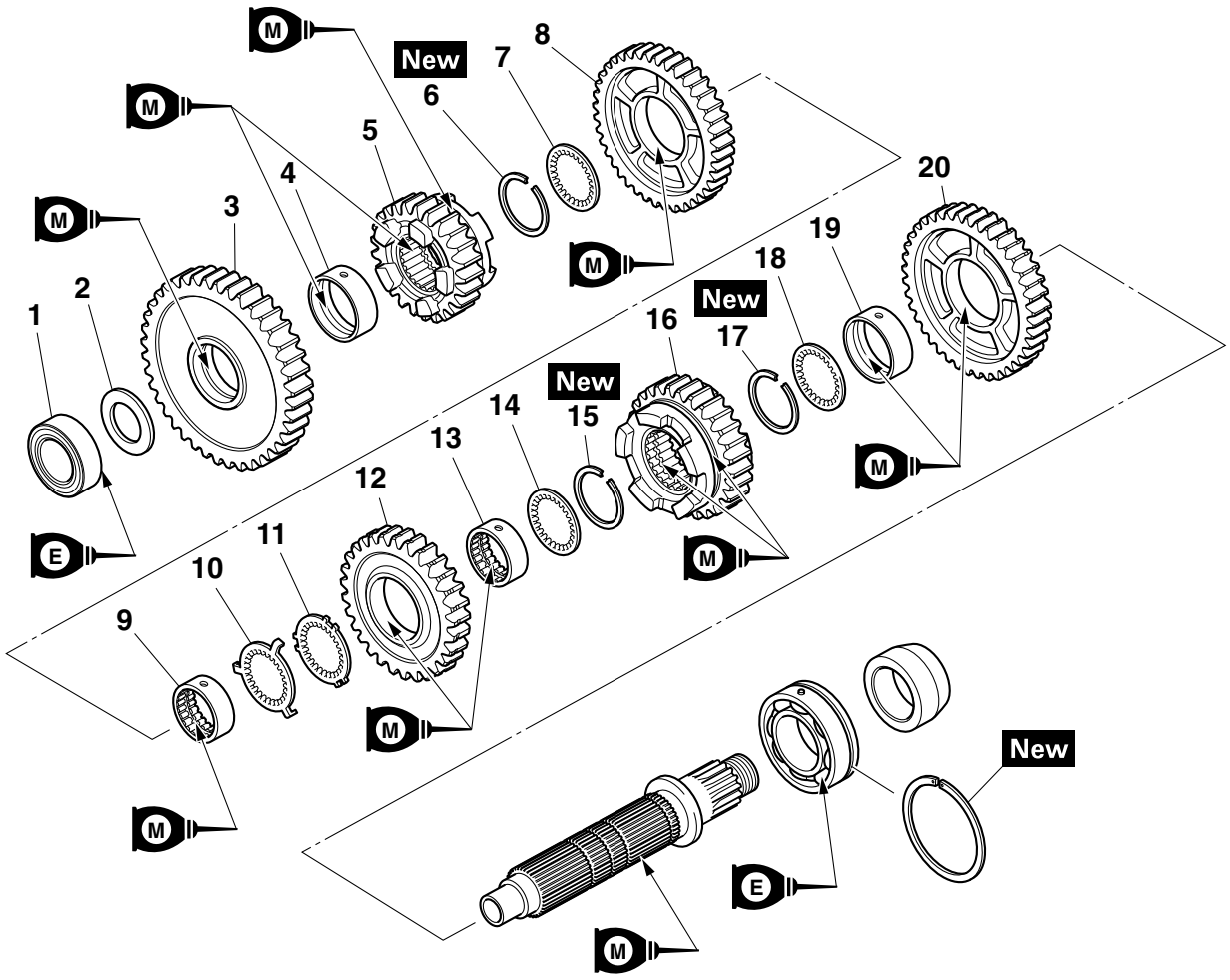

Order	Job/Parts to remove	Q'ty	Remarks
1	Bearing	1	
2	Washer	1	
3	1st wheel gear	1	
4	Collar	1	
5	5th wheel gear	1	
6	Circlip	1	
7	Washer	1	
8	3rd wheel gear	1	
9	Collar	1	
10	Toothed lock washer	1	
11	Toothed lock washer retainer	1	
12	4th wheel gear	1	
13	Collar	1	
14	Washer	1	
15	Circlip	1	
16	6th wheel gear	1	
17	Circlip	1	
18	Washer	1	
19	Collar	1	
20	2nd wheel gear	1	

Disassembling the drive axle assembly

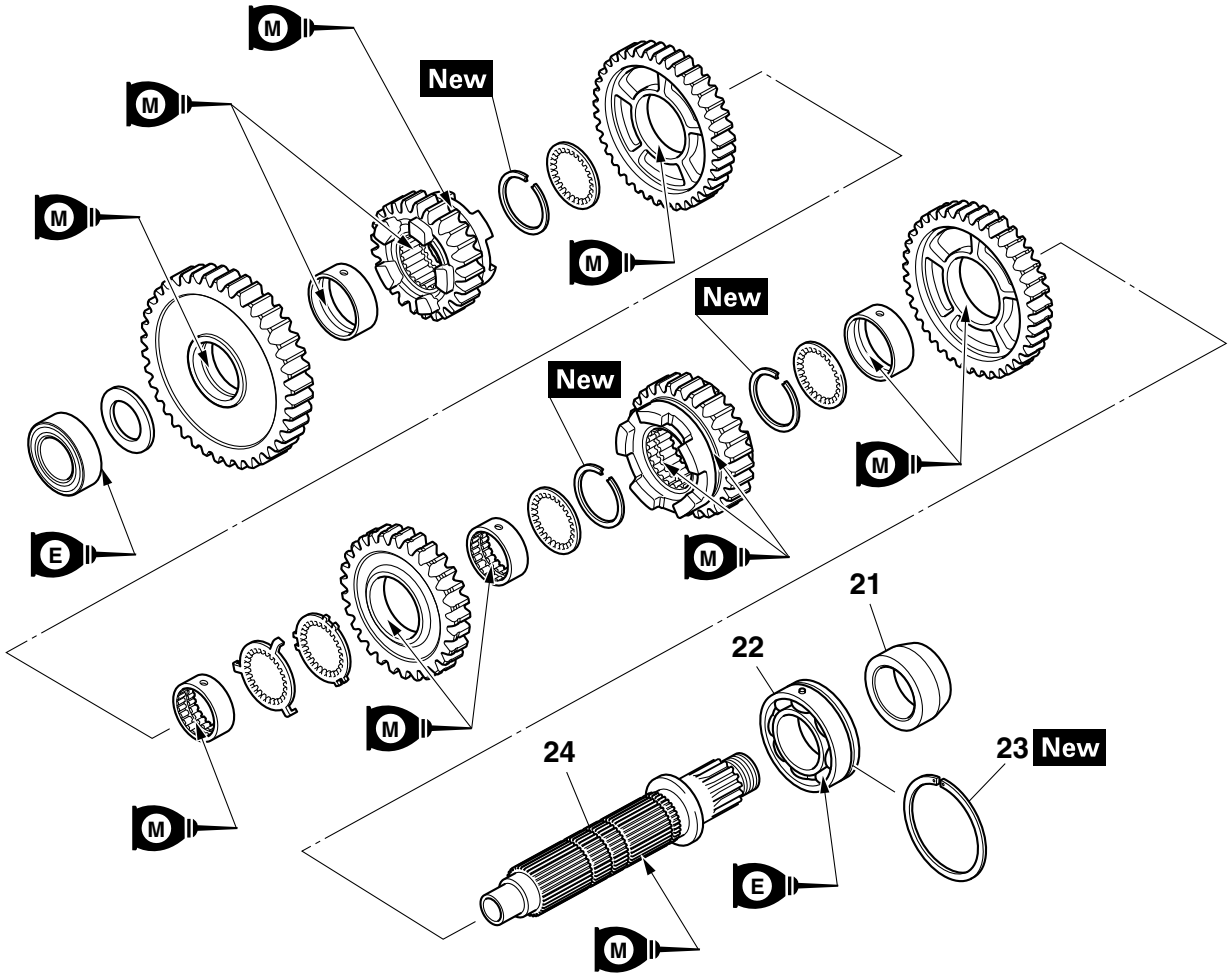

Order	Job/Parts to remove	Q'ty	Remarks
21	Collar	1	
22	Bearing	1	
23	Circlip	1	
24	Drive axle	1	

EAS26250

REMOVING THE TRANSMISSION

1. Remove:
   - Drive axle assembly “1”
   - Shift drum retainers “2”
   - Shift fork guide bars
   - Shift fork-L
   - Shift fork-R
   - Shift drum assembly
   - Shift fork-C

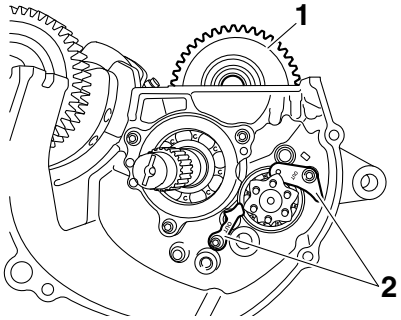

2. Remove:
   - Bearing housing “1”
   - Main axle assembly “2”

▼▼▼▼▼▼▼▼▼▼▼▼▼▼▼▼▼▼▼▼▼▼▼▼▼▼▼▼▼▼▼▼▼▼

a. Insert two bolts “3” of the proper size, as shown in the illustration, into the main axle assembly bearing housing.

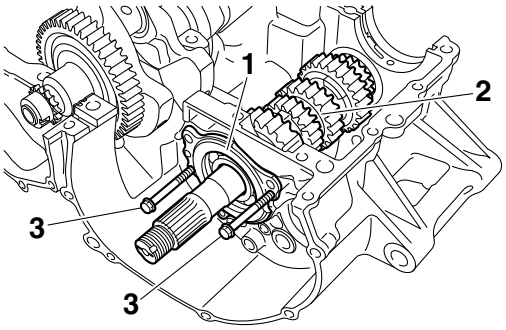

b. Tighten the bolts until they contact the crankcase surface.
c. Continue tightening the bolts until the main axle assembly comes free from the upper crankcase.

▲▲▲▲▲▲▲▲▲▲▲▲▲▲▲▲▲▲▲▲▲▲▲▲▲▲▲▲▲▲▲▲▲▲

3. Remove:
   - Bearing “1”

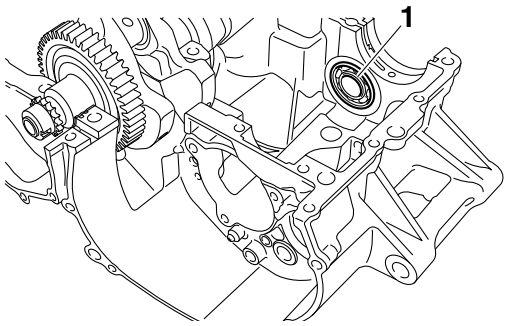

EAS26260

CHECKING THE SHIFT FORKS

The following procedure applies to all of the shift forks.

1. Check:
   - Shift fork cam follower “1”
   - Shift fork pawl “2”
     Bends/damage/scoring/wear → Replace the shift fork.

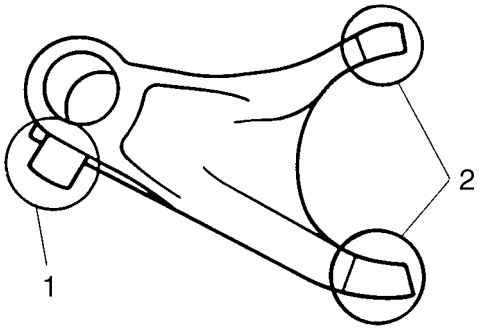

2. Check:
   - Shift fork guide bar
     Roll the shift fork guide bar on a flat surface.
     Bends → Replace.

EWA12840

WARNING

Do not attempt to straighten a bent shift fork guide bar.

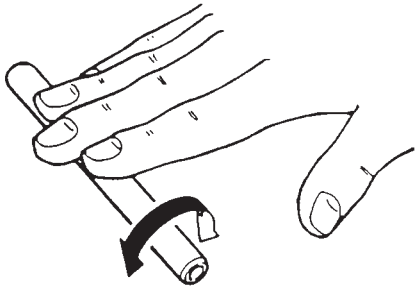

3. Check:
   - Shift fork movement
     (along the shift fork guide bar)
     Rough movement → Replace the shift forks and shift fork guide bar as a set.

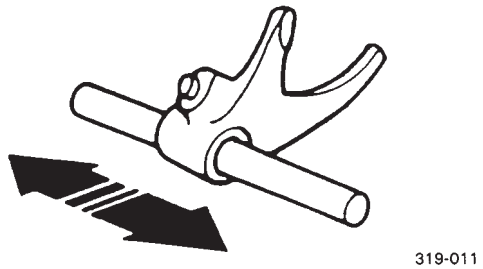

EAS26270

CHECKING THE SHIFT DRUM ASSEMBLY

1. Check:
   - Shift drum groove
     Damage/scratches/wear → Replace the shift drum assembly.
   - Shift drum segment “1”
     Damage/wear → Replace the shift drum assembly.
   - Shift drum bearing “2”
     Damage/pitting → Replace the shift drum assembly.

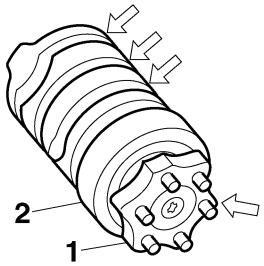

EAS26280

CHECKING THE TRANSMISSION

1. Measure:
   - Main axle runout
     (with a centering device and dial gauge “1”)
     Out of specification → Replace the main axle.

	Main axle runout limit **0.08 mm (0.0032 in)**

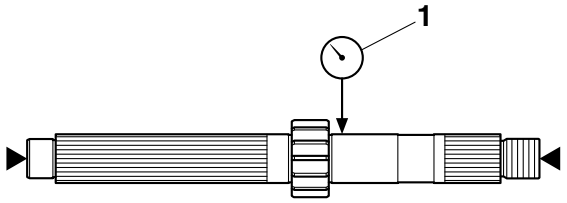

2. Measure:
   - Drive axle runout
     (with a centering device and dial gauge “1”)
     Out of specification → Replace the drive axle.

	Drive axle runout limit **0.08 mm (0.0032 in)**

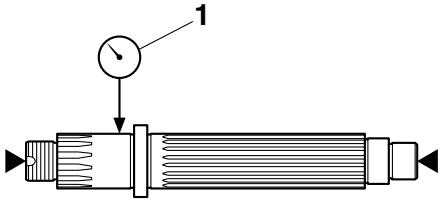

3. Check:
   - Transmission gears
     Blue discoloration/pitting/wear → Replace the defective gear(s).
   - Transmission gear dogs
     Cracks/damage/rounded edges → Replace the defective gear(s).

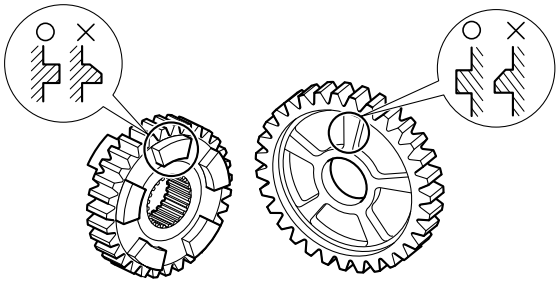

4. Check:
   - Transmission gear engagement
     (each pinion gear to its respective wheel gear)
     Incorrect → Reassemble the transmission axle assemblies.
5. Check:
   - Transmission gear movement
     Rough movement → Replace the defective part(s).
6. Check:
   - Circlips
     Bends/damage/looseness → Replace.

EAS29020

ASSEMBLING THE MAIN AXLE AND DRIVE AXLE

1. Install:
   - Toothed washer “1”
   - Circlip “2” New

TIP

- Be sure the circlip sharp-edged corner “a” is positioned opposite side to the toothed washer and gear.

- Align the opening between the ends “b” of the circlip with a groove “c” in the axle.
- Install the circlip so that a spline “d” is in the center of the gap between the circlip ends “e” as shown.

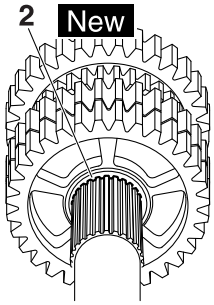

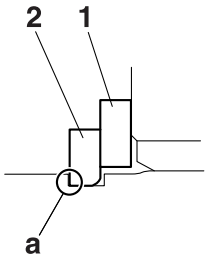

A

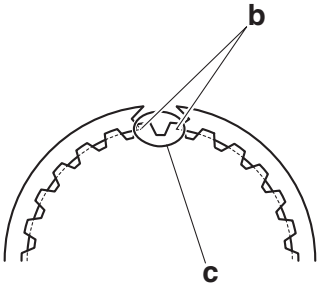

B

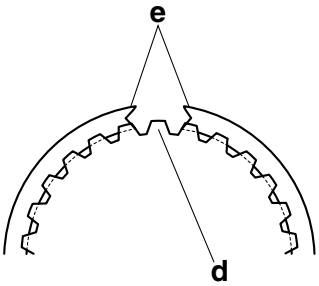

A. Main axle
B. Drive axle

2. Install:
   - Toothed lock washer retainer “1”
   - Toothed lock washer “2”

TIP

- With the toothed lock washer retainer in the groove “a” in the axle, align the projection on the retainer with an axle spline, and then install the toothed lock washer.
- Be sure to align the projection on the toothed lock washer that is between the alignment marks “b” with the alignment mark “c” on the retainer.

A

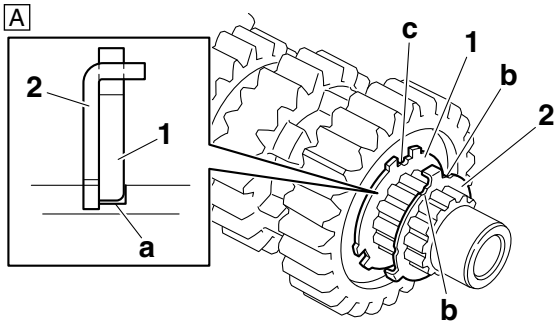

B

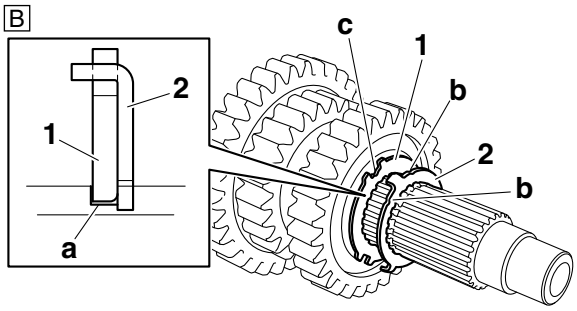

A. Main axle
B. Drive axle

EAS26350

INSTALLING THE TRANSMISSION

1. Install:
   - Bearing “1”

TIP

Face the seal side of bearing to the outside.

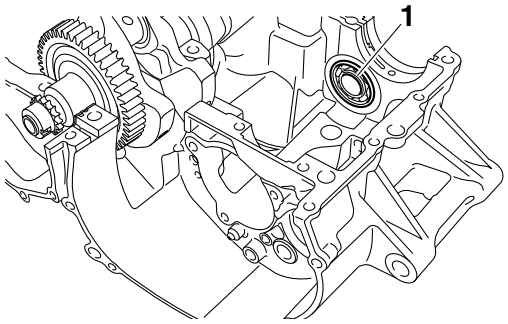

2. Install:
   - Main axle assembly “1”
   - Bearing housing “2”

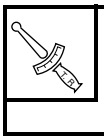

Bearing housing bolt
12 Nm (1.2 m·kgf, 8.7 ft·lbf)
LOCTITE®

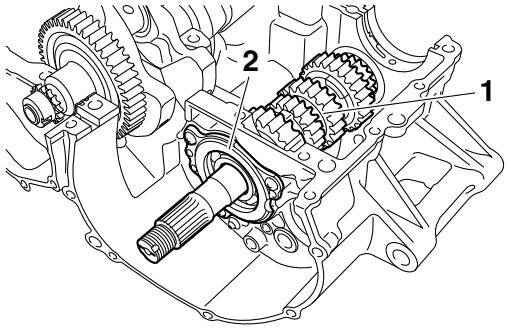

3. Install:
   - Shift fork-C “1”
   - Shift drum assembly “2”
   - Shift fork guide bar “3”

TIP

- The embossed marks on the shift forks should face towards the right side of the engine and be in the following sequence: “R”, “C”, “L”.
- Carefully position the shift forks so that they are installed correctly into the transmission gears.
- Install shift fork-C into the groove “a” in the 3rd and 4th pinion gear on the main axle.

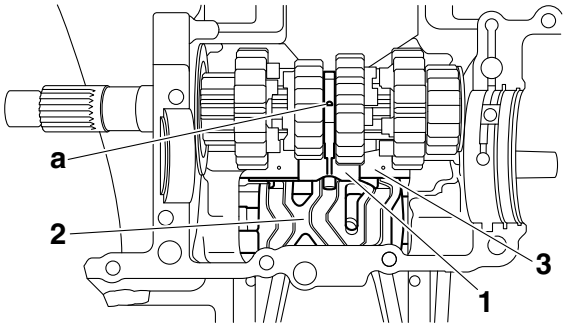

4. Install:
   - Shift fork-R “1”
   - Shift fork-L “2”
   - Shift fork guide bar
   - Shift drum retainers “3”
   - Bearing
   - Oil seal New
   - Circlip “4” New
   - Drive axle assembly “5”

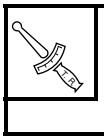

Shift drum retainer bolt
10 Nm (1.0 m·kgf, 7.2 ft·lbf)
LOCTITE®

TIP

- Install shift fork-R into the groove “a” in the 5th wheel gear and shift fork-L into the groove “b” in the 6th wheel gear on the drive axle.
- Install the shift drum retainer with its “OUT” mark “c” facing outward.
- Touch the protrusion “d” on the shift fork guide bar to the side of the shift drum retainer.
- Make sure that the drive axle bearing circlip “4” is inserted into the grooves “e” in the upper crankcase.

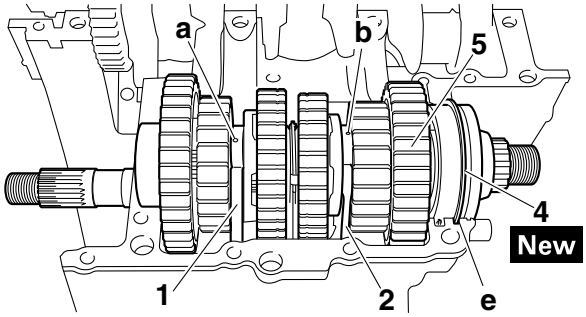

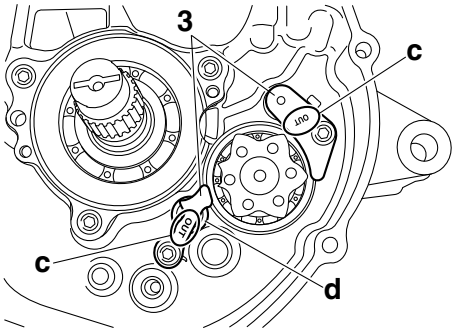

5. Check:
   - Transmission
     Rough movement → Repair.

TIP

Oil each gear, shaft, and bearing thoroughly.

COOLING SYSTEM

EAS26380

RADIATOR

Removing the radiator

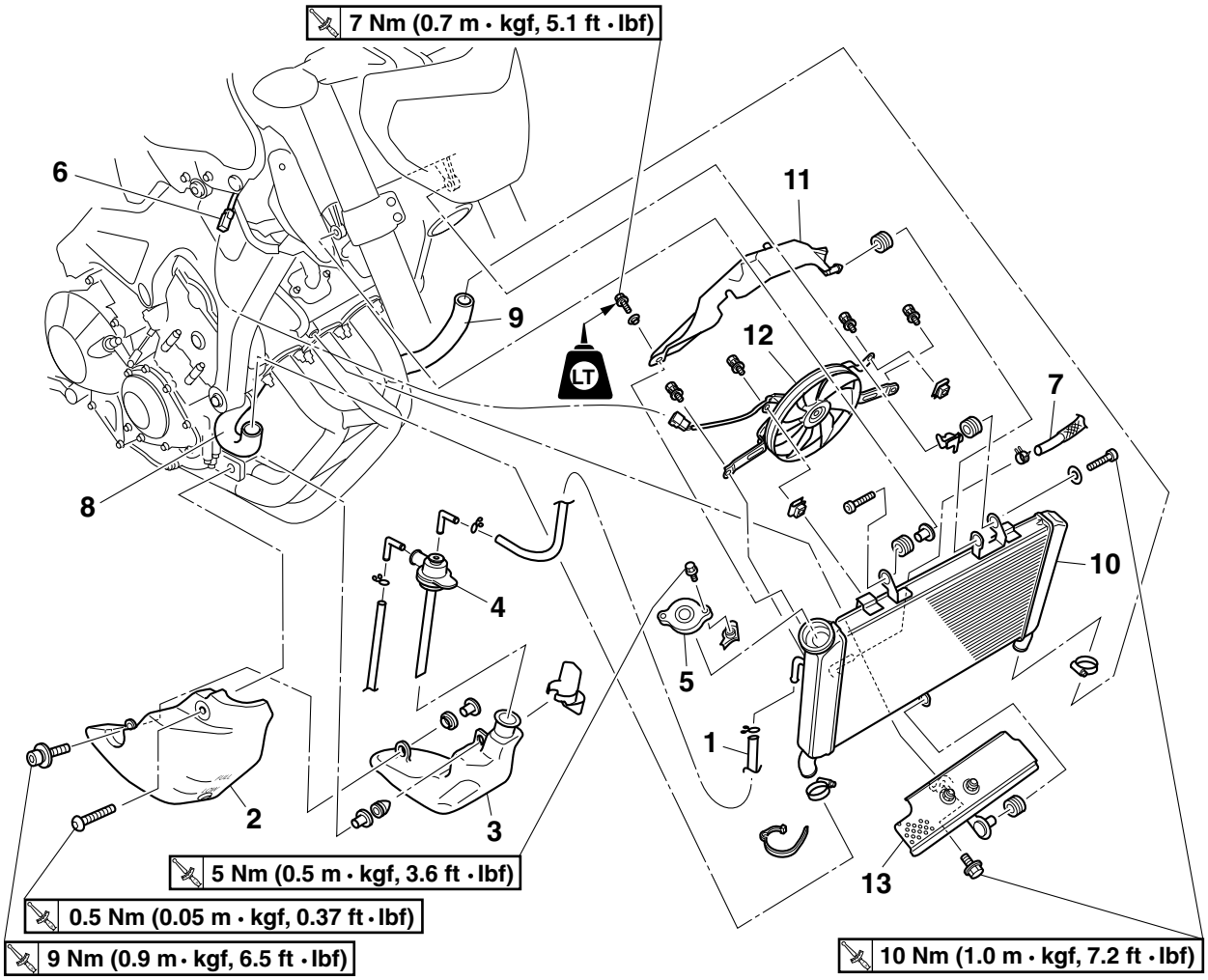

Order	Job/Parts to remove	Q'ty	Remarks
	Air scoop (right)		Refer to "GENERAL CHASSIS" on page 4-1.
	Coolant		Drain. Refer to "CHANGING THE COOLANT" on page 3-26.
1	Coolant reservoir hose	1	Disconnect.
2	Coolant reservoir cover	1	
3	Coolant reservoir	1	
4	Coolant reservoir cap	1	
5	Radiator cap	1	
6	Radiator fan motor coupler	1	Disconnect.
7	Radiator hose (cylinder head to radiator)	1	Disconnect.
8	Radiator inlet hose	1	Disconnect.
9	Radiator outlet hose	1	Disconnect.
10	Radiator	1	
11	Radiator fan cover	1	
12	Radiator fan	1	
13	Radiator stay	1	

EAS26390

CHECKING THE RADIATOR

1. Check:
   - Radiator fins
     Obstruction → Clean.
     Apply compressed air to the rear of the radiator.
     Damage → Repair or replace.

TIP

Straighten any flattened fins with a thin, flat-head screwdriver.

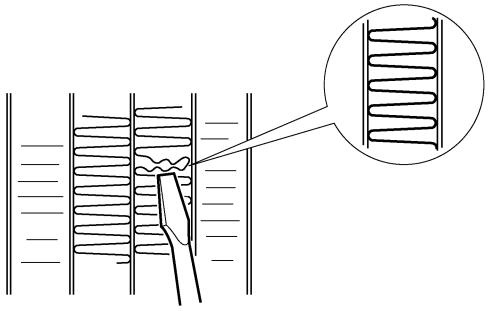

2. Check:
   - Radiator hoses
   - Radiator pipes
     Cracks/damage → Replace.
3. Measure:
   - Radiator cap opening pressure
     Below the specified pressure → Replace the radiator cap.

Radiator cap opening pressure
93.3–122.7 kPa (0.93–1.23 kgf/cm^2, 13.5–17.8 psi)

▼▼▼▼▼▼▼▼▼▼▼▼▼▼▼▼▼▼▼▼▼▼▼▼▼▼▼▼▼▼▼▼▼▼

a. Install the radiator cap tester "1" and radiator cap tester adapter "2" to the radiator cap "3".

Radiator cap tester
90890-01325
Mityvac cooling system tester kit
YU-24460-A
Radiator cap tester adapter
90890-01352
Pressure tester adapter
YU-33984

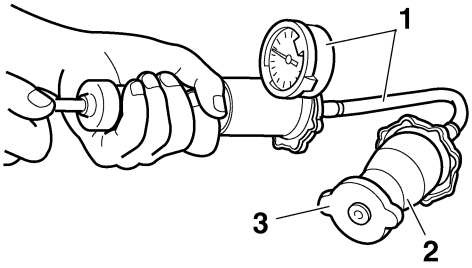

b. Apply the specified pressure for ten seconds and make sure there is no drop in pressure.

▲▲▲▲▲▲▲▲▲▲▲▲▲▲▲▲▲▲▲▲▲▲▲▲▲▲▲▲▲▲▲▲▲▲

4. Check:
   - Radiator fan
     Damage → Replace.
     Malfunction → Check and repair.
     Refer to "COOLING SYSTEM" on page 8-27.

EAS26400

INSTALLING THE RADIATOR

1. Fill:
   - Cooling system
     (with the specified amount of the recommended coolant)
     Refer to "CHANGING THE COOLANT" on page 3-26.
2. Check:
   - Cooling system
     Leaks → Repair or replace any faulty part.

▼▼▼▼▼▼▼▼▼▼▼▼▼▼▼▼▼▼▼▼▼▼▼▼▼▼▼▼▼▼▼▼▼▼

a. Attach the radiator cap tester "1" and radiator cap tester adapter "2" to the radiator.

Radiator cap tester
90890-01325
Mityvac cooling system tester kit
YU-24460-A
Radiator cap tester adapter
90890-01352
Pressure tester adapter
YU-33984

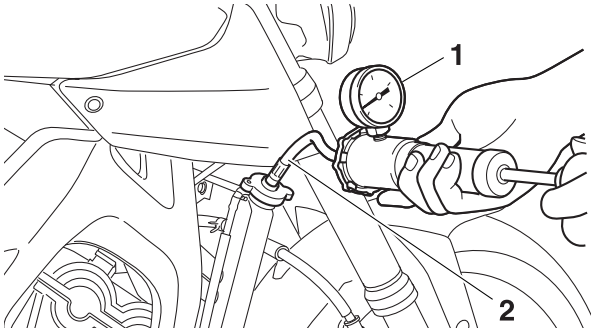

b. Apply 122.7 kPa (1.23 kgf/cm^2, 17.8 psi) of

pressure.

c. Measure the indicated pressure with the gauge.

▲▲▲▲▲▲▲▲▲▲▲▲▲▲▲▲▲▲▲▲▲▲▲▲▲▲▲▲▲▲▲▲▲▲

3. Measure:
   - Radiator cap opening pressure
     Below the specified pressure → Replace the radiator cap.
     Refer to “CHECKING THE RADIATOR” on page 6-2.

EAS26410

OIL COOLER

Removing the oil cooler

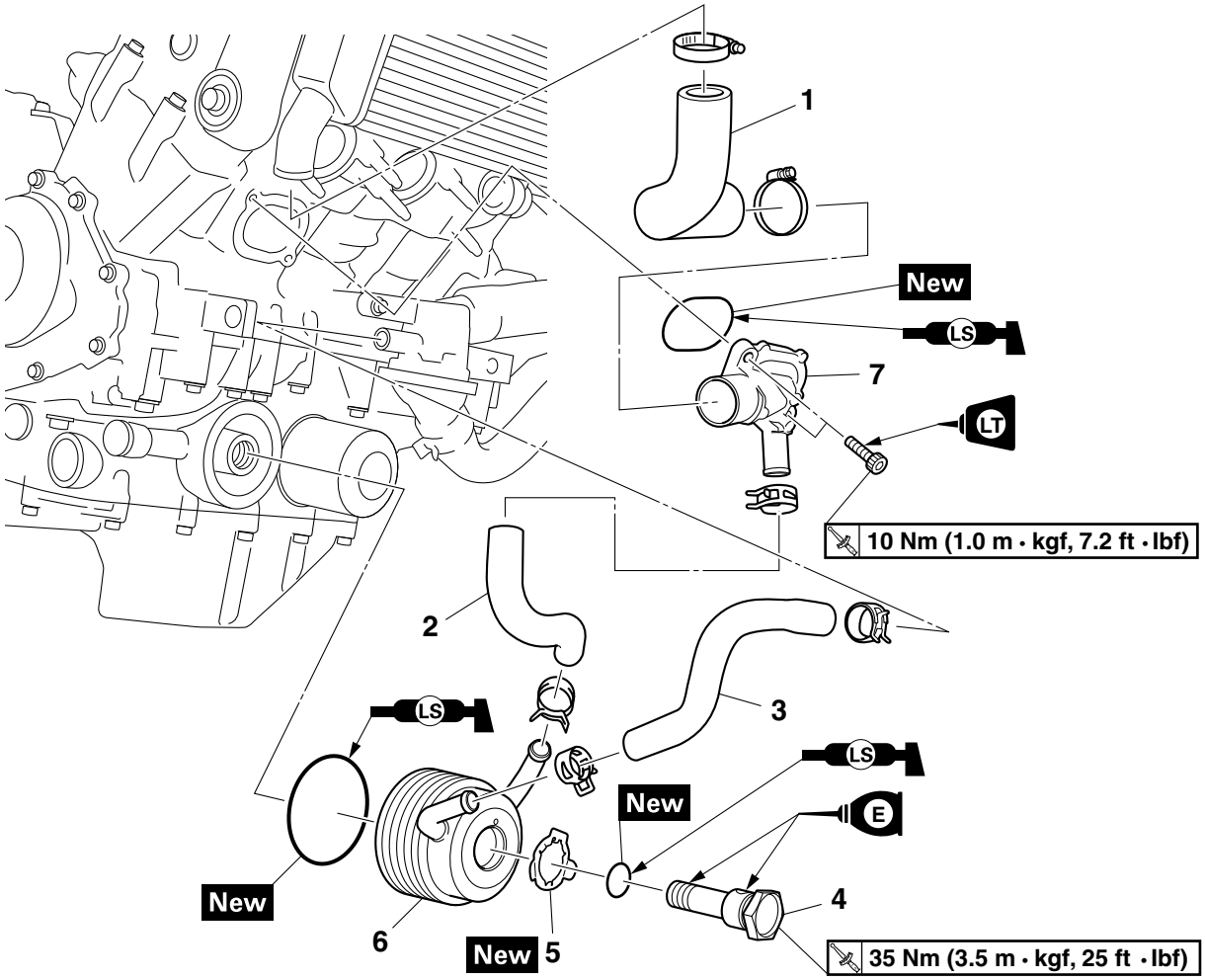

Order	Job/Parts to remove	Q'ty	Remarks
	Coolant reservoir		Refer to "RADIATOR" on page 6-1.
	Muffler assembly		Refer to "ENGINE REMOVAL" on page 5-3.
	Coolant		Drain. Refer to "CHANGING THE COOLANT" on page 3-26.
	Engine oil		Drain. Refer to "CHANGING THE ENGINE OIL" on page 3-23.
1	Radiator inlet hose	1	
2	Oil cooler inlet hose	1	
3	Oil cooler outlet hose	1	
4	Oil cooler union bolt	1	
5	Washer	1	
6	Oil cooler	1	
7	Water jacket joint	1	

EAS26420
CHECKING THE OIL COOLER
1. Check:
   - Oil cooler
     Cracks/damage → Replace.
2. Check:
   - Oil cooler inlet hose
   - Oil cooler outlet hose
     Cracks/damage/wear → Replace.

EAS26430
INSTALLING THE OIL COOLER
1. Clean:
   - Mating surfaces of the oil cooler and the crankcase
     (with a cloth dampened with lacquer thinner)
2. Install:
   - O-ring New
   - Oil cooler "1"
   - Washer "2" New
   - Oil cooler union bolt "3"

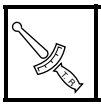	**Oil cooler union bolt** **35 Nm (3.5 m·kgf, 25 ft·lbf)**

TIP
- Before installing the oil cooler, apply engine oil lightly to the oil cooler union bolt and apply lithium-soap-based grease to the O-ring.
- Make sure the O-ring is positioned properly.
- Align the projection "a" on the oil cooler with the slot "b" in the crankcase.
- After installing the oil cooler union bolt, bend the tab "c" of the washer.

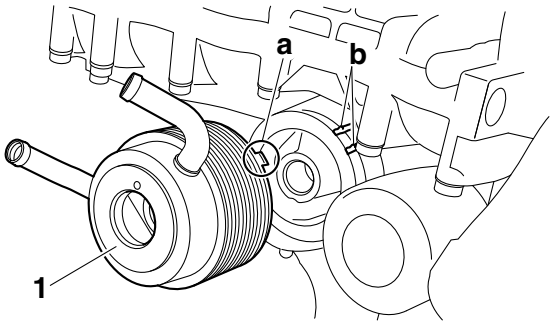

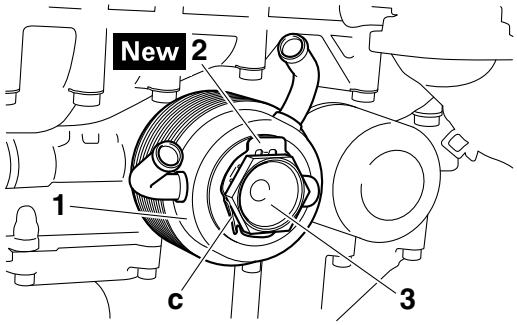

3. Fill:
   - Cooling system
     (with the specified amount of the recommended coolant)
     Refer to "CHANGING THE COOLANT" on page 3-26.
   - Crankcase
     (with the specified amount of the recommended engine oil)
     Refer to "CHANGING THE ENGINE OIL" on page 3-23.
4. Check:
   - Cooling system
     Leaks → Repair or replace any faulty part.
     Refer to "INSTALLING THE RADIATOR" on page 6-2.
5. Measure:
   - Radiator cap opening pressure
     Below the specified pressure → Replace the radiator cap.
     Refer to "CHECKING THE RADIATOR" on page 6-2.

EAS26440

THERMOSTAT

Removing the thermostat assembly

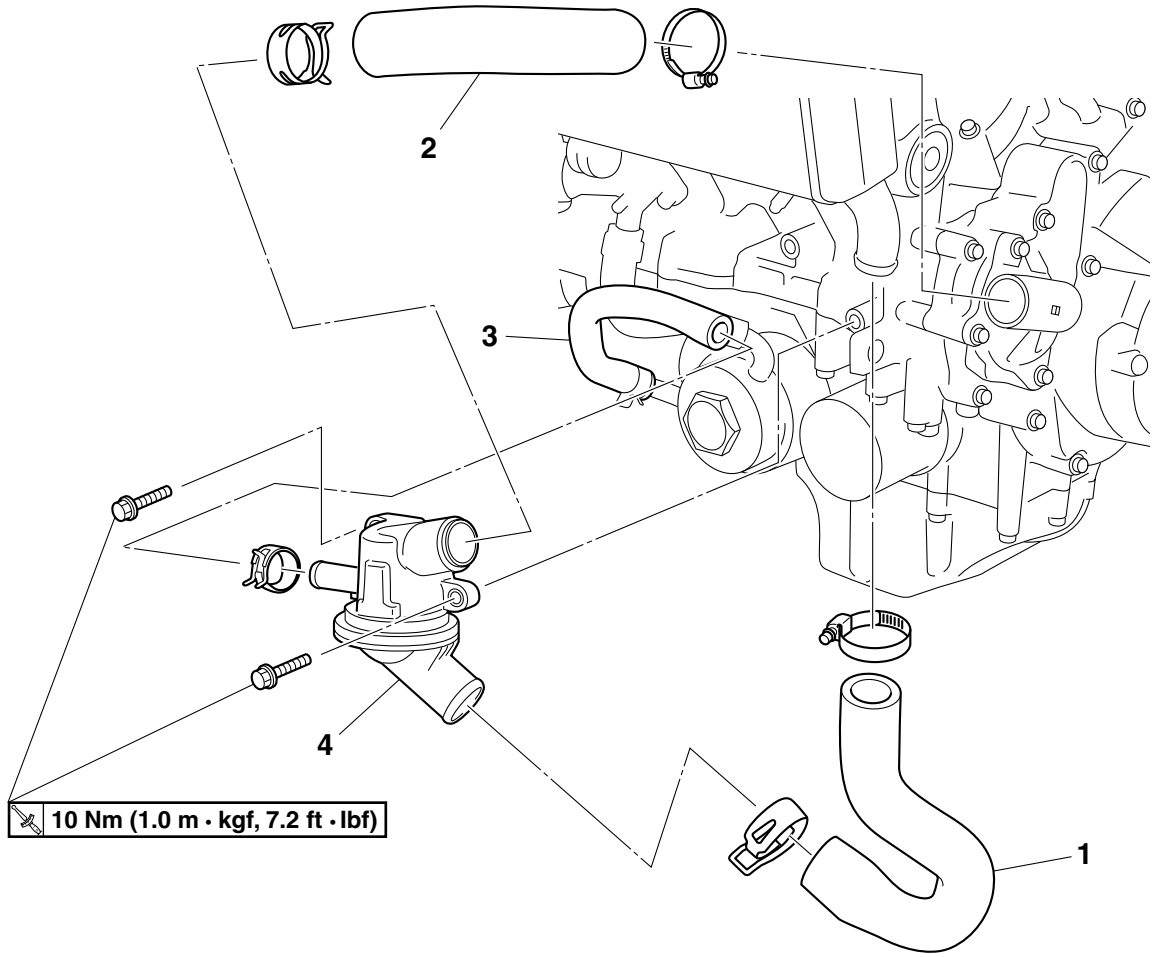

Order	Job/Parts to remove	Q'ty	Remarks
	Muffler assembly		Refer to "ENGINE REMOVAL" on page 5-3.
	Coolant		Drain. Refer to "CHANGING THE COOLANT" on page 3-26.
1	Radiator outlet hose	1	
2	Water pump inlet hose	1	
3	Oil cooler outlet hose	1	Disconnect.
4	Thermostat assembly	1	

EAS26450

CHECKING THE THERMOSTAT

1. Check:
   - Thermostat assembly “1”
     Cracks/damage → Replace.

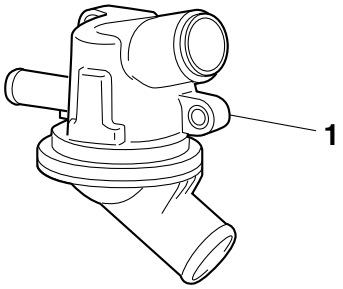

EAS26480

INSTALLING THE THERMOSTAT ASSEMBLY

1. Fill:
   - Cooling system
     (with the specified amount of the recommended coolant)
     Refer to “CHANGING THE COOLANT” on page 3-26.
2. Check:
   - Cooling system
     Leaks → Repair or replace any faulty part.
     Refer to “INSTALLING THE RADIATOR” on page 6-2.
3. Measure:
   - Radiator cap opening pressure
     Below the specified pressure → Replace the radiator cap.
     Refer to “CHECKING THE RADIATOR” on page 6-2.

EAS26500

WATER PUMP

Removing the water pump

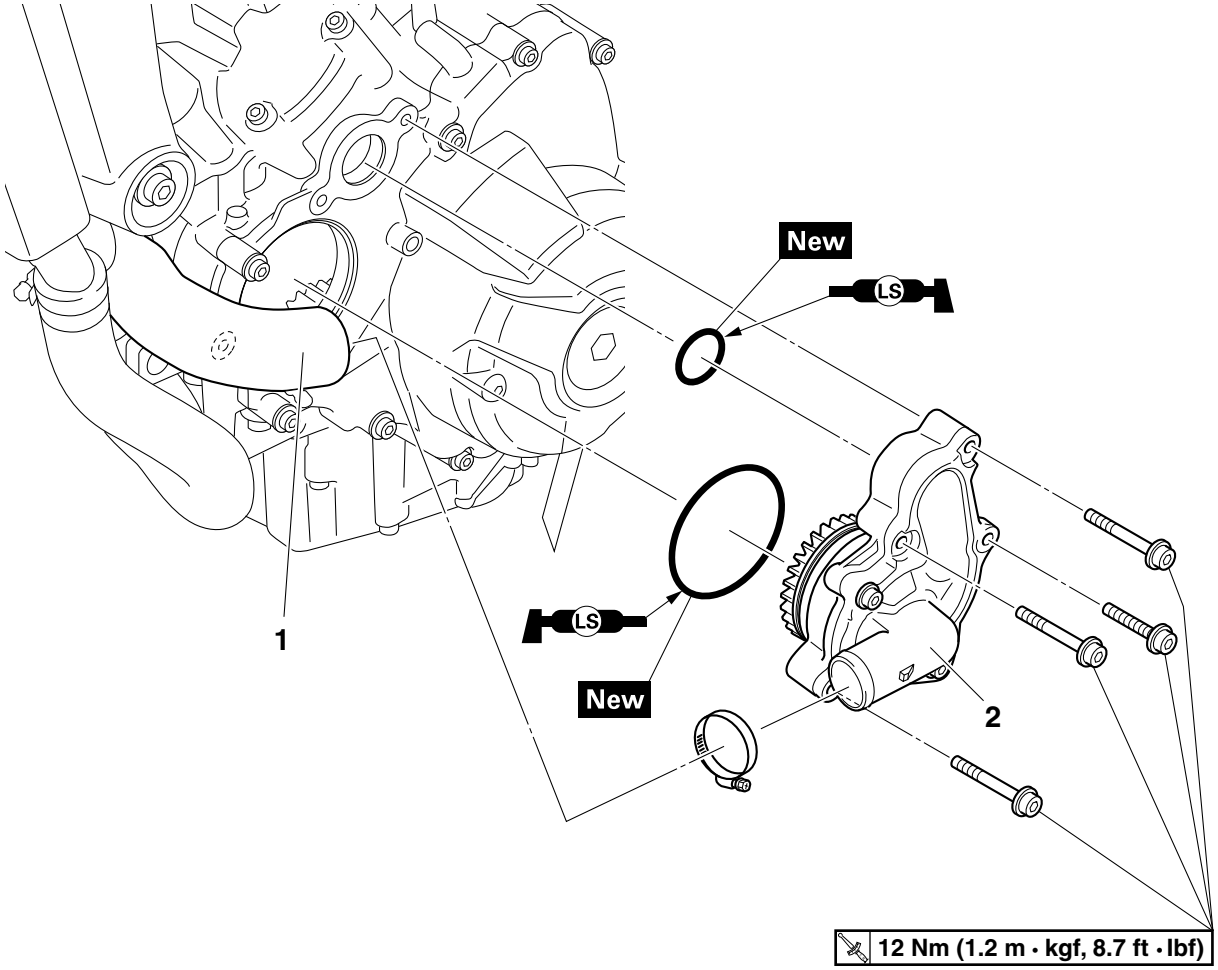

Order	Job/Parts to remove	Q'ty	Remarks
	Coolant		Drain. Refer to "CHANGING THE COOLANT" on page 3-26.
1	Water pump inlet hose	1	Disconnect.
2	Water pump assembly	1	

Disassembling the water pump

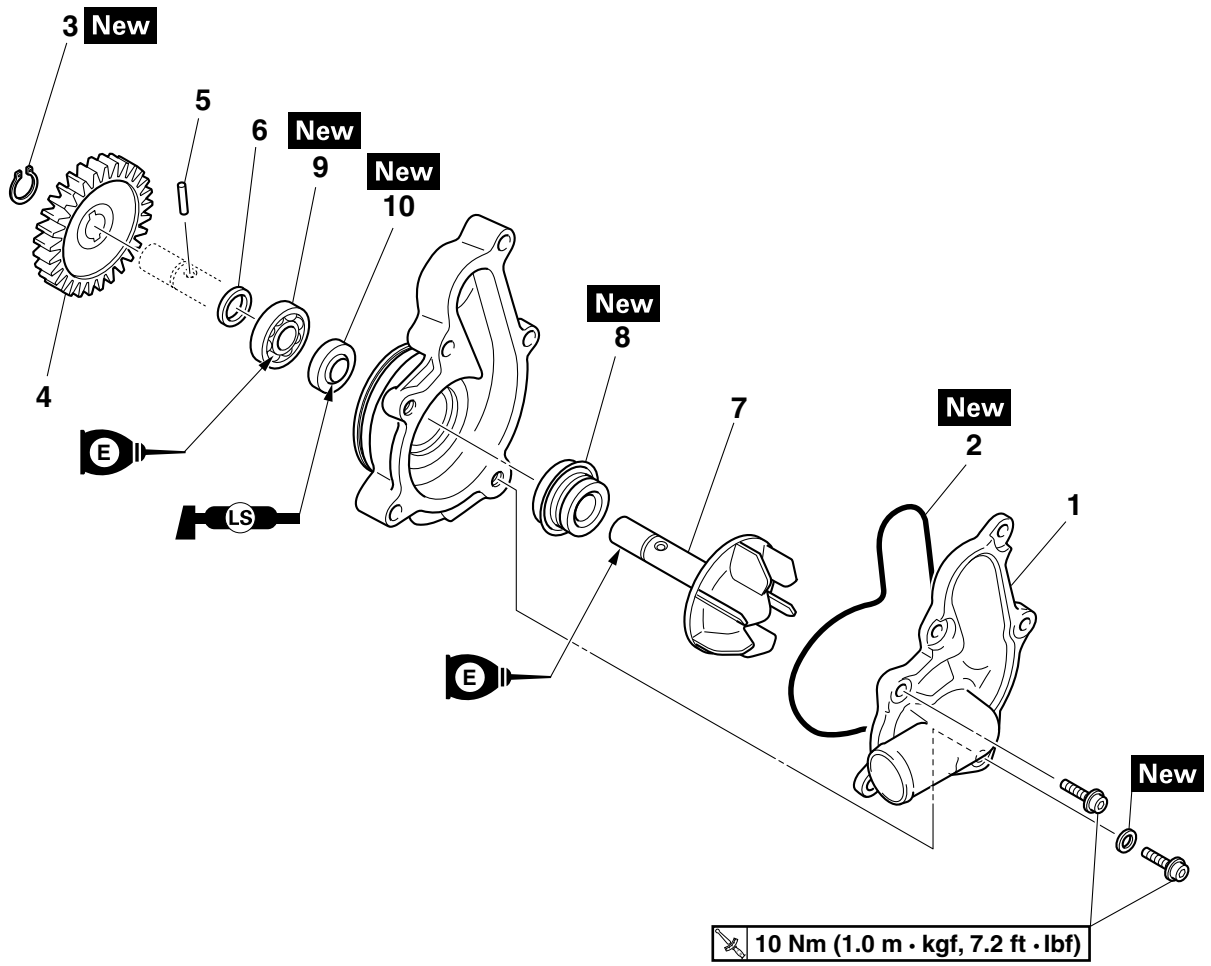

Order	Job/Parts to remove	Q'ty	Remarks
1	Water pump housing cover	1	
2	O-ring	1	
3	Circlip	1	
4	Water pump driven gear	1	
5	Pin	1	
6	Washer	1	
7	Impeller shaft	1	
8	Mechanical seal	1	
9	Bearing	1	
10	Oil seal	1	

EAS26520
DISASSEMBLING THE WATER PUMP
1. Remove:
   • Mechanical seal (housing side) “1”

TIP
Remove the mechanical seal (housing side) from the inside of the water pump housing “2”.

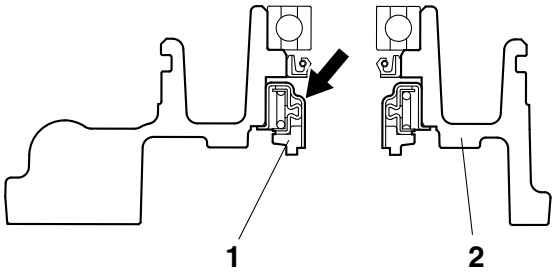

2. Remove:
   • Bearing “1”
   • Oil seal “2”

TIP
Remove the oil seal and bearing from the outside of the water pump housing “3”.

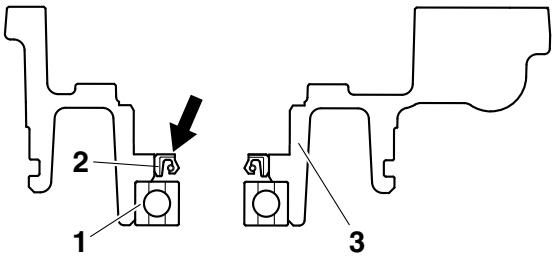

3. Remove:
   • Mechanical seal (impeller side) “1”
   (from the impeller, with a thin, flat-head screwdriver)

TIP
Do not scratch the impeller shaft.

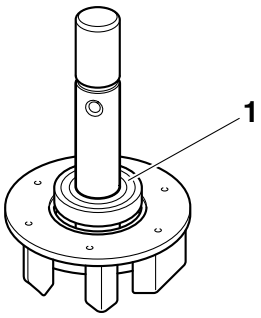

EAS26541
CHECKING THE WATER PUMP
1. Check:
   • Water pump housing cover “1”
   • Impeller “2”
   Cracks/damage/wear → Replace.
   • Water pump housing “3”
   Cracks/damage/wear → Replace the water pump assembly.

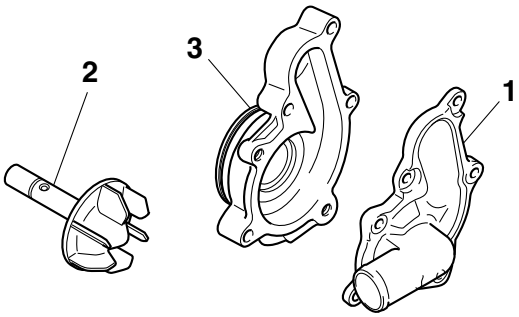

2. Check:
   • Bearing
   Rough movement → Replace.
3. Check:
   • Water pump inlet pipe
   Cracks/damage/wear → Replace.

EAS26560
ASSEMBLING THE WATER PUMP
1. Install:
   • Oil seal “1” New
   • Bearing “2” New
   (into the water pump housing “3”)

	**Installed depth “a”** **0.5–1.0 mm (0.02–0.04 in)**

TIP
Install the oil seal with a socket that matches its outside diameter.

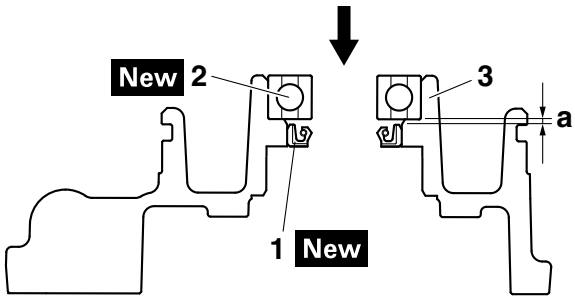

2. Install:
   • Mechanical seal (housing side) “1” New

ECA1RC1601
NOTICE
Never lubricate the mechanical seal surface

with oil or grease.

TIP

Use the special tools and a press to press the mechanical seal (housing side) straight in until it touches the water pump housing.

	Mechanical seal installer **90890-04078** **Water pump seal installer** **YM-33221-A** **Middle driven shaft bearing driver** **90890-04058** **Middle drive bearing installer 40 & 50 mm** **YM-04058**

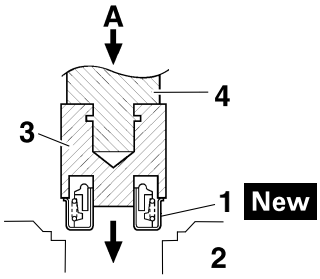

2. Water pump housing
3. Mechanical seal installer
4. Middle driven shaft bearing driver

A. Push down

3. Install:
   - Mechanical seal (impeller side) “1” New

TIP

- Before installing the mechanical seal (impeller side), apply tap water or coolant onto its outer surface.
- If the top of the mechanical seal is dirty, clean it.

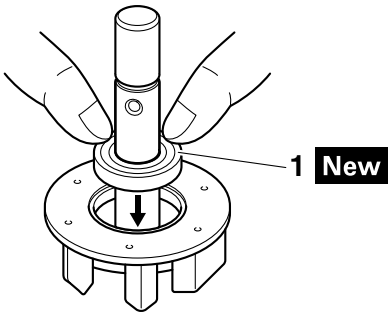

4. Measure:
   - Impeller shaft tilt
     Out of specification → Repeat steps (3) and (4).

ECA1RC1602

NOTICE

Make sure the mechanical seal (impeller side) is flush with the impeller.

	Impeller shaft tilt limit **0.15 mm (0.006 in)**

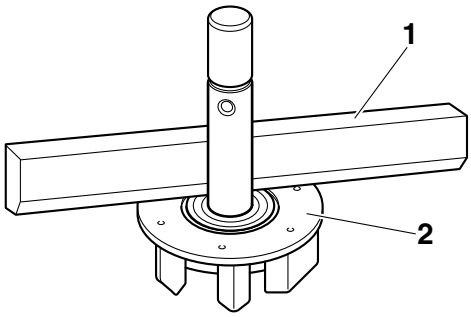

1. Straightedge
2. Impeller

FUEL SYSTEM

EAS26620

FUEL TANK

Removing the fuel tank

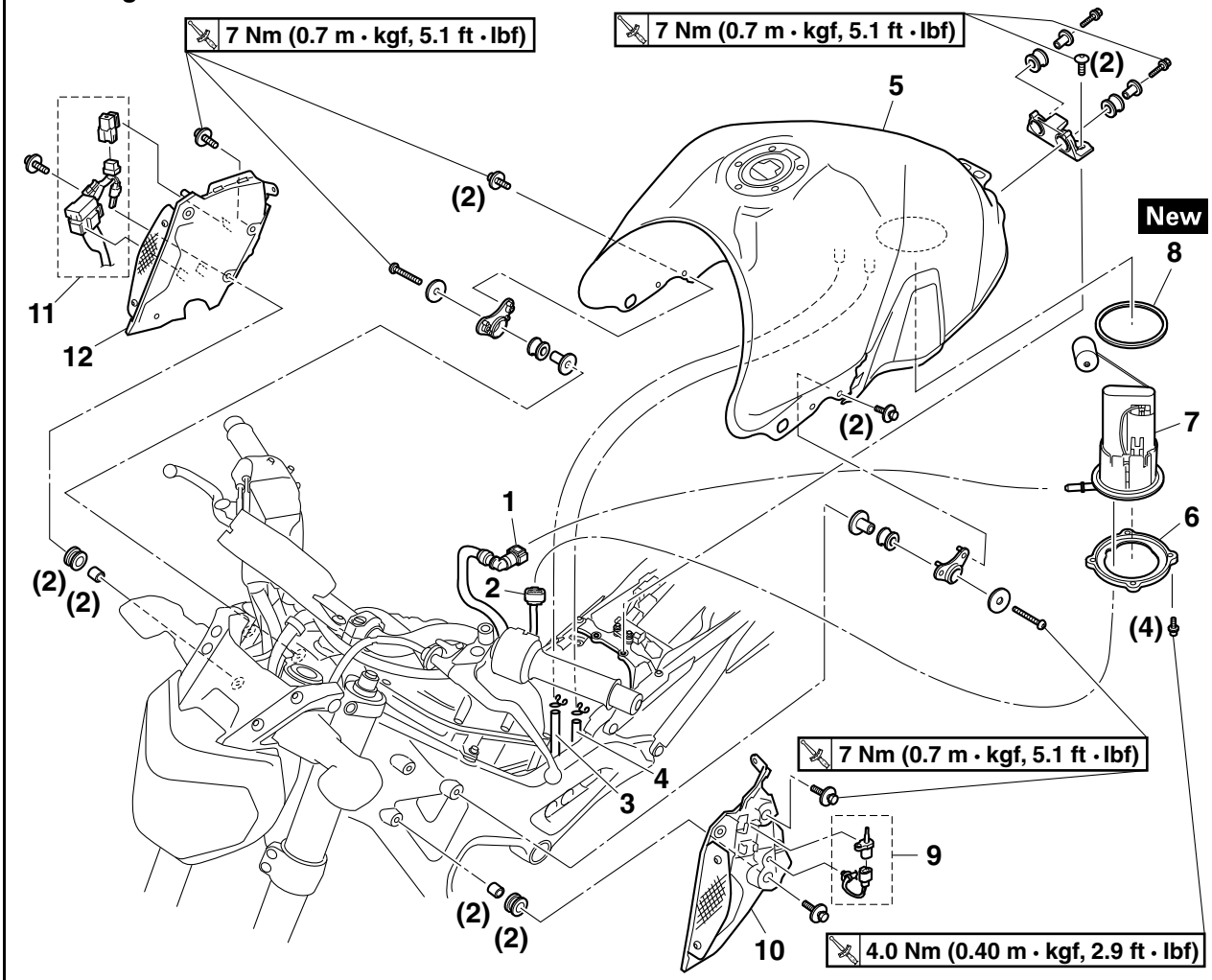

Order	Job/Parts to remove	Q'ty	Remarks
	Rider seat		Refer to "GENERAL CHASSIS" on page 4-1.
	Air scoop/Fuel tank cover		Refer to "GENERAL CHASSIS" on page 4-1.
1	Fuel hose connector	1	Disconnect.
2	Fuel pump coupler	1	Disconnect.
3	Fuel tank breather hose	1	Disconnect.
4	Fuel tank drain hose	1	Disconnect.
5	Fuel tank	1	
6	Fuel pump bracket	1	
7	Fuel pump	1	
8	Fuel pump gasket	1	
9	Wire harness assembly (intake air temperature sensor)	1	
10	Air scoop stay (left)	1	
11	Wire harness assembly (headlight relay/fuse box 1/radiator fan motor coupler)	1	
12	Air scoop stay (right)	1	

Removing the rollover valve and canister (for California only)

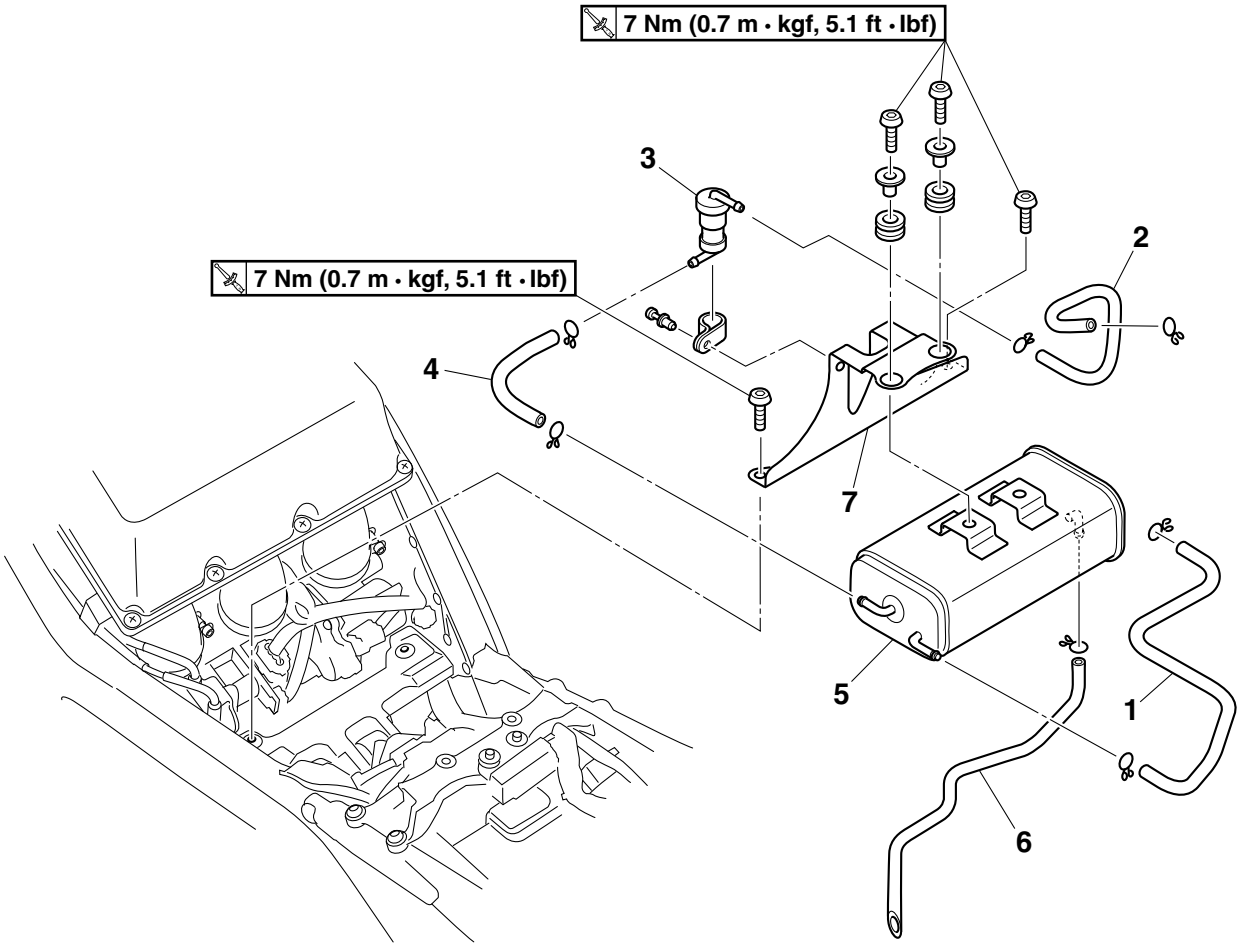

Order	Job/Parts to remove	Q'ty	Remarks
	Rider seat		Refer to "GENERAL CHASSIS" on page 4-1.
	Air scoop/Fuel tank cover		Refer to "GENERAL CHASSIS" on page 4-1.
	Fuel tank		Refer to "FUEL TANK" on page 7-1.
1	Canister purge hose (hose joint to canister)	1	
2	Fuel tank breather hose (fuel tank to rollover valve)	1	
3	Rollover valve	1	
4	Fuel tank breather hose (rollover valve to canister)	1	
5	Canister	1	
6	Canister breather hose	1	
7	Canister bracket	1	

EAS1RC1701

REMOVING THE FUEL TANK

1. Extract the fuel in the fuel tank through the fuel tank cap with a pump.
2. Remove:
   - Rider seat
   - Air scoop/Fuel tank cover
     Refer to “GENERAL CHASSIS” on page 4-1.
3. Disconnect:
   - Fuel hose (fuel tank side)
   - Fuel pump coupler
   - Fuel tank drain hose
   - Fuel tank breather hose

EWA1RC1702

WARNING

Cover fuel hose connection with a cloth when disconnecting them. Residual pressure in the fuel lines could cause fuel to spurt out when removing the hose.

ECA1RC1707

NOTICE

Be sure to disconnect the fuel hose by hand. Do not forcefully disconnect the hose with tools.

TIP

- To remove the fuel hose from the fuel pump, slide the fuel hose connector cover “1” on the end of the hose in the direction of the arrow shown, press the two buttons “2” on the sides of the connector, and then remove the hose.
- Before removing the hose, place a few rags in the area under where it will be removed.
- It is prohibited to wear the cotton work gloves or equivalent coverings.

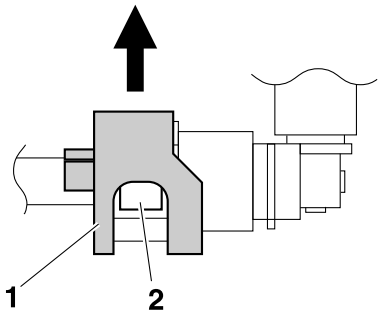

4. Remove:
   - Fuel tank

TIP

Do not set the fuel tank down so that the installation surface of the fuel pump is directly under the tank. Be sure to lean the fuel tank in an upright position.

EAS26640

REMOVING THE FUEL PUMP

1. Remove:
   - Fuel pump

ECA14720

NOTICE

- **Do not drop the fuel pump or give it a strong shock.**
- **Do not touch the base section of the fuel sender.**

EAS1RC1702

CHECKING THE FUEL PUMP BODY

1. Check:
   - Fuel pump body
     Obstruction → Clean.
     Cracks/damage → Replace fuel pump assembly.

EAS26690

CHECKING THE FUEL PUMP OPERATION

1. Check:
   - Fuel pump operation
     Refer to “CHECKING THE FUEL PRESSURE” on page 7-11.

EAS1RC1718

CHECKING THE ROLLOVER VALVE (for California only)

1. Check:
   - Rollover valve “1”
     Damage/faulty → Replace.

TIP

- Check that air flows smoothly only in the direction of the arrow shown in the illustration.
- The rollover valve must be in an upright position when checking the airflow.

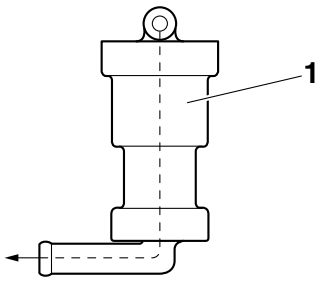

EAS1RC1703

INSTALLING THE FUEL PUMP

1. Install:
   - Fuel pump gasket New
   - Fuel pump
   - Fuel pump bracket
   - Fuel pump bolts

	**Fuel pump bolt** **4.0 Nm (0.40 m·kgf, 2.9 ft·lbf)**

TIP
- Do not damage the installation surfaces of the fuel tank when installing the fuel pump.
- Always use a new fuel pump gasket.
- Install the fuel pump gasket so that the lip side turns to the inside of the fuel tank.
- Install the fuel pump as shown in the illustration.
- Align the projection “a” on the fuel pump with the slot in the fuel pump bracket.
- Tighten the fuel pump bolts in the proper tightening sequence as shown.

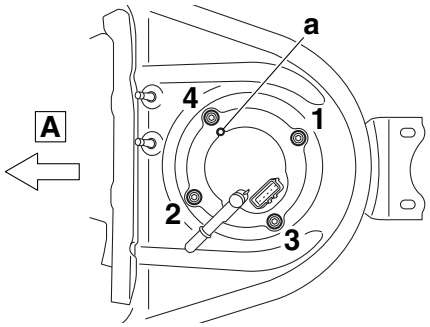

A. Forward

EAS1RC1704
INSTALLING THE FUEL TANK

1. Connect:
   - Fuel hose (fuel tank side)

ECA1RC1708
NOTICE

When installing the fuel hose, make sure that it is securely connected, and that the fuel hose connector cover on the fuel hose is in the correct position, otherwise the fuel hose will not be properly installed.

TIP
- Install the fuel hose securely onto the fuel pump until a distinct “click” is heard.
- To install the fuel hose onto the fuel pump, slide the fuel hose connector cover “1” on the end of the hose in the direction of the arrow shown.
- It is prohibited to wear the cotton work gloves or equivalent coverings.

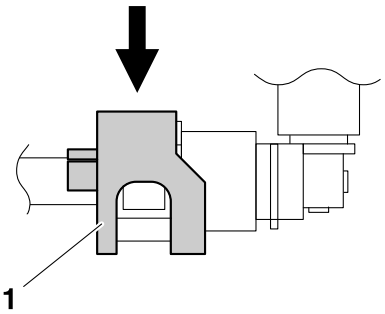

2. Connect:
   - Fuel tank breather hose
   - Fuel tank drain hose
   - Fuel pump coupler

EAS26970

THROTTLE BODIES

Removing the throttle bodies

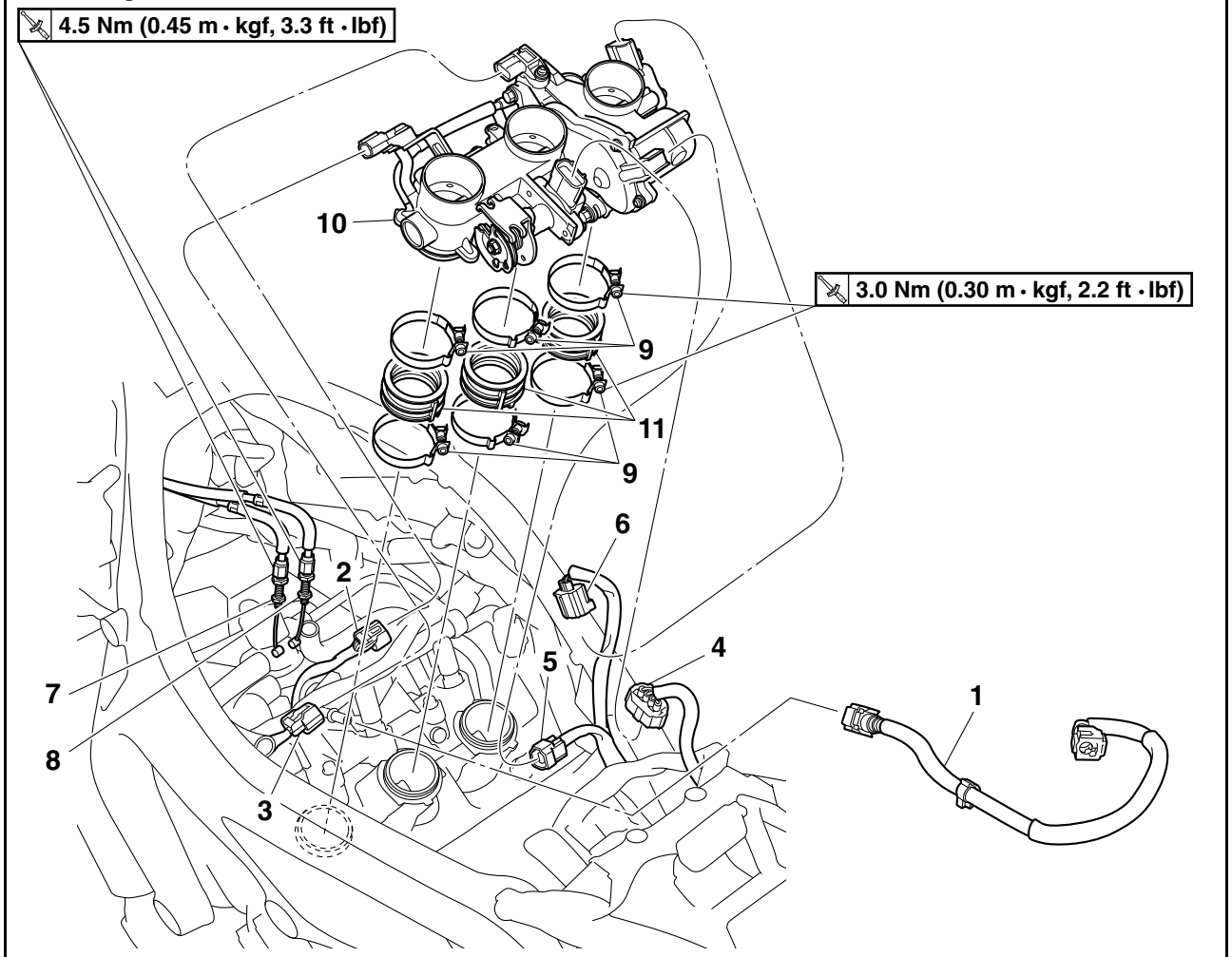

Order	Job/Parts to remove	Q'ty	Remarks
	Rider seat		Refer to "GENERAL CHASSIS" on page 4-1.
	Air scoop/Fuel tank cover		Refer to "GENERAL CHASSIS" on page 4-1.
	Fuel tank		Refer to "FUEL TANK" on page 7-1.
	Air filter case		Refer to "GENERAL CHASSIS" on page 4-1.
	Canister purge hose		Refer to "FUEL TANK" on page 7-1. For California only.
1	Fuel hose	1	
2	Intake air pressure sensor 1 coupler	1	Disconnect.
3	Intake air pressure sensor 2 coupler	1	Disconnect.
4	Accelerator position sensor coupler	1	Disconnect.
5	Throttle servo motor coupler	1	Disconnect.
6	Throttle position sensor coupler	1	Disconnect.
7	Throttle cable (accelerator cable)	1	Disconnect. (Black)
8	Throttle cable (decelerator cable)	1	Disconnect.
9	Throttle body joint clamp screw	6	Loosen.
10	Throttle body assembly	1	
11	Throttle body joint	3	

Removing the sensors

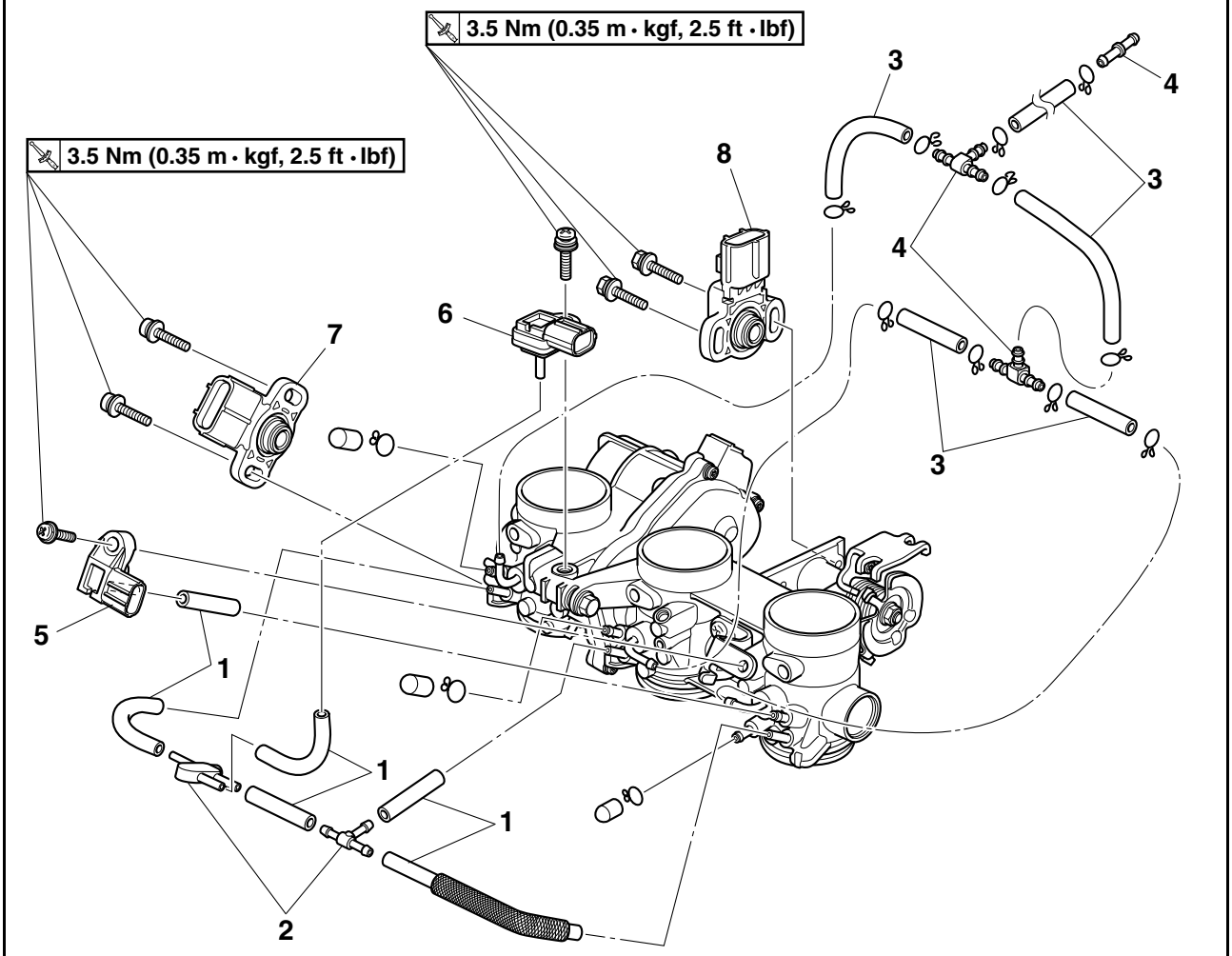

Order	Job/Parts to remove	Q'ty	Remarks
1	Negative pressure hose	6	
2	Hose joint	2	
3	Canister purge hose	5	For California only.
4	Hose joint	3	For California only.
5	Intake air pressure sensor 2	1	
6	Intake air pressure sensor 1	1	
7	Throttle position sensor	1	
8	Accelerator position sensor	1	

Removing the injectors

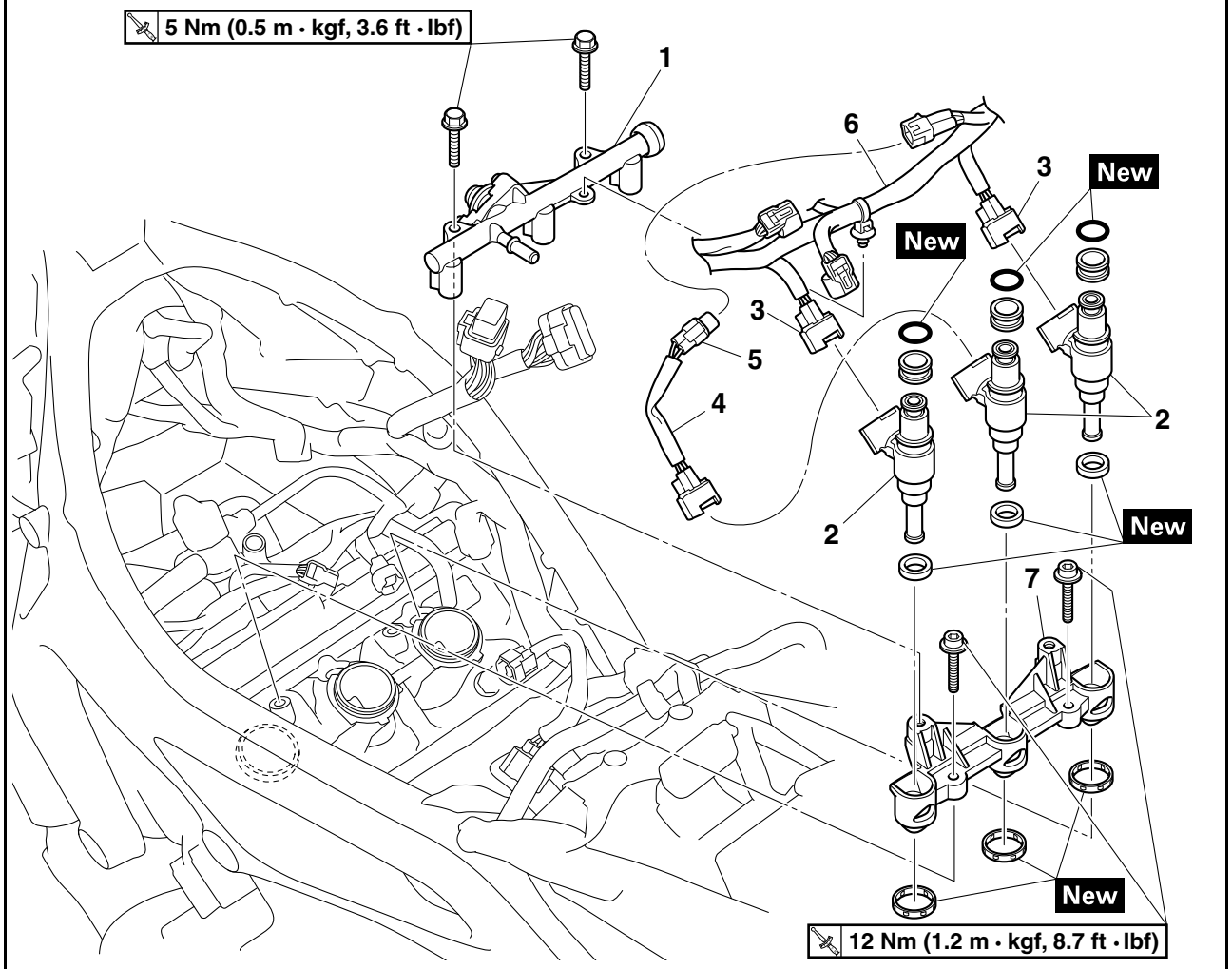

Order	Job/Parts to remove	Q'ty	Remarks
	Throttle bodies/Throttle body joint		Refer to "THROTTLE BODIES" on page 7-5.
1	Fuel rail	1	
2	Injector	3	
3	Injector coupler	2	Disconnect.
4	Injector lead	1	
5	Injector lead coupler	1	Disconnect.
6	Wire harness	1	
7	Adapter	1	

EAS1RC1706

CHECKING THE INJECTORS (BEFORE REMOVING)

1. Check:
   - Injectors
     Use the diagnostic code numbers “36”–“38”.
     Refer to “SELF-DIAGNOSTIC FUNCTION AND DIAGNOSTIC CODE TABLE” on page 9-5.

EAS1RC1710

REMOVING THE FUEL HOSE (FUEL RAIL SIDE)

1. Remove:
   - Fuel tank
     Refer to “REMOVING THE FUEL TANK” on page 7-3.
2. Remove:
   - Fuel hose (fuel rail side)

ECA1RC1707

NOTICE

Be sure to disconnect the fuel hose by hand. Do not forcefully disconnect the hose with tools.

TIP

- To remove the fuel hose from the fuel rail joint, slide the fuel hose connector cover “1” on the end of the hose in the direction of the arrow shown, press the two buttons “2” on the sides of the connector, and then remove the hose.
- Before removing the hose, place a few rags in the area under where it will be removed.
- It is prohibited to wear the cotton work gloves or equivalent coverings.

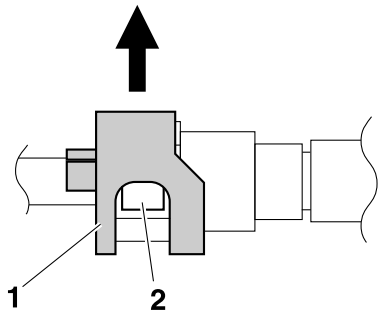

EAS1RC1707

REMOVING THE INJECTORS

EWA1RC1701

WARNING

- **Check the injectors in a well-ventilated area free of combustible materials. Make sure that there is no smoking or use of electric tools in the vicinity of the injectors.**
- **Be careful when disconnecting the fuel hose. Any remaining pressure in the fuel hose may cause the fuel to spray out. Place a container or rag under the hose to catch any fuel that spills. Always clean up any spilt fuel immediately.**
- **Turn the main switch to “OFF” and disconnect the negative battery lead from the battery terminal before removing the injectors.**

1. Remove:
   - Throttle bodies
   - Fuel rail “1”

▼▼▼▼▼▼▼▼▼▼▼▼▼▼▼▼▼▼▼▼▼▼▼▼▼▼▼▼▼▼▼▼▼▼

a. Remove the fuel rail bolts “2” as shown.

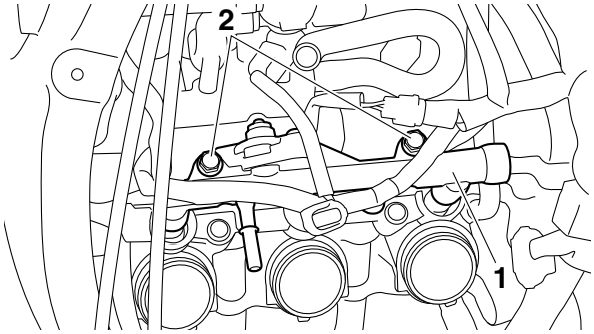

▲▲▲▲▲▲▲▲▲▲▲▲▲▲▲▲▲▲▲▲▲▲▲▲▲▲▲▲▲▲▲▲▲▲

EAS1RC1708

CHECKING THE INJECTORS

1. Check:
   - Injectors
     Obstruction → Replace and check the fuel pump/fuel supply system.
     Deposit → Replace.
     Damage → Replace.
2. Check:
   - Injector resistance
     Refer to “CHECKING THE FUEL INJECTORS” on page 8-111.

EAS1RC1713

CHECKING AND CLEANING THE THROTTLE BODIES

TIP

Clean the throttle bodies only if they cannot be synchronized using the bypass air screws. Before cleaning the throttle bodies, check the following items:

- Valve clearance
- Spark plugs
- Air filter element
- Throttle body joints
- Fuel hose
- Exhaust system
- Cylinder head breather hose

EWA1RC1703

⚠ WARNING

If the throttle bodies are subjected to strong shocks or dropped during cleaning, replace them as a set.

1. Check:
   - Throttle bodies
     Cracks/damage → Replace the throttle bodies as a set.
2. Clean:
   - Throttle bodies

ECA1RC1701

NOTICE

- **Observe the following precautions; otherwise, the throttle bodies may not operate properly.**
- **Do not subject the throttle bodies to excessive force.**
- **Clean the throttle bodies in the recommended cleaning solvent.**
- **Do not use any caustic carburetor cleaning solution.**
- **Do not apply cleaning solvent directly to any plastic parts, sensors, or seals.**
- **Be careful not to remove the white paint mark that identifies the standard throttle body.**
- **Do not turn the bypass air screws “a”; otherwise, the throttle body synchronization will be affected.**

	Recommended cleaning solvent **Yamaha Oil & Brake Cleaner**

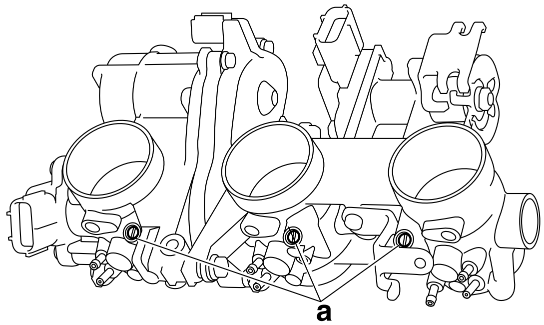

▼▼▼▼▼▼▼▼▼▼▼▼▼▼▼▼▼▼▼▼▼▼▼▼▼▼▼▼▼▼▼▼▼▼

a. Place the throttle bodies on a flat surface with the air filter case side facing up.
b. Install the caps (895-14169-00) onto the hose fittings “a”.

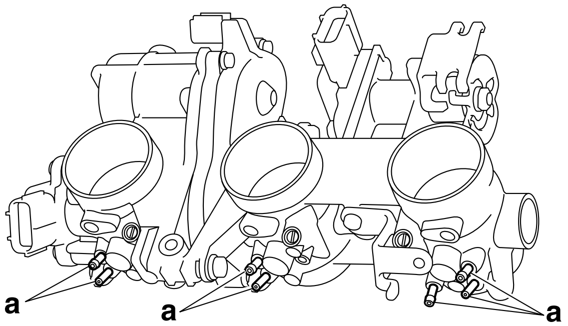

c. Hold the throttle valves in the open position.

EWA1RC1704

⚠ WARNING

When cleaning the throttle bodies, be careful not to injure yourself on the throttle valves or other components of the throttle bodies.

ECA1RC1703

NOTICE

- **Do not open the throttle valves by supplying electrical power to the throttle bodies.**
- **Do not use tools to open the throttle valves or to keep them in the open position.**
- **Do not open the throttle valves quickly.**

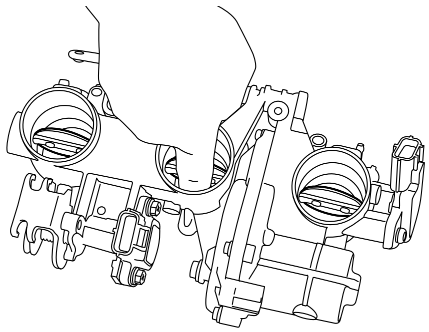

d. Apply the recommended cleaning solvent to the throttle valves and the inside of the throttle bodies to remove any carbon deposits.

TIP

- Do not allow any cleaning solvent to enter the opening for the injectors.
- Do not apply any cleaning solvent to the portions of the throttle valve shafts between the throttle bodies.

e. Remove the carbon deposits from the inside of each throttle body in a downward direction, from the air filter case side of the throttle body to the engine side.

ECA1RC1704

NOTICE

- **Do not use a tool, such as a wire brush, to remove the carbon deposits; otherwise, the inside of the throttle bodies may be damaged.**

- **Do not allow carbon deposits or other foreign materials to enter any of the passages in each throttle body or in the space between the throttle valve shaft and the throttle body.**

f. After removing the carbon deposits, clean the inside of the throttle bodies with the recommended cleaning solvent, and then dry the throttle bodies using compressed air.
g. Make sure that there are no carbon deposits or other foreign materials in any of the passages “a” in each throttle body or in the space “b” between the throttle valve shaft and the throttle body.

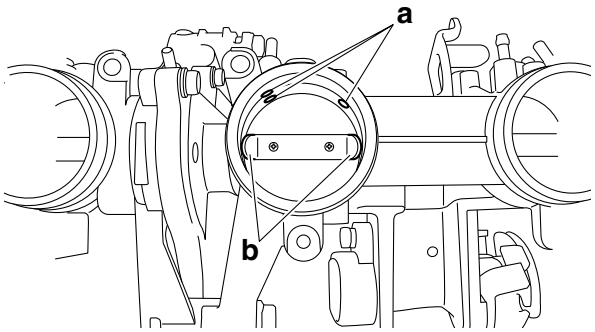

▲▲▲▲▲▲▲▲▲▲▲▲▲▲▲▲▲▲▲▲▲▲▲▲▲▲▲▲▲▲▲▲

3. Install the throttle bodies.
4. Reset:
   - ISC (idle speed control) learning values
     Use the diagnostic code number “67”.
     Refer to “SELF-DIAGNOSTIC FUNCTION AND DIAGNOSTIC CODE TABLE” on page 9-5.
5. Adjust:
   - Throttle bodies synchronizing
     Out of specification → Replace the throttle bodies.
     Refer to “SYNCHRONIZING THE THROTTLE BODIES” on page 3-8.

EAS1RC1714

REPLACING THE THROTTLE BODIES

1. Remove the throttle bodies from the vehicle.
2. Install a new throttle bodies to the vehicle.
3. Reset:
   - ISC (idle speed control) learning values
     Use the diagnostic code number “67”.
     Refer to “SELF-DIAGNOSTIC FUNCTION AND DIAGNOSTIC CODE TABLE” on page 9-5.
4. Adjust:
   - Throttle bodies synchronizing
     Refer to “SYNCHRONIZING THE THROTTLE BODIES” on page 3-8.
5. Place the vehicle on a suitable stand so that the rear wheel is elevated.
6. Check:
   - Engine idling speed
     Start the engine, warm it up, and then measure the engine idling speed.

	**Engine idling speed** **1100–1300 r/min**

EAS1RC1705

INSTALLING THE INJECTORS

ECA1RC1702

NOTICE

- **Always use new O-rings.**
- **When installing the injectors, do not allow any foreign material to enter or adhere to the injectors, fuel rails, or O-rings.**
- **Be careful not to twist or pinch the O-rings when installing the injectors.**
- **When installing the injector, install it at the same position as the removed cylinder.**
- **If an injector is subject to strong shocks or excessive force, replace it.**
- **If installing the original fuel rail and bolts, remove the white paint marks using a cleaning solvent. Otherwise, paint chips on the bolt seats could prevent the bolts from being tightened to the specified torque.**

1. Install a new seal onto the end of each injector.
2. Install the injectors to the fuel rail, making sure to install them in the correct direction.
3. Install the injector assemblies to the adapter.

	**Fuel rail bolt** **5 Nm (0.5 m·kgf, 3.6 ft·lbf)**

4. Check the injector pressure after the injectors are installed to the throttle bodies.
   Refer to “CHECKING THE INJECTOR PRESSURE” on page 7-10.

EAS1RC1715

CHECKING THE INJECTOR PRESSURE

TIP

- After installing the injectors, perform the following steps to check the injector pressure.
- Do not allow any foreign materials to enter the fuel lines.

1. Check:
   - Injector pressure

▼▼▼▼▼▼▼▼▼▼▼▼▼▼▼▼▼▼▼▼▼▼▼▼▼▼▼▼▼▼▼▼▼▼

a. Connect the injector pressure adapter “1” to the fuel rail joint “2”, and then connect an air compressor “3” to the adapter.
b. Connect the pressure gauge “4” to the injector pressure adapter “1”.

Pressure gauge
90890-03153
YU-03153
Fuel injector pressure adapter
90890-03210
YU-03210

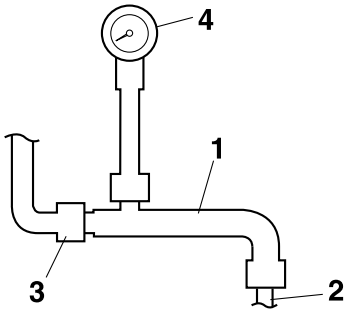

c. Close the valve on the injector pressure adapter.
d. Apply air pressure with the air compressor.
e. Open the valve on the injector pressure adapter until the specified pressure is reached.

Specified air pressure
490 kPa (5.0 kgf/cm^2, 71.1 psi)

ECA1RC1706

NOTICE

Never exceed the specified air pressure or damage could occur.

f. Close the valve on the injector pressure adapter.
g. Check that the specified air pressure is held at least one minute.
   Pressure drops → Check the pressure gauge and adapter.
   Check the seals and O-rings and then reinstall.
   Out of specification → Replace the fuel injectors.

▲▲▲▲▲▲▲▲▲▲▲▲▲▲▲▲▲▲▲▲▲▲▲▲▲▲▲▲▲▲▲▲▲▲

EAS1RC1709

CHECKING THE FUEL PRESSURE

1. Check:
   • Fuel pressure

▼▼▼▼▼▼▼▼▼▼▼▼▼▼▼▼▼▼▼▼▼▼▼▼▼▼▼▼▼▼▼▼▼▼

a. Remove the rider seat, air scoop and fuel tank cover.
   Refer to “GENERAL CHASSIS” on page 4-1.
b. Remove the fuel tank bolt and hold up the fuel tank.
c. Disconnect the fuel hose “1” from the fuel pump.
   Refer to “REMOVING THE FUEL TANK” on page 7-3.

EWA1RC1702

WARNING

Cover fuel hose connection with a cloth when disconnecting them. Residual pressure in the fuel lines could cause fuel to spurt out when removing the hose.

ECA1RC1707

NOTICE

Be sure to disconnect the fuel hose by hand. Do not forcefully disconnect the hose with tools.

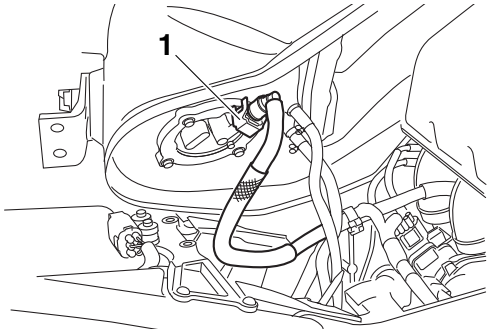

d. Connect the pressure gauge “2” and fuel pressure adapter “3” to the fuel hose.

Pressure gauge
90890-03153
YU-03153
Fuel pressure adapter
90890-03176
YM-03176

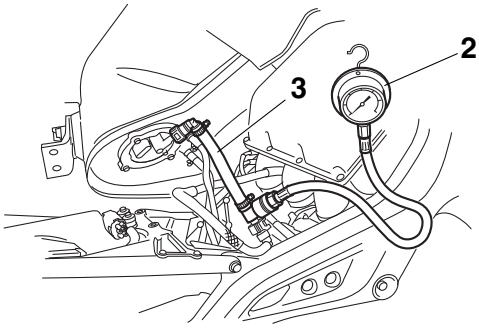

e. Start the engine.
f. Measure the fuel pressure.

Faulty → Replace the fuel pump.

Fuel line pressure at idling
300–390 kPa (3.0–3.9 kgf/cm^2, 43.5–56.6 psi)

▲▲▲▲▲▲▲▲▲▲▲▲▲▲▲▲▲▲▲▲▲▲▲▲▲▲▲▲▲▲▲▲

EAS1RC1711

INSTALLING THE FUEL HOSE (FUEL RAIL SIDE)

1. Connect:
   - Fuel hose (fuel rail side)

ECA1RC1708

NOTICE

When installing the fuel hose, make sure that it is securely connected, and that the fuel hose connector cover on the fuel hose is in the correct position, otherwise the fuel hose will not be properly installed.

TIP

- Install the fuel hose securely onto the fuel rail joint until a distinct “click” is heard.
- To install the fuel hose onto the fuel rail joint, slide the fuel hose connector cover “1” on the end of the hose in the direction of the arrow shown.
- It is prohibited to wear the cotton work gloves or equivalent coverings.

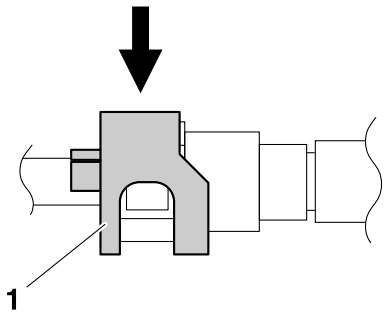

EAS1RC1716

ADJUSTING THE THROTTLE POSITION SENSOR

EWA1RC1705

WARNING

- **Handle the throttle position sensor with special care.**
- **Never subject the throttle position sensor to strong shocks. If the throttle position sensor is dropped, replace it.**

1. Check:
   - Throttle position sensor
     Refer to “CHECKING THE THROTTLE POSITION SENSOR” on page 8-107.
2. Adjust:
   - Throttle position sensor angle

TIP

Before adjusting the throttle position sensor, the throttle bodies must be removed.

▼▼▼▼▼▼▼▼▼▼▼▼▼▼▼▼▼▼▼▼▼▼▼▼▼▼▼▼▼▼▼▼

a. Temporary tighten the throttle position sensor screws.
b. Check that the throttle valves are fully closed.
c. Turn the main switch to “OFF”.
d. Connect the throttle position sensor to the wire harness.
e. Simultaneously press and hold the “SELECT” button “1” and “RESET” button “2”, turn the main switch to “ON”, and continue to press the buttons for 8 seconds or more.

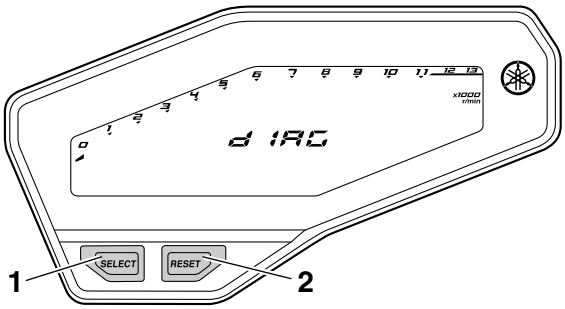

TIP

“dIAG” appears on the display.

f. Simultaneously press the “SELECT” button “1” and “RESET” button “2” for 2 seconds or more to set the diagnostic mode.

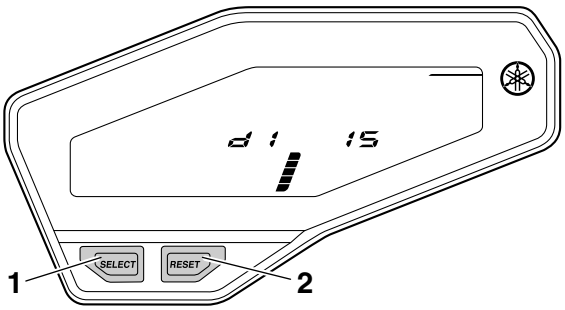

TIP

The diagnostic code number “1” appears on the display.

g. Diagnostic code number “1” is selected.
h. Adjust the position of the throttle position sensor angle so that 11–21 can appear in the meter display.
i. After adjusting the throttle position sensor angle, tighten the throttle position sensor screws “3”.

	Throttle position sensor screw 3.5 Nm (0.35 m·kgf, 2.5 ft·lbf)

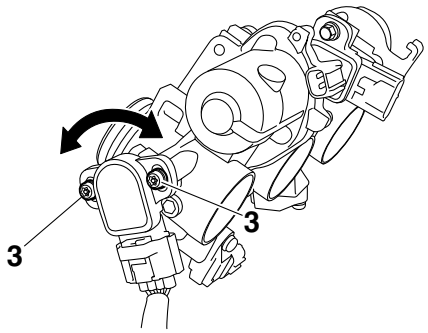

▲▲▲▲▲▲▲▲▲▲▲▲▲▲▲▲▲▲▲▲▲▲▲▲▲▲▲▲▲▲▲▲

EAS1RC1717

ADJUSTING THE ACCELERATOR POSITION SENSOR

EWA1RC1706

WARNING

- **Handle the accelerator position sensor with special care.**
- **Never subject the accelerator position sensor to strong shocks. If the accelerator position sensor is dropped, replace it.**

1. Check:
   - Accelerator position sensor
     Refer to "CHECKING THE ACCELERATOR POSITION SENSOR" on page 8-107.
2. Adjust:
   - Accelerator position sensor angle

TIP

Before adjusting the accelerator position sensor, the throttle bodies must be removed.

▼▼▼▼▼▼▼▼▼▼▼▼▼▼▼▼▼▼▼▼▼▼▼▼▼▼▼▼▼▼▼▼

a. Temporary tighten the accelerator position sensor bolts.
b. Check that the throttle valves are fully closed.
c. Turn the main switch to "OFF".
d. Connect the accelerator position sensor to the wire harness.
e. Connect the throttle cables to the throttle bodies.
f. Simultaneously press and hold the "SELECT" button "1" and "RESET" button "2", turn the main switch to "ON", and continue to press the buttons for 8 seconds or more.

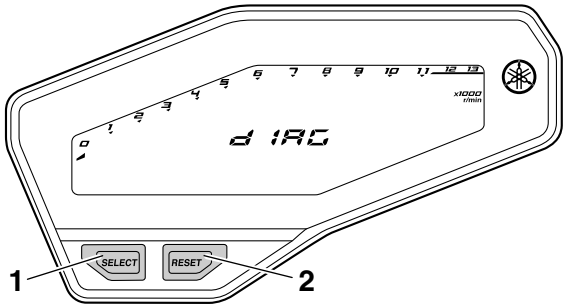

TIP

"dIAG" appears on the display.

g. Simultaneously press the "SELECT" button "1" and "RESET" button "2" for 2 seconds or more to set the diagnostic mode.

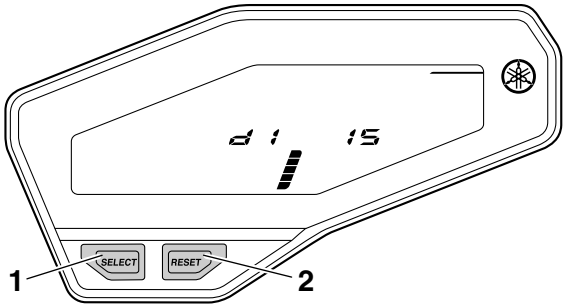

TIP

The diagnostic code number "1" appears on the display.

h. Diagnostic code number "14" is selected.
i. Turn the throttle grip to the fully closed position.
j. Adjust the position of the accelerator position sensor angle so that 12–22 can appear in the meter display.
k. After adjusting the accelerator position sensor angle, tighten the accelerator position sensor bolts "3".

	Accelerator position sensor bolt 3.5 Nm (0.35 m·kgf, 2.5 ft·lbf)

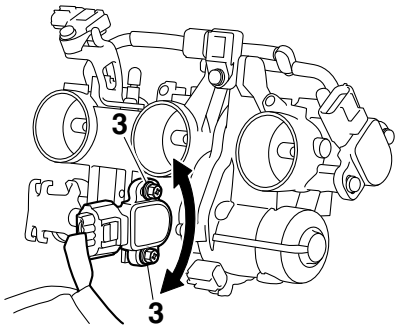

l. Turn the throttle grip to the fully open position.

m. Check the meter display value. If the meter display value is not 97–107, adjust the accelerator position sensor angle.
n. Select the diagnostic code number “15”.
o. Turn the throttle grip to the fully closed position.
p. Check the meter display value. If the meter display value is not 10–24, adjust the accelerator position sensor angle.
q. Turn the throttle grip to the fully open position.
r. Check the meter display value. If the meter display value is not 95–109, adjust the accelerator position sensor angle.
s. Repeat steps (h) to (r) until the meter display values are within the specified ranges.
t. If the meter display values are not within the specified ranges after repeating steps (h) to (r) several times, replace the accelerator position sensor.

▲▲▲▲▲▲▲▲▲▲▲▲▲▲▲▲▲▲▲▲▲▲▲▲▲▲▲▲▲▲▲▲▲▲

EAS27040

AIR INDUCTION SYSTEM

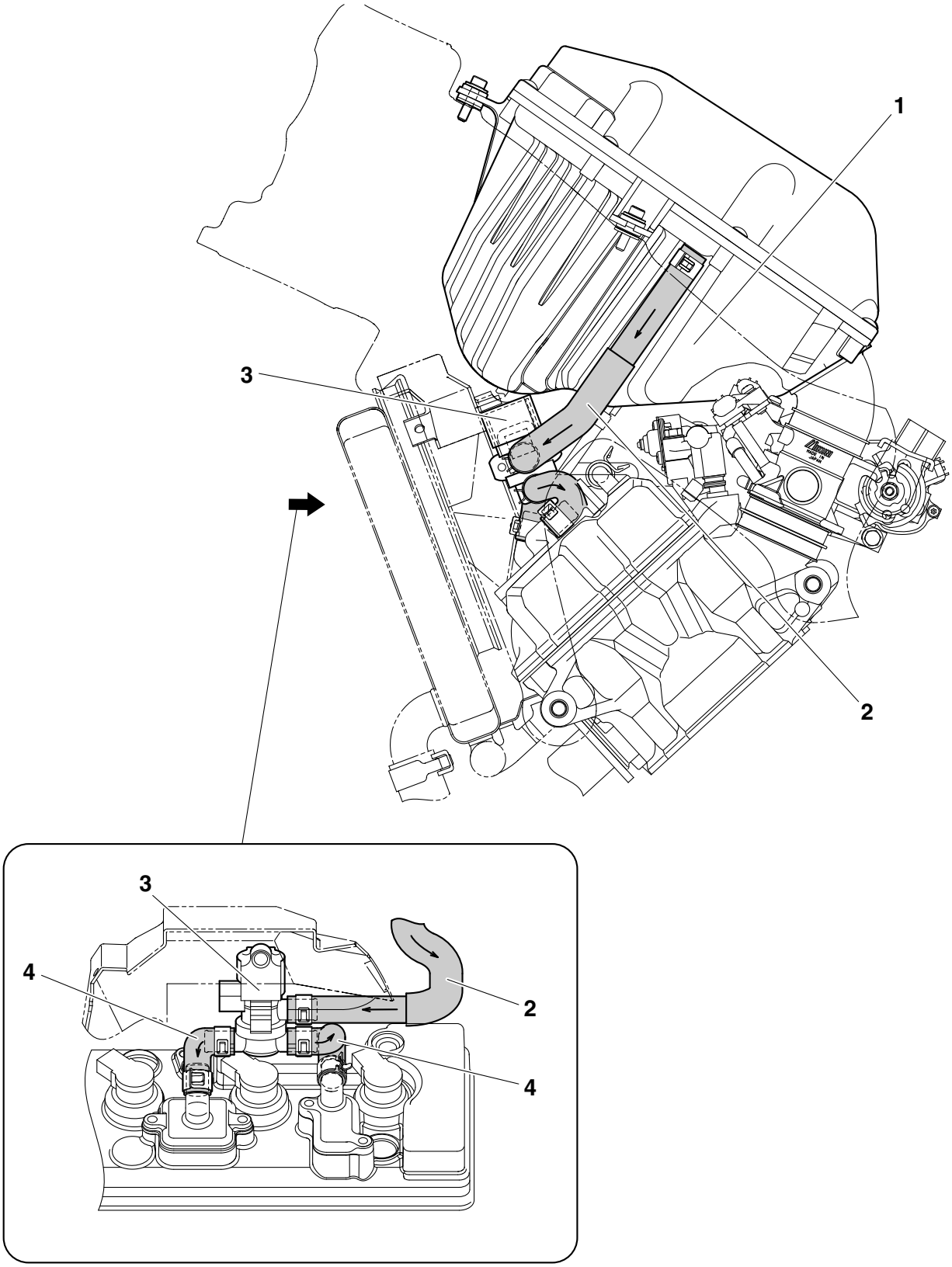

1. Air filter case
2. Air induction system hose (air filter case to air cut-off valve)
3. Air cut-off valve
4. Air induction system hose (air cut-off valve to reed valve cover)

Removing the air cut-off valve assembly and reed valves

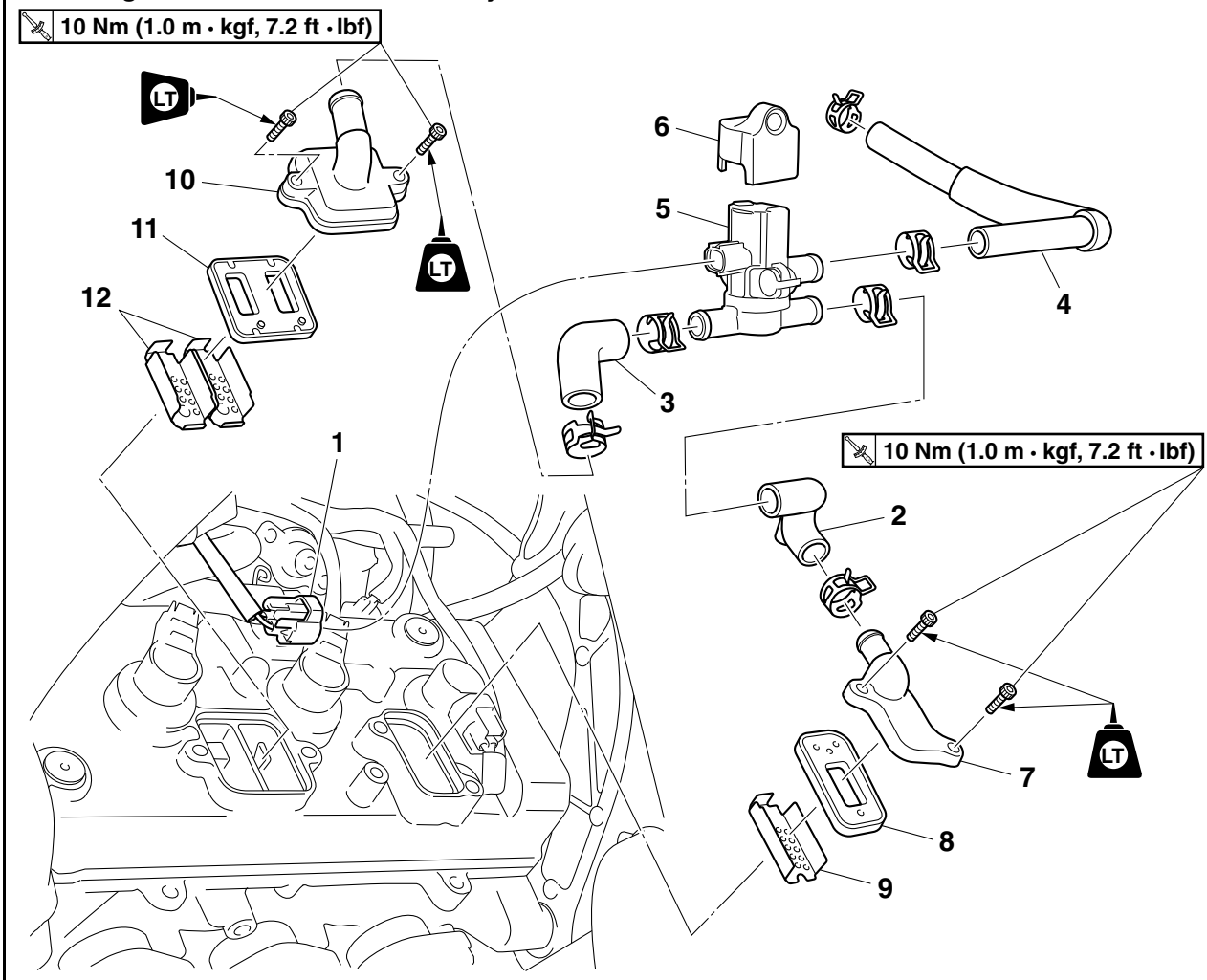

Order	Job/Parts to remove	Q'ty	Remarks
	Rider seat		Refer to "GENERAL CHASSIS" on page 4-1.
	Air scoop/Fuel tank cover		Refer to "GENERAL CHASSIS" on page 4-1.
	Fuel tank		Refer to "FUEL TANK" on page 7-1.
	Air filter case		Refer to "GENERAL CHASSIS" on page 4-1.
	Radiator		Refer to "RADIATOR" on page 6-1.
1	Air cut-off valve coupler	1	Disconnect.
2	Air induction system hose (air cut-off valve to reed valve cover)	1	
3	Air induction system hose (air cut-off valve to reed valve cover)	1	
4	Air induction system hose (air filter case to air cut-off valve)	1	
5	Air cut-off valve	1	
6	Air cut-off valve holder	1	
7	Reed valve cover	1	
8	Reed valve assembly 1	1	
9	Reed valve plate	1	
10	Reed valve cover	1	
11	Reed valve assembly 2	1	
12	Reed valve plate	2	

EAS27060

CHECKING THE AIR INDUCTION SYSTEM

Air injection

The air induction system burns unburned exhaust gases by injecting fresh air (secondary air) into the exhaust port, reducing the emission of hydrocarbons. When there is negative pressure at the exhaust port, the reed valve opens, allowing secondary air to flow into the exhaust port. The required temperature for burning the unburned exhaust gases is approximately 600 to 700 °C (1112 to 1292 °F).

Air cut-off valve

The air cut-off valve is controlled by the signals from the ECU in accordance with the combustion conditions. Ordinarily, the air cut-off valve opens to allow the air to flow during idle and closes to cut-off the flow when the vehicle is being driven. However, if the coolant temperature is below the specified value, the air cut-off valve remains open and allows the air to flow into the exhaust pipe until the temperature becomes higher than the specified value.

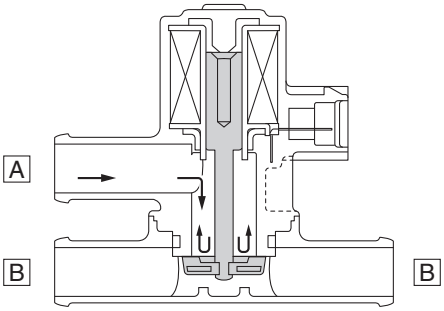

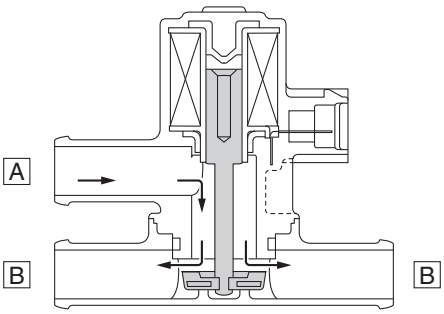

A. From the air filter case
B. To the cylinder head

1. Check:
   - Hoses
     Loose connections → Connect properly.
     Cracks/damage → Replace.
2. Check:
   - Reed valve
   - Reed valve stopper
   - Reed valve seat
     Cracks/damage → Replace the reed valve assembly.
3. Measure:
   - Reed valve bending limit “a”
     Out of specification → Replace the reed valve assembly.

	Reed valve bending limit **0.4 mm (0.02 in)**

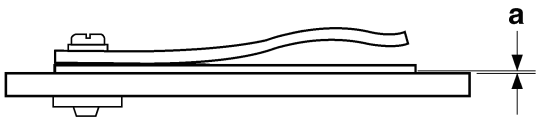

4. Check:
   - Air cut-off valve
     Cracks/damage → Replace.
5. Check
   - Air induction system solenoid
     Refer to “CHECKING THE AIR INDUCTION SYSTEM SOLENOID” on page 8-108.

EAS1RC1712

INSTALLING THE AIR INDUCTION SYSTEM

1. Install:
   - Reed valve plate “1”

TIP

- Align the projection “a” on the cylinder head cover with the notch “b” in the reed valve plate “1”.
- Align the projection “c” on the cylinder head cover with the hole “d” in the reed valve plate “1”.

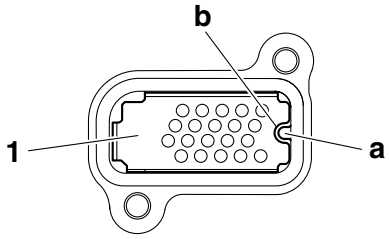

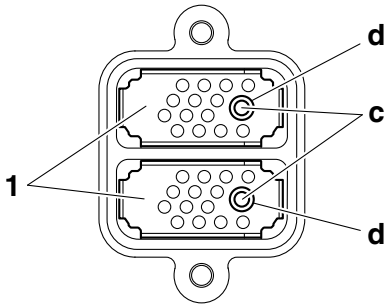

2. Install:
   - Reed valve assembly 1
   - Reed valve assembly 2

TIP

- Install the reed valve assembly 1 so that the open side turns to the exhaust side of the engine.
- Install the reed valve assembly 2 so that the open side turns to the intake side of the engine.

A

B

A. Reed valve assembly 1
B. Reed valve assembly 2
C. Exhaust side

3. Install:
   - Reed valve cover

	**Reed valve cover bolt** **10 Nm (1.0 m·kgf, 7.2 ft·lbf)** **LOCTITE®**

ELECTRICAL SYSTEM

EAS27090

IGNITION SYSTEM

EAS27110

CIRCUIT DIAGRAM

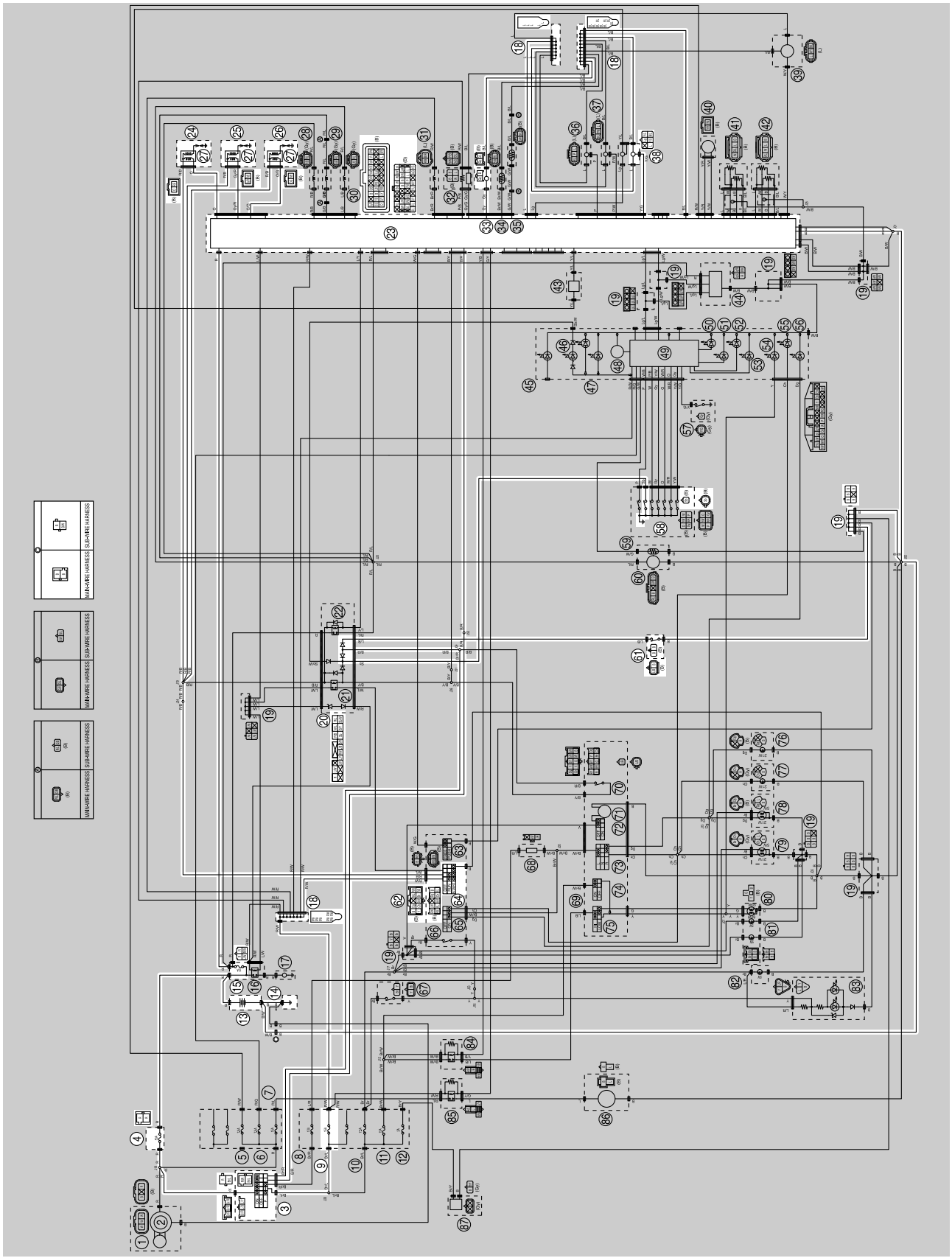

3. Main switch
4. Main fuse
9. Ignition fuse
13. Battery
14. Engine ground
15. Fuel injection system fuse
18. Joint connector
19. Joint coupler
20. Relay unit
23. ECU (engine control unit)
24. Ignition coil #1
25. Ignition coil #2
26. Ignition coil #3
27. Spark plug
33. Crankshaft position sensor
38. Lean angle sensor
58. Gear position sensor
61. Sidestand switch
62. Right handlebar switch
64. Start/engine stop switch

EAS1RC1804

ENGINE STOPPING DUE TO SIDESTAND OPERATION

When the engine is running and the transmission is in gear, the engine will stop if the sidestand is moved down. This is because the electric current from the ignition coils does not flow to the ECU when both the gear position sensor (neutral circuit) and sidestand switch are set to “OFF”, thereby preventing the spark plugs from producing a spark. However, the engine continues to run under the following conditions:

- The transmission is in gear (the neutral circuit of the gear position sensor is open) and the sidestand is up (the sidestand switch circuit is closed).
- The transmission is in neutral (the neutral circuit of the gear position sensor is closed) and the sidestand is down (the sidestand switch circuit is open).

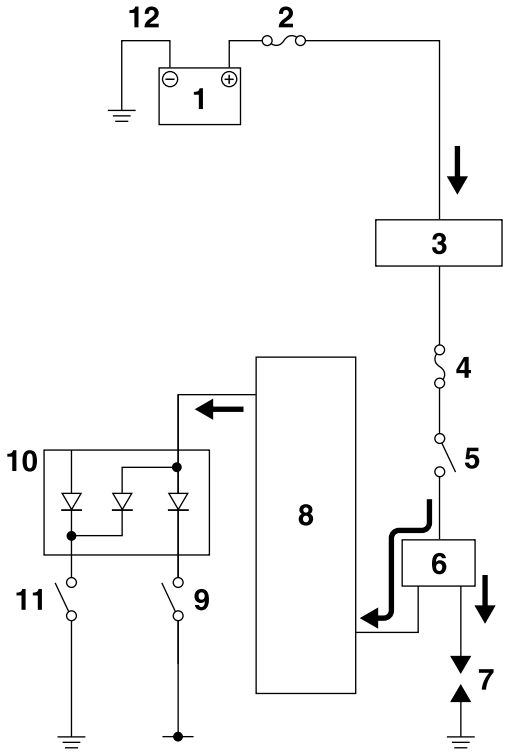

1. Battery
2. Main fuse
3. Main switch
4. Ignition fuse
5. Start/engine stop switch
6. Ignition coil
7. Spark plug
8. ECU (engine control unit)
9. Sidestand switch
10. Relay unit (diode)
11. Gear position sensor (neutral circuit)
12. Battery negative lead

EAS27150

TROUBLESHOOTING

The ignition system fails to operate (no spark or intermittent spark).

TIP

- Before troubleshooting, remove the following part(s):

1. Rider seat
2. Air scoop
3. Fuel tank cover
4. Fuel tank
5. Air filter case

1. Check the fuses. (Main, ignition and fuel injection system) Refer to "CHECKING THE FUSES" on page 8-93.	NG→	Replace the fuse(s).
OK↓		
2. Check the battery. Refer to "CHECKING AND CHARGING THE BATTERY" on page 8-94.	NG→	• Clean the battery terminals. • Recharge or replace the battery.
OK↓		
3. Check the spark plugs. Refer to "CHECKING THE SPARK PLUGS" on page 3-4.	NG→	Re-gap or replace the spark plugs.
OK↓		
4. Check the ignition spark gap. Refer to "CHECKING THE IGNITION SPARK GAP" on page 8-100.	OK→	Ignition system is OK.
NG↓		
5. Check the ignition coils. Refer to "CHECKING THE IGNITION COILS" on page 8-100.	NG→	Replace the ignition coils.
OK↓		
6. Check the crankshaft position sensor. Refer to "CHECKING THE CRANKSHAFT POSITION SENSOR" on page 8-101.	NG→	Replace the crankshaft position sensor.
OK↓		
7. Check the main switch. Refer to "CHECKING THE SWITCHES" on page 8-89.	NG→	Replace the main switch.
OK↓		
8. Check the start/engine stop switch. Refer to "CHECKING THE SWITCHES" on page 8-89.	NG→	Replace the right handlebar switch.
OK↓		

9. Check the gear position sensor. Refer to “CHECKING THE GEAR POSITION SENSOR” on page 8-110.	NG→	Replace the gear position sensor.
OK↓		
10. Check the sidestand switch. Refer to “CHECKING THE SWITCHES” on page 8-89.	NG→	Replace the sidestand switch.
OK↓		
11. Check the relay unit (diode). Refer to “CHECKING THE RELAY UNIT (DIODE)” on page 8-99.	NG→	Replace the relay unit.
OK↓		
12. Check the lean angle sensor. Refer to “CHECKING THE LEAN ANGLE SENSOR” on page 8-101.	NG→	Replace the lean angle sensor.
OK↓		
13. Check the entire ignition system’s wiring. Refer to “CIRCUIT DIAGRAM” on page 8-1.	NG→	Properly connect or repair the ignition system’s wiring.
OK↓		
Replace the ECU. Refer to “REPLACING THE ECU (engine control unit)” on page 8-93.		

EAS27160

ELECTRIC STARTING SYSTEM

EAS27170

CIRCUIT DIAGRAM

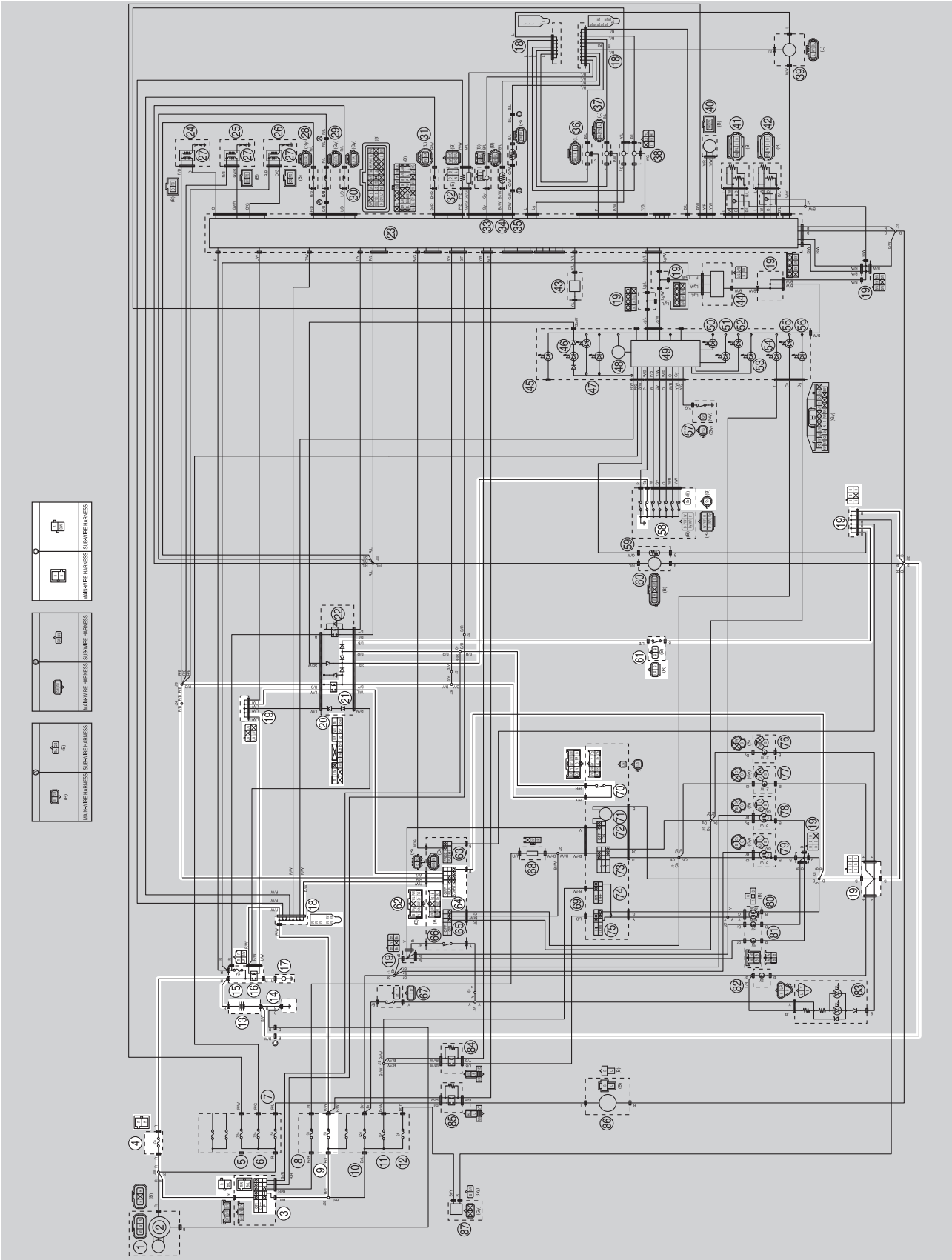

3. Main switch
4. Main fuse
9. Ignition fuse
13. Battery
14. Engine ground
15. Fuel injection system fuse
16. Starter relay
17. Starter motor
18. Joint connector
19. Joint coupler
20. Relay unit
21. Starting circuit cut-off relay
58. Gear position sensor
61. Sidestand switch
62. Right handlebar switch
64. Start/engine stop switch
70. Clutch switch

EAS27180

STARTING CIRCUIT CUT-OFF SYSTEM OPERATION

If the main switch is turned to “ON” and the “⊛” side of the start/engine stop switch is pushed, the starter motor can only operate if at least one of the following conditions is met:

- The transmission is in neutral (the neutral circuit of the gear position sensor is closed).
- The clutch lever is pulled to the handlebar (the clutch switch is closed) and the sidestand is up (the sidestand switch is closed).

The starting circuit cut-off relay prevents the starter motor from operating when neither of these conditions has been met. In this instance, the starting circuit cut-off relay is open so current cannot reach the starter motor. When at least one of the above conditions has been met the starting circuit cut-off relay is closed and the engine can be started by pushing the “⊛” side of the start/engine stop switch.

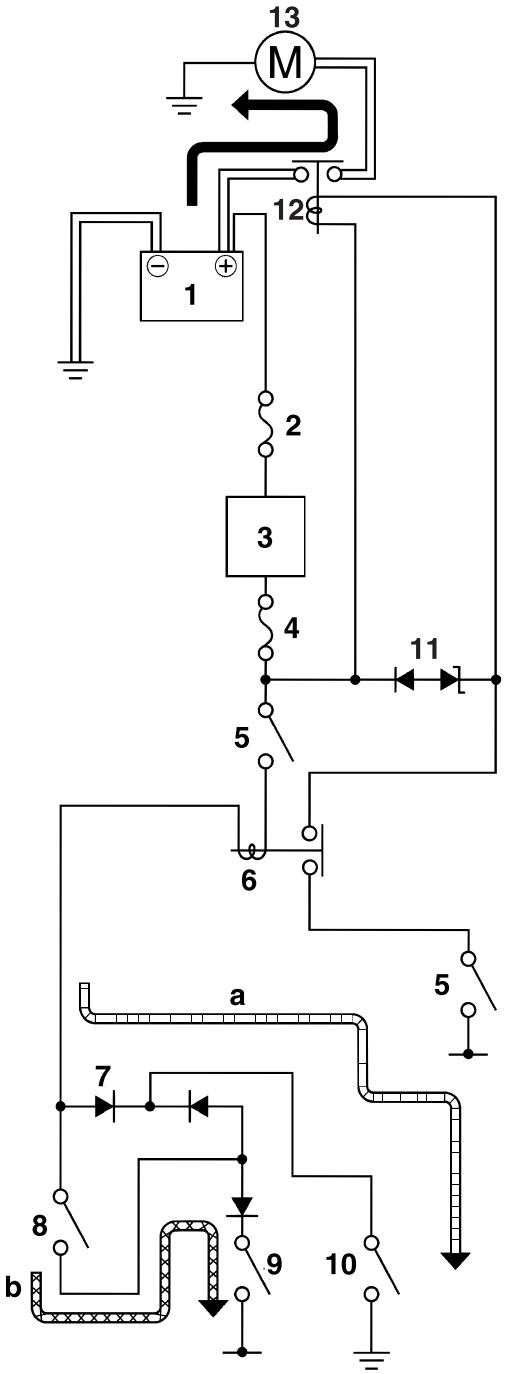

a. WHEN THE TRANSMISSION IS IN NEUTRAL
b. WHEN THE SIDESTAND IS UP AND THE CLUTCH LEVER IS PULLED TO THE HANDLEBAR

1. Battery
2. Main fuse
3. Main switch
4. Ignition fuse
5. Start/engine stop switch
6. Starting circuit cut-off relay
7. Diode
8. Clutch switch
9. Sidestand switch
10. Gear position sensor (neutral circuit)
11. Diode
12. Starter relay
13. Starter motor

EAS27190

TROUBLESHOOTING

The starter motor fails to turn.

TIP

• Before troubleshooting, remove the following part(s):
1. Rider seat
2. Air scoop
3. Fuel tank cover
4. Fuel tank
5. Air filter case
6. Throttle bodies

1. Check the fuses. (Main, ignition and fuel injection system) Refer to "CHECKING THE FUSES" on page 8-93.	NG→	Replace the fuse(s).
OK↓		
2. Check the battery. Refer to "CHECKING AND CHARGING THE BATTERY" on page 8-94.	NG→	• Clean the battery terminals. • Recharge or replace the battery.
OK↓		
3. Check the starter motor operation. Refer to "CHECKING THE STARTER MOTOR OPERATION" on page 8-102.	OK→	Starter motor is OK. Perform the electric starting system troubleshooting, starting with step 5.
NG↓		
4. Check the starter motor. Refer to "CHECKING THE STARTER MOTOR" on page 5-37.	NG→	Repair or replace the starter motor.
OK↓		
5. Check the relay unit (starting circuit cut-off relay). Refer to "CHECKING THE RELAYS" on page 8-97.	NG→	Replace the relay unit.
OK↓		
6. Check the relay unit (diode). Refer to "CHECKING THE RELAY UNIT (DIODE)" on page 8-99.	NG→	Replace the relay unit.
OK↓		
7. Check the starter relay. Refer to "CHECKING THE RELAYS" on page 8-97.	NG→	Replace the starter relay.
OK↓		
8. Check the main switch. Refer to "CHECKING THE SWITCHES" on page 8-89.	NG→	Replace the main switch.
OK↓		

9. Check the gear position sensor. Refer to “CHECKING THE GEAR POSITION SENSOR” on page 8-110.	NG→	Replace the gear position sensor.
OK↓		
10. Check the sidestand switch. Refer to “CHECKING THE SWITCHES” on page 8-89.	NG→	Replace the sidestand switch.
OK↓		
11. Check the clutch switch. Refer to “CHECKING THE SWITCHES” on page 8-89.	NG→	Replace the clutch switch.
OK↓		
12. Check the start/engine stop switch. Refer to “CHECKING THE SWITCHES” on page 8-89.	NG→	Replace the right handlebar switch.
OK↓		
13. Check the entire starting system’s wiring. Refer to “CIRCUIT DIAGRAM” on page 8-7.	NG→	Properly connect or repair the starting system’s wiring.
OK↓		
The starting system circuit is OK.		

EAS27200

CHARGING SYSTEM

EAS27210

CIRCUIT DIAGRAM

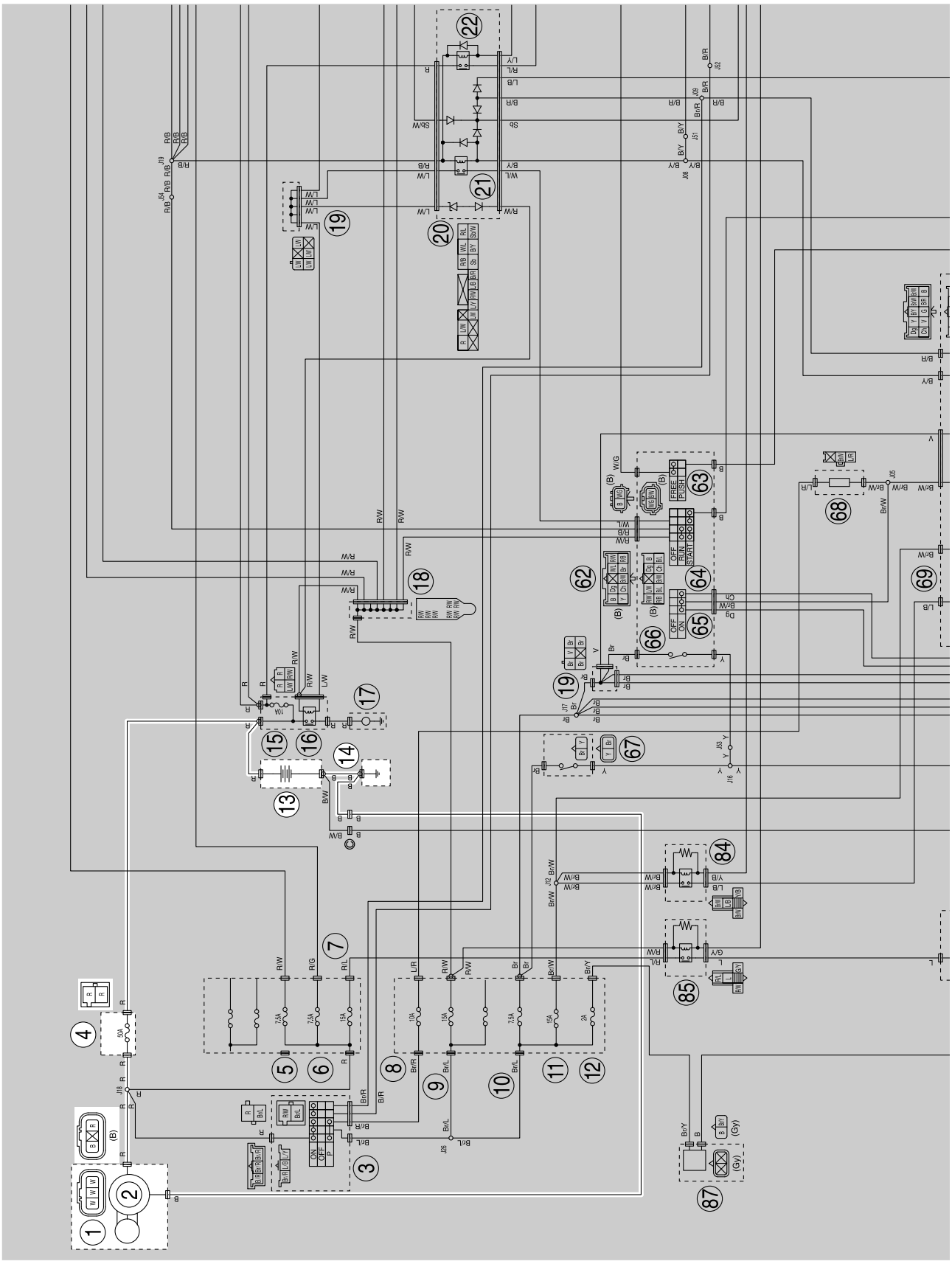

1. AC magneto
2. Rectifier/regulator
4. Main fuse
13. Battery
14. Engine ground

EAS27230

TROUBLESHOOTING

The battery is not being charged.

TIP

- Before troubleshooting, remove the following part(s):
1. Rider seat
2. Rear side cover

1. Check the fuse. (Main) Refer to "CHECKING THE FUSES" on page 8-93.	NG→	Replace the fuse.
OK↓		
2. Check the battery. Refer to "CHECKING AND CHARGING THE BATTERY" on page 8-94.	NG→	• Clean the battery terminals. • Recharge or replace the battery.
OK↓		
3. Check the stator coil. Refer to "CHECKING THE STATOR COIL" on page 8-102.	NG→	Replace the stator coil assembly.
OK↓		
4. Check the rectifier/regulator. Refer to "CHECKING THE RECTIFIER/REGULATOR" on page 8-102.	NG→	Replace the rectifier/regulator.
OK↓		
5. Check the entire charging system's wiring. Refer to "CIRCUIT DIAGRAM" on page 8-13.	NG→	Properly connect or repair the charging system's wiring.
OK↓		
The charging system circuit is OK.		

EAS27240

LIGHTING SYSTEM

EAS27250

CIRCUIT DIAGRAM

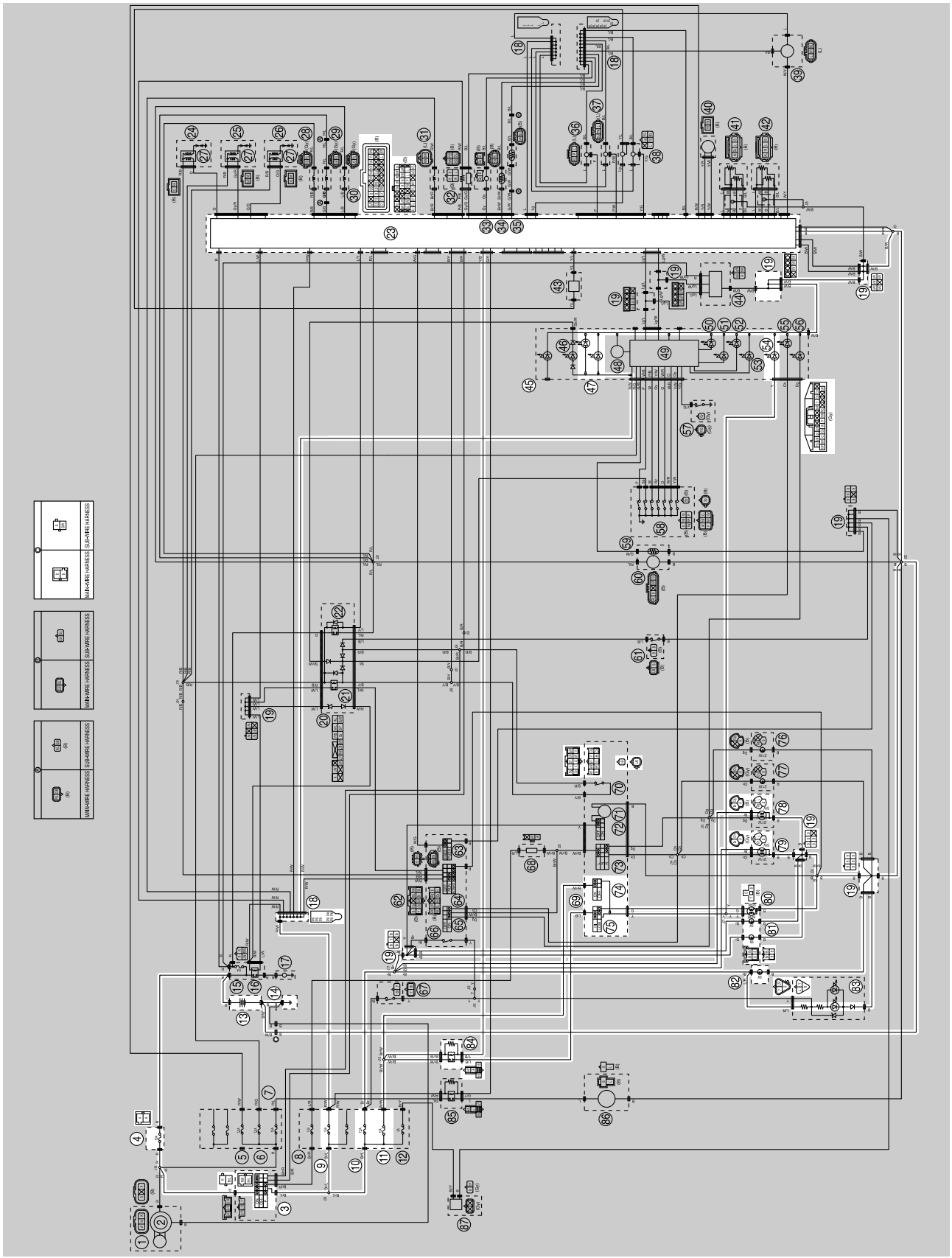

3. Main switch
4. Main fuse
9. Ignition fuse
10. Signal fuse
11. Headlight fuse
13. Battery
14. Engine ground
18. Joint connector
19. Joint coupler
23. ECU (engine control unit)
45. Meter assembly
47. Meter light
54. High beam indicator light
69. Left handlebar switch
74. Pass switch
75. Dimmer switch
78. Front right turn signal/position light
79. Front left turn signal/position light
80. Headlight
81. Auxiliary light
82. License plate light
83. Tail/brake light
84. Headlight relay

EAS27260

TROUBLESHOOTING

Any of the following fail to light: headlight, high beam indicator light, taillight, license light or meter light.

TIP

• Before troubleshooting, remove the following part(s):

1. Rider seat
2. Air scoop
3. Fuel tank cover
4. Fuel tank
5. Rear side cover
6. Headlight assembly

1. Check the each bulbs and bulb sockets condition. Refer to “CHECKING THE BULBS AND BULB SOCKETS” on page 8-92.	NG→	Replace the bulb(s) and bulb socket(s).
OK↓		
2. Check the fuses. (Main, headlight, ignition and signal) Refer to “CHECKING THE FUSES” on page 8-93.	NG→	Replace the fuse(s).
OK↓		
3. Check the battery. Refer to “CHECKING AND CHARGING THE BATTERY” on page 8-94.	NG→	• Clean the battery terminals. • Recharge or replace the battery.
OK↓		
4. Check the main switch. Refer to “CHECKING THE SWITCHES” on page 8-89.	NG→	Replace the main switch.
OK↓		
5. Check the dimmer switch. Refer to “CHECKING THE SWITCHES” on page 8-89.	NG→	The dimmer switch is faulty. Replace the left handlebar switch.
OK↓		
6. Check the pass switch. Refer to “CHECKING THE SWITCHES” on page 8-89.	NG→	The pass switch is faulty. Replace the left handlebar switch.
OK↓		
7. Check the headlight relay (on/off). Refer to “CHECKING THE RELAYS” on page 8-97.	NG→	Replace the headlight relay.
OK↓		

8. Check the entire lighting system's wiring. Refer to "CIRCUIT DIAGRAM" on page 8-17.	NG→	Properly connect or repair the lighting system's wiring.
OK↓		
Replace the ECU or meter assembly. Refer to "REPLACING THE ECU (engine control unit)" on page 8-93.		

EAS27270

SIGNALING SYSTEM

EAS27280

CIRCUIT DIAGRAM

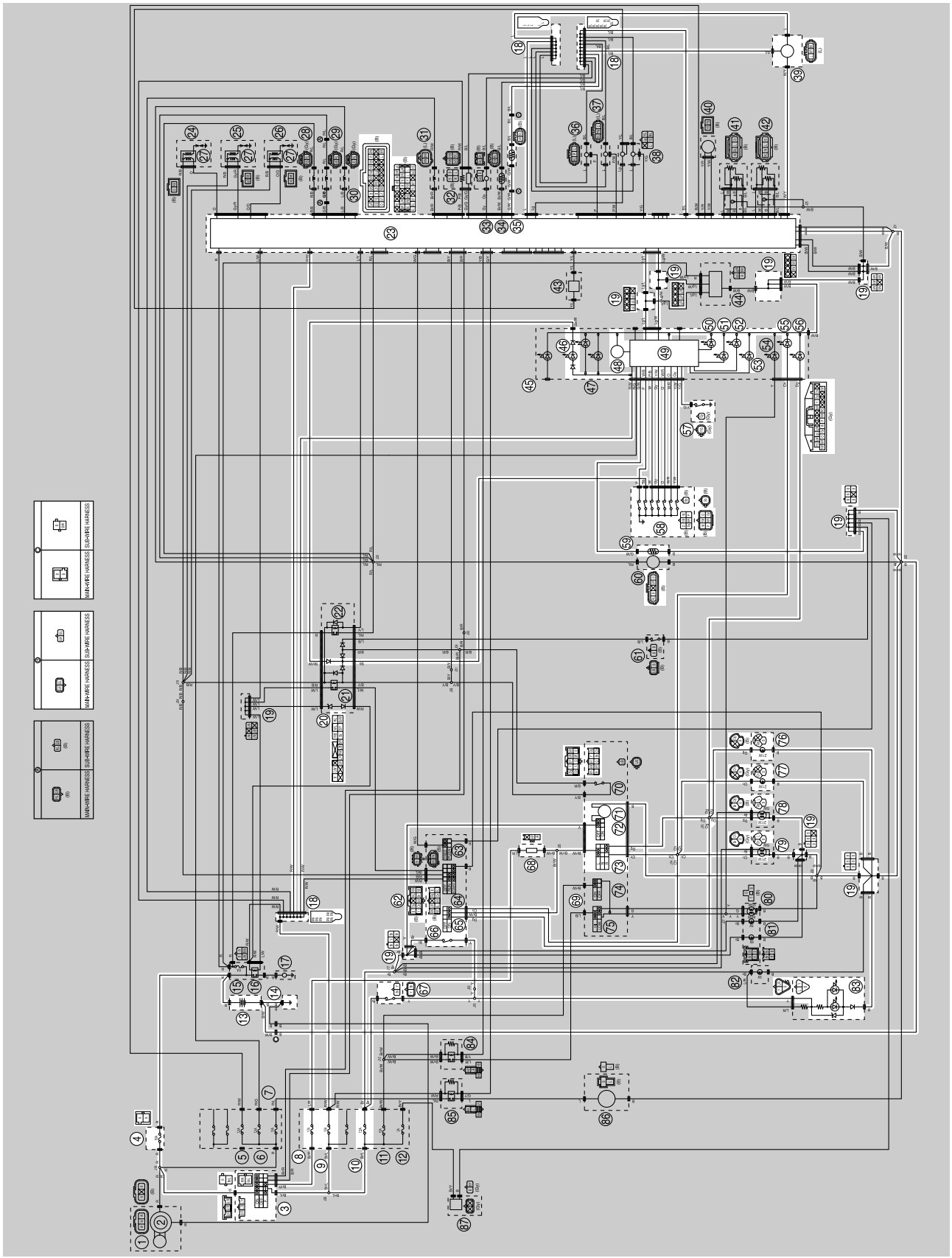

3. Main switch
4. Main fuse
8. Parking lighting fuse
9. Ignition fuse
10. Signal fuse
13. Battery
14. Engine ground
18. Joint connector
19. Joint coupler
20. Relay unit
23. ECU (engine control unit)
35. Coolant temperature sensor
39. Speed sensor
45. Meter assembly
46. Neutral indicator light
48. Tachometer
49. Multi-function meter
50. Oil level warning light
51. Fuel level indicator light
52. Engine trouble warning light
53. Coolant temperature warning light
55. Left turn signal indicator light
56. Right turn signal indicator light
57. Oil level switch
58. Gear position sensor
59. Fuel sender
62. Right handlebar switch
65. Hazard switch
66. Front brake light switch
67. Rear brake light switch
68. Turn signal/hazard relay
69. Left handlebar switch
71. Horn
72. Horn switch
73. Turn signal switch
76. Rear right turn signal light
77. Rear left turn signal light
78. Front right turn signal/position light
79. Front left turn signal/position light
83. Tail/brake light

EAS27290

TROUBLESHOOTING

- Any of the following fail to light: turn signal light, brake light or an indicator light.
- The horn fails to sound.

TIP

- Before troubleshooting, remove the following part(s):

1. Rider seat
2. Air scoop
3. Fuel tank cover
4. Fuel tank
5. Air filter case
6. Throttle bodies

1. Check the fuses. (Main, ignition, signal and parking lighting) Refer to "CHECKING THE FUSES" on page 8-93.	NG→	Replace the fuse(s).
OK↓		
2. Check the battery. Refer to "CHECKING AND CHARGING THE BATTERY" on page 8-94.	NG→	• Clean the battery terminals. • Recharge or replace the battery.
OK↓		
3. Check the main switch. Refer to "CHECKING THE SWITCHES" on page 8-89.	NG→	Replace the main switch.
OK↓		
4. Check the entire signaling system's wiring. Refer to "CIRCUIT DIAGRAM" on page 8-21.	NG→	Properly connect or repair the signaling system's wiring.
OK↓		
This circuit is OK.		

Check the signaling system

The horn fails to sound.

1. Check the horn switch. Refer to "CHECKING THE SWITCHES" on page 8-89.	NG→	Replace the left handlebar switch.
OK↓		
2. Check the horn. Refer to "CHECKING THE HORN" on page 8-103.	NG→	Replace the horn.
OK↓		

3. Check the entire signaling system's wiring. Refer to "CIRCUIT DIAGRAM" on page 8-21.	NG→	Properly connect or repair the signaling system's wiring.
OK↓		
This circuit is OK.		

The tail/brake light fails to come on.

1. Check the front brake light switch. Refer to "CHECKING THE SWITCHES" on page 8-89.	NG→	Replace the front brake light switch.
OK↓		
2. Check the rear brake light switch. Refer to "CHECKING THE SWITCHES" on page 8-89.	NG→	Replace the rear brake light switch.
OK↓		
3. Check the entire signaling system's wiring. Refer to "CIRCUIT DIAGRAM" on page 8-21.	NG→	Properly connect or repair the signaling system's wiring.
OK↓		
This circuit is OK.		

The turn signal light, turn signal indicator light or both fail to blink.

1. Check the front turn signal/position light bulbs, rear turn signal light bulbs and socket. Refer to "CHECKING THE BULBS AND BULB SOCKETS" on page 8-92.	NG→	Replace the front turn signal/position light bulb(s), rear turn signal light bulb(s), socket(s) or both.
OK↓		
2. Check the turn signal switch. Refer to "CHECKING THE SWITCHES" on page 8-89.	NG→	Replace the left handlebar switch.
OK↓		
3. Check the hazard switch. Refer to "CHECKING THE SWITCHES" on page 8-89.	NG→	Replace the left handlebar switch.
OK↓		
4. Check the turn signal/hazard relay. Refer to "CHECKING THE TURN SIGNAL/HAZARD RELAY" on page 8-98.	NG→	Replace the turn signal/hazard relay.
OK↓		

5. Check the entire signaling system's wiring.
   Refer to "CIRCUIT DIAGRAM" on page 8-21.

NG→ Properly connect or repair the signaling system's wiring.

OK↓

Replace the meter assembly.

The neutral indicator light fails to come on.

1. Check the gear position sensor.
   Refer to "CHECKING THE GEAR POSITION SENSOR" on page 8-110.

NG→ Replace the gear position sensor.

OK↓

2. Check the relay unit (diode).
   Refer to "CHECKING THE RELAY UNIT (DIODE)" on page 8-99.

NG→ Replace the relay unit.

OK↓

3. Check the entire signaling system's wiring.
   Refer to "CIRCUIT DIAGRAM" on page 8-21.

NG→ Properly connect or repair the signaling system's wiring.

OK↓

Replace the meter assembly.

The oil level warning light fails to come on.

1. Check the oil level switch.
   Refer to "CHECKING THE SWITCHES" on page 8-89.

NG→ Replace the oil level switch.

OK↓

2. Check the entire signaling system's wiring.
   Refer to "CIRCUIT DIAGRAM" on page 8-21.

NG→ Properly connect or repair the signaling system's wiring.

OK↓

Replace the meter assembly.

The fuel level warning light fails to come on.

1. Check the fuel sender.
   Refer to "CHECKING THE FUEL SENDER" on page 8-104.

NG→ Replace the fuel pump assembly.

OK↓

2. Check the entire signaling system's wiring. Refer to "CIRCUIT DIAGRAM" on page 8-21.	NG→	Properly connect or repair the signaling system's wiring.
OK↓		
Replace the ECU or meter assembly. Refer to "REPLACING THE ECU (engine control unit)" on page 8-93.		

The speedometer fails to operate.

1. Check the speed sensor. Refer to "CHECKING THE SPEED SENSOR" on page 8-105.	NG→	Replace the speed sensor.
OK↓		
2. Check the entire signaling system's wiring. Refer to "CIRCUIT DIAGRAM" on page 8-21.	NG→	Properly connect or repair the signaling system's wiring.
OK↓		
Replace the ECU or meter assembly. Refer to "REPLACING THE ECU (engine control unit)" on page 8-93.		

The coolant temperature warning light fails to come on.

1. Check the coolant temperature sensor. Refer to "CHECKING THE COOLANT TEMPERATURE SENSOR" on page 8-106.	NG→	Replace the coolant temperature sensor.
OK↓		
2. Check the entire signaling system's wiring. Refer to "CIRCUIT DIAGRAM" on page 8-21.	NG→	Properly connect or repair the signaling system's wiring.
OK↓		
Replace the ECU or meter assembly. Refer to "REPLACING THE ECU (engine control unit)" on page 8-93.		

EAS27300

COOLING SYSTEM

EAS27310

CIRCUIT DIAGRAM

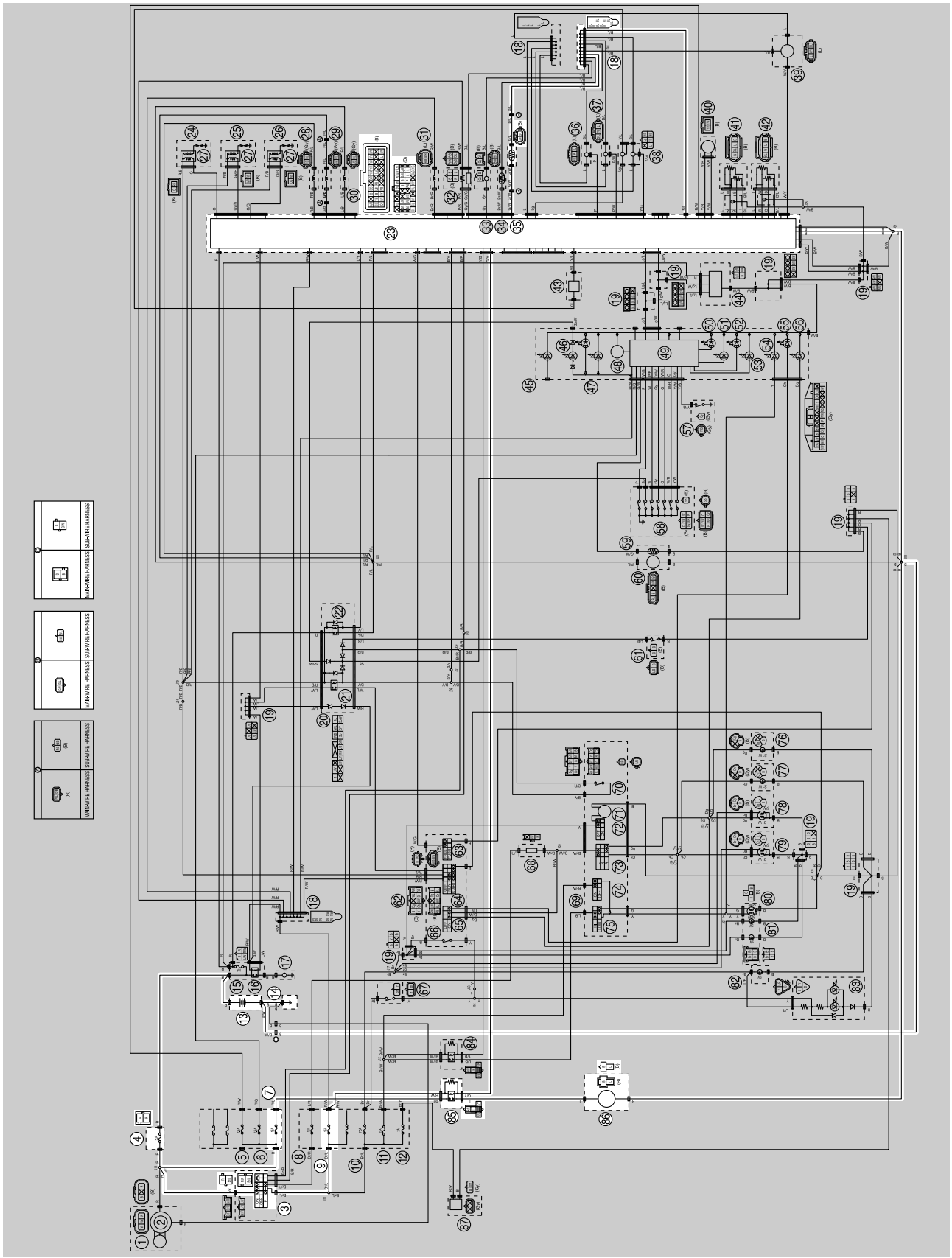

3. Main switch
4. Main fuse
7. Radiator fan fuse
9. Ignition fuse
13. Battery
14. Engine ground
18. Joint connector
23. ECU (engine control unit)
35. Coolant temperature sensor
85. Radiator fan motor relay
86. Radiator fan motor

EAS27320

TROUBLESHOOTING

TIP

• Before troubleshooting, remove the following part(s):
1. Rider seat
2. Air scoop
3. Fuel tank cover
4. Fuel tank
5. Air filter case
6. Throttle bodies

1. Check the fuses. (Main, ignition and radiator fan) Refer to "CHECKING THE FUSES" on page 8-93.	NG→	Replace the fuse(s).
OK↓		
2. Check the battery. Refer to "CHECKING AND CHARGING THE BATTERY" on page 8-94.	NG→	• Clean the battery terminals. • Recharge or replace the battery.
OK↓		
3. Check the main switch. Refer to "CHECKING THE SWITCHES" on page 8-89.	NG→	Replace the main switch.
OK↓		
4. Check the radiator fan motor. Refer to "CHECKING THE RADIATOR FAN MOTORS" on page 8-106.	NG→	Replace the radiator fan motor(s).
OK↓		
5. Check the radiator fan motor relay. Refer to "CHECKING THE RELAYS" on page 8-97.	NG→	Replace the radiator fan motor relay.
OK↓		
6. Check the coolant temperature sensor. Refer to "CHECKING THE COOLANT TEMPERATURE SENSOR" on page 8-106.	NG→	Replace the coolant temperature sensor.
OK↓		
7. Check the entire cooling system's wiring. Refer to "CIRCUIT DIAGRAM" on page 8-27.	NG→	Properly connect or repair the cooling system's wiring.
OK↓		
Replace the ECU. Refer to "REPLACING THE ECU (engine control unit)" on page 8-93.		

EAS27331

FUEL INJECTION SYSTEM

EAS27340

CIRCUIT DIAGRAM

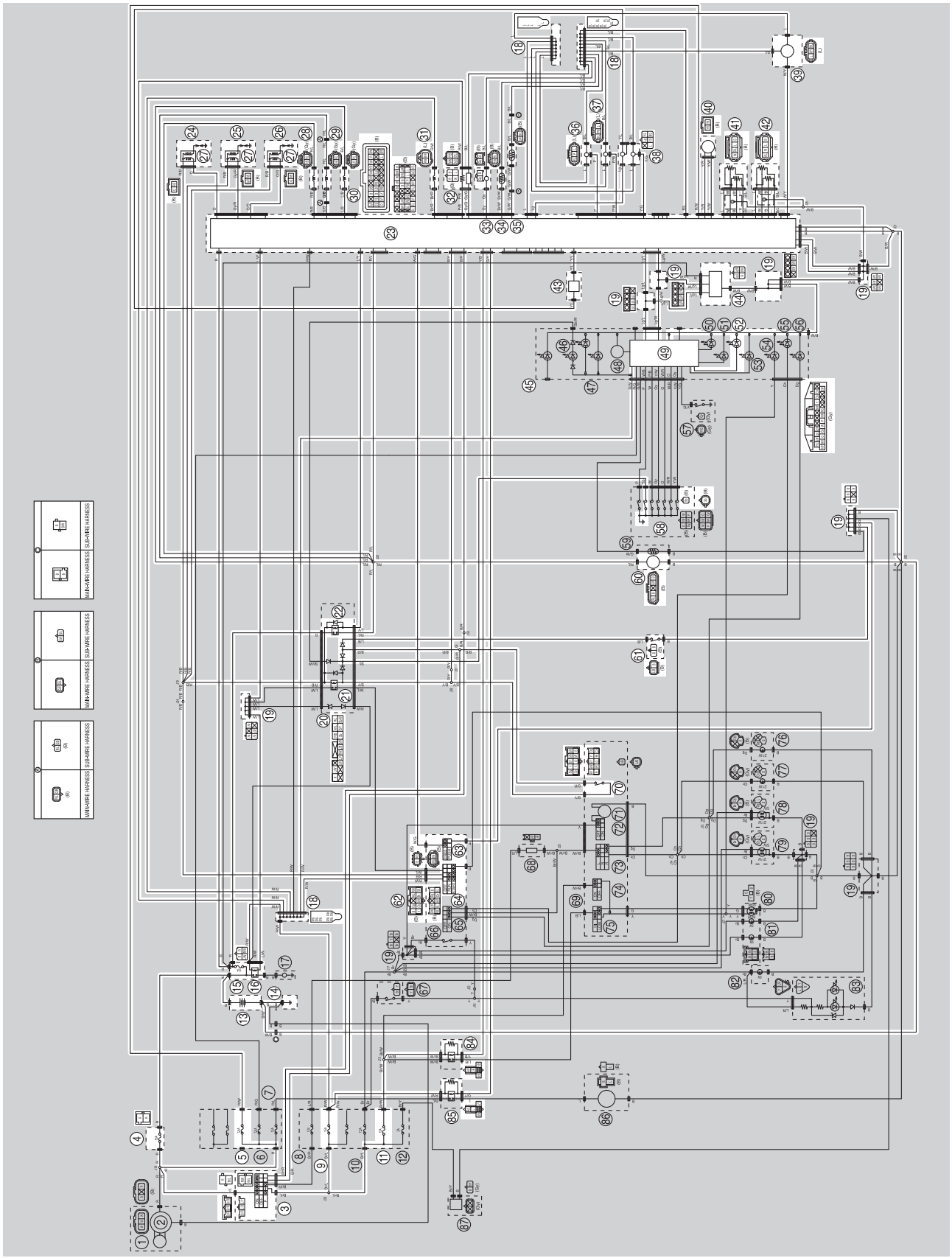

3. Main switch
4. Main fuse
5. Electric throttle valve fuse
9. Ignition fuse
11. Headlight fuse
13. Battery
14. Engine ground
15. Fuel injection system fuse
16. Starter relay
18. Joint connector
19. Joint coupler
20. Relay unit
21. Starting circuit cut-off relay
22. Fuel pump relay
23. ECU (engine control unit)
24. Ignition coil #1
25. Ignition coil #2
26. Ignition coil #3
27. Spark plug
28. Injector #1
29. Injector #2
30. Injector #3
31. Air induction system solenoid
32. O_2 sensor
33. Crankshaft position sensor
34. Intake air temperature sensor
35. Coolant temperature sensor
36. Intake air pressure sensor 1
37. Intake air pressure sensor 2
38. Lean angle sensor
39. Speed sensor
40. Throttle servo motor
41. Accelerator position sensor
42. Throttle position sensor
43. Yamaha diagnostic tool connector
44. Yamaha diagnostic tool coupler
45. Meter assembly
49. Multi-function meter
52. Engine trouble warning light
58. Gear position sensor
60. Fuel pump
61. Sidestand switch
62. Right handlebar switch
63. Drive mode switch
64. Start/engine stop switch
70. Clutch switch
84. Headlight relay
85. Radiator fan motor relay

EAS27351

ECU SELF-DIAGNOSTIC FUNCTION

The ECU is equipped with a self-diagnostic function in order to ensure that the fuel injection system is operating normally. If this function detects a malfunction in the system, it immediately operates the engine under substitute characteristics and illuminates the engine trouble warning light to alert the rider that a malfunction has occurred in the system. Once a malfunction has been detected, a fault code number is stored in the memory of the ECU.

- To inform the rider that the fuel injection system is not functioning, the engine trouble warning light flashes while the "⊛" side of the start/engine stop switch is being pushed to start the engine.
- If a malfunction is detected in the system by the self-diagnostic function, the ECU provides an appropriate substitute characteristic operation, and alerts the rider of the detected malfunction by illuminating the engine trouble warning light.
- After the engine has been stopped, the lowest fault code number appears on the meter display. Once a fault code has been displayed, it remains stored in the memory of the ECU until it is deleted.

Engine trouble warning light indication and fuel injection system operation

Warning light indication	ECU operation	Fuel injection operation	Vehicle operation
Flashing*	Warning provided when unable to start engine	Operation stopped	Cannot be operated
Remains on	Malfunction detected	Operated with substitute characteristics in accordance with the description of the malfunction	Can or cannot be operated depending on the fault code

* The warning light flashes when any one of the following conditions is present and the "⊛" side of the start/engine stop switch is pushed:

12:	Crankshaft position sensor	41:	Lean angle sensor (open or short circuit)
19:	Sidestand switch (open circuit in the wire to the ECU)	50:	ECU internal malfunction (faulty ECU memory)
30:	Lean angle sensor (latch up detected)		

Checking the engine trouble warning light

The engine trouble warning light comes on for around 2 seconds after the main switch has been set to "ON" and it comes on while the "⊛" side of the start/engine stop switch is being pushed. If the warning light does not come on under these conditions, the warning light (LED) may be defective.

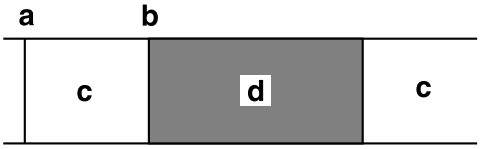

a. Main switch "OFF"
b. Main switch "ON"
c. Engine trouble warning light off
d. Engine trouble warning light on for around 2 seconds

ECU detects an abnormal signal from a sensor

If the ECU detects an abnormal signal from a sensor while the vehicle is being driven, the ECU illuminates the engine trouble warning light and provides the engine with alternate operating instructions that are appropriate for the type of malfunction.

When an abnormal signal is received from a sensor, the ECU processes the specified values that are programmed for each sensor in order to provide the engine with alternate operating instructions that enable the engine to continue operating or stop operating, depending on the conditions.

EAS30580

TROUBLESHOOTING METHOD

The engine operation is not normal and the engine trouble warning light comes on.

1. Check:
   - Fault code number

▼▼▼▼▼▼▼▼▼▼▼▼▼▼▼▼▼▼▼▼▼▼▼▼▼▼▼▼▼▼▼▼▼▼

a. Check the fault code number displayed on the meter.
b. Identify the faulty system with the fault code number.
c. Identify the probable cause of the malfunction.

▲▲▲▲▲▲▲▲▲▲▲▲▲▲▲▲▲▲▲▲▲▲▲▲▲▲▲▲▲▲▲▲▲▲

2. Check and repair the probable cause of the malfunction.

Fault code No.	No fault code No.
Check and repair. Refer to “TROUBLESHOOTING DETAILS” on page 8-38. Monitor the operation of the sensors and actuators in the diagnostic mode. Refer to “TROUBLESHOOTING DETAILS” on page 8-38 and “SELF-DIAGNOSTIC FUNCTION AND DIAGNOSTIC CODE TABLE” on page 9-5.	Check and repair.

3. Perform the reinstatement action for the fuel injection system.
   Refer to “Confirmation of service completion” in the appropriate table in “TROUBLESHOOTING DETAILS” on page 8-38.
4. Set the main switch to “OFF”, then to “ON” again, and then check that no fault code number is displayed.

TIP

If another fault code number is displayed, repeat steps (1) to (4) until no fault code number is displayed.

5. Erase the malfunction history in the diagnostic mode (code No.62). Refer to “SELF-DIAGNOSTIC FUNCTION AND DIAGNOSTIC CODE TABLE” on page 9-5.

TIP

Setting the main switch to “OFF” will not erase the malfunction history.

The engine operation is not normal, but the engine trouble warning light does not come on.

1. Check the operation of the following sensors and actuators in the diagnostic mode. Refer to “TROUBLESHOOTING DETAILS” on page 8-38.

1: Throttle position sensor signal 1 (throttle angle) 13: Throttle position sensor signal 2 (throttle angle) 14: Accelerator position sensor signal 1 (throttle angle) 15: Accelerator position sensor signal 2 (throttle angle) 30: Cylinder-#1 ignition coil 31: Cylinder-#2 ignition coil 32: Cylinder-#3 ignition coil 36: Injector #1 37: Injector #2 38: Injector #3 48: Air induction system solenoid

If a malfunction is detected in the sensors or actuators, repair or replace all faulty parts.
If no malfunction is detected in the sensors and actuators, check and repair the inner parts of the engine.

EAS27411

DIAGNOSTIC MODE

Setting the diagnostic mode

1. Turn the main switch to “OFF”.
2. Disconnect the wire harness coupler from the fuel pump.
3. Simultaneously press and hold the “SELECT” button “1” and “RESET” button “2” , turn the main switch to “ON”, and continue to press the buttons for 8 seconds or more.

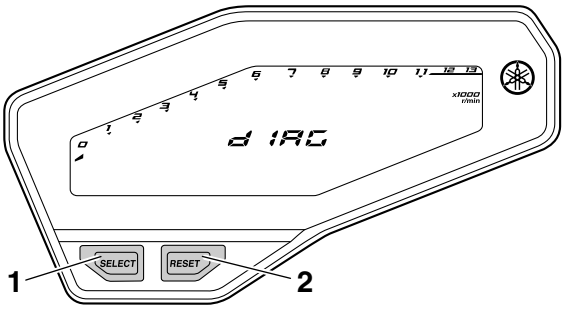

TIP

“dIAG” appears on the display.

4. Press the “SELECT” button to select the diagnostic mode “dIAG”.
5. Simultaneously press the “SELECT” and “RESET” buttons for 2 seconds or more to set the diagnostic mode.

TIP

The diagnostic code number “1” appears on the display.

6. Select the diagnostic code number corresponding to the fault code number by pressing the “SELECT” and “RESET” buttons.

TIP

The diagnostic code number appears on the display (1–70).

- To decrease the selected diagnostic code number, press the “RESET” button. Press the “RESET” button for 1 second or longer to automatically decrease the diagnostic code numbers.
- To increase the selected diagnostic code number, press the “SELECT” button. Press the “SELECT” button for 1 second or longer to automatically increase the diagnostic code numbers.

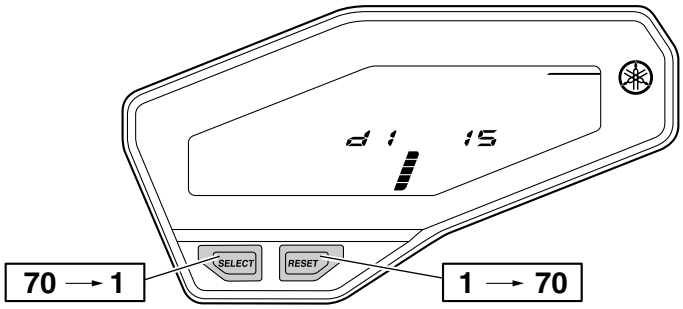

7. Verify the operation of the sensor or actuator.
   - Sensor operation
     The data representing the operating conditions of the sensor appears on the display.
   - Actuator operation
     Set the start/engine stop switch to “○” to operate the actuator.

TIP

If the start/engine stop switch is set to “○”, set it to “⊗”, and then set it to “○” again.

8. Turn the main switch to “OFF” to cancel the diagnostic mode.

TIP

Information about each diagnostic code number is organized in this manual as follows:

- If a diagnostic code number has a corresponding fault code number, the information is shown in "TROUBLESHOOTING DETAILS". (Refer to "TROUBLESHOOTING DETAILS" on page 8-38.)
- If a diagnostic code number does not have a corresponding fault code number, the information is shown in "DIAGNOSTIC CODE TABLE". (Refer to "SELF-DIAGNOSTIC FUNCTION AND DIAGNOSTIC CODE TABLE" on page 9-5.)

9. Connect the wire harness coupler to the fuel pump.

EAS1RC1812

YAMAHA DIAGNOSTIC TOOL

This model uses the Yamaha diagnostic tool to identify malfunctions.
For information about using the Yamaha diagnostic tool, refer to the operation manual that is included with the tool.

	**Yamaha diagnostic tool** **90890-03215**

Features of the Yamaha diagnostic tool

You can use the Yamaha diagnostic tool to identify malfunctions quicker than with conventional-methods.
By connecting the adapter interface, which is connected to the USB port of a computer, to a vehicle's ECU using the communication cable, you can display information that is necessary for identifying malfunctions and for maintenance to display on the computer. The displayed information includes the sensor output data and information recorded in the ECU.

Functions of the Yamaha diagnostic tool

Fault diagnosis mode:	Fault codes recorded on the ECU are read, and the contents are displayed. The freeze frame data (FFD) is the operation data when a malfunction was detected. This data can be used to identify when the malfunction occurred and check the engine conditions and running conditions when it occurred.
Function diagnostic mode:	Check the operation of the output value of each sensor and actuator.
Inspection mode:	Determine whether each sensor or actuator is functioning properly.
CO adjustment mode:	Adjust the concentration of CO admissions during idling.
Monitoring mode:	Displays a graph of sensor output values for actual operating conditions.
Logging mode:	Records and saves the sensor output value in actual driving conditions.
View log:	Displays the logging data.
ECU rewrite:	If necessary, the ECU is rewritten using ECU rewrite data provided by Yamaha. Ignition timing adjustment, etc. cannot be changed from the vehicle's original state.

However, the diagnostic tool cannot be used to freely change the basic vehicle functions, such as adjusting the ignition timing.

Connecting the Yamaha diagnostic tool

Remove the protective cap "1", and then connect the Yamaha diagnostic tool "2" to the coupler.

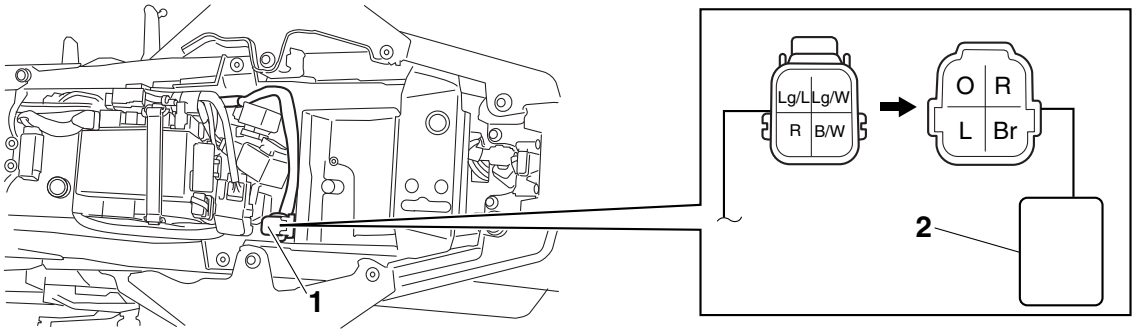

TIP

When the Yamaha diagnostic tool is connected to the vehicle, the operation of the multi-function meter and indicators will be different from the normal operation.

EAS27462

TROUBLESHOOTING DETAILS

This section describes the measures per fault code number displayed on the meter. Check and service the items or components that are the probable cause of the malfunction following the order given.
After the check and service of the malfunctioning part have been completed, reset the meter display according to the reinstatement method.
Fault code No.:
Fault code number displayed on the meter when the engine failed to work normally.
Diagnostic code No.:
Diagnostic code number to be used when the diagnostic mode is operated. Refer to “DIAGNOSTIC MODE” on page 8-36.

Fault code No.	**12**
Item	**Crankshaft position sensor: no normal signals are received from the crankshaft position sensor.**
Fail-safe system	Unable to start engine
	Unable to drive vehicle
Diagnostic code No.	—
Meter display	—
Procedure	—

Item	Probable cause of malfunction and check	Maintenance job	Confirmation of service completion
1	Connection of crankshaft position sensor coupler. Check the locking condition of the coupler. Disconnect the coupler and check the pins (bent or broken terminals and locking condition of the pins).	Improperly connected → Connect the coupler securely or replace the wire harness.	Crank the engine. Fault code number is not displayed → Service is finished. Fault code number is displayed → Go to item 2.

Fault code No.		12	
Item		Crankshaft position sensor: no normal signals are received from the crankshaft position sensor.	
2	Connection of wire harness ECU coupler. Check the locking condition of the coupler. Disconnect the coupler and check the pins (bent or broken terminals and locking condition of the pins).	Improperly connected → Connect the coupler securely or replace the wire harness.	Crank the engine. Fault code number is not displayed → Service is finished. Fault code number is displayed → Go to item 3.
3	Wire harness continuity.	Open or short circuit → Replace the wire harness. Between crankshaft position sensor coupler and ECU coupler. gray–gray Between crankshaft position sensor coupler and joint connector. black/blue–black/blue Between joint connector and ECU coupler. black/blue–black/blue	Crank the engine. Fault code number is not displayed → Service is finished. Fault code number is displayed → Go to item 4.
4	Installed condition of crankshaft position sensor. Check for looseness or pinching. Check the gap (0.85 mm (0.0335 in)) between the crankshaft position sensor and the generator rotor.	Improperly installed sensor → Reinstall or replace the sensor. Refer to “GENERATOR AND STARTER CLUTCH” on page 5-30.	Crank the engine. Fault code number is not displayed → Service is finished. Fault code number is displayed → Go to item 5.
5	Defective crankshaft position sensor.	Check the crankshaft position sensor. Refer to “CHECKING THE CRANKSHAFT POSITION SENSOR” on page 8-101. Replace if defective.	Crank the engine. Fault code number is not displayed → Service is finished. Fault code number is displayed → Go to item 6.
6	Malfunction in ECU.	Replace the ECU. Refer to “REPLACING THE ECU (engine control unit)” on page 8-93.	

Fault code No.	13
Item	Intake air pressure sensor 1: open or short circuit detected.
Fail-safe system	Able to start engine
	Able to drive vehicle
Diagnostic code No.	03
Meter display	Displays the intake air pressure.

Fault code No.	**13**
Item	**Intake air pressure sensor 1: open or short circuit detected.**
Procedure	Shift the transmission into gear, extend the sidestand, and then operate the throttle while pushing the "⊛" side of the start/engine stop switch. (If the display value changes, the performance is OK.)

Item	Probable cause of malfunction and check	Maintenance job	Confirmation of service completion
1	Connection of intake air pressure sensor 1 coupler. Check the locking condition of the coupler. Disconnect the coupler and check the pins (bent or broken terminals and locking condition of the pins).	Improperly connected → Connect the coupler securely or replace the wire harness.	Turn the main switch to "ON". Fault code number is not displayed → Service is finished. Fault code number is displayed → Go to item 2.
2	Connection of wire harness ECU coupler. Check the locking condition of the coupler. Disconnect the coupler and check the pins (bent or broken terminals and locking condition of the pins).	Improperly connected → Connect the coupler securely or replace the wire harness.	Turn the main switch to "ON". Fault code number is not displayed → Service is finished. Fault code number is displayed → Go to item 3.
3	Wire harness continuity.	Open or short circuit → Replace the wire harness. Between intake air pressure sensor 1 coupler and ECU coupler. pink–pink Between intake air pressure sensor 1 coupler and joint connector. blue–blue black/blue–black/blue Between joint connector and ECU coupler. blue–blue black/blue–black/blue	Turn the main switch to "ON". Fault code number is not displayed → Service is finished. Fault code number is displayed → Go to item 4.
4	Installed condition of intake air pressure sensor 1. Check for looseness or pinching.	Improperly installed sensor → Reinstall or replace the sensor.	Turn the main switch to "ON". Fault code number is not displayed → Service is finished. Fault code number is displayed → Go to item 5.

Fault code No.		13	
Item		**Intake air pressure sensor 1: open or short circuit detected.**	
5	Defective intake air pressure sensor 1.	Execute the diagnostic mode. (Code No. 03) When engine is stopped: Atmospheric pressure at the current altitude and weather conditions is indicated. At sea level: Approx. 101 kPa (757.6 mmHg, 29.8 inHg) 1000 m (3300 ft) above sea level: Approx. 90 kPa (675.1 mmHg, 26.6 inHg) 2000 m (6700 ft) above sea level: Approx. 80 kPa (600.0 mmHg, 23.6 inHg) 3000 m (9800 ft) above sea level: Approx. 70 kPa (525.0 mmHg, 20.7 inHg) When engine is cranking: Make sure that the indication value changes. The value does not change when engine is cranking. → Check the intake air pressure sensor 1. Replace if defective. Refer to “CHECKING THE INTAKE AIR PRESSURE SENSOR” on page 8-109.	Turn the main switch to “ON”. Fault code number is not displayed → Service is finished. Fault code number is displayed → Go to item 6.
6	Malfunction in ECU.	Replace the ECU. Refer to “REPLACING THE ECU (engine control unit)” on page 8-93.	

TIP

If fault code numbers “13” and “14” are both indicated, take the actions specified for fault code number “13” first.

Fault code No.	14
Item	**Intake air pressure sensor 1: hose system malfunction (clogged or detached hose).**
Fail-safe system	Able to start engine
	Able to drive vehicle
Diagnostic code No.	03
Meter display	Displays the intake air pressure.
Procedure	Shift the transmission into gear, extend the sidestand, and then operate the throttle while pushing the “⊛” side of the start/engine stop switch. (If the display value changes, the performance is OK.)

Fault code No.	14		
Item	Intake air pressure sensor 1: hose system malfunction (clogged or detached hose).		
Item	**Probable cause of malfunction and check**	**Maintenance job**	**Confirmation of service completion**
1	Condition of intake air pressure sensor 1 hose. Check the intake air pressure sensor hose condition.	Clogged or detached hose → Repair or replace the sensor hose.	Start the engine and let it idle for approximately 5 seconds. Fault code number is not displayed → Service is finished. Fault code number is displayed → Go to item 2.
2	Defective intake air pressure sensor 1.	Execute the diagnostic mode. (Code No. 03) When engine is stopped: Atmospheric pressure at the current altitude and weather conditions is indicated. At sea level: Approx. 101 kPa (757.6 mmHg, 29.8 inHg) 1000 m (3300 ft) above sea level: Approx. 90 kPa (675.1 mmHg, 26.6 inHg) 2000 m (6700 ft) above sea level: Approx. 80 kPa (600.0 mmHg, 23.6 inHg) 3000 m (9800 ft) above sea level: Approx. 70 kPa (525.0 mmHg, 20.7 inHg) When engine is cranking: Make sure that the indication value changes. The value does not change when engine is cranking. → Check the intake air pressure sensor 1. Replace if defective. Refer to “CHECKING THE INTAKE AIR PRESSURE SENSOR” on page 8-109.	

Fault code No.	15
Item	Throttle position sensor: open or short circuit detected.
Fail-safe system	Able/Unable to start engine
	Able/Unable to drive vehicle
Diagnostic code No.	01, 13

Fault code No.		15
Item		Throttle position sensor: open or short circuit detected.
01	Meter display	Throttle position sensor signal 1 • 11–21 (fully closed position) • 96–106 (fully open position)
	Procedure	• Check with throttle valves fully closed. • Check with throttle valves fully open.
13	Meter display	Throttle position sensor signal 2 • 9–23 (fully closed position) • 94–108 (fully open position)
	Procedure	• Check with throttle valves fully closed. • Check with throttle valves fully open.

Item	Probable cause of malfunction and check	Maintenance job	Confirmation of service completion
1	Connection of throttle position sensor coupler. Check the locking condition of the coupler. Disconnect the coupler and check the pins (bent or broken terminals and locking condition of the pins).	Improperly connected → Connect the coupler securely or replace the wire harness.	Turn the main switch to “ON”. Fault code number is not displayed → Service is finished. Fault code number is displayed → Go to item 2.
2	Connection of wire harness ECU coupler. Check the locking condition of the coupler. Disconnect the coupler and check the pins (bent or broken terminals and locking condition of the pins).	Improperly connected → Connect the coupler securely or replace the wire harness.	Turn the main switch to “ON”. Fault code number is not displayed → Service is finished. Fault code number is displayed → Go to item 3.
3	Wire harness continuity.	Open or short circuit → Replace the wire harness. Between throttle position sensor coupler and ECU coupler. black/blue–black/blue white–white black–black blue–blue	Turn the main switch to “ON”. Fault code number is not displayed → Service is finished. Fault code number is displayed → Go to item 4.
4	Installed condition of throttle position sensor. Check for looseness or pinching.	Improperly installed sensor → Reinstall or adjust the sensor. Refer to “ADJUSTING THE THROTTLE POSITION SENSOR” on page 7-12.	Turn the main switch to “ON”. Fault code number is not displayed → Service is finished. Fault code number is displayed → Go to item 5.

Fault code No.		15	
Item		**Throttle position sensor: open or short circuit detected.**	
5	Throttle position sensor resistance.	Measure the throttle position sensor resistance. black/blue–blue Refer to “CHECKING THE THROTTLE POSITION SENSOR” on page 8-107.	Turn the main switch to “ON”. Fault code number is not displayed → Service is finished. Fault code number is displayed → Go to item 6.
6	Defective throttle position sensor.	Check throttle position sensor signal 1. Execute the diagnostic mode. (Code No. 01) When the throttle valves are fully closed: A value of 11–21 is indicated. When throttle valves are fully open: A value of 96–106 is indicated. Check throttle position sensor signal 2. Execute the diagnostic mode. (Code No. 13) When the throttle valves are fully closed: A value of 9–23 is indicated. When the throttle valves are fully open: A value of 94–108 is indicated. An indicated value is out of the specified range → Replace the throttle position sensor.	Turn the main switch to “ON”. Fault code number is not displayed → Service is finished. Fault code number is displayed → Go to item 7.
7	Malfunction in ECU.	Replace the ECU. Refer to “REPLACING THE ECU (engine control unit)” on page 8-93.	

Fault code No.	19
Item	**Sidestand switch: a break or disconnection of the black/red lead of the ECU is detected.**
Fail-safe system	Unable to start engine
	Unable to drive vehicle
Diagnostic code No.	20
Meter display	Sidestand switch • “ON” (sidestand retracted) • “OFF” (sidestand extended)
Procedure	Extend and retract the sidestand (with the transmission in gear).

Fault code No.	19		
Item	Sidestand switch: a break or disconnection of the black/red lead of the ECU is detected.		
Item	**Probable cause of malfunction and check**	**Maintenance job**	**Confirmation of service completion**
1	Connection of sidestand switch coupler. Check the locking condition of the coupler. Disconnect the coupler and check the pins (bent or broken terminals and locking condition of the pins).	Improperly connected → Connect the coupler securely or replace the wire harness.	Turn the main switch to “ON”, and then extend and retract the sidestand. Fault code number is not displayed → Service is finished. Fault code number is displayed → Go to item 2.
2	Connection of wire harness ECU coupler. Check the locking condition of the coupler. Disconnect the coupler and check the pins (bent or broken terminals and locking condition of the pins).	Improperly connected → Connect the coupler securely or replace the wire harness.	Turn the main switch to “ON”, and then extend and retract the sidestand. Fault code number is not displayed → Service is finished. Fault code number is displayed → Go to item 3.
3	Connection of main switch coupler. Check the locking condition of the coupler. Disconnect the coupler and check the pins (bent or broken terminals and locking condition of the pins).	Improperly connected → Connect the coupler securely or replace the wire harness.	Turn the main switch to “ON”, and then extend and retract the sidestand. Fault code number is not displayed → Service is finished. Fault code number is displayed → Go to item 4.
4	Connection of relay unit coupler. Check the locking condition of the coupler. Disconnect the coupler and check the pins (bent or broken terminals and locking condition of the pins).	Improperly connected → Connect the coupler securely or replace the wire harness.	Turn the main switch to “ON”, and then extend and retract the sidestand. Fault code number is not displayed → Service is finished. Fault code number is displayed → Go to item 5.
5	Wire harness continuity.	Open or short circuit → Replace the wire harness. Between main switch coupler and relay unit coupler. brown/red–black/red Between main switch coupler and ECU coupler. black/red–black/red Between relay unit coupler and sidestand switch coupler. blue/black–blue/black	Turn the main switch to “ON”, and then extend and retract the sidestand. Fault code number is not displayed → Service is finished. Fault code number is displayed → Go to item 6.

Fault code No.		**19**	
Item		**Sidestand switch: a break or disconnection of the black/red lead of the ECU is detected.**	
6	Defective sidestand switch.	Execute the diagnostic mode. (Code No. 20) Shift the transmission into gear. Sidestand retracted: “ON” Sidestand extended: “OFF” Replace if defective.	Turn the main switch to “ON”, and then extend and retract the sidestand. Fault code number is not displayed → Service is finished. Fault code number is displayed → Go to item 7.
7	Malfunction in ECU.	Replace the ECU. Refer to “REPLACING THE ECU (engine control unit)” on page 8-93.	

Fault code No.		**20**
Item		**Intake air pressure sensor 1 or intake air pressure sensor 2: when the main switch is turned to “ON”, the intake air pressure sensor 1 voltage and intake air pressure sensor 2 voltage differ greatly.**
Fail-safe system		Able to start engine
		Able to drive vehicle
Diagnostic code No.		03, 04
03	**Meter display**	Displays the intake air pressure.
	Procedure	Shift the transmission into gear, extend the sidestand, and then operate the throttle while pushing the “⊛” side of the start/engine stop switch. (If the display value changes, the performance is OK.)
04	**Meter display**	Displays the intake air pressure.
	Procedure	Shift the transmission into gear, extend the sidestand, and then operate the throttle while pushing the “⊛” side of the start/engine stop switch. (If the display value changes, the performance is OK.)

Item	**Probable cause of malfunction and check**	**Maintenance job**	**Confirmation of service completion**

Fault code No.		**20**	
Item		**Intake air pressure sensor 1 or intake air pressure sensor 2: when the main switch is turned to "ON", the intake air pressure sensor 1 voltage and intake air pressure sensor 2 voltage differ greatly.**	
1	Defective intake air pressure sensor 1.	Execute the diagnostic mode. (Code No. 03) When engine is stopped: Atmospheric pressure at the current altitude and weather conditions is indicated. 0 m above sea level: Approx. 101 kPa (757.6 mmHg, 29.8 inHg) 3000 m (9800 ft) above sea level: Approx. 70 kPa (525.0 mmHg, 20.7 inHg) Displayed value is incorrect → Check the intake air pressure sensor 1. Replace if defective. Refer to "CHECKING THE INTAKE AIR PRESSURE SENSOR" on page 8-109.	Turn the main switch to "ON". Fault code number is not displayed → Service is finished. Fault code number is displayed → Go to item 2.
2	Defective intake air pressure sensor 2.	Execute the diagnostic mode. (Code No. 04) When engine is stopped: Atmospheric pressure at the current altitude and weather conditions is indicated. 0 m above sea level: Approx. 101 kPa (757.6 mmHg, 29.8 inHg) 3000 m (9800 ft) above sea level: Approx. 70 kPa (525.0 mmHg, 20.7 inHg) Displayed value is incorrect → Check the intake air pressure sensor 2. Replace if defective. Refer to "CHECKING THE INTAKE AIR PRESSURE SENSOR" on page 8-109.	Turn the main switch to "ON". Fault code number is not displayed → Service is finished. Fault code number is displayed → Go to item 3.
3	Malfunction in ECU.	Replace the ECU. Refer to "REPLACING THE ECU (engine control unit)" on page 8-93.	

Fault code No.	**21**
Item	**Coolant temperature sensor: open or short circuit detected.**
Fail-safe system	Able to start engine
	Able to drive vehicle
Diagnostic code No.	06
Meter display	Displays the coolant temperature.
Procedure	Compare the actually measured coolant temperature with the meter display value.

Item	Probable cause of malfunction and check	Maintenance job	Confirmation of service completion
1	Connection of coolant temperature sensor coupler. Check the locking condition of the coupler. Disconnect the coupler and check the pins (bent or broken terminals and locking condition of the pins).	Improperly connected → Connect the coupler securely or replace the wire harness.	Turn the main switch to “ON”. Fault code number is not displayed → Service is finished. Fault code number is displayed → Go to item 2.
2	Connection of wire harness ECU coupler. Check the locking condition of the coupler. Disconnect the coupler and check the pins (bent or broken terminals and locking condition of the pins).	Improperly connected → Connect the coupler securely or replace the wire harness.	Turn the main switch to “ON”. Fault code number is not displayed → Service is finished. Fault code number is displayed → Go to item 3.
3	Wire harness continuity.	Open or short circuit → Replace the wire harness. Between coolant temperature sensor coupler and ECU coupler. green/white–green/white Between coolant temperature sensor coupler and joint connector. black/blue–black/blue Between joint connector and ECU coupler. black/blue–black/blue	Turn the main switch to “ON”. Fault code number is not displayed → Service is finished. Fault code number is displayed → Go to item 4.
4	Installed condition of coolant temperature sensor. Check for looseness or pinching.	Improperly installed sensor → Reinstall or replace the sensor.	Turn the main switch to “ON”. Fault code number is not displayed → Service is finished. Fault code number is displayed → Go to item 5.

Fault code No.		21	
Item		**Coolant temperature sensor: open or short circuit detected.**	
5	Defective coolant temperature sensor.	Execute the diagnostic mode. (Code No. 06) When engine is cold: Displayed temperature is close to the ambient temperature. The displayed temperature is not close to the ambient temperature → Check the coolant temperature sensor. Replace if defective. Refer to "CHECKING THE COOLANT TEMPERATURE SENSOR" on page 8-106.	Turn the main switch to "ON". Fault code number is not displayed → Service is finished. Fault code number is displayed → Go to item 6.
6	Malfunction in ECU.	Replace the ECU. Refer to "REPLACING THE ECU (engine control unit)" on page 8-93.	

Fault code No.		22	
Item		**Intake air temperature sensor: open or short circuit detected.**	
Fail-safe system		Able to start engine	
		Able to drive vehicle	
Diagnostic code No.		05	
Meter display		Displays the air temperature.	
Procedure		Compare the actually measured air temperature with the meter display value.	
Item	**Probable cause of malfunction and check**	**Maintenance job**	**Confirmation of service completion**
1	Connection of intake air temperature sensor coupler. Check the locking condition of the coupler. Disconnect the coupler and check the pins (bent or broken terminals and locking condition of the pins).	Improperly connected → Connect the coupler securely or replace the wire harness.	Turn the main switch to "ON". Fault code number is not displayed → Service is finished. Fault code number is displayed → Go to item 2.
2	Connection of wire harness ECU coupler. Check the locking condition of the coupler. Disconnect the coupler and check the pins (bent or broken terminals and locking condition of the pins).	Improperly connected → Connect the coupler securely or replace the wire harness.	Turn the main switch to "ON". Fault code number is not displayed → Service is finished. Fault code number is displayed → Go to item 3.

Fault code No.		22	
Item		**Intake air temperature sensor: open or short circuit detected.**	
3	Wire harness continuity.	Open or short circuit → Replace the wire harness. Between intake air temperature sensor coupler and ECU coupler. brown/white–brown/white Between intake air temperature sensor coupler and joint connector. black/blue–black/blue Between joint connector and ECU coupler. black/blue–black/blue	Turn the main switch to "ON". Fault code number is not displayed → Service is finished. Fault code number is displayed → Go to item 4.
4	Installed condition of intake air temperature sensor. Check for looseness or pinching.	Improperly installed sensor → Reinstall or replace the sensor.	Turn the main switch to "ON". Fault code number is not displayed → Service is finished. Fault code number is displayed → Go to item 5.
5	Defective intake air temperature sensor.	Execute the diagnostic mode. (Code No. 05) When engine is cold: Displayed temperature is close to the ambient temperature. The displayed temperature is not close to the ambient temperature. → Check the intake air temperature sensor. Replace if defective. Refer to "CHECKING THE INTAKE AIR TEMPERATURE SENSOR" on page 8-109.	Turn the main switch to "ON". Fault code number is not displayed → Service is finished. Fault code number is displayed → Go to item 6.
6	Malfunction in ECU.	Replace the ECU. Refer to "REPLACING THE ECU (engine control unit)" on page 8-93.	

Fault code No.	24
Item	**O_2 sensor: no normal signals are received from the O_2 sensor.**
Fail-safe system	Able to start engine
	Able to drive vehicle
Diagnostic code No.	—
Meter display	—
Procedure	—

Fault code No.	24		
Item	O_2 sensor: no normal signals are received from the O_2 sensor.		
Item	**Probable cause of malfunction and check**	**Maintenance job**	**Confirmation of service completion**
1	Installed condition of O_2 sensor.	Improperly installed sensor → Reinstall or replace the sensor.	Start the engine, warm it up, and then race it, or execute the diagnostic mode. (Code No. 63) Fault code number is not displayed → Service is finished. Fault code number is displayed → Go to item 2.
2	Connection of O_2 sensor coupler. Check the locking condition of the coupler. Disconnect the coupler and check the pins (bent or broken terminals and locking condition of the pins).	Improperly connected → Connect the coupler securely or replace the wire harness.	Start the engine, warm it up, and then race it, or execute the diagnostic mode. (Code No. 63) Fault code number is not displayed → Service is finished. Fault code number is displayed → Go to item 3.
3	Connection of wire harness ECU coupler. Check the locking condition of the coupler. Disconnect the coupler and check the pins (bent or broken terminals and locking condition of the pins).	Improperly connected → Connect the coupler securely or replace the wire harness.	Start the engine, warm it up, and then race it, or execute the diagnostic mode. (Code No. 63) Fault code number is not displayed → Service is finished. Fault code number is displayed → Go to item 4.
4	Wire harness continuity.	Open or short circuit → Replace the wire harness. Between O_2 sensor coupler and ECU coupler. gray/green–gray/green pink/black–pink/black Between O_2 sensor coupler and joint connector. black/blue–black/blue red/white–red/white Between joint connector and ECU coupler. black/blue–black/blue Between joint connector and fuse box 1. red/white–red/white	Start the engine, warm it up, and then race it, or execute the diagnostic mode. (Code No. 63) Fault code number is not displayed → Service is finished. Fault code number is displayed → Go to item 5.

Fault code No.		24	
Item		**O_2 sensor: no normal signals are received from the O_2 sensor.**	
5	Check fuel pressure.	Refer to “CHECKING THE FUEL PRESSURE” on page 7-11.	Start the engine, warm it up, and then race it, or execute the diagnostic mode. (Code No. 63) Fault code number is not displayed → Service is finished. Fault code number is displayed → Go to item 6.
6	Defective O_2 sensor.	Check the O_2 sensor. Replace if defective. Refer to “ENGINE REMOVAL” on page 5-3.	Start the engine, warm it up, and then race it, or execute the diagnostic mode. (Code No. 63) Fault code number is not displayed → Service is finished. Fault code number is displayed → Go to item 7.
7	Malfunction in ECU.	Replace the ECU. Refer to “REPLACING THE ECU (engine control unit)” on page 8-93.	

Fault code No.		25	
Item		**Intake air pressure sensor 2: open or short circuit detected.**	
Fail-safe system		Able to start engine	
		Able to drive vehicle	
Diagnostic code No.		04	
Meter display		Displays the intake air pressure.	
Procedure		Shift the transmission into gear, extend the sidestand, and then operate the throttle while pushing the “⊛” side of the start/engine stop switch. (If the display value changes, the performance is OK.)	
Item	**Probable cause of malfunction and check**	**Maintenance job**	**Confirmation of service completion**
1	Connection of intake air pressure sensor 2 coupler. Check the locking condition of the coupler. Disconnect the coupler and check the pins (bent or broken terminals and locking condition of the pins).	Improperly connected → Connect the coupler securely or replace the wire harness.	Turn the main switch to “ON”. Fault code number is not displayed → Service is finished. Fault code number is displayed → Go to item 2.

Fault code No.		25	
Item		**Intake air pressure sensor 2: open or short circuit detected.**	
2	Connection of wire harness ECU coupler. Check the locking condition of the coupler. Disconnect the coupler and check the pins (bent or broken terminals and locking condition of the pins).	Improperly connected → Connect the coupler securely or replace the wire harness.	Turn the main switch to “ON”. Fault code number is not displayed → Service is finished. Fault code number is displayed → Go to item 3.
3	Wire harness continuity.	Open or short circuit → Replace the wire harness. Between intake air pressure sensor 2 coupler and ECU coupler. pink/white–pink/white Between intake air pressure sensor 2 coupler and joint connector. blue–blue black/blue–black/blue Between joint connector and ECU coupler. blue–blue black/blue–black/blue	Turn the main switch to “ON”. Fault code number is not displayed → Service is finished. Fault code number is displayed → Go to item 4.
4	Installed condition of intake air pressure sensor 2. Check for looseness or pinching.	Improperly installed sensor → Reinstall or replace the sensor.	Turn the main switch to “ON”. Fault code number is not displayed → Service is finished. Fault code number is displayed → Go to item 5.

Fault code No.		25	
Item		**Intake air pressure sensor 2: open or short circuit detected.**	
5	Defective intake air pressure sensor 2.	Execute the diagnostic mode. (Code No. 04) When engine is stopped: Atmospheric pressure at the current altitude and weather conditions is indicated. At sea level: Approx. 101 kPa (757.6 mmHg, 29.8 inHg) 1000 m (3300 ft) above sea level: Approx. 90 kPa (675.1 mmHg, 26.6 inHg) 2000 m (6700 ft) above sea level: Approx. 80 kPa (600.0 mmHg, 23.6 inHg) 3000 m (9800 ft) above sea level: Approx. 70 kPa (525.0 mmHg, 20.7 inHg) When engine is cranking: Make sure that the indication value changes. The value does not change when engine is cranking. → Check the intake air pressure sensor 2. Replace if defective. Refer to "CHECKING THE INTAKE AIR PRESSURE SENSOR" on page 8-109.	Turn the main switch to "ON". Fault code number is not displayed → Service is finished. Fault code number is displayed → Go to item 6.
6	Malfunction in ECU.	Replace the ECU. Refer to "REPLACING THE ECU (engine control unit)" on page 8-93.	

TIP

- If fault code numbers "25" and "26" are both indicated, take the actions specified for fault code number "25" first.
- If fault code numbers "25" and "14" are both indicated, take the actions specified for fault code number "25" first.

Fault code No.	26
Item	**Intake air pressure sensor 2: hose system malfunction (clogged or detached hose).**
Fail-safe system	Able to start engine
	Able to drive vehicle
Diagnostic code No.	04
Meter display	Displays the intake air pressure.

Fault code No.	26
Item	**Intake air pressure sensor 2: hose system malfunction (clogged or detached hose).**
Procedure	Shift the transmission into gear, extend the sidestand, and then operate the throttle while pushing the "⊛" side of the start/engine stop switch. (If the display value changes, the performance is OK.)

Item	Probable cause of malfunction and check	Maintenance job	Confirmation of service completion
1	Condition of intake air pressure sensor 2 hose. Check the intake air pressure sensor hose condition.	Clogged or detached hose → Repair or replace the sensor hose.	Start the engine and let it idle for approximately 5 seconds. Fault code number is not displayed → Service is finished. Fault code number is displayed → Go to item 2.
2	Defective intake air pressure sensor 2.	Execute the diagnostic mode. (Code No. 04) When engine is stopped: Atmospheric pressure at the current altitude and weather conditions is indicated. At sea level: Approx. 101 kPa (757.6 mmHg, 29.8 inHg) 1000 m (3300 ft) above sea level: Approx. 90 kPa (675.1 mmHg, 26.6 inHg) 2000 m (6700 ft) above sea level: Approx. 80 kPa (600.0 mmHg, 23.6 inHg) 3000 m (9800 ft) above sea level: Approx. 70 kPa (525.0 mmHg, 20.7 inHg) When engine is cranking: Make sure that the indication value changes. The value does not change when engine is cranking. → Check the intake air pressure sensor 2. Replace if defective. Refer to "CHECKING THE INTAKE AIR PRESSURE SENSOR" on page 8-109.	

TIP

- If fault code numbers "25" and "26" are both indicated, take the actions specified for fault code number "25" first.
- If fault code numbers "26" and "37" are both indicated, take the actions specified for fault code number "26" first.

Fault code No.	**30**
Item	**Latch up detected.**
Fail-safe system	Unable to start engine
	Unable to drive vehicle
Diagnostic code No.	08
Meter display	Lean angle sensor output voltage • 0.4–1.4 (upright) • 3.7–4.4 (overturned)
Procedure	Remove the lean angle sensor and incline it more than 65 degrees.

Item	Probable cause of malfunction and check	Maintenance job	Confirmation of service completion
1	The vehicle has overturned.	Raise the vehicle upright.	Turn the main switch to “ON”, then to “OFF”, and then back to “ON”. Fault code number is not displayed → Service is finished. Fault code number is displayed → Go to item 2.
2	Installed condition of lean angle sensor.	Check the installed direction and condition of the sensor.	Turn the main switch to “ON”, then to “OFF”, and then back to “ON”. Fault code number is not displayed → Service is finished. Fault code number is displayed → Go to item 3.
3	Defective lean angle sensor.	Execute the diagnostic mode. (Code No. 08) Replace if defective. Refer to “CHECKING THE LEAN ANGLE SENSOR” on page 8-101.	Turn the main switch to “ON”, then to “OFF”, and then back to “ON”. Fault code number is not displayed → Service is finished. Fault code number is displayed → Go to item 4.
4	Malfunction in ECU.	Replace the ECU. Refer to “REPLACING THE ECU (engine control unit)” on page 8-93.	

Fault code No.	**33**
Item	**Cylinder-#1 ignition coil: open or short circuit detected in the primary lead of the cylinder-#1 ignition coil.**
Fail-safe system	Able to start engine (depending on the number of faulty cylinders)
	Able to drive vehicle (depending on the number of faulty cylinders)
Diagnostic code No.	30

Fault code No.	**33**
Item	**Cylinder-#1 ignition coil: open or short circuit detected in the primary lead of the cylinder-#1 ignition coil.**
Actuation	Actuates the cylinder-#1 ignition coil five times at one-second intervals. Illuminates the engine trouble warning light.
Procedure	Check that a spark is generated five times. • Connect an ignition checker.

Item	Probable cause of malfunction and check	Maintenance job	Confirmation of service completion
1	Connection of cylinder-#1 ignition coil coupler. Check the locking condition of the coupler. Disconnect the coupler and check the pins (bent or broken terminals and locking condition of the pins).	Improperly connected → Connect the coupler securely or replace the wire harness.	Start the engine and let it idle for approximately 5 seconds. Fault code number is not displayed → Service is finished. Fault code number is displayed → Go to item 2.
2	Connection of wire harness ECU coupler. Check the locking condition of the coupler. Disconnect the coupler and check the pins (bent or broken terminals and locking condition of the pins).	Improperly connected → Connect the coupler securely or replace the wire harness.	Start the engine and let it idle for approximately 5 seconds. Fault code number is not displayed → Service is finished. Fault code number is displayed → Go to item 3.
3	Wire harness continuity.	Open or short circuit → Replace the wire harness. Between cylinder-#1 ignition coil coupler and ECU coupler. orange–orange	Start the engine and let it idle for approximately 5 seconds. Fault code number is not displayed → Service is finished. Fault code number is displayed → Go to item 4.
4	Installed condition of cylinder-#1 ignition coil. Check for looseness or pinching.	Improperly installed ignition coil → Reinstall or replace the ignition coil.	Start the engine and let it idle for approximately 5 seconds. Fault code number is not displayed → Service is finished. Fault code number is displayed → Go to item 5.
5	Defective cylinder-#1 ignition coil.	Measure the primary coil resistance of the cylinder-#1 ignition coil. Replace if out of specification. Refer to “CHECKING THE IGNITION COILS” on page 8-100.	Start the engine and let it idle for approximately 5 seconds. Fault code number is not displayed → Service is finished. Fault code number is displayed → Go to item 6.

Fault code No.		**33**	
Item		**Cylinder-#1 ignition coil: open or short circuit detected in the primary lead of the cylinder-#1 ignition coil.**	
6	Malfunction in ECU.	Execute the diagnostic mode. (Code No. 30) No spark → Replace the ECU. Refer to “REPLACING THE ECU (engine control unit)” on page 8-93.	

Fault code No.	**34**
Item	**Cylinder-#2 ignition coil: open or short circuit detected in the primary lead of the cylinder-#2 ignition coil.**
Fail-safe system	Able to start engine (depending on the number of faulty cylinders)
	Able to drive vehicle (depending on the number of faulty cylinders)
Diagnostic code No.	31
Actuation	Actuates the cylinder-#2 ignition coil five times at one-second intervals. Illuminates the engine trouble warning light.
Procedure	Check that a spark is generated five times. • Connect an ignition checker.

Item	Probable cause of malfunction and check	Maintenance job	Confirmation of service completion
1	Connection of cylinder-#2 ignition coil coupler. Check the locking condition of the coupler. Disconnect the coupler and check the pins (bent or broken terminals and locking condition of the pins).	Improperly connected → Connect the coupler securely or replace the wire harness.	Start the engine and let it idle for approximately 5 seconds. Fault code number is not displayed → Service is finished. Fault code number is displayed → Go to item 2.
2	Connection of wire harness ECU coupler. Check the locking condition of the coupler. Disconnect the coupler and check the pins (bent or broken terminals and locking condition of the pins).	Improperly connected → Connect the coupler securely or replace the wire harness.	Start the engine and let it idle for approximately 5 seconds. Fault code number is not displayed → Service is finished. Fault code number is displayed → Go to item 3.
3	Wire harness continuity.	Open or short circuit → Replace the wire harness. Between cylinder-#2 ignition coil coupler and ECU coupler. gray/red–gray/red	Start the engine and let it idle for approximately 5 seconds. Fault code number is not displayed → Service is finished. Fault code number is displayed → Go to item 4.

Fault code No.		34	
Item		**Cylinder-#2 ignition coil: open or short circuit detected in the primary lead of the cylinder-#2 ignition coil.**	
4	Installed condition of cylinder-#2 ignition coil. Check for looseness or pinching.	Improperly installed ignition coil → Reinstall or replace the ignition coil.	Start the engine and let it idle for approximately 5 seconds. Fault code number is not displayed → Service is finished. Fault code number is displayed → Go to item 5.
5	Defective cylinder-#2 ignition coil.	Measure the primary coil resistance of the cylinder-#2 ignition coil. Replace if out of specification. Refer to "CHECKING THE IGNITION COILS" on page 8-100.	Start the engine and let it idle for approximately 5 seconds. Fault code number is not displayed → Service is finished. Fault code number is displayed → Go to item 6.
6	Malfunction in ECU.	Execute the diagnostic mode. (Code No. 31) No spark → Replace the ECU. Refer to "REPLACING THE ECU (engine control unit)" on page 8-93.	

Fault code No.		35	
Item		**Cylinder-#3 ignition coil: open or short circuit detected in the primary lead of the cylinder-#3 ignition coil.**	
Fail-safe system		Able to start engine (depending on the number of faulty cylinders)	
		Able to drive vehicle (depending on the number of faulty cylinders)	
Diagnostic code No.		32	
Actuation		Actuates the cylinder-#3 ignition coil five times at one-second intervals. Illuminates the engine trouble warning light.	
Procedure		Check that a spark is generated five times. • Connect an ignition checker.	
Item	**Probable cause of malfunction and check**	**Maintenance job**	**Confirmation of service completion**
1	Connection of cylinder-#3 ignition coil coupler. Check the locking condition of the coupler. Disconnect the coupler and check the pins (bent or broken terminals and locking condition of the pins).	Improperly connected → Connect the coupler securely or replace the wire harness.	Start the engine and let it idle for approximately 5 seconds. Fault code number is not displayed → Service is finished. Fault code number is displayed → Go to item 2.

Fault code No.		35	
Item		Cylinder-#3 ignition coil: open or short circuit detected in the primary lead of the cylinder-#3 ignition coil.	
2	Connection of wire harness ECU coupler. Check the locking condition of the coupler. Disconnect the coupler and check the pins (bent or broken terminals and locking condition of the pins).	Improperly connected → Connect the coupler securely or replace the wire harness.	Start the engine and let it idle for approximately 5 seconds. Fault code number is not displayed → Service is finished. Fault code number is displayed → Go to item 3.
3	Wire harness continuity.	Open or short circuit → Replace the wire harness. Between cylinder-#3 ignition coil coupler and ECU coupler. orange/green–orange/green	Start the engine and let it idle for approximately 5 seconds. Fault code number is not displayed → Service is finished. Fault code number is displayed → Go to item 4.
4	Installed condition of cylinder-#3 ignition coil. Check for looseness or pinching.	Improperly installed ignition coil → Reinstall or replace the ignition coil.	Start the engine and let it idle for approximately 5 seconds. Fault code number is not displayed → Service is finished. Fault code number is displayed → Go to item 5.
5	Defective cylinder-#3 ignition coil.	Measure the primary coil resistance of the cylinder-#3 ignition coil. Replace if out of specification. Refer to “CHECKING THE IGNITION COILS” on page 8-100.	Start the engine and let it idle for approximately 5 seconds. Fault code number is not displayed → Service is finished. Fault code number is displayed → Go to item 6.
6	Malfunction in ECU.	Execute the diagnostic mode. (Code No. 32) No spark → Replace the ECU. Refer to “REPLACING THE ECU (engine control unit)” on page 8-93.	

Fault code No.		39
Item		Injector: open or short circuit detected.
Fail-safe system		Able to start engine (depending on the number of faulty cylinders)
		Able to drive vehicle (depending on the number of faulty cylinders)
Diagnostic code No.		36, 37, 38
36	Actuation	Actuates injector #1 five times at one-second intervals. Illuminates the engine trouble warning light.
	Procedure	Check that injector #1 is actuated five times by listening for the operating sound.

Fault code No.		39
Item		Injector: open or short circuit detected.
37	Actuation	Actuates injector #2 five times at one-second intervals. Illuminates the engine trouble warning light.
	Procedure	Check that injector #2 is actuated five times by listening for the operating sound.
38	Actuation	Actuates injector #3 five times at one-second intervals. Illuminates the engine trouble warning light.
	Procedure	Check that injector #3 is actuated five times by listening for the operating sound.

Item	Probable cause of malfunction and check	Maintenance job	Confirmation of service completion
1	Identify the malfunctioning injector.	Execute the diagnostic mode. (Code Nos. 36, 37, 38) Identify the injector that does not produce an operating sound. Perform the following procedures for the defective injector. Refer to “CHECKING THE FUEL INJECTORS” on page 8-111.	—
2	Connection of injector #1, #2, and/or injector #3 coupler. Check the locking condition of the coupler. Disconnect the coupler and check the pins (bent or broken terminals and locking condition of the pins).	Improperly connected → Connect the coupler securely or replace the wire harness.	Execute the diagnostic mode. (Code Nos. 36, 37, 38) No operating sound → Go to item 3. Operating sound → Go to item 7.
3	Defective injector #1, #2, and/or injector #3.	Measure the injector resistance. Replace if out of specification. Refer to “CHECKING THE FUEL INJECTORS” on page 8-111.	Execute the diagnostic mode. (Code Nos. 36, 37, 38) No operating sound → Go to item 4. Operating sound → Go to item 7.
4	Connection of wire harness ECU coupler. Check the locking condition of the coupler. Disconnect the coupler and check the pins (bent or broken terminals and locking condition of the pins).	Improperly connected → Connect the coupler securely or replace the wire harness.	Execute the diagnostic mode. (Code Nos. 36, 37, 38) No operating sound → Go to item 5. Operating sound → Go to item 7.

Fault code No.		39	
Item		**Injector: open or short circuit detected.**	
5	Wire harness continuity.	Open or short circuit → Replace the wire harness. Between injector coupler and ECU coupler. Injector #1 red/black–red/black Injector #2 green/black–green/black Injector #3 blue/black–blue/black Between injector coupler and relay unit coupler. red/blue–red/blue	Execute the diagnostic mode. (Code Nos. 36, 37, 38) No operating sound → Go to item 6. Operating sound → Go to item 7.
6	Malfunction in ECU.	Replace the ECU. Refer to “REPLACING THE ECU (engine control unit)” on page 8-93.	
7	Delete the fault code.		Start the engine and let it idle for approximately 5 seconds. Check that the fault code number is not displayed.

Fault code No.		41	
Item		**Lean angle sensor: open or short circuit detected.**	
Fail-safe system		Unable to start engine	
		Unable to drive vehicle	
Diagnostic code No.		08	
Meter display		Lean angle sensor output voltage • 0.4–1.4 (upright) • 3.7–4.4 (overturned)	
Procedure		Remove the lean angle sensor and incline it more than 65 degrees.	
Item	**Probable cause of malfunction and check**	**Maintenance job**	**Confirmation of service completion**
1	Connection of lean angle sensor coupler. Check the locking condition of the coupler. Disconnect the coupler and check the pins (bent or broken terminals and locking condition of the pins).	Improperly connected → Connect the coupler securely or replace the wire harness.	Turn the main switch to “ON”, then to “OFF”, and then back to “ON”. Fault code number is not displayed → Service is finished. Fault code number is displayed → Go to item 2.

Fault code No.		**41**	
Item		**Lean angle sensor: open or short circuit detected.**	
2	Connection of wire harness ECU coupler. Check the locking condition of the coupler. Disconnect the coupler and check the pins (bent or broken terminals and locking condition of the pins).	Improperly connected → Connect the coupler securely or replace the wire harness.	Turn the main switch to “ON”, then to “OFF”, and then back to “ON”. Fault code number is not displayed → Service is finished. Fault code number is displayed → Go to item 3.
3	Wire harness continuity.	Open or short circuit → Replace the wire harness. Between lean angle sensor coupler and ECU coupler. yellow/green–yellow/green Between lean angle sensor coupler and joint connector. blue–blue black/blue–black/blue Between joint connector and ECU coupler. blue–blue black/blue–black/blue	Turn the main switch to “ON”, then to “OFF”, and then back to “ON”. Fault code number is not displayed → Service is finished. Fault code number is displayed → Go to item 4.
4	Defective lean angle sensor.	Execute the diagnostic mode. (Code No. 08) Replace if defective. Refer to “CHECKING THE LEAN ANGLE SENSOR” on page 8-101.	Turn the main switch to “ON”, then to “OFF”, and then back to “ON”. Fault code number is not displayed → Service is finished. Fault code number is displayed → Go to item 5.
5	Malfunction in ECU.	Replace the ECU. Refer to “REPLACING THE ECU (engine control unit)” on page 8-93.	

Fault code No.	**42**	
Item	**A**	**Speed sensor: no normal signals are received from the speed sensor.**
	B	Neutral switch: open or short circuit is detected.
	C	Clutch switch: open or short circuit is detected.
Fail-safe system	Able to start engine	
	Able to drive vehicle	
Diagnostic code No.	07	
Meter display	Vehicle speed pulse 0–999	

Fault code No.	**42**	
Item	**A**	**Speed sensor: no normal signals are received from the speed sensor.**
	B	Neutral switch: open or short circuit is detected.
	C	Clutch switch: open or short circuit is detected.
Procedure	Check that the number increases when the rear wheel is rotated. The number is cumulative and does not reset each time the wheel is stopped.	

Item	Probable cause of malfunction and check	Maintenance job	Confirmation of service completion
1	Locate the malfunction.	Execute the diagnostic mode. (Code No. 07) Rotate the rear wheel by hand and check that the indicated value increases.	Value does not increase → Go to item 2.
		Execute the diagnostic mode. (Code No. 21) When the transmission is in neutral: “ON” When the transmission is in gear with the clutch lever released: “OFF”	Incorrect indication → Go to item 2 in section B for the neutral switch.
		When the transmission is in gear with the clutch lever squeezed and the sidestand retracted: “ON”	Incorrect indication → Go to item 2 in section C for the clutch switch.
2	Connection of speed sensor coupler. Check the locking condition of the coupler. Disconnect the coupler and check the pins (bent or broken terminals and locking condition of the pins).	Improperly connected → Connect the coupler securely or replace the wire harness.	Execute the diagnostic mode. (Code No. 07) Rotate the rear wheel by hand and check that the indicated value increases. Value increases → Go to item 6 and delete the fault code. Value does not increase → Go to item 3.
3	Connection of wire harness ECU coupler. Check the locking condition of the coupler. Disconnect the coupler and check the pins (bent or broken terminals and locking condition of the pins).	Improperly connected → Connect the coupler securely or replace the wire harness.	Execute the diagnostic mode. (Code No. 07) Rotate the rear wheel by hand and check that the indicated value increases. Value increases → Go to item 6 and delete the fault code. Value does not increase → Go to item 4.

Fault code No.		**42**		
Item		**A**	**Speed sensor: no normal signals are received from the speed sensor.**	
		B	Neutral switch: open or short circuit is detected.	
		C	Clutch switch: open or short circuit is detected.	
4	Wire harness continuity.		Open or short circuit → Replace the wire harness. Between speed sensor coupler and ECU coupler. white/yellow–white/yellow Between speed sensor coupler and joint connector. blue–blue black/blue–black/blue Between joint connector and ECU coupler. blue–blue black/blue–black/blue	Execute the diagnostic mode. (Code No. 07) Rotate the rear wheel by hand and check that the indicated value increases. Value increases → Go to item 6 and delete the fault code. Value does not increase → Go to item 5.
5	Malfunction in ECU.		Replace the ECU. Refer to “REPLACING THE ECU (engine control unit)” on page 8-93.	Go to item 6 and delete the fault code.
6	Delete the fault code.			Turn the main switch to “ON”, and then rotate the rear wheel by hand. Start the engine, and input the vehicle speed signals by operating the vehicle at 20 to 30 km/h (19 mi/h). The fault code can also be deleted by activating the diagnostic mode and selecting diagnostic code number “63”.

Fault code No.	**42**	
Item	A	Speed sensor: no normal signals are received from the speed sensor.
	B	**Neutral switch: open or short circuit is detected.**
	C	Clutch switch: open or short circuit is detected.
Fail-safe system	Able to start engine	
	Able to drive vehicle	
Diagnostic code No.	21	

Fault code No.	**42**	
Item	A	Speed sensor: no normal signals are received from the speed sensor.
	B	**Neutral switch: open or short circuit is detected.**
	C	Clutch switch: open or short circuit is detected.
Meter display	Neutral • "ON" (when the transmission is in neutral) • "OFF" (when the transmission is in gear or the clutch lever released)	
Procedure	Shift the transmission.	

Item	Probable cause of malfunction and check	Maintenance job	Confirmation of service completion
1	Locate the malfunction.	Execute the diagnostic mode. (Code No. 07) Rotate the rear wheel by hand and check that the indicated value increases.	Value does not increase → Go to item 2 in section A for the speed sensor.
		Execute the diagnostic mode. (Code No. 21) When the transmission is in neutral: "ON" When the transmission is in gear with the clutch lever released: "OFF"	Incorrect indication → Go to item 2.
		When the transmission is in gear with the clutch lever squeezed and the sidestand is retracted: "ON"	Incorrect indication → Go to item 2 in section C for the clutch switch.
2	Connection of neutral switch coupler. Check the locking condition of the coupler. Disconnect the coupler and check the pins (bent or broken terminals and locking condition of the pins).	Improperly connected → Connect the coupler securely or replace the wire harness.	Execute the diagnostic mode. (Code No. 21) When the transmission is in neutral: "ON" When the transmission is in gear with the clutch lever released: "OFF" Correct indication → Go to item 9. Incorrect indication → Go to item 3.

Fault code No.		42	
Item		A	Speed sensor: no normal signals are received from the speed sensor.
		B	**Neutral switch: open or short circuit is detected.**
		C	Clutch switch: open or short circuit is detected.
3	Connection of wire harness ECU coupler. Check the locking condition of the coupler. Disconnect the coupler and check the pins (bent or broken terminals and locking condition of the pins).	Improperly connected → Connect the coupler securely or replace the wire harness.	Execute the diagnostic mode. (Code No. 21) When the transmission is in neutral: “ON” When the transmission is in gear with the clutch lever released: “OFF” Correct indication → Go to item 9. Incorrect indication → Go to item 4.
4	Wire harness continuity.	Open or short circuit → Replace the wire harness. Between relay unit coupler and gear position sensor coupler. sky blue–sky blue Between relay unit coupler and ECU coupler black/yellow–black/yellow	Execute the diagnostic mode. (Code No. 21) When the transmission is in neutral: “ON” When the transmission is in gear with the clutch lever released: “OFF” Correct indication → Go to item 9. Incorrect indication → Go to item 5.
5	Defective relay unit.	Check the relay unit. Refer to “CHECKING THE RELAY UNIT (DIODE)” on page 8-99.	Execute the diagnostic mode. (Code No. 21) When the transmission is in neutral: “ON” When the transmission is in gear with the clutch lever released: “OFF” Correct indication → Go to item 9. Incorrect indication → Go to item 6.
6	Defective gear position sensor (neutral circuit).	Check the gear position sensor. Refer to “CHECKING THE GEAR POSITION SENSOR” on page 8-110.	Execute the diagnostic mode. (Code No. 21) When the transmission is in neutral: “ON” When the transmission is in gear with the clutch lever released: “OFF” Correct indication → Go to item 9. Incorrect indication → Go to item 7.

Fault code No.	**42**			
Item		A	Speed sensor: no normal signals are received from the speed sensor.	
		B	**Neutral switch: open or short circuit is detected.**	
		C	Clutch switch: open or short circuit is detected.	
7	Faulty shift drum (neutral detection area).		Malfunction → Replace the shift drum. Refer to “TRANSMISSION” on page 5-76.	Execute the diagnostic mode. (Code No. 21) When the transmission is in neutral: “ON” When the transmission is in gear with the clutch lever released: “OFF” Correct indication → Go to item 9. Incorrect indication → Go to item 8.
8	Malfunction in ECU.		Replace the ECU. Refer to “REPLACING THE ECU (engine control unit)” on page 8-93.	
9	Delete the fault code.			Turn the main switch to “ON”, and then rotate the rear wheel by hand. Start the engine, and input the vehicle speed signals by operating the vehicle at 20 to 30 km/h (19 mi/h). The fault code can also be delete by activating the diagnostic mode and selecting diagnostic code number “63”.

Fault code No.	**42**	
Item	A	Speed sensor: no normal signals are received from the speed sensor.
	B	Neutral switch: open or short circuit is detected.
	C	**Clutch switch: open or short circuit is detected.**
Fail-safe system	Able to start engine	
	Able to drive vehicle	
Diagnostic code No.	21	
Meter display	Clutch switch • “ON” (when the clutch lever is squeezed with the transmission in gear and when the sidestand is retracted) • “OFF” (when the clutch lever is squeezed with the transmission in gear and when the sidestand is extended)	

Fault code No.	42	
Item	A	Speed sensor: no normal signals are received from the speed sensor.
	B	Neutral switch: open or short circuit is detected.
	C	**Clutch switch: open or short circuit is detected.**
Procedure	Operate the transmission, clutch lever, and sidestand.	

Item	Probable cause of malfunction and check	Maintenance job	Confirmation of service completion
1	Locate the malfunction.	Execute the diagnostic mode. (Code No. 07) Rotate the rear wheel by hand and check that the indicated value increases.	Value does not increase → Go to item 2 in section A for the speed sensor.
		Execute the diagnostic mode. (Code No. 21) When the transmission is in neutral: “ON” When the transmission is in gear with the clutch lever released: “OFF”	Incorrect indication → Go to item 2 in section B for the neutral switch.
		When the transmission is in gear with the clutch lever squeezed and the sidestand retracted: “ON”	Incorrect indication → Go to item 2.
2	Clutch lever adjustment.	Refer to “ADJUSTING THE CLUTCH LEVER FREE PLAY” on page 3-11.	Execute the diagnostic mode. (Code No. 21) When the clutch lever is released: “OFF” When the clutch lever is squeezed: “ON” Correct indication→ Go to item 9. Incorrect indication → Go to item 3.
3	Connection of clutch switch coupler. Check the locking condition of the coupler. Disconnect the coupler and check the pins (bent or broken terminals and locking condition of the pins).	Improperly connected → Connect the coupler securely or replace the wire harness.	Execute the diagnostic mode. (Code No. 21) When the clutch lever is released: “OFF” When the clutch lever is squeezed: “ON” Correct indication→ Go to item 9. Incorrect indication → Go to item 4.

Fault code No.		42	
Item		A	Speed sensor: no normal signals are received from the speed sensor.
		B	Neutral switch: open or short circuit is detected.
		C	**Clutch switch: open or short circuit is detected.**
4	Connection of wire harness ECU coupler. Check the locking condition of the coupler. Disconnect the coupler and check the pins (bent or broken terminals and locking condition of the pins).	Improperly connected → Connect the coupler securely or replace the wire harness.	Execute the diagnostic mode. (Code No. 21) When the clutch lever is released: “OFF” When the clutch lever is squeezed: “ON” Correct indication→ Go to item 9. Incorrect indication → Go to item 5.
5	Wire harness continuity.	Open or short circuit → Replace the wire harness. Between ECU coupler and relay unit coupler. black/yellow–black/yellow Between relay unit coupler and clutch switch coupler. black/yellow–black/yellow black/red–black/red	Execute the diagnostic mode. (Code No. 21) When the clutch lever is released: “OFF” When the clutch lever is squeezed: “ON” Correct indication→ Go to item 9. Incorrect indication → Go to item 6.
6	Defective relay unit.	Check the relay unit. Refer to “CHECKING THE RELAY UNIT (DIODE)” on page 8-99.	Execute the diagnostic mode. (Code No. 21) When the clutch lever is released: “OFF” When the clutch lever is squeezed: “ON” Correct indication→ Go to item 9. Incorrect indication → Go to item 7.
7	Defective clutch switch.	Check the clutch switch. Replace if defective. Refer to “CHECKING THE SWITCHES” on page 8-89.	Execute the diagnostic mode. (Code No. 21) When the clutch lever is released: “OFF” When the clutch lever is squeezed: “ON” Correct indication→ Go to item 9. Incorrect indication → Go to item 8.
8	Malfunction in ECU.	Replace the ECU. Refer to “REPLACING THE ECU (engine control unit)” on page 8-93.	

Fault code No.		42	
Item		A	Speed sensor: no normal signals are received from the speed sensor.
		B	Neutral switch: open or short circuit is detected.
		C	**Clutch switch: open or short circuit is detected.**
9	Delete the fault code.		Turn the main switch to “ON”, and then rotate the rear wheel by hand. Start the engine, and input the vehicle speed signals by operating the vehicle at 20 to 30 km/h (19 mi/h). The fault code can also be delete by activating the diagnostic mode and selecting diagnostic code number “63”.

Fault code No.		43
Item		**Fuel system voltage: incorrect voltage supplied to the fuel injector and fuel pump.**
Fail-safe system		Able to start engine
		Able to drive vehicle
Diagnostic code No.		09, 50
09	**Meter display**	Fuel system voltage (battery voltage) Approximately 12.0
	Procedure	Set the start/engine stop switch to “◯”, and then compare the actually measured battery voltage with the meter display value. (If the actually measured battery voltage is low, recharge the battery.)
50	**Actuation**	Actuates the relay unit five times at one-second intervals. Illuminates the engine trouble warning light.
	Procedure	Check that the relay unit is actuated five times by listening for the operating sound.

Item	Probable cause of malfunction and check	Maintenance job	Confirmation of service completion
1	Connection of relay unit coupler. Check the locking condition of the coupler. Disconnect the coupler and check the pins (bent or broken terminals and locking condition of the pins).	Improperly connected → Connect the coupler securely or replace the wire harness.	Start the engine and let it idle for approximately 5 seconds. Fault code number is not displayed → Service is finished. Fault code number is displayed → Go to item 2.

Fault code No.		43	
Item		Fuel system voltage: incorrect voltage supplied to the fuel injector and fuel pump.	
2	Connection of wire harness ECU coupler. Check the locking condition of the coupler. Disconnect the coupler and check the pins (bent or broken terminals and locking condition of the pins).	Improperly connected → Connect the coupler securely or replace the wire harness.	Start the engine and let it idle for approximately 5 seconds. Fault code number is not displayed → Service is finished. Fault code number is displayed → Go to item 3.
3	Wire harness continuity.	Open or short circuit → Replace the wire harness. Between battery and starter relay (fuel injection system fuse). red–red Between starter relay (fuel injection system fuse) and relay unit coupler. red–red Between relay unit coupler and ECU coupler. red/blue–red/blue blue/yellow–blue/yellow	Start the engine and let it idle for approximately 5 seconds. Fault code number is not displayed → Service is finished. Fault code number is displayed → Go to item 4.
4	Defective relay unit.	Execute the diagnostic mode. (Code No. 50) No operating sound → Replace the relay unit.	Start the engine and let it idle for approximately 5 seconds. Fault code number is not displayed → Service is finished. Fault code number is displayed → Go to item 5.
5	Defective relay unit.	Execute the diagnostic mode. (Code No. 09) Fuel system voltage is below 3 V → Replace the relay unit.	Start the engine and let it idle for approximately 5 seconds. Fault code number is not displayed → Service is finished. Fault code number is displayed → Go to item 6.
6	Malfunction in ECU.	Replace the ECU. Refer to “REPLACING THE ECU (engine control unit)” on page 8-93.	

Fault code No.	44
Item	EEPROM fault code number: an error is detected while reading or writing on EEPROM.
Fail-safe system	Able/Unable to start engine
	Able/Unable to drive vehicle
Diagnostic code No.	60

Fault code No.	**44**
Item	**EEPROM fault code number: an error is detected while reading or writing on EEPROM.**
Meter display	EEPROM fault code display • 00 (no history) • 01–03: Cylinder fault code number (history exists) If more than one cylinder is defective, the display switches every two seconds to show the cylinder fault code numbers of all defective cylinders in a repeating cycle. • 11: Data error for ISC (idle speed control) learning values (history exists)
Procedure	—

Item	Probable cause of malfunction and check	Maintenance job	Confirmation of service completion
1	Locate the malfunction.	Execute the diagnostic mode. (Code No. 60)	—
2	"11" is indicated in diagnostic mode (code No. 60). EEPROM data error for ISC (idle speed control) learning values.	Turn the main switch to "OFF".	Turn the main switch to "ON". Fault code number is not displayed → Service is finished. Fault code number is displayed → Repeat item 1. If the same number is indicated, go to item 3.
3	Malfunction in ECU.	Replace the ECU. Refer to "REPLACING THE ECU (engine control unit)" on page 8-93.	

Fault code No.	**46**
Item	**Charging voltage is abnormal.**
Fail-safe system	Able to start engine
	Able to drive vehicle
Diagnostic code No.	—
Meter display	—
Procedure	—

Item	Probable cause of malfunction and check	Maintenance job	Confirmation of service completion
1	Malfunction in charging system.	Check the charging system. Refer to "CHARGING SYSTEM" on page 8-13. Defective rectifier/regulator or AC magneto → Replace. Defective connection in the charging system circuit → Properly connect or replace the wire harness.	Start the engine and let it idle for approximately 5 seconds. Fault code number is not displayed → Service is finished. Fault code number is displayed → Repeat the maintenance job.

Fault code No.		**50**	
Item		**Faulty ECU memory. (When this malfunction is detected in the ECU, the fault code number might not appear on the meter display.)**	
Fail-safe system		Able/Unable to start engine	
		Able/Unable to drive vehicle	
Diagnostic code No.		—	
Meter display		—	
Procedure		—	
Item	**Probable cause of malfunction and check**	**Maintenance job**	**Confirmation of service completion**
1	Malfunction in ECU.	Replace the ECU. Refer to “REPLACING THE ECU (engine control unit)” on page 8-93. **TIP** Do not perform this procedure with the main switch turned to “ON”.	Turn the main switch to “ON”. Check that the fault code number is not displayed.

Fault code No.		**59**	
Item		**Accelerator position sensor: open or short circuit detected.**	
Fail-safe system		Able/Unable to start engine	
		Able/Unable to drive vehicle	
Diagnostic code No.		14, 15	
14	**Meter display**	Accelerator position sensor signal 1 • 12–22 (fully closed position) • 97–107 (fully open position)	
	Procedure	• Check with throttle grip in fully closed position. • Check with throttle grip in fully open position.	
15	**Meter display**	Accelerator position sensor signal 2 • 10–24 (fully closed position) • 95–109 (fully open position)	
	Procedure	• Check with throttle grip in fully closed position. • Check with throttle grip in fully open position.	
Item	**Probable cause of malfunction and check**	**Maintenance job**	**Confirmation of service completion**

Fault code No.		59	
Item		**Accelerator position sensor: open or short circuit detected.**	
1	Connection of accelerator position sensor coupler. Check the locking condition of the coupler. Disconnect the coupler and check the pins (bent or broken terminals and locking condition of the pins).	Improperly connected → Connect the coupler securely or replace the wire harness.	Turn the main switch to “ON”. Fault code number is not displayed → Service is finished. Fault code number is displayed → Go to item 2.
2	Connection of wire harness ECU coupler. Check the locking condition of the coupler. Disconnect the coupler and check the pins (bent or broken terminals and locking condition of the pins).	Improperly connected → Connect the coupler securely or replace the wire harness.	Turn the main switch to “ON”. Fault code number is not displayed → Service is finished. Fault code number is displayed → Go to item 3.
3	Wire harness continuity.	Open or short circuit → Replace the wire harness. Between accelerator position sensor coupler and ECU coupler. black/blue–black/blue white–white black–black blue–blue	Turn the main switch to “ON”. Fault code number is not displayed → Service is finished. Fault code number is displayed → Go to item 4.
4	Installed condition of accelerator position sensor. Check for looseness or pinching.	Improperly installed sensor → Reinstall or adjust the sensor. Refer to “ADJUSTING THE ACCELERATOR POSITION SENSOR” on page 7-13.	Turn the main switch to “ON”. Fault code number is not displayed → Service is finished. Fault code number is displayed → Go to item 5.
5	Accelerator position sensor resistance.	Measure the accelerator position sensor resistance. black/blue–blue Refer to “CHECKING THE ACCELERATOR POSITION SENSOR” on page 8-107.	Turn the main switch to “ON”. Fault code number is not displayed → Service is finished. Fault code number is displayed → Go to item 6.

Fault code No.		59	
Item		**Accelerator position sensor: open or short circuit detected.**	
6	Defective accelerator position sensor.	Check accelerator position sensor signal 1. Execute the diagnostic mode. (Code No. 14) When the throttle grip is fully closed: A value of 12–22 is indicated. When the throttle grip is fully open: A value of 97–107 is indicated. Check accelerator position sensor signal 2. Execute the diagnostic mode. (Code No. 15) When the throttle grip is fully closed: A value of 10–24 is indicated. When the throttle grip is fully open: A value of 95–109 is indicated. An indicated value is out of the specified range → Replace the accelerator position sensor.	Turn the main switch to “ON”. Fault code number is not displayed → Service is finished. Fault code number is displayed → Go to item 7.
7	Malfunction in ECU.	Replace the ECU. Refer to “REPLACING THE ECU (engine control unit)” on page 8-93.	

Fault code No.		60	
Item		**YCC-T drive system: malfunction detected.**	
Fail-safe system		Able/Unable to start engine	
		Able/Unable to drive vehicle	
Diagnostic code No.		—	
Meter display		—	
Procedure		—	
Item	**Probable cause of malfunction and check**	**Maintenance job**	**Confirmation of service completion**

Fault code No.	60		
Item	**YCC-T drive system: malfunction detected.**		
1	Connection of throttle servo motor coupler. Check the locking condition of the coupler. Disconnect the coupler and check the pins (bent or broken terminals and locking condition of the pins).	Improperly connected → Connect the coupler securely or replace the wire harness.	Turn the main switch to “ON”. Fault code number is not displayed → Service is finished. Fault code number is displayed → Go to item 2.
2	Connection of wire harness ECU coupler. Disconnect the coupler and check the pins (bent or broken terminals and locking condition of the pins).	Improperly connected → Connect the coupler securely or replace the wire harness.	Turn the main switch to “ON”. Fault code number is not displayed → Service is finished. Fault code number is displayed → Go to item 3.
3	Check the electronic throttle valve fuse.	Abnormality → Replace the electronic throttle valve fuse.	Turn the main switch to “ON”. Fault code number is not displayed → Service is finished. Fault code number is displayed → Go to item 4.
4	Wire harness continuity.	Open or short circuit → Replace the wire harness. Between throttle servo motor coupler and ECU coupler. yellow/red–yellow/red yellow/white–yellow/white Between ECU coupler and fuse box 2 (electronic throttle valve fuse). red/white–red/white	Turn the main switch to “ON”. Fault code number is not displayed → Service is finished. Fault code number is displayed → Go to item 5.
5	Defective throttle servo motor.	Check the throttle servo motor. Replace the throttle bodies if defective. Refer to “CHECKING THE THROTTLE SERVO MOTOR” on page 8-108.	Turn the main switch to “ON”. Fault code number is not displayed → Service is finished. Fault code number is displayed → Go to item 6.
6	Defective throttle bodies.	Check the throttle bodies. Replace if defective. Refer to “CHECKING THE THROTTLE SERVO MOTOR” on page 8-108.	Turn the main switch to “ON”. Fault code number is not displayed → Service is finished. Fault code number is displayed → Go to item 7.
7	Malfunction in ECU.	Replace the ECU. Refer to “REPLACING THE ECU (engine control unit)” on page 8-93.	

Fault code No.	**89 (Yamaha diagnostic tool)** **Err (multi-function meter display)**
Item	**Multi-function meter: signals cannot be transmitted between the ECU and the multi-function meter.**
Fail-safe system	Able to start engine
	Able to drive vehicle
Diagnostic code No.	—
Meter display	—
Procedure	—

Item	Probable cause of malfunction and check	Maintenance job	Confirmation of service completion
1	Connection of meter assembly coupler. Check the locking condition of the coupler. Disconnect the coupler and check the pins (bent or broken terminals and locking condition of the pins).	Improperly connected → Connect the coupler securely or replace the wire harness.	Turn the main switch to “ON”. Fault code number is not displayed → Service is finished. Fault code number is displayed → Go to item 2.
2	Connection of wire harness ECU coupler. Check the locking condition of the coupler. Disconnect the coupler and check the pins (bent or broken terminals and locking condition of the pins).	Improperly connected → Connect the coupler securely or replace the wire harness.	Turn the main switch to “ON”. Fault code number is not displayed → Service is finished. Fault code number is displayed → Go to item 3.
3	Wire harness continuity.	Open or short circuit → Replace the wire harness. Between ECU coupler and joint coupler. light green/blue–light green/blue light green/white–light green/white Between joint coupler and meter assembly coupler. light green/blue–light green/blue light green/white–light green/white	Turn the main switch to “ON”. Fault code number is not displayed → Service is finished. Fault code number is displayed → Go to item 4.
4	Defective meter assembly.	Replace the meter assembly.	Turn the main switch to “ON”. Fault code number is not displayed → Service is finished. Fault code number is displayed → Go to item 5.

Fault code No.		**89 (Yamaha diagnostic tool) Err (multi-function meter display)**	
Item		**Multi-function meter: signals cannot be transmitted between the ECU and the multi-function meter.**	
5	Malfunction in ECU.	Replace the ECU. Refer to “REPLACING THE ECU (engine control unit)” on page 8-93.	

EAS27550

FUEL PUMP SYSTEM

EAS27560

CIRCUIT DIAGRAM

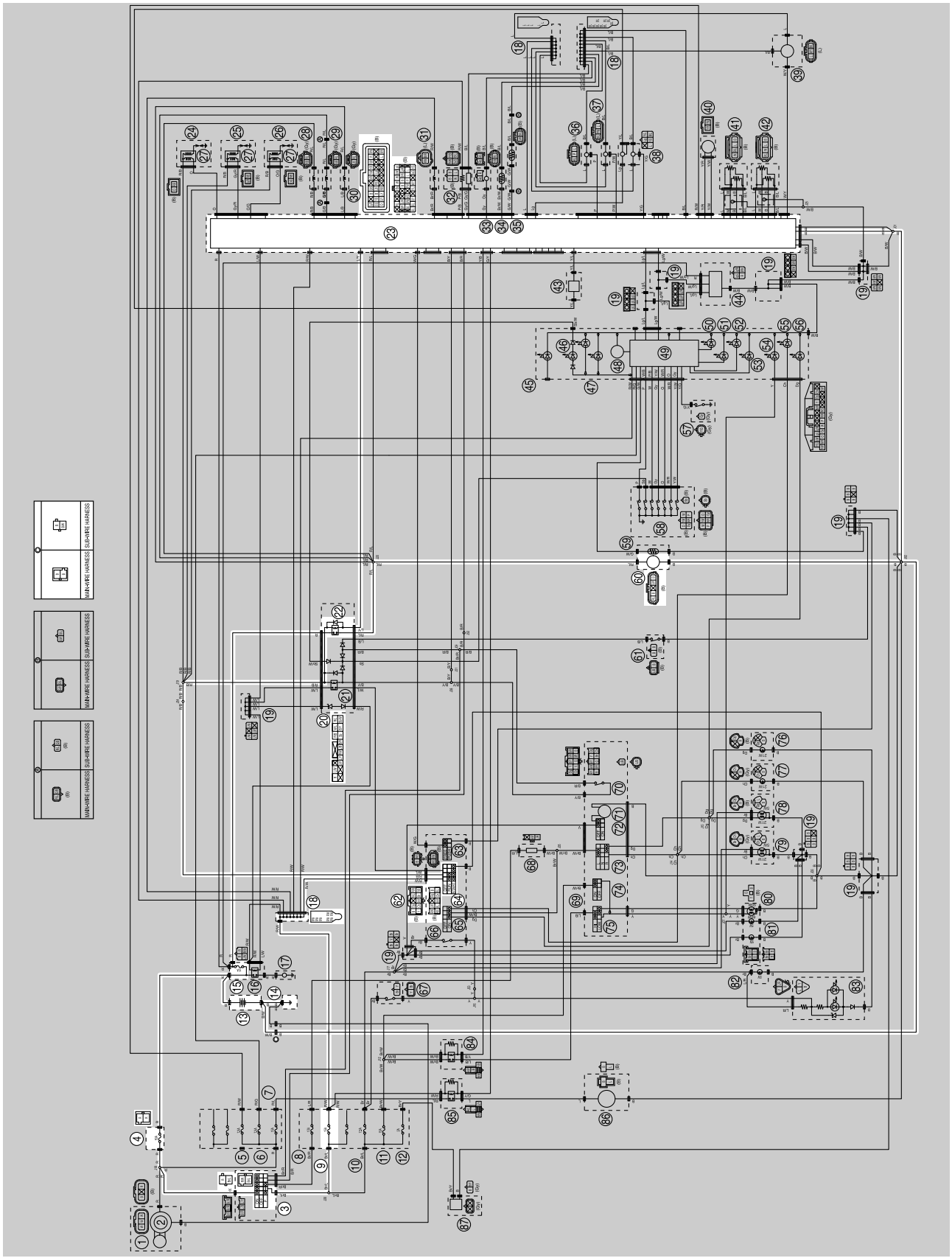

3. Main switch
4. Main fuse
9. Ignition fuse
13. Battery
14. Engine ground
15. Fuel injection system fuse
18. Joint connector
20. Relay unit
22. Fuel pump relay
23. ECU (engine control unit)
60. Fuel pump
62. Right handlebar switch
64. Start/engine stop switch

EAS27570

TROUBLESHOOTING

If the fuel pump fails to operate.

TIP

- Before troubleshooting, remove the following part(s):

1. Rider seat
2. Air scoop
3. Fuel tank cover
4. Fuel tank

1. Check the fuses. (Main, ignition and fuel injection system) Refer to "CHECKING THE FUSES" on page 8-93.	NG→	Replace the fuse(s).
OK↓		
2. Check the battery. Refer to "CHECKING AND CHARGING THE BATTERY" on page 8-94.	NG→	• Clean the battery terminals. • Recharge or replace the battery.
OK↓		
3. Check the main switch. Refer to "CHECKING THE SWITCHES" on page 8-89.	NG→	Replace the main switch.
OK↓		
4. Check the start/engine stop switch. Refer to "CHECKING THE SWITCHES" on page 8-89.	NG→	Replace the right handlebar switch.
OK↓		
5. Check the relay unit (fuel pump relay). Refer to "CHECKING THE RELAYS" on page 8-97.	NG→	Replace the relay unit.
OK↓		
6. Check the fuel pump. Refer to "CHECKING THE FUEL PUMP OPERATION" on page 7-3.	NG→	Replace the fuel pump.
OK↓		
7. Check the entire fuel pump system's wiring. Refer to "CIRCUIT DIAGRAM" on page 8-81.	NG→	Properly connect or repair the fuel pump system's wiring.
OK↓		
Replace the ECU. Refer to "REPLACING THE ECU (engine control unit)" on page 8-93.		

EAS27973

ELECTRICAL COMPONENTS

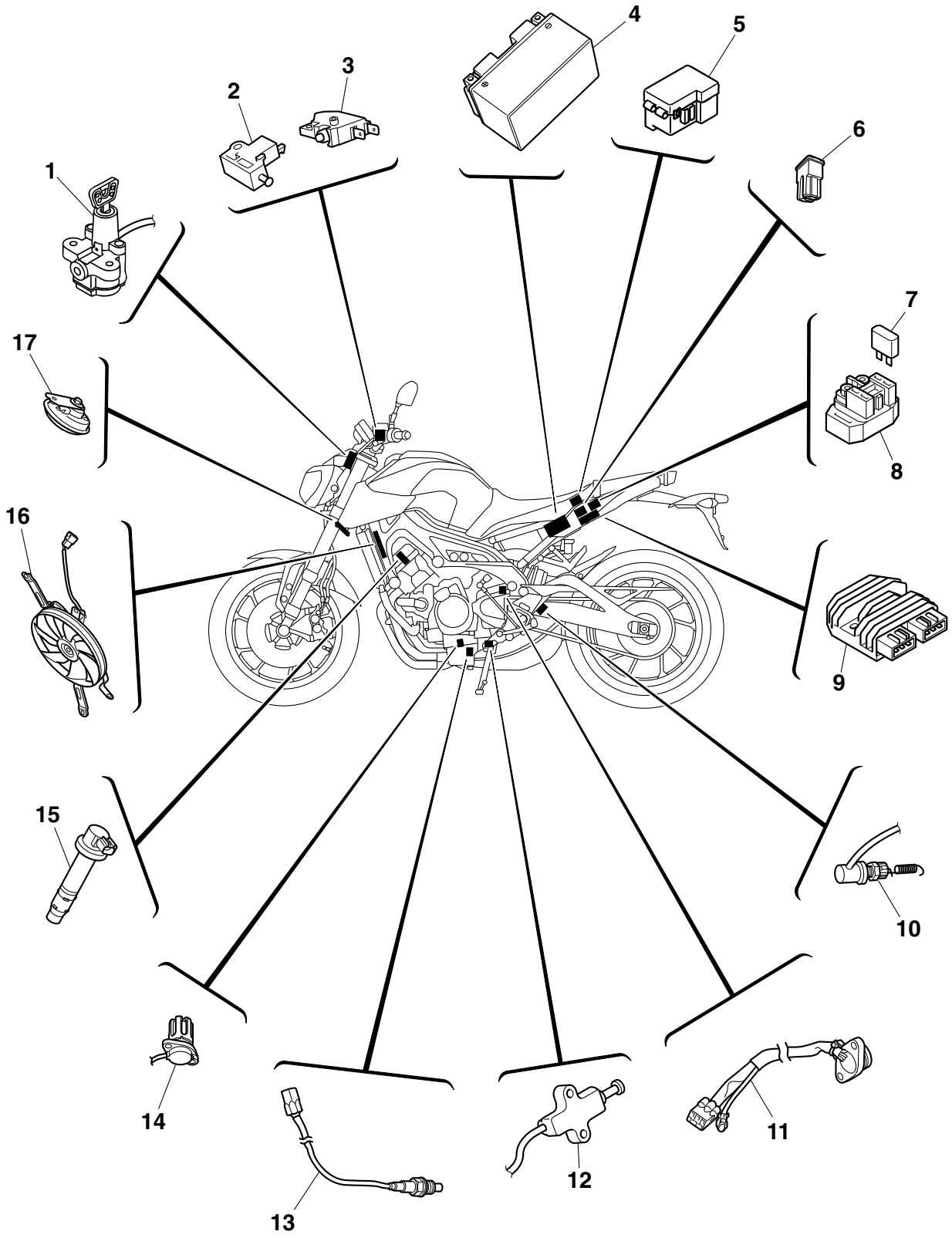

1. Main switch
2. Clutch switch
3. Front brake light switch
4. Battery
5. Fuse box 2
6. Main fuse
7. Fuel injection system fuse
8. Starter relay
9. Rectifier/regulator
10. Rear brake light switch
11. Gear position sensor
12. Sidestand switch
13. O_2 sensor
14. Oil level switch
15. Ignition coil
16. Radiator fan motor
17. Horn

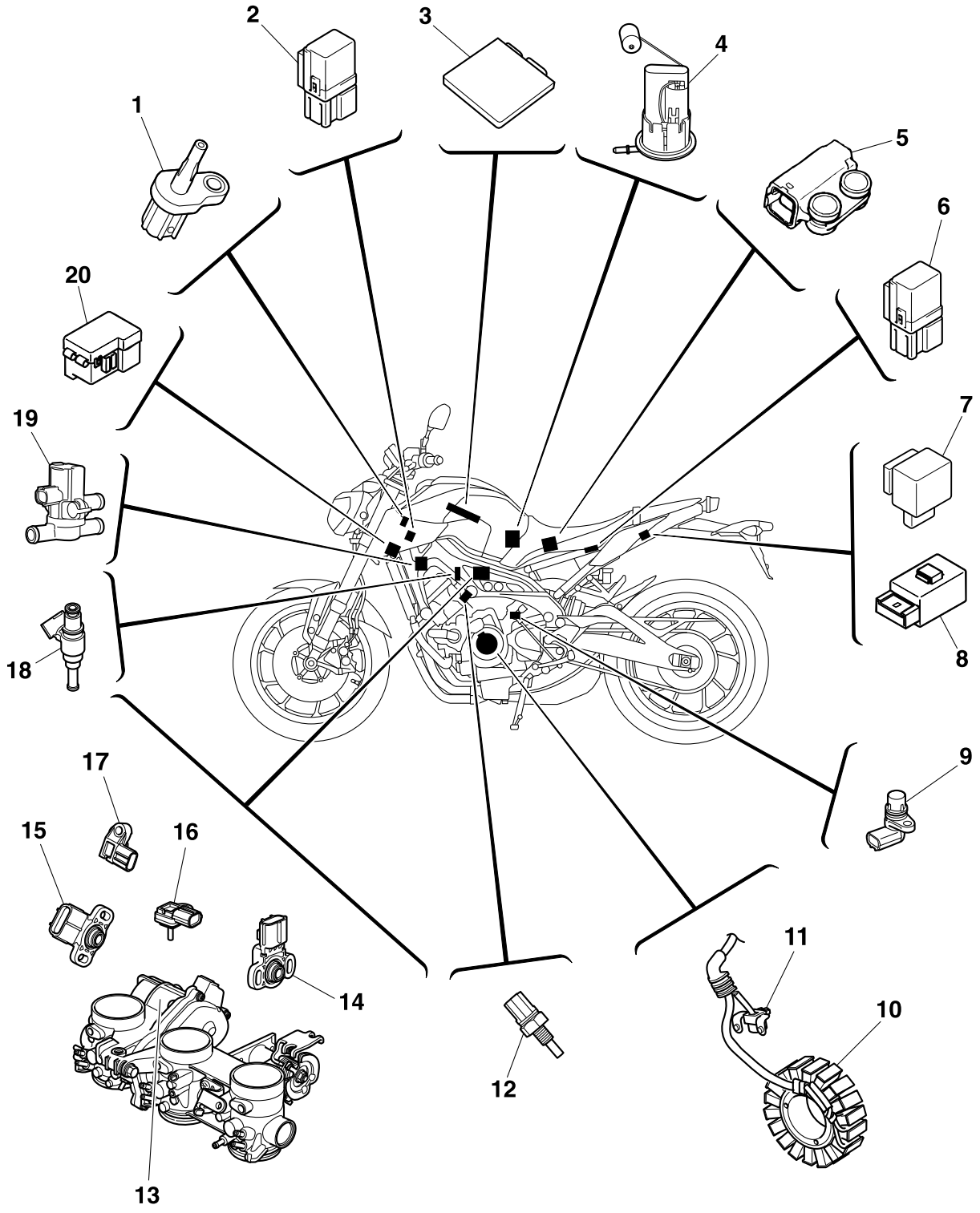
1
2
3
4
5
6
7
8
9
10
11
12
13
14
15
16
17
18
19
20

1. Intake air temperature sensor
2. Headlight relay
3. ECU (engine control unit)
4. Fuel pump
5. Lean angle sensor
6. Radiator fan motor relay
7. Turn signal/hazard relay
8. Relay unit
9. Speed sensor
10. Stator coil
11. Crankshaft position sensor
12. Coolant temperature sensor
13. Throttle servo motor
14. Accelerator position sensor
15. Throttle position sensor
16. Intake air pressure sensor 1
17. Intake air pressure sensor 2
18. Injector
19. Air induction system solenoid
20. Fuse box 1

EAS27981

CHECKING THE SWITCHES

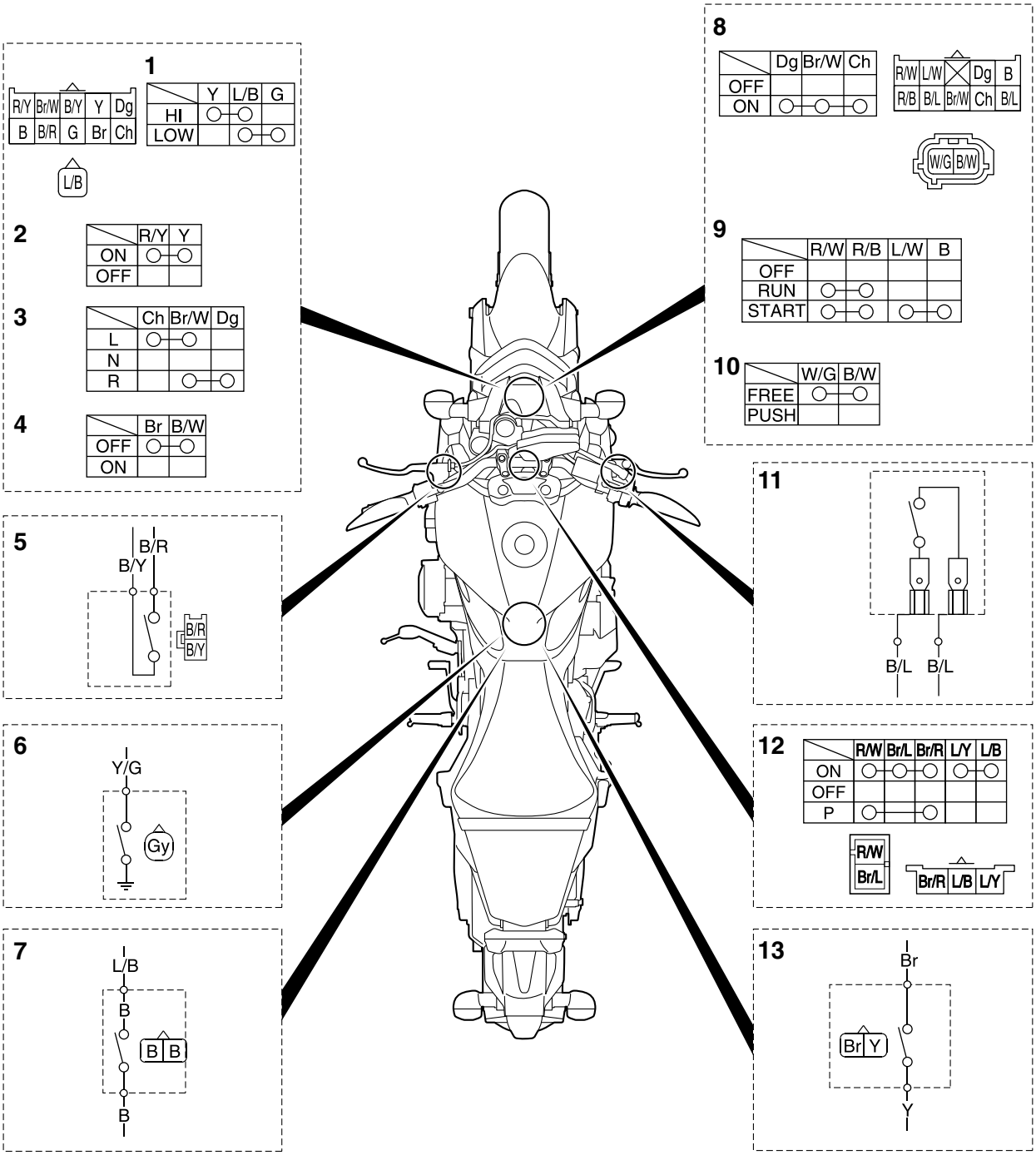

1. Dimmer switch
2. Pass switch
3. Turn signal switch
4. Horn switch
5. Clutch switch
6. Oil level switch
7. Sidestand switch
8. Hazard switch
9. Start/engine stop switch
10. Drive mode switch
11. Front brake light switch
12. Main switch
13. Rear brake light switch

Check each switch for continuity with the pocket tester. If the continuity reading is incorrect, check the wiring connections and if necessary, replace the switch.

ECA14370

NOTICE

Never insert the tester probes into the coupler terminal slots "a". Always insert the probes from the opposite end of the coupler, taking care not to loosen or damage the leads.

Pocket tester
90890-03112
Analog pocket tester
YU-03112-C

TIP

- Before checking for continuity, set the pocket tester to "0" and to the "Ω × 1" range.
- When checking for continuity, switch back and forth between the switch positions a few times.

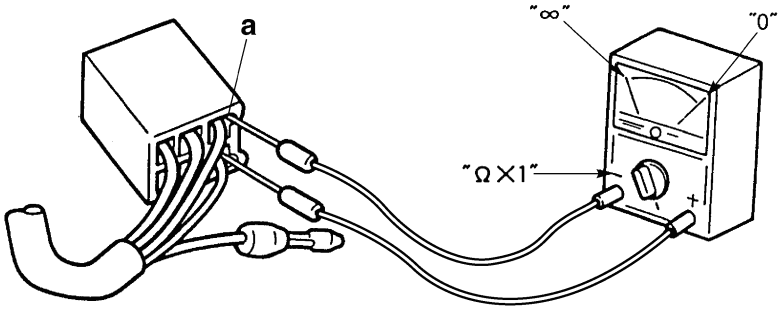

The switches and their terminal connections are illustrated as in the following example of the main switch.
The switch positions "a" are shown in the far left column and the switch lead colors "b" are shown in the top row.
The continuity (i. e., a closed circuit) between switch terminals at a given switch position is indicated by "○——○".
There is continuity between red/white, brown/blue, and brown/red and between blue/yellow and blue/black when the switch is set to "ON".
There is continuity between red/white and brown/red when the switch is set to "P".

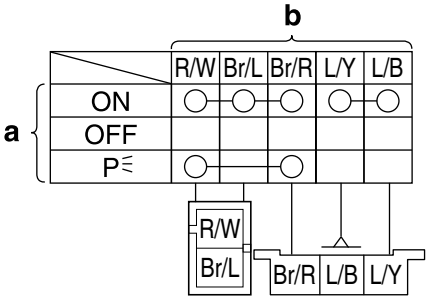

EAS27990

CHECKING THE BULBS AND BULB SOCKETS

Check each bulb and bulb socket for damage or wear, proper connections, and also for continuity between the terminals.

Damage/wear → Repair or replace the bulb, bulb socket or both.

Improperly connected → Properly connect.

No continuity → Repair or replace the bulb, bulb socket or both.

Types of bulbs

The bulbs used on this vehicle are shown in the illustration.

- Bulbs “a” is used for the headlights and usually use a bulb holder that must be detached before removing the bulb. The majority of these types of bulbs can be removed from their respective socket by turning them counterclockwise.
- Bulbs “b” and “c” are used for turn signal and tail/brake lights and can be removed from the socket by pushing and turning the bulb counterclockwise.
- Bulbs “d” is used for meter and indicator lights and can be removed from their respective socket by carefully pulling them out.

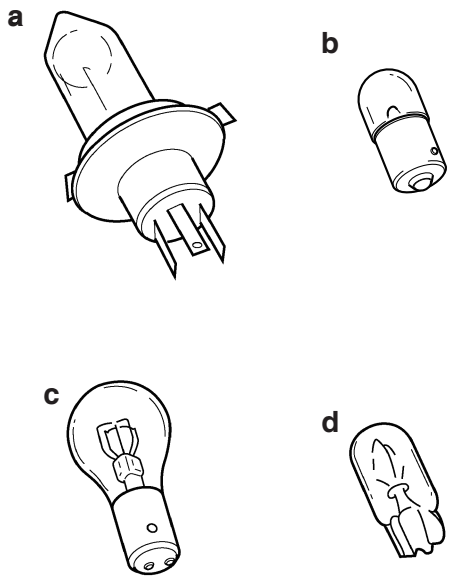

Checking the condition of the bulbs

The following procedure applies to all of the bulbs.

1. Remove:
   - Bulb

EWA13320

WARNING

Since the headlight bulb gets extremely hot, keep flammable products and your hands away from the bulb until it has cooled down.

ECA14380

NOTICE

- **Be sure to hold the socket firmly when removing the bulb. Never pull the lead, otherwise it may be pulled out of the terminal in the coupler.**
- **Avoid touching the glass part of the headlight bulb to keep it free from oil, otherwise the transparency of the glass, the life of the bulb, and the luminous flux will be adversely affected. If the headlight bulb gets soiled, thoroughly it with a cloth moistened with alcohol or lacquer thinner.**

2. Check:
   - Bulb (for continuity)
     (with the pocket tester)
     No continuity → Replace.

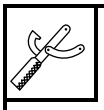

Pocket tester
90890-03112
Analog pocket tester
YU-03112-C

TIP

Before checking for continuity, set the pocket tester to “0” and to the “Ω × 1” range.

▼▼▼▼▼▼▼▼▼▼▼▼▼▼▼▼▼▼▼▼▼▼▼▼▼▼▼▼▼▼▼▼▼▼

a. Connect the positive tester probe to terminal “1” and the negative tester probe to terminal “2”, and check the continuity.
b. Connect the positive tester probe to terminal “1” and the negative tester probe to terminal “3”, and check the continuity.
c. If either of the readings indicate no continuity, replace the bulb.

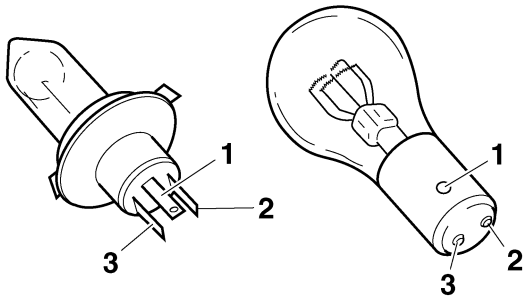

▲▲▲▲▲▲▲▲▲▲▲▲▲▲▲▲▲▲▲▲▲▲▲▲▲▲▲▲▲▲▲▲▲▲

Checking the condition of the bulb sockets

The following procedure applies to all of the bulb sockets.

1. Check:
   - Bulb socket (for continuity)
     (with the pocket tester)
     No continuity → Replace.

Pocket tester
90890-03112
Analog pocket tester
YU-03112-C

TIP

Check each bulb socket for continuity in the same manner as described in the bulb section; however, note the following.

▼▼▼▼▼▼▼▼▼▼▼▼▼▼▼▼▼▼▼▼▼▼▼▼▼▼▼▼▼▼▼▼▼▼

a. Install a good bulb into the bulb socket.
b. Connect the pocket tester probes to the respective leads of the bulb socket.
c. Check the bulb socket for continuity. If any of the readings indicate no continuity, replace the bulb socket.

▲▲▲▲▲▲▲▲▲▲▲▲▲▲▲▲▲▲▲▲▲▲▲▲▲▲▲▲▲▲▲▲▲▲

EAS28000

CHECKING THE FUSES

The following procedure applies to all of the fuses.

ECA13680

NOTICE

To avoid a short circuit, always set the main switch to "OFF" when checking or replacing a fuse.

1. Remove:
   - Rider seat
     Refer to "GENERAL CHASSIS" on page 4-1.
2. Check:
   - Fuse

▼▼▼▼▼▼▼▼▼▼▼▼▼▼▼▼▼▼▼▼▼▼▼▼▼▼▼▼▼▼▼▼▼▼

a. Connect the pocket tester to the fuse and check the continuity.

TIP

Set the pocket tester selector to "Ω × 1".

Pocket tester
90890-03112
Analog pocket tester
YU-03112-C

b. If the pocket tester indicates "∞", replace the fuse.

▲▲▲▲▲▲▲▲▲▲▲▲▲▲▲▲▲▲▲▲▲▲▲▲▲▲▲▲▲▲▲▲▲▲

3. Replace:
   - Blown fuse

▼▼▼▼▼▼▼▼▼▼▼▼▼▼▼▼▼▼▼▼▼▼▼▼▼▼▼▼▼▼▼▼▼▼

a. Set the main switch to "OFF".
b. Install a new fuse of the correct amperage rating.
c. Set on the switches to verify if the electrical circuit is operational.
d. If the fuse immediately blows again, check the electrical circuit.

Fuses	Amperage rating	Q'ty
Main	50 A	1
Headlight	15 A	1
Signal	7.5 A	1
Ignition	15 A	1
Radiator fan	15 A	1
Parking lighting	10 A	1
Fuel injection system	10 A	1
Auxiliary DC outlet	2 A	1
Backup	7.5 A	1
Electric throttle valve	7.5 A	1
Spare fuse	15 A	1
Spare fuse	10 A	1
Spare fuse	7.5 A	1
Spare fuse	2 A	1

EWA13310

⚠ WARNING

Never use a fuse with an amperage rating other than that specified. Improvising or using a fuse with the wrong amperage rating may cause extensive damage to the electrical system, cause the lighting and ignition systems to malfunction and could possibly cause a fire.

▲▲▲▲▲▲▲▲▲▲▲▲▲▲▲▲▲▲▲▲▲▲▲▲▲▲▲▲▲▲▲▲▲▲

4. Install:
   - Rider seat
     Refer to "GENERAL CHASSIS" on page 4-1.

EAS1RC1815

REPLACING THE ECU (engine control unit)

1. Turn the main switch to "OFF".
2. Replace the ECU (engine control unit).
3. Clean the throttle bodies and reset the ISC

(idle speed control) learning value.
Refer to “CHECKING AND CLEANING THE THROTTLE BODIES” on page 7-8.

4. Check:
   - Engine idling speed
     Start the engine, warm it up, and then measure the engine idling speed.

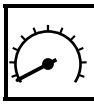	**Engine idling speed** **1100–1300 r/min**

EAS28031

CHECKING AND CHARGING THE BATTERY

EWA13290

WARNING

Batteries generate explosive hydrogen gas and contain electrolyte which is made of poisonous and highly caustic sulfuric acid. Therefore, always follow these preventive measures:

- **Wear protective eye gear when handling or working near batteries.**
- **Charge batteries in a well-ventilated area.**
- **Keep batteries away from fire, sparks or open flames (e.g., welding equipment, lighted cigarettes).**
- **DO NOT SMOKE when charging or handling batteries.**
- **KEEP BATTERIES AND ELECTROLYTE OUT OF REACH OF CHILDREN.**
- **Avoid bodily contact with electrolyte as it can cause severe burns or permanent eye injury.**

FIRST AID IN CASE OF BODILY CONTACT:
EXTERNAL

- **Skin — Wash with water.**
- **Eyes — Flush with water for 15 minutes and get immediate medical attention.**

INTERNAL

- **Drink large quantities of water or milk followed with milk of magnesia, beaten egg or vegetable oil. Get immediate medical attention.**

ECA13661

NOTICE

- **This is a VRLA (Valve Regulated Lead Acid) battery. Never remove the sealing caps because the balance between cells will not be maintained and battery performance will deteriorate.**
- **Charging time, charging amperage and charging voltage for a VRLA (Valve Regulated Lead Acid) battery are different from those of conventional batteries. The VRLA (Valve Regulated Lead Acid) battery should be charged according to the appropriate charging method. If the battery is overcharged, the electrolyte level will drop considerably. Therefore, take special care when charging the battery.**

TIP

Since VRLA (Valve Regulated Lead Acid) batteries are sealed, it is not possible to check the charge state of the battery by measuring the specific gravity of the electrolyte. Therefore, the charge of the battery has to be checked by measuring the voltage at the battery terminals.

1. Remove:
   - Rider seat
     Refer to “GENERAL CHASSIS” on page 4-1.
2. Disconnect:
   - Battery leads
     (from the battery terminals)

ECA13640

NOTICE

First, disconnect the negative battery lead “1”, and then positive battery lead “2”.

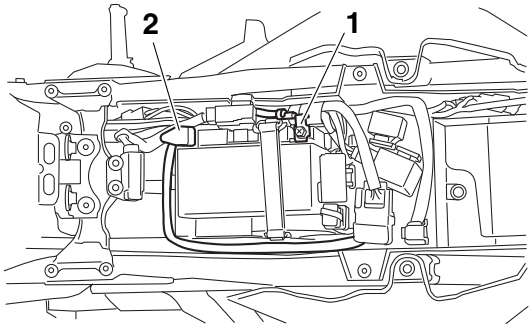

3. Remove:
   - Battery
     Refer to “GENERAL CHASSIS” on page 4-1.
4. Check:
   - Battery charge

▼▼▼▼▼▼▼▼▼▼▼▼▼▼▼▼▼▼▼▼▼▼▼▼▼▼▼▼▼▼▼▼▼▼

a. Connect a pocket tester to the battery terminals.

- Positive tester probe → positive battery terminal
- Negative tester probe → negative battery terminal

TIP

- The charge state of a VRLA (Valve Regulated Lead Acid) battery can be checked by measuring its open-circuit voltage (i.e., the voltage when the positive battery terminal is disconnected).

- No charging is necessary when the open-circuit voltage equals or exceeds 12.8 V.

b. Check the charge of the battery, as shown in the charts and the following example.

Example Open-circuit voltage = 12.0 V Charging time = 6.5 hours Charge of the battery = 20–30 %

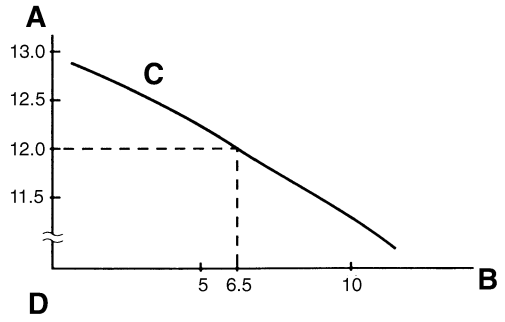

A. Open-circuit voltage (V)
B. Charging time (hours)
C. Relationship between the open-circuit voltage and the charging time at 20 °C (68 °F)
D. These values vary with the temperature, the condition of the battery plates, and the electrolyte level.

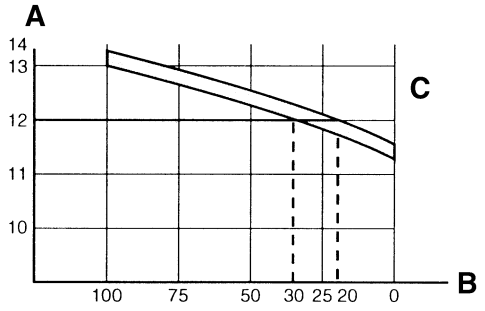

A. Open-circuit voltage (V)
B. Charging condition of the battery (%)
C. Ambient temperature 20 °C (68 °F)

▲▲▲▲▲▲▲▲▲▲▲▲▲▲▲▲▲▲▲▲▲▲▲▲▲▲▲▲▲▲▲▲

5. Charge:
   - Battery
     (refer to the appropriate charging method)

EWA13300

WARNING

Do not quick charge a battery.

ECA13671

NOTICE

- **Do not use a high-rate battery charger since it forces a high-amperage current into the battery quickly and can cause battery overheating and battery plate damage.**
- **If it is impossible to regulate the charging current on the battery charger, be careful not to overcharge the battery.**
- **When charging a battery, be sure to remove it from the vehicle. (If charging has to be done with the battery mounted on the vehicle, disconnect the negative battery lead from the battery terminal.)**
- **To reduce the chance of sparks, do not plug in the battery charger until the battery charger leads are connected to the battery.**
- **Before removing the battery charger lead clips from the battery terminals, be sure to turn off the battery charger.**
- **Make sure the battery charger lead clips are in full contact with the battery terminal and that they are not shorted. A corroded battery charger lead clip may generate heat in the contact area and a weak clip spring may cause sparks.**
- **If the battery becomes hot to the touch at any time during the charging process, disconnect the battery charger and let the battery cool before reconnecting it. Hot batteries can explode!**
- **As shown in the following illustration, the open-circuit voltage of a VRLA (Valve Regulated Lead Acid) battery stabilizes about 30 minutes after charging has been completed. Therefore, wait 30 minutes after charging is completed before measuring the open-circuit voltage.**

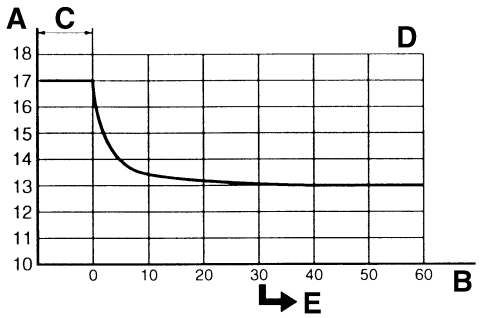

A. Open-circuit voltage (V)
B. Time (minutes)
C. Charging
D. Ambient temperature 20 °C (68 °F)
E. Check the open-circuit voltage.

▼▼▼▼▼▼▼▼▼▼▼▼▼▼▼▼▼▼▼▼▼▼▼▼▼▼▼▼▼▼▼▼

Charging method using a variable-current (voltage) charger

a. Measure the open-circuit voltage prior to

charging.

TIP

Voltage should be measured 30 minutes after the engine is stopped.

b. Connect a charger and ammeter to the battery and start charging.

TIP

Set the charging voltage to 16–17 V. If the setting is lower, charging will be insufficient. If too high, the battery will be over-charged.

c. Make sure that the current is higher than the standard charging current written on the battery.

TIP

If the current is lower than the standard charging current written on the battery, set the charging voltage adjust dial at 20–24 V and monitor the amperage for 3–5 minutes to check the battery.

- Standard charging current is reached Battery is good.
- Standard charging current is not reached Replace the battery.

d. Adjust the voltage so that the current is at the standard charging level.
e. Set the time according to the charging time suitable for the open-circuit voltage.
f. If charging requires more than 5 hours, it is advisable to check the charging current after a lapse of 5 hours. If there is any change in the amperage, readjust the voltage to obtain the standard charging current.
g. Measure the battery open-circuit voltage after leaving the battery unused for more than 30 minutes.

12.8 V or more --- Charging is complete.
12.7 V or less --- Recharging is required.
Under 12.0 V --- Replace the battery.

▲▲▲▲▲▲▲▲▲▲▲▲▲▲▲▲▲▲▲▲▲▲▲▲▲▲▲▲▲▲▲▲▲

▼▼▼▼▼▼▼▼▼▼▼▼▼▼▼▼▼▼▼▼▼▼▼▼▼▼▼▼▼▼▼▼▼

Charging method using a constant voltage charger

a. Measure the open-circuit voltage prior to charging.

TIP

Voltage should be measured 30 minutes after the engine is stopped.

b. Connect a charger and ammeter to the battery and start charging.

c. Make sure that the current is higher than the standard charging current written on the battery.

TIP

If the current is lower than the standard charging current written on the battery, this type of battery charger cannot charge the VRLA (Valve Regulated Lead Acid) battery. A variable voltage charger is recommended.

d. Charge the battery until the battery's charging voltage is 15 V.

TIP

Set the charging time at 20 hours (maximum).

e. Measure the battery open-circuit voltage after leaving the battery unused for more than 30 minutes.

12.8 V or more --- Charging is complete.
12.7 V or less --- Recharging is required.
Under 12.0 V --- Replace the battery.

▲▲▲▲▲▲▲▲▲▲▲▲▲▲▲▲▲▲▲▲▲▲▲▲▲▲▲▲▲▲▲▲▲

6. Install:
   - Battery
     Refer to "GENERAL CHASSIS" on page 4-1.
7. Connect:
   - Battery leads
     (to the battery terminals)

ECA13630

NOTICE

First, connect the positive battery lead "1", and then the negative battery lead "2".

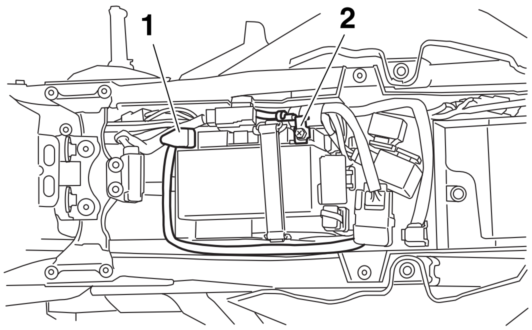

8. Check:
   - Battery terminals
     Dirt → Clean with a wire brush.
     Loose connection → Connect properly.
9. Lubricate:
   - Battery terminals

	Recommended lubricant **Dielectric grease**

10.Install:
- Rider seat
  Refer to “GENERAL CHASSIS” on page 4-1.

EAS28040
CHECKING THE RELAYS
Check each switch for continuity with the pocket tester. If the continuity reading is incorrect, replace the relay.

Pocket tester
90890-03112
Analog pocket tester
YU-03112-C

1. Disconnect the relay from the wire harness.
2. Connect the pocket tester ($\Omega \times 1$) and battery (12 V) to the relay terminal as shown.
   Check the relay operation.
   Out of specification → Replace.

Starter relay

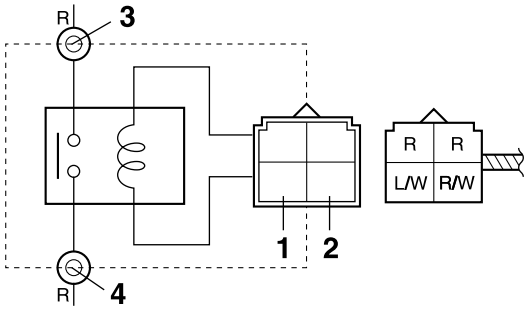

1. Positive battery terminal
2. Negative battery terminal
3. Positive tester probe
4. Negative tester probe

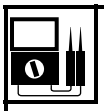

Relay operation
Continuity
(between “3” and “4”)

Relay unit (starting circuit cut-off relay)

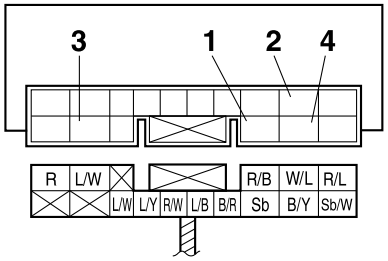

1. Positive battery terminal
2. Negative battery terminal
3. Positive tester probe
4. Negative tester probe

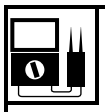

Result
Continuity
(between “3” and “4”)

Relay unit (fuel pump relay)

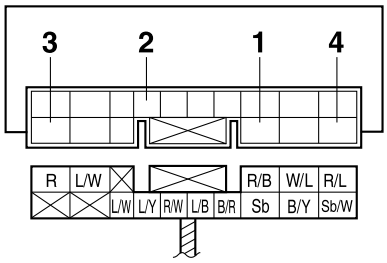

1. Positive battery terminal
2. Negative battery terminal
3. Positive tester probe
4. Negative tester probe

Result
Continuity
(between “3” and “4”)

Headlight relay

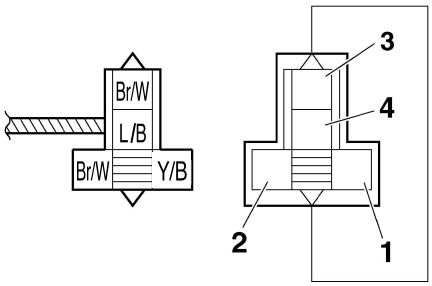

1. Positive battery terminal
2. Negative battery terminal
3. Positive tester probe
4. Negative tester probe

Result
Continuity
(between "3" and "4")

Radiator fan motor relay

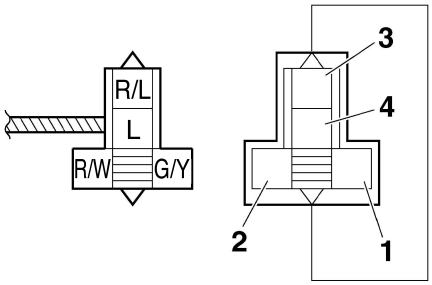

1. Positive battery terminal
2. Negative battery terminal
3. Positive tester probe
4. Negative tester probe

Result
Continuity
(between "3" and "4")

EAS1RC1801

CHECKING THE TURN SIGNAL/HAZARD RELAY

1. Check:
   - Turn signal/hazard relay input voltage
     Out of specification → The wiring circuit from the main switch to the turn signal/hazard relay coupler is faulty and must be repaired.

Turn signal/hazard relay input voltage
DC 12 V

▼▼▼▼▼▼▼▼▼▼▼▼▼▼▼▼▼▼▼▼▼▼▼▼▼▼▼▼▼▼▼▼▼▼

a. Connect the pocket tester (DC 20 V) to the turn signal/hazard relay terminal as shown.

Pocket tester
90890-03112
Analog pocket tester
YU-03112-C

- Positive tester probe
  blue/red "1"
- Negative tester probe
  Ground

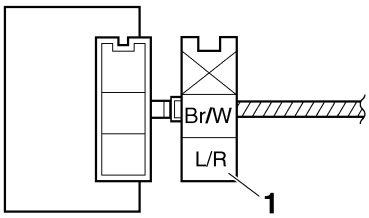

b. Turn the main switch to "ON".
c. Measure the turn signal/hazard relay input voltage.

▲▲▲▲▲▲▲▲▲▲▲▲▲▲▲▲▲▲▲▲▲▲▲▲▲▲▲▲▲▲▲▲▲▲

2. Check:
   - Turn signal/hazard relay output voltage
     Out of specification → Replace.

Turn signal/hazard relay output voltage
DC 12 V

▼▼▼▼▼▼▼▼▼▼▼▼▼▼▼▼▼▼▼▼▼▼▼▼▼▼▼▼▼▼▼▼▼▼

a. Connect the pocket tester (DC 20 V) to the turn signal/hazard relay terminal as shown.

Pocket tester
90890-03112
Analog pocket tester
YU-03112-C

- Positive tester probe
  brown/white "1"
- Negative tester probe
  Ground

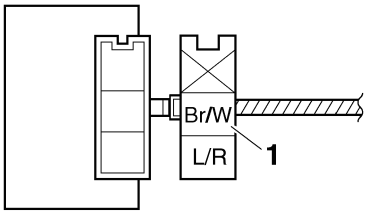

b. Turn the main switch to “ON”.
c. Measure the turn signal/hazard relay output voltage.

▲▲▲▲▲▲▲▲▲▲▲▲▲▲▲▲▲▲▲▲▲▲▲▲▲▲▲▲▲▲▲▲

EAS28050

CHECKING THE RELAY UNIT (DIODE)

1. Check:
   - Relay unit (diode)
     Out of specification → Replace.

Pocket tester
90890-03112
Analog pocket tester
YU-03112-C

TIP

The pocket tester or the analog pocket tester readings are shown in the following table.

Continuity
Positive tester probe
sky blue “1”
Negative tester probe
black/yellow “2”
No continuity
Positive tester probe
black/yellow “2”
Negative tester probe
sky blue “1”
Continuity
Positive tester probe
sky blue “1”
Negative tester probe
black/red “3”
No continuity
Positive tester probe
black/red “3”
Negative tester probe
sky blue “1”
Continuity
Positive tester probe
sky blue “1”
Negative tester probe
sky blue/white “4”
No continuity
Positive tester probe
sky blue/white “4”
Negative tester probe
sky blue “1”
Continuity
Positive tester probe
blue/black “5”
Negative tester probe
black/red “3”
No continuity
Positive tester probe
black/red “3”
Negative tester probe
blue/black “5”

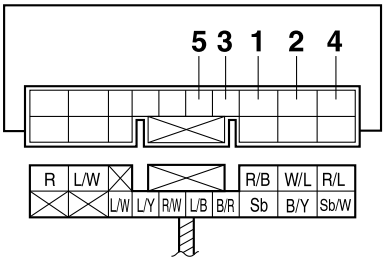

▼▼▼▼▼▼▼▼▼▼▼▼▼▼▼▼▼▼▼▼▼▼▼▼▼▼▼▼▼▼▼▼

a. Disconnect the relay unit coupler from the wire harness.
b. Connect the pocket tester ($\Omega \times 1$) to the relay

unit terminal as shown.
c. Check the relay unit (diode) for continuity.
d. Check the relay unit (diode) for no continuity.

▲▲▲▲▲▲▲▲▲▲▲▲▲▲▲▲▲▲▲▲▲▲▲▲▲▲▲▲▲▲▲▲

EAS28100

CHECKING THE IGNITION COILS

The following procedure applies to all of the ignition coils.

1. Check:
   - Primary coil resistance
     Out of specification → Replace.

Primary coil resistance
1.19–1.61 Ω

▼▼▼▼▼▼▼▼▼▼▼▼▼▼▼▼▼▼▼▼▼▼▼▼▼▼▼▼▼▼▼▼

a. Remove the ignition coil from the spark plug.
b. Connect the pocket tester (Ω × 1) to the ignition coil as shown.

Pocket tester
90890-03112
Analog pocket tester
YU-03112-C

- Positive tester probe →
  red/black "1"
- Negative tester probe →
  Cylinder-#1 ignition coil
  orange "2"
  Cylinder-#2 ignition coil
  gray/red "2"
  Cylinder-#3 ignition coil
  orange/green "2"

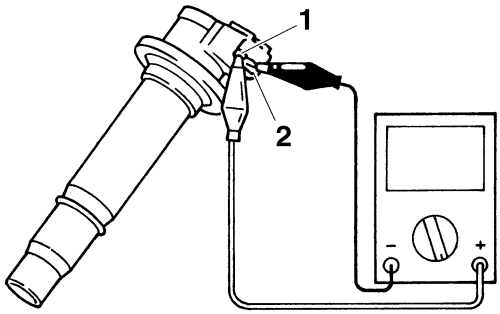

c. Measure the primary coil resistance.

▲▲▲▲▲▲▲▲▲▲▲▲▲▲▲▲▲▲▲▲▲▲▲▲▲▲▲▲▲▲▲▲

2. Check:
   - Secondary coil resistance
     Out of specification → Replace.

Secondary coil resistance
9.35–12.65 kΩ

▼▼▼▼▼▼▼▼▼▼▼▼▼▼▼▼▼▼▼▼▼▼▼▼▼▼▼▼▼▼▼▼

a. Connect the pocket tester (Ω × 1 k) to the ignition coil as shown.

Pocket tester
90890-03112
Analog pocket tester
YU-03112-C

- Negative tester probe →
  red/black "1"
- Positive tester probe →
  spark plug terminal "2"

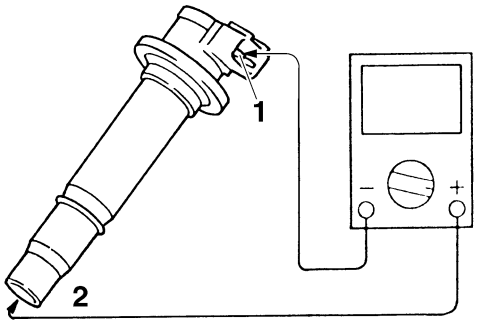

b. Measure the secondary coil resistance.

▲▲▲▲▲▲▲▲▲▲▲▲▲▲▲▲▲▲▲▲▲▲▲▲▲▲▲▲▲▲▲▲

EAS28930

CHECKING THE IGNITION SPARK GAP

1. Check:
   - Ignition spark gap
     Out of specification → Perform the ignition system troubleshooting, starting with step 5. Refer to "TROUBLESHOOTING" on page 8-4.

Minimum ignition spark gap
6.0 mm (0.24 in)

TIP

If the ignition spark gap is within specification, the ignition system circuit is operating normally.

▼▼▼▼▼▼▼▼▼▼▼▼▼▼▼▼▼▼▼▼▼▼▼▼▼▼▼▼▼▼▼▼

a. Remove the ignition coil from the spark plug.
b. Connect the ignition checker "1" as shown.

Ignition checker
90890-06754
Oppama pet-4000 spark checker
YM-34487

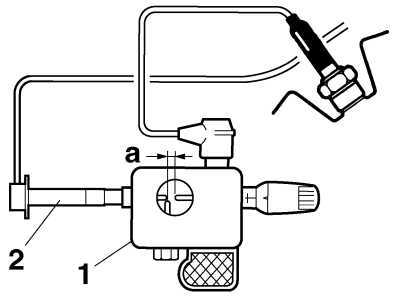

2. Ignition coil

c. Turn the main switch to “ON”.
d. Measure the ignition spark gap “a”.
e. Crank the engine by pushing the “⊛” side of the start/engine stop switch and gradually increase the spark gap until a misfire occurs.

▲▲▲▲▲▲▲▲▲▲▲▲▲▲▲▲▲▲▲▲▲▲▲▲▲▲▲▲▲▲▲▲

EAS28120

CHECKING THE CRANKSHAFT POSITION SENSOR

1. Disconnect:
   - Crankshaft position sensor coupler (from the wire harness)
2. Check:
   - Crankshaft position sensor resistance
     Out of specification → Replace the crankshaft position sensor.

Crankshaft position sensor resistance
228–342 Ω (Gy-B)

▼▼▼▼▼▼▼▼▼▼▼▼▼▼▼▼▼▼▼▼▼▼▼▼▼▼▼▼▼▼▼▼

a. Connect the pocket tester (Ω × 100) to the crankshaft position sensor coupler as shown.

Pocket tester
90890-03112
Analog pocket tester
YU-03112-C

- Positive tester probe
  gray “1”
- Negative tester probe
  black “2”

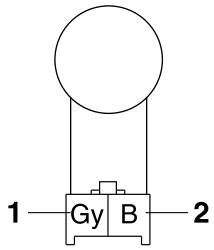

b. Measure the crankshaft position sensor resistance.

▲▲▲▲▲▲▲▲▲▲▲▲▲▲▲▲▲▲▲▲▲▲▲▲▲▲▲▲▲▲▲▲

EAS28131

CHECKING THE LEAN ANGLE SENSOR

1. Remove:
   - Lean angle sensor
     (from the fuel tank bracket)
2. Check:
   - Lean angle sensor output voltage
     Out of specification → Replace.

Lean angle sensor output voltage
Less than 65°
0.4–1.4 V
More than 65°
3.7–4.4 V

▼▼▼▼▼▼▼▼▼▼▼▼▼▼▼▼▼▼▼▼▼▼▼▼▼▼▼▼▼▼▼▼

a. Connect the test harness-lean angle sensor (6P) “1” to the lean angle sensor and wire harness as shown.
b. Connect the pocket tester (DC 20 V) to the test harness-lean angle sensor (6P).

Pocket tester
90890-03112
Analog pocket tester
YU-03112-C
Test harness- lean angle sensor (6P)
90890-03209
YU-03209

- Positive tester probe
  yellow/green (wire harness color)
- Negative tester probe
  black/blue (wire harness color)

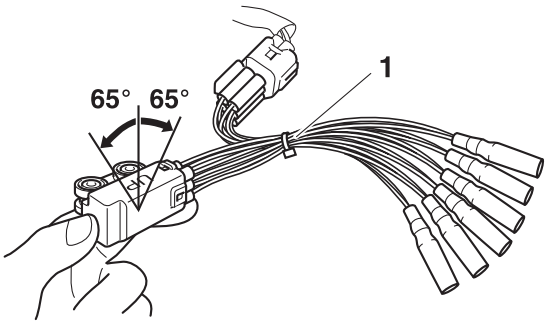

c. Set the main switch to “ON”.
d. Turn the lean angle sensor to 65°.
e. Measure the lean angle sensor output voltage.

▲▲▲▲▲▲▲▲▲▲▲▲▲▲▲▲▲▲▲▲▲▲▲▲▲▲▲▲▲▲▲▲

EAS28940

CHECKING THE STARTER MOTOR OPERATION

1. Check:
   - Starter motor operation
     Does not operate → Perform the electric starting system troubleshooting, starting with step 4.
     Refer to “TROUBLESHOOTING” on page 8-11.

▼▼▼▼▼▼▼▼▼▼▼▼▼▼▼▼▼▼▼▼▼▼▼▼▼▼▼▼▼▼▼▼

a. Connect the positive battery terminal “1” and starter motor lead “2” with a jumper lead “3”.

EWA13810

WARNING

- **A wire that is used as a jumper lead must have at least the same capacity of the battery lead, otherwise the jumper lead may burn.**
- **This check is likely to produce sparks, therefore, make sure no flammable gas or fluid is in the vicinity.**

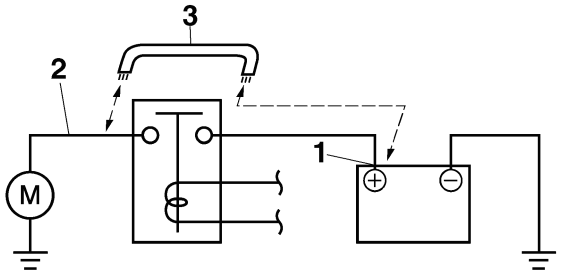

b. Check the starter motor operation.

▲▲▲▲▲▲▲▲▲▲▲▲▲▲▲▲▲▲▲▲▲▲▲▲▲▲▲▲▲▲▲▲

EAS28150

CHECKING THE STATOR COIL

1. Disconnect:
   - Stator coil coupler
     (from the wire harness)
2. Check:
   - Stator coil resistance
     Out of specification → Replace the stator coil.

Stator coil resistance
0.152–0.228 Ω (W-W)

▼▼▼▼▼▼▼▼▼▼▼▼▼▼▼▼▼▼▼▼▼▼▼▼▼▼▼▼▼▼▼▼

a. Connect the digital circuit tester to the stator coil coupler as shown.

Digital circuit tester
90890-03174
Model 88 Multimeter with tachometer
YU-A1927

- Positive tester probe
  white “1”
- Negative tester probe
  white “2”

- Positive tester probe
  white “1”
- Negative tester probe
  white “3”

- Positive tester probe
  white “2”
- Negative tester probe
  white “3”

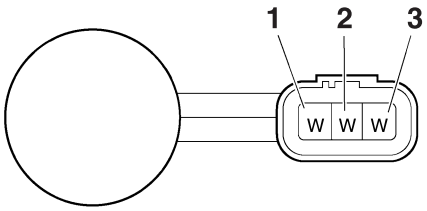

b. Measure the stator coil resistance.

▲▲▲▲▲▲▲▲▲▲▲▲▲▲▲▲▲▲▲▲▲▲▲▲▲▲▲▲▲▲▲▲

EAS28170

CHECKING THE RECTIFIER/REGULATOR

1. Check:
   - Rectifier/regulator input voltage
     Out of specification → Correct the stator coil condition.
     Refer to “CHECKING THE STATOR COIL” on page 8-102.

Rectifier/regulator input voltage
above 14 V at 5000 r/min

▼▼▼▼▼▼▼▼▼▼▼▼▼▼▼▼▼▼▼▼▼▼▼▼▼▼▼▼▼▼▼▼▼▼

a. Set the engine tachometer to the ignition coil of cylinder #1.
b. Connect the pocket tester (AC 20 V) to the rectifier/regulator coupler as shown.

Pocket tester
90890-03112
Analog pocket tester
YU-03112-C

- Positive tester probe
  white "1"
- Negative tester probe
  white "2"

- Positive tester probe
  white "1"
- Negative tester probe
  white "3"

- Positive tester probe
  white "2"
- Negative tester probe
  white "3"

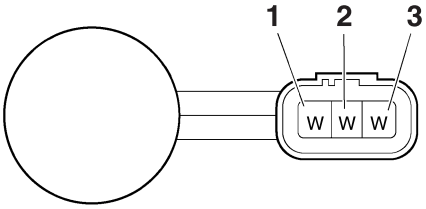

c. Start the engine and let it run at approximately 5000 r/min.
d. Measure the rectifier/regulator input voltage.

▲▲▲▲▲▲▲▲▲▲▲▲▲▲▲▲▲▲▲▲▲▲▲▲▲▲▲▲▲▲▲▲▲▲

2. Check:
   - Rectifier/regulator output voltage
     Out of specification → Replace the rectifier/regulator.

Regulated voltage (DC)
14.3–14.7 V

▼▼▼▼▼▼▼▼▼▼▼▼▼▼▼▼▼▼▼▼▼▼▼▼▼▼▼▼▼▼▼▼▼▼

a. Set the engine tachometer to the ignition coil of cylinder #1.
b. Connect the pocket tester (DC 20 V) to the battery as shown.

Pocket tester
90890-03112
Analog pocket tester
YU-03112-C

- Positive tester probe →
  positive battery terminal "1"
- Negative tester probe →
  negative battery terminal "2"

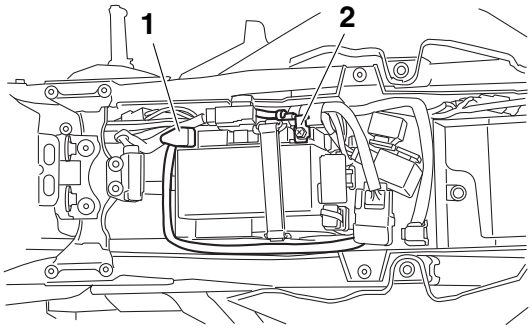

c. Start the engine and let it run at approximately 5000 r/min.
d. Measure the charging voltage.

▲▲▲▲▲▲▲▲▲▲▲▲▲▲▲▲▲▲▲▲▲▲▲▲▲▲▲▲▲▲▲▲▲▲

EAS28180

CHECKING THE HORN

1. Check:
   - Horn resistance
     Out of specification → Replace.

Horn
Coil resistance
1.07–1.11 Ω

▼▼▼▼▼▼▼▼▼▼▼▼▼▼▼▼▼▼▼▼▼▼▼▼▼▼▼▼▼▼▼▼▼▼

a. Disconnect the horn leads from the horn terminals.
b. Connect the digital circuit tester to the horn terminals.

Digital circuit tester
90890-03174
Model 88 Multimeter with tachometer
YU-A1927

- Positive tester probe
  Horn terminal "1"
- Negative tester probe
  Horn terminal "2"

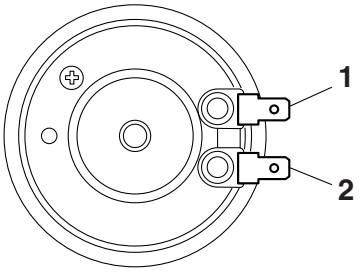

c. Measure the horn resistance.

▲▲▲▲▲▲▲▲▲▲▲▲▲▲▲▲▲▲▲▲▲▲▲▲▲▲▲▲▲▲▲▲

2. Check:
   - Horn sound
     Faulty sound → Replace.

EAS28190

CHECKING THE ENGINE OIL LEVEL SWITCH

1. Drain:
   - Engine oil
2. Remove:
   - Oil level switch
     (from the oil pan)
3. Check:
   - Oil level switch resistance

Oil level switch
Oil level switch resistance (maximum level position)
484.0–536.0 Ω
Oil level switch resistance (minimum level position)
114.0–126.0 Ω

▼▼▼▼▼▼▼▼▼▼▼▼▼▼▼▼▼▼▼▼▼▼▼▼▼▼▼▼▼▼▼▼

a. Connect the pocket tester (Ω × 100) to the oil level switch terminal as shown.

Pocket tester
90890-03112
Analog pocket tester
YU-03112-C

Minimum level position "A"
- Positive tester probe
  Connector (gray) "1"
- Negative tester probe
  Body earth "2"

Maximum level position "B"
- Positive tester probe
  Connector (gray) "1"
- Negative tester probe
  Body earth "2"

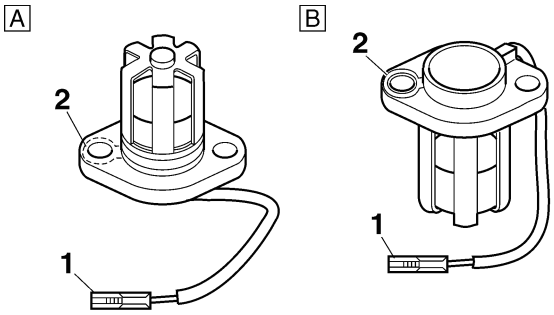

b. Measure the oil level switch resistance.

▲▲▲▲▲▲▲▲▲▲▲▲▲▲▲▲▲▲▲▲▲▲▲▲▲▲▲▲▲▲▲▲

EAS1RC1802

CHECKING THE FUEL SENDER

1. Disconnect:
   - Fuel pump coupler
     (from the fuel pump)
2. Remove:
   - Fuel tank
3. Remove:
   - Fuel pump
     (from the fuel tank)
4. Check:
   - Fuel sender resistance
     Out of specification → Replace the fuel pump assembly.

Sender unit resistance (full)
9.0–11.0 Ω
Sender unit resistance (empty)
213.0–219.0 Ω

▼▼▼▼▼▼▼▼▼▼▼▼▼▼▼▼▼▼▼▼▼▼▼▼▼▼▼▼▼▼▼▼

a. Connect the pocket tester (Ω × 10/100) to the fuel sender terminals as shown.

Pocket tester
90890-03112
Analog pocket tester
YU-03112-C

- Positive tester probe →
  Fuel sender terminal "1"
- Negative tester probe →
  Fuel sender terminal "2"

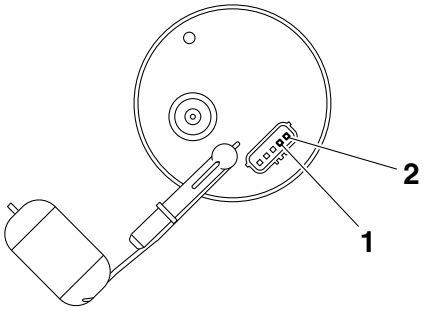

b. Move the fuel sender float to maximum “3” and minimum “4” level position.

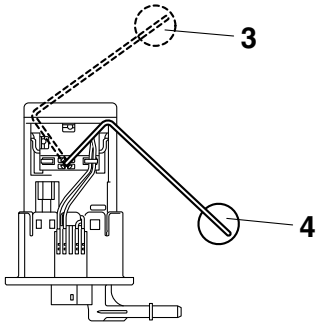

▲▲▲▲▲▲▲▲▲▲▲▲▲▲▲▲▲▲▲▲▲▲▲▲▲▲▲▲▲▲

EAS29040

CHECKING THE FUEL METER/FUEL LEVEL WARNING LIGHT

This model is equipped with a self-diagnosis device for the fuel level detection circuit.

1. Check:
   - Fuel meter/fuel level warning light “1”
     (Turn the main switch to “ON”.)
     Warning light comes on for a few seconds, then goes off → Warning light is OK.
     Warning light does not come on → Replace the meter assembly.
     Warning light flashes eight times, then goes off for 3 seconds in a repeated cycle (malfunction detected in fuel sender) → Replace the fuel pump assembly.

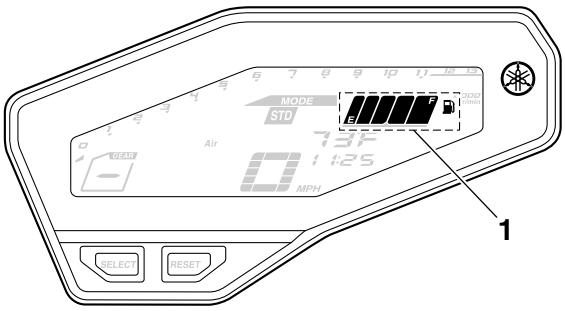

EAS29050

CHECKING THE OIL LEVEL WARNING LIGHT

This model is equipped with a self-diagnosis device for the oil level detection circuit.

1. Check:
   - Oil level warning light “1”
     (Turn the main switch to “ON”.)
     Warning light comes on for a few seconds, then goes off → Warning light is OK.
     Warning light does not come on → Replace the meter assembly.
     Warning light flashes ten times, then goes off for 2.5 seconds in a repeated cycle (malfunction detected in oil level switch) → Replace the oil level switch.

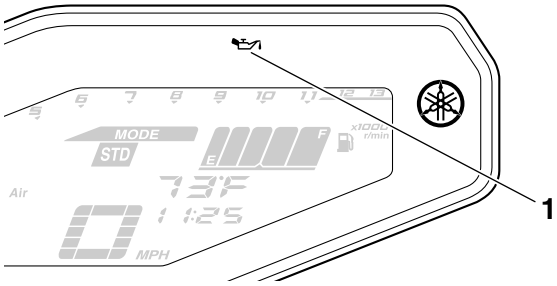

EAS28241

CHECKING THE SPEED SENSOR

1. Check:
   - Speed sensor output voltage
     Out of specification → Replace.

	Output voltage reading cycle **0.6 V to 4.8 V to 0.6 V to 4.8 V**

▼▼▼▼▼▼▼▼▼▼▼▼▼▼▼▼▼▼▼▼▼▼▼▼▼▼▼▼▼▼

a. Connect the test harness S– pressure sensor (3P) “1” to the speed sensor coupler and wire harness as shown.
b. Connect the pocket tester (DC 20 V) to the test harness S– pressure sensor (3P).

	Pocket tester **90890-03112** **Analog pocket tester** **YU-03112-C** **Test harness S– pressure sensor (3P)** **90890-03207** **YU-03207**

- Positive tester probe
  white/yellow (wire harness color)
- Negative tester probe
  black/blue (wire harness color)

c. Set the main switch to “ON”.
d. Elevate the rear wheel and slowly rotate it.
e. Measure the voltage. With each full rotation of the rear wheel, the voltage reading should cycle from 0.6 V to 4.8 V to 0.6 V to 4.8 V.

▲▲▲▲▲▲▲▲▲▲▲▲▲▲▲▲▲▲▲▲▲▲▲▲▲▲▲▲▲▲▲▲

EAS28250

CHECKING THE RADIATOR FAN MOTORS

1. Check:
   - Radiator fan motor
     Faulty/rough movement → Replace.

▼▼▼▼▼▼▼▼▼▼▼▼▼▼▼▼▼▼▼▼▼▼▼▼▼▼▼▼▼▼▼▼

a. Disconnect the radiator fan motor coupler from the wire harness.
b. Connect the battery (DC 12 V) as shown.

• Positive tester probe blue “1” • Negative tester probe black “2”

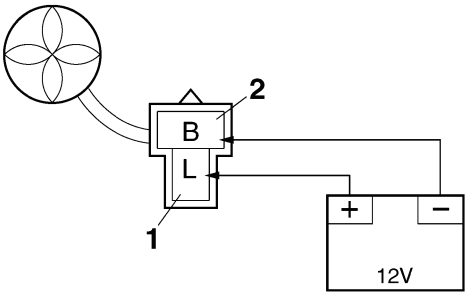

c. Measure the radiator fan motor movement.

▲▲▲▲▲▲▲▲▲▲▲▲▲▲▲▲▲▲▲▲▲▲▲▲▲▲▲▲▲▲▲▲

EAS28261

CHECKING THE COOLANT TEMPERATURE SENSOR

1. Remove:
   - Coolant temperature sensor
     Refer to “CYLINDER HEAD” on page 5-19.

EWA14130

WARNING

- **Handle the coolant temperature sensor with special care.**
- **Never subject the coolant temperature sensor to strong shocks. If the coolant temperature sensor is dropped, replace it.**

2. Check:
   - Coolant temperature sensor resistance
     Out of specification → Replace.

Coolant temperature sensor resistance **2510–2780 Ω@20 °C (68 °F)** **210–221 Ω@100 °C (212 °F)**

▼▼▼▼▼▼▼▼▼▼▼▼▼▼▼▼▼▼▼▼▼▼▼▼▼▼▼▼▼▼▼▼

a. Connect the pocket tester (Ω × 1 k) to the coolant temperature sensor as shown.

Pocket tester **90890-03112** **Analog pocket tester** **YU-03112-C**

b. Immerse the coolant temperature sensor “1” in a container filled with coolant “2”.

TIP

Make sure the coolant temperature sensor terminals do not get wet.

c. Place a thermometer “3” in the coolant.

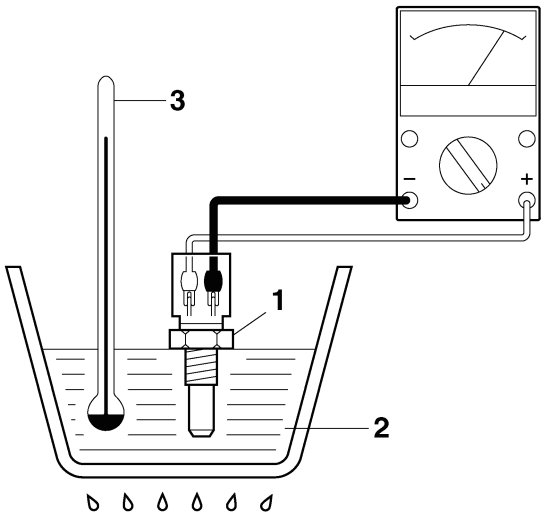

d. Heat the coolant or let it cool down to the specified temperatures.

e. Measure the coolant temperature sensor resistance.

▲▲▲▲▲▲▲▲▲▲▲▲▲▲▲▲▲▲▲▲▲▲▲▲▲▲▲▲▲▲▲▲

3. Install:
   - Coolant temperature sensor

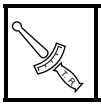	**Coolant temperature sensor 16 Nm (1.6 m·kgf, 12 ft·lbf)**

EAS28300

CHECKING THE THROTTLE POSITION SENSOR

1. Remove:
   - Throttle position sensor (from the throttle bodies)

EWA1RC1705

WARNING

- **Handle the throttle position sensor with special care.**
- **Never subject the throttle position sensor to strong shocks. If the throttle position sensor is dropped, replace it.**

2. Check:
   - Throttle position sensor maximum resistance
     Out of specification → Replace the throttle position sensor.

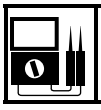	**Resistance 1.20–2.80 kΩ**

▼▼▼▼▼▼▼▼▼▼▼▼▼▼▼▼▼▼▼▼▼▼▼▼▼▼▼▼▼▼▼▼

a. Connect the pocket tester (Ω × 1 k) to the throttle position sensor terminals as shown.

	**Pocket tester 90890-03112 Analog pocket tester YU-03112-C**

- Positive tester probe → blue "1"
- Negative tester probe → black/blue "2"

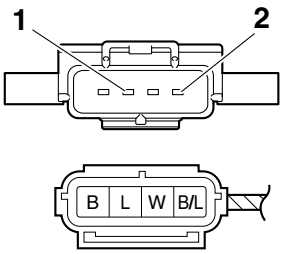

b. Measure the throttle position sensor maximum resistance.

▲▲▲▲▲▲▲▲▲▲▲▲▲▲▲▲▲▲▲▲▲▲▲▲▲▲▲▲▲▲▲▲

3. Install:
   - Throttle position sensor

TIP

When installing the throttle position sensor, adjust its angle properly. Refer to "ADJUSTING THE THROTTLE POSITION SENSOR" on page 7-12.

EAS29100

CHECKING THE ACCELERATOR POSITION SENSOR

1. Remove:
   - Accelerator position sensor (from the throttle bodies)

EWA1RC1706

WARNING

- **Handle the accelerator position sensor with special care.**
- **Never subject the accelerator position sensor to strong shocks. If the accelerator position sensor is dropped, replace it.**

2. Check:
   - Accelerator position sensor maximum resistance
     Out of specification → Replace the accelerator position sensor.

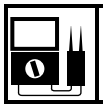	**Resistance 1.08–2.52 kΩ**

▼▼▼▼▼▼▼▼▼▼▼▼▼▼▼▼▼▼▼▼▼▼▼▼▼▼▼▼▼▼▼▼

a. Connect the pocket tester (Ω × 1 k) to the accelerator position sensor terminals as shown.

	**Pocket tester 90890-03112 Analog pocket tester YU-03112-C**

- Positive tester probe → blue "1"
- Negative tester probe → black/blue "2"

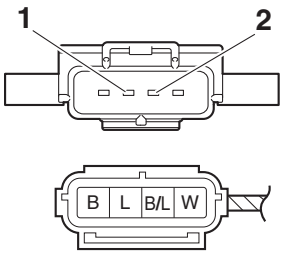

b. Measure the accelerator position sensor maximum resistance.

▲▲▲▲▲▲▲▲▲▲▲▲▲▲▲▲▲▲▲▲▲▲▲▲▲▲▲▲▲▲▲▲

3. Install:
   - Accelerator position sensor

TIP

When installing the accelerator position sensor, adjust its angle properly. Refer to “ADJUSTING THE ACCELERATOR POSITION SENSOR” on page 7-13.

EAS1RC1803

CHECKING THE THROTTLE SERVO MOTOR

1. Remove:
   - Air filter case
     Refer to “GENERAL CHASSIS” on page 4-1.
2. Check:
   - Throttle valve operation
     Throttle valves do not fully close → Replace the throttle bodies.

▼▼▼▼▼▼▼▼▼▼▼▼▼▼▼▼▼▼▼▼▼▼▼▼▼▼▼▼▼▼▼▼

a. Connect two C-size batteries to the throttle servo motor terminals “1” as shown.

ECA1RC1802

NOTICE

Do not use a 12 V battery to operate the throttle servo motor.

TIP

Do not use old batteries to operate the throttle servo motor.

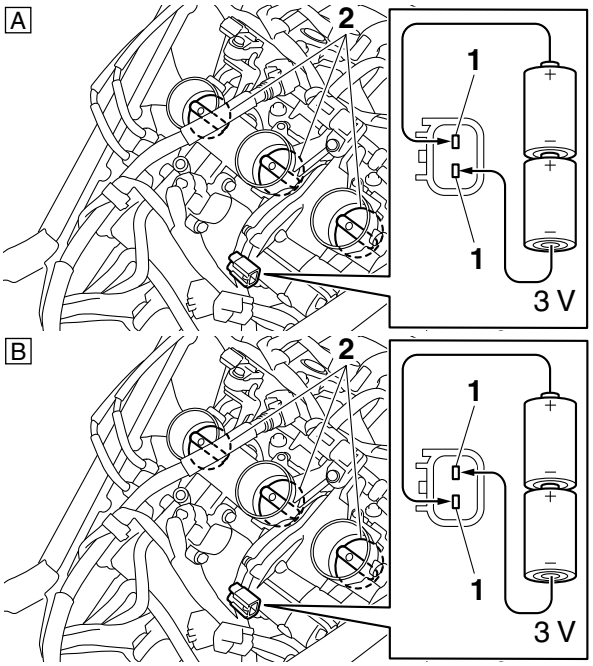

A. Check that the throttle valves “2” open.
B. Check that the throttle valves “2” fully close.

▲▲▲▲▲▲▲▲▲▲▲▲▲▲▲▲▲▲▲▲▲▲▲▲▲▲▲▲▲▲▲▲

EAS28371

CHECKING THE AIR INDUCTION SYSTEM SOLENOID

1. Check:
   - Air induction system solenoid resistance
     Out of specification → Replace.

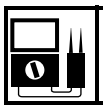	**Solenoid resistance** **20–24 Ω**

▼▼▼▼▼▼▼▼▼▼▼▼▼▼▼▼▼▼▼▼▼▼▼▼▼▼▼▼▼▼▼▼

a. Remove the air induction system solenoid coupler from the air induction system solenoid.
b. Connect the pocket tester (Ω × 1) to the air induction system solenoid terminal as shown.

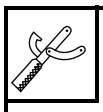	**Pocket tester** **90890-03112** **Analog pocket tester** **YU-03112-C**

- Positive tester probe →
  Air induction system solenoid terminal “1”
- Negative tester probe →
  Air induction system solenoid terminal “2”

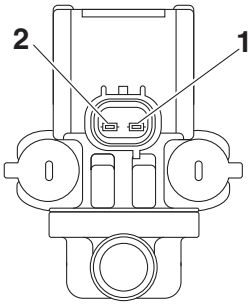

c. Measure the air induction system solenoid resistance.

▲▲▲▲▲▲▲▲▲▲▲▲▲▲▲▲▲▲▲▲▲▲▲▲▲▲▲▲▲▲▲▲

EAS28411

CHECKING THE INTAKE AIR PRESSURE SENSOR

1. Check:
   - Intake air pressure sensor output voltage
     Out of specification → Replace.

Intake air pressure sensor output voltage
3.57–3.71 V@101.3 kPa

▼▼▼▼▼▼▼▼▼▼▼▼▼▼▼▼▼▼▼▼▼▼▼▼▼▼▼▼▼▼▼▼

a. Connect the test harness S– pressure sensor (3P) "1" to the intake air pressure sensor and wire harness as shown.

ECA1RC1805

NOTICE

Pay attention to the installing direction of the test harness S– pressure sensor (3P) coupler.

b. Connect the digital circuit tester (DCV) to the test harness S– pressure sensor (3P).

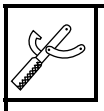

Digital circuit tester
90890-03174
Model 88 Multimeter with tachometer
YU-A1927
Test harness S– pressure sensor (3P)
90890-03207
YU-03207

- Positive tester probe
  pink (wire harness color) (intake air pressure sensor 1)
  pink/white (wire harness color) (intake air pressure sensor 2)
- Negative tester probe
  black/blue (wire harness color)

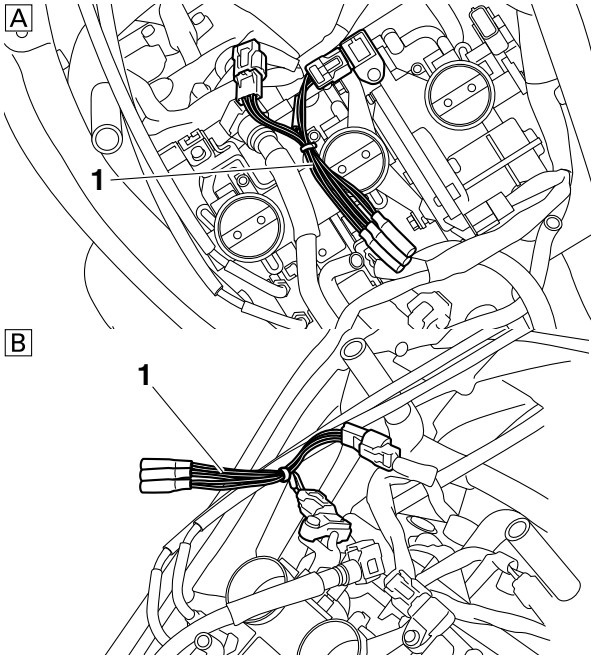

A. Intake air pressure sensor 1
B. Intake air pressure sensor 2

c. Set the main switch to "ON".
d. Measure the intake air pressure sensor output voltage.

▲▲▲▲▲▲▲▲▲▲▲▲▲▲▲▲▲▲▲▲▲▲▲▲▲▲▲▲▲▲▲▲

EAS28421

CHECKING THE INTAKE AIR TEMPERATURE SENSOR

1. Remove:
   - Intake air temperature sensor

EWA14110

WARNING

- **Handle the intake air temperature sensor with special care.**
- **Never subject the intake air temperature sensor to strong shocks. If the intake air temperature sensor is dropped, replace it.**

2. Check:
   - Intake air temperature sensor resistance
     Out of specification → Replace.

Intake air temperature sensor resistance
5400–6600 Ω@0 °C (32 °F)
290–390 Ω@80 °C (176 °F)

▼▼▼▼▼▼▼▼▼▼▼▼▼▼▼▼▼▼▼▼▼▼▼▼▼▼▼▼▼▼▼▼

a. Connect the pocket tester (Ω × 100) to the intake air temperature sensor terminal as shown.

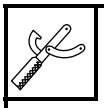

Pocket tester
90890-03112
Analog pocket tester
YU-03112-C

b. Immerse the intake air temperature sensor "1" in a container filled with water "2".

TIP
Make sure that the intake air temperature sensor terminals do not get wet.

c. Place a thermometer "3" in the water.

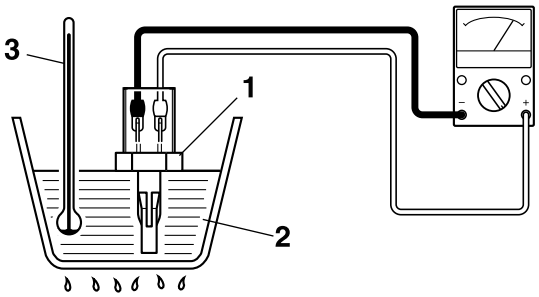

d. Slowly heat the water, then let it cool down to the specified temperature.
e. Measure the intake air temperature sensor resistance.

▲▲▲▲▲▲▲▲▲▲▲▲▲▲▲▲▲▲▲▲▲▲▲▲▲▲▲▲▲▲▲▲▲▲

3. Install:
   - Intake air temperature sensor

EAS1RC1816

CHECKING THE GEAR POSITION SENSOR

1. Remove:
   - Fuel tank
     Refer to "FUEL TANK" on page 7-1.
   - Gear position sensor
     Refer to "CRANKCASE" on page 5-56.
2. Check:
   - Gear position sensor
     Out of specification → Replace the gear position sensor.

Pocket tester
90890-03112
Analog pocket tester
YU-03112-C

Result
Neutral position
Continuity
Positive tester probe
sky blue "1"
Negative tester probe
Sensor terminal "a"
1st position
Continuity
Positive tester probe
white "2"
Negative tester probe
Sensor terminal "b"
2nd position
Continuity
Positive tester probe
pink "3"
Negative tester probe
Sensor terminal "c"
3rd position
Continuity
Positive tester probe
yellow/white "4"
Negative tester probe
Sensor terminal "d"
4th position
Continuity
Positive tester probe
white/red "5"
Negative tester probe
Sensor terminal "e"
5th position
Continuity
Positive tester probe
orange "6"
Negative tester probe
Sensor terminal "f"
6th position
Continuity
Positive tester probe
gray "7"
Negative tester probe
Sensor terminal "g"

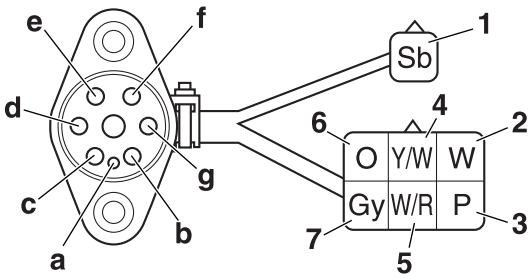

EAS1RC1817

CHECKING THE FUEL INJECTORS

The following procedure applies to all of the fuel injectors.

1. Remove:
   - Fuel injector
     Refer to “THROTTLE BODIES” on page 7-5.
2. Check:
   - Fuel injector resistance
     Out of specification → Replace the fuel injector.

	**Resistance** **12.0 Ω**

▼▼▼▼▼▼▼▼▼▼▼▼▼▼▼▼▼▼▼▼▼▼▼▼▼▼▼▼▼▼▼▼▼▼

a. Disconnect the fuel injector coupler from the fuel injector.
b. Connect the pocket tester (Ω × 10) to the fuel injector coupler as shown.

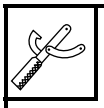	**Pocket tester** **90890-03112** **Analog pocket tester** **YU-03112-C**

- Positive tester probe →
  Injector terminal “1”
- Negative tester probe →
  Injector terminal “2”

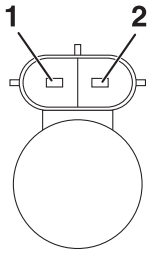

c. Measure the fuel injector resistance.

▲▲▲▲▲▲▲▲▲▲▲▲▲▲▲▲▲▲▲▲▲▲▲▲▲▲▲▲▲▲▲▲▲▲

TROUBLESHOOTING

EAS28451

TROUBLESHOOTING

EAS28460

GENERAL INFORMATION

TIP

The following guide for troubleshooting does not cover all the possible causes of trouble. It should be helpful, however, as a guide to basic troubleshooting. Refer to the relative procedure in this manual for checks, adjustments, and replacement of parts.

EAS30410

STARTING FAILURES

Engine

1. Cylinder(s) and cylinder head(s)
   - Loose spark plug
   - Loose cylinder head or cylinder
   - Damaged cylinder head gasket
   - Worn or damaged cylinder
   - Incorrect valve clearance
   - Improperly sealed valve
   - Incorrect valve-to-valve-seat contact
   - Incorrect valve timing
   - Faulty valve spring
   - Seized valve
2. Piston(s) and piston ring(s)
   - Improperly installed piston ring
   - Damaged, worn or fatigued piston ring
   - Seized piston ring
   - Seized or damaged piston
3. Air filter
   - Improperly installed air filter
   - Clogged air filter element
4. Crankcase and crankshaft
   - Improperly assembled crankcase
   - Seized crankshaft

Fuel system

1. Fuel tank
   - Empty fuel tank
   - Clogged fuel tank cap breather hole
   - Deteriorated or contaminated fuel
   - Clogged or damaged fuel hose
2. Fuel pump
   - Faulty fuel pump
   - Faulty fuel pump relay
3. Throttle body (-ies)
   - Deteriorated or contaminated fuel
   - Sucked-in air

Electrical system

1. Battery
   - Discharged battery
   - Faulty battery
2. Fuse(s)
   - Blown, damaged or incorrect fuse
   - Improperly installed fuse
3. Spark plug(s)
   - Incorrect spark plug gap
   - Incorrect spark plug heat range
   - Fouled spark plug
   - Worn or damaged electrode
   - Worn or damaged insulator
4. Ignition coil(s)
   - Cracked or broken ignition coil body
   - Broken or shorted primary or secondary coils
5. Ignition system
   - Faulty ECU
   - Faulty crankshaft position sensor
   - Broken generator rotor woodruff key
6. Switches and wiring
   - Faulty main switch
   - Faulty start/engine stop switch
   - Broken or shorted wiring
   - Faulty gear position sensor
   - Faulty sidestand switch
   - Faulty clutch switch
   - Improperly grounded circuit
   - Loose connections
7. Starting system
   - Faulty starter motor
   - Faulty starter relay
   - Faulty starting circuit cut-off relay
   - Faulty starter clutch

EAS30430

INCORRECT ENGINE IDLING SPEED

Engine

1. Cylinder(s) and cylinder head(s)
   - Incorrect valve clearance
   - Damaged valve train components
2. Air filter
   - Clogged air filter element

Fuel system

1. Throttle body (-ies)
   - Damaged or loose throttle body joint
   - Improperly synchronized throttle bodies
   - Improper throttle grip free play
   - Flooded throttle body
   - Faulty air induction system

Electrical system

1. Battery
   - Discharged battery
   - Faulty battery
2. Spark plug(s)
   - Incorrect spark plug gap
   - Incorrect spark plug heat range
   - Fouled spark plug

- Worn or damaged electrode
- Worn or damaged insulator

3. Ignition coil(s)
   - Broken or shorted primary or secondary coils
   - Cracked or broken ignition coil
4. Ignition system
   - Faulty ECU
   - Faulty crankshaft position sensor
   - Broken generator rotor woodruff key

EAS30450

POOR MEDIUM-AND-HIGH-SPEED PERFORMANCE

Refer to “STARTING FAILURES” on page 9-1.

Engine

1. Air filter
   - Clogged air filter element

Fuel system

1. Throttle body (-ies)
   - Faulty throttle body
2. Fuel pump
   - Faulty fuel pump

EAS28530

FAULTY GEAR SHIFTING

Shifting is difficult

Refer to “Clutch drags”.

EAS28540

SHIFT PEDAL DOES NOT MOVE

Shift shaft

- Improperly adjusted shift rod
- Bent shift shaft

Shift drum and shift forks

- Foreign object in a shift drum groove
- Seized shift fork
- Bent shift fork guide bar

Transmission

- Seized transmission gear
- Foreign object between transmission gears
- Improperly assembled transmission

EAS28550

JUMPS OUT OF GEAR

Shift shaft

- Incorrect shift pedal position
- Improperly returned stopper lever

Shift forks

- Worn shift fork

Shift drum

- Incorrect axial play
- Worn shift drum groove

Transmission

- Worn gear dog

EAS28560

FAULTY CLUTCH

Clutch slips

1. Clutch
   - Improperly assembled clutch
   - Improperly adjusted clutch cable
   - Loose or fatigued clutch spring
   - Worn friction plate
   - Worn clutch plate
2. Engine oil
   - Incorrect oil level
   - Incorrect oil viscosity (low)
   - Deteriorated oil

Clutch drags

1. Clutch
   - Unevenly tensioned clutch springs
   - Warped pressure plate
   - Bent clutch plate
   - Swollen friction plate
   - Bent clutch pull rod
   - Broken clutch boss
   - Burnt primary driven gear bushing
   - Match marks not aligned
2. Engine oil
   - Incorrect oil level
   - Incorrect oil viscosity (high)
   - Deteriorated oil

EAS30480

OVERHEATING

Engine

1. Clogged coolant passages
   - Cylinder head(s) and piston(s)
   - Heavy carbon buildup
2. Engine oil
   - Incorrect oil level
   - Incorrect oil viscosity
   - Inferior oil quality

Cooling system

1. Coolant
   - Low coolant level
2. Radiator
   - Damaged or leaking radiator
   - Faulty radiator cap
   - Bent or damaged radiator fin
3. Water pump
   - Damaged or faulty water pump
   - Thermostat
   - Thermostat stays closed
   - Oil cooler
   - Clogged or damaged oil cooler
   - Hose(s) and pipe(s)
   - Damaged hose
   - Improperly connected hose

- Damaged pipe
- Improperly connected pipe

Fuel system

1. Throttle body (-ies)
   - Damaged or loose throttle body joint
2. Air filter
   - Clogged air filter element

Chassis

1. Brake(s)
   - Dragging brake

Electrical system

1. Spark plug(s)
   - Incorrect spark plug gap
   - Incorrect spark plug heat range
2. Ignition system
   - Faulty ECU

EAS28610

OVERCOOLING

Cooling system

1. Thermostat
   - Thermostat stays open

EAS28620

POOR BRAKING PERFORMANCE

- Worn brake pad
- Worn brake disc
- Air in hydraulic brake system
- Leaking brake fluid
- Faulty brake caliper kit
- Faulty brake caliper seal
- Loose union bolt
- Damaged brake hose
- Oil or grease on the brake disc
- Oil or grease on the brake pad
- Incorrect brake fluid level

EAS28660

FAULTY FRONT FORK LEGS

Leaking oil

- Bent, damaged or rusty inner tube
- Cracked or damaged outer tube
- Improperly installed oil seal
- Damaged oil seal lip
- Incorrect oil level (high)
- Loose damper rod assembly bolt
- Damaged damper rod assembly bolt copper washer
- Cracked or damaged cap bolt O-ring

Malfunction

- Bent or damaged inner tube
- Bent or damaged outer tube
- Damaged fork spring
- Worn or damaged outer tube bushing
- Bent or damaged damper rod
- Incorrect oil viscosity
- Incorrect oil level

EAS28670

UNSTABLE HANDLING

1. Handlebar
   - Bent or improperly installed handlebar
2. Steering head components
   - Improperly installed upper bracket
   - Improperly installed lower bracket (improperly tightened ring nut)
   - Bent steering stem
   - Damaged ball bearing or bearing race
3. Front fork leg(s)
   - Uneven oil levels (both front fork legs)
   - Unevenly tensioned fork spring (both front fork legs)
   - Broken fork spring
   - Bent or damaged inner tube
   - Bent or damaged outer tube
4. Swingarm
   - Worn bearing or bushing
   - Bent or damaged swingarm
5. Rear shock absorber assembly(-ies)
   - Faulty rear shock absorber spring
   - Leaking oil or gas
6. Tire(s)
   - Uneven tire pressures (front and rear)
   - Incorrect tire pressure
   - Uneven tire wear
7. Wheel(s)
   - Incorrect wheel balance
   - Deformed cast wheel
   - Damaged wheel bearing
   - Bent or loose wheel axle
   - Excessive wheel runout
8. Frame
   - Bent frame
   - Damaged steering head pipe
   - Improperly installed bearing race

EAS28710

FAULTY LIGHTING OR SIGNALING SYSTEM

Headlight does not come on

- Wrong headlight bulb
- Too many electrical accessories
- Hard charging
- Incorrect connection
- Improperly grounded circuit
- Poor contacts (main or light switch)
- Burnt-out headlight bulb

Headlight bulb burnt out

- Wrong headlight bulb
- Faulty battery

- Faulty rectifier/regulator
- Improperly grounded circuit
- Faulty main switch
- Faulty dimmer switch
- Headlight bulb life expired

Tail/brake light does not come on
- Too many electrical accessories
- Incorrect connection

Turn signal does not come on
- Faulty turn signal switch
- Faulty turn signal/hazard relay
- Burnt-out turn signal bulb
- Incorrect connection
- Damaged or faulty wire harness
- Improperly grounded circuit
- Faulty battery
- Blown, damaged or incorrect fuse

Turn signal blinks slowly
- Faulty turn signal/hazard relay
- Faulty main switch
- Faulty turn signal switch
- Incorrect turn signal bulb

Turn signal remains lit
- Faulty turn signal/hazard relay
- Burnt-out turn signal bulb

Turn signal blinks quickly
- Incorrect turn signal bulb
- Faulty turn signal/hazard relay
- Burnt-out turn signal bulb

Horn does not sound
- Damaged or faulty horn
- Faulty main switch
- Faulty horn switch
- Faulty battery
- Blown, damaged or incorrect fuse
- Faulty wire harness

EAS1RC1902

SELF-DIAGNOSTIC FUNCTION AND DIAGNOSTIC CODE TABLE

Self-diagnostic function table

Fault code No.	Item	Reference pages
12	Crankshaft position sensor: no normal signals are received from the crankshaft position sensor.	8-38
13	Intake air pressure sensor 1: open or short circuit detected.	8-39
14	Intake air pressure sensor 1: hose system malfunction (clogged or detached hose).	8-41
15	Throttle position sensor: open or short circuit detected.	8-42
19	Sidestand switch: a break or disconnection of the black/red lead of the ECU is detected.	8-44
20	Intake air pressure sensor 1 or intake air pressure sensor 2: when the main switch is turned to “ON”, the intake air pressure sensor 1 voltage and intake air pressure sensor 2 voltage differ greatly.	8-46
21	Coolant temperature sensor: open or short circuit detected.	8-48
22	Intake air temperature sensor: open or short circuit detected.	8-49
24	O_2 sensor: no normal signals are received from the O_2 sensor.	8-50
25	Intake air pressure sensor 2: open or short circuit detected.	8-52
26	Intake air pressure sensor 2: hose system malfunction (clogged or detached hose).	8-54
30	Latch up detected.	8-56
33	Cylinder-#1 ignition coil: open or short circuit detected in the primary lead of the cylinder-#1 ignition coil.	8-56
34	Cylinder-#2 ignition coil: open or short circuit detected in the primary lead of the cylinder-#2 ignition coil.	8-58
35	Cylinder-#3 ignition coil: open or short circuit detected in the primary lead of the cylinder-#3 ignition coil.	8-59
39	Injector: open or short circuit detected.	8-60
41	Lean angle sensor: open or short circuit detected.	8-62
42	Speed sensor: no normal signals are received from the speed sensor.	8-63
	Neutral switch: open or short circuit is detected.	8-65
	Clutch switch: open or short circuit is detected.	8-68
43	Fuel system voltage: incorrect voltage supplied to the fuel injector and fuel pump.	8-71
44	EEPROM fault code number: an error is detected while reading or writing on EEPROM.	8-72
46	Charging voltage is abnormal.	8-73
50	Faulty ECU memory. (When this malfunction is detected in the ECU, the fault code number might not appear on the meter display.)	8-74

Fault code No.	Item	Reference pages
59	Accelerator position sensor: open or short circuit detected.	8-74
60	YCC-T drive system: malfunction detected.	8-76
70	Engine idling stop	—

Communication error with the meter

Fault code No.	Item	Reference pages
89 (Yamaha diagnostic tool) Err (multi-function meter display)	Multi-function meter: signals cannot be transmitted between the ECU and the multi-function meter.	8-78

Diagnostic code: sensor operation table

Diagnostic code No.	Item	Meter display	Procedure
01	Throttle position sensor signal 1		
	• Fully closed position	11–21	Check with throttle valves fully closed.
	• Fully open position	96–106	Check with throttle valves fully open.
03	Intake air pressure 1	Displays the intake air pressure.	Shift the transmission into gear, extend the sidestand, and then operate the throttle while pushing the "⊛" side of the start/engine stop switch. (If the display value changes, the performance is OK.)
04	Intake air pressure 2	Displays the intake air pressure.	Shift the transmission into gear, extend the sidestand, and then operate the throttle while pushing the "⊛" side of the start/engine stop switch. (If the display value changes, the performance is OK.)
05	Air temperature	Displays the air temperature.	Compare the actually measured air temperature with the meter display value.

Diagnostic code No.	Item	Meter display	Procedure
06	Coolant temperature	When engine is cold: Displays temperature closer to air temperature. When engine is hot: Displays current coolant temperature.	Compare the actually measured coolant temperature with the meter display value.
07	Vehicle speed pulses	Vehicle speed pulse 0–999	Check that the number increases when the rear wheel is rotated. The number is cumulative and does not reset each time the wheel is stopped.
08	Lean angle sensor • Upright • Overturned	Lean angle sensor output voltage 0.4–1.4 3.7–4.4	Remove the lean angle sensor and incline it more than 65 degrees.
09	Fuel system voltage (battery voltage)	Fuel system voltage Approximately 12.0	Set the start/engine stop switch to "◯", and then compare the actually measured battery voltage with the meter display value. (If the actually measured battery voltage is low, recharge the battery.)
13	Throttle position sensor signal 2 • Fully closed position • Fully open position	 9–23 94–108	 Check with throttle valves fully closed. Check with throttle valves fully open.
14	Accelerator position sensor signal 1 • Fully closed position • Fully open position	 12–22 97–107	 Check with throttle grip fully closed position. Check with throttle grip fully open position.
15	Accelerator position sensor signal 2 • Fully closed position • Fully open position	 10–24 95–109	 Check with throttle grip fully closed position. Check with throttle grip fully open position.

Diagnostic code No.	Item	Meter display	Procedure
20	Sidestand switch • Stand retracted • Stand extended	 ON OFF	Extend and retract the sidestand (with the transmission in gear).
21	Gear position sensor and clutch switch • Transmission is in neutral • Transmission is in gear or the clutch lever released • Clutch lever is squeezed with the transmission in gear and when the sidestand is retracted • Clutch lever is squeezed with the transmission in gear and when the sidestand is extended	 ON OFF ON OFF	Operate the transmission, clutch lever, and sidestand.
60	EEPROM fault code display • No history • History exists	 00 • No malfunctions detected (If the self-diagnosis fault code 44 is indicated, the ECU is defective.) 01–03 (Cylinder fault code) • (If more than one cylinder is defective, the display alternates every two seconds to show all the detected cylinder numbers. When all cylinder numbers are shown, the display repeats the same process.) 11 (Data error for ISC (idle speed control) learning values)	—

Diagnostic code No.	Item	Meter display	Procedure
61	Malfunction history code display • No history • History exists	 00 Fault codes 12–89 • (If more than one code number is detected, the display alternates every two seconds to show all the detected code numbers. When all code numbers are shown, the display repeats the same process.)	—
62	Malfunction history code erasure • No history • History exists	 00 • Displays the total number of malfunctions, including the current malfunction, that have occurred since the history was last erased. (For example, if there have been three malfunctions, “03” is displayed.)	 — To erase the history, set the start/engine stop switch from “⊗” to “◯”.
63	Malfunction code reinstatement (for fault code No. 24, 42 only) • No malfunction code • Malfunction code exists	 00 Fault code 24, 42 • (If more than one code number is detected, the display alternates every two seconds to show all the detected code numbers. When all code numbers are shown, the display repeats the same process.)	 — To reinstate, set the start/engine stop switch from “⊗” to “◯”.

Diagnostic code No.	Item	Meter display	Procedure
67	ISC (idle speed control) learning condition display ISC (idle speed control) learning data erasure	00 ISC (idle speed control) learning data has been erased. 01 It is not necessary to erase the ISC (idle speed control) learning data. 02 It is necessary to erase the ISC (idle speed control) learning data.	To erase the ISC (idle speed control) learning data, set the start/engine stop switch from "⊗" to "◯" 3 times in 5 seconds.
70	Control number	0–254 [-]	—

Diagnostic code: actuator operation table

Diagnostic code No.	Item	Actuation	Procedure
30	Cylinder-#1 ignition coil	Actuates the cylinder-#1 ignition coil five times at one-second intervals. Illuminates the engine trouble warning light.	Check that a spark is generated five times. • Connect an ignition checker.
31	Cylinder-#2 ignition coil	Actuates the cylinder-#2 ignition coil five times at one-second intervals. Illuminates the engine trouble warning light.	Check that a spark is generated five times. • Connect an ignition checker.
32	Cylinder-#3 ignition coil	Actuates the cylinder-#3 ignition coil five times at one-second intervals. Illuminates the engine trouble warning light.	Check that a spark is generated five times. • Connect an ignition checker.
36	Injector #1	Actuates the injector #1 five times at one-second intervals. Illuminates the engine trouble warning light.	Check that injector #1 is actuated five times by listening for the operating sound.
37	Injector #2	Actuates the injector #2 five times at one-second intervals. Illuminates the engine trouble warning light.	Check that injector #2 is actuated five times by listening for the operating sound.
38	Injector #3	Actuates the injector #3 five times at one-second intervals. Illuminates the engine trouble warning light.	Check that injector #3 is actuated five times by listening for the operating sound.

Diagnostic code No.	Item	Actuation	Procedure
48	Air induction system solenoid	Actuates the air induction system solenoid five times at one-second intervals. Illuminates the engine trouble warning light.	Check that the air induction system solenoid is actuated five times by listening for the operating sound.
50	Relay unit	Actuates the relay unit five times at one-second intervals. Illuminates the engine trouble warning light.	Check that the relay unit is actuated five times by listening for the operating sound.
51	Radiator fan motor relay	Actuates the radiator fan motor relay five times at five-second intervals. Illuminates the engine trouble warning light.	Check that the radiator fan motor relay is actuated five times by listening for the operating sound.
52	Headlight relay	Actuates the headlight relay five times at five-second intervals. Illuminates the engine trouble warning light.	Check that the headlight relay is actuated five times by listening for the operating sound.

EAS1RC1903

EVENT CODE TABLE

TIP

The event code numbers listed below cannot be displayed on the meter. To display the event code numbers, use the Yamaha diagnostic tool.

No.	Item	Symptom	Possible causes	Note
192	Intake air pressure sensor 1	Brief abnormality detected in the intake air pressure sensor 1	Same as fault code 13	Perform the inspection items listed for fault code No. 13.
193	Throttle position sensor	Brief abnormality detected in the throttle position sensor	Same as fault code 15	Perform the inspection items listed for fault code No. 15.
195	Sidestand switch	Brief abnormality detected in the ECU (black/red lead) input line	Same as fault code 19	Perform the inspection items listed for fault code No. 19.
196	Coolant temperature sensor	Brief abnormality detected a in the coolant temperature sensor	Same as fault code 21	Perform the inspection items listed for fault code No. 21.
197	Intake air temperature sensor	Brief abnormality detected in the intake air temperature sensor	Same as fault code 22	Perform the inspection items listed for fault code No. 22.
199	Intake air pressure sensor 2	Brief abnormality detected in the intake air pressure sensor 2	Same as fault code 25	Perform the inspection items listed for fault code No. 25.
203	Lean angle sensor	Brief abnormality detected in the lean angle sensor	Same as fault code 41	Perform the inspection items listed for fault code No. 41.
207	Accelerator position sensor	Brief abnormality detected in the accelerator position sensor	Same as fault code 59	Perform the inspection items listed for fault code No. 59.

No.	Item	Symptom	Possible causes	Note
240	O_2 sensor (Stuck at the upper limit for adjustment)	During O_2 feedback, the adjustment is maintained at the upper limit	– Open or short circuit in the wire harness between the sensor and ECU – Drop in fuel pressure – Clogged fuel injector – Fault in sensor – Malfunction in ECU – Malfunction in the fuel injection system	– If a fault code is occurring, respond to that first. * Rarely, Code 240 occurs even when the system is functioning properly.
241	O_2 sensor (Stuck at the lower limit for adjustment)	During O_2 feedback, the adjustment is maintained at the lower limit	– Open or short circuit in the wire harness between the sensor and ECU – Drop in fuel pressure – Clogged fuel injector – Fault in sensor – Malfunction in ECU – Malfunction in the fuel injection system	– If a fault code is occurring, respond to that first. * Rarely, Code 241 occurs even when the system is functioning properly.
242	ISC (Stuck at the upper limit for adjustment)	During idling, the adjustment is maintained at the upper limit	Idling engine speed is slow – Clogged throttle body – Poorly adjusted throttle cable – Poorly adjusted clutch cable – Malfunction in the fuel injection system – Dirty or worn spark plug – Malfunction in the battery – Malfunction in ECU	– Implement diagnosis mode D67, and check the ISC maintenance request. – If a fault code is occurring, respond to that first. * Rarely, Code 242 occurs even when the system is functioning properly.

No.	Item	Symptom	Possible causes	Note
243	ISC (Stuck at the lower limit for adjustment)	During idling, the adjustment is maintained at the lower limit	Idling engine speed is fast – Poorly adjusted throttle cable – Poorly adjusted clutch cable – Malfunction in the fuel injection system – Dirty or worn spark plug – Malfunction in the battery – Malfunction in ECU	– If a fault code is occurring, respond to that first. * Rarely, Code 243 occurs even when the system is functioning properly.
244	Poor starting/inability to start	Poor starting/inability to start detected	– No gasoline – Malfunction in the fuel injection system – Dirty or worn spark plug – Malfunction in the battery – Malfunction in ECU	– If a fault code is occurring, respond to that first. * Rarely, Code 244 occurs even when the system is functioning properly.
245	Engine stop	Engine stop detected	– No gasoline – Poorly adjusted throttle cable – Poorly adjusted clutch cable – Malfunction in the fuel injection system – Dirty or worn spark plug – Malfunction in the battery – Malfunction in ECU	– If a fault code is occurring, respond to that first. * Rarely, Code 245 occurs even when the system is functioning properly.

EAS28740

WIRING DIAGRAM

FZ09E/FZ09EC 2014

1. AC magneto
2. Rectifier/regulator
3. Main switch
4. Main fuse
5. Electric throttle valve fuse
6. Backup fuse
7. Radiator fan fuse
8. Parking lighting fuse
9. Ignition fuse
10. Signal fuse
11. Headlight fuse
12. Auxiliary DC outlet fuse
13. Battery
14. Engine ground
15. Fuel injection system fuse
16. Starter relay
17. Starter motor
18. Joint connector
19. Joint coupler
20. Relay unit
21. Starting circuit cut-off relay
22. Fuel pump relay
23. ECU (engine control unit)
24. Ignition coil #1
25. Ignition coil #2
26. Ignition coil #3
27. Spark plug
28. Injector #1
29. Injector #2
30. Injector #3
31. Air induction system solenoid
32. O_2 sensor
33. Crankshaft position sensor
34. Intake air temperature sensor
35. Coolant temperature sensor
36. Intake air pressure sensor 1
37. Intake air pressure sensor 2
38. Lean angle sensor
39. Speed sensor
40. Throttle servo motor
41. Accelerator position sensor
42. Throttle position sensor
43. Yamaha diagnostic tool connector
44. Yamaha diagnostic tool coupler
45. Meter assembly
46. Neutral indicator light
47. Meter light
48. Tachometer
49. Multi-function meter
50. Oil level warning light
51. Fuel level indicator light
52. Engine trouble warning light
53. Coolant temperature warning light
54. High beam indicator light
55. Left turn signal indicator light
56. Right turn signal indicator light
57. Oil level switch
58. Gear position sensor
59. Fuel sender
60. Fuel pump
61. Sidestand switch
62. Right handlebar switch
63. Drive mode switch
64. Start/engine stop switch
65. Hazard switch
66. Front brake light switch
67. Rear brake light switch
68. Turn signal/hazard relay
69. Left handlebar switch
70. Clutch switch
71. Horn
72. Horn switch
73. Turn signal switch
74. Pass switch
75. Dimmer switch
76. Rear right turn signal light
77. Rear left turn signal light
78. Front right turn signal/position light
79. Front left turn signal/position light
80. Headlight
81. Auxiliary light
82. License plate light
83. Tail/brake light
84. Headlight relay
85. Radiator fan motor relay
86. Radiator fan motor
87. Auxiliary DC jack

EAS28750

COLOR CODE

B	Black
Br	Brown
Ch	Chocolate
Dg	Dark green
G	Green
Gy	Gray
L	Blue
Lg	Light green
O	Orange
P	Pink
R	Red
Sb	Sky blue
V	Violet
W	White
Y	Yellow
B/L	Black/Blue
B/R	Black/Red
B/W	Black/White
B/Y	Black/Yellow
Br/L	Brown/Blue
Br/R	Brown/Red
Br/W	Brown/White
Br/Y	Brown/Yellow
G/B	Green/Black
G/W	Green/White
G/Y	Green/Yellow
Gy/G	Gray/Green
Gy/R	Gray/Red
L/B	Blue/Black
L/R	Blue/Red
L/W	Blue/White
L/Y	Blue/Yellow
Lg/L	Light green/Blue
Lg/W	Light green/White
O/G	Orange/Green
P/B	Pink/Black
P/W	Pink/White
R/B	Red/Black
R/G	Red/Green
R/L	Red/Blue
R/W	Red/White
R/Y	Red/Yellow
Sb/W	Sky blue/White
W/B	White/Black
W/G	White/Green
W/L	White/Blue
W/R	White/Red
W/Y	White/Yellow
Y/B	Yellow/Black
Y/G	Yellow/Green
Y/L	Yellow/Blue
Y/R	Yellow/Red
Y/W	Yellow/White

YAMAHA

FZ09E/FZ09EC 2014
WIRING DIAGRAM

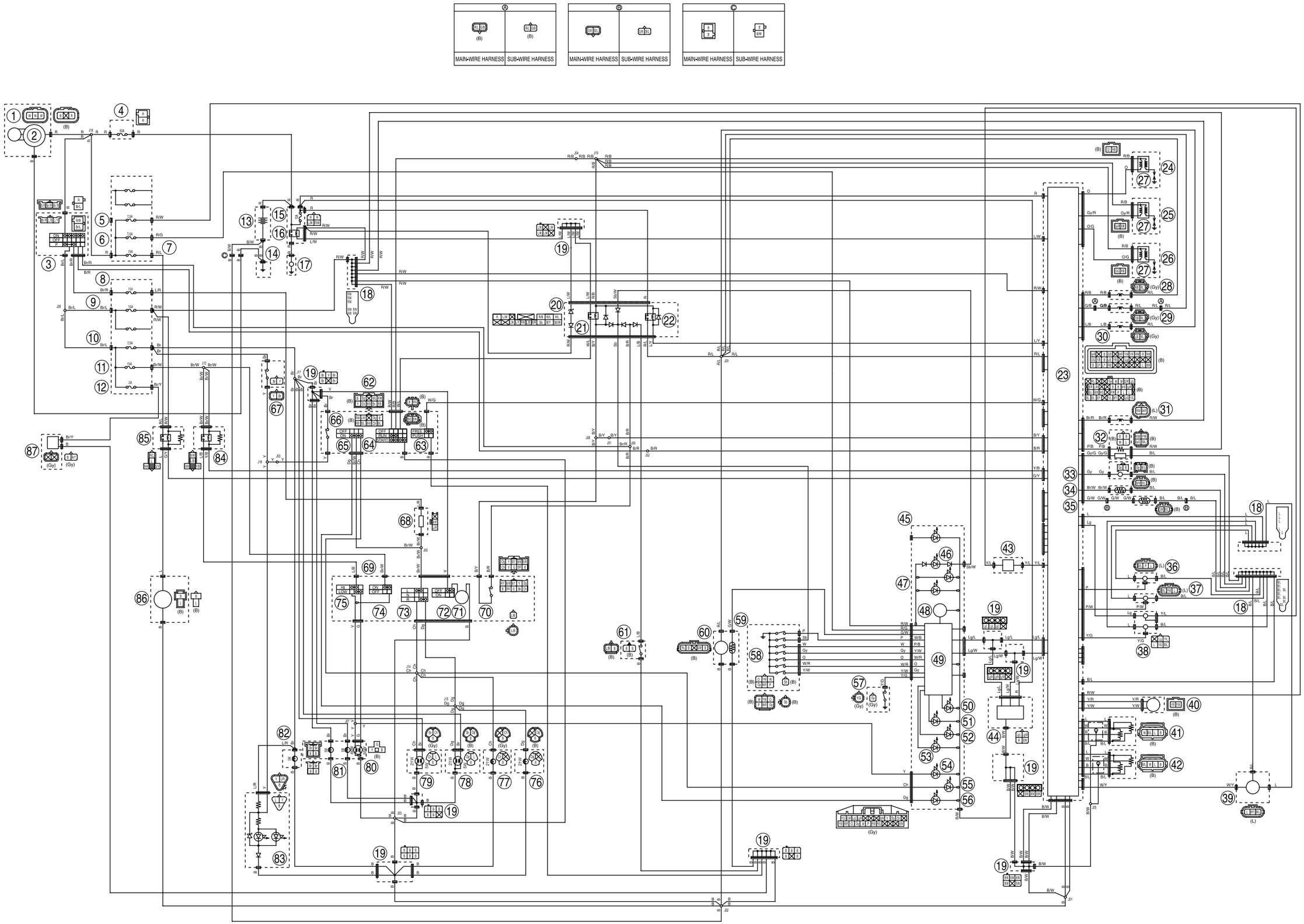

FZ09E/FZ09EC 2014
WIRING DIAGRAM